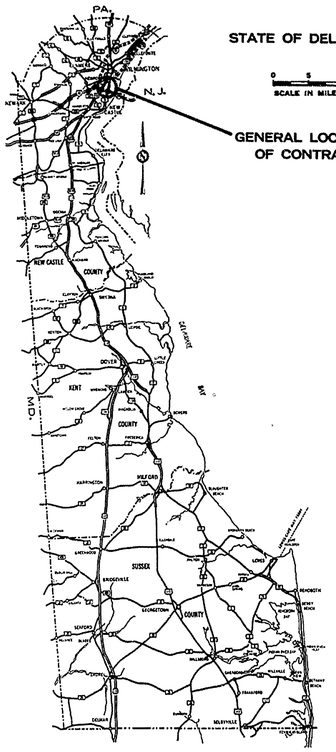

DESIGN DESIGNATION

FEDERAL CLASS _____

A.D.T. _____

D.H.V. _____

DESIGN SPEED _____ M.P.H.

MIN. STOPPING SIGHT DISTANCE _____ FT.

MAX. S.E. _____ FT./FT.

THE STATE OF DELAWARE

DEPARTMENT OF HIGHWAYS & TRANSPORTATION
DIVISION OF HIGHWAYS

CONSTRUCTION PLAN FOR:

CONTRACT NUMBER 70-12-002

~~FEDERAL AID PROJECT NUMBER~~ _____

BEGIN PROJECT: STATION NO. _____ END: STATION NO. _____

LENGTH: _____ FEET = _____ MILES

CONTRACT	COUNTY	STATE	B.P.R. REG. NO.	FEDERAL AID PROJECT NUMBER	FISCAL YEAR	SHEET NUMBER	TOTAL SHEETS
70-12-002	N. C.	DEL.	2			1	32

BRIDGE NO.27 AT LINCOLN AVE. & BRIDGE NO.28 AT HARRISON AVE. OVER U.S. RT. NO. 13.
PEDESTRIAN BRIDGES

SURVEY BOOKS

INDEX OF SHEETS

1 TITLE SHEET
_____ TYPICAL SECTION SHEETS
_____ QUANTITY SHEET
_____ PLANS & PROFILE SHEETS
_____ BRIDGE SHEETS
G-2, G-3, G-4, G-5, T-2 STANDARD SHEETS

UTILITIES

Sewer Line
Diamond State Telephone Co.
Delmarva Power & Light Co.
Artesian Water

"AS BUILT PLANS"
GRD. 3/20/74

CONTRACT QUANTITIES — PAY ITEMS

SECTION	DESCRIPTION	UNIT	BR. 27	BR. 28	ESTIMATE & PROPOSAL
201	CLEARING AND GRUBBING	L. S.	L. S.	L. S.	L. S.
*202	EXCAVATION AND EMBANKMENT	C. Y.	158	28	186
*207	EXCAVATION FOR STRUCTURES	C. Y.	183	208	391
401	HOT-MIX, HOT LAID ASPHALTIC CONCRETE PAVEMENT	TONS	102	28	130
*602	P.C.C. MASONRY — SUPERSTRUCTURE	C. Y.	27.7	29.4	57.1
*602	P.C.C. MASONRY — ABOVE FOOTINGS	C. Y.	22.2	25.6	47.8
*602	P.C.C. MASONRY — FOOTINGS	C. Y.	28.5	28.0	56.5
*605	BAR REINFORCEMENT	LBS.	13,852	14,700	28,552
606	STEEL STRUCTURES — SUPERSTRUCTURE (APPROX. 106,600 LBS.)	L. S.	L. S.	L. S.	L. S.
606	STEEL STRUCTURES — FOUR (4) STAIRS	L. S.	L. S.	L. S.	L. S.
**609	COARSE AGGREGATE FOR FOUNDATION STABILIZATION	TONS	18	18	36
708	P.C.C. SIDEWALK	S. F.	577	610	1,187
715	GALVANIZED STEEL BEAM GUARD RAIL	L. F.	344	199	543
716	TWISTED END ANCHORAGES — MEDIAN BARRIER	EACH	1	—	1
717	END POST ATTACHMENTS	EACH	3	4	7
S.P.	CHAIN LINK FENCE — FULL COVERAGE	L. F.	172	184	356
S.P.	CHAIN LINK FENCE — 6' HIGH	L. F.	34	34	68
735	FLAGMAN	HRS.	100	100	200
S.P.	CONCRETE DITCH	L. S.	L. S.	—	L. S.
S.P.	SINGLE GATE	EACH	—	1	1
S.P.	MAINTENANCE OF TRAFFIC	L. S.	L. S.	L. S.	L. S.
716	TWISTED END ANCHORAGES — SINGLE RAIL	EACH	3	2	5
S.P.	1 1/2" GALVANIZED CONDUIT	L. F.	153	140	293
S.P.	2 1/2" GALVANIZED CONDUIT	L. F.	5	50	55
S.P.	CONDUIT JUNCTION WELL	EACH	2	2	4
608	REMOVAL OF EXISTING MASONRY	C. Y.	—	5	5
S.P.	STEEL POLE BASE	EACH	—	1	1

*Denotes Fixed Quantity Item — Section 109.06 Of Standard Specifications
**Estimated Assuming 6" Thickness

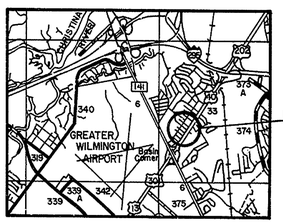

BRIDGE NO.27 ON LINCOLN AVE.
BRIDGE NO.28 ON HARRISON AVE.

LOCATION MAP
Scale: 1" = 1 Mile

CONVENTIONAL SIGNS

PROPOSED CENTER LINE
NEW RIGHT OF WAY LINE
PROPERTY LINE
CONCRETE ROAD
MACADAM OR ASPHALT ROAD
WOODED AREA
TELEPHONE OR UTILITY POLE
EXISTING CULVERT OR PIPE
RAILROAD
GUARD RAIL

SCALES

TITLE SHEET 1" = FEET
CONSTRUCTION PLAN 1" = FEET
VERTICAL PROFILE 1" = FEET

DELAWARE DIVISION OF HIGHWAYS

RECOMMENDED

RECOMMENDED 9/27 1971 E. B. Palenski
CHIEF, PLANS AND DESIGN

RECOMMENDED _____ 19__ _____
ASSISTANT CHIEF ENGINEER

APPROVED

APPROVED _____ 19__ _____
CHIEF ENGINEER

APPROVED 9-27 1971 E. Halsey
DIRECTOR OF OPERATIONS

DEPARTMENT OF TRANSPORTATION
FEDERAL HIGHWAY ADMINISTRATION
BUREAU OF PUBLIC ROADS

APPROVED _____ 19__

_____
DIVISION ENGINEER

B1-2

COUNTY	CONTRACT	F. A. A. REG. NO.	STATE	FED. AID PROJECT NO.	SHEET NO.	TOTAL SHEETS
N. C.	70-12-002	2	DEL.		2	32

BRIDGE NO.27 AT LINCOLN AVE., & BRIDGE NO. 28 AT HARRISON AVE. OVER U.S. RT. NO. 13.
PEDESTRIAN BRIDGES

NO.	REVISIONS	BY	DATE
1	Add Existing 24" R.C.P.	T.O.	11-2-72

BENCH MARK No. 1: Chiseled "X" on N.W. Cor. of Headwall, 26.5' Lt. Sta. 1+30, El. 65.71

See Sheet No. 6 for General Plan & Elevation.
See Sheet No. 6 and No. 25 for Concrete Ditch.
See Sheet No. 6 and No. 24 for Sidewalk.

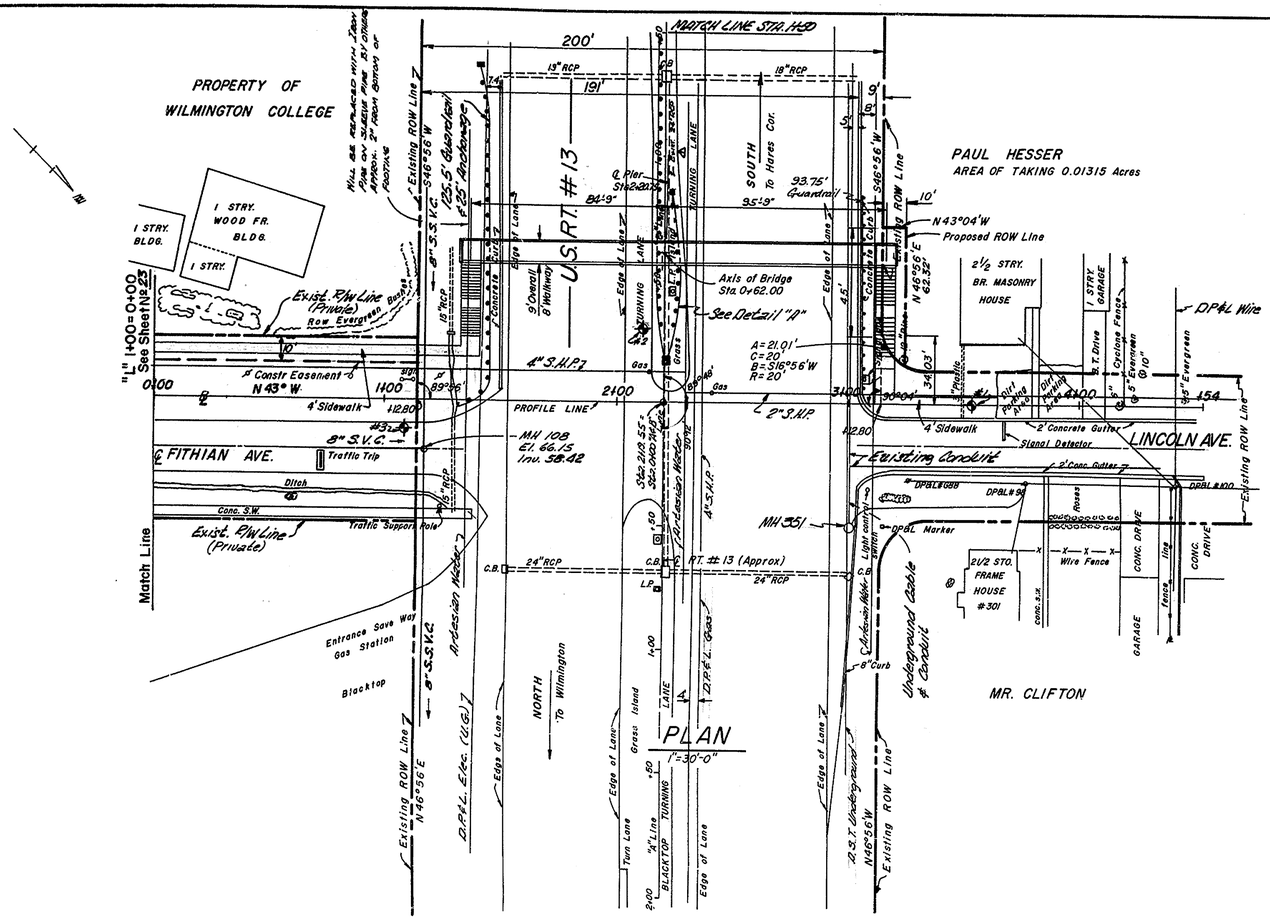

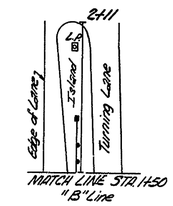

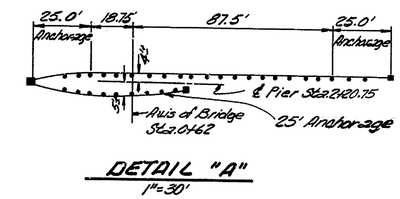

DETAIL "A"
1"=30'

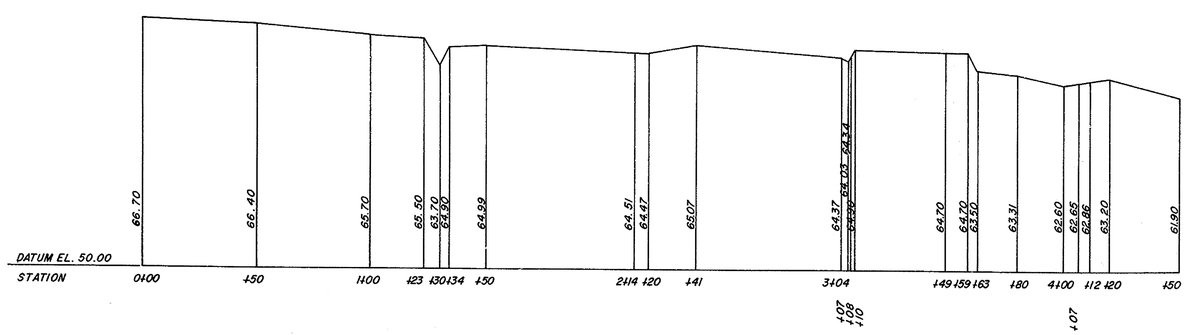

PROFILE
Horz: 1"=30'-0"
Vert: 1"=5'-0"

GENERAL NOTES

SPECIFICATIONS: Design Criteria are based on 1969 Standard Specifications for Highway Bridges, American Association of State Highway Officials, including Interim Specifications of 1970 and Design Criteria for Pedestrian Bridges, B.P.R. Materials and Workmanship are to conform with the State of Delaware, State Highway Department Standard Specifications dated June 1, 1970, unless otherwise noted and/or specified in Special Provisions. All welding shall conform to the current specifications for Welding Highway and Railway Bridges by the American Welding Society.

LIVE LOADING: 1969 A.A.S.H.O. Section 1.2.11 (A) and (C).

FOUNDATION DATA: Foundation design and foundation quantities are based on a study of the borings made at the site. This boring information, the accuracy of which the State does not guarantee, is presented with these plans to the contractor for his information only. The contractor must make his own deductions of subsoil conditions, which may affect his method or cost of construction.

PORTLAND CEMENT CONCRETE MASONRY: All concrete shall have a 28 day strength of 3000 p.s.i. min. Cover over the bar reinforcement shall be 2 inches except as otherwise noted on the drawings. All exposed edges of concrete shall be chamfered 3/4" x 3/4" unless otherwise shown. Bearings for shoes shall be finished at least 1/8" high, and after curing, ground to a true plane and elevation over an area extending 1" beyond the contact surfaces.

BAR REINFORCEMENT: Bar Reinforcement shall conform with Deformed Billet-Steel Bars, Grade 40, AASHO M31 (ASTM A615). Lapped Splices, unless otherwise noted, shall be 24 bar diameters.

STRUCTURAL STEEL: All Structural Steel shall conform to the requirements of AASHO M183 (ASTM A36). Girders shall be cambered for dead load deflection and where required, for additional permanent camber due to vertical curvature. Do not paint steel surfaces in contact with concrete. Anchor bolts, immediately after the concrete has attained its initial set, shall be securely wrapped in burlap. All portions of steel structure are required to be painted.

SLAB SURFACE: See Special Provisions for information on Colma Sol Green mixed with Colma Sol Granules for treatment of deck surface.

FOOTING: The footings may be ordered by the Engineer to be at any elevation or of any dimensions necessary to provide a proper foundation.

GALVANIZED FENCE AND SUPPORTS: Chain link fence fabric conforming to AASHO M181 shall be No. 9 Ga. wire woven in a 2" Mesh and Galvanized after weaving in accordance with AASHO M120. Galvanized pipe rail and fence supports shall conform to ASTM A-53 Grade B, Type "S" or "E". AASHO M-183 steel shall be used for all hardware, and after fabrication, shall be galvanized in accordance with AASHO M111.

Any galvanized surfaces damaged by handling or by welding after galvanizing shall be repaired using "Galv-Weld" or an acceptable equal. Such repair compound shall meet Federal Specification QQ-93.

DELAWARE DEPARTMENT OF HIGHWAYS & TRANSPORTATION
DIVISION OF HIGHWAYS

SITE PLAN
BRIDGE NO.27, LINCOLN AVE.

D. CHH	SCALE	APPROVED BY:
T.G.R.D.	As Shown	John E. Cubbins
C. T.O.		BRIDGE ENGINEER

B-1-2

COUNTY	CONTRACT	P.R.A. REG. NO.	STATE	FED. AID PROJECT NO.	SHEET NO.	TOTAL SHEETS
N. C.	70-12-002	2	DEL.		3	32

BRIDGE NO. 27 AT LINCOLN AVE. & BRIDGE NO. 28 AT HARRISON AVE. OVER U.S. RT. NO. 13
PEDESTRIAN BRIDGES

NO.	REVISIONS	BY	DATE

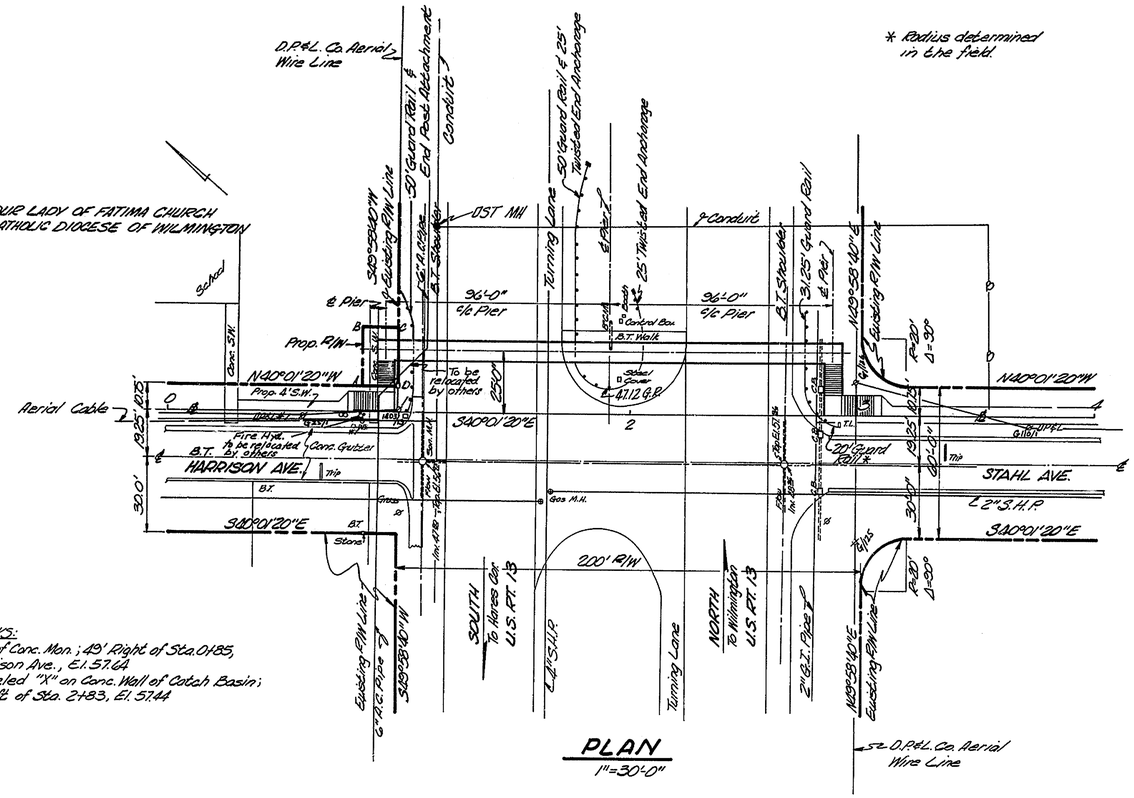

* Radius determined in the field.

PLAN
1"=30'-0"

BENCH MARKS:
B.M.#1: Top of Conc. Mon.; 49' Right of Sta. 0+85, Harrison Ave., El. 57.64
B.M.#2: Chiseled "X" on Conc. Wall of Catch Basin; 9' Left of Sta. 2+83, El. 57.44

RIGHT OF WAY

AB	25'	N49°58'40"E
BC	15'	S40°01'20"E
CD	25'	S49°58'40"W
DA	15'	N40°01'20"W

Area of Taking = 0.00860 Acres

NOTE!
See Sheet No. 7 for General Plan & Elevation.
See Sheet No. 7 & 24 for Sidewalk.
See Sheet No. 2 for General Notes.

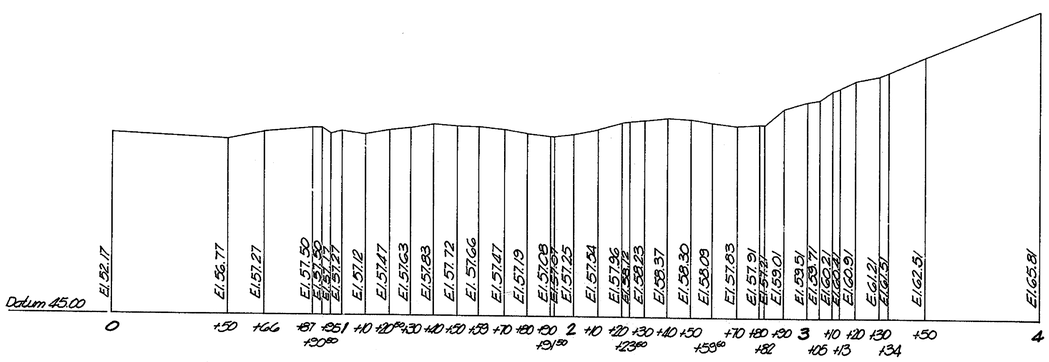

PROFILE
Horz: 1"=30'-0"
Vert: 1"=5'-0"

DELAWARE
DEPARTMENT OF HIGHWAYS & TRANSPORTATION
DIVISION OF HIGHWAYS

SITE PLAN
BRIDGE NO. 28, HARRISON AVE.

D. T.O.	SCALE	APPROVED BY:
T. G.R.D.	AS SHOWN	
C. C.H.		BRIDGE ENGINEER

COUNTY	CONTRACT			
N.C.	10-12-002	DEL		32

BRIDGE NO. 27 AT LINCOLN AVE. & BRIDGE NO. 28 AT HARRISON AVE. OVER U.S. RT. NO. 13
PEDESTRIAN BRIDGES

NO.	REVISIONS	BY	DATE

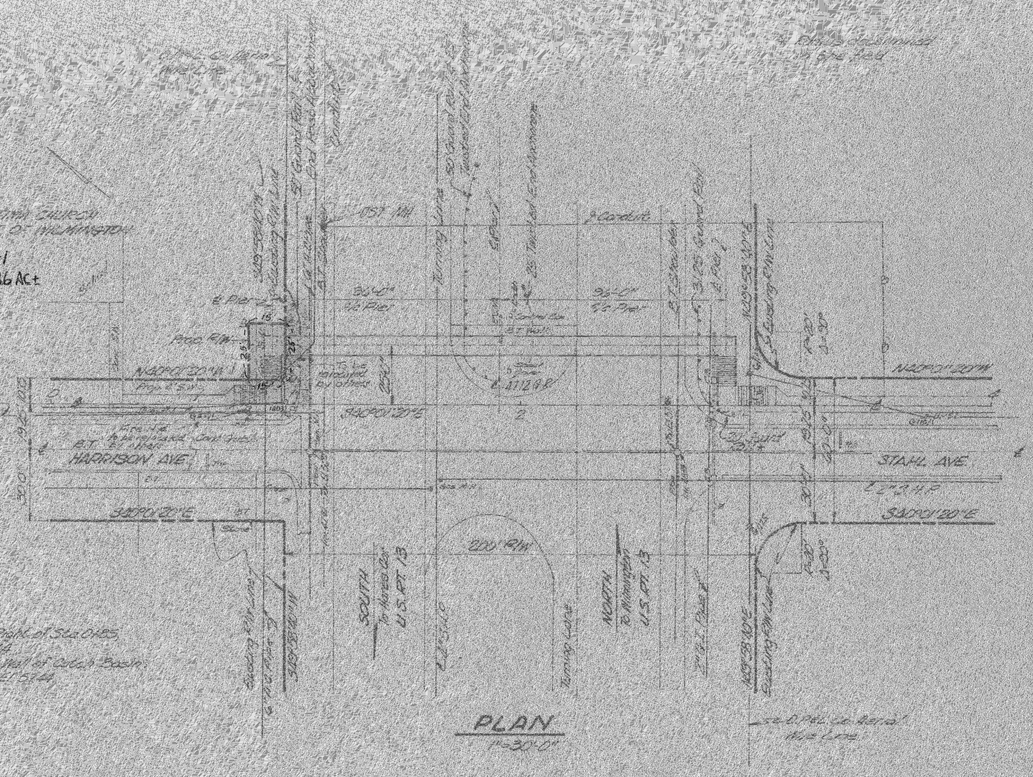

PLAN
1"=30'-0"

RIGHT OF WAY

AB	25'	N49°58'40"E
BC	15'	S40°01'20"E
CD	25'	S49°58'40"W
DA	15'	N40°01'20"W

Area of Taking = 0.00860 Acres

NOTE:
See Sheet No. 7 for General Plan & Elevation
See Sheet No. 7 & 24 for Sidewalk
See Sheet No. 2 for General Notes

BENCH MARKS
B.M.# Top of Conc. Mon. 49' Right of Sta. 0+85, Harrison Ave. El. 57.44
B.M.#2 Chiseled "X" on Conc. Wall of Catch Basin @ Left of Sta. 2+33, El. 57.44

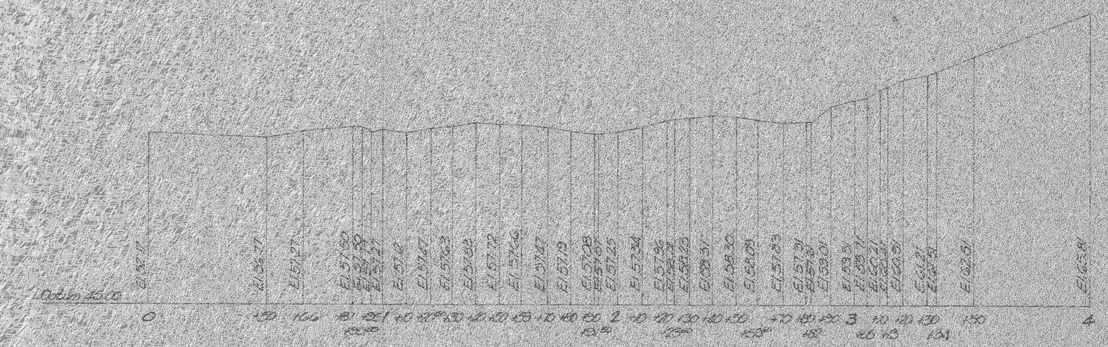

PROFILE
Horz. 1"=30'-0"
Vert. 1"=5'-0"

DELAWARE
DEPARTMENT OF HIGHWAYS & TRANSPORTATION
DIVISION OF HIGHWAYS

SITE PLAN
BRIDGE NO. 28, HARRISON AVE.

	SCALE	APPROVED BY
D.T.G.	AS SHOWN	
T.G.R.D.		
C.F.H.		BRIDGE ENGINEER

COUNTY	CONTRACT	P. R. A. REG. NO.	STATE	FED. AID PROJECT NO.	SHEET NO.	TOTAL SHEETS
N. C.	70-12-002	2	DEL.		4	32

BRIDGE NO. 27 AT LINCOLN AVE. & BRIDGE NO. 28 AT HARRISON AVE. OVER U. S. RT. NO. 13
PEDESTRIAN BRIDGES

NO.	REVISIONS	BY	DATE

Sample No.	Sample Depth	Sample Blows/6"	Sample Description	Casing Blows
	5-5½	5		–
1	5½-6	7	Moist, medium dense light	–
	6-6½	12	brown silty fine to coarse	–
			sand with trace gravel &	–
			trace clay. 12" Sple., 12" Rec.	
	10-10½	20		16
2	10½-11	24	Moist dense light brown fine	30
	11-11½	20	to coarse sand & gravel with	35
			some silt.	40
			4" Sple, 4" Rec.	45
	15-15½	28		22
3	15½-16	20	Wet, dense light brown fine	48
	16-16½	16	to coarse sand with some	50
			silt. 4" Sple. 4" Rec.	55
				65
	20-20½	34	Wet, very dense light brown	32
4	20½-21	30	fine to coarse sand & gravel	50
	21-21½	32	with some silt.	24
			8" Sple., 8" Rec.	30
				60
	25-25½	230	Moist very dense light brown	50
5			silty fine to coarse sand	65
			and gravel.	85
			6" Sple., 6" Rec.	110
				115

BORING No. 1

50' West of Route 13, Edge of curb, 5' south of Lincoln Avenue edge of pavement.

Sample No.	Sample Depth	Sample Blows/6"	Sample Description	Casing Blows
	5-5½	6	Wet, stiff, brown, fine sandy	–
1	5½-6	11	silt with trace mica	–
	6-6½	13	14" Sple., 14" Rec.	–
				–
				–
	10-10½	12	Saturated, dense, light brown	20
2	10½-11	16	fine to coarse sand & gravel	33
	11-11½	20	with trace silt.	31
			1" Sple., 1" Rec.	35
				37
	15-15½	23		24
3	15½-16	27	Wet, very dense, light brown	37
	16-16½	27	silty fine to coarse sand	40
			and gravel.	25
			6" Sple., 6" Rec.	50
	20-20½	70	Wet, very dense, light brown	28
4	20½-21	52	silty fine to coarse sand	48
	21-21½	40	and gravel.	50
			6" Sple., 6" Rec.	63
				63
	25-25½	190		40
5	25½-26	140	Saturated, very dense, brown	60
			silty fine to coarse sand	70
			and gravel.	80
			10" Sple., 10" Rec.	240

BORING No. 2

Left Turn Lane, Rt. 13, N.B.L. 30' South of intersection of Lincoln Avenue Median.

Sample No.	Sample Depth	Sample Blows/6"	Sample Description	Casing Blows
	5-5½	4		–
1	5½-6	7	Moist, very stiff, brown	–
	6-6½	10	sandy silt with some gravel.	–
			6" Sple., 6" Rec.	–
				–
	10-10½	16	Saturated, medium dense,	28
	10½-11	15	light brown fine to coarse	34
	11-11½	14	sand & gravel with some silt.	35
			3" Sple., 3" Rec.	38
				45
	15-15½	29	No Recovery	14
	15½-16	27		30
	16-16½	33		37
				45
	15-20		Wash Sample	50
	20-20½	33	Wet, very dense, light brown	31
3	20½-21	42	fine to coarse sand & gravel	56
	21-21½	34	with some silt.	72
			9" Sple., 9" Rec.	65
				65
	25-25½	72	Wet, very dense, light brown	42
4	25½-26	45	silty fine to coarse sand	60
	26-26½	54	and gravel.	129
			12" Sple., 12" Rec.	136
				102

BORING No. 3

42' East of Rt. 13 Curb, 8' South of ℄ of Lincoln Ave.

BORING DATA

Weight of Casing Hammer:	300 lbs.
Weight of Sample Hammer:	140 lbs.
Average Fall Casing:	20 ins.
Average Fall Sampler:	30 ins.
Sampler Length:	18 ins.
Casing Size:	2½ ins.
Split Spoon:	2 ins.

⊕ Denotes Boring Location

DELAWARE DEPARTMENT
OF HIGHWAYS & TRANSPORTATION
DIVISION OF HIGHWAYS

BORINGS

BRIDGE NO. 27, LINCOLN AVE.

D. C. H.	SCALE	APPROVED BY:
T. G.R.D.	No Scale	John E. Gilchrist
C. T.Q.		BRIDGE ENGINEER

COUNTY	CONTRACT	P. R. A. REG. NO.	STATE	FED. AID PROJECT NO.	SHEET NO.	TOTAL SHEETS
N.C.	70-12-002	2	DEL.		5	32

BRIDGE NO.27 AT LINCOLN AVE. & BRIDGE NO.28 AT HARRISON AVE. OVER U.S. RT. NO. 13

PEDESTRIAN BRIDGES

NO.	REVISIONS	BY	DATE

Sample No.	Depth	Blows/6"	Sample Description	Casing Blows
	5-5½	8		–
1	5½-6	17	Moist, medium to dense, brown	–
	6-6½	26	silty fine to coarse sand &	–
			gravel with trace clay.	–
			8" Sple., 8" Rec.	–
	10-10½	17	Saturated, medium, dense,	25
2	10½-11	15	light brown fine to coarse	35
	11-11½	15	sand with some silt and trace	30
			gravel	25
			8" Sple., 8" Rec.	40
	15-15½	24	Saturated, very dense, light	6
3	15½-16	23	brown, fine to coarse sand	40
	16-16½	27	& gravel with some silt.	55
			10" Sple., 10" Rec.	50
				75
	20-20½	38	Saturated, very dense, light	30
4	20½-21	30	brown fine to coarse sand &	60
	21-21½	26	gravel with some silt.	57
			10" Sple., 10" Rec.	60
				76
	25-25½	15	Saturated, dense, light brown,	35
5	25½-26	11	fine to coarse sand & gravel	64
	26-26½	18	with trace silt.	74
			8" Sple., 8" Rec.	70
				63
	30-30½	31		40
6	30½-31	21	Saturated, dense, light brown,	62
	31-31½	11	fine to coarse sand & gravel	47
			with some silt & trace clay	50
			balls. 2" Sple., 2" Rec.	55

BORING No. 1

35' South of Grant Avenue, 2' off shoulder Rt. 13, N.B.L.

Sample No.	Depth	Blows/6"	Sample Description	Casing Blows
	5-5½	4		–
1	5½-6	10	Moist, stiff, multi-colored	–
	6-6½	13	silt with some sand & trace	–
			clay.	–
			14" Sple., 14" Rec.	–
	10-10½	13		11
2	10½-11	17	Wet, hard, gray, sandy silt	25
	11-11½	18	with some clay & trace gravel	44
			14" Sple., 14" Rec.	50
				60
	15-15½	19		25
3	15½-16	31	Saturated, very dense, light	48
	16-16½	40	brown, fine to coarse sand &	65
			gravel with some silt.	103
			6" Sple., 6" Rec.	155
	20-20½	45	Saturated, very dense, brown	45
4	20½-21	85	silty fine to coarse sand &	145
	21-21½	78	gravel.	170
			6" Sple., 6" Rec.	221
				180

BORING No. 2

Median Center 15' South of crossover Opp. Grant Ave.

Sample No.	Depth	Blows/6"	Sample Description	Casing Blows
	5-5½	4		–
1	5½-6	11	Wet, medium, dense, brown	–
	6-6½	16	silty fine to coarse sand &	–
			gravel with trace clay.	–
			6" Sple., 6" Rec.	–
	10-10½	18	Saturated, dense, light brown	31
2	10½-11	17	fine to coarse sand & gravel	37
	11-11½	18	with some silt.	41
			2" Sple., 2" Rec.	37
			(Large Gravel lodged in tip)	42
	15-15½	22		72
3	15½-16	24	Wet, dense, light brown, fine	47
	16-16½	22	to coarse sand & gravel with	50
			some silt. 8" Sple., 8" Rec.	58
				78
	20-20½	20	Moist, dense, brown, silty fine	20
4	20½-21	19	to coarse sand & gravel.	48
	21-21½	13	4" Sple., 4" Rec.	65
				46
				32
	25-25½	7	Saturated, stiff, red clay	30
5	25½-26	13	(No Recovery inside spoon	58
	26-26½	15	material scraped from out-	55
			side of spoon.)	34
				26
	30-30½	17	Wet, hard, light brown,	43
6	30½-31	20	sandy clay. 10" Sple.,	70
	31-31½	12	10" Rec.	120
				145
				118
	35-35½	12	Wet, hard, red & gray clay	72
7	35½-36	12	with some sand.	100
	36-36½	27	18" Sple., 18" Rec.	118
				145
				291

BORING No. 3

15' off shoulder - Rt. 13, S.B. 50' N. of Grant Ave.

BORING DATA

Weight of Casing Hammer:	300 Lbs.
Weight of Sample Hammer:	140 Lbs.
Average Fall Casing:	20 Ins.
Average Fall Sampler:	30 Ins.
Sampler Length:	18 Ins.
Casing Size:	2½ Ins.
Split Spoon:	2 Ins.

✦ Denotes Boring Location

DELAWARE DEPARTMENT OF HIGHWAYS & TRANSPORTATION
DIVISION OF HIGHWAYS

BORINGS

BRIDGE NO. 28,

D. C.H.	SCALE	APPROVED BY:
T. G.R.D.	No Scale	John E. Schiles
C. T.O.		BRIDGE ENGINEER

COUNTY	CONTRACT	P.R.A. REG. NO.	STATE	FED. AID PROJECT NO.	SHEET NO.	TOTAL SHEETS
N. C.	70-12-002	2	DEL.		6	32

BRIDGE NO. 27 AT LINCOLN AVE. & BRIDGE NO. 28 AT HARRISON AVE. OVER U.S. RT. NO. 13
PEDESTRIAN BRIDGES

NO.	REVISIONS	BY	DATE
1	REVISE ELEVATIONS	T.O.	8-1-72
2	REVISE PIER No. 2 & ADD EXISTING 24" R.C.P.	T.O.	11-2-72

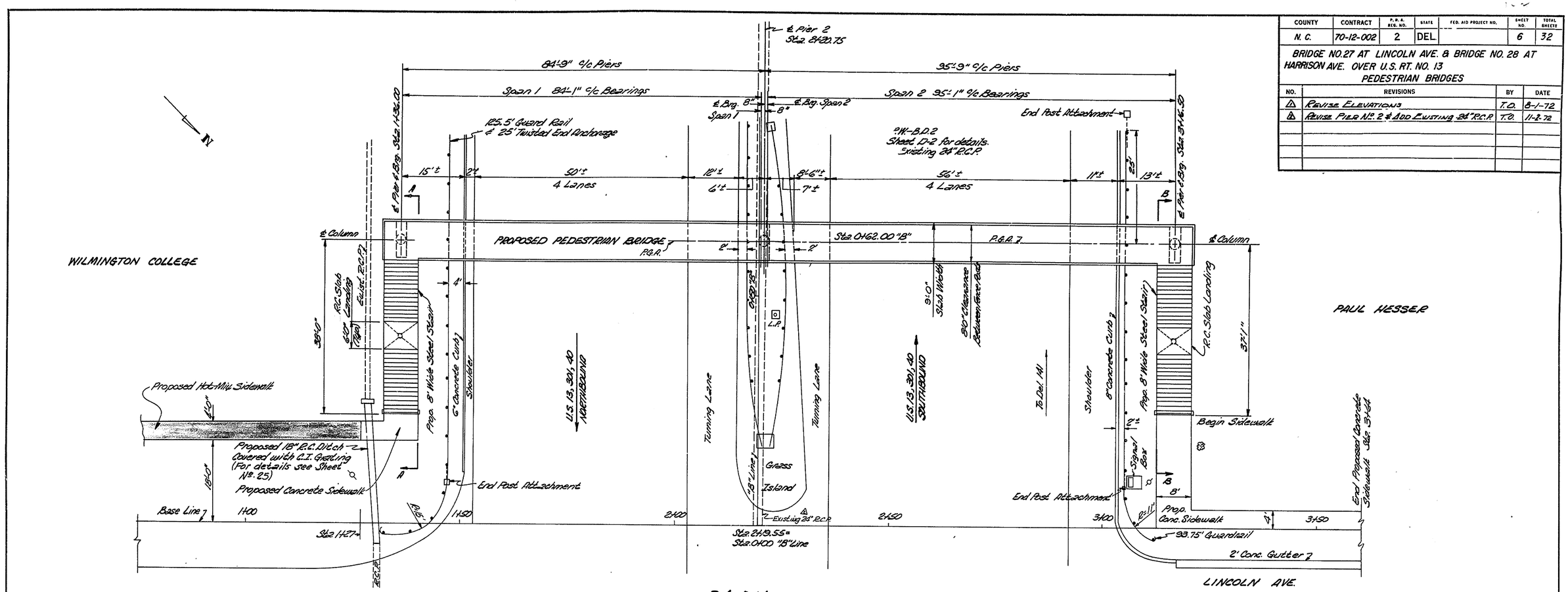

PLAN
3/32" = 1'-0"

CIRCULAR VERTICAL CURVE DATA
Length L = 160', Radius R = 2528.92'
Degree D = 2°16'
P.V.C. Sta. 1+40.75 El. 84.46
P.V.I. Sta. 2+20.75 El. 85.73
P.V.T. Sta. 3+00.75 El. 84.46

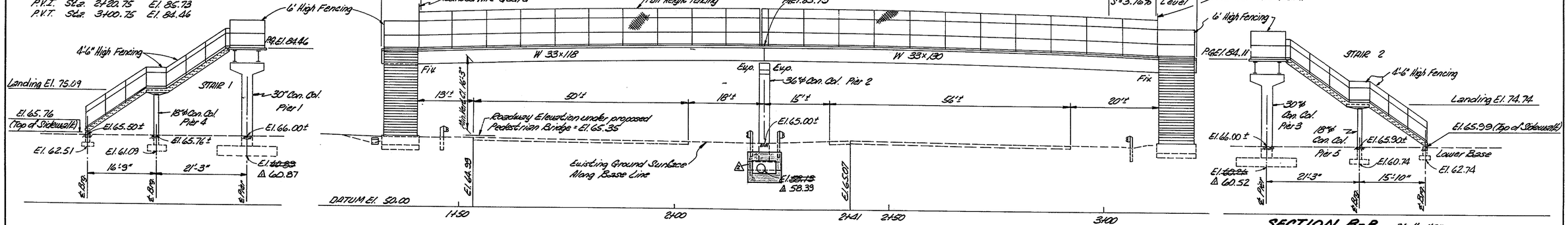

SECTION A-A
3/32" = 1'-0"

ELEVATION
3/32" = 1'-0"

SECTION B-B
3/32" = 1'-0"

NOTE!
No special payment for backfill. Use all suitable material removed under excavation.

DELAWARE
DEPARTMENT OF HIGHWAYS & TRANSPORTATION
DIVISION OF HIGHWAYS

GENERAL PLAN AND ELEVATION
BRIDGE NO. 27

	SCALE	APPROVED BY:
D. C.H. & T.O. T. G.R.D. C. T.O.	3/32" = 1'-0"	John E. Riehlis BRIDGE ENGINEER

COUNTY	CONTRACT	P.B.A. REG. NO.	STATE	FED. AID PROJECT NO.	SHEET NO.	TOTAL SHEETS
N. C.	70-12-002	2	DEL.		7	32

BRIDGE NO. 27 AT LINCOLN AVE. & BRIDGE NO. 28 AT HARRISON AVE OVER U.S. RT. NO13
PEDESTRIAN BRIDGES

NO.	REVISIONS	BY	DATE

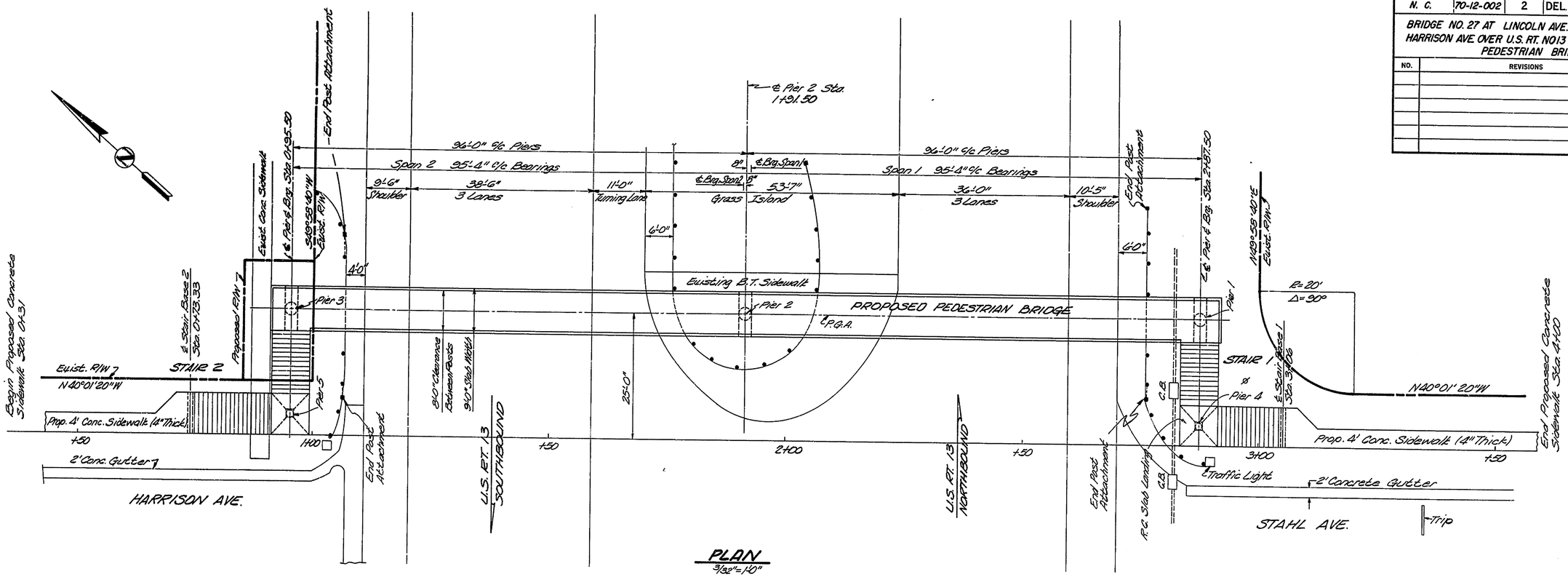

PLAN
3/32"=1'-0"

CIRCULAR VERTICAL CURVE DATA

Length L=180' Radius R=2528.92'
Degree D=2°16', e=1.59'
P.V.C. Sta. 1+01.50 El. 77.81
P.V.I. Sta. 1+91.50 El. 79.40
P.V.T. Sta. 2+81.50 El. 77.81

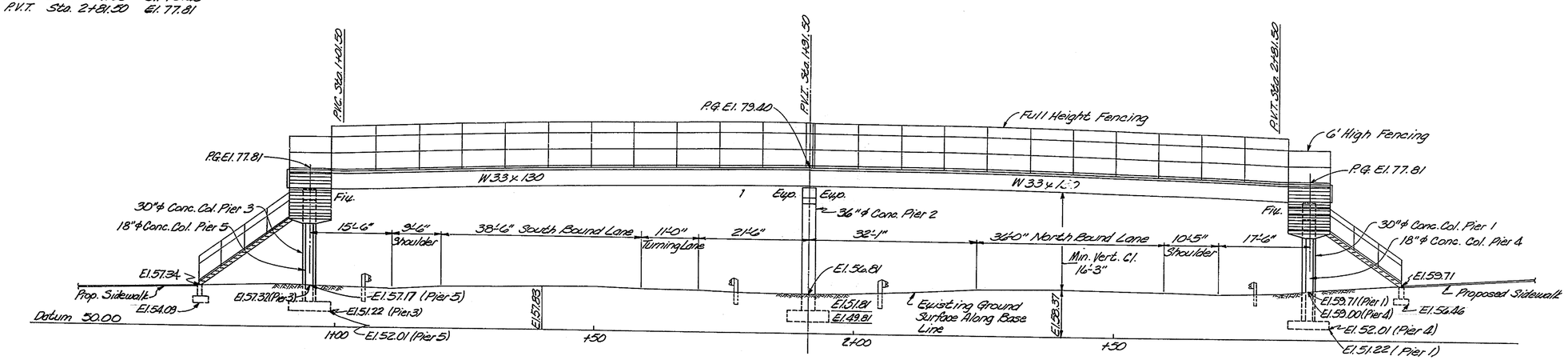

ELEVATION
3/32"=1'-0"

NOTE!
No special payment for backfill.
Use all suitable material removed under excavation.

DELAWARE
DEPARTMENT OF HIGHWAYS & TRANSPORTATION
DIVISION OF HIGHWAYS

GENERAL PLAN AND ELEVATION
BRIDGE NO. 28

D. T.O.	SCALE	APPROVED BY:
T. G.R.D.	3/32"=1'-0"	John S. Ruhler
C. C.H.		BRIDGE ENGINEER

COUNTY	CONTRACT	P.D.A. REG. NO.	STATE	FED. AID PROJECT NO.	SHEET NO.	TOTAL SHEETS
N. C.	70-12-002	2	DEL		8	32

BRIDGE NO. 27 AT LINCOLN AVE. & BRIDGE NO. 28 AT HARRISON AVE. OVER U.S. RT. NO. 13
PEDESTRIAN BRIDGES

NO.	REVISIONS	BY	DATE

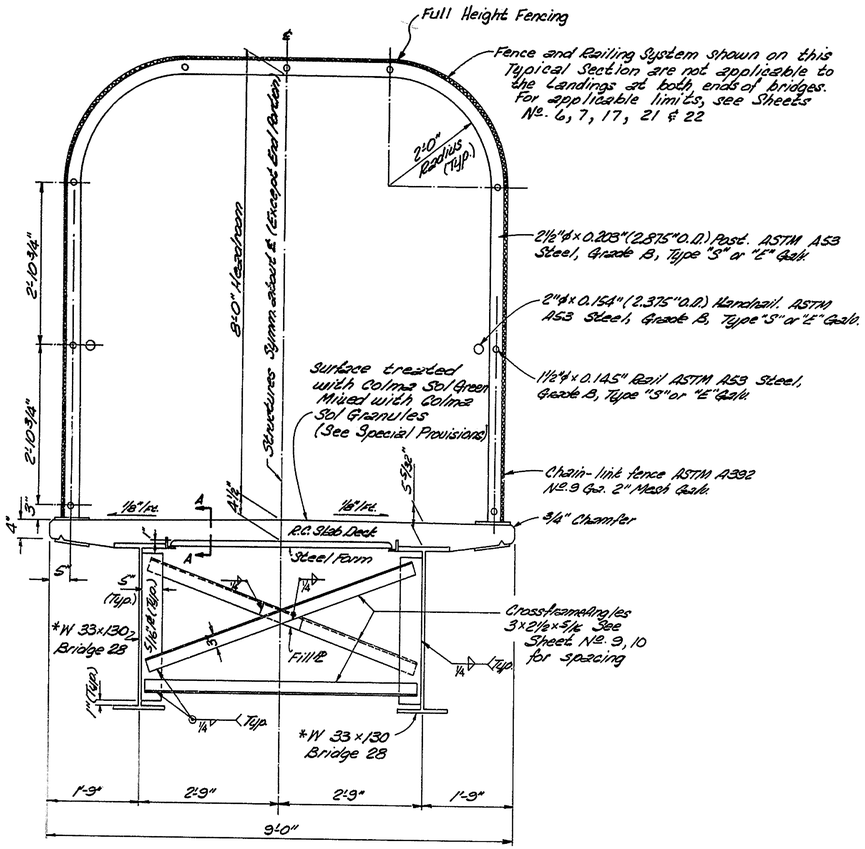

* Use W 33 x 118 for Span 1 & W 33 x 130 for Span 2 of Bridge No. 27

TYPICAL SECTION
3/4" = 1'-0"

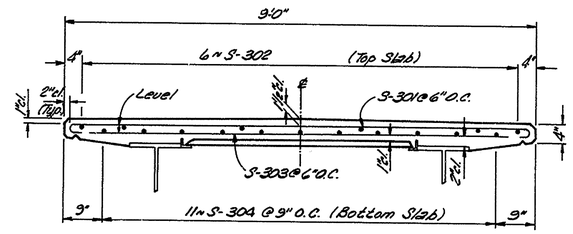

SLAB REINFORCEMENT
3/4" = 1'-0"

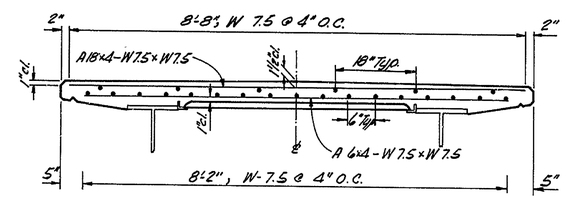

ALTERNATE SLAB REINFORCEMENT
WELDED WIRE FABRIC
3/4" = 1'-0"

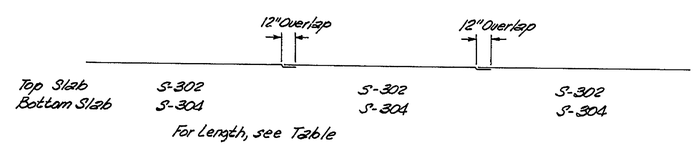

DETAIL OF BARS S-302 AND S-304
Not To Scale

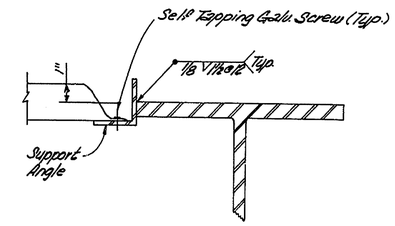

FLANGE DETAIL
Not To Scale

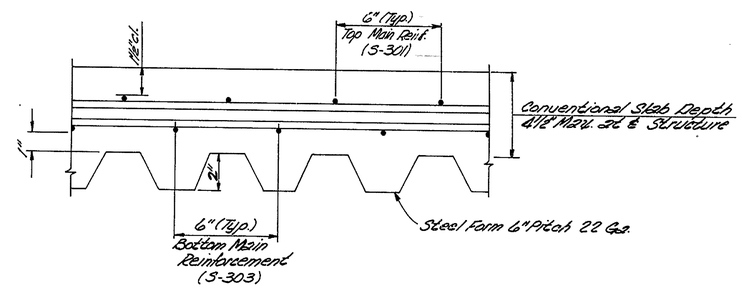

SECTION A-A
Not To Scale

NOTE!
1. Studs are not shown on drawings.
2. Colma Sol Green surface treatment shall be paid for under Section 602 P.C.C. Masonry - Superstructure.

SLAB BAR REINFORCEMENT										
	MARK	SIZE	BRIDGE No. 27				BRIDGE No. 28			
			SPAN 1		SPAN 2		SPAN 1		SPAN 2	
			Length	Number	Length	Number	Length	Number	Length	Number
STRAIGHT BARS	S-302	3	30'-3"	18	33'-10"	18	34'-0"	18	34'-0"	18
	S-303	3	8'-0"	179	8'-0"	201	8'-0"	201	8'-0"	201
	S-304	3	30'-3"	33	33'-10"	33	34'-0"	33	34'-0"	33
BENT BARS	S-301	3	9'-4"	178	9'-4"	200	9'-4"	201	9'-4"	201
BENDING DIAGRAM	8'-6"; 5" Lk.; 5" Lk.; S-301									

DELAWARE
DEPARTMENT OF HIGHWAYS & TRANSPORTATION
DIVISION OF HIGHWAYS

TYPICAL SECTION ~ SLAB REINFORCEMENT AND STEEL FORMS BRIDGES 27+28

D. CH. & T.O.	SCALE	APPROVED BY:
T. G.R.D.	AS SHOWN	
C. T.O.		BRIDGE ENGINEER

COUNTY	CONTRACT	P. M. A. REG. NO.	STATE	FED. AID PROJECT NO.	SHEET NO.	TOTAL SHEETS
N. C.	70-12-002	2	DEL.		9	32

BRIDGE NO. 27 AT LINCOLN AVE. & BRIDGE NO. 28 AT HARRISON AVE. OVER U.S. RT. NO. 13
PEDESTRIAN BRIDGES

NO.	REVISIONS	BY	DATE

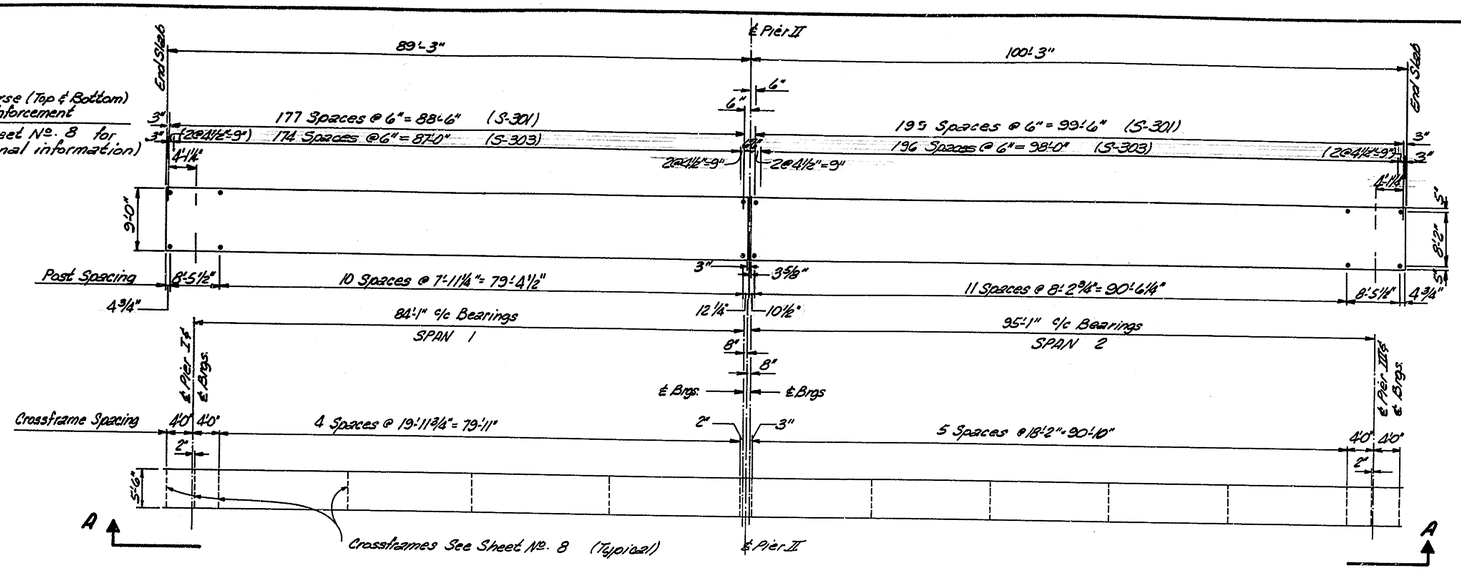

DECK PLAN AND STEEL FRAMING

3/32" = 1'-0"

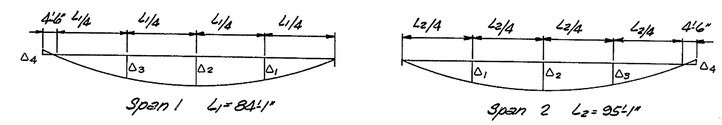

Δ4	Δ3	Δ2	Δ1		Δ1	Δ2	Δ3	Δ4
-0.13"	0.55"	0.78"	0.55"	Steel	0.87"	1.23"	0.87"	-0.18"
-0.32"	1.35"	1.88"	1.35"	Conc. Slab	1.93"	2.70"	1.93"	-0.41"
-0.03"	0.11"	0.16"	0.11"	Fence	0.17"	0.24"	0.17"	-0.04"
-0.48"	2.01"	2.82"	2.01"	Total	2.97"	4.17"	2.97"	-0.63"

DEAD LOAD DEFLECTION DIAGRAM

Not To Scale

NOTES:

1. Steel Beams shall be Cambered for dead load deflection and vertical curve.

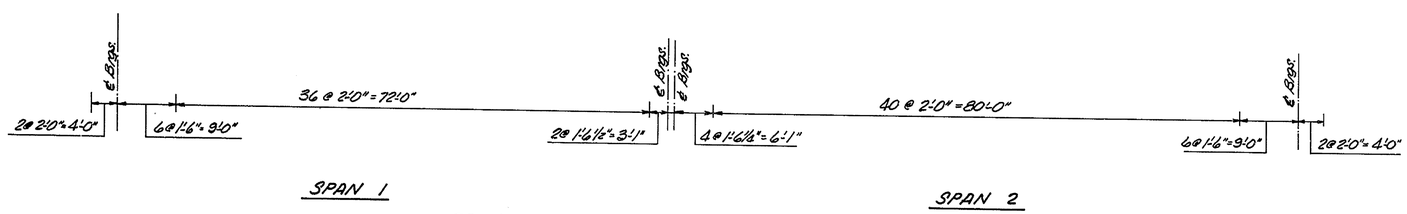

SPACING FOR STUD SHEAR CONNECTORS

3/32" = 1'-0"

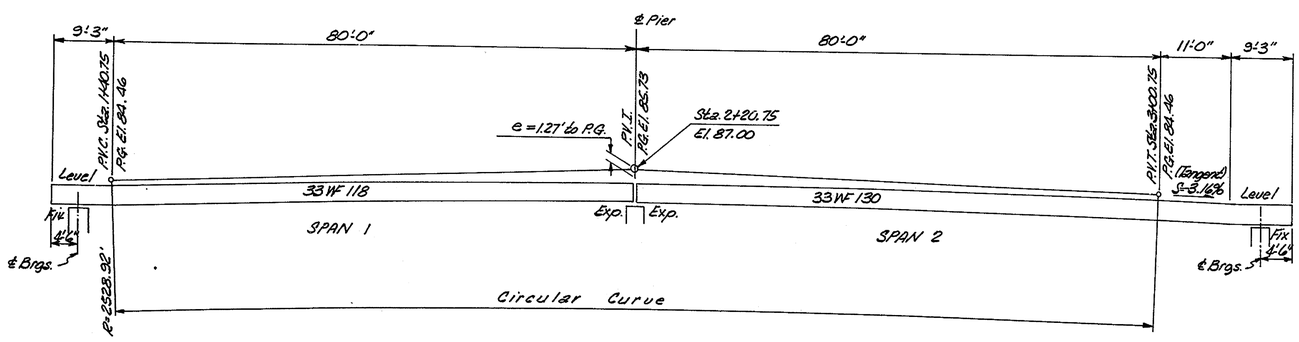

ELEVATION A-A

3/32" = 1'-0"

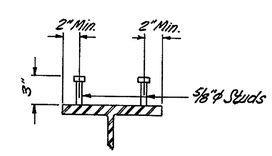

SHEAR CONNECTOR DETAIL

1½" = 1'-0"

DELAWARE
DEPARTMENT OF HIGHWAYS & TRANSPORTATION
DIVISION OF HIGHWAYS

DECK PLAN AND STEEL FRAMING
BRIDGE NO. 27

D. C.H.&T.O. T. G.R.D. C. T.O.	SCALE AS SHOWN	APPROVED BY: John E. Fisher BRIDGE ENGINEER

COUNTY	CONTRACT	P.R.A. REG. NO.	STATE	FED. AID PROJECT NO.	SHEET NO.	TOTAL SHEETS
N. C.	70-12-002	2	DEL		10	32

BRIDGE NO. 27 AT LINCOLN AVE. & BRIDGE NO. 28 AT HARRISON AVE. OVER U.S. RT. NO. 13
PEDESTRIAN BRIDGES

NO.	REVISIONS	BY	DATE

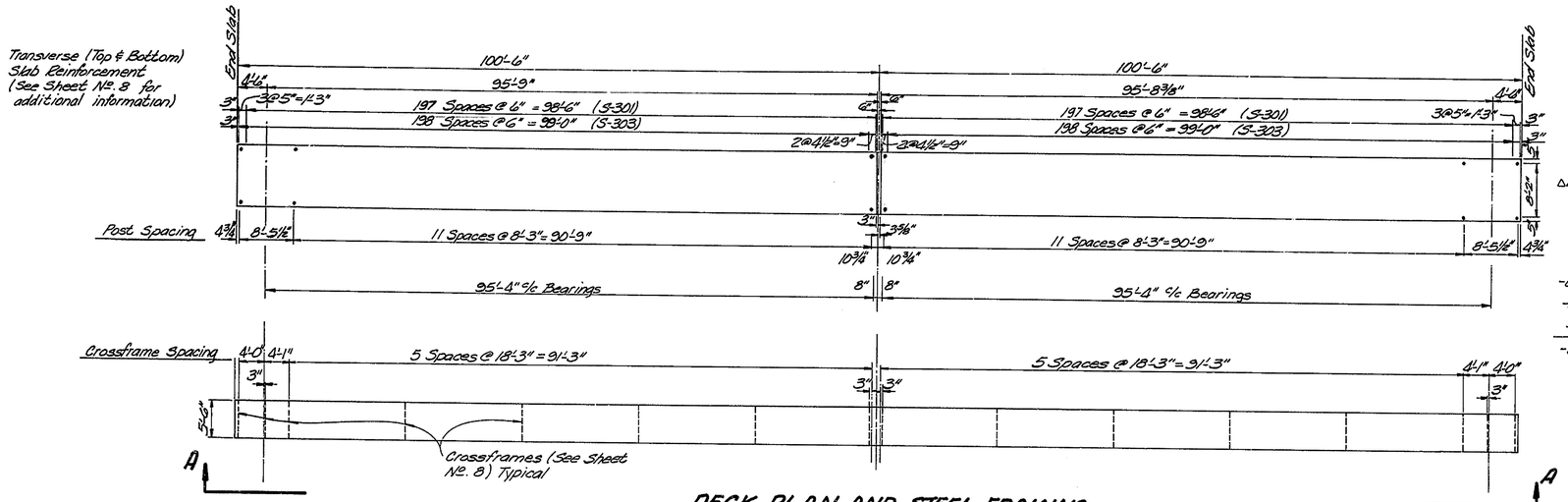

DECK PLAN AND STEEL FRAMING

3/32" = 1'-0"

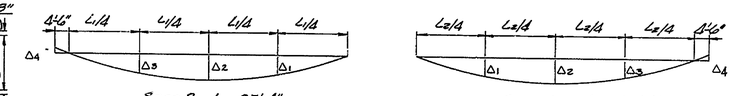

Δ4	Δ3	Δ2	Δ1		Δ1	Δ2	Δ3	Δ4
-0.18"	0.87"	1.23"	0.87"	Steel	0.87"	1.23"	0.87"	-0.18"
-0.41"	1.93"	2.70	1.93"	Conc. Slab	1.93"	2.70"	1.93	-0.41
-0.04"	0.17"	0.24"	0.17"	Fence	0.17"	0.24"	0.17"	-0.04
-0.63"	2.97"	4.17"	2.97"	Total	2.97"	4.17"	2.97"	-0.63

DEAD LOAD DEFLECTION DIAGRAM

Not To Scale

NOTE! Steel Beams shall be Cambered for dead load deflection and vertical curve.

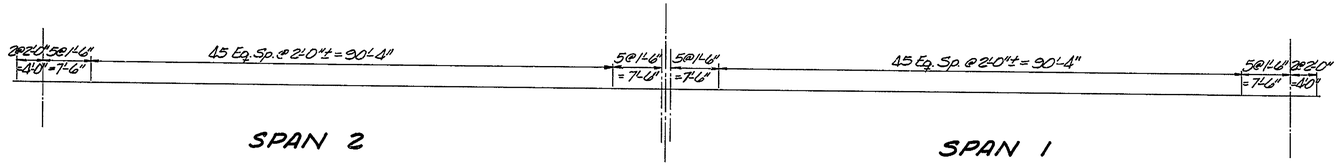

SPACING FOR STUD SHEAR CONNECTORS

3/32" = 1'-0"

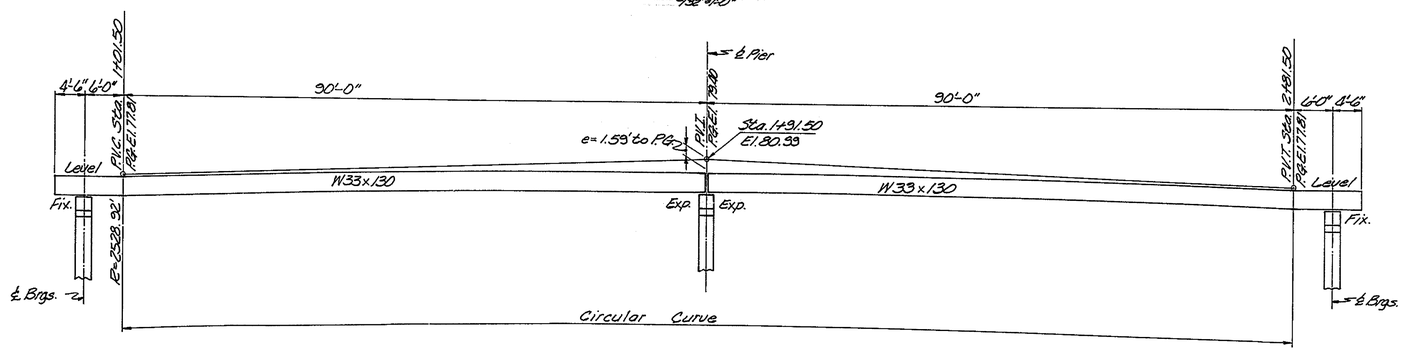

ELEVATION A-A

3/32" = 1'-0"

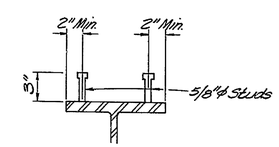

SHEAR CONNECTOR DETAIL

1½" = 1'-0"

DELAWARE
DEPARTMENT OF HIGHWAYS & TRANSPORTATION
DIVISION OF HIGHWAYS

DECK PLAN AND STEEL FRAMING
BRIDGE NO. 28

D.T.O.	SCALE	APPROVED BY:
T.G.R.D.	AS SHOWN	John H. Schaber
C.C.H.		BRIDGE ENGINEER

COUNTY	CONTRACT	P.B.A. REG. NO.	STATE	FED. AID PROJECT NO.	SHEET NO.	TOTAL SHEETS
N.C.	70-12-002	2	DEL.		11	32

BRIDGE NO. 27 AT LINCOLN AVE. & BRIDGE NO. 28 AT HARRISON AVE. OVER U.S. RT. NO. 13
PEDESTRIAN BRIDGES

NO.	REVISIONS	BY	DATE

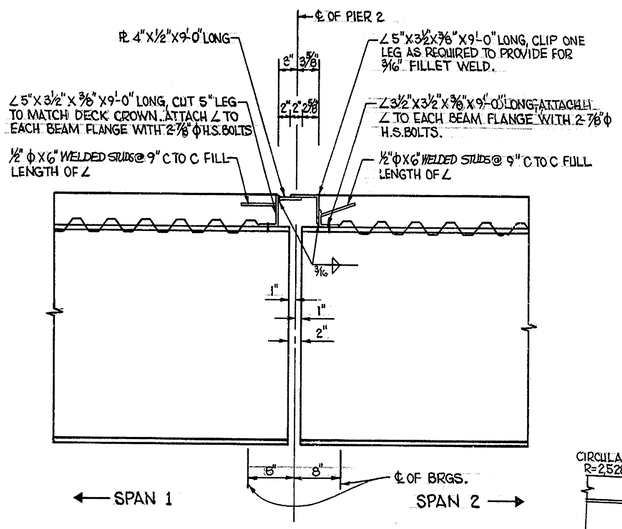

EXPANSION DAM – PIER 2
SCALE: 1"=1'-0"

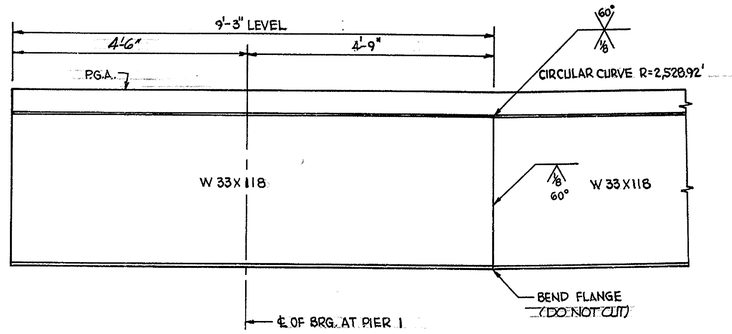

BEND DETAIL (SPAN 1, BRI. 27)
SCALE: 3/4"=1'-0"

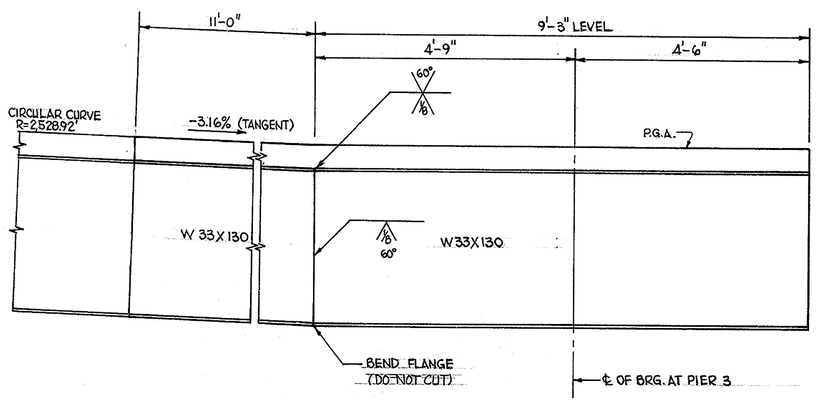

BEND DETAIL (SPAN 2, BRI. 27)
SCALE: 3/4"=1'-0"

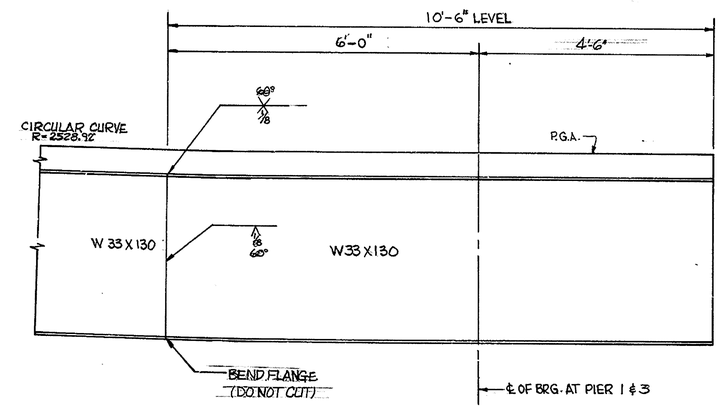

BEND DETAIL (SPAN 1 & 2 BR. 28)
SCALE: 3/4"=1'-0"

DELAWARE
DEPARTMENT OF HIGHWAYS & TRANSPORTATION
DIVISION OF HIGHWAYS

EXPANSION DAM & BEND DETAILS
BRIDGES NO. 27 & 28

D. C.H. & T.O.	SCALE	APPROVED BY:
T. R.F.	AS SHOWN	John E. Kinkler
C. T.O.		BRIDGE ENGINEER

COUNTY	CONTRACT	F.A.P. REG. NO.	STATE	FED. AID PROJECT NO.	SHEET NO.	TOTAL SHEETS
N. C.	70-12-002	2	DEL		12	32

BRIDGE NO.27 AT LINCOLN AVE. & BRIDGE NO. 28 AT HARRISON AVE. OVER U.S. RT. NO. 13
PEDESTRIAN BRIDGES

NO.	REVISIONS	BY	DATE
1	REVISE ELEVATIONS	T.O.	8-1-72
2	REVISE PIER No. 2	T.O.	11-2-72

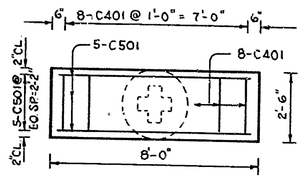

CAP PLAN
SCALE: 3/8"=1'-0"

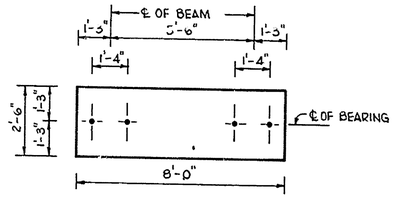

ANCHOR BOLTS LAYOUT FOR PIER 1 & 3
SCALE: 3/8"=1'-0"

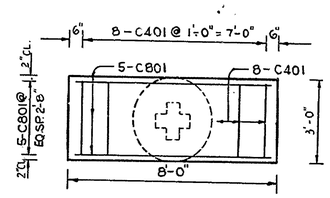

CAP PLAN
SCALE: 3/8"=1'-0"

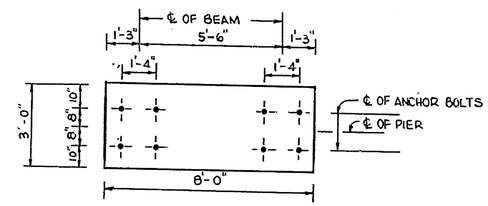

ANCHOR BOLTS LAYOUT FOR PIER 2
SCALE: 3/8"=1'-0"

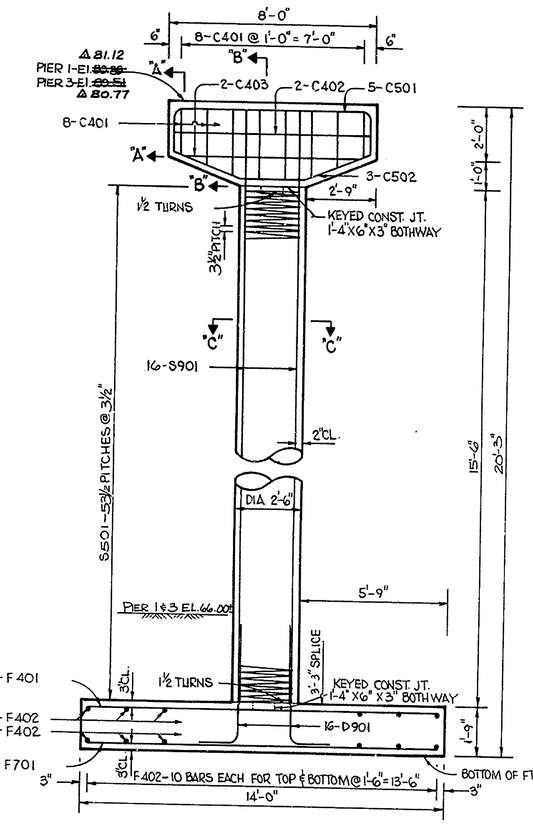

ELEVATION OF PIER 1 & 3
SCALE: 3/8"=1'-0"

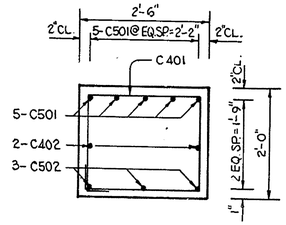

SECTION "A"-"A"
SCALE: 3/4"=1'-0"

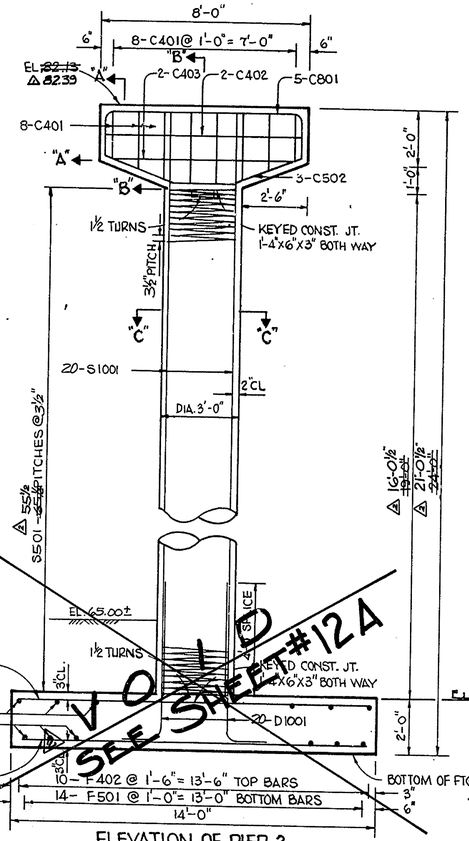

ELEVATION OF PIER 2
SCALE: 3/8"=1'-0"

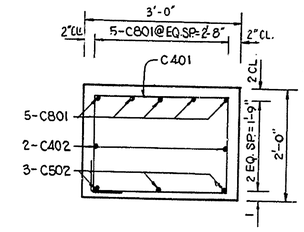

SECTION "A"-"A"
SCALE: 3/4"=1'-0"

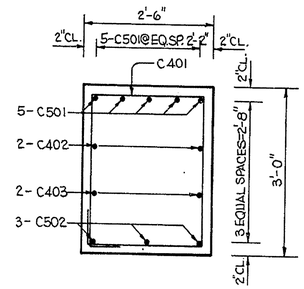

SECTION "B"-"B"
SCALE: 3/4"=1'-0"

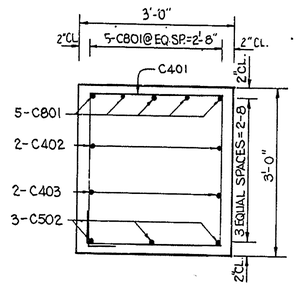

SECTION "B"-"B"
SCALE: 3/4"=1'-0"

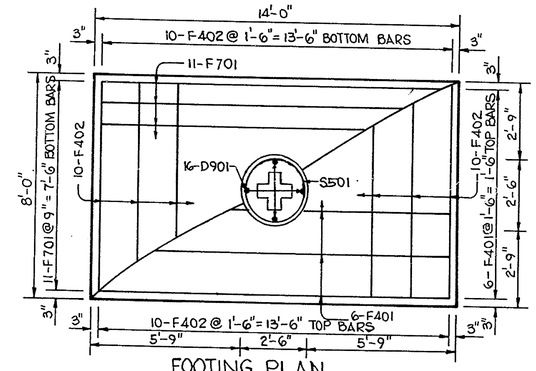

FOOTING PLAN
SCALE: 3/8"=1'-0"

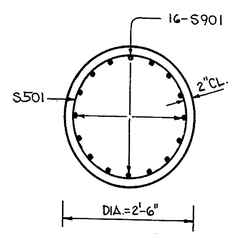

SECTION "C"-"C"
SCALE: 3/4"=1'-0"

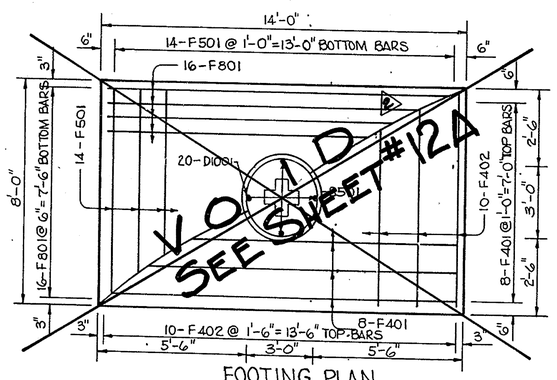

FOOTING PLAN
SCALE: 3/8"=1'-0"

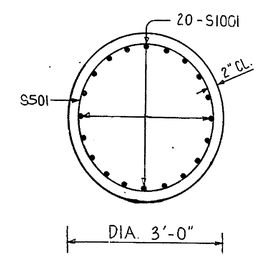

SECTION "C"-"C"
SCALE: 3/4"=1'-0"

REINFORCING BAR LIST

STRAIGHT BARS MARK	SIZE	LENGTH	NUMBER	BENT BARS MARK	SIZE	LENGTH	NUMBER
FOR PIER 1 & 3 PER PIER							
C402	4	7'-6"	2	C501	5	10'-6"	5
C403	4	6'-9"	2	C502	5	7'-10"	3
S901	9	18'-4"	16	C401	4	10'-8"	2
F701	7	13'-6"	11			10'-6"	2
F401	4	13'-6"	6			9'-8"	2
F402	4	7'-6"	20			9'-0"	2
				S501	5	384'-7"	1
				D901	9	6'-2"	16
FOR PIER 2							
C402	4	7'-6"	2	C801	8	10'-6"	5
C403	4 Δ	6'-9"	2	C502	5	7'-10"	3
S1001	10 ~~9~~	~~52'-10"~~	20	C401	4	11'-8"	2
F801	8	13'-6"	16			11'-6"	2
F501	5	7'-6"	14			10'-8"	2
F401	4	13'-6"	Δ ~~6~~ 12		Δ 490'-1"	10'-0"	2
F402	4	7'-6"	10	S501	5	~~5'-10"~~	1
Δ F502	5	6'-3"	28	D1001	10	7'-4"	20
Δ F802	8	7'-8"	7	Δ F503	5	5'-6"	20
Δ F803	8	7'-8"	14				

BENDING DIAGRAM

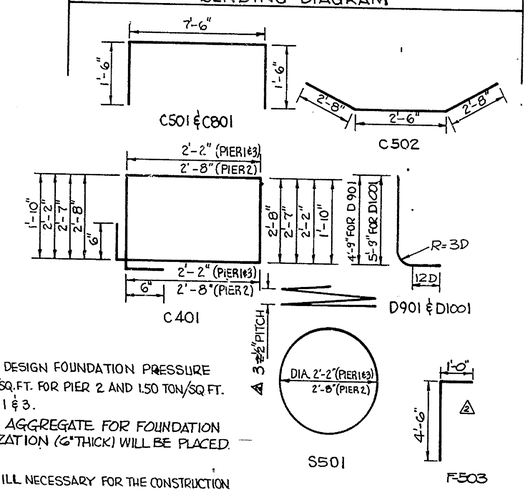

NOTE:

MAXIMUM DESIGN FOUNDATION PRESSURE 2. / TON/SQ.FT. FOR PIER 2 AND 1.50 TON/SQ FT. FOR PIER 1 & 3.

COARSE AGGREGATE FOR FOUNDATION STABILIZATION (6" THICK) WILL BE PLACED.

THE BACKFILL NECESSARY FOR THE CONSTRUCTION SHALL BE PLACED AS EARLY AS PRACTICABLE SO AS TO ALLOW THE MAXIMUM AMOUNT OF TIME FOR THE STABILIZATION OF THE BACKFILL. USE ORIGINAL SOIL FOR THE BACKFILL AFTER REMOVING ORGANIC MATERIAL UNLESS ORDERED BY ENGINEER.

DELAWARE
DEPARTMENT OF HIGHWAYS & TRANSPORTATION
DIVISION OF HIGHWAYS

PIERS 1, 2 & 3

BRIDGE NO. 27

D.C.H.B.T.O.	SCALE	APPROVED BY:
T.R.F.	AS SHOWN	John W. Fiddler
C. T.O.		BRIDGE ENGINEER

COUNTY	CONTRACT	P.R.A. REG. NO.	STATE	FED. AID PROJECT NO.	SHEET NO.	TOTAL SHEETS
N. C.	70-12-002	2	DEL.		12A	32

BRIDGE NO.27 AT LINCOLN AVE. & BRIDGE NO. 28 AT HARRISON AVE. OVER U.S. RT. NO. 13
PEDESTRIAN BRIDGES

NO.	REVISIONS	BY	DATE
1	Add Sheet ~ Revise Pier No. 2, Br. #27	T.O.	11-2-72

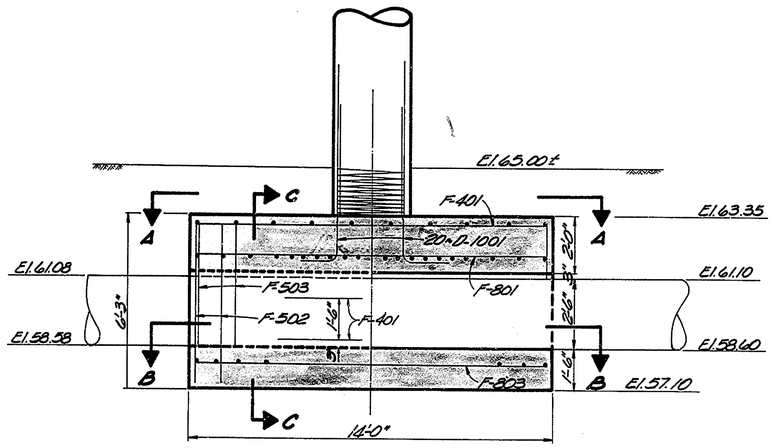

VIEW D-D VIEW E-E

ELEVATION OF PIER 2
3/8"=1'-0"

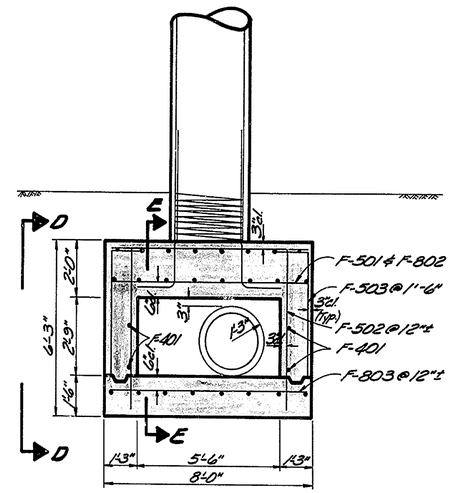

TYPICAL SECTION C-C
3/8"=1'-0"

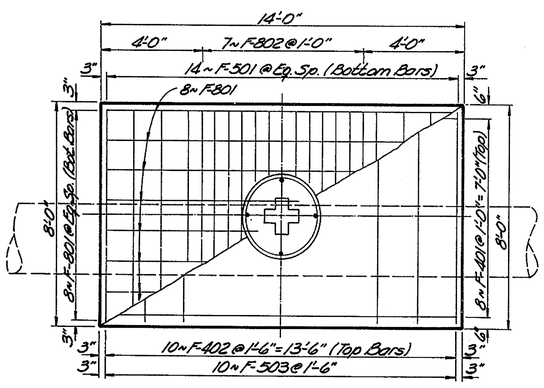

VIEW A-A
3/8"=1'-0"

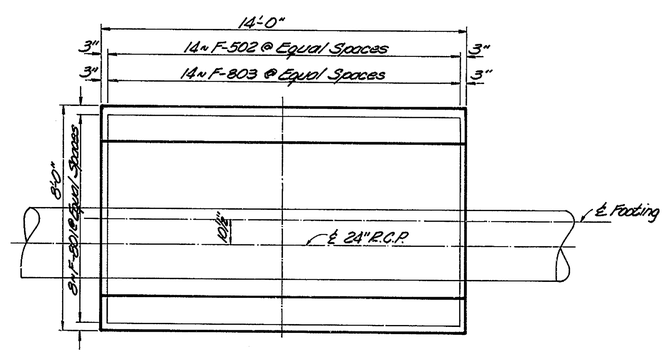

VIEW B-B
3/8"=1'-0"

DELAWARE
DEPARTMENT OF HIGHWAYS & TRANSPORTATION
DIVISION OF HIGHWAYS

PIER NO. 2
BRIDGE No. 27

D.T.O. T.G.R.D. C.C.H.	SCALE 3/8"=1'-0"	APPROVED BY: Robert C. McHendrick BRIDGE ENGINEER

COUNTY	CONTRACT	F.P.A. REG. NO.	STATE	FED. AID PROJECT NO.	SHEET NO.	TOTAL SHEETS
N. C.	70-12-002	2	DEL		13	32

BRIDGE NO.27 AT LINCOLN AVE. & BRIDGE NO. 28 AT HARRISON AVE. OVER U.S. RT. NO. 13
PEDESTRIAN BRIDGES

NO.	REVISIONS	BY	DATE

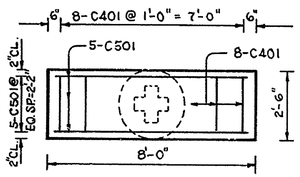

CAP PLAN
SCALE: 3/8"=1'-0"

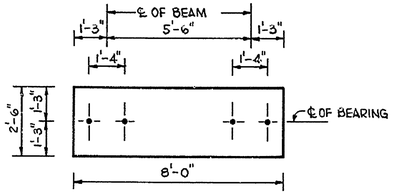

ANCHOR BOLTS LAYOUT FOR PIER 1 & 3
SCALE: 3/8"=1'-0"

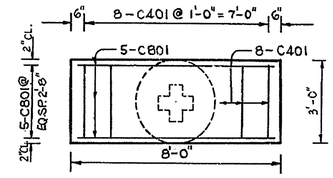

CAP PLAN
SCALE: 3/8"=1'-0"

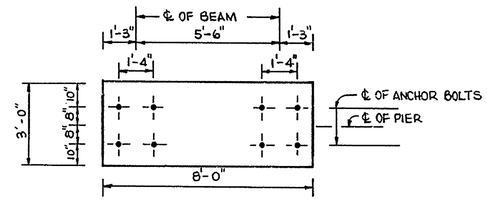

ANCHOR BOLTS LAYOUT FOR PIER 2
SCALE: 3/8"=1'-0"

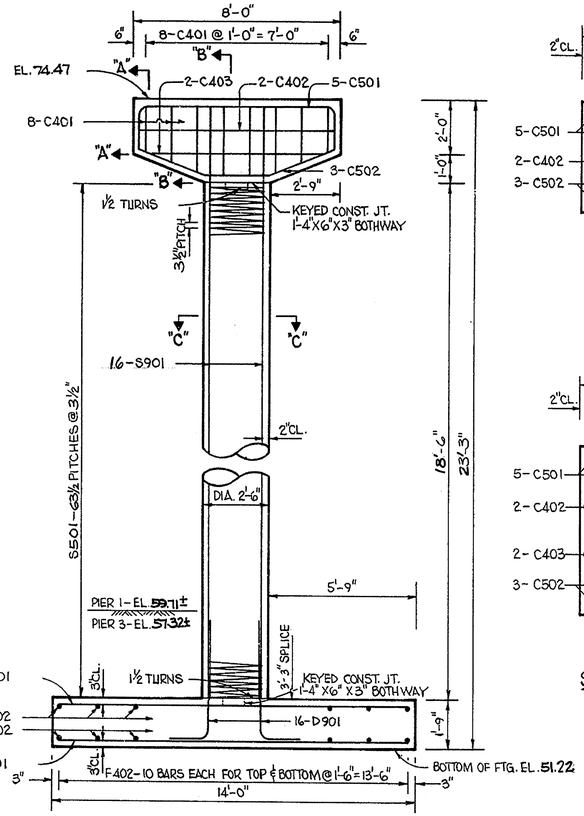

ELEVATION OF PIER 1 & 3
SCALE: 3/8"=1'-0"

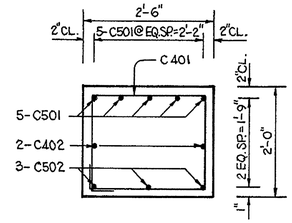

SECTION "A"-"A"
SCALE: 3/4"=1'-0"

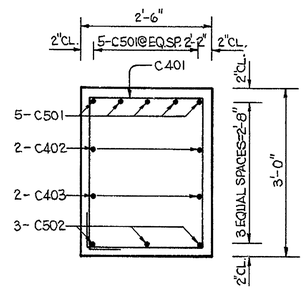

SECTION "B"-"B"
SCALE: 3/4"=1'-0"

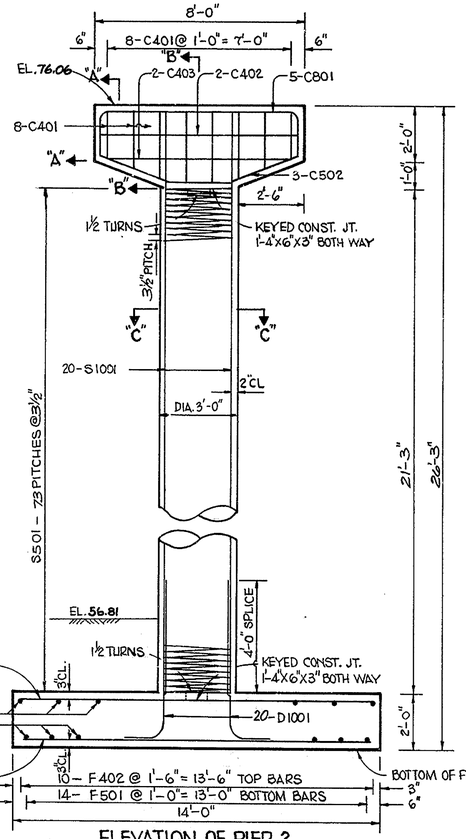

ELEVATION OF PIER 2
SCALE: 3/8"=1'-0"

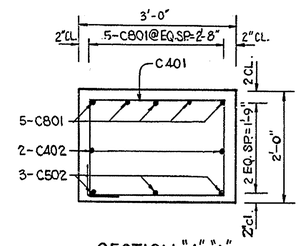

SECTION "A"-"A"
SCALE: 3/4"=1'-0"

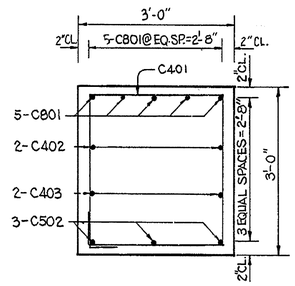

SECTION "B"-"B"
SCALE: 3/4"=1'-0"

REINFORCING BAR LIST

STRAIGHT BARS				BENT BARS			
MARK	SIZE	LENGTH	NUMBER	MARK	SIZE	LENGTH	NUMBER
FOR PIER 1 & 3 PER PIER							
C402	4	7'-6"	2	C501	5	10'-6"	5
C403	4	6'-9"	2	C502	5	7'-10"	3
S901	9	21'-4"	16	C401	4	10'-8"	2
F701	7	13'-6"	11			10'-6"	2
F401	4	13'-6"	6			9'-8"	2
F402	4	7'-6"	20			9'-0"	2
				S501	5	452'-8"	1
				D901	9	6'-2"	16
FOR PIER 2							
C402	4	7'-6"	2	C801	8	10'-6"	5
C403	4	6'-9"	2	C502	5	7'-10"	3
S1001	10	24'-1"	20	C401	4	11'-8"	2
F801	8	13'-6"	16			11'-6"	2
F501	5	7'-6"	14			10'-8"	2
F401	4	13'-6"	8			10'-0"	2
F402	4	7'-6"	10	S501	5	636'-9"	1
				D1001	10	7'-4"	20

BENDING DIAGRAM

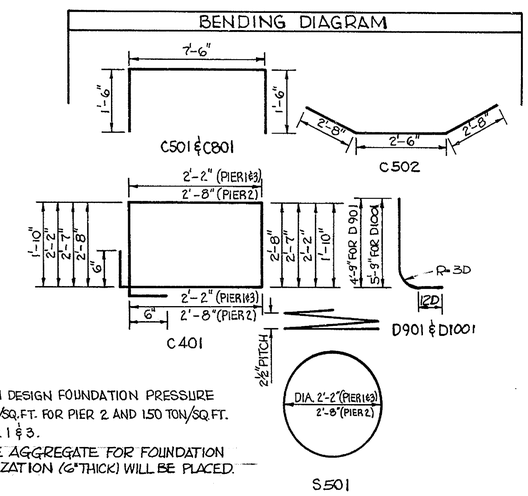

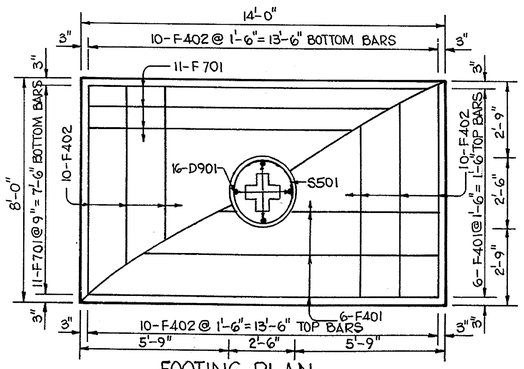

FOOTING PLAN
SCALE: 3/8"=1'-0"

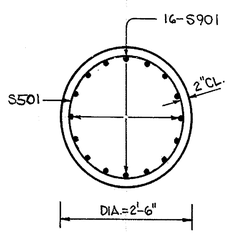

SECTION "C"-"C"
SCALE: 3/4"=1'-0"

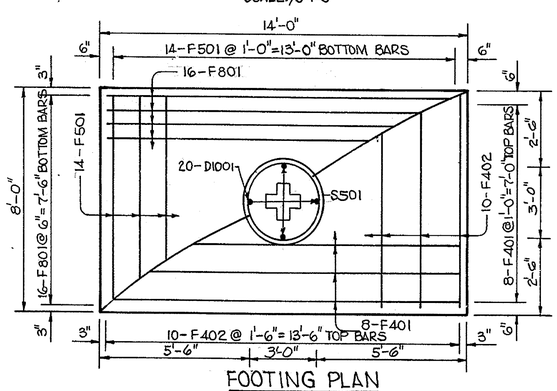

FOOTING PLAN
SCALE: 3/8"=1'-0"

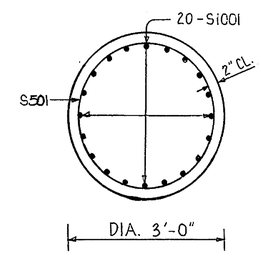

SECTION "C"-"C"
SCALE: 3/4"=1'-0"

NOTE:

MAXIMUM DESIGN FOUNDATION PRESSURE 2.1 TON/SQ.FT. FOR PIER 2 AND 1.50 TON/SQ.FT. FOR PIER 1 & 3.

COARSE AGGREGATE FOR FOUNDATION STABILIZATION (6" THICK) WILL BE PLACED.

THE BACKFILL NECESSARY FOR THE CONSTRUCTION SHALL BE PLACED AS EARLY AS PRACTICABLE SO AS TO ALLOW THE MAXIMUM AMOUNT OF TIME FOR THE STABILIZATION OF THE BACKFILL. USE ORIGINAL SOIL FOR THE BACKFILL AFTER REMOVING ORGANIC MATERIAL UNLESS ORDERED BY ENGINEER.

DELAWARE
DEPARTMENT OF HIGHWAYS & TRANSPORTATION
DIVISION OF HIGHWAYS

PIERS 1,2 & 3

BRIDGE NO. 28

D.C.H.&T.O.	SCALE	APPROVED BY:
T. R.F.	AS SHOWN	John H. Liebler
C. T.O.		BRIDGE ENGINEER

3 VAN DYKE 19 1253

COUNTY	CONTRACT	P.R.A. SEG. NO.	STATE	FED. AID PROJECT NO.	SHEET NO.	TOTAL SHEETS
N. C.	70-12-002	2	DEL.		14	32

BRIDGE NO. 27 AT LINCOLN AVE. & BRIDGE NO. 28 AT HARRISON AVE. OVER U.S. RT. NO. 13
PEDESTRIAN BRIDGES

NO.	REVISIONS	BY	DATE

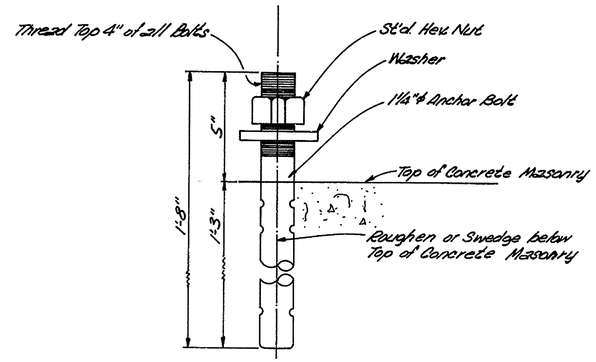

ANCHOR BOLT DETAIL
Not To Scale

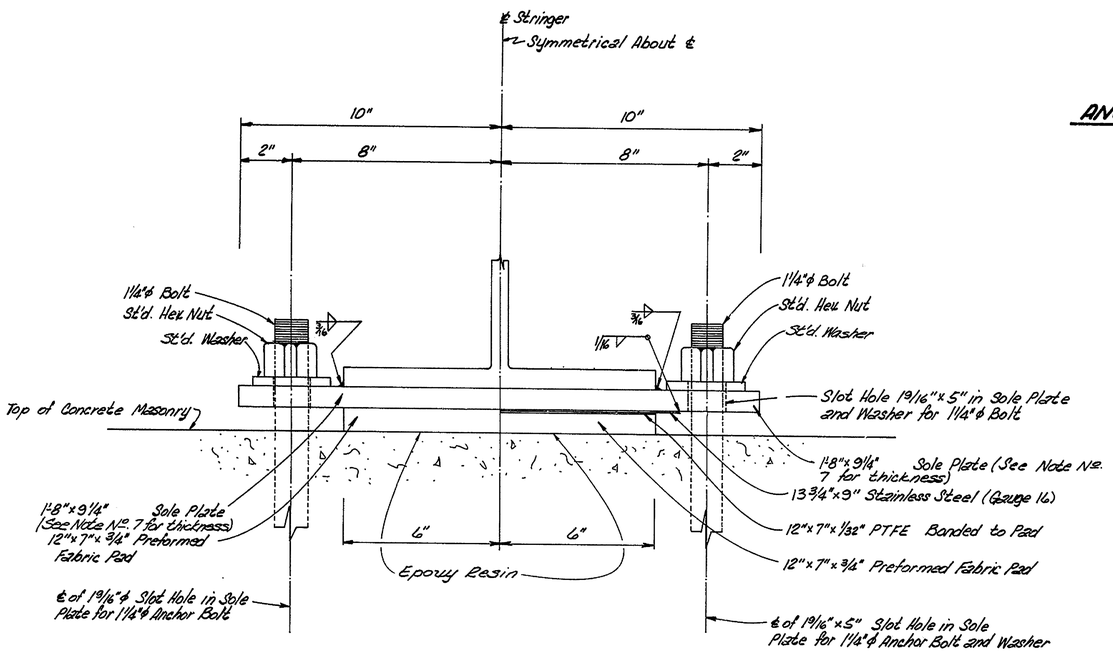

HALF END ELEVATION
FIXED BEARING SHOE

HALF END ELEVATION
EXPANSION BEARING SHOE

3/8" = 1'-0"

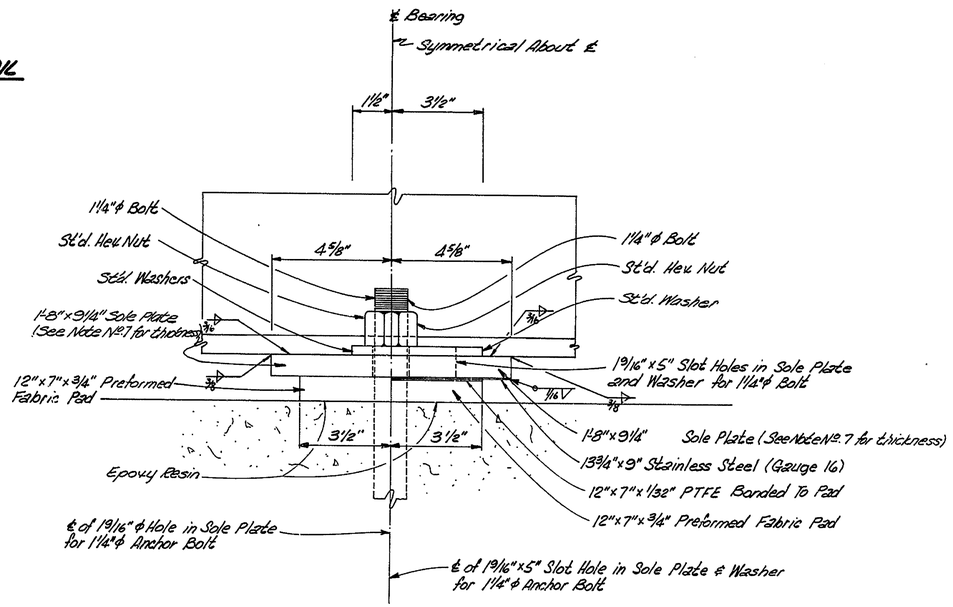

HALF SIDE ELEVATION
FIXED BEARING SHOE

HALF SIDE ELEVATION
EXPANSION BEARING SHOE

3/8" = 1'-0"

NOTES!

1. Sole Plates are to be AASHO M183 Steel and shall be painted.
2. Stainless Steel Plates shall have a 2B Finish on the side in contact with PTFE. Stainless Steel Plates shall not be painted.
3. P.T.F.E. denotes Polytetrafluoroethylene.
4. Preformed Fabric Pad shall conform with the A.A.S.H.O. Specification 2.10.3 (M)
5. Burr Threads on Anchor Bolts above and below nut anchor.
6. Bolts shall be set by use of templates.
7. Use Sole Plates with ¾" thickness for Span 2 of Bridge No. 27, Span 1 & 2 of Bridge No. 28, and Sole Plates with 1" thickness for Span 1 of Bridge No. 27.
8. Tighten Nuts by hand.
9. Nuts, Plate Washers, Sole Plates shall be galvanized.

DELAWARE
DEPARTMENT OF HIGHWAYS & TRANSPORTATION
DIVISION OF HIGHWAYS

BEARING SHOE DETAILS
PIERS 1, 2 & 3
BRIDGES NO. 27 & 28

	SCALE	APPROVED BY:
D. C.H. T. G.R.D. C. T.O.	AS SHOWN	John S. Riddle BRIDGE ENGINEER

COUNTY	CONTRACT	P.R.A. REG. NO.	STATE	FED. AID PROJECT NO.	SHEET NO.	TOTAL SHEETS
N. C.	70-12-002	2	DEL.		15	32

BRIDGE NO. 27 AT LINCOLN AVE. & BRIDGE NO. 28 AT HARRISON AVE. OVER U.S. RT. NO. 13
PEDESTRIAN BRIDGES

NO.	REVISIONS	BY	DATE
1	Handrail & Kick Plate Addition	GRD	7-20-73

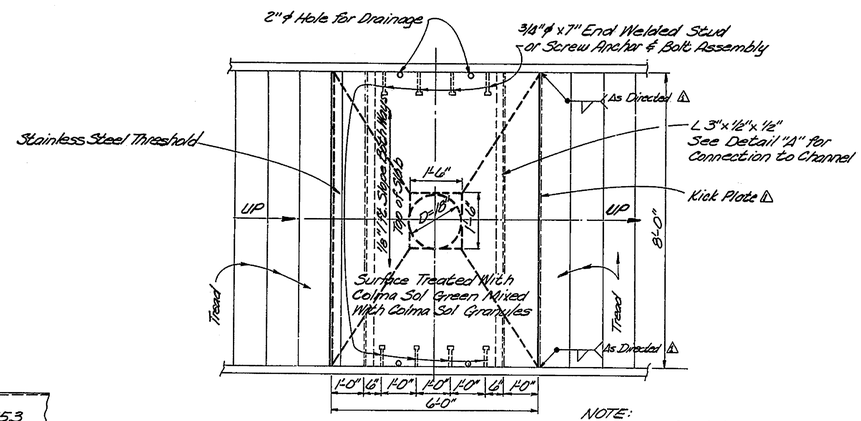

NOTE:
1" Chamfer & 1/2" Continuous Drip Groove provided at four edges

PLAN
1/2"=1'-0"

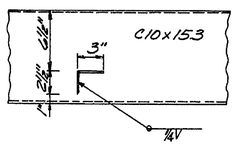

DETAIL "A" CONNECTION OF ANGLE TO CHANNEL
1 1/2"=1'-0"

NOTE! For Br. 28, The Angle will be Welded in the Field.

DETAILS: CHAMFER & GROOVE
1"=1'-0"

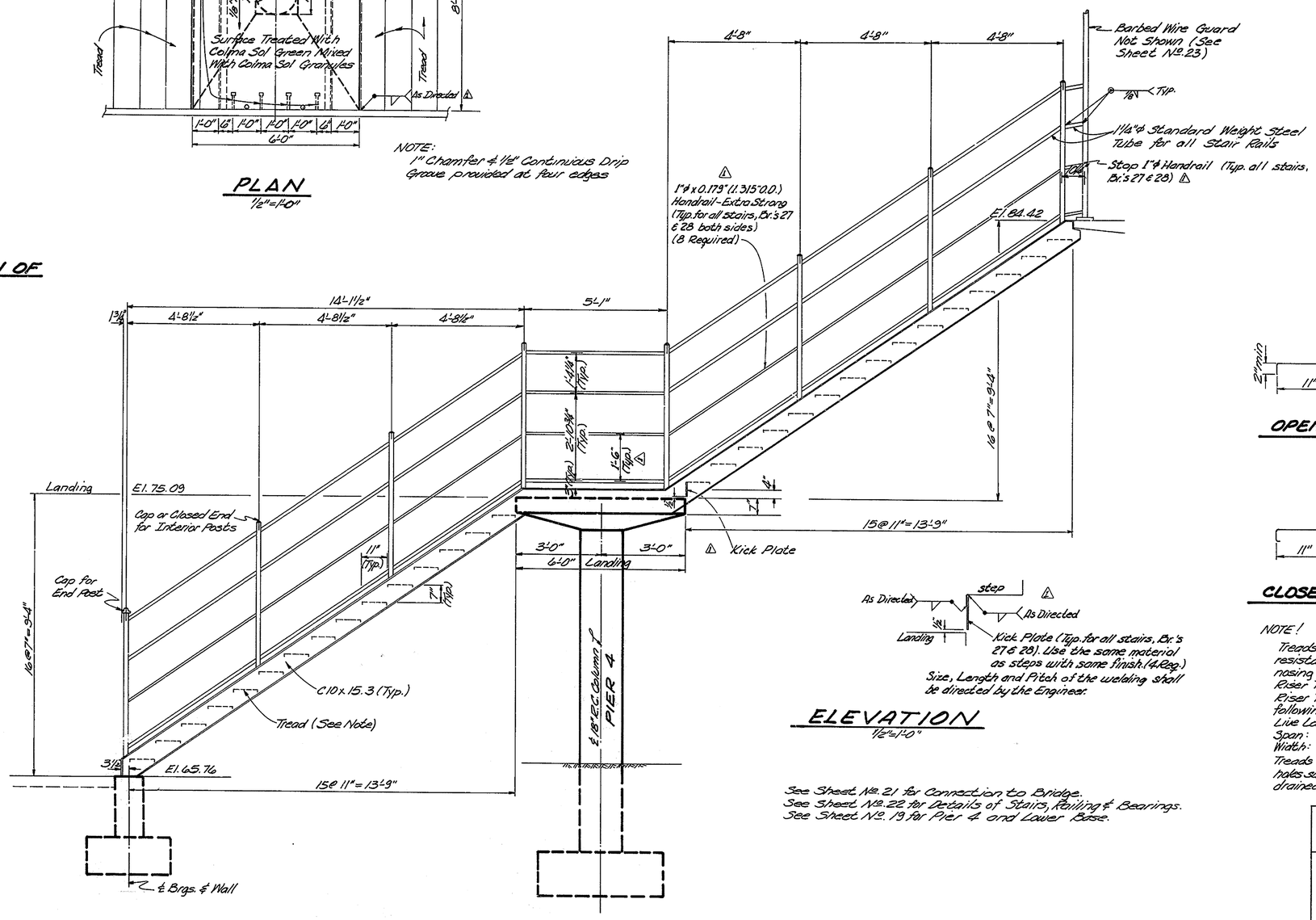

Kick Plate (Typ. for all stairs, Br.'s 27 & 28). Use the same material as steps with same finish. (4 Req.)
Size, Length and Pitch of the welding shall be directed by the Engineer.

ELEVATION
1/2"=1'-0"

See Sheet No. 21 for Connection to Bridge.
See Sheet No. 22 for Details of Stairs, Railing & Bearings.
See Sheet No. 19 for Pier 4 and Lower Base.

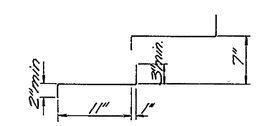

OPEN RISER TYPE

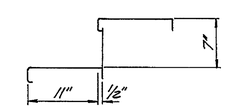

CLOSED RISER TYPE

NOTE!
Treads on all Stairs shall be skid resistant raised pattern plates with nosing and short riser bent (Open Riser Type) or closed riser (Closed Riser Type). They shall satisfy the following requirements:
Live Load: 85 lb/ft² of area walkway
Span: 8'
Width: 11" on Stairs
Treads on all stairs shall have small holes such that water can be effectively drained.

DELAWARE
DEPARTMENT OF HIGHWAYS & TRANSPORTATION
DIVISION OF HIGHWAYS

STAIR 1
BRIDGE NO. 27

D.T.O. T.G.R.D. C.C.H.	SCALE AS SHOWN	APPROVED BY: John E. Cubbe BRIDGE ENGINEER

COUNTY	CONTRACT	P.R.A. REG. NO.	STATE	FED. AID PROJECT NO.	SHEET NO.	TOTAL SHEETS
N. C.	70-12-002	2	DEL.		16	32

BRIDGE NO. 27 AT LINCOLN AVE. & BRIDGE NO. 28 AT HARRISON AVE. OVER U.S. RT. NO. 13

PEDESTRIAN BRIDGES

NO.	REVISIONS	BY	DATE

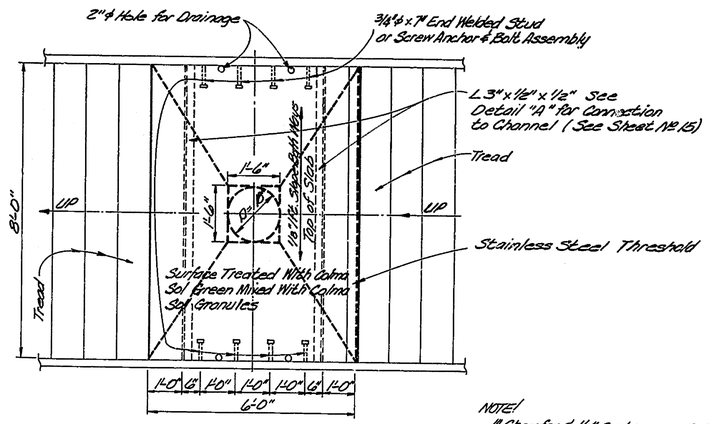

NOTE!
1" Chamfer & 1/2" Continuous Drip Groove provided at four edges

PLAN
1/2"=1'-0"

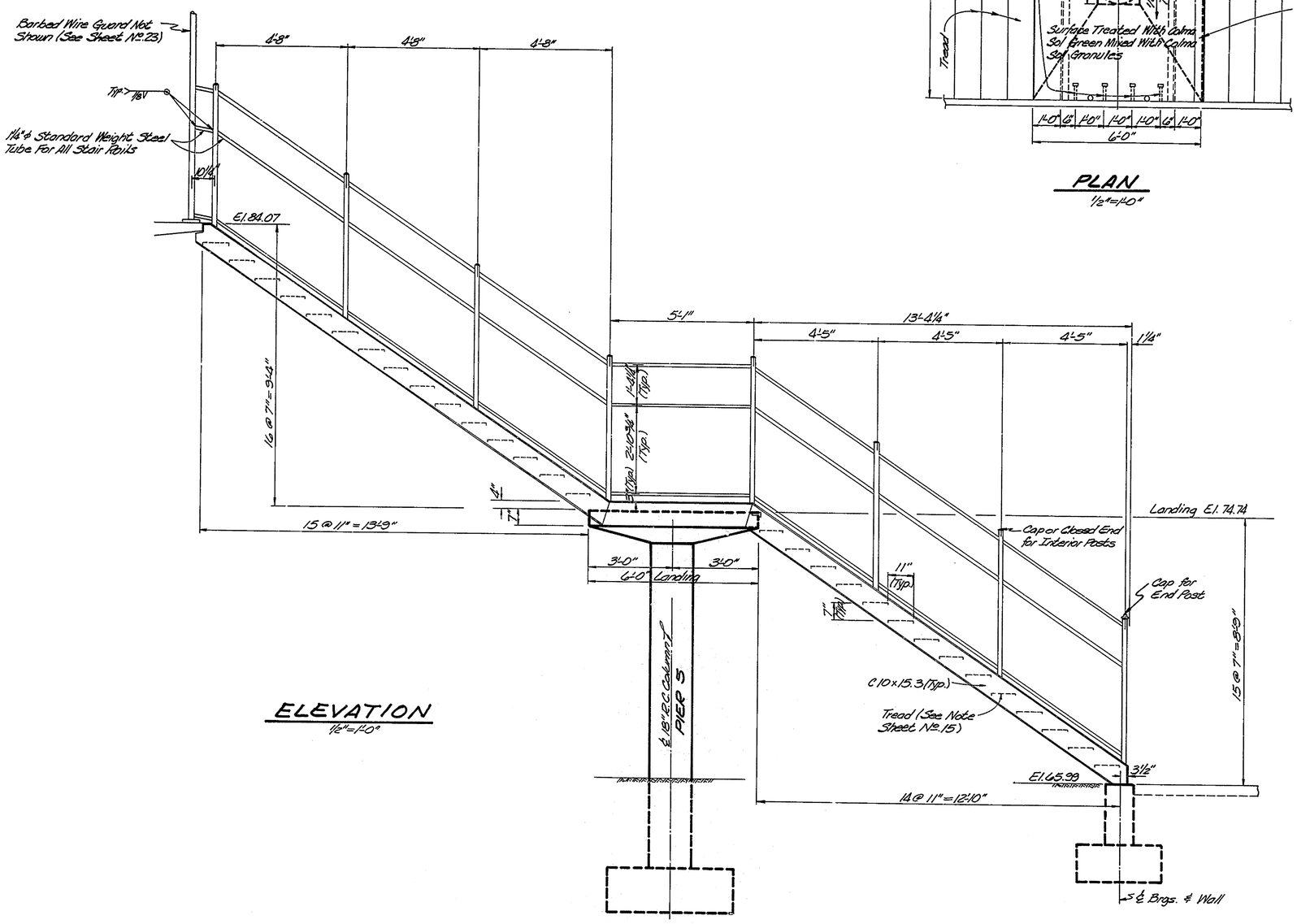

ELEVATION
1/2"=1'-0"

See Sheet No. 21 for Connection to Bridge.
See Sheet No. 22 for Details of Stairs, Railing & Bearing.
See Sheet No. 19 for Pier 5 and Lower Base.

DELAWARE
DEPARTMENT OF HIGHWAYS & TRANSPORTATION
DIVISION OF HIGHWAYS

STAIR 2

BRIDGE NO. 27

D. T.O.	SCALE	APPROVED BY:
T. G.R.D.	1/2" = 1'-0"	John E. Rubler
C. C.H.		BRIDGE ENGINEER

COUNTY	CONTRACT	P. B. A. REG. NO.	STATE	FED. AID PROJECT NO.	SHEET NO.	TOTAL SHEETS
N. C.	70-12-002	2	DEL		17	32

BRIDGE NO. 27 AT LINCOLN AVE. & BRIDGE NO. 28 AT HARRISON AVE. OVER U.S. RT. NO. 13

PEDESTRIAN BRIDGES

NO.	REVISIONS	BY	DATE

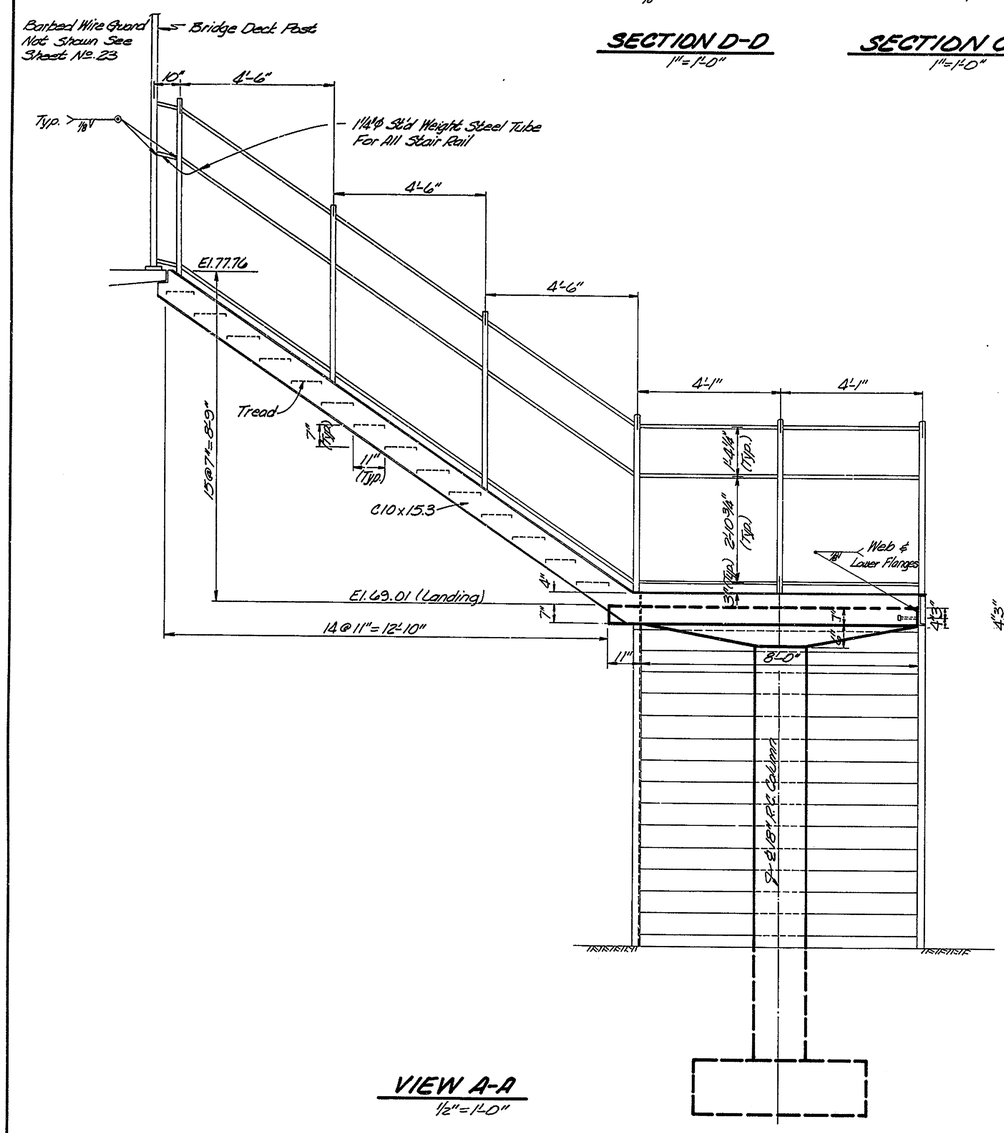

VIEW A-A
½" = 1'-0"

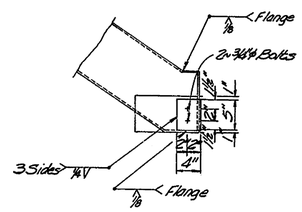

SECTION D-D
1" = 1'-0"

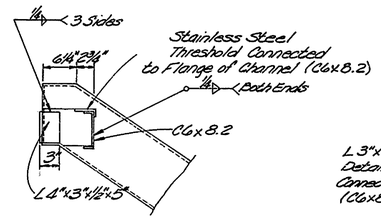

SECTION C-C
1" = 1'-0"

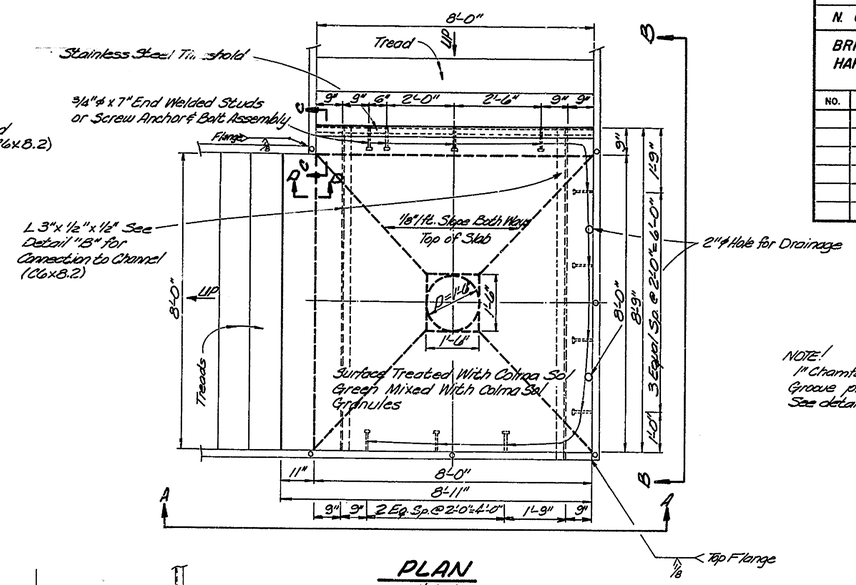

PLAN
½" = 1'-0"

NOTE:
1" Chamfer & ½" Continuous Drip Groove provided at four edges
See details on Sheet No. 15

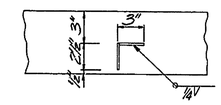

DETAIL "B" CONNECTION OF ANGLE TO CHANNEL
1½" = 1'-0"

See Sheet No. 21 for Connection to Bridge.
See Sheet No. 22 for Details of Stair, Railing & Bearings.
See Sheet No. 20 for Pier 4.
See Sheet No. 19 for Lower Base.

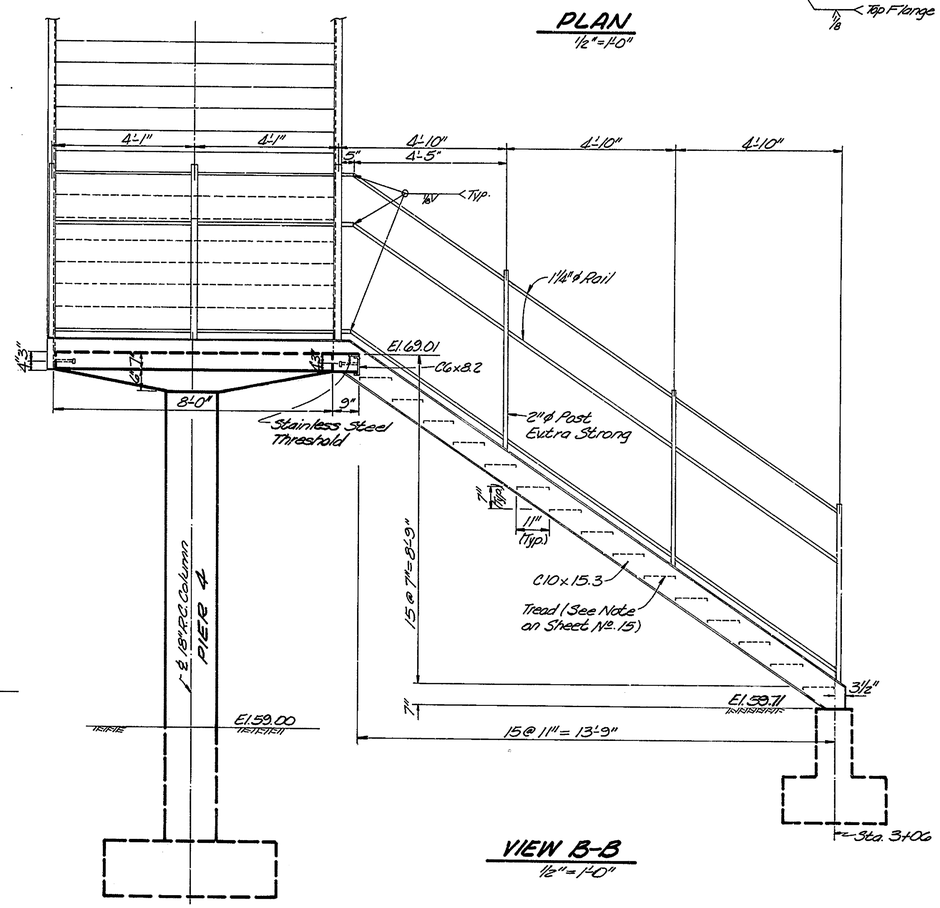

VIEW B-B
½" = 1'-0"

DELAWARE
DEPARTMENT OF HIGHWAYS & TRANSPORTATION
DIVISION OF HIGHWAYS

STAIR 1

BRIDGE NO. 28

D. T.O.	SCALE	APPROVED BY:
T. G.R.D.	AS SHOWN	BRIDGE ENGINEER
C. C.H.		

COUNTY	CONTRACT	F. B. A. REG. NO.	STATE	FED. AID PROJECT NO.	SHEET NO.	TOTAL SHEETS
N.C.	70-12-002	2	DEL.		18	32

BRIDGE NO. 27 AT LINCOLN AVE. & BRIDGE NO. 28 AT HARRISON AVE. OVER U.S. RT. NO. 13

PEDESTRIAN BRIDGES

NO.	REVISIONS	BY	DATE

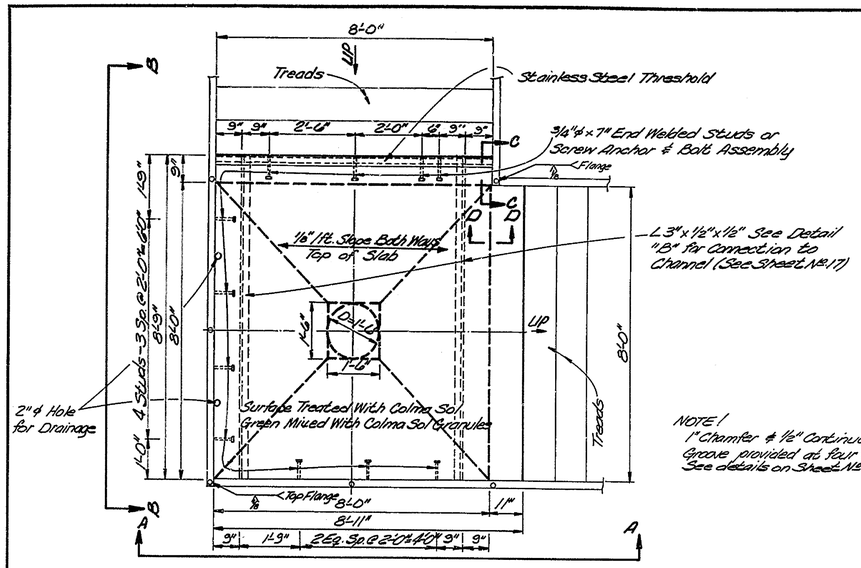

PLAN
1/2" = 1'-0"

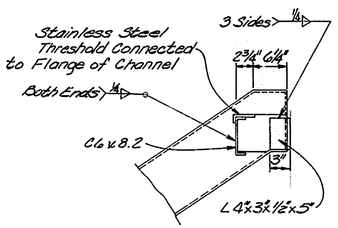

SECTION C-C
1" = 1'-0"

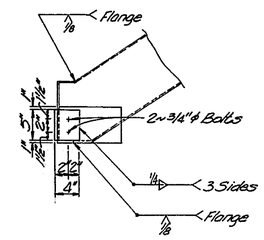

SECTION D-D
1" = 1'-0"

NOTE!
1" Chamfer & 1/2" Continuous Drip Groove provided at four edges See details on Sheet No. 13

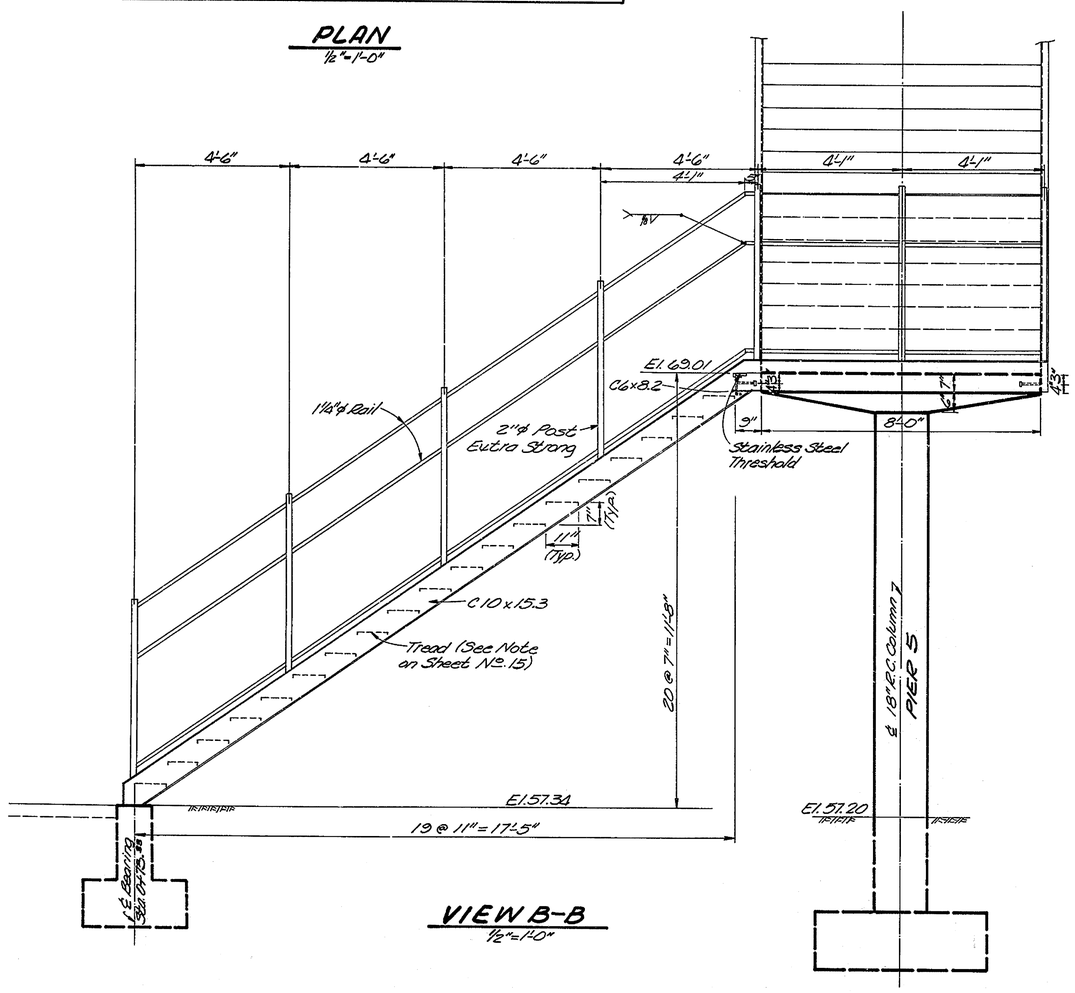

VIEW B-B
1/2" = 1'-0"

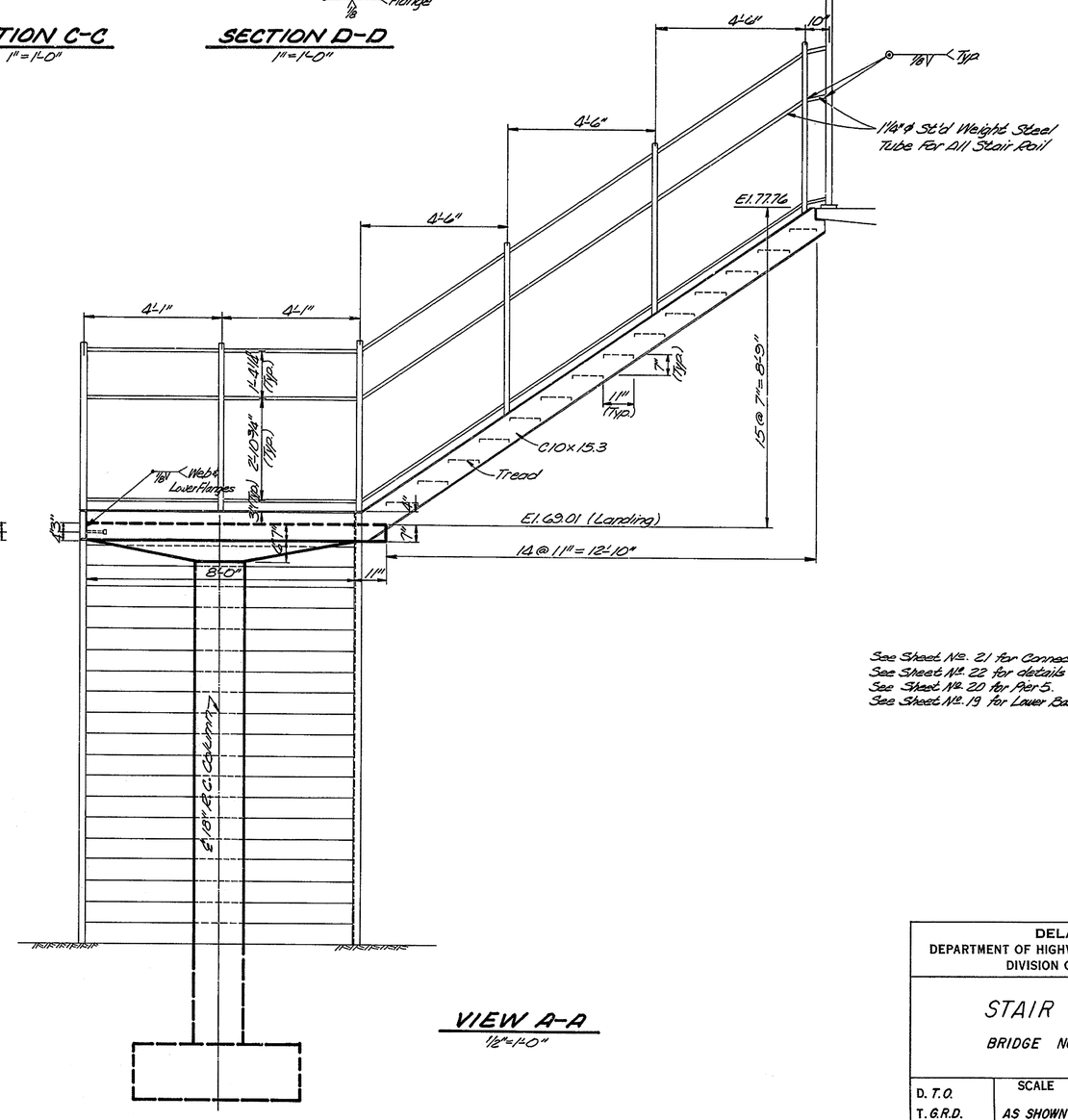

VIEW A-A
1/2" = 1'-0"

See Sheet No. 21 for Connection to Bridge.
See Sheet No. 22 for details of Stair, Railing & Bearings.
See Sheet No. 20 for Pier 5.
See Sheet No. 19 for Lower Base.

DELAWARE
DEPARTMENT OF HIGHWAYS & TRANSPORTATION
DIVISION OF HIGHWAYS

STAIR 2

BRIDGE NO. 28

D. T.O.	SCALE	APPROVED BY:
T. G.R.D.	AS SHOWN	
C. C.H.		BRIDGE ENGINEER

COUNTY	CONTRACT	P.R.A. REG. NO.	STATE	FED. AID PROJECT NO.	SHEET NO.	TOTAL SHEETS
N. C.	70-12-002	2	DEL.		19	32

BRIDGE NO. 27 AT LINCOLN AVE. & BRIDGE NO. 28 AT HARRISON AVE. OVER U.S. RT. NO. 13
PEDESTRIAN BRIDGES

NO.	REVISIONS	BY	DATE

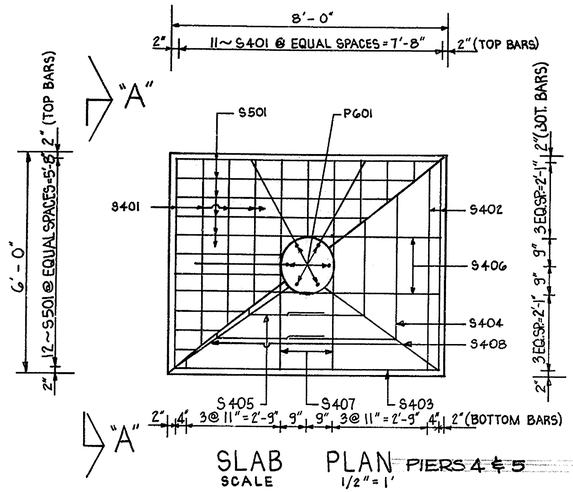

SLAB PLAN ~~PIERS 4 & 5~~
SCALE 1/2" = 1'

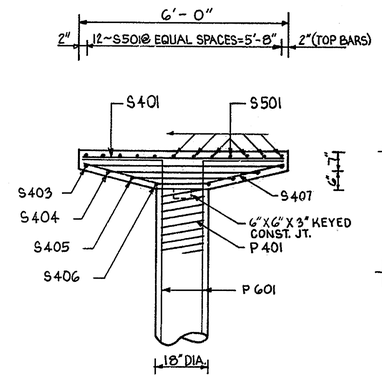

SECTION "A"-"A"
SCALE 1/2" = 1'

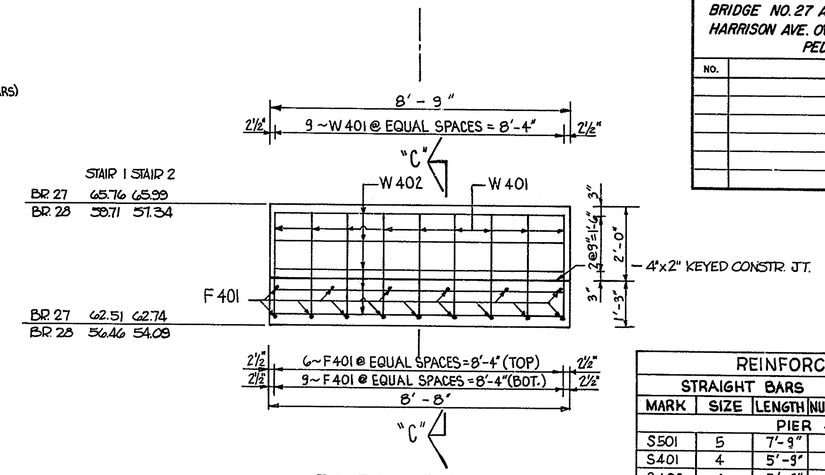

ELEVATION
LOWER STAIR BASE
SCALE 1/2" = 1'

REINFORCING BAR LIST							
STRAIGHT BARS				BENT BARS			
MARK	SIZE	LENGTH	NUMBER	MARK	SIZE	LENGTH	NUMBER
PIER 4 & 5 (EACH PIER)							
S501	5	7'-9"	12	P601	6	14'-11"	6
S401	4	5'-9"	11	D601	6	4'-9"	6
S402	4	5'-9"	4	S404	4	20'-0"	1
S403	4	7'-9"	2	S405	4	13'-6"	1
F401	4	6'-1"	9	S406	4	7'-10"	2
F402	4	4'-1"	12	S407	4	5'-10"	2
				S408	4	4'-10"	4
				P401	4	155'-9"	1
LOWER STAIR BASE 1 & 2 (EACH STAIR BASE)							
W401	4	2'-9"	18				
W402	4	8'-4"	14				
F401	4	2'-6"	15				

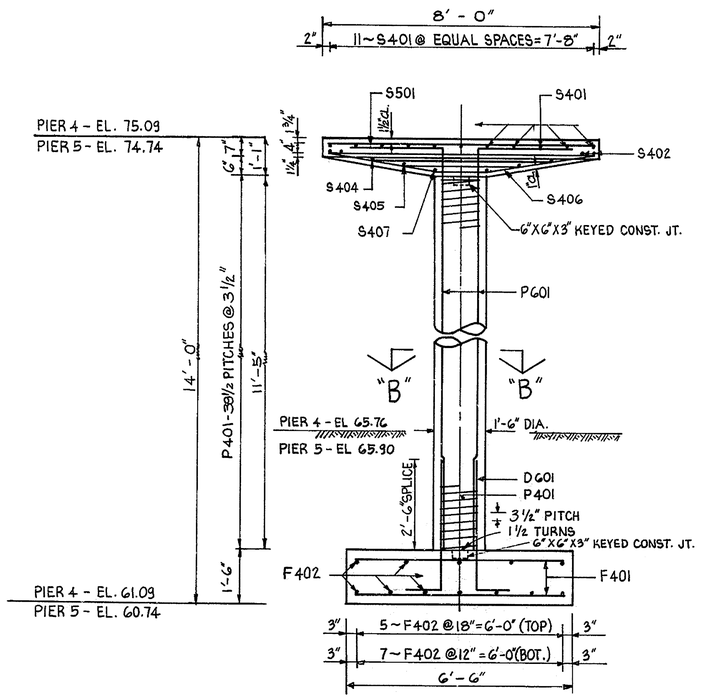

ELEVATION ~~PIERS 4 & 5~~
SCALE 1/2" = 1'

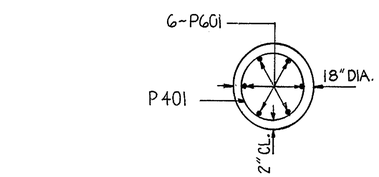

SECTION "B"-"B"
SCALE 3/4" = 1'

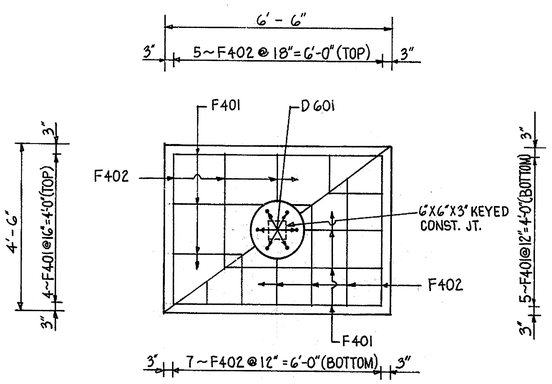

FOOTING PLAN
SCALE 1/2" = 1'

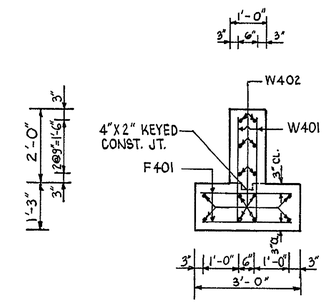

SECTION "C"-"C"
SCALE 1/2" = 1'

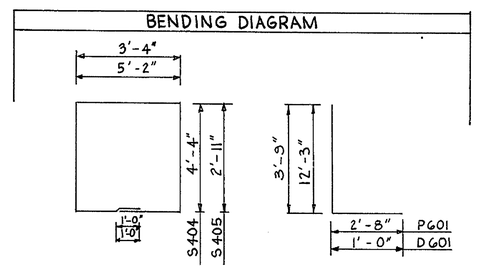

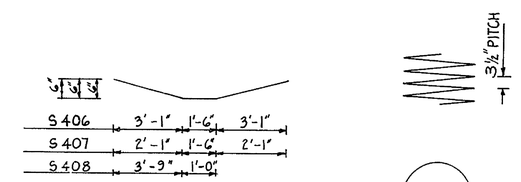

P401

NOTE:

MAXIMUM DESIGN FOUNDATION PRESSURE 1.00 TON/SQ. FT. FOR PIER 4 & 5 AND 0.30 TON/SQ. FT. FOR LOWER STAIR BASE THE BACKFILL NECESSARY FOR THE CONSTRUCTION SHALL BE PLACED AS EARLY AS PRACTICABLE SO AS TO ALLOW THE MAXIMUM AMOUNT OF TIME FOR THE STABILIZATION OF THE BACKFILL. USE ORIGINAL SOIL FOR THE BACKFILL AFTER REMOVING ORGANIC MATERIAL UNLESS ORDERED BY THE ENGINEER. COARSE AGGREGATE FOR FOUNDATION STABILIZATION (6" THICK) WILL BE PLACED UNDER FOOTING OF PIERS 4 & 5 AND LOWER STAIR BASE.

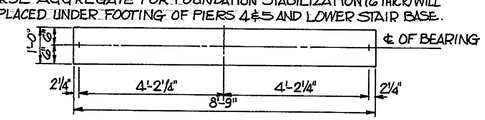

ANCHOR BOLTS LAYOUT FOR LOWER STAIR BASE
SCALE 1/2" = 1'

DELAWARE
DEPARTMENT OF HIGHWAYS & TRANSPORTATION
DIVISION OF HIGHWAYS

PIERS 4 & 5
LOWER STAIR BASE
BR. NO. 27 & 28

D. T.O.	SCALE	APPROVED BY:
T. F. B.	AS SHOWN	John S. Pulley
C. C.-H.		BRIDGE ENGINEER

COUNTY	CONTRACT	P.R.A. REG. NO.	STATE	FED. AID PROJECT NO.	SHEET NO.	TOTAL SHEETS
N.C.	70-12-002	2	DEL.		20	32

BRIDGE NO.27 AT LINCOLN AVE. & BRIDGE NO. 28 AT HARRISON AVE. OVER U.S. RT. NO. 13
PEDESTRIAN BRIDGES

NO.	REVISIONS	BY	DATE

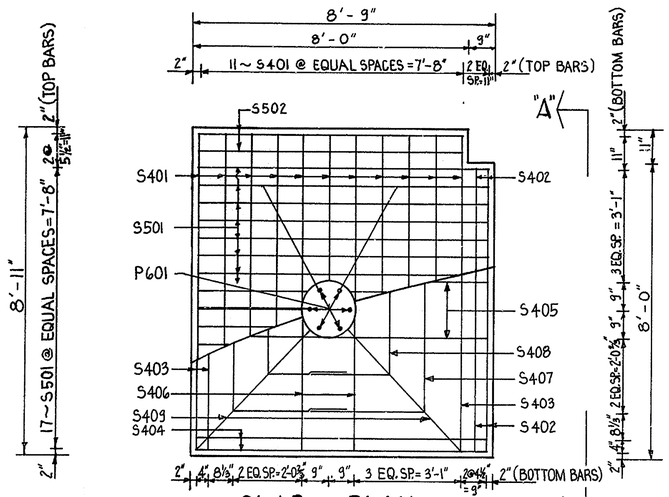

SLAB PLAN
SCALE 1/2" = 1'

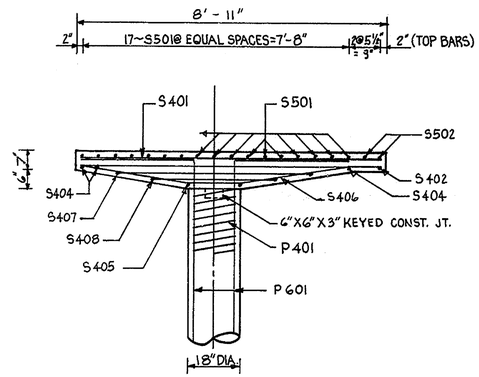

SECTION "A"-"A"
SCALE 1/2" = 1'

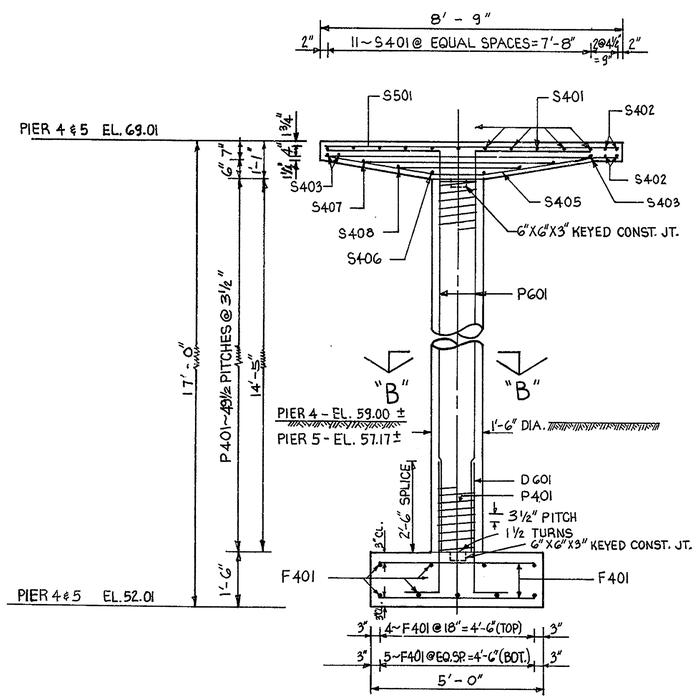

ELEVATION
SCALE 1/2" = 1'

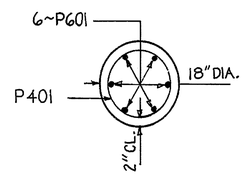

SECTION "B"-"B"
SCALE 3/4" = 1'

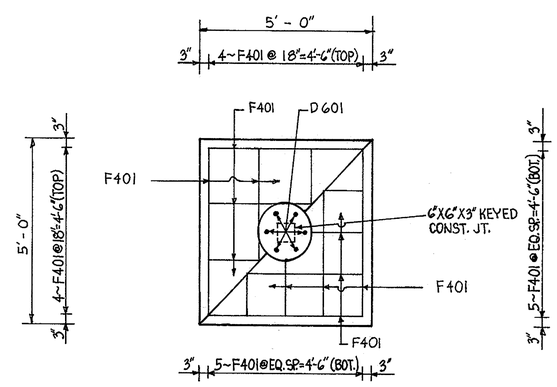

FOOTING PLAN
SCALE 1/2" = 1'

NOTE:

MAXIMUM DESIGN FOUNDATION PRESSURE 1.00 TON/SQ.FT. FOR PIER 4 & 5
THE BACKFILL NECESSARY FOR THE CONSTRUCTION SHALL BE PLACED AS EARLY AS PRACTICABLE SO AS TO ALLOW THE MAXIMUM AMOUNT OF TIME FOR THE STABILIZATION OF THE BACKFILL. USE ORIGINAL SOIL FOR THE BACKFILL AFTER REMOVING ORGANIC MATERIAL UNLESS ORDERED BY THE ENGINEER.
~~COARSE AGGREGATE FOR FOUNDATION STABILIZATION (6" THICK) WILL BE PLACED.~~

REINFORCING BAR LIST

STRAIGHT BARS				BENT BARS			
MARK	SIZE	LENGTH	NUMBER	MARK	SIZE	LENGTH	NUMBER
PIER 4 & 5 (EACH PIER)							
S501	5	8'-7"	17	P601	6	18'-7"	6
S502	5	7'-10"	2	P401	4	192'-5"	1
S401	4	8'-9"	11	D601	6	4'-9"	6
S402	4	7'-10"	5	S405	4	8'-8"	2
S403	4	8'-9"	3	S406	4	8'-10"	2
S404	4	8'-7"	3	S407	4	23'-4"	1
F401	4	4'-8"	18	S408	4	15'-4"	1
				S409	4	11'-4"	2

BENDING DIAGRAM

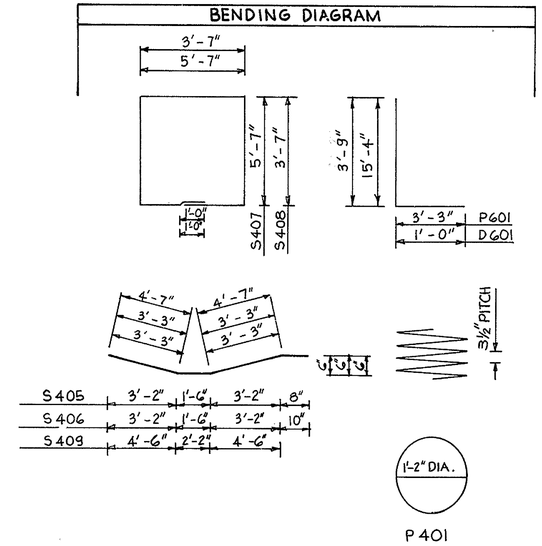

DELAWARE
DEPARTMENT OF HIGHWAYS & TRANSPORTATION
DIVISION OF HIGHWAYS

PIERS 4 & 5 BR. NO. 28

D.T.O.	SCALE	APPROVED BY:
T.F.B.	AS SHOWN	John S. Cables
C.C.H.		BRIDGE ENGINEER

COUNTY	CONTRACT	P.R.A. REG. NO.	STATE	FED. AID PROJECT NO.	SHEET NO.	TOTAL SHEETS
N.C.	70-12-002	2	DEL.		21	32

BRIDGE NO. 27 AT LINCOLN AVE. & BRIDGE NO. 28 AT HARRISON AVE. OVER U.S. RT. NO. 13
PEDESTRIAN BRIDGES

NO.	REVISIONS	BY	DATE

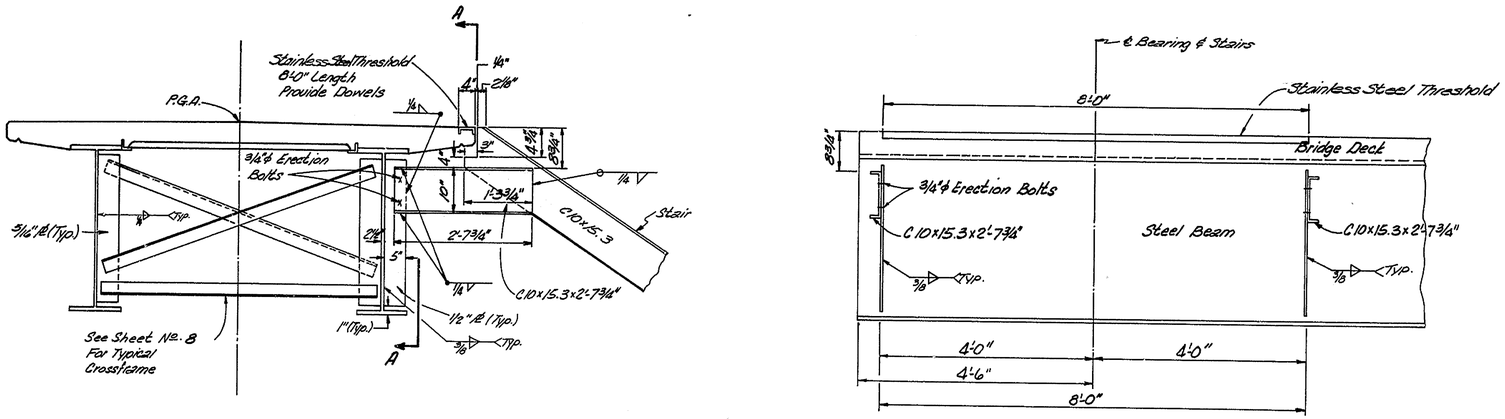

STAIR CONNECTION TO BRIDGE
STAIR No. 1 & 2 BR. No. 28 & STAIR No. 1 & 2 BR. No. 27
3/4" = 1'-0"

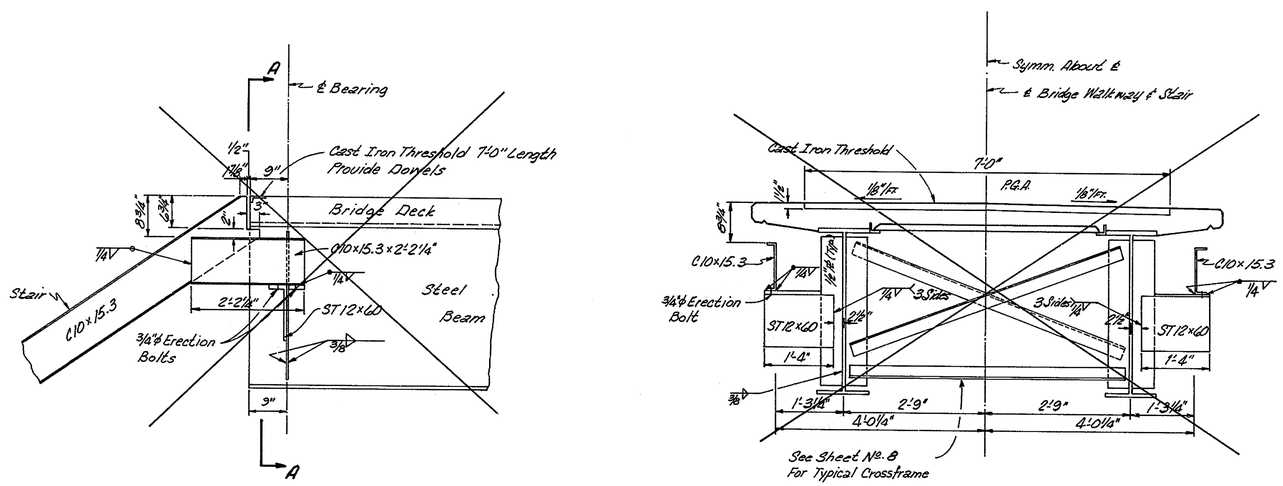

STAIR CONNECTION TO BRIDGE
STAIR No. 1 BR. No. 28
3/4" = 1'-0"

DELAWARE
DEPARTMENT OF HIGHWAYS & TRANSPORTATION
DIVISION OF HIGHWAYS

STAIR CONNECTION TO BRIDGE
BRIDGES NO. 27 & 28

	SCALE	APPROVED BY:
D. C.H. & T.O. T. G.R.D. C. T.O.	3/4" = 1'-0"	John E. Rulster BRIDGE ENGINEER

COUNTY	CONTRACT	P.R.A. REG. NO.	STATE	FED. AID PROJECT NO.	SHEET NO.	TOTAL SHEETS
N.C.	70-12-002	2	DEL		22	32

BRIDGE NO. 27 AT LINCOLN AVE. & BRIDGE NO. 28 AT HARRISON AVE. OVER U.S. RT. NO. 13
PEDESTRIAN BRIDGES

NO.	REVISIONS	BY	DATE
1	Handrail & Kick Plate Addition	GRD	7-20-73

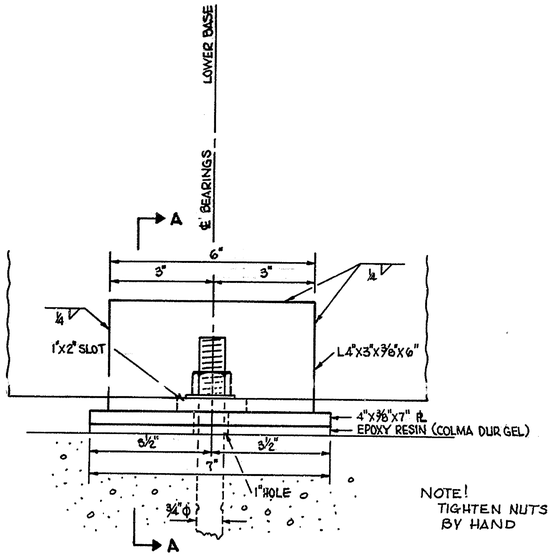

NOTE!
TIGHTEN NUTS BY HAND

ELEVATION (VIEW FROM OUTSIDE)

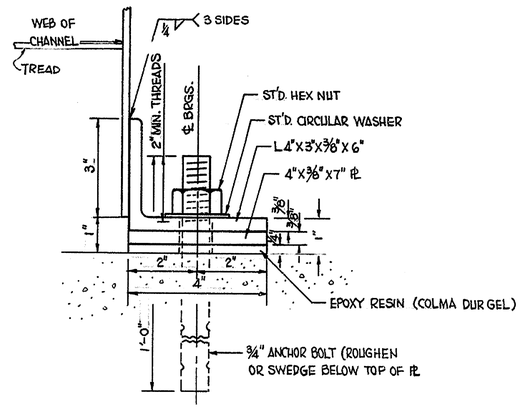

SECTION A-A

BEARINGS OF LOWER BASE
SCALE: 1/2"=1"

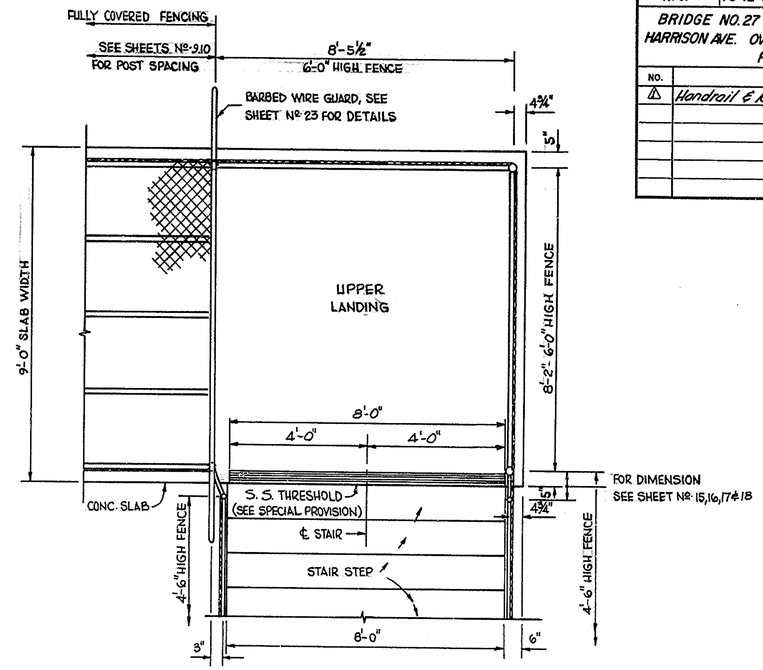

UPPER LANDING DETAIL OF STAIR, BRIDGES 27 & 28
SCALE: 1/2"=1'-0"

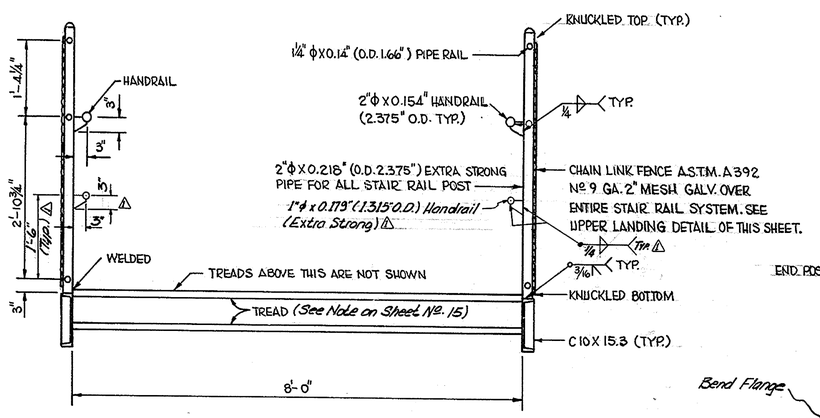

TYPICAL STAIR CROSS-SECTION
SCALE: 3/4"=1'-0"

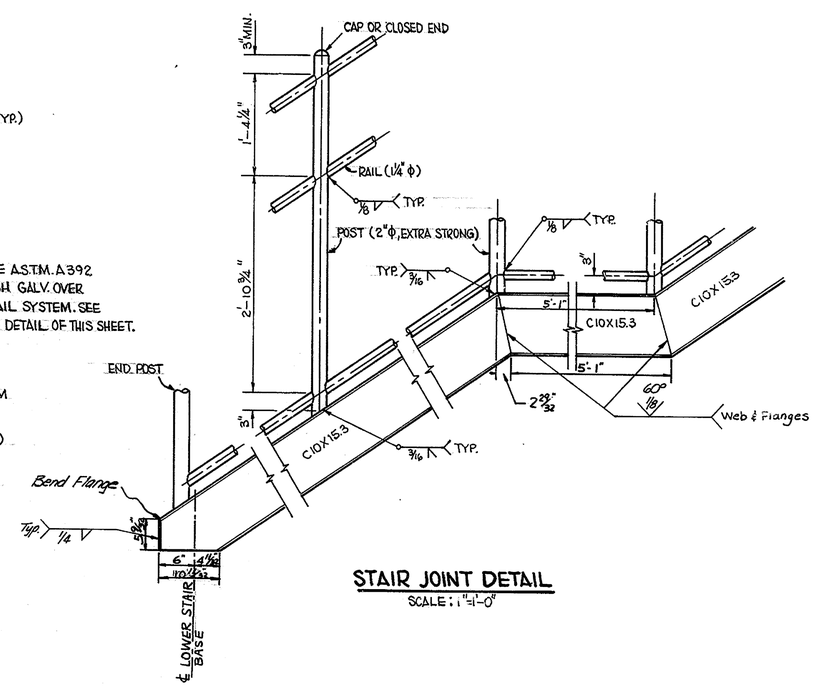

STAIR JOINT DETAIL
SCALE: 1"=1'-0"

NOTES:

1. HANDRAIL SHALL BE PROVIDED AT BOTH SIDES FOR FULL LENGTH OF STAIR, AND THEY SHALL BE CONNECTED TO BRIDGE HANDRAILS.
2. HANDRAIL SHALL BE WELDED TO EVERY POST AND SHALL HAVE A CLOSED END AT LOWER END POST.
3. HANDRAIL SPLICES SHALL BE THE FLUSH SLIP-JOINT TYPE.
4. ALL RAILS SHALL BE PARALLEL TO STAIR CHANNEL. POST SHALL BE TRULY VERTICAL.
5. ALL POSTS AND RAILS SHALL BE AS PER A.S.T.M. A53 GRADE B, TYPE S OR E.
6. ALL RAILS POSTS, FENCE AND THEIR CONNECTIONS SHALL BE GALVANIZED IN ACCORDANCE WITH THE NOTES GIVEN ON SHEET Nº 2.
7. THE MATERIAL AND INSTALLATION OF THE STAIR RAIL SYSTEM (INCLUDING HANDRAILS 2" Φ EXTRA STRONG PIPES AND 1 1/4" Φ PIPES) AND OF THE CONNECTIONS OF STAIRS TO BRIDGE SHALL BE PAID FOR UNDER SECTION 606 STEEL STRUCTURES - FOUR (4) STAIRS.
8. STRETCHER BARS AND BAR BAND SHALL BE PROVIDED AT END POSTS AND OTHER POSTS AS DIRECTED BY THE ENGINEER. THE SPACING OF BAR BAND SHALL BE 12" OVER CENTERS. SEE SHEET Nº 23 FOR MORE DETAILS.
9. ANCHOR BOLT, NUT AND WASHER SHALL BE GALVANIZED.

DELAWARE
DEPARTMENT OF HIGHWAYS & TRANSPORTATION
DIVISION OF HIGHWAYS

DETAILS OF STAIRS & BEARINGS

D. C.H.&T.O.	SCALE	APPROVED BY:
T. R.B.F.	AS SHOWN	John W. Schultz
C. T.O.		BRIDGE ENGINEER

COUNTY	CONTRACT	P. R. A. REG. NO.	STATE	FED. AID PROJECT NO.	SHEET NO.	TOTAL SHEETS
N. C.	70-12-002	2	DEL		23	32

BRIDGE NO. 27 AT LINCOLN AVE. & BRIDGE NO. 28 AT HARRISON AVE., OVER U.S. RT. NO. 13

PEDESTRIAN BRIDGES

NO.	REVISIONS	BY	DATE

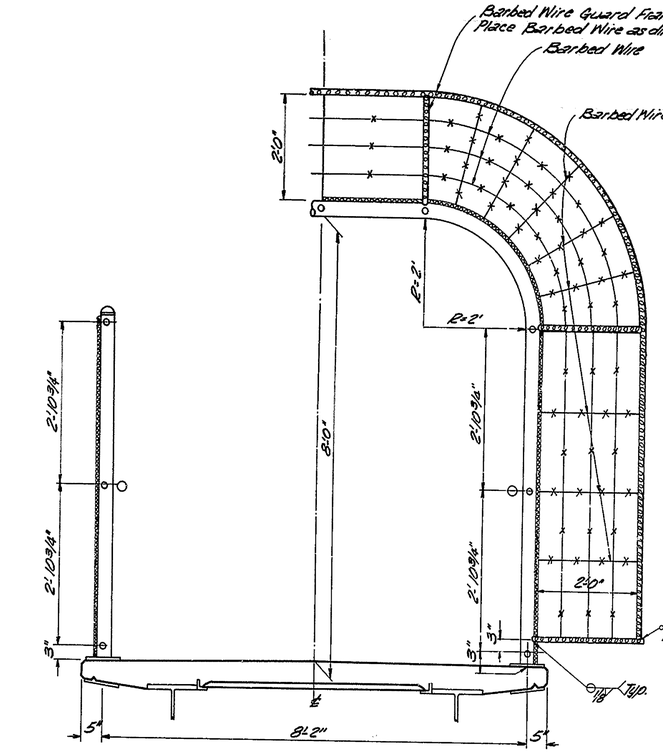

HALF SECTION "B-B"
(6' High Fencing Exists Only At One Side)

HALF SECTION "A-A"
(Structure is Symm. about ℄.)

3/4" = 1'-0"

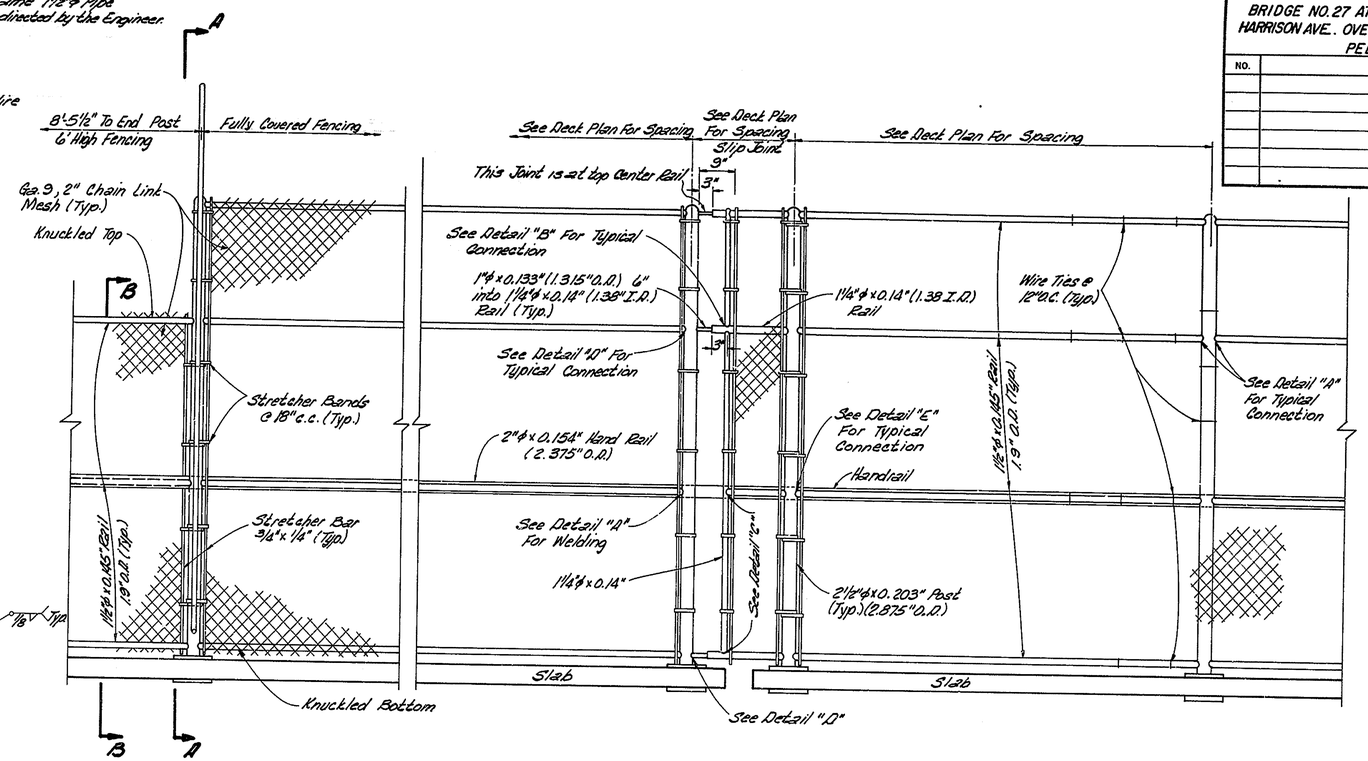

TYPICAL PANEL OF 6' HIGH FENCING
3/4" = 1'-0"

SLIP JOINT DETAIL AT PIER II
3/4" = 1'-0"

TYPICAL PANEL OF FULLY COVERED FENCING
3/4" = 1'-0"

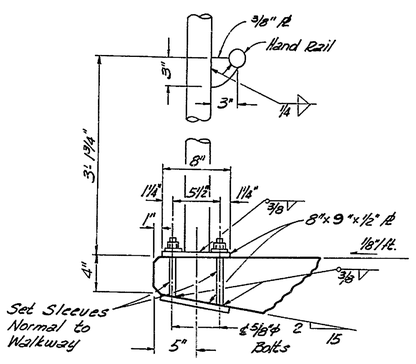

SECTION
1½" = 1'-0"

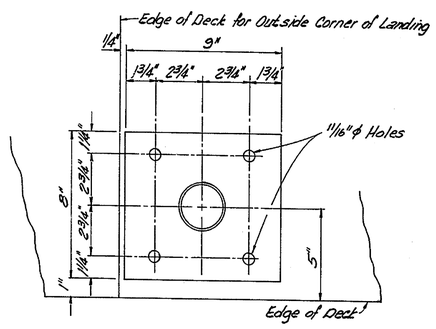

PLAN
3" = 1'-0"

POST BASE ASSEMBLY

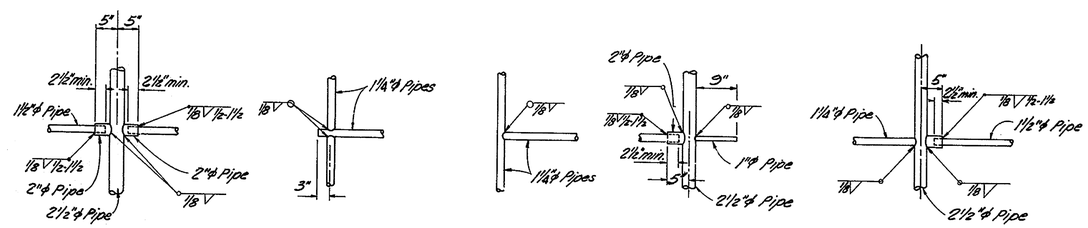

DETAIL "A"
3/4" = 1'-0"

DETAIL "B"
3/4" = 1'-0"

DETAIL "C"
3/4" = 1'-0"

DETAIL "D"
3/4" = 1'-0"

DETAIL "E"
3/4" = 1'-0"

NOTES:

1. All rails shall be parallel to grade. Posts shall be truly vertical.
2. All post and rails shall be as per A.S.T.M. A53 Grade B, Type "S" or "E".
3. All material used in railing system (posts, rails, fences, base plates, anchor bolts, hex nuts, washers and other connectors) shall be galvanized in accordance with the Notes given on Sheet No. 2.
4. Hand Rails shall be provided at both sides for full length of railing system, and shall be welded to every post with bracket fitting. Handrail splices shall be flush slip-joint type.
5. Chain Link Fence complete shall be paid for a linear foot basis and shall include all rails, posts, fence, anchor bolts, base plates, barbed wire guard and other connections necessary for completion of the job.

DELAWARE
DEPARTMENT OF HIGHWAYS & TRANSPORTATION
DIVISION OF HIGHWAYS

BRIDGE FENCING

BRIDGES NO. 27 & 28

D.C.H.&T.O.	SCALE	APPROVED BY:
T.G.R.D.	AS SHOWN	John E. Gillette
C. T.O.		BRIDGE ENGINEER

D HELIPRINT 19 1253

COUNTY	CONTRACT	P. B. A. REG. NO.	STATE	FED. AID PROJECT NO.	SHEET NO.	TOTAL SHEETS
N.C.	7012-002	2	DEL.		24	32

BRIDGE NO. 27 AT LINCOLN AVE. & BRIDGE NO. 28 AT HARRISON AVE. OVER U.S. RT. NO. 13
PEDESTRIAN BRIDGES

PR. EL. TRACING G.L.M. 7-30-71 DESIGN _____ CHKD. _____

REVISIONS

B.M. #1 GORDY AVE.
NAIL IN DP & L POLE #4
14' LT. "G" 0+48 EL.-73.07

B.M. #2 SCHOOL SIDEWALK
CHISLED "X" "G" 4+51
EL. - 76.63

B.M. #2 NAIL IN POLE
24' LT. OF STA. "L" 8+89
EL. - 72.06

B.M. #1 CHISELED "X" ON N.W.
COR. OF HEADWALL; 26.5' RT.
OF "L" 0-30 EL.-65.71

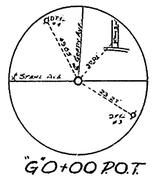

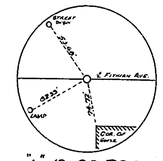

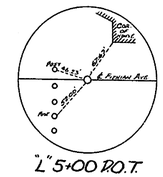

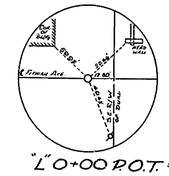

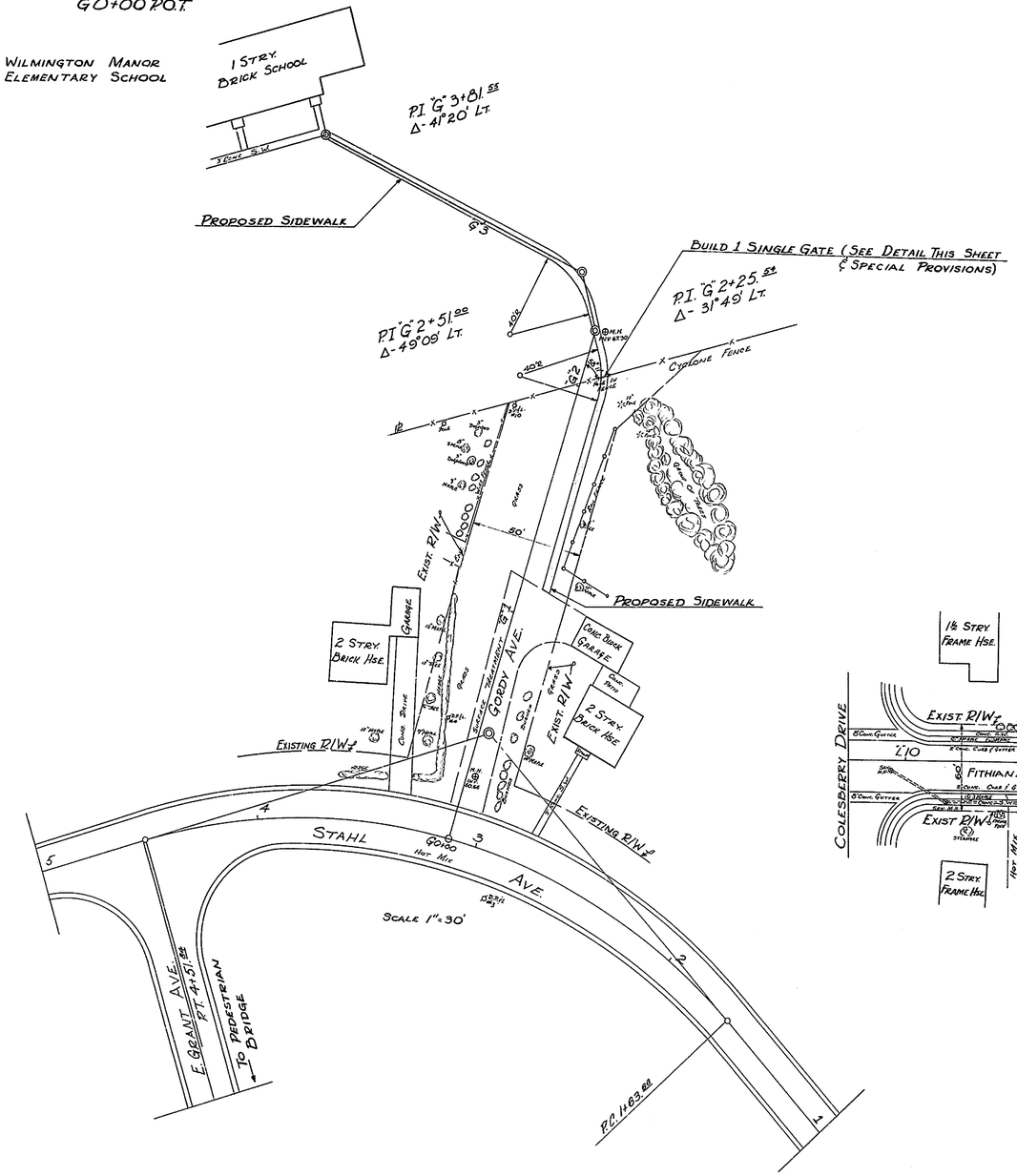

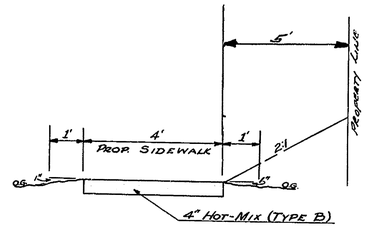

PROPOSED SIDEWALK DETAIL

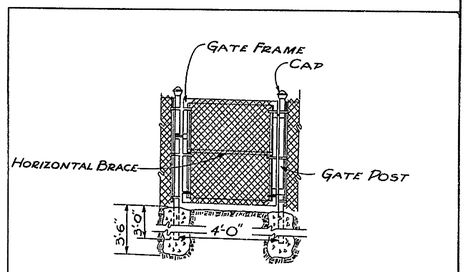

DETAIL FOR 4' SINGLE GATE
NO SCALE

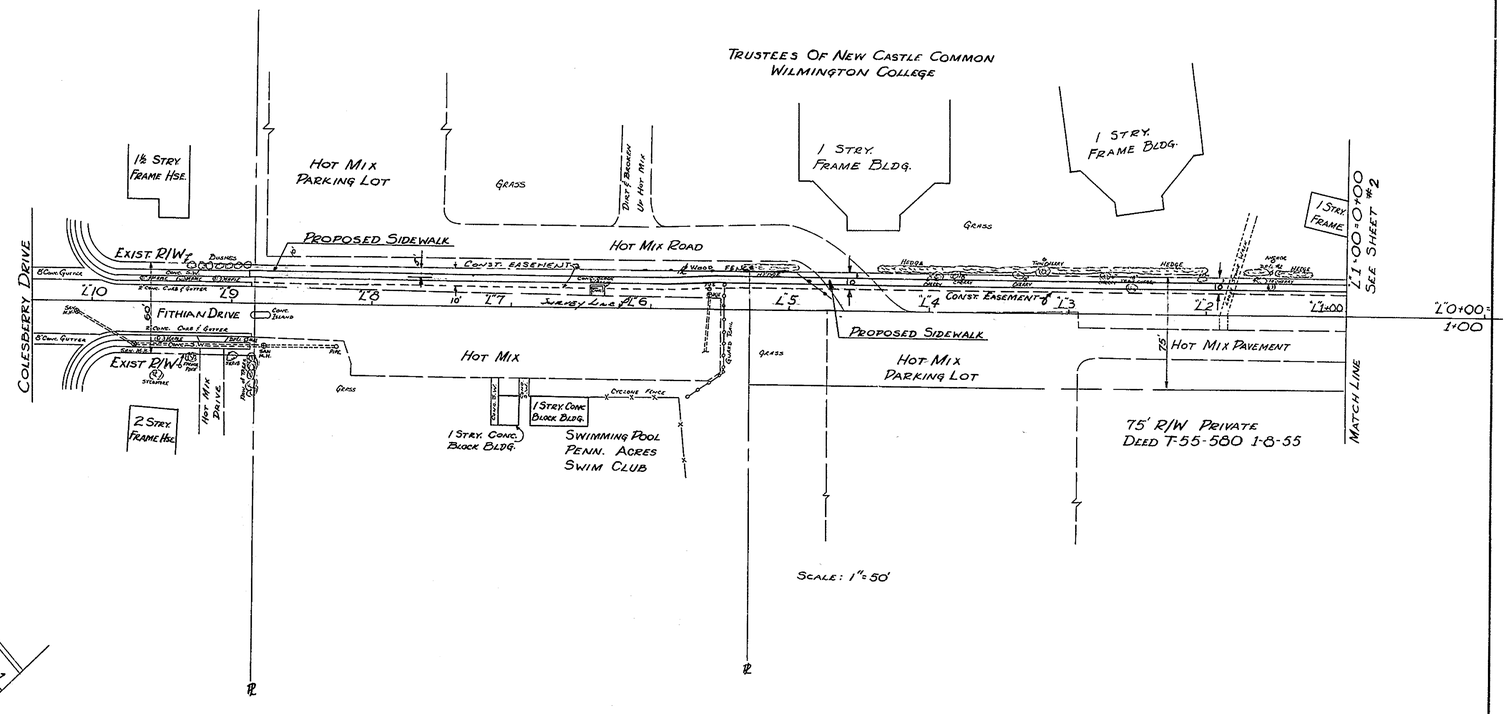

COUNTY	CONTRACT	P. R. A. REG. NO.	STATE	FED. AID PROJECT NO.	SHEET NO.	TOTAL SHEETS
N. C.	70-12-002	2	DEL.		25	32

BRIDGE NO. 27 AT LINCOLN AVE. & BRIDGE NO. 28 AT HARRISON AVE. OVER U.S. RT. NO. 13
PEDESTRIAN BRIDGES

NO.	REVISIONS	BY	DATE

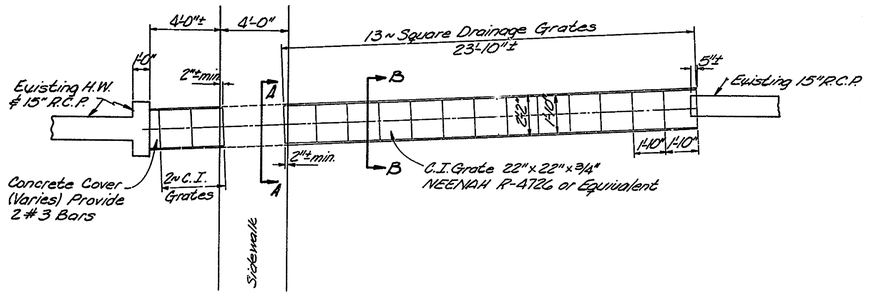

PLAN
1"=4'-0"

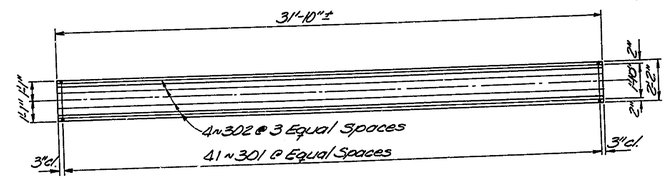

PLAN ~ REINFORCING BARS
1/4"=1'-0"

REINFORCING BAR LIST							
STRAIGHT BARS				BENT BARS			
MARK	SIZE	LENGTH	NUMBER	MARK	SIZE	LENGTH	NUMBER
302	3	31'-6"±	8	301	3	4'-10"	41

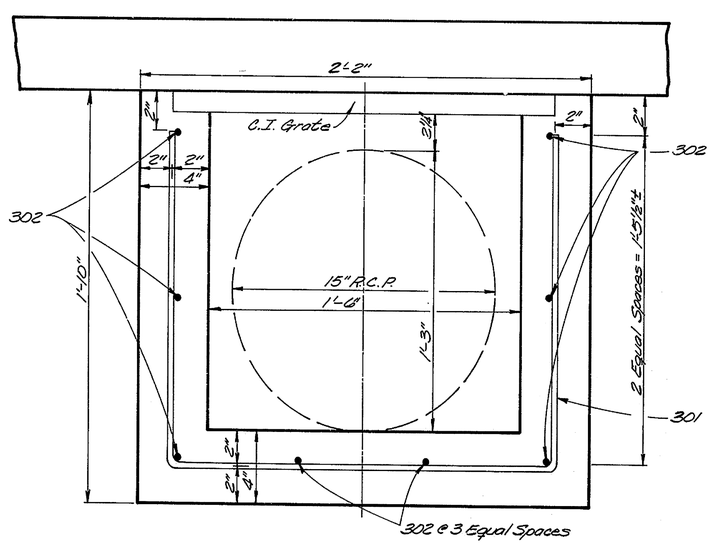

TYPICAL SECTION
Not To Scale
A-A & B-B

BENDING DIAGRAM

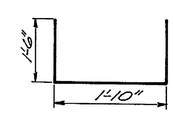

301

NOTE!
Exact length to be determined in the field.

DELAWARE
DEPARTMENT OF HIGHWAYS & TRANSPORTATION
DIVISION OF HIGHWAYS

CONCRETE DITCH DETAILS

BRIDGE NO. 27

D. T.O.	SCALE	APPROVED BY:
T. G.R.D.	As Shown	John E. Rulite
C. C.H.		BRIDGE ENGINEER

COUNTY	CONTRACT	P.R.A. REG. NO.	STATE	FED. AID PROJECT NO.	SHEET NO.	TOTAL SHEETS
NEW CASTLE	70-12-002	2	DEL.		26	32

BRIDGE NO. 27 AT LINCOLN AVE. & BRIDGE NO. 28 AT HARRISON AVE. OVER U.S. RT. NO. 13
PEDESTRIAN BRIDGES

PREL. TRACING C H SHORT DESIGN _____ CHKD. _____

8/30/71 REVISIONS

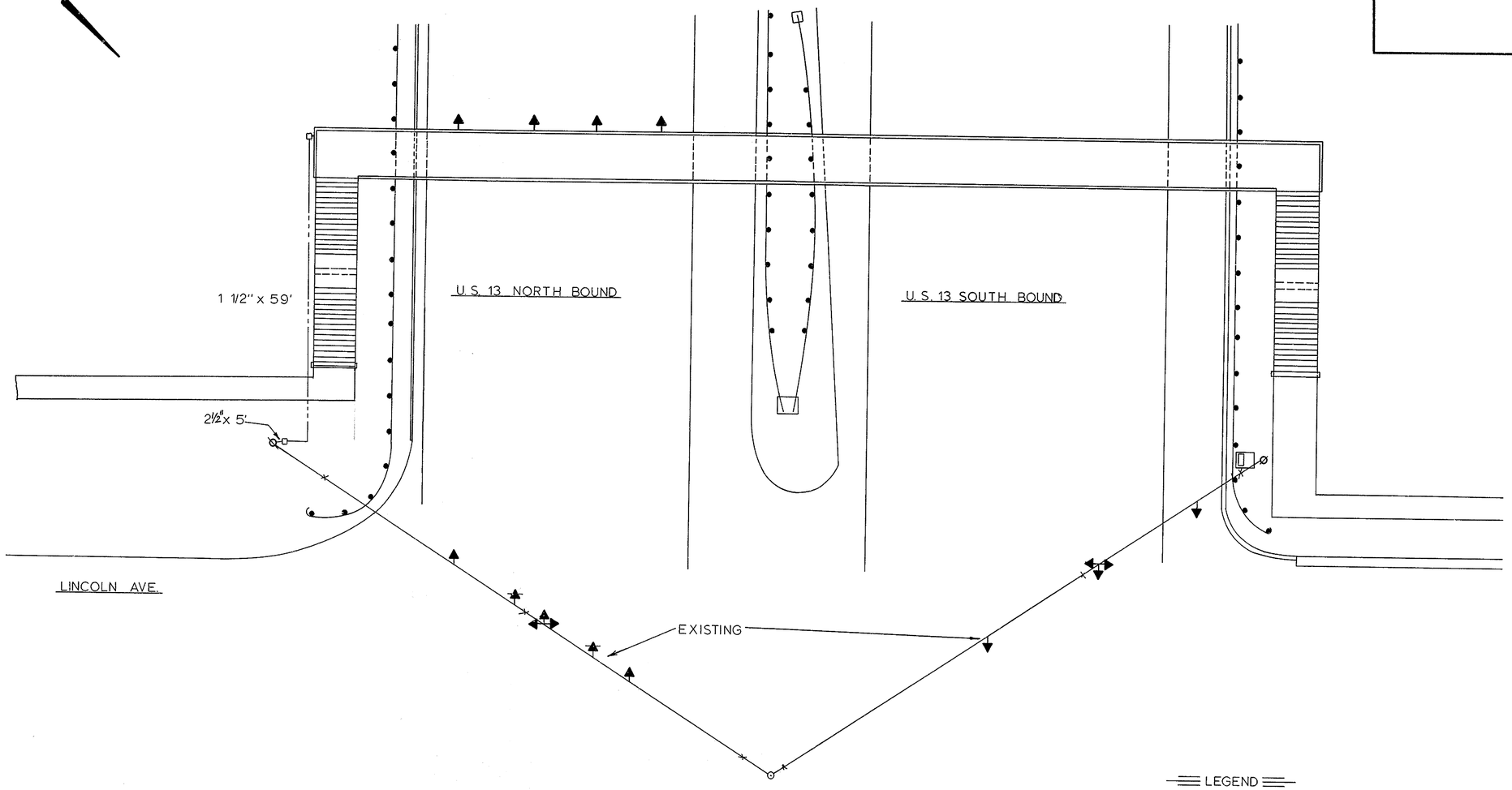

PLACEMENT OF HEADS SOUTH SIDE OF BRIDGE

LEGEND
- 1 1/2" GALV. CONDUIT
- JUNCTION WELL
- SIGNAL HEAD

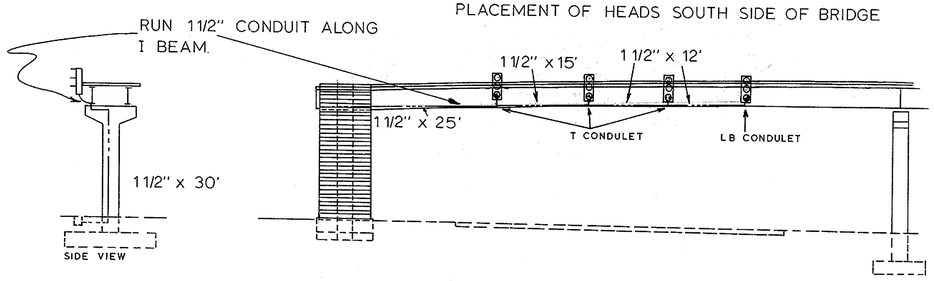

PLACEMENT OF CONDUIT TO BE DONE IN THE FIELD

NOTE: The State will furnish and install Signal Heads.

DELAWARE
DEPARTMENT OF HIGHWAYS & TRANSPORTATION
DIVISION OF HIGHWAYS

SIGNAL HEAD AND CONDUIT PLACEMENT

BRIDGE NO. 27

D.	SCALE	APPROVED BY:
T. C.H. SHORT		John Riddle
C. C.H.		BRIDGE ENGINEER

COUNTY	CONTRACT	P.R.A. REG. NO.	STATE	FED. AID PROJECT NO.	SHEET NO.	TOTAL SHEETS
NEW CASTLE	70-12-002	2	DEL.		27	32

BRIDGE NO. 28 AT HARRISON AVE. OVER U.S. RT. NO. 13 PEDESTRAIN BRIGE

PREL. TRACING C.H. SHORT DESIGN CHS & JDB CHKD.

5/18/72 REVISIONS

NOTES:
1. TAKE SERVICE FROM DP&L 14D3/13 TO STEEL POLE.
2. RUN 1 1/2" CONDUIT FROM NORTH SIDE TO SOUTH SIDE OF BRIDGE AND DOWN PIER TO EXISTING "J" WELL.
3. REPLACE CONDUIT IF DAMAGED BY PIER BASE EXCAVATION (2 1/2"ϕ SHALL BE USED AS REPLACEMENT. TO BE PAID UNDER SPECIAL PROVISION "2 1/2" GALVANIZED CONDUIT)
4. ITEMS MARKED AS FOLLOWS ARE TO BE REMOVED (R)

Scale: 1" = 30'

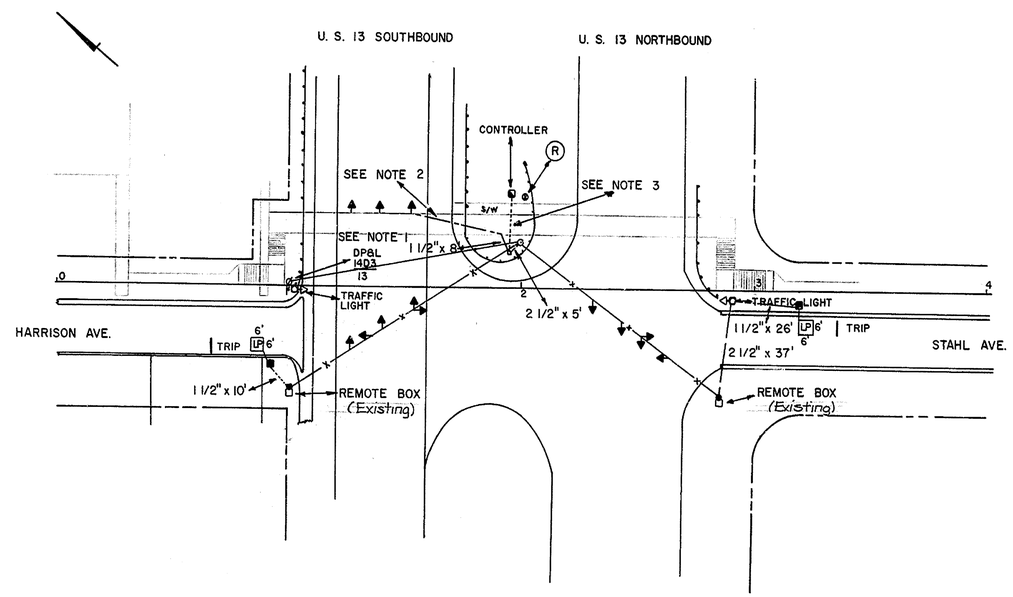

LEGEND

- STEEL POLE BASE
- EXISTING STEEL POLE BASE
- EXISTING CABINET BASE
- 2 1/2" GALV. CONDUIT
- 1 1/2" GALV. CONDUIT
- EXISTING GALV. CONDUIT
- EXISTING WOOD POLE
- SIGNAL HEAD (BY OTHERS)
- EXISTING SIGNAL HEAD
- SPAN WIRE (BY OTHERS)
- EXISTING JUNCTION WELL
- JUNCTION WELL
- EXISTING PEDESTAL BASE
- LOOP DETECTOR (BY OTHERS)

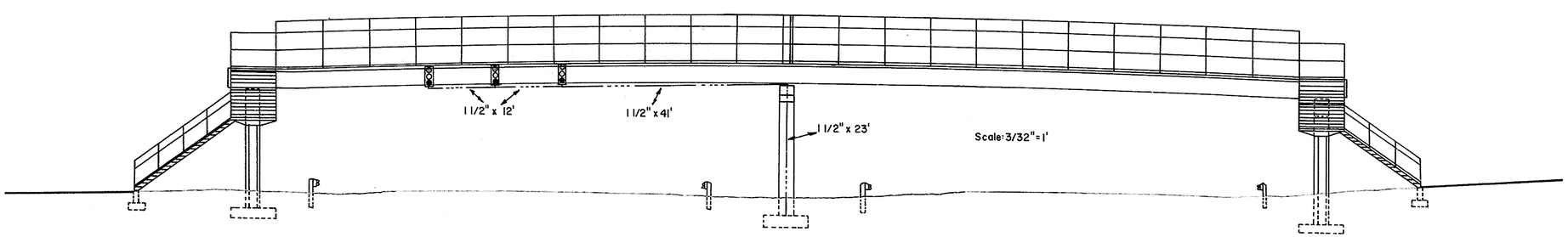

PLACEMENT OF HEADS NORTH SIDE OF BRIDGE

DELAWARE
DEPARTMENT OF HIGHWAYS & TRANSPORTATION
DIVISION OF HIGHWAYS

SIGNAL HEAD AND CONDUIT PLACEMENT

BRIDGE NO. 28

D. T. C.H. SHORT C. C.H.	SCALE	APPROVED BY: BRIDGE ENGINEER