# DELAWARE STATE HIGHWAY DEPARTMENT
## DELAWARE TURNPIKE
## JOHN F. KENNEDY MEMORIAL HIGHWAY
### CONSTRUCTION CONTRACT NO. 7053
### RTE. 896 INTERCHANGE IMPROVEMENTS

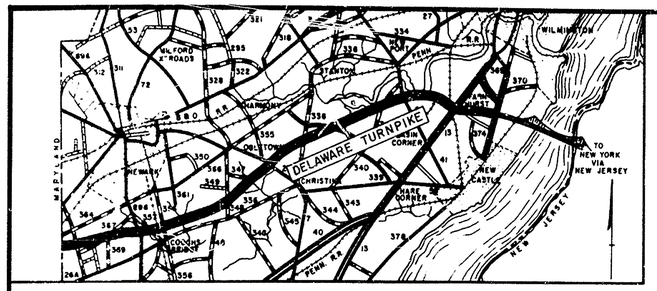


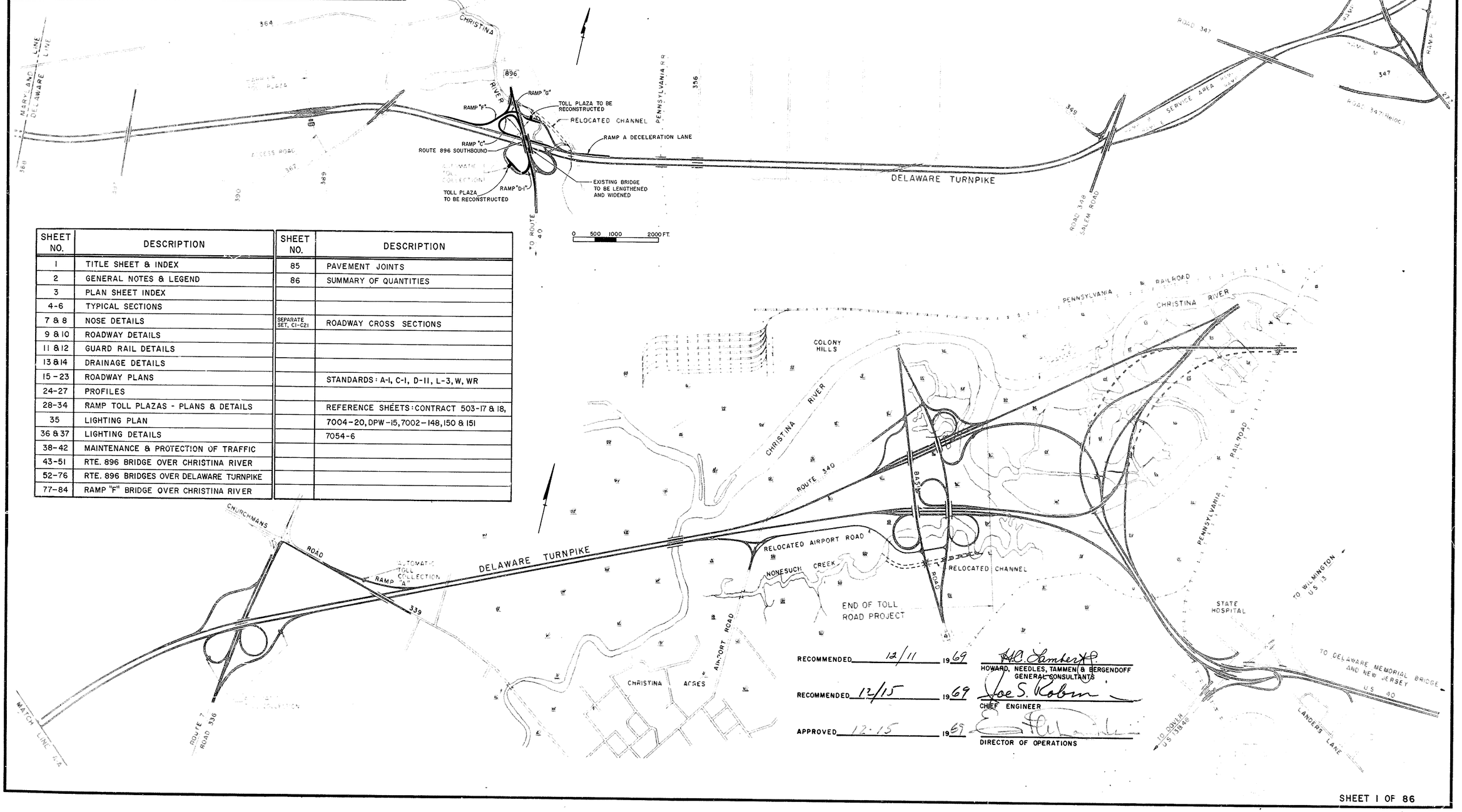


| SHEET NO. | DESCRIPTION | SHEET NO. | DESCRIPTION |
|---|---|---|---|
| 1 | TITLE SHEET & INDEX | 85 | PAVEMENT JOINTS |
| 2 | GENERAL NOTES & LEGEND | 86 | SUMMARY OF QUANTITIES |
| 3 | PLAN SHEET INDEX | | |
| 4-6 | TYPICAL SECTIONS | | |
| 7 & 8 | NOSE DETAILS | SEPARATE SET, C1-C21 | ROADWAY CROSS SECTIONS |
| 9 & 10 | ROADWAY DETAILS | | |
| 11 & 12 | GUARD RAIL DETAILS | | |
| 13 & 14 | DRAINAGE DETAILS | | |
| 15-23 | ROADWAY PLANS | | STANDARDS: A-1, C-1, D-11, L-3, W, WR |
| 24-27 | PROFILES | | |
| 28-34 | RAMP TOLL PLAZAS - PLANS & DETAILS | | REFERENCE SHEETS: CONTRACT 503-17 & 18, |
| 35 | LIGHTING PLAN | | 7004-20, DPW-15, 7002-148, 150 & 151 |
| 36 & 37 | LIGHTING DETAILS | | 7054-6 |
| 38-42 | MAINTENANCE & PROTECTION OF TRAFFIC | | |
| 43-51 | RTE. 896 BRIDGE OVER CHRISTINA RIVER | | |
| 52-76 | RTE. 896 BRIDGES OVER DELAWARE TURNPIKE | | |
| 77-84 | RAMP "F" BRIDGE OVER CHRISTINA RIVER | | |

RECOMMENDED 12/11 1969 — H.C. Lambert
HOWARD, NEEDLES, TAMMEN & BERGENDOFF
GENERAL CONSULTANTS

RECOMMENDED 12/15 1969 — Joe S. Robin
CHIEF ENGINEER

APPROVED 12-15 1969 — [illegible]
DIRECTOR OF OPERATIONS

SHEET 1 OF 86

## GENERAL NOTES

Horizontal alignment is based on offsets from existing Route 896 and the Delaware Turnpike.

Vertical Control based on U.S.C. & G.S. datum.

Base Sheets providing existing topography, horizontal alignment, and grade were prepared from final plans used for the construction of what is now the existing Delaware Turnpike. Also survey field information was used to incorporate the latest additions or changes in topographical features. A screened image is used to show this existing information. Work to be performed in this Contract is shown in full, non-screened lines and construction notes.

The vertical alignment of the proposed Rte. 896 Southbound Roadway generally follows the existing vertical alignment. See Typical Sections.

Controlled Access Line shown on Sheets is also a fence line.

All existing underdrain systems are to remain in operation if not replaced in this contract or specifically directed to be removed by the Engineer.

All transverse joints in proposed concrete pavement are to be spaced to line up with the transverse joints in the existing pavement.

The boring records of the existing borings shown on the plans and the pile driving records for the existing bridges are available for the contractors inspection at the office of the Engineer.

For General Notes pretaining to Structures see the General Plan Sheets for the individual bridges.

Curb transitions from either Parkway Curb Type 2 or Concrete Curb Type 1 to match the existing bridge safety walk or the new bridge parapets shall be accomplished in a 10 ft. transition section.

Utilities shown on the plans to be either relocated or removed by others will be completed prior to starting or in conjunction with this contract.

For General Notes pertaining to Typical Sections and Maintenance of Traffic see sheets 4 and 37 respectively.

## GENERAL LEGEND

- ℄ of Proposed Construction
- Edge of Proposed Pavement
- Edge of Proposed Paved Shoulders
- Proposed 6" Hot-mix, Hot-laid Asphaltic Concrete Pavement
- Existing Underdrain
- Proposed Underdrain & Outlet Pipe
- Proposed Inlet and Pipes
- Proposed Pipe and Flared End Section
- Direction of Flow in Ditch
- Existing Guardrail
- Proposed Guardrail
- Existing Sign (Removal, when necessary, by Others)
- Existing Boring
- Proposed R/W & Controlled Access Line
- Existing Fence to be removed
- Proposed Fence
- Existing Concrete Pavement to be removed
- G — Existing Gas Main
- To — Existing Overhead Telephone Line
- Tu — Existing Underground Telephone Line
- Sanitary Sewer Line (By Others)
- Drainage Manhole and Pipe

## ELECTRICAL NOTES

1. Stationing and spacing between lighting standards, and the location of junction boxes and conduit runs shown on the Plans are all approximate, but are to be followed as close as possible, unless otherwise ordered by the Engineer.
2. Existing concrete foundations of lighting standards which are being relocated shall be removed or demolished as directed. The complete lighting standard assemblies shall be reinstalled on new concrete foundations, as prescribed in the Specifications.
3. All required repairs to the existing conduit raceways, where indicated on the Plans, shall be made with same type and size of conduits as the existing raceways.
4. Frames and covers of junction boxes designated to be removed or demolished, shall be salvaged (see Specifications).
5. Drainage tees shall be provided at all low points of all conduit runs. Wherever possible conduits shall be sloped to drain to junction boxes.
6. All electrical work on Proposed Overhead Sign Structure, beyond and including the control cabinet, and the stubbed conduit out of sign foundation shall be provided by others (see Specifications).
7. All cables shall be 600V. insulation and color—coded (see Specifications).
8. All cable ends not connected shall be test capped by means of insulating and sealing them in the same manner as required by the Specifications for cable splice.
9. The following notations are used throughout lighting plans and detail sheets:
   a. Lighting Standard Identifications, such as 10-1-B next to a lighting standard symbol, the first figure indicates the lighting standard number. The second figure indicates the circuit number and the third figure designates the luminaire phase connection.
   b. Notations such as 2"-3#8 when pointing to conduit, the first figure indicates the size of conduit, the second figure indicates the number of cables and the third figure designates the size of cables.
   c. Notations such as 3#6 or $\frac{3\#6}{(1)}$ when pointing to conduit, the first figure indicates the number of cables and the second figure indicates the size of cables. The third figure (in parenthesis) when shown, indicates the circuit number. Circuit numbers are indicated only for those conduits in which more than one circuit is required to be installed or at circuit splitting points.

## ELECTRICAL LEGEND

- New or Relocated Type A Lighting Standard on New Concrete Foundation.
- New or Relocated Type B Lighting Standard on New Concrete Foundation.
- New Type C Lighting Standard with Parapet Mounting Brackets
- Relocated Type D Lighting Standard on New Concrete Foundation
- Existing Type A Lighting Standard to be Relocated
- Existing Type B Lighting Standard to be Relocated
- Existing Type D Lighting Standard to be Relocated
- Existing Type A Lighting Standard to remain
- Existing Type B Lighting Standard to remain
- Existing Type C Lighting Standard to remain
- Existing Type D Lighting Standard to remain
- New Underbridge Lighting Luminaire
- New Concrete Junction Box
- New Junction Box and Lighting Standard Anchor Bolts on Structure
- Existing Concrete Junction Box to remain (unless otherwise noted)
- Existing Junction Box and Lighting Standard Anchor Bolts on Structure.
- Existing conduit fitting to be removed
- Existing, Relocated or New Toll Plaza Service Cabinet.
- New 3" Galv. W.I. Conduit
- New 2" Galv. W.I. Conduit
- New 2" Plastic Conduit
- Existing 3" Galv. W.I. Conduit
- Existing 2" Galv. W.I. Conduit
- Existing 3" Plastic Conduit
- Existing 2" Plastic Conduit
- Existing 3#8 Direct Burial Cables

  (Existing 3" Galv. W.I. Conduit, Existing 2" Galv. W.I. Conduit, Existing 3" Plastic Conduit, Existing 2" Plastic Conduit, Existing 3#8 Direct Burial Cables: To remain (unless otherwise noted))
- Existing Conduit or Direct Burial Cable to be removed or abandoned
- Metallic to Non-Metallic Conduit Adapter
- Capped Conduit

| DELAWARE TURNPIKE | CONT. NO. | TITLE | SHEET NO. | TOTAL SHEETS |
|---|---|---|---|---|
| | 7053 | PLAN SHEET INDEX | 3 | 86 |

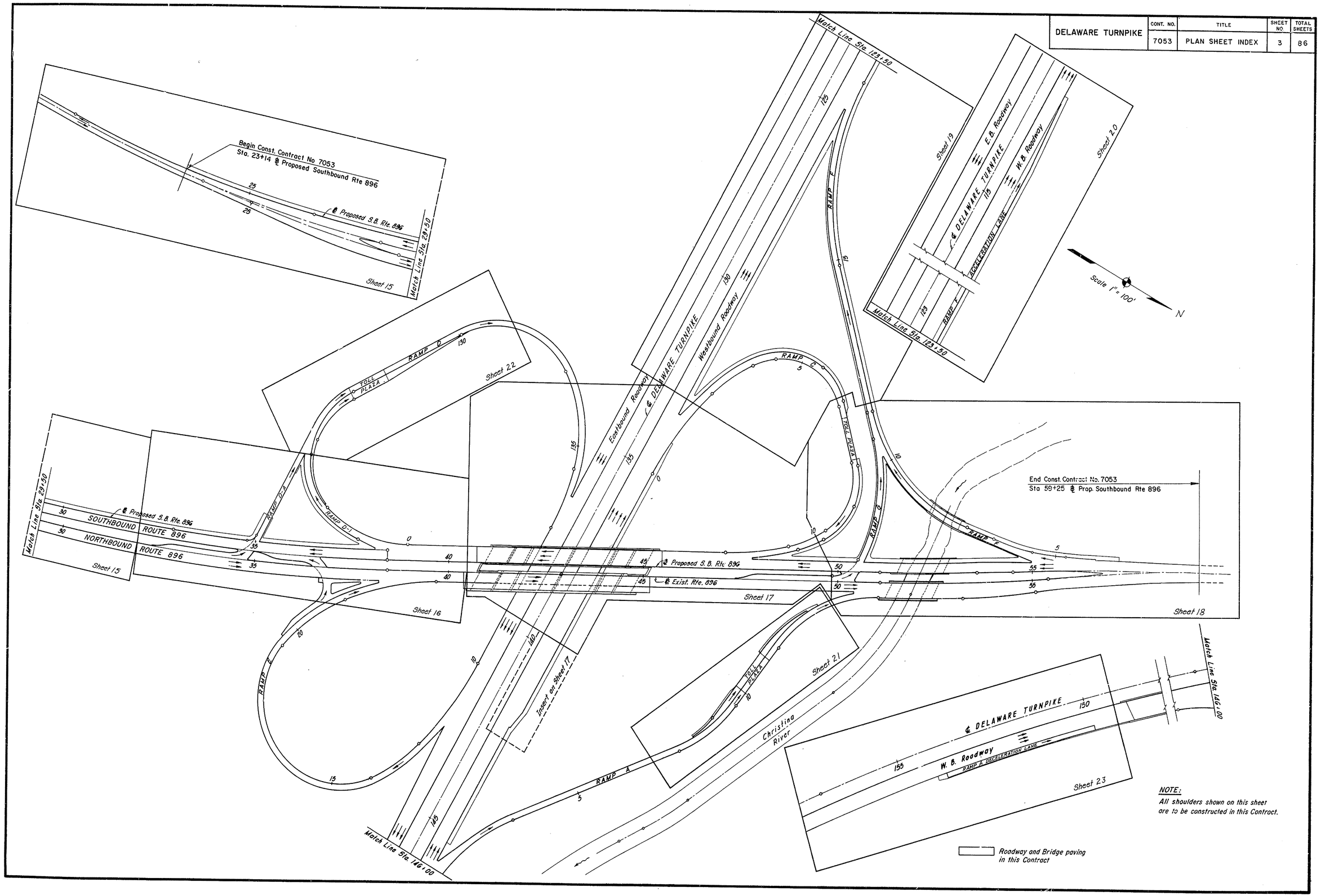


NOTE:
All shoulders shown on this sheet are to be constructed in this Contract.

| DELAWARE TURNPIKE | CONT NO. | TITLE | SHEET NO. | TOTAL SHEETS |
|---|---|---|---|---|
| | 7053 | TYPICAL SECTIONS | 4 | 86 |

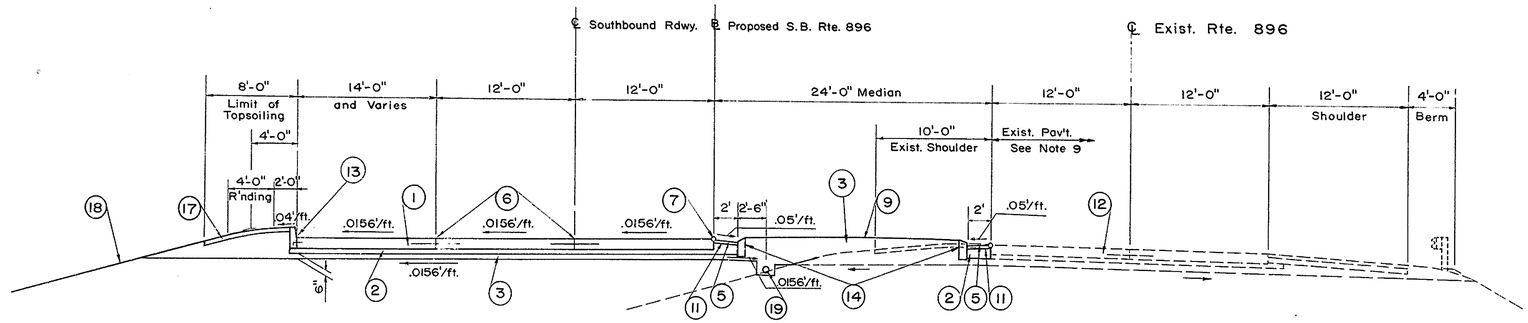


## ROUTE 896

## FROM STA. 38+50± TO STA. 47+50±

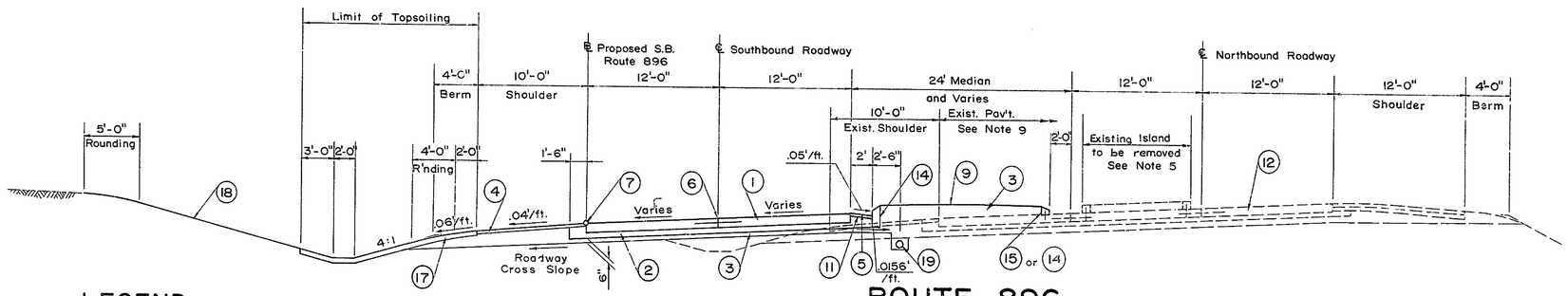


## ROUTE 896

## FROM STA. 28+00± TO STA. 38+50±

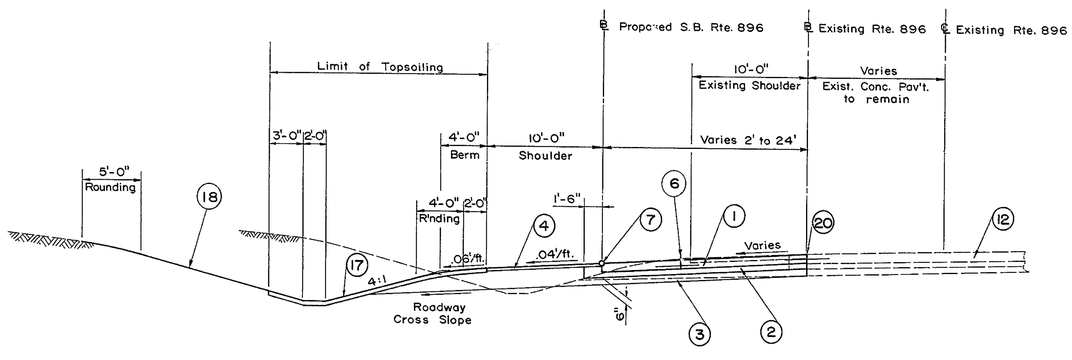


## ROUTE 896

## FROM STA. 23+14± TO STA. 28+00±

## LEGEND

1. 9" Reinforced Concrete Pavement
2. 4" Quarry Waste
3. Select Borrow
4. Bituminous Surface Treatment
5. 3" Hot-Mix, Hot Laid Asphaltic Concrete Shoulder (1-1/2" Wearing Course and 1-1/2" Binder Course)
6. Dowelled Longitudinal Saw-Cut Joint
7. Point of Application of Grade
8. 6" Soil Cement Base Course
9. Median Surface Treatment, (Single Course with Stone Chips and Soil Sterilization, sloped to curbs)
10. 6" Hot-Mix, Hot Laid Asphaltic Concrete Pavement (1-1/2" Wearing Course and 4-1/2" Binder Course)
11. R.C.-1 Asphalt Tack Coat
12. Existing 9" Reinforced Concrete Pavement To Remain Unless Noted on Roadway Plans
13. Portland Cement Concrete Curb, Type 1
14. Portland Cement Concrete Parkway Curb, Type 2
15. Portland Cement Concrete Parkway Curb, Dowelled
16. Hot-Mix, Hot Laid Asphaltic Concrete Curb
17. 4" Topsoil, Seeding and Mulching
18. Seeding and Mulching
19. 6" Perforated Corrugated Metal Pipe Underdrain
20. Longitudinal Construction Joint (Drilled and Grouted Dowels)

## TYPICAL SECTION GENERAL NOTES

1. Station limits specified for each typical section are approximate. The typical section may represent items of construction beyond the limits indicated.
2. For Wire Mesh Reinforcement for Portland cement concrete pavement see Standard Sheet A-1.
3. Subgrade cross-slope shall be not less than 0.0156 ft./ft. to provide drainage for the subbase. In curve transitions where the pavement cross-slope becomes less than 0.0156 ft./ft. the minimum cross-slope shall be maintained until abrupt reversal of the subgrade cross-slope can be accomplished.
4. Unsuitable material below the template grade shall be removed to the limits specified by the Engineer and replaced with select borrow. When required by the Engineer, underdrains shall be installed in areas from which unsuitable material has been removed.
5. For detail of Island removal see Roadway Details, sheet 9.
6. Side slopes in cut or fill generally conform to the following criteria: (See cross section plans for exact side slopes)

   0' to 10' height use 4:1
   10' to 20' height use 3:1 } Requires Guard Rail
   Over 20' height use 2:1 }

7. For station limits and location of underdrains see Roadway Plan sheets.
8. For depth of and location of side ditches see Roadway Plan sheets and cross section plans.
9. For limits of existing concrete pavement removal, see Roadway Plan sheets.
10. For existing guard rail to be removed and proposed guard rail to be placed see Roadway Plan sheets.
11. All typical sections are drawn to a scale of 1" = 6'.

| DELAWARE TURNPIKE | CONT. NO. | TITLE | SHEET NO. | TOTAL SHEETS |
|---|---|---|---|---|
| | 7053 | TYPICAL SECTIONS | 5 | 86 |

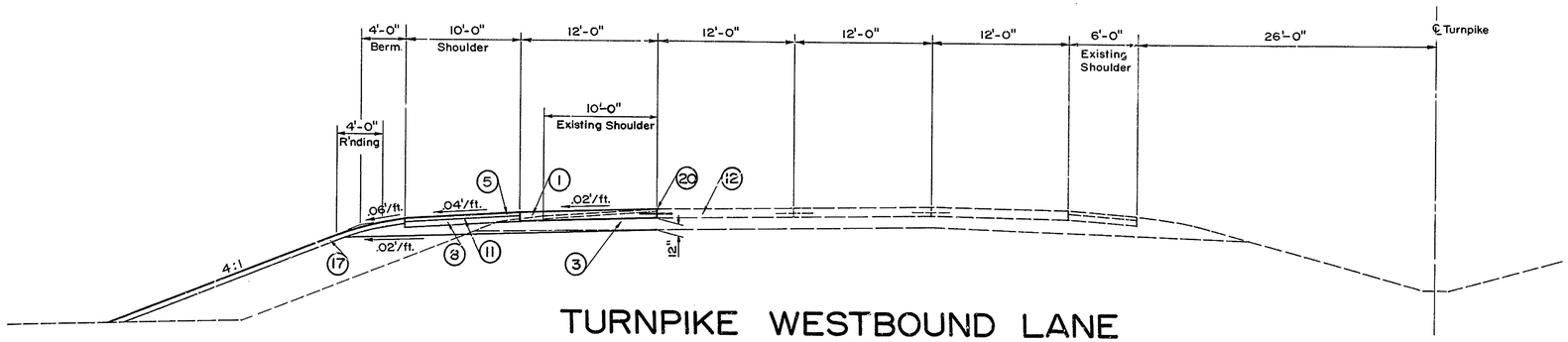


## TURNPIKE WESTBOUND LANE
## FROM STA. 133+50± TO STA. 142+00±

(RAMP C DECELERATION LANE)

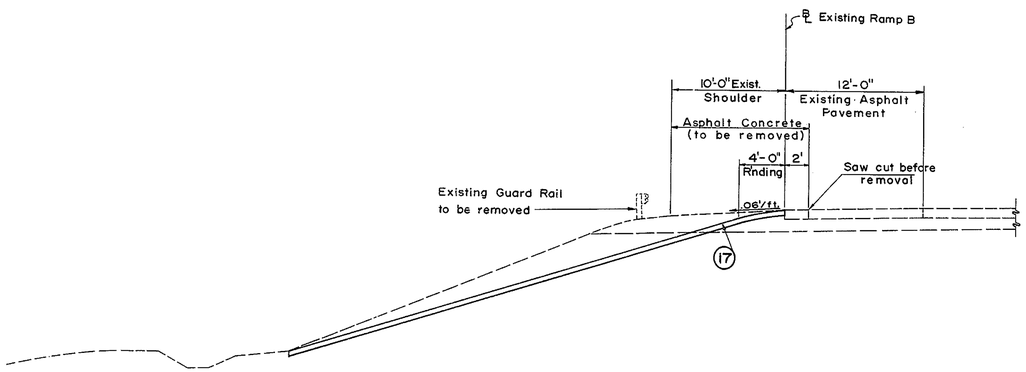


## TURNPIKE WESTBOUND LANE
## FROM STA. 126+00± TO STA. 132+00±

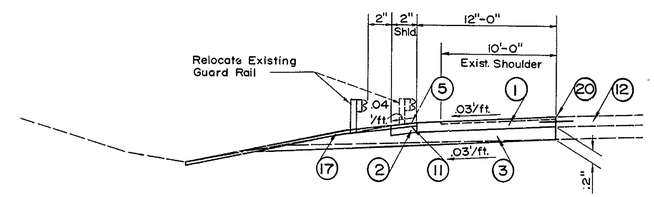


## TURNPIKE WESTBOUND LANE
## FROM STA. 150+00± TO STA. 154+00±

(RAMP A DECELERATION LANE)

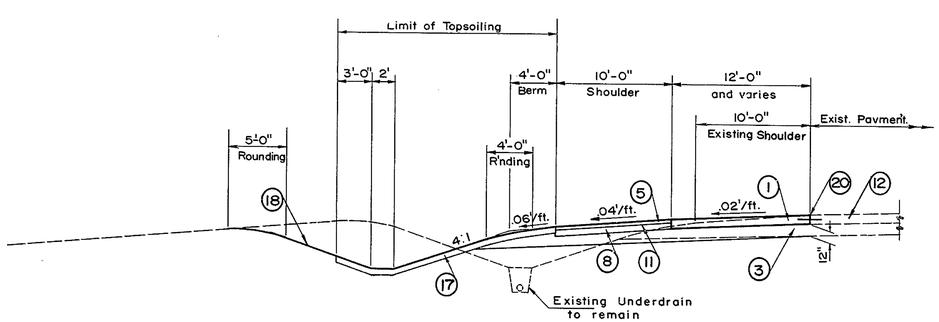


## TURNPIKE WESTBOUND LANE
## FROM STA. 112+00± TO STA. 125+00±

(RAMP F ACCELERATION LANE)

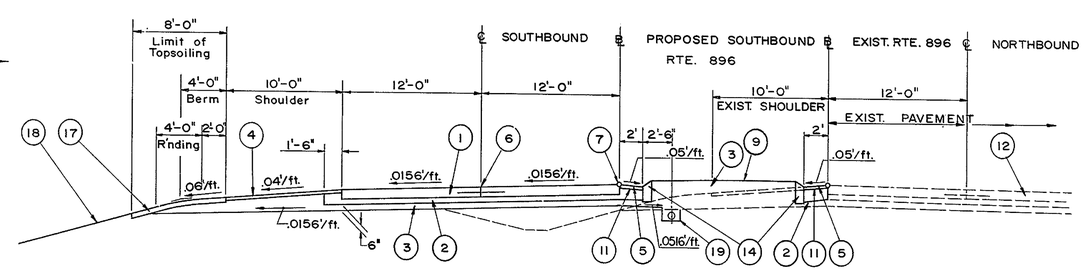


## ROUTE 896
## FROM STA. 47+50± TO STA. 57+40

NOTE:
For Typical Section General Notes and Legend see Sheet No. 4

| DELAWARE TURNPIKE | CONT NO | TITLE | SHEET NO. | TOTAL SHEETS |
|---|---|---|---|---|
| | 7053 | TYPICAL SECTIONS | 6 | 86 |

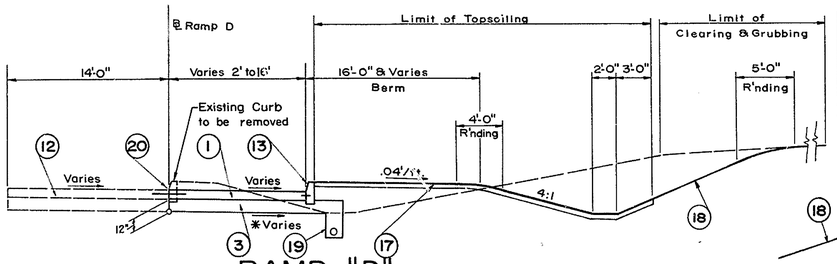


RAMP "D"

ADJACENT TO TOLL PLAZA

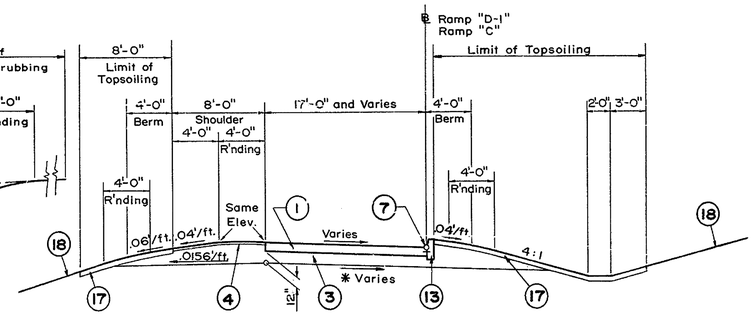


RAMP "D-1"

RAMP "C"

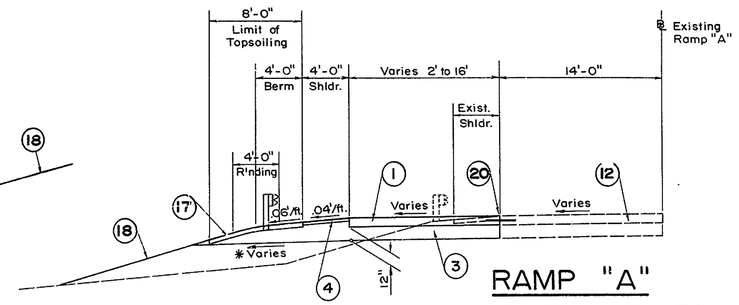


RAMP "A"

BEFORE TOLL PLAZA

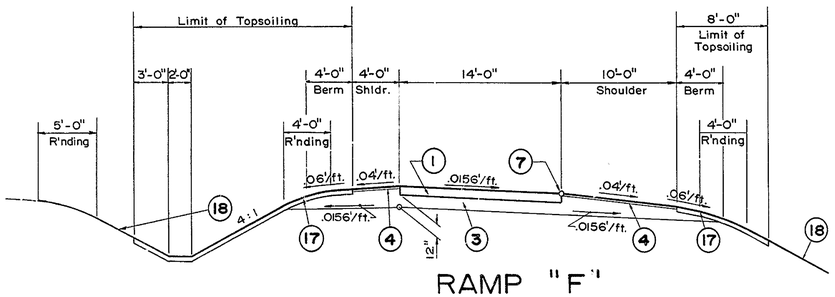


RAMP "F"

TYPICAL NORMAL SECTION

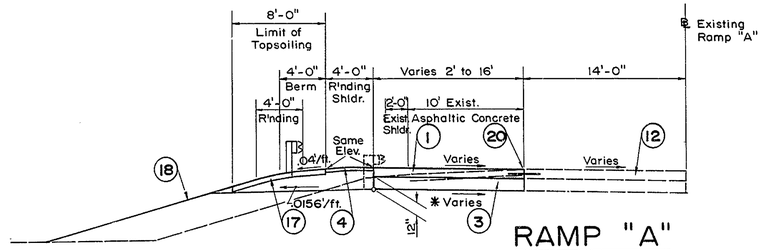


RAMP "A"

AFTER TOLL PLAZA

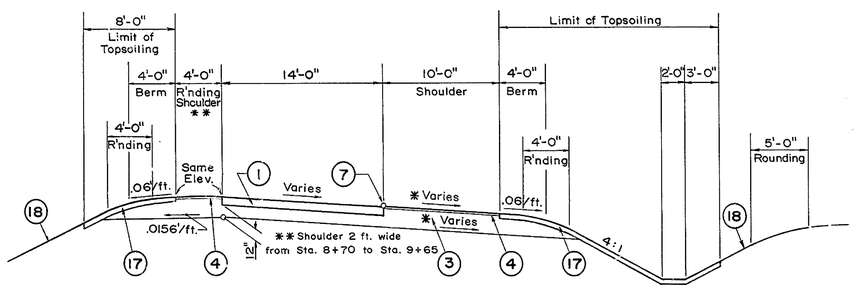


RAMP "F"

SUPERELEVATED SECTION AFTER BRIDGE

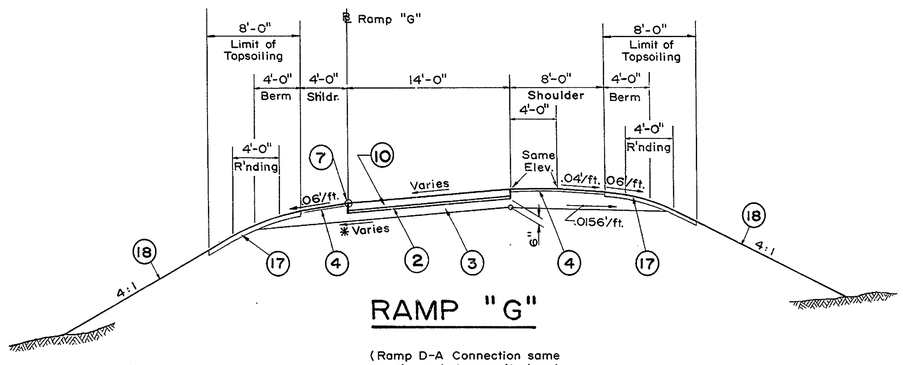


RAMP "G"

(Ramp D-A Connection same as above, but opposite hand. Also Route 896 connection to work by others.)

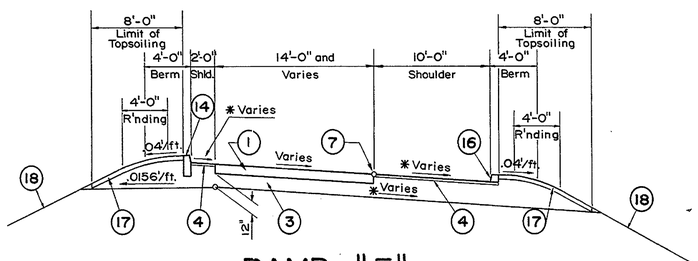


RAMP "F"

SUPERELEVATED SECTION BEFORE BRIDGE

NOTE:
For Typical Section General Notes and Legend see Sheet No. 4

* Cross slope of shoulder and subgrade to be the same as that of the adjacent pavement.

| DELAWARE TURNPIKE | CONT. NO. | TITLE | SHEET NO. | TOTAL SHEETS |
|---|---|---|---|---|
| | 7053 | NOSE DETAILS | 7 | 86 |

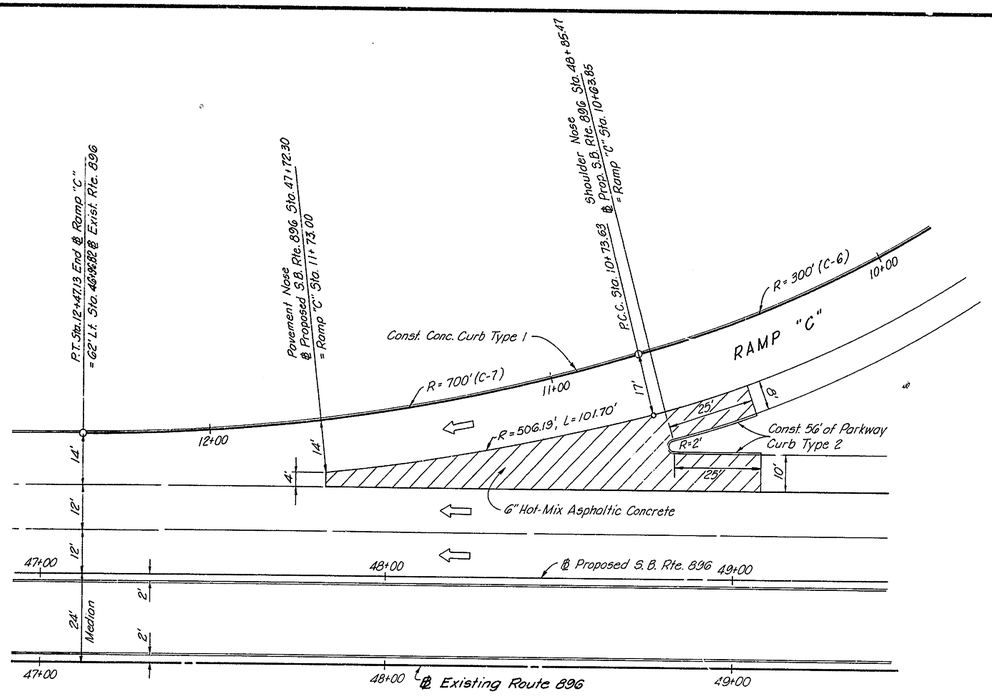


RAMP "C" TO ROUTE 896

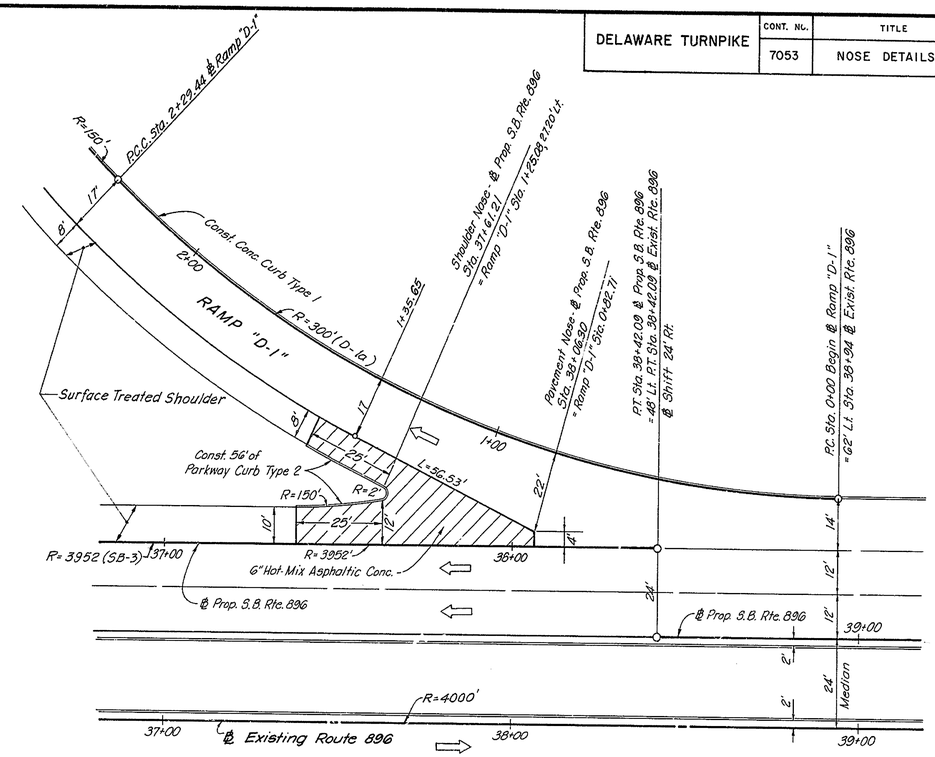


ROUTE 896 TO RAMP "D-1"

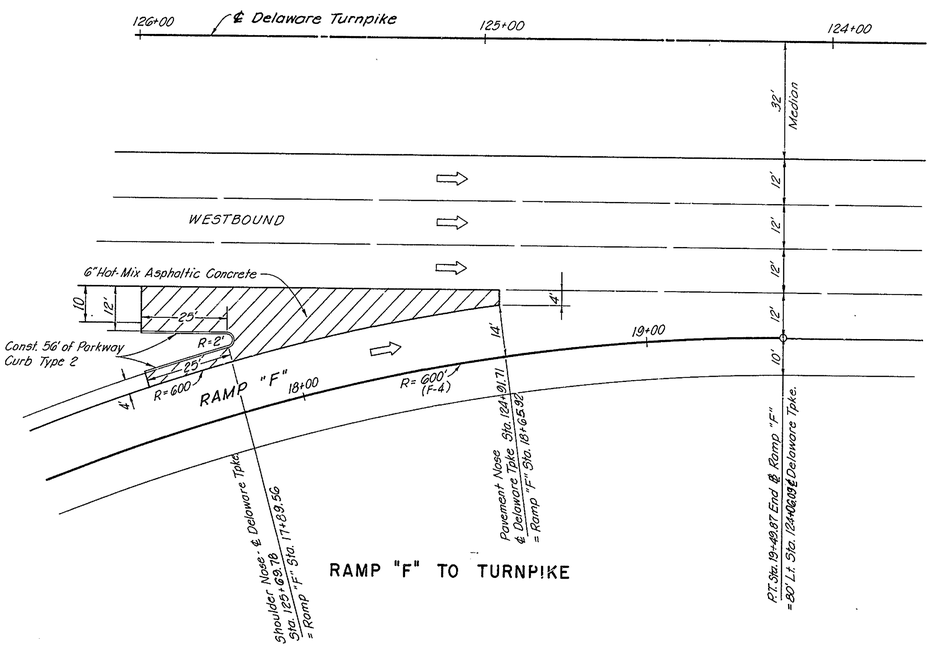


RAMP "F" TO TURNPIKE

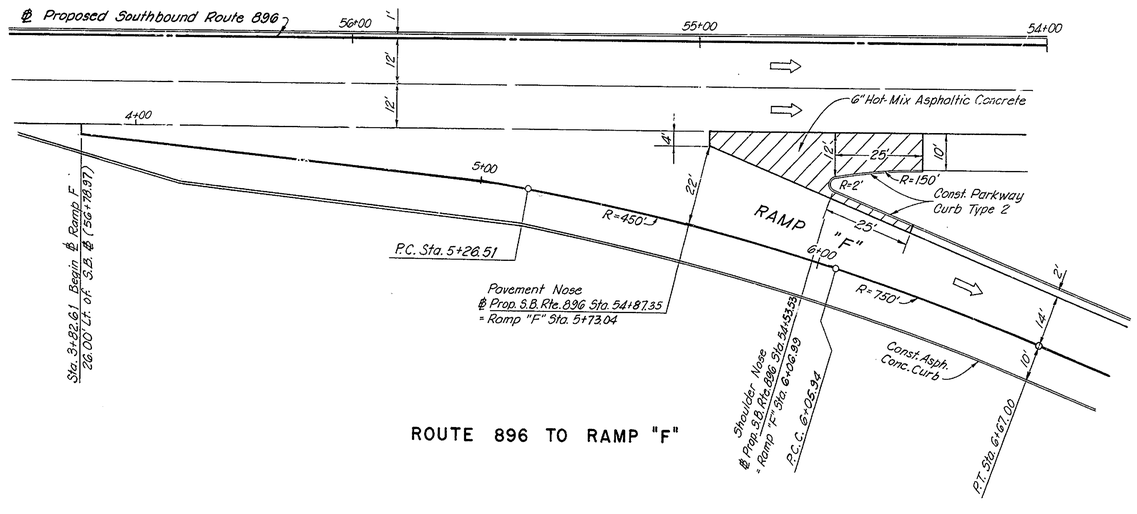


ROUTE 896 TO RAMP "F"

| DELAWARE TURNPIKE | CONT. NO. | TITLE | SHEET NO. | TOTAL SHEETS |
|---|---|---|---|---|
| | 7053 | NOSE DETAILS | 8 | 86 |

Rev. 1-8-70

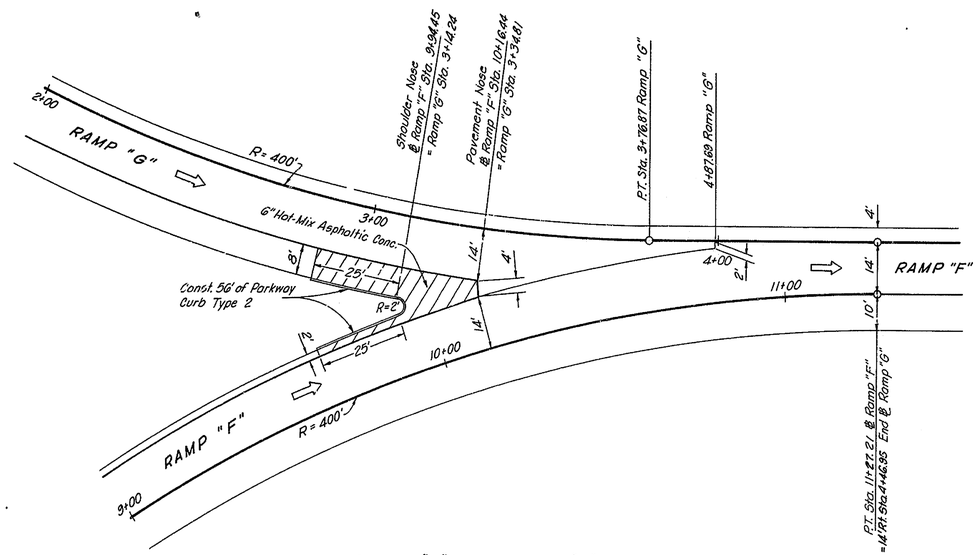


RAMP "G" TO RAMP "F"

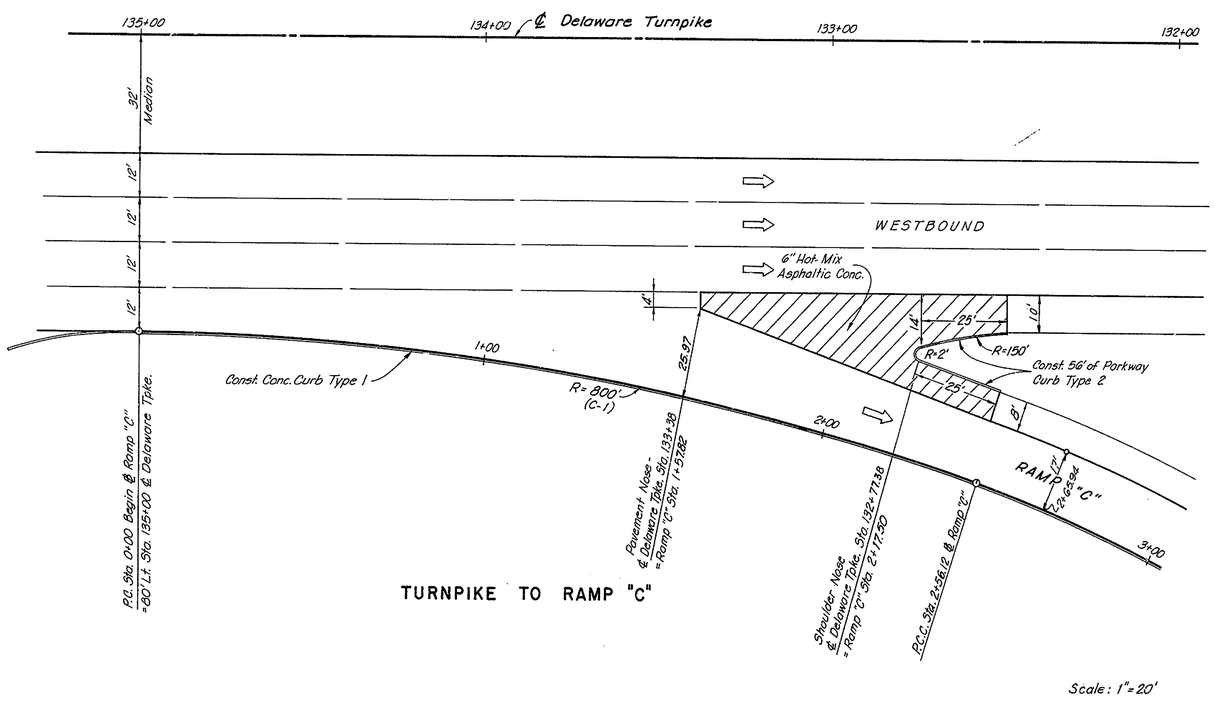


TURNPIKE TO RAMP "C"

Scale: 1" = 20'

| DELAWARE TURNPIKE | CONT. NO | TITLE | SHEET NO | TOTAL SHEETS |
|---|---|---|---|---|
| | 7053 | ROADWAY DETAILS | 9 | 86 |

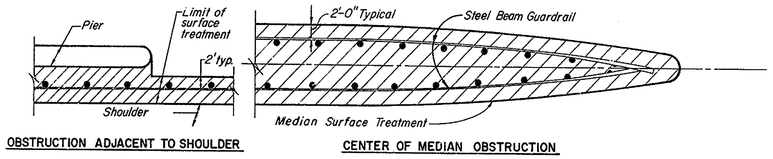


## SURFACE TREATMENT WHEN GUARDRAIL RESTRICTS MOWING

No Scale

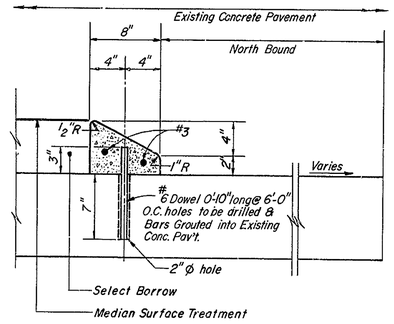


## PARKWAY CURB DOWELLED

Scale: $1\frac{1}{2}$" = 1'-0"

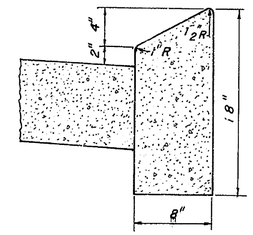


## PARKWAY CURB TYPE 2

NO SCALE

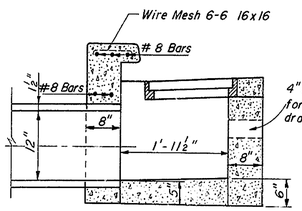


## INLET TYPE A-I MODIFIED

Scale: $\frac{3}{4}$" = 1'-0"

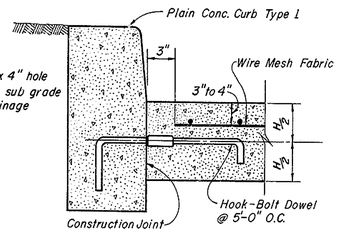


## CONCRETE PAVEMENT TO CURB DETAIL

Scale: $\frac{1}{8}$" = 1"

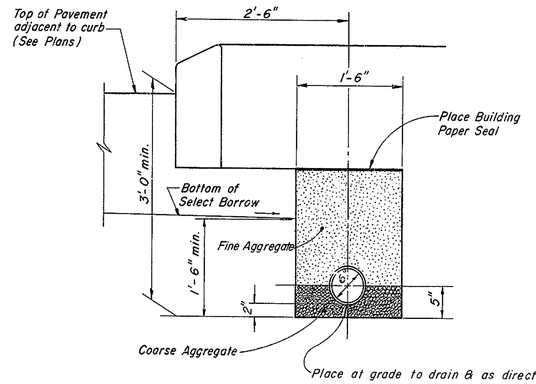


## PERFORATED UNDERDRAIN TRENCH DETAIL

No scale

Note:

1. Where laterals are required, they shall be connected at an angle of 45° to the longitudinal drain.
2. For underdrain locations see Plans.

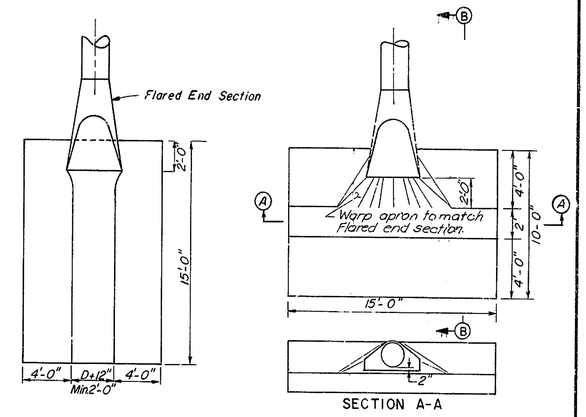


SECTION A-A

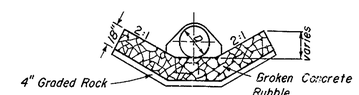


DITCH NORMAL TO ROADWAY

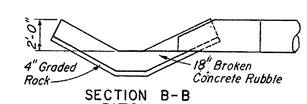


SECTION B-B
DITCH PARALLEL TO ROADWAY

RUBBLE APRON

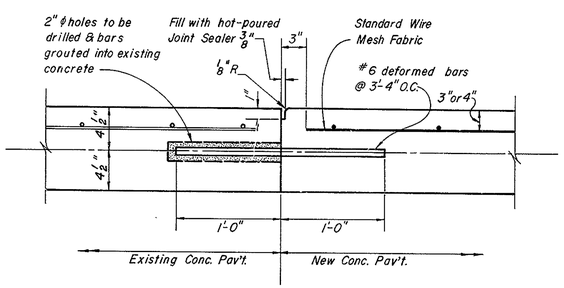


## TYPICAL DOWELLED LONGITUDINAL JOINT WITH EXISTING PAVEMENT

Scale: $1\frac{1}{2}$" = 1'-0"

NOTE: To be used at all locations were new and existing concrete abut.

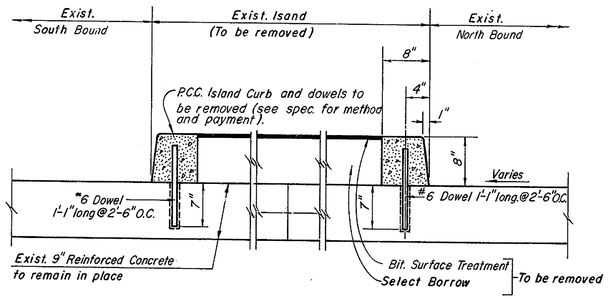


## EXISTING CURBED ISLAND TO BE REMOVED

Scale: 1"=1'-0"

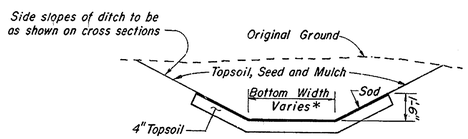


SODDED DITCH

No scale

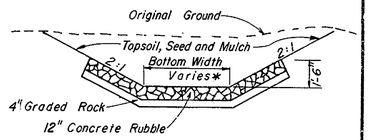


PLAIN RUBBLE GUTTER

No scale

*Bottom width of ditch as indicated on Plan Sheets.

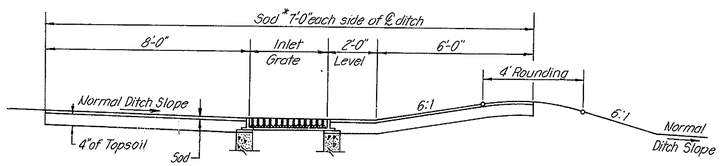


## SODDED DITCH DIKE

Scale: 3/8" = 1'-0"

| DELAWARE TURNPIKE | CONT. NO. | TITLE | SHEET NO. | TOTAL SHEETS |
|---|---|---|---|---|
| | 7053 | ROADWAY DETAILS | 10 | 86 |

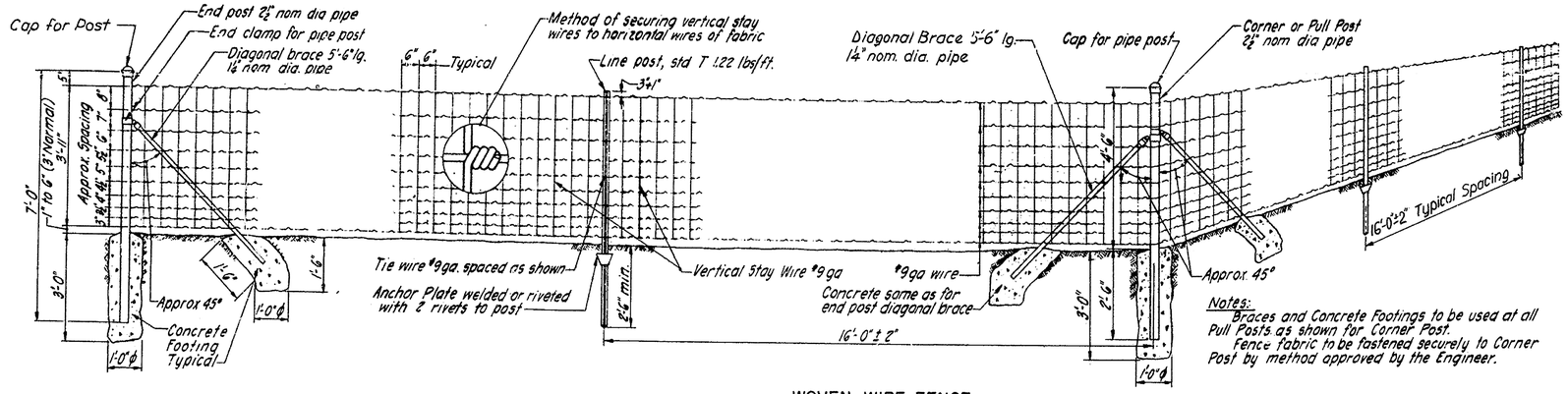


Notes:
Braces and Concrete Footings to be used at all Pull Posts as shown for Corner Post.
Fence fabric to be fastened securely to Corner Post by method approved by the Engineer.

## WOVEN WIRE FENCE

½" = 1'-0"

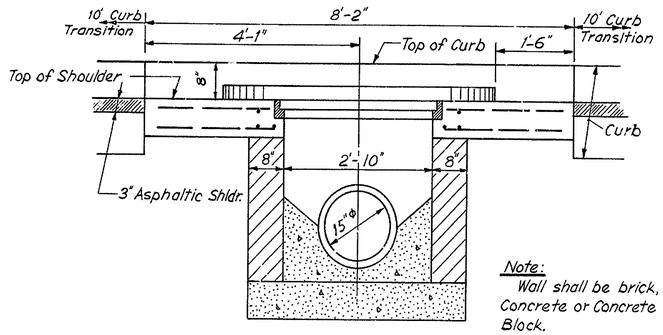


Note:
Wall shall be brick, Concrete or Concrete Block.

## SECTION B-B

¾" = 1'-0"

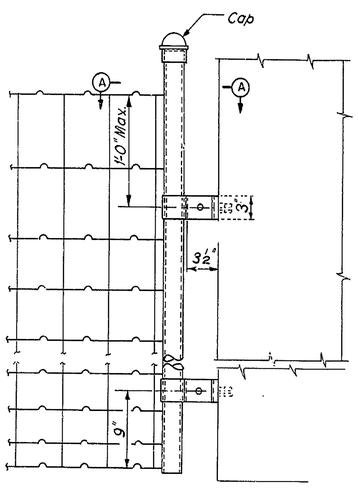


## ABUTMENT CONNECTION

1½" = 1'-0"

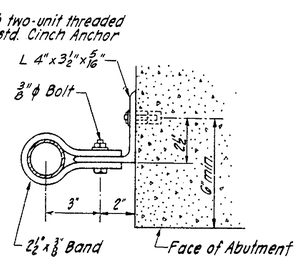


## SECTION A-A

3" = 1'-0"

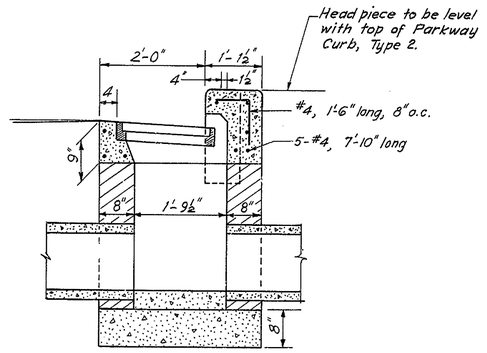


## SECTION C-C

¾" = 1'-0"

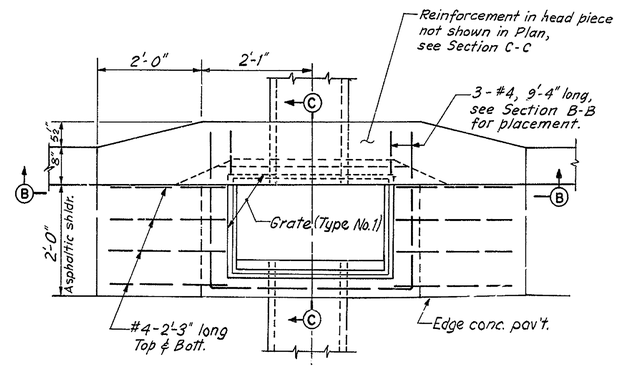


## PLAN
## TYPE C COMB. INLET

¾" = 1'-0"

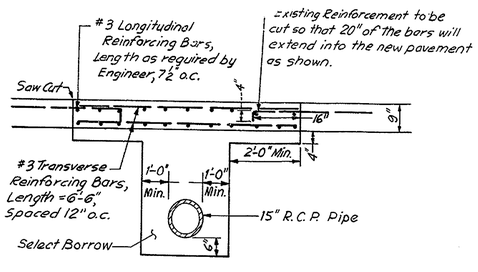


## CONCRETE PAVEMENT PATCH

No scale

| | Length of Twist | Length of Taper (And Twist) | Minimum Length of Tangent Rail Before Obstruction | Minimum Length of Rail Beyond Obstruction |
|---|---|---|---|---|
| Shoulder Installation | 25' | 62'-6" | 50' | 25' |
| Median Installation | 25' | 37'-6" | 50' | Symmetrical About Obstruction |

| | DIST. FROM BEGINNING OF TAPERS | 6.25 | 12.50 | 18.75 | 25.00 | 31.25 | 37.50 | 43.75 | 50.00 | 56.25 | 62.50 | 68.75 | 75.00 | 81.25 | 87.50 | 93.75 | 100.00 | 106.25 | 112.50 | 118.75 | 125.00 | 131.25 | 137.50 | 143.75 | 150.00 | | | |
|---|---|---|---|---|---|---|---|---|---|---|---|---|---|---|---|---|---|---|---|---|---|---|---|---|---|---|---|---|
| END OFFSET | C=5' | .18 | .59 | 1.27 | 2.13 | 3.32 | 5.00 | | | | | | | | | | | | | | | | | | | | | |
| | C=6' | .22 | .71 | 1.50 | 2.66 | 4.15 | 6.00 | | | | | | | | | | | | | | | | | | | | | |
| | C=10' | .13 | .42 | .90 | 1.60 | 2.52 | 3.66 | 4.95 | 6.45 | 8.19 | 10.00 | | | | | | | | | | | | | | | | | |
| | C=10' | .02 | .07 | .16 | .28 | .43 | .63 | .85 | 1.11 | 1.41 | 1.74 | 2.10 | 2.50 | 2.93 | 3.40 | 3.91 | 4.44 | 5.02 | 5.63 | 6.27 | 6.94 | 7.66 | 8.40 | 9.18 | 10.00 | | | |

## TABLE OF OFFSETS FROM TANGENT FOR PLACING GUARDRAIL TAPER

| DELAWARE TURNPIKE | CONT. NO. | TITLE | SHEET NO. | TOTAL SHEETS |
|---|---|---|---|---|
| | 7053 | GUARD RAIL DETAILS | 11 | 86 |

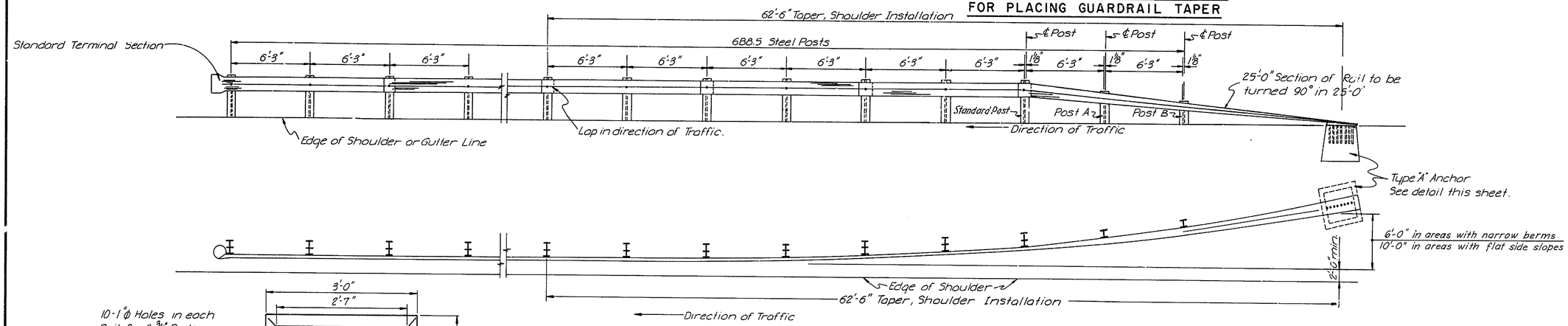


## TYPICAL SHOULDER INSTALLATION

Scale: 1"=4'-0"

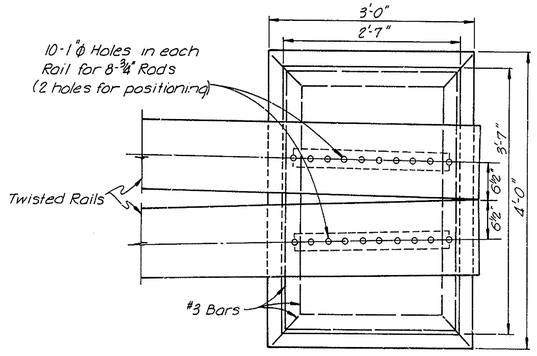


## TYPE B ANCHOR BLOCK

Scale 1"=1'-0"

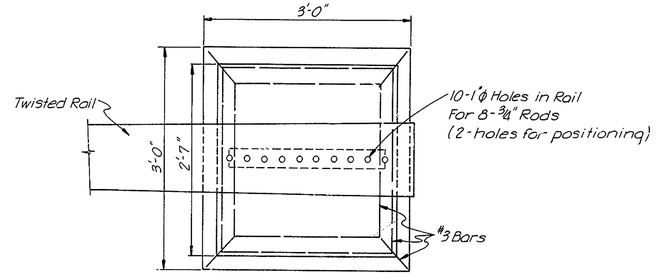


## TOP VIEW (SINGLE RAIL)

Scale 1"=1'-0"

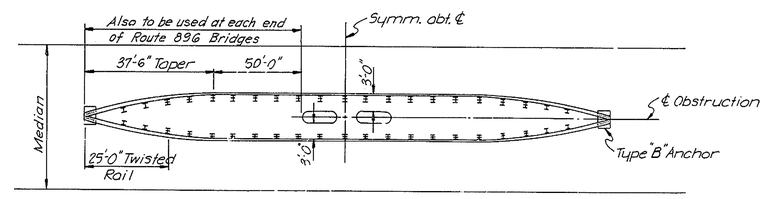


## GUARDRAIL TREATMENT AT OBSTRUCTIONS IN CENTER OF MEDIAN

Scale: none

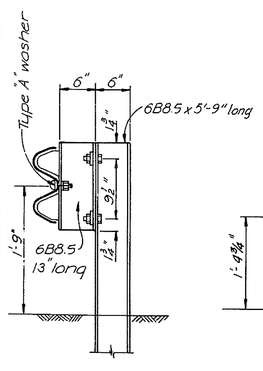


## STANDARD POST

Scale ¾"=1'-0"

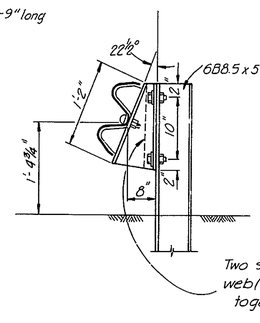


## POST A

Scale ¾"=1'-0"

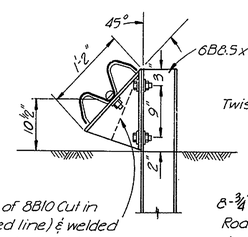


## POST B

Scale ¾"=1'-0"

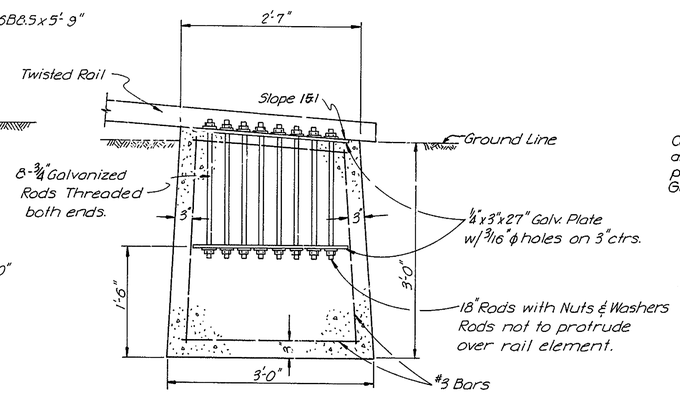


## TYPE A ANCHOR BLOCK

Scale 1"=1'-0"

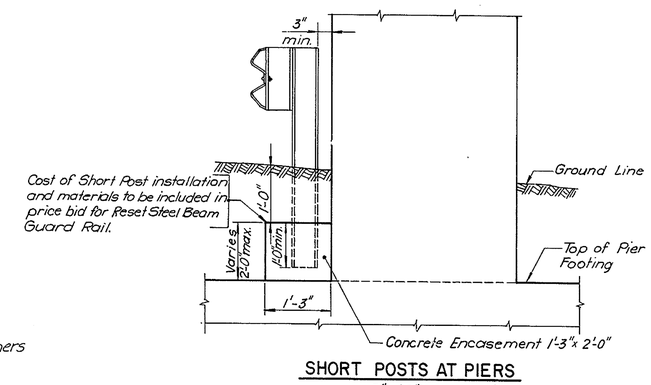


## SHORT POSTS AT PIERS

¾"=1'-0"

Note: Concrete block to be 2'-0"x2'-0" except as shown above at pier shaft where short posts are required at pier base or any other sub-surface structure where the fill is not deep enough for a normal length post.

| DELAWARE TURNPIKE | CONT NO | TITLE | SHEET NO. | TOTAL SHEETS |
|---|---|---|---|---|
| | 7053 | GUARD RAIL DETAILS | 12 | 86 |

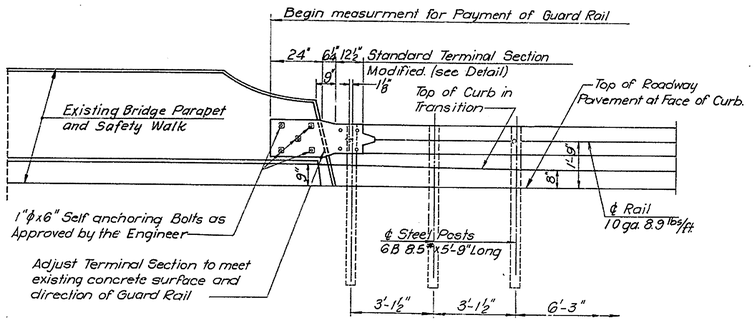


SIDE VIEW (LOOKING FROM ROADWAY)

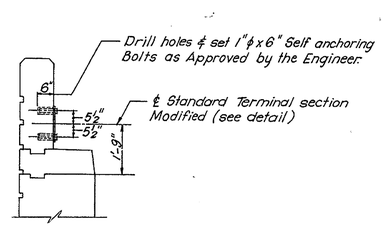


SECTION A-A

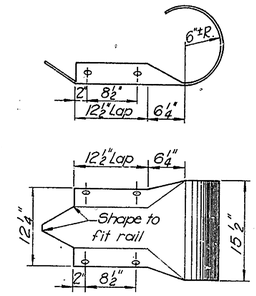


STANDARD TERMINAL SECTION

1" = 1'-0"

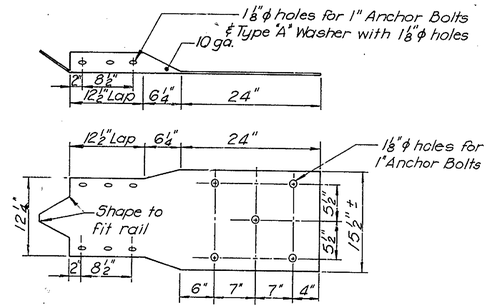


STANDARD TERMINAL SECTION MODIFIED

1" = 1'-0"

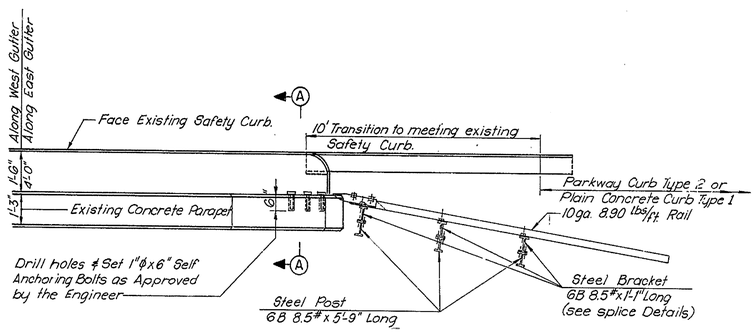


PLAN VIEW

GUARDRAIL JUNCTION AT EXISTING BRIDGE PARAPET

⅜" = 1'-0"

Cost of connection of Guard Rail to Parapet to be included in cost bid per L.F. of Reset Steel Beam Guard Rail.

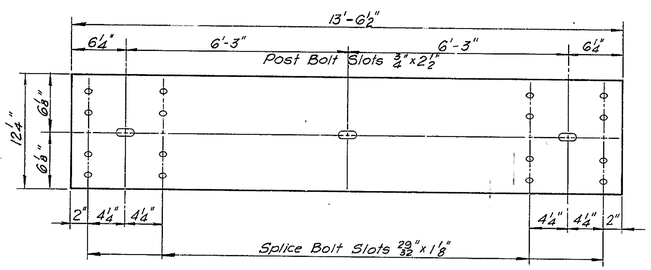


RAIL DETAIL

1½" = 1'-0"

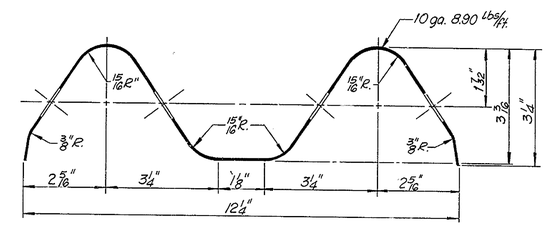


RAIL SECTION

Half Size

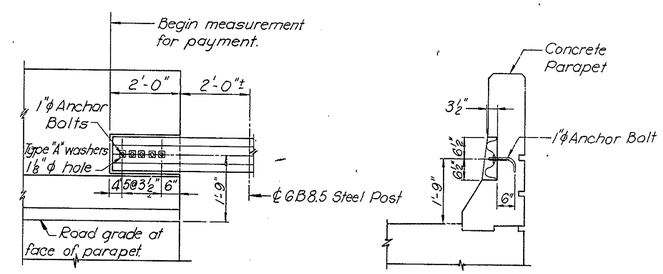


GUARD RAIL JUNCTION AT BRIDGE PARAPET

NEW CONSTRUCTION

½" = 1'-0"

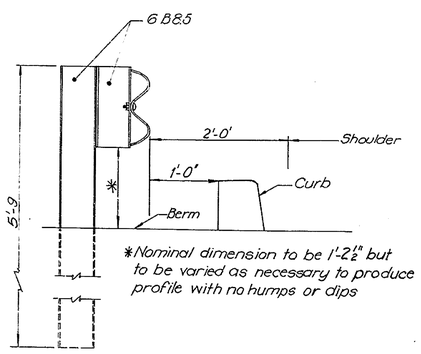


TYPICAL SECTION AT SHOULDER

1" = 1'-0"

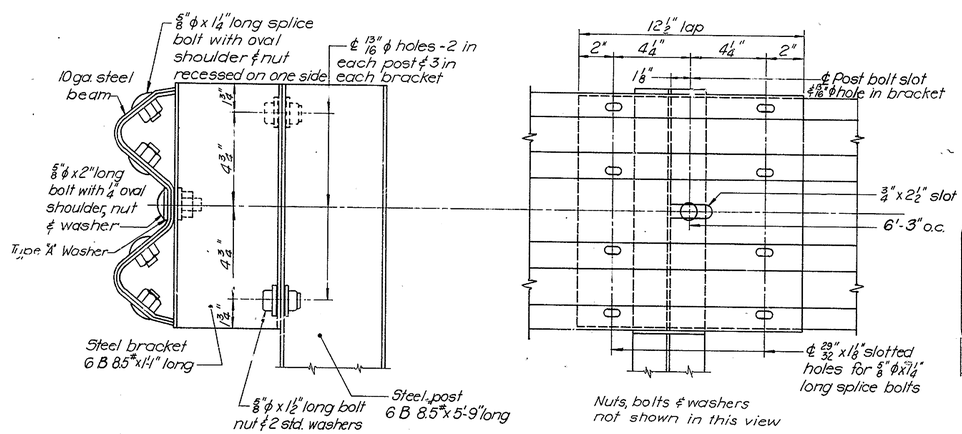


SPLICE DETAILS

3" = 1'-0"

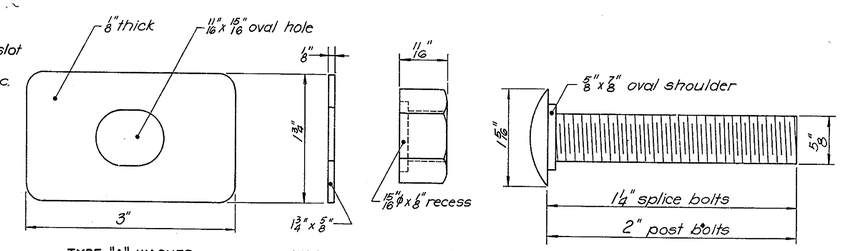


TYPE "A" WASHER | WASHER | HEX NUT

RAIL HARDWARE

Full Size

| DELAWARE TURNPIKE | CONT. NO. | TITLE | SHEET NO. | TOTAL SHEETS |
|---|---|---|---|---|
| | 7053 | DRAINAGE DETAILS | 13 | 86 |

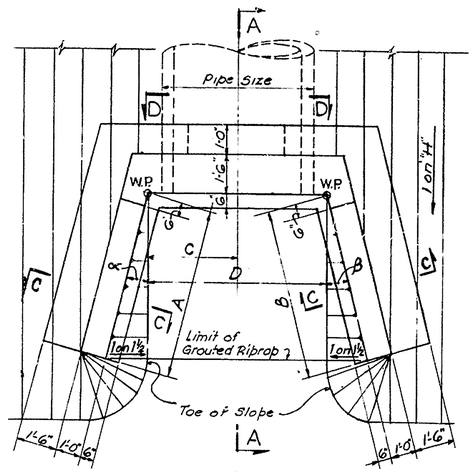


PLAN
(SKEW = 0°)

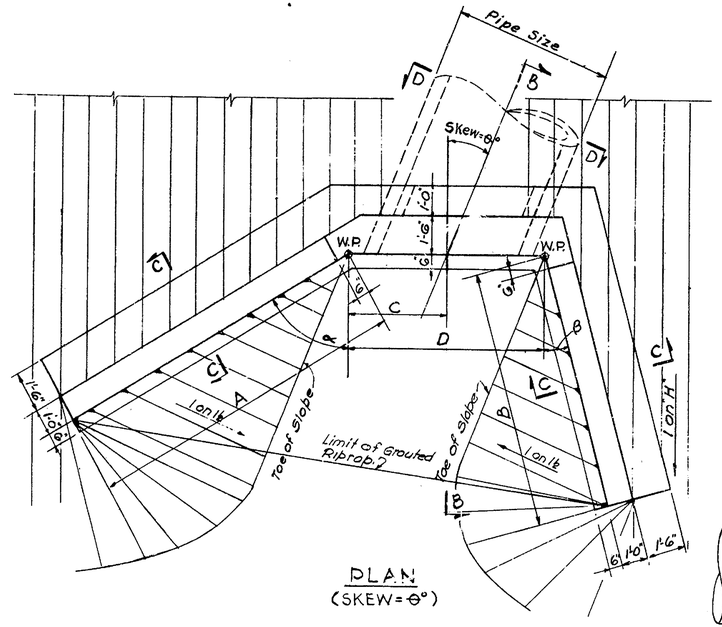


PLAN
(SKEW = θ°)

## WING WALLS

SCHEDULE OF DIMENSIONS

| TYPE | PIPE SIZE | DIRECTION OF θ | θ | α | β | A | B | C | D | E | F | G | H | QUANTITIES / WALL REINF. (LBS.) | CONC. (CU. YDS) | GROUTED RIP RAP (SQ. YDS) |
|---|---|---|---|---|---|---|---|---|---|---|---|---|---|---|---|---|
| WW-A | 48"φ | — | 0° | 15° | 15° | 6'-6" | 6'-6" | 3'-0" | 6'-0" | 4'-3" | 4'-3" | 8'-0" | 2 | 300 | 7.0 | 6.0 |
| WW-B | 60"φ | — | 0° | 15° | 15° | 8'-3" | 8'-3" | 3'-6" | 7'-0" | 4'-6" | 4'-6" | 9'-1" | 2 | 400 | 9.0 | 8.5 |
| WW-C | 60"×38" | R | 30° | 60° | 15° | 8'-8" | 5'-6" | 4'-0" | 8'-0" | 6'-3" | 5'-11" | 7'-2½" | 4 | 400 | 9.0 | 7.5 |
| WW-D | 60"×38" | R | 30° | 60° | 30° | 8'-8" | 4'-8" | 4'-0" | 8'-7" | 6'-3" | 6'-3" | 7'-2½" | 4 | 400 | 9.0 | 7.0 |
| WW-E | 66"φ | L | 41° | 15° | 60° | 6'-0" | 12'-9" | 6'-0" | 12'-0" | 5'-10" | 5'-6" | 9'-8" | 2 | 450 | 11.0 | 10.0 |
| WW-F | 54"φ | — | 0° | 15° | 15° | 7'-6" | 7'-6" | 3'-3" | 6'-6" | 4'-5" | 4'-5" | 8'-7" | 2 | 350 | 8.0 | 7.0 |
| WW-G | 54"φ | R | 26° | 60° | 30° | 12'-6" | 7'-4" | 5'-10" | 8'-8" | 5'-3" | 5'-3" | 8'-7" | 3 | 500 | 12.0 | 12.0 |
| WW-H | 60"φ | R | 23° | 60° | 15° | 10'-4" | 8'-5" | 3'-9" | 7'-7" | 7'-7" | 6'-9" | 9'-1" | 4 | 500 | 12.0 | 11.0 |

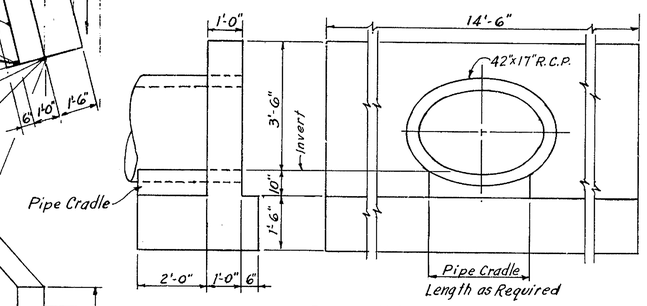


ELEVATION

HEADWALL DETAILS - 42"×27" ELLIPTICAL R.C.P.

| QUANTITIES/WALL | | | |
|---|---|---|---|
| REINF. | CONCRETE (CU. YDS.) | | |
| (LBS.) | WALL | FOOTING | TOTAL |
| 90 | 1.61 | 2.82 | 4.43 |

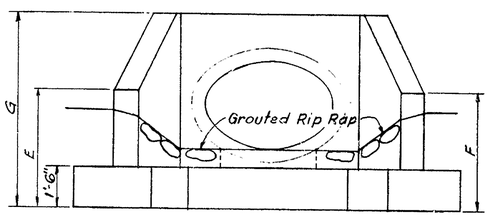


ELEVATION

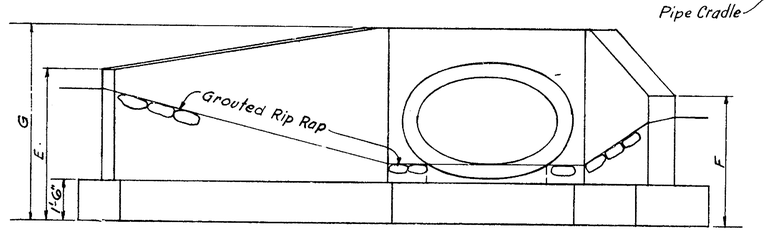


ELEVATION

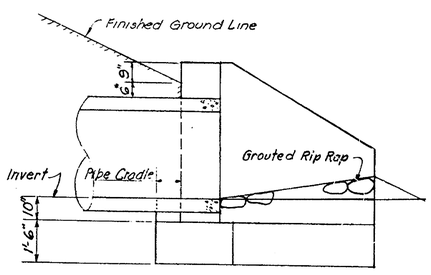


SECTION A-A
SECTION B-B SIMILAR

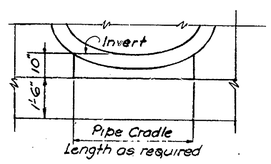


SECTION D-D

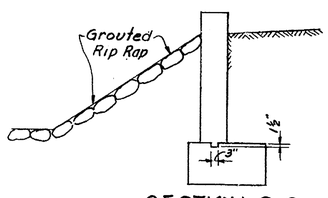


SECTION C-C

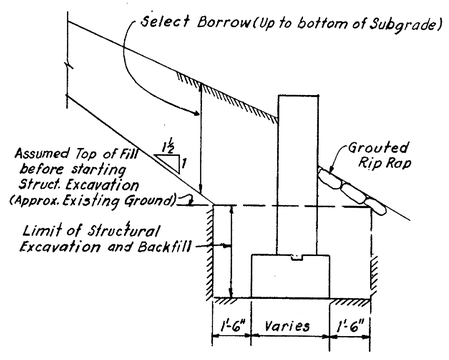


PAYMENT LINES FOR EXCAVATION AND BACKFILL

NOTES:

1. DESIGN SPECIFICATIONS: A.A.S.H.O. 1957.
2. MATERIAL AND FABRICATION SPECIFICATIONS: State of Delaware, State Highway Department. Standard Specifications for Highway Construction, June 1, 1965, and as given in the Special Provisions.
3. DESIGN STRESSES: Reinforcing Steel = 18,000 p.s.i. Concrete; $f'_c$ = 1,200 p.s.i. n = 10
4. Splices for stress bars shall be a minimum of 30 diameters, all other splices a minimum of 20 diameters.
5. All exposed concrete edges shall be bevelled 1"×1" unless otherwise noted.
6. For location of Headwalls see Roadway Plan sheets.
7. For Bar List see Sheet No. 14.
8. Headwalls for Culverts 36" or less shall conform to the State Standard Detail Sheets.
9. The cost for Grouted Rip-Rap is to be included in the price bid for the Wing Wall Concrete.

# CULVERT HEAD WALLS - DETAILS

NOT TO SCALE

| DELAWARE TURNPIKE | CONT. NO. | TITLE | SHEET NO. | TOTAL SHEETS |
|---|---|---|---|---|
| | 7053 | DRAINAGE DETAILS | 14 | 86 |

# WING WALLS - BAR LIST

| TYPE | MARK | SIZE | AMT. REQD. | LENGTH | BAR TYPE | A | B | C | Δ |
|---|---|---|---|---|---|---|---|---|---|
| WW-A | F1 | 5 | 21 | 3'-1" | I | 2'-6" | 7" | 5" | |
| | F2 | | 3 | 10'-0" | STR. | | | | |
| | FS1 | | 1 EA. TOT. 7 | 4'-5" TO 8'-11" | I | 3'-10" TO 7'-6" | 7" | 5" | 7" |
| | FS2 | | 2 | 8'-2" | I | 7'-7" | 7" | 5" | |
| | FT1 | | 1 EA. TOT. 7 | 4'-5" TO 8'-11" | I | 3'-10" TO 7'-6" | 7" | 5" | 7" |
| | FT2 | | 2 | 8'-2" | I | 7'-7" | 7" | 5" | |
| | H1 | | 2 | 7'-0" | STR. | | | | |
| | H2 | | 1 | 7'-7" | | | | | |
| | H3 | | 4 | 1'-6" | | | | | |
| | HS1 | | 3 | 7'-6" | | | | | |
| | HS2 | | 1 EA. TOT. 2 | 3'-8" TO 4'-6" | STR. | | | | 1'-8" |
| | HS3 | | 1 | 8'-5" | II | 1'-8" | 6'-9" | 8 3/16" | |
| | HT1 | | 3 | 7'-6" | STR. | | | | |
| | HT2 | | 1 EA. TOT. 2 | 3'-8" TO 4'-6" | STR. | | | | 1'-8" |
| | HT3 | | 1 | 8'-5" | II | 1'-8" | 6'-9" | 8 3/16" | |
| | FS3 | | 3 | 7'-6" | STR. | | | | |
| | FT3 | 5 | 3 | 7'-6" | STR. | | | | |
| WW-B | F1 | 5 | 23 | 3'-1" | I | 2'-6" | 7" | 5" | |
| | F2 | | 3 | 11'-0" | STR. | | | | |
| | FS1 | | 1 EA. TOT. 8 | 4'-9" TO 8'-11" | I | 4'-2" TO 8'-4" | 7" | 5" | 7" |
| | FS2 | | 2 | 9'-1" | I | 8'-6" | 7" | 5" | |
| | FT1 | | 1 EA. TOT. 8 | 4'-9" TO 8'-11" | I | 4'-2" TO 8'-4" | 7" | 5" | 7" |
| | FT2 | | 2 | 9'-1" | I | 8'-6" | 7" | 5" | |
| | H1 | | 2 | 8'-0" | STR. | | | | |
| | H2 | | 1 | 8'-7" | | | | | |
| | H3 | | 4 | 1'-6" | | | | | |
| | HS1 | | 3 | 9'-3" | | | | | |
| | HS2 | | 1 EA. TOT. 3 | 3'-9" TO 5'-11" | STR. | | | | 1'-4" |
| | HS3 | | 1 | 10'-3" | II | 1'-8" | 6'-7" | 7 9/16" | |
| | HT1 | | 3 | 9'-3" | STR. | | | | |
| | HT2 | | 1 EA. TOT. 3 | 3'-3" TO 5'-11" | STR. | | | | 1'-4" |
| | HT3 | | 1 | 10'-3" | II | 1'-8" | 6'-7" | 7 9/16" | |
| | FS3 | | 3 | 9'-3" | STR. | | | | |
| | FT3 | 5 | 3 | 9'-3" | STR. | | | | |
| WW-C | F1 | 5 | 23 | 3'-1" | I | 2'-6" | 7" | 5" | |
| | F2 | | 2 | 10'-11" | STR. | | | | |
| | FS1 | | 1 EA. TOT. 9 | 6'-5" TO 7'-2" | I | 5'-10" TO 6'-7" | 7" | 5" | 1 1/4" |
| | FS2 | | 2 | 7'-4" | I | 6'-9" | 7" | 5" | |
| | FT1 | | 1 EA. TOT. 5 | 6'-1" TO 7'-2" | I | 5'-6" TO 6'-7" | 7" | 5" | 8" |
| | FT2 | | 2 | 7'-4" | I | 6'-9" | 7" | 5" | |
| | H1 | | 2 | 7'-10" | STR. | | | | |
| | H2 | | 1 | 10'-1" | | | | | |
| | H3 | | 4 | 1'-6" | | | | | |
| | HS1 | | 5 | 9'-8" | | | | | |
| | HS2 | | 1 | 4'-0" | STR. | | | | |
| | HS3 | | 1 | 9'-8" | II | 1'-8" | 8'-0" | 1 7/16" | |
| | HT1 | | 4 | 6'-6" | STR. | | | | |
| | HT2 | | 1 | 5'-10" | STR. | | | | |
| | HT3 | | 1 | 6'-8" | II | 1'-8" | 5'-0" | 3 1/8" | |
| | FS3 | | 3 | 9'-8" | STR. | | | | |
| | FT3 | 5 | 3 | 6'-6" | STR. | | | | |
| WW-D | F1 | 5 | 23 | 3'-1" | I | 2'-6" | 7" | 5" | |
| | F2 | | 2 | 11'-1" | STR. | | | | |
| | FS1 | | 1 EA. TOT. 9 | 6'-5" TO 7'-3" | I | 5'-10" TO 6'-8" | 7" | 5" | 1 1/4" |
| | FS2 | | 2 | 7'-4" | I | 6'-9" | 7" | 5" | |
| | FT1 | | 1 EA. TOT. 5 | 6'-5" TO 7'-3" | I | 5'-10" TO 6'-8" | 7" | 5" | 2 1/8" |
| | FT2 | | 2 | 7'-4" | I | 6'-9" | 7" | 5" | |
| | H1 | | 2 | 8'-2" | STR. | | | | |
| | H2 | | 1 | 10'-8" | | | | | |
| | H3 | | 4 | 1'-6" | | | | | |
| | HS1 | | 5 | 9'-8" | | | | | |
| | HS2 | | 1 | 4'-0" | STR. | | | | |
| | HS3 | | 1 | 9'-8" | II | 1'-8" | 8'-0" | 1 7/16" | |
| | HT1 | | 5 | 5'-6" | STR. | | | | |
| | HT2 | | 1 | 4'-0" | STR. | | | | |
| | HT3 | | 1 | 5'-7" | II | 1'-6" | 4'-1" | 2 3/16" | |
| | FS3 | | 3 | 9'-8" | STR. | | | | |
| | FT3 | 5 | 3 | 5'-8" | STR. | | | | |

| TYPE | MARK | SIZE | AMT. REQD. | LENGTH | BAR TYPE | A | B | C | Δ |
|---|---|---|---|---|---|---|---|---|---|
| WW-E | F1 | 5 | 31 | 3'-1" | I | 2'-6" | 7" | 5" | |
| | F2 | | 3 | 14'-0" | STR. | | | | |
| | FS1 | | 1 EA. TOT. 6 | 6'-0" TO 9'-8" | I | 5'-5" TO 9'-1" | 7" | 5" | 9" |
| | FS2 | | 2 | 9'-9" | I | 9'-2" | 7" | 5" | |
| | FT1 | | 1 EA. TOT. 13 | 5'-7" TO 9'-8" | I | 5'-0" TO 9'-1" | 7" | 5" | 4" |
| | FT2 | | 2 | 9'-9" | I | 9'-2" | 7" | 5" | |
| | H1 | | 2 | 11'-6" | STR. | | | | |
| | H2 | | 1 | 13'-0" | | | | | |
| | H3 | | 4 | 1'-6" | | | | | |
| | HS1 | | 4 | 7'-0" | | | | | |
| | HS2 | | 1 EA. TOT. 3 | 2'-8" TO 4'-9" | STR. | | | | 1'-0 1/2" |
| | HS3 | | 1 | 7'-8" | II | 1'-8" | 6'-0" | 8 1/2" | |
| | HT1 | | 5 | 13'-9" | STR. | | | | |
| | HT2 | | 1 EA. TOT. 3 | 3'-8" TO 9'-8" | STR. | | | | 3'-0" |
| | HT3 | | 1 | 14'-0" | II | 1'-8" | 12'-4" | 4" | |
| | FS3 | | 3 | 7'-0" | STR. | | | | |
| | FT3 | 5 | 3 | 13'-9" | STR. | | | | |
| WW-F | F1 | 5 | 23 | 3'-1" | I | 2'-6" | 7" | 5" | |
| | F2 | | 3 | 8'-6" | STR. | | | | |
| | FS1 | | 1 EA. TOT. 7 | 4'-7" TO 8'-7" | I | 4'-0" TO 8'-0" | 7" | 5" | 8" |
| | FS2 | | 2 | 8'-9" | I | 8'-2" | 7" | 5" | |
| | FT1 | | 1 EA. TOT. 7 | 4'-7" TO 8'-7" | I | 4'-0" TO 8'-0" | 7" | 5" | 8" |
| | FT2 | | 2 | 8'-9" | I | 8'-2" | 7" | 5" | |
| | H1 | | 2 | 8'-0" | STR. | | | | |
| | H2 | | 1 | 7'-6" | | | | | |
| | H3 | | 4 | 1'-6" | | | | | |
| | HS1 | | 4 | 8'-6" | | | | | |
| | HS2 | | 1 | 4'-7" | STR. | | | | |
| | HS3 | | 1 | 8'-8" | II | 1'-8" | 7'-0" | 7 1/4" | |
| | HT1 | | 4 | 8'-6" | STR. | | | | |
| | HT2 | | 1 | 4'-7" | STR. | | | | |
| | HT3 | | 1 | 8'-8" | II | 1'-8" | 7'-0" | 7 1/4" | |
| | FS3 | | 3 | 8'-6" | STR. | | | | |
| | FT3 | 5 | 3 | 8'-6" | STR. | | | | |
| WW-G | F1 | 5 | 30 | 3'-1" | I | 2'-6" | 7" | 5" | |
| | F2 | | 3 | 10'-3" | STR. | | | | |
| | FS1 | | 1 EA. TOT. 12 | 5'-5" TO 8'-7" | I | 4'-10" TO 8'-0" | 7" | 5" | 3 1/2" |
| | FS2 | | 2 | 8'-9" | I | 8'-2" | 7" | 5" | |
| | FT1 | | 1 EA. TOT. 7 | 5'-5" TO 8'-7" | I | 4'-10" TO 8'-0" | 7" | 5" | 6 1/2" |
| | FT2 | | 2 | 8'-9" | I | 6'-7" | 7" | 5" | |
| | H1 | | 2 | 7'-6" | STR. | | | | |
| | H2 | | 1 | 9'-3" | | | | | |
| | H3 | | 4 | 1'-6" | | | | | |
| | HS1 | | 4 | 13'-6" | | | | | |
| | HS2 | | 1 | 4'-7" | STR. | | | | |
| | HS3 | | 1 | 13'-8" | II | 1'-8" | 12'-0" | 3 1/4" | |
| | HT1 | | 4 | 8'-4" | STR. | | | | |
| | HT2 | | 1 | 2'-10" | STR. | | | | |
| | HT3 | | 1 | 8'-8" | II | 1'-8" | 7'-0" | 5 1/2" | |
| | FS3 | | 3 | 13'-6" | STR. | | | | |
| | FT3 | 5 | 3 | 13'-6" | STR. | | | | |
| WW-H | F1 | 5 | 28 | 3'-1" | I | 2'-6" | 7" | 5" | |
| | F2 | | 2 | 10'-3" | STR. | | | | |
| | FS1 | | 1 EA. TOT. 10 | 7'-9" TO 9'-1" | I | 7'-2" TO 8'-6" | 7" | 5" | 1 3/4" |
| | FS2 | | 2 | 9'-3" | I | 8'-8" | 7" | 5" | |
| | FT1 | | 1 EA. TOT. 8 | 6'-11" TO 9'-1" | I | 6'-4" TO 8'-6" | 7" | 5" | 3 3/16" |
| | FT2 | | 2 | 9'-3" | I | 8'-8" | 7" | 5" | |
| | H1 | | 2 | 7'-5" | STR. | | | | |
| | H2 | | 1 | 9'-8" | | | | | |
| | H3 | | 4 | 1'-6" | | | | | |
| | HS1 | | 6 | 11'-4" | | | | | |
| | HS2 | | 1 | 6'-7" | STR. | | | | |
| | HS3 | | 1 | 11'-4 | II | 1'-8" | 9'-8 | 1 3/16" | |
| | HT1 | | 5 | 9'-5" | STR. | | | | |
| | HT2 | | 1 EA. TOT. 2 | 3'-5" TO 6'-9" | STR. | | | | |
| | HT3 | | 1 | 9'-9" | II | 1'-8" | 8'-1" | 9 3/16" | |
| | FS3 | | 3 | 11'-4" | STR. | | | | |
| | FT3 | 5 | 3 | 9'-5" | STR. | | | | |

All bar dimensions are out to out

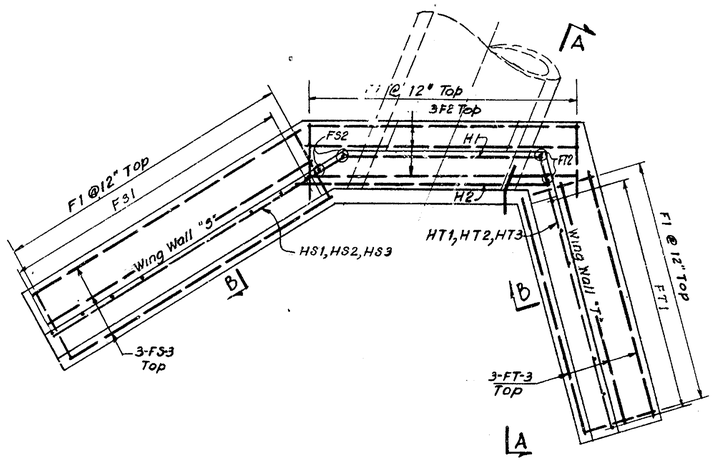


PLAN

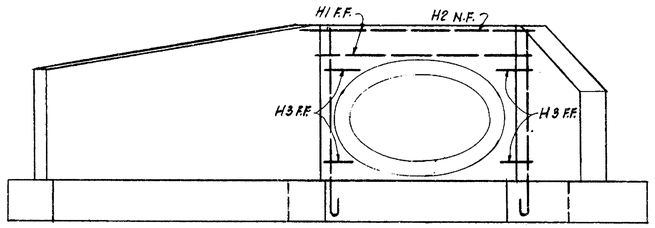


ELEVATION

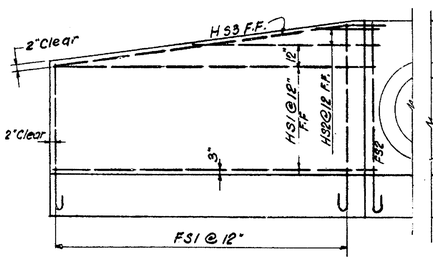


ELEVATION WINGWALL "S"

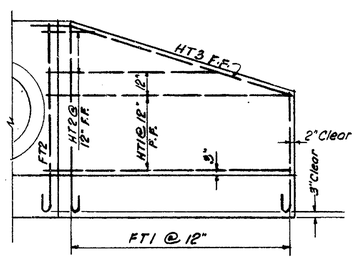


ELEVATION WINGWALL "T"

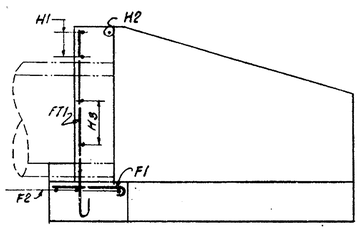


SECTION A-A

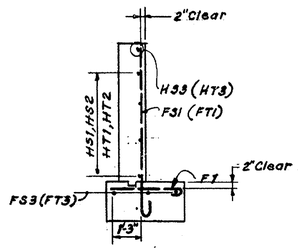


SECTION B-B

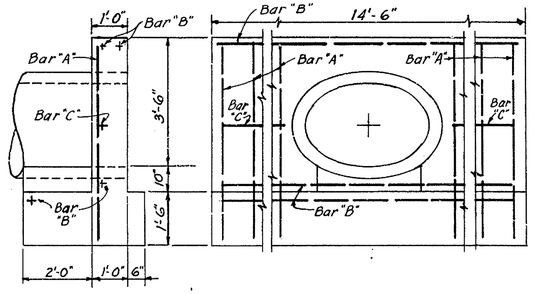


BAR LIST & DETAILS
HEADWALL FOR 42"x27" ELLIP. R.C.P.

| Spacing of Vertical Bars | 1/2" REINFORCING BARS | | | | | | | | |
|---|---|---|---|---|---|---|---|---|---|
| | BARS "A" | | | BARS "B" | | | BARS "C" | | |
| | NO. | Length | Total Length | NO. | Length | Total Length | NO. | Length | Total Length |
| 11" | 12 | 5'-6" | 66' | 4 | 14' | 56' | 2 | 4'-6" | 9' |

NOTES:

1. For Location of Headwalls see Roadway Plan sheets.
2. For Dimensions of Headwalls see Sheet No. 13.

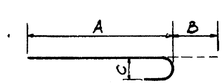


TYPE I

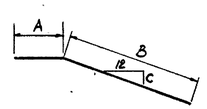


TYPE II

# CULVERT HEAD WALLS - BAR LIST

NOT TO SCALE

| DELAWARE TURNPIKE | CONT. NO. | TITLE | SHEET NO. | TOTAL SHEETS |
|---|---|---|---|---|
| | 7053 | ROADWAY PLANS | 15 | 86 |

| Curve No. | Δ | R | T | L |
|---|---|---|---|---|
| SB-1 | 7°-20'-28.8" | 3000' | 192.460 | 384.393 |
| SB-2 | 4°-08'-00.7" | 7060' | 254.778 | 509.336 |
| | | | | |

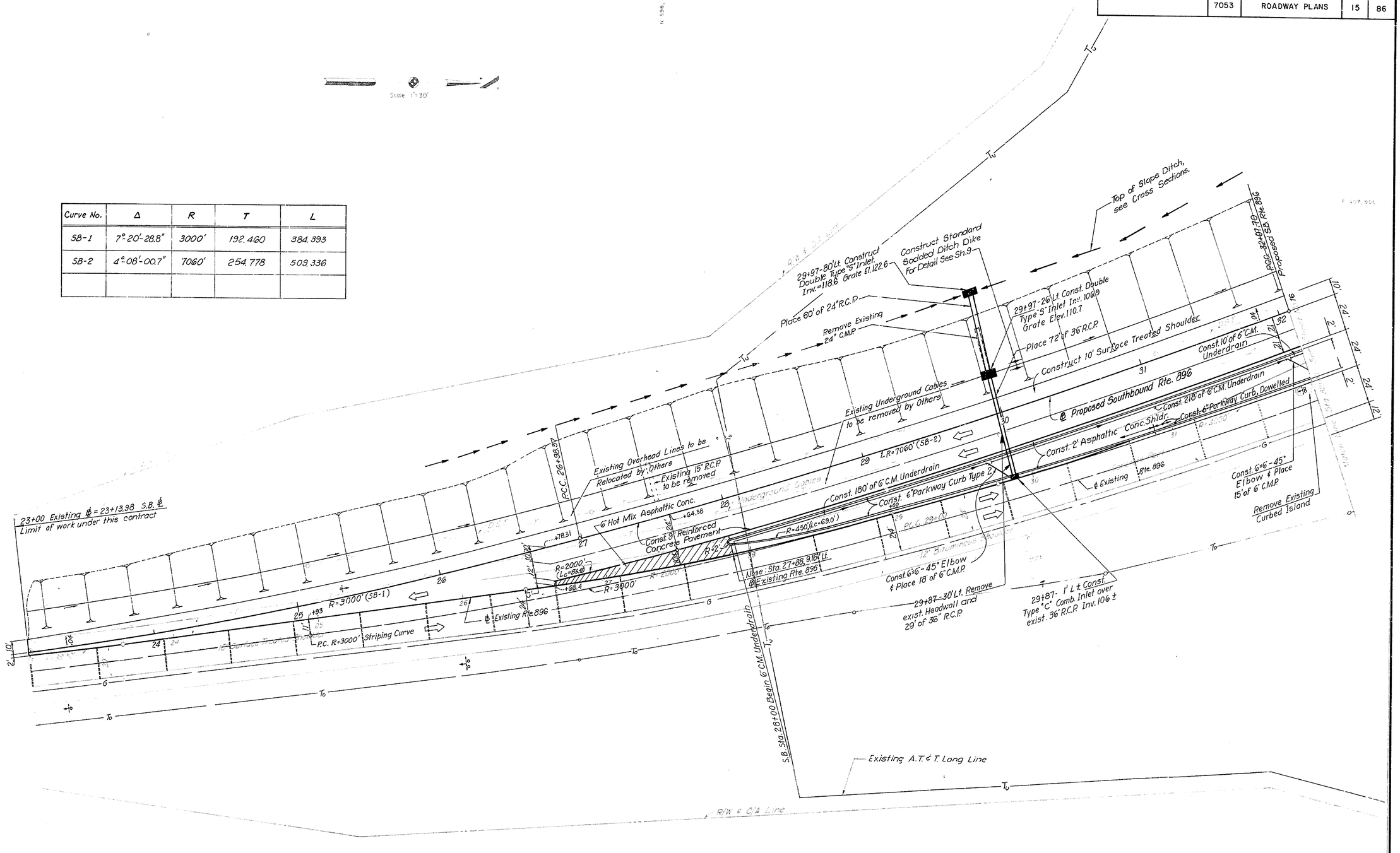

| DELAWARE TURNPIKE | CONT. NO. | TITLE | SHEET NO. | TOTAL SHEETS |
|---|---|---|---|---|
| | 7053 | ROADWAY PLANS | 16 | 86 |

| Curve No. | Δ | R | T | L |
|---|---|---|---|---|
| D-1a | 43°-49'-08.4" | 300' | 120.657' | 229.436' |
| D-1b | 68°-11'-40.8" | 150' | 101.547' | 178.533' |
| D-1c | 50°-30'-20.7" | 150' | 70.754' | 132.224' |
| SB-3 | 9°-11'-50.3" | 3952' | 317.877' | 634.388' |

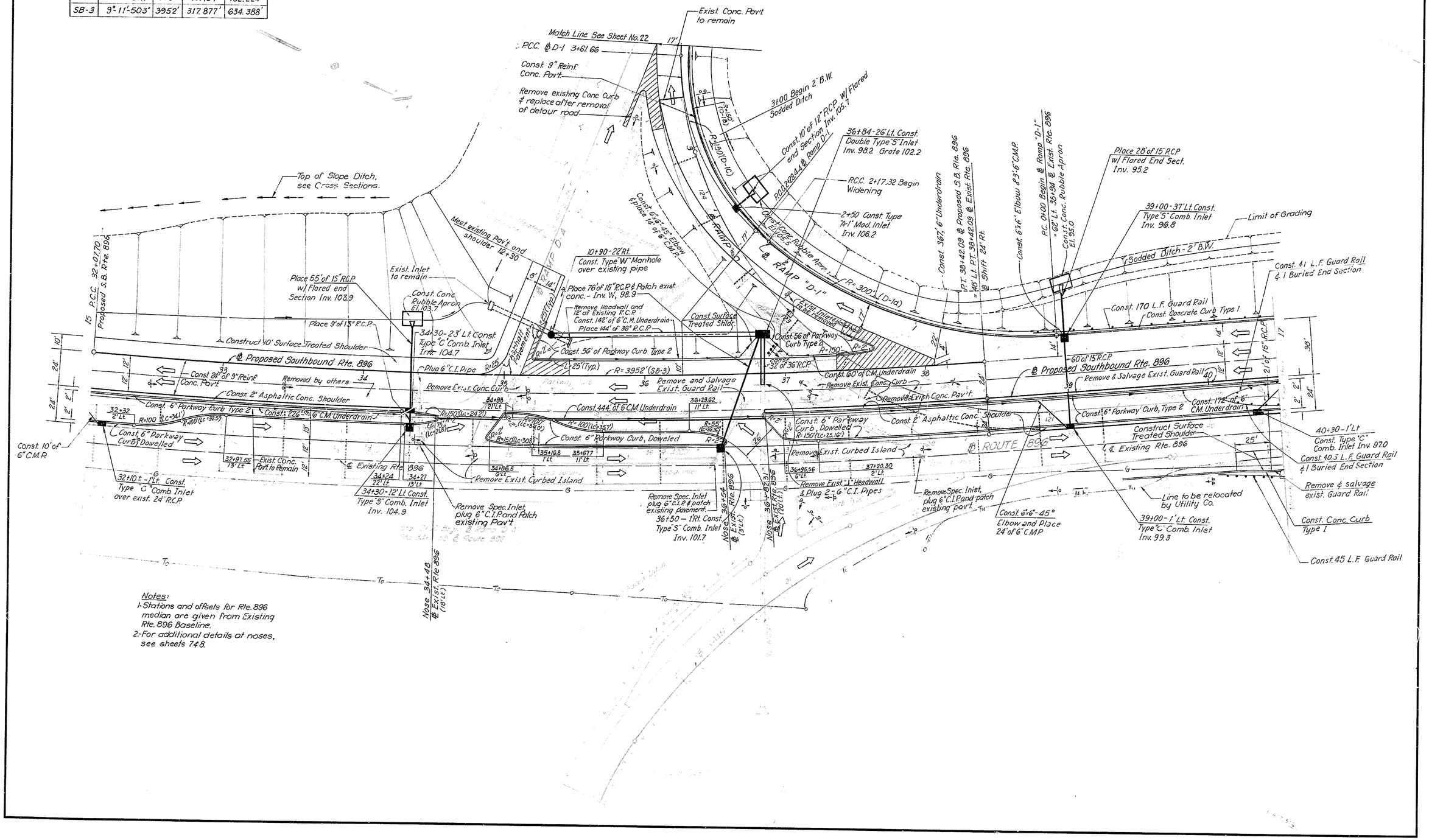


Notes:
1- Stations and offsets for Rte. 896 median are given from Existing Rte. 896 Baseline.
2- For additional details at noses, see sheets 7 & 8.

| DELAWARE TURNPIKE | CONT NO | TITLE | SHEET NO. | TOTAL SHEETS |
|---|---|---|---|---|
| | 7053 | ROADWAY PLANS | 17 | 86 |

| P.I. NO. | Δ | R | T | L |
|---|---|---|---|---|
| C-1 | 18°-20'-34.6" | 800' | 129.163' | 256.116' |
| C-6 | 21°-56'-24.3" | 300' | 58.151' | 114.878' |
| C-7 | 14°-12'-04.6" | 700' | 87.198' | 173.502' |

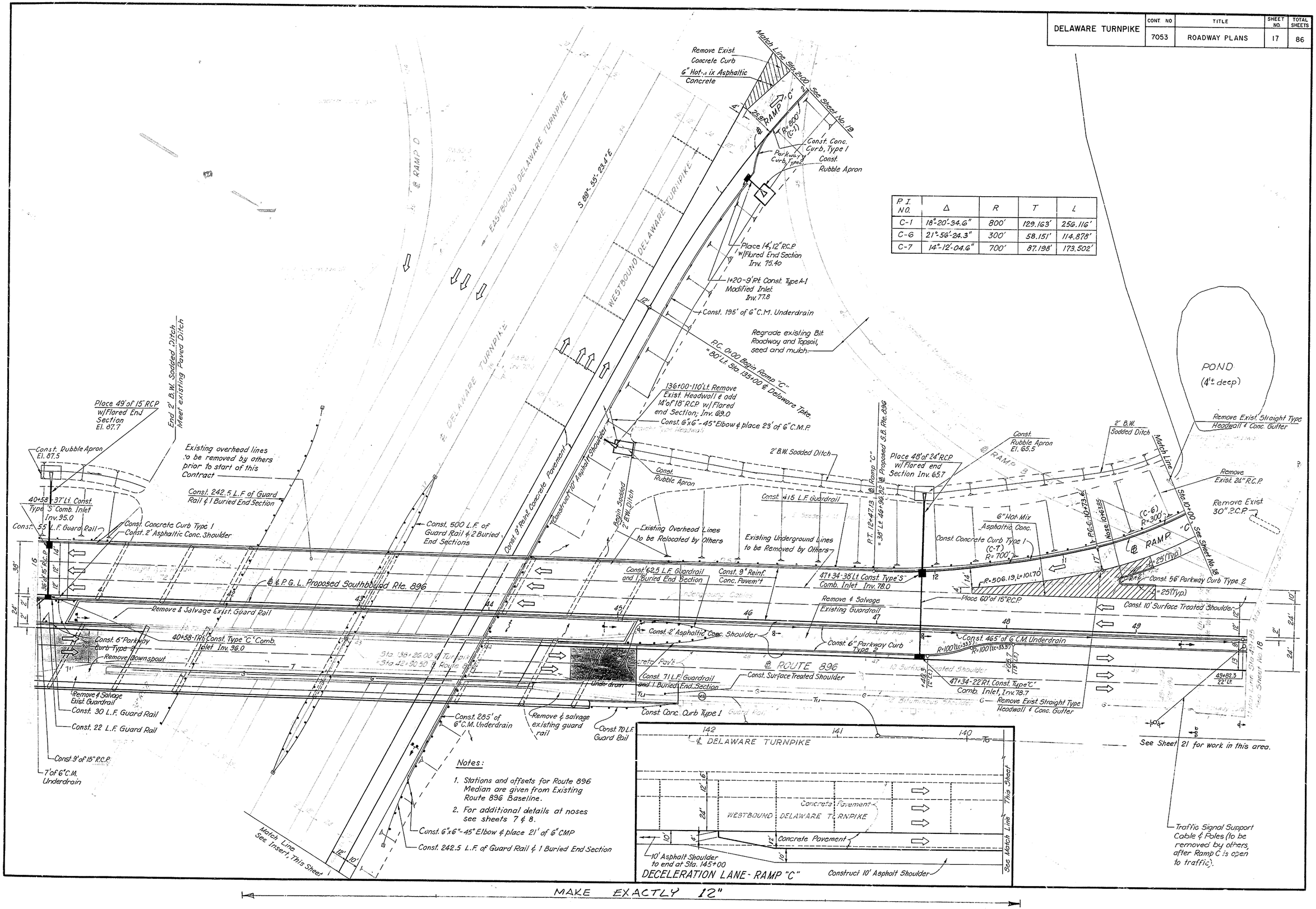

| DELAWARE TURNPIKE | CONT. NO. | TITLE | SHEET NO. | TOTAL SHEETS |
|---|---|---|---|---|
| | 7053 | ROADWAY PLANS | 18 | 86 |

| Curve No. | Δ | R | T | L |
|---|---|---|---|---|
| NB-1 | 4°-17'-37.1" | 3000' | 112.460' | 224.815 |
| SB-4 | 3°-01'-30.8" | 4976 | 131.397 | 262.734 |
| SB-5 | 4°-18'-29.6" | 3000 | 112.842 | 225.579 |
| SB-6 | 1°-56'-22.2" | 1200 | 20.312 | 40.621 |
| F-1 | 10°-06'-48.7" | 450 | 39.819 | 79.431 |
| F-2 | 4°-39'-53.5" | 750 | 30.548 | 61.063 |
| F-3 | 55°-27'-48.2" | 400 | 210.287 | 387.208 |
| G-1 | 62°-17'-24-0" | 75 | 45.323 | 81.537 |
| G-2 | 42°-18'-11.7" | 400 | 154.761 | 295.332 |
| C-5 | 69°-00'-02.9" | 150 | 103.094 | 180.644 |

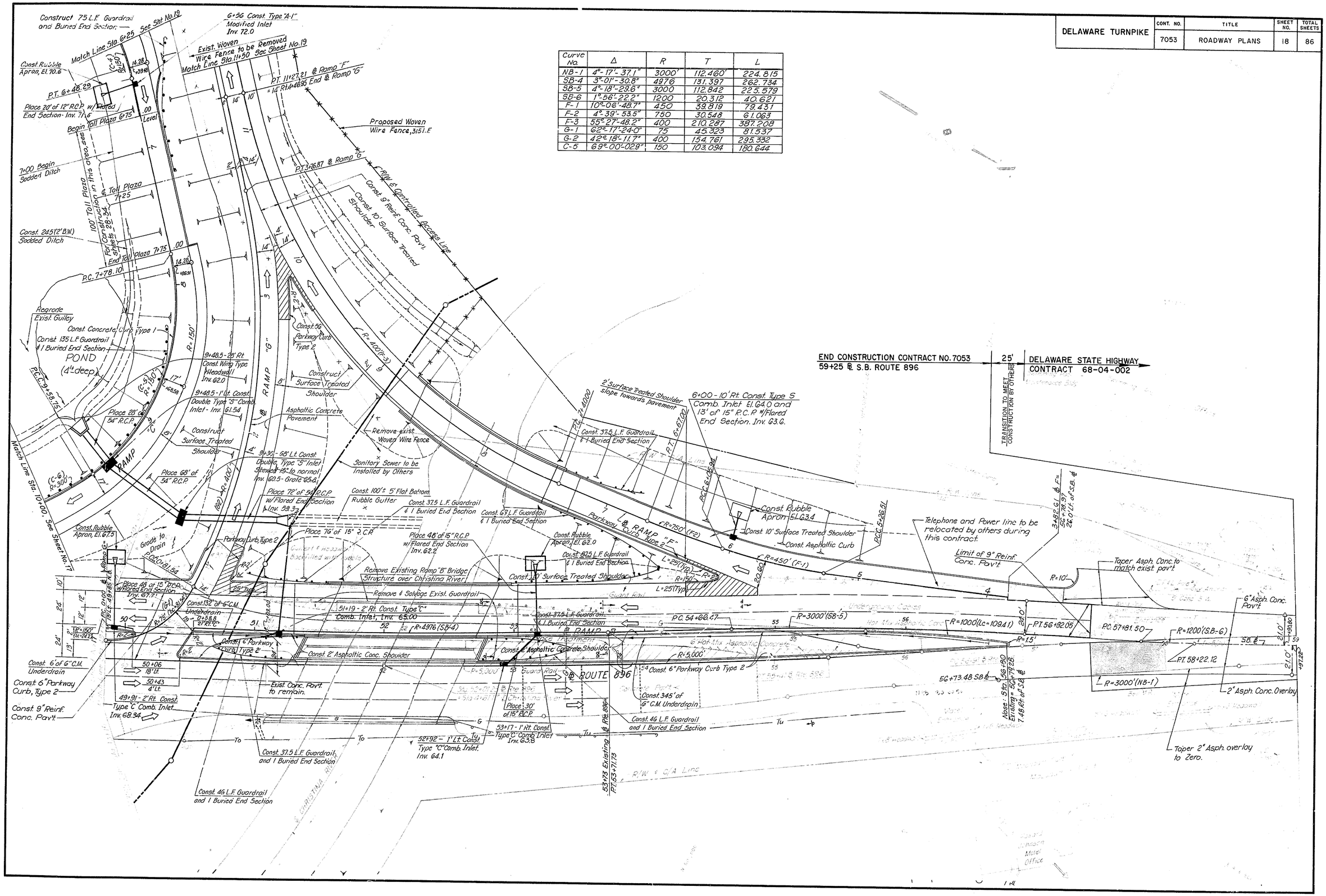

| DELAWARE TURNPIKE | CONT. NO. | TITLE | SHEET NO. | TOTAL SHEETS |
|---|---|---|---|---|
| | 7053 | ROADWAY PLANS | 19 | 86 |

| Curve No. | Δ | R | T | L |
|---|---|---|---|---|
| C-2 | 14°-30'-57.8" | 400' | 50.943 | 101.341 |
| C-3 | 25°-25'-59.5" | 200' | 45.133 | 88.779 |
| C-4 | 77°-10'-41.6" | 150' | 119.697 | 202.052 |
| F-4 | 43°-13'-12.3" | 600' | 237.679 | 452.600 |

NOTE:
For additional details at noses, see sheets 7 & 8.

Scale 1"=30'

Match Line Sta. 11+50 See Sheet No. 18

Match Line Sta. 6+25 See Sht. No. 18

Proposed R/W & Controlled Access Line

Construct 10' Surface Treated Shoulder

℄ RAMP "F"

Construct 4' Surface Treated Shoulder

Const. 9" Reinf. Conc. Pav't.

Const. 540 L.F. Woven Wire Fence

P.C. 14+97.27

Remove Exist. Woven Wire Fence

Place 48' of 12" R.C.P. Inv. 73.0

4+60 Const. Type "A-1" Modified Inlet I.E. Inlet 75.5

Const. Concrete Curb Type 1

P.C.C. 4+46.24

Regrade Existing Ditch

Const. Rubble Apron

R.C.C. 3+57.46

4+17 - 20' Rt. Const. Flared End Section Inv. 72.5

Place 60' of 48" R.C.P.

4+17 - 40' Lt. Const. Wing Type Headwall Inv. 73.0

Const. 105' of 5' B.W. Rubble Gutter

Construct 6' Surface Treated Shoulder

Place 92' of 18" R.C.P. Inv. West 73.5

Straight Type Headwall Inv. 80.8

Remove Existing Headwall & Const. Type "W" Manhole

℄ RAMP "C"

R.C.C. 2+36.12

See Sheet No. 17

R/W & Controlled Access Line

R=600' (F-4)

Match Existing Ditch

P.T. 19+49.97 End ℄ Ramp "F" = 124+06.09 ℄ W.B. Delaware Tpke. 80' Lt.

Exist. 6" Underdrain to Remain

2' Grass & Mulch Ditch

5' Conc. Gutter

Const. 10' Asphaltic Conc. Shoulder

Const. 10' Surface Treated Shoulder

Const. 56' Parkway Curb Type 2

Remove 2' Existing Asphaltic Concrete Pavement & 10' Surface Treated Shoulder

Remove & Salvage Existing Guardrail

Existing Asphalt Pavement to Remain

Saw Cut

Guard Rail

Const. 56' Parkway Curb Type 2

℄ RAMP "B"

Parkway Curb Type 2 to be removed

Concrete Pavement

48" R.C.P.

PWBO-4 Inv. 91.5

PWEO-1 Inv. 81.7

WESTBOUND DELAWARE TURNPIKE

℄ DELAWARE TURNPIKE

EASTBOUND DELAWARE TURNPIKE

| DELAWARE TURNPIKE | CONT. NO. | TITLE | SHEET NO. | TOTAL SHEETS |
|---|---|---|---|---|
| | 7053 | ROADWAY PLANS | 20 | 86 |

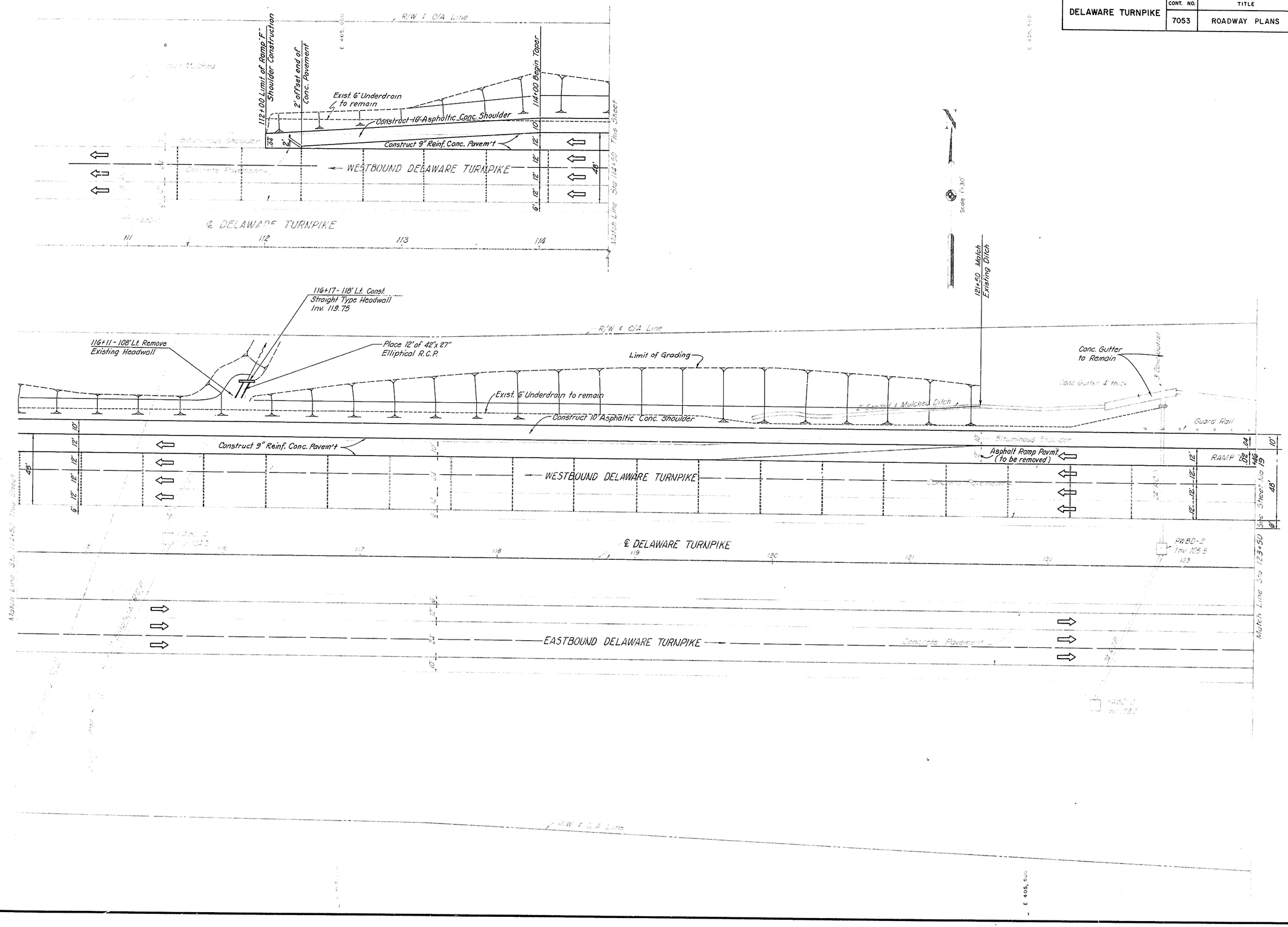

| DELAWARE TURNPIKE | CONT. NO. | TITLE | SHEET NO. | TOTAL SHEETS |
|---|---|---|---|---|
| | 7053 | ROADWAY PLANS | 21 | 86 |

| Curve No. | Δ | R | T | L |
|---|---|---|---|---|
| A-4 | 19°-15'-43.6" | 200' | 33.939' | 67.237' |
| A-5 | 24°-42'-05.9" | 356' | 77.951' | 153.481' |

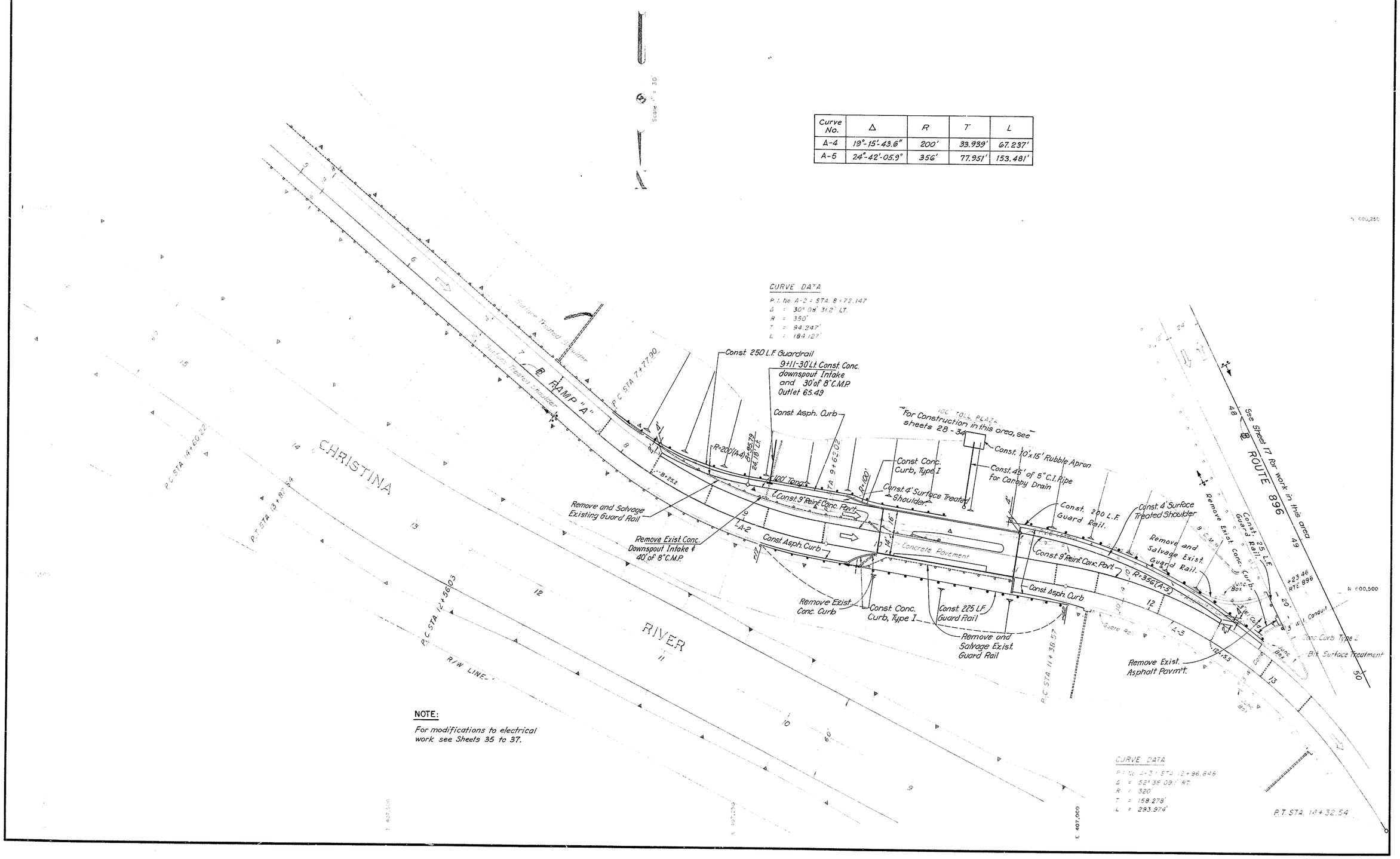


**NOTE:**

For modifications to electrical work see Sheets 35 to 37.

| DELAWARE TURNPIKE | CONT. NO. | TITLE | SHEET NO. | TOTAL SHEETS |
|---|---|---|---|---|
| | 7053 | ROADWAY PLANS | 22 | 86 |

Rev. 1-8-72

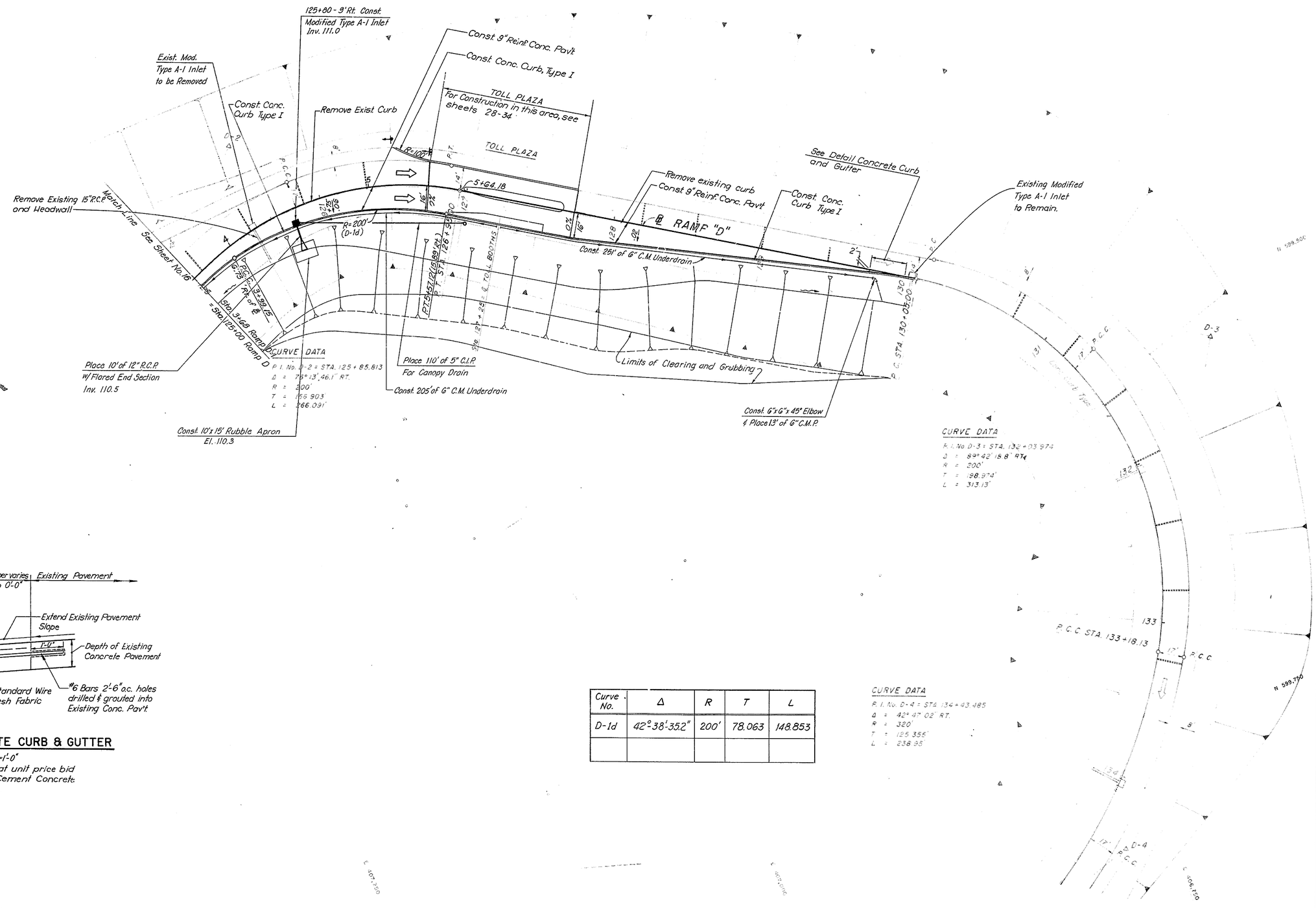


| Curve No. | Δ | R | T | L |
|---|---|---|---|---|
| D-1d | 42°-38'-35.2" | 200' | 78.063 | 148.853 |
| | | | | |

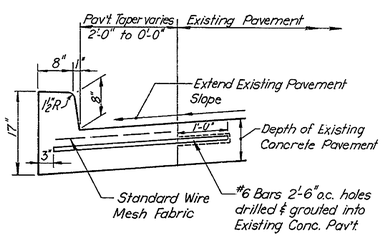


## DETAIL – CONCRETE CURB & GUTTER

¾"=1'-0"

To be paid for at unit price bid for Portland Cement Concrete Curb, Type 1.

| DELAWARE TURNPIKE | CONT. NO. | TITLE | SHEET NO. | TOTAL SHEETS |
|---|---|---|---|---|
| | 7053 | ROADWAY PLANS | 23 | 86 |

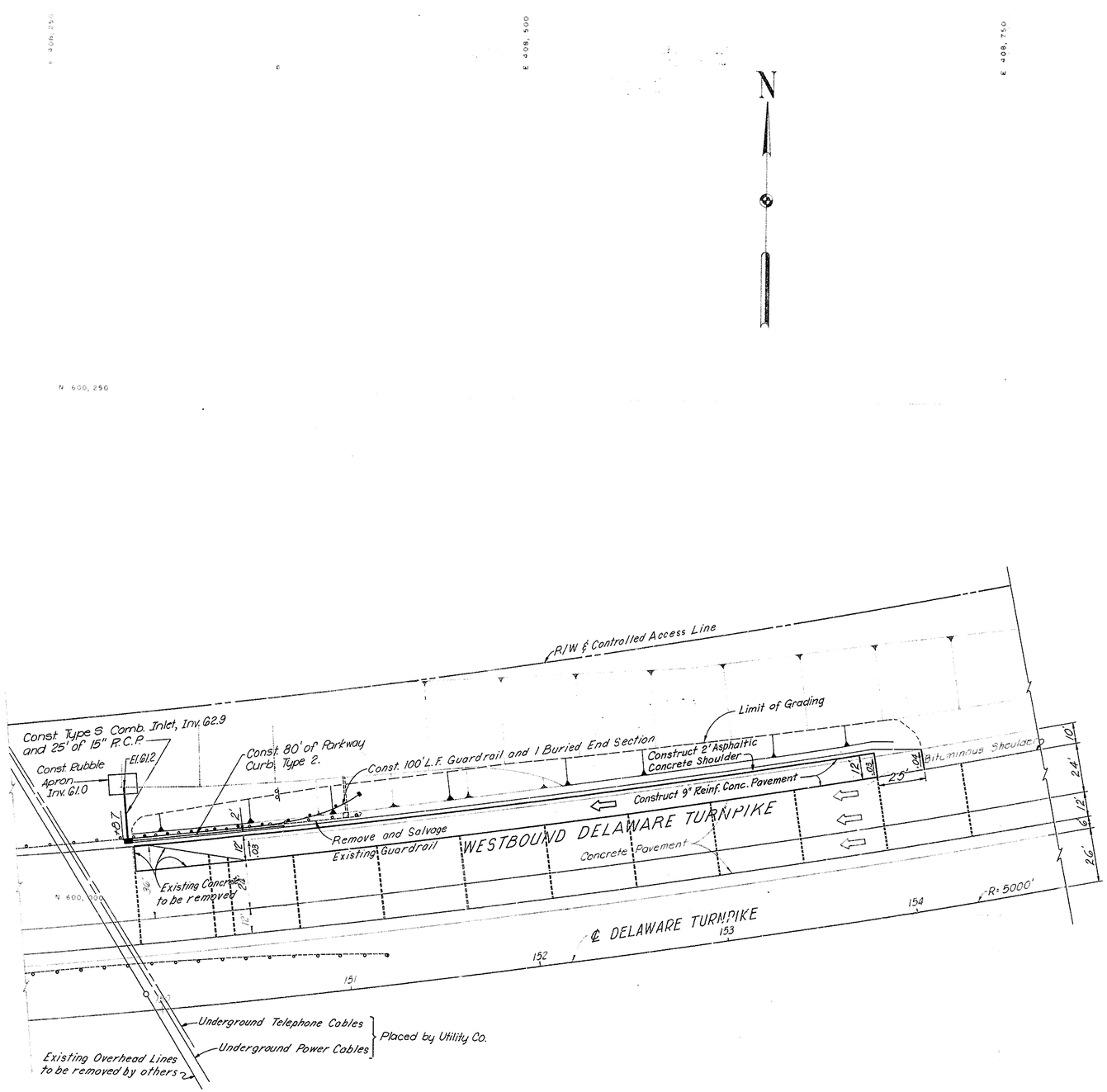

# PROFILES

SCALE: HOR. 1" = 50'
VERT. 1" = 5'

| DELAWARE TURNPIKE | CONT. NO. | TITLE | SHEET NO. | TOTAL SHEETS |
|---|---|---|---|---|
| | 7053 | PROFILES | 24 | 86 |

Rev. 2/24/70

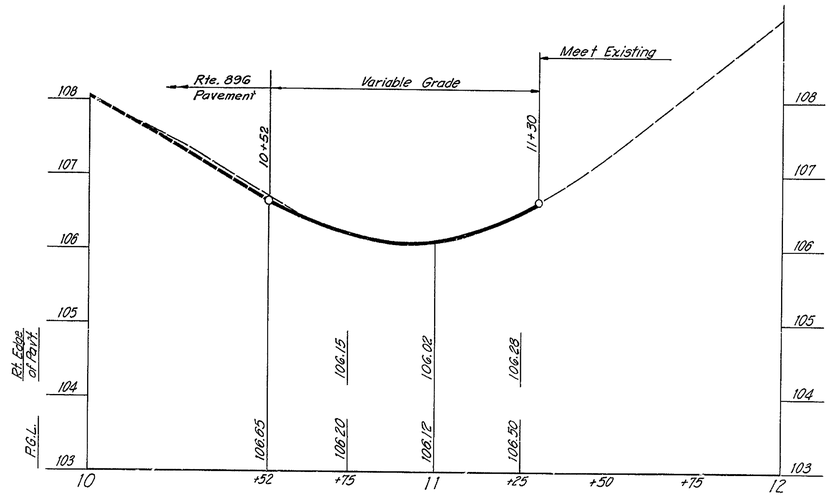


RAMP "D-A"

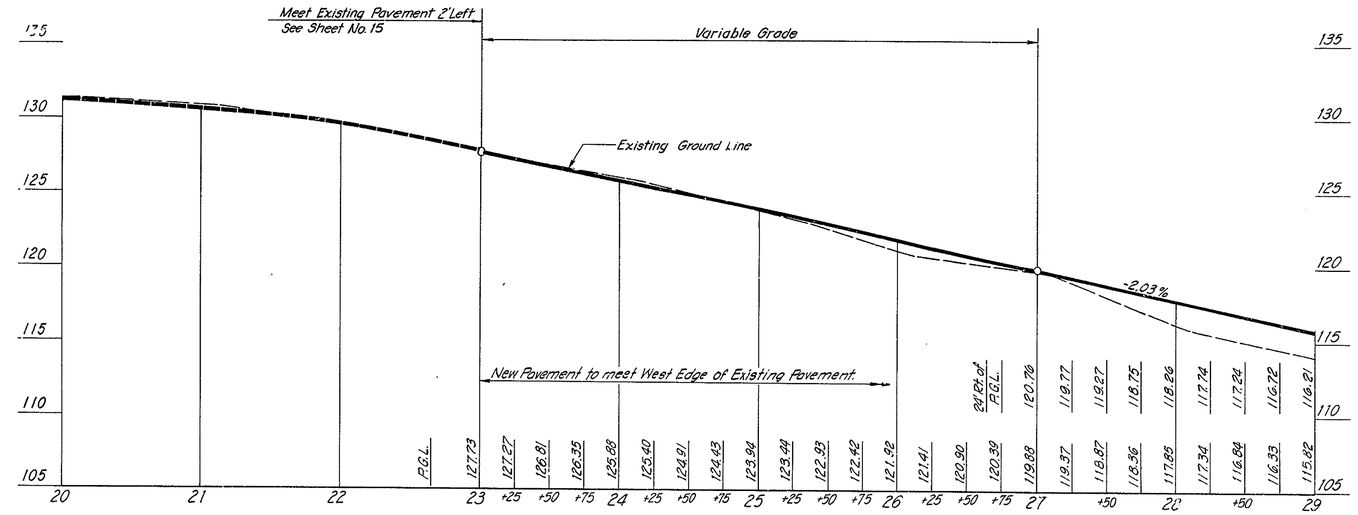


ROUTE 896 SOUTHBOUND

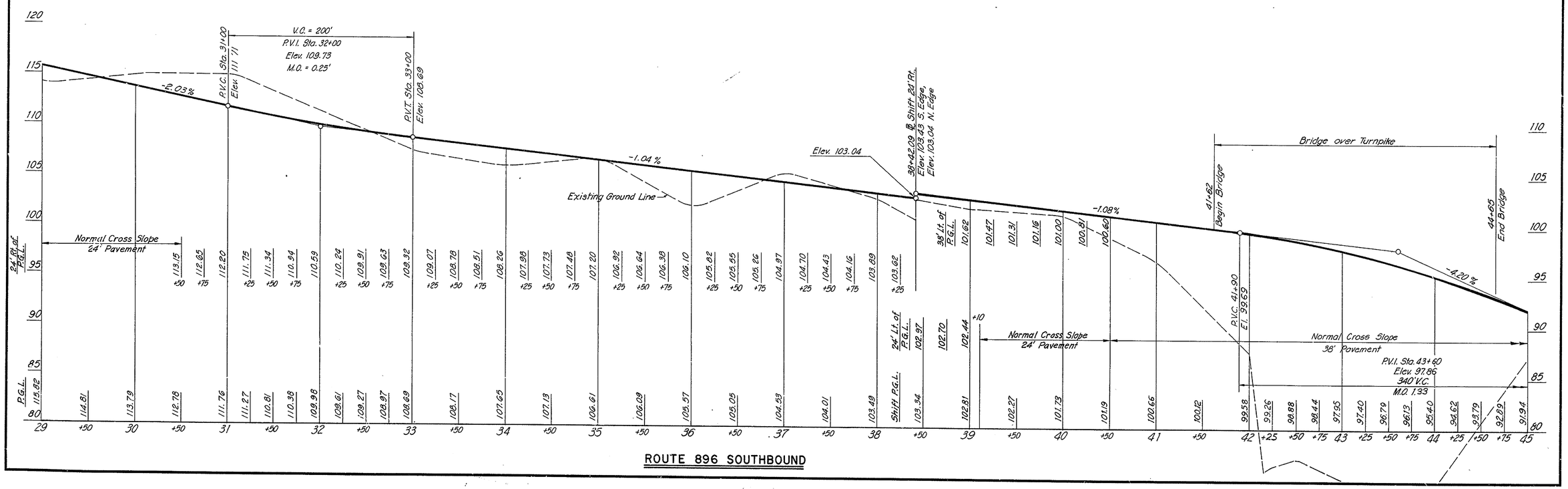


ROUTE 896 SOUTHBOUND

| DELAWARE TURNPIKE | CONT. NO. | TITLE | SHEET NO | TOTAL SHEETS |
|---|---|---|---|---|
| | 7053 | PROFILES | 25 | 86 |

# PROFILES

SCALE: HOR. 1" = 50'
VERT. 1" = 5'

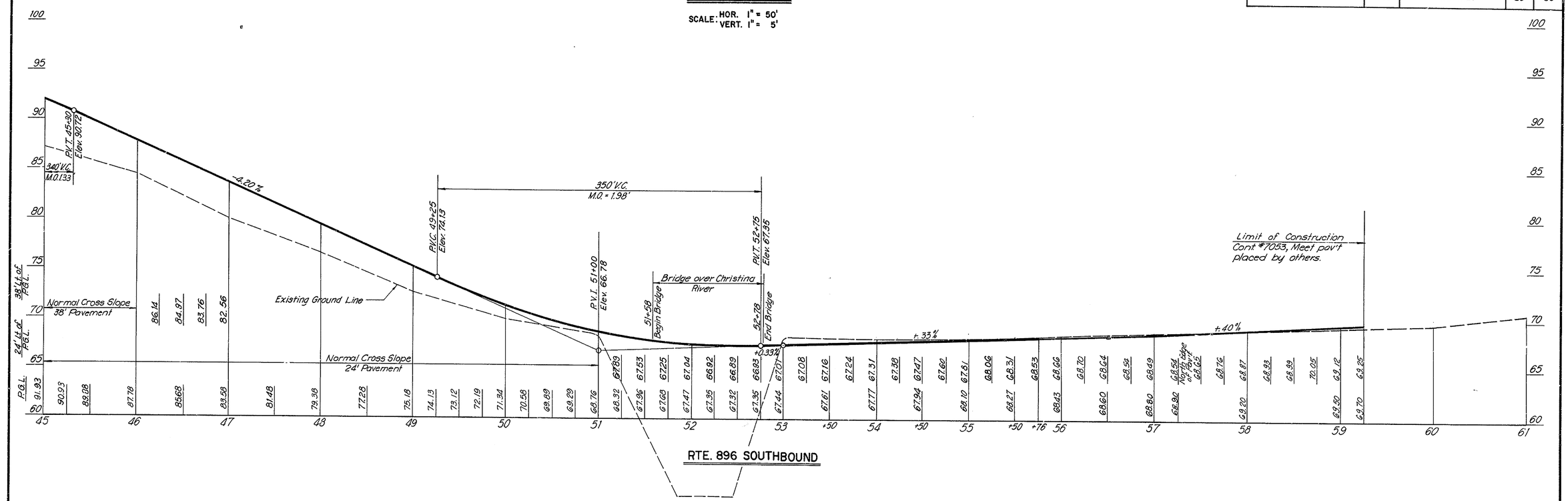


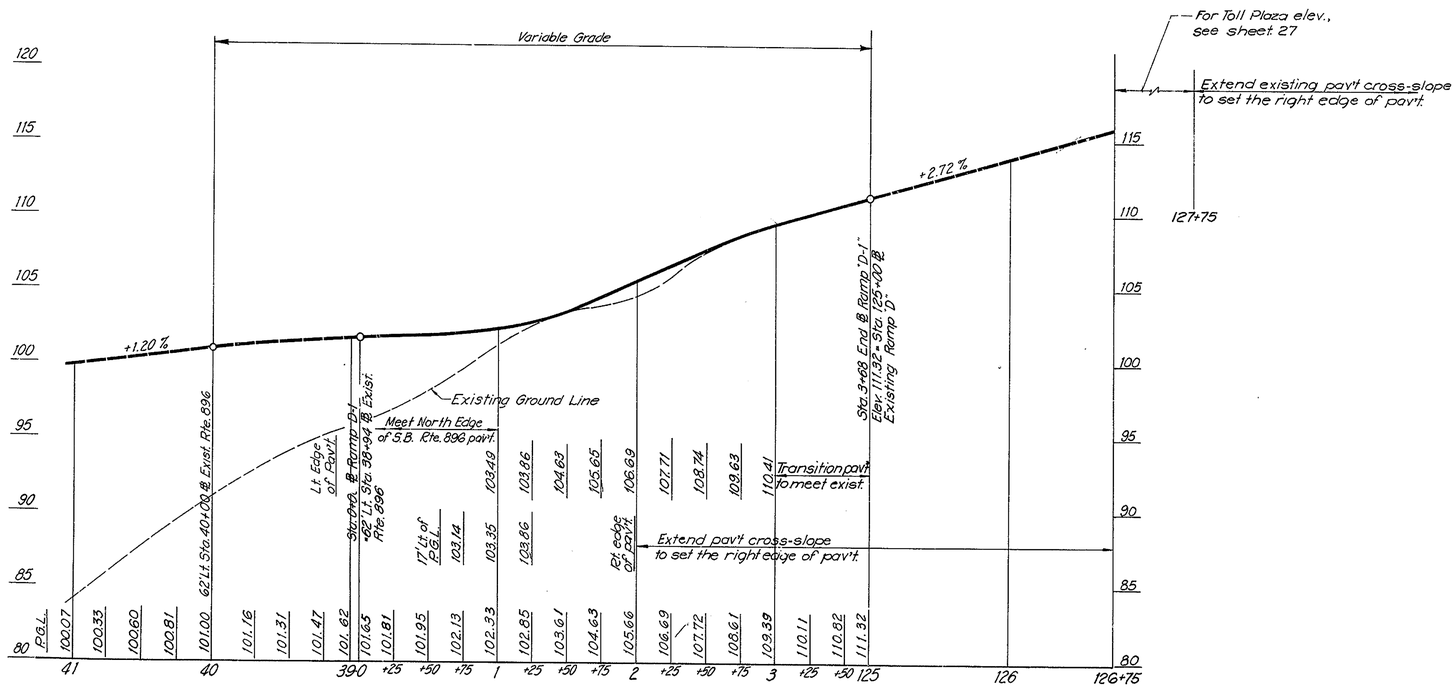


RAMP "D-1"

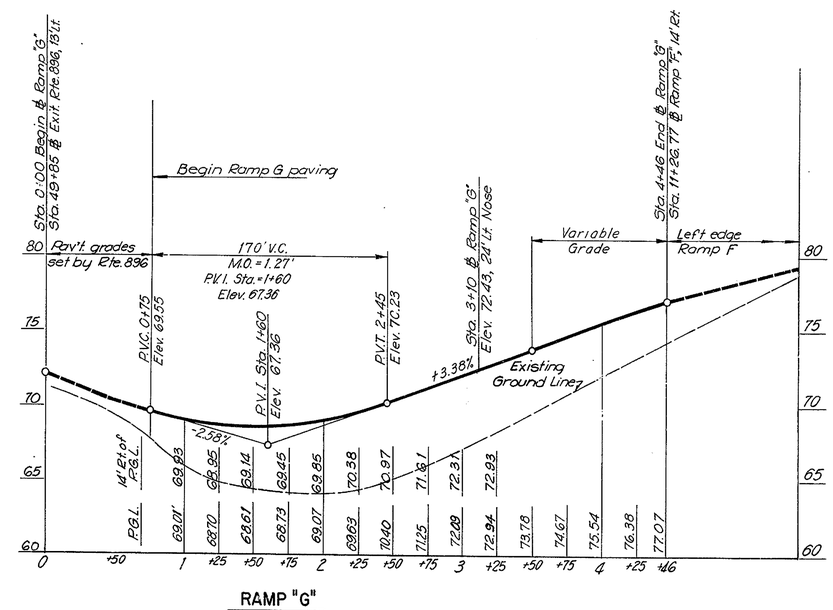


RAMP "G"

# PROFILES

Scales: Horiz. 1"=50'
Vert. 1"= 5'

| DELAWARE TURNPIKE | CONT. NO. | TITLE | SHEET NO. | TOTAL SHEETS |
|---|---|---|---|---|
| | 7053 | PROFILES | 26 | 86 |

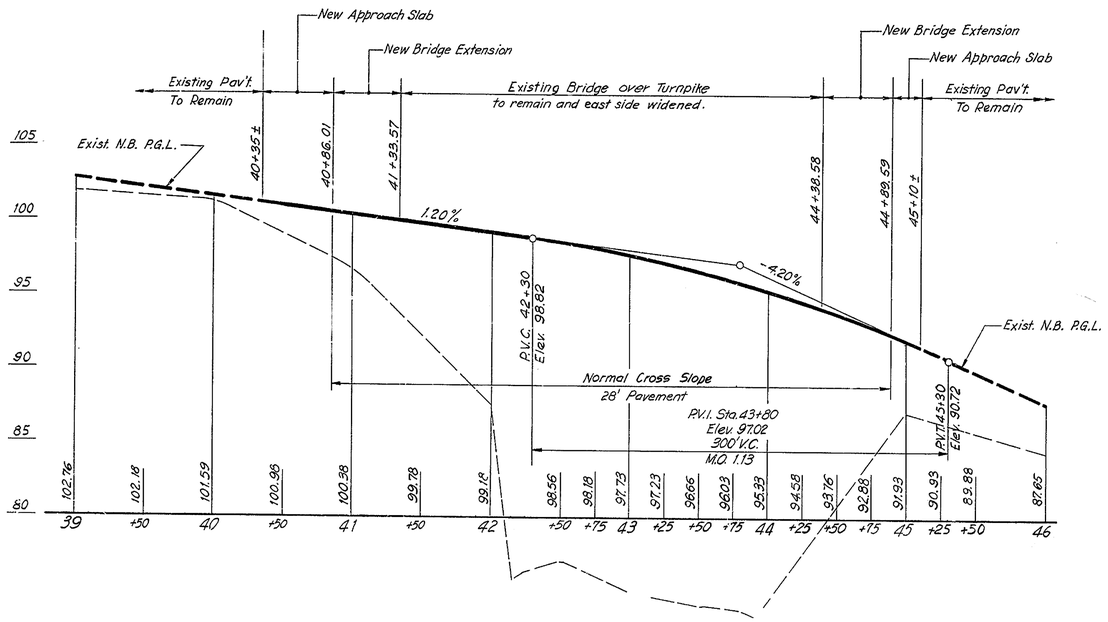


PROFILE ROUTE 896 NORTHBOUND

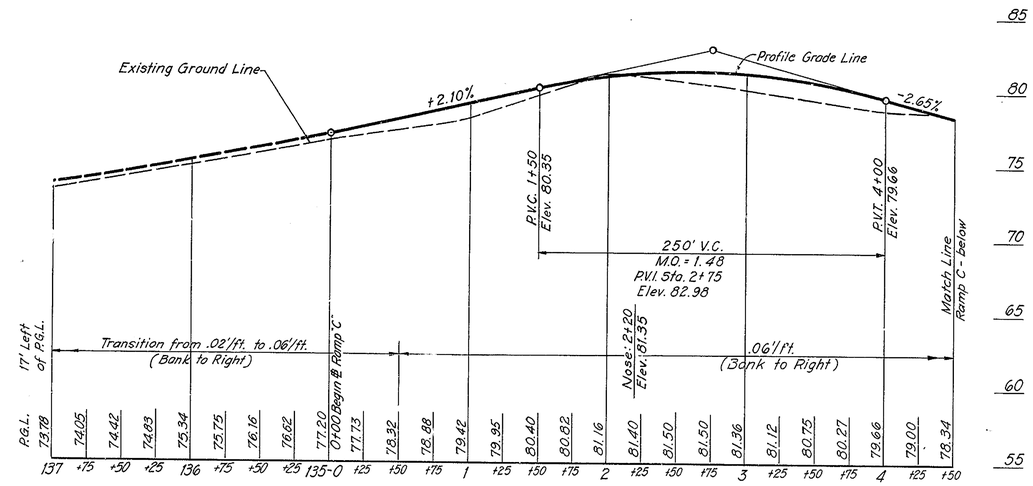


PROFILE RAMP "C"

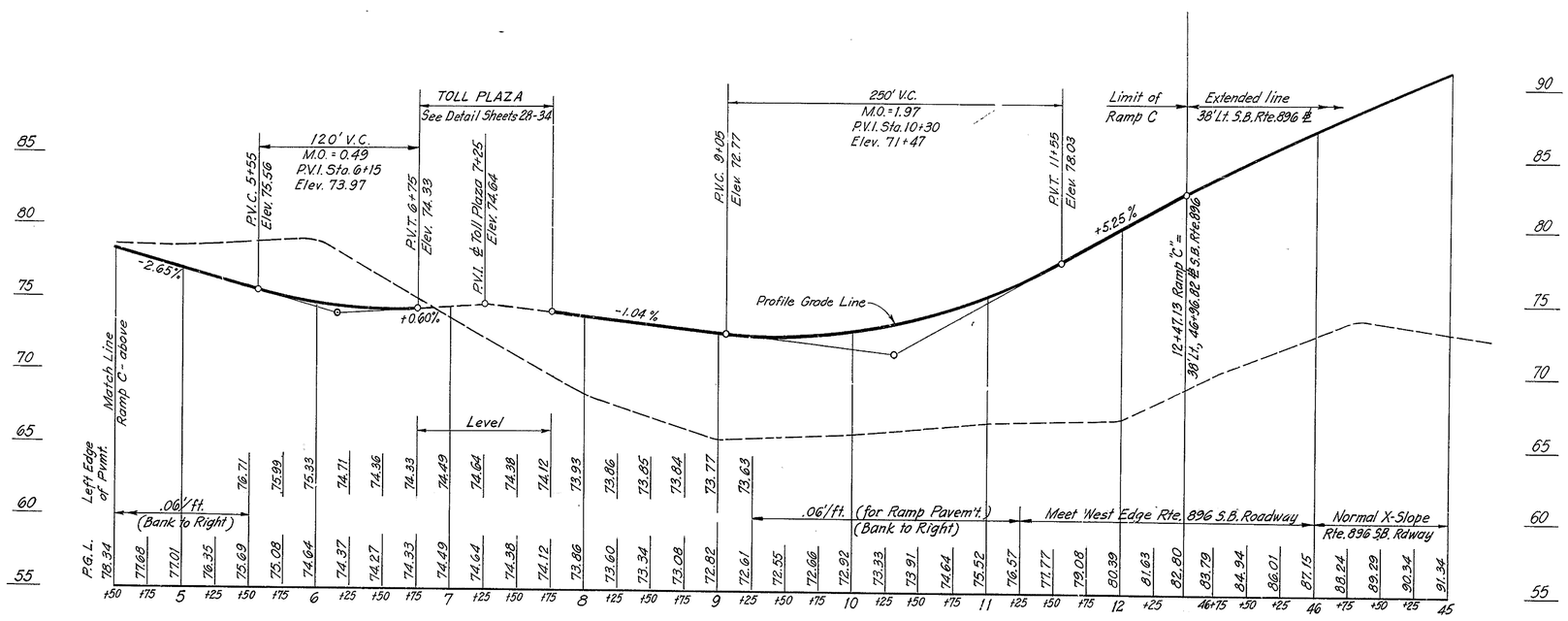


PROFILE RAMP "C"

| DELAWARE TURNPIKE | CONT. NO. | TITLE | SHEET NO. | TOTAL SHEETS |
|---|---|---|---|---|
| | 7053 | PROFILES | 27 | 86 |

# PROFILES

Scales: Horiz. 1"=50'
Vert. 1"=5'

* Except as noted below the edges of shoulders are set by the cross slopes as shown on the typical sections.

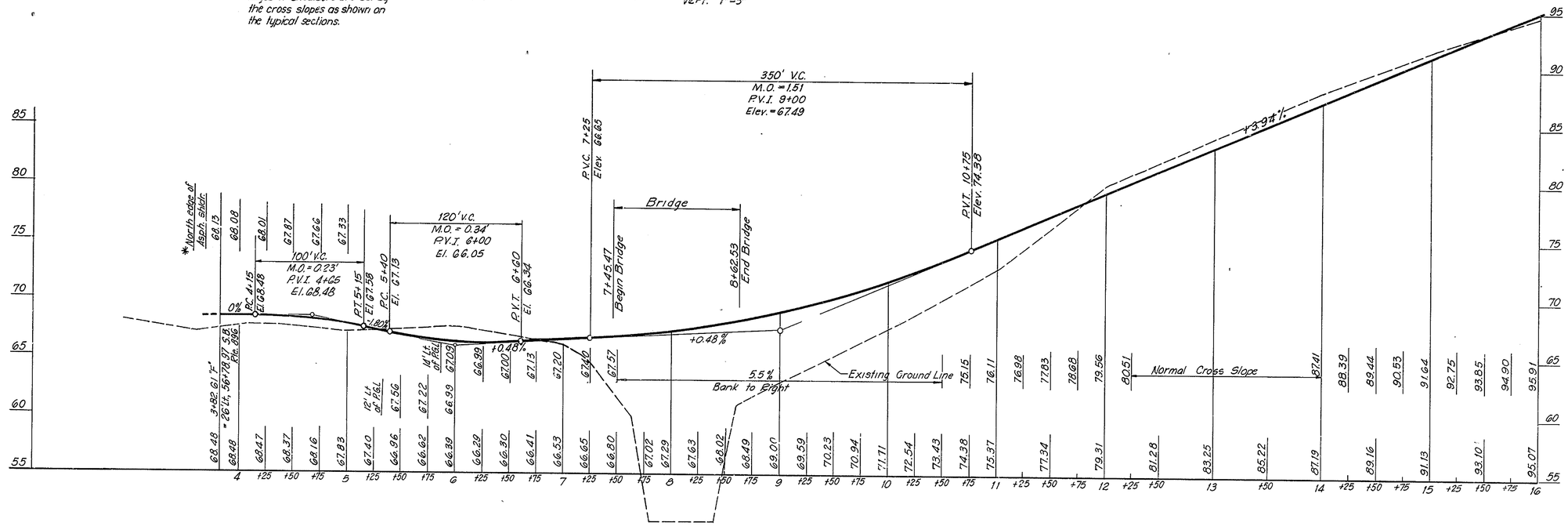


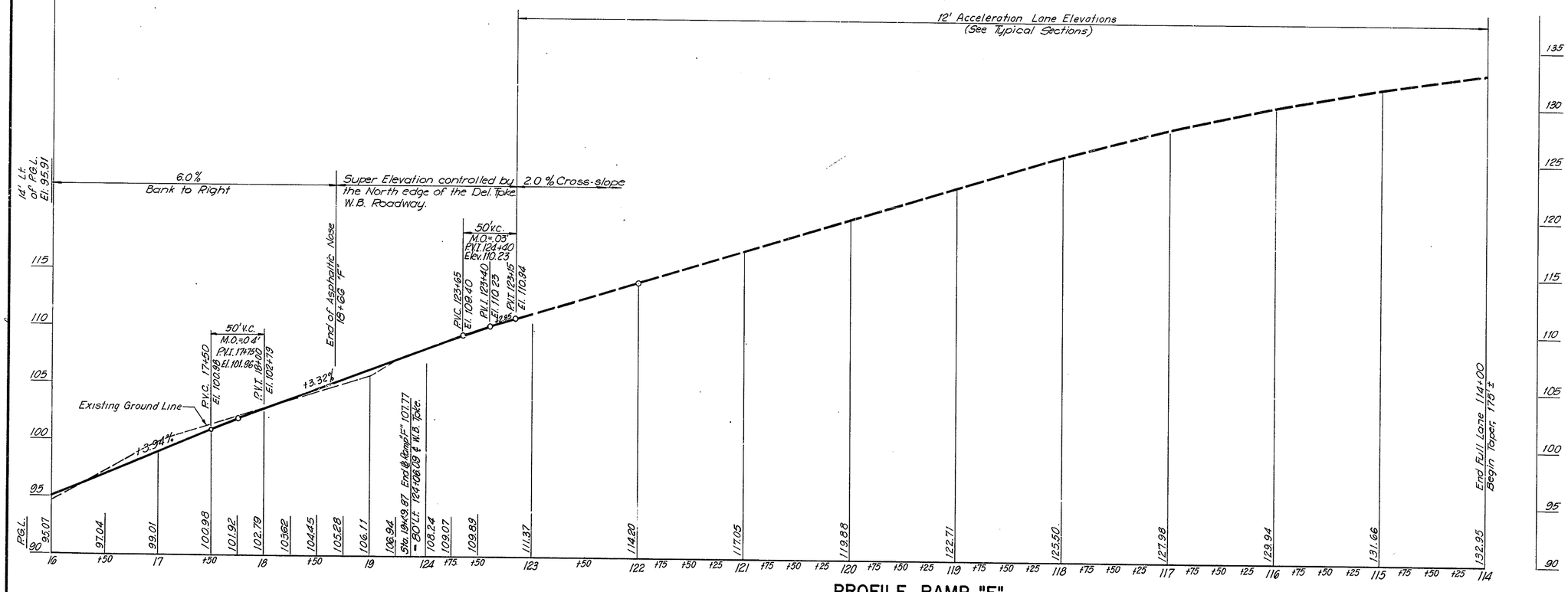


## PROFILE RAMP "F"

| DELAWARE TURNPIKE | CONT. NO. | TITLE | SHEET NO. | TOTAL SHEETS |
|---|---|---|---|---|
| | 7053 | RAMP TOLL PLAZAS CONCRETE DETAILS | 28 | 86 |

Rev. 2/17/70

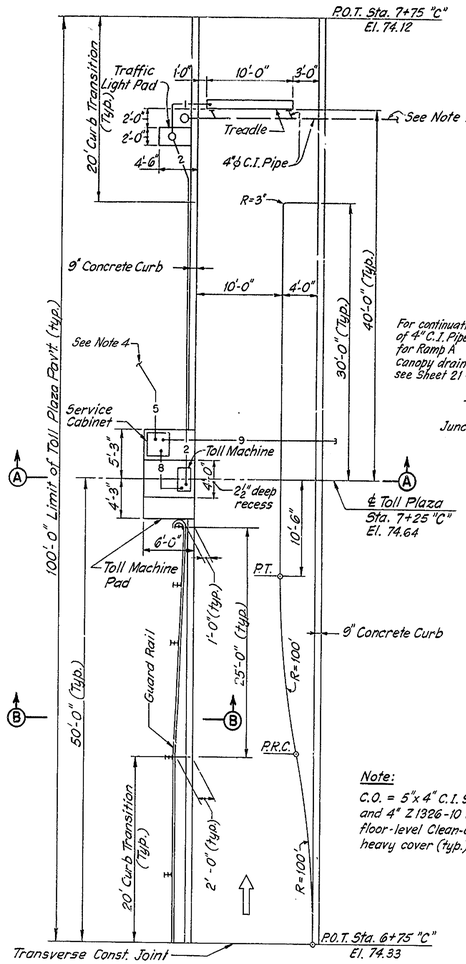


SINGLE LANE PLAZA

RAMP C

Note:
C.O. = 5"x 4" C.I. 90° Elbow and 4" Z1326-10 Surpreme floor-level Clean-out with heavy cover (Typ.)

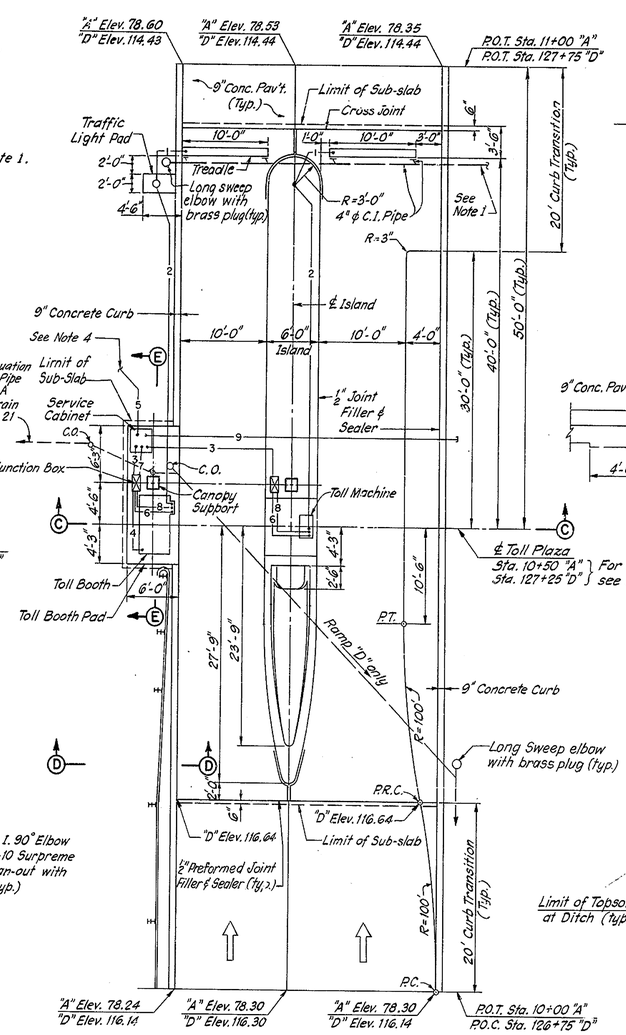


TWO-LANE PLAZA

RAMP A & RAMP D

RAMP PLAZA PLANS

$\frac{1}{8}$"=1'-0"

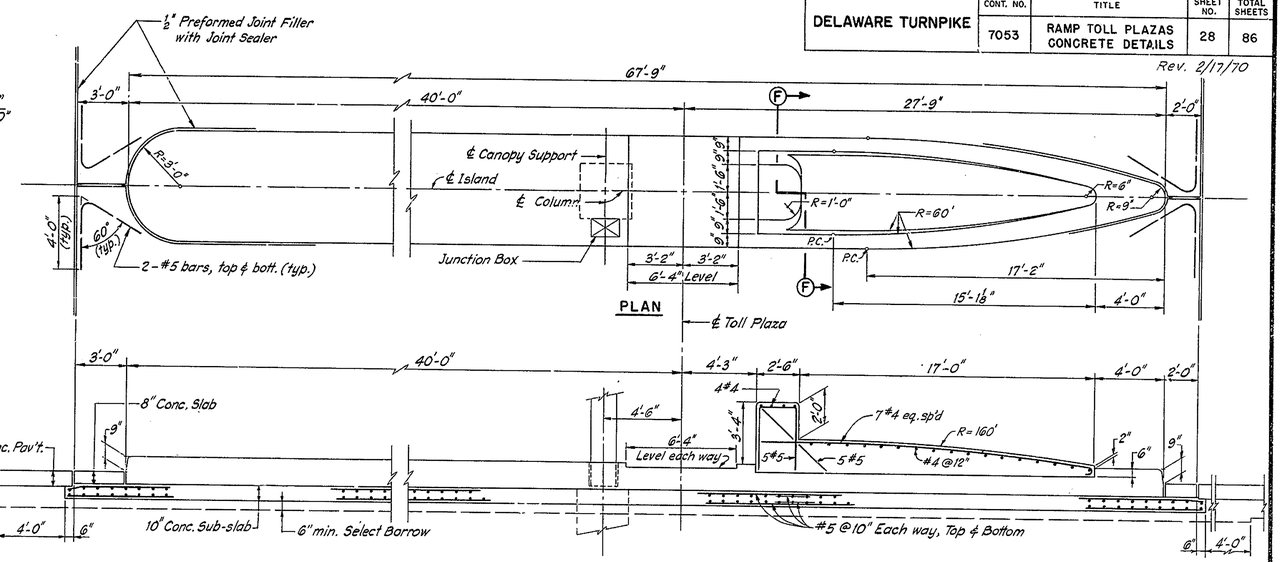


LONGITUDINAL SECTION

ISLAND LAYOUT

¼"=1'-0"

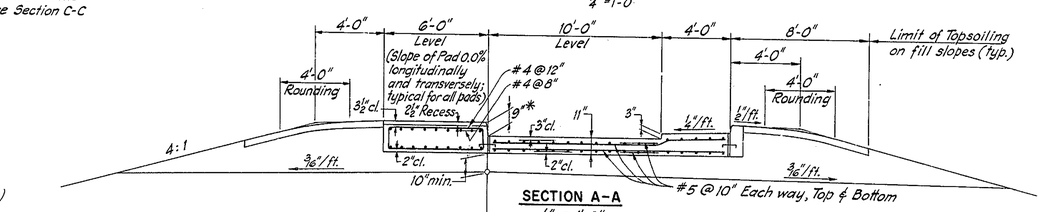


SECTION A-A

¼" = 1'-0"

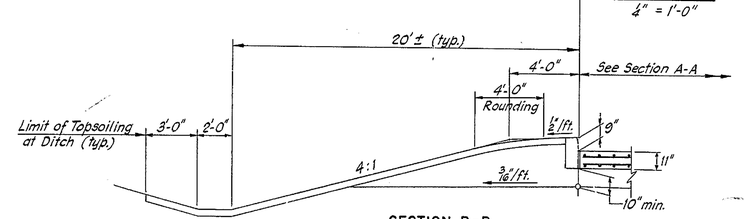


SECTION B-B

¼" = 1'-0"

NOTES:

1. Treadle drain shall be run to daylight at a slope of ⅛"/ft. Direction of drain may be reversed at the Contractor's option.
2. Toll Booths shall be supplied and placed by Others.
3. For Canopy details, Alternates "A" & "B" see Sheets 31 to 34.
4. For Conduit Schedule and Cabinet details see Sheet 30.
5. Conduit shall be terminated in concrete junction box, as part of toll plaza electrical work. (See Sheet 35).
6. For Sections E-E and F-F see Sheet 29.

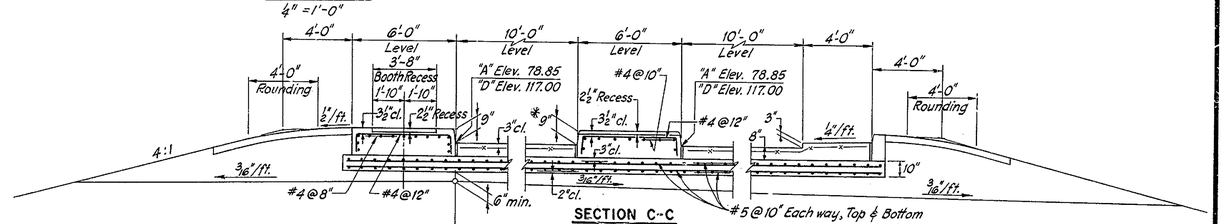


SECTION C-C

¼" = 1'-0"

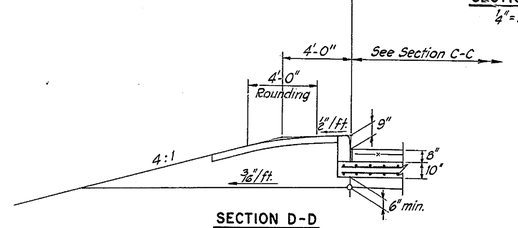


SECTION D-D

¼" = 1'-0"

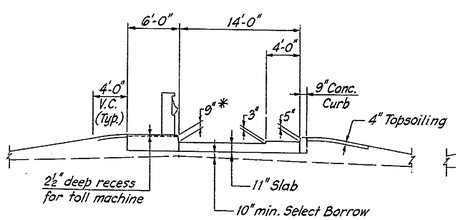


SINGLE LANE ELEVATION

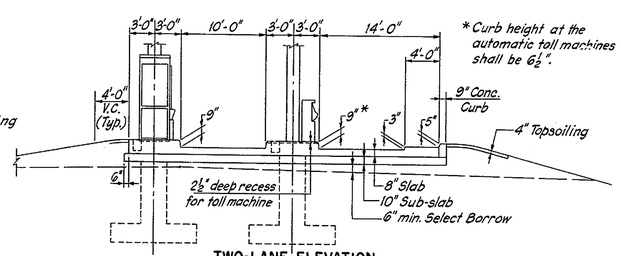


TWO-LANE ELEVATION

* Curb height at the automatic toll machines shall be 6½".

Scales: $\frac{1}{8}$"=1'-0"

| DELAWARE TURNPIKE | CONT. NO. | TITLE | SHEET NO. | TOTAL SHEETS |
|---|---|---|---|---|
| | 7053 | RAMP TOLL PLAZAS CONCRETE DETAILS | 29 | 86 |

Rev. 2/17/70

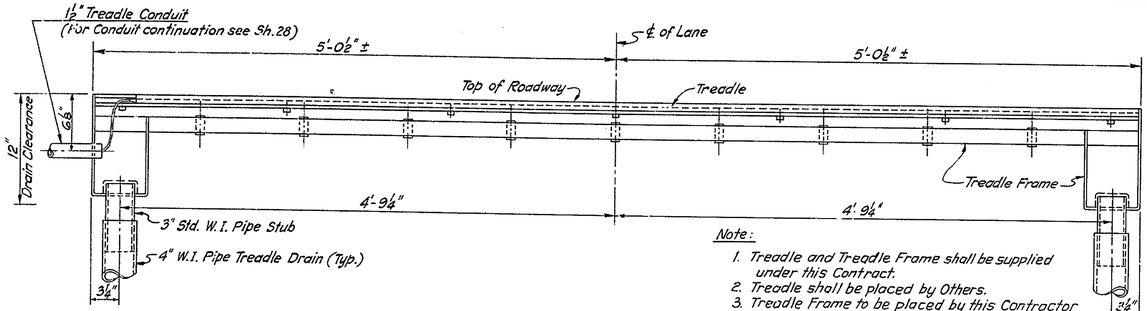


Note:
1. Treadle and Treadle Frame shall be supplied under this Contract.
2. Treadle shall be placed by Others.
3. Treadle Frame to be placed by this Contractor prior to the placing of Ramp Plaza pavement.

**TREADLE DRAIN DETAIL**

1½" = 1'-0"

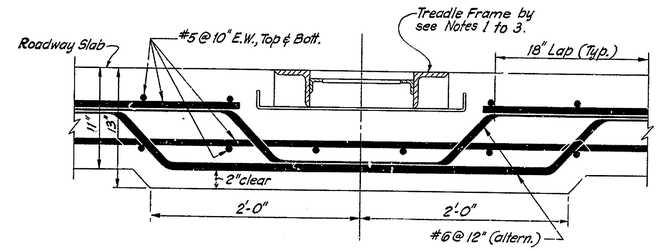


**PAVEMENT SECTION AT TREADLE**

**SINGLE LANE PLAZA**

1½" = 1'-0"

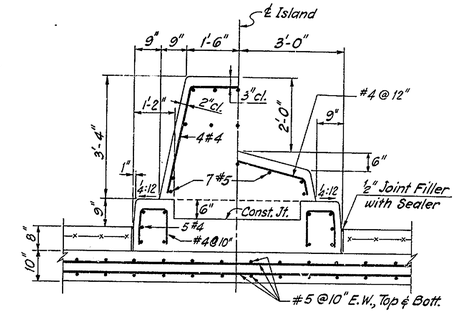


**SECTION F-F**

½" = 1'-0"

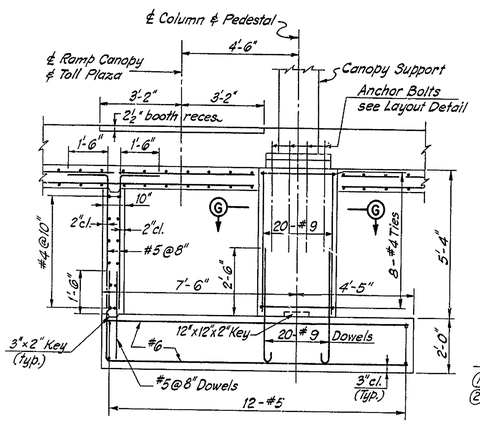


**SECTION E-E**

⅜" = 1'-0"

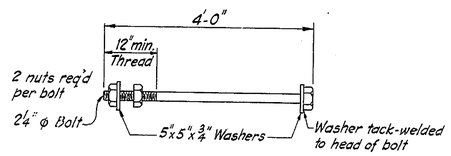


**ANCHOR BOLT DETAIL**

¾" = 1'-0"

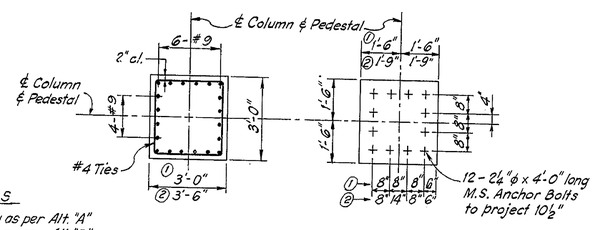


SYMBOLS
① Canopy as per Alt. "A"
② Canopy as per Alt "B"

**SECTION G-G** **ANCHOR BOLT LAYOUT**

**CANOPY PEDESTAL**

⅜" = 1'-0"

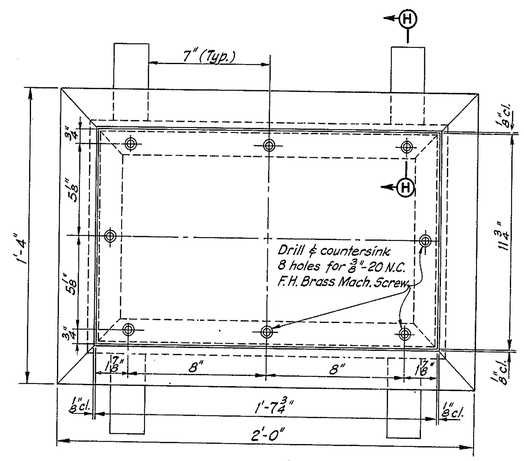


**JUNCTION BOX PLAN**

3" = 1'-0"

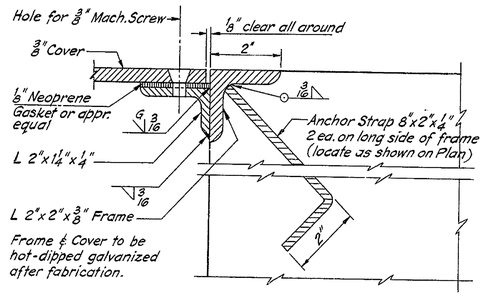


**SECTION H-H**

Half size

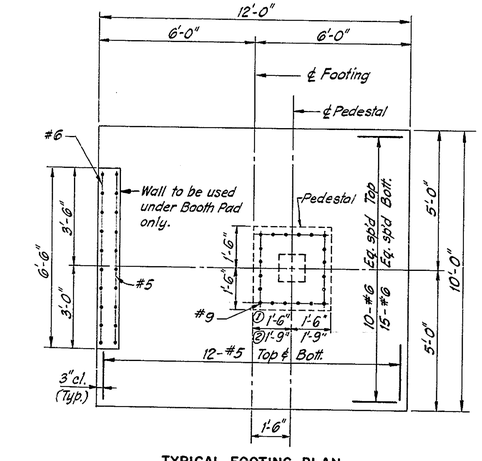


**TYPICAL FOOTING PLAN**

**TWO-LANE PLAZA**

⅜" = 1'-0"

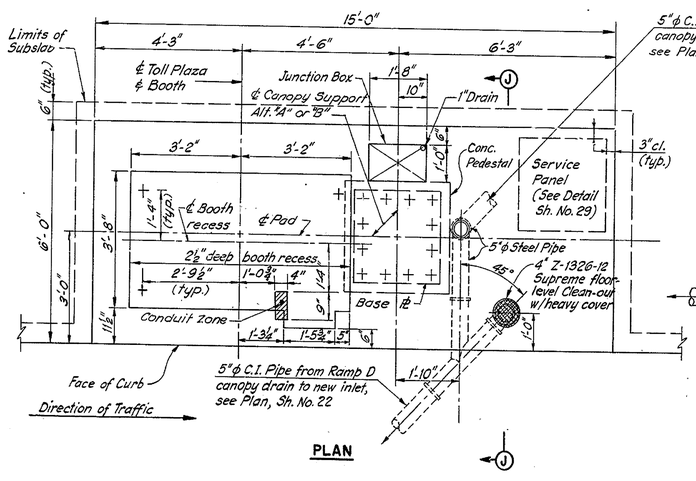


**PLAN**

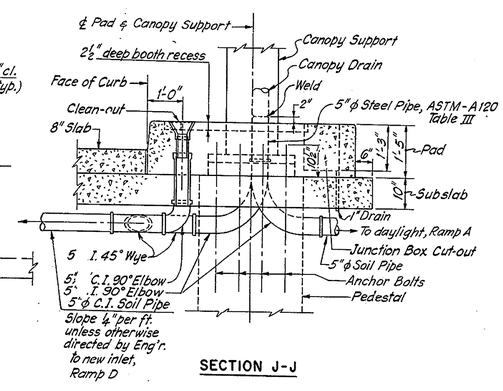


**SECTION J-J**

**BOOTH PAD AND CANOPY DRAINAGE — TWO-LANE PLAZA**

½" = 1'-0"

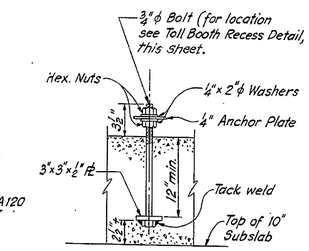


**TOLL BOOTH**

**ANCHOR BOLT DETAIL**

1½" = 1'-0"

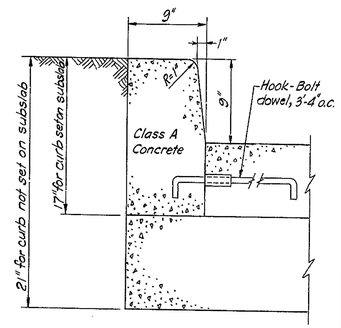


**CURB DETAIL**

1½" = 1'-0"

Notes:

For Canopy Details
Alternate "A" sheets 31, 32 & 34.
Alternate "B" sheets 33 & 34.

| DELAWARE TURNPIKE | CONT. NO | TITLE | SHEET NO. | TOTAL SHEETS |
|---|---|---|---|---|
| | 7053 | RAMP TOLL PLAZAS CABINET DETAILS | 30 | 86 |

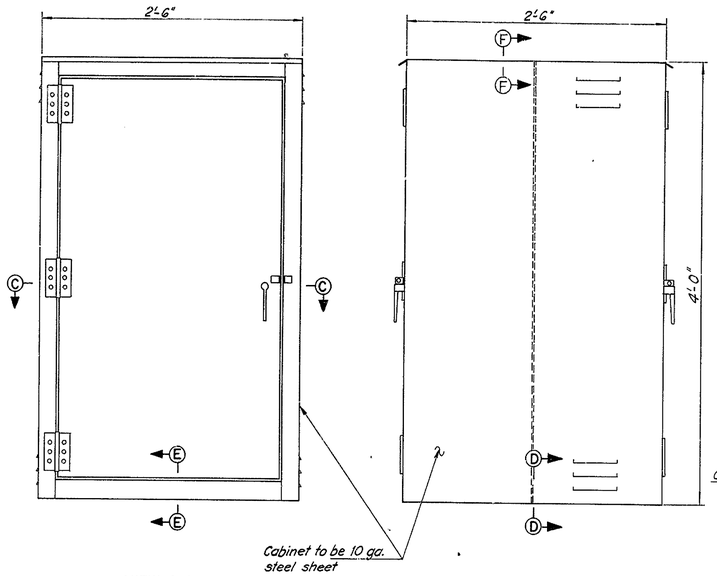


VIEW A-A

VIEW B-B

## SERVICE CABINET

1½" = 1'-0"

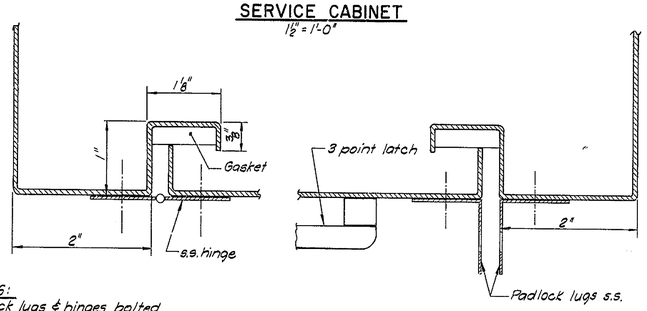


NOTES:
Padlock lugs & hinges bolted w/s.s. Flat head screws. Screws shall be of the nonremovable type.

DETAIL C-C

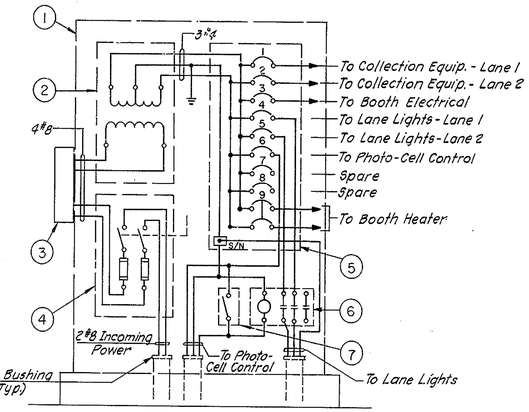


## WIRING DIAGRAM

NEW SERVICE CABINET AT RAMP PLAZA A

No Scale

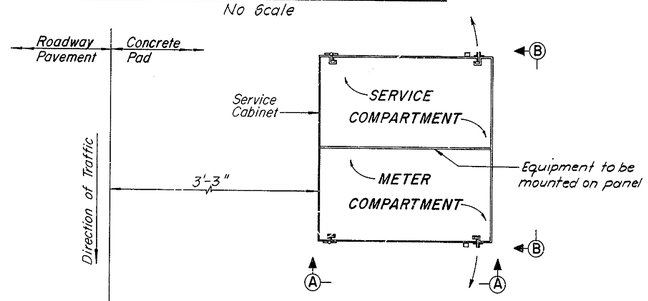


## SERVICE CABINET - PLAN LAYOUT

1" = 1'-0"

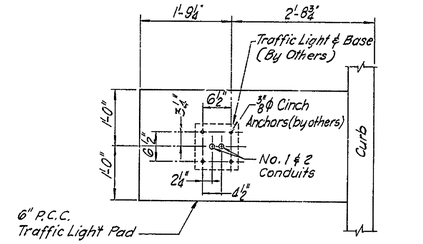


## TRAFFIC LIGHT CONDUIT LAYOUT

¾" = 1'-0"

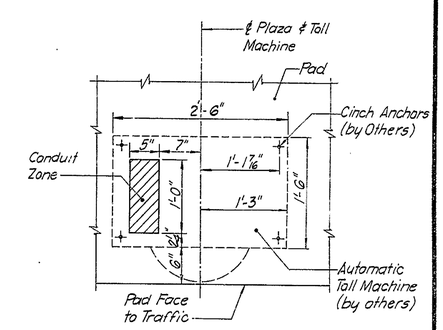


## AUTOMATIC TOLL MACHINE CONDUIT LAYOUT

1½" = 1'-0"

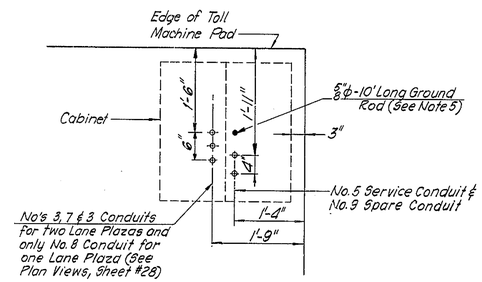


## SERVICE CABINET CONDUIT LAYOUT

¾" = 1'-0"

## CONDUIT SCHEDULE

| NO. | DESIGNATION | SIZE |
|---|---|---|
| 1 | Treadle | ¾" |
| 2 | Traffic Light on Island | 1" |
| 3 | Auto. Machine & Booth Power | 1" |
| 4 | Booth Accessories | 1" |
| 5 | Incoming Power | 2" |
| 6 | Canopy Traffic Signal | ¾" |
| 7 | Canopy Lane Lights & Sign | ¾" |
| 8 | Auto. Machine Power | 1" |
| 9 | Spare Conduit | 2" |

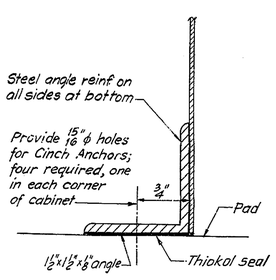


DETAIL D-D

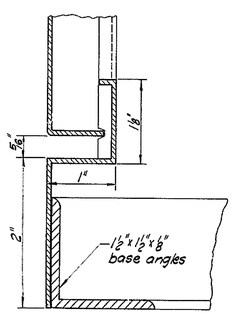


DETAIL E-E

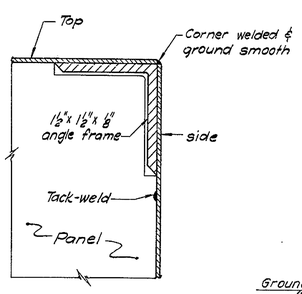


DETAIL F-F

## CABINET DETAILS

not to scale

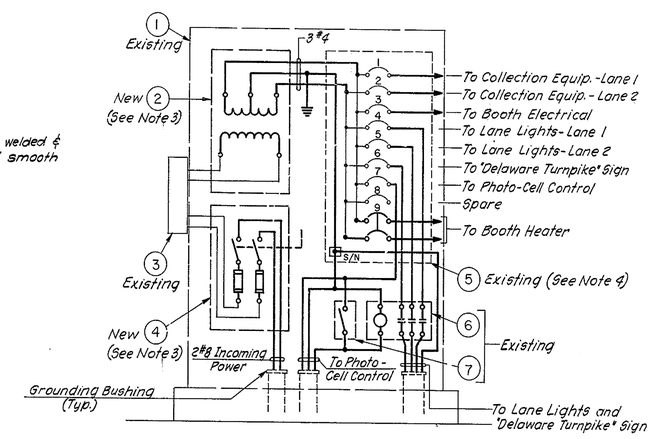


## WIRING DIAGRAM

MODIFIED SERVICE CABINET AT RAMP PLAZA D

No Scale

## LIST OF EQUIPMENT

1. Service Cabinet: Housing, trims, door and equipment mounting plate all shall be #10 gauge sheet steel. Cabinet shall be of weatherproof construction (see Specifications).
2. Dry-Type Transformer: 10 KVA, 480-120/240 V. with 2½% taps above and below normal, equal to G.E. Co.'s Type QM, Cat. # 9T21B1015.
3. Meter and Meter Pan: Meter pan to be furnished by the utility Company and installed under this Contract. Meter to be furnished and installed by utility Company.
4. Safety Switch: 60 A., 480 V., 2 pole (with two 40 A. fuses) within NEMA 1 enclosure equal to G.E. Co's. Cat. # TH 3362.
5. Distribution Panelboard: 1 φ, 3 wire, 120/240 V., S/N, 100 A. main with lugs, column type complete with 8 (eight) single pole (15 A. trip) and 1 (one) double pole (30 A. trip) branch circuit breakers, equal to G.E. Co's Cat. # NLAB X 310 L.
6. Contactor: 60 A., 480 V., 3 pole, with 120 V. control, within NEMA 1 enclosure, equal to G. E. Co's Cat. # CR 160 L 4802 AA.
7. By Pass Switch: Single pole toggle switch equal to Hubbell Cat. # 3031 in conduit box with switch cover, equal to Crouse-Hinds Cat. # FS 1019 & FS 1020 G.

## NOTES

1. All wiring within the new or modified cabinets, unless otherwise noted, shall be No. 12 A.W.G. All wires shall be color-coded (see Specifications).
2. The Modified Service Cabinet, all equipment and the wiring therein shown by thin lines are existing. All other work and all connections within the cabinet shown by heavy lines are under this Contract.
3. Salvage the existing 3 KVA dry-type transformer and 30 amp. Safety Switch in the Modified Service Cabinet (see Specifications).
4. Install new 2 pole, 30 amp. circuit breaker in the space provided.
5. All conduits shall be bonded and connected to the ground rod with a #6 bare tinned copper ground wire.

| DELAWARE TURNPIKE | CONT. NO. | TITLE | SHEET NO. | TOTAL SHEETS |
|---|---|---|---|---|
| | 7053 | RAMP PLAZA CANOPY ALTERNATE "A" | 31 | 86 |

Rev. 2/17/70

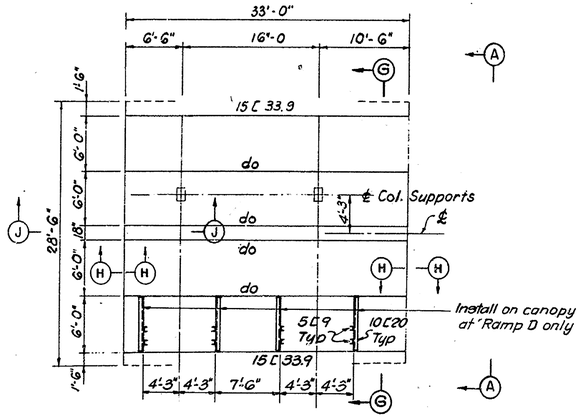


ROOF FRAMING PLAN

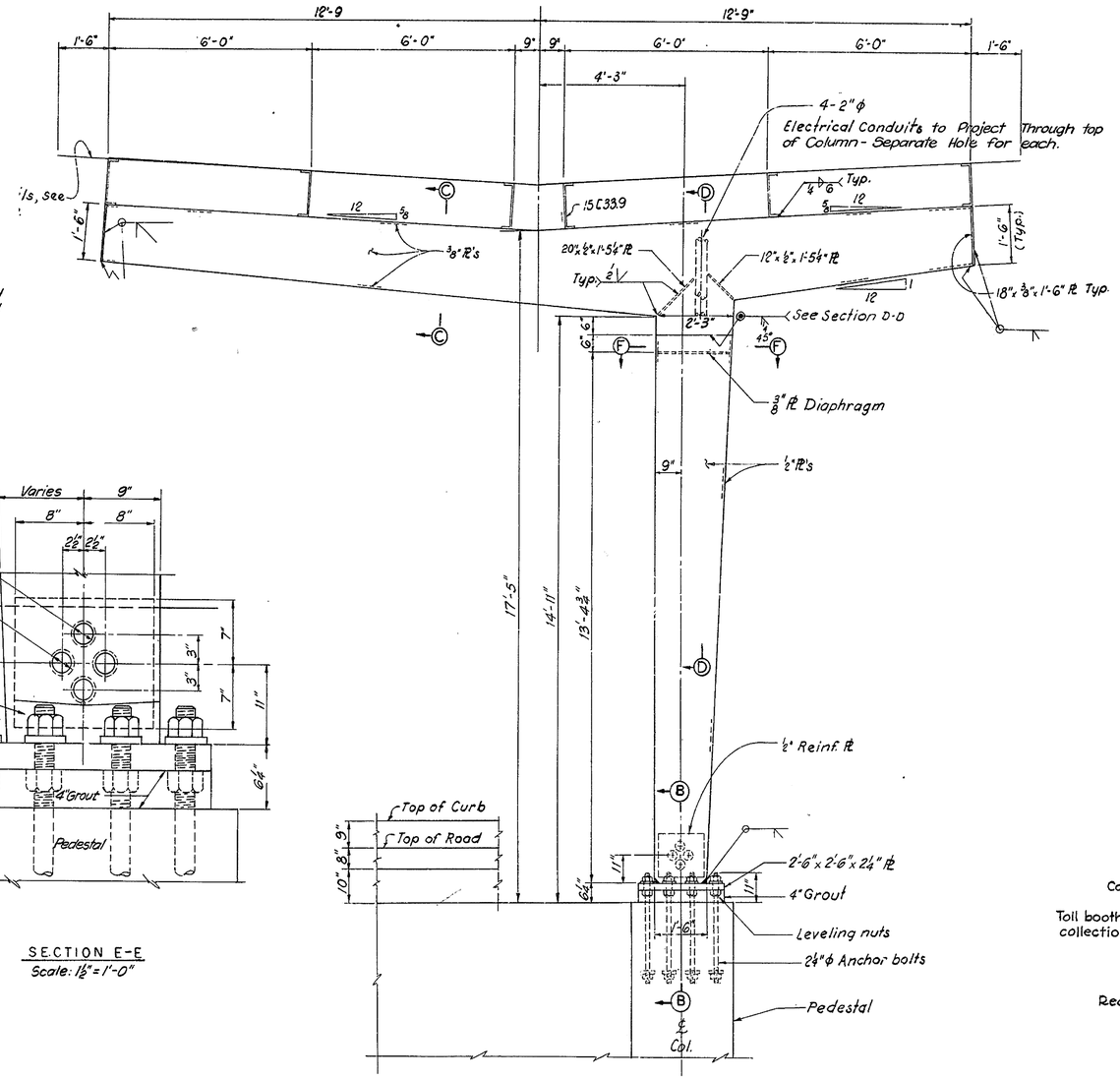


VIEW A-A

Scale: 1/2" = 1'-0"

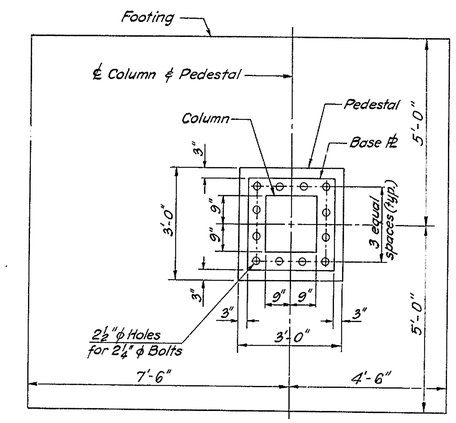


RAMP TOLL PLAZA BASE DETAIL

1/2" = 1'-0"

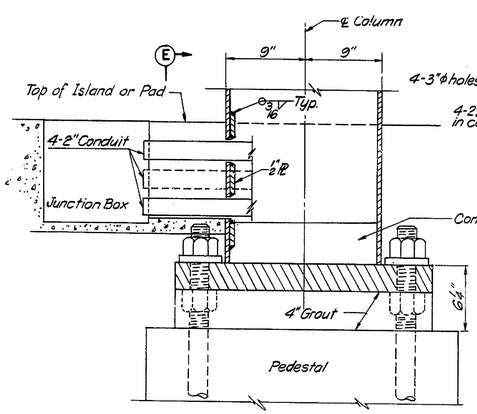


SECTION B-B

Scale: 1 1/2" = 1'-0"

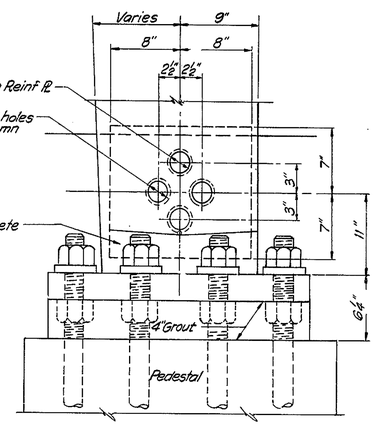


SECTION E-E

Scale: 1 1/2" = 1'-0"

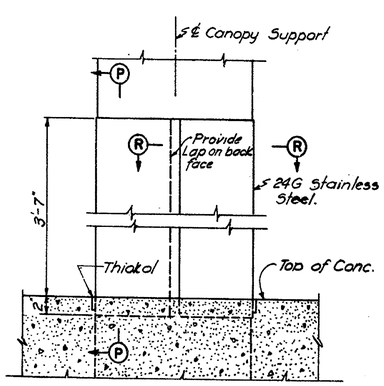


COLUMN COVER

(Back Face of Canopy Support all Columns)

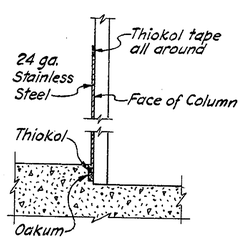


SECTION P-P

1 1/2" = 1'-0"

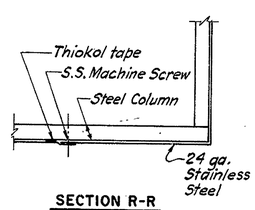


SECTION R-R

1 1/2" = 1'-0"

NOTES:

1) All traffic signals shall be controlled from their respective toll booth or automatic toll collection unit.
2) For Canopy Details, Alternate B, see sheet 33.
3) For electrical details see sheet 34.
4) For sections noted on this sheet, but not shown, see sheet 32.

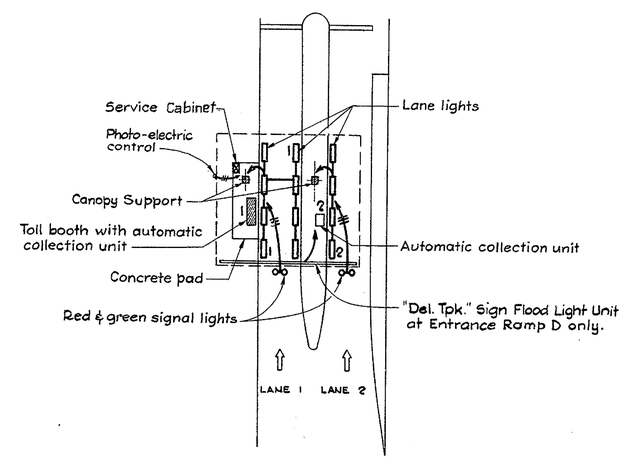


PLAN

(With Lighting Layout)

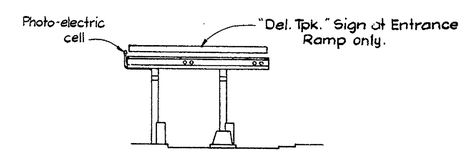


ELEVATION

RAMP TOLL PLAZA LAYOUT

(Alternates "A" & "B")

| DELAWARE TURNPIKE | CONT. NO. | TITLE | SHEET NO. | TOTAL SHEETS |
|---|---|---|---|---|
| | 7053 | RAMP PLAZA CANOPY ALTERNATE "A" | 32 | 86 |

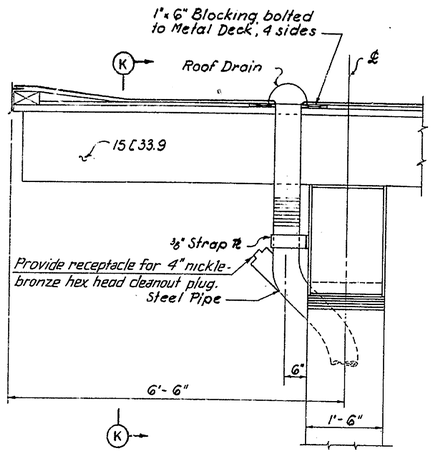


SECTION J-J
Scale: 3/4" = 1'-0"

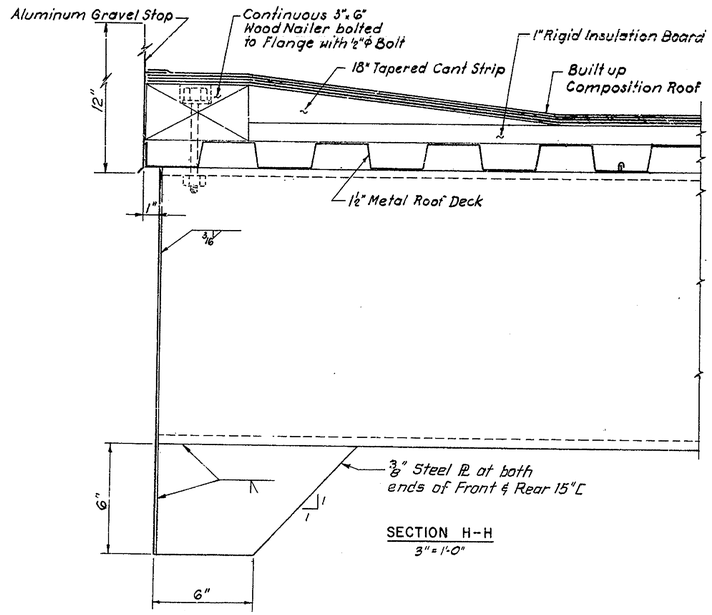


SECTION H-H
3" = 1'-0"

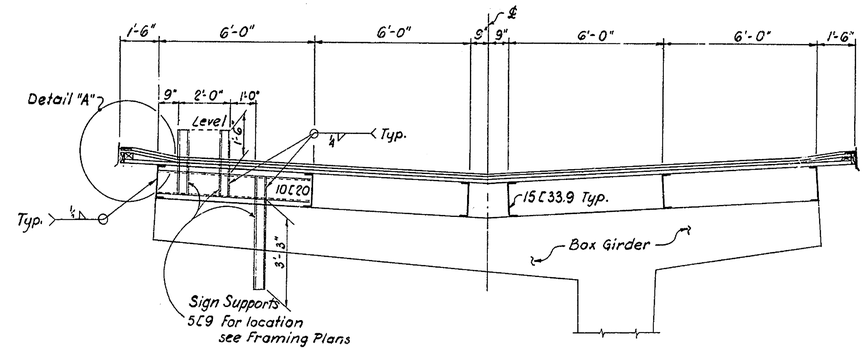


SECTION G-G
Scale: 3/8" = 1'-0"

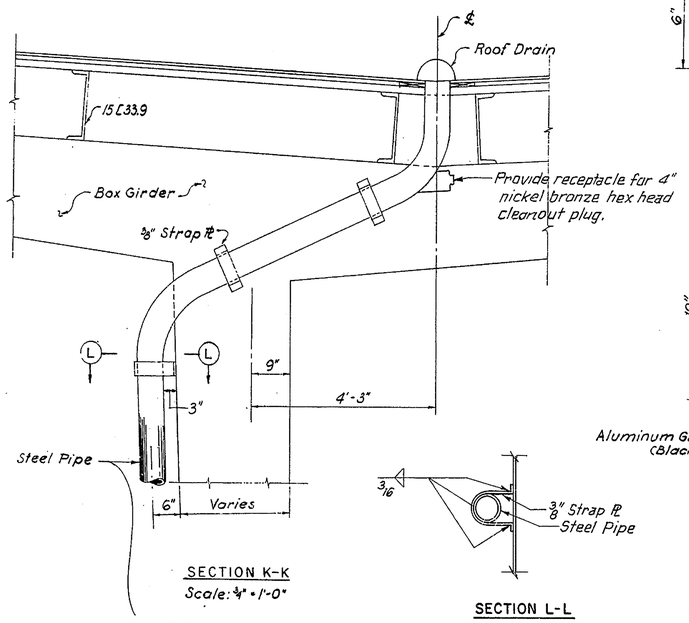


SECTION K-K
Scale: 3/4" = 1'-0"

SECTION L-L
Scale 3/4" = 1'-0"

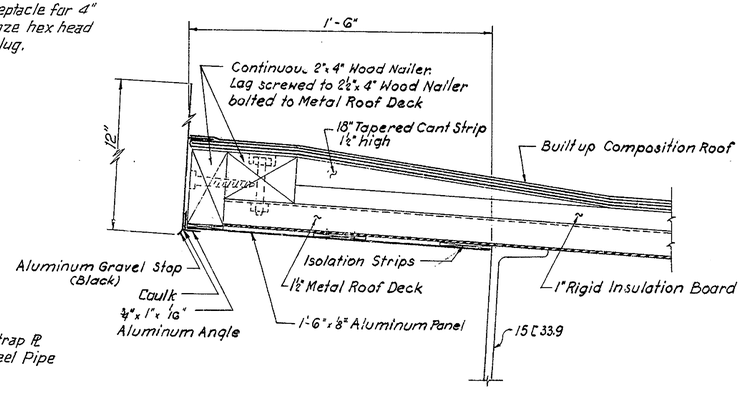


DETAIL "A"
Scale: 3" = 1'-0"

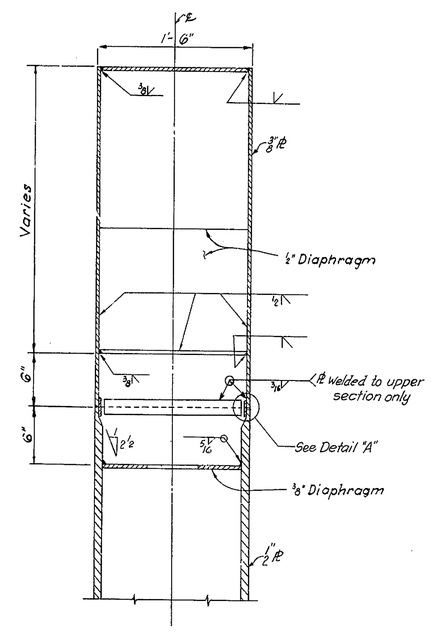


SECTION D-D
1/2" = 1'-0"

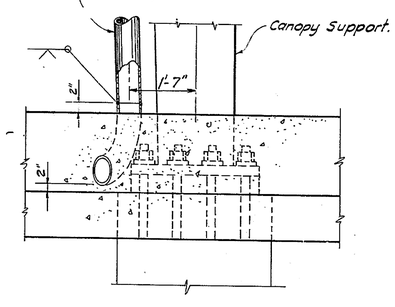


DRAINAGE CONNECTION DETAIL AT RAMPS
3/4" = 1'-0"

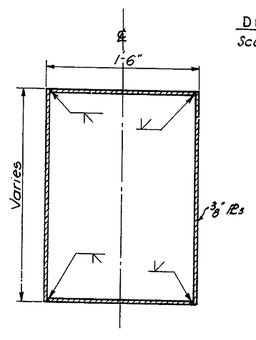


SECTION C-C
Scale: 1 1/2" = 1'-0"

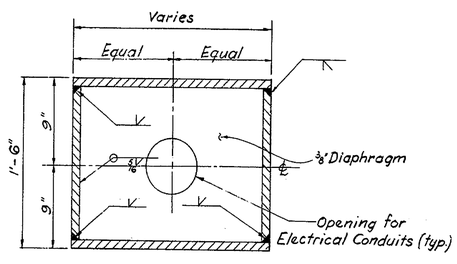


SECTION F-F
Scale: 1 1/2" = 1'-0"

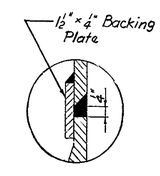


DETAIL "A"
No Scale

| DELAWARE TURNPIKE | CONT. NO. | TITLE | SHEET NO. | TOTAL SHEETS |
|---|---|---|---|---|
| | 7053 | RAMP PLAZA CANOPY ALTERNATE "B" | 33 | 86 |

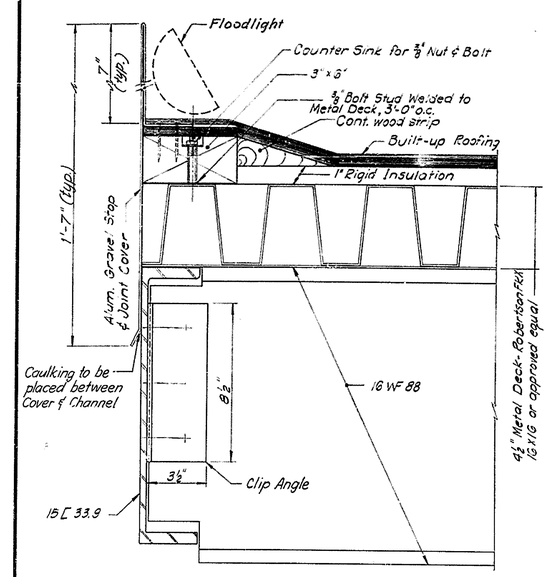


SECTION B-B
3" = 1'-0"

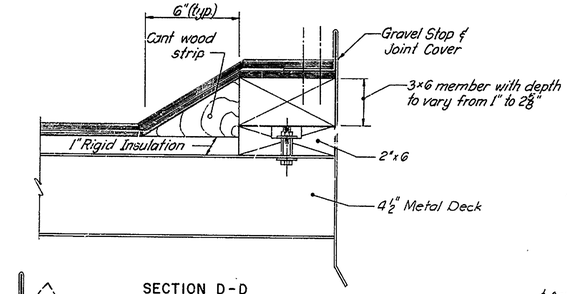


SECTION D-D
3" = 1'-0"

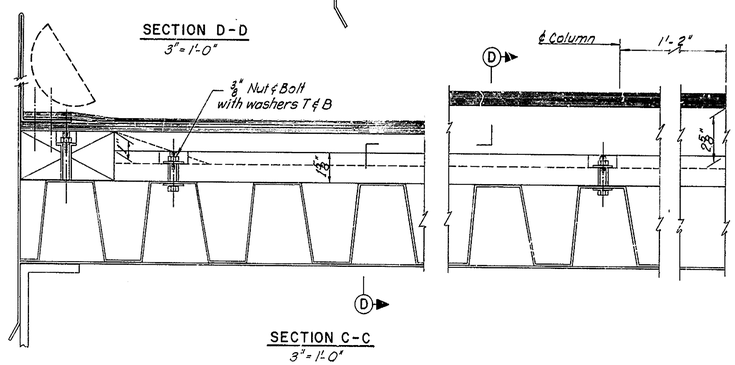


SECTION C-C
3" = 1'-0"

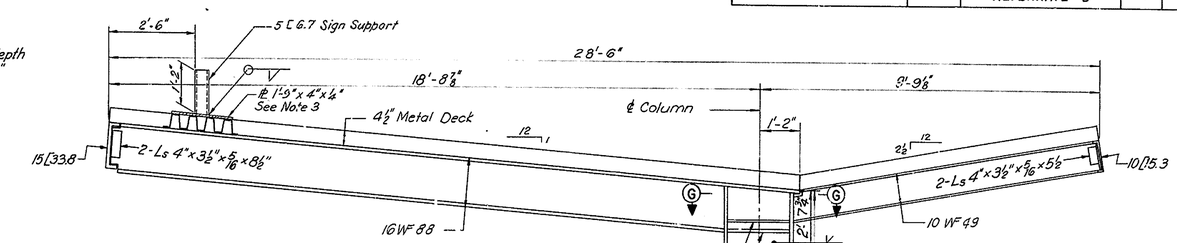


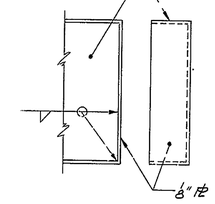


SIDE VIEW END VIEW
DETAIL A
No scale

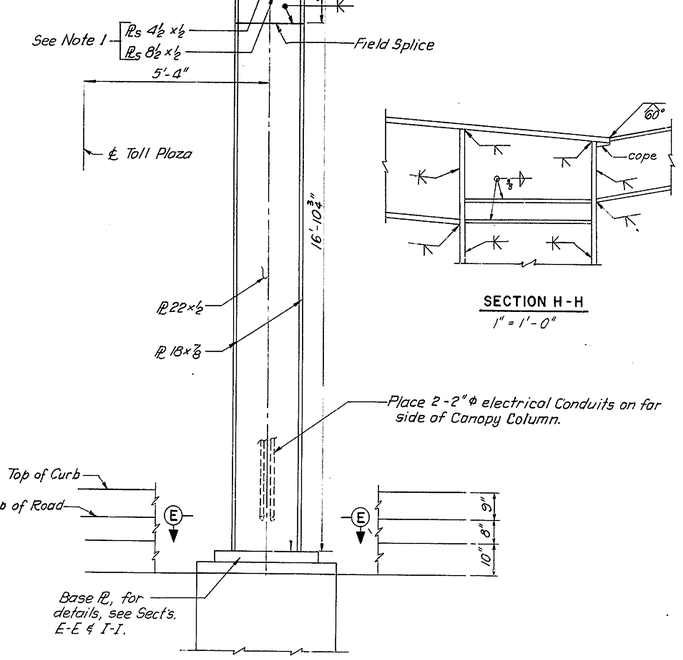


VIEW A-A
½" = 1'-0"




SECTION H-H
1" = 1'-0"

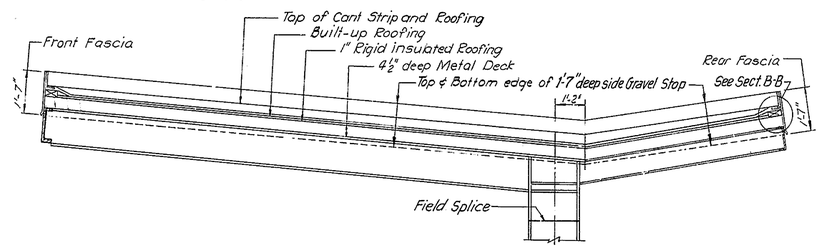


SECTION F-F
⅜" = 1'-0"

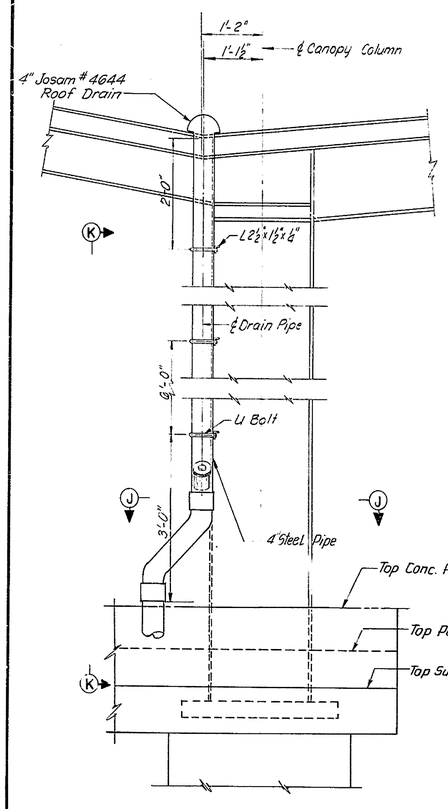


CANOPY DRAIN END VIEW
¾" = 1'-0"

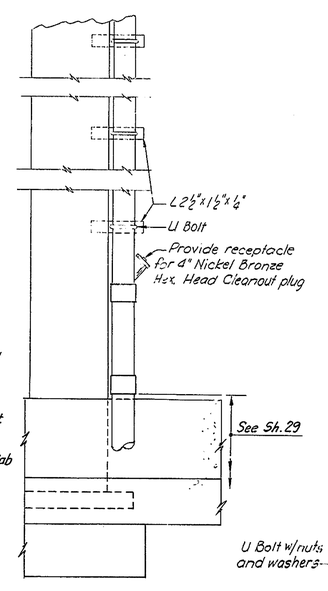


VIEW K-K

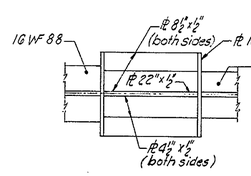


SECTION G-G
½" = 1'-0"

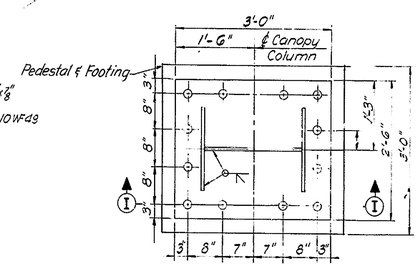


SECTION E-E
¾" = 1'-0"

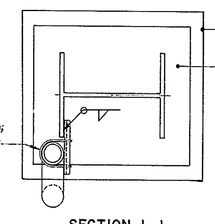


SECTION J-J
¾" = 1'-0"

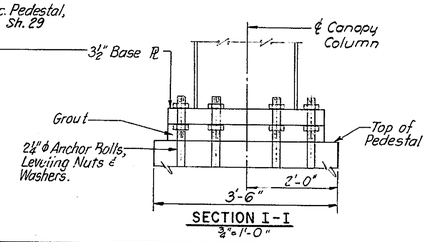


SECTION I-I
¾" = 1'-0"

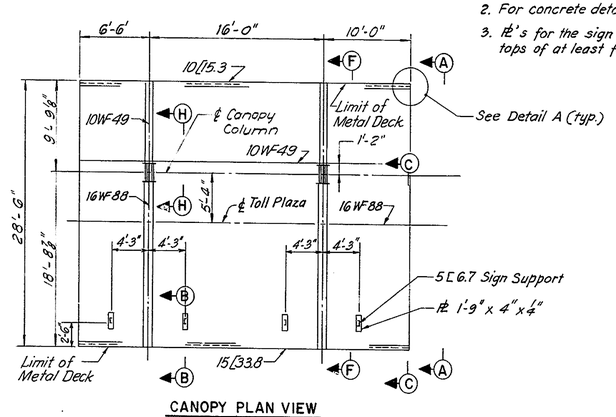


CANOPY PLAN VIEW
⅛" = 1'-0"

Notes:
1. Bottom of PL to be located at the same elevation as the bottom flange of beam.
2. For concrete details see Sheets 28 & 29.
3. PL's for the sign support to be welded to the tops of at least four (4) cells of the metal deck.

| DELAWARE TURNPIKE | CONT. NO. | TITLE | SHEET NO. | TOTAL SHEETS |
|---|---|---|---|---|
| | 7053 | RAMP PLAZA CANOPY LIGHTING DETAILS | 34 | 86 |

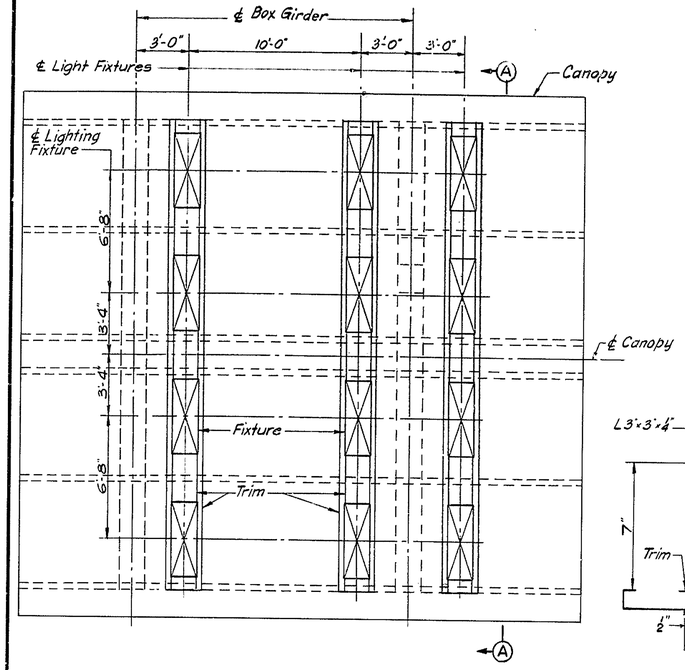


CANOPY LANE LIGHT LAYOUT
1/4"=1'-0"

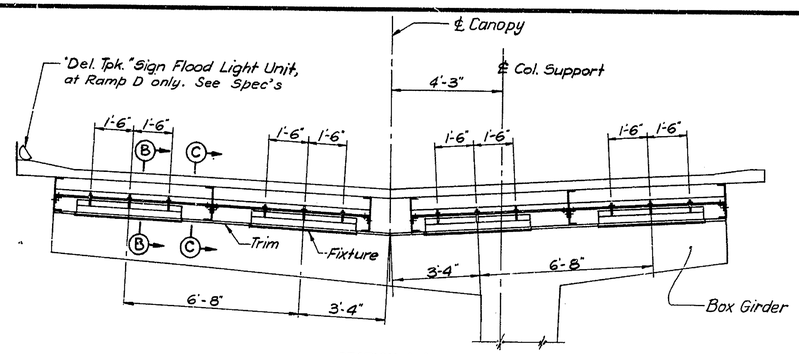


SECTION A-A
3/8"=1'-0"

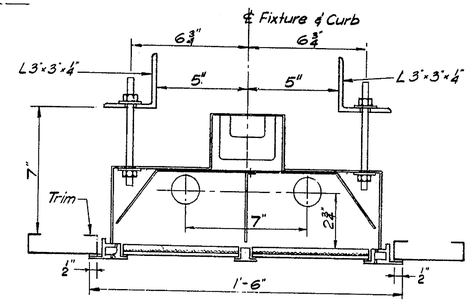


SECTION B-B
3"=1'-0"

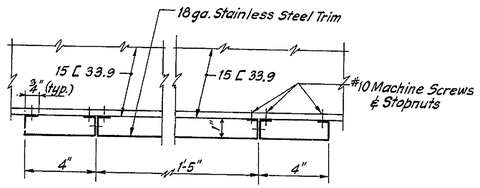


SECTION C-C
3"=1'-0"

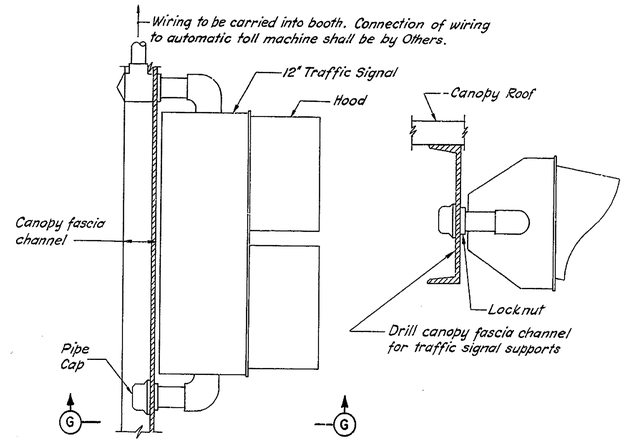


PLAN VIEW

SECTION G-G

CANOPY TRAFFIC SIGNAL
Alternates "A" & "B"
No scale

ALTERNATE "A"

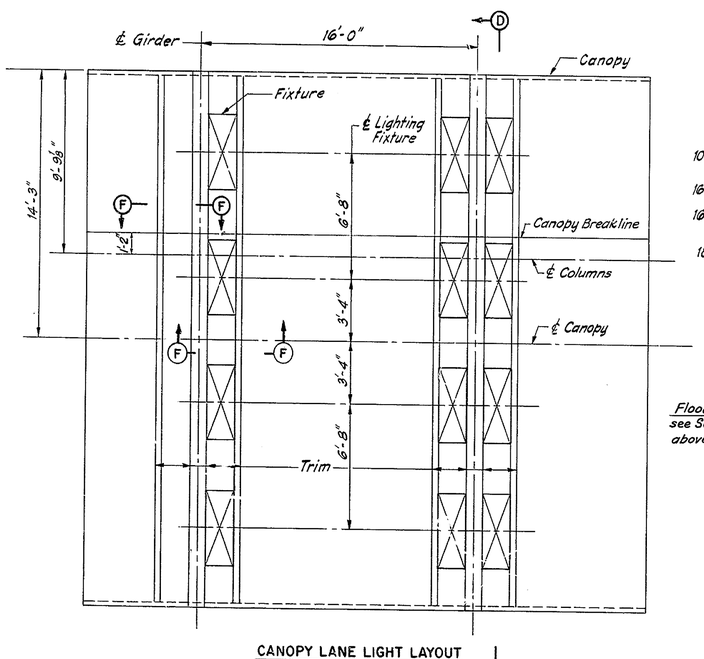


CANOPY LANE LIGHT LAYOUT
1/4"=1'-0"

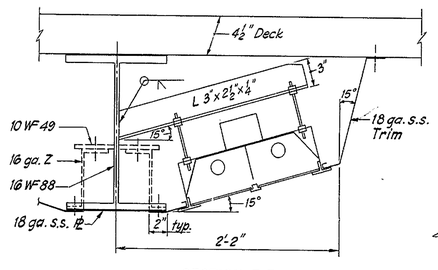


SECTION E-E
1 1/2"=1'-0"

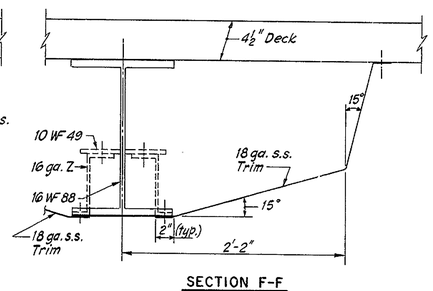


SECTION F-F
1 1/2"=1'-0"

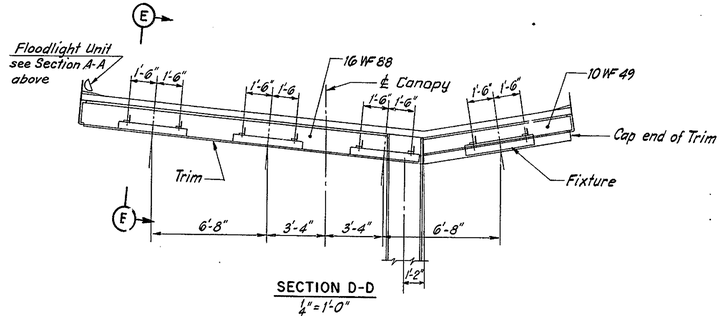


SECTION D-D
1/4"=1'-0"

ALTERNATE "B"

| DELAWARE TURNPIKE | CONT. NO. | TITLE | SHEET NO. | TOTAL SHEETS |
|---|---|---|---|---|
| | 7053 | LIGHTING PLAN | 35 | 86 |

| No. | Revision | Date |
|---|---|---|
| 1 | General Revisions for Additional Lighting | 7-22-70 |

* All lighting standard numbers have been revised, but only where the work has been changed have the items been circled.

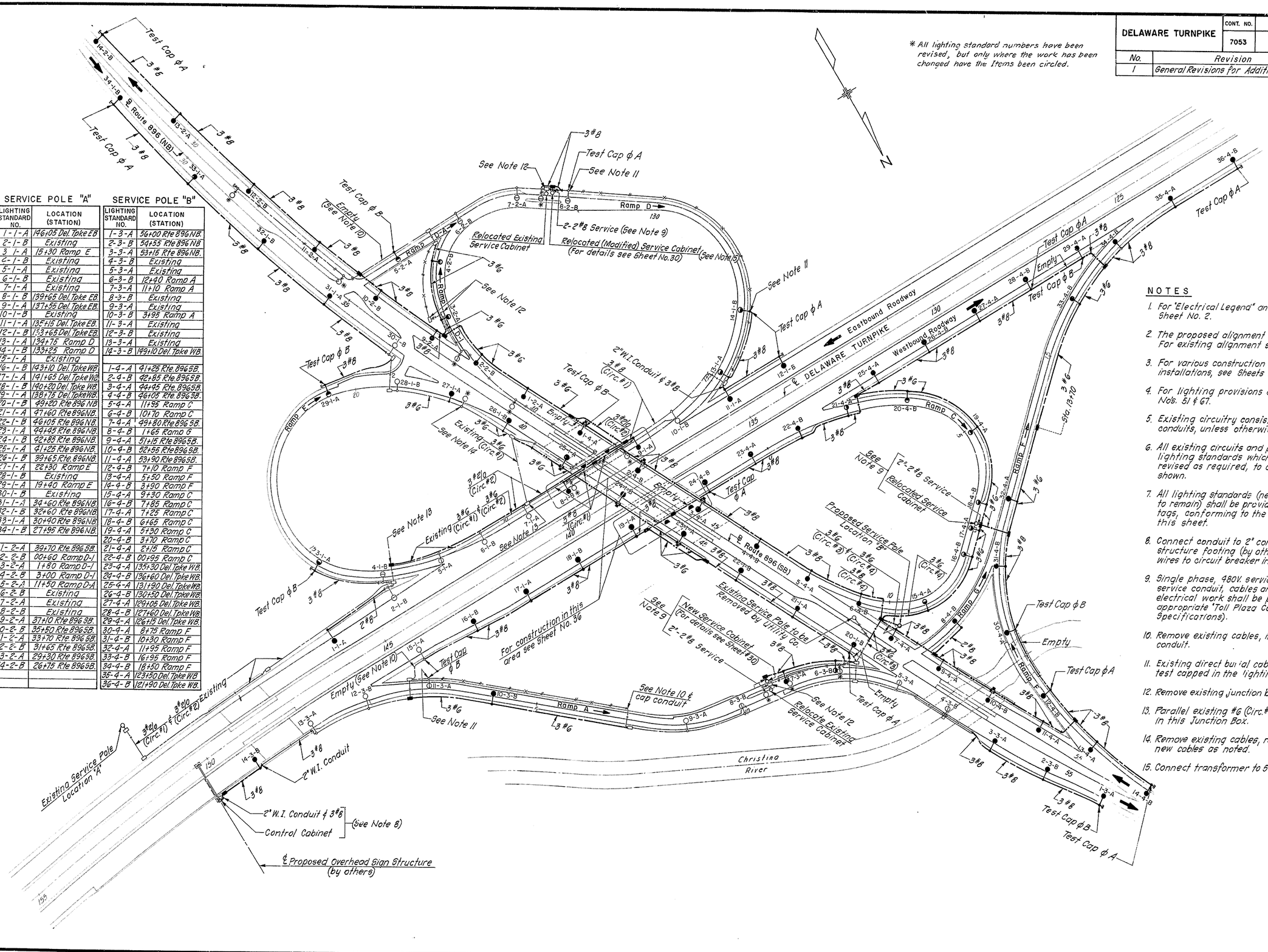


## SERVICE POLE "A"

| LIGHTING STANDARD NO. | LOCATION (STATION) |
|---|---|
| 1-1-A | 146+05 Del. Tpke EB |
| 2-1-B | Existing |
| 3-1-A | 15+30 Ramp E |
| 2-1-B | Existing |
| 5-1-A | Existing |
| 6-1-B | Existing |
| 7-1-A | Existing |
| 8-1-B | 139+65 Del. Tpke EB |
| 9-1-A | 137+55 Del. Tpke EB. |
| 10-1-B | Existing |
| 11-1-A | 135+15 Del. Tpke EB. |
| 12-1-B | 133+65 Del. Tpke EB. |
| 13-1-A | 134+75 Ramp D |
| 14-1-B | 133+25 Ramp D |
| 15-1-A | Existing |
| 16-1-B | 143+10 Del. Tpke WB. |
| 17-1-A | 141+65 Del. Tpke WB |
| 18-1-B | 140+20 Del. Tpke WB |
| 19-1-A | 138+75 Del. Tpke WB. |
| 20-1-B | 49+20 Rte 896 NB |
| 21-1-A | 47+60 Rte 896 NB. |
| 22-1-B | 46+05 Rte 896 NB. |
| 23-1-A | 44+45 Rte 896 NB. |
| 24-1-B | 42+85 Rte 896 NB. |
| 25-1-A | 41+25 Rte 896 NB. |
| 26-1-B | 39+65 Rte 896 NB. |
| 27-1-A | 22+30 Ramp E |
| 28-1-B | Existing |
| 29-1-A | 19+40 Ramp E |
| 30-1-B | Existing |
| 31-1-A | 34+60 Rte 896 NB. |
| 32-1-B | 32+60 Rte 896 NB |
| 33-1-A | 30+90 Rte 896 NB |
| 34-1-B | 27+95 Rte 896 NB. |
| | |
| 1-2-A | 39+70 Rte 896 SB. |
| 2-2-B | 00+60 Ramp D-1 |
| 3-2-A | 1+80 Ramp D-1 |
| 4-2-B | 3+00 Ramp D-1 |
| 5-2-A | 11+50 Ramp D-A |
| 6-2-B | Existing |
| 7-2-A | Existing |
| 8-2-B | Existing |
| 9-2-A | 37+10 Rte 896 SB. |
| 10-2-B | 35+50 Rte 896 SB. |
| 11-2-A | 33+70 Rte 896 SB. |
| 12-2-B | 31+65 Rte 896 SB. |
| 13-2-A | 29+30 Rte 896 SB. |
| 14-2-B | 26+75 Rte 896 SB. |
| | |
| | |

## SERVICE POLE "B"

| LIGHTING STANDARD NO. | LOCATION (STATION) |
|---|---|
| 1-3-A | 56+00 Rte 896 NB. |
| 2-3-B | 54+55 Rte 896 NB |
| 3-3-A | 53+15 Rte 896 NB. |
| 4-3-B | Existing |
| 5-3-A | Existing |
| 6-3-B | 12+40 Ramp A |
| 7-3-A | 11+10 Ramp A |
| 8-3-B | Existing |
| 9-3-A | Existing |
| 10-3-B | 3+95 Ramp A |
| 11-3-A | Existing |
| 12-3-B | Existing |
| 13-3-A | Existing |
| 14-3-B | 149+10 Del. Tpke WB. |
| | |
| 1-4-A | 91+25 Rte 896 SB. |
| 2-4-B | 92+85 Rte 896 SB. |
| 3-4-A | 94+45 Rte 896 SB. |
| 4-4-B | 96+05 Rte 896 SB. |
| 5-4-A | 11+95 Ramp C |
| 6-4-B | 10+70 Ramp C |
| 7-4-A | 49+80 Rte 896 SB. |
| 8-4-B | 1+65 Ramp G |
| 9-4-A | 51+15 Rte 896 SB. |
| 10-4-B | 52+55 Rte 896 SB. |
| 11-4-A | 53+90 Rte 896 SB. |
| 12-4-B | 7+10 Ramp F |
| 13-4-A | 5+50 Ramp F |
| 14-4-B | 3+90 Ramp F |
| 15-4-A | 9+30 Ramp C |
| 16-4-B | 7+85 Ramp C |
| 17-4-A | 7+25 Ramp C |
| 18-4-B | 6+65 Ramp C |
| 19-4-A | 5+90 Ramp C |
| 20-4-B | 3+70 Ramp C |
| 21-4-A | 2+15 Ramp C |
| 22-4-B | 00+95 Ramp C |
| 23-4-A | 135+30 Del. Tpke WB. |
| 24-4-B | 136+60 Del. Tpke WB. |
| 25-4-A | 131+90 Del. Tpke WB. |
| 26-4-B | 130+50 Del. Tpke WB. |
| 27-4-A | 129+05 Del. Tpke WB. |
| 28-4-B | 127+60 Del. Tpke WB. |
| 29-4-A | 126+15 Del. Tpke WB. |
| 30-4-A | 8+75 Ramp F |
| 31-4-B | 10+30 Ramp F |
| 32-4-A | 11+95 Ramp F |
| 33-4-B | 16+95 Ramp F |
| 34-4-B | 18+50 Ramp F |
| 35-4-A | 123+50 Del. Tpke WB |
| 36-4-B | 121+90 Del. Tpke WB. |

## NOTES

1. For "Electrical Legend" and "Electrical Notes" see Sheet No. 2.
2. The proposed alignment is shown on this sheet. For existing alignment see Highway Plans.
3. For various construction details regarding lighting installations, see Sheets No's. 36 & 37.
4. For lighting provisions on structures, see Sheets Nos. 51 & 67.
5. Existing circuitry consists of 3#8 cables in all conduits, unless otherwise noted.
6. All existing circuits and phase connections to the lighting standards which are to remain, shall be revised as required, to conform to the circuitry shown.
7. All lighting standards (new, relocated and existing to remain) shall be provided with identification tags, conforming to the designations shown on this sheet.
8. Connect conduit to 2" conduit stubbed out of sign structure footing (by others) and connect 3#8 wires to circuit breaker in control cabinet (by others).
9. Single phase, 480V service for toll facilities, service conduit, cables and all other associated electrical work shall be paid for under the appropriate "Toll Plaza Construction" items. (See Specifications).
10. Remove existing cables, install drag wire in existing conduit.
11. Existing direct burial cables are disconnected and test capped in the lighting standard base(s).
12. Remove existing junction box (See Note 4 on Sheet #2)
13. Parallel existing #6 (Circ. #2) and new #2/0 (Circ. #2) in this Junction Box.
14. Remove existing cables, repair conduit and install new cables as noted.
15. Connect transformer to 5% below normal Voltage taps.

| DELAWARE TURNPIKE | CONT NO | TITLE | SHEET NO | TOTAL SHEETS |
|---|---|---|---|---|
| | 7053 | LIGHTING DETAILS-I | 36 | 86 |

| No. | Revision | Date |
|---|---|---|
| 1 | Additional Underbridge Lighting | 7-22-70 |

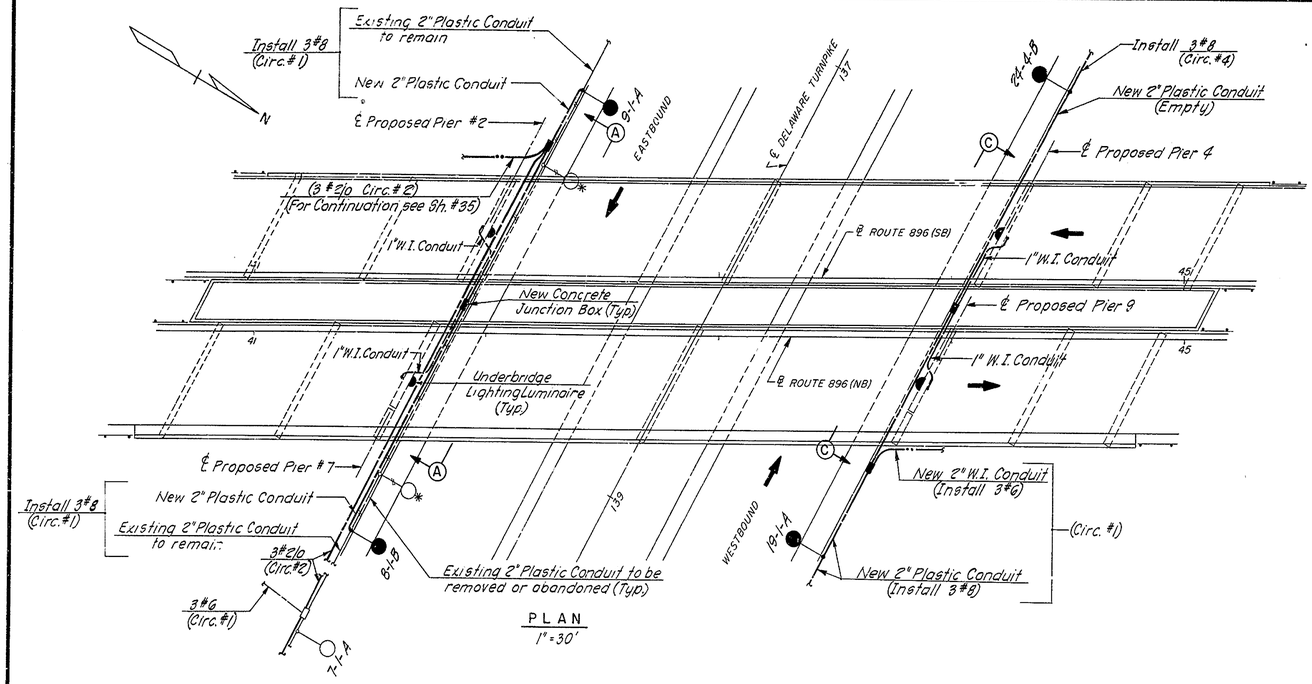


PLAN
1" = 30'

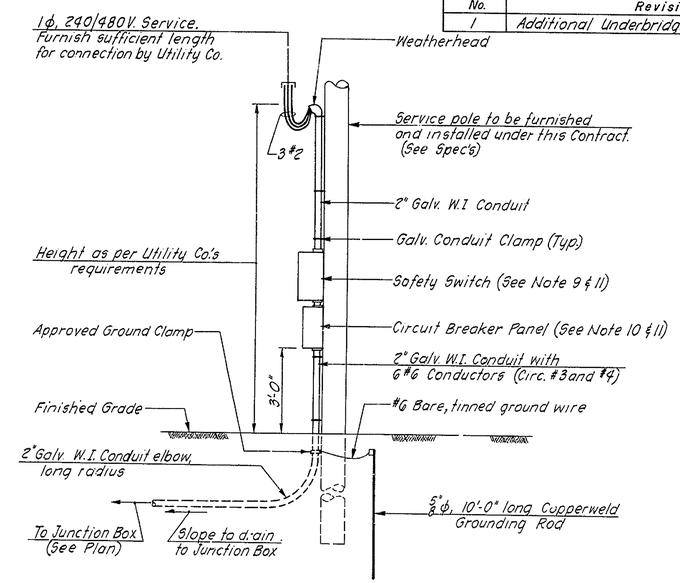


SERVICE POLE DETAIL (LOCATION B)
No Scale

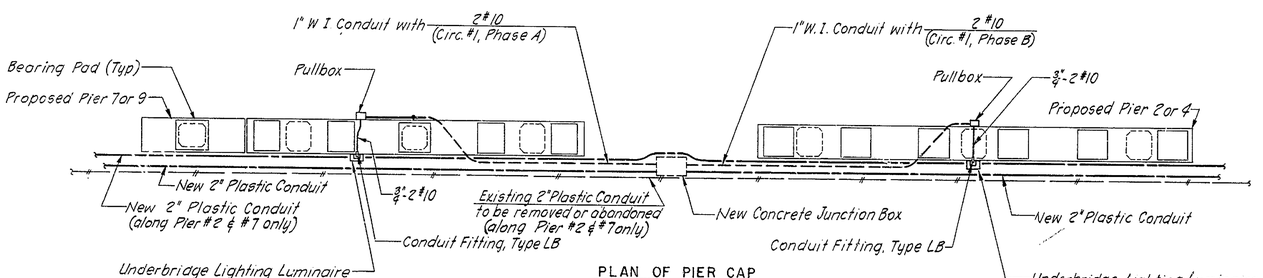


PLAN OF PIER CAP
1/8" = 1'-0"

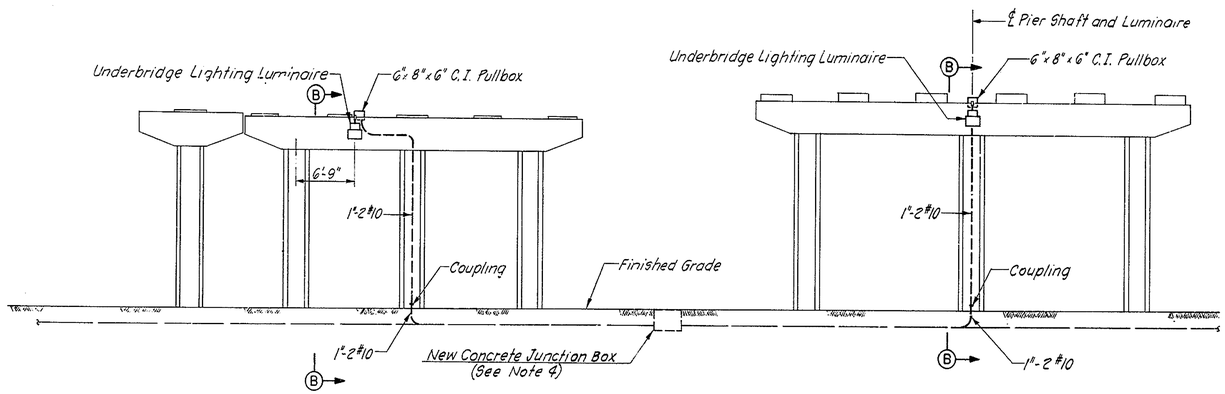


SECTION A-A
1/8" = 1'-0"
(Section C-C is similar)

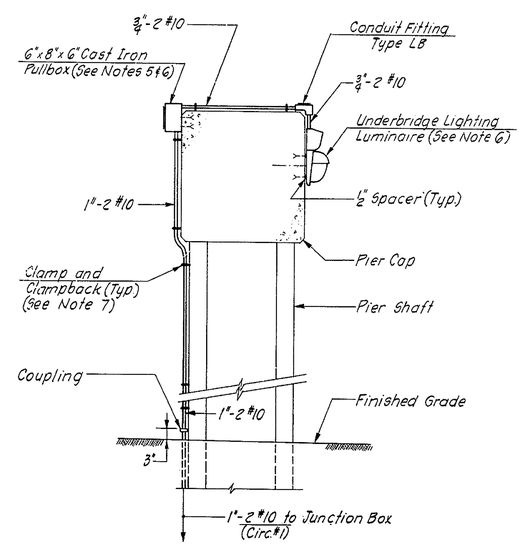


SECTION B-B
1/2" = 1'-0"

## NOTES

1. For "Electrical Legend" and "Electrical Notes" see Sheet No. 2.
2. See "Lighting" and "Bridge" plans for other related electrical installations which are shown on this sheet.
3. For concrete junction box construction details, see Sheet No. 37.
4. In this junction box install a cable connector kit, style 82 and 64 as required, with 5A. fuse for phase wire of each underbridge lighting circuit.
5. Cast iron pullbox shall be furnished with mounting lugs and conduit hubs, and shall be gasketed and galvanized, equal to O-Z Cat. # YS080606.
6. Cast iron pullboxes and underbridge lighting luminaires are to be fastened to concrete surfaces with 3/8" φ-2 unit expansion anchor bolts and 1/2" spacers.
7. Conduit to be fastened to concrete with clamps and clampbacks by means of 3/8" φ-2 unit expansion bolts, spaced at 5'-0" maximum.
8. All installations on service pole shall conform to the Utility Company's requirements.
9. Safety switch shall be 3 pole, SW, 480V., 100A. size with two 70A. fuses, in NEMA 3R enclosure, equal to G.E. Cat. # TH3363RH.
10. Circuit Breaker Panel shall be furnished with three 2-pole, 480V, 100A. (TEF) frame (50A. trip) circuit breakers (one spare) and neutral bar, in NEMA 3R enclosure.
11. Safety switch and circuit breaker panel shall be furnished with approved heavy duty padlocks keyed identically. The enclosures shall be fastened to pole with 3/8" φ, 2 1/2" long galvanized lag screws

| DELAWARE TURNPIKE | CONT. NO. | TITLE | SHEET NO. | TOTAL SHEETS |
|---|---|---|---|---|
| | 7053 | LIGHTING DETAILS-II | 37 | 86 |

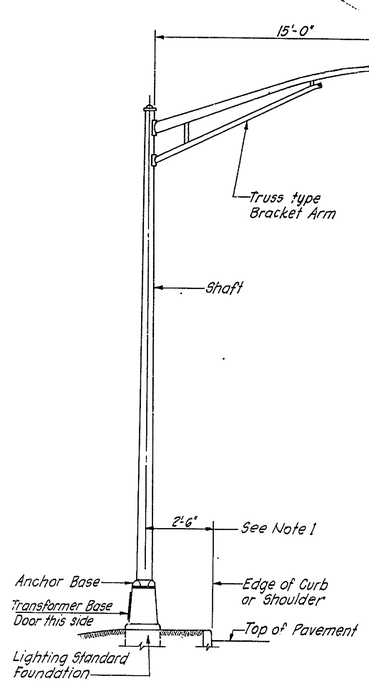


TYPE A

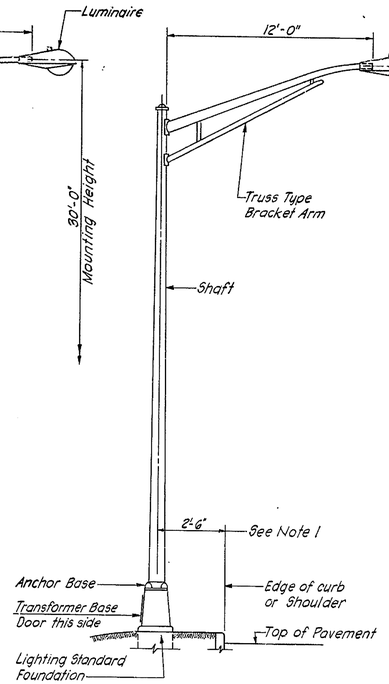


TYPE B

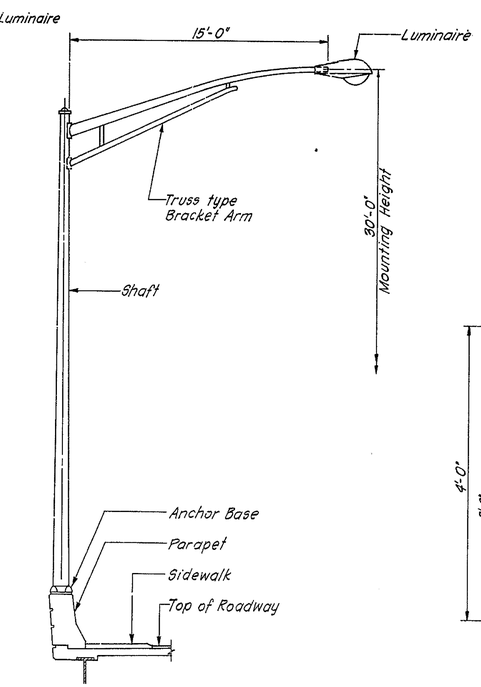


TYPE C
(See Note 2)

## LIGHTING STANDARD INSTALLATION

No Scale

(Guard Rail installation where required, shall be coordinated with lighting standard locations.)

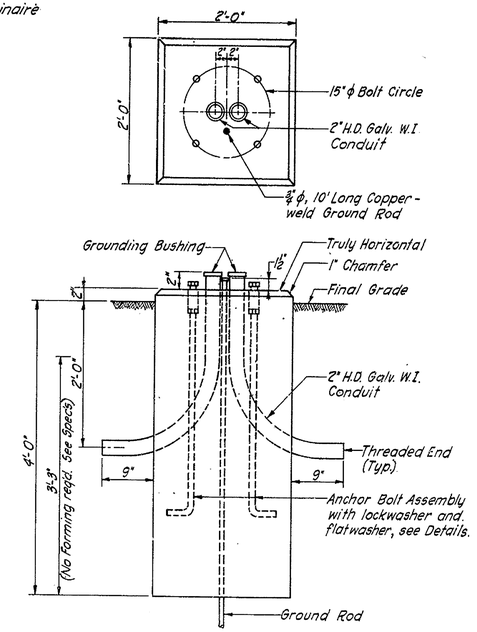


## LIGHTING STANDARD FOUNDATION

1" = 1'-0"

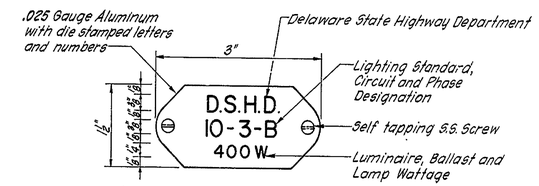


## LIGHTING STANDARD IDENTIFICATION PLATE

No Scale

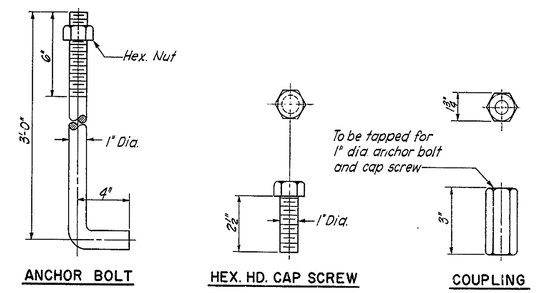


ANCHOR BOLT — HEX. HD. CAP SCREW — COUPLING

## ANCHOR BOLT ASSEMBLY

No Scale

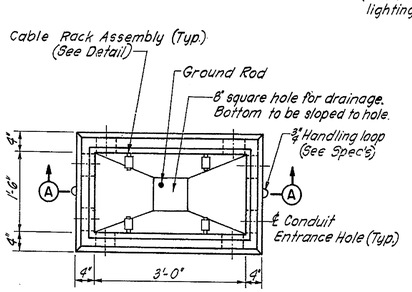


PLAN WITH COVER REMOVED

3/4" = 1'-0"

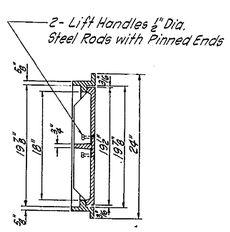


SECTION B-B

1" = 1'-0"

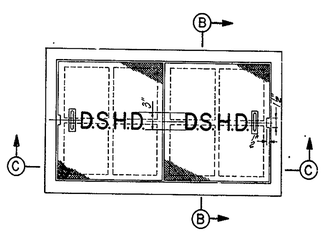


PLAN

1" = 1'-0"

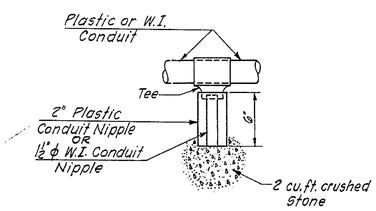


## CONDUIT DRAINAGE DETAIL

No Scale

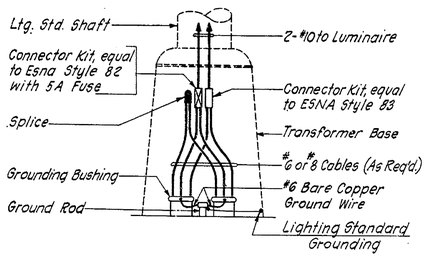


## LIGHTING STANDARD WIRING

No Scale

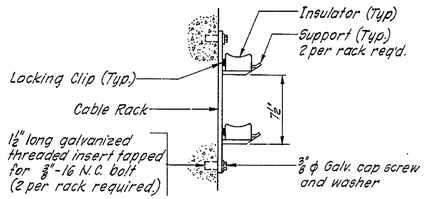


## CABLE RACK ASSEMBLY

1 1/2" = 1'-0"
(See Note 6)

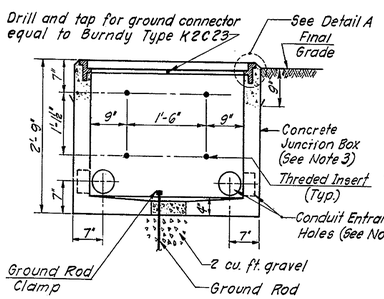


SECTION A-A

3/4" = 1'-0"

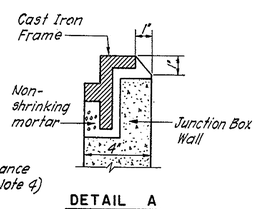


DETAIL A

3" = 1'-0"

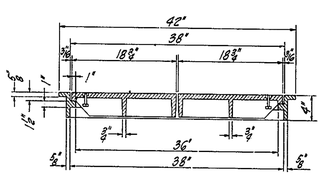


SECTION C-C

1" = 1'-0"

FRAME AND COVER
(See Note 5)

## CONCRETE JUNCTION BOX DETAILS

## NOTES

1. This dimension may vary, as directed, in order to maintain alignment with existing lighting standards.
2. For details of lighting standard Type C mounting, conduit and junction boxes embedded in structures, see Sheet No. 51.
3. Concrete junction box shall be reinforced with #3 bars 12" o.c. throughout.
4. Conduit entrance holes shall be 5" Dia. with 1" knockout wall.
5. Frame and cover shall be equal to Flockhart Foundry Co.'s Dwg. No. 18664, and completely H.D. Galvanized after fabrication.
6. Cable rack assembly shall be manufactured by the McGraw-Edison Power System Division, or approved equal, and shall consist of the following components:
   - Rack — Cat. No. DU 1782
   - Support — Cat. No. DU 561
   - Insulator — Cat. No. DE 1141
   - Locking Clip — Cat. No. WDU 4M1

   (4 assemblies per junction box are required)

| DELAWARE TURNPIKE | CONT. NO. | TITLE | SHEET NO. | TOTAL SHEETS |
|---|---|---|---|---|
| | 7053 | MAINTENANCE AND PROTECTION OF TRAFFIC | 38 | 86 |

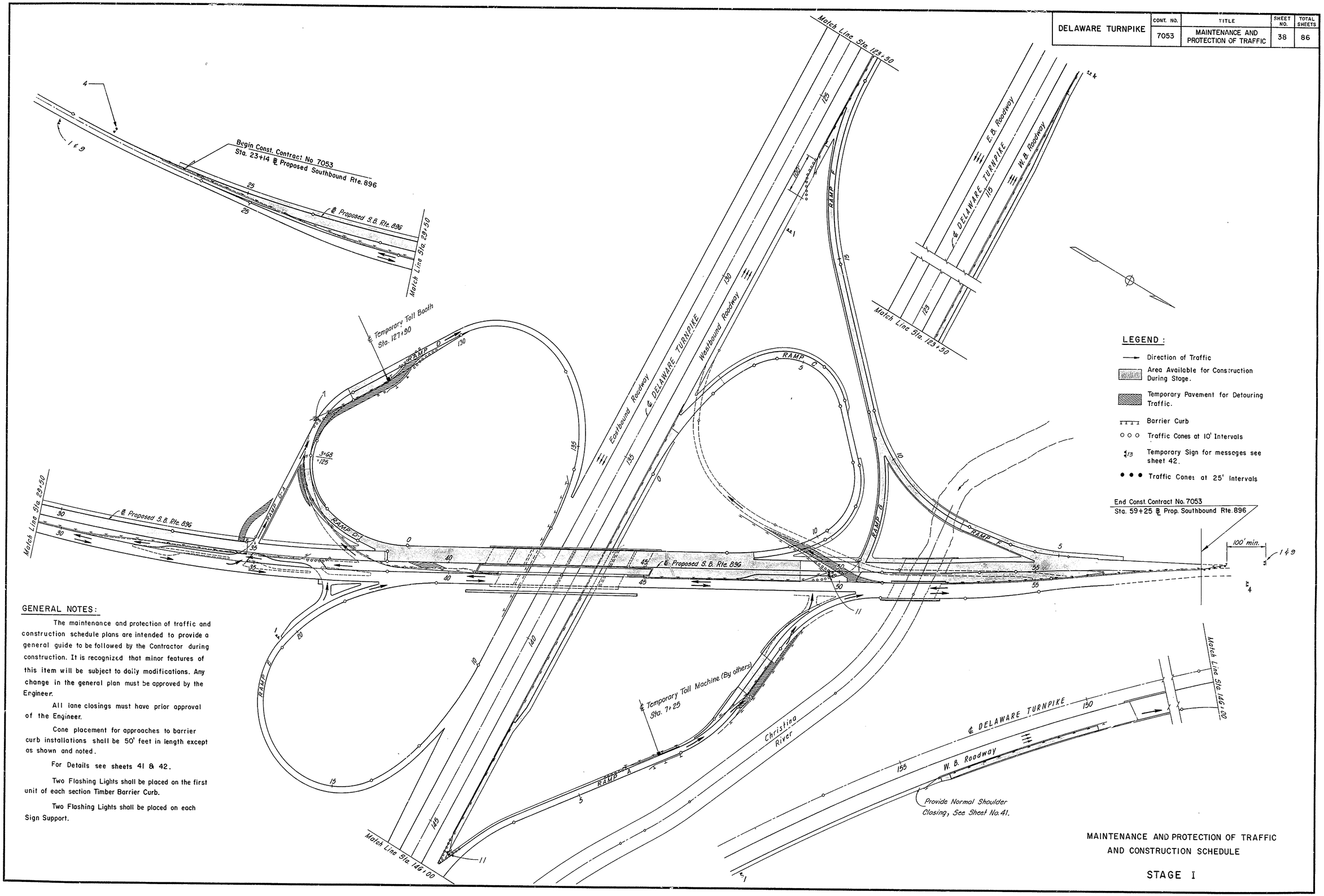


## LEGEND :

- Direction of Traffic
- Area Available for Construction During Stage.
- Temporary Pavement for Detouring Traffic.
- Barrier Curb
- Traffic Cones at 10' Intervals
- Temporary Sign for messages see sheet 42.
- Traffic Cones at 25' Intervals

## GENERAL NOTES:

The maintenance and protection of traffic and construction schedule plans are intended to provide a general guide to be followed by the Contractor during construction. It is recognized that minor features of this item will be subject to daily modifications. Any change in the general plan must be approved by the Engineer.

All lane closings must have prior approval of the Engineer.

Cone placement for approaches to barrier curb installations shall be 50' feet in length except as shown and noted.

For Details see sheets 41 & 42.

Two Flashing Lights shall be placed on the first unit of each section Timber Barrier Curb.

Two Flashing Lights shall be placed on each Sign Support.

MAINTENANCE AND PROTECTION OF TRAFFIC AND CONSTRUCTION SCHEDULE

STAGE I

| DELAWARE TURNPIKE | CONT. NO. | TITLE | SHEET NO. | TOTAL SHEETS |
|---|---|---|---|---|
| | 7053 | MAINTENANCE AND PROTECTION OF TRAFFIC | 39 | 86 |

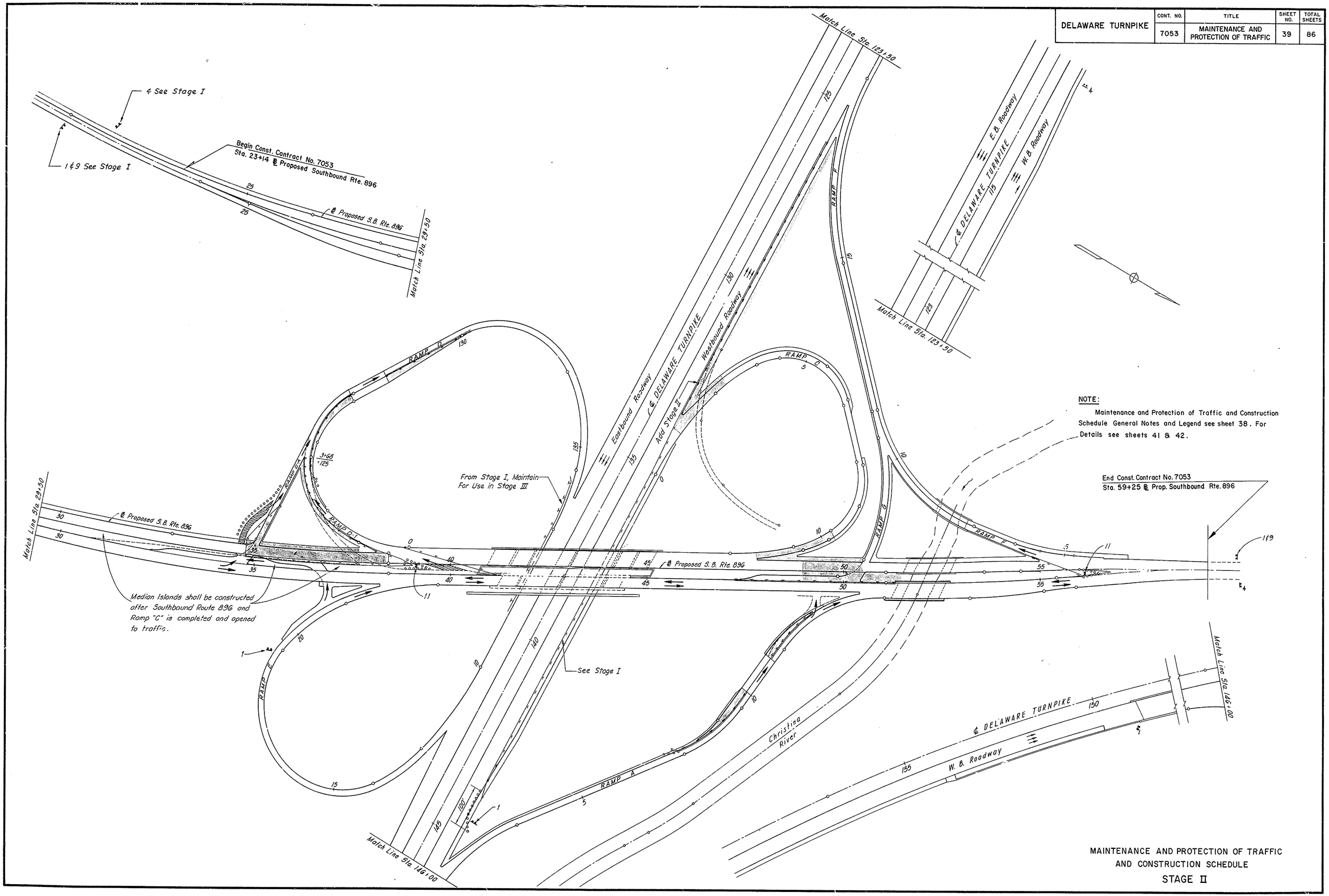


NOTE:

Maintenance and Protection of Traffic and Construction Schedule General Notes and Legend see sheet 38. For Details see sheets 41 & 42.

MAINTENANCE AND PROTECTION OF TRAFFIC AND CONSTRUCTION SCHEDULE

STAGE II

| DELAWARE TURNPIKE | CONT. NO. | TITLE | SHEET NO. | TOTAL SHEETS |
|---|---|---|---|---|
| | 7053 | MAINTENANCE AND PROTECTION OF TRAFFIC | 40 | 36 |

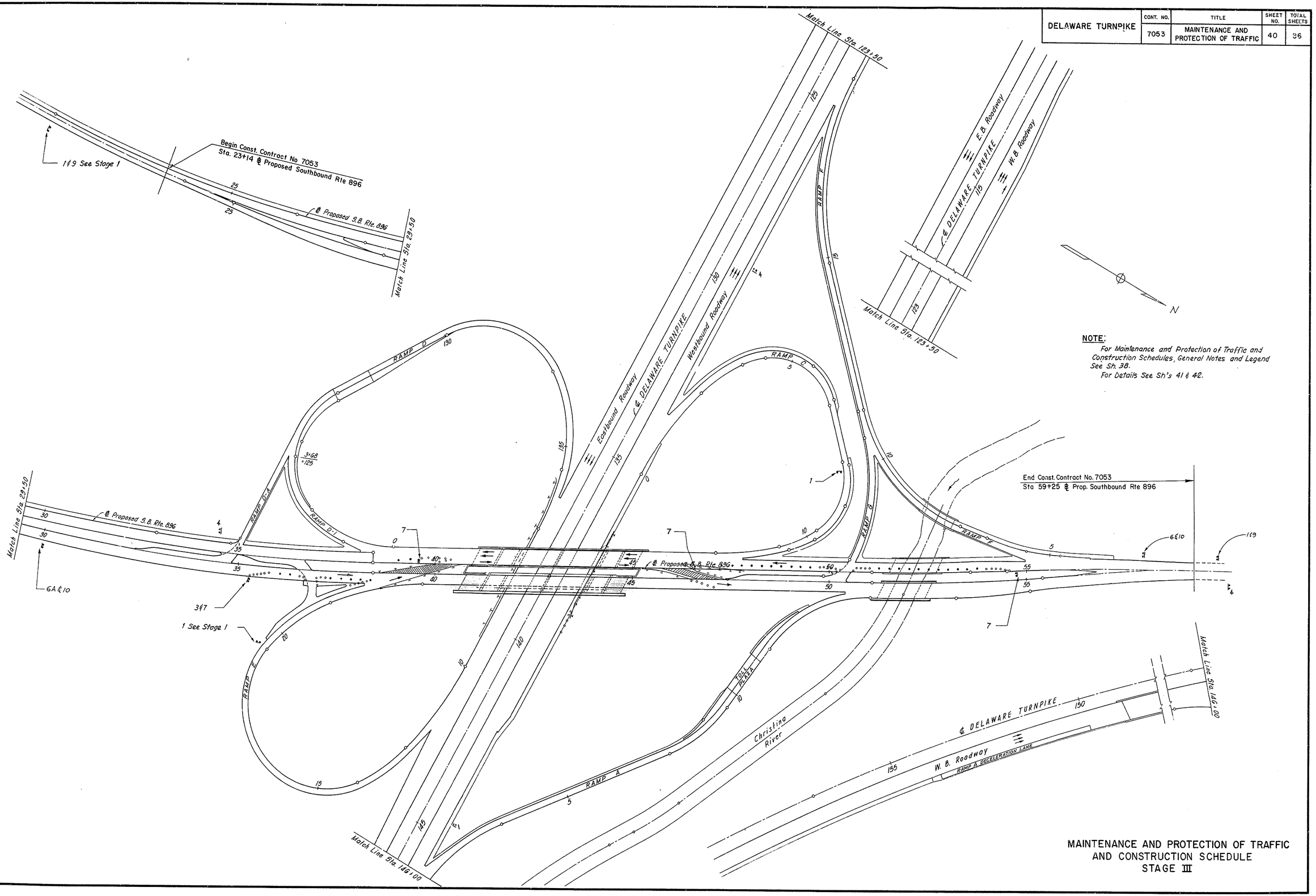


**NOTE:**

*For Maintenance and Protection of Traffic and Construction Schedules, General Notes and Legend See Sh. 38.*

*For Details See Sh's 41 & 42.*

MAINTENANCE AND PROTECTION OF TRAFFIC
AND CONSTRUCTION SCHEDULE
STAGE III

| DELAWARE TURNPIKE | CONT. NO | TITLE | SHEET NO. | TOTAL SHEETS |
|---|---|---|---|---|
| | 7053 | MAINTENANCE AND PROTECTION OF TRAFFIC | 41 | 86 |

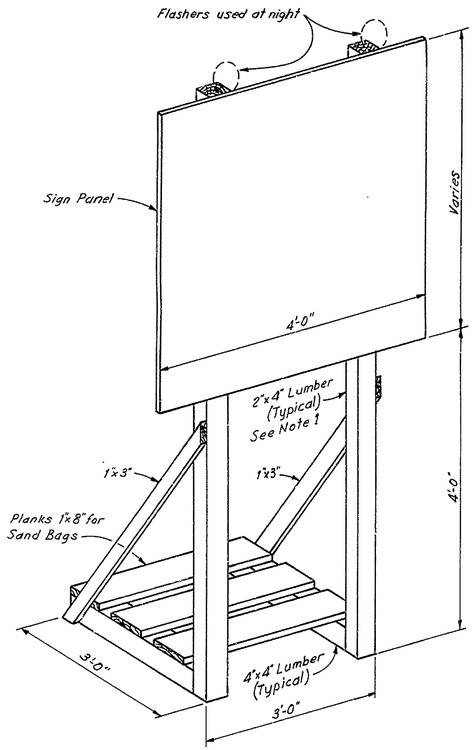


## SIGN SUPPORT

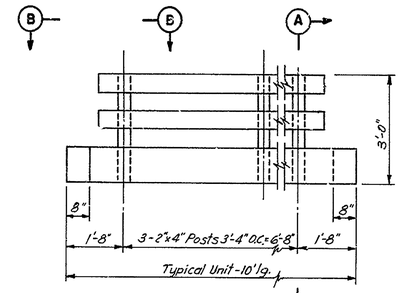


ELEVATION

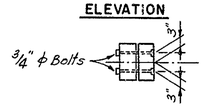


SECTION C-C

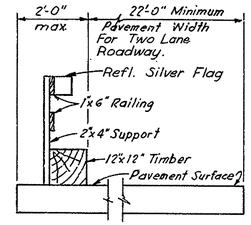


SECTION A-A

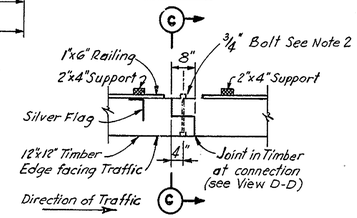


SECTION B-B

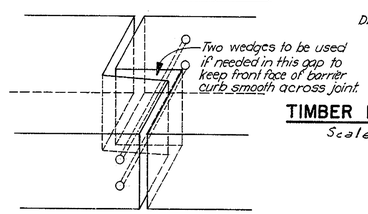


VIEW D-D

## TIMBER BARRIER CURB

Scale 1/2" = 1'-0"

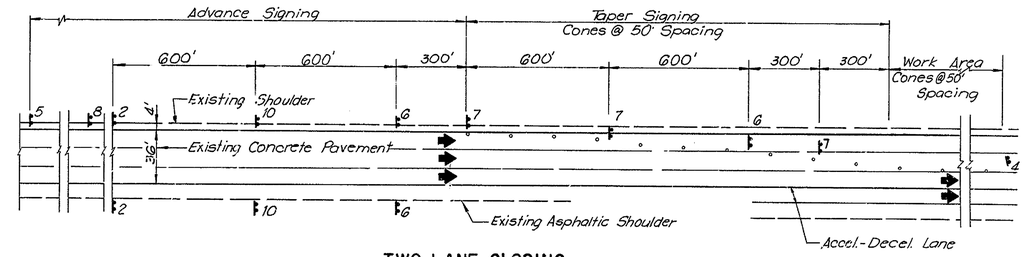


## TWO LANE CLOSING

(For bridge painting only)

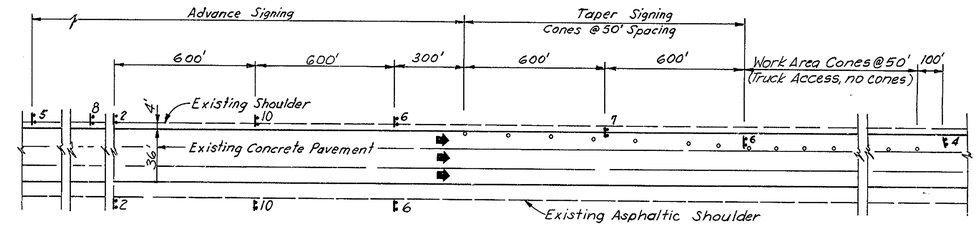


## LANE CLOSING

(See note 4 & 7)

NOTES:

1. - Sign Support frame to be painted white.
2. - Barrier Curb sections shall be connected by bolting together 12" x 12" timber sections with 3/4" ϕ bolts, nuts & washers. Countersink Bolt head in front edge of curb.
3. - Full Shoulder Closing layout shows right shoulder closing, left shoulder closing similar.
4. - Only one lane closing to be in place at any given time, and to be allowed to remain in place only during daylight hours.
5. - A shoulder closing on the Turnpike Roadway is to be placed 400' in front of the first section of the continous Timber Barrier Curb.
6. - Full Lane Closing layout shows left lane closing, right lane closing similar.
7. - Lane Closing to be used for contractor access point to median for pier construction.

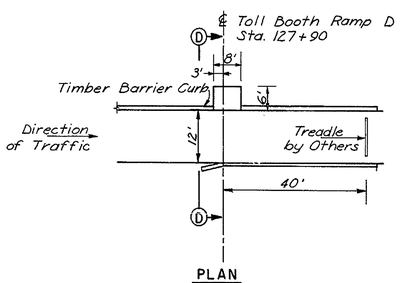


PLAN

Scale 1" = 20'

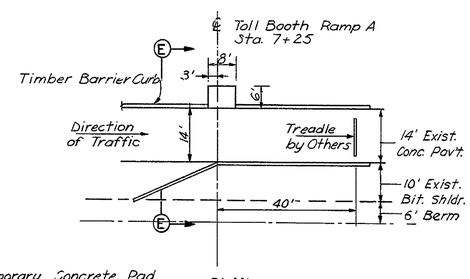


Note: Temporary Concrete Pad reinforcement to be #3 bars @ 10" ctrs. each way. Top and bottom clearance 3 1/2". (To be paid for under Item 18 Masonry - Footings)

PLAN

Scale 1" = 20'

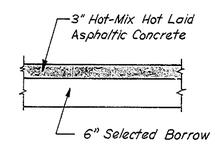


TYPICAL TEMPORARY PAVEMENT SECTION

No Scale

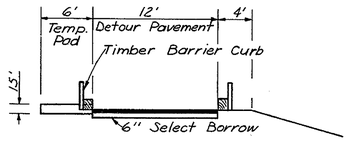


SECTION D-D

Scale 1/8" = 1'-0"

TEMPORARY TOLL PLAZA

RAMP D

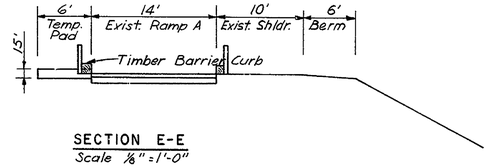


SECTION E-E

Scale 1/8" = 1'-0"

TEMPORARY TOLL PLAZA

RAMP A

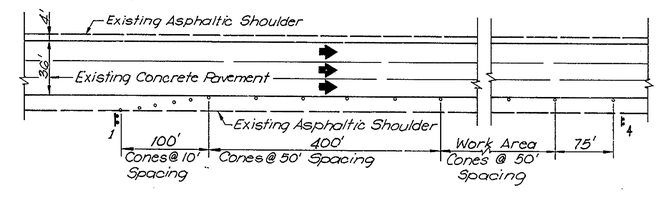


## SHOULDER CLOSING

| DELAWARE TURNPIKE | CONT. NO. | TITLE | SHEET NO. | TOTAL SHEETS |
|---|---|---|---|---|
| | 7053 | MAINTENANCE AND PROTECTION OF TRAFFIC | 42 | 86 |

SIGN NO. 1

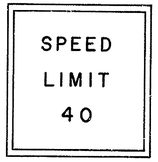


SIGN NO. 2

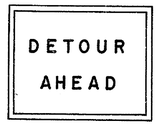


SIGN NO. 3

SIGN NO. 4

SIGN NO. 5 & 5A

* Sign No. 5A shall have the same Text as sign No. 5 except that LEFT shall read RIGHT.
** Add "S" to word LANE for two lane closing for bridge painting.

SIGN NO. 6 & 6A

* Sign No. 6A shall have the same Text as sign No. 6 except that LEFT shall read RIGHT.

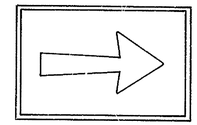

SIGN NO. 7

| SIGN NO. | LETTERS | | COLORS | | | SIZE W x H | WIDTH OF BORDER |
|---|---|---|---|---|---|---|---|
| | SIZE | VERT. SPACING | BORDER | COPY | BACK-GROUND | | |
| 1 | 6<br>6<br>6 | 8<br>7<br>7<br>8 | AGA | AGA | YELLOW REFL. | 4'-0" x 4'-0" | 1 1/2" |
| 2<br>9 | 6<br>6<br>10 | 7<br>6<br>6<br>7 | AGA | AGA | SILVER REFL. | 4'-0" x 4'-0" | 1 1/2" |
| 3 | 6<br>6 | 8<br>8<br>8 | AGA | AGA | YELLOW REFL. | 4'-0" x 3'-0" | 1 1/2" |
| 4 | 6<br>6<br>6 | 8<br>7<br>7<br>8 | AGA | AGA | YELLOW REFL. | 4'-0" x 4'-0" | 1 1/2" |
| 5 & 5A<br>8 & 8A | 6<br>6<br>8<br>10<br>6 | 8<br>7<br>7<br>7<br>7<br>8 | AGA | AGA | YELLOW REFL. | 4'-0" x 6'-0" | 1 1/2" |
| 6 & 6A | 6<br>6<br>6 | 8<br>7<br>7<br>8 | AGA | AGA | YELLOW REFL. | 4'-0" x 4'-0" | 1 1/2" |
| 7 | INTERSTATE ARROW | | AGA | AGA | YELLOW REFL. | 5'-0" x 3'-0" | 1 1/2" |
| 10 | 6<br>6<br>6 | 8<br>7<br>7<br>8 | AGA | AGA | YELLOW REFL. | 4'-0" x 4'-0" | 1 1/2" |
| 11 | * | 7<br>7 | AGA | AGA | YELLOW REFL. | 4'-6" x 3'-0" | 1 1/2" |

* Type A-3 arrows, see this sheet.

SIGN NO. 8 & 8A

* Sign No. 8A shall have the same Text as sign No. 8 except that LEFT shall read RIGHT.
** Add "S" to word LANE for two lane closing for bridge painting.

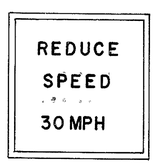


SIGN NO. 9

SIGN NO. 10

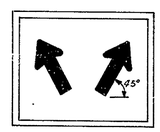


SIGN NO. 11

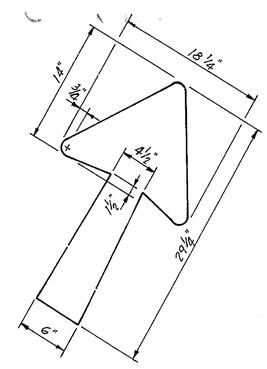


TYPE "A-3" ARROW

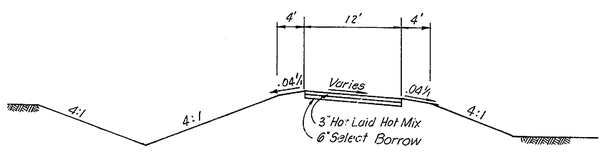


TYPICAL SECTION DETOUR PAVEMENT

| DELAWARE TURNPIKE | CONT. NO. | TITLE | SHEET NO. | TOTAL SHEETS |
|---|---|---|---|---|
| | 7053 | | 43 | 86 |

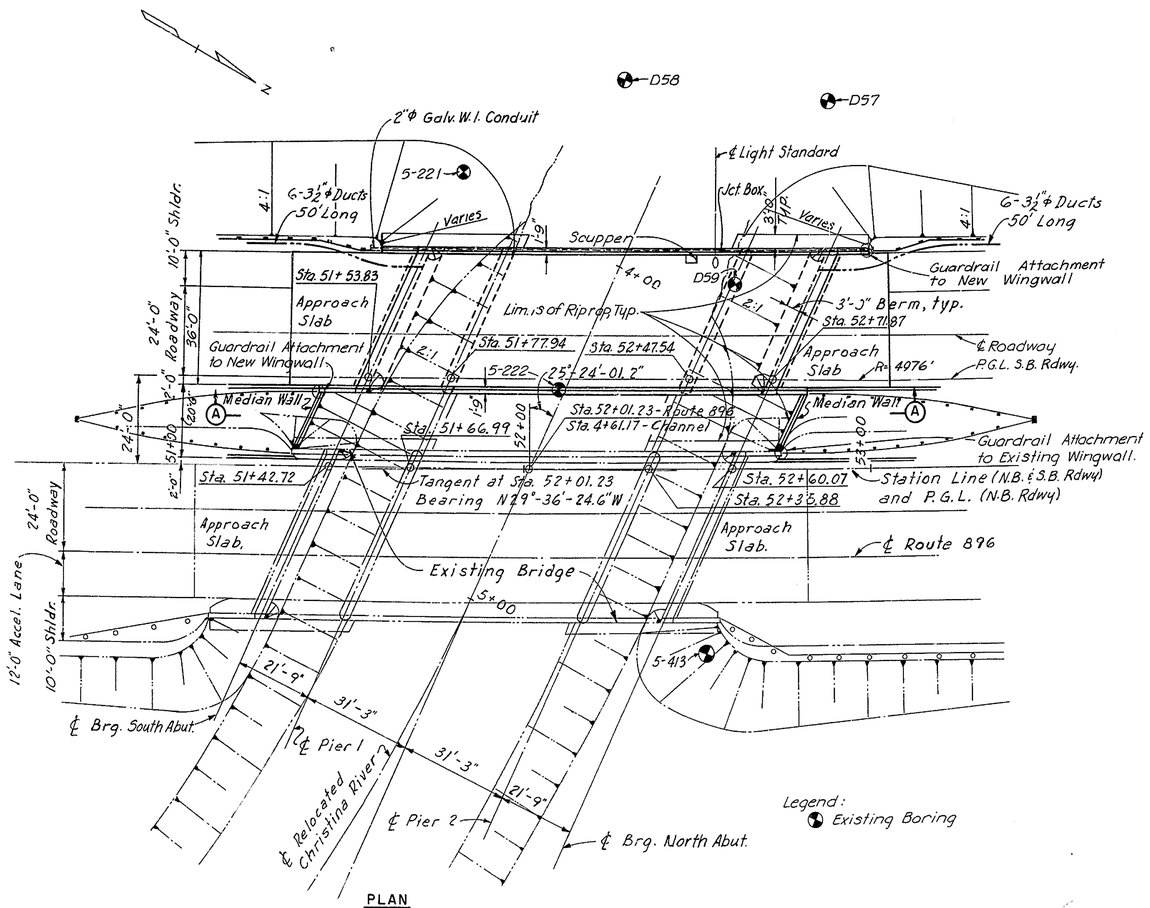


PLAN
Scale 1" = 20'

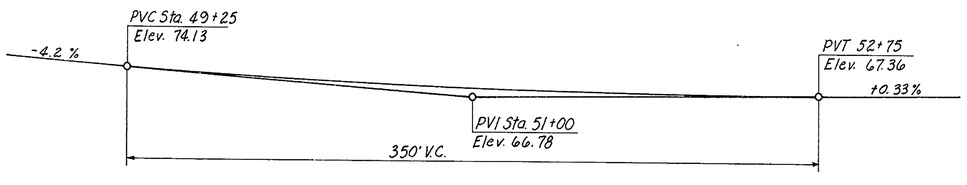


PROFILE
No Scale

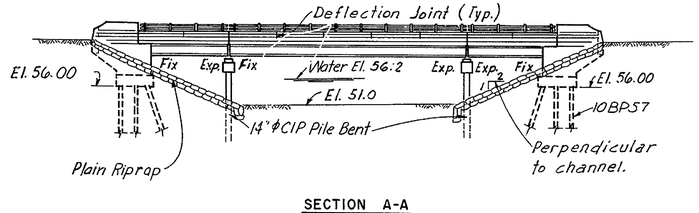


SECTION A-A
Scale 1" = 20'

## ESTIMATED QUANTITIES

| ITEM NO. | DESCRIPTION | UNIT | QUANTITY |
|---|---|---|---|
| 4 | Excavation for Structures. | C.Y. | 410 |
| 11 | Hot-mix, Hot-laid Asphaltic Conc. Pavement | Tons | 103 |
| 18 | Portland Cement Concrete Masonry | | |
| | Footings | C.Y. | 68 |
| | Substructure above footings | C.Y. | 105 |
| | Superstructure | C.Y. | 160 |
| | Approach Slabs | C.Y. | 100 |
| 19 | Superficial Waterproofing | S.Y. | 75 |
| 20 | Bar Reinforcement | Lbs. | 64,300 |
| 22 | Structural Steel (Estimated Wt. 116,000 lbs.) | L.S. | 1 |
| 31 | 6"φ Perforated Corr. Metal Pipe Underdrain | L.F. | 130 |
| | Steel Bearing Piles – 10BP57 | L.F. | 980 |
| 35 | Cast-in-Place Concrete Piles 14"φ (bents) | L.F. | 510 |
| | Bridge Drainage | L.S. | 1 |
| 64 | Riprap (Plain) | S.Y. | 400 |
| | Coal Tar Epoxy Underseal | S.Y. | 660 |
| | Protective Coating for Concrete | S.F. | 590 |
| 22A | Aluminum Railing-Double Rail | L.F. | 240 |
| | 3½"φ Galvanized W.I. ducts | L.F. | 600 |
| | | | |

**GENERAL NOTES:**

Construction Specifications: Delaware State Highway Department Standard Specifications dated June 1, 1965 and Special Provisions.

Design Specifications: A.A.S.H.O. Standard Specifications for Highway Bridges dated 1965.

Design Live Load: HS20-44.

Design Stresses: Concrete fc = 1200 p.s.i. Structural and Reinforcing Steel fs = 20,000 p.s.i.

Concrete:
All exposed edges shall be chamfered 1" unless otherwise noted.
Concrete cover on reinforcing shall be 2" min. unless otherwise shown in the plans.

Bar Reinforcement: Bar reinforcement shall be deformed billet-steel bars (A-615) Grade 40.
All bar laps shall be 30 diameters minimum of the smaller bar spliced, unless otherwise noted.
In computing the total length shown for each bent bar, dimensions of legs adjoining each bend (not 135° or 180° hooks) were carried to the point of intersection of both legs and no deductions were made for the shorter distance along the curve. The Contractor shall take this fact into consideration when ordering and fabricating bent bars
The first digit of the bar mark denotes the bar size, i.e. A501 is a No. 5 bar.

Structural Steel: Structural Steel shall conform to the requirements of A.S.T.M. Designation A-36 except as noted.

Piles: All piles in Abutments shall be 10BP57 steel bearing piles driven to a minimum bearing capacity of 50 tons. All piles in Piers shall be 14"φ cast-in-place concrete piles driven to a minimum bearing capacity of 50 tons.

| NO. | REVISION | BY | DATE |
|---|---|---|---|
| 3 | | | |
| 2 | | | |
| 1 | | | |
| | | BY | DATE |
| MADE | L.D.F. | | 11-68 |
| CHECKED | J.B.G. | | 12-68 |
| IN CHARGE | J.E.H. | | |

DELAWARE STATE HIGHWAY DEPARTMENT
DELAWARE TURNPIKE
ROUTE 896 INTERCHANGE IMPROVEMENTS
BRIDGE OVER CHRISTINA RIVER
GENERAL PLAN & ELEVATION

HOWARD, NEEDLES, TAMMEN & BERGENDOFF
consulting engineers
NEW YORK KANSAS CITY

SCALE: As Noted
CONTRACT NO. 7053
SHEET NO. 1 OF 9

| DELAWARE TURNPIKE | CONT. NO. | TITLE | SHEET NO. | TOTAL SHEETS |
|---|---|---|---|---|
| | 7053 | | 44 | 86 |

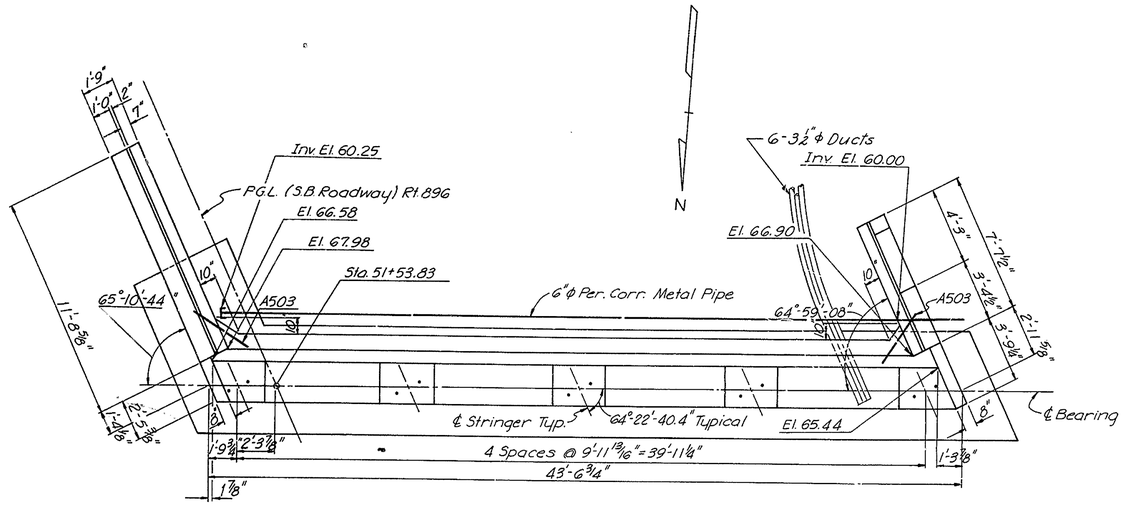


PLAN OF SOUTH ABUTMENT

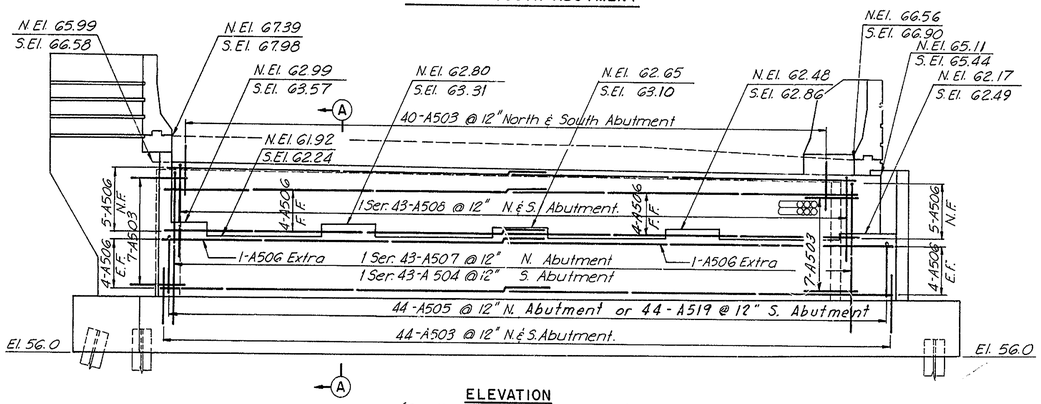


ELEVATION
(South Abutment as shown)
(North Abutment opp. hand)

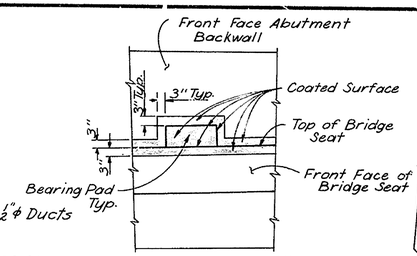


APPLICATION LIMITS OF EPOXY PROTECTIVE COATING FOR CONCRETE

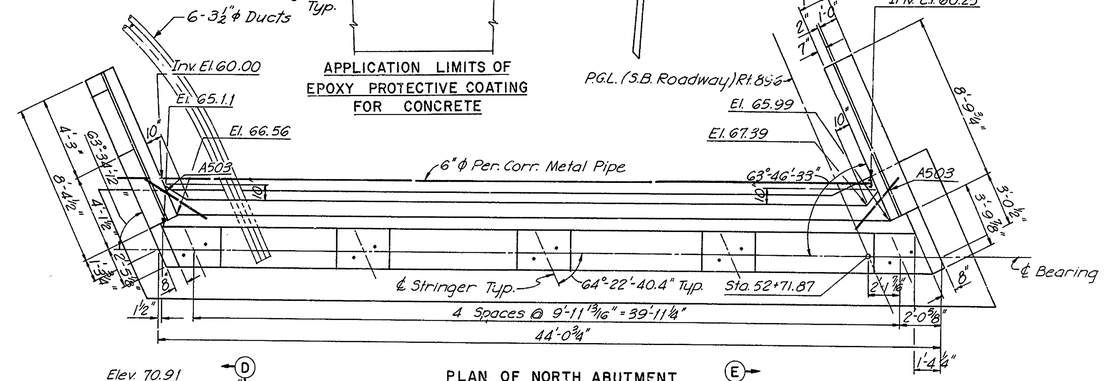


PLAN OF NORTH ABUTMENT

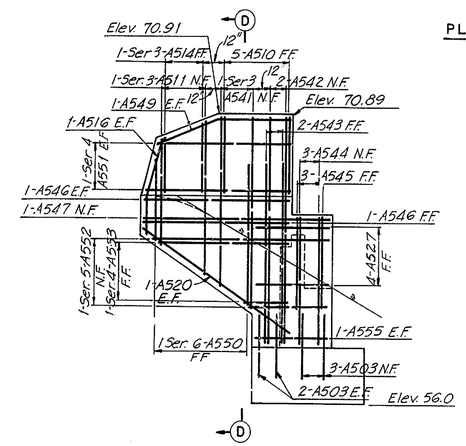


ELEVATION N.W. WINGWALL

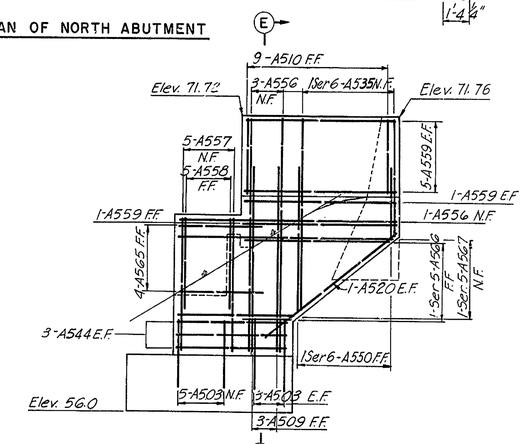


ELEVATION N.E. WINGWALL

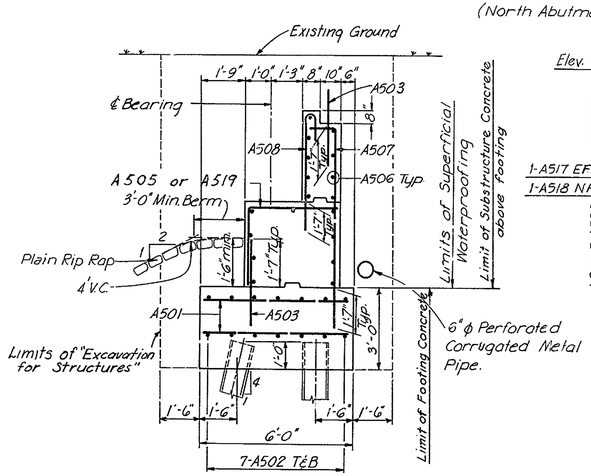


SECTION A-A
Scale 3/8" = 1'-0"

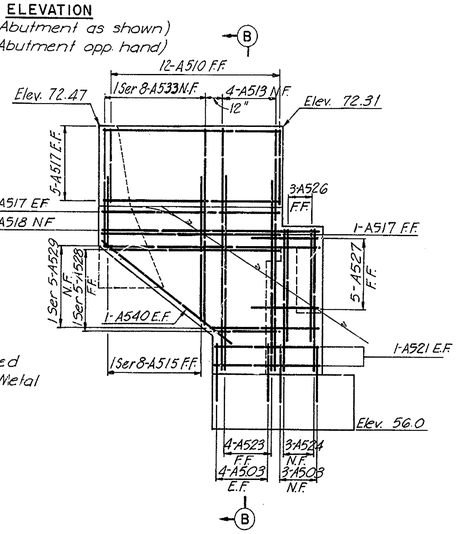


ELEVATION S.E. WINGWALL

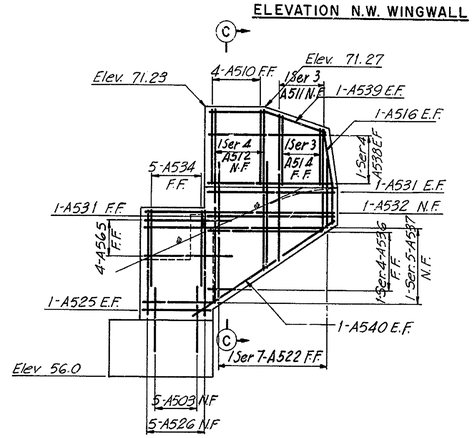


ELEVATION S.W. WINGWALL

NOTES:

For General Notes see sheet No. 1 of 9.
For Sections B-B, C-C, D-D and E-E see sheet No. 3 of 9.
For Footing Plans and Typical Pad Details see sheet No. 3 of 9.
Min. Reinforcing Steel Concrete Cover 3" in footing, 2" above footing.
Backfill behind abutments to be placed only after bridge deck slab has been completed.
All bars spaced at 12" Max. unless noted.
All construction joints to have 2"×6" continous key.

Legend:
N.F. denotes Near Face
E.F. denotes Each Face
F.F. denotes Far Face

| NO. | REVISION | BY | DATE |
|---|---|---|---|
| 3 | | | |
| 2 | | | |
| 1 | | | |

| | BY | DATE |
|---|---|---|
| MADE | D.L.S. | 11-68 |
| CHECKED | J.B.G. | 12-68 |
| IN CHARGE | J.E.H. | |

DELAWARE STATE HIGHWAY DEPARTMENT

# DELAWARE TURNPIKE

ROUTE 896 INTERCHANGE IMPROVEMENTS
BRIDGE OVER CHRISTINA RIVER

## ABUTMENTS

HOWARD, NEEDLES, TAMMEN & BERGENDOFF
consulting engineers
NEW YORK KANSAS CITY

SCALE: ¼"=1'-0" unless noted
CONTRACT NO. 7053
SHEET NO. 2 OF 9

| DELAWARE TURNPIKE | CONT NO. | TITLE | SHEET NO. | TOTAL SHEETS |
|---|---|---|---|---|
| | 7053 | | 45 | 86 |

Note: For details of Guardrail Anchorage See Sheet No. 12.

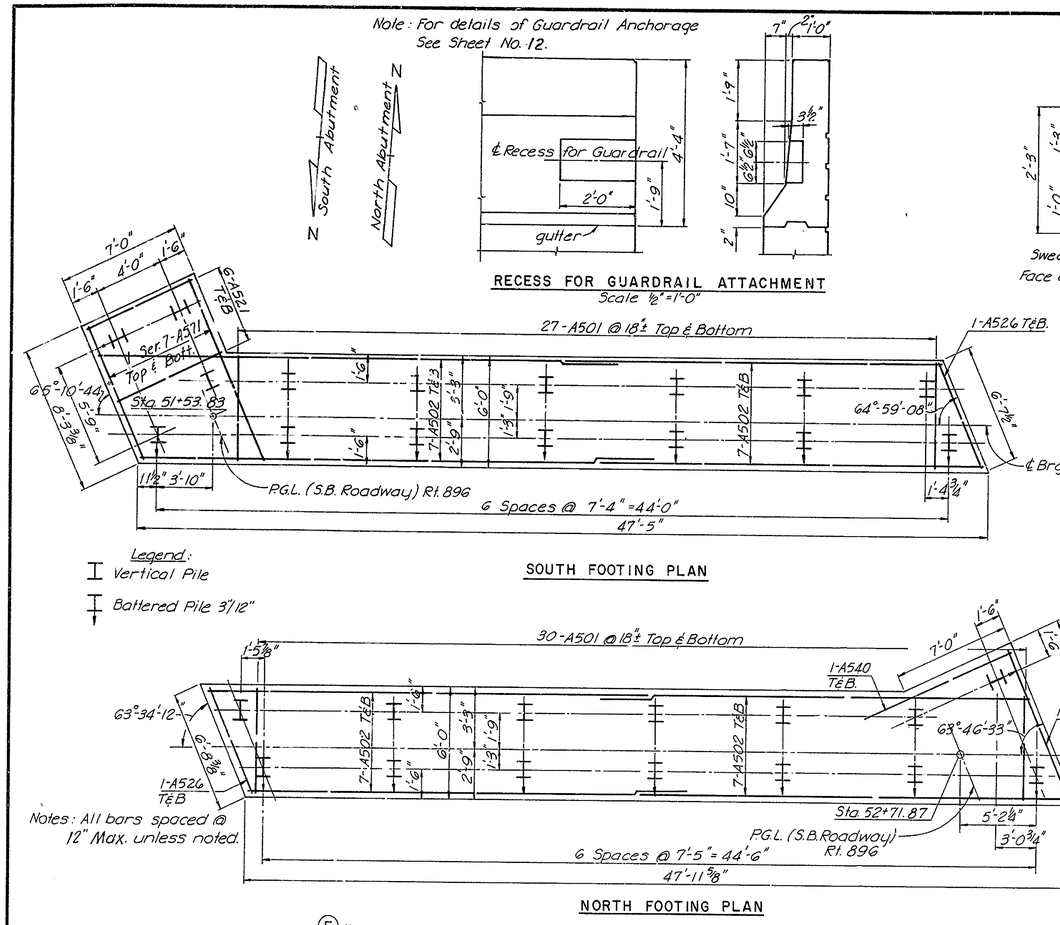


Notes: All bars spaced @ 12" Max. unless noted.

Legend:
Vertical Pile
Battered Pile 3/12

SOUTH FOOTING PLAN

NORTH FOOTING PLAN

RECESS FOR GUARDRAIL ATTACHMENT
Scale ½" = 1'-0"

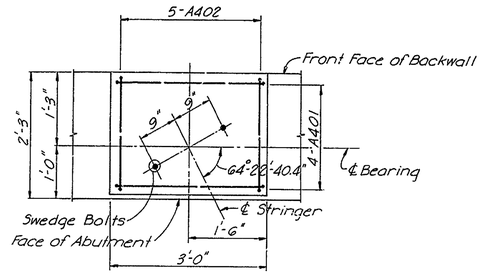


PLAN

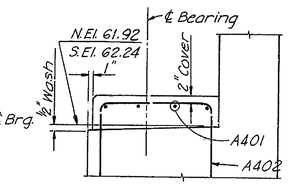


ELEVATION

TYPICAL PAD DETAILS
No Scale

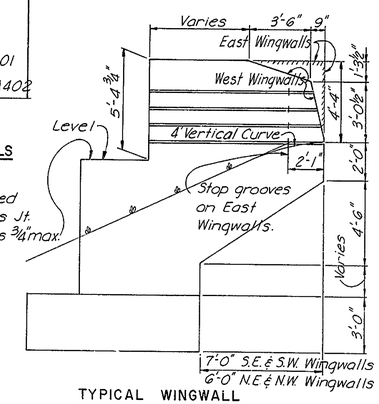


TYPICAL WINGWALL

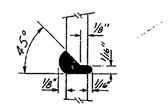


100% BUTT-WELDED SPLICE DETAIL
No Scale

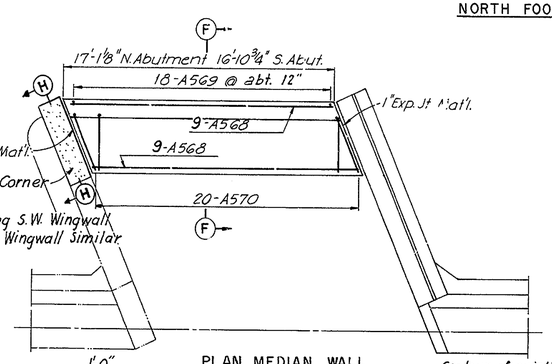


PLAN MEDIAN WALL

| APPROX. PILE TIP ELEVATION | |
|---|---|
| South Abut. | 25.0 |
| North Abut. | 25.0 |

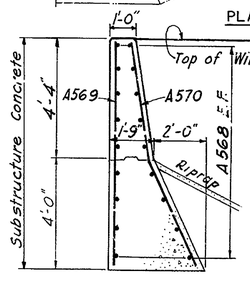


SECTION F-F
Scale 3/8" = 1'-0"

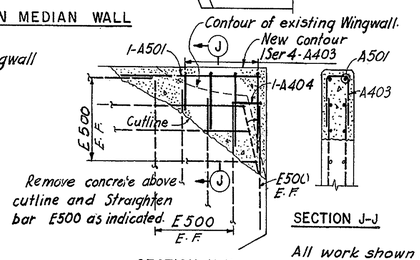


SECTION J-J

SECTION H-H
Scale: 3/8" = 1'-0"

Note: Bars E500 are existing.

All work shown in Sections H-H and J-J is be paid for under Item 18 P.C.C. Masonry - Superstructure.

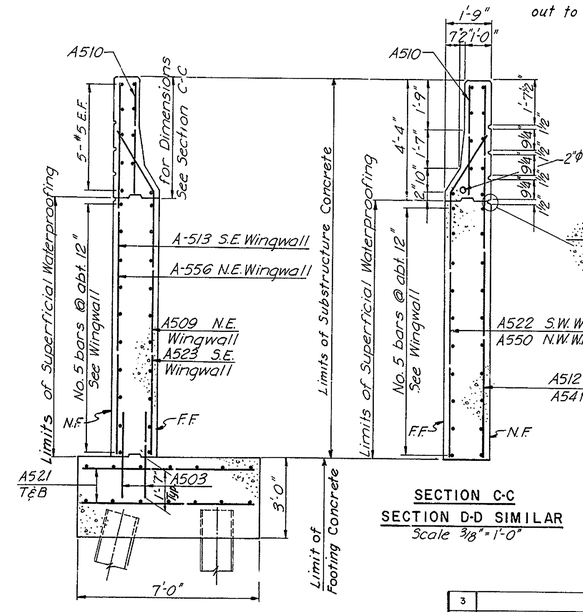


SECTION B-B
SECTION E-E SIMILAR
EXCEPT FOR FOOTING
Scale 3/8" = 1'-0"

SECTION C-C
SECTION D-D SIMILAR
Scale 3/8" = 1'-0"

## REINFORCING BAR SCHEDULE

| MARK | NO. | TYPE | A | B | C | LENGTH |
|---|---|---|---|---|---|---|
| A401 | 40 | 4 | 1'-9" | 2'-8" | 1'-9" | 6'-2" |
| A402 | 50 | 4 | 1'-9" | 1'-10" | 1'-9" | 5'-5" |
| A501 | 118 | Str. | | | | 5'-6" |
| A502 | 56 | " | | | | 24'-4" |
| A503 | 230 | " | | | | 3'-2" |
| A504 | 1 Ser 43 | 1 | 7'-4"-8'-5" | 1'-2" | | 8'-6" - 9'-7" |
| A505 | 44 | 1 | 2'-7" | 3'-5" | | 6'-0" |
| A506 | 72 | Str. | | | | 22'-0" |
| A507 | 1 Ser. 43 | 1 | 6'-10"-7'-9" | 1'-2" | | 8'-0"-8'-11" |
| A508 | 2 Ser 43 | 2 | 4'-7"-5'-7" | 7" | | 5'-2"-6'-2" |
| A509 | 3 | 3 | 8'-4" | 2'-0" | 1'-3" | 10'-8" |
| A510 | 30 | Str. | | | | 4'-0" |
| A511 | 2 Ser. 3 | " | | | | 5'-3"-7'-3" |
| A512 | 1 Ser. 4 | " | | | | 8'-6"-10'-6" |
| A513 | 4 | Str. | | | | 13'-0" |
| A514 | 2 Ser. 3 | " | | | | 2'-9"-3'-9" |
| A515 | 1 Ser 8 | 3 | 2'-0"-8'-0" | 2'-0" | 1'-5" | 4'-0"-10'-0" |
| A516 | 4 | 3 | 1'-9" | 2'-11" | 9" | 4'-9" |
| A517 | 13 | Str. | | | | 11'-4" |
| A518 | 1 | " | | | | 13'-8" |
| A519 | 44 | 1 | 3'-0" | 3'-5" | | 6'-5" |
| A520 | 4 | Str. | | | | 8'-3" |
| A521 | 16 | " | | | | 6'-7" |
| A522 | 1 Ser. 7 | 3 | 2'-5"-6'-8" | 2'-0" | 1'-5" | 4'-9"-9'-0" |
| A523 | 4 | 3 | 8'-11" | 2'-0" | 1'-3" | 11'-3" |
| A524 | 3 | Str. | | | | 7'-8" |
| A525 | 2 | " | | | | 3'-5" |
| A526 | 12 | " | | | | 6'-0" |
| A527 | 9 | " | | | | 3'-10" |
| A528 | 1 Ser. 5 | " | | | | 4'-2"-10'-10" |
| A529 | 1 Ser. 5 | " | | | | 6'-9"-13'-5" |
| | | | | | | |
| A531 | 3 | " | | | | 7'-3" |
| A532 | 1 | " | | | | 11'-0" |
| A533 | 1 Ser. 8 | " | | | | 6'-0"-10'-6 |
| A534 | 5 | Str. | | | | 4'-10" |
| A535 | 1 Ser. 6 | " | | | | 6'-0"-10'-0" |
| A536 | 1 Ser. 4 | " | | | | 2'-2"-6'-6" |
| A537 | 1 Ser. 5 | " | | | | 4'-0"-10'-6 |
| A538 | 2 Ser. 4 | " | | | | 6'-3"-7'-0" |
| A539 | 2 | 3 | 3'-2" | 3'-4" | 1'-3" | 6'-9" |
| A540 | 4 | Str. | | | | 8'-9" |
| A541 | 1 Ser. 3 | " | | | | 8'-3"-10'-3" |
| A542 | 2 | Str. | | | | 11'-8" |
| A543 | 2 | 3 | 7'-4" | 2'-0" | 1'-3" | 9'-8" |
| A544 | 9 | Str. | | | | 6'-2" |
| A545 | 3 | " | | | | 5'-0" |
| A546 | 3 | " | | | | 8'-0" |
| A547 | 1 | " | | | | 10'-6" |
| | | | | | | |
| A549 | 2 | 3 | 4'-0" | 3'-4" | 1'-3" | 7'-7" |
| A550 | 2 Ser. 6 | 3 | 2'-8"-7'-3" | 2'-0" | 1'-5" | 5'-0"-9'-7" |
| A551 | 2 Ser. 4 | Str. | | | | 7'-4"-8'-0" |
| A552 | 1 Ser. 5 | " | | | | 4'-9"-10'-0" |
| A553 | 1 Ser. 4 | " | | | | 2'-2"-7'-10 |
| | | | | | | |
| A555 | 2 | " | | | | 4'-6" |
| A556 | 4 | " | | | | 12'-4" |
| A557 | 5 | " | | | | 7'-0" |
| A558 | 5 | " | | | | 5'-9" |
| A559 | 13 | " | | | | 8'-6" |
| | | | | | | |
| | | | | | | |
| | | | | | | |
| | | | | | | |
| A565 | 8 | Str | | | | 5'-3" |
| A566 | 1 Ser. 5 | " | | | | 2'-5"-8'-3" |
| A567 | 1 Ser. 5 | " | | | | 6'-3"-12'-0" |
| A568 | 36 | " | | | | 16'-6" |
| A569 | 36 | " | | | | 7'-11" |
| A570 | 40 | 3 | 4'-4" | 4'-3" | 1'-3 | 8'-7" |
| A571 | 2 Ser. 7 | Str. | | | | 7'-9"-10'-9" |
| A572 | 2 | " | | | | 9'-6" |
| | | | | | | |
| | | | | | | |
| A403 | 2 Ser 4 | 4 | 1'-4"-3'-0" | 0'-11" | 1'-4"-3'-0" | 3'-7"-6'-11" |
| A404 | 2 | 4 | 1'-2" | 0'-11" | 1'-2" | 3'-3" |

BAR BENDING DIAGRAMS

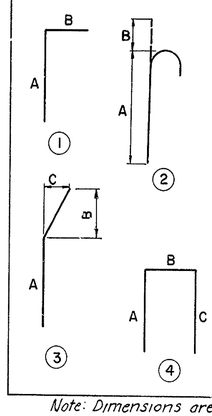


Note: Dimensions are out to out of bars.

| NO. | REVISION | BY | DATE |
|---|---|---|---|
| 3 | | | |
| 2 | | | |
| 1 | | | |

| | BY | DATE |
|---|---|---|
| MADE | D.L.S. | 12/68 |
| CHECKED | J.B.G. | 12/68 |
| IN CHARGE | J.E.H. | |

DELAWARE STATE HIGHWAY DEPARTMENT

# DELAWARE TURNPIKE

ROUTE 896 INTERCHANGE IMPROVEMENTS
BRIDGE OVER CHRISTINA RIVER

## ABUTMENT DETAILS

HOWARD, NEEDLES, TAMMEN & BERGENDOFF
consulting engineers
NEW YORK KANSAS CITY

SCALE: ¼" = 1'-0" unless noted
CONTRACT NO. 7053
SHEET NO. 3 OF 9

| DELAWARE TURNPIKE | CONT NO. | TITLE | SHEET NO. | TOTAL SHEETS |
|---|---|---|---|---|
| | 7053 | | 46 | 86 |

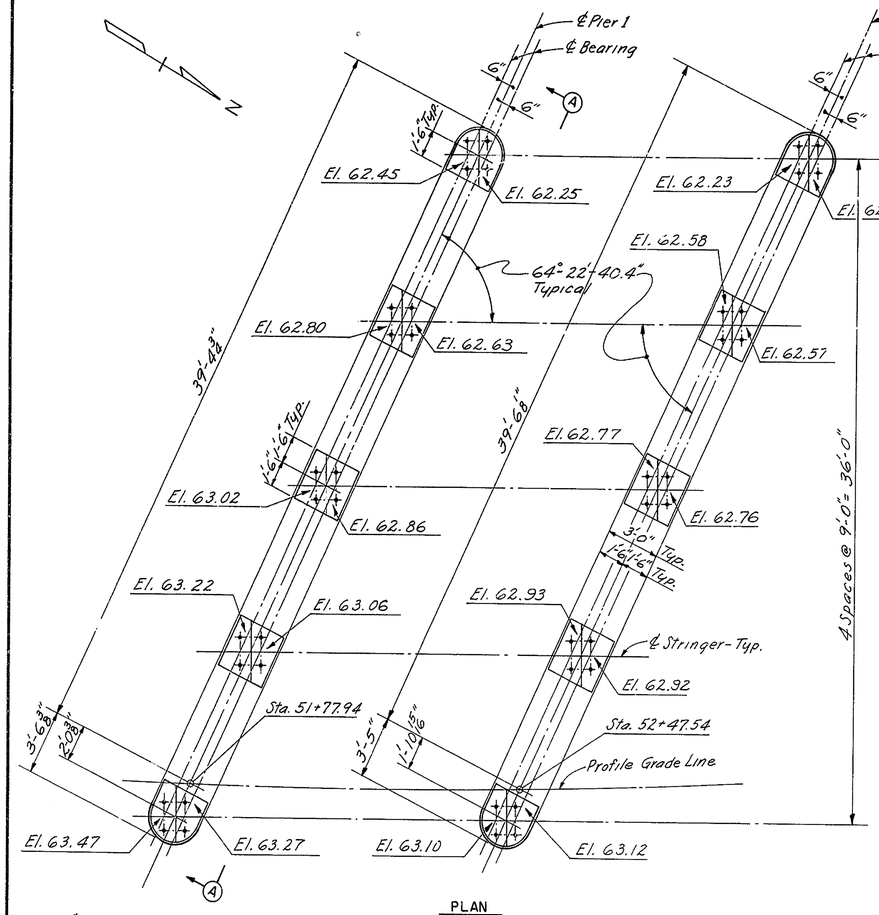


PLAN
Scale 1/4" = 1'-0"

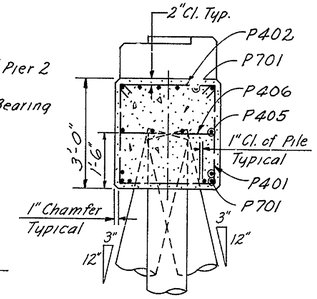


SECTION C-C
Scale 1/2" = 1'-0"

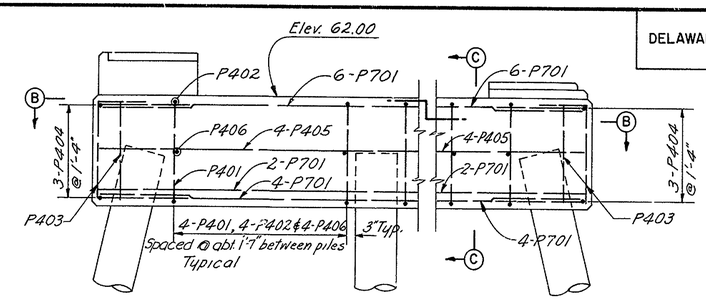


ELEVATION A-A
Scale 1/2" = 1'-0"

| REINFORCING SCHEDULE * | | | |
|---|---|---|---|
| MARK | NUMBER | TYPE | LENGTH |
| P401 | 24 | 1 | 8'-9" |
| P402 | 24 | 2 | 3'-5" |
| P403 | 6 | 3 | 4'-0" |
| P404 | 6 | 4 | 6'-8" |
| P405 | 8 | Str. | 22'-1" |
| P406 | 24 | Str. | 2'-8" |
| P407 | 32 | 5 | 7'-0" |
| P408 | 6 | 5 | 6'-5" |
| P409 | 15 | 5 | 7'-4" |
| | | | |
| | | | |
| | | | |
| P701 | 24 | Str. | 22'-5" |
| | | | |
| | | | |
| | | | |

*Quantities shown are for one Pier only

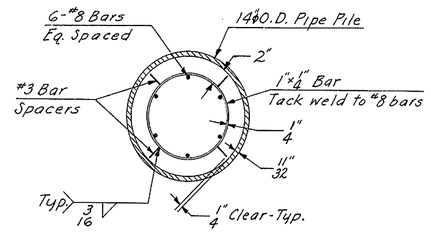


SECTION F-F
Scale 1 1/2" = 1'-0"

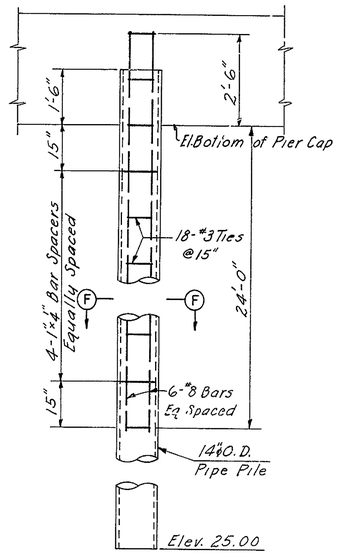


TYPICAL PILE DETAIL
Not to scale

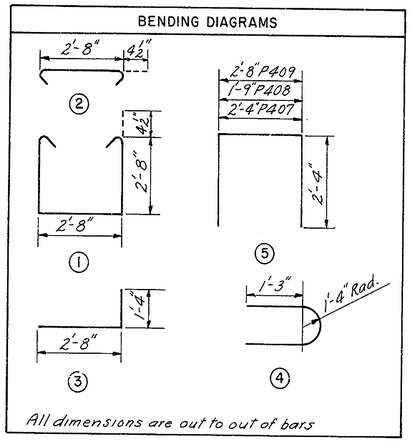





SECTION B-B
Scale 1/2" = 1'-0"

NOTES:

All pier piles shall be 14" ϕ C.I.P. Concrete. Exterior surfaces of 14" ϕ C.I.P. Piles to be coated from 6" above bottom of cap beam to Elev. 46.00 with a coal-tar epoxy material equal to "Tarset" as specified. Two coats of "Tarset+" shall be applied; each coat of not more than 125 ft²/gallon. These coatings shall be applied on blast cleaned surfaces of the pile for the length indicated above.

Pad elevations given denote top of finished concrete pad. For details of anchor bolts for shoes, see Sheet No. 8 of 9. For General Notes, see Sheet No. 1 of 9.

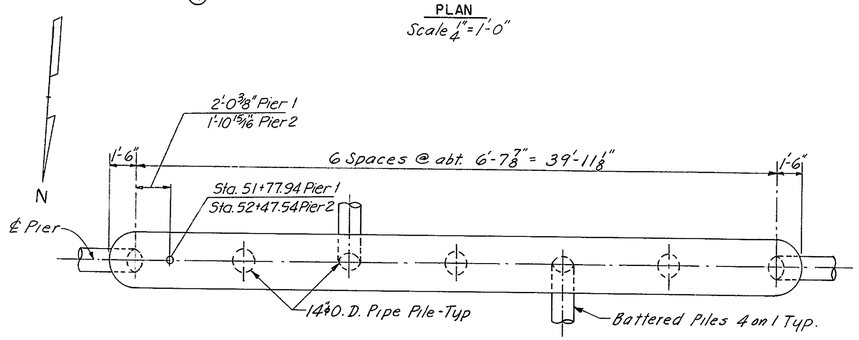


PILE PLAN
Scale 1/4" = 1'-0"

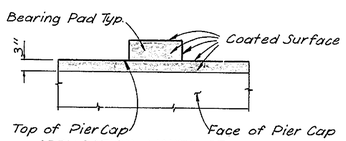


APPLICATION LIMITS OF EPOXY PROTECTIVE COATING FOR CONCRETE
Part Elevation at Pier

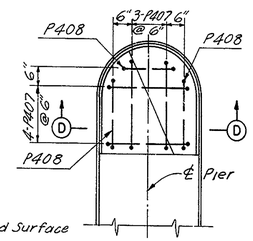


EXTERIOR PAD PLAN

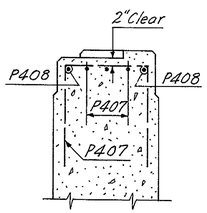


SECTION D-D

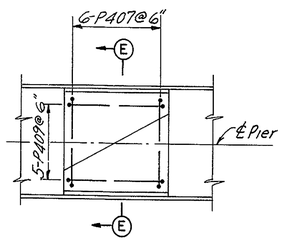


INTERIOR PAD PLAN

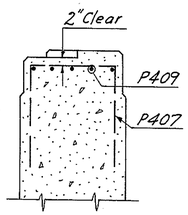


SECTION E-E

PAD DETAILS
Scale 1/2" = 1'-0"

| NO. | REVISION | BY | DATE |
|---|---|---|---|
| 3 | | | |
| 2 | | | |
| 1 | | | |

| | BY | DATE |
|---|---|---|
| MADE | F.J.C. | 12-68 |
| CHECKED | J.B.G. | 12-68 |
| IN CHARGE | J.E.H. | |

DELAWARE STATE HIGHWAY DEPARTMENT

# DELAWARE TURNPIKE

ROUTE 896 INTERCHANGE IMPROVEMENTS
BRIDGE OVER CHRISTINA RIVER
PIERS

HOWARD, NEEDLES, TAMMEN & BERGENDOFF
consulting engineers
NEW YORK KANSAS CITY

SCALE: As Noted
CONTRACT NO. 7053
SHEET NO. 4 OF 9

| DELAWARE TURNPIKE | CONT. NO. | TITLE | SHEET NO. | TOTAL SHEETS |
|---|---|---|---|---|
| | 7053 | | 47 | 86 |

Rev. 2/70

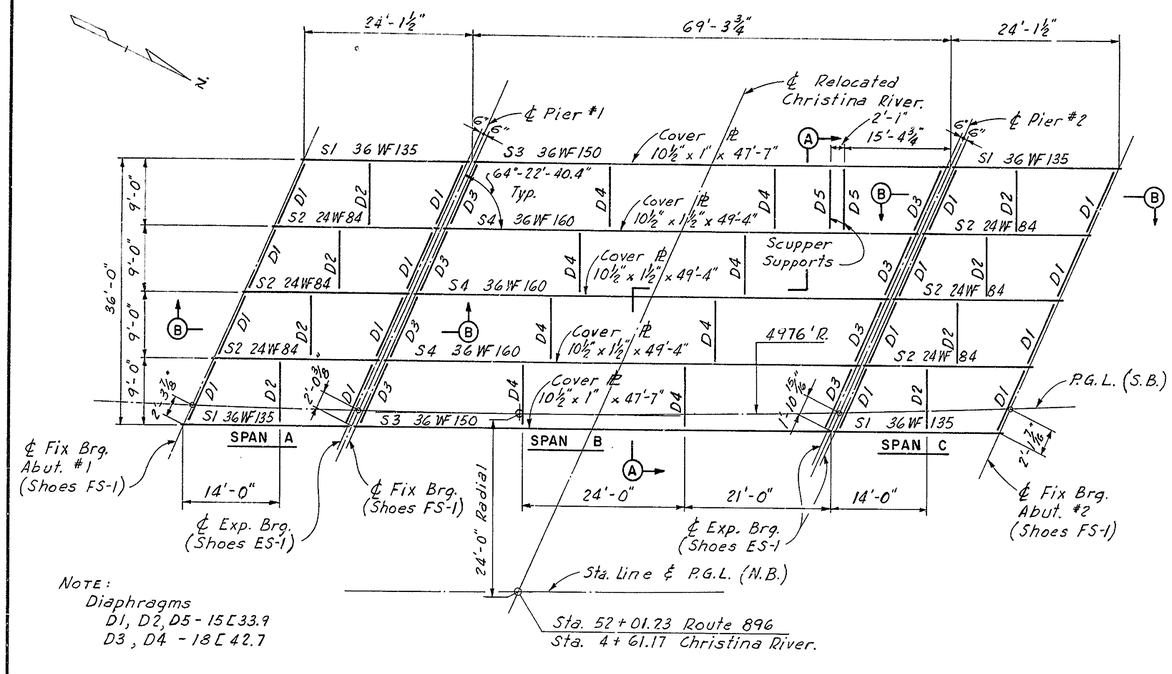


NOTE:
Diaphragms
D1, D2, D5 - 15[33.9
D3, D4 - 18[42.7

PLAN
Scale 1" = 10'

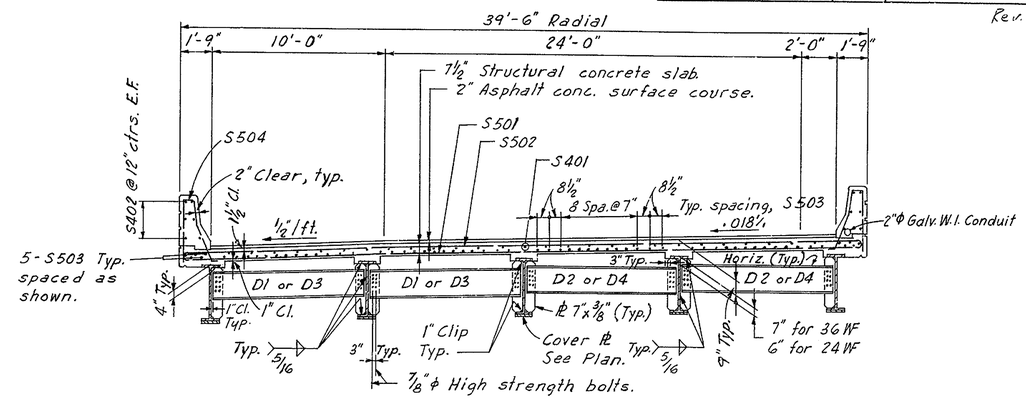


END DIAPHRAGM

INTERMEDIATE DIAPHRAGM

SECTION A-A
Scale ¼" = 1'-0"

NOTES:

For General Notes, see Sheet No. 1 of 9.

For Slab reinforcement see Sheet No. 6 of 9.

For Shoe Details see Sheet No. 8 of 9.

Shear stud spacing shown is maximum spacing.

For details of Diaphragms D5 supporting scupper, see Sheet No. 8 of 9.

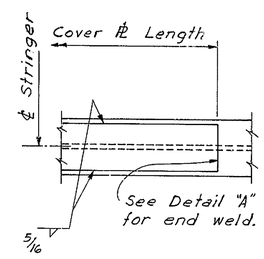


COVER PLATE DETAIL
Not to Scale

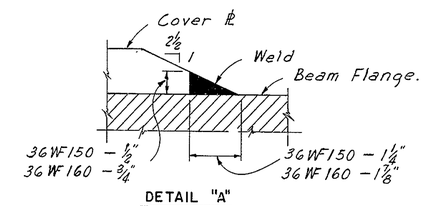


DETAIL "A"
Not to Scale

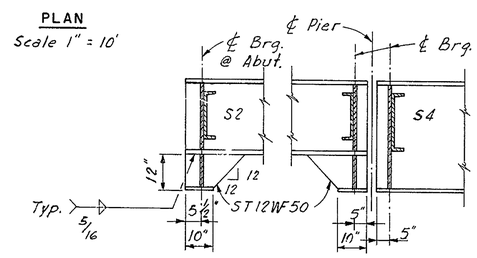


SECTION B-B
Scale ½" = 1'-0"

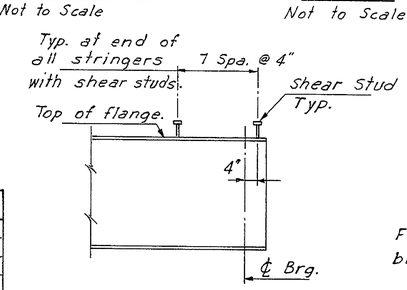


DETAIL "B"
Not to Scale

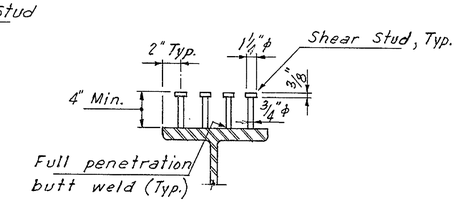


SHEAR STUD DETAIL
Not to Scale

CAMBER INCREMENTS FOR DEAD LOADS

| | Stringer S1 | | Stringer S2 | | Stringer S3 | | Stringer S4 | |
|---|---|---|---|---|---|---|---|---|
| | ¼ & ¾L | ½L | ¼ & ¾L | ½L | ¼ & ¾L | ½L | ¼ & ¾L | ½L |
| Structural Steel | — | — | .01 | .01 | .20 | .28 | .20 | .28 |
| Concrete Deck Slab | .02 | .03 | .06 | .09 | .70 | .97 | .79 | 1.10 |
| Par. Rail & 2" Wear. Surf. | .01 | .01 | .03 | .04 | .13 | .18 | .14 | .19 |
| Full Dead Load | .03 | .04 | .10 | .14 | 1.03 | 1.43 | 1.13 | 1.57 |
| Vertical Curve | -.11 | -.11 | -.11 | -.11 | -.72 | -.96 | -.72 | -.96 |
| Total Camber | -.08 | -.07 | -.01 | -.03 | .31 | .47 | .41 | .61 |

Note: All cambers are in inches.
Camber not required when it is less than 1 inch.

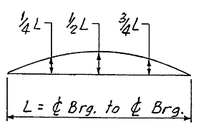


DEFLECTION DIAGRAM

STRINGER SCHEDULE

| Stringer | Length ℄ Brg. to ℄ Brg. | Shear Stud Spacing 0.1L | 0.2L | 0.3L | 0.4L | 0.5L |
|---|---|---|---|---|---|---|
| S1 & S2 | 23'-6 13/16" | — | — | — | — | — |
| S3 | 68'-2½" | 8" | 9" | 11½" | 13" | 14½" |
| S4 | 68'-2½" | 6½" | 7½" | 10" | 11" | 12½" |
| | | | | | | |
| | | | | | | |

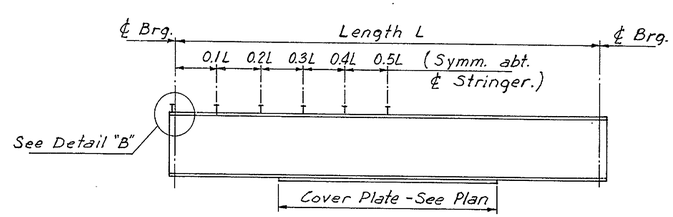


STRINGER ELEVATION
Not to Scale

| NO. | REVISION | BY | DATE |
|---|---|---|---|
| 3 | | | |
| 2 | | | |
| 1 | | | |

| | BY | DATE |
|---|---|---|
| MADE | L.D.F. | 12-68 |
| CHECKED | J.B.G. | 12-68 |
| IN CHARGE | J.E.H. | |

DELAWARE STATE HIGHWAY DEPARTMENT
DELAWARE TURNPIKE
ROUTE 896 INTERCHANGE IMPROVEMENTS
BRIDGE OVER CHRISTINA RIVER
FRAMING PLAN

HOWARD, NEEDLES, TAMMEN & BERGENDOFF
consulting engineers
NEW YORK KANSAS CITY

SCALE: As Noted
CONTRACT NO. 7053
SHEET NO. 5 OF 9

| DELAWARE TURNPIKE | CONT. NO. | TITLE | SHEET NO. | TOTAL SHEETS |
|---|---|---|---|---|
| | 7053 | | 48 | 86 |

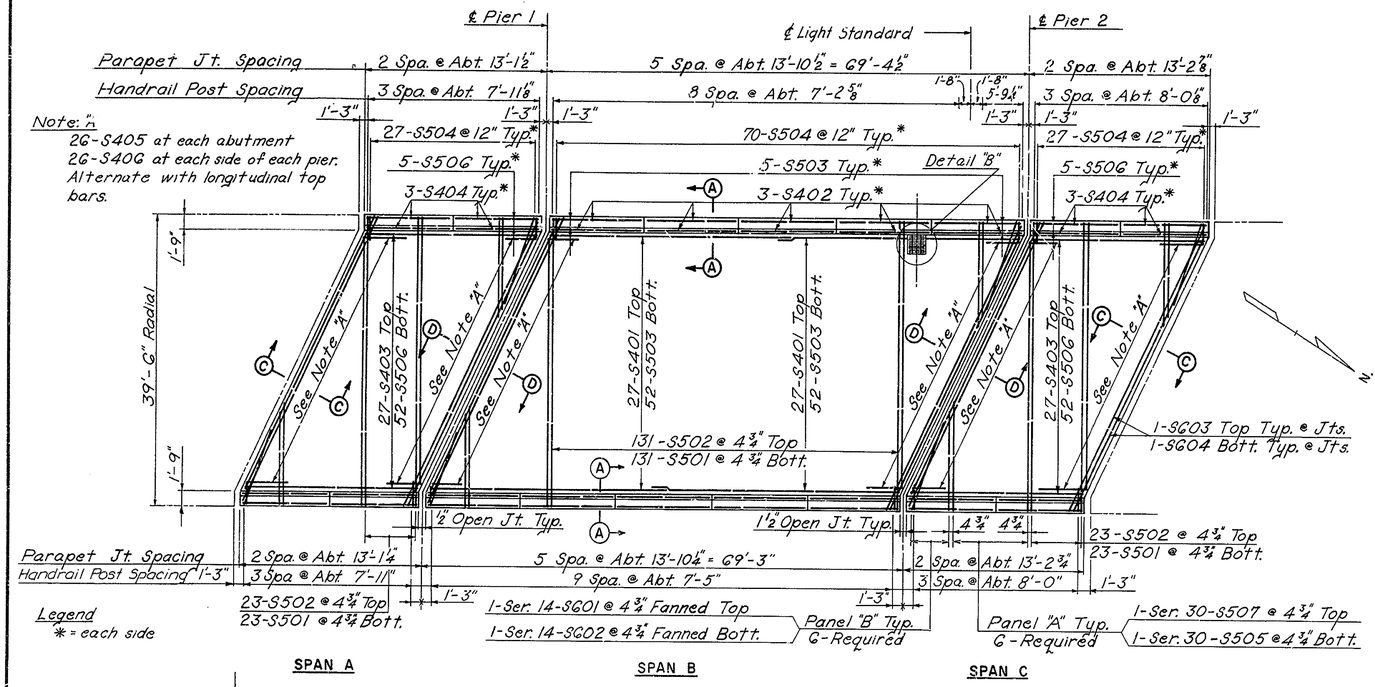


SLAB PLAN
SCALE 1" = 10'

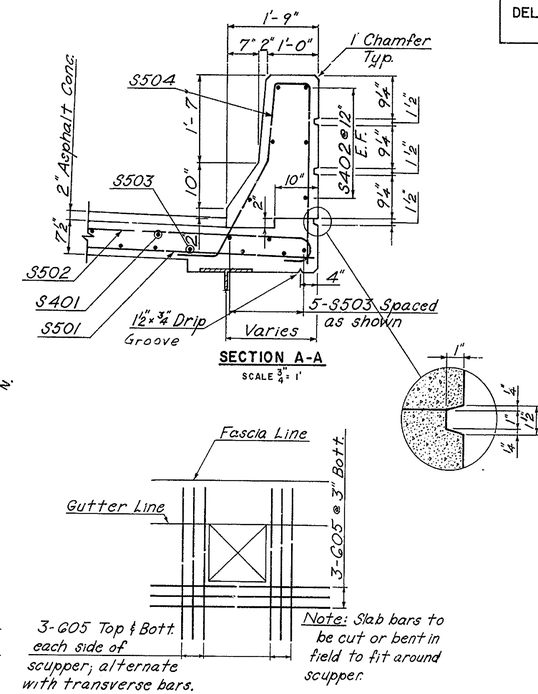


SECTION A-A
SCALE ¾" = 1'

DETAIL "B"
Not to Scale

## REINFORCING BAR SCHEDULE

| MARK | NO. | TYPE | A | B | LENGTH |
|---|---|---|---|---|---|
| **DECK - SLAB** | | | | | |
| S401 | 54 | Str. | | | 35'-1" |
| S402 | 60 | Str. | | | 13'-6" |
| S403 | 54 | Str. | | | 25'-11" |
| S404 | 48 | Str. | | | 12'-10" |
| S405 | 52 | 1 | 0'-8" | 6'-0" | 6'-8" |
| S406 | 104 | 1 | 0'-8" | 4'-0" | 4'-8" |
| | | | | | |
| S501 | 177 | Str. | | | 39'-2" |
| S502 | 177 | 2 | 39'-2" | 0'-7" | 40'-4" |
| S503 | 114 | Str. | | | 35'-5" |
| S504 | 254 | 3 | | | 7'-10" |
| S505 | G-Ser. 30 | Str. | | | 12'-5" to 37'-5" |
| S506 | 124 | Str. | | | 25'-10" |
| S507 | G-Ser. 30 | 2 | 12'-5" to 37'-5" | 0'-7" | 13'-7" to 38'-7" |
| | | | | | |
| SG01 | G-Ser. 14 | 4 | 6'-0" to 11'-9" | 0'-8" | 6'-8" to 12'-5" |
| SG02 | G-Ser. 14 | Str. | | | 6'-0 to 11'-9" |
| SG03 | 12 | 2 | 41'-9" | 0'-8" | 43'-1" |
| SG04 | 12 | Str. | | | 41'-9" |
| SG05 | 15 | Str. | | | 6'-0" |
| | | | | | |
| S508 | 3 | 6 | | | 4'-10" |
| S509 | 7 | 4 | 4'-0" | 0'-7" | 4'-7" |
| **APPROACH - SLABS** | | | | | |
| AS401 | 72 | 5 | 1'-9" | 1'-4" | 5'-9" |
| | | | | | |
| | | | | | |
| | | | | | |
| AS501 | 42 | Str. | | | 35'-8" |
| AS502 | 2-Ser. 12 | Str. | | | 9'-2 to 33'-3" |
| AS503 | 6 | Str. | | | 8'-6" |
| AS504 | 6 | Str. | | | 3'-8" |
| AS505 | 6 | Str. | | | 39'-2" |
| | | | | | |
| AS601 | 1-Ser. 72 | 2 | 19'-8" to 36'-2" | 0'-8" | 21'-0" to 37'-6" |
| AS602 | 1-Ser. 72 | 2 | 19'-8" to 37'-2" | 0'-8" | 21'-0" & 38'-6" |
| | | | | | |

## BENDING DIAGRAMS

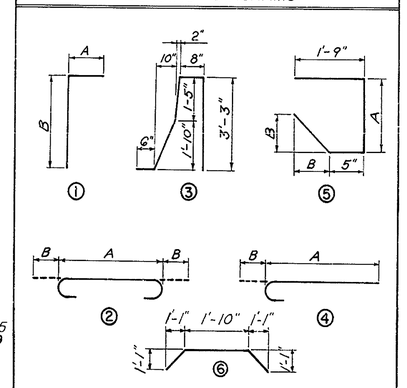


Note: All dimensions are out to out of bars

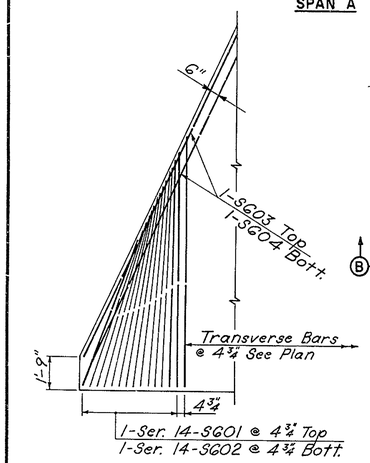


TYPICAL ACUTE CORNER REINFORCING
SCALE ¼" = 1'

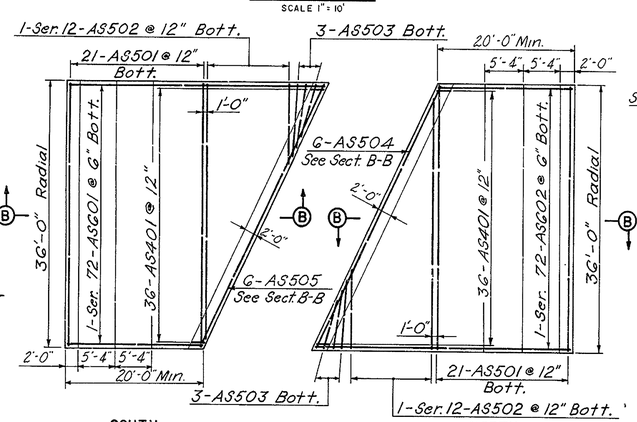


APPROACH SLABS
SCALE 1" = 10'

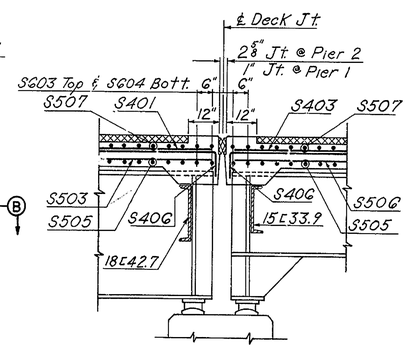


SECTION D-D
SCALE ½" = 1'

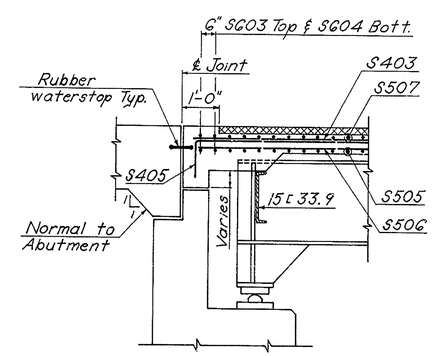


SECTION C-C
SCALE ½" = 1'

NOTES:
For location of longitudinal bars and minimum reinforcing steel concrete cover see typ. section sh. 5 of 9
All parapet joints shall be radial.
For joint details see sheet No. 7 of 9.
For General Notes see sheet No. 1 of 9.

Parapet Joints and Post Spacings are measured along gutter line.
For Light Std Blister details and placing of S506, S509 and extra S504 bars, see sheet No. 9 of 9.

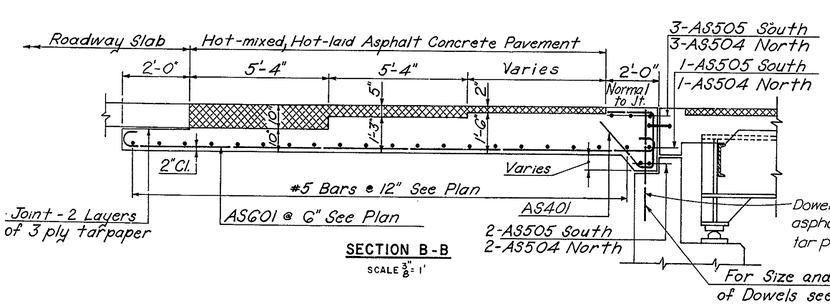


SECTION B-B
SCALE ⅜" = 1'

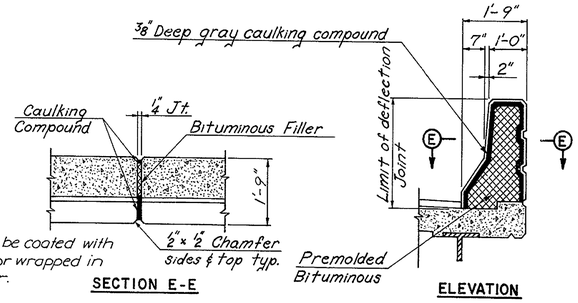


SECTION E-E

ELEVATION

PARAPET DEFLECTION JOINT
SCALE ½" = 1'

Note: No Reinforcement to pass through joint.

| NO. | REVISION | BY | DATE |
|---|---|---|---|
| 3 | | | |
| 2 | | | |
| 1 | | | |

| | BY | DATE |
|---|---|---|
| MADE | C.E.R. | 11-68 |
| CHECKED | J.B.G. | 12-68 |
| IN CHARGE | J.E.H. | |

DELAWARE STATE HIGHWAY DEPARTMENT

# DELAWARE TURNPIKE

ROUTE 896 INTERCHANGE IMPROVEMENTS
BRIDGE OVER CHRISTINA RIVER

## CONCRETE-DECK & APPROACH-SLABS

HOWARD, NEEDLES, TAMMEN & BERGENDOFF
consulting engineers
NEW YORK KANSAS CITY

SCALE: As Noted
CONTRACT NO. 7053
SHEET NO. 6 OF 9

| DELAWARE TURNPIKE | CONT. NO. | TITLE | SHEET NO. | TOTAL SHEETS |
|---|---|---|---|---|
| | 7053 | | 49 | 86 |

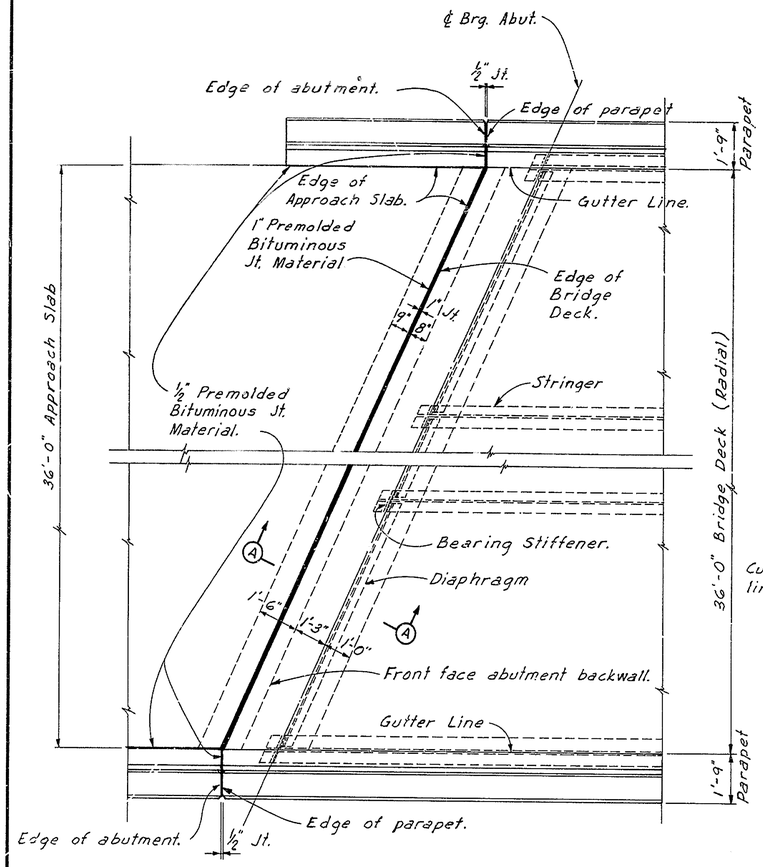


PLAN - JOINT AT SOUTH ABUTMENT (AS SHOWN)
PLAN - JOINT AT NORTH ABUTMENT (SIMILAR)
Scale ⅜" = 1'-0"

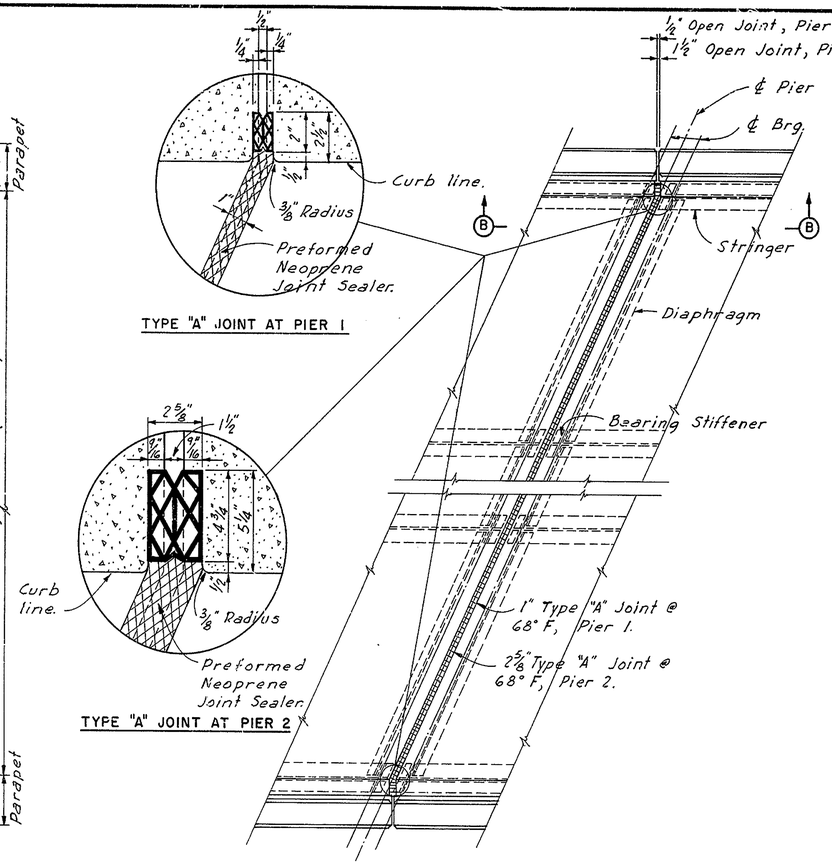


PLAN - JOINT AT PIER NO. 1 AND NO. 2
Scale ⅜" = 1'-0"

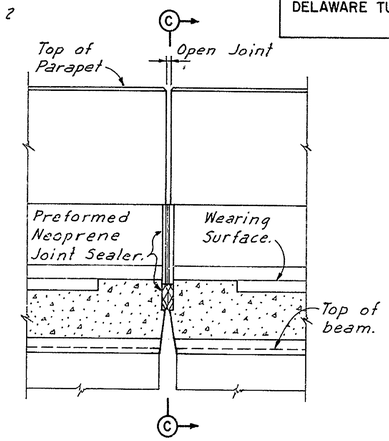


SECTION B-B
Scale 1" = 1'-0"

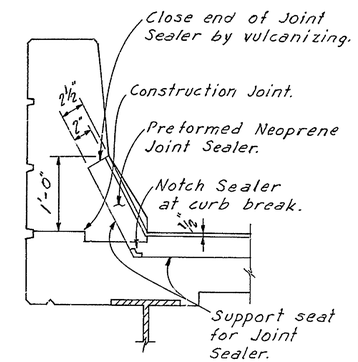


SECTION C-C
TREATMENT OF TYPE "A" JOINT AT CURB
Scale 1" = 1'-0"

NOTES

All roadway joints shall conform to the crown and grade of the roadway surface.

It is absolutely essential that the openings for the preformed neoprene joint sealers be accurately formed and constructed to smooth straight lines. The size of the opening shall be adjusted to allow for the temperature at the time of construction.

Cost of the joints to be included in Portland Cement Concrete Masonry.

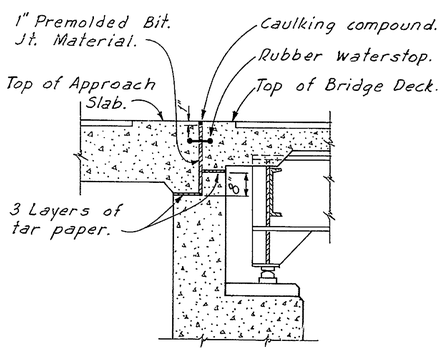


SECTION A-A
Scale ½" = 1'-0"

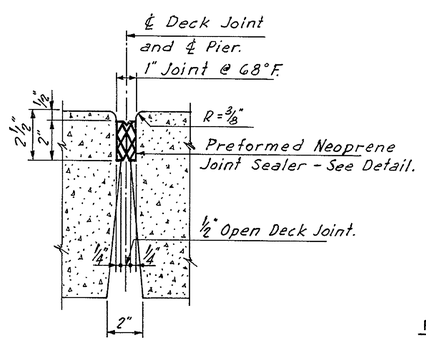


1" TYPE "A" JOINT
Scale 3" = 1'-0"

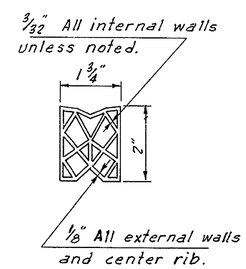


PREFORMED NEOPRENE JOINT SEALER FOR 1" TYPE "A" JOINT
Scale = Half Size

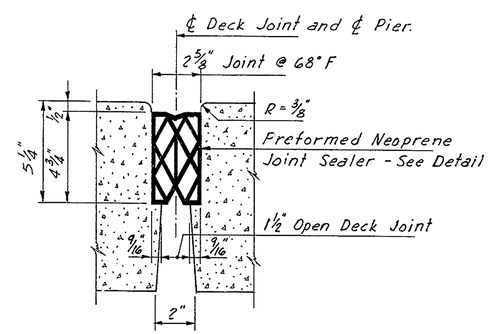


2 5/8" TYPE "A" JOINT
Scale 3" = 1'-0"

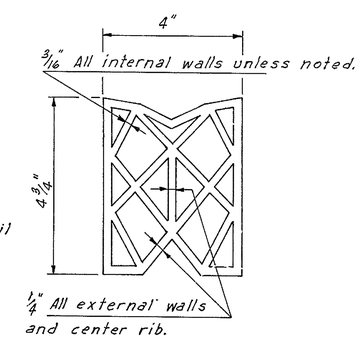


PREFORMED NEOPRENE JOINT SEALER FOR 2 5/8" TYPE "A" JOINT
Scale = Half Size

| NO. | REVISION | BY | DATE |
|---|---|---|---|
| 3 | | | |
| 2 | | | |
| 1 | | | |

| | BY | DATE |
|---|---|---|
| MADE | L.D.F. | 11-68 |
| CHECKED | J.B.G. | 12-68 |
| IN CHARGE | J.E.H. | |

DELAWARE STATE HIGHWAY DEPARTMENT
DELAWARE TURNPIKE
ROUTE 896 INTERCHANGE IMPROVEMENTS
BRIDGE OVER CHRISTINA RIVER
JOINT DETAILS

HOWARD, NEEDLES, TAMMEN & BERGENDOFF
consulting engineers
NEW YORK KANSAS CITY

SCALE: As Noted
CONTRACT NO. 7053
SHEET NO. 7 OF 9

| DELAWARE TURNPIKE | CONT. NO. | TITLE | SHEET NO. | TOTAL SHEETS |
|---|---|---|---|---|
| | 7053 | | 50 | 86 |

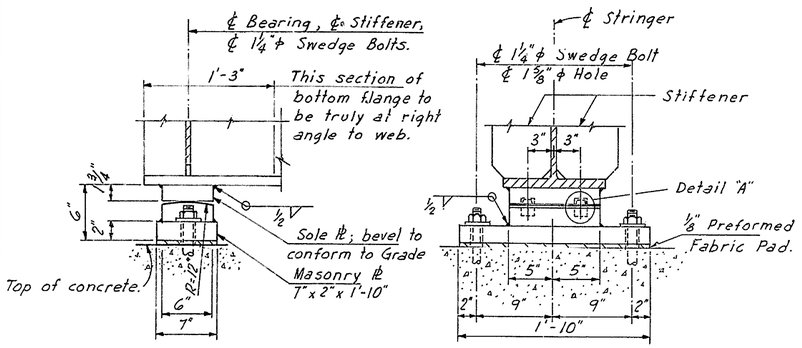


FIXED SHOE FS-1
Scale 1½"=1'-0"

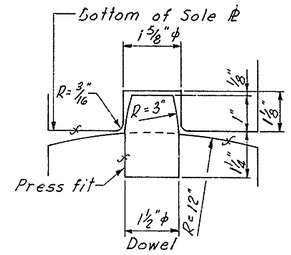


DETAIL "A"
Not to Scale

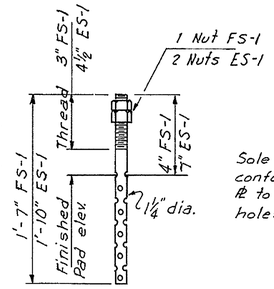


SWEDGE BOLT DETAIL
Not to Scale

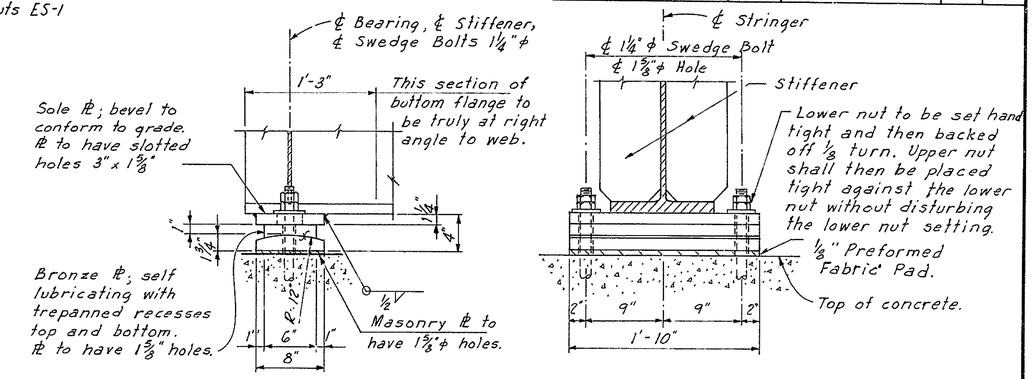


EXPANSION SHOE ES-1
Scale 1½" = 1'-0"

**SHOE NOTES**

Shoes to have vertical and horizontal center lines mutually perpendicular at 65° F.

For location of Shoes; see Sheet No. 5 of 9.

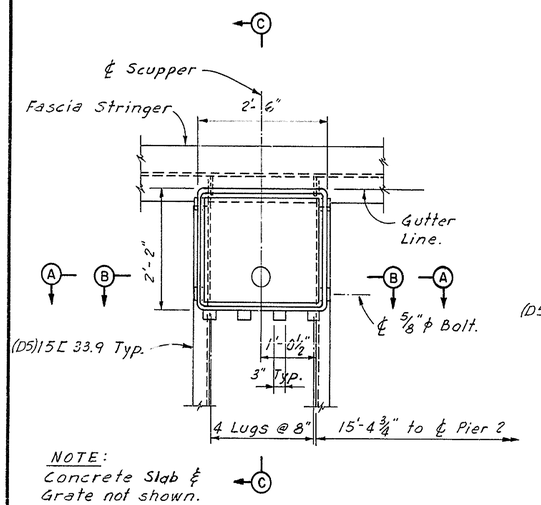


NOTE:
Concrete Slab ℄ Grate not shown.

SCUPPER PLAN
Scale ¾" = 1'-0"

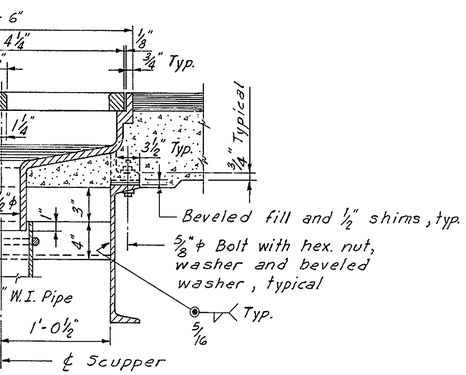


SECTION B-B
Scale 1½" = 1'-0"

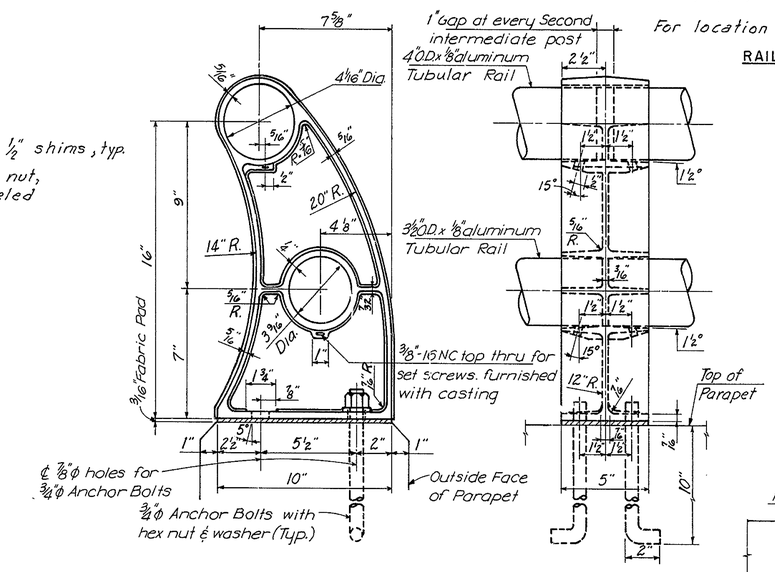


RAILING POST DETAILS
Scale 3"=1'-0"

**RAILING NOTES:**

1) All Railings are to be fabricated and erected so that the rails are parallel to each other and to the top fascia and so the posts are truly vertical.
2) Anchor bolts for railing posts shall be aluminum alloy meeting the requirements of ASTM-B211 alloy 2024-T4.
3) After nuts have been placed & tightened to the satisfaction of the Engineer, bolts shall be cut off ⅛" above nuts and peened.
4) All rails to be continuous at all end posts adjacent to piers and abutments.
5) Tubular rails shall be closed at all piers and abutments with a welded in aluminum plug.
6) The finished aluminum alloy bolts, nuts, & washers shall be given an anodic coating at least 0.0002 inches thick and a chromate seal.

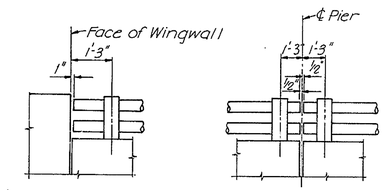


AT ABUTMENTS

AT PIERS

RAILING TERMINAL DETAILS
No Scale

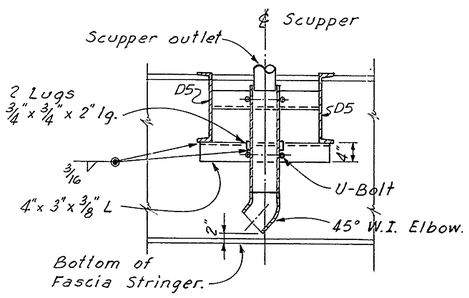


SECTION A-A
Scale ¾" = 1'-0"

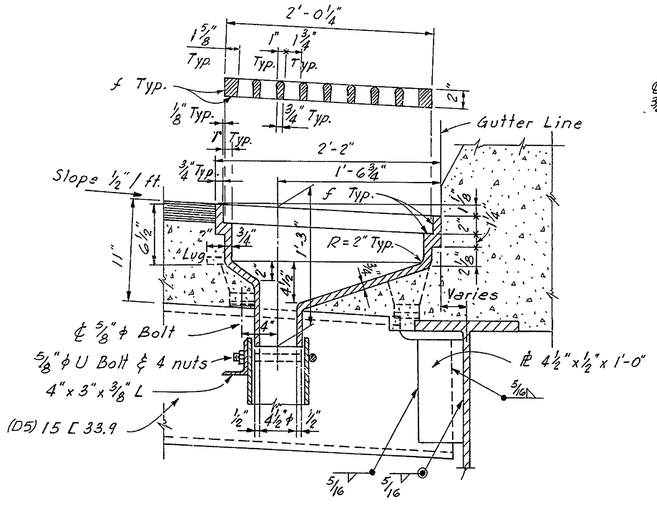


SECTION C-C
Scale 1½" = 1'-0"

**DRAINAGE NOTES**

All pipe to be black wrought iron, standard weight.

All pipe and fittings to be galvanized.

All fittings to be welded, wrought iron, standard weight.

Brackets, rods, straps, plates, bolts, nuts and washers to be galvanized.

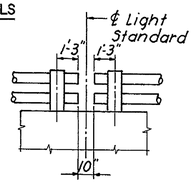


AT LIGHT STANDARD

| NO. | REVISION | BY | DATE |
|---|---|---|---|
| 3 | | | |
| 2 | | | |
| 1 | | | |

| | BY | DATE |
|---|---|---|
| MADE | L.D.F. | 12-68 |
| CHECKED | J.B.G. | 12-68 |
| IN CHARGE | J.E.H. | |

DELAWARE STATE HIGHWAY DEPARTMENT

# DELAWARE TURNPIKE

ROUTE 896 INTERCHANGE IMPROVEMENTS
BRIDGE OVER CHRISTINA RIVER

## MISCELLANEOUS DETAILS

HOWARD, NEEDLES, TAMMEN & BERGENDOFF
consulting engineers
NEW YORK KANSAS CITY

SCALE: As Noted
CONTRACT NO. 7053
SHEET NO. 8 OF 9

| DELAWARE TURNPIKE | CONT. NO. | TITLE | SHEET NO. | TOTAL SHEETS |
|---|---|---|---|---|
| | 7053 | | 51 | 86 |

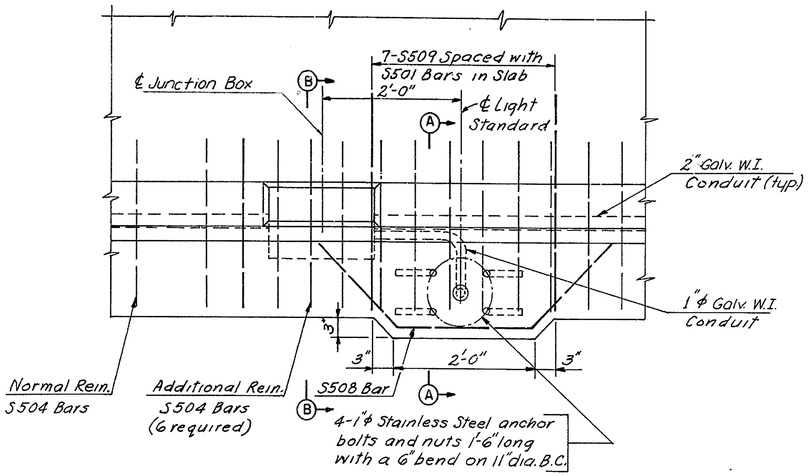


LIGHT BLISTER DETAIL
Scale 1" = 1'-0"

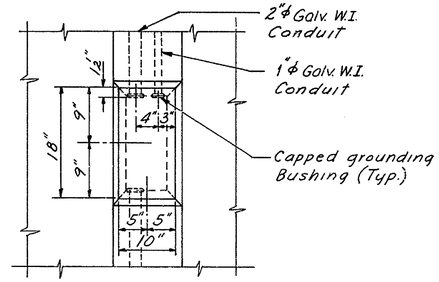


VIEW C-C
Scale 1" = 1'-0"

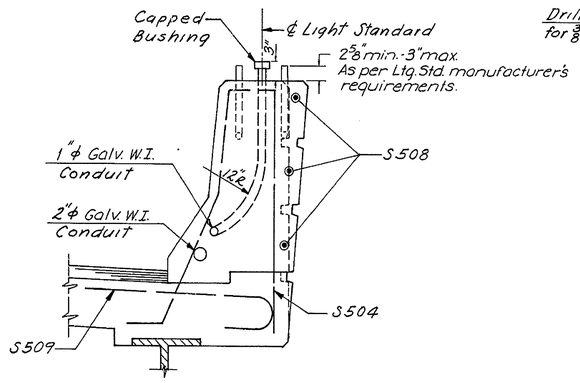


SECTION A-A
Scale 1" = 1'-0"

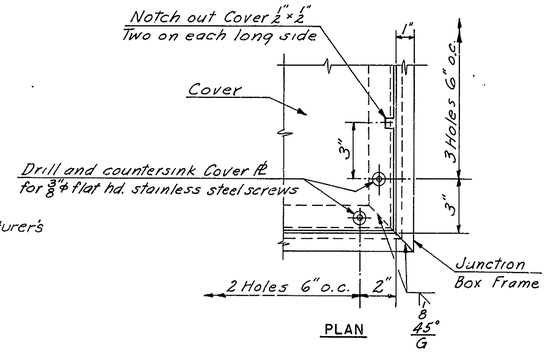


PLAN

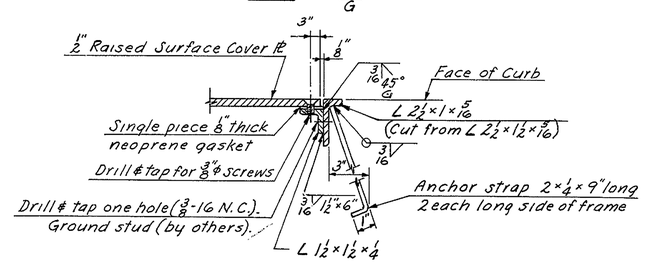


JUNCTION BOX FRAME AND COVER
Scale 3" = 1'-0"

NOTES:

Junction box frame and cover shall be H.D. Galvanized after fabrication.

Anchor bolts, washers and nuts shall be H.D. Galvanized steel.

All metal conduits and fittings shall be H.D. Galvanized. (see Spec's.).

Grounding bushings shall be equal to O-Z Type IGB.

For location of lighting standards see Sheet No. 6 of 9

Location of junction box with respect to light standard will be such that it will clear any parapet joint and at the same time maintain the specified distance.

Cost of 1" ϕ and 2" ϕ W.I. conduits imbedded in concrete and junction box on structure to be included in price bid for Item 18 P.C.C. Masonry – Superstructure.

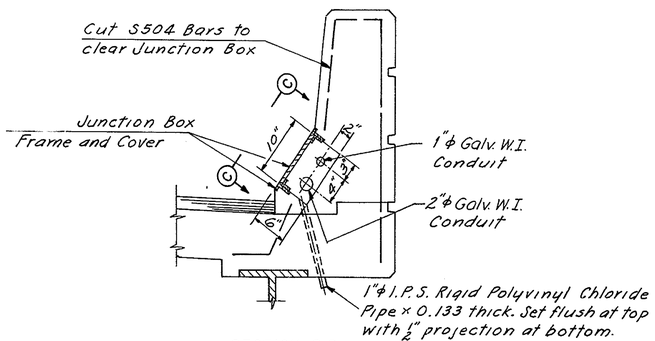


SECTION B-B
Scale 1" = 1'-0"

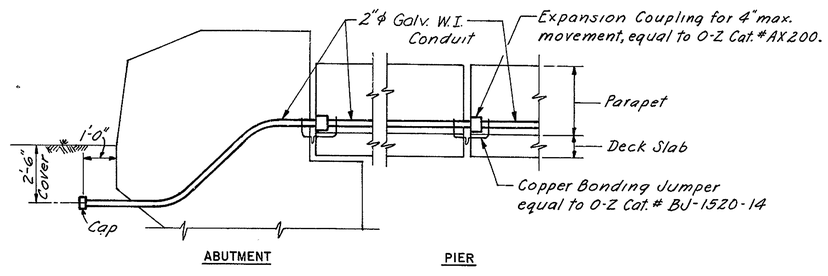


EXPANSION JOINT DETAILS FOR CONDUITS
No Scale

| NO. | REVISION | BY | DATE |
|---|---|---|---|
| 3 | | | |
| 2 | | | |
| 1 | | | |

| | BY | DATE |
|---|---|---|
| MADE | F.J.C. | 7-69 |
| CHECKED | JBG | 8-69 |
| IN CHARGE | JEH | |

DELAWARE STATE HIGHWAY DEPARTMENT

DELAWARE TURNPIKE

ROUTE 896 INTERCHANGE IMPROVEMENTS
BRIDGE OVER CHRISTINA RIVER

LIGHTING DETAILS

HOWARD, NEEDLES, TAMMEN & BERGENDOFF
consulting engineers
NEW YORK KANSAS CITY

SCALE: As Noted
CONTRACT NO. 7053
SHEET NO. 9 OF 9

| DELAWARE TURNPIKE | CONT. NO. | TITLE | SHEET NO. | TOTAL SHEETS |
|---|---|---|---|---|
| | 7053 | | 52 | 86 |

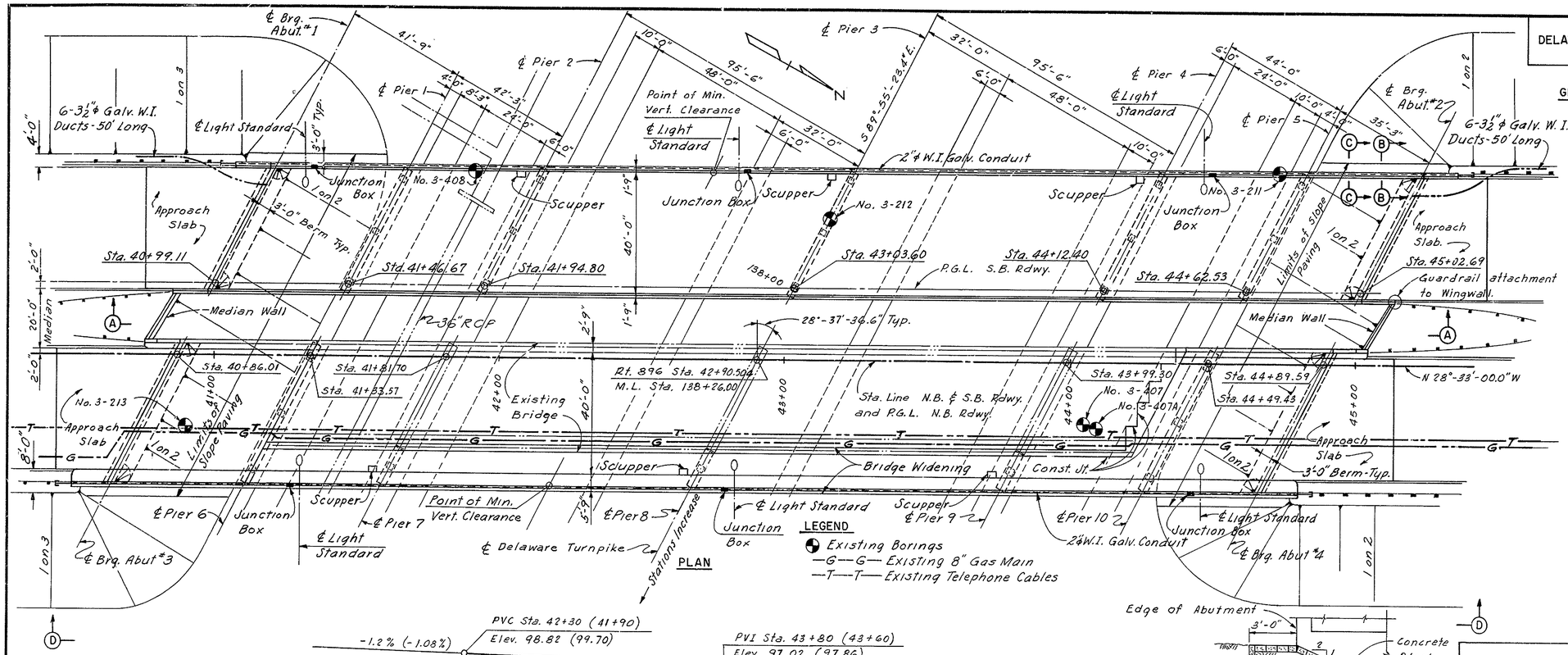


PLAN

**LEGEND**

- Existing Borings
- —G—G— Existing 8" Gas Main
- —T—T— Existing Telephone Cables

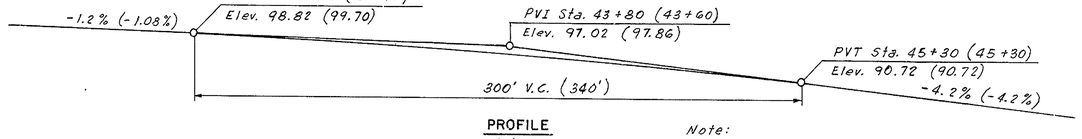


PROFILE
Not to Scale

Note:
Vertical curve data shown thus (43+60) are for S.B. Roadway.

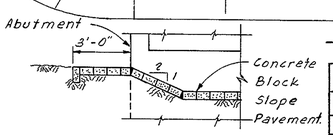


SECTION B-B
Not to Scale

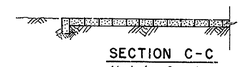

SECTION C-C
Not to Scale

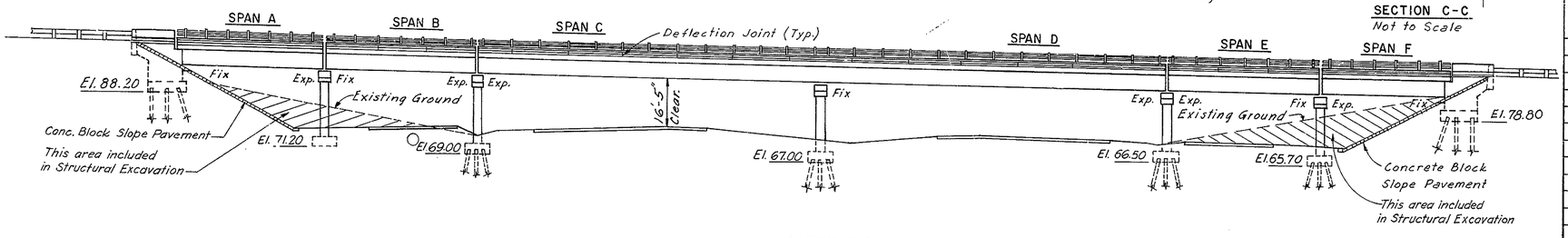


SECTION A-A

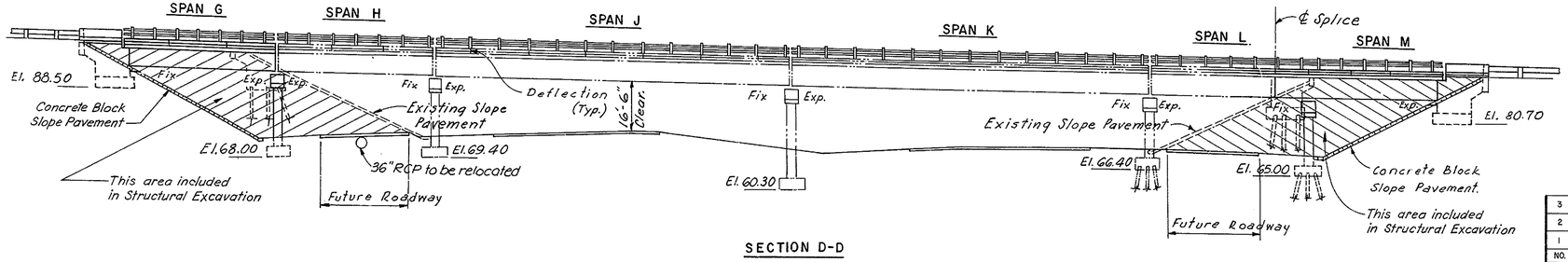


SECTION D-D

## GENERAL NOTES

Construction Specifications: Delaware State Highway Department Standard Specifications dated June 1, 1965 and Special Provisions.

Design Specifications: A.A.S.H.O. Standard Specifications for Highway Bridges dated 1965.

Design Live Load: HS20-44.

Design Stresses: Concrete fc = 1,200 psi
Structural and Reinforcing Steel f = 20,000 psi.

Concrete:

All exposed edges shall be chamfered 1" unless otherwise noted.

Concrete cover on reinforcing shall be 2" minimum unless otherwise shown on plans.

Bar Reinforcement: Bar reinforcement shall be deformed billet-steel bars (A-615) grade 40.

All bar laps shall be 30 bar diameters minimum of the smaller bar spliced.

For Additional Notes see Sheet No. 3 of 25.

Structural Steel: Structural steel shall conform to the requirements of A.S.T.M. Designation A-36 except as noted.

Guardrail Attachment:
For Guardrail attachment, see Sheet No. 12

Pile Footings: 14"ϕ Cast-in-place conc. piles shall be driven to a min. bearing capacity of 50 Tons.

10BP57 Steel Bearing Piles shall be driven to a min. bearing capacity of 50 Tons.

Soil Capacity: Abutment #3 and #4 shall have a max. soil pressure of 1.5 Tons per square foot.

Pier No 1, 6, 7 & 8 shall have a maximum soil pressure of 2.0 Tons per square foot.

## ESTIMATED QUANTITIES

| ITEM NO. | DESCRIPTION | UNIT | QUANTITY |
|---|---|---|---|
| | Partial Removal of Existing Structure | L.S. | 1 |
| 4 | Excavation for Structures | C.Y. | 1236d |
| 11 | Hot-mix, Hot-laid Asphaltic Concrete Pavement | Tons | 384 |
| 18 | Portland Cement Concrete Masonry | | |
| | Footings | C.Y. | 438 |
| | Substructure | C.Y. | 568 |
| | Superstructure | C.Y. | 924 |
| | Approach Slabs | C.Y. | 243 |
| 19 | Superficial Waterproofing | S.Y. | 250 |
| 20 | Bar Reinforcement | Lbs. | 384,735 |
| 22 | Structural Steel (Estimated Wt. = 748,000#) | L.S. | 1 |
| 22A | Aluminum Railing - Double Rail | L.F. | 1015 |
| | Reset Existing Bridge Railing | L.F. | 308 |
| 31 | 6"ϕ Perforated Corr. Metal Pipe Underdrain | L.F. | 216 |
| 35 | 14"ϕ C.I.P. Concrete Piles. (Footings) | L.F. | 2959 |
| | 10BP57 Steel Piles | L.F. | 764 |
| | Bridge Drainage | L.S. | 1 |
| | Slope Paving (Concrete Block) | S.Y. | 1175 |
| | Coal Tar Epoxy Underseal | S.Y. | 2819 |
| | Protective Coating for Concrete. | S.F. | 3220 |
| | 3½"ϕ Galv. W.I. Ducts | L.F. | 600 |

| NO. | REVISION | BY | DATE |
|---|---|---|---|
| 3 | | | |
| 2 | | | |
| 1 | | | |

| | BY | DATE |
|---|---|---|
| MADE | L.D.F. | 8-69 |
| CHECKED | J.R.C. | 11-69 |
| IN CHARGE | J.E.H. | |

DELAWARE STATE HIGHWAY DEPARTMENT

# DELAWARE TURNPIKE

ROUTE 896 INTERCHANGE IMPROVEMENTS
BRIDGE OVER DELAWARE TURNPIKE

## GENERAL PLAN & ELEVATION

HOWARD, NEEDLES, TAMMEN & BERGENDOFF
consulting engineers
NEW YORK KANSAS CITY

SCALE: 1" = 20' Unless Noted
CONTRACT NO. 7053
SHEET NO. 1 OF 25

| DELAWARE TURNPIKE | CONT NO | TITLE | SHEET NO | TOTAL SHEETS |
|---|---|---|---|---|
| | 7053 | | 53 | 86 |

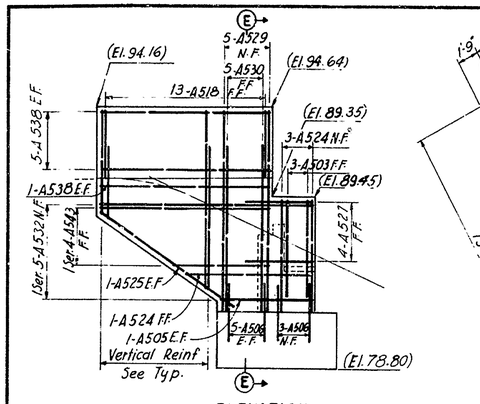


ELEVATION
ABUT 2 W. WINGWALL

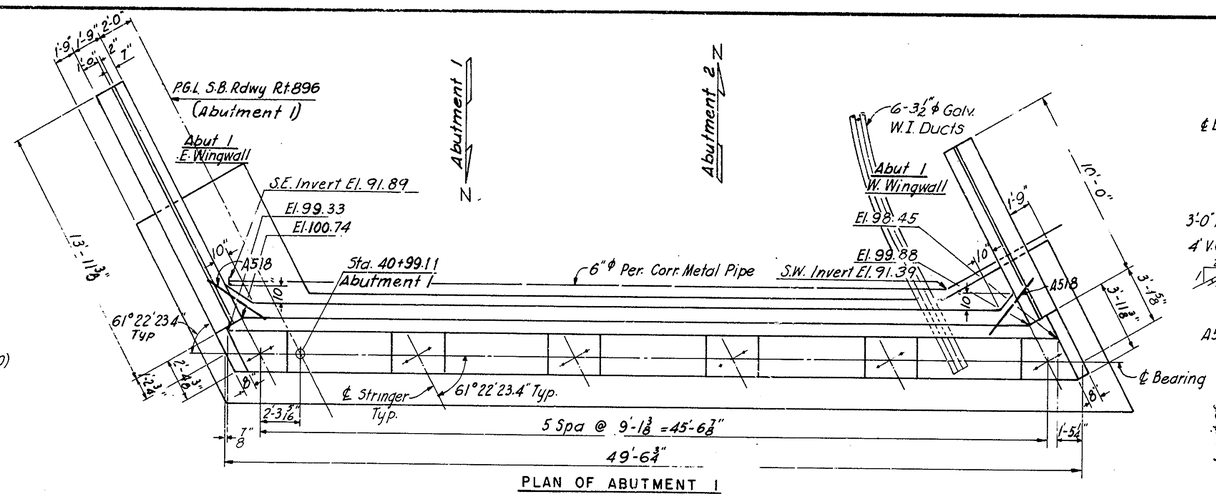


PLAN OF ABUTMENT 1

Abutment 2 Similar except for Wingwalls
See Details this Sheet

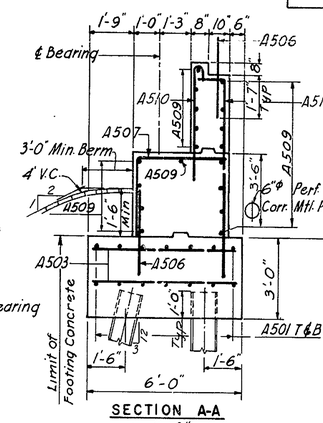


SECTION A-A
Scale: ⅜" = 1'-0"

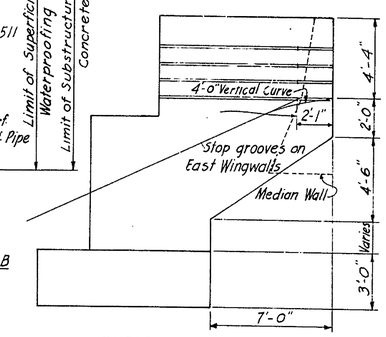


TYPICAL WINGWALL

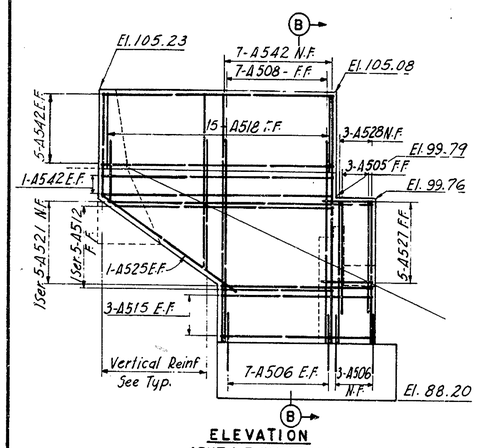


ELEVATION
ABUT 1 E. WINGWALL

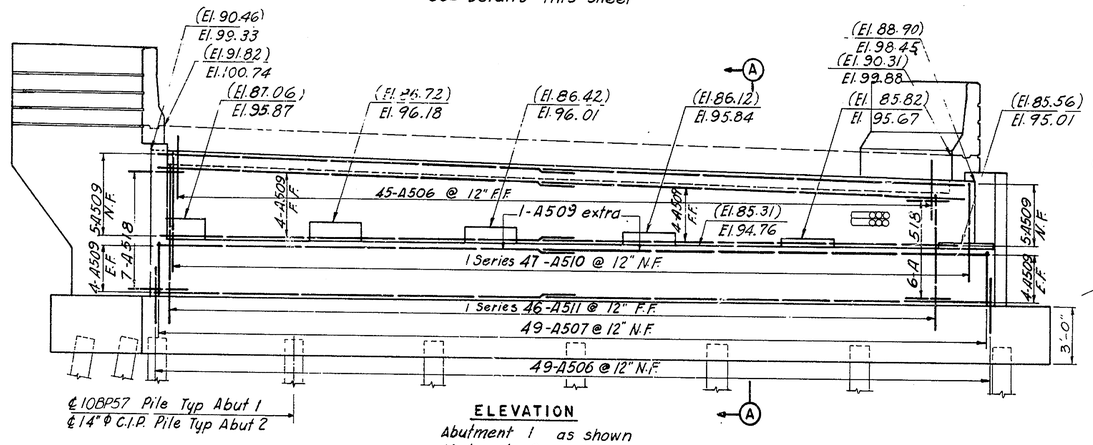


ELEVATION
Abutment 1 as shown
Abutment 2 opp. hand

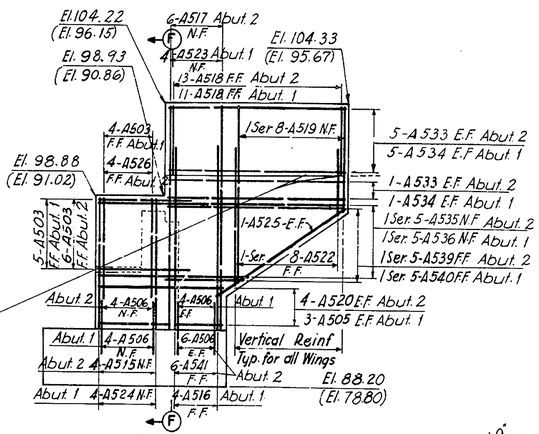


ELEVATION
ABUT 1 W. & ABUT 2 E. WINGWALLS

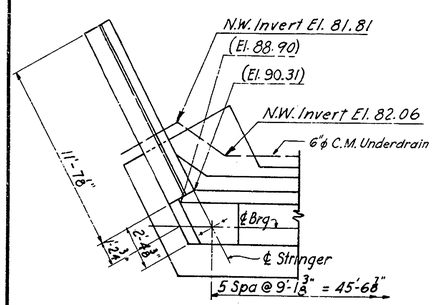


PLAN

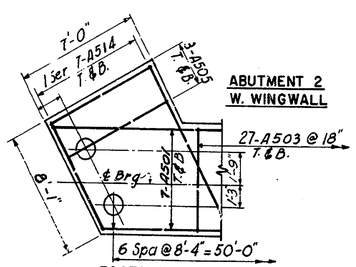


ABUTMENT 2
W. WINGWALL

FOOTING

Note: Elevations shown thus (El. 91.01) refer to Abutment 2.

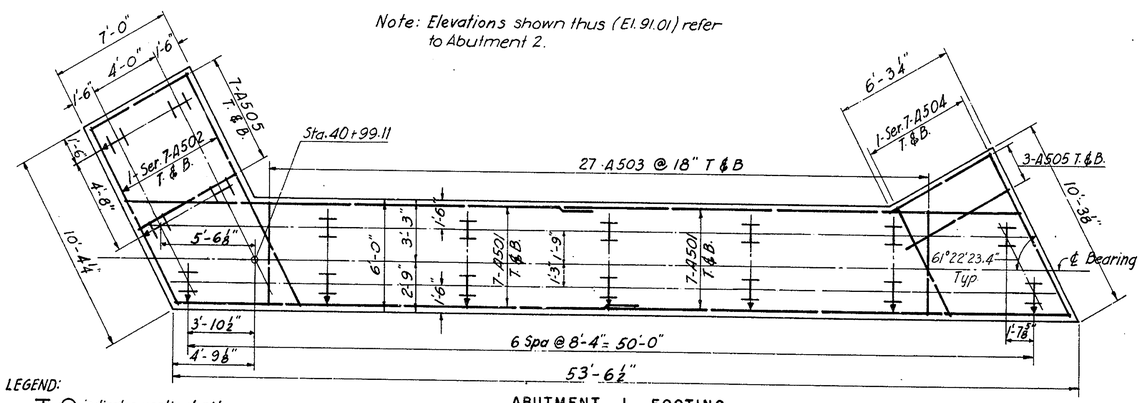


ABUTMENT 1 FOOTING
Abutment 2 Similar except for Wingwalls and Piles - see Details this Sheet

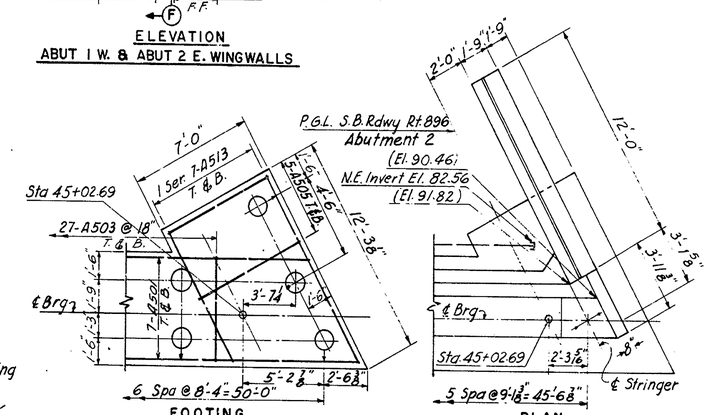


FOOTING

ABUT 2 E. WINGWALL

PLAN

LEGEND:
- indicates vertical pile.
- indicates 3:12 batter pile and direction of batter.

N.F. denotes Near Face
E.F. denotes Each Face
F.F. denotes Far Face
T&B denotes Top & Bottom

NOTES:
For General Notes see sheet No. 1 of 25
For Sections B-B, E-E, F-F see sheet No. 3 of 25
For Typical Pad Details see sheet No. 3 of 25
For additional notes see sheet No. 3 of 25
For Epoxy Protective Coating limits see Sheet No. 4 of 25.

| NO | REVISION | BY | DATE |
|---|---|---|---|
| 3 | | | |
| 2 | | | |
| 1 | | | |

| | BY | DATE |
|---|---|---|
| MADE | I.R.P. | 11-68 |
| CHECKED | F.J.C. | 11-69 |
| IN CHARGE | J.E.H. | |

DELAWARE STATE HIGHWAY DEPARTMENT

# DELAWARE TURNPIKE

ROUTE 896 INTERCHANGE IMPROVEMENTS
BRIDGE OVER DELAWARE TURNPIKE
ABUTMENTS 1 & 2

HOWARD, NEEDLES, TAMMEN & BERGENDOFF
consulting engineers
NEW YORK KANSAS CITY

SCALE: ¼" = 1'-0" unless noted
CONTRACT NO. 7053
SHEET NO. 2 OF 25

| DELAWARE TURNPIKE | CONT. NO. | TITLE | SHEET NO. | TOTAL SHEETS |
|---|---|---|---|---|
| | 7053 | | 54 | 86 |

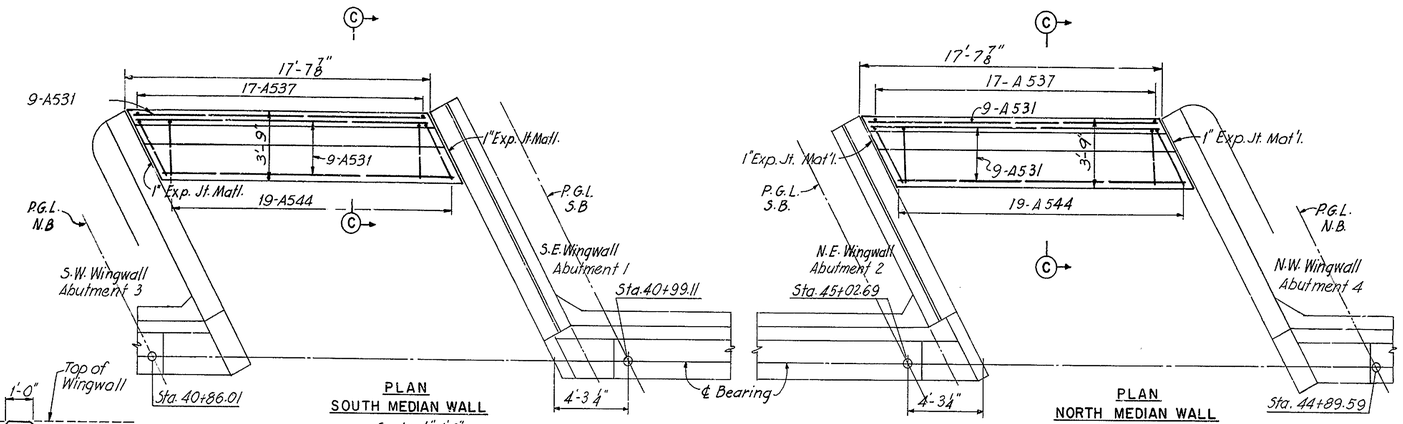


PLAN
SOUTH MEDIAN WALL
Scale: 1/4" = 1'-0"

PLAN
NORTH MEDIAN WALL
Scale: 1/4" = 1'-0"

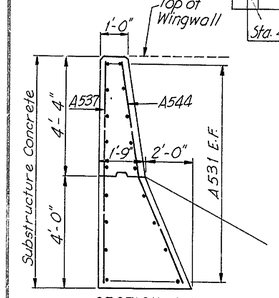


SECTION C-C
Scale 3/8" = 1'-0"

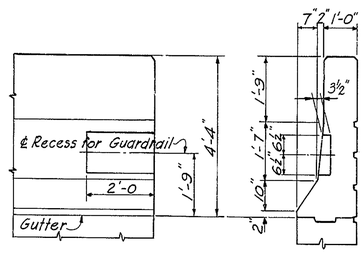


RECESS FOR GUARDRAIL ATTACHMENT
Scale: 1/2" = 1'-0"

Note: For details of Guardrail Anchorage see Sheet No. 12.

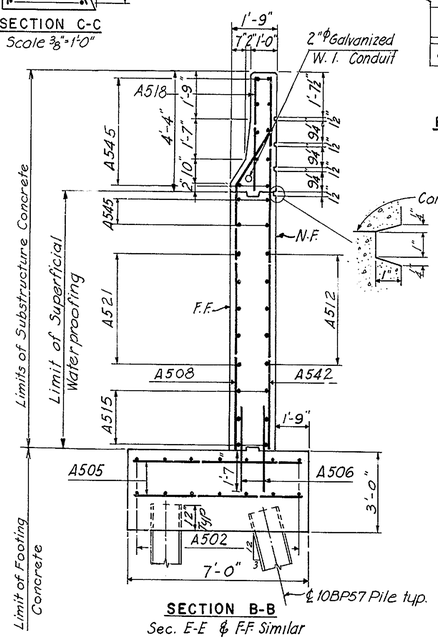


SECTION B-B
Sec. E-E & F-F Similar
Scale: 3/8" = 1'-0"

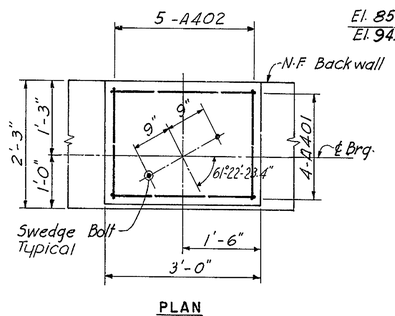


PLAN

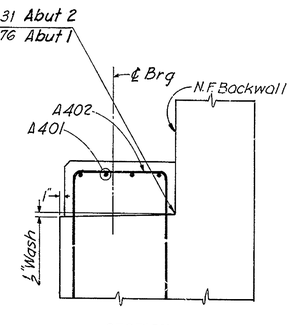


SECTION

TYPICAL PAD DETAIL
Scale: 3/4" = 1'-0"

NOTES

Min. Reinforcing Steel concrete cover 3" in footing, 2" above footing.
Backfill behind abutments to be placed only after bridge deck slab has been completed.
All bars spaced @ 12" Max unless noted.
All construction joints to be 2"x6" continuous key.

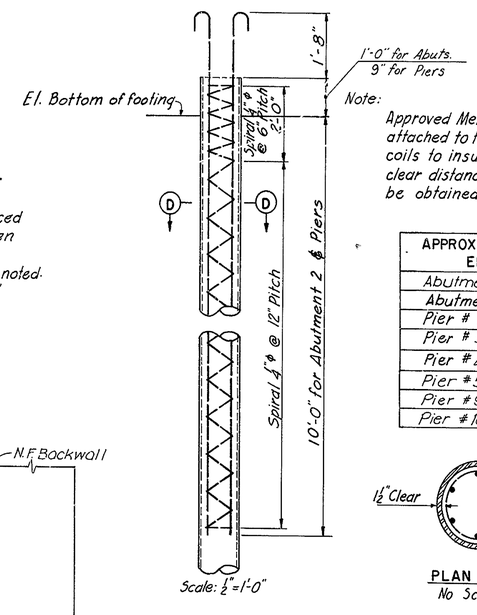


Scale: 1/2" = 1'-0"

PILE DETAIL
for 14" ϕ C.I.P.

Note:
Approved Metal Spacers shall be attached to the top and bottom coils to insure that the minimum clear distance to the shell will be obtained.

| APPROX PILE TIP ELEVATION | |
|---|---|
| Abutment 1 | 45 |
| Abutment 2 | 40 |
| Pier # 2 | 45 |
| Pier # 3 | 40 |
| Pier # 4 | 35 |
| Pier # 5 | 35 |
| Pier # 9 | 35 |
| Pier # 10 | 35 |

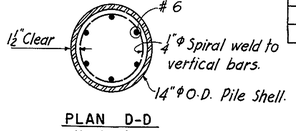


PLAN D-D
No Scale

ADDITIONAL GENERAL NOTES:

In computing the total length shown for each bent bar, dimensions of legs adjoining each bend (not 135° or 180° hooks) were carried to the point of intersection of both legs and no deductions were made for the shorter distance along the curve. The Contractor shall take this fact into consideration when ordering and fabricating bent bars.

The first digit of the bar mark denotes the bar size. A501 is a No.5 bar.

REINFORCING BAR SCHEDULE

| MARK | NO | TYPE | A | B | C | LENGTH |
|---|---|---|---|---|---|---|
| A401 | 48 | 5 | 2'-6" | 2'-8" | | 7'-8" |
| A402 | 60 | 5 | 2'-6" | 1'-10" | | 6'-10" |
| A501 | 56 | Str | | | | 27'-3" |
| A502 | 2 Ser Tea. | Str. | | | | 9'-10" to 13'-4" |
| A503 | 126 | Str. | | | | 5'-6" |
| A504 | 2 Ser Tea. | Str. | | | | 6'-4" to 9'-9" |
| A505 | 47 | Str. | | | | 6'-6" |
| A506 | 246 | Str. | | | | 3'-2" |
| A507 | 98 | 7 | 3'-3" | 3'-5" | | 6'-8" |
| A508 | 7 | 4 | 9'-7" | 2'-6" | 1'-3" | 12'-1" |
| A509 | 72 | Str | | | | 25'-4" |
| A510 | 2 Ser 4 Tea. | 2 | 5'-0" to 6'-5" | 0'-7" | | 5'-7" to 7'-0" |
| A511 | 2 Ser 4 Tea. | 7 | 7'-10" to 9'-3" | 1'-2" | | 9'-0" to 10'-5" |
| A512 | 1 Ser 5 | Str | | | | 6'-5" to 13'-5" |
| A513 | 2 Ser Tea. | Str | | | | 7'-8" to 11'-6" |
| A514 | 2 Ser Tea. | Str. | | | | 7'-6" to 11'-2" |
| A515 | 10 | Str. | | | | 8'-11" |
| A516 | 4 | 4 | 8'-10" | 2'-6" | 1'-3" | 11'-4" |
| A517 | 6 | Str | | | | 14'-0" |
| A518 | 78 | Str. | | | | 4'-2" |
| A519 | 4 Ser 8 Tea | Str. | | | | 6'-0" to 10'-2" |
| A520 | 8 | Str. | | | | 8'-8" |
| A521 | 1 Ser 5 | Str. | | | | 8'-10" to 15'-10" |
| A522 | 4 Ser 8 Tea | 4 | 2'-0" to 6'-1" | 2'-6" | 1'-3" | 4'-6" to 8'-7" |
| A523 | 4 | Str | | | | 12'-9" |
| A524 | 8 | Str. | | | | 7'-4" |
| A525 | 8 | Str. | | | | 8'-7" |
| A526 | 4 | Str. | | | | 7'-0" |
| A527 | 9 | Str. | | | | 3'-10" |
| A528 | 3 | Str. | | | | 8'-4" |
| A529 | 5 | Str. | | | | 12'-8" |
| A530 | 5 | 4 | 8'-8" | 2'-6" | 1'-3" | 11'-2" |
| A531 | 36 | Str | | | | 17'-0" |
| A532 | 1 Ser 5 | Str. | | | | 6'-8" to 13'-8" |
| A533 | 14 | Str. | | | | 11'-8" |
| A534 | 14 | Str. | | | | 9'-8" |
| A535 | 1 Ser 5 | Str. | | | | 9'-4" to 15'-7" |
| A536 | 1 Ser 5 | Str. | | | | 7'-11" to 13'-7" |
| A537 | 34 | Str. | | | | 8'-0" |
| A538 | 14 | Str | | | | 11'-3" |
| A539 | 1 Ser. 5 | Str. | | | | 4'-6" to 11'-6" |
| A540 | 1 Ser 5 | Str. | | | | 4'-0" to 9'-7" |
| A541 | 6 | 4 | 10'-2" | 2'-6" | 1'-3" | 12'-8" |
| A542 | 21 | Str. | | | | 13'-8" |
| A543 | 1 Ser 4 | Str. | | | | 5'-6" to 11'-3" |
| A544 | 38 | 4 | 4'-3" | 4'-1" | 1'-2" | 8'-3" |

NOTE: All dimensions are out to out of bars

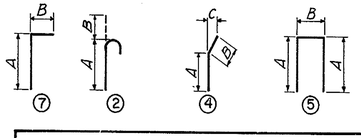


| NO | REVISION | BY | DATE |
|---|---|---|---|
| 3 | | | |
| 2 | | | |
| 1 | | | |

| | BY | DATE |
|---|---|---|
| MADE | IRP | 11-68 |
| CHECKED | F.J.C. | 11-69 |
| IN CHARGE | JEH | |

DELAWARE STATE HIGHWAY DEPARTMENT

# DELAWARE TURNPIKE

ROUTE 896 INTERCHANGE IMPROVEMENTS
BRIDGE OVER DELAWARE TURNPIKE

## ABUTMENTS 1 & 2 DETAILS

HOWARD, NEEDLES, TAMMEN & BERGENDOFF
consulting engineers
NEW YORK KANSAS CITY

SCALE: as noted
CONTRACT NO. 7053
SHEET NO. 3 OF 25

| DELAWARE TURNPIKE | CONT NO. | TITLE | SHEET NO. | TOTAL SHEETS |
|---|---|---|---|---|
| | 7053 | | 55 | 86 |

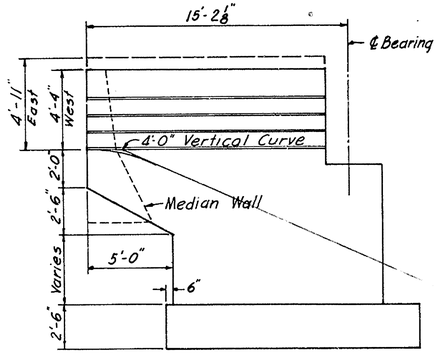


TYPICAL WINGWALL

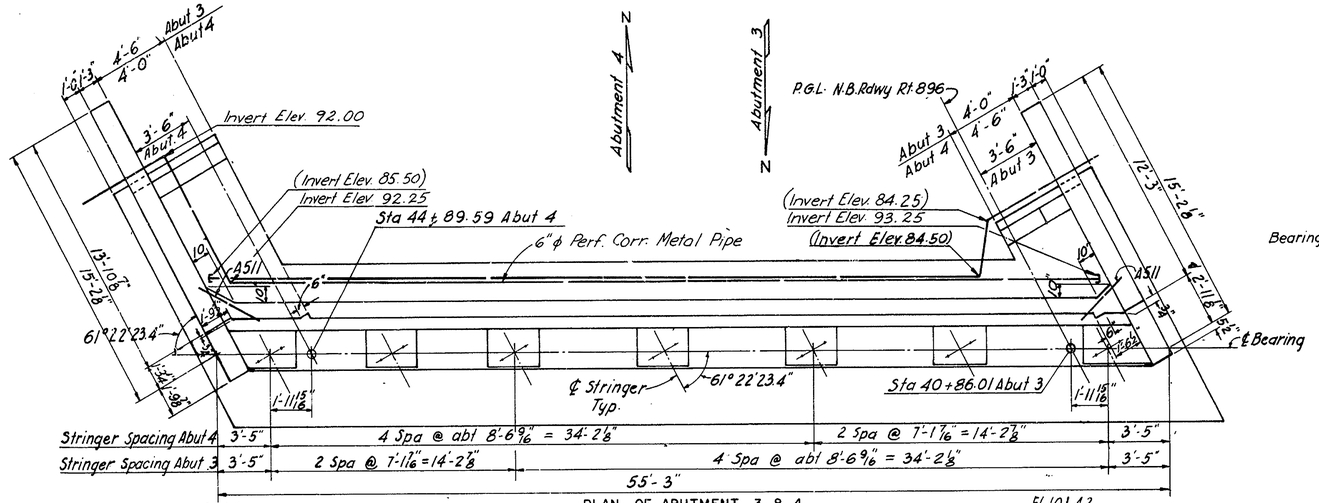


PLAN OF ABUTMENT 3 & 4

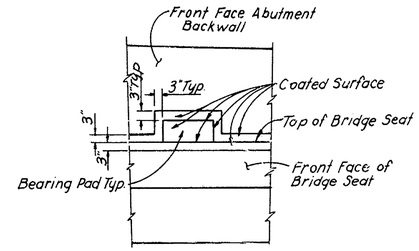


APPLICATION LIMITS OF EPOXY PROTECTIVE COATING FOR CONCRETE
(Part Elevation at Abutment)

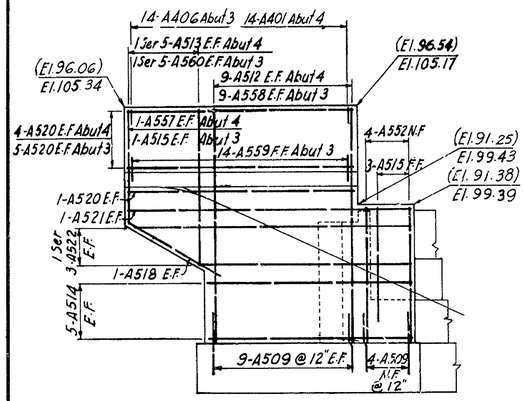


ELEVATION
ABUT 3 EAST & ABUT 4 WEST WINGWALL

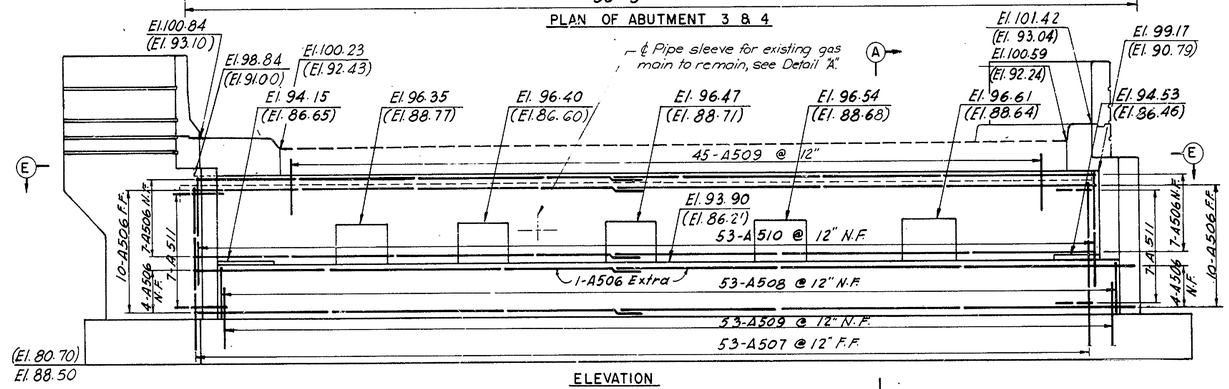


ELEVATION
Abutment 3 as shown
Abutment 4 opp. hand

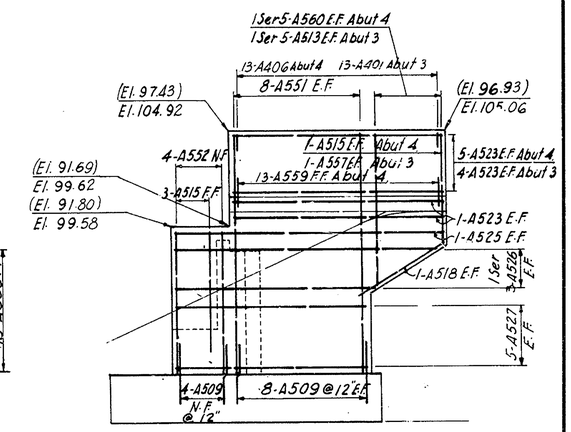


ELEVATION
ABUT 3 WEST & ABUT 4 EAST WINGWALL

Note: Elevations shown thus (93.02) refer to Abutment 4 only.

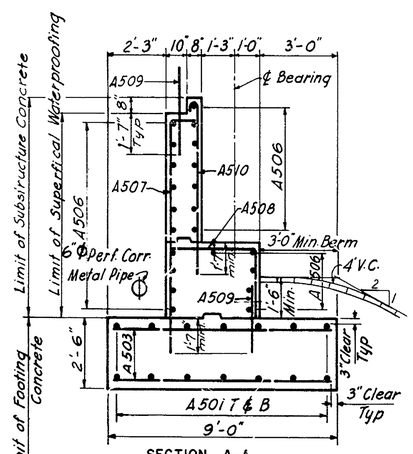


SECTION A-A
Scale: 3/8" = 1'-0"

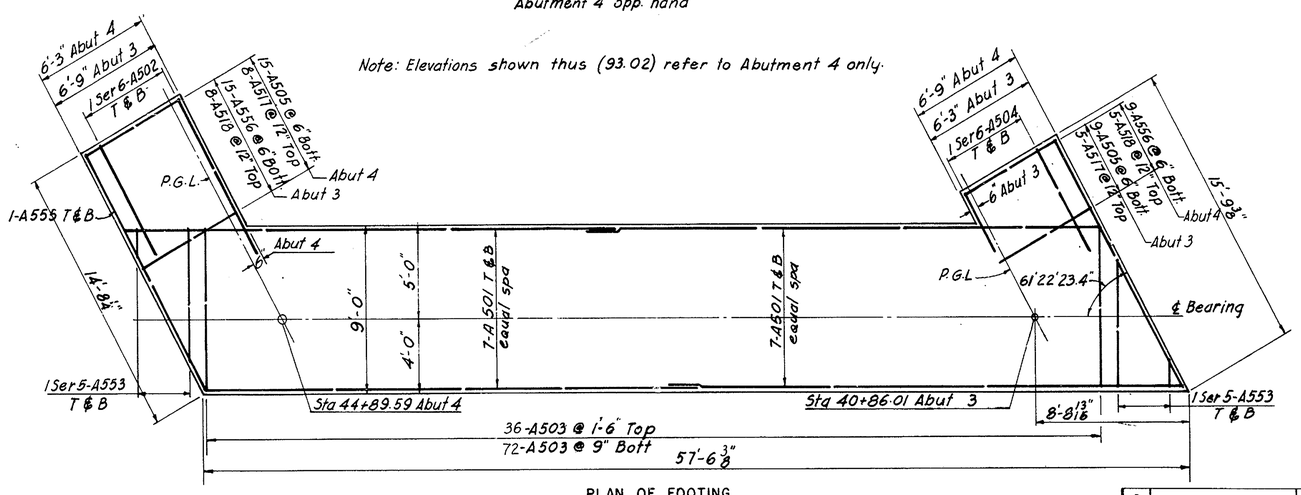


PLAN OF FOOTING

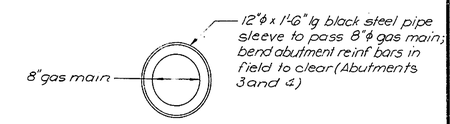


DETAIL "A"
1" = 1'-0"

NOTES:
For General Notes see sheet No. 1 of 25
For Typical Pad Details see sheet No. 5 of 25
For Additional Notes see sheet No. 3 of 25

LEGEND:
N.F. denotes Near Face.
E.F. denotes Each Face.
F.F. denotes Far Face.
T & B denotes Top and Bottom.

| NO. | REVISION | BY | DATE |
|---|---|---|---|
| 3 | | | |
| 2 | | | |
| 1 | | | |

| | BY | DATE |
|---|---|---|
| MADE | IRP | 10-69 |
| CHECKED | F.J.C. | 11-69 |
| IN CHARGE | J.E.H. | |

DELAWARE STATE HIGHWAY DEPARTMENT
DELAWARE TURNPIKE
ROUTE 896 INTERCHANGE IMPROVEMENTS
BRIDGE OVER DELAWARE TURNPIKE
ABUTMENTS 3 & 4

HOWARD, NEEDLES, TAMMEN & BERGENDOFF
consulting engineers
NEW YORK KANSAS CITY

SCALE: 1/4" = 1'-0" unless noted
CONTRACT NO. 7053
SHEET NO. 4 OF 25

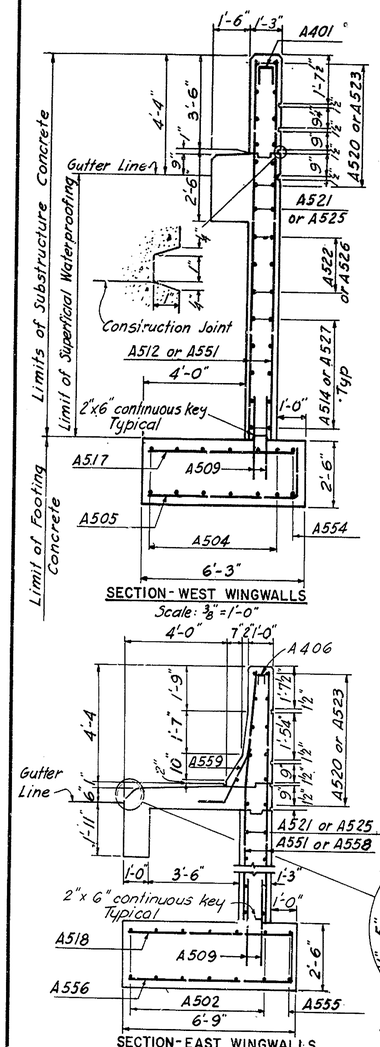


SECTION - WEST WINGWALLS
Scale: 3/8" = 1'-0"

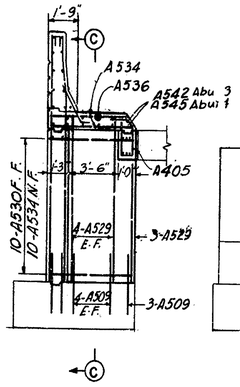


SECTION B-B

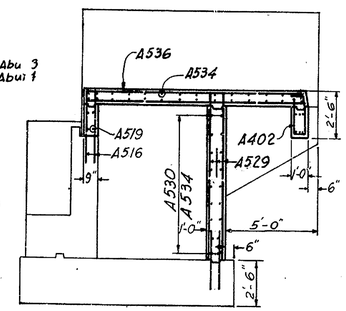


SECTION C-C

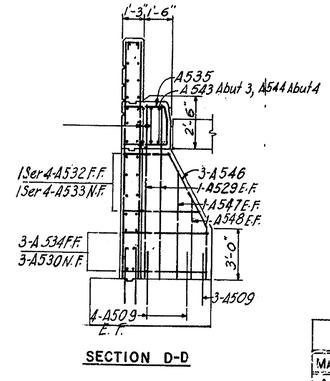


SECTION D-D

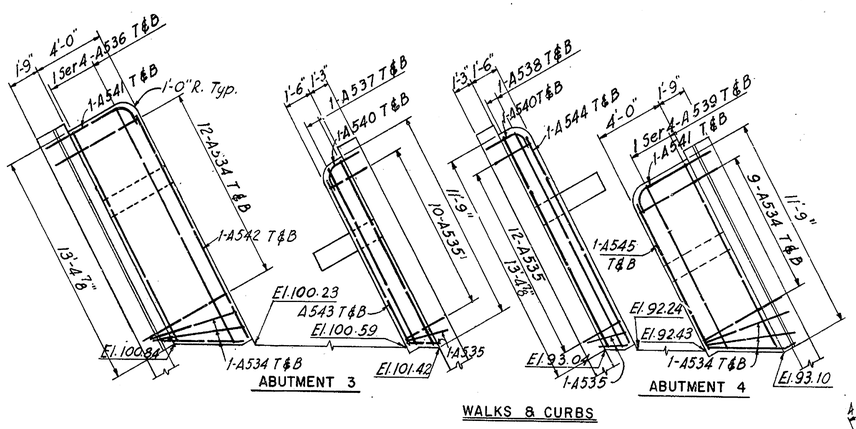


ABUTMENT 3

WALKS & CURBS

ABUTMENT 4

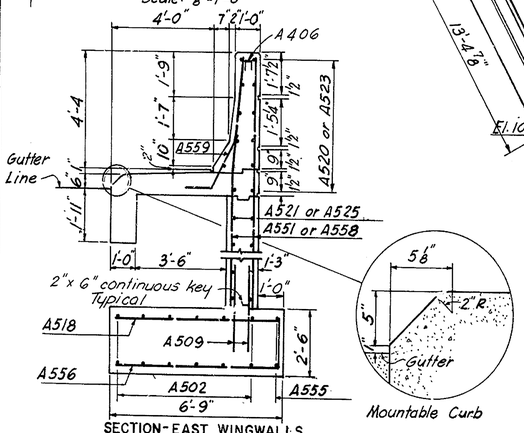


SECTION - EAST WINGWALLS
Scale: 3/8" = 1'-0"

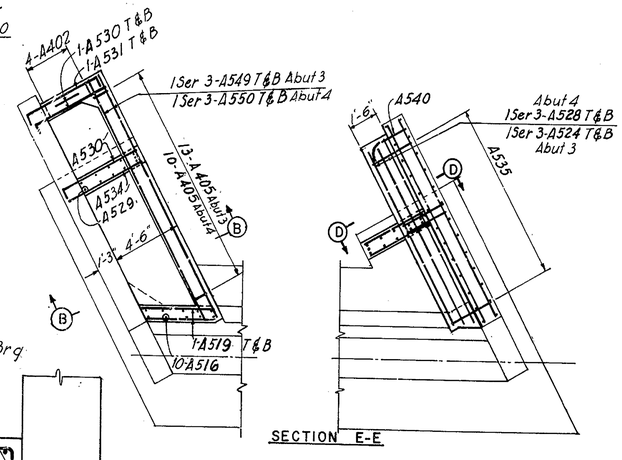


SECTION E-E

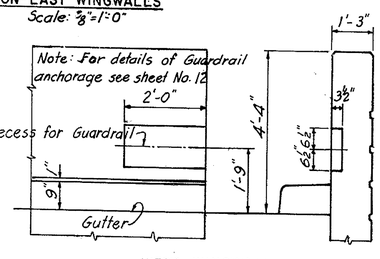


WEST WINGWALL

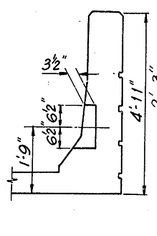


EAST WINGWALL

RECESS FOR GUARDRAIL ATTACHMENT

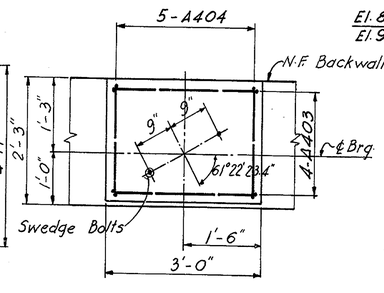


PLAN

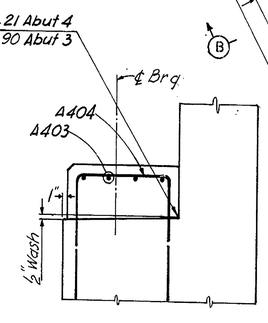


SECTION

TYPICAL PAD DETAIL
Scale: 3/4" = 1'-0"

BENDING DIAGRAMS

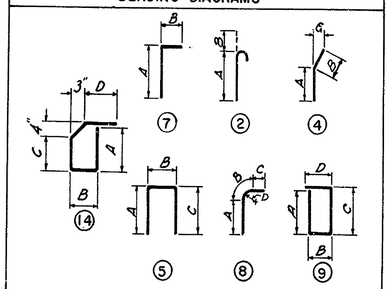


Dimensions are out to out of bars

| REINFORCING BAR SCHEDULE | | | | | | | |
|---|---|---|---|---|---|---|---|
| MARK | NO | TYPE | A | B | C | D | LENGTH |
| A558 | 18 | Str. | | | | | 13'-10" |
| A559 | 27 | 4 | 2'-0" | 1'-0" | 0'-10" | | 3'-0" |
| A560 | 8 Ser 5 ea | Str. | | | | | 6'-7" to 9'-0" |
| | | | | | | | |
| | | | | | | | |
| A406 | 27 | 5 | 0'-10" | 0'-8" | 0'-10" | | 2'-4" |
| A 405 | 23 | 14 | 2'-1" | 0'-8" | 1'-9" | 1'-3" | 6'-2" |

Note: Bar Schedule includes reinforcing for both Abutments.

| DELAWARE TURNPIKE | CONT. NO. | TITLE | SHEET NO. | TOTAL SHEETS |
|---|---|---|---|---|
| | 7053 | | 56 | 86 |

| REINFORCING BAR SCHEDULE | | | | | | | |
|---|---|---|---|---|---|---|---|
| MARK | NO | TYPE | A | B | C | D | LENGTH |
| A401 | 27 | 5 | 0'-10" | 0'-11" | 0'-10" | | 2'-7" |
| A402 | 4 | 9 | 2'-0" | 0'-8" | 2'-1" | 0'-10" | 5'-7" |
| | | | | | | | |
| A501 | 56 | Str | | | | | 29'-4" |
| A502 | 4 Ser 6 ea | Str | | | | | 6'-4" to 8'-10" |
| A503 | 194 | Str | | | | | 8'-6" |
| A504 | 4 Ser 6 ea | Str | | | | | 4'-0" to 6'-6" |
| A505 | 18 | 7 | 5'-9" | 2'-0" | | | 7'-9" |
| A506 | 88 | Str | | | | | 28'-4" |
| A507 | 106 | 7 | 8'-10" | 1'-2" | | | 10'-0" |
| A508 | 106 | 7 | 2'-8" | 3'-5" | | | 6'-1" |
| A509 | 324 | Str | | | | | 3'-2" |
| A510 | 106 | 2 | 6'-8" | 0'-7" | | | 7'-3" |
| A511 | 28 | Str | | | | | 3'-0" |
| A512 | 18 | Str | | | | | 13'-0" |
| A513 | 8 Ser 5 ea | Str | | | | | 6'-0" to 8'-5" |
| A514 | 20 | Str | | | | | 12'-0" |
| A515 | 16 | Str | | | | | 6'-7" |
| A516 | 20 | Str | | | | | 4'-4" |
| A517 | 10 | Str | | | | | 5'-9" |
| A518 | 24 | Str | | | | | 6'-3" |
| A519 | 8 | Str | | | | | 4'-10" |
| A520 | 22 | Str | | | | | 13'-7" |
| A521 | 4 | Str | | | | | 16'-8" |
| A522 | 4 Ser 3 ea | Str | | | | | 12'-4" to 16'-0" |
| A523 | 26 | Str | | | | | 11'-11" |
| A524 | 2 Ser 3 ea | Str | | | | | 10'-6" to 11'-9" |
| A525 | 4 | Str | | | | | 15'-3" |
| A526 | 4 Ser 3 ea | Str | | | | | 11'-2" to 14'-6" |
| A527 | 20 | Str | | | | | 10'-10" |
| A528 | 2 Ser 3 ea | Str | | | | | 12'-11" to 13'-5" |
| A529 | 30 | Str | | | | | 9'-3" |
| A530 | 30 | 7 | 4'-11" | 1'-7" | | | 6'-6" |
| A531 | 4 | 5 | 1'-7" | 5'-5" | 1'-7" | | 8'-7" |
| A532 | 2 Ser 4 ea | Str | | | | | 2'-5" to 4'-5" |
| A533 | 2 Ser 4 ea | 7 | 2'-5" to 4'-5" | 1'-7" | | | 4'-0" to 6'-0" |
| A534 | 80 | Str | | | | | 5'-5" |
| A535 | 26 | 5 | 2'-5" | 2'-2" | 2'-5" | | 7'-0" |
| A536 | 2 Ser 4 ea | Str | | | | | 12'-9" to 14'-3" |
| A537 | 4 | Str | | | | | 11'-0" |
| A538 | 4 | Str | | | | | 12'-9" |
| A539 | 2 Ser 4 ea | Str | | | | | 9'-9" to 11'-3" |
| A540 | 4 | 8 | 1'-7" | 1'-4" | 1'-1" | 0'-10" | 4'-0" |
| A541 | 4 | 8 | 4'-3" | 1'-4" | 1'-1" | 0'-10" | 6'-8" |
| A542 | 2 | Str | | | | | 13'-6" |
| A543 | 2 | Str | | | | | 9'-9" |
| A544 | 2 | Str | | | | | 12'-8" |
| A545 | 2 | Str | | | | | 8'-5" |
| A546 | 6 | 4 | 5'-0" | 2'-4" | 1'-5" | | 7'-8" |
| A547 | 4 | Str | | | | | 5'-8" |
| A548 | 4 | Str | | | | | 4'-2" |
| A549 | 2 Ser 3 ea | Str | | | | | 14'-5" to 14'-9" |
| A550 | 2 Ser 3 ea | Str | | | | | 9'-2" to 9'-6" |
| A551 | 32 | Str | | | | | 13'-7" |
| A552 | 16 | Str | | | | | 7'-11" |
| A553 | 8 Ser 5 ea | Str | | | | | 1'-9" to 7'-4" |
| A554 | 4 | Str | | | | | 15'-3" |
| A555 | 4 | Str | | | | | 14'-2" |
| A556 | 30 | 7 | 6'-3" | 2'-0" | | | 8'-3" |
| A557 | 4 | Str. | | | | | 6'-0" |
| | | | | | | | |
| A403 | 40 | 5 | 3'-7" | 2'-8" | 3'-7" | | 9'-10" |
| A404 | 50 | 5 | 3'-7" | 1'-10" | 3'-7" | | 9'-0" |

| NO. | REVISION | BY | DATE |
|---|---|---|---|
| 3 | | | |
| 2 | | | |
| 1 | | | |

| | BY | DATE |
|---|---|---|
| MADE | I.R.P. | 10-69 |
| CHECKED | F.J.C. | 11-69 |
| IN CHARGE | J.E.H. | |

DELAWARE STATE HIGHWAY DEPARTMENT

# DELAWARE TURNPIKE

ROUTE 896 INTERCHANGE IMPROVEMENTS
BRIDGE OVER DELAWARE TURNPIKE

## ABUTMENTS 3 & 4 DETAILS

HOWARD, NEEDLES, TAMMEN & BERGENDOFF
consulting engineers
NEW YORK KANSAS CITY

SCALE: 1/2" = 1'-0" unless noted
CONTRACT NO. 7053
SHEET NO. 5 OF 25

| DELAWARE TURNPIKE | CONT. NO. | TITLE | SHEET NO. | TOTAL SHEETS |
|---|---|---|---|---|
| | 7053 | | 57 | 86 |

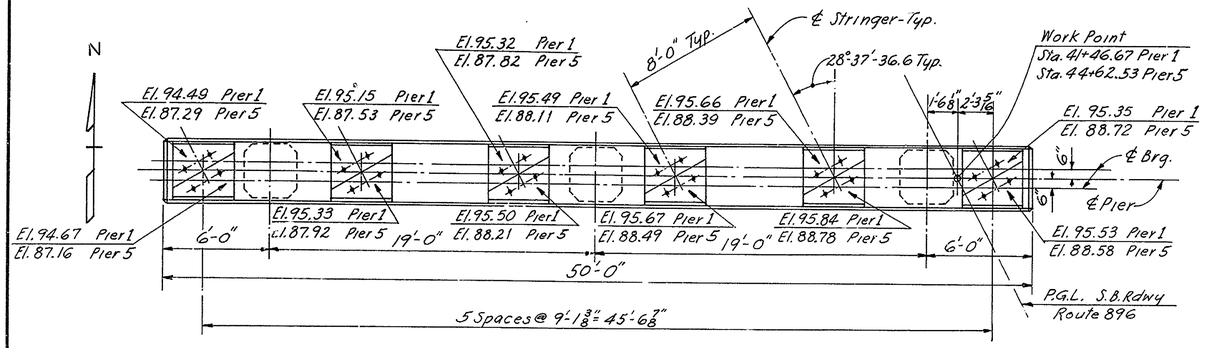


PLAN

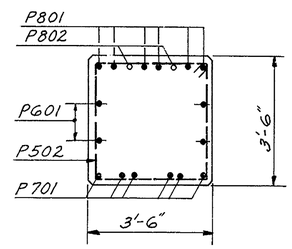


SECTION A-A
Scale ½"=1'-0"

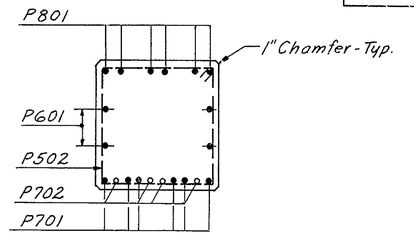


SECTION B-B
Scale ½"=1'-0"

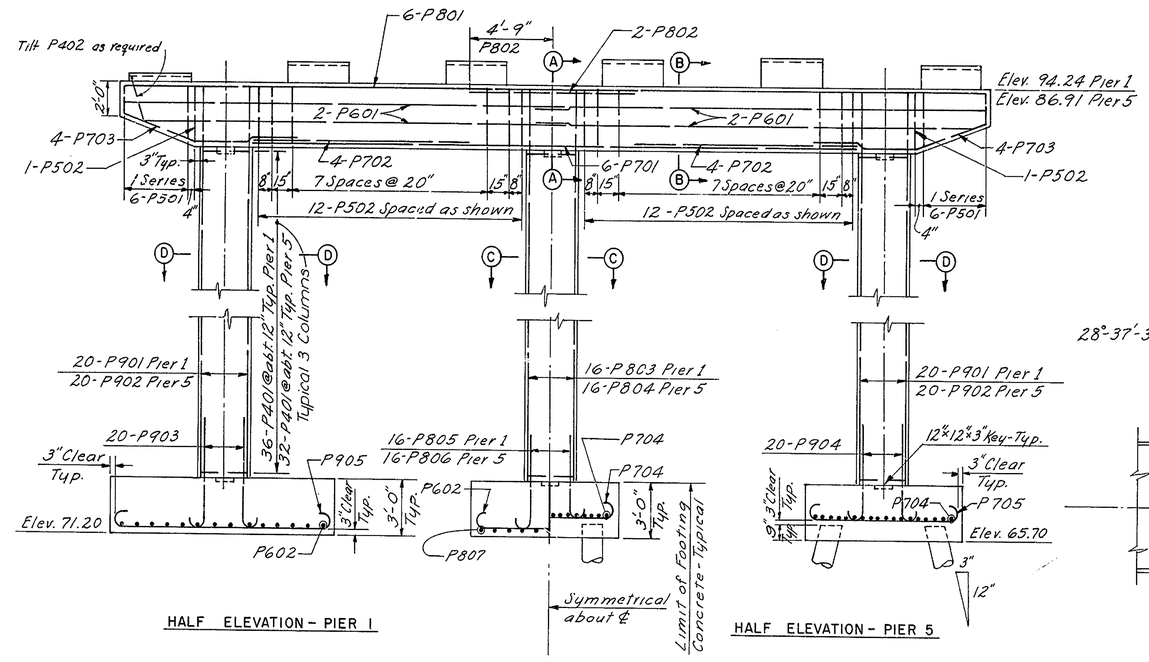


HALF ELEVATION - PIER 1

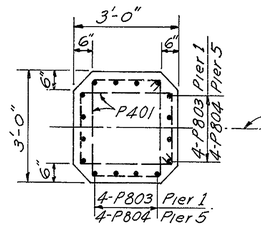


SECTION C-C
Scale ½"=1'-0"

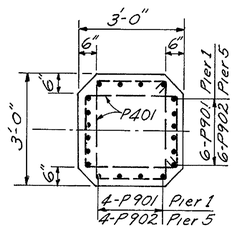


SECTION D-D
Scale ½"=1'-0"




HALF ELEVATION - PIER 5

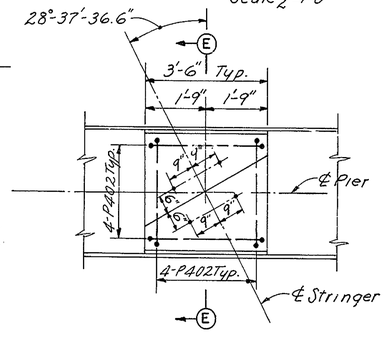


PAD PLAN
Scale ½"=1'-0"

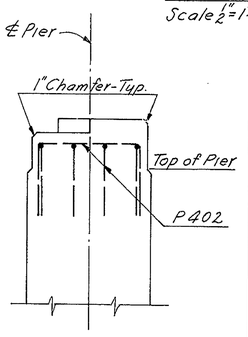


SECTION E-E
Scale ½"=1'-0"

| REINFORCING SCHEDULE | | | | |
|---|---|---|---|---|
| MARK | NO. REQ'D PIER 1 | NO. REQ'D PIER 5 | TYPE | LENGTH |
| P401 | 108 | 96 | 3 | 10'-2" |
| P402 | 48 | 48 | 5 | 8'-8" |
| | | | | |
| | | | | |
| P501 | 2 Series 6 | 2 Series 6 | 3 | 10'-6" to 13'-0" |
| P502 | 26 | 26 | 3 | 13'-6" |
| | | | | |
| P601 | 8 | 8 | Str. | 25'-9" |
| P602 | 41 | | 1 | 9'-10" |
| | | | | |
| P701 | 6 | 6 | Str. | 35'-0" |
| P702 | 8 | 8 | Str. | 11'-3" |
| P703 | 8 | 8 | 6 | 11'-5" |
| P704 | | 68 | 1 | 9'-2" |
| P705 | | 32 | 1 | 10'-2" |
| | | | | |
| | | | | |
| P801 | 6 | 6 | Str. | 49'-8" |
| P802 | 2 | 2 | Str. | 9'-6" |
| P803 | 16 | | Str. | 19'-10" |
| P804 | | 16 | Str. | 18'-0" |
| P805 | 16 | | 2 | 6'-4" |
| P806 | | 16 | 2 | 5'-7" |
| P807 | 11 | | 1 | 13'-8" |
| | | | | |
| P901 | 40 | | Str. | 19'-10" |
| P902 | | 40 | Str. | 18'-0" |
| P903 | 40 | | 2 | 6'-10" |
| P904 | | 40 | 2 | 6'-1" |
| P905 | 22 | | 1 | 15'-0" |
| | | | | |
| | | | | |

BENDING DIAGRAMS

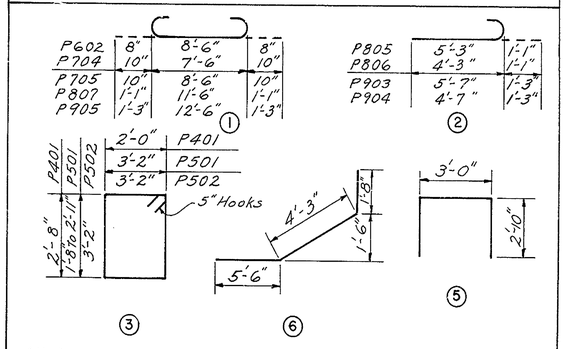


All dimensions are out to out of bars

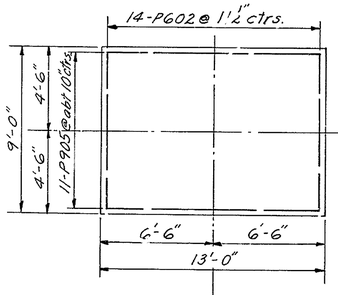


HALF FOOTING PLAN - PIER 1

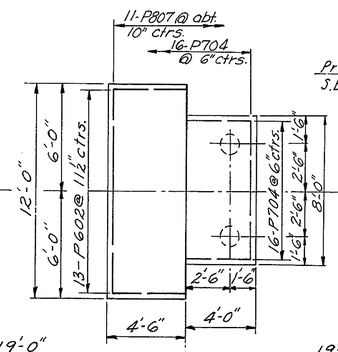


HALF FOOTING PLAN - PIER 5

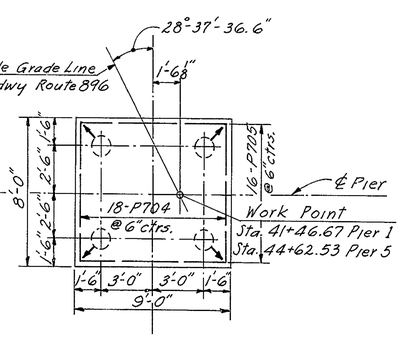


NOTES:

For General Notes, see Sheet No. 1 of 25.
Pad elevations given denote top of finished concrete pad.
For details of anchor bolts for shoes, see Sheet No. 16 of 25
Minimum reinforcing steel concrete cover, 3" in footing, 2" above footing.
For Pile Details and notes, see Sheet No. 3 of 25
For Epoxy Protective Coating limits see detail Sheet 8 of 25.

LEGEND

○ Indicates Vertical Piles

○→ Indicates pile battered 1 on 4 in the direction shown.

| NO. | REVISION | BY | DATE |
|---|---|---|---|
| 3 | | | |
| 2 | | | |
| 1 | | | |

| | BY | DATE |
|---|---|---|
| MADE | F.J.C. | 10-69 |
| CHECKED | J.R.C. | 11-69 |
| IN CHARGE | J.E.H. | |

DELAWARE STATE HIGHWAY DEPARTMENT

# DELAWARE TURNPIKE

ROUTE 896 INTERCHANGE IMPROVEMENTS
BRIDGE OVER DELAWARE TURNPIKE

## PIERS 1 & 5

HOWARD, NEEDLES, TAMMEN & BERGENDOFF
consulting engineers
NEW YORK KANSAS CITY

SCALE: 1"=1'-0" unless Noted
CONTRACT NO. 7053
SHEET NO. 6 OF 25

| DELAWARE TURNPIKE | CONT. NO. | TITLE | SHEET NO. | TOTAL SHEETS |
|---|---|---|---|---|
| | 7053 | | 58 | 86 |

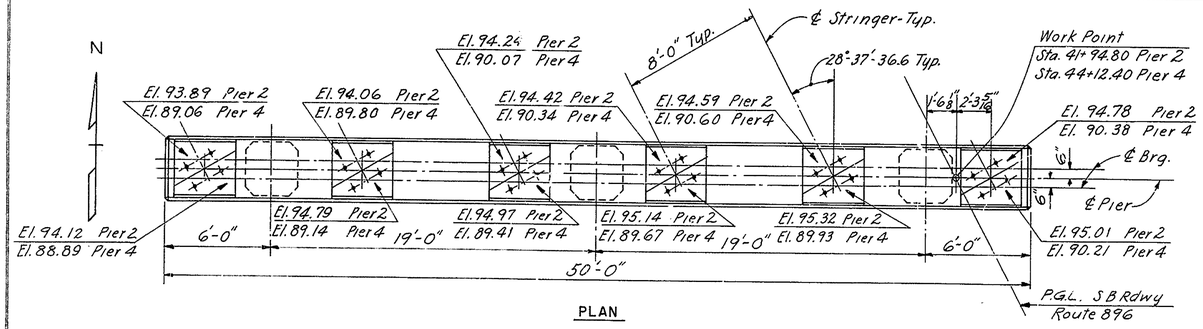


PLAN

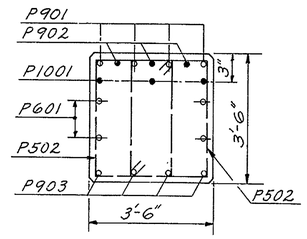


SECTION A-A
Scale 1/2"=1'-0"

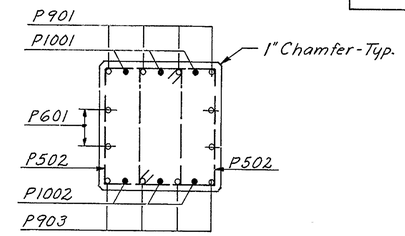


SECTION B-B
Scale 1/2"=1'-0"

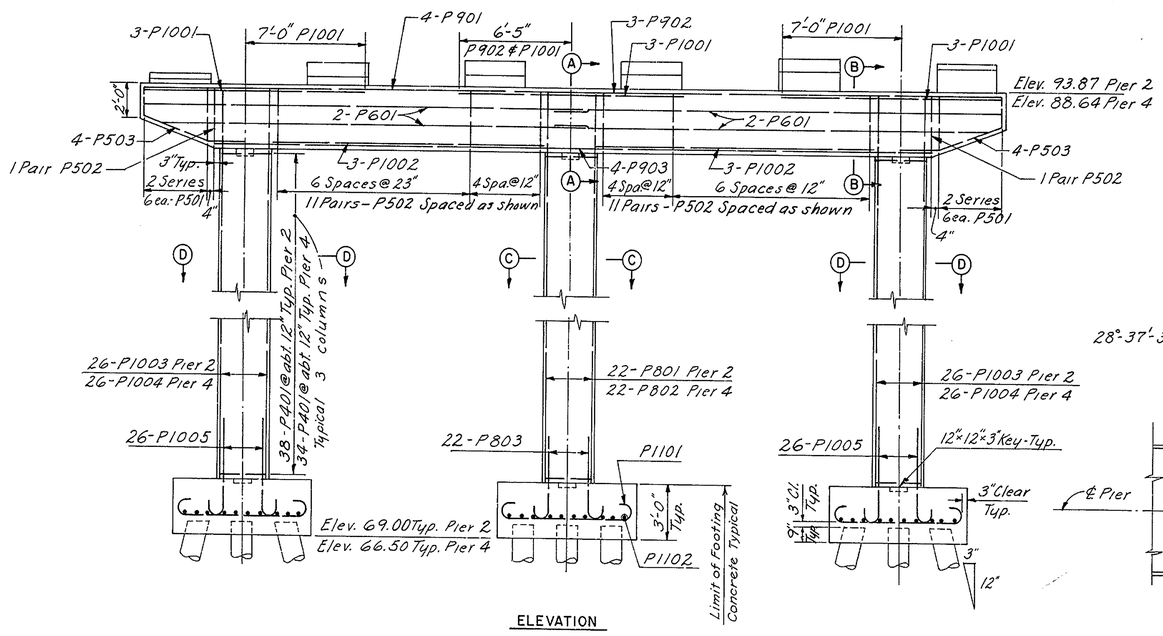


ELEVATION

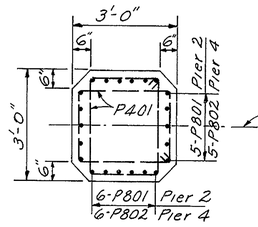


SECTION C-C
Scale 1/2"=1'-0"

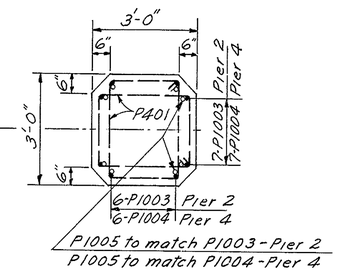


SECTION D-D
Scale 1/2"=1'-0"

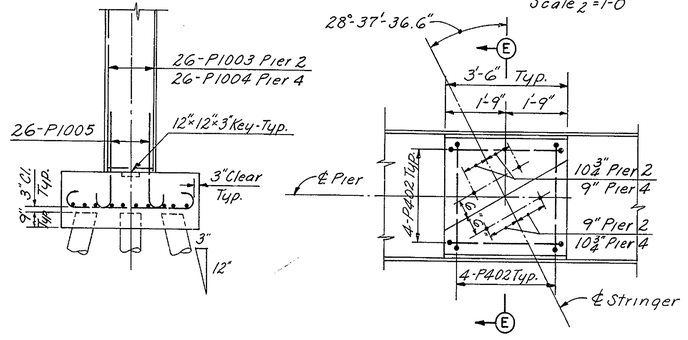


PAD PLAN
Scale 1/2"=1'-0"

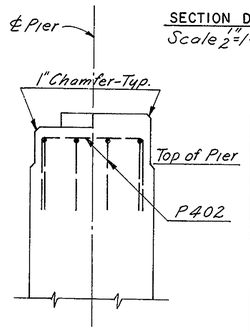


SECTION E-E
Scale 1/2"=1'-0"

| REINFORCING SCHEDULE | | | | |
|---|---|---|---|---|
| MARK | NO. REQ'D PIER 2 | NO. REQ'D PIER 4 | TYPE | LENGTH |
| P401 | 114 | 102 | 3 | 10'-2" |
| P402 | 48 | 48 | 5 | 8'-2" |
| | | | | |
| | | | | |
| P501 | 4 Ser. 6 ea. | 4 Ser. 6 ea. | 3 | 8'-2" to 10'-8" |
| P502 | 48 | 48 | 3 | 11'-2" |
| P503 | 8 | 8 | 4 | 6'-0" |
| | | | | |
| | | | | |
| P601 | 8 | 8 | Str. | 25'-10" |
| | | | | |
| | | | | |
| P801 | 22 | | Str. | 21'-8" |
| P802 | | 22 | Str. | 19'-0" |
| P803 | 22 | 22 | 2 | 5'-7" |
| | | | | |
| | | | | |
| P901 | 4 | 4 | Str. | 49'-8" |
| P902 | 3 | 3 | Str. | 12'-10" |
| P903 | 4 | 4 | Str. | 41'-6" |
| | | | | |
| P1001 | 9 | 9 | Str. | 12'-10" |
| P1002 | 6 | 6 | Str. | 16'-0" |
| P1003 | 52 | | Str. | 21'-8" |
| P1004 | | 52 | Str. | 19'-0" |
| P1005 | 52 | 52 | 2 | 6'-8" |
| | | | | |
| P1101 | 30 | 30 | 1 | 10'-8" |
| P1102 | 30 | 30 | 1 | 11'-8" |

BENDING DIAGRAMS

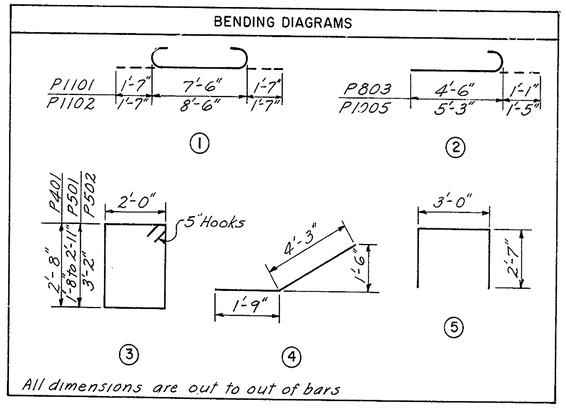


All dimensions are out to out of bars

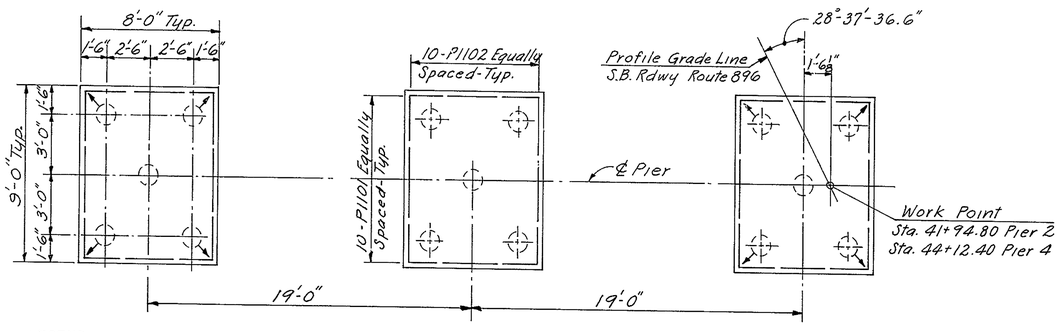


PILE PLAN

LEGEND:

○ Indicates Vertical Piles

○→ Indicates pile battered 1 on 4 in the direction shown.

NOTES:

For General Notes, see Sheet No. 1 of 25.
Pad elevations given denote top of finished concrete pad.
For details of anchor bolts for shoes, see Sheet No. 16 of 25.
Minimum reinforcing steel concrete cover, 3" in footing, 2" above footing.
For Pile Details and notes, see Sheet No. 3 of 25.
For Epoxy Protective Coating limits see Detail on Sheet no. 8 of 25.

| NO. | REVISION | BY | DATE |
|---|---|---|---|
| 3 | | | |
| 2 | | | |
| 1 | | | |

| | BY | DATE |
|---|---|---|
| MADE | F.J.C. | 2-69 |
| CHECKED | J.R.C. | 11-69 |
| IN CHARGE | JEH | |

DELAWARE STATE HIGHWAY DEPARTMENT

# DELAWARE TURNPIKE

ROUTE 896 INTERCHANGE IMPROVEMENTS
BRIDGE OVER DELAWARE TURNPIKE

## PIERS 2 & 4

HOWARD, NEEDLES, TAMMEN & BERGENDOFF
consulting engineers
NEW YORK KANSAS CITY

SCALE: 1/4"=1'-0" unless noted
CONTRACT NO. 7053
SHEET NO. 7 OF 25

| DELAWARE TURNPIKE | CONT. NO | TITLE | SHEET NO | TOTAL SHEETS |
|---|---|---|---|---|
| | 7053 | | 59 | 86 |

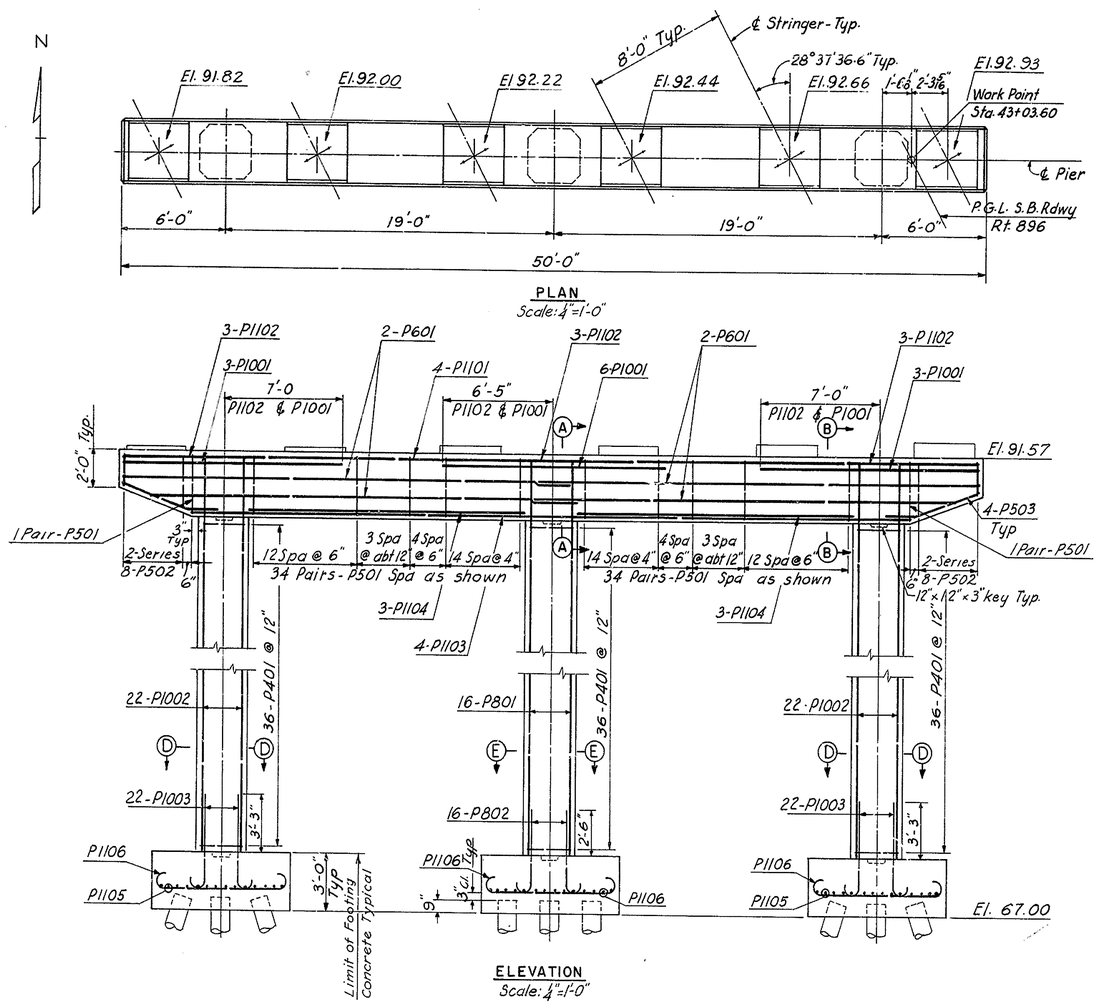


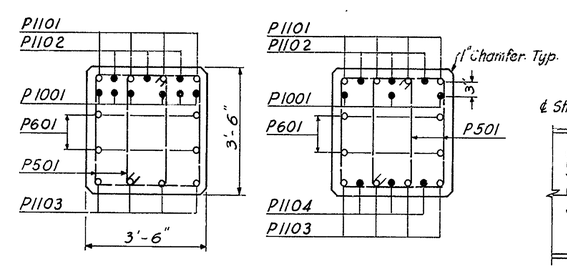


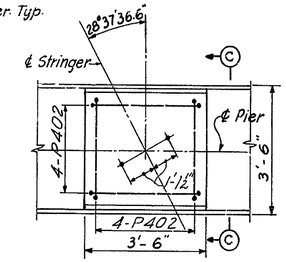


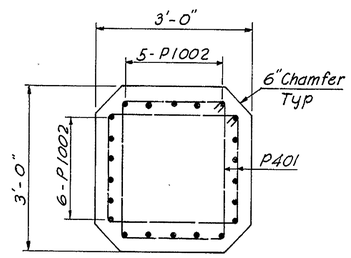


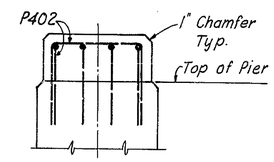


PAD DETAIL
Scale: ½"=1'-0"

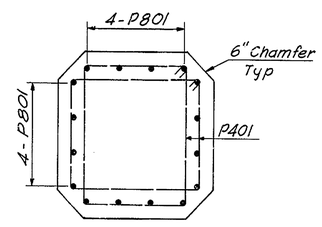


COLUMN DETAIL
Scale: ¾"=1'-0"

NOTES:

For General Notes see Sheet No. 1 of 25.

Pad elevations given denote top of finished concrete pad.

For details of anchor bolts for Shoes, see Sheet No. 16 of 25

Min. reinforcing steel concrete cover 3" ftg., 2" above ftg.

For Pile Details and notes see Sheet No. 3 of 25.

| REINFORCING SCHEDULE | | | |
|---|---|---|---|
| MARK | NO | TYPE | LENGTH |
| P401 | 108 | 3 | 10'-2" |
| P402 | 48 | 5 | 7'-4" |
| P501 | 140 | 3 | 11'-2" |
| P502 | 4 Ser 8 ea | 3 | 8'-2" to 10'-10" |
| P503 | 8 | 4 | 6'-0" |
| P601 | 8 | Str | 25'-10" |
| P801 | 16 | Str | 21'-5" |
| P802 | 16 | 2 | 5'-5" |
| P1001 | 12 | Str | 12'-10" |
| P1002 | 44 | " | 21'-5" |
| P1003 | 44 | 2 | 6'-6" |
| P1101 | 4 | Str | 49'-8" |
| P1102 | 9 | " | 12'-10" |
| P1103 | 4 | " | 41'-6" |
| P1104 | 6 | " | 16'-0" |
| P1105 | 28 | 1 | 9'-8" |
| P1106 | 44 | 1 | 10'-8" |

BENDING DIAGRAMS

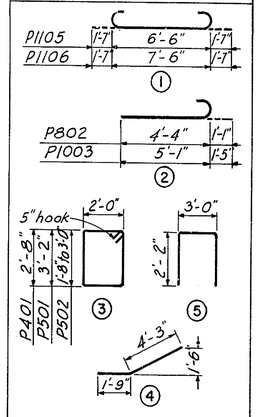


All Dimensions are out to out of bars

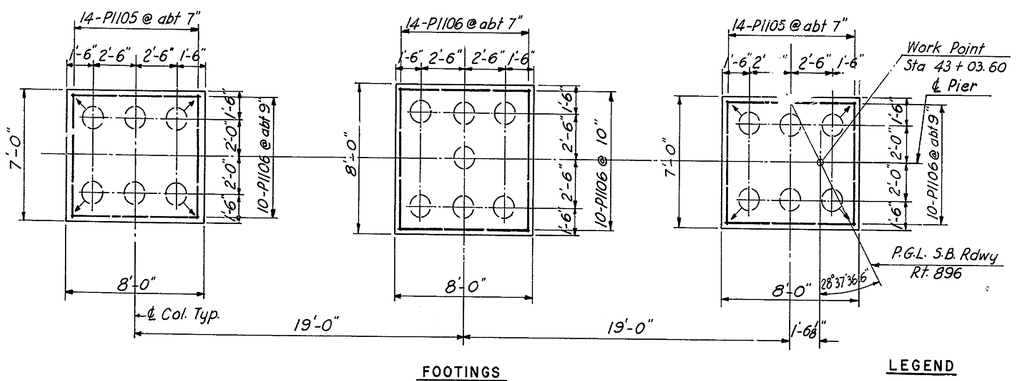


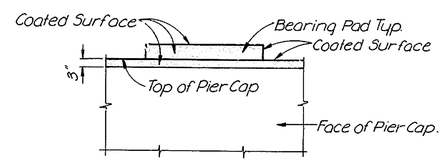


EPOXY PROTECTIVE COATING FOR CONCRETE LIMIT DETAIL
No Scale

LEGEND

○ Indicates Vertical Piles

○→ Indicates pile battered 1 on 4 in the direction shown.

| NO. | REVISION | BY | DATE |
|---|---|---|---|
| 3 | | | |
| 2 | | | |
| 1 | | | |

| | BY | DATE |
|---|---|---|
| MADE | IRP | 2-69 |
| CHECKED | J.R.C. | 11-69 |
| IN CHARGE | JEH | |

DELAWARE STATE HIGHWAY DEPARTMENT

# DELAWARE TURNPIKE

ROUTE 896 INTERCHANGE IMPROVEMENTS
BRIDGE OVER DELAWARE TURNPIKE
PIER 3

HOWARD, NEEDLES, TAMMEN & BERGENDOFF
consulting engineers
NEW YORK KANSAS CITY

SCALE: as noted
CONTRACT NO. 7053
SHEET NO. 8 OF 25

| DELAWARE TURNPIKE | CONT. NO | TITLE | SHEET NO | TOTAL SHEETS |
|---|---|---|---|---|
| | 7053 | | 60 | 86 |

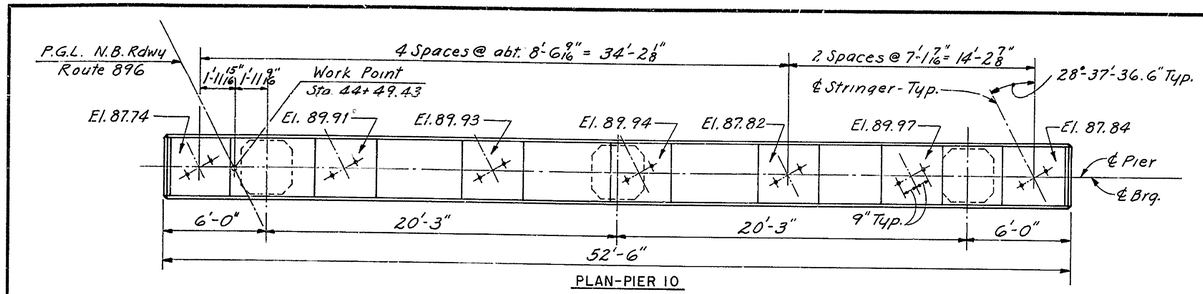


PLAN-PIER 10

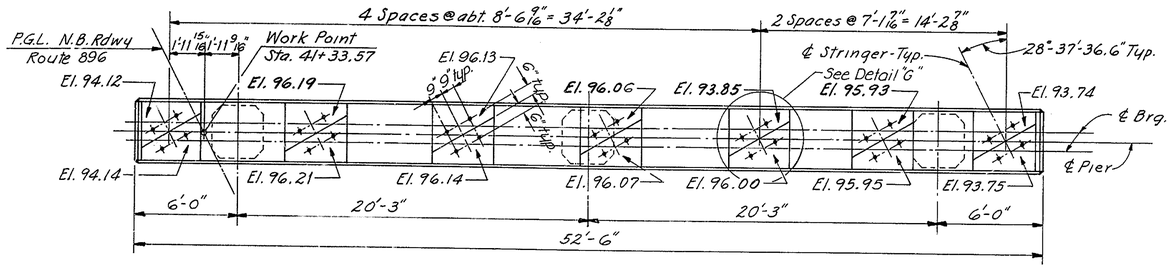


PLAN-PIER 6

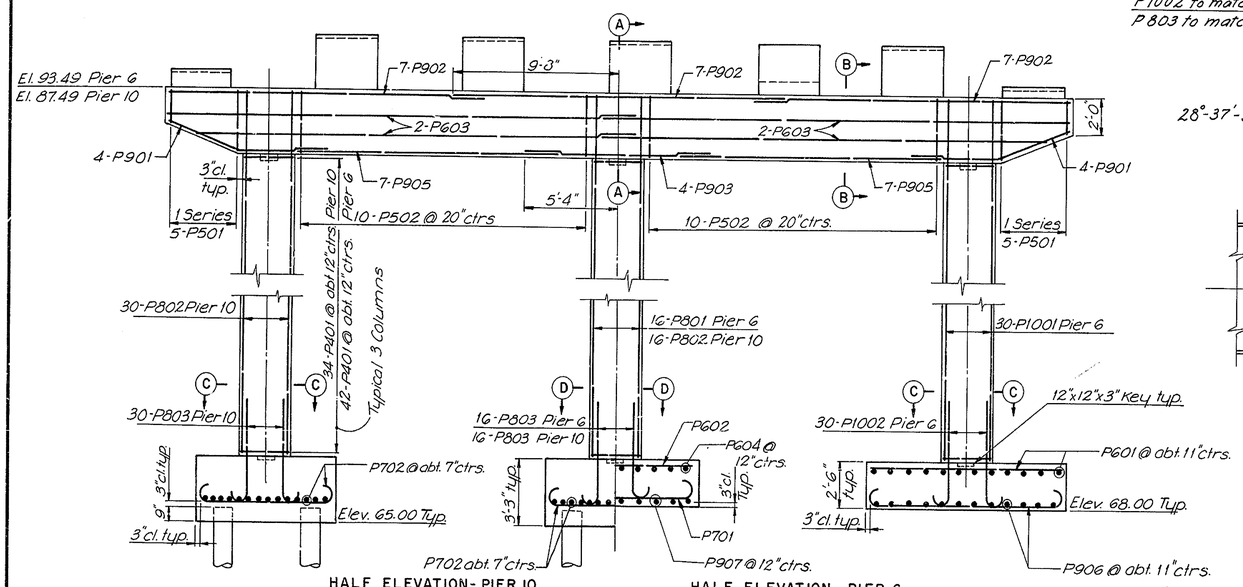


HALF ELEVATION- PIER 10

HALF ELEVATION - PIER 6

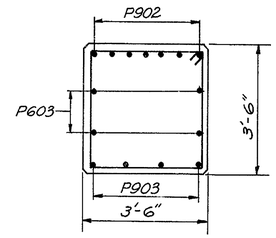


SECTION A-A
Scale 1/2" = 1'-0"

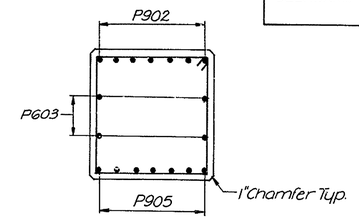


SECTION B-B
Scale 1/2" = 1'-0"

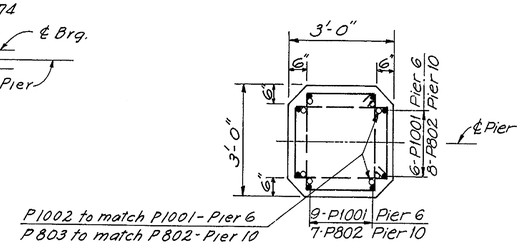


SECTION C-C
Scale 1/2" = 1'-0"

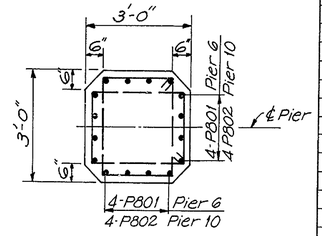


SECTION D-D
Scale 1/2" = 1'-0"

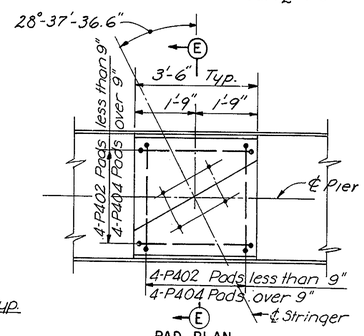


PAD PLAN
Scale 1/2" = 1'-0"

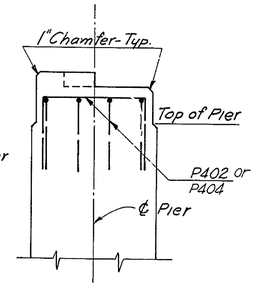


SECTION E-E
Scale 1/2" = 1'-0"

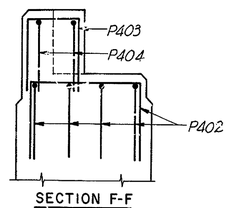


SECTION F-F
Scale 1/2" = 1'-0"

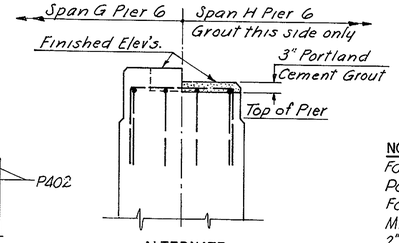


ALTERNATE
SECTION E-E
Scale 1/2" = 1'-0"

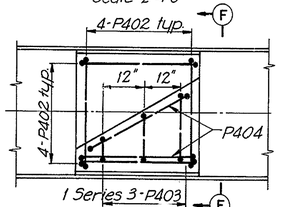


DETAIL "G"
Scale 1/2" = 1'-0"

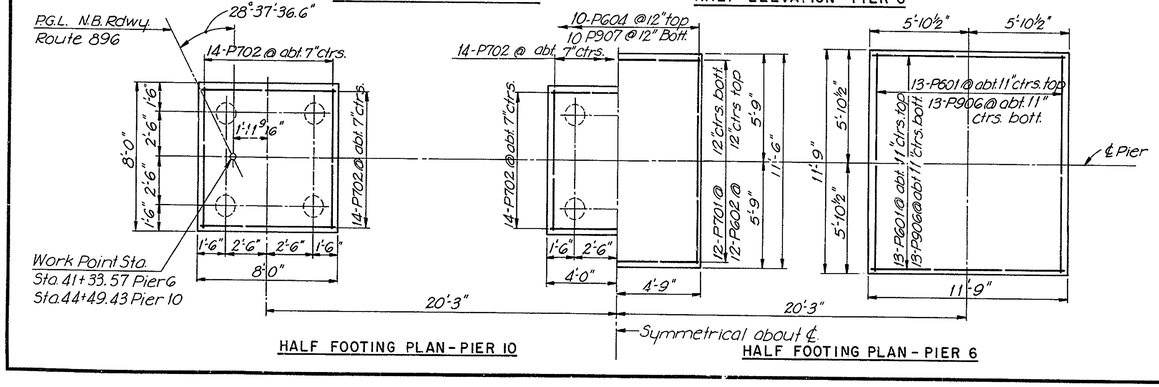


HALF FOOTING PLAN - PIER 10

HALF FOOTING PLAN - PIER 6

## REINFORCING SCHEDULE

| MARK | NO. REQ'D PIER 6 | NO. REQ'D PIER 10 | TYPE | LENGTH |
|---|---|---|---|---|
| P401 | 126 | 132 | 3 | 10'-2" |
| P402 | 24 | 24 | 5 | 6'-6" |
| P403 | 1 Series 3 | | 5 | 7'-8" to 8'-10" |
| P404 | 34 | 32 | 5 | 10'-6" |
| P501 | 2 Series 5 | 2 Series 5 | 3 | 10'-6" to 13'-0" |
| P502 | 20 | 20 | 3 | 13'-6" |
| | | | | |
| P601 | 52 | | Str. | 11'-3" |
| P602 | 12 | | Str. | 9'-0" |
| P603 | 8 | 8 | Str. | 27'-0" |
| P604 | 10 | | Str. | 11'-0" |
| | | | | |
| P701 | 12 | | 1 | 10'-8" |
| P702 | | 84 | 1 | 9'-2" |
| | | | | |
| P801 | 16 | | Str. | 22'-8" |
| P802 | | 76 | Str. | 18'-11" |
| P803 | 16 | 76 | 2 | 5'-10" |
| | | | | |
| P901 | 8 | 8 | 6" | 11'-5" |
| P902 | 21 | 21 | Str. | 19'-4" |
| P903 | 4 | 4 | Str. | 10'-8" |
| P904 | 10 | | 1 | 13'-6" |
| P905 | 14 | 14 | Str. | 14'-6" |
| P906 | 26 | | 1 | 13'-9" |
| | | | | |
| | | | | |
| | | | | |
| P1001 | 60 | | Str. | 22'-8" |
| P1002 | 60 | | 2 | 6'-11" |
| | | | | |
| | | | | |

## BENDING DIAGRAMS

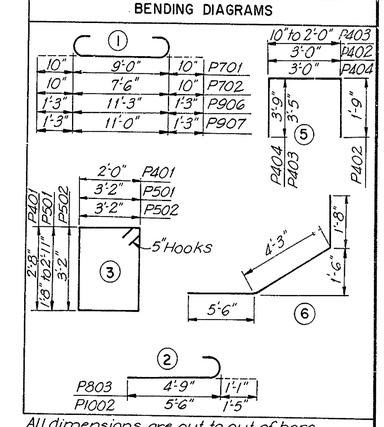


All dimensions are out to out of bars.

**NOTES:**

For General Notes see sheet No. 1 of 25.
Pad elevations given denotes top of finished concrete pad.
For Details of anchor bolts for shoes, see Sheet No. 16 of 25.
Minimum reinforcing steel concrete cover, 3" in footing, 2" above footing.
For Pile details and notes, see sheet No. 3 of 25
For Epoxy Protective Coating limits see detail Sheet No. 8 of 25

| NO. | REVISION | BY | DATE |
|---|---|---|---|
| 3 | | | |
| 2 | | | |
| 1 | | | |

| | BY | DATE |
|---|---|---|
| MADE | F.J.C./D.L.S. | 11-69 |
| CHECKED | J.R.C. | 11-69 |
| IN CHARGE | J.E.H. | |

DELAWARE STATE HIGHWAY DEPARTMENT

# DELAWARE TURNPIKE

ROUTE 896 INTERCHANGE IMPROVEMENTS
BRIDGE OVER DELAWARE TURNPIKE

## PIERS 6 & 10

HOWARD, NEEDLES, TAMMEN & BERGENDOFF
consulting engineers
NEW YORK KANSAS CITY

SCALE: 1/4" = 1'-0" unless Noted
CONTRACT NO. 7053
SHEET NO. 9 OF 25

| DELAWARE TURNPIKE | CONT. NO. | TITLE | SHEET NO. | TOTAL SHEETS |
|---|---|---|---|---|
| | 7053 | | 61 | 86 |

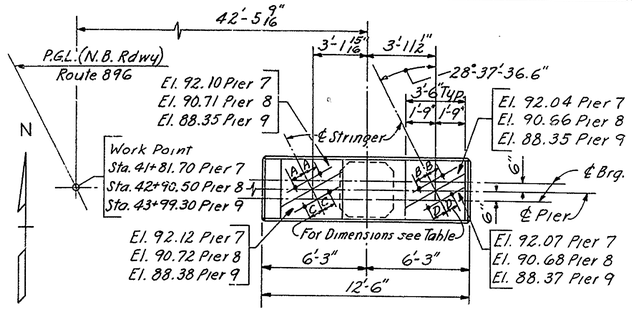


PLAN

| ANCHOR BOLT LOCATION TABLE | | | | |
|---|---|---|---|---|
| PIER | DIM. A | DIM. B | DIM. C | DIM. D |
| 7 | 11" | 11" | 9" | 7½" |
| 8 | 11" | 11" | 10" | 10" |
| 9 | 9" | 8¼" | 10" | 10" |

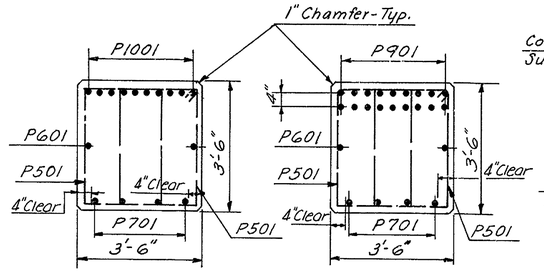


SECTION A-A
Scale 1/2" = 1'-0"




SECTION B-B
Scale 1/2" = 1'-0"

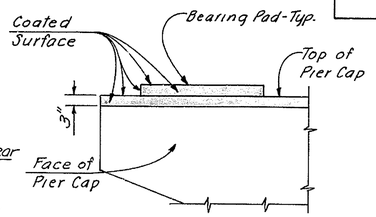


APPLICATION LIMITS OF EPOXY PROTECTIVE COATING FOR CONCRETE
Scale 1/2" = 1'-0"

| REINFORCING SCHEDULE | | | | | |
|---|---|---|---|---|---|
| MARK | NO. REQ'D PIER 7 | NO. REQ'D PIER 8 | NO. REQ'D PIER 9 | TYPE | LENGTH |
| P401 | 34 | 50 | 32 | 3 | 12'-2" |
| | | | | | |
| | | | | | |
| P501 | 4 Series 6 ea. | 4 Series 10 ea. | 4 Series 6 ea. | 3 | 8'-6" to 11'-0" |
| | | | | | |
| | | | | | |
| P601 | 2 | 2 | 2 | Str. | 12'-2" |
| P602 | 30 | | | Str. | 13'-6" |
| P603 | | 30 | | Str. | 14'-0" |
| | | | | | |
| | | | | | |
| | | | | | |
| | | | | | |
| P701 | 4 | 4 | 4 | 6 | 12'-6" |
| | | | | | |
| | | | | | |
| P901 | | 18 | | Str. | 12'-2" |
| | | | | | |
| | | | | | |
| P1001 | 10 | | 10 | Str. | 12'-2" |
| P1002 | 38 | | | Str. | 19'-6" |
| P1003 | | 34 | | Str. | 27'-3" |
| P1004 | 38 | 34 | | 2 | 7'-2" |
| | | | | | |
| P1101 | | | 32 | 1 | 16'-2" |
| P1102 | | | 36 | Str. | 18'-0 |
| P1103 | | | 36 | 2 | 7'-8" |
| P1104 | 32 | | | 1 | 16'-8" |
| P1105 | | 32 | | 1 | 17'-2" |

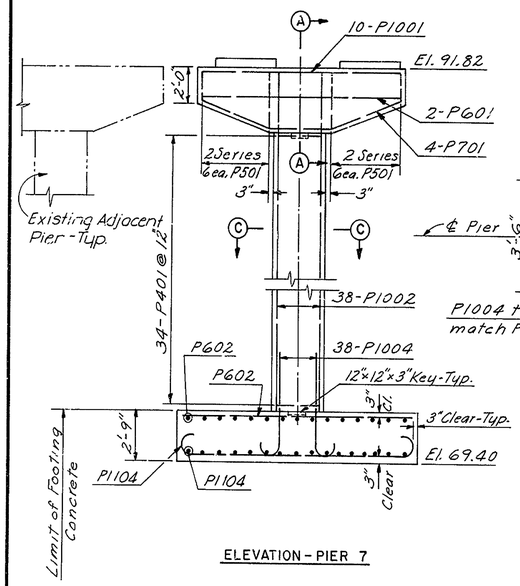


ELEVATION - PIER 7

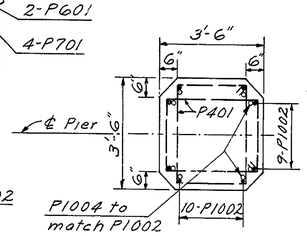


SECTION C-C
Scale 1/2" = 1'-0"

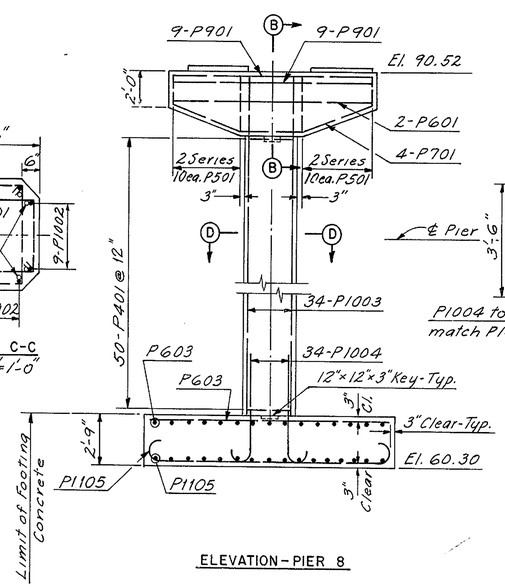


ELEVATION - PIER 8

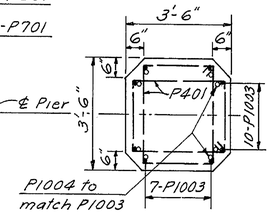


SECTION D-D
Scale 1/2" = 1'-0"

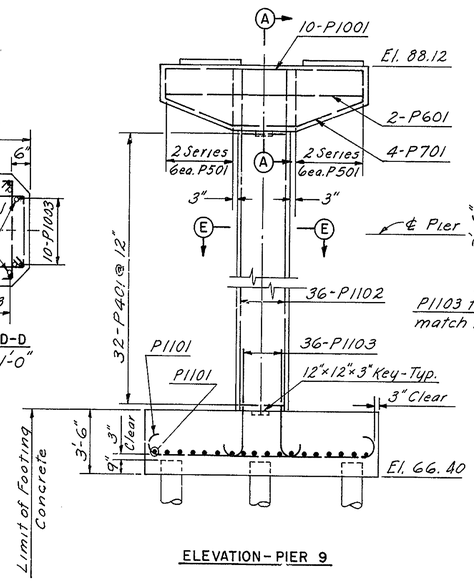


ELEVATION - PIER 9

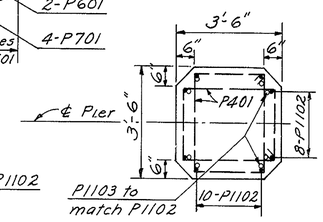


SECTION E-E
Scale 1/2" = 1'-0"

BENDING DIAGRAMS

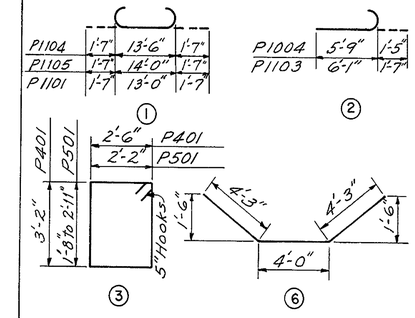


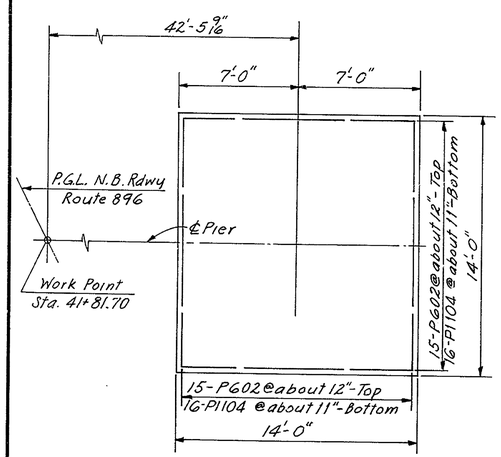


FOOTING PLAN - PIER 7

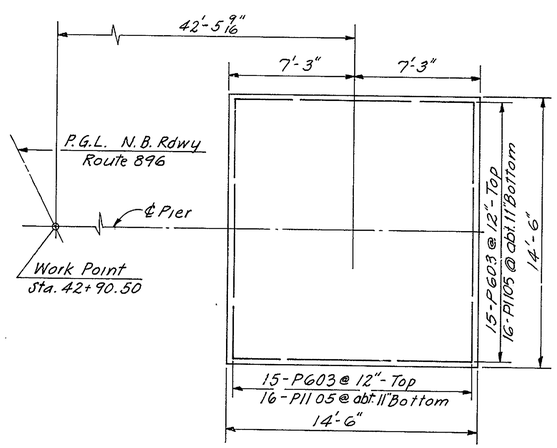


FOOTING PLAN - PIER 8

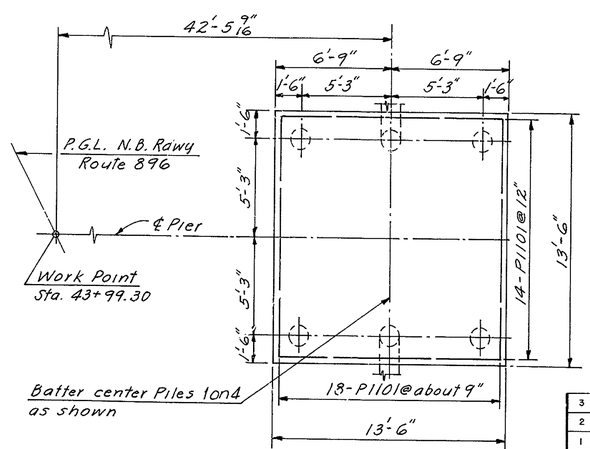


FOOTING PLAN - PIER 9

NOTES:

For General Notes, see Sheet No. 1 of 25
Pad elevations given denote top of finished concrete pad.
For details of anchor bolts for shoes, see Sheet No. 16 of 25
Minimum reinforcing steel concrete cover, 3" in footing, 2" above footing, unless noted.
For Pile Details and notes, see Sheet No. 3 of 25

| NO. | REVISION | BY | DATE |
|---|---|---|---|
| 3 | | | |
| 2 | | | |
| 1 | | | |

| | BY | DATE |
|---|---|---|
| MADE | F.J.C. | 11-69 |
| CHECKED | J.R.C. | 11-69 |
| IN CHARGE | J.E.H. | |

DELAWARE STATE HIGHWAY DEPARTMENT

# DELAWARE TURNPIKE

ROUTE 896 INTERCHANGE IMPROVEMENTS
BRIDGE OVER DELAWARE TURNPIKE

## PIERS 7-8-9

HOWARD, NEEDLES, TAMMEN & BERGENDOFF
consulting engineers
NEW YORK KANSAS CITY

SCALE: 1/4" = 1'-0" unless Noted
CONTRACT NO. 7053
SHEET NO. 10 OF 25

| DELAWARE TURNPIKE | CONT. NO. | TITLE | SHEET NO. | TOTAL SHEETS |
|---|---|---|---|---|
| | 7053 | | 62 | 86 |

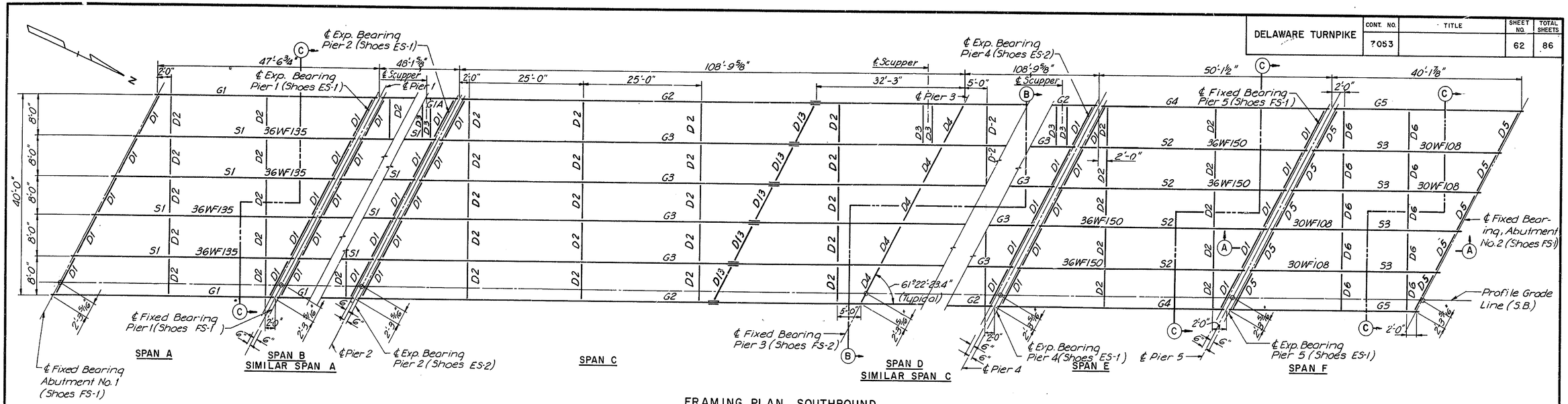


FRAMING PLAN SOUTHBOUND

Scale 1"=10'-0"

| DIAPHRAGM. SCHEDULE | |
|---|---|
| D1 | 18 [ 42.7 |
| D2 | 18 [ 42.7 |
| D3 | 15 [ 33.9 |
| D4 | 18 [ 42.7 |
| D5 | 15 [ 33.9 |
| D6 | 15 [ 33.9 |
| D13 | 18 [ 42.7 |

CAMBER INCREMENTS FOR DEAD LOADS (Inches)

| | S1 | | S2 | | S3 | | G1 | | G4 | | G5 | | G1A | |
|---|---|---|---|---|---|---|---|---|---|---|---|---|---|---|
| | ¼ & ¾L | ½L | ¼ & ¾L | ½L | ¼ & ¾L | ½L | ¼ & ¾L | ½L | ¼ & ¾L | ½L | ¼ & ¾L | ½L | ¼ & ¾L | ½L |
| Structural Steel | .05 | .08 | .06 | .08 | .04 | .06 | .04 | .05 | .04 | .06 | .02 | .03 | .04 | .05 |
| Concrete Deck Slab | .29 | .39 | .29 | .41 | .25 | .34 | .23 | .33 | .28 | .38 | .13 | .18 | .23 | .33 |
| Par., Rail & 2" Wearing Surface | .05 | .06 | .05 | .07 | .04 | .05 | .03 | .05 | .04 | .06 | .02 | .03 | .03 | .05 |
| Full Dead Load | .39 | .53 | .40 | .56 | .33 | .45 | .30 | .43 | .36 | .50 | .17 | .24 | .30 | .43 |
| Vertical Curve | .00 | .00 | .25 | .33 | .16 | .22 | .00 | .00 | .25 | .33 | .16 | .22 | .13 | .17 |
| Total Camber | .39 | .53 | .65 | .89 | .48 | .67 | .30 | .43 | .61 | .83 | .33 | .46 | .43 | .60 |

Note: For total camber less than 1", S1, S2 & S3 natural mill camber shall be turned upward.

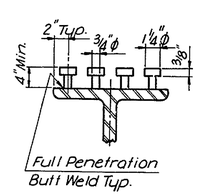


SHEAR STUD DETAIL

No Scale

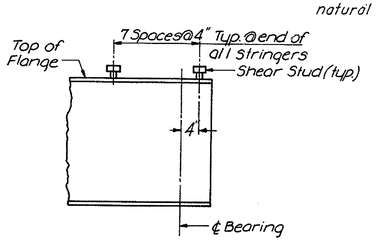


DETAIL A

No Scale

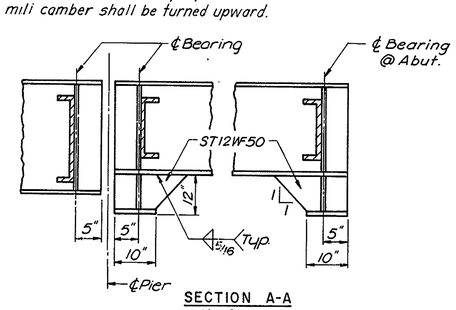


SECTION A-A

No Scale

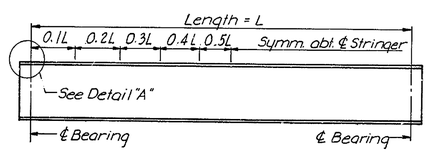


STRINGER ELEVATION

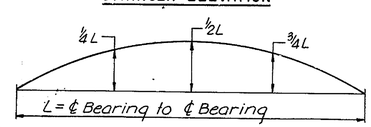


DEFLECTION DIAGRAM

| STRINGER SCHEDULE | | | | | |
|---|---|---|---|---|---|
| STRINGER | LENGTH ℄ BRG. TO ℄ BRG. | SHEAR STUD SPACING 0.1L | 0.2L | 0.3L | 0.4L | 0.5L |
| S1 | 46'-11 15/16" | 8" | 9" | 10" | 12" | 14" |
| S2 | 48'-11 3/16" | 8" | 9" | 11" | 12" | 14" |
| S3 | 39'-7 1/16" | 7" | 8" | 9" | 11" | 12" |
| | | | | | | |
| G1 & G1A | 46'-11 15/16" | 10" | 12" | 13" | 15" | 17" |
| G4 | 48'-11 13/16" | 10" | 11" | 13" | 15" | 17" |
| G5 | 39'-7 1/16" | 10" | 12" | 14" | 16" | 18" |
| | | | | | | |

Note: Shear Stud Spacing shown is maximum spacing.

NOTES:

Details for Stringers G1, G1A, G2, G3, G4, & G5 See sheet no. 13 of 25.

For details and location of Diaphragms D3 supporting scupper see sheet No. 24 of 25.

For sections B-B and C-C see sheet No. 17 of 25.

For shoe details see sheet No. 16 of 25.

For General Notes see sheet No. 1 of 25.

| NO. | REVISION | BY | DATE |
|---|---|---|---|
| 3 | | | |
| 2 | | | |
| 1 | | | |

| | BY | DATE |
|---|---|---|
| MADE | D.L.S. | 11-69 |
| CHECKED | J.B.G. | 11-69 |
| IN CHARGE | J.E.H. | |

DELAWARE STATE HIGHWAY DEPARTMENT

DELAWARE TURNPIKE

ROUTE 896 INTERCHANGE IMPROVEMENTS

BRIDGE OVER DELAWARE TURNPIKE

FRAMING PLAN

HOWARD, NEEDLES, TAMMEN & BERGENDOFF consulting engineers

NEW YORK KANSAS CITY

SCALE: As shown

CONTRACT NO. 7053

SHEET NO. 11 OF 25

| DELAWARE TURNPIKE | CONT. NO. | TITLE | SHEET NO. | TOTAL SHEETS |
|---|---|---|---|---|
| | 7053 | | 63 | 86 |

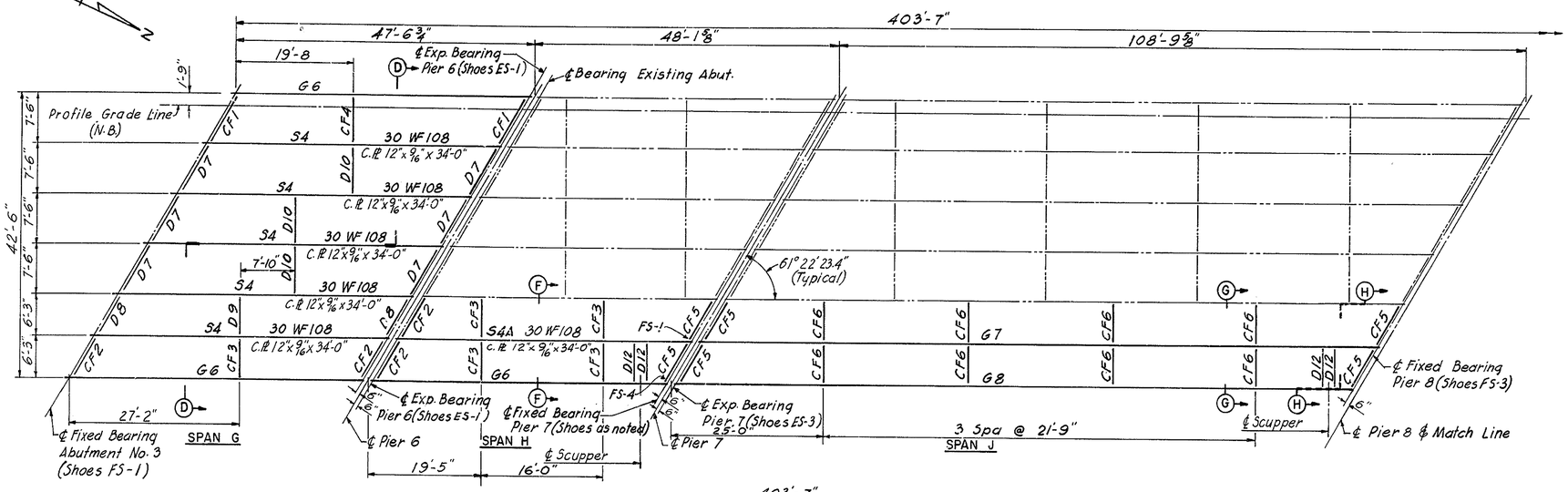


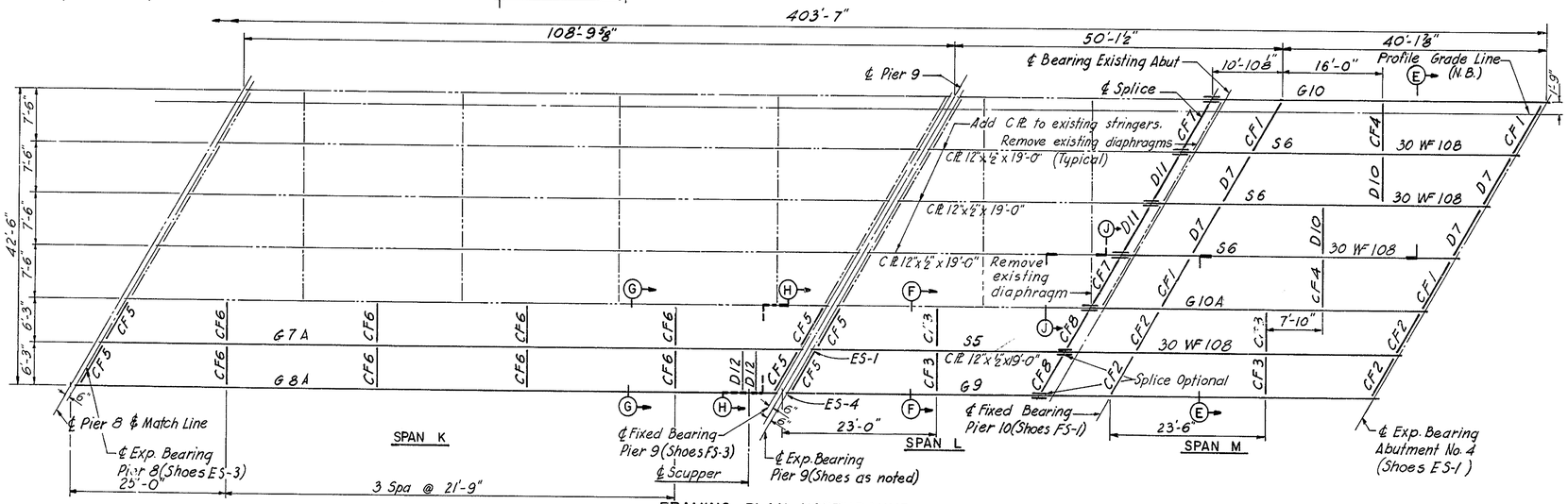


FRAMING PLAN NORTHBOUND

Scale: 1" = 10'-0"

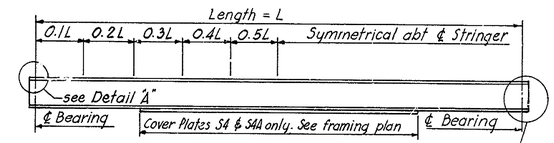


STRINGER ELEVATION

see Detail "D" S4A @ ℄ Brg Pier 7 only

| DIAPHRAGM SCHEDULE | |
|---|---|
| D7 | 15 [ 33.9 |
| D8 | 15 [ 33.9 |
| D9 | 15 [ 33.9 |
| D10 | 15 [ 33.9 |
| D11 | 15 [ 33.9 |
| D12 | 15 [ 33.9 |

| STRINGER SCHEDULE | | | | | | |
|---|---|---|---|---|---|---|
| STRINGER | LENGTH ℄ BRG TO ℄ BRG | SHEAR STUD SPACING 0.1L | 0.2L | 0.3L | 0.4L | 0.5L |
| S4 & S4A | 46'-11⅞" | 6" | 8" | 10" | 12" | 17" |
| | | | | | | |
| | | | | | | |
| G6 | 46'-11⅞" | 12" | 15" | 18" | 21" | 24" |
| G7 & G7A | 107'-8" | 9" | 11" | 15" | 21" | 24" |
| G8 & G8A | 107'-8" | 9" | 11" | 15" | 21" | 24" |
| | | | | | | |
| | | | | | | |

Note: Shear Stud spacing shown is maximum spacing.

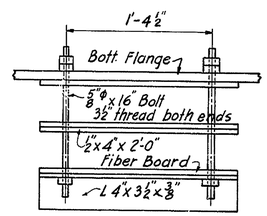


TEL. CONDUIT SUPPORT

Scale: 1½" = 1'-0"

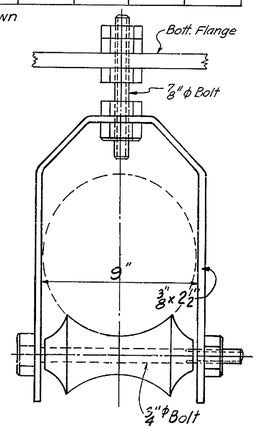


GAS MAIN SUPPORT

Scale: 3" = 1'-0"

SUPPORTS FOR EXISTING UTILITIES

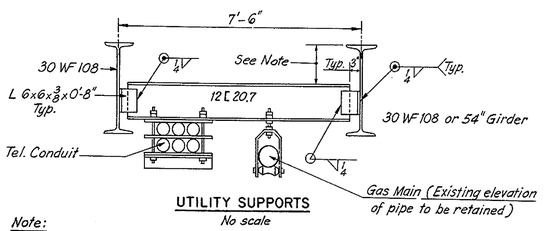


UTILITY SUPPORTS

No scale

Note:

12 [ 20.7 channels shall be spaced at 5'-0" ctrs. throughout lengthened and new spans. Telephone supports shall be fastened to each 12 [ 20.7 channel. Gas Main supports shall be fastened to alternate 12 [ 20.7 channels.

Support channels shall be set to accommodate the existing utility locations as directed.

For additional details of utility supports see this sheet.

NOTES:

For General Notes see sheet No. 1 of 25.

For detail regarding the 3" block-out of existing exterior stringers, adjacent to the widening, for the sliding plate joint see sheet No. 23 of 25

For details of stringers S6, G10 and G10A see sheet No. 14 of 25.

For details of stringers G6 see sheets No. 14 and 15 of 25.

For details of stringers S5 and G9 see sheet No. 15 of 25.

For stringers S4 and S4A camber increments see sheet No. 15 of 25.

For detail "A" and shear stud detail see sheet No. 11 of 25.

For detail "D" see sheet No. 14 of 25.

For sections D-D thru J-J see sheet No. 17 of 25.

For shoe details see sheet No. 16 of 25.

For details and location of Diaphragms D12 supporting scupper see sheet No. 24 of 25.

| NO. | REVISION | BY | DATE |
|---|---|---|---|
| 3 | | | |
| 2 | | | |
| 1 | | | |

| | BY | DATE |
|---|---|---|
| MADE | I.R.P. | 10-69 |
| CHECKED | J.B.G. | 11-69 |
| IN CHARGE | J.E.H. | |

DELAWARE STATE HIGHWAY DEPARTMENT

DELAWARE TURNPIKE

ROUTE 896 INTERCHANGE IMPROVEMENTS
BRIDGE OVER DELAWARE TURNPIKE

FRAMING PLAN

HOWARD, NEEDLES, TAMMEN & BERGENDOFF
consulting engineers
NEW YORK KANSAS CITY

SCALE: as noted
CONTRACT NO. 7053
SHEET NO. 12 OF 25

| DELAWARE TURNPIKE | CONT. NO. | TITLE | SHEET NO. | TOTAL SHEETS |
|---|---|---|---|---|
| | 7053 | | 64 | 86 |

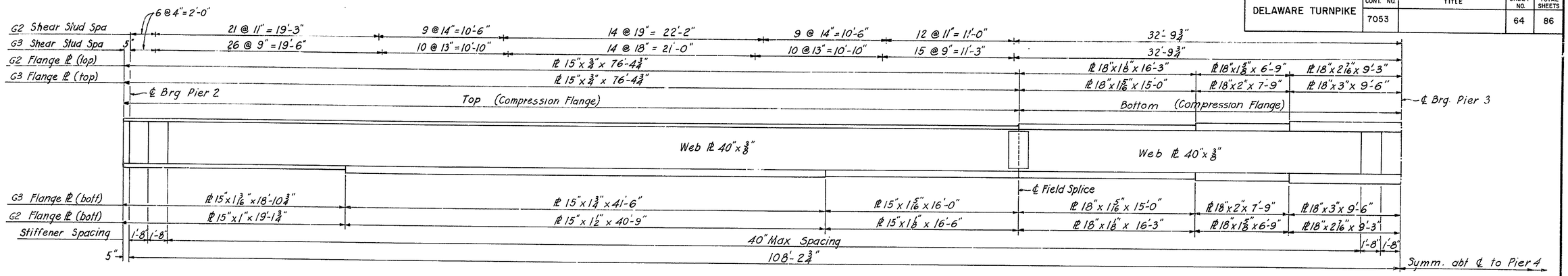


STRINGERS G2 & G3
Scale: 1/4" = 1'-0"

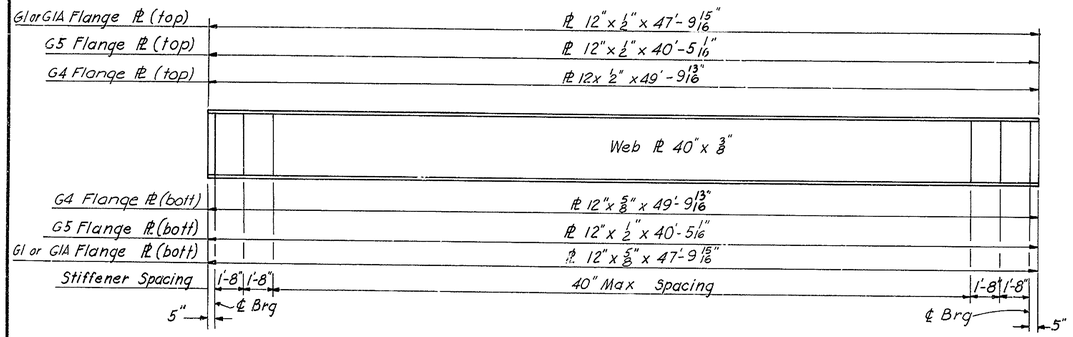


STRINGERS G1, G1A, G4 & G5
Scale: 1/4" = 1'-0"

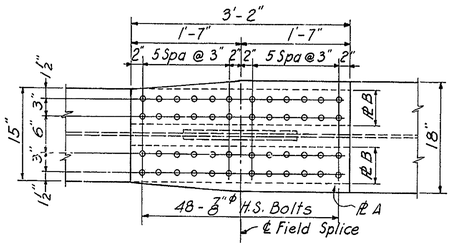


FLANGE SPLICE
Scale: 1" = 1'-0"

| | | ℄ Brg | 0.1 | 0.2 | 0.3 | 0.4 | 0.5 | 0.6 | 0.7 | 0.8 | 0.9 | ℄ Brg |
|---|---|---|---|---|---|---|---|---|---|---|---|---|
| CAMBER INCREMENTS FOR DEAD LOAD (inches) | | | | | | | | | | | | |
| | | SPAN C & SPAN D * | | | | | | | | | | |
| G2 | Structural Steel | 0 | .14 | .24 | .31 | .33 | .29 | .23 | .18 | .08 | .01 | 0 |
| G2 | Conc. Deck Slab | | .53 | .94 | 1.19 | 1.26 | 1.14 | .88 | .49 | .19 | .02 | |
| G2 | Par. Rail & 2" Wear Surface | | .11 | .20 | .27 | .29 | .28 | .24 | .16 | .08 | .02 | |
| G2 | Full Dead Load | | .78 | 1.38 | 1.77 | 1.88 | 1.71 | 1.35 | .83 | .35 | .05 | |
| G2 | Vertical Curve | | .58 | 1.03 | 1.35 | 1.55 | 1.61 | 1.55 | 1.35 | 1.03 | .58 | |
| G2 | Total Camber | 0 | 1.36 | 2.41 | 3.12 | 3.43 | 3.32 | 2.90 | 2.18 | 1.38 | .63 | 0 |
| G3 | Structural Steel | 0 | .13 | .24 | .30 | .32 | .28 | .21 | .20 | .08 | .01 | 0 |
| G3 | Conc. Deck Slab | | .59 | 1.06 | 1.34 | 1.40 | 1.26 | .95 | .49 | .19 | .02 | |
| G3 | Par. Rail & 2" Wear Surface | | .14 | .26 | .33 | .37 | .35 | .30 | .21 | .11 | .03 | |
| G3 | Full Dead Load | | .86 | 1.56 | 1.97 | 2.09 | 1.89 | 1.46 | .90 | .38 | .06 | |
| G3 | Vertical Curve | | .58 | 1.03 | 1.35 | 1.55 | 1.61 | 1.55 | 1.35 | 1.03 | .58 | |
| G3 | Total Camber | 0 | 1.44 | 2.59 | 3.32 | 3.64 | 3.50 | 3.01 | 2.25 | 1.41 | .64 | 0 |

* Span D opposite hand.
Note: Positive sign indicates downward deflection.

Note: Values tabulated above for Span C are based on a chord between ℄ Bearing Pier 2 and ℄ Bearing Pier 3. Values tabulated above for Span D are based on a chord between ℄ Bearing Pier 3 and ℄ Bearing Pier 4.

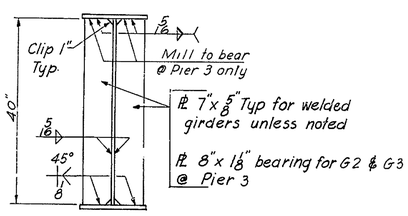


BEARING STIFFENER
Scale: 3/4" = 1'-0"

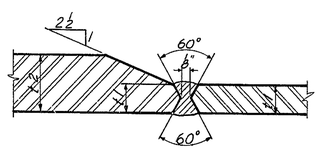


TYPICAL FLANGE SPLICE WELD
No Scale

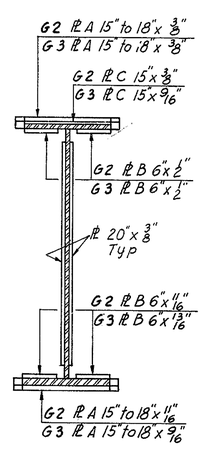


SECTION A-A

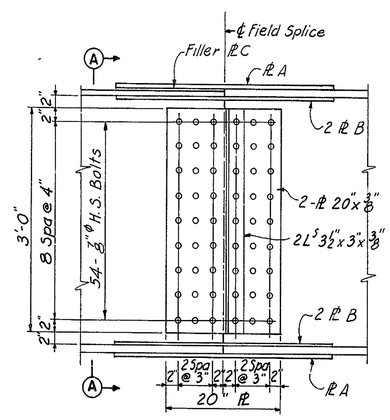


WEB SPLICE
Scale: 1" = 1'-0"

FIELD SPLICE

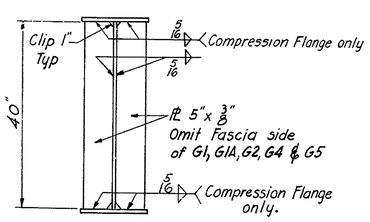


INTERMEDIATE STIFFENER
Scale: 3/4" = 1'-0"

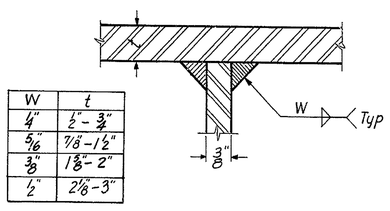


| W | t |
|---|---|
| 1/4" | 1/2" - 3/4" |
| 5/16" | 7/8" - 1 1/2" |
| 3/8" | 1 7/8" - 2" |
| 1/2" | 2 1/8" - 3" |

FLANGE TO WEB WELD
No Scale

**NOTES:**

Diaphragm connection PL's shall be set, then intermediate web stiffeners shall be equally spaced between them.

Intermediate web stiffeners are to be set alternating sides of interior stringers.

All dimensions are measured along ℄ of stringers.

Shear studs are not required at ℄ of field splices. Shear studs that occur on splice plates may be field welded.

For typical shear stud spacing at the ends of all girders, and for shear stud Detail see Sheet No. 11 of 25.

For location of Diaphragm Connection PL's and additional welding information see Sheet No. 17 of 25.

| NO. | REVISION | BY | DATE |
|---|---|---|---|
| 3 | | | |
| 2 | | | |
| 1 | | | |

| | BY | DATE |
|---|---|---|
| MADE | IRP | 10-69 |
| CHECKED | JBG | 11-69 |
| IN CHARGE | JEH | |

DELAWARE STATE HIGHWAY DEPARTMENT

# DELAWARE TURNPIKE

ROUTE 896 INTERCHANGE IMPROVEMENTS
BRIDGE OVER DELAWARE TURNPIKE
GIRDER DETAILS

HOWARD, NEEDLES, TAMMEN & BERGENDOFF
consulting engineers
NEW YORK KANSAS CITY

SCALE: as noted
CONTRACT NO. 7053
SHEET NO. 13 OF 25

| DELAWARE TURNPIKE | CONT. NO. | TITLE | SHEET NO. | TOTAL SHEETS |
|---|---|---|---|---|
| | 7053 | | 65 | 86 |

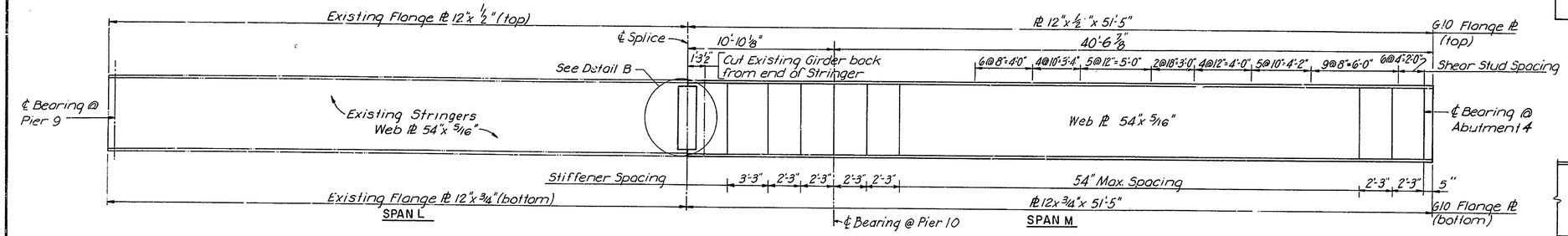


STRINGER G10 & G10A
Scale 1/4"=1'-0"

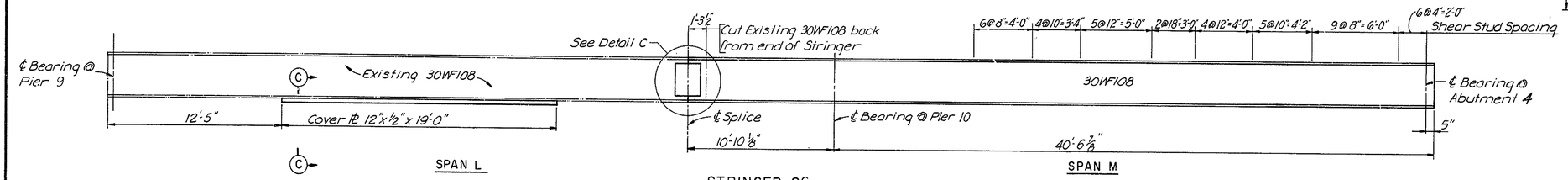


STRINGER S6
Scale 1/4"=1'-0"

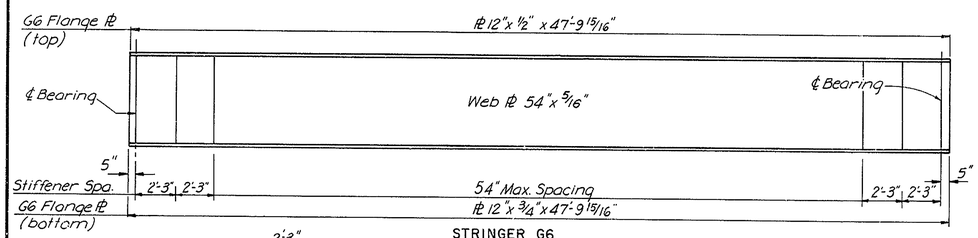


STRINGER G6
Scale 1/4"=1'-0"

| | | ℄ Splice | 0.78 | 0.8 | 0.9 | ℄ Brg. | 0.1 | 0.2 | 0.3 | 0.4 | 0.5 | 0.6 | 0.7 | 0.8 | 0.9 | ℄ Brg. |
|---|---|---|---|---|---|---|---|---|---|---|---|---|---|---|---|---|
| | CAMBER INCREMENTS FOR DEAD LOAD (Inches) | | | | | | | | | | | | | | | |
| | | SPAN L | | | | | SPAN M | | | | | | | | | |
| G10 & G10A | Structural Steel | | .16 | .16 | .08 | 0 | -.07 | -.10 | -.12 | -.12 | -.11 | -.10 | -.08 | -.05 | -.03 | 0 |
| | Conc. Deck Slab | | -.06 | -.06 | -.04 | 0 | .07 | .15 | .23 | .28 | .31 | .31 | .27 | .20 | .11 | 0 |
| | Par. Rail & 2" Wear Surface | | -.02 | -.02 | -.01 | 0 | .02 | .05 | .07 | .08 | .08 | .08 | .07 | .05 | .03 | 0 |
| | Full Dead Load | | .08 | .08 | .03 | 0 | .02 | .10 | .18 | .24 | .28 | .29 | .26 | .20 | .11 | 0 |
| | Vertical Curve | | .24 | .24 | .13 | 0 | .09 | .16 | .20 | .23 | .24 | .23 | .20 | .16 | .09 | 0 |
| | Total Camber | | .32 | .32 | .16 | 0 | .11 | .26 | .38 | .47 | .52 | .52 | .46 | .36 | .20 | 0 |
| S6 | Structural Steel | | .13 | .13 | .07 | 0 | -.05 | -.09 | -.10 | -.10 | -.09 | -.08 | -.06 | -.04 | -.02 | 0 |
| | Conc. Deck Slab | | -.05 | -.05 | -.04 | 0 | .07 | .15 | .23 | .29 | .32 | .31 | .27 | .20 | .11 | 0 |
| | Par. Rail & 2" Wear Surface | | -.02 | -.02 | -.01 | 0 | .02 | .05 | .06 | .07 | .07 | .07 | .06 | .04 | .02 | 0 |
| | Full Dead Load | | .06 | .06 | .02 | 0 | .04 | .11 | .19 | .26 | .30 | .30 | .27 | .20 | .11 | 0 |
| | Vertical Curve | | .24 | .24 | .13 | 0 | .09 | .16 | .20 | .23 | .24 | .23 | .20 | .16 | .09 | 0 |
| | Total Camber | | .30 | .30 | .15 | 0 | .13 | .27 | .39 | .49 | .54 | .53 | .47 | .36 | .20 | 0 |

NOTE:
Values tabulated above for Span L are based on a chord between ℄ Bearing Pier 9 and ℄ Bearing Pier 10.
Values tabulated above for Span M are based on a chord between ℄ Bearing Pier 10 and ℄ Bearing Abutment 4.
For total camber less than 1", S6 only, natural mill camber shall be turned upward.
Minus sign indicates upward deflection, positive sign indicates downward deflection.

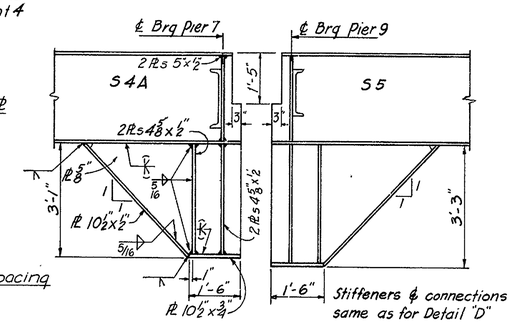


DETAIL "D" DETAIL "E"
Scale: 1/2"=1'-0"

NOTES:

Diaphragm connection PL's shall be set, then intermediate web stiffeners shall be equally spaced between them.

Intermediate web stiffeners are to be set alternating sides of interior stringers.

All dimensions are measured along ℄ of stringers.

For shear stud spacing at ends of all stringers, and for shear stud detail see sheet No. 11 of 25

For location of Diaphragm Connection PL's and additional welding information see sheet No. 17 of 25

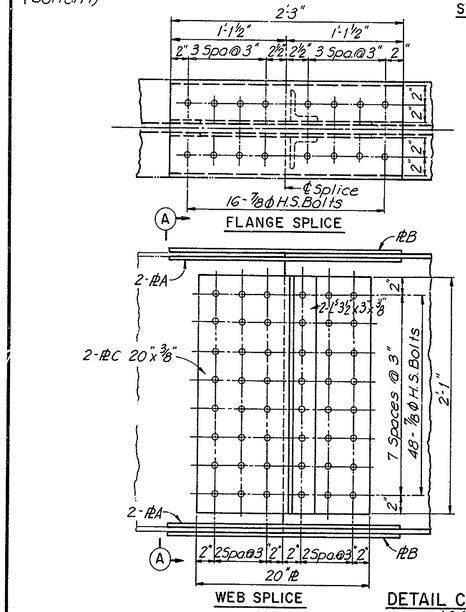


DETAIL C
Scale 1 1/2"=1'-0"

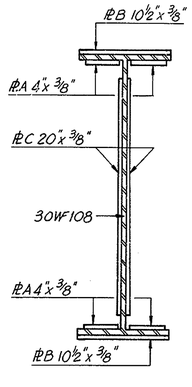


SECTION A-A

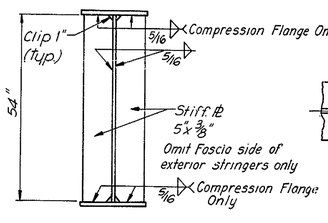


INTERMEDIATE STIFFENER
No Scale

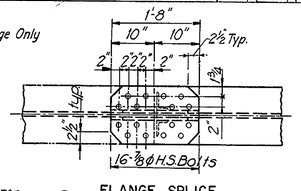


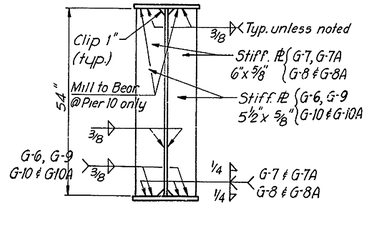


BEARING STIFFENER
No Scale

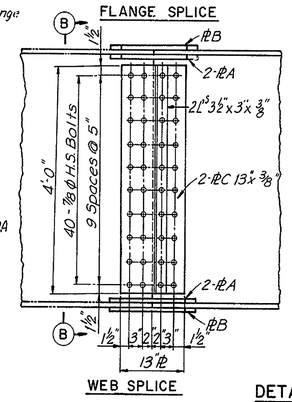


DETAIL B
Scale 3/4"=1'-0"

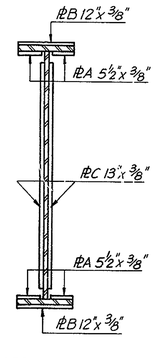


SECTION B-B

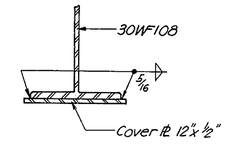


SECTION C-C
No Scale

| NO. | REVISION | BY | DATE |
|---|---|---|---|
| 3 | | | |
| 2 | | | |
| 1 | | | |

| | BY | DATE |
|---|---|---|
| MADE | D.L.S. | 9-69 |
| CHECKED | JBG | 11-69 |
| IN CHARGE | JEH | |

DELAWARE STATE HIGHWAY DEPARTMENT
DELAWARE TURNPIKE
ROUTE 896 INTERCHANGE IMPROVEMENTS
BRIDGE OVER DELAWARE TURNPIKE
GIRDER DETAILS

HOWARD, NEEDLES, TAMMEN & BERGENDOFF
consulting engineers
NEW YORK KANSAS CITY

SCALE: As shown
CONTRACT NO. 7053
SHEET NO. 14 OF 25

| DELAWARE TURNPIKE | CONT. NO | TITLE | SHEET NO. | TOTAL SHEETS |
|---|---|---|---|---|
| | 7053 | | 66 | 86 |

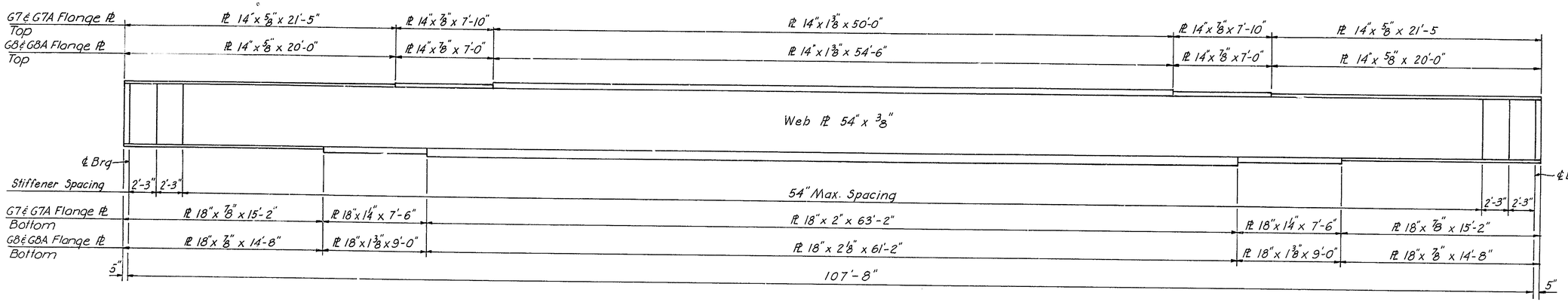


STRINGERS G7, G7A, G8 & G8A
Scale: 1/4" = 1'-0"

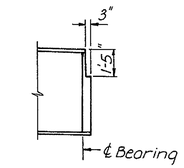


STRINGERS G7 & G7A
(Typical at both ends)

| | | ℄ Brg | 0.1 | 0.2 | 0.3 | 0.4 | 0.5 | 0.6 | 0.7 | 0.8 | 0.9 | ℄ Brg | 0.1 | 0.2 | 0.3 | 0.4 | 0.5 | 0.6 | 0.7 | 0.8 | 0.9 | ℄ Brg |
|---|---|---|---|---|---|---|---|---|---|---|---|---|---|---|---|---|---|---|---|---|---|---|
| CAMBER INCREMENTS FOR DEAD LOAD (Inches) | | | | | | | | | | | | | | | | | | | | | | |
| | | SPAN L | | | | | | | | | | | SPAN M | | | | | | | | | |
| S5 | Structural Steel | 0 | .02 | .04 | .05 | .06 | .06 | .05 | .04 | .03 | .01 | 0 | 0 | 0 | .01 | .01 | .01 | .02 | .02 | .01 | .01 | 0 |
| | Conc. Deck Slab | 0 | .10 | .19 | .25 | .28 | .27 | .24 | .19 | .12 | .05 | 0 | -.01 | 0 | .03 | .05 | .07 | .08 | .07 | .06 | .03 | 0 |
| | Par. Rail & 2" Wear Surface | 0 | .03 | .05 | .07 | .07 | .07 | .06 | .05 | .03 | .01 | 0 | -.01 | -.01 | 0 | .01 | .01 | .02 | .02 | .01 | .01 | 0 |
| | Full Dead Load | 0 | .15 | .28 | .37 | .41 | .40 | .35 | .28 | .18 | .07 | 0 | -.02 | -.01 | .04 | .07 | .09 | .12 | .11 | .08 | .05 | 0 |
| | Vertical Curve | 0 | .13 | .24 | .31 | .35 | .37 | .35 | .31 | .24 | .13 | 0 | .09 | .16 | .20 | .23 | .24 | .23 | .20 | .16 | .09 | 0 |
| | Total Camber | 0 | .28 | .52 | .68 | .76 | .77 | .70 | .59 | .42 | .20 | 0 | .07 | .15 | .24 | .30 | .33 | .31 | .31 | .24 | .14 | 0 |
| G9 | Structural Steel | 0 | .01 | .01 | .02 | .02 | .02 | .02 | .01 | .01 | 0 | 0 | 0 | 0 | 0 | 0 | 0 | 0 | 0 | 0 | 0 | 0 |
| | Conc. Deck Slab | 0 | .04 | .07 | .09 | .11 | .10 | .09 | .07 | .04 | .02 | 0 | 0 | 0 | 0 | .01 | .01 | .02 | .02 | .02 | .01 | 0 |
| | Par. Rail & 2" Wear Surface | 0 | .03 | .05 | .07 | .08 | .08 | .07 | .06 | .04 | .02 | 0 | 0 | 0 | 0 | 0 | 0 | 0 | 0 | 0 | 0 | 0 |
| | Full Dead Load | 0 | .08 | .13 | .18 | .21 | .20 | .18 | .14 | .09 | .04 | 0 | 0 | 0 | .01 | .01 | .02 | .02 | .02 | .02 | .01 | 0 |
| | Vertical Curve | 0 | .13 | .24 | .31 | .35 | .37 | .35 | .31 | .24 | .13 | 0 | .09 | .16 | .20 | .23 | .24 | .23 | .20 | .16 | .09 | 0 |
| | Total Camber | 0 | .21 | .37 | .49 | .56 | .57 | .53 | .45 | .33 | .17 | 0 | .09 | .16 | .21 | .24 | .26 | .25 | .22 | .18 | .10 | 0 |

NOTE: Values tabulated above for Span L are based on a chord between ℄ Bearing Pier 9 and ℄ Bearing Pier 10.
Values tabulated above for Span M are based on a chord between ℄ Bearing Pier 10 and ℄ Bearing Abutment 4.
For total camber less than 1", S5 only, natural mill camber shall be turned upward.
Minus sign indicates upward deflection, positive sign indicates downward deflection.

| CAMBER INCREMENTS FOR DEAD LOAD (Inches) | S4 & S4A | | G6 | | G7 | | G7A | | G8 | | G8A | |
|---|---|---|---|---|---|---|---|---|---|---|---|---|
| | 1/4 & 3/4 L | 1/2 L | 1/4 & 3/4 L | 1/2 L | 1/4 & 3/4 L | 1/2 L | 1/4 & 3/4 L | 1/2 L | 1/4 & 3/4 L | 1/2 L | 1/4 & 3/4 L | 1/2 L |
| Structural Steel | .08 | .11 | .03 | .03 | .53 | .72 | .53 | .72 | .51 | .70 | .51 | .70 |
| Conc. Deck Slab | .42 | .56 | .15 | .20 | 1.16 | 1.56 | 1.16 | 1.56 | 1.21 | 1.65 | 1.21 | 1.65 |
| Par. Rail & 2" Wear Surface | .07 | .09 | .03 | .04 | .52 | .72 | .52 | .72 | .51 | .70 | .51 | .70 |
| Full Dead Load | .57 | .76 | .21 | .27 | 2.21 | 3.00 | 2.21 | 3.00 | 2.23 | 3.05 | 2.23 | 3.05 |
| Vertical Curve | 0 | 0 | 0 | 0 | .38 | .51 | 1.30 | 1.74 | .32 | .43 | 1.30 | 1.74 |
| Total Camber | .57* | .76* | .21 | .27 | 2.59 | 3.51 | 3.51 | 4.74 | 2.55 | 3.48 | 3.53 | 4.79 |

* Note: For total camber less than 1", natural mill camber shall be turned upward

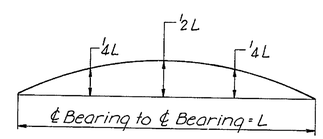


DEFLECTION DIAGRAM
No Scale

NOTES: Diaphragm connection PL's shall be set, then intermediate web stiffeners shall be equally spaced between them.
Intermediate web stiffeners are to be set alternating sides of interior stringers.
For intermediate and bearing stiffener details see sheet No. 14 of 25.
All dimensions are measured along ℄ of Stringers.
For Details B, C and E see sheet No. 14 of 25
For typical shear stud spacing at the ends of all stringers and for shear stud detail see sheet No. 11 of 25.
For location of Diaphragm Connection PL's and additional welding information see sheet No. 17 of 25.
For Section C-C see sheet No. 14 of 25.
For flange to web weld detail and typical flange splice weld detail see sheet No. 13 of 25.

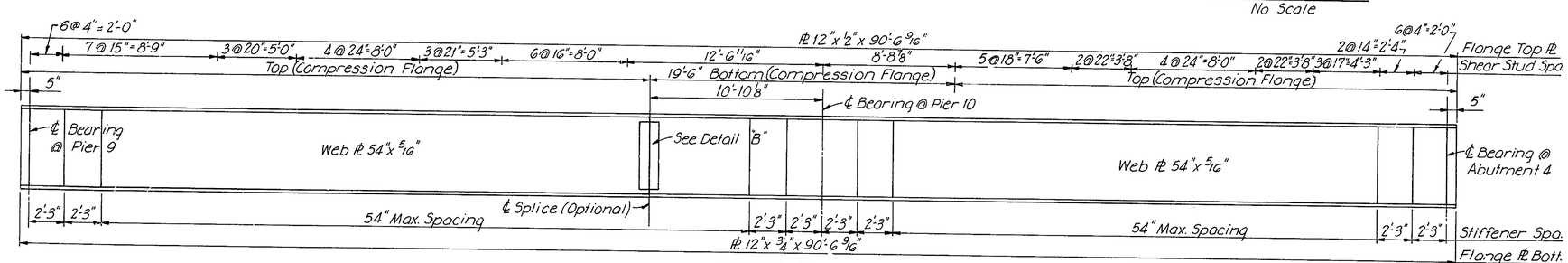


STRINGER G9
Scale 1/4" = 1'-0"

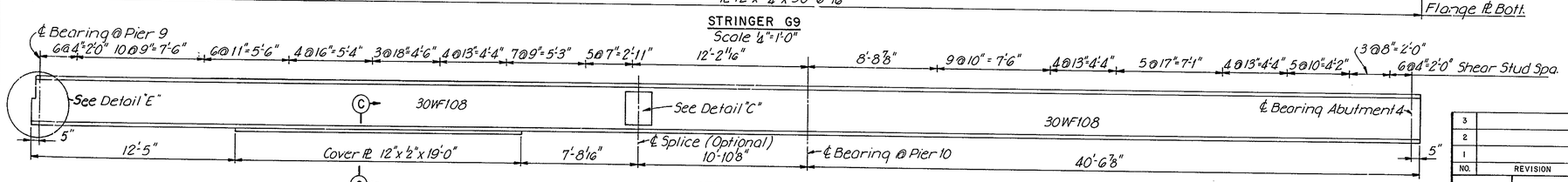


STRINGER S5
Scale 1/4" = 1'-0"

| NO. | REVISION | BY | DATE |
|---|---|---|---|
| 3 | | | |
| 2 | | | |
| 1 | | | |

| | BY | DATE |
|---|---|---|
| MADE | I.R.P | 11-69 |
| CHECKED | J.B.G. | 11-69 |
| IN CHARGE | J.E.H | |

DELAWARE STATE HIGHWAY DEPARTMENT
DELAWARE TURNPIKE
ROUTE 896 INTERCHANGE IMPROVEMENTS
BRIDGE OVER DELAWARE TURNPIKE
GIRDER DETAILS

HOWARD, NEEDLES, TAMMEN & BERGENDOFF
consulting engineers
NEW YORK KANSAS CITY

SCALE: as shown
CONTRACT NO. 7053
SHEET NO. 15 OF 25

| DELAWARE TURNPIKE | CONT. NO. | TITLE | SHEET NO. | TOTAL SHEETS |
|---|---|---|---|---|
| | 7053 | | 67 | 86 |

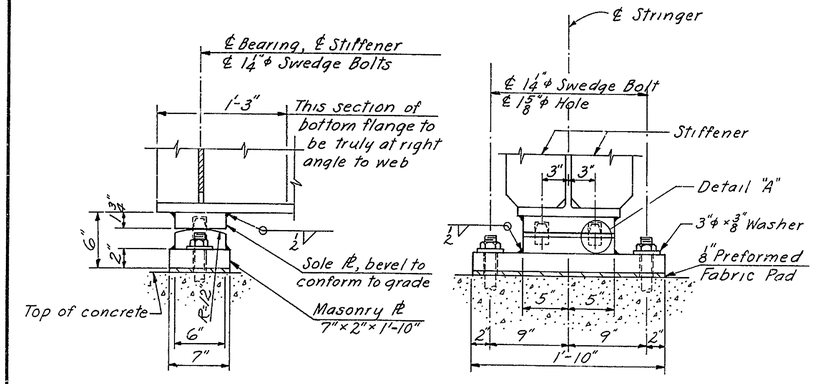


FIXED SHOE FS-1
Scale 1½"=1'-0"

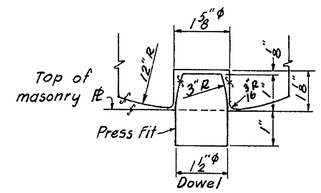


DETAIL "C"
Not to Scale

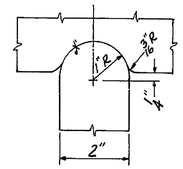

DETAIL "B"
Not to Scale

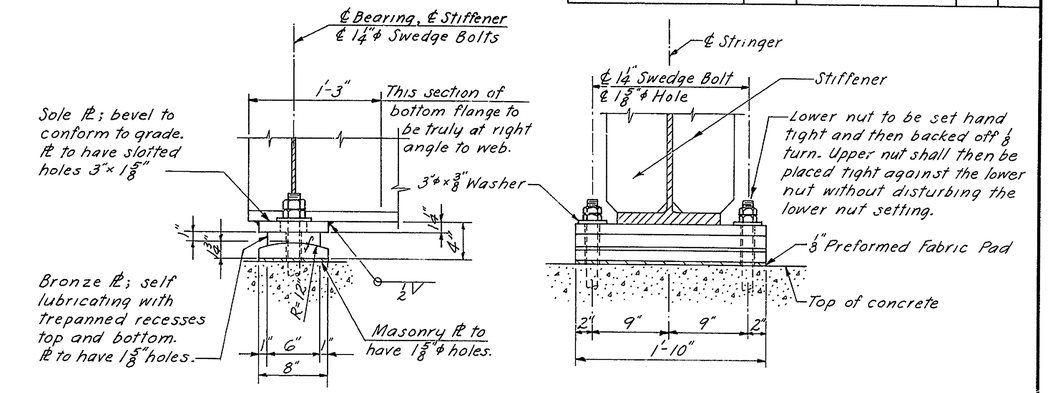


EXPANSION SHOE ES-1
Scale 1½"=1'-0"

NOTES:
Shoes to have vertical and horizontal center lines mutually perpendicular at 65° F.
For location of shoes see sheet No. 11 of 25 and 12 of 25.
For General Notes see sheet No. 1 of 25.

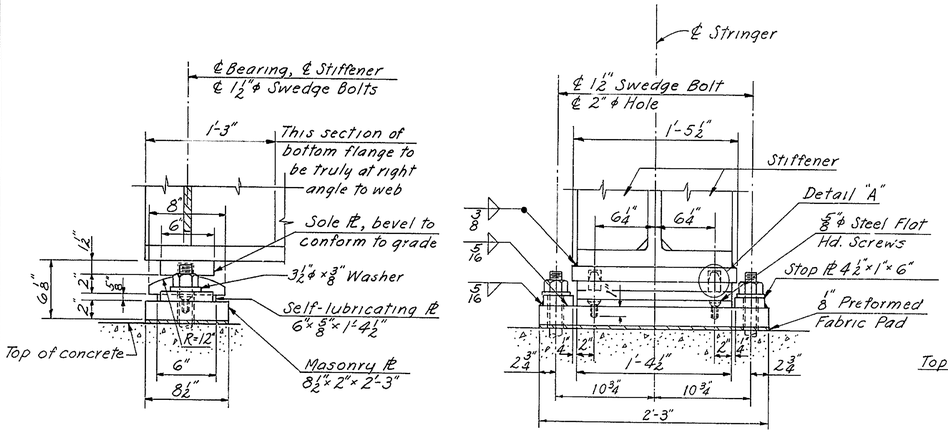


EXPANSION SHOE ES-2
Not to Scale

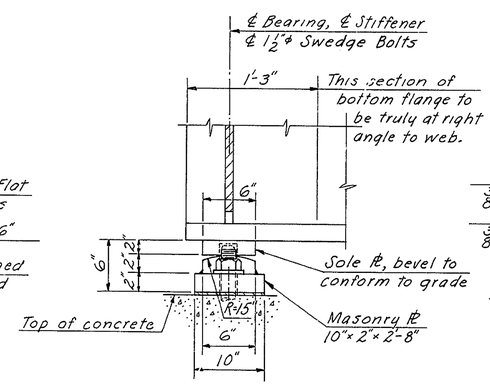


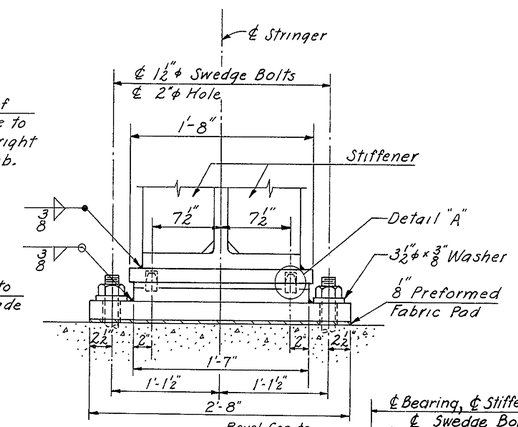


FIXED SHOE FS-2
Not to Scale

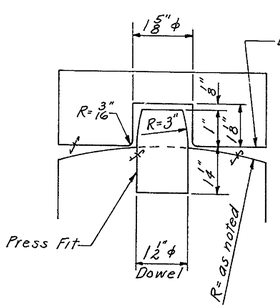


DETAIL "A"
Not to Scale

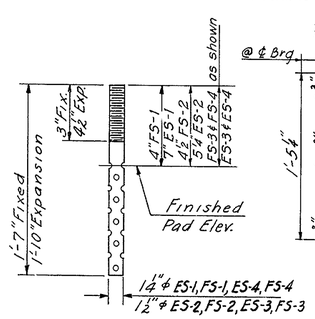


SWEDGE BOLT DETAIL
Not to Scale

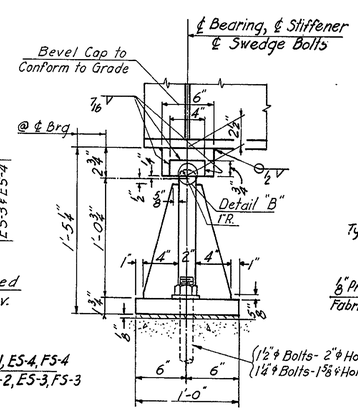


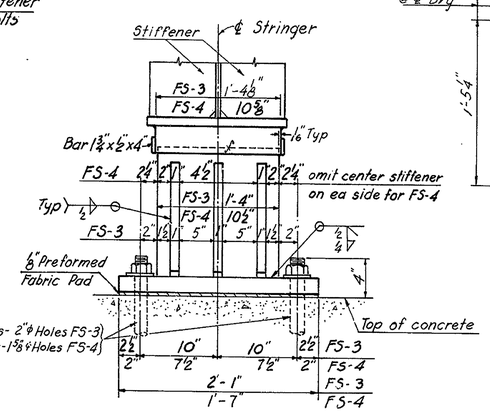


FIXED SHOE FS-3 & FS-4
Scale: 1½"=1'-0"

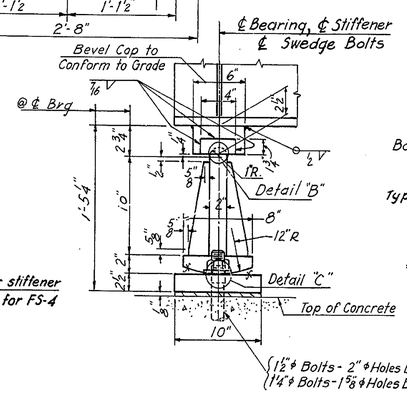


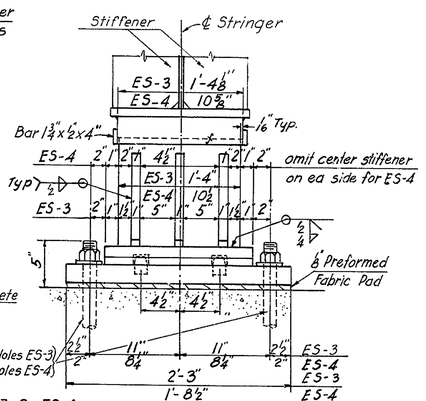


EXPANSION SHOE ES-3 & ES-4
Scale ½"=1'-0"

| NO. | REVISION | BY | DATE |
|---|---|---|---|
| 3 | | | |
| 2 | | | |
| 1 | | | |

| | BY | DATE |
|---|---|---|
| MADE | F.J.C. | 10-69 |
| CHECKED | J.B.G. | 11-69 |
| IN CHARGE | JEH | |

DELAWARE STATE HIGHWAY DEPARTMENT
# DELAWARE TURNPIKE
ROUTE 896 INTERCHANGE IMPROVEMENTS
BRIDGE OVER DELAWARE TURNPIKE
## SHOE DETAILS

HOWARD, NEEDLES, TAMMEN & BERGENDOFF
consulting engineers
NEW YORK KANSAS CITY

SCALE: As Noted
CONTRACT NO. 7053
SHEET NO. 16 OF 25

| DELAWARE TURNPIKE | CONT. NO. | TITLE | SHEET NO. | TOTAL SHEETS |
|---|---|---|---|---|
| | 7053 | | 68 | 86 |

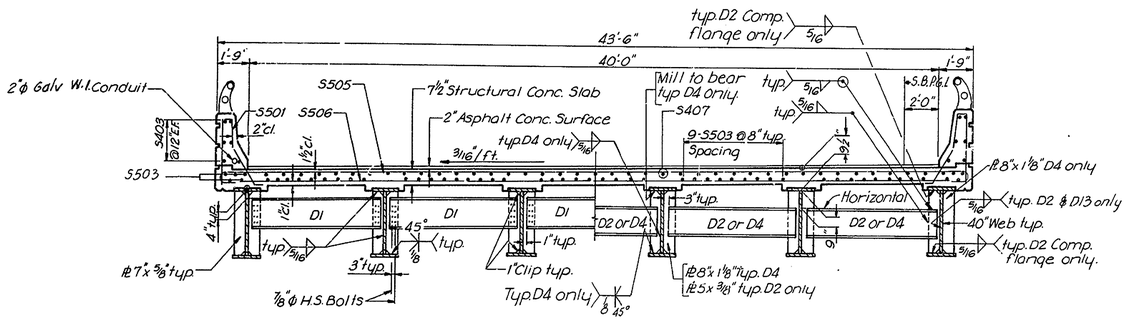


SECTION B-B

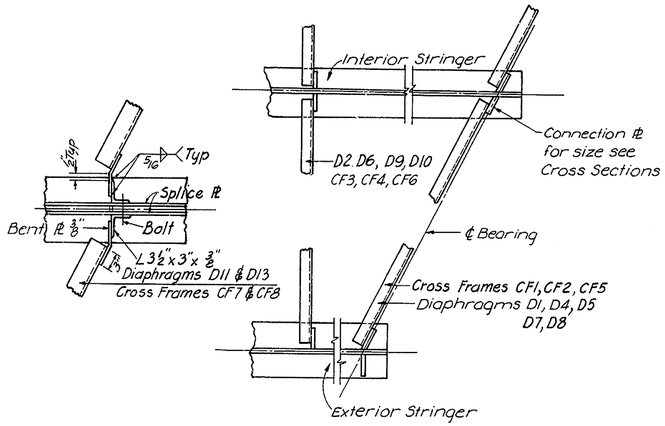


DIAPHRAGM CONNECTIONS
No Scale

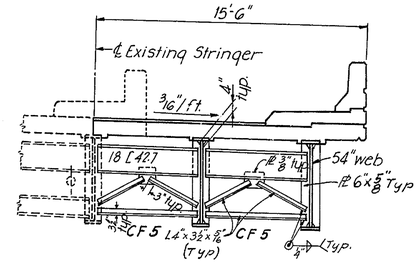


SECTION H-H

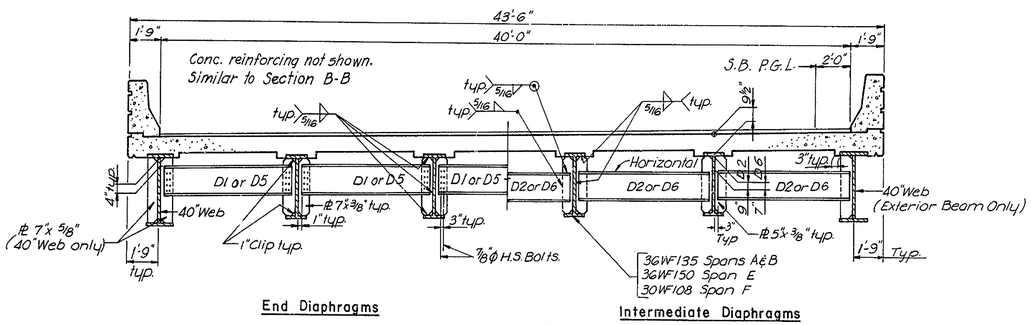


SECTION C-C

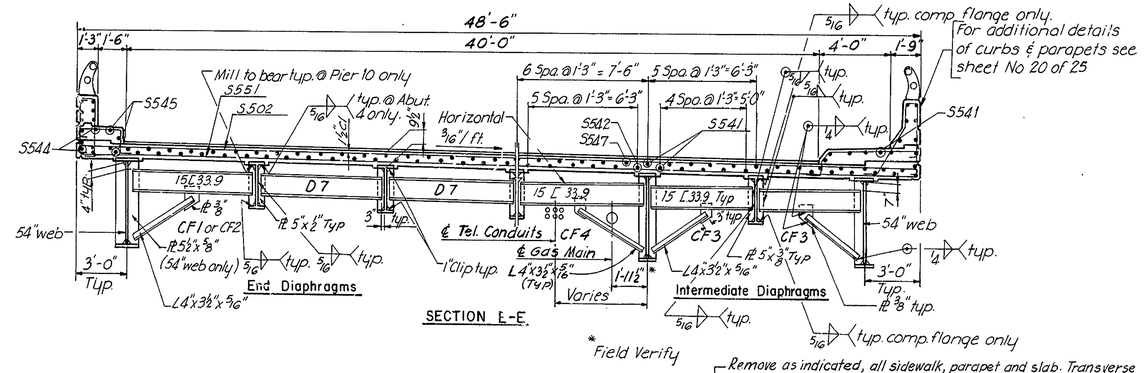


SECTION E-E

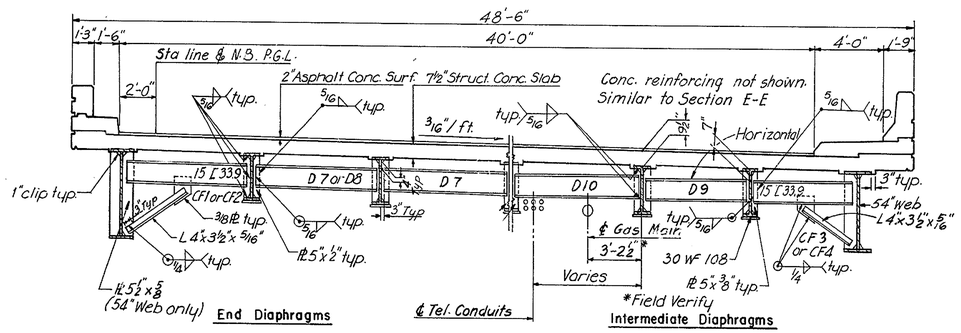


SECTION D-D

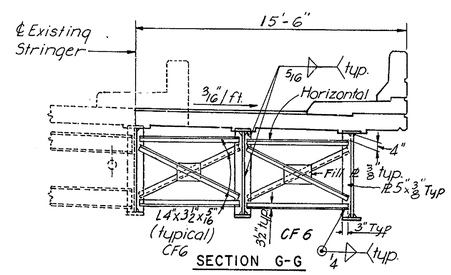


SECTION G-G

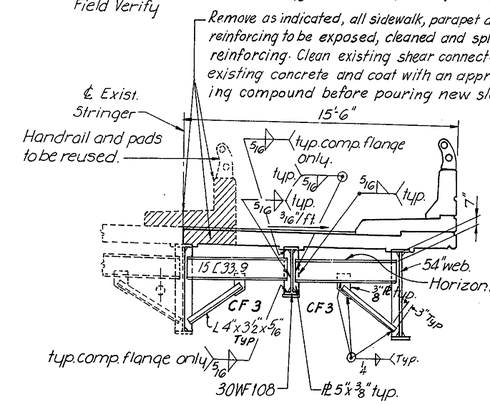


SECTION F-F

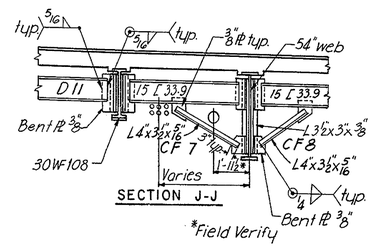


SECTION J-J

NOTES:

For General Notes see sheet No 1 of 25
For Diaphragm Schedules see sheet No 11 and 12 of 25.
For Connector PL's sizes at diaphragms CF5 for stringers G6, G9 & G10A, See Bearing Stiffener Detail Sheet No. 14 of 25.
For Connector PL's sizes at diaphrams CF5 for Stringers S4A and S5 See Details "D" & "E" Sheet No. 14 of 25.

| NO. | REVISION | BY | DATE |
|---|---|---|---|
| 3 | | | |
| 2 | | | |
| 1 | | | |

| | BY | DATE |
|---|---|---|
| MADE | I.R.P. | 10-69 |
| CHECKED | J.B.G. | 11-69 |
| IN CHARGE | J.E.H. | |

DELAWARE STATE HIGHWAY DEPARTMENT

# DELAWARE TURNPIKE

ROUTE 896 INTERCHANGE IMPROVEMENTS
BRIDGE OVER DELAWARE TURNPIKE

## TYPICAL SECTIONS

HOWARD, NEEDLES, TAMMEN & BERGENDOFF
consulting engineers
NEW YORK KANSAS CITY

SCALE: 1/4"=1'-0" unless noted
CONTRACT NO. 7053
SHEET NO 17 OF 25

| DELAWARE TURNPIKE | CONT. NO. | TITLE | SHEET NO. | TOTAL SHEETS |
|---|---|---|---|---|
| | 7053 | | 69 | 86 |

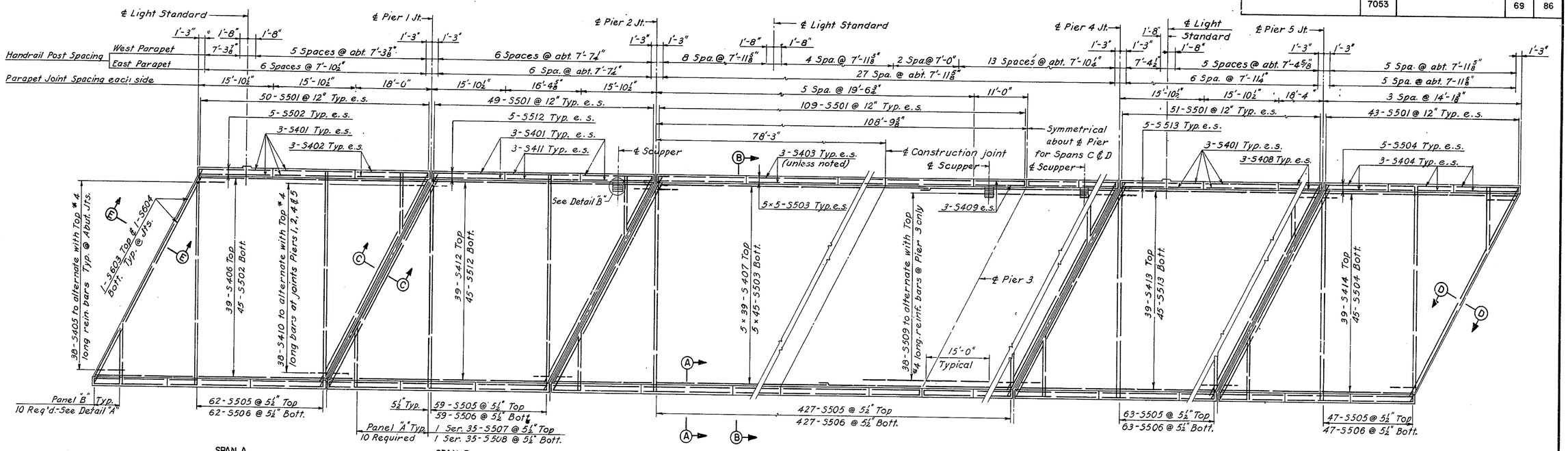


## PLAN SOUTH BOUND

Scale: 1" = 10'

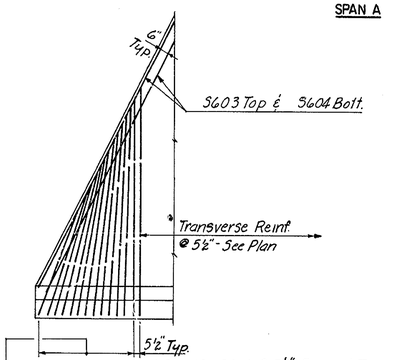


DETAIL A

Scale: 1/4" = 1'-0"

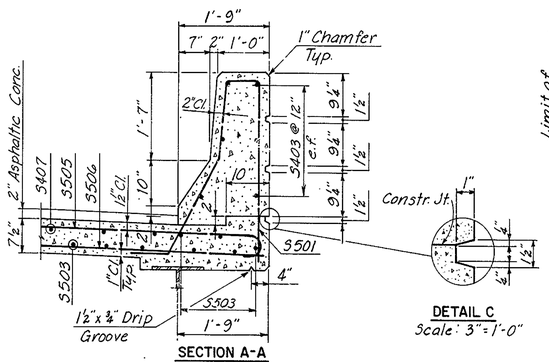


SECTION A-A

Scale: 3/4" = 1'-0"

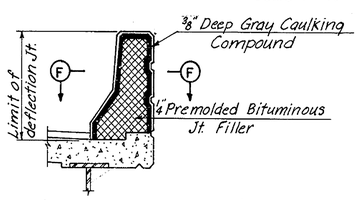


ELEVATION

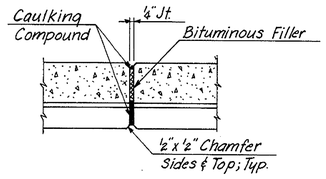


SECTION F-F

## PARAPET DEFLECTION JOINT

Scale: 1/2" = 1'-0"

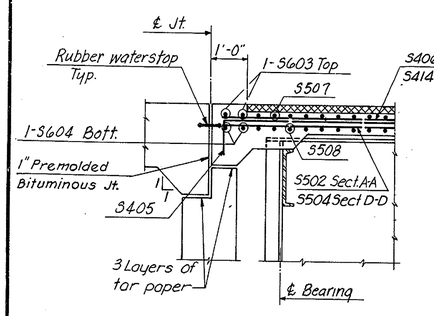


SECTIONS D-D & E-E

Scale: 1/2" = 1'-0"

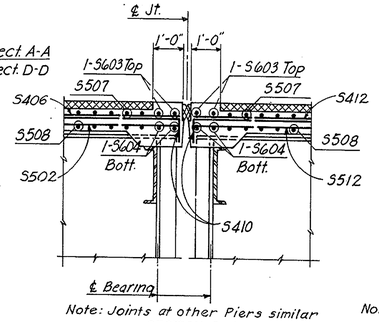


Note: Joints at other Piers similar

SECTION C-C

Scale: 1/2" = 1'-0"

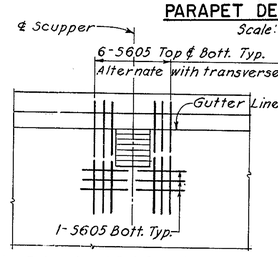


Note: Cut or bend Reinf. to clear Scupper

DETAIL B

Scale 1/2" = 1'-0"

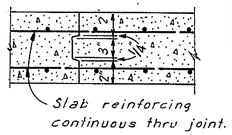


SECTION THRU CONSTRUCTION JOINT

Not to Scale

## BENDING DIAGRAMS

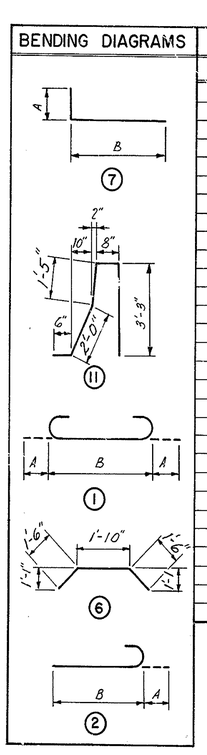


## REINFORCING BAR SCHEDULE

| MARK | NO. | TYPE | A | B | LENGTH |
|---|---|---|---|---|---|
| S401 | 72 | Str. | | | 15'-6" |
| S402 | 12 | Str. | | | 17'-8" |
| S403 | 120 | Str. | | | 19'-2" |
| S404 | 36 | Str. | | | 13'-9" |
| S405 | 76 | 7 | 0'-8" | 6'-0" | 6'-8" |
| S406 | 39 | Str. | | | 49'-4" |
| S407 | 195 | Str. | | | 44'-5" |
| S408 | 12 | Str. | | | 18'-0" |
| S409 | 24 | Str. | | | 10'-8" |
| S410 | 304 | 7 | 0'-8" | 4'-0" | 4'-8" |
| S411 | 12 | Str. | | | 16'-0" |
| S412 | 39 | Str. | | | 47'-8" |
| S413 | 39 | Str. | | | 49'-8" |
| S414 | 39 | Str. | | | 41'-11" |
| | | | | | |
| | | | | | |
| S501 | 840 | 11 | | | 7'-10" |
| S502 | 55 | Str. | | | 49'-4" |
| S503 | 275 | Str. | | | 44'-9" |
| S504 | 55 | Str. | | | 41'-11" |
| S505 | 658 | 1 | 0'-7" | 43'-2" | 44'-4" |
| S506 | 658 | Str. | | | 43'-2" |
| S507 | 10 Ser. 35 | 1 | 0'-7" | 18'-5" to 40'-5" | 13'-7" to 41'-7" |
| S508 | 10 Ser. 35 | Str. | | | 12'-5" to 40'-5" |
| S509 | 38 | Str. | | | 30'-0" |
| S510 | 9 | 6 | | | 4'-10" |
| S511 | 18 | 2 | 0'-7" | 4'-0" | 4'-7" |
| S512 | 55 | Str. | | | 47'-8" |
| S513 | 55 | Str. | | | 49'-8" |

| MARK | NO. | TYPE | A | B | LENGTH |
|---|---|---|---|---|---|
| | | | | | |
| S601 | 10 Ser. 13 | 1 | 0'-8" | 6'-0" to 11'-5" | 7'-4" to 12'-9" |
| S602 | 10 Ser. 13 | Str. | | | 6'-0" to 11'-5" |
| S603 | 20 | 1 | 0'-8" | 47'-2" | 48'-6" |
| S604 | 20 | Str. | | | 47'-2" |
| S605 | 45 | Str. | | | 6'-0" |

## NOTES

For General Notes: see sheet 1 of 25

For Light Blister and Hand Rail Details: see sheet 25 of 25

For Section B-B; see sheet 17 of 25

For location of Scuppers; see sheet 24 of 25

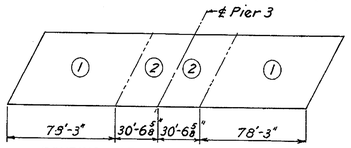


POURING SEQUENCE SPANS C & D

Legend
e.f. = each face
e.s. = each side

| NO. | REVISION | BY | DATE |
|---|---|---|---|
| 3 | | | |
| 2 | | | |
| 1 | | | |

| | BY | DATE |
|---|---|---|
| MADE | W.F.D. | 10-69 |
| CHECKED | F.J.C. | 11-69 |
| IN CHARGE | J.E.H. | |

DELAWARE STATE HIGHWAY DEPARTMENT

# DELAWARE TURNPIKE

ROUTE 896 INTERCHANGE IMPROVEMENTS
BRIDGE OVER DELAWARE TURNPIKE

## SLAB PLAN

HOWARD, NEEDLES, TAMMEN & BERGENDOFF
consulting engineers
NEW YORK KANSAS CITY

SCALE: As Shown
CONTRACT NO. 7053
SHEET NO. 18 OF 25

| DELAWARE TURNPIKE | CONT. NO. | TITLE | SHEET NO. | TOTAL SHEETS |
|---|---|---|---|---|
| | 7053 | | 70 | 86 |

Note A: 1 Ser. 48-S504 @ 6" Top; 1 Ser. 48-S503 @ 6" Bott.
Note B: 14-S511 Top alternate with Top #5 longitudinal reinforcing.
Note C: 40-S511 Top to alternate with S509 bars Span G, and S541 & S547 Span M.

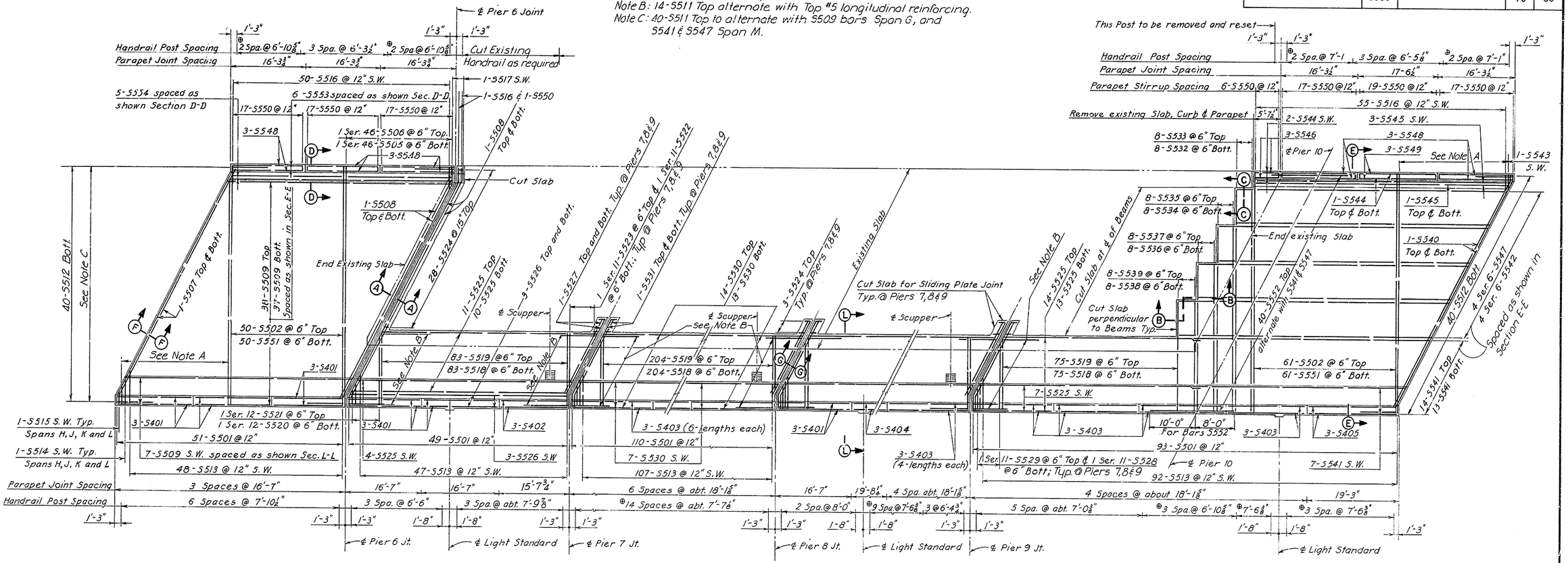


Note: Span K Reinforcing same as Span J (unless noted)

## PLAN NORTH BOUND

Scale 1" = 10'

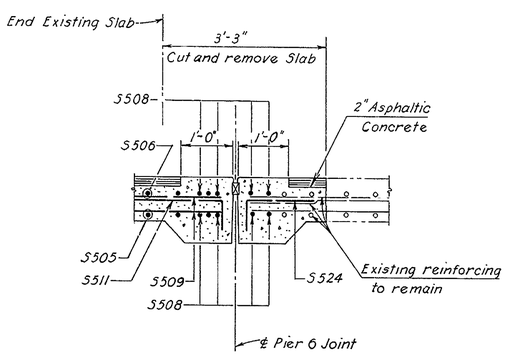


SECTION A-A

Scale ¾" = 1'-0"

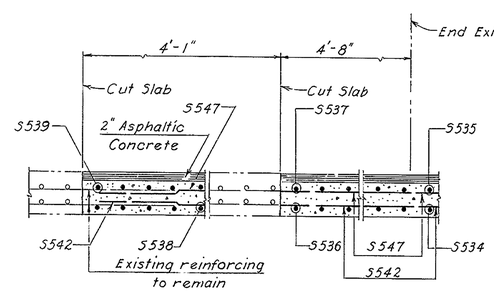


SECTION B-B

Scale ¾" = 1'-0"

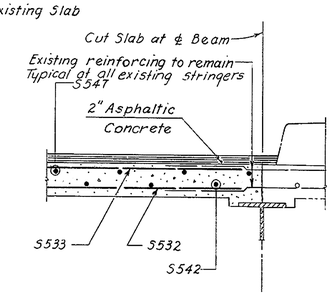


SECTION C-C

Scale ¾" = 1'-0"

Notes:

Remove Existing Slab, Side Walk and Parapet after cutting concrete.

Clean shear connectors and reinforcing to be spliced, see specifications.

Roughen cut in concrete and paint with an approved epoxy bonding compound before placing new Slab.

## NOTES

For General Notes; see sheet 1 of 25.

For Reinforcing Schedule, Scupper Detail, Parapet Deflection Joint Detail, Sections D-D, F-F, G-G, H-H and L-L; see sheet 20 of 25.

For Section E-E; see sheet 17 of 25.

For Light Blister Detail and Handrail Detail; see sheet 25 of 25

⊕ Indicates areas where existing Handrail is to be used

For Joint Details at Piers 7, 8 and 9; see Sheet No. 23 of 25.

For Joint Details at Abutments 3 & 4 and Pier 6; see Sheet No. 22 of 25.

Legend
S.W. denotes Side Walk

| NO. | REVISION | BY | DATE |
|---|---|---|---|
| 3 | | | |
| 2 | | | |
| 1 | | | |

| | BY | DATE |
|---|---|---|
| MADE | W. F. D. | 10-69 |
| CHECKED | J. R. C. | 11-69 |
| IN CHARGE | J. E. H. | |

DELAWARE STATE HIGHWAY DEPARTMENT

# DELAWARE TURNPIKE

ROUTE 896 INTERCHANGE IMPROVEMENTS
BRIDGE OVER DELAWARE TURNPIKE

## SLAB PLAN

HOWARD, NEEDLES, TAMMEN & BERGENDOFF
consulting engineers
NEW YORK KANSAS CITY

SCALE: As shown
CONTRACT NO. ____
SHEET NO. 19 OF 25

| DELAWARE TURNPIKE | CONT. NO. | TITLE | SHEET NO. | TOTAL SHEETS |
|---|---|---|---|---|
| | 7053 | | 71 | 86 |

Remove as indicated, all sidewalk, parapet and slab. Transverse reinforcing to be exposed, cleaned and spliced with new slab reinforcing.
Clean existing shear connectors. Roughen cut in existing concrete and coat with an approved epoxy bonding compound before pouring new slab.

For General Notes; see sheet 1 of 25

Reinforcing Schedule includes reinforcing shown on sheet 19; S501, S510, and S511 on sheet 25 of 25

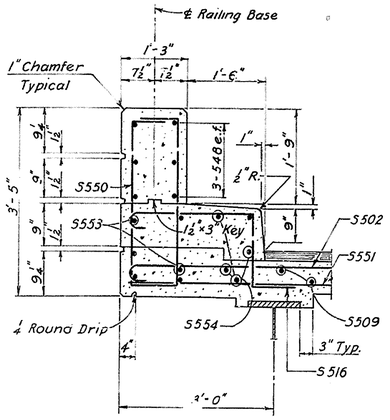


SECTION D-D
Scale ¾" = 1'-0"

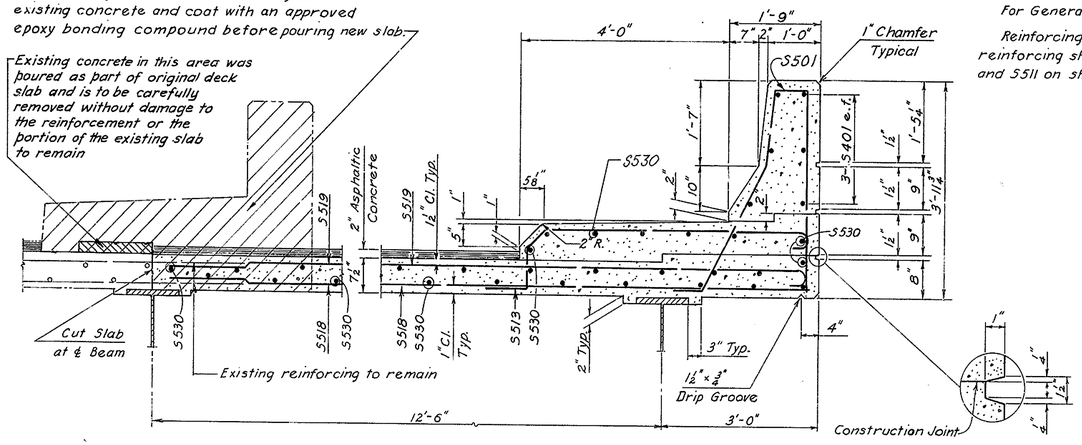


Construction Joint

SECTION L-L
Scale ¾" = 1'-0"

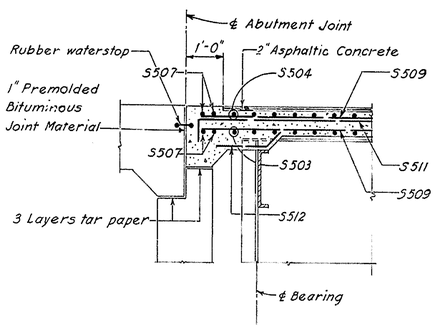


SECTION F-F
Scale ½" = 1'-0"

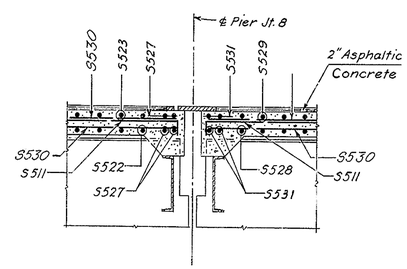


SECTION G-G
Scale ½" = 1'-0"

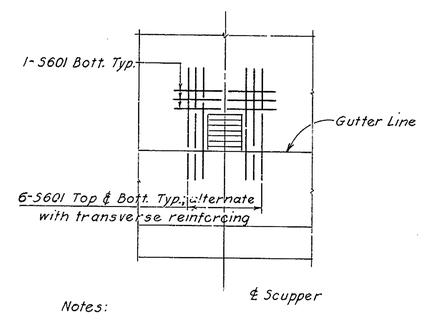


Notes:
For additional Scupper Details; see Sheet No. 24 of 25
Cut or bend reinforcing, as required, to clear Scupper

SCUPPER DETAIL
Scale ¼" = 1'-0"

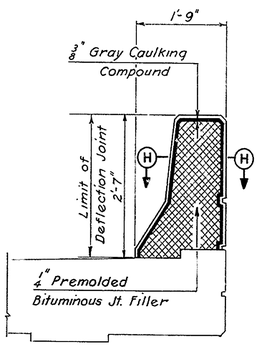


ELEVATION

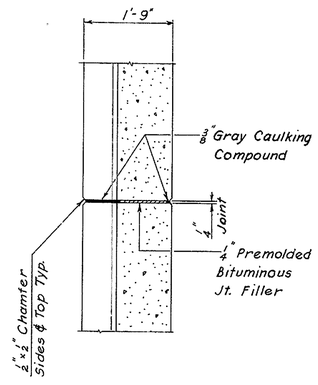


SECTION H-H

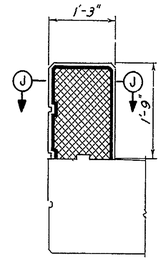


ELEVATION

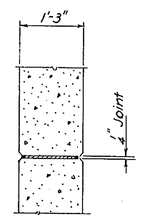


SECTION J-J

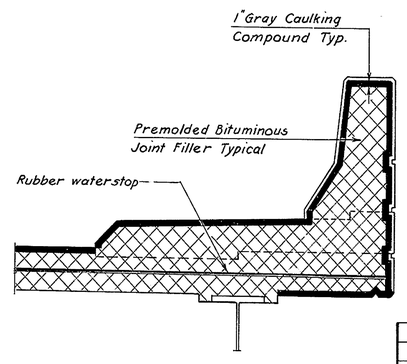


SECTION K-K
Scale ¾" = 1'-0"

For dimensions and specifications not shown; see other Parapet

PARAPET DEFLECTION JOINTS
Scale ¾" = 1'-0"

## BENDING DIAGRAMS

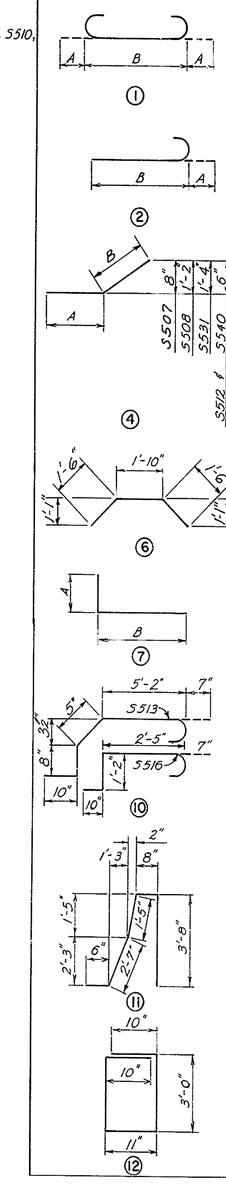


## REINFORCING BAR SCHEDULE

| MARK | NUMBER | TYPE | A | B | LENGTH |
|---|---|---|---|---|---|
| S401 | 36 | Str. | | | 16'-3" |
| S402 | 6 | Str. | | | 15'-3" |
| S403 | 84 | Str. | | | 17'-9" |
| S404 | 6 | Str. | | | 19'-4" |
| S405 | 6 | Str. | | | 18'-11" |
| | | | | | |
| S501 | 431 | 11 | | | 8'-10" |
| S502 | 111 | 1 | 0'-7" | 48'-2" | 49'-4" |
| S503 | 1 Ser. 48 | Str. | | | 3'-2" to 46'-1" |
| S504 | 1 Ser. 48 | 1 | 0'-7" | 3'-2" to 46'-1" | 4'-4" to 47'-3" |
| S505 | 1 Ser. 46 | Str. | | | 2'-7" to 45'-6" |
| S506 | 1 Ser. 46 | 1 | 0'-7" | 2'-7" to 45'-6" | 3'-9" to 46'-8" |
| S507 | 4 | 4 | 51'-10" | 1'-7" | 53'-5" |
| S508 | 8 | 4 | 50'-1" | 2'-7" | 52'-8" |
| S509 | 82 | Str. | | | 49'-4 |
| S510 | 9 | 6 | | | 4'-10" |
| S511 | 218 | 7 | 0'-7" | 8'-0" | 8'-7" |
| S512 | 80 | 4 | 1'-3" | 0'-8" | 1'-11" |
| S513 | 401 | 10 | | | 7'-8" |
| S514 | 5 | 2 | 0'-7" | 4'-5" | 5'-0" |
| S515 | 5 | 2 | 0'-7" | 2'-7" | 3'-2" |
| S516 | 106 | 10 | | | 5'-0" |
| S517 | 2 | 2 | 0'-7" | 2'-4" | 2'-11" |
| S518 | 566 | Str. | | | 15'-3" |
| S519 | 566 | 2 | 0'-7" | 15'-3" | 15'-10" |
| S520 | 1 Ser. 12 | Str. | | | 3'-2" to 14'-1" |
| S521 | 1 Ser. 12 | 1 | 0'-7" | 3'-2" to 14'-1" | 4'-4" to 15'-3" |
| S522 | 3 Ser. 11 | Str. | | | 1'-9" to 11'-5" |
| S523 | 3 Ser. 11 | 1 | 0'-7" | 1'-9" to 11'-5" | 2'-11" to 12'-7" |
| S524 | 46 | 7 | 0'-7" | 1'-7" | 2'-2" |
| S525 | 59 | Str. | | | 47'-5" |
| S526 | 9 | Str. | | | 48'-4" |
| S527 | 12 | Str. | | | 16'-6" |
| S528 | 3 Ser. 11 | Str. | | | 4'-9" to 14'-1" |
| S529 | 3 Ser. 11 | 1 | 0'-7" | 4'-9" to 14'-1" | 5'-11" to 15'-3" |
| S530 | 136 | Str. | | | 55'-0" |
| S531 | 12 | 4 | 16'-0" | 2'-10" | 18'-10" |
| S532 | 8 | Str. | | | 45'-3" |
| S533 | 8 | 2 | 0'-7" | 45'-3" | 45'-10" |
| S534 | 8 | Str. | | | 37'-9" |
| S535 | 8 | 2 | 0'-7" | 37'-9" | 38'-4" |
| S536 | 8 | Str. | | | 30'-3" |
| S537 | 8 | 2 | 0'-7" | 30'-3" | 30'-10" |
| S538 | 8 | Str. | | | 22'-9 |
| S539 | 8 | 2 | 0'-7" | 22'-9" | 23'-4" |
| S540 | 4 | 4 | 51'-10" | 1'-1" | 52'-11" |
| S541 | 34 | Str. | | | 46'-2" |
| S542 | 4 Ser. 6 | Str. | | | 54'-11" to 58'-4" |
| S543 | 1 | 2 | 0'-7" | 1'-7" | 2'-2" |
| S544 | 6 | Str. | | | 55'-4" |
| S545 | 5 | Str. | | | 54'-9" |
| S546 | 6 | Str. | | | 5'-2 |
| S547 | 4 Ser. 6 | Str. | | | 55'-3" to 58'-8" |
| S548 | 30 | Str. | | | 15'-11" |
| S549 | 6 | Str. | | | 17'-2" |
| S550 | 112 | 12 | | | 8'-7" |
| S551 | 111 | Str. | | | 48'-2" |
| S552 | 40 | Str. | | | 18'-0" |
| S553 | 6 | Str. | | | 48'-8" |
| S554 | 5 | Str | | | 49'-1" |
| | | | | | |
| S601 | 45 | Str. | | | 6'-0" |

| NO. | REVISION | BY | DATE |
|---|---|---|---|
| 3 | | | |
| 2 | | | |
| 1 | | | |

| | BY | DATE |
|---|---|---|
| MADE | W. F. D. | 10-69 |
| CHECKED | J. R. C. | 11-69 |
| IN CHARGE | J. E. H. | |

DELAWARE STATE HIGHWAY DEPARTMENT

# DELAWARE TURNPIKE

ROUTE 896 INTERCHANGE IMPROVEMENTS
BRIDGE OVER DELAWARE TURNPIKE

## SLAB DETAILS

HOWARD, NEEDLES, TAMMEN & BERGENDOFF
consulting engineers
NEW YORK KANSAS CITY

SCALE: As shown
CONTRACT NO. _____
SHEET NO. 20 OF 25

| DELAWARE TURNPIKE | CONT NO | TITLE | SHEET NO | TOTAL SHEETS |
|---|---|---|---|---|
| | 7053 | | 72 | 86 |

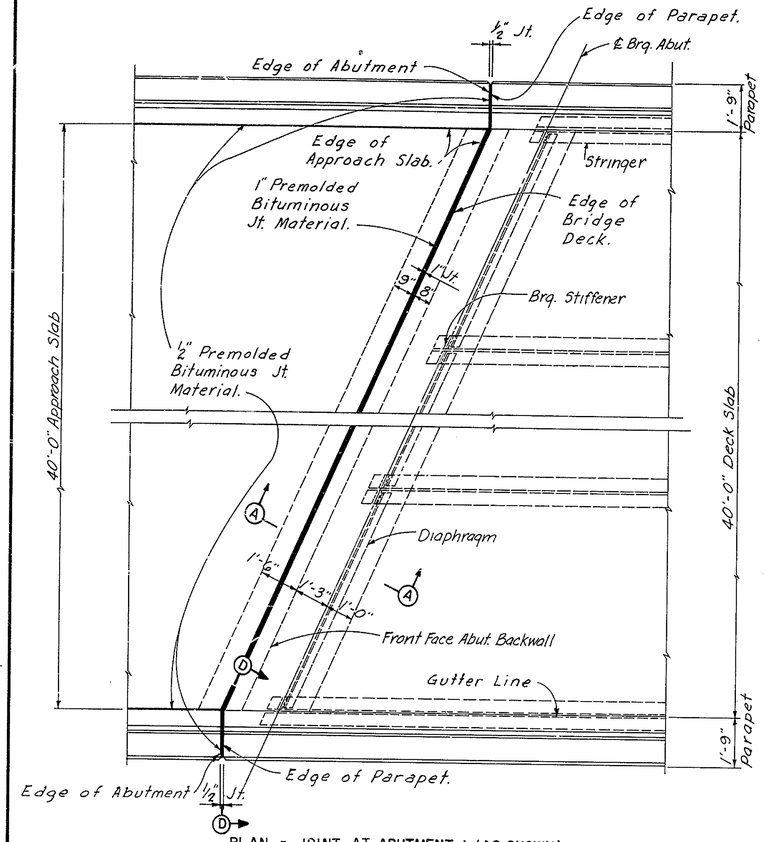


PLAN - JOINT AT ABUTMENT 1 (AS SHOWN)
PLAN - JOINT AT ABUTMENT 2 (SIMILAR)
Scale 3/8" = 1'-0"

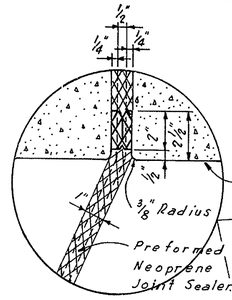


TYPE "A" JOINT AT PIER NO. 1 AND NO. 5
Scale 3" = 1'-0"

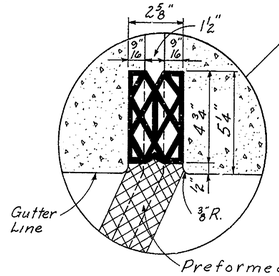


TYPE "A" JOINT AT PIER NO. 2 AND NO. 4
No Scale

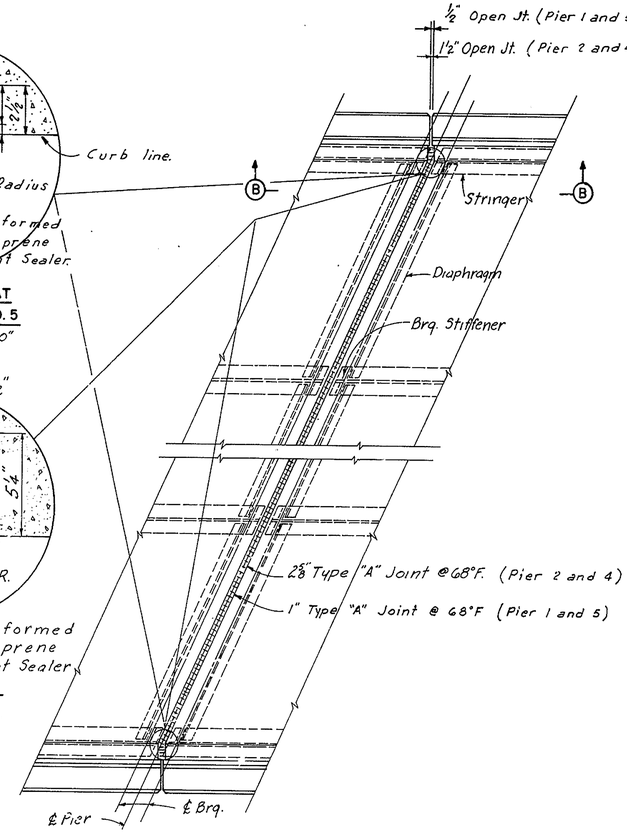


PLAN - JOINT AT PIER NO. 1, 2, 4 AND NO. 5
Scale 3/8" = 1'-0"

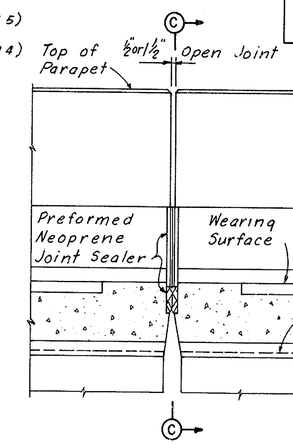


SECTION B-B
Scale 1" = 1'-0"

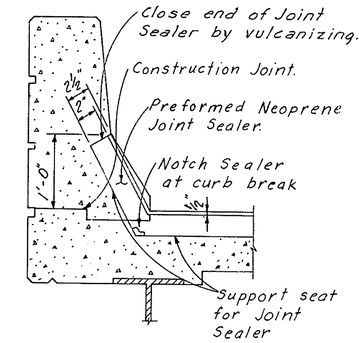


SECTION C-C
TREATMENT OF TYPE "A" JOINT AT CURB
Scale 1" = 1'-0"

NOTES:

All roadway joints shall conform to the crown and grade of the roadway surface.

It is absolutely essential that the openings for the preformed neoprene joint sealers be accurately formed and constructed to smooth straight lines. The size of the opening shall be adjusted to allow for the temperature at the time of construction.

Cost of the joints to be included in Portland Cement concrete masonry.

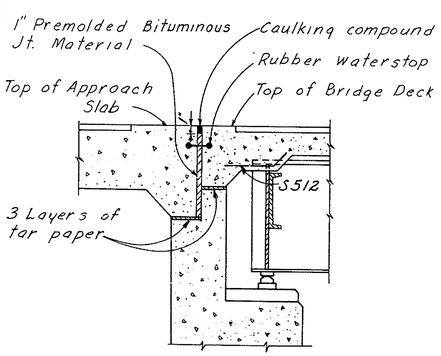


SECTION A-A
Scale 1/2" = 1'-0"

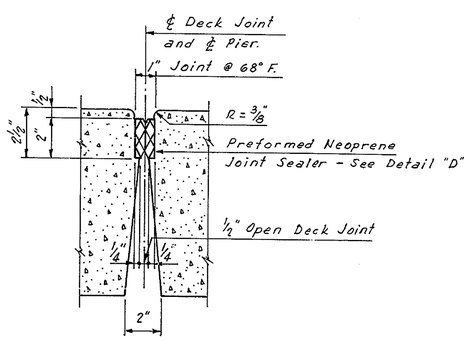


1" TYPE "A" JOINT
Scale 3" = 1'-0"

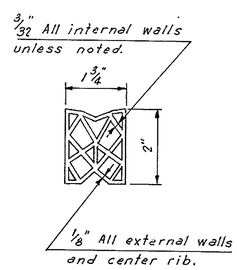


DETAIL "D"
PREFORMED NEOPRENE JOINT SEALER
FOR 1" TYPE "A" JOINT
Scale = Half Size

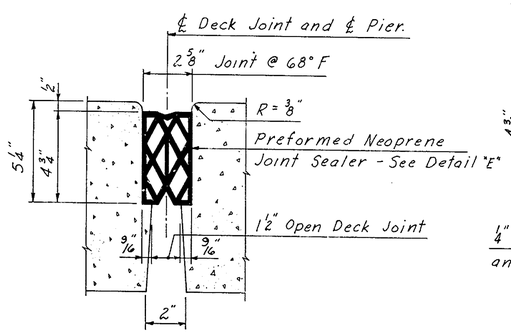


2 5/8" TYPE "A" JOINT
Scale 3" = 1'-0"

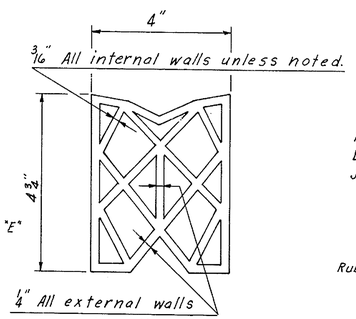


DETAIL "E"
PREFORMED NEOPRENE JOINT SEALER
FOR 2 5/8" TYPE "A" JOINT
Scale = Half Size

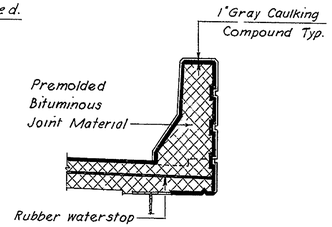


SECTION D-D
Scale 1/2" = 1'-0"

| NO. | REVISION | BY | DATE |
|---|---|---|---|
| 3 | | | |
| 2 | | | |
| 1 | | | |

| | BY | DATE |
|---|---|---|
| MADE | B.E.B. | 11-68 |
| CHECKED | W.F.D. | 11-69 |
| IN CHARGE | J.E.H. | |

DELAWARE STATE HIGHWAY DEPARTMENT
DELAWARE TURNPIKE
ROUTE 896 INTERCHANGE IMPROVEMENTS
BRIDGE OVER DELAWARE TURNPIKE
JOINT DETAILS

HOWARD, NEEDLES, TAMMEN & BERGENDOFF
consulting engineers
NEW YORK KANSAS CITY

SCALE: As Noted
CONTRACT NO. 7053
SHEET NO. 21 OF 25

| DELAWARE TURNPIKE | CONT. NO. | TITLE | SHEET NO. | TOTAL SHEETS |
|---|---|---|---|---|
| | 7053 | | 73 | 86 |

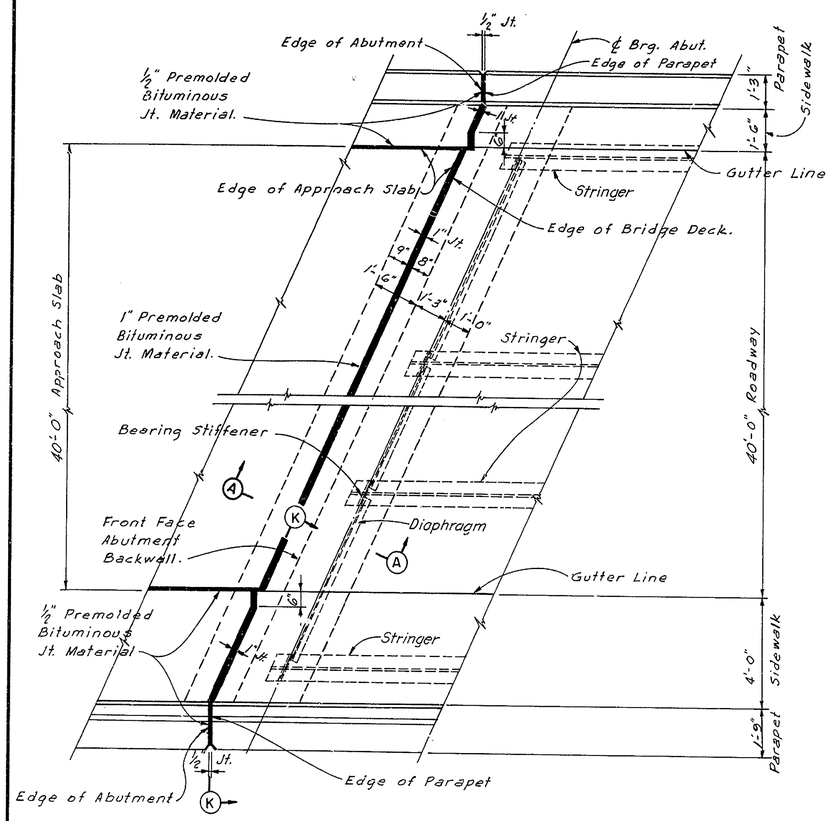


PLAN - JOINT AT ABUTMENT 3 (AS SHOWN)
PLAN - JOINT AT ABUTMENT 4 (SIMILAR)
Scale 3/8" = 1'-0"

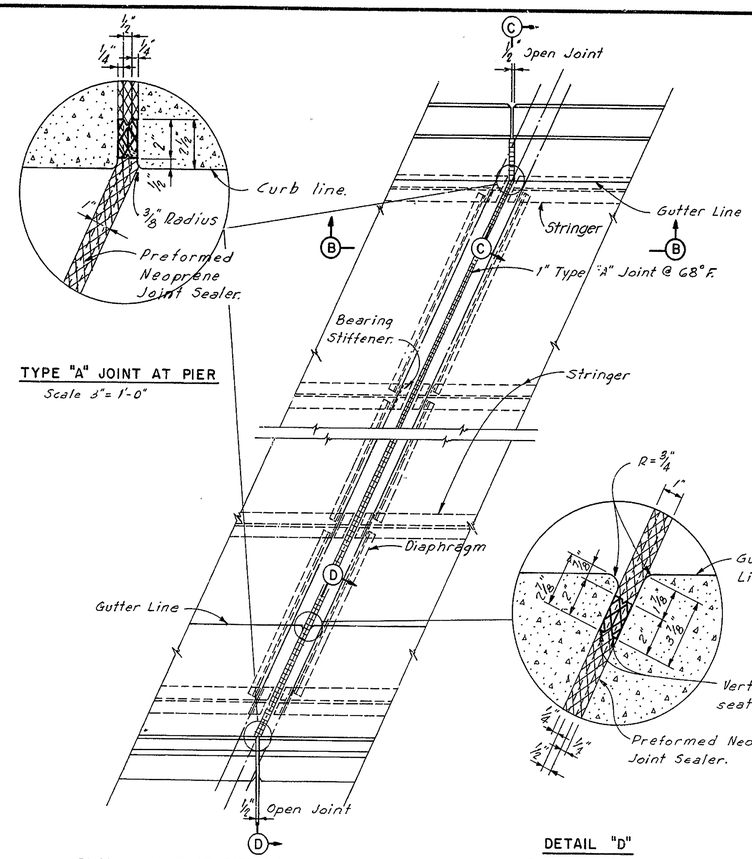


TYPE "A" JOINT AT PIER
Scale 3" = 1'-0"

PLAN - JOINT AT PIER NO. 6
Scale 3/8" = 1'-0"

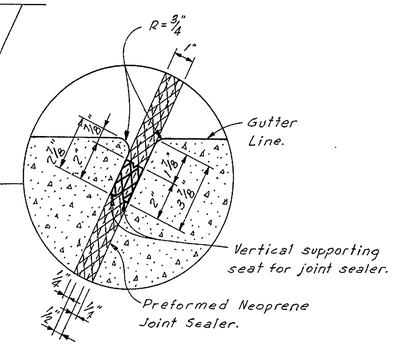


DETAIL "D"
Scale 3" = 1'-0"

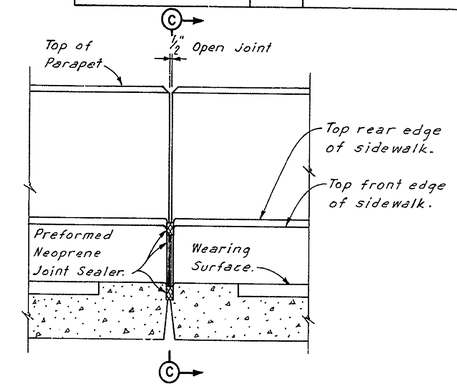


SECTION B-B
Scale 1" = 1'-0"

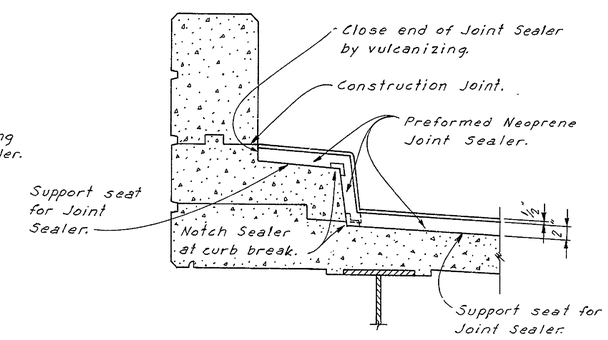


SECTION C-C
TREATMENT OF TYPE "A" JOINT AT CURB
Scale 1" = 1'-0"

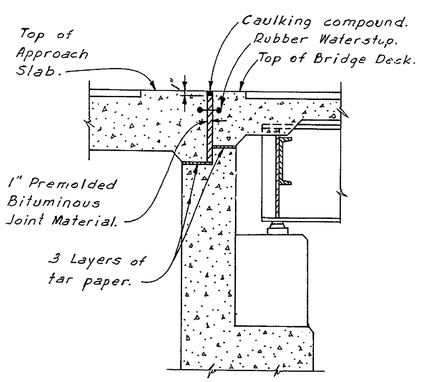


SECTION A-A
Scale 1/2" = 1'-0"

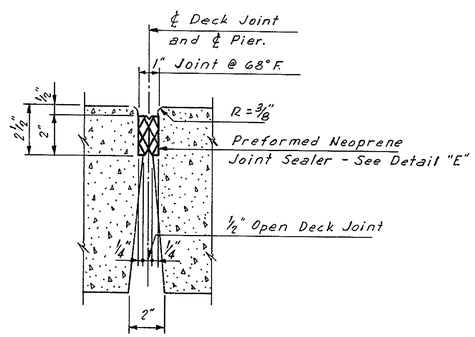


1" TYPE "A" JOINT
Scale 3" = 1'-0"

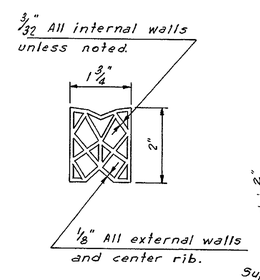


DETAIL "E"
PREFORMED NEOPRENE
JOINT SEALER
FOR 1" TYPE "A" JOINT
Scale = Half Size

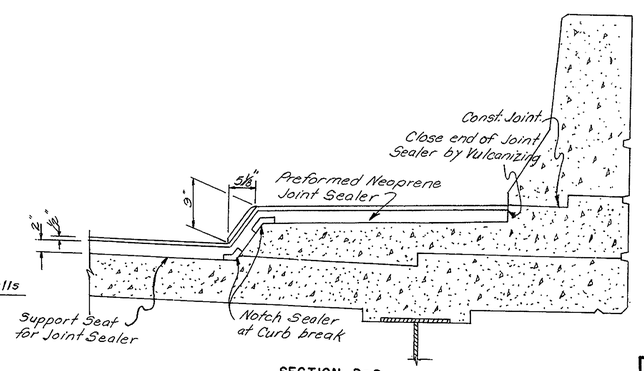


SECTION D-D
TREATMENT OF TYPE "A" JOINT AT CURB
Scale: 1'-0"

NOTES:
For General Notes see sheet No. 1 of 25
All Roadway Joints shall Conform to the Crown and Grade of the Roadway Surface.

It is absolutely essential that the openings for the preformed neoprene joint Sealers be accurately formed and constructed to smooth straight lines.

The size of the opening shall be adjusted to allow for the temperature at the time of construction.

Cost of the Joints to be included in Portland Cement Concrete Masonery.

For Section K-K see sheet no. 20 of 25

| NO. | REVISION | BY | DATE |
|---|---|---|---|
| 3 | | | |
| 2 | | | |
| 1 | | | |

| | BY | DATE |
|---|---|---|
| MADE | L.D.E | 8-69 |
| CHECKED | I.R.P. | 11-69 |
| IN CHARGE | J.E.H. | |

DELAWARE STATE HIGHWAY DEPARTMENT
DELAWARE TURNPIKE
ROUTE 896 INTERCHANGE IMPROVEMENTS
BRIDGE OVER DELAWARE TURNPIKE
JOINT DETAILS

HOWARD, NEEDLES, TAMMEN & BERGENDOFF
consulting engineers
NEW YORK KANSAS CITY

SCALE: As Noted
CONTRACT NO. 7053
SHEET NO 22 OF 25

| DELAWARE TURNPIKE | CONT. NO. | TITLE | SHEET NO. | TOTAL SHEETS |
|---|---|---|---|---|
| | 7053 | | 74 | 86 |

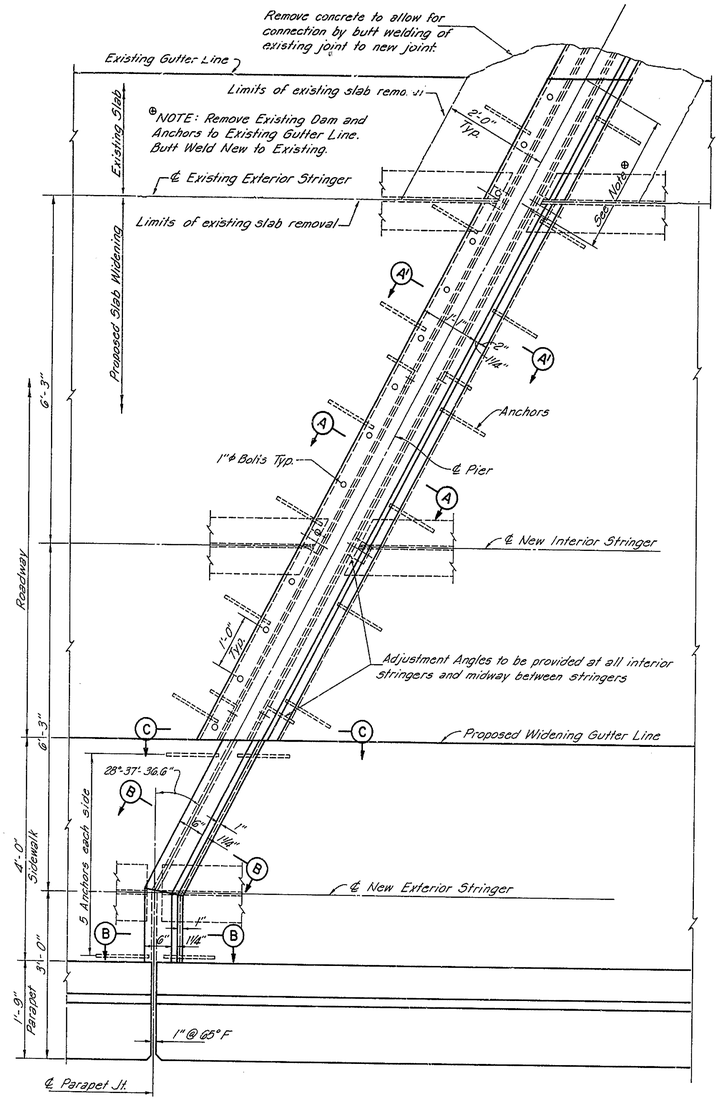


PLAN AT EXPANSION JOINT
SLIDING PLATE DETAIL
PIERS 7, 8 & 9
Scale: 3/4" = 1'-0"

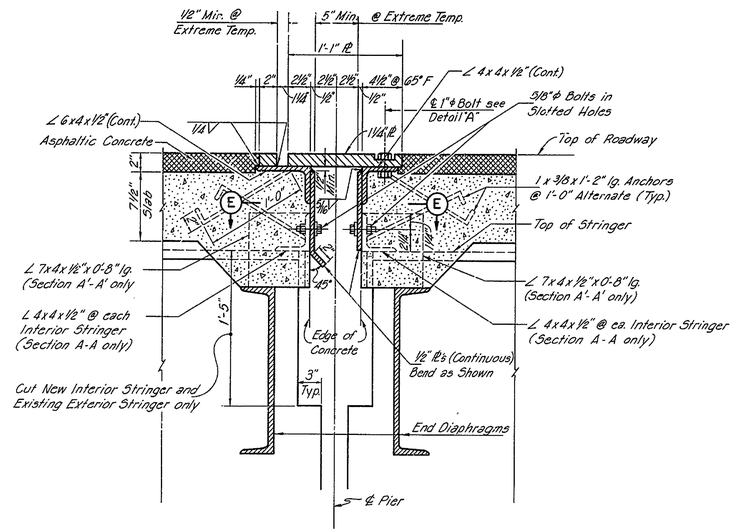


SECTION A-A (As Shown)
SECTION A'-A' (Same unless noted)

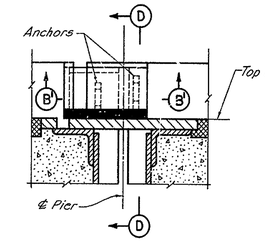


SECTION C-C

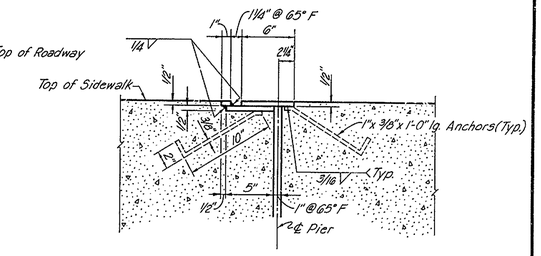


SECTION B-B (Shown)
SECTION B'-B' (Similar)

Note: Parapet not shown

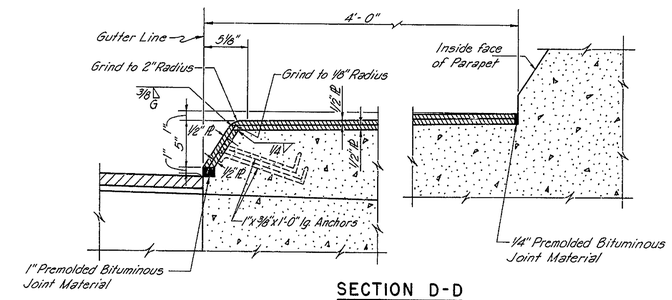


SECTION D-D

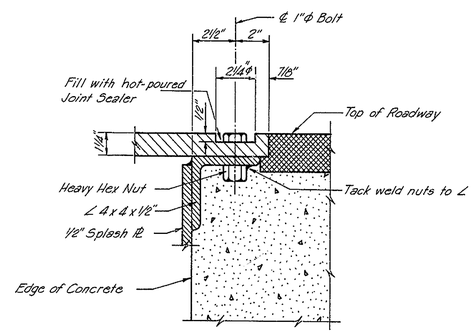


DETAIL "A"
Scale: 3" = 1'-0"

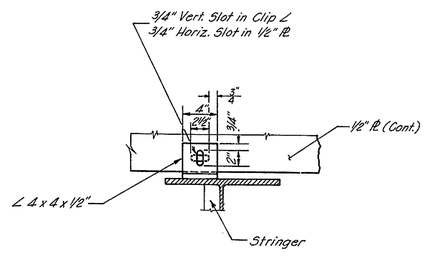


SECTION F-F

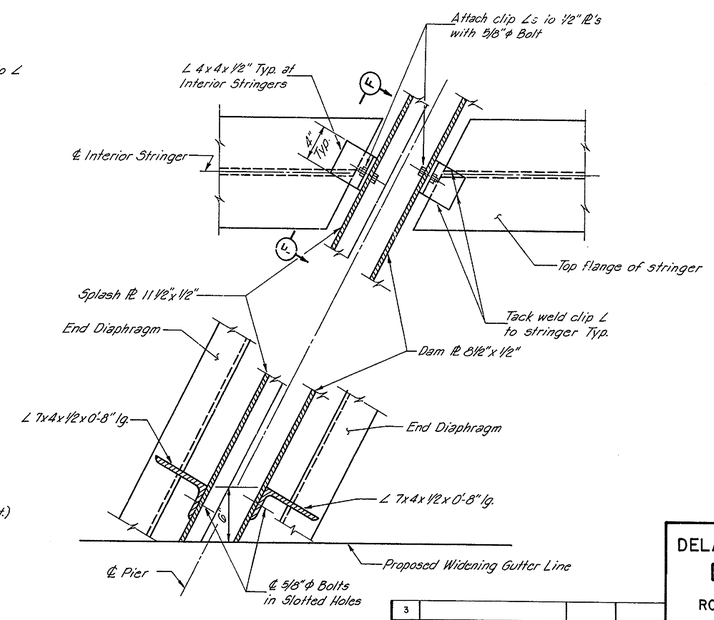


SECTION E-E

NOTES:
For General Notes, See Sheet No. 1 of 25

Top of expansion joint to conform to Roadway Cross-Section & Side Walk

Reinforcing not shown, see sheet 19 of 25

| NO. | REVISION | BY | DATE |
|---|---|---|---|
| 3 | | | |
| 2 | | | |
| 1 | | | |

| | BY | DATE |
|---|---|---|
| MADE | C.K.C. | 11-69 |
| CHECKED | W.F.D. | 11-69 |
| IN CHARGE | J.F.H. | |

DELAWARE STATE HIGHWAY DEPARTMENT
DELAWARE TURNPIKE
ROUTE 896 INTERCHANGE IMPROVEMENTS
BRIDGE OVER DELAWARE TURNPIKE
JOINT DETAILS

HOWARD, NEEDLES, TAMMEN & BERGENDOFF
consulting engineers
NEW YORK KANSAS CITY

SCALE: 1 1/2" = 1'-0" unless noted
CONTRACT NO. 7053
SHEET NO. 23 OF 25

| DELAWARE TURNPIKE | CONT. NO. | TITLE | SHEET NO. | TOTAL SHEETS |
|---|---|---|---|---|
| | 7053 | | 75 | 86 |

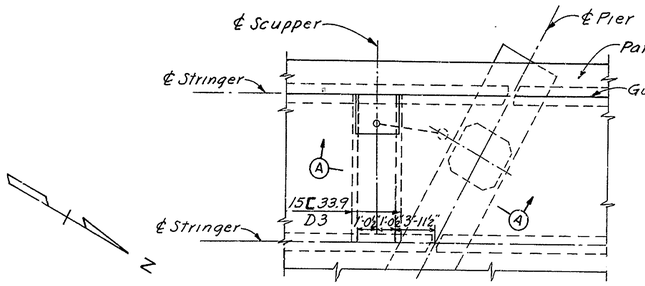


TYPICAL PLAN – PIERS 2-3-4
Scale 4" = 1'-0"

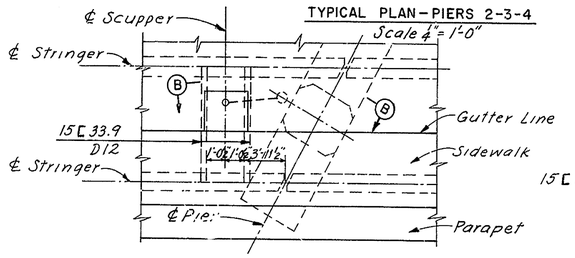


TYPICAL PLAN - PIERS 7-8-9
Scale 1/4" = 1'-0"

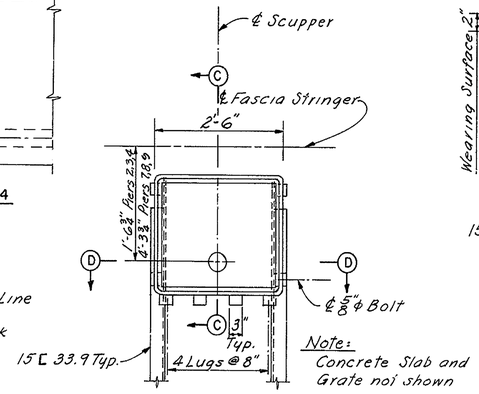


SCUPPER PLAN
Scale 3/4" = 1'-0"

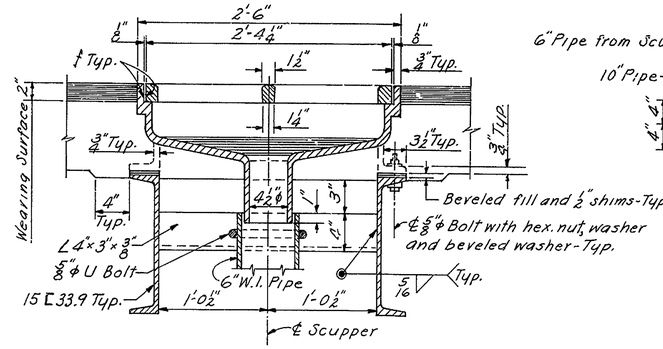


SECTION D-D
Scale 1 1/2" = 1'-0"

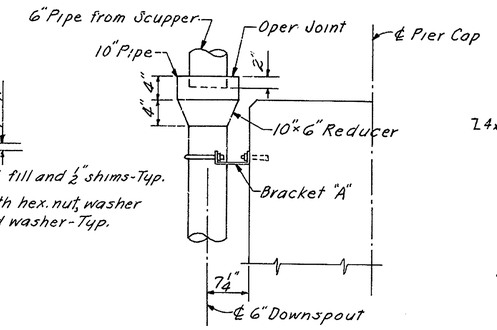


HOPPER DETAIL
Scale 1" = 1'-0"

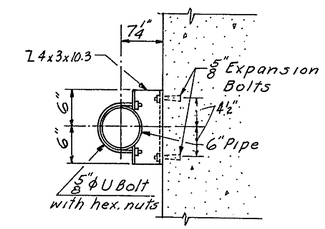


BRACKET "A" DETAIL
Scale 1" = 1'-0"

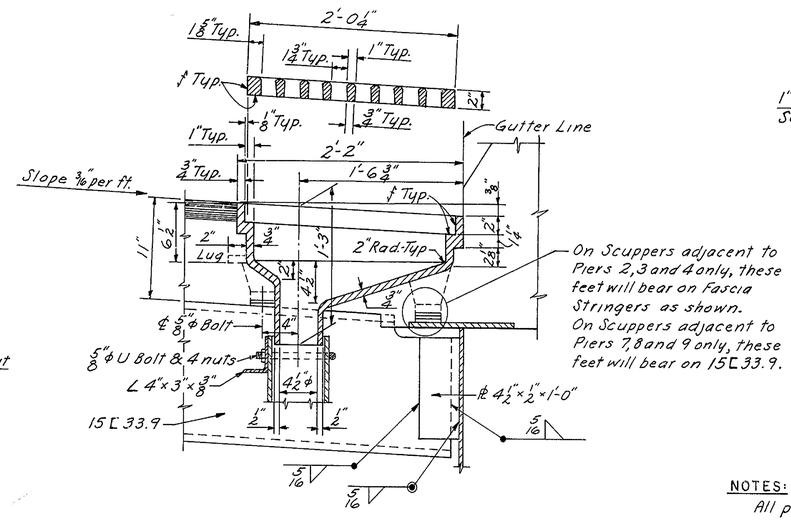


SECTION C-C
Scale 1 1/2" = 1'-0"

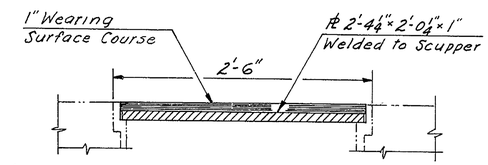


EXISTING SCUPPER MODIFICATION
Scale 1 1/2" = 1'-0"

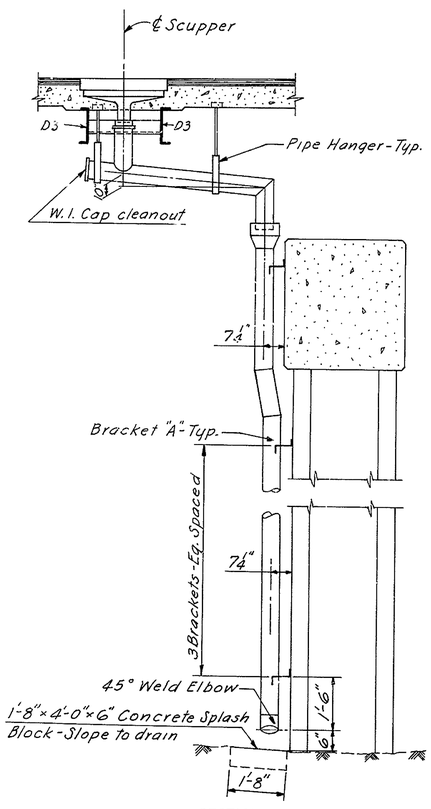


SECTION A-A
Scale 1/2" = 1'-0"

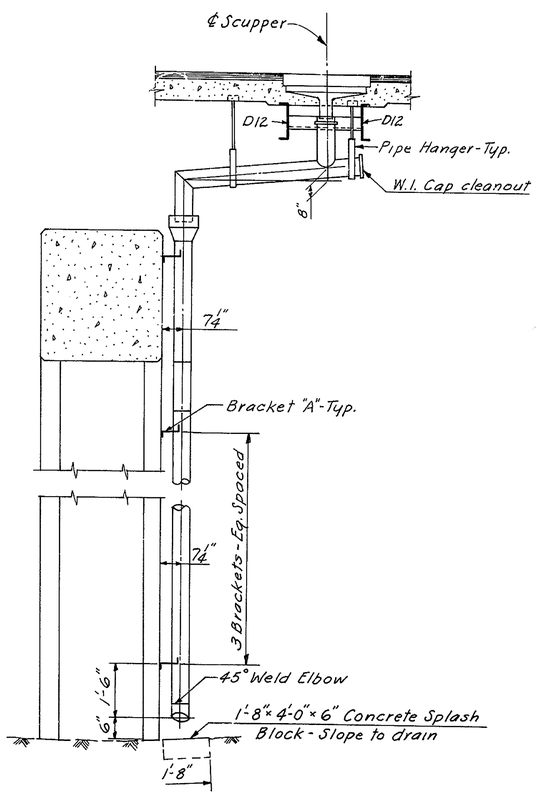


SECTION B-B
Scale 1/2" = 1'-0"

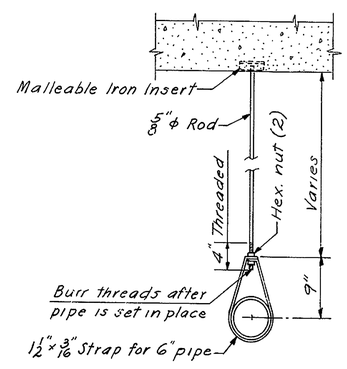


PIPE HANGER DETAIL
Scale 1" = 1'-0"

NOTES:

All pipe to be black wrought iron, standard weight.
All fittings to be welded, wrought iron, standard weight.
All pipe and fittings to be galvanized.
All brackets, rods, straps, plates, bolts, nuts and washers to be galvanized.
All grates and frames shall be cast steel.
All existing down spouts shall be removed. Salvaged down spouts and grates shall be reused at new scuppers.

| NO. | REVISION | BY | DATE |
|---|---|---|---|
| 3 | | | |
| 2 | | | |
| 1 | | | |

| | BY | DATE |
|---|---|---|
| MADE | F.J.C. | 10-69 |
| CHECKED | J.R.C. | 11-69 |
| IN CHARGE | J.E.H. | |

DELAWARE STATE HIGHWAY DEPARTMENT

# DELAWARE TURNPIKE

ROUTE 896 INTERCHANGE IMPROVEMENTS
BRIDGE OVER DELAWARE TURNPIKE

## DRAINAGE DETAILS

HOWARD, NEEDLES, TAMMEN & BERGENDOFF
consulting engineers
NEW YORK KANSAS CITY

SCALE: As Noted
CONTRACT NO. 7053
SHEET NO. 24 OF 25

| DELAWARE TURNPIKE | CONT NO | TITLE | SHEET NO | TOTAL SHEETS |
|---|---|---|---|---|
| | 7053 | | 76 | 86 |

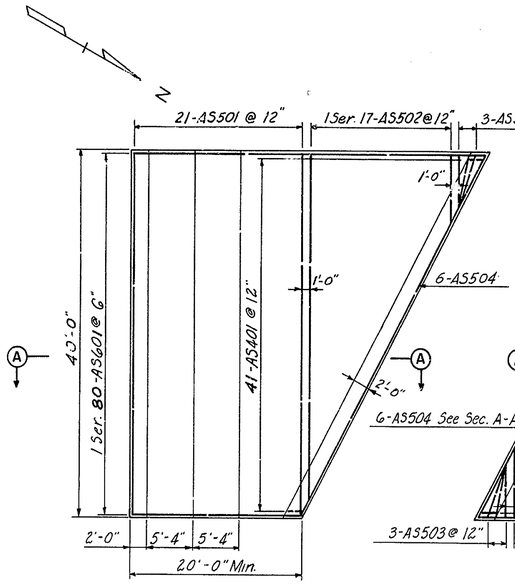


PLAN AT ABUTMENT NO. 1 & NO. 3

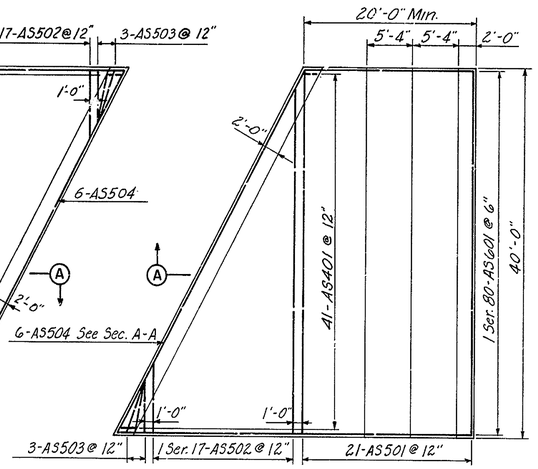


PLAN AT ABUTMENT NO. 2 & NO. 4

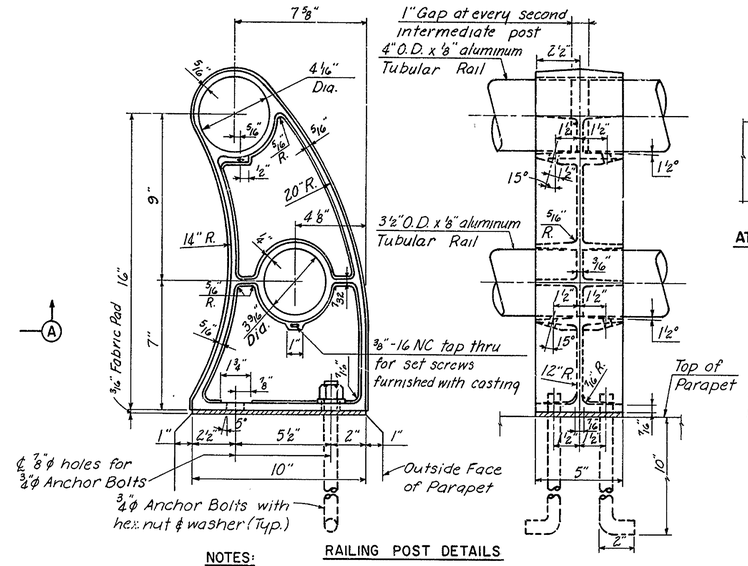


RAILING POST DETAILS

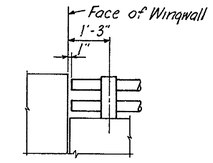


AT ABUTMENTS

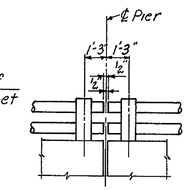


AT PIERS

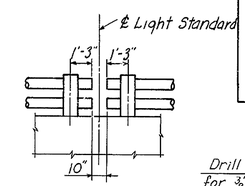


AT LIGHT STANDARDS

| REINFORCING BAR SCHEDULE | | | | | |
|---|---|---|---|---|---|
| MARK | NO. | TYPE | A | B | LENGTH |
| AS401 | 164 | 13 | 1'-9" | 1'-4" | 5'-9" |
| | | | | | |
| | | | | | |
| AS501 | 84 | Str. | | | 39'-8" |
| AS502 | 4 Ser. 17 | Str. | | | 7'-6" to 37'-6" |
| AS503 | 12 | Str. | | | 6'-0" |
| AS504 | 24 | Str. | | | 45'-2" |
| | | | | | |
| | | | | | |
| | | | | | |
| | | | | | |
| AS601 | 4 Ser. 80 | 1 | 19'-8" to 41'-6" | 8" | 21'-0" to 42'-10" |
| | | | | | |
| No. of Bars shown are for 4 Approach Slabs | | | | | |

BENDING DIAGRAMS

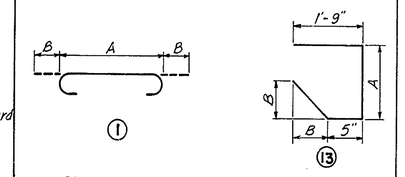


Dimensions are out to out of bars

NOTES:

1.) All Railings are to be fabricated and erected so that the rails are parallel to each other and to the top fascia and so the posts are truly vertical.

2.) Anchor bolts for railing posts shall be aluminum alloy meeting the requirements of ASTM-B211 alloy 2024-T4.

3.) After nuts have been placed & tightened to the satisfaction of the Engineer, bolts shall be cut off 1/8" above nuts and peened.

4.) All rails to be continuous at all end posts adjacent to piers and abutments.

5.) Tubular rails shall be closed at all piers and abutments with a welded in aluminum plug.

6.) The finished aluminum alloy bolts, nuts, & washers shall be given an anodic coating at least 0.0002 inches thick and a chromate seal.

7.) For Railings to be reused see sheet No. 19 of 25.

APPROACH SLABS

Scale 1/8" = 1'-0"

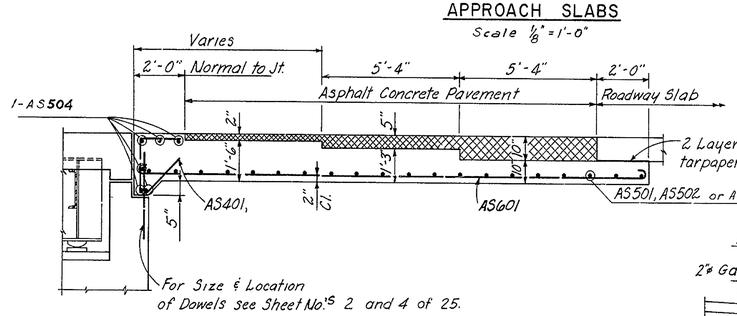


SECTION A-A

Scale: 3/8" = 1'-0"

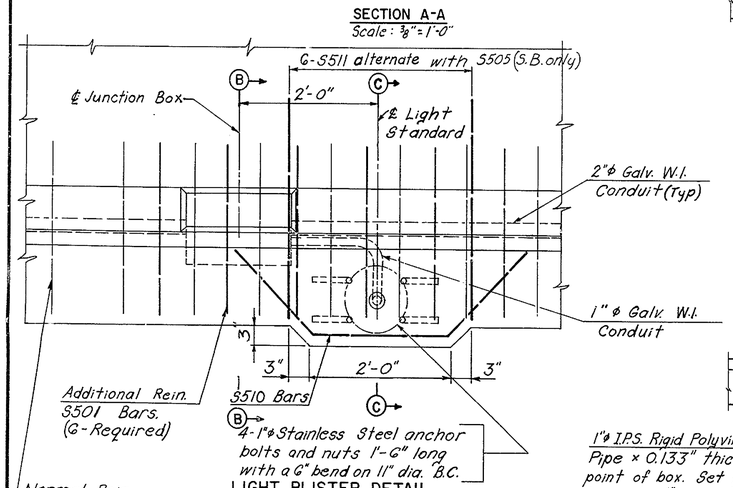


LIGHT BLISTER DETAIL

Scale: 1" = 1'-0"

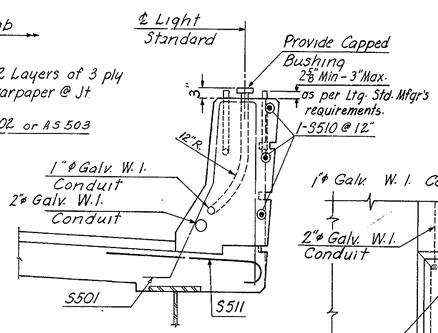


SECTION C-C

Scale: 3/4" = 1'-0"

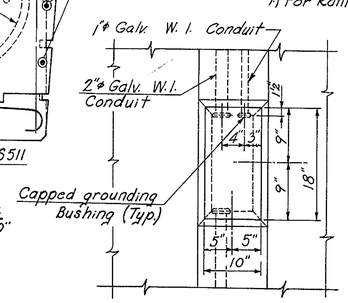


VIEW C-C

Scale 1" = 1'-0"

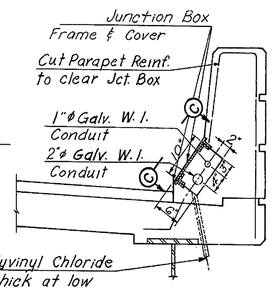


SECTION B-B

Scale: 3/4" = 1'-0"

NOTES:

Junction Box frame and Cover shall be H.D. Galvanized after fabrication.

Anchor bolts, washers and nuts shall be H.D. Galvanized Steel.

All metal conduits and fittings shall be H.D. Galvanized (See Spec's).

Grounding bushings shall be equal to O-Z Type IGB.

For location of lighting standards, See Sheet No. 15

Location of Junction Box with respect to Light Standard will be such that it will clear any parapet joint and at the same time maintain the specified distance.

Cost of 1" ϕ and 2" ϕ W.I. conduits imbedded in concrete and junction box on structure to be included in price bid for Item 18 P.C.C. Masonry - Superstructure.

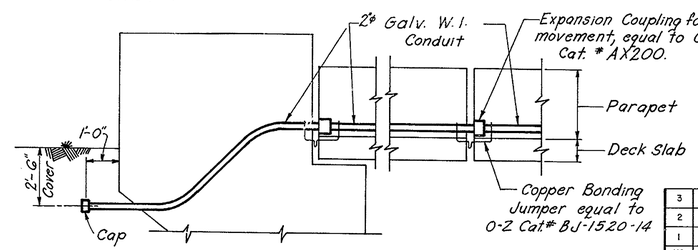


ABUTMENT PIER

EXPANSION JOINT DETAILS FOR CONDUITS

No Scale

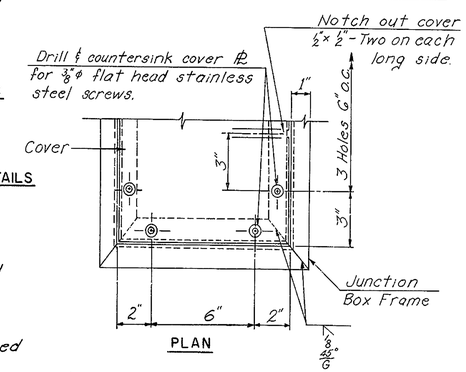


PLAN

HANDRAIL TERMINAL DETAILS

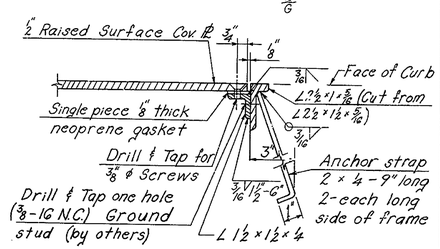


JUNCTION BOX FRAME AND COVER

Scale: 3" = 1'-0"

| NO. | REVISION | BY | DATE |
|---|---|---|---|
| 3 | | | |
| 2 | | | |
| 1 | | | |

| | BY | DATE |
|---|---|---|
| MADE | BEB | 1-69 |
| CHECKED | JBG | 8-69 |
| IN CHARGE | JEH | |

DELAWARE STATE HIGHWAY DEPARTMENT

# DELAWARE TURNPIKE

ROUTE 896 INTERCHANGE IMPROVEMENTS
BRIDGE OVER DELAWARE TURNPIKE

## MISCELLANEOUS DETAILS

HOWARD, NEEDLES, TAMMEN & BERGENDOFF
consulting engineers
NEW YORK KANSAS CITY

SCALE: As Noted
CONTRACT NO. 7053
SHEET NO 25 of 25

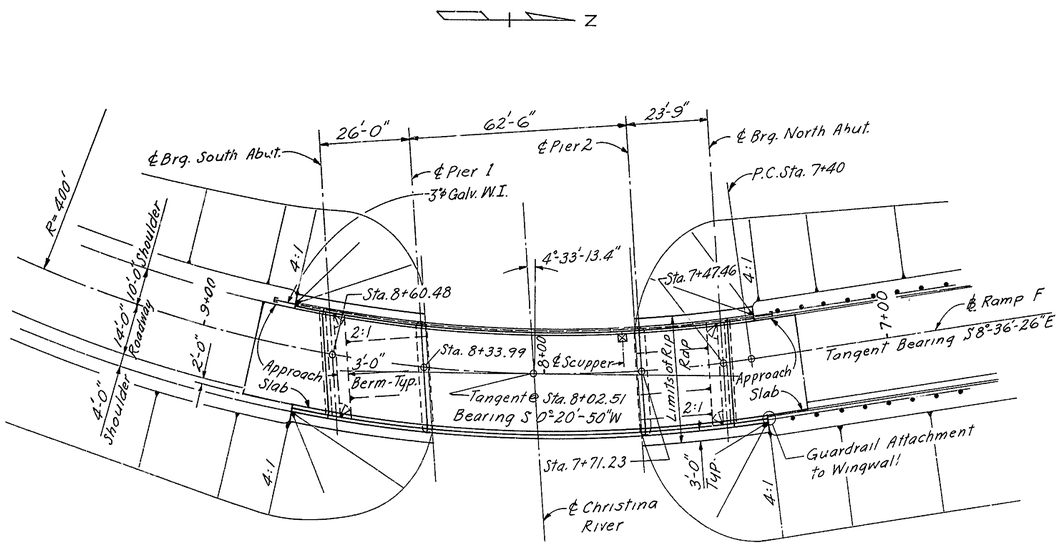


PLAN

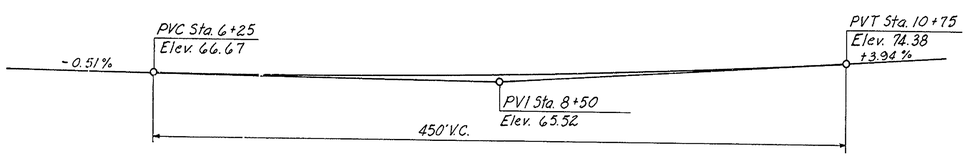


PROFILE
No Scale

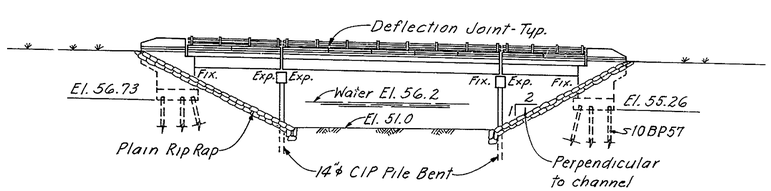


ELEVATION

## ESTIMATED QUANTITIES

| ITEM NO. | DESCRIPTION | UNIT | QUANTITY |
|---|---|---|---|
| 4 | Excavation for Structures | C.Y. | 135 |
| 11 | Hot-mix, Hot-laid Asphaltic Conc. Pavement | Tons | 70 |
| 18 | Portland Cement Concrete Masonry | | |
| | Footings | C.Y. | 51 |
| | Substructure above footings | C.Y. | 88 |
| | Superstructure | C.Y. | 122 |
| | Approach Slabs | C.Y. | 54 |
| 19 | Superficial Waterproofing | S.Y. | 65 |
| 20 | Bar Reinforcement | Lbs. | 41,900 |
| 22 | Structural Steel (Estimated Wt. 81,000 lbs.) | L.S. | 1 |
| 31 | 6"φ Perforated Corr. Metal Pipe Underdrain | L.F. | 120 |
| | Steel Bearing Piles - 10 BP 57 | L.F. | 940 |
| 35 | Cast-in-Place Concrete Piles 14"φ (bents) | L.F. | 420 |
| | Bridge Drainage | L.S. | 1 |
| 64 | Riprap (Plain) | S.Y. | 230 |
| | Coal Tar Epoxy Underseal | S.Y. | 440 |
| | Protective Coating for Concrete | S.F. | 410 |
| 22A | Aluminum Railing - Double Rail | L.F. | 235 |

GENERAL NOTES:

Construction Specifications: Delaware State Highway Department Standard Specifications dated June 1, 1965 and Special Provisions.

Design Specifications: A.A.S.H.O. Standard Specifications for Highway Bridges dated 1965.

Design Live Load: HS20-44

Design Stresses: Concrete fc = 1200 p.s.i. Structural and Reinforcing Steel fs = 20,000 p.s.i.

Concrete:

All exposed edges shall be chamfered 1" unless otherwise noted.

Concrete cover on reinforcing shall be 2" min. unless otherwise shown in the plans.

Bar Reinforcement: Bar reinforcement shall be deformed billet-steel bars (A-615) grade 40.

All bar laps shall be 30 diameters minimum of the smaller bar spliced, unless otherwise noted.

In computing the total length shown for each bent bar, dimensions of legs adjoining each bend (not 135° or 180° hooks) were carried to the point of intersection of both legs and no deductions were made for the shorter distance along the curve. The Contractor shall take this fact into consideration when ordering and fabricating bent bars.

The first digit of the bar mark denotes the bar size, i.e. A501 is a No. 5 bar.

Structural Steel: Structural Steel shall conform to the requirements of A.S.T.M. Designation A36 except as noted.

Piles: All piles in Abutments shall be 10BP57 steel bearing piles driven to a minimum bearing capacity of 50 tons. All piles in Piers shall be 14"φ cast-in-place concrete piles driven to a minimum bearing capacity of 50 tons.

| NO. | REVISION | BY | DATE |
|---|---|---|---|
| 3 | | | |
| 2 | | | |
| 1 | | | |

| | BY | DATE |
|---|---|---|
| MADE | F.J.C. | 12-68 |
| CHECKED | JBG | 1-69 |
| IN CHARGE | JEH | |

DELAWARE STATE HIGHWAY DEPARTMENT

DELAWARE TURNPIKE

ROUTE 896 INTERCHANGE IMPROVEMENTS
RAMP F BRIDGE OVER CHRISTINA RIVER

GENERAL PLAN & ELEVATION

HOWARD, NEEDLES, TAMMEN & BERGENDOFF
consulting engineers
NEW YORK KANSAS CITY

SCALE: 1" = 20'-0"
CONTRACT NO. 7053
SHEET NO. 1 OF 8

| DELAWARE TURNPIKE | CONT. NO. | TITLE | SHEET NO. | TOTAL SHEETS |
|---|---|---|---|---|
| | 7053 | | 78 | 86 |

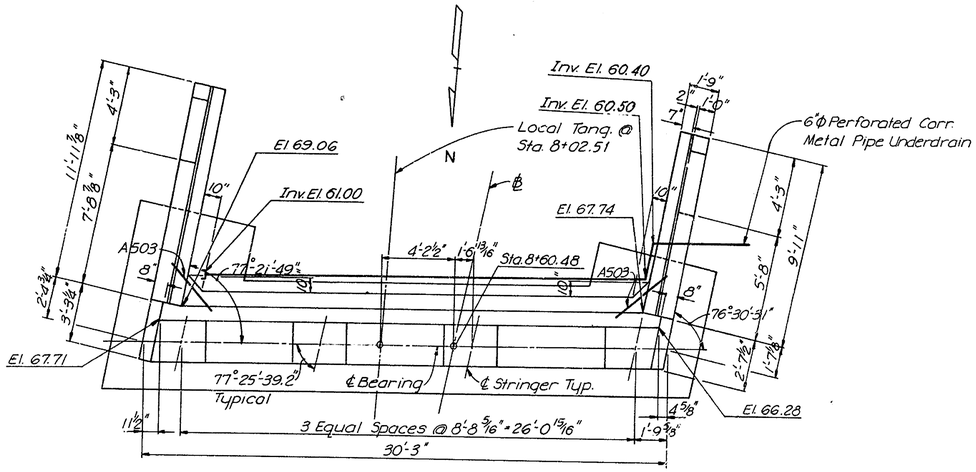


PLAN SOUTH ABUTMENT

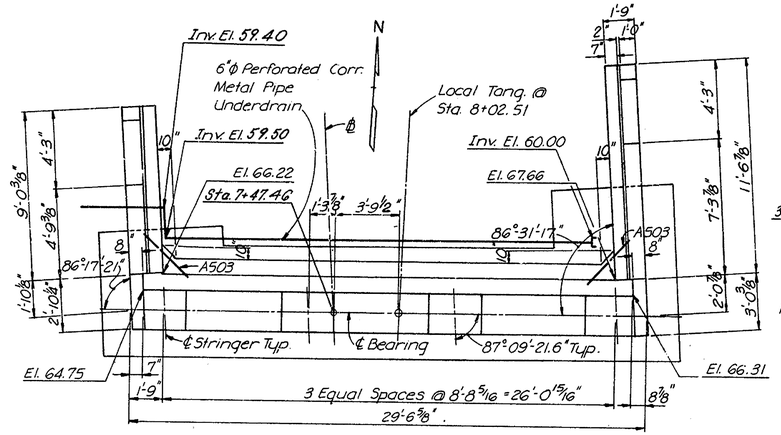


PLAN NORTH ABUTMENT

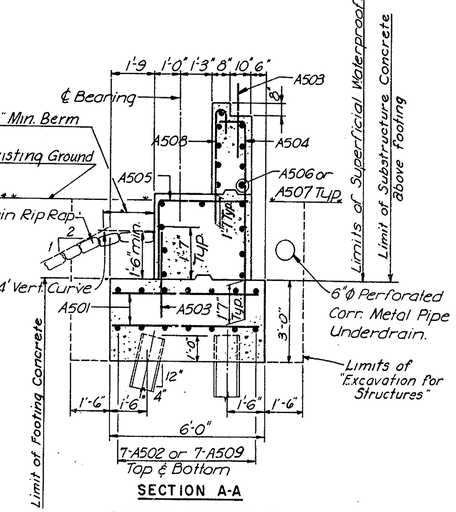


SECTION A-A

SECTION B-B SIMILAR

Scale 3/8" = 1'-0"

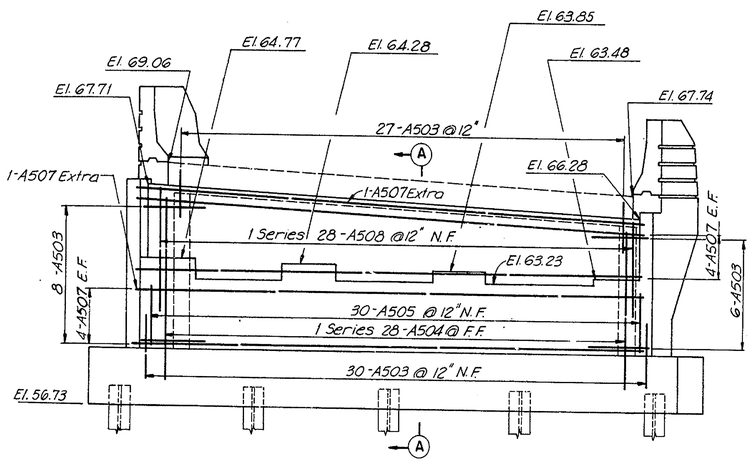


ELEVATION SOUTH ABUTMENT

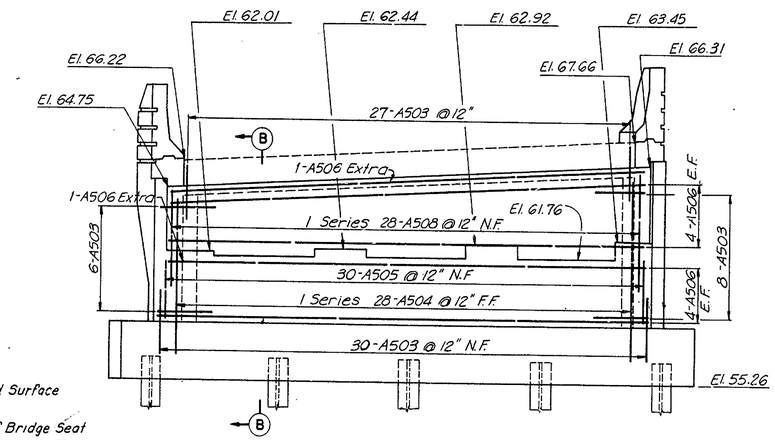


ELEVATION NORTH ABUTMENT

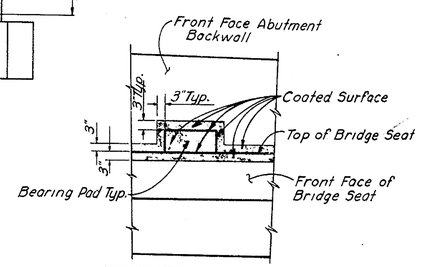


APPLICATION LIMITS OF EPOXY PROTECTIVE COATING FOR CONCRETE

(Part Elevation at Abutment)

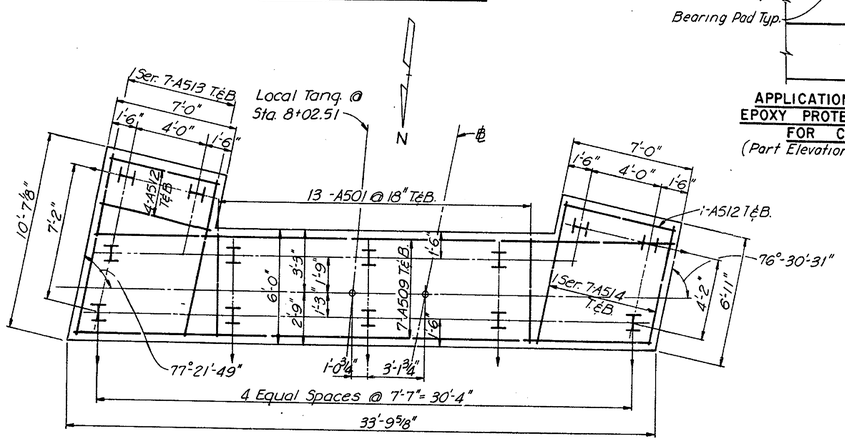


FOOTING SOUTH ABUTMENT

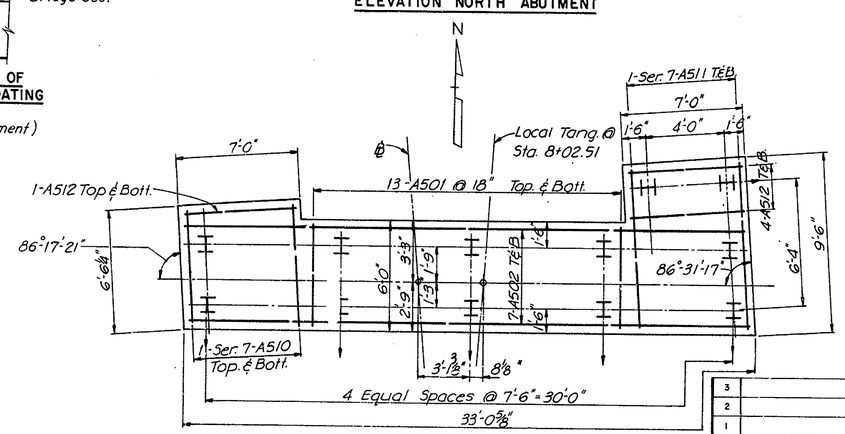


FOOTING NORTH ABUTMENT

**NOTES:**

For General Notes see sheet No. 1 of 8.

For Wingwall and Typical Pad Details see sheet no. 3 of 8.

Min. Reinforcing steel concrete cover 3" in footing, 2" above footing.

Backfill behind abutments to be placed only after bridge deck slab has been completed.

All bars spaced @ 12" max. ctrs unless noted.

All construction joints to have 2"x6" continous key.

Legend:
N.F. Denotes Near Face
E.F. Denotes Each Face
F.F. Denotes Far Face
I indicates vertical pile
I indicates 3:12 batter pile and direction of batter

| NO. | REVISION | BY | DATE |
|---|---|---|---|
| 3 | | | |
| 2 | | | |
| 1 | | | |

| | BY | DATE |
|---|---|---|
| MADE | D.L.S. | 1-69 |
| CHECKED | JBG | 2-69 |
| IN CHARGE | JEH | |

DELAWARE STATE HIGHWAY DEPARTMENT

DELAWARE TURNPIKE

ROUTE 896 INTERCHANGE IMPROVEMENTS

RAMP F. BRIDGE OVER CHRISTINA RIVER

ABUTMENTS

HOWARD, NEEDLES, TAMMEN & BERGENDOFF consulting engineers

NEW YORK KANSAS CITY

SCALE 1/4" = 1'-0" unless noted

CONTRACT NO 70.5.3

SHEET NO 2 OF 8

| DELAWARE TURNPIKE | CONT. NO. | TITLE | SHEET NO. | TOTAL SHEETS |
|---|---|---|---|---|
| | 7053 | | 79 | 86 |

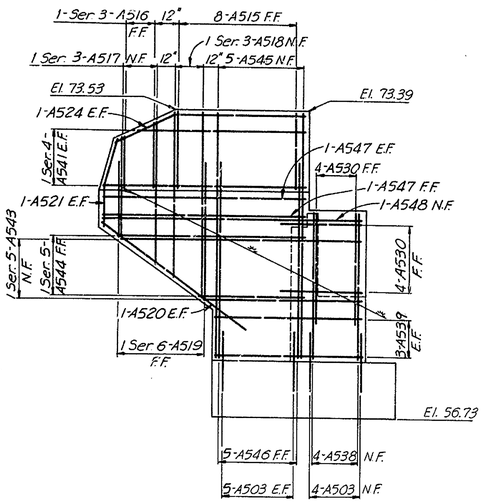


ELEVATION S.E. WINGWALL

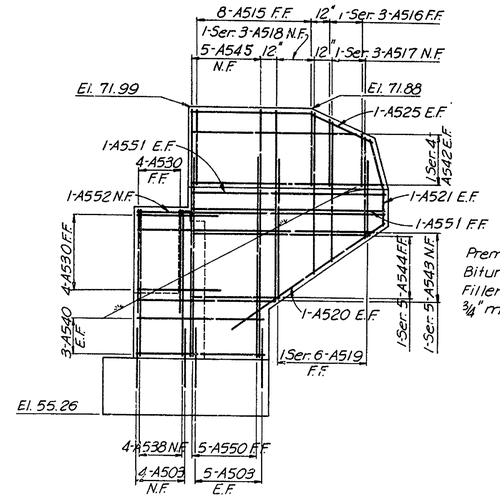


ELEVATION N.E. WINGWALL

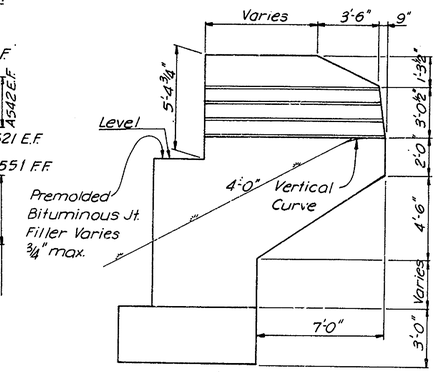


TYPICAL WINGWALL

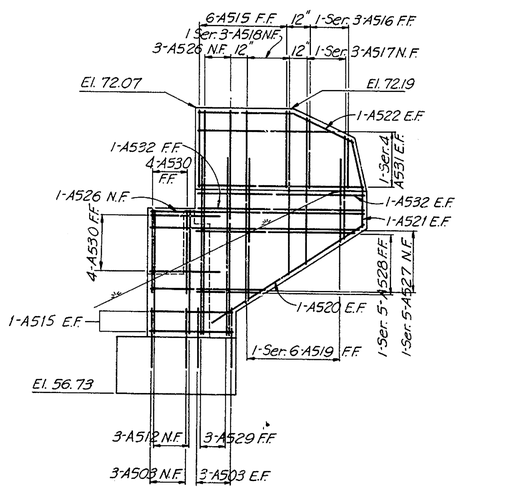


ELEVATION S.W. WINGWALL

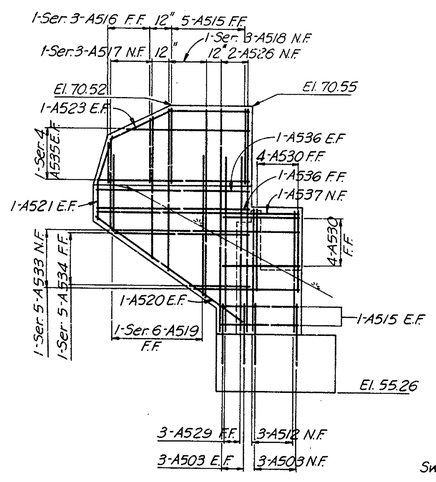


ELEVATION N.W. WINGWALL

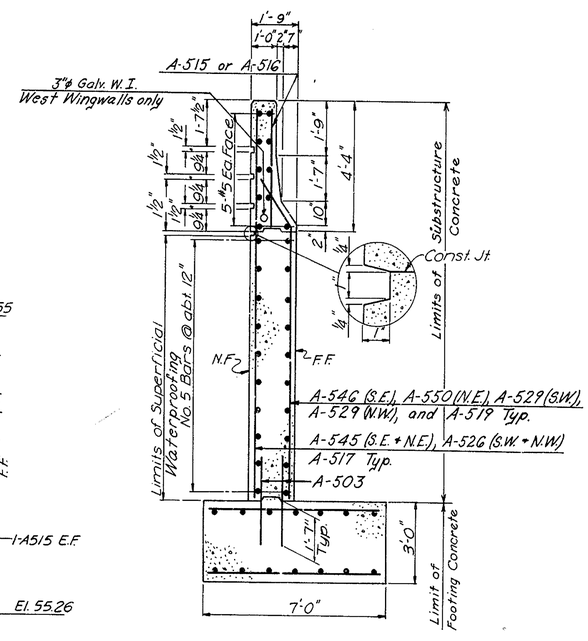


TYPICAL SECTION
Scale 3/8"=1'-0"

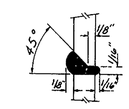


100% BUTT-WELDED SPLICE DETAIL
No Scale

| APPROX. PILE TIP ELEVATION | |
|---|---|
| S. Abutment | 20.0 |
| N. Abutment | 20.0 |

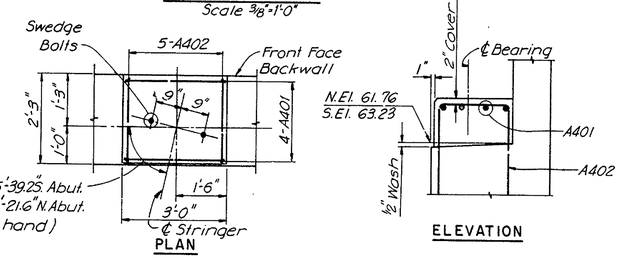


TYPICAL PAD DETAILS
Scale 1/2"=1'-0"

BAR REINFORCING SCHEDULE

| MARK | NO. | TYPE | A | B | C | LENGTH |
|---|---|---|---|---|---|---|
| A401 | 32 | 4 | 2'-4" | 2'-8" | 2'-4" | 7'-4" |
| A402 | 40 | 4 | 2'-4" | 1'-10" | 2'-4" | 6'-6" |
| | | | | | | |
| A501 | 52 | Str. | | | | 5'-6" |
| A502 | 14 | " | | | | 32'-6" |
| A503 | 180 | " | | | | 3'-2" |
| A504 | 2 Ser.28 | 2 | 7'-2"-8'-9" | 1'-0" | | 8'-2" - 9'-9" |
| A505 | 60 | 2 | 3'-2" | 3'-5" | | 6'-7" |
| A506 | 18 | Str. | | | | 29'-0" |
| A507 | 18 | " | | | | 29'-9" |
| A508 | 2 Ser.28 | 1 | 4'-4"-5'-10" | 7" | | 4'-11" - 6'-5" |
| A509 | 14 | Str. | | | | 33'-3" |
| A510 | 2 Ser. 7 | " | | | | 6'-0" - 6'-6" |
| A511 | 2 Ser. 7 | " | | | | 8'-6" - 9'-0" |
| A512 | 26 | " | | | | 6'-6" |
| A513 | 2 Ser. 7 | " | | | | 8'-8" - 10'-0" |
| A514 | 2 Ser. 7 | " | | | | 6'-5" - 7'-10" |
| A515 | 35 | " | | | | 4'-0" |
| A516 | 4 Ser. 3 | " | | | | 2'-10" - 3'-8" |
| A517 | 4 Ser. 3 | " | | | | 5'-3" - 7'-3" |
| A518 | 4 Ser. 3 | " | | | | 8'-3" - 10'-3" |
| A519 | 4 Ser. 6 | 3 | 2'-8"-6'-3" | 2'-0" | 1'-3" | 5'-0" - 8'-7" |
| A520 | 8 | Str. | | | | 9'-9" |
| A521 | 8 | 3 | 1'-9" | 2'-11" | 9" | 4'-9" |
| A522 | 2 | " | 5'-5" | 3'-4" | 1'-3" | 9'-0" |
| A523 | 2 | " | 4'-6" | 3'-4" | 1'-3" | 8'-1" |
| A524 | 2 | " | 7'-5" | 3'-4" | 1'-3" | 11'-0" |
| A525 | 2 | " | 7'-0" | 3'-4" | 1'-3" | 11'-7" |
| A526 | 6 | Str. | | | | 12'-0" |
| A527 | 1 Ser. 5 | " | | | | 6'-6" - 11'-10" |
| A528 | 1 Ser. 5 | " | | | | 3'-11" - 9'-3" |
| A529 | 6 | 3 | 8'-0" | 2'-0" | 1'-3" | 10'-4" |
| A530 | 32 | Str. | | | | 4'-8" |
| A531 | 2 Ser. 4 | " | | | | 8'-0" - 9'-5" |
| A532 | 3 | " | | | | 9'-5" |
| A533 | 1 Ser. 5 | " | | | | 6'-0" - 10'-10" |
| A534 | 1 Ser. 5 | " | | | | 3'-2" - 7'-9" |
| A535 | 2 Ser. 4 | " | | | | 7'-0" - 8'-6" |
| A536 | 3 | " | | | | 8'-6" |
| A537 | 1 | " | | | | 11'-4" |
| A538 | 8 | " | | | | 8'-0" |
| A539 | 6 | " | | | | 7'-9" |
| A540 | 6 | " | | | | 7'-1" |
| A541 | 2 Ser. 4 | " | | | | 9'-9" - 11'-5" |
| A542 | 2 Ser. 4 | " | | | | 9'-6" - 11'-0" |
| A543 | 2 Ser. 5 | " | | | | 8'-4" - 13'-6" |
| A544 | 2 Ser. 5 | " | | | | 5'-0 - 10'-5" |
| A545 | 10 | " | | | | 13'-5" |
| A546 | 5 | 3 | 9'-4" | 2'-0" | 1'-3" | 11'-8" |
| A547 | 3 | Str. | | | | 11'-5" |
| A548 | 1 | " | | | | 14'-9" |
| | | | | | | |
| A550 | 5 | 3 | 9'-2" | 2'-0" | 1'-3" | 11'-6" |
| A551 | 3 | Str. | | | | 13'-2" |
| A552 | 1 | Str. | | | | 14'-1" |

Dimensions are out to out of bars.

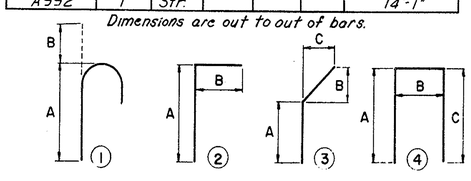


| NO. | REVISION | BY | DATE |
|---|---|---|---|
| 3 | | | |
| 2 | | | |
| 1 | | | |

| | BY | DATE |
|---|---|---|
| MADE | DLS | 2-69 |
| CHECKED | JBG | 3-69 |
| IN CHARGE | JEH | |

DELAWARE STATE HIGHWAY DEPARTMENT

# DELAWARE TURNPIKE

ROUTE 896 INTERCHANGE IMPROVEMENTS
RAMP F BRIDGE OVER CHRISTINA RIVER

## ABUTMENT DETAILS

HOWARD, NEEDLES, TAMMEN & BERGENDOFF
consulting engineers
NEW YORK KANSAS CITY

SCALE 1/4"=1'-0" unless noted
CONTRACT NO. 7053
SHEET NO. 3 OF 8

| DELAWARE TURNPIKE | CONT NO | TITLE | SHEET NO | TOTAL SHEETS |
|---|---|---|---|---|
| | 7053 | | 80 | 86 |

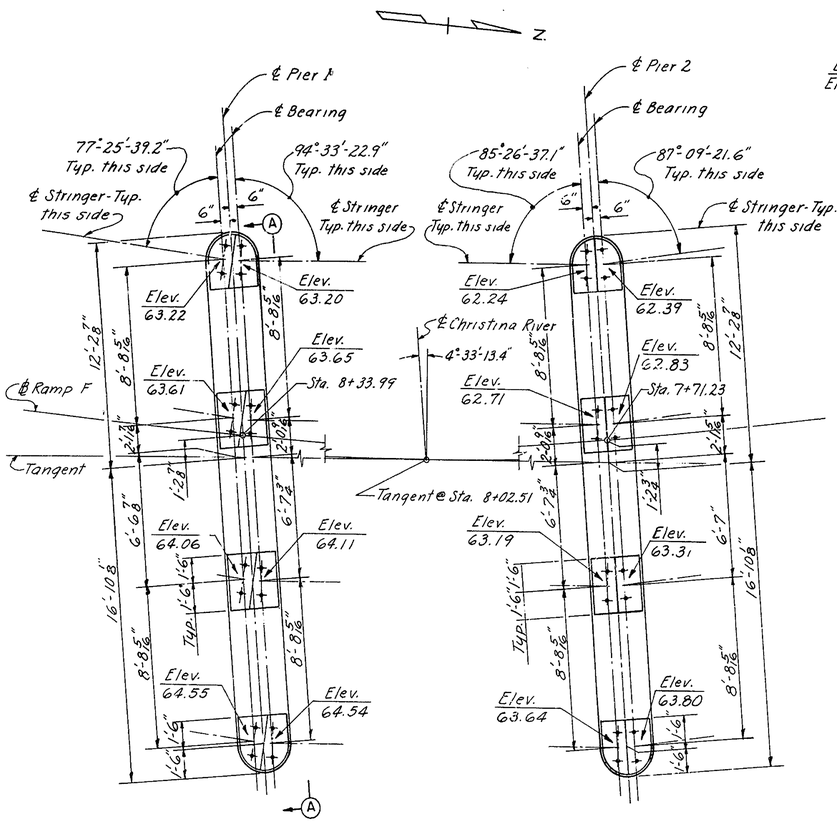


PLAN
Scale 1/4"=1'-0"

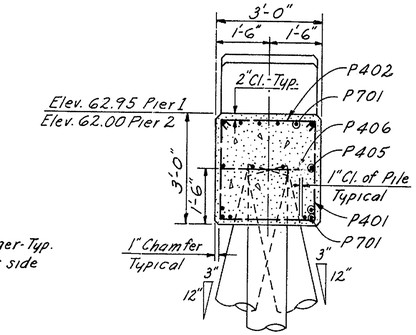


SECTION C-C
Scale 1/2"=1'-0"

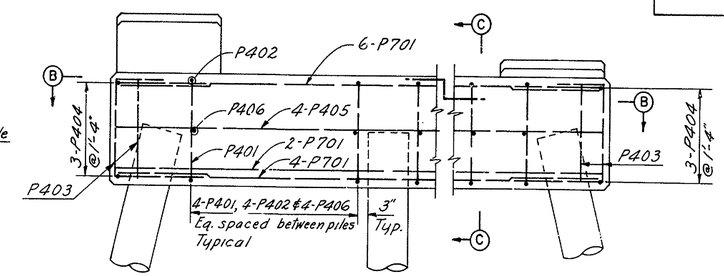


ELEVATION A-A
Scale 1/2"=1'-0"

| REINFORCING SCHEDULE * | | | |
|---|---|---|---|
| MARK | NUMBER | TYPE | LENGTH |
| P401 | 16 | 1 | 8'-9" |
| P402 | 16 | 2 | 3'-5" |
| P403 | 6 | 3 | 4'-0" |
| P404 | 6 | 4 | 8'-9" |
| P405 | 4 | Str. | 26'-9" |
| P406 | 16 | Str. | 2'-8" |
| P407 | 26 | 5 | 7'-4" |
| P408 | 6 | 5 | 6'-9" |
| P409 | 10 | 5 | 7'-8" |
| | | | |
| | | | |
| | | | |
| P701 | 12 | Str. | 26'-9" |
| | | | |
| | | | |
| | | | |
| | | | |

*Quantities shown are for one Pier only

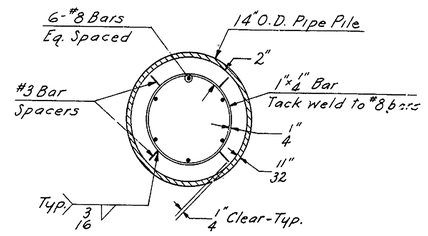


SECTION F-F
Scale 1 1/2"=1'-0"

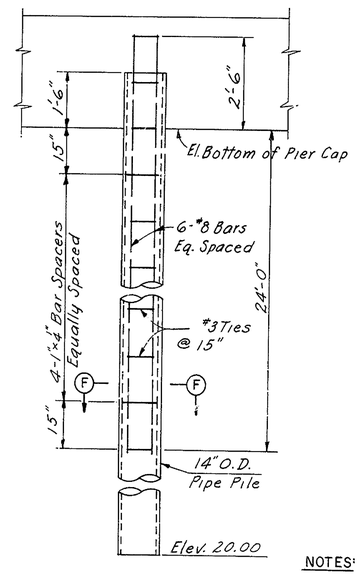


TYPICAL PILE DETAIL
Not to scale

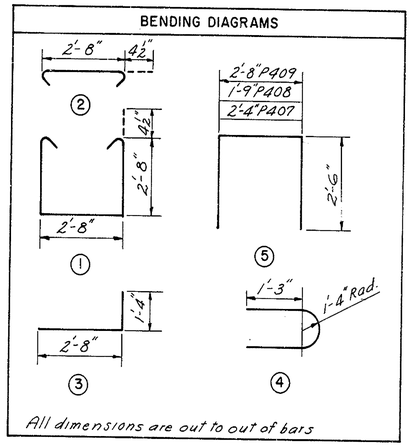


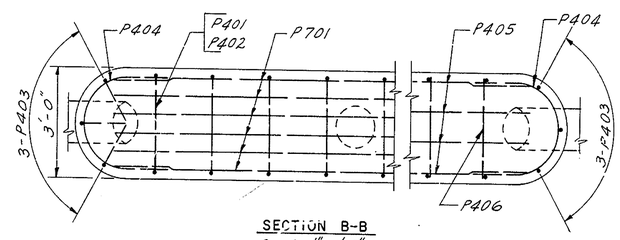


SECTION B-B
Scale 1/2"=1'-0"

NOTES:

All pier piles shall be 14" ϕ C.I.P. Concrete. Exterior surfaces of 14" ϕ C.I.P. Piles to be coated from 6" above bottom of cap beam to Elev. 46.00 with a coal-tar epoxy material equal to "Tarset" as specified. Two coats of "Tarset" shall be applied; each coat of not more than 125 ft²/gallon. These coatings shall be applied on blast cleaned surfaces of the pile for the length indicated above.

Pad elevations given denote top of finished concrete pad. For details of anchor bolts for shoes, see Sheet No. 8 of 8. For General Notes, see Sheet No. 1 of 8.

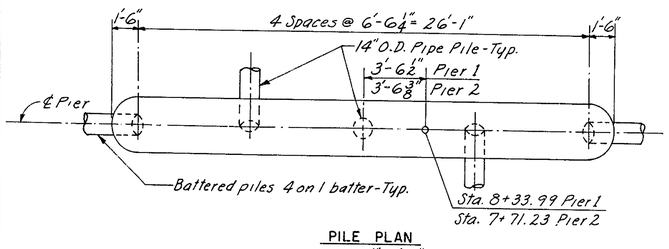


PILE PLAN
Scale 1/4"=1'-0"

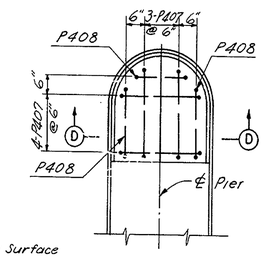


EXTERIOR PAD PLAN

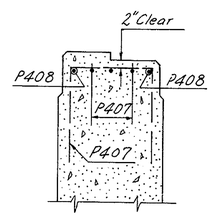


SECTION D-D

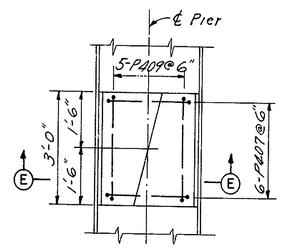


INTERIOR PAD PLAN

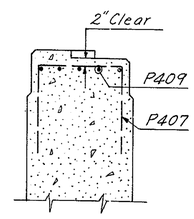


SECTION E-E

PAD DETAILS
Scale 1/2"=1'-0"

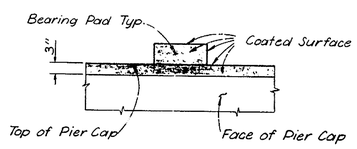


APPLICATION LIMITS OF EPOXY PROTECTIVE COATING FOR CONCRETE
Part Elevation at Pier

| NO | REVISION | BY | DATE |
|---|---|---|---|
| 3 | | | |
| 2 | | | |
| 1 | | | |

| | BY | DATE |
|---|---|---|
| MADE | F.J.C. | 12-68 |
| CHECKED | JBG | 1-69 |
| IN CHARGE | JEH | |

DELAWARE STATE HIGHWAY DEPARTMENT

# DELAWARE TURNPIKE

ROUTE 896 INTERCHANGE IMPROVEMENTS
RAMP F BRIDGE OVER CHRISTINA RIVER

## PIERS

HOWARD, NEEDLES, TAMMEN & BERGENDOFF
consulting engineers
NEW YORK KANSAS CITY

SCALE: As Noted
CONTRACT NO 7053
SHEET NO 4 OF 8

| DELAWARE TURNPIKE | CONT. NO. | TITLE | SHEET NO. | TOTAL SHEETS |
|---|---|---|---|---|
| | 7053 | | 81 | 86 |

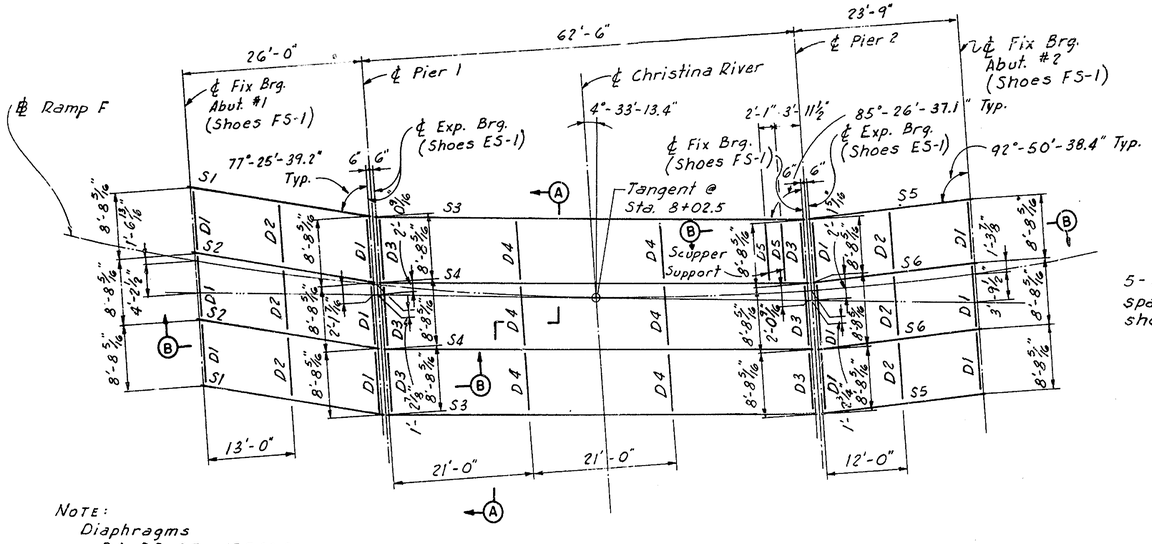


NOTE:
Diaphragms
D1, D2, D5 - 15 [ 33.9
D3, D4 - 18 [ 42.7

PLAN
Scale 1" = 10'

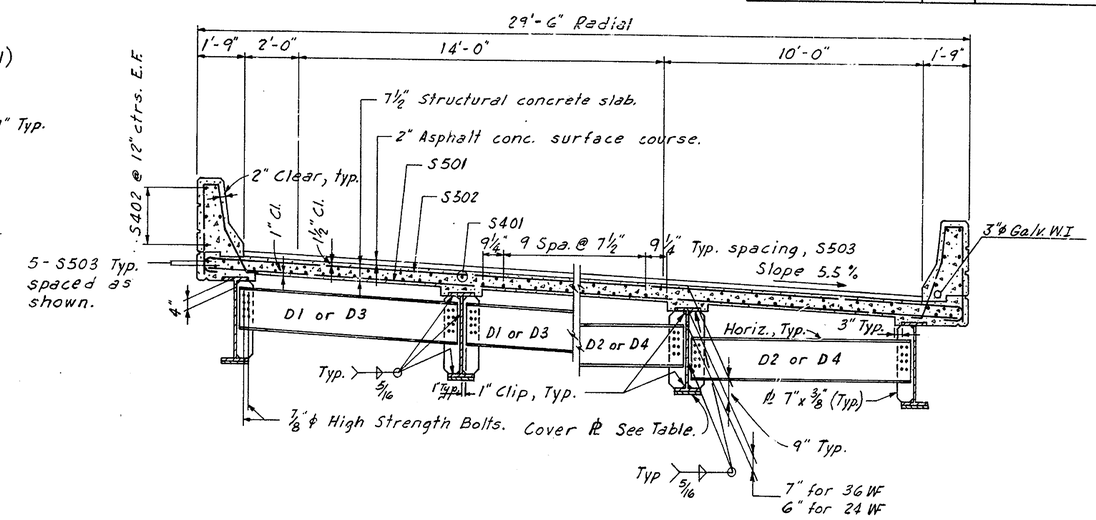


END DIAPHRAGM

INTERMEDIATE DIAPHRAGM

SECTION A-A
Scale 3/8" = 1'-0"

| STRINGER | | |
|---|---|---|
| No. | Size | Cover Plate |
| S1 | 36WF135 | — |
| S2 | 24WF94 | — |
| S3 | 36WF135 | 10½" x ¾" x 38'-5" |
| S4 | 36WF135 | 10½" x 1⅛" x 43'-9" |
| S5 | 36WF135 | — |
| S6 | 24WF84 | — |

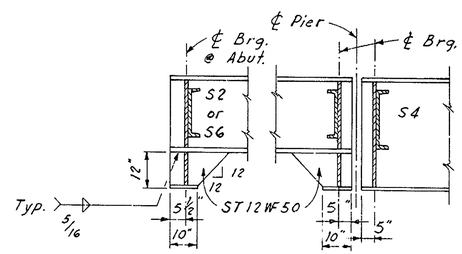


SECTION B-B
Scale ½" = 1'-0"

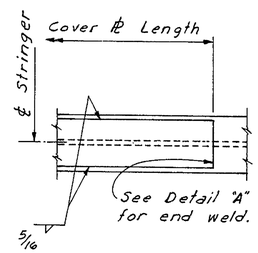


COVER PLATE DETAIL
Not to Scale

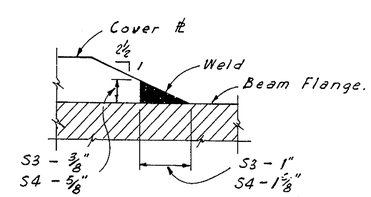


DETAIL "A"
Not to Scale

NOTES:

For General Notes, see Sheet No. 1 of 8.

For Slab reinforcement see Sheet No. 6 of 8.

For Shoe Details see Sheet No. 8 of 8.

Shear Stud spacing shown is maximum spacing.

For details of Diaphragm D5 supporting scupper see Sheet No. 8 of 8.

| CAMBER INCREMENTS FOR DEAD LOADS | Stringer S1 | | Stringer S2 | | Stringer S3 | | Stringer S4 | | Stringer S5 | | Stringer S6 | |
|---|---|---|---|---|---|---|---|---|---|---|---|---|
| | ¼ & ¾L | ½L | ¼ & ¾L | ½L | ¼ & ¾L | ½L | ¼ & ¾L | ½L | ¼ & ¾L | ½L | ¼ & ¾L | ½L |
| Structural St. | 0.00 | 0.01 | 0.01 | 0.02 | 0.15 | 0.20 | 0.15 | 0.21 | 0.00 | 0.00 | 0.01 | 0.01 |
| Concrete Deck Slab | 0.03 | 0.03 | 0.08 | 0.11 | 0.55 | 0.77 | 0.66 | 0.91 | 0.02 | 0.03 | 0.06 | 0.09 |
| Parapet & 2" Wear. Surf. | 0.01 | 0.02 | 0.05 | 0.06 | 0.12 | 0.16 | 0.12 | 0.17 | 0.01 | 0.01 | 0.03 | 0.04 |
| Full Dead Load | 0.04 | 0.06 | 0.14 | 0.19 | 0.82 | 1.13 | 0.93 | 1.29 | 0.03 | 0.04 | 0.10 | 0.14 |
| Vertical Curve | -.18 | -.25 | -.18 | -.24 | -.80 | -.93 | -1.00 | -1.34 | -.12 | -.18 | -.12 | -.18 |
| Total Camber | -.14 | -.19 | -.04 | -.05 | -.02 | .20 | -.07 | -.05 | -.09 | -.14 | -.02 | -.04 |

Note: All cambers are in inches.
Camber not required when it is less than 1 inch.

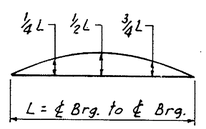


DEFLECTION DIAGRAM

| STRINGER SCHEDULE | | | | | | |
|---|---|---|---|---|---|---|
| Stringer | Length ℄ Brg. to ℄ Brg. | Shear Stud Spacing 0.1L | 0.2L | 0.3L | 0.4L | 0.5L |
| S1 & S2 | 26'-1½" | — | — | — | — | — |
| S3 | 61'-8 5/16" | 8" | 9" | 11" | 13" | 14½" |
| S4 | 61'-8 5/16" | 6½" | 7½" | 10" | 11" | 13" |
| S5 & S6 | 23'-3⅜" | — | — | — | — | — |

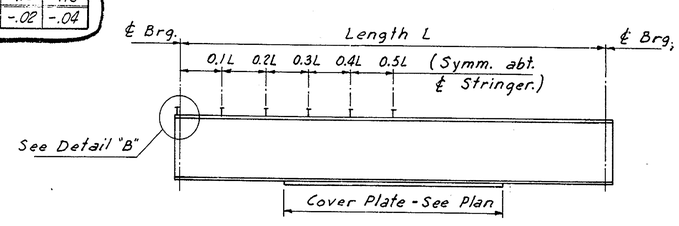


STRINGER ELEVATION
Not to Scale

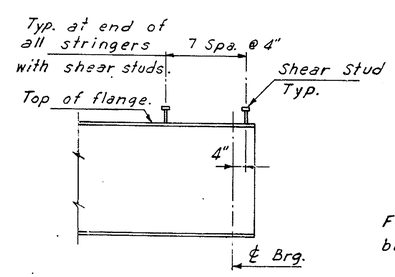


DETAIL "B"
Not to Scale

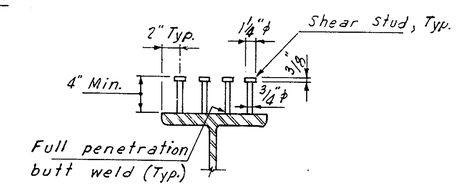


SHEAR STUD DETAIL
Not to Scale

| NO. | REVISION | BY | DATE |
|---|---|---|---|
| 3 | | | |
| 2 | | | |
| 1 | | | |

| | BY | DATE |
|---|---|---|
| MADE | L.D.F. | 11-68 |
| CHECKED | JBG | 12-68 |
| IN CHARGE | JEH | |

DELAWARE STATE HIGHWAY DEPARTMENT
DELAWARE TURNPIKE
ROUTE 896 INTERCHANGE IMPROVEMENTS
RAMP F BRIDGE OVER CHRISTINA RIVER
FRAMING PLAN

HOWARD, NEEDLES, TAMMEN & BERGENDOFF
consulting engineers
NEW YORK KANSAS CITY

SCALE: As Noted
CONTRACT NO. 7053
SHEET NO. 5 OF 8

| DELAWARE TURNPIKE | CONT. NO. | TITLE | SHEET NO. | TOTAL SHEETS |
|---|---|---|---|---|
| | 7053 | | 82 | 86 |

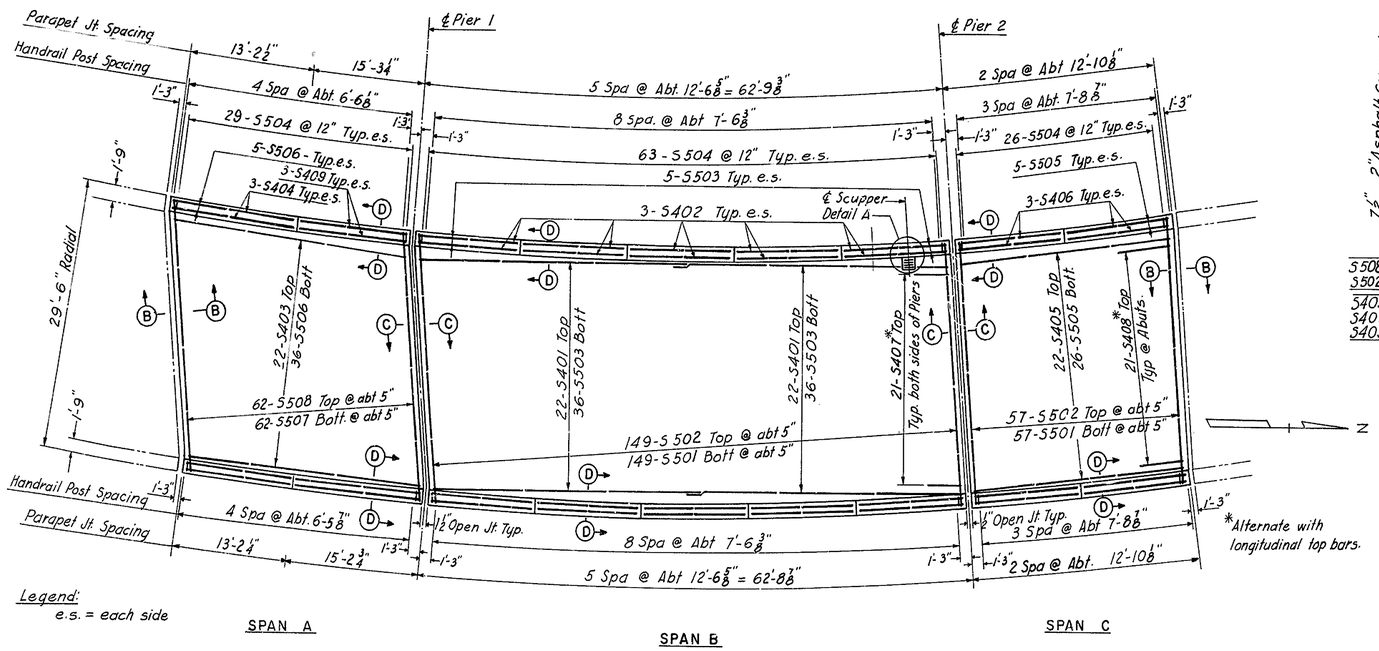


SLAB PLAN
Scale: ⅛" = 1'-0"

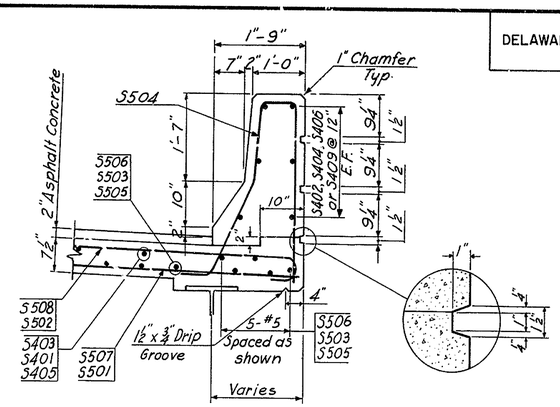


SECTION D-D
Scale: ¾" = 1'-0"

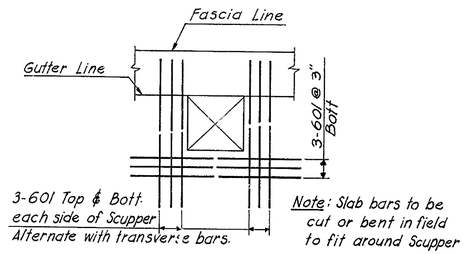


Note: Slab bars to be cut or bent in field to fit around Scupper

DETAIL A
No Scale

| REINFORCING BAR SCHEDULE | | | | | |
|---|---|---|---|---|---|
| MARK | NO | TYPE | A | B | LENGTH |
| DECK SLAB | | | | | |
| S401 | 44 | Str. | | | 32'-0" |
| S402 | 60 | " | | | 12'-2" |
| S403 | 22 | " | | | 28'-0" |
| S404 | 12 | " | | | 12'-10" |
| S405 | 22 | " | | | 25'-3" |
| S406 | 24 | " | | | 12'-4" |
| S407 | 84 | 1 | 4'-0" | 0'-8" | 4'-8" |
| S408 | 42 | 1 | 6'-0" | 0'-8" | 6'-8" |
| S409 | 12 | Str. | | | 14'-10" |
| | | | | | |
| S501 | 206 | Str. | | | 29'-2" |
| S502 | 206 | 2 | 29'-2" | 0'-7" | 30'-4" |
| S503 | 82 | Str. | | | 32'-0" |
| S504 | 236 | 3 | | | 7'-10" |
| S505 | 36 | Str. | | | 25'-3" |
| S506 | 46 | " | | | 28'-0" |
| S507 | 62 | " | | | 29'-6" |
| S508 | 62 | 2 | 29'-6" | 0'-7" | 30'-8" |
| | | | | | |
| | | | | | |
| | | | | | |
| S601 | 15 | Str. | | | 6'-0" |
| APPROACH SLABS | | | | | |
| AS401 | 54 | 4 | 1'-9" | 1'-4" | 5'-9" |
| | | | | | |
| | | | | | |
| AS501 | 42 | Str | | | 25'-8" |
| AS502 | 1 | " | | | 17'-1" |
| AS503 | 1Ser-5 | " | | | 3'-8" to 22'-0" |
| AS504 | 6 | " | | | 26'-4" |
| AS505 | 6 | " | | | 25'-8" |
| AS506 | 1 | " | | | 8'-6" |
| | | | | | |
| AS601 | 1Ser-51 | 2 | 19'-8" to 25'-4" | 0'-8" | 21'-0" to 26'-8" |
| AS602 | 1Ser-51 | " | 19'-8" to 21'-0" | 0'-8" | 21'-0" to 22'-4" |

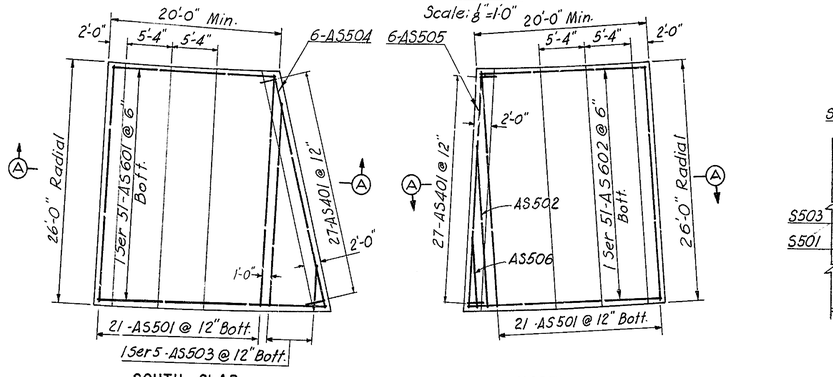


SOUTH SLAB

NORTH SLAB

APPROACH SLABS
Scale: ⅛" = 1'-0"

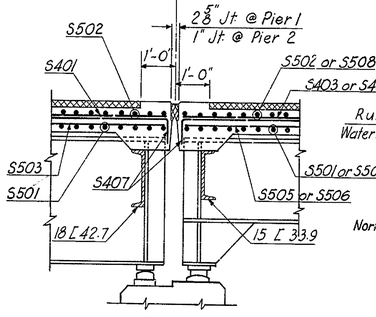


SECTION C-C
Scale: ½" = 1'-0"

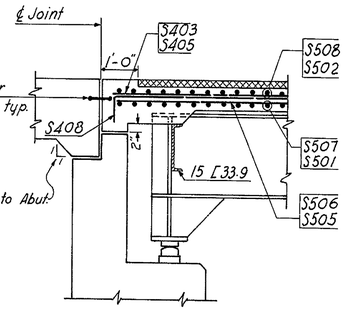


SECTION B-B
Scale: ½" = 1'-0"

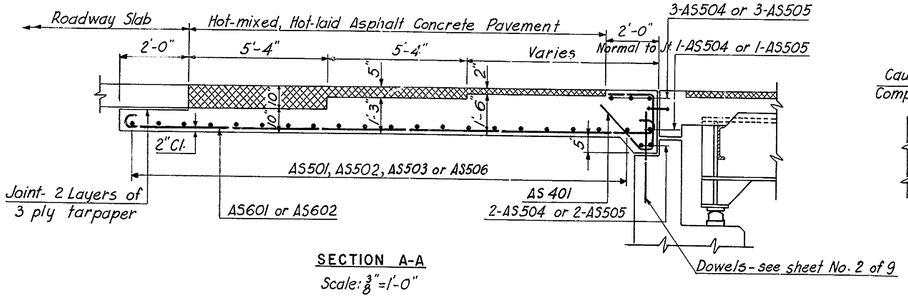


SECTION A-A
Scale: ⅜" = 1'-0"

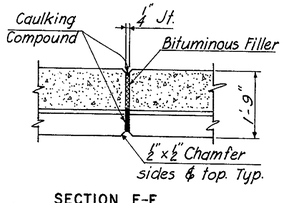


SECTION E-E

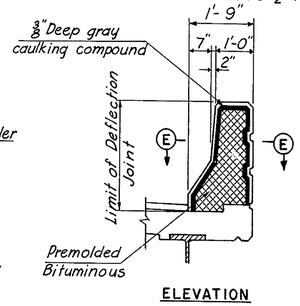


ELEVATION

DETAILS AT PARAPET DEFLECTION JOINT
Scale: ½" = 1'-0"

NOTES:
For spacing of longitudinal reinforcing in deck slabs see typical section-Sheet No. 5 of 8
All parapet joints shall be radial.
For joint details see Sheet No. 6 of 8
For General Notes see Sheet No. 1 of 8
Parapet Joints and Post Spacings are measured along Gutter Line.

BENDING DIAGRAMS

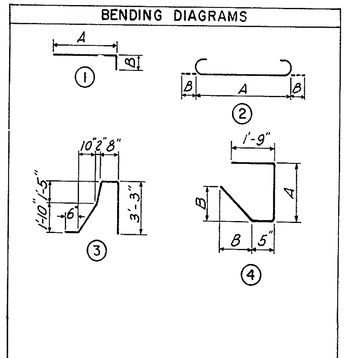


Dimensions are out to out of bars

| NO. | REVISION | BY | DATE |
|---|---|---|---|
| 3 | | | |
| 2 | | | |
| 1 | | | |

| | BY | DATE |
|---|---|---|
| MADE | I.R.P. | 2-69 |
| CHECKED | JBG | 3-69 |
| IN CHARGE | J.E.H. | |

DELAWARE STATE HIGHWAY DEPARTMENT
DELAWARE TURNPIKE
ROUTE 896 INTERCHANGE IMPROVEMENTS
RAMP F BRIDGE OVER CHRISTINA RIVER
CONCRETE DECK & APPROACH SLABS

HOWARD, NEEDLES, TAMMEN & BERGENDOFF
consulting engineers
NEW YORK KANSAS CITY

SCALE: as Shown
CONTRACT NO. 7053
SHEET NO. 6 OF 8

| DELAWARE TURNPIKE | CONT. NO. | TITLE | SHEET NO. | TOTAL SHEETS |
|---|---|---|---|---|
| | 7053 | | 83 | 86 |

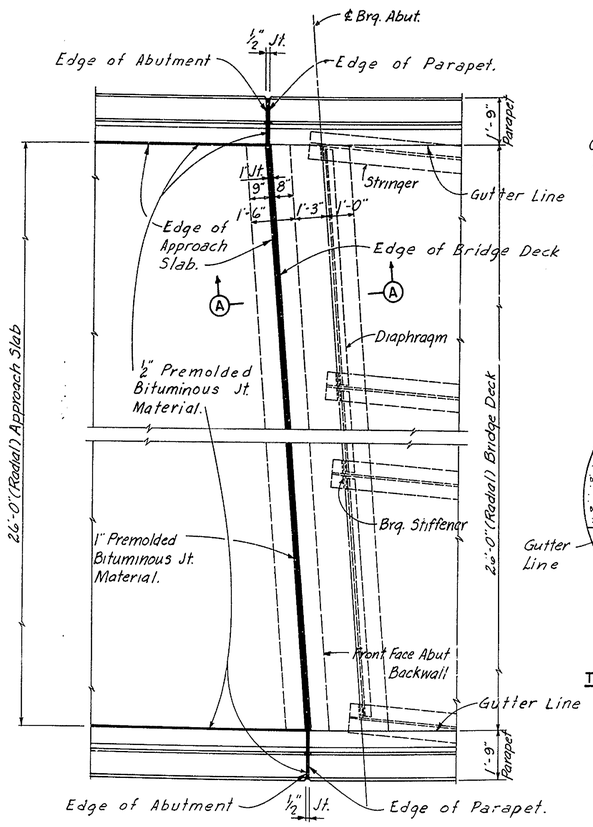


PLAN - JOINT AT SOUTH ABUTMENT (AS SHOWN)
PLAN - JOINT AT NORTH ABUTMENT (SIMILAR)
Scale ⅜" = 1'-0"

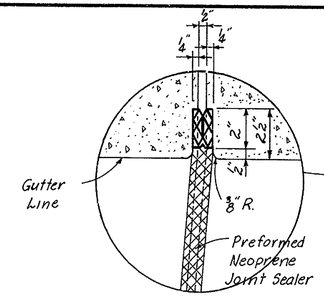


TYPE "A" JOINT AT PIER 2

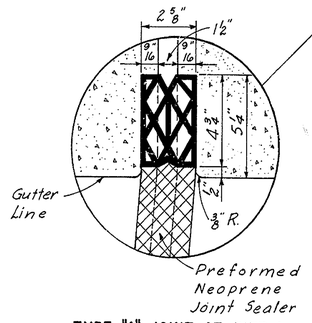


TYPE "A" JOINT AT PIER 1

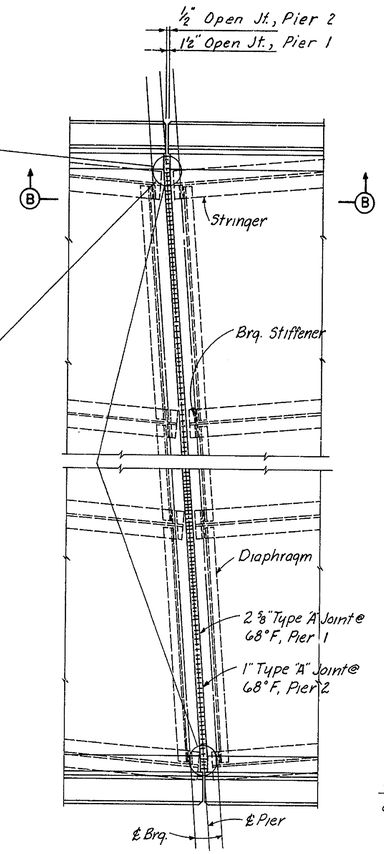


PLAN - JOINT AT PIER NO. 1 AND NO. 2
Scale ⅜" = 1'-0"

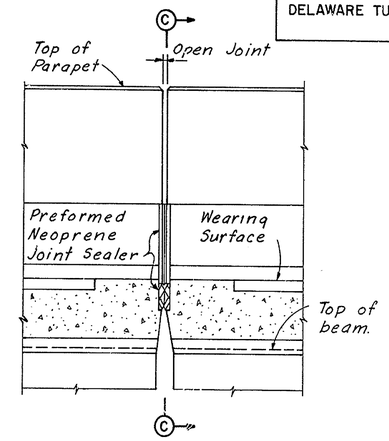


SECTION B-B
Scale 1" = 1'-0"

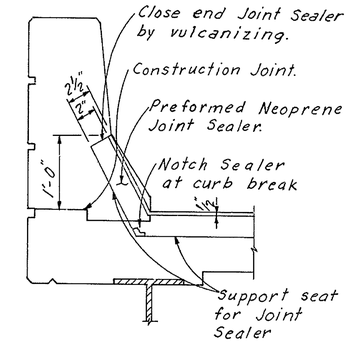


SECTION C-C
TREATMENT OF TYPE "A" JOINT AT CURB
Scale 1" = 1'-0"

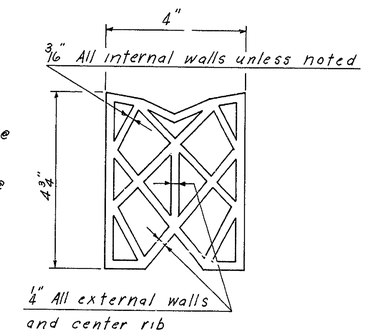


PREFORMED NEOPRENE JOINT SEALER
FOR 2⅝" TYPE "A" JOINT
Scale = Half Size

NOTES

All roadway joints shall conform to the crown and grade of the roadway surface.

It is absolutely essential that the openings for the preformed neoprene joint sealers be accurately formed and constructed to smooth straight lines. The size of the opening shall be adjusted to allow for the temperature at the time of construction.

Cost of the joints to be included in Portland Cement Concrete Masonry.

Cost of 1"ϕ and 2"ϕ W.I. conduits imbedded in concrete and junction box on structure to be included in price bid for Item 18 P.C.C. Masonry-Superstructure.

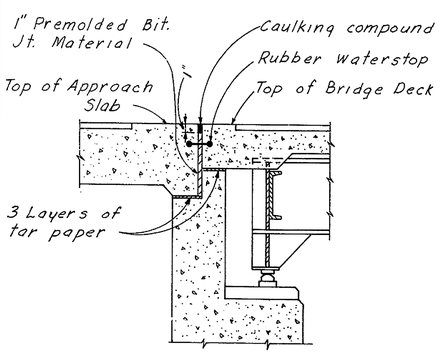


SECTION A-A
Scale ½" = 1'-0"

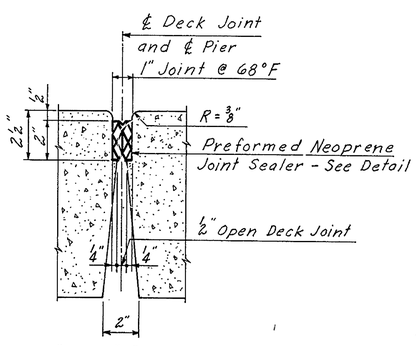


1" TYPE "A" JOINT
Scale 3" = 1'-0"

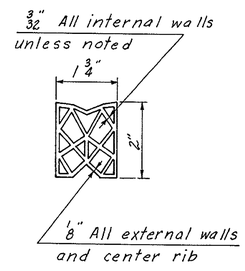


PREFORMED NEOPRENE JOINT SEALER
FOR 1" TYPE "A" JOINT
Scale = Half Size

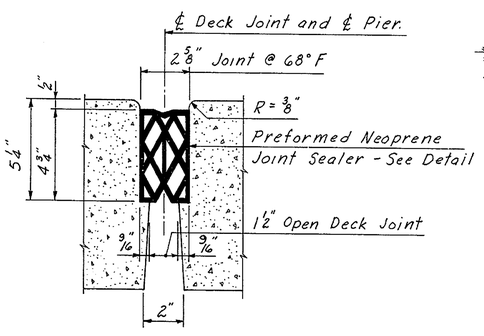


2⅝" TYPE "A" JOINT
Scale 3" = 1'-0"

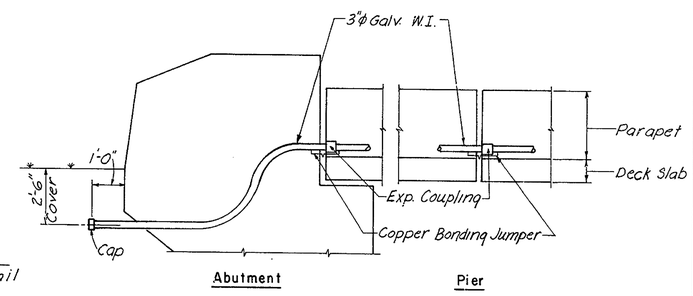


EXPANSION JOINT DETAILS FOR CONDUITS
No Scale

Note: Expansion Coupling, for 4" max. movement, equal to O-Z Cat.#Ax300. Copper Bonding Jumper equal to O-Z Cat.# BJ-2530-14

| NO. | REVISION | BY | DATE |
|---|---|---|---|
| 3 | | | |
| 2 | | | |
| 1 | | | |

| | BY | DATE |
|---|---|---|
| MADE | B.E.B. | 11-68 |
| CHECKED | JBG | 12-68 |
| IN CHARGE | J.E.H. | |

DELAWARE STATE HIGHWAY DEPARTMENT
DELAWARE TURNPIKE
ROUTE 896 INTERCHANGE IMPROVEMENTS
RAMP F BRIDGE OVER CHRISTINA RIVER
JOINT DETAILS

HOWARD, NEEDLES, TAMMEN & BERGENDOFF
consulting engineers
NEW YORK KANSAS CITY

SCALE: As Noted
CONTRACT NO. 7053
SHEET NO. 7 OF 8

| DELAWARE TURNPIKE | CONT NO. | TITLE | SHEET NO. | TOTAL SHEETS |
|---|---|---|---|---|
| | 7053 | | 84 | 86 |

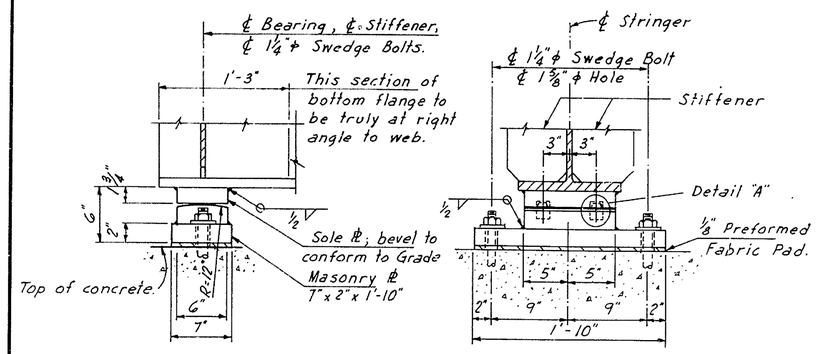


FIXED SHOE FS-1
Scale 1½"=1'-0"

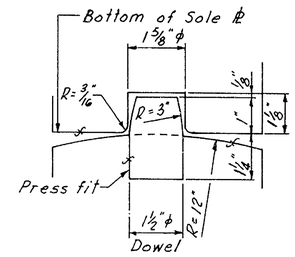


DETAIL "A"
Not to Scale

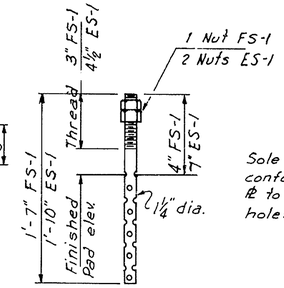


SWEDGE BOLT DETAIL
Not to Scale

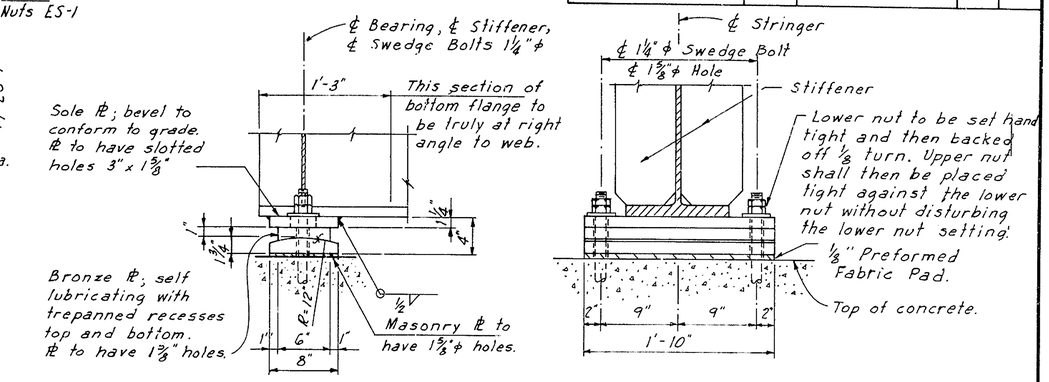


EXPANSION SHOE ES-1
Scale 1½"=1'-0"

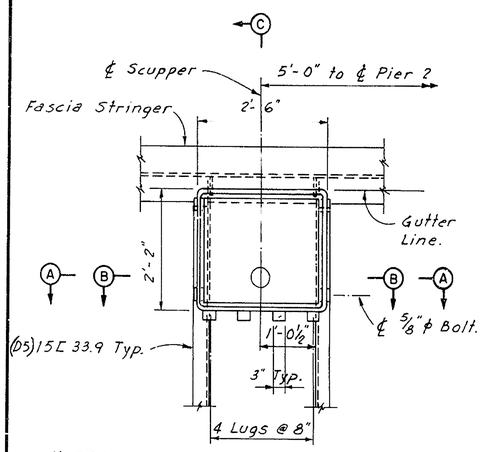


NOTE:
Concrete Slab ℄ Grate not shown.

SCUPPER PLAN
Scale ¾"=1'-0"

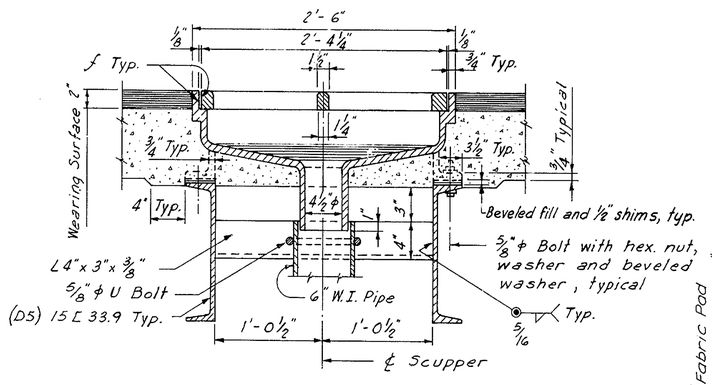


SECTION B-B
Scale 1½"=1'-0"

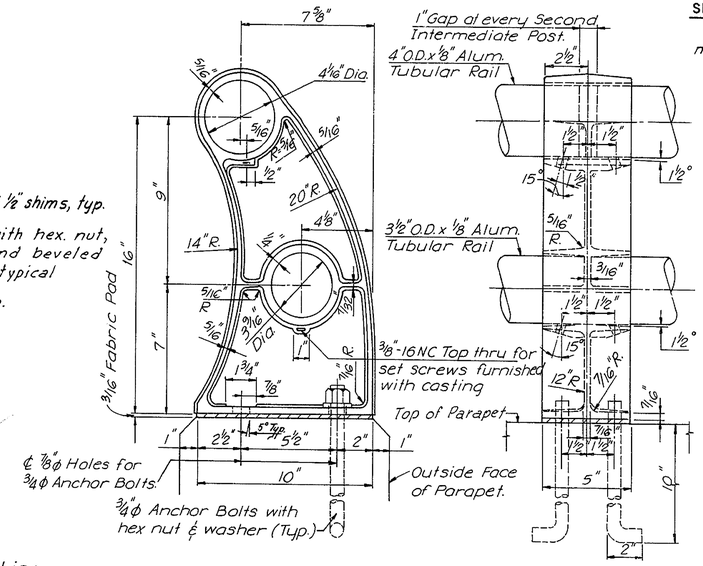


HANDRAIL POST DETAILS
Scale 3"=1'-0"

SHOE NOTES

Shoes to have vertical and horizontal center lines mutually perpendicular at 65°F.

For location of Shoes; see Sheet No. 5 of 8.

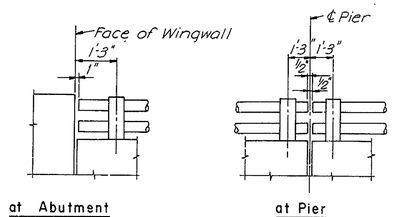


HANDRAIL TERMINAL DETAILS

HANDRAIL NOTES

1.) All Railings are to be fabricated and erected so that the rails are parallel to each other and to the top fascia and so the posts are truly vertical.

2.) Anchor bolts for railing posts shall be aluminum alloy meeting the requirements of A.S.T.M. B211 alloy 2024-T4.

3.) After nuts have been placed & tightened to the satisfaction of the Engineer, bolts shall be cut off ⅛" above nuts and peened.

4.) All rails to be continuous at all end posts adjacent to piers and abutments.

5.) Tubular rails shall be closed at all piers and abutments with a welded in aluminum plug.

6.) The finished aluminum alloy bolts, nuts & washers shall be given an anodic coating at least 0.0002 inches thick and a chromate seal.

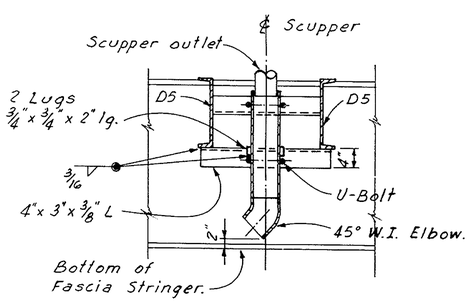


SECTION A-A
Scale ¾"=1'-0"

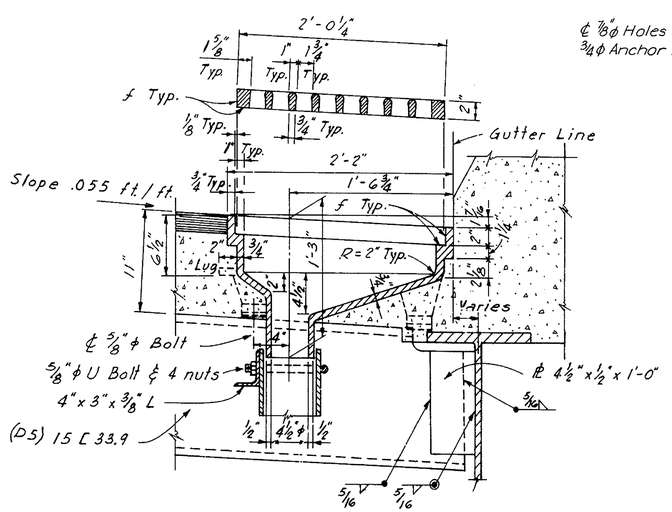


SECTION C-C
Scale 1½"=1'-0"

DRAINAGE NOTES

All pipe to be black wrought iron, standard weight.

All pipe and fittings to be galvanized.

All fittings to be welded, wrought iron, standard weight.

Brackets, rods, straps, plates, bolts, nuts and washers to be galvanized.

| NO. | REVISION | BY | DATE |
|---|---|---|---|
| 3 | | | |
| 2 | | | |
| 1 | | | |

| | BY | DATE |
|---|---|---|
| MADE | L.D.F | 12-68 |
| CHECKED | JBG | 1-69 |
| IN CHARGE | JEH | |

DELAWARE STATE HIGHWAY DEPARTMENT

DELAWARE TURNPIKE

ROUTE 896 INTERCHANGE IMPROVEMENTS
RAMP F BRIDGE OVER CHRISTINA RIVER

MISCELLANEOUS DETAILS

HOWARD, NEEDLES, TAMMEN & BERGENDOFF
consulting engineers
NEW YORK KANSAS CITY

SCALE: As Noted
CONTRACT NO. 7053
SHEET NO. 8 OF 8

| DELAWARE TURNPIKE | CONT. NO. | TITLE | SHEET NO. | TOTAL SHEETS |
|---|---|---|---|---|
| | 7053 | PAVEMENT JOINTS | 85 | 86 |

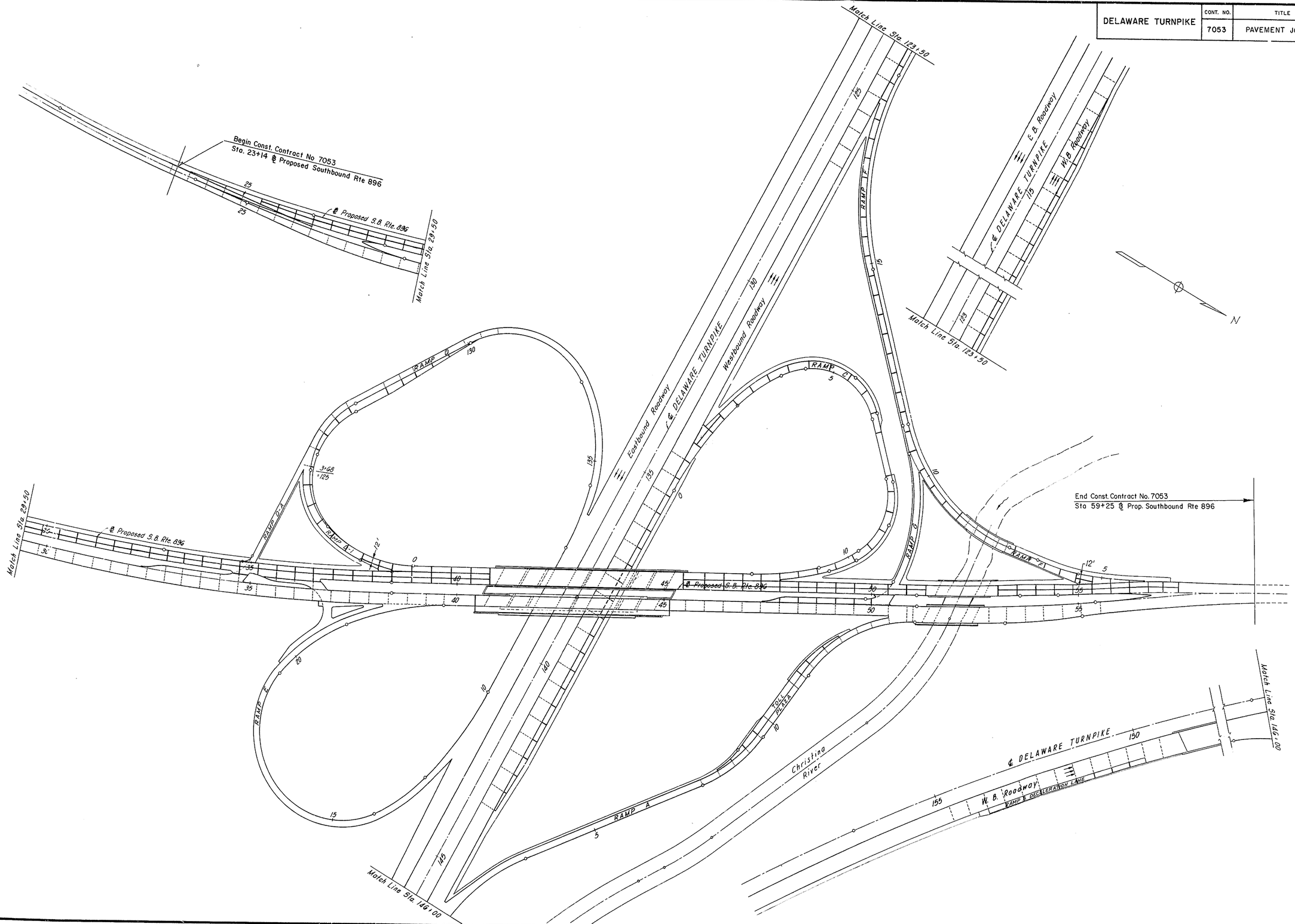

| DELAWARE TURNPIKE | CONT NO. | TITLE | SHEET NO. | TOTAL SHEETS |
|---|---|---|---|---|
| | 7053 | SUMMARY OF QUANTITIES | 86 | 86 |

| ITEM | DESCRIPTION | UNIT | NEAT | PROPOSAL |
|---|---|---|---|---|
| — | Maintenance and Protection of Traffic | L.S. | — | — |
| — | Flagmen | M.H. | 3,500 | 3,500 |
| — | Traffic Cones | Ea. | 100 | 125 |
| — | Temporary Traffic Signs | Sq. Ft. | 515 | 550 |
| 1 | Clearing and Grubbing | L.S. | — | — |
| 2 | Excavation and Embankment | Cu.Yds. | 45,000 | 50,000 |
| 2 | Undercut Excavation | Cu. Yds. | 1,000 | 1,250 |
| 2A | Removal of Existing Masonry | Cu.Yds. | 45 | 55 |
| 3 | Rock Excavation – Roadway | Cu.Yds. | 1,500 | 2,000 |
| 4 | Excavation for Structures | Cu.Yds. | 12,909 | 13,000 |
| 4A | Excavation for Pipe Trenches | Cu.Yds. | 1,320 | 1,400 |
| 5 | Common Borrow | Cu.Yds. | 15,000 | 20,000 |
| 6 | Removal of Structures and Obstructions (Ramp B over Christina River) | L.S. | — | — |
| 7 | Select Borrow | Cu.Yds. | 16,000 | 18,000 |
| 8C | Quarry Waste Base Course | Sq.Yds. | 14,580 | 15,000 |
| 8D | Soil Cement Base Course | Sq.Yds. | 2,400 | 2,500 |
| 8D | Portland Cement | Bbl. | 270 | 280 |
| 11 | Hot-Mix, Hot Laid Asphaltic Concrete Pavement | Tons | 2,060 | 2,100 |
| 14 | R.C.-70 Asphalt for Bituminous Surface Treatment | Gals. | 2,600 | 2,700 |
| 14 | R.C.-250 Asphalt for Bituminous Surface Treatment | Gals. | 3,120 | 3,250 |
| 14 | Coarse Aggregate for Bituminous Surface Treatment | Tons | 210 | 215 |
| 15 | Portland Cement Concrete Pavement, 9" Thick | Sq.Yds. | 17,500 | 18,000 |
| 15 | Drilling Holes and Grouting Dowels into Existing Pavement | Ea. | 1,650 | 1,700 |
| 16 | Patching Portland Cement Concrete Pavement | Sq.Yds. | 35 | 40 |
| 18 | Portland Cement Concrete Masonry – Footings | Cu.Yds. | 580 | 600 |
| 18 | Portland Cement Concrete Masonry – Substructure | Cu.Yds. | 761 | 761 |
| 18 | Portland Cement Concrete Masonry – Superstructures | Cu.Yds. | 1,206 | 1,206 |
| 18 | Portland Cement Concrete Masonry – Approach Slabs | Cu.Yds. | 397 | 397 |
| 19 | Superficial Waterproofing | Sq.Yds. | 390 | 400 |
| 20 | Bar Reinforcement | Lbs. | 491,700 | 495,000 |
| 22 | Structural Steel (Approx. Wt. 945,000 lbs.) | L.S. | — | — |
| 22A | Aluminum Bridge Railing | Lin. Ft. | 1,490 | 1,500 |
| 26 | 12" Reinforced Concrete Pipe | Lin.Ft. | 90 | 95 |
| 26 | 15" Reinforced Concrete Pipe | Lin.Ft. | 605 | 625 |
| 26 | 18" Reinforced Concrete Pipe | Lin.Ft. | 110 | 120 |
| 26 | 24" Reinforced Concrete Pipe | Lin.Ft. | 110 | 120 |
| 26 | 36" Reinforced Concrete Pipe | Lin.Ft. | 250 | 260 |
| 26 | 48" Reinforced Concrete Pipe | Lin.Ft. | 60 | 65 |
| 26 | 54" Reinforced Concrete Pipe | Lin.Ft. | 170 | 180 |
| 26 | 42"x27" Reinforced Concrete Elliptical Pipe | Lin.Ft. | 12 | 15 |
| 26 | Reinforced Concrete Flared End Sections for 12" Pipe | Ea. | 4 | 4 |
| 26 | Reinforced Concrete Flared End Sections for 15" Pipe | Ea. | 5 | 5 |
| 26 | Reinforced Concrete Flared End Sections for 18" Pipe | Ea. | 1 | 1 |
| 26 | Reinforced Concrete Flared End Sections for 24" Pipe | Ea. | 1 | 1 |
| 26 | Reinforced Concrete Flared End Sections for 48" Pipe | Ea. | 1 | 1 |
| 26 | Reinforced Concrete Flared End Sections for 54" Pipe | Ea. | 1 | 1 |
| 28 | 5" Cast Iron Pipe | Lin.Ft. | 110 | 120 |
| 29 | 6" Corrugated Metal Pipe | Lin.Ft. | 45 | 100 |
| 31 | 6" Perforated Corrugated Metal Pipe Underdrains | Lin.Ft. | 4,275 | 5,000 |
| 35 | Cast-in-place Concrete Piles, 14" Diameter (Bents) | Lin.Ft. | 930 | 950 |
| 35 | Cast-in-place Concrete Piles, 14" Diameter (Footings) | Lin.Ft. | 2,959 | 3,000 |
| 36 | Plain Rubble Gutter | Sq.Yds. | 250 | 300 |
| 38 | Portland Cement Concrete Curb, Type 1 | Lin.Ft. | 2,450 | 2,600 |
| 38A | Hot-Mix, Hot Laid Asphaltic Concrete Curb | Lin.Ft. | 415 | 450 |
| 40 | Portland Cement Concrete Parkway Curb, Type 2 | Lin.Ft. | 4,100 | 4,200 |
| 43 | Corrugated Metal Downspouts | Lin.Ft. | 70 | 80 |
| 44 | Type C Combination Inlet | Ea. | 11 | 11 |
| 44 | Drop Inlet, Type A-1 Modified | Ea. | 4 | 4 |
| 44 | Drop Inlet, Double Type S | Ea. | 3 | 3 |
| 44 | Type S Combination Inlet | Ea. | 7 | 7 |
| 44 | Double Type S Combination Inlet | Ea. | 2 | 2 |
| 45 | Manholes, Type W | Ea. | 2 | 2 |
| 50 | Woven Wire Fence | Lin.Ft. | 855 | 875 |
| 50 | Abutment Connection | Ea. | 1 | 1 |
| 51 | Topsoil, 4" Thick | Sq.Yds. | 12,000 | 13,000 |

| ITEM | DESCRIPTION | UNIT | NEAT | PROPOSAL |
|---|---|---|---|---|
| 52 | Topsoiling, 4" Thick | Sq.Yds. | 2,000 | 2,000 |
| 53 | Seeding | Acres | 8.1 | 8.3 |
| 54 | Mulching | Sq.Yds. | 39,130 | 40,000 |
| 55 | Sodding | Sq. Yds. | 1,400 | 1,500 |
| 61 | Calcium Chloride for Dust Control | Tons | 5 | 5 |
| 64 | Riprap, Plain | Sq.Yds. | 630 | 650 |
| 65 | Removal of Existing Portland Cement Concrete Curb | Lin. Ft. | 1,020 | 1,100 |
| 65 | Removal of Existing Portland Cement Concrete Pavement | Sq. Yds. | 1,400 | 1,500 |
| — | Removal of Existing Curbed Island | Lin.Ft. | 1,140 | 1,150 |
| — | Special Fill | Tons | 1,000 | 1,000 |
| — | Median Surface Treatment | Sq.Yds. | 4,030 | 4,200 |
| — | Portland Cement Concrete Parkway Curb, Doweled | Lin.Ft. | 930 | 950 |
| — | Rubble Apron, 18" Thick | Sq. Yds. | 250 | 280 |
| — | Slope Paving (Concrete Block) | Sq.Yds. | 1,175 | 1,200 |
| — | Remove and Salvage Steel Beam Guard Rail (Steel Posts) | Lin.Ft. | 2,810 | 2,900 |
| — | Reset Steel Beam Guard Rail (Steel Posts) | Lin.Ft. | 3,220 | 3,300 |
| — | Steel Beam Guard Rail Buried End Sections (25 Lin.Ft.) | Ea. | 19 | 20 |
| — | Bridge Drainage (Bridge Route 896 over Christina River) | L.S. | — | — |
| — | Bridge Drainage (Route 896 Bridges over Delaware Turnpike) | L.S. | — | — |
| — | Bridge Drainage (Bridge Ramp "F" over Christina River) | L.S. | — | — |
| — | Protective Coating for Concrete | Sq. Ft. | 4,220 | 4,300 |
| — | Coal Tar Epoxy Underseal | Sq.Yds. | 3,919 | 3,930 |
| — | Painting Existing Structural Steel on Bridge (Route 896 over Delaware Turnpike) | L.S. | — | — |
| — | Constructing Toll Plaza at Ramp "A" | L.S. | — | — |
| — | Constructing Toll Plaza at Ramp "C" | L.S. | — | — |
| — | Constructing Toll Plaza at Ramp "D" | L.S. | — | - |
| — | 3½" Galvanized Wrought Iron Conduit | Lin.Ft. | 1,200 | 1,200 |
| — | 3" Galvanized Wrought Iron Conduit | Lin.Ft. | 425 | 450 |
| — | 2" Galvanized Wrought Iron Conduit | Lin.Ft. | 255 | 280 |
| — | 2" Polyvinyl Chloride Conduit | Lin.Ft. | 6,500 | 6,600 |
| — | #6 Single Conductor Cable | Lin.Ft. | 8,700 | 8,800 |
| — | #8 Single Conductor Cable | Lin.Ft. | 17,700 | 17,800 |
| — | Concrete Junction Box | Ea. | 14 | 14 |
| — | Lighting Standard Foundation | Ea. | 48 | 48 |
| — | Lighting Standard Type A | Ea. | 30 | 30 |
| — | Lighting Standard Type B | Ea. | 8 | 8 |
| — | Lighting Standard Type C | Ea. | 2 | 2 |
| — | Relocating Existing Lighting Standard | Ea. | 10 | 10 |
| — | Underbridge Lighting Installation | L.S. | — | — |
| — | Service Pole Installation | L.S. | — | — |
| — | Revisions to Existing Electrical Installations | L.S. | — | — |
| — | Maintenance of Director's Existing Field Office | Month | 18 | 18 |
| — | Reset Existing Bridge Railing | Lin. Ft. | 308 | 310 |
| — | Steel Bearing Piles, 10 BP 57 | Lin.Ft. | 2,684 | 2,700 |
| — | Partial Removal of Exist. Structure (Rte. 896 Bridge over T'pike) | L.S. | — | — |
| — | Temporary Support for Existing Superstructure and Utilities (Bridge Rte. 896 over Turnpike) | L.S. | — | — |
| | Canopy, Alternate "A" | Ea. | 2 | 2 |
| | Canopy, Alternate "B" | Ea. | 2 | 2 |