R-2-X

CONTRACT	COUNTY	STATE	B.P.R. REG. NO.	FEDERAL AID PROJECT NUMBER	FISCAL YEAR	SHEET NUMBER	TOTAL SHEETS
71-02-009	New Castle	DEL.	2			A	301

RELOCATED DELAWARE ROUTE 141
THRU NEWPORT

DEPRESSED ROADWAY SECTION

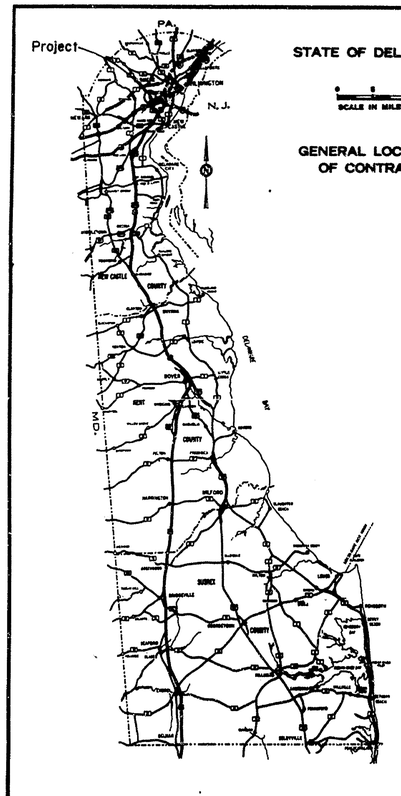

STATE OF DELAWARE

SCALE IN MILES

GENERAL LOCATION OF CONTRACT

DESIGN DESIGNATION

FEDERAL CLASS	F.A.P.
A.D.T.	30161
D.H.V.	3016
DESIGN SPEED	50 M.P.H.
MIN. STOPPING SIGHT DISTANCE	474 FT.
MAX. S.E.	0.08 FT./FT.
MAX. DEGREE CURVE	6° 00' 00"
MAX. % GRADE	3.15%

THE STATE OF DELAWARE

DEPARTMENT OF HIGHWAYS & TRANSPORTATION
DIVISION OF HIGHWAYS

CONSTRUCTION PLAN FOR:

CONTRACT NUMBER 71-02-009

FEDERAL AID PROJECT NUMBER _____

BEGIN PROJECT: STATION NO. 38+13.50 / 95+00.00 **END:** STATION NO. 71+20.00 / 109+69.34 ROUTE 141 NB & SB PART A / ROUTE 141 B. SBL PART B

LENGTH: 3,306.50 / 1,463.34 FEET = 0.626 / 0.277 MILES ROUTE 141 NB & SB PART A / ROUTE 141 B. SBL PART B
Total Length 4,769.84 FEET 0.903 Miles

SURVEY BOOKS

FOR SURVEY BOOKS, SEE SHEET NO. 1

INDEX OF SHEETS

A	TITLE SHEET PART A & PART B
B-C	SUMMARY OF QUANTITIES SHEETS PART A & PART B
1-250	PLAN SHEETS PART A
251-269	PLAN SHEETS PART B
270-298	STANDARD SHEETS, 270, C-1, C-2, C-4, D-1, D-3, D-7, D-9, D-13, D-14, D-15, D-16, D-17, D-18, D-19, E-1, G-2, G-3, G-4, G-5, G-7, P-1, P-2, S-1, S-2, S-3, T-2, T-7, T-8

UTILITIES

Artesian Water Co
501 Newport Gap Pike
Newport, Delaware

Delmarva Power & Light Co
600 Market St.
Wilmington, Delaware

B & O Railroad
Wheeling West Virginia

Diamond State Telephone Co
3900 Washington St.
Wilmington, Delaware

Department of Public Works
P.O. Box 165
Wilmington 99, Delaware

Rollins Cablevision
Box 4014
Wilmington, Del. 19808

Town of Newport
Newport, Delaware

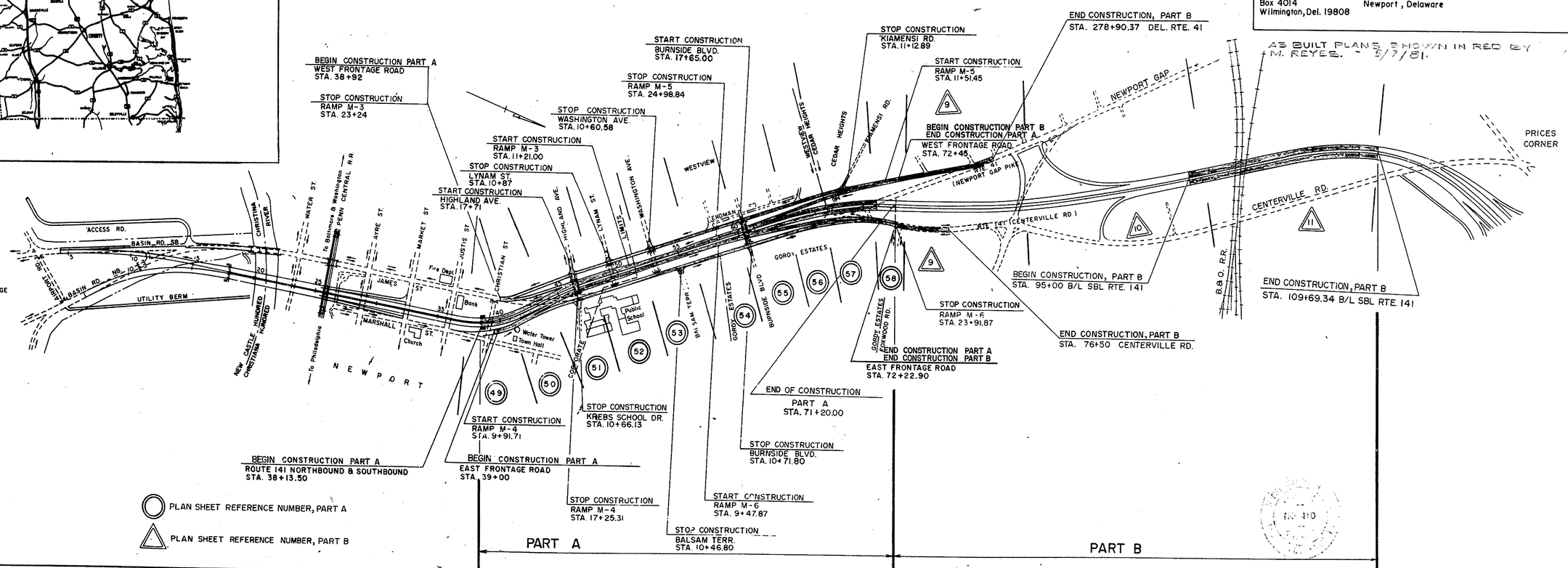

CONVENTIONAL SIGNS

PROPOSED CENTER LINE		WOODED AREA	
NEW RIGHT OF WAY LINE		TELEPHONE OR UTILITY POLE	
PROPERTY LINE		EXISTING CULVERT OR PIPE	
CONCRETE ROAD		RAILROAD	
MACADAM OR ASPHALT ROAD		GUARD RAIL	

SCALES

TITLE SHEET	1" = 400 FEET
CONSTRUCTION PLAN	1" = 20 FEET
VERTICAL PROFILE	1" = 5 FEET

DIVISION OF HIGHWAYS

RECOMMENDED

RECOMMENDED 12/6 19 73 Jack J. Schuh — CHIEF OF DESIGN

RECOMMENDED _____ 19 __ _____ — ASSISTANT CHIEF ENGINEER

APPROVED

APPROVED 12-7 19 73 R. E. Tomasetti — CHIEF ENGINEER

APPROVED _____ 19 __ _____ — DIRECTOR OF HIGHWAYS

DEPARTMENT OF TRANSPORTATION
FEDERAL HIGHWAY ADMINISTRATION

APPROVED _____ 19 __

_____ DIVISION ENGINEER

COUNTY	CONTRACT	P.R.A. REG. NO.	STATE	FED. AID PROJECT NO.	SHEET NO.	TOTAL SHEETS
NEWCASTLE	71-02-009	2	DEL.		B	301

RELOCATED DELAWARE ROUTE 141
THRU NEWPORT

PREL. TRACING _____ DESIGN _____ CHKD. _____

REVISIONS

Jan. 16, 1974 - 36' Class III to 36' Class IV R.R.
Feb. 7, 1974 - Added Item "Temporary Safety Fence" R.R.

SUMMARY OF QUANTITIES

	SECTION	ITEM - DESCRIPTION	UNIT	PROPOSAL
	SP	FIELD OFFICE	L.S.	L.S.
	201	CLEARING AND GRUBBING	L.S.	L.S.
	202	EXCAVATION AND EMBANKMENT	C.Y.	380,624
Δ	205	ROCK EXCAVATION FOR ROADWAY	C.Y.	100
Δ	206	ROCK EXCAVATION FOR STRUCTURE AND TRENCHES	C.Y.	100
	207	EXCAVATION FOR STRUCTURES	C.Y.	13,590
	208	EXCAVATION AND BACKFILL FOR PIPE TRENCHES	C.Y.	19,726
	209	BORROW TYPE A	C.Y.	17,517
	210	SELECT BORROW	C.Y.	10,222
	211	REMOVAL OF STRUCTURES & OBSTRUCTIONS	L.S.	L.S.
	303	CRUSHER RUN BASE COURSE	S.Y. INCHES	720,917
	401	HOT-MIX, HOT LAID ASPHALTIC CONCRETE PAVEMENT	TON	8,328
	SP	SOIL STERILANT	M.S.F.	5.0
	404	PRIME COAT FOR BITUMINOUS SURFACE TREATMENT	GAL.	285
	404	SEAL COAT FOR BITUMINOUS SURFACE TREATMENT	GAL.	345
	404	COARSE AGGREGATE FOR BITUMINOUS SURFACE TREATMENT	TON	24
	501	TRANSVERSE SAWED JOINT FOR P.C.C. PAVEMENT	L.F.	2,120
	SP	PORTLAND CEMENT CONCRETE PAVEMENT 9" DEPTH, CONTINUOUSLY REINFORCED	S.Y.	17,080
	501	REINFORCED PORTLAND CEMENT CONCRETE PAVEMENT, 9" DEPTH	S.Y.	10,488
	SP	TERMINAL CONSTR. JOINT	EA.	2
*	602	PORTLAND CEMENT CONCRETE MASONRY CURB TRANSITION	C.Y.	21
*	602	PORTLAND CEMENT CONCRETE MASONRY CURB TERMINAL	C.Y.	4.6
*	602	PORTLAND CEMENT CONCRETE MASONRY ABUTMENT FOOTING	C.Y.	209
*	602	PORTLAND CEMENT CONCRETE MASONRY PIER FOOTING	C.Y.	69
*	602	PORTLAND CEMENT CONCRETE MASONRY WALL FOOTING	C.Y.	1,835
*	602	PORTLAND CEMENT CONCRETE MASONRY ABUTMENT ABOVE FOOTING	C.Y.	345
*	602	PORTLAND CEMENT CONCRETE MASONRY PIER ABOVE FOOTING	C.Y.	166
*	602	PORTLAND CEMENT CONCRETE MASONRY RETAINING WALL	C.Y.	2,522
*	602	PORTLAND CEMENT CONCRETE MASONRY SUPERSTRUCTURES	C.Y.	574
*	602	PORTLAND CEMENT CONCRETE MASONRY APPROACH SLABS	C.Y.	161
	SP	PAVEMENT RELIEF JOINT, TYPE 2	L.F.	48
	603	SUPERFICIAL WATERPROOFING	S.Y.	4,415
	604	MEMBRANE WATERPROOFING	S.Y.	554
*	605	BAR REINFORCEMENT	LBS.	595,400
	606	STEEL STRUCTURES (452,600 LBS.)	L.S.	L.S.
*	SP	PREFABRICATED EXPANSION JOINT SYSTEM	L.F.	204
	SP	PROTECTIVE COATING FOR BRIDGE SUPERSTRUCTURE	GALS.	162
	SP	PARAPET PROTECTIVE FENCE	L.F.	4,792
	501	REINFORCED PORTLAND CEMENT CONCRETE PAVEMENT, 10" DEPTH	S.Y.	480
	210 A	FURNISHING SELECT BORROW FOR PIPE AND UTILITY TRENCH BACKFILL	C.Y.	22,425

	SECTION	ITEM - DESCRIPTION	UNIT	PROPOSAL
	615	66" REINFORCED CONCRETE PIPE, CLASS IV	L.F.	766
	615	66" REINFORCED CONCRETE PIPE, CLASS III	L.F.	972
	615	60" REINFORCED CONCRETE PIPE, CLASS III	L.F.	1,326
	615	48" REINFORCED CONCRETE PIPE, CLASS III	L.F.	269
	615	42" REINFORCED CONCRETE PIPE, CLASS V	L.F.	254
	615	42" REINFORCED CONCRETE PIPE, CLASS IV	L.F.	248
	615	42" REINFORCED CONCRETE PIPE, CLASS III	L.F.	322
	615	36" REINFORCED CONCRETE PIPE, CLASS ~~III~~ IV	L.F.	318
	615	30" REINFORCED CONCRETE PIPE, CLASS III	L.F.	356
	615	27" REINFORCED CONCRETE PIPE, CLASS III	L.F.	103
	615	24" REINFORCED CONCRETE PIPE, CLASS IV	L.F.	75
	615	24" REINFORCED CONCRETE PIPE, CLASS III	L.F.	522
	615	21" REINFORCED CONCRETE PIPE, CLASS III	L.F.	479
	615	18" REINFORCED CONCRETE PIPE, CLASS III	L.F.	5,034
	615	15" REINFORCED CONCRETE PIPE, CLASS III	L.F.	835
	617	30" CORRUGATED METAL PIPE BITUMINOUS COATED PAVED INVERT, 16 GAGE	L.F.	57
	617	24" CORRUGATED METAL PIPE BITUMINOUS COATED PAVED INVERT, 16 GAGE	L.F.	50
	617	24" CORRUGATED METAL PIPE, 16 GAGE (TEMPORARY)	L.F.	50
	617	18" CORRUGATED METAL PIPE BITUMINOUS COATED PAVED INVERT, 16 GAGE	L.F.	297
	617	18" CORRUGATED METAL PIPE, 16 GAGE (TEMPORARY)	L.F.	188
	617	15" CORRUGATED METAL PIPE BITUMINOUS COATED PAVED INVERT, 16 GAGE	L.F.	38
	620	42" REINFORCED CONCRETE PIPE, FLARED END SECTION	EA.	2
	620	36" REINFORCED CONCRETE PIPE, FLARED END SECTION	EA.	1
	620	18" CORRUGATED METAL PIPE FLARED END SECTION	EA.	7
	624	12" CAST-IN-PLACE CONCRETE PILES, 7 GAGE	L.F.	35,880
	624	12" STEEL SHELL TEST PILES, 7 GAGE	L.F.	3,750
	628	CONCRETE SLOPE PAVING	S.Y.	182
	705	PORTLAND CEMENT CONCRETE CURB, TYPE 1	L.F.	1,371
Δ	707	INTEGRAL PORTLAND CEMENT CONCRETE CURB & GUTTER, TYPE 1	L.F.	13,458
	707	INTEGRAL PORTLAND CEMENT CONCRETE CURB & GUTTER, TYPE 2	L.F.	735
	707	INTEGRAL PORTLAND CEMENT CONCRETE CURB & GUTTER, TYPE 3	L.F.	4,850
	SP	PORTLAND CEMENT CONCRETE CURB SPECIAL TYPE A	L.F.	45
	SP	PORTLAND CEMENT CONCRETE CURB SPECIAL TYPE B	L.F.	155
	SP	PORTLAND CEMENT CONCRETE CURB SPECIAL TYPE C	L.F.	628
	708	PORTLAND CEMENT CONCRETE SIDEWALK, 4" DEPTH	S.F.	35,016
	708	PORTLAND CEMENT CONCRETE SIDEWALK, 6" DEPTH	S.F.	2,180
Δ	709	HOT-MIX, HOT LAID ASPHALTIC CONCRETE CURB	L.F.	100
	711	CATCH BASIN, TYPE A	EA.	7
	711	CATCH BASIN, TYPE DBL-A	EA.	1
	SP	MAINTENANCE OF TRAFFIC (RAILROAD)	L.S.	L.S.
	SP	TEMPORARY SAFETY FENCE	L.F.	6,600

	SECTION	ITEM - DESCRIPTION	UNIT	PROPOSAL
	711	CATCH BASIN TYPE A-MODIFIED	EA.	1
	711	CATCH BASIN TYPE DBL-A-MODIFIED	EA.	2
	711	CATCH BASIN TYPE B	EA.	11
	711	CATCH BASIN TYPE J	EA.	29
	711	CATCH BASIN TYPE DBL-J	EA.	4
	711	CATCH BASIN TYPE J-MODIFIED	EA.	16
	711	CATCH BASIN TYPE PW-BD1	EA.	4
	711	CATCH BASIN TYPE PW-BD2	EA.	2
	711	CATCH BASIN TYPE PW-BD2 MODIFIED NO.1	EA.	1
	711	CATCH BASIN TYPE S COMB.	EA.	9
	711	CATCH BASIN TYPE DBL S COMB	EA.	8
	712	MANHOLE - STANDARD	EA.	3
	S.P.	SPECIAL MANHOLES	EA.	15
	712	MANHOLE - S	EA.	2
	712	MANHOLE - D	EA.	3
	712	MANHOLE - W	EA.	5
	713	ADJUSTING AND REPAIRING EXISTING CATCH BASIN OR MANHOLE	EA.	5
	715	GALVANIZED STEEL BEAM GUARD RAIL (STEEL POSTS)	L.F.	743
	716	TWISTED END ANCHORAGES	EA.	2
	718	MEDIAN BARRIER BEAM GUARD RAIL (STEEL POSTS)	L.F.	2,400
	SP	PORTLAND CEMENT CONCRETE MEDIAN BARRIER	L.F.	821
	720	CHAIN LINK FENCE, TYPE I	L.F.	570
	720	CHAIN LINK FENCE, TYPE II	L.F.	2,120
Δ	720	TERMINAL POSTS	EA.	18
	723	TOPSOILING 4" DEPTH	S.Y.	12,391
	724	SEEDING	S.Y.	12,391
	724	SEEDING CHEMICAL BINDER, 60 GAL PER ACRE	S.Y.	12,391
	726	MULCHING, STRAW OR HAY	S.Y.	12,391
	726	MULCH SECUREMENT, CHEMICAL MULCH BINDER	S.Y.	12,391
Δ	727	SODDING	S.Y.	196
	724	CROWNVETCH SEEDING & MULCHING	S.Y.	44,031
Δ	725	EROSION CONTROL EXCAVATION & EMBANKMENT	C.Y.	100
Δ	725	EROSION CONTROL, EXCELSIOR BLANKET, NET OR JUTE MESH	S.Y.	1000
Δ	725	EROSION CONTROL SEEDING I	ACRE	2
	725	EROSION CONTROL SEEDING II	ACRE	2
Δ	725	CHEMICAL EROSION CONTROL	GAL.	100
Δ	725	EROSION CONTROL SODDING	S.Y.	100
	730	LATERAL OR LONGITUDINAL DITCHING	L.F.	244
Δ	731	CALCIUM CHLORIDE FOR DUST CONTROL	TON	12
	733	REMOVAL OF EXISTING PORTLAND CEMENT CONCRETE PAVEMENT CURB, GUTTER & SIDEWALK	S.Y.	8,517
	734	6" PERFORATED PIPE UNDER DRAINS	L.F.	10,275
	735	FLAGMAN	HR.	7,200
Δ	SP	LATERAL SUBBASE DRAINAGE DITCHES	L.F.	100
	SP	DEMOLITION OF BUILDINGS	LS.	L.S.

	SECTION	ITEM - DESCRIPTION	UNIT	PROPOSAL
Δ	SP	SAWING OF JOINTS	L.F.	1,000
	SP	MAINTENANCE OF TRAFFIC (ROADWAY)	L.S.	L.S.
Δ	SP	HOT-MIX, ASPHALTIC CONCRETE AND OR COLD LAID BITUMINOUS CONCRETE (TRM)	TON	100
Δ	SP	CRUSHER RUN (TRM)	TON	100
	SP	RELOCATION OF 12,000 VOLTS ELECTRICAL SERVICE TO KREB SCHOOL	L.S.	L.S.
	SP	REMOVAL OF NEWPORT WATER TOWER	L.S.	L.S.
	609	COARSE AGGREGATE FOR FOUNDATION STABILIZATION	TON	50
		ITEMS FOR SANITARY SEWERS		
	SP	RELOCATION OF SANITARY SEWERS	L.S.	L.S.
	SP	ADJUSTING SANITARY SEWER LATERALS	EA.	30
		ITEMS FOR NEWPORT WATER SYSTEM		
	SP	3" D.I. PIPE, CLASS 2	L.F.	245
	SP	4" D.I. PIPE, CLASS 2	L.F.	90
	SP	6" D.I. PIPE, CLASS 2	L.F.	1,550
	SP	8" D.I. PIPE, CLASS 2	L.F.	335
	SP	3" GATE VALVE WITH VALVE BOX	EA.	2
	SP	4" GATE VALVE WITH VALVE BOX	EA.	1
	SP	6" GATE VALVE WITH VALVE BOX	EA.	4
	SP	8" GATE VALVE WITH VALVE BOX	EA.	2
	SP	FIRE HYDRANTS	EA.	2
	SP	MECHANICAL JOINT CAST OR DUCTILE IRON FITTINGS	LBS.	4,585
	SP	AIR RELEASE VALVE	EA.	1
		ITEMS FOR TRAFFIC CONTROL		
	SP	4" NON-METALLIC CONDUIT UNDER NEW PAVEMENT OR SOFT SURFACE	L.F.	125
	SP	2 1/2" GALVANIZED CONDUIT UNDER NEW PAVEMENT OR SOFT SURFACE	L.F.	425
	SP	1 1/2" GALVANIZED CONDUIT UNDER NEW PAVEMENT OR SOFT SURFACE	L.F.	4,050
	SP	STEEL POLE BASE - TYPE 1	EA.	16
	SP	CONDUIT JUNCTION WELL (PRECAST)	EA.	28
	SP	SMALL CABINET BASE	EA.	4

* ESTIMATED FIXED QUANTITY - SECTION 109.06 OF STANDARD SPECIFICATIONS

Δ CONTINGENT QUANTITIES AS DIRECTED BY THE ENGINEER

COUNTY	CONTRACT	P.N.A. REG. NO.	STATE	FED. AID PROJECT NO.	SHEET NO.	TOTAL SHEETS
NEWCASTLE	71-02-009	2	DEL.		C	301

RELOCATED DELAWARE ROUTE 141
THRU NEWPORT

PREL. TRACING _____ DESIGN _____ CHKD. _____

REVISIONS

SUMMARY OF QUANTITIES

SECTION	ITEM - DESCRIPTION	UNIT	PROPOSAL
	ITEMS FOR ROADWAY LIGHTING		
SP	LIGHTING POLE & 12' DAVIT ARM. TRANSFORMER BASE MOUNTED	EA.	25
SP	LIGHTING POLE & 10' DAVIT ARM TRANSFORMER BASE MOUNTED	EA.	12
SP	LIGHTING POLE & 10' DAVIT ARM WITH ANCHOR BASE PARAPET MOUNTED	EA.	2
SP	LIGHTING POLE & 6' DAVIT ARM WITH ANCHOR BASE PARAPET MOUNTED	EA.	2
SP	LUMINAIRE, 400 WATT HIGH PRESSURE SODIUM VAPOR LAMP	EA.	37
SP	LUMINAIRE, 400 WATT MERCURY VAPOR LAMP	EA.	4
SP	UNDERPASS LUMINAIRE 250 WATT HIGH PRESSURE SODIUM VAPOR LAMP	EA.	1
SP	LIGHTING POLE BASE	EA.	37
SP	ROADWAY LIGHTING JUNCTION BOX	EA.	1
SP	JUNCTION BOX, SPECIAL	EA.	2
SP	CONDUIT DUCT MARKER	EA.	9
SP	ELECTRIC POWER SUPPLY SYSTEM	L.S.	L.S.
SP	2" HIGH IMPACT PVC CONDUIT UNDER SODDED OR SOFT SURFACE	L.F.	7,400
SP	2" GALVANIZED STEEL CONDUIT ON STRUCTURE	L.F.	50
SP	2" GALVANIZED FLEXIBLE STEEL CONDUIT ON STRUCTURE	L.F.	15
SP	#2 AWG CABLE	L.F.	10,600
SP	#4 AWG CABLE	L.F.	4,000
SP	#6 AWG CABLE	L.F.	4,730
SP	#8 AWG CABLE	L.F.	3,500
SP	CONDUIT JUNCTION WELL (PRECAST), LIGHTING	EA.	5
	ITEMS FOR SIGNS & SIGN STRUCTURES		
206	ROCK EXCAVATION FOR STRUCTURES AND TRENCHES, SIGNS	C.Y.	10
207	EXCAVATION FOR STRUCTURES, SIGNS	C.Y.	135
602	PORTLAND CEMENT CONCRETE MASONRY, SIGNS	C.Y.	36
605	BAR REINFORCEMENT, SIGNS	LBS.	2,600
SP	SIGN PANELS	S.F.	2,250
SP	CANTILEVER SIGN STRUCTURES, SIGN NO.17	L.S.	L.S.
SP	CANTILEVER SIGN STRUCTURES, SIGN NO.21	L.S.	L.S.
SP	CANTILEVER SIGN STRUCTURES, SIGN NO.22	L.S.	L.S.
SP	CANTILEVER SIGN STRUCTURES, SIGN NO.23	L.S.	L.S.
SP	BREAKAWAY TYPE GROUND MOUNTED SIGN SUPPORTS & FOUNDATION, SIGN NO.18	L.S.	L.S.
SP	BREAKAWAY TYPE GROUND MOUNTED SIGN SUPPORTS & FOUNDATION, SIGN NO.26	L.S.	L.S.
SP	ELECTRICAL WORK FOR CANTILEVER & HIGHWAY BRIDGE MOUNTED SIGN NO.17	L.S.	L.S.
SP	ELECTRICAL WORK FOR CANTILEVER & HIGHWAY BRIDGE MOUNTED SIGN NO.19	L.S.	L.S.
SP	ELECTRICAL WORK FOR CANTILEVER & HIGHWAY BRIDGE MOUNTED SIGN NO.20	L.S.	L.S.
SP	ELECTRICAL WORK FOR CANTILEVER & HIGHWAY BRIDGE MOUNTED SIGN NO.21	L.S.	L.S.
SP	ELECTRICAL WORK FOR CANTILEVER & HIGHWAY BRIDGE MOUNTED SIGN NO.22	L.S.	L.S.
SP	ELECTRICAL WORK FOR CANTILEVER & HIGHWAY BRIDGE MOUNTED SIGN NO.23	L.S.	L.S.
SP	ELECTRICAL WORK FOR CANTILEVER & HIGHWAY BRIDGE MOUNTED SIGN NO.24	L.S.	L.S.
SP	ELECTRICAL WORK FOR CANTILEVER & HIGHWAY BRIDGE MOUNTED SIGN NO.25	L.S.	L.S.

SECTION	ITEM - DESCRIPTION	UNIT	PROPOSAL
	ITEMS FOR ROADWAY LIGHTING		
S.P.	UNDERPAVEMENT CROSSING, 2" GALVANIZED STEEL CONDUIT, ENCASED	L.F.	475
S.P.	GALVANIZED STEEL CONDUIT IN STRUCTURE	L.F.	489
S.P.	JUNCTION BOXES IN STRUCTURE	EA.	6

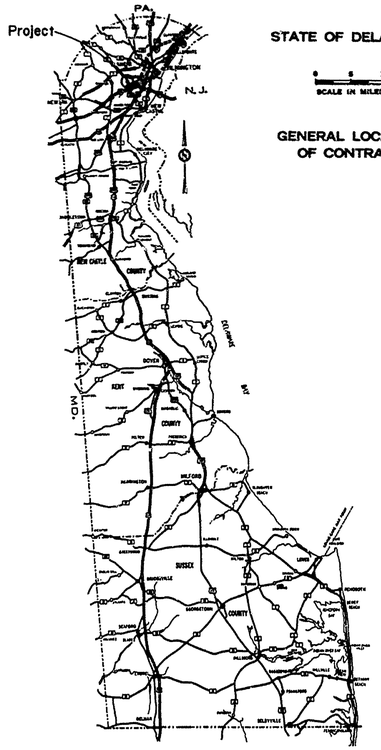

DESIGN DESIGNATION

FEDERAL CLASS	F.A.P.
A.D.T.	30161
D.H.V.	3016
DESIGN SPEED	50 M.P.H.
MIN. STOPPING SIGHT DISTANCE	474 FT.
MAX. S.E.	0.08 FT./FT.
MAX. DEGREE CURVE	6° 00' 00"
MAX. % GRADE	3.15%

THE STATE OF DELAWARE

DEPARTMENT OF HIGHWAYS & TRANSPORTATION
DIVISION OF HIGHWAYS

CONSTRUCTION PLAN FOR:

CONTRACT NUMBER 71-02-009 PART A

FEDERAL AID PROJECT NUMBER _____

BEGIN PROJECT: STATION NO. 38+13.50 **END:** STATION NO. 71+20.00 ROUTE 141 N.B. & S.B. PART A

LENGTH: 3306.50 FEET = 0.626 MILES ROUTE 141 N.B. & S.B. PART A

CONTRACT	COUNTY	STATE	B.P.R. REG. NO.	FEDERAL AID PROJECT NUMBER	FISCAL YEAR	SHEET NUMBER	TOTAL SHEETS
71-02-009	New Castle	DEL.	2			1	301

RELOCATED DELAWARE ROUTE 141
THRU NEWPORT

DEPRESSED ROADWAY SECTION

SURVEY BOOKS

4760 4762 4764 4767 4769
4761 4763 4765 4768

INDEX OF SHEETS

1	TITLE SHEET
2	INDEX OF DRAWINGS
3-9	QUANTITY SHEETS
10-14	GEOMETRY & PERIMETER BASE LINE
15-26	TYPICAL SECTIONS
27-32	TRAFFIC PLAN & CONSTRUCTION SEQUENCE
33-48	DETAILS
49-99	PLAN & PROFILE SHEETS
100-199	STRUCTURAL PLANS
200-222	STRUCTURAL & ROADWAY BORING PLANS
223-225	NEWPORT WATER RELOCATION PLANS
226-231	SANITARY SEWER PLANS
232-237	ROADWAY LIGHTING PLANS
238-239	TRAFFIC CONTROL PLANS
240-280	SIGNS AND SIGN DETAILS PLANS

UTILITIES

Artesian Water Co.
501 Newport Gap Pike
Newport, Delaware

Delmarva Power & Light Co.
600 Market St.
Wilmington, Delaware

Diamond State Telephone Co.
3900 Washington St.
Wilmington, Delaware

Department of Public Works
P.O. Box 165
Wilmington 99, Delaware

Rollins Cablevision
Box 4014
Wilmington, Del. 19808

Town of Newport
Newport, Delaware

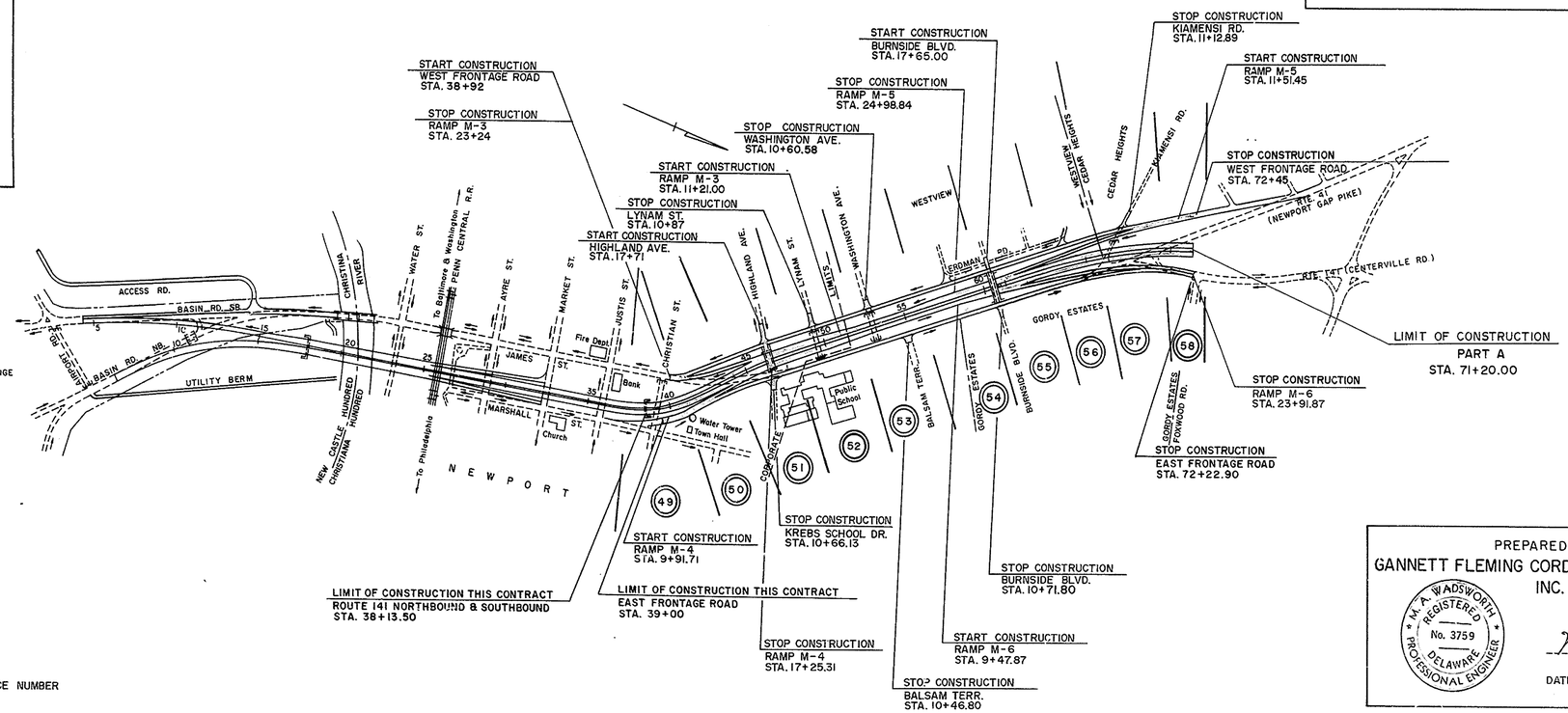

PLAN SHEET REFERENCE NUMBER

PREPARED BY
GANNETT FLEMING CORDDRY & CARPENTER INC.

M. A. WADSWORTH REGISTERED No. 3759 DELAWARE PROFESSIONAL ENGINEER

M. A. Wadsworth
Reg. Prof. Engineer
DATE NOV 26, 1973

CONVENTIONAL SIGNS

PROPOSED CENTER LINE	WOODED AREA
NEW RIGHT OF WAY LINE	TELEPHONE OR UTILITY POLE
PROPERTY LINE	EXISTING CULVERT OR PIPE
CONCRETE ROAD	RAILROAD
MACADAM OR ASPHALT ROAD	GUARD RAIL

SCALES

TITLE SHEET	1" = 400 FEET
CONSTRUCTION PLAN	1" = 20 FEET
VERTICAL PROFILE	1" = 5 FEET

DIVISION OF HIGHWAYS

RECOMMENDED

RECOMMENDED _____ 19__ _____ CHIEF, PLANS AND DESIGN

RECOMMENDED _____ 19__ _____ ASSISTANT CHIEF ENGINEER

APPROVED

APPROVED _____ 19__ _____ CHIEF ENGINEER

APPROVED _____ 19__ _____ DIRECTOR OF HIGHWAYS

DEPARTMENT OF TRANSPORTATION
FEDERAL HIGHWAY ADMINISTRATION

APPROVED _____ 19 ____

_____ DIVISION ENGINEER

COUNTY	CONTRACT	P. B. A. REG. NO.	STATE	FED. AID PROJECT NO.	SHEET NO.	TOTAL SHEETS
NEW CASTLE	71-02-009	2	DEL.		2	301

RELOCATED DELAWARE ROUTE 141
THRU NEWPORT

PREL. TRACING G.B.S. DESIGN G.S. CHKD. G.S.

REVISIONS

INDEX OF DRAWINGS
PART A

1. TITLE SHEET
2. INDEX TO PLAN & LEGEND
3. SUMMARY OF QUANTITIES
4. SUMMARY OF QUANTITIES
5. TABULATION OF EARTHWORK AND PAVING QUANTITIES
6. TABULATION OF DRAINAGE QUANTITIES
7. TABULATION OF DRAINAGE & UNDERDRAIN QUANTITIES
8. TABULATION OF MISCELLANEOUS ROADWAY QUANTITIES
9. TABULATION OF STRUCTURAL QUANTITIES
10. GEOMETRY & PERIMETER BASELINE - SOUTH OF RIVER
11. GEOMETRY & PERIMETER BASELINE - VIADUCT AREA
12. GEOMETRY & PERIMETER BASELINE - DEPRESSED AREA
13. GEOMETRIC TIES TO PERIMETER BASELINE
14. REFERENCE TIES TO PERIMETER BASELINE
15. TYPICAL SECTIONS ROUTE 141 NB.& SB.
16. TYPICAL SECTIONS ROUTE 141 NB.& SB.
17. TYPICAL SECTIONS ROUTE 141 NB.& SB.
18 TYPICAL SECTIONS ROUTE 141 NB.& SB.
19. TYPICAL SECTIONS ROUTE 141 NB.& SB.
20. TYPICAL SECTIONS RAMP M-3, M-4
21. TYPICAL SECTIONS RAMP M-4, EAST FRONTAGE ROAD
22. TYPICAL SECTIONS EAST FRONTAGE ROAD
23. TYPICAL SECTIONS RAMP M-3, WEST FRONTAGE ROAD
24. TYPICAL SECTIONS WEST FRONTAGE ROAD
25. TYPICAL SECTIONS RAMP M-5, WEST FRONTAGE ROAD
26. TYPICAL SECTIONS RAMP M-6, EAST FRONTAGE ROAD
27. TEMPORARY RUNAROUND
28. TRAFFIC PLAN & CONSTRUCTION SEQUENCE 1
29. TRAFFIC PLAN & CONSTRUCTION SEQUENCE 2
30. TRAFFIC PLAN & CONSTRUCTION SEQUENCE 3
31. TRAFFIC PLAN & CONSTRUCTION SEQUENCE 4
32. TRAFFIC PLAN & CONSTRUCTION SEQUENCE 5
33. PAVEMENT DETAILS - CONTINUOUSLY REINF., P.C.C. PAVEMENT
34. PAVEMENT DETAILS - CONTINUOUSLY REINF., P.C.C. PAVEMENT
35-35A. PAVEMENT DETAILS - CONTINUOUSLY REINF., P.C.C. PAVEMENT
36. MANHOLE NO.9, 10 DETAILS
37. MANHOLE NO.11, 12 DETAILS
38. MANHOLE NO.13, 14 DETAILS
39. MANHOLE NO.15, 16 DETAILS
40. MANHOLE NO.17, 18 DETAILS
41. MANHOLE NO.19.20 DETAILS
42. MANHOLE NO.69A, 72 & 73 DETAILS
43. MEDIAN BARRIER & DRAINAGE DETAILS
44. HIGHLAND AVE BRIDGE - MEDIAN & CURB TRANSITION DETAILS
45. CURB TRANSITION DETAILS
46. CURB TERMINAL DETAILS
47. DRAINAGE TABULATION
48. DRAINAGE TABULATION
49. CONSTRUCTION PLAN ROUTE 141 STA.28+13 TO STA.40+75
50. CONSTRUCTION PLAN ROUTE 141 STA.40+75 TO STA.44+00
51. CONSTRUCTION PLAN ROUTE 141 STA.44+00 TO STA.48+00
52. CONSTRUCTION PLAN ROUTE 141 STA.48+00 TO STA.52+00
53. CONSTRUCTION PLAN ROUTE 141 STA.52+00 TO STA.56+00
54. CONSTRUCTION PLAN ROUTE 141 STA.56+00 TO STA.60+00
55. CONSTRUCTION PLAN ROUTE 141 STA.60+00 TO STA.62+00
56. CONSTRUCTION PLAN ROUTE 141 STA.62+00 TO STA.65+00
57. CONSTRUCTION PLAN ROUTE 141 STA.65+00 TO STA.69+00
58. CONSTRUCTION PLAN ROUTE 141 STA.69+00 TO STA.70+00
59. CONTOUR GRADING & DRAINAGE PLAN STA.38+13 TO STA.40+75
60. CONTOUR GRADING & DRAINAGE PLAN STA.40+75 TO STA.44+00
61. CONTOUR GRADING & DRAINAGE PLAN STA.44+00 TO STA.48+00
62. CONTOUR GRADING & DRAINAGE PLAN STA.48+00 TO STA.52+00
63. CONTOUR GRADING & DRAINAGE PLAN STA.52+00 TO STA.56+00
64. CONTOUR GRADING & DRAINAGE PLAN STA.56+00 TO STA.60+00
65. CONTOUR GRADING & DRAINAGE PLAN STA.60+00 TO STA.62+00
66. CONTOUR GRADING & DRAINAGE PLAN STA.62+00 TO STA.65+00
67. CONTOUR GRADING & DRAINAGE PLAN STA.65+00 TO STA.69+00
68. CONTOUR GRADING & DRAINAGE PLAN STA.69+00 TO STA.70+00
69. PAVEMENT DETAILS & JOINT LAYOUT ROUTE 141 STA.38+13 TO STA.40+75
70. PAVEMENT DETAILS & JOINT LAYOUT ROUTE 141 STA.40+75 TO STA.44+00
71. PAVEMENT DETAILS & JOINT LAYOUT ROUTE 141 STA.44+00 TO STA.48+00
72. PAVEMENT DETAILS & JOINT LAYOUT ROUTE 141 STA.48+00 TO STA.52+00
73. PAVEMENT DETAILS & JOINT LAYOUT ROUTE 141 STA.52+00 TO STA.56+00
74. PAVEMENT DETAILS & JOINT LAYOUT ROUTE 141 STA.56+00 TO STA.60+00
75. PAVEMENT DETAILS & JOINT LAYOUT ROUTE 141 STA.60+00 TO STA.62+00
76. PAVEMENT DETAILS & JOINT LAYOUT ROUTE 141 STA.62+00 TO STA.65+00
77. PAVEMENT DETAILS & JOINT LAYOUT ROUTE 141 STA.65+00 TO STA.69+00
78. PAVEMENT DETAILS & JOINT LAYOUT ROUTE 141 STA.69+00 TO STA.70+00
79. PROFILE ROUTE 141 NB.& SB. STA.38+13 TO STA.42+00
80. PROFILE ROUTE 141 NB.& SB. STA.42+00 TO STA.48+00
81. PROFILE ROUTE 141 NB.& SB. STA.48+00 TO STA.54+00
82. PROFILE ROUTE 141 NB.& SB. STA.54+00 TO STA.60+00
83. PROFILE ROUTE 141 NB.& SB. STA.60+00 TO STA.64+00
84. PROFILE ROUTE 141 NB.& SB. STA.64+00 TO STA.70+00
85. PROFILE RAMP M-3 STA.10+00 TO STA.20+00
86. PROFILE RAMP M-3 STA.20+00 TO STA.23+24
87. PROFILE RAMP M-4 STA. 9+91 TO STA.17+25
88. PROFILE RAMP M-5 STA.11+51 TO STA.21+00
89. PROFILE RAMP M-5 STA.21+00 TO STA.25+00
90. PROFILE RAMP M-6 STA. 9+47 TO STA.19+00
91. PROFILE RAMP M-6 STA.19+00 TO STA.24+50
92. PROFILE EAST FRONTAGE ROAD STA.38+00 TO STA.44+00
93. PROFILE EAST FRONTAGE ROAD STA.44+00 TO STA.56+00
94. PROFILE EAST FRONTAGE ROAD STA.56+00 TO STA.68+00
95. PROFILE EAST FRONTAGE ROAD STA.68+00 TO STA.72+22
96. PROFILE WEST FRONTAGE ROAD STA.38+92 TO STA.51+00
97. PROFILE WEST FRONTAGE ROAD STA.51+00 TO STA.63+00
98. PROFILE WEST FRONTAGE ROAD STA.63+00 TO STA.73+07
99. PROFILE BURNSIDE BLVD, BRIDGE, BALSAM TERRACE, HIGHLAND AVE & BRIDGE & KREB SCHOOL DR.

100 - 199 STRUCTURAL PLANS (FOR INDEX SEE SHEET NO.100)

200 - 222 STRUCTURAL AND ROADWAY BORING PLANS

223 - 225 NEWPORT WATER RELOCATION PLANS

226 - 231 SANITARY SEWER PLANS

232 - 237 ROADWAY LIGHTING PLANS

238 - 239 TRAFFIC CONTROL PLANS

240 - 250 SIGNS & SIGN DETAILS PLANS

LEGEND

- PORTLAND CEMENT CONCRETE PAVEMENT OR SIDEWALK
- HOT MIX, HOT LAID ASPHALTIC CONCRETE PAVEMENT
- HOT MIX, HOT LAID ASPHALTIC CONCRETE MEDIAN OR SHOULDER
- PORTLAND CEMENT CONCRETE CURB, TYPE I
- INTEGRAL PORTLAND CEMENT CONCRETE CURB & GUTTER, TYPE I
- INTEGRAL PORTLAND CEMENT CONCRETE CURB & GUTTER, TYPE 2
- PORTLAND CEMENT CONCRETE PARKWAY CURB, TYPE I
- INTEGRAL PORTLAND CEMENT CONCRETE CURB & GUTTER, TYPE 3
- R.O.W. CHAIN LINK FENCE, TYPE I
- R.O.W. CHAIN LINK FENCE, TYPE II
- GALVANIZED STEEL BEAM GUARD RAIL (STEEL POST)
- MEDIAN BARRIER BEAM GUARD RAIL (STEEL POST)
- 6" PERFORATED PIPE UNDERDRAIN
- —S— EXISTING SANITARY SEWER
- —ST— EXISTING STORM SEWER
- —G— EXISTING GAS MAIN
- —W— EXISTING WATER MAIN
- —T— EXISTING UNDERGROUND TELEPHONE CONDUIT
- 4" TOPSOIL, SEEDING & MULCHING
- CROWNVETCH SEEDING & MULCHING
- BITUMINOUS SURFACE TREATMENT & SOIL STERILANT

COUNTY	CONTRACT	P.N.A. REG. NO.	STATE	FED. A.D. PROJECT NO.	SHEET NO.	TOTAL SHEETS
NEWCASTLE	71-02-009	2	DEL		3	301

RELOCATED DELAWARE ROUTE 141
THRU NEWPORT

PREL TRACING ____ DESIGN ____ CHKD. ____

REVISIONS

SUMMARY OF QUANTITIES
PART A

	SECTION	ITEM - DESCRIPTION	UNIT	PROPOSAL
	SP	FIELD OFFICE	L.S.	L.S.
	SP	TRAINEES	EA.	5
	201	CLEARING AND GRUBBING	L.S.	L.S.
	202	EXCAVATION AND EMBANKMENT	C.Y.	378,415
Δ	205	ROCK EXCAVATION FOR ROADWAY	C.Y.	100
Δ	206	ROCK EXCAVATION FOR STRUCTURE AND TRENCHES	C.Y.	100
	207	EXCAVATION FOR STRUCTURES	C.Y.	13,590
	208	EXCAVATION AND BACKFILL FOR PIPE TRENCHES	C.Y.	17,000
	209	BORROW TYPE A	C.Y.	17,460
	210	SELECT BORROW	C.Y.	10,205
	211	REMOVAL OF STRUCTURES & OBSTRUCTIONS	L.S.	L.S.
	303	CRUSHER RUN BASE COURSE	S.Y. INCHES	681,485
	401	HOT-MIX, HOT LAID ASPHALTIC CONCRETE PAVEMENT	TON	7,590
	SP	SOIL STERILANT	M.S.F.	5.0
	404	PRIME COAT FOR BITUMINOUS SURFACE TREATMENT	GAL.	285
	404	SEAL COAT FOR BITUMINOUS SURFACE TREATMENT	GAL.	345
	404	COARSE AGGREGATE FOR BITUMINOUS SURFACE TREATMENT	TON	24
	501	TRANSVERSE SAWED JOINT FOR P.C.C. PAVEMENT	L.F.	2,090
	501	PORTLAND CEMENT CONCRETE PAVEMENT 9" DEPTH, CONTINUOUSLY REINFORCED	S.Y.	17,080
	501	REINFORCED PORTLAND CEMENT CONCRETE PAVEMENT, 9" DEPTH	S.Y.	10,355
	SP	TERMINAL CONSTR. JOINT	EA.	2
*	602	PORTLAND CEMENT CONCRETE MASONRY CURB TRANSITION	C.Y.	21
*	602	PORTLAND CEMENT CONCRETE MASONRY CURB TERMINAL	C.Y.	4.6
*	602	PORTLAND CEMENT CONCRETE MASONRY ABUTMENT FOOTING	C.Y.	209
*	602	PORTLAND CEMENT CONCRETE MASONRY PIER FOOTING	C.Y.	69
*	602	PORTLAND CEMENT CONCRETE MASONRY WALL FOOTING	C.Y.	1,835
*	602	PORTLAND CEMENT CONCRETE MASONRY ABUTMENT ABOVE FOOTING	C.Y.	345
*	602	PORTLAND CEMENT CONCRETE MASONRY PIER ABOVE FOOTING	C.Y.	166
*	602	PORTLAND CEMENT CONCRETE MASONRY RETAINING WALL ABOVE FOOTING	C.Y.	2,522
*	602	PORTLAND CEMENT CONCRETE MASONRY SUPERSTRUCTURES	C.Y.	574
*	602	PORTLAND CEMENT CONCRETE MASONRY APPROACH SLABS	C.Y.	161
	SP	PAVEMENT RELIEF JOINT TYPE 2	L.F.	48
	603	SUPERFICIAL WATERPROOFING	S.Y.	4,415
	604	MEMBRANE WATERPROOFING	S.Y.	554
*	605	BAR REINFORCEMENT	LBS.	595,400
	606	STEEL STRUCTURES (452,600 LBS.)	L.S.	L.S.
*	SP	PREFABRICATED EXPANSION JOINT SYSTEM	L.F.	204
	SP	PROTECTIVE COATING FOR BRIDGE SUPERSTRUCTURE	GAL.	162
	SP	PARAPET PROTECTIVE FENCE	L.F.	4,792
Δ	609	COARSE AGGREGATE FOR FOUNDATION STABILIZATION	TON	50
	501	REINFORCED PORTLAND CEMENT CONCRETE PAVEMENT, 10" DEPTH	S.Y.	480

* ESTIMATED FIXED QUANITY-SECTION 109.06 OF STANDARD SPECIFICATIONS

SECTION	ITEM - DESCRIPTION	UNIT	PROPOSAL
615	66" REINFORCED CONCRETE PIPE, CLASS IV	L.F.	766
615	66" REINFORCED CONCRETE PIPE, CLASS III	L.F.	972
615	60" REINFORCED CONCRETE PIPE, CLASS III	L.F.	1,326
615	48" REINFORCED CONCRETE PIPE, CLASS III	L.F.	269
615	42" REINFORCED CONCRETE PIPE, CLASS III	L.F.	322
615	27" REINFORCED CONCRETE PIPE, CLASS III	L.F.	105
615	24" REINFORCED CONCRETE PIPE, CLASS IV	L.F.	75
615	24" REINFORCED CONCRETE PIPE, CLASS III	L.F.	486
615	21" REINFORCED CONCRETE PIPE, CLASS III	L.F.	479
615	18" REINFORCED CONCRETE PIPE, CLASS III	L.F.	4,330
615	15" REINFORCED CONCRETE PIPE, CLASS III	L.F.	835
617	30" CORRUGATED METAL PIPE BITUMINOUS COATED PAVED INVERT, 16 GAGE	L.F.	57
617	24" CORRUGATED METAL PIPE BITUMINOUS COATED PAVED INVERT, 16 GAGE	L.F.	50
617	24" CORRUGATED METAL PIPE, 16 GAGE (TEMPORARY)	L.F.	50
617	18" CORRUGATED METAL PIPE BITUMINOUS COATED PAVED INVERT, 16 GAGE	L.F.	183
617	15" CORRUGATED METAL PIPE BITUMINOUS COATED PAVED INVERT, 16 GAGE	L.F.	38
624	12" CAST-IN-PLACE CONCRETE PILES, 7 GAGE	L.F.	35,880
624	12" STEEL SHELL TEST PILES, 7 GAGE	L.F.	3,750
628	CONCRETE SLOPE PAVING	S.Y.	182
705	PORTLAND CEMENT CONCRETE CURB, TYPE 1	L.F.	1,350
707	INTEGRAL PORTLAND CEMENT CONCRETE CURB & GUTTER, TYPE 1	L.F.	11,370
707	INTEGRAL PORTLAND CEMENT CONCRETE CURB & GUTTER, TYPE 2	L.F.	735
707	INTEGRAL PORTLAND CEMENT CONCRETE CURB & GUTTER, TYPE 3	L.F.	4,850
SP	PORTLAND CEMENT CONCRETE CURB - SPECIAL, TYPE A	L.F.	45
SP	PORTLAND CEMENT CONCRETE CURB - SPECIAL, TYPE B	L.F.	155
SP	PORTLAND CEMENT CONCRETE CURB - SPECIAL, TYPE C	S.F.	548
708	PORTLAND CEMENT CONCRETE SIDEWALK, 4" DEPTH	S.F.	33,960
708	PORTLAND CEMENT CONCRETE SIDEWALK, 6" DEPTH	S.F.	2,180
Δ 709	HOT-MIX, HOT LAID ASPHALTIC CONCRETE CURB	L.F.	100
711	CATCH BASIN, TYPE A	EA.	7
711	CATCH BASIN, TYPE DBL-A	EA.	1
711	CATCH BASIN, TYPE A-MODIFIED	EA.	1
711	CATCH BASIN, TYPE DBL-A-MODIFIED	EA.	2
711	CATCH BASIN, TYPE B	EA.	11
711	CATCH BASIN, TYPE J	EA.	29
711	CATCH BASIN, TYPE DBL-J	EA.	4
711	CATCH BASIN, TYPE J-MODIFIED	EA.	16
711	CATCH BASIN, TYPE PW-BD1	EA.	4
712	MANHOLE - STANDARD	EA.	2
712	SPECIAL MANHOLES	EA.	15
210A	FURNISHING SELECT BORROW FOR PIPE AND UTILITY TRENCH BACKFILL	C.Y.	19,925

	SECTION	ITEM - DESCRIPTION	UNIT	PROPOSAL
	712	MANHOLE - B	EA.	2
	712	MANHOLE - W	EA.	5
	713	ADJUSTING AND REPAIRING EXISTING CATCH BASIN OR MANHOLE	EA.	3
	715	GALVANIZED STEEL BEAM GUARD RAIL(STEEL POSTS)	L.F.	743
	716	TWISTED END ANCHORAGES	EA.	2
	718	GALVANIZED STEEL BEAM MEDIAN BARRIER	L.F.	2,400
	SP	PORTLAND CEMENT CONCRETE MEDIAN BARRIER	L.F.	821
	720	CHAIN LINK FENCE, TYPE I	L.F.	570
	720	CHAIN LINK FENCE, TYPE II	L.F.	2,120
Δ	720	TERMINAL POSTS	EA.	18
	723	TOPSOILING 4" DEPTH	S.Y.	10,200
	724	SEEDING	S.Y.	10,200
	724	SEEDING CHEMICAL BINDER, 60 GAL. PER ACRE	S.Y.	10,200
	725	MULCHING	S.Y.	10,200
Δ	726	SODDING	S.Y.	100
	724	CROWNVETCH SEEDING & MULCHING	S.Y.	25,650
	730	LATERAL OR LONGITUDINAL DITCHING	L.F.	170
Δ	731	CALCIUM CHLORIDE FOR DUST CONTROL	TON	10
	733	REMOVAL OF EXISTING PORTLAND CEMENT CONCRETE PAVEMENT CURB,GUTTER & SIDEWALK	S.Y.	5,050
	734	6" PERFORATED PIPE UNDER DRAIN	L.F.	10,200
	735	FLAGMAN	HR.	6,000
Δ	SP	SAWING OF JOINTS	L.F.	1,000
	SP	MAINTENANCE OF TRAFFIC	L.S.	L.S.
Δ	SP	HOT MIX, ASPHALTIC CONCRETE AND/OR COLD LAID BITUMINOUS CONCRETE (TRM)	TON	20
Δ	SP	CRUSHER RUN BASE COURSE (TEMPORARY ROAD MATERIAL)	TON	10
	SP	RELOCATION OF 12,000 VOLTS ELECTRICAL SERVICE TO KREB SCHOOL	L.S.	L.S.
	SP	REMOVAL OF NEWPORT WATER TOWER	L.S.	L.S.
Δ	SP	LATERAL SUBBASE DRAINAGE DITCHES	L.F.	100

SECTION	ITEM - DESCRIPTION	UNIT	PROPOSAL
	ITEMS FOR SANITARY SEWERS		
SP	RELOCATION OF SANITARY SEWERS	L.S.	L.S.
SP	ADJUSTING SANITARY SEWER LATERALS	EA.	30
	ITEMS FOR ROADWAY LIGHTING		
SP	UNDERPAVEMENT CROSSING 2" GALVANIZED STEEL CONDUIT ENCASED	L.F.	475
SP	GALVANIZED STEEL CONDUIT IN STRUCTURE	L.F.	489
SP	JUNCTION BOXES IN STRUCTURE	EA.	6
	ITEMS FOR NEWPORT WATER SYSTEM		
SP	3" D.I. PIPE, CLASS 2	L.F.	245
SP	4" D.I. PIPE, CLASS 2	L.F.	90
SP	6" D.I. PIPE, CLASS 2	L.F.	1,550
SP	8" D.I. PIPE, CLASS 2	L.F.	335
SP	3" GATE VALVE WITH VALVE BOX	EA.	2
SP	4" GATE VALVE WITH VALVE BOX	EA.	1
SP	6" GATE VALVE WITH VALVE BOX	EA.	4
SP	8" GATE VALVE WITH VALVE BOX	EA.	2
SP	FIRE HYDRANTS	EA.	2
SP	MECHANIAL JOINT CASTS OR DUCTILE IRON FITTINGS	LBS.	4,585
SP	AIR RELEASE VALVE	EA.	1
	ITEMS FOR TRAFFIC CONTROL		
SP	4" NON-METALLIC CONDUIT UNDER NEW PAVEMENT OR SOFT SURFACE	L.F.	125
SP	2 1/2" GALVANIZED CONDUIT UNDER NEW PAVEMENT OR SOFT SURFACE	L.F.	425
SP	1 1/2" GALVANIZED CONDUIT UNDER NEW PAVEMENT OR SOFT SURFACE	L.F.	4,050
SP	STEEL POLE BASE - TYPE I	EA.	16
SP	CONDUIT JUNCTION WELL (PRECAST)	EA.	28
SP	SMALL CABINET BASE	EA.	4

Δ CONTINGENT QUANTITIES AS DIRECTED BY THE ENGINEER

COUNTY	CONTRACT	F.A.P. REG. NO.	STATE	FED. AID PROJECT NO.	SHEET NO.	TOTAL SHEETS
NEWCASTLE	71-02-009	2	DEL		4	301

RELOCATED DELAWARE ROUTE 141
THRU NEWPORT

PREL TRACING ____ DESIGN ____ CHKD ____

REVISIONS

SUMMARY OF QUANTITIES
PART A

SECTION	ITEM - DESCRIPTION	UNIT	PROPOSAL
	ITEMS FOR ROADWAY LIGHTING		
SP	LIGHTING POLE & 12' DAVIT ARM. TRANSFORMER BASE MOUNTED	EA.	25
SP	LIGHTING POLE & 10' DAVIT ARM TRANSFORMER BASE MOUNTED	EA.	12
SP	LIGHTING POLE & 10' DAVIT ARM WITH ANCHOR BASE PARAPET MOUNTED	EA.	2
SP	LIGHTING POLE & 6' DAVIT ARM WITH ANCHOR BASE PARAPET MOUNTED	EA.	2
SP	LUMINAIRE, 400 WATT HIGH PRESSURE SODIUM VAPOR LAMP	EA.	37
SP	LUMINAIRE, 400 WATT MERCURY VAPOR LAMP	EA.	4
SP	UNDERPASS LUMINAIRE 250 WATT HIGH PRESSURE SODIUM VAPOR LAMP	EA.	1
SP	LIGHTING POLE BASE	EA.	37
SP	ROADWAY LIGHTING JUNCTION BOX	EA.	1
SP	JUNCTION BOX, SPECIAL	EA.	2
SP	CONDUIT DUCT MARKER	EA.	9
SP	ELECTRIC POWER SUPPLY SYSTEM	L.S.	L.S.
SP	2" HIGH IMPACT PVC CONDUIT UNDER SODDED OR SOFT SURFACE	L.F.	7,400
SP	2" GALVANIZED STEEL CONDUIT ON STRUCTURE	L.F.	50
SP	2" GALVANIZED FLEXIBLE STEEL CONDUIT ON STRUCTURE	L.F.	15
SP	#2 AWG CABLE	L.F.	10,600
SP	#4 AWG CABLE	L.F.	4,000
SP	#6 AWG CABLE	L.F.	4,730
SP	#8 AWG CABLE	L.F.	3,500
SP	CONDUIT JUNCTION WELL (PRECAST)	EA.	5
	ITEMS FOR SIGNS & SIGN STRUCTURES		
206	ROCK EXCAVATION FOR STRUCTURES	C.Y.	10
207	EXCAVATION FOR STRUCTURES	C.Y.	135
602	PORTLAND CEMENT CONCRETE MASONRY	C.Y.	36
605	BAR REINFORCEMENT	LBS.	2,600
SP	SIGN PANELS	S.F.	2,250
SP	CANTILEVER SIGN STRUCTURES, SIGN NO.17	L.S.	L.S.
SP	CANTILEVER SIGN STRUCTURES, SIGN NO.21	L.S.	L.S.
SP	CANTILEVER SIGN STRUCTURES, SIGN NO.22	L.S.	L.S.
SP	CANTILEVER SIGN STRUCTURES, SIGN NO.23	L.S.	L.S.
SP	BREAKAWAY TYPE GROUND MOUNTED SIGN SUPPORTS & FOUNDATION, SIGN NO.18	L.S.	L.S.
SP	BREAKAWAY TYPE GROUND MOUNTED SIGN SUPPORTS & FOUNDATION, SIGN NO.26	L.S.	L.S.
SP	ELECTRICAL WORK FOR CANTILEVER & HIGHWAY BRIDGE MOUNTED SIGN NO.17	L.S.	L.S.
SP	ELECTRICAL WORK FOR CANTILEVER & HIGHWAY BRIDGE MOUNTED SIGN NO.19	L.S.	L.S.
SP	ELECTRICAL WORK FOR CANTILEVER & HIGHWAY BRIDGE MOUNTED SIGN NO.20	L.S.	L.S.
SP	ELECTRICAL WORK FOR CANTILEVER & HIGHWAY BRIDGE MOUNTED SIGN NO.21	L.S.	L.S.
SP	ELECTRICAL WORK FOR CANTILEVER & HIGHWAY BRIDGE MOUNTED SIGN NO.22	L.S.	L.S.
SP	ELECTRICAL WORK FOR CANTILEVER & HIGHWAY BRIDGE MOUNTED SIGN NO.23	L.S.	L.S.
SP	ELECTRICAL WORK FOR CANTILEVER & HIGHWAY BRIDGE MOUNTED SIGN NO.24	L.S.	L.S.
SP	ELECTRICAL WORK FOR CANTILEVER & HIGHWAY BRIDGE MOUNTED SIGN NO.25	L.S.	L.S.

COUNTY	CONTRACT	F.H.A. REG. NO.	STATE	FED. AID PROJECT NO.	SHEET NO.	TOTAL SHEETS
NEW CASTLE	71-02-009	2	DEL.		5	301

RELOCATED DELAWARE ROUTE 141
THRU NEWPORT

PREL. TRACING GBS. DESIGN G.S. CHKD. G.S.

REVISIONS

TABULATION OF EARTHWORK QUANTITIES

SECTION	202		209	210
UNIT	C.Y.		C.Y.	C.Y.
LOCATION	EXCAVATION	EMBANKMENT	BORROW TYPE A	SELECT BORROW
ROUTE 141 NB. & SB. AND RAMPS	364,045	1,190	13,400	10
EAST FRONTAGE ROAD	7,390	375		
WEST FRONTAGE ROAD	5,530	1,090		
TABULATION OF SIDEWALK QUANTITIES				515
TABULATION OF STRUCTURAL QUANTITIES				9,080
TEMPORARY RUN AROUND 1	970	20		
TEMPORARY RUN AROUND 2	65	105		
TEMPORARY RUN AROUND 3	415	1,700		
* SUB-TOTAL (UNADJUSTED)	378,415	4,480	13,400	10,205
ADJUSTMENT		-	4,060	
TOTAL	378,415		17,460	10,205 ⚠2

⚠1 CONTINGENT QUANTITY TO BE USED AS DIRECTED BY ENGINEER

⚠2 NO ADJUSTEMENT IN QUANTITIES AS IT IS ANTICIPATED THAT A PORTION OF THE EXCAVATED MATERIAL WILL MEET THE REQUIREMENTS FOR SELECT BORROW

TABULATION OF PAVING QUANTITIES

SECTION	303					401			501				SP
UNIT	S.Y.				S.Y. INCHES	TON			L.F.	S.Y.			EA.
LOCATION	CRUSHER RUN BASE COURSE					HOT MIX, HOT LAID ASPHALTIC CONCRETE PAVEMENT			TRANSVERSE SAWED JOINT FOR P.C.C. PAVEMENT	9" CONTINUOUS REINFORCED P.C.C. PAVEMENT	9" REINFORCED P.C.C. PAVEMENT	10" REINFORCED P.C.C. PAVEMENT	TERMINAL CONSTR. JOINT
						TYPE C		TYPE B					
	4" DEPTH	8" DEPTH	10" DEPTH	11" DEPTH	VARIABLE DEPTH	1 1/2" DEPTH	2" DEPTH	2 1/2" DEPTH					
ROUTE 141 NB.	1,365	10,410		70	61,075		600		340	8,540	1,525	240	1
ROUTE 141 SB.	1,240	9,685		70	61,290		550		220	8,540	1,135	240	1
RAMP M-3	600	1,715	325		12,235	27	160	46	350		1,715		
RAMP M-4	215	1,135			7,810		70		225		1,135		
RAMP M-5	525	2,300			12,730		160		480		2,300		
RAMP M-6	280	2,475			19,320		180		465		2,475		
EAST FRONTAGE ROAD			9,835		7,115	855		1,445					
WEST FRONTAGE ROAD	15	70	9,185		8,200	880	5	1,495	10		70		
TEMP RUN AROUND 1			4,270			265		450					
TEMP RUN AROUND 2		1,045				88		147					
TEMP RUN AROUND 3		625				50		87					
TEMP SIDEWALKS	345					30							
SUB-TOTAL	4,585	29,466	23,615	140		2,195	1,725	3,670	2,090	17,080	10,355	480	2
SUB-TOTAL S.Y. INCHES	18,340	235,680	236,150	1,540	189,775								
TOTAL	681,485					7,590			2,090	17,080	10,355	480	2

GENERAL NOTES

FOR TABULATION OF STRUCTURAL QUANTITIES, SEE SHEET NO.9

FOR TABULATION OF WATER RELOCATION QUANTITIES, SEE SHEET NO.225

FOR TABULATION OF SANITARY SEWER QUANTITIES, SEE SHEET NO.231

FOR TABULATION OF ROADWAY LIGHTING QUANTITIES, SEE SHEET NO.232

FOR TABULATION OF TRAFFIC CONTROL QUANTITIES, SEE SHEET NO.238

FOR TABULATION OF SIGNING QUANTITIES, SEE SHEET NO.240

TABULATION OF TOPSOIL, SEEDING, MULCHING & ETC.

SECTION		723	724	725	726	SP
UNIT		S.Y.	AC.	S.Y.	S.Y.	S.Y.
LOCATION		TOPSOILING 4" DEPTH	SEEDING	MULCHING	SODDING	CROWNVETCH SEEDING & MULCHING
ROUTE 141 NB.		2,328	0.48	2,328		9,250
ROUTE 141 SB.		4,110	.85	4,110		5,390
RAMP M-3		255	0.05	255		1,624
RAMP M-4		304	0.06	304		941
RAMP M-5		137	0.03	137		4,364
RAMP M-6		176	0.04	176		2,867
EAST FRONTAGE ROAD		200	0.04	200		1,214
WEST FRONTAGE ROAD		2,690	0.60	2,690		
TOTAL		10,200	2.15	10,200	100 ⚠1	25,650

TABULATION OF GUARDRAIL, MEDIAN BARRIER ETC. QUANTITIES

SECTION			715	716		718	SP	SP		
UNIT			L.F.	EA.		L.F.	L.F.	L.F.		
LOCATION	STATION	SIDE	GALVANIZED STEEL BEAM GUARD RAIL	TWISTED END ANCHORAGE		GALVANIZED STEEL BEAM MEDIAN BARRIER	P.C.C. MEDIAN BARRIER	P.C.C. CURB SPECIAL		
								TYPE A	TYPE B	TYPE C
ROUTE 141	38+13 TO 46+34	MEDIAN					821			
	46+96 TO 47+22	MEDIAN								25
	47+22 TO 52+45	MEDIAN								523
	46+96 TO 69+93	MEDIAN				2,400				
	38+56 TO 40+27	LT.	163	1						
RAMP M-6	16+00 TO 21+80	LT.	580	1						
	21+90 TO 22+35	RT.								
EAST FRONTAGE ROAD	70+23 TO 72+23	LT.						45	155	
TOTAL			743	2		2,400	821	45	155	548

TABULATION OF R.O.W. CHAIN LINK FENCE QUANTITIES

LOCATION	SECTION		720		
	UNIT		L.F.		EA.
	STATION	SIDE	CHAIN LINK FENCE TYPE I	CHAIN LINK FENCE TYPE II	TERMINAL POST
ROUTE 141 NB. TO EAST FRONTAGE ROAD	38+13 TO 37+95	RT. LT.	50		2
EAST FRONTAGE ROAD TO RAMP M-4	37+95 TO 11+90			320	2
ROUTE 141 SB. TO RAMP M-3	38+13 TO 21+54	LT.	280		4
RAMP M-3	19+00 TO 21+54	LT.		260	2
WEST FRONTAGE ROAD	61+54 TO 68+50	RT.		700	3
WEST FRONTAGE ROAD TO RAMP M-5	72+45 TO 17+00	RT.		640	3
RAMP M-6	19+50 TO 21+90	LT.	240		1
RAMP M-6	21+90 TO 23+92	LT.		200	1
TOTAL			570	2,120	18

TABULATION OF EXCAVATED MATERIAL AVAILABLE FOR EMBANKMENT

SECTION	ITEM	EXCAVATED MATERIAL C.Y.	DEDUCTION FOR UNSUITABLE MATERIAL AND ADJUSTMENT C.Y.	AVAILABLE MATERIAL C.Y.
202	EXCAVATION	378,415	126,145	252,270
207	EXCAVATION FOR STRUCTURE	13,590	4,530	9,060
208	EXCAVATION FOR PIPE TRENCHES	17,000	5,650	11,350
SP	SANITARY SEWER	3,375	1,125	2,250
SP	UTILITIES ⚠4	6,000	2,000	4,000
202	DEDUCT EMBANKMENT UTILIZED			-4,480
TOTAL		418,380	139,450	274,450 ⚠3

⚠3 TO BE PLACED NORTH OF LIBERTY ROAD AND IN ACCORDANCE WITH THE PLANS OF PART B

⚠4 CONTINGENT QUANTITY FOR GAS, TELEPHONE, ARTESIAN WATER, NEWPORT WATER & SANITARY SEWER

TABULATION OF SELECT BORROW FOR UTILITIES

SECTION 210A	FURNISHING SELECT BORROW FOR PIPE AND UTILITY TRENCH BACKFILL	
UTILITY	WORK BY CONTRACTOR C.Y.	WORK BY UTILITIES C.Y.
ARTESIAN WATER CO.		430
GAS (DELMARVA POWER & LIGHT CO.)		2,420
DIAMOND STATE TELEPHONE CO.		1,310
NEWPORT WATER SYSTEM	940	
SANITARY SEWERS	550	
SUB-TOTAL	1,490	4,160
ADJUSTMENT	1,850	
TOTAL	7,500	

COUNTY	CONTRACT	P.R.A. REG. NO.	STATE	FED. AID PROJECT NO.	SHEET NO.	TOTAL SHEETS
NEW CASTLE	71-02-009	2	DEL		6	301

RELOCATED DELAWARE ROUTE 141
THRU NEWPORT

PREL. TRACING G.B.S. DESIGN R.W.H. CHKD. G.S.

REVISIONS

TABULATION OF DRAINAGE QUANTITIES

TABLE I

RUN	LOCATION	SIDE	208 EXCAVATION AND BACKFILL FOR PIPE TRENCHES (C.Y.)	210A FURNISHING SELECT BORROW FOR PIPE AND UTILITY TRENCH BACKFILL (C.Y.)	615 REINFORCED CONCRETE PIPE CLASS III (L.F.) 15"	18"	21"	24"	27"	711 (EA.) CATCH BASIN TYPE A	CATCH BASIN TYPE DBL. A	CATCH BASIN TYPE A MODIFIED	CATCH BASIN DBL. A MODIFIED	CATCH BASIN TYPE B	CATCH BASIN TYPE J	CATCH BASIN TYPE DBL. J	CATCH BASIN TYPE J MODIFIED	CATCH BASIN TYPE PW. BD 1	712 (EA.) TYPE W MANHOLE	EXIST. MANAHOLE	STD. MANHOLE
9-1 TO 9	EAST FRONTAGE ROAD	LT.	19	16		38													1		
9-2 TO 9-1	EAST FRONTAGE ROAD	LT.	14	10		36				1											
9-3 TO 9-1	EAST FRONTAGE ROAD	LT.	8	6		23				1											
9-4 TO 9-3	EAST FRONTAGE ROAD	RT.	7	5		23													1		
9-5 TO 9-4	EAST FRONTAGE ROAD	RT.	103	72		284											1				
9-6 TO 9-5	EAST FRONTAGE ROAD	RT.	48	37		104											1				
9-7 TO 9-6	EAST FRONTAGE ROAD	RT.	27	22		49									1						
9-8 TO 9-7	EAST FRONTAGE ROAD	RT.	87	69		172									1						
9-9 TO 9-8	EAST FRONTAGE ROAD	LT.	9	7		27								1							
9-10 TO 9-8	EAST FRONTAGE ROAD	RT.	93	68		237									1						
9-11 TO 9-10	EAST FRONTAGE ROAD	LT.	9	6		27								1							
9-12 TO 9-10	EAST FRONTAGE ROAD	RT.	38	26		111									1						
9-13 TO 9-12	EAST FRONTAGE ROAD	RT.	44	30		132									1						
9-14 TO 9-13	EAST FRONTAGE ROAD	LT.	10	7		30								1							
9-16 TO 9-15	℄ ROUTE 141	RT.	155	141				82							1						
9-17 TO 9-16	RAMP M-4	RT.	281	240				236								1					
9-18 TO 9-17	℄ ROUTE 141	RT.	69	44				142								1					
9-19 TO 9-18	℄ ROUTE 141	LT.	25	18		61					1										
9-20 TO 9-18	℄ ROUTE 141	RT.	18	11		63									1						
9-21 TO 9-20	℄ ROUTE 141	LT.	22	16		55				1											
10-1 TO 10	℄ ROUTE 141	RT.	25	20		52							1								
10-2 TO 10	℄ ROUTE 141	RT.	33	23		92							1								
12-1 TO 12	RAMP M-3	RT.	23	19		45									1						
12-2 TO 12-1	RAMP M-3	RT.	58	44		129									1						
12-3 TO 12	℄ ROUTE 141	LT.	13	9		42						1									
14-1 TO 14	℄ ROUTE 141	LT.	21	16		50												1			
14-2 TO 14-1	℄ ROUTE 141	RT.	20	14		55									1						
15-1 TO 15	℄ ROUTE 141	LT.	49	39					50									1			
15-2 TO 15-1	℄ ROUTE 141	RT.	46	34					55						1						
15-4 TO 15-3	EAST FRONTAGE ROAD	RT.	23	19				26							1						
15-5 TO 15-4	EAST FRONTAGE ROAD	RT.	60	50		90									1						
15-6 TO 15-5	EAST FRONTAGE ROAD	RT.	9	7		19															1
15-7 TO 15-6	EAST FRONTAGE ROAD	RT.	17	13		38									1						
15-8 TO 15-6	BALSAM TERRACE	LT.	2	1		10														1	
15-9 TO 15-4	EAST FRONTAGE ROAD	RT.	7	5			117								1						
15-10 TO 15-9	EAST FRONTAGE ROAD	RT.	141	96			302												1		
15-11 TO 15-10	EAST FRONTAGE ROAD	RT.	5	3			14									1					
15-12 TO 15-11	EAST FRONTAGE ROAD	RT.	17	11			46									1					
15-14 TO 15-13	WEST FRONTAGE ROAD	LT.	9	7		22											1				
16-1 TO 16	℄ ROUTE 141	LT.	33	28		52												1			
16-2 TO 16-1	RAMP M-6	RT.	37	31		62													1		
16-3 TO 16-2	RAMP M-6	RT.	107	85		207									1						
16-5 TO 16-4	BURNSIDE BLVD.	LT.	2	1		8				1											
16-6 TO 16-5	BURNSIDE BLVD.	RT.	5	3		22				1											
16-7 TO 16-4	WEST FRONTAGE ROAD	LT.	21	16		48											1				
17-1 TO 17	ROUTE 141 SOUTHBOUND ℄	RT.	21	17		40												1			
17-2 TO 17	RAMP M-5	RT.	17	13		44									1						
18-2 TO 18-1	WEST FRONTAGE ROAD	RT.	33	25		74											1				
18-3 TO 18-1	WEST FRONTAGE ROAD	LT.	15	12		34											1				
18-4 TO 18-3	WEST FRONTAGE ROAD	LT.	24	18		58											1				
SUB-TOTAL *			1,979	1,530		2,765	479	486	105	5	1	1	2	3	17	4	7	4	4	1	1

* FOR TOTAL SEE SHEET NO. 7

TABLE II

RUN	LOCATION	SIDE	208 EXCAVATION AND BACKFILL FOR PIPE TRENCHES (C.Y.)	210 FURNISHING SELECT BORROW FOR PIPE AND UTILITY TRENCH BACKFILL (C.Y.)	615 REINFORCED CONCRETE PIPE CLASS III (L.F.) 42"	48"	60"	66"		712 (EA.) SPECIAL MANHOLE
13 TO 12	RAMP M-3	RT.	406	197				170		1
14 TO 13	℄ ROUTE 141	LT.	1445	878				454		1
15 TO 14	℄ ROUTE 141	LT.	1370	945				348		1
16 TO 15	RAMP M-5	RT.	2014	1515			460			1
17 TO 16	ROUTE 141 SOUTHBOUND ℄	LT.	2094	1569			504			1
18 TO 17	ROUTE 141 SOUTHBOUND ℄	LT.	946	675			264			1
72 TO 73	ROUTE 141 NORTHBOUND ℄	LT.	95	45		74				1
19 TO 18	ROUTE 141 SOUTHBOUND ℄	LT.	105	69			40			1
73 TO 20	ROUTE 141 NORTHBOUND ℄	RT.	306	176		195				1
69A TO 20-2	RAMP M-6	RT.	665	497	322					1
20 TO 19	ROUTE 141 NORTHBOUND ℄	LT.	85	44			38			1
SUB-TOTAL			9,540	6,610						11
TOTAL			⚠	⚠	322	269	1,326	972		⚠

TABLE III

RUN	LOCATION	SIDE	208 EXCAVATION AND BACKFILL FOR PIPE TRENCHES (C.Y.)	210A FURNISHING SELECT BORROW FOR PIPE AND UTILITY TRENCH BACKFILL (C.Y.)	615 REINFORCED CONCRETE PIPE CLASS IV (L.F.) 24"	66"	711 (EA.) CATCH BASIN TYPE J	712 (EA.) SPECIAL MANHOLE
9 TO 8	RAMP M-4	LT.	1783	1455		266		1
9-15 TO 9	RAMP M-4	LT.	158	145	75		1	
10 TO 9	℄ ROUTE 141	RT.	413	330		70		1
11 TO 10	℄ ROUTE 141	LT.	225	180		40		1
12 TO 11	℄ ROUTE 141	LT.	1521	1035		390		1
SUB-TOTAL			4,100	3,145			1	4
TOTAL			⚠	⚠	75	766	⚠	⚠

⚠ FOR THE TOTAL OF THESE ITEMS SEE TABLE V

FOR DRAINAGE DETAILS SEE SHEET NO. 47 & 48

COUNTY	CONTRACT	P. R. A. REG. NO.	STATE	FED. AID PROJECT NO.	SHEET NO.	TOTAL SHEETS
NEW CASTLE	71-02-009	2	DEL.		7	301

RELOCATED DELAWARE ROUTE 141
THRU NEWPORT

PREL. TRACING G.B.S. DESIGN R.W.H. CHKD. G.S.

REVISIONS

TABULATION OF DRAINAGE QUANTITIES

TABLE I (Cont.)

RUN	SECTION		208	210 A	615					711									712		
	UNIT		C.Y.	C.Y.	L.F.					EA.									EA.		
	LOCATION	SIDE	EXCAVATION AND BACKFILL FOR PIPE TRENCHES	FURNISHING SELECT BORROW FOR PIPE AND UTILITY TRENCH BACKFILL	REINFORCED CONCRETE PIPE CLASS III					CATCH BASIN TYPE A	CATCH BASIN TYPE DBL. A	CATCH BASIN TYPE A MODIFIED	CATCH BASIN TYPE DBL. A MODIFIED	CATCH BASIN TYPE B	CATCH BASIN TYPE J	CATCH BASIN TYPE DBL. J	CATCH BASIN TYPE J MODIFIED	CATCH BASIN TYPE PW BD 1	TYPE W MANHOLE	EXIST. MANHOLE	STD. MANHOLE
					15"	18"	21"	24"	27"												
	CONTINUED FROM SHEET NO. 5		1,979	1,530		2,765	479	486	105	5	1	1	2	3	17	4	7	4	4	1	1
20-1 TO 20	ROUTE 141 NORTHBOUND ℄	RT.	11	9		28									1						
20-3 TO 20-2	EAST FRONTAGE ROAD	RT.	53	47		61									1						
20-4 TO 20-3	EAST FRONTAGE ROAD	RT.	63	54		82									1						
20-5 TO 20-4	EAST FRONTAGE ROAD	RT.	61	50		107									1						
20-6 TO 20-5	EAST FRONTAGE ROAD	RT.	22	17		56									1						
20-8 TO 20-3	EAST FRONTAGE ROAD	RT.	180	153		251									1						
20-9 TO 20-8	EAST FRONTAGE ROAD	RT.	39	31		76									1						
20-10 TO 20-9	EAST FRONTAGE ROAD	RT.	21	16		49									1						
20-11 TO 20-10	EAST FRONTAGE ROAD	RT.	22	16		52									1						
20-12 TO 20-11	EAST FRONTAGE ROAD	RT.	41	30		97									1						
20-13 TO 20-12	EAST FRONTAGE ROAD	RT.	26	19		65									1						
31-1 TO 31	WEST FRONTAGE ROAD	LT.	60	44		154											1				1
31-2 TO 31-1	WEST FRONTAGE ROAD	RT.	8	6		22								1							
31-3 TO 31-1	WEST FRONTAGE ROAD	LT.	84	63		196											1				
31-4 TO 31-3	WEST FRONTAGE ROAD	RT.	8	6		22								1							
31-5 TO 31-3	WEST FRONTAGE ROAD	LT.	60	44		143											1				
31-6 TO 31-5	WEST FRONTAGE ROAD	RT.	8	6		22								1							
31-7 TO 31	WEST FRONTAGE ROAD	RT.	16	12		44				1											
31-8 TO 31	WEST FRONTAGE ROAD	RT.	13	9		38				1											
32-1 TO 32	RAMP M-3	RT.	15	14	28												1			1	
32-2 TO 32-1	WEST FRONTAGE ROAD	LT.	10	8	28												1				
32 3 TO 32-1	WEST FRONTAGE ROAD	LT.	130	108	275												1				
32-4 TO 32-3	WEST FRONTAGE ROAD	RT.	7	5	22									1							
29 TO 17-3 & 28 TO 16-7	ERDMAN ROAD		195	168	482									2			1				
SUB-TOTAL			3,120	2,465										9	28		14		4		2
TOTAL			⚠	⚠	835	4,330	479	486	105	7	1	1	2	⚠	⚠	4	⚠	4	⚠	2	⚠

TABLE IV

RUN	SECTION		208	210	617				711		712		
	UNIT		C.Y.	C.Y.	L.F.				EA.		EA.		
	LOCATION	SIDE	EXCAVATION AND BACKFILL FOR PIPE TRENCHES	SELECT BORROW	CORRUGATED METAL PIPE BITUMINOUS COATED PAVED INVERT 16 GAGE				CATCH BASIN TYPE B	CATCH BASIN TYPE J MODIFIED	MANHOLE TYPE B	MANHOLE TYPE W	
					15"	18"	24"	30"					
15-3 TO 15-2	EAST FRONTAGE ROAD	LT.	50	42			50		1				
15-13 TO 15	WEST FRONTAGE ROAD	RT.	29	23		56			1				
16-4 TO 16	BURNSIDE BLVD.	LT.	29	25		36					1		
17-3 TO 17-2	WEST FRONTAGE ROAD	RT.	11	9	38					1			
18-1 TO 18	WEST FRONTAGE ROAD	RT.	31	26		75				1			
20-2 TO 20	RAMP M-6	LT.	83	75				57			1		
30 TO 9-6	KREBS SCHOOL DRIVE	RT.	7	5		16						1	
SUB-TOTAL			240	205					2	2		1	
TOTAL			⚠	⚠	38	183	50	57	⚠	⚠	2	⚠	

TABULATION OF UNDERDRAIN QUANTITIES

LOCATION	SECTION		734
	UNIT		L.F.
	STATION TO STATION	SIDE	6" PERFORATED PIPE EROSION PROTECTION
ROUTE 141 NB.	38+14 TO 70+40	RT.	2,538
ROUTE 141 SB.	38+14 TO 70+30	LT.	3,205
	70+30 TO 70+40	RT.	40
RAMP M-3	11+21 TO 21+45	RT.	1,020
RAMP M-4	11+42 TO 13+74	LT.	228
	13+74 TO 17+25	RT.	351
RAMP M-5	11+48 TO 18+89	LT.	781
	18+89 TO 24+99	RT.	597
RAMP M-6	9+48 TO 22+40	RT.	1,292
	22+40 TO 23+79	LT.	148
TOTAL			10,200

TABLE V

	SECTION	208	210 A	711			712		
	UNIT	C.Y.	C.Y.	EA.			EA.		
	CLASSIFICATION	EXCAVATION AND BACKFILL FOR PIPE TRENCHES	FURNISHING SELECT BORROW FOR PIPE AND UTILITY TRENCH BACKFILL	CATCH BASIN TYPE B	CATCH BASIN TYPE J	CATCH BASIN TYPE J MODIFIED	MANHOLE TYPE W	MANHOLE TYPE STD.	MANHOLE TYPE SPECIAL
TABLE I	REINFORCED CONCRETE PIPE 15" TO 27" CLASS III	3,120	2,465	9	28	14	4	2	
TABLE II	REINFORCED CONCRETE PIPE 30" TO 66" CLASS III	9,540	6,610						11
TABLE III	REINFORCED CONCRETE PIPE 24" TO 66" CLASS IV	4,100	3,145		1				4
TABLE IV	CORRUGATED METAL PIPE 15" TO 30" 16 GAGE	240	205	2		2	1		
	SELECT BORROW FOR UTILITIES		7,500						
TOTAL		17,000	19,925	11	29	16	5	2	15

NOTE:

⚠ For the Total of these Items see Table V

For Drainage Details see Sheet No's. 47 & 48

COUNTY	CONTRACT	P.R.A. REG. NO.	STATE	FED. AID PROJECT NO.	SHEET NO.	TOTAL SHEETS
NEWCASTLE	71-02-009	2	DEL.		8	301

RELOCATED DELAWARE ROUTE 141
THRU NEWPORT

PREL. TRACING G.B.S. DESIGN G.S. CHKD. G.S.

REVISIONS

TABULATION OF REMOVAL OF EXISTING PORTLAND CEMENT CONCRETE PAVEMENT, CURB, SIDEWALK, ETC. QUANTITIES

REFERENCE PLANS SHEET NO.	LOCATION	SIDE	REMOVAL OF EXISTING PORTLAND CEMENT CONCRETE PAV'T.	CURB	GUTTER	SIDEWALKS
	SECTION		733			
	UNIT		S.Y.			
49	JAMES ST.	LT.		15		91
		RT.		14		86
50	JAMES ST.	LT.		25		149
		RT.		25		149
51	JAMES ST.	LT.		27		232
		RT.		30		241
	HIGHLAND AVE.	LT.			42	40
		RT.		3	40	
	KREB SCHOOL DR.	LT.		2		28
		RT.		6		
52	NEWPORT GAP PIKE	LT.		1		151
		RT.		26		259
	LYNAM ST.	LT.			57	
		RT.			57	
53	NEWPORT GAP PIKE	LT.		2		122
		RT.		26		158
	BALSAM TERRACE	LT.		2		
		RT.		2		
	WASHINGTON AVE.	LT.			56	
		RT.			58	
54	NEWPORT GAP PIKE	LT.				180
		RT.		30		187
55	NEWPORT GAP PIKE	LT.				124
		RT.		4		168
	BURNSIDE BLVD.	LT.			60	93
		RT.			62	
	ERDMAN ROAD	RT.				68
56	NEWPORT GAP PIKE	LT.				131
		RT.				177
	ERDMAN ROAD	RT.				76
57	NEWPORT GAP PIKE	LT.				156
		RT.				178
	KIMENSI ROAD	LT.				125
		RT.				14
	CENTERVILLE ROAD	RT.	634			
58	NEWPORT GAP PIKE	LT.				56
		RT.				117
	CENTERVILLE ROAD	LT.		7		98
		RT.				83
SUB-TOTAL			634	247	432	3,737
TOTAL			5,050			

TABULATION OF CURB, CURB & GUTTER QUANTITIES

LOCATION	STATION TO STATION	SIDE	PORTLAND CEMENT CONCRETE CURB TYPE 1	INTEGRAL PORTLAND CEMENT CONCRETE CURB AND GUTTER TYPE 1	TYPE 2	TYPE 3
	SECTIONS		705	707		
	UNIT		L.F.			
ROUTE 141 NB.	41+50 TO 43+55	RT.		205		
	47+26 TO 57+97	RT.		1071		
	61+44 TO 69+83	RT.		849		
ROUTE 141 SB.	38+56 TO 46+50	LT.		789		
	50+84 TO 58+01	LT.		716		
	63+00 TO 69+93	LT.		692		
RAMP M-3	11+21 TO 14+77	RT.		356		
	15+65 TO 21+48	RT.	45	543		
	21+40 TO 23+24	LT.	184			
RAMP M-4	9+92 TO 14+27	LT.		435		
	12+19 TO 16+65	RT.		446		
RAMP M-5	13+63 TO 24+99	RT.	73	1136		
RAMP M-6	9+47 TO 21+90	RT.		1243		
	14+31 TO 14+76	LT.	45			
EAST FRONTAGE ROAD	39+00 TO 39+20	LT.		20		
	39+50 TO 45+98	RT.				648
	41+56 TO 42+89	LT.	133			
	45+65 TO 46+32	LT.	67			
	46+70 TO 51+00	RT.	73	430		
	51+34 TO 51+39	RT.		5		
	51+87 TO 54+53	RT.		266		
	55+09 TO 60+08	RT.		499		
	59+73 TO 60+42	LT.	69			
	60+88 TO 61+55	LT.	67			
	61+22 TO 72+23	RT.		1101		
	68+81 TO 70+23	LT.	141			
WEST FRONTAGE ROAD	38+92 TO 46+21	LT.				729
	40+66 TO 42+57	RT.	192			
	45+53 TO 46+24	RT.	71			
	46+92 TO 47+68	RT.	76			
	47+07 TO 49+32	LT.				225
	50+18 TO 52+60	LT.				242
	53+43 TO 60+12	LT.				575
	59+62 TO 60+31	RT.	69			
	60+89 TO 68+55	LT.				676
	60+77 TO 69+43	RT.				865
	69+83 TO 72+45	LT.		262		
KREB SCHOOL DRIVE				66		72
HIGHLAND AVE.			31		124	94
LYNAM ST.					68	95
WASHINGTON AVE.					16	94
BALSAM TERRACE				32	16	
BURNSIDE BLVD.			24	126	149	94
KIMENSI ROAD				82	118	116
ERDMAN ROAD					244	325
TOTAL			1,360	11,370	735	4,850

TABULATION OF CURB TRANSITION & TERMINAL QUANTITIES

LOCATION	STATION TO STATION	SIDE	PORTLAND CEMENT CONCRETE MASONARY: CURB TERMINAL	CURB TRANSITIONS 30'	10' TYPE 1	10' TYPE 2
	SECTION		602			
	UNIT		C.Y.			
ROUTE 141	43+55 TO 63+00	RT.	2.60			
ROUTE 141 NB.	46+95 TO 47+26	RT.		3.15		
RAMP M-3	14+77 TO 15+07	LT.		3.15		
	15+75 TO 16+05	LT.		3.15		
	21+47 TO 21+52	LT.	0.65			
RAMP M-4	12+15 TO 12+20	RT.	0.70			
	16+65 TO 16+95	RT.		3.15		
RAMP M-5	13+58 TO 13+63	LT.	0.65			
HIGHLAND AVE	18+28 TO 18+38	LT.				0.50
	18+37 TO 18+47	RT.				0.50
LYNAM ST.	10+39 TO 10+49	LT.				0.50
	10+47 TO 10+57	RT.				0.50
WASHINGTON AVE.	10+40 TO 10+50	LT.				0.50
	10+45 TO 10+55	RT.				0.50
BALSAM TERRACE	10+29 TO 10+39	LT.			0.60	
	10+29 TO 10+39	RT.			0.60	
BURNSIDE BLVD.	10+51 TO 10+61	LT.			0.60	
	10+61 TO 10+71	RT.			0.60	
ERDMAN ROAD						3.0
SUB-TOTAL				12.60	2.40	6.00
TOTAL			4.60	21.00		

TABULATION OF SIDEWALK QUANTITIES

LOCATION	SELECT BORROW	PORTLAND CEMENT CONCRETE SIDEWALK 4" DEPTH	6" DEPTH
SECTION	210	708	
UNIT	C.Y.	S.F.	
EAST FRONTAGE ROAD	184	12,230	1,700
WEST FRONTAGE ROAD	176	13,485	480
HIGHLAND AVE. BRIDGE	75	3,695	
BURNSIDE BLVD. BRIDGE	80	4,350	
SUB-TOTALS	515		
TOTALS	⚠	33,960	2,180

⚠ FOR TOTAL SEE TABULATION OF EARTH WORK QUANTITIES

COUNTY	CONTRACT	F.R.A. REG. NO.	STATE	FED. AID PROJECT NO.	SHEET NO.	TOTAL SHEETS
NEW CASTLE	71-02-009	2	DEL.		9	301

NO.	REVISIONS	BY	DATE

SUMMARY OF STRUCTURAL QUANTITIES

Location	Item	Excavation For Structures	Select Borrow	Portland Cement Concrete Masonry-Abutment Footing	Portland Cement Concrete Masonry-Pier Footing	Portland Cement Concrete Masonry-Wall Footing	Portland Cement Concrete Masonry-Abut. Above Footing	Portland Cement Concrete Masonry-Pier Above Footing	Portland Cement Concrete Masonry-Retaining Wall Above Footing	Portland Cement Concrete Masonry-Superstructure	Portland Cement Concrete Masonry-Approach Slabs	Superficial Waterproofing	Membrane Waterproofing	Bar Reinforcement	Steel Structures	Parapet Protective Fence	Prefabricated Expansion Joint System	Protective Coating For Bridge Superstructure	12" Cast-In-Place Concrete Piles 7 Gage	12" Steel Shell Test Piles 7 Gage	Concrete Slope Paving	Pavement Relief Joint - Type 2	Junction Boxes In Structure	2 Inch Galvanized Steel Conduit In Structure
	Section	207	210	602	602	602	602	602	602	602	602	603	604	605	606				624	624	628			
	Unit	C.Y.	C.Y.	C.Y.	C.Y.	C.Y.	C.Y.	C.Y.	C.Y.	C.Y.	C.Y.	S.Y.	S.Y.	Lbs.	L.S.	L.F.	L.F.	Gal.	L.F.	L.F.	S.Y.	L.F.	Each	L.F.
Highland Ave. Bridge	Superstructure									365				79,100	(2) 278,700	283	130	48					3	157
	West Abutment	1,735	1,275	66		128	115		171		33	439	88	(1) 56,700		152		5	3,760	300				
	Pier	120	50		44			111						7,600				3	960	100				
	East Abutment	2,490	1,865	97		191	149		212		34	562	101	(1) 85,900		152		6	5,160	300				25
	Bridge Total	4,345	3,190	163	44	319	264	111	383	365	67	1,001	189	229,300	278,700	587	130	62	9,880	700			3	182
Burnside Blvd. Bridge	Superstructure									209				51,200	(3) 173,900	305	74	30					3	297
	West Abutment	540	350	18		85	33		85		19	202	36	(1) 27,300		149		4	1,960	250	104			10
	Pier	65	30		25			55						4,000				1	680	50				
	East Abutment	1,025	735	28		105	48		130		19	309	51	(1) 40,000		152		4	2,720	250	78			
	Bridge Total	1,630	1,115	46	25	190	81	55	215	209	38	511	87	122,500	173,900	606	74	39	5,360	550	182		3	307
Retaining Walls	No. 1 (W. Front. Rd.)	700	490			130			144			229	26	19,500		295		4	1,960	250				
	No. 2 (W. Front. Rd.)	1,340	910			274			483			636	53	46,100		1,095		16	4,400	550				
	No. 3 (E. Front. Rd.)	385	320			58			41			120	11	8,500				7						
	No. 4 (E. Front. Rd.)	530	330			123			141			189	23	17,500		276		4	1,880	250				
	No. 5 (E. Front. Rd.)	1,615	1,125			314			507			672	61	52,500		1,203		13	4,800	700				
	No. 6 (E. Front. Rd.)	2,980	2,160			427			566			1,057	104	85,700		730		10	7,600	750				
	Wall Total	7,550	5,335			1,326			1,882			2,903	278	229,800		3,599		54	20,640	2,500				
Viaduct	Abutment 2										56			12,900				5				48		
	Barrier Wall	65	40						42					900				2						
	Viaduct Total								42		56			13,800				7				48		
	Total	13,590	9,680 △4	209	69	1,835	345	166	2,522	574	161	4,415	554	595,400	452,600	4,792	204	162	35,880	3,750	182	48	6	489

(1) Includes Approach Slabs.

(2) Includes 7,600 lbs. M222 Steel Galvanized for Sign Support Frames, and 720 lbs. Bronze for Bearings.

(3) Includes 8,200 lbs. M222 Steel Galvanized for Sign Support Frames, and 450 lbs. Bronze for Bearings.

△4 For Total See Tabulation of Earth Work Quantities

HIGHLAND AVE. BRIDGE

INSTALLATION OF THE DIAMOND STATE TELEPHONE COMPANY FACILITIES

Material	Furnished By	Installed By	Remarks
31-Hanger Assemblies	Utility Company	Utility Company	See General Notes
6-4" I.D. Asbestos Cement Ducts	Utility Company	Utility Company	

INSTALLATION OF NEWPORT WATER COMPANY FACILITIES

Material	Furnished By	Installed By	Remarks
15-Pipe Hangers	Contractor	Contractor	See General Notes
1-8.625" O.D. Water Line	Contractor	Contractor	
2-12" I.D. Steel Sleeve	Contractor	Contractor	

BURNSIDE BLVD. BRIDGE

INSTALLATION OF THE DIAMOND STATE TELEPHONE COMPANY FACILITIES

Material	Furnished By	Installed By	Remarks
33-Hanger Assemblies	Utility Company	Utility Company	See General Notes
10-4" I.D. Asbestos Cement Ducts	Utility Company	Utility Company	

INSTALLATION OF DELMARVA POWER AND LIGHT COMPANY FACILITIES

Material	Furnished By	Installed By	Remarks
2-10" I.D. Steel Sleeve	Utility Company	Contractor	See General Notes
13-Pipe Hangers for Gas Line	Utility Company	Utility Company	
1-6.625" O.D. Gas Line	Utility Company	Utility Company	
33-Hanger Assemblies for Ducts	Utility Company	Utility Company	
6-5" I.D. Transite Ducts Type II	Utility Company	Utility Company	

INSTALLATION OF ARTESIAN WATER COMPANY FACILITIES

Material	Furnished By	Installed By	Remarks
13-Pipe Hangers	Utility Company	Utility Company	See General Notes
1-8.625" O.D. Water Line	Utility Company	Utility Company	
2-12" I.D. Steel Sleeve	Utility Company	Contractor	

TRAFFIC CONTROL

Bridge	Material	Furnished By	Installed By	Remarks
Highland Ave.	1½" Galv. Steel Conduit in Structure	Contractor	Contractor	See Bridge Plans
Burnside Blvd.	1½" Galv. Steel Conduit in Structure	Contractor	Contractor	

DELAWARE
DEPARTMENT OF HIGHWAYS & TRANSPORTATION
DIVISION OF HIGHWAYS

STATE ROUTE 141 THRU NEWPORT

RETAINING WALLS AND OVERPASSES

SUMMARY OF STRUCTURAL QUANTITIES

D. W.B.C. T. C.V.L. C. L.W.H.	SCALE NONE	APPROVED BY: BRIDGE ENGINEER

HEL PRINT 19 1253

COUNTY	CONTRACT	P. R. A. RES. NO.	STATE	FED. AID PROJECT NO.	SHEET NO.	TOTAL SHEETS
NEW CASTLE	71-02-009	2	DEL.		10	301

RELOCATED DELAWARE ROUTE 141
THRU NEWPORT

PREL. TRACING R.L.H. DESIGN H.A.D. CHKD. G.S.

REVISIONS

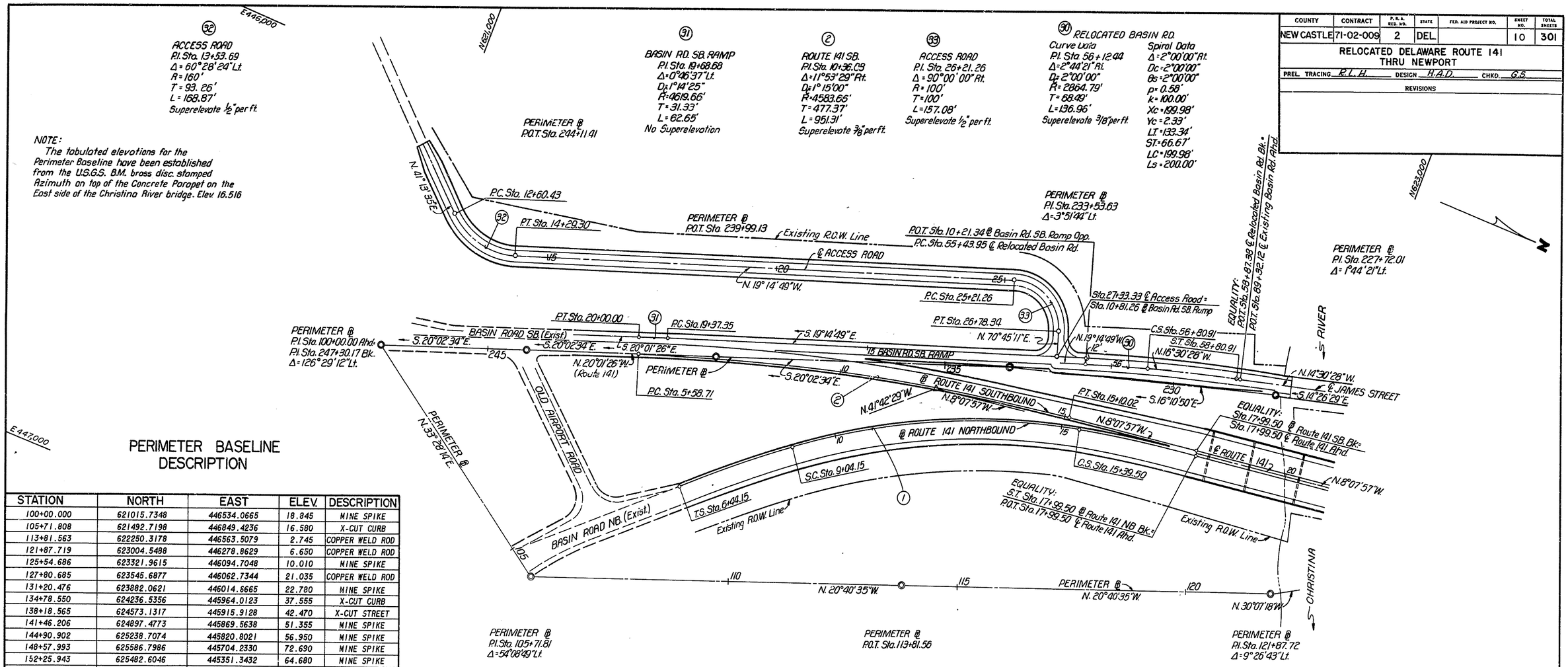

PERIMETER BASELINE DESCRIPTION

STATION	NORTH	EAST	ELEV.	DESCRIPTION
100+00.000	621015.7348	446534.0665	18.845	MINE SPIKE
105+71.808	621492.7198	446849.4236	16.580	X-CUT CURB
113+81.563	622250.3178	446563.5079	2.745	COPPER WELD ROD
121+87.719	623004.5488	446278.8629	6.650	COPPER WELD ROD
125+54.686	623321.9615	446094.7048	10.010	MINE SPIKE
127+80.685	623545.6877	446062.7344	21.035	COPPER WELD ROD
131+20.476	623882.0621	446014.6665	22.780	MINE SPIKE
134+78.550	624236.5356	445964.0123	37.555	X-CUT CURB
138+18.565	624573.1317	445915.9128	42.470	X-CUT STREET
141+46.206	624897.4773	445869.5638	51.355	MINE SPIKE
144+90.902	625238.7074	445820.8021	56.950	MINE SPIKE
148+57.993	625586.7986	445704.2330	72.690	MINE SPIKE
152+25.943	625482.6046	445351.3432	64.680	MINE SPIKE
155+12.545	625711.7973	445179.2640	66.560	X-CUT WALK
158+48.679	625980.6006	444977.4448	69.925	X-CUT WALK
161+72.612	626239.6466	444782.9515	72.375	X-CUT WALK
166+61.774	626630.8245	444489.2528	80.840	COPPER WELD ROD
173+59.213	627184.9745	444065.7690	77.565	X-CUT WALK
174+93.525	627112.7633	443952.5208	73.670	COPPER WELD ROD
178+25.051	626782.4208	443980.5040	75.080	X-CUT GUTTER
182+86.507	626413.4700	444257.6627	76.225	MINE SPIKE
184+96.494	626245.5774	444383.7850	73.840	MINE SPIKE
188+59.181	626210.7331	444744.7944	71.870	X-CUT WALK
191+83.367	625951.4845	444939.4398	69.090	MINE SPIKE
194+62.970	625783.6008	444715.8487	63.365	X-CUT GUTTER
197+70.317	625530.9297	444890.8336	58.870	MINE SPIKE
198+58.721	625458.2524	444941.1656	60.260	P-K NAIL
200+93.341	625262.3927	445070.3371	55.665	X-CUT GUTTER
203+55.108	625054.0224	445228.7792	49.905	COPPER WELD ROD
206+72.563	624906.7448	445510.0037	55.195	X-CUT WALK
207+29.313	624880.4168	445560.2765	54.865	X-CUT WALK
207+49.753	624860.2528	445563.6245	54.570	X-CUT WALK
210+77.689	624536.7465	445617.3385	43.815	X-CUT CURB
214+17.644	624200.6138	445668.1788	35.400	X-CUT CURB
217+75.759	623846.5262	445721.7348	23.920	MINE SPIKE
221+31.936	623494.3548	445775.0010	7.760	X-CUT WALK
223+42.927	623285.7365	445806.5546	10.780	X-CUT CURB
224+76.595	623153.5720	445826.5446	11.825	X-CUT WALK
227+72.008	622867.4927	445900.2176	11.140	COPPER WELD ROD
233+53.626	622308.9132	446062.2944	10.735	MINE SPIKE
239+99.129	621702.5042	446283.5221	15.070	MINE SPIKE
244+11.405	621315.1970	446424.8179	17.095	MINE SPIKE
247+30.173	621015.7348	446534.0665	18.845	MINE SPIKE

(1) ROUTE 141 NB.

Curve Data
I.P.I. Sta. 121+35.62
Δ = 23°49'32" Rt.
Dc = 3°45'00"
R = 1527.89'
T = 322.33'
L = 635.35'
Superelevate 3/4" per ft.

Spiral Data
Δ 33°34'32" Rt.
Ts = 591.47'
Es = 69.94'
Dc = 3°45'00"
θs = 4°52'30"
p = 1.85'
k = 129.97'
Xc = 259.81'
Yc = 7.37'
LT = 173.40'
ST = 86.73'
LC = 259.92'
Ls = 260.00'

GEOMETRY & PERIMETER BASELINE

COUNTY	CONTRACT	P.R.A. REG. NO.	STATE	FED. AID PROJECT NO.	SHEET NO.	TOTAL SHEETS
NEW CASTLE	71-02-009	2	DEL.		11	301

RELOCATED DELAWARE ROUTE 141
THRU NEWPORT

PREL. TRACING R.L.H. DESIGN H.A.D. CHKD. G.S.

REVISIONS

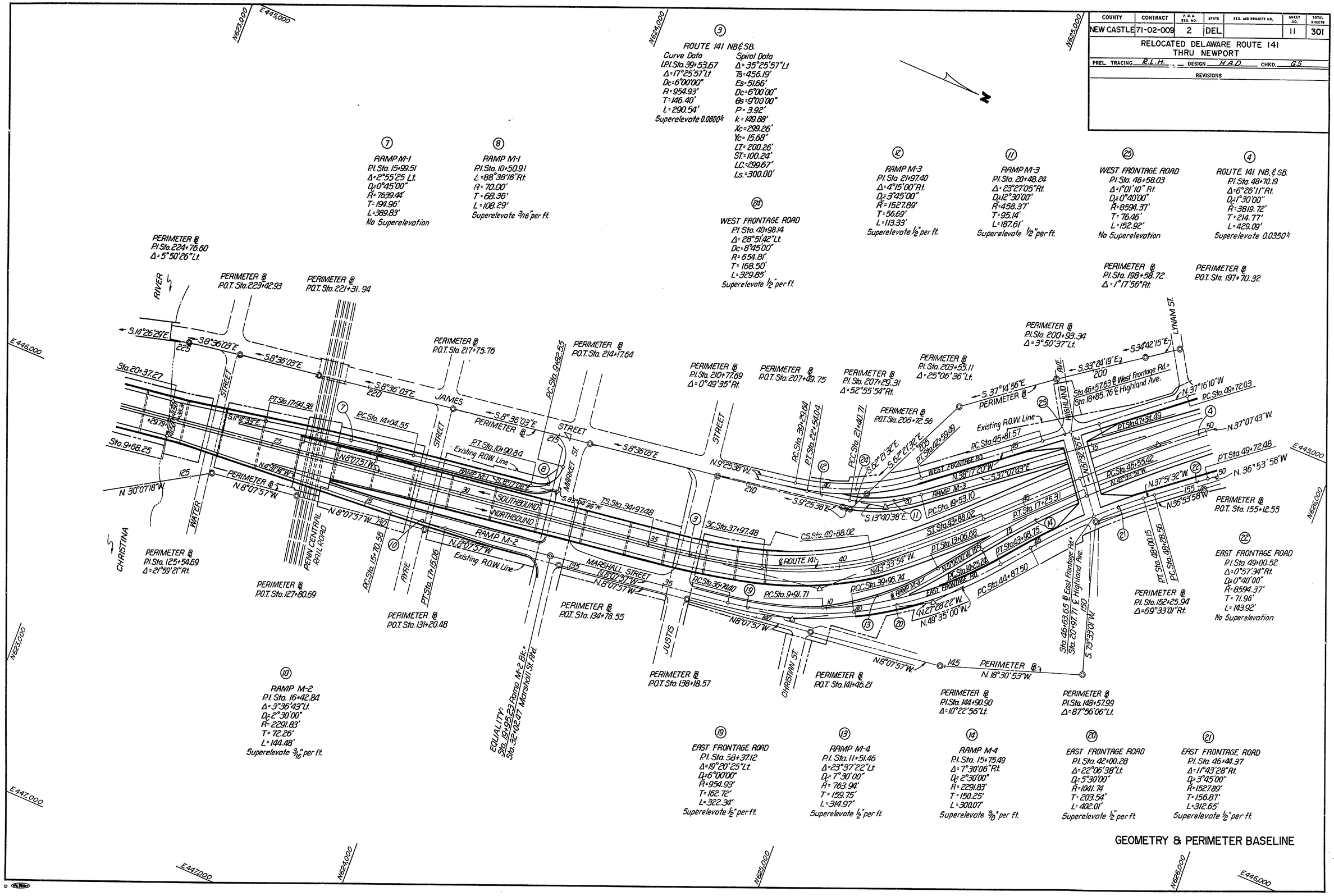

COUNTY	CONTRACT	P.R.A. REG. NO.	STATE	FED. AID PROJECT NO.	SHEET NO.	TOTAL SHEETS
NEW CASTLE	71-02-009	2	DEL.		12	301

RELOCATED DELAWARE ROUTE 141
THRU NEWPORT

PREL. TRACING R.L.H. DESIGN H.A.D. CHKD. G.S.

REVISIONS

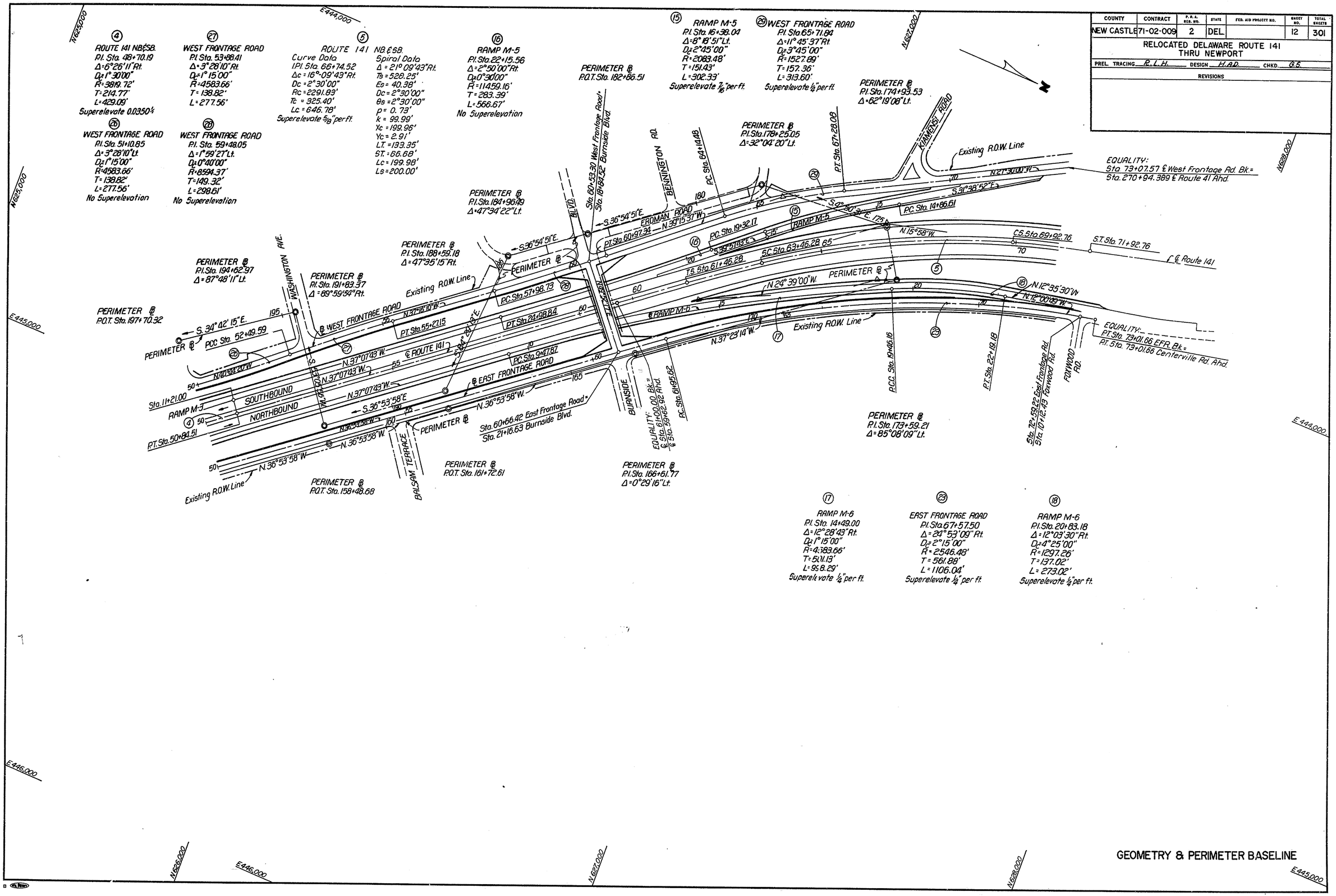

GEOMETRY & PERIMETER BASELINE

COUNTY	CONTRACT	P.B.A. REG. NO.	STATE	FED. AID PROJECT NO.	SHEET NO.	TOTAL SHEETS
NEW CASTLE	71-02-009	2	DEL.		13	301

RELOCATED DELAWARE ROUTE 141
THRU NEWPORT

PREL. TRACING G.B.S. DESIGN G.S. CHKD. A.C.N.

REVISIONS

ROUTE 141 ALIGNMENT TIES TO THE PERIMETER BASELINE

ROADWAY	POINT DESIGNATION	PERIMETER ℄ STATION	ANGLE LT. OF AHEAD TANGENT	OFFSET DISTANCE LT. OR RT. OF AHEAD TANGENT
	CURVE NO.1			
ROUTE 141 NB.	T.S. STA. 6+44.15	108+91.61	90°	190.86' LT.
	P.Is STA. 8+17.55	110+53.46	90°	253.09' LT.
	S.C. STA. 9+04.15	111+36.76	90°	277.22' LT.
	I.P.I. STA.12+35.62	114+43.67	90°	403.12' LT.
	P.Ic STA.12+26.48	114+46.36	90°	366.91' LT.
	C.S. STA.15+39.50	117+65.81	90°	323.90' LT.
	P.Is STA.16+26.23	118+51.76	90°	312.33' LT.
	S.T. STA.17+99.50	120+21.02	90°	274.67' LT.
	CURVE NO.2			
ROUTE 141 SB.	P.C. STA. 5+58.71	241+69.51	90°	0.13' RT.
	P.I. STA.10+36.08	236+92.14	90°	0.03' LT.
	P.T. STA.15+10.02	232+18.70	90°	89.67' LT.
	CURVE NO.3			
ROUTE 141 ℄	T.S. STA.34+97.48	136+90.02	90°	100.00' LT.
	P.Is STA.36+97.74	138+90.29	90°	100.00' LT.
	S.C. STA.37+97.48	139+89.28	90°	115.68' LT.
	I.P.I. STA.39+53.67	141+46.21	90°	100.00' LT.
	P.Ic STA.39+43.88	141+33.88	90°	138.58' LT.
	C.S. STA.40+88.02	142+64.98	90°	203.75' LT.
	P.Is STA.41+88.26	144+90.90	108°-21'-10"	283.25' LT.
	S.T. STA.43+88.02	145+83.15	90°	353.64' LT.
	CURVE NO.4			
ROUTE 141 ℄	P.C. STA.46+55.42	152+25.94	96°-26'-21"	109.24' LT.
	P.I. STA.48+70.19	154+27.01	90°	133.48' LT.
	P.T. STA.50+84.51	156+41.78	90°	134.34' LT.
	CURVE NO.5			
ROUTE 141 ℄	T.S. STA.61+46.28	168+41.80	90°	137.61' LT.
	P.Is STA.62+79.62	169+75.14	90°	137.01' LT.
	S.C. STA.63+46.28	170+41.74	90°	133.80' LT.
	I.P.I. STA.66+74.52	174+93.53	321°-30'-49"	1.50' RT.
	P.Ic STA.66+71.68	174+77.56	90°	2.49' LT.
	C.S. STA.69+92.76	173+98.53	270°	313.16' RT.
	P.Is STA.70+59.43	173+82.34	270°	377.85' RT.
	S.T. STA.71+92.76	—	—	—

ROADWAY	POINT DESIGNATION	PERIMETER ℄ STATION	ANGLE LT. OF AHEAD TANGENT	OFFSET DISTANCE LT. OR RT. OF AHEAD TANGENT
	CURVE NO.7			
RAMP M-1	P.C. STA.14+04.55	218+49.05	90°	128.90' LT.
	P.I. STA.15+99.51	220+44.01	90°	127.82' LT.
	P.T. STA.17+94.38	222+38.76	90°	136.70' LT.
	CURVE NO.8			
RAMP M-1	P.C. STA. 9+82.55	214+65.00	90°	62.67' LT.
	P.I. STA.10+50.91	214+67.00	90°	131.00' LT.
	P.T. STA.10+90.84	215+35.35	90°	130.62' LT.
	CURVE NO.10			
RAMP M-2	P.C. STA.15+70.58	130+28.99	90°	20.55' LT.
	P.I. STA.16+42.84	131+01.11	90°	16.00' LT.
	P.T. STA.17+15.06	131+73.38	90°	16.00' LT.
	CURVE NO.11			
RAMP M-3	P.C. STA.19+53.10	205+65.19	90°	98.60' LT.
	P.I. STA.20+48.24	206+51.25	90°	58.05' LT.
	P.C.C. STA.21+40.71	207+29.31	274°-14'-53"	20.31' LT.
	CURVE NO.12			
RAMP M-3	P.I. STA.21+97.40	207+87.35	90°	16.05' LT.
	P.T. STA.22+54.04	208+44.04	90°	16.05' LT.
	CURVE NO.13			
RAMP M-4	P.C. STA. 9+91.71	141+64.70	90°	61.96' LT.
	P.I. STA.11+51.46	143+15.47	90°	114.79' LT.
	P.T. STA.13+06.68	144+32.43	90°	223.61' LT.
	CURVE NO.14			
RAMP M-4	P.C. STA.14+25.24	145+81.69	90°	281.63' LT.
	P.I. STA.15+75.49	147+08.33	90°	362.47' LT.
	P.T. STA.17+25.31	152+25.94	96°-16'-52"	64.24' LT.
	CURVE NO.15			
RAMP M-5	P.C. STA.14+86.61	174+93.53	301°-23'-54"	45.52' RT.
	P.I. STA.16+38.04	176+52.41	90°	29.43' LT.
	P.T. STA.17+88.94	177+76.27	90°	116.55' LT.

ROADWAY	POINT DESIGNATION	PERIMETER ℄ STATION	ANGLE LT. OF AHEAD TANGENT	OFFSET DISTANCE LT. OR RT. OF AHEAD TANGENT
	CURVE NO.16			
RAMP M-5	P.C. STA.19+32.17	179+89.42	90°	117.30' LT.
	P.I. STA.22+15.56	182+72.41	90°	132.37' LT.
	P.T. STA.24+98.84	186+35.00	90°	46.25' LT.
	CURVE NO.17			
RAMP M-6	P.C. STA. 9+47.87	163+54.13	90°	92.19' LT.
	P.I. STA.14+49.00	168+56.04	90°	92.54' LT.
	P.C.C. STA.19+46.16	173+44.84	90°	17.95' LT.
	CURVE NO.18			
RAMP M-6	P.I. STA.20+83.18	173+59.21	252°-52'-39"	128.63' RT.
	P.T. STA.22+19.18	173+59.21	251°-25'-43"	265.57' RT.
	CURVE NO.19			
EAST FRONT. RD.	P.C. STA.36+74.40	139+25.45	90°	16.00' LT.
	P.I. STA.38+37.12	140+88.17	90°	16.00' LT.
	P.C.C. STA.39+96.74	142+41.71	90°	69.89' LT.
	CURVE NO.20			
EAST FRONT. RD.	P.I. STA.42+00.28	144+33.76	90°	137.30' LT.
	P.T. STA.43+98.75	146+33.78	90°	250.38' LT.
	CURVE NO.21			
EAST FRONT. RD.	P.C. STA.44+87.50	147+09.80	90°	296.19' LT.
	P.I. STA.46+44.37	152+25.94	217°-35'-06"	28.68' LT.
	P.T. STA.48+00.15	153+60.07	90°	20.12' LT.
	CURVE NO.22			
EAST FRONT. RD.	P.C. STA.48+28.56	153+88.48	90°	20.60' LT.
	P.I. STA.49+00.52	154+60.43	90°	21.80' LT.
	P.T. STA.49+72.48	155+32.39	90°	21.80' LT.
	CURVE NO.23			
EAST FRONT. RD.	P.C. STA.61+95.62	167+55.71	90°	21.00' LT.
	P.I. STA.67+57.50	173+17.57	90°	16.22' LT.
	P.T. STA.73+01.66	173+59.21	249°-08'-14"	517.32' RT.
	CURVE NO.24			
WEST FRONT. RD.	P.C. STA.39+29.64	208+76.05	90°	29.05' LT.
	P.I. STA.40+98.14	206+93.01	90°	0.14' LT.
	P.T. STA.42+59.49	205+39.16	90°	68.58' LT.
	CURVE NO.25			
WEST FRONT. RD.	P.C. STA.45+81.57	201+70.63	90°	134.36' LT.
	P.I. STA.46+58.03	200+85.27	90°	132.73' LT.
	P.T. STA.47+34.49	200+08.98	90°	127.58' LT.
	CURVE NO.26			
WEST FRONT. RD.	P.C. STA.49+72.03	197+74.53	90°	113.51' LT.
	P.I. STA.51+10.85	196+35.85	90°	107.29' LT.
	P.C.C. STA.52+49.59	194+97.80	90°	92.70' LT.
	CURVE NO.27			
WEST FRONT. RD.	P.I. STA.53+88.41	193+80.97	270°	100.15' RT.
	P.T. STA.55+27.15	193+81.86	270°	238.97' RT.
	CURVE NO.28			
WEST FRONT. RD.	P.C. STA.57+98.73	185+85.64	90°	2.53' RT.
	P.I. STA.59+48.05	184+05.46	90°	66.58' RT.
	P.T. STA.60+97.34	182+56.26	90°	60.47' RT.
	CURVE NO.29			
WEST FRONT. RD.	P.C. STA.64+14.48	179+39.39	90°	47.49' LT.
	P.I. STA.65+71.84	177+66.91	90°	12.01' LT.
	P.T. STA.67+28.08	176+21.70	90°	48.61' RT.
	CURVE NO.30			
RELOCATED BASIN ROAD	P.C. STA.55+43.95	231+92.85	90°	33.86' RT.
	P.Ic STA.56+12.44	230+93.23	90°	25.72' RT.
	C.S. STA.56+80.91	230+55.32	90°	25.93' RT.
	P.Is STA.57+47.58	229+88.65	90°	26.32' RT.
	S.T. STA.58+80.91	228+55.36	90°	22.42' RT.
	CURVE NO.31			
BASIN ROAD S.B. RAMP	P.C. STA.19+37.35	241+06.85	90°	35.68' RT.
	P.I. STA.19+68.68	241+38.17	90°	36.12' RT.
	P.T. STA.20+00.00	241+69.50	90°	36.12' RT.
	CURVE NO.32			
ACCESS ROAD	P.C. STA.12+60.43	245+78.61	90°	278.41' RT.
	P.I. STA.13+53.69	245+33.79	90°	196.63' RT.
	P.T. STA.14+29.30	244+40.53	90°	195.33' RT.
	CURVE NO.33			
ACCESS ROAD	P.C. STA.25+21.66	233+53.63	268°-25'-39"	180.23' RT.
	P.I. STA.26+21.26	232+60.97	90°	185.44' RT.
	P.T. STA.26+78.34	232+55.62	90°	85.38' RT.

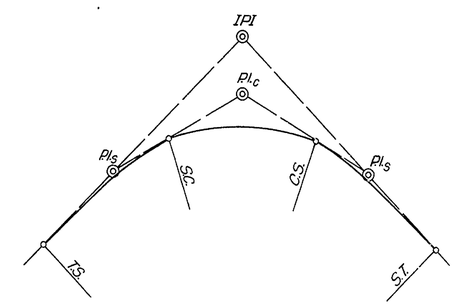

TYPICAL CURVE DATA NOTATION

GEOMETRY & PERIMETER BASELINE

COUNTY	CONTRACT	P.R.A. REG. NO.	STATE	FED. AID PROJECT NO.	SHEET NO.	TOTAL SHEETS
NEW CASTLE	71-02-009	2	DEL.		14	301

RELOCATED DELAWARE ROUTE 141
THRU NEWPORT

PREL. TRACING P.P.C. DESIGN G.S. CHKD. G.S.

REVISIONS

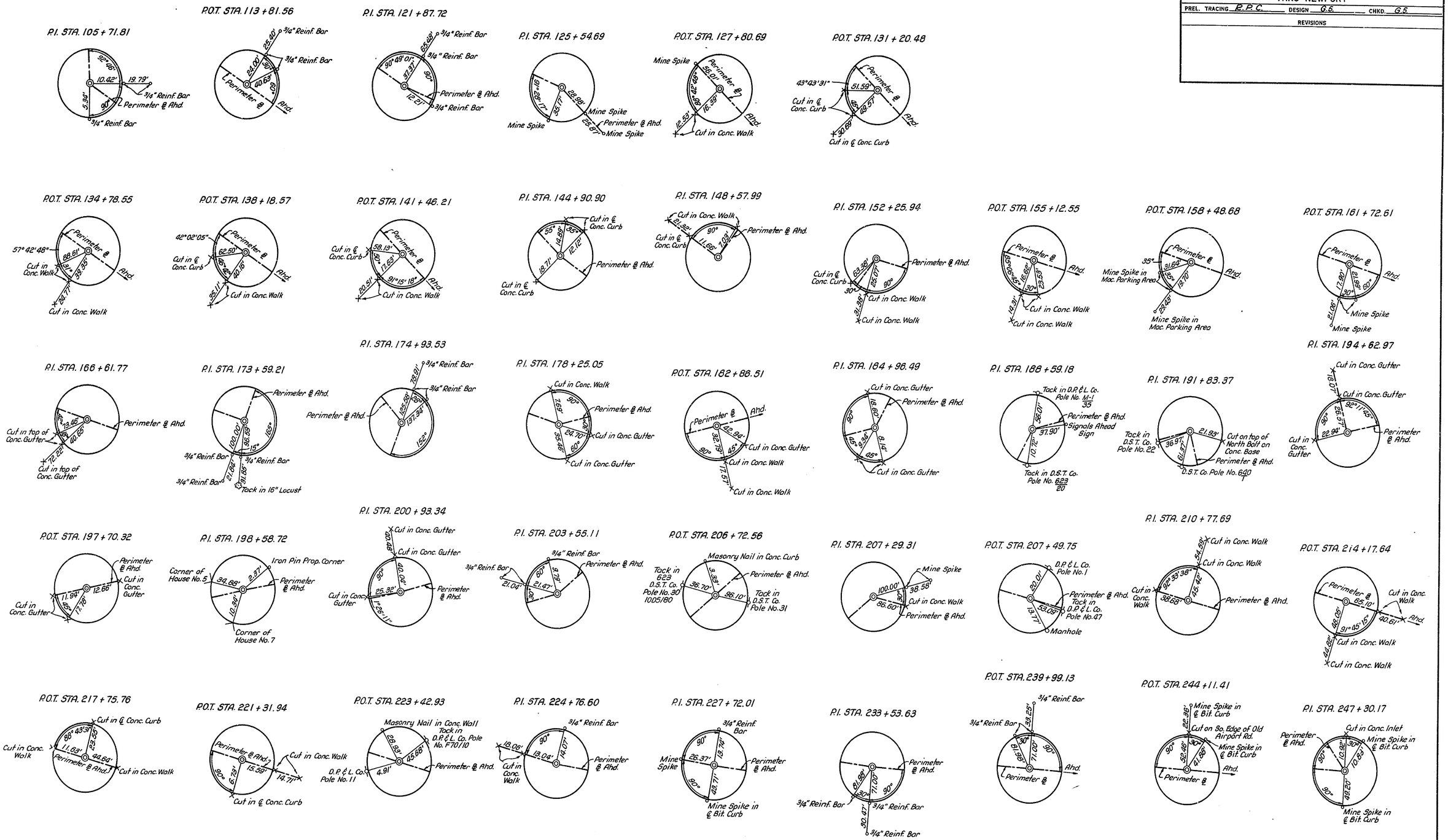

GEOMETRY & PERIMETER BASELINE

COUNTY	CONTRACT	P.R.A. REG. NO.	STATE	FED. AID PROJECT NO.	SHEET NO.	TOTAL SHEETS
NEW CASTLE	71-02-009	2	DEL.		15	301

RELOCATED DELAWARE ROUTE 141
THRU NEWPORT

PREL. TRACING G.B.M. DESIGN G.S. CHKD. A.N.

REVISIONS

TABULATION OF VARIABLE WIDTH MEDIAN			
STATION	A	B	C
38+25	1.50	4.00	5.50
38+38.02	1.50	4.00	5.50
38+50	1.48	4.18	5.66
38+75	1.45	4.57	6.02
39+00	1.42	4.95	6.37
39+25	1.38	5.33	6.71
39+50	1.35	5.72	7.07
39+75	1.32	6.10	7.42
40+00	1.28	6.48	7.76
40+25	1.25	6.87	8.12
40+50	1.22	7.25	8.47
40+75	1.18	7.63	8.81
40+88.02	1.17	7.83	9.00

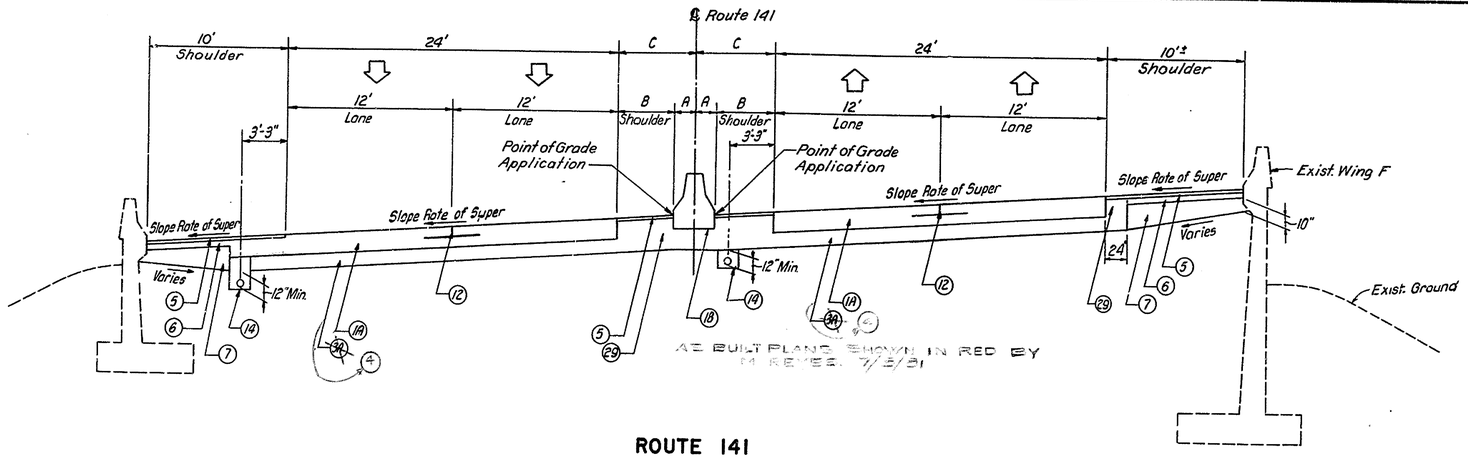

ROUTE 141
STA. 38+13.50 TO STA. 38+38.50

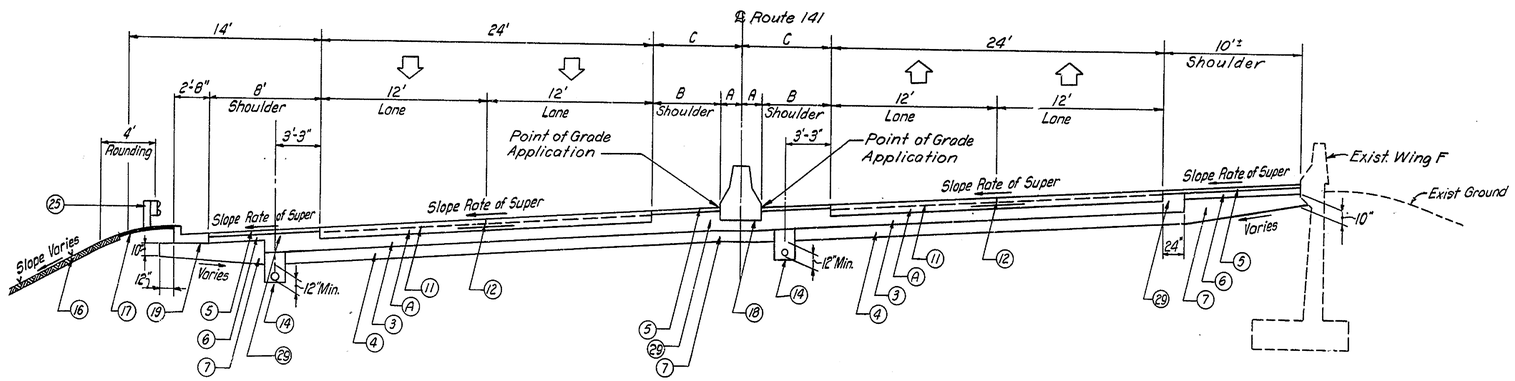

ROUTE 141
STA. 38+38.50 TO STA. 39+28.50

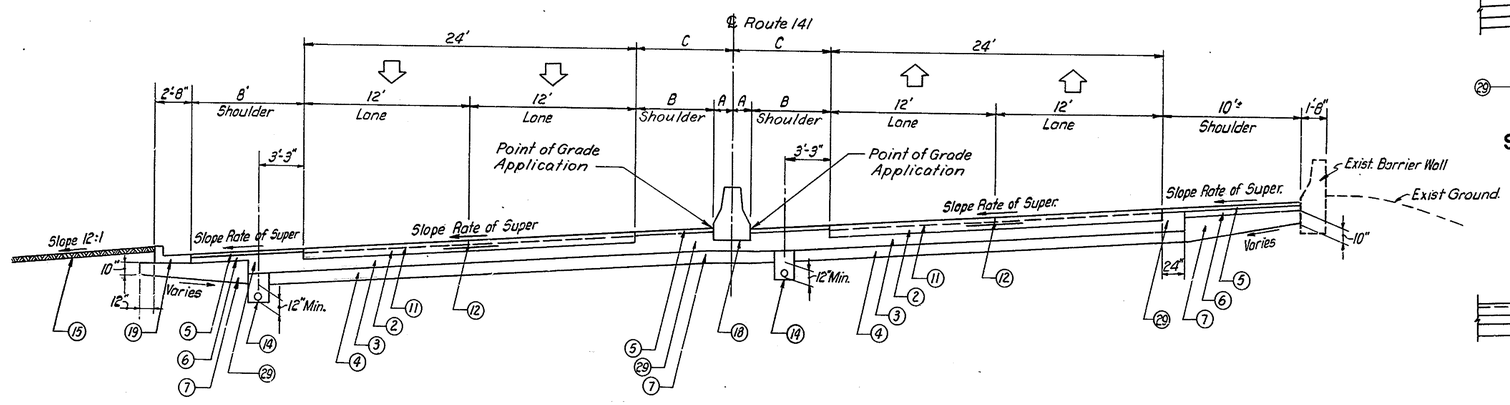

ROUTE 141 S.B.
STA. 39+28.50 TO STA. 42+31.65

ROUTE 141 N.B.
STA. 39+28.50 TO STA. 42+26.73

LEGEND

- (A) 10" REINFORCED P.C.C. PAVEMENT
- (1A) 16" REINFORCED P.C.C. APPROACH SLAB (FOR REINFORCING DETAILS SEE SHEET 198).
- (2) 9" CONTINUOUSLY REINFORCED P.C.C. PAVEMENT
- (3) 8" CRUSHER RUN BASE COURSE
- (3A) 11" CRUSHER RUN BASE COURSE
- (4) 10" BORROW TYPE A
- (5) 2" HOT-MIX, HOT LAID ASPHALTIC CONCRETE WEARING COURSE, TYPE C
- (6) 4" CRUSHER RUN BASE COURSE
- (7) BORROW, TYPE A (VARIABLE DEPTH)
- (11) WIRE MESH OR BAR REINFORCEMENT
- (12) DOWELLED LONGITUDINAL SAW-CUT JOINT
- (14) 6" PERFORATED PIPE U-DRAIN
- (15) 4" TOPSOIL, SEEDING AND MULCHING
- (16) CROWNVETCH SEEDING AND MULCHING
- (17) BITUMINOUS SURFACE TREATMENT AND SOIL STERILANT (4' WIDTH)
- (18) P.C.C. MEDIAN BARRIER
- (19) INTEGRAL P.C.C. CURB AND GUTTER, TYPE 1
- (25) GALVANIZED STEEL BEAM GUARD RAIL
- (29) CRUSHER RUN BASE COURSE (VARIABLE DEPTH)

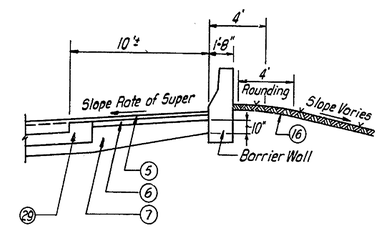

PART SECTION ROUTE 141 N.B.
STA. 39+74.09 TO STA. 41+50.00

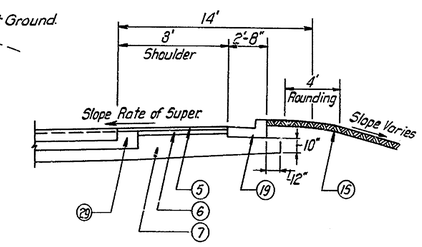

PART SECTION ROUTE 141 N.B.
STA. 41+50.00 TO STA. 42+26.73

TYPICAL SECTIONS

COUNTY	CONTRACT	F. R. A. REG. NO.	STATE	FED. AID PROJECT NO.	SHEET NO.	TOTAL SHEETS
NEW CASTLE	71-02-009	2	DEL.		16	301

RELOCATED DELAWARE ROUTE 141
THRU NEWPORT

PREL. TRACING R.L.H. DESIGN G.S. CHKD. A.N.

REVISIONS

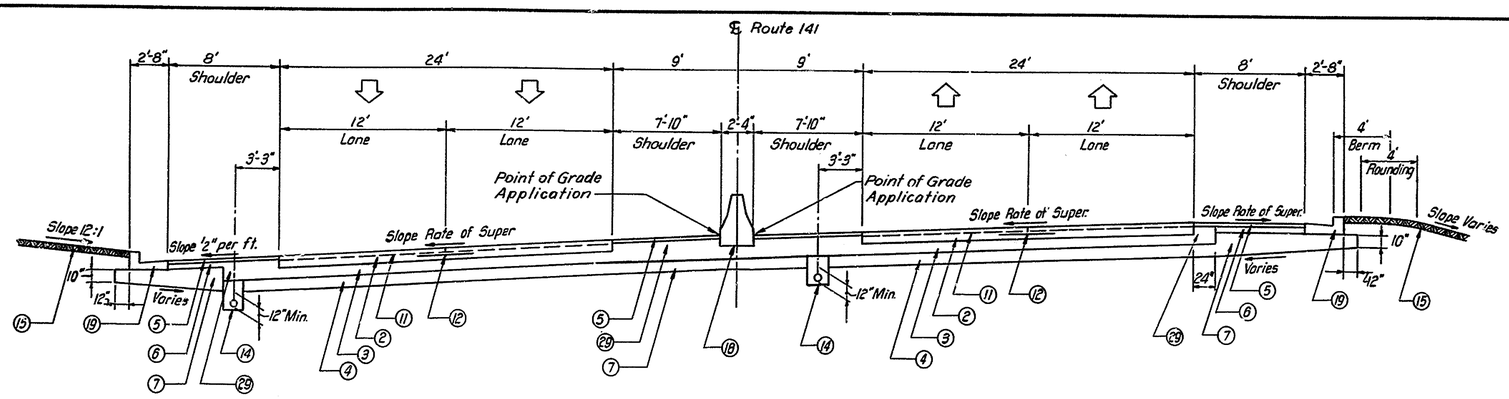

ROUTE 141 S.B.
STA. 42+31.65 TO STA. 43+29.52

ROUTE 141 N.B.
STA. 42+26.73 TO STA. 43+29.52

LEGEND

1. 9" REINFORCED P.C.C. PAVEMENT
2. 9" CONTINUOUSLY REINFORCED P.C.C. PAVEMENT
3. 8" CRUSHER RUN BASE COURSE
4. 10" BORROW TYPE A
5. 2" HOT-MIX, HOT LAID ASPHALTIC CONCRETE WEARING COURSE, TYPE C
6. 4" CRUSHER RUN BASE COURSE
7. BORROW, TYPE A (VARIABLE DEPTH)
11. WIRE MESH OR BAR REINFORCEMENT
12. DOWELLED LONGITUDINAL SAW-CUT JOINT
13. DOWELLED LONGITUDINAL CONSTRUCTION JOINT
14. 6" PERFORATED PIPE U-DRAIN
15. 4" TOPSOIL, SEEDING AND MULCHING
16. CROWNVETCH SEEDING AND MULCHING
18. P.C.C. MEDIAN BARRIER
19. INTEGRAL P.C.C. CURB AND GUTTER, TYPE 1
29. CRUSHER RUN BASE COURSE (VARIABLE DEPTH)

△1 Slope 3/16" per ft. Sta. 43+29.52 to Sta. 44+95.42
Slope Rate of Super Sta. 44+95.42 to Sta. 45+69.41

△2 Slope Rate of Super Sta. 43+29.52 to Sta. 43+88.02
Slope 3/16" per ft. Sta. 43+88.02 to Sta. 44+75.69

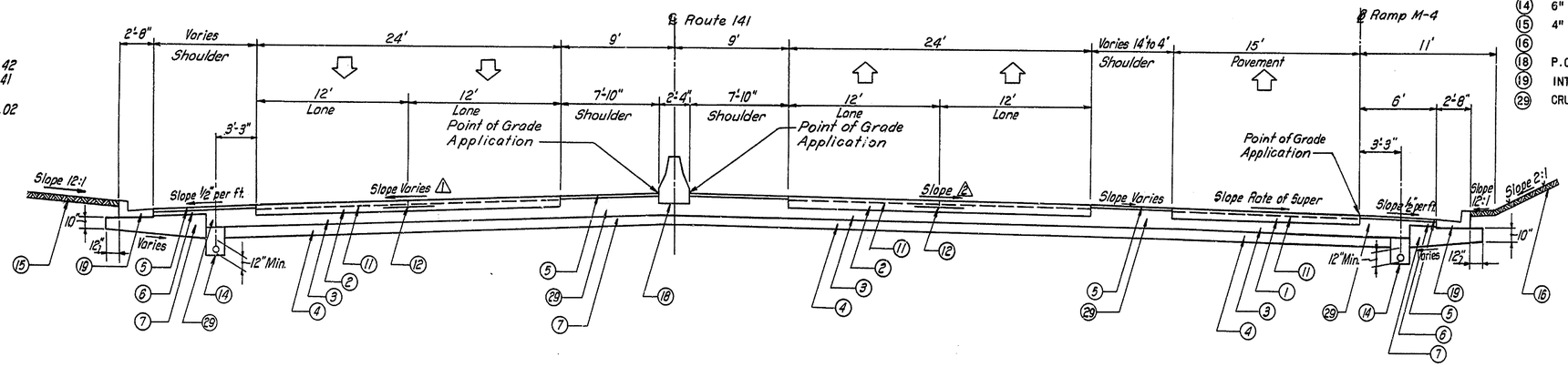

ROUTE 141 S.B.
STA. 43+29.52 TO STA. 45+69.41

ROUTE 141 N.B.
STA. 43+29.52 TO STA. 44+75.69

RAMP M-4
STA. 14+31.37 TO STA. 15+46.87

△3 Slope 3/16" per ft. Sta. 44+75.69 to Sta. 46+43.40
Slope Rate of Super Sta. 46+43.40 to Sta. 46+55.42

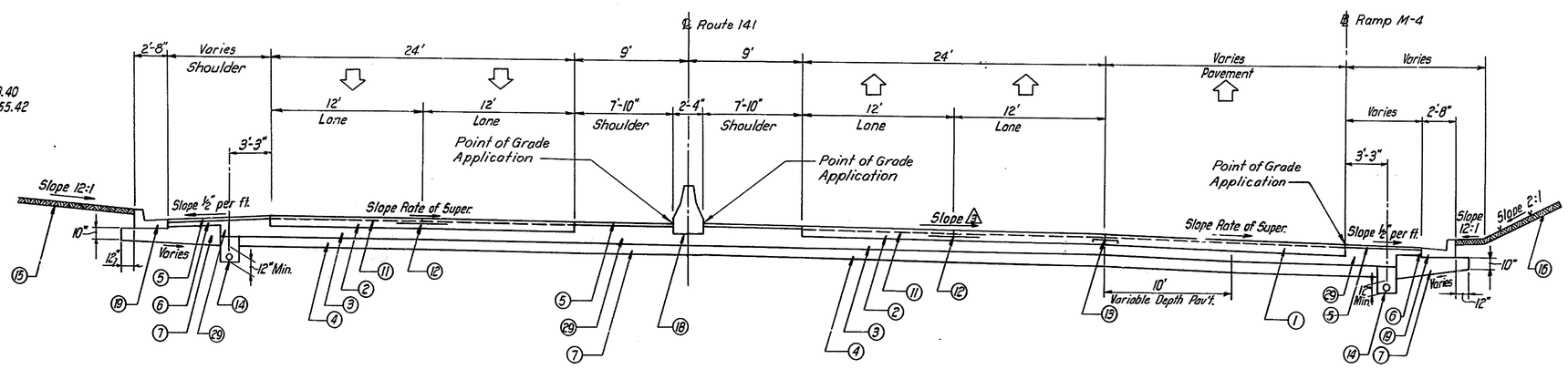

ROUTE 141 S.B.
STA. 45+69.41 TO STA. 46+49.82

ROUTE 141 N.B.
STA. 44+75.69 TO STA. 46+55.42

RAMP M-4
STA. 15+46.87 TO STA. 17+25.31

TYPICAL SECTIONS

COUNTY	CONTRACT	P.R.A. REG. NO.	STATE	FED. AID PROJECT NO.	SHEET NO.	TOTAL SHEETS
NEW CASTLE	71-02-009	2	DEL.		17	301

RELOCATED DELAWARE ROUTE 141
THRU NEWPORT

PREL. TRACING R.L.H. DESIGN G.S. CHKD. A.N.

REVISIONS

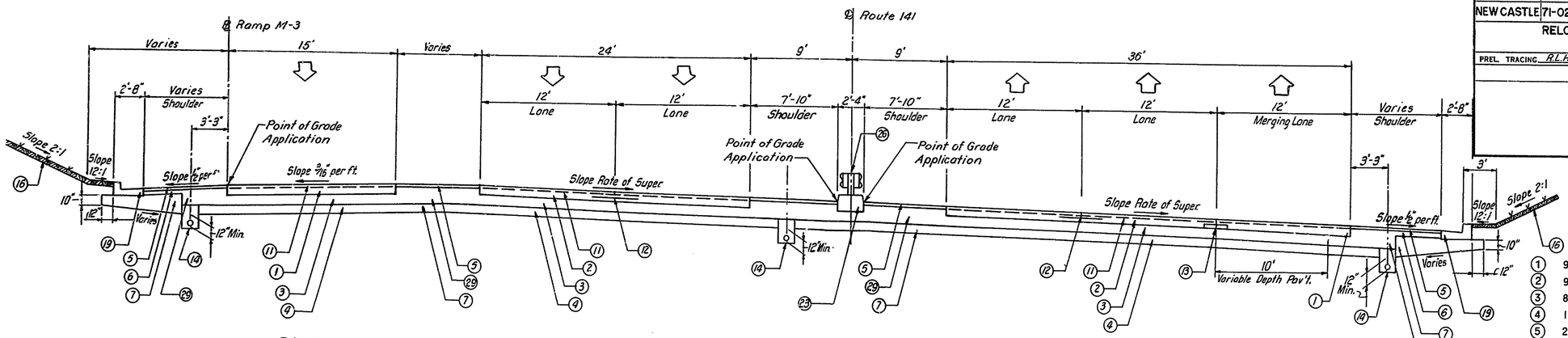

RAMP M-3
STA.13+53.14 TO STA.15+60.02

ROUTE 141 S.B.
STA.46+49.82 TO STA.48+54.22

ROUTE 141 N.B.
STA.46+55.42 TO STA.48+38.29

AS BUILT PLANS SHOWN IN RED BY M. REYES. 7/5/81.

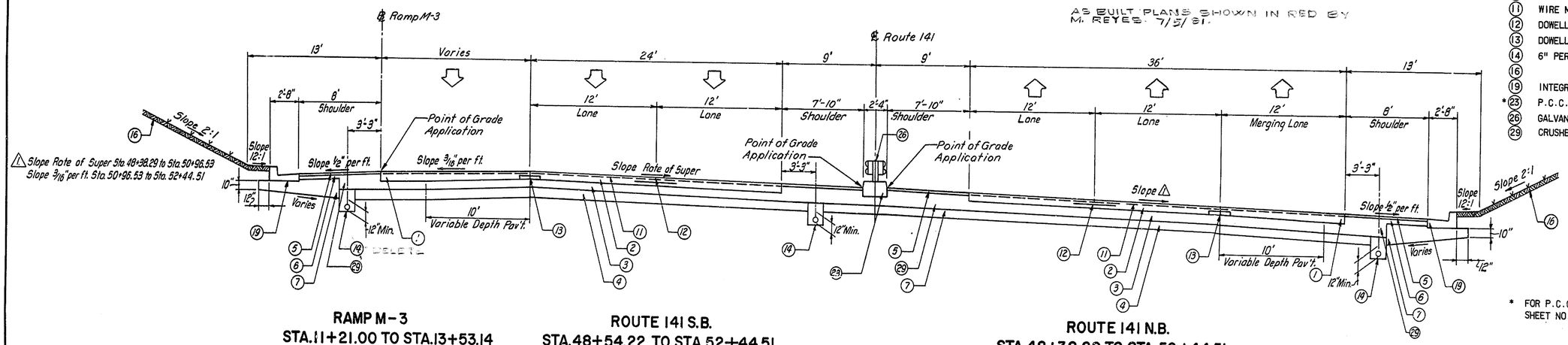

RAMP M-3
STA.11+21.00 TO STA.13+53.14

ROUTE 141 S.B.
STA.48+54.22 TO STA.52+44.51

ROUTE 141 N.B.
STA.48+38.29 TO STA.52+44.51

LEGEND

1. 9" REINFORCED P.C.C. PAVEMENT
2. 9" CONTINUOUSLY REINFORCED P.C.C. PAVEMENT
3. 8" CRUSHER RUN BASE COURSE
4. 10" BORROW TYPE A
5. 2" HOT-MIX, HOT LAID ASPHALTIC CONCRETE WEARING COURSE, TYPE C
6. 4" CRUSHER RUN BASE COURSE
7. BORROW, TYPE A (VARIABLE DEPTH)
11. WIRE MESH OR BAR REINFORCEMENT
12. DOWELLED LONGITUDINAL SAW-CUT JOINT
13. DOWELLED LONGITUDINAL CONSTRUCTION JOINT
14. 6" PERFORATED PIPE U-DRAIN
16. CROWNVETCH SEEDING AND MULCHING
19. INTEGRAL P.C.C. CURB AND GUTTER, TYPE 1
*23. P.C.C. CURB SPECIAL TYPE C
26. GALVANIZED STEEL BEAM MEDIAN BARRIER
29. CRUSHER RUN BASE COURSE (VARIABLE DEPTH)

* FOR P.C.C. CURB SPECIAL TYPE SEE SHEET NO. 43 & 44

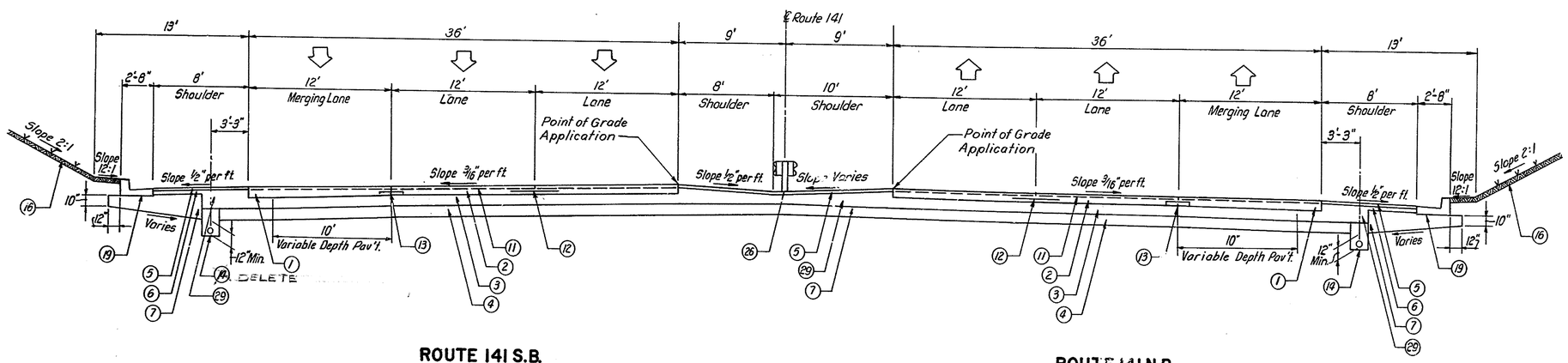

ROUTE 141 S.B.
STA.52+44.51 TO STA.58+00.67

ROUTE 141 N.B.
STA.52+44.51 TO STA.57+96.86

TYPICAL SECTIONS

COUNTY	CONTRACT	P.B.A. REG. NO.	STATE	FED. AID PROJECT NO.	SHEET NO.	TOTAL SHEETS
NEWCASTLE	71-02-009	2	DEL.		18	301

RELOCATED DELAWARE ROUTE 141
THRU NEWPORT

PREL. TRACING R.L.H. DESIGN G.S. CHKD. A.N.

REVISIONS

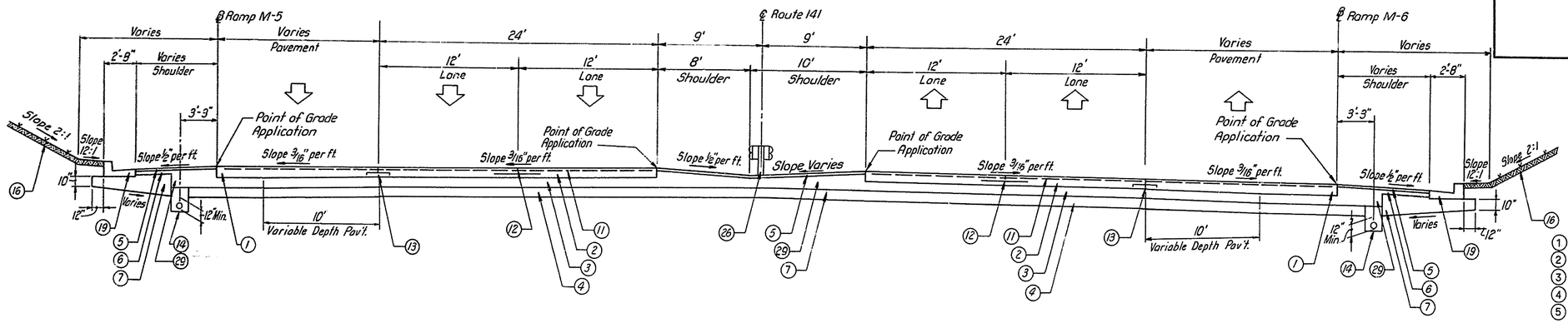

RAMP M-5
STA. 22+84.68 TO STA. 24+98.84

ROUTE 141 S.B.
STA. 58+00.67 TO STA. 61+00.00 B.K.

ROUTE 141 N.B.
STA. 57+96.86 TO STA. 61+00.00 BK.

RAMP M-6
STA. 9+47.87 TO STA. 12+00.71

LEGEND

1. 9" REINFORCED P.C.C. PAVEMENT
2. 9" CONTINUOUSLY REINFORCED P.C.C. PAVEMENT
3. 8" CRUSHER RUN BASE COURSE
4. 10" BORROW TYPE A
5. 2" HOT-MIX, HOT LAID ASPHALTIC CONCRETE WEARING COURSE, TYPE C
6. 4" CRUSHER RUN BASE COURSE
7. BORROW, TYPE A (VARIABLE DEPTH)
11. WIRE MESH OR BAR REINFORCEMENT
12. DOWELLED LONGITUDINAL SAW-CUT JOINT
13. DOWELLED LONGITUDINAL CONSTRUCTION JOINT
14. 6" PERFORATED PIPE U-DRAIN
15. 4" TOPSOIL, SEEDING AND MULCHING
16. CROWNVETCH SEEDING AND MULCHING
19. INTEGRAL P.C.C. CURB AND GUTTER, TYPE 1
26. GALVANIZED STEEL BEAM MEDIAN BARRIER
29. CRUSHER RUN BASE CURSE (VARIABLE DEPTH)

1 Slope 3/16" per ft. Sta. 59+62.92 Ahd. to Sta. 60+10.28 Ahd.
Slope Rate of Super Sta. 60+10.28 to Sta. 60+87.50

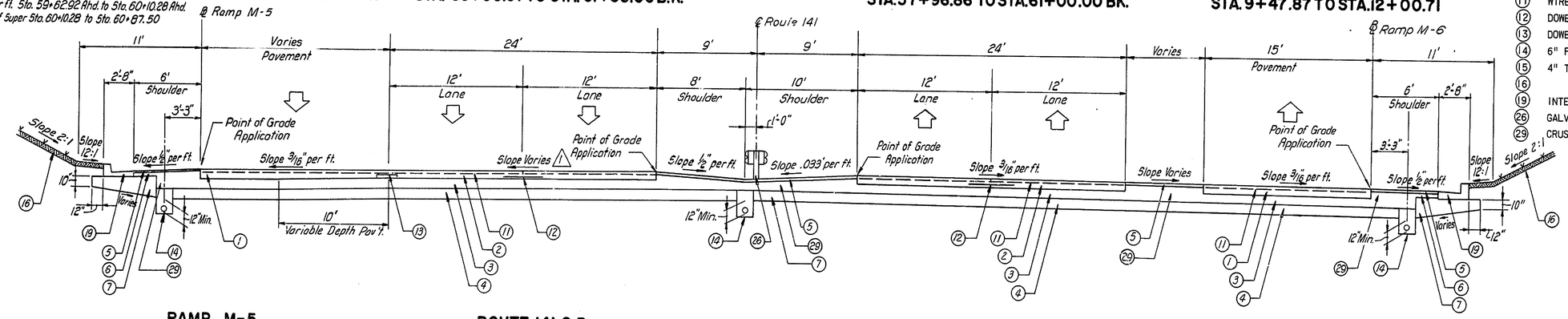

RAMP M-5
STA. 21+98.61 TO STA. 22+84.68

ROUTE 141 S.B.
STA. 59+62.92 AHD. TO STA. 60+87.50 AHD.

ROUTE 141 N.B.
STA. 59+62.92 AHD. TO STA 61+92.15 AHD.

RAMP M-6
STA. 12+00.71 TO STA. 14+25.66

2 Slope Rate of Super Sta. 18+85.95 to Sta. 19+32.16.
Slope 3/16" Sta. 19+32.16 to Sta. 21+98.61

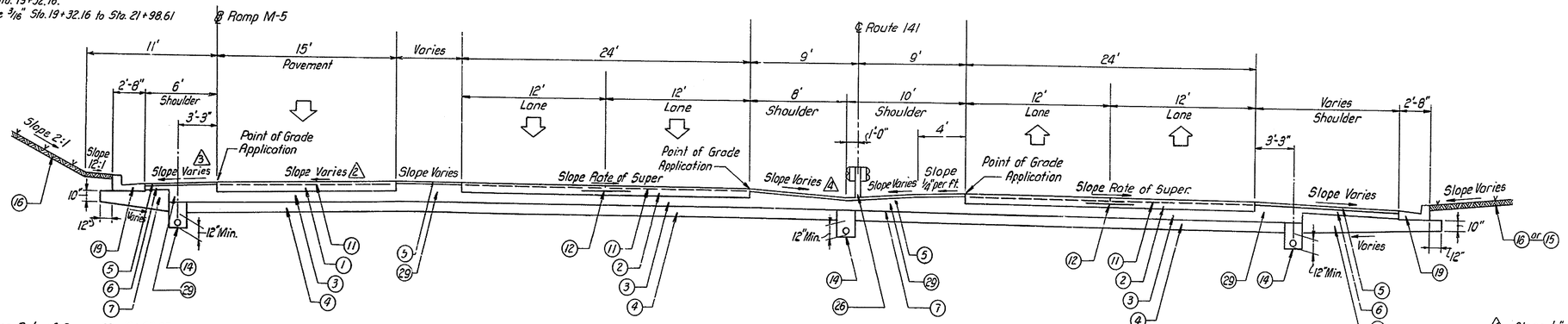

3 Slope Rate of Super. Sta. 18+85.95 to Sta. 19+32.16
Slope ½" per ft. Sta. 19+32.16 to Sta. 21+98.61

RAMP M-5
STA. 18+85.95 TO STA. 21+98.61

ROUTE 141 S.B.
STA. 60+87.50 TO STA. 65+00.00

ROUTE 141 N.B.
STA. 61+92.15 STA. 63+46.28

4 Slope ½" per ft. Sta. 59+62.92 to Sta. 61+91.00
Slope Rate of Super Sta. 61+91.00 to Sta. 63+46.28

TYPICAL SECTIONS

COUNTY	CONTRACT	P.R.A. REG. NO.	STATE	FED. AID PROJECT NO.	SHEET NO.	TOTAL SHEETS
NEW CASTLE	71-02-009	2	DEL.		19	301

RELOCATED DELAWARE ROUTE 141
THRU NEWPORT

PREL. TRACING R.L.H. DESIGN G.S. CHKD. G.S.

REVISIONS

*12' Lane Drop 70:1 Taper
Sta. 73+40 to Sta. 65+00

**Crownvetch Seeding and Mulching Sta. 69+92.76 to Sta. 70+10.00
Seed & Mulch, Temporary Soil Erosion Protection, Sta. 70+40.00 to Sta. 71+20.00

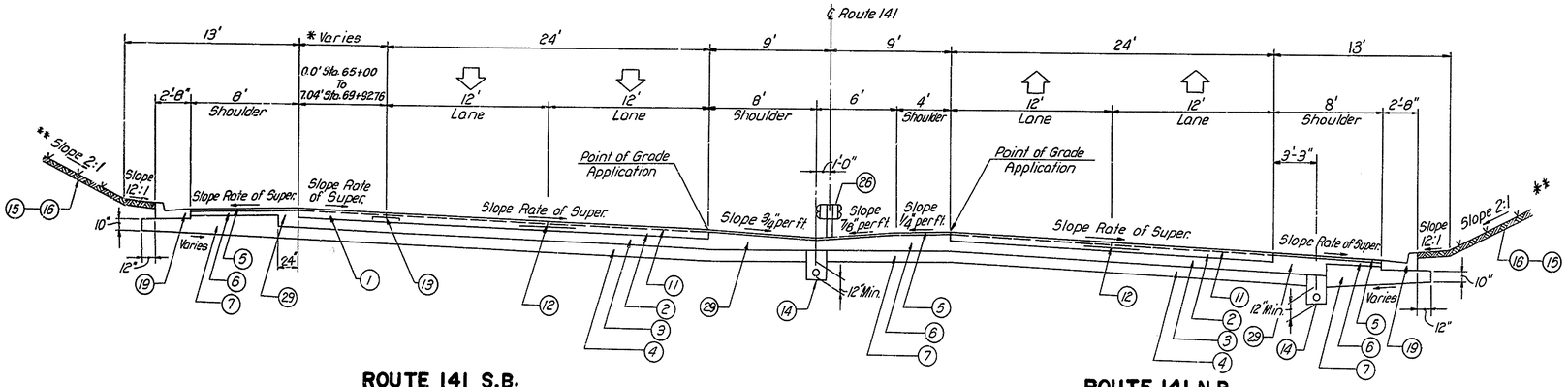

ROUTE 141 S.B.
STA. 65+00.00 TO 69+ 92.76

ROUTE 141 N.B.
STA. 63+46.28 TO STA. 69+92.76

LEGEND

2	9" CONTINUOUSLY REINFORCED P.C.C. PAVEMENT
3	8" CRUSHER RUN BASE COURSE
4	10" BORROW TYPE A
5	2" HOT-MIX, HOT LAID ASPHALTIC CONCRETE WEARING COURSE, TYPE C
6	4" CRUSHER RUN BASE COURSE
7	BORROW, TYPE A (VARIABLE DEPTH)
11	WIRE MESH OR BAR REINFORCEMENT
12	DOWELLED LONGITUDINAL SAW-CUT JOINT
13	DOWELLED LONGITUDINAL CONSTRUCTION JOINT
14	6" PERFORATED PIPE U-DRAIN
15	4" TOPSOIL, SEEDING AND MULCHING
16	CROWNVETCH SEEDING AND MULCHING
19	INTEGRAL P.C.C. CURB AND GUTTER, TYPE 1
26	GALVANIZED STEEL BEAM MEDIAN BARRIER
29	CRUSHER RUN BASE COURSE (VARIABLE DEPTH)

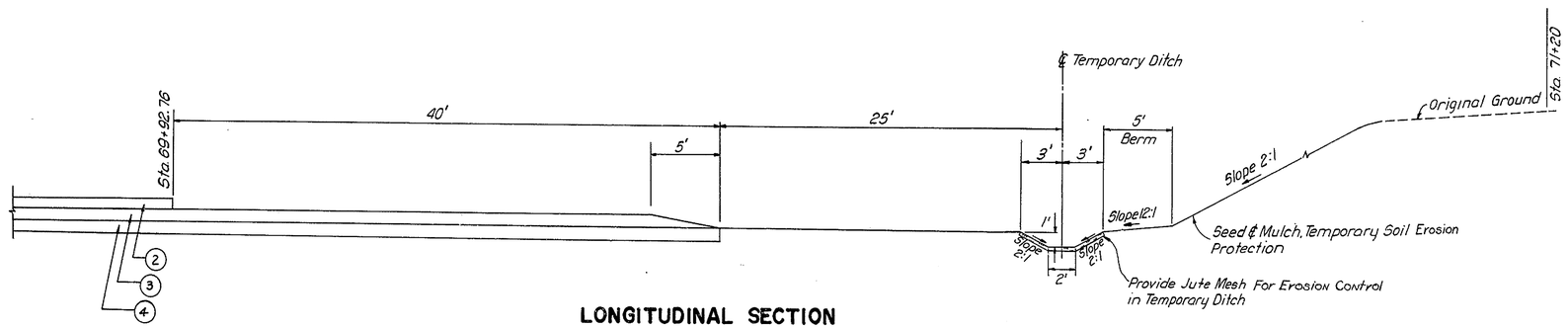

LONGITUDINAL SECTION
℄ ROUTE 141
STA. 69+92.76 TO STA. 71+20.00

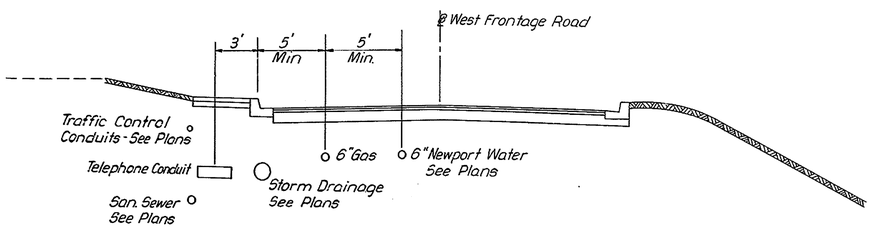

TYPICAL LOCATION FOR UTILITIES

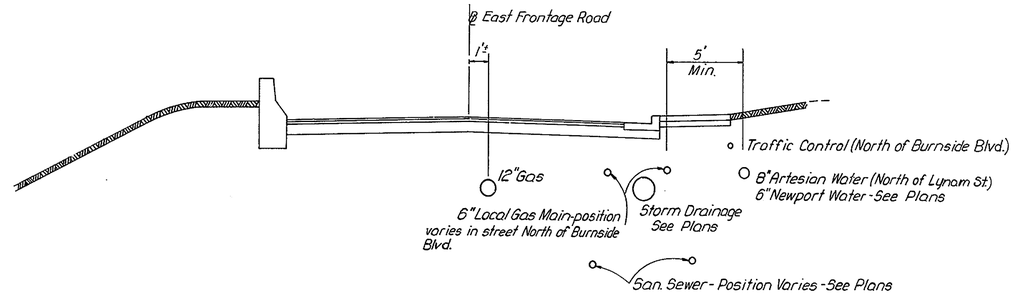

TYPICAL SECTIONS

△1 Slope 3/16"/ft. Sta. 15+60.02 to Sta. 18+66.43 Tangent Section
Slope Rate of Super. Sta. 18+66.43 to Sta. 21+40.71

△2 Slope 1/2"/ft. Sta. 15+60.02 to Sta 18+66.43
Slope Rate of Super. Sta. 18+66.43 to Sta. 21+40.71

COUNTY	CONTRACT	P.R.J. REG. NO.	STATE	FED. AID PROJECT NO.	SHEET NO.	TOTAL SHEETS
NEW CASTLE	71-02-009	2	DEL.		20	301

RELOCATED DELAWARE ROUTE 141
THRU NEWPORT

PREL. TRACING G.B.M. DESIGN G.S. CHKD. A.N.

REVISIONS

AS BUILT PLANS SHOWN IN RED BY M. REYES. 5/7/91

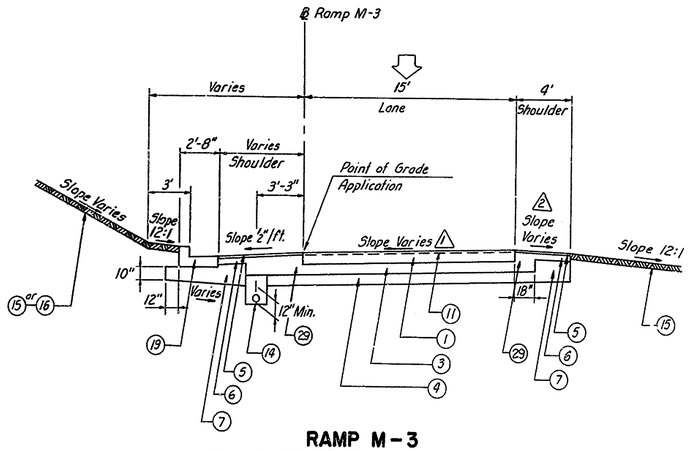

RAMP M-3
STA. 15+60.02 TO STA. 21+40.71

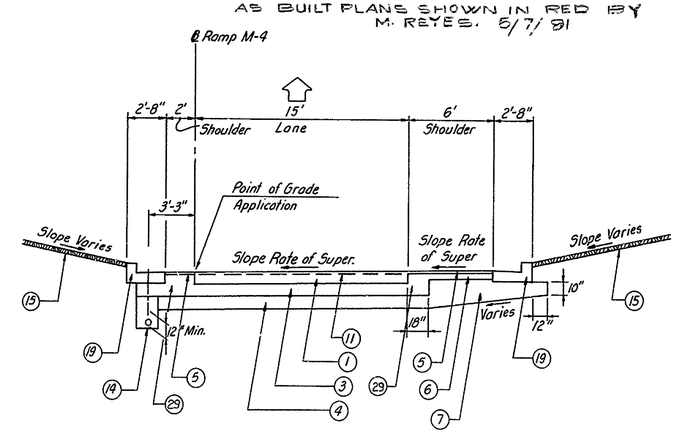

RAMP M-4
STA. 12+14.77 TO STA. 12+99.71

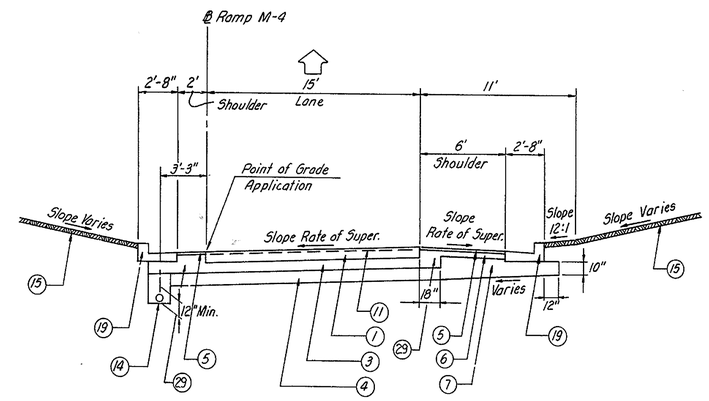

RAMP M-4
STA. 12+99.71 TO STA. 13+74.41

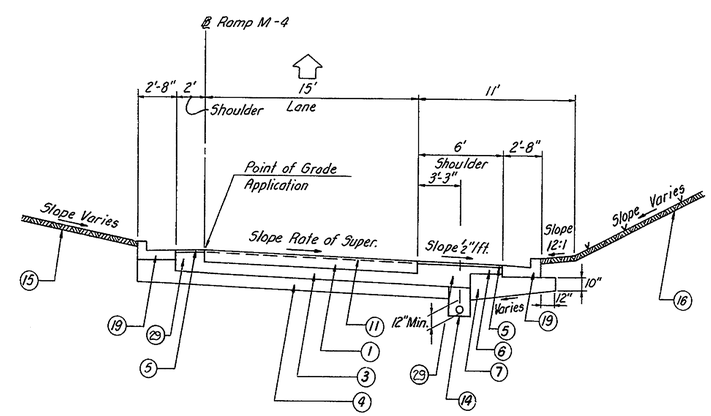

RAMP M-4
STA. 13+74.41 TO STA. 14+31.37

LEGEND

1. 9" REINFORCED P.C.C. PAVEMENT
3. 8" CRUSHER RUN BASE COURSE
4. 10" BORROW TYPE A
5. 2" HOT-MIX, HOT LAID ASPHALTIC CONCRETE WEARING COURSE, TYPE C
6. 4" CRUSHER RUN BASE COURSE
7. BORROW, TYPE A (VARIABLE DEPTH)
11. WIRE MESH OR BAR REINFORCEMENT
14. 6" PERFORATED PIPE U-DRAIN
15. 4" TOPSOIL, SEEDING AND MULCHING
16. CROWNVETCH SEEDING AND MULCHING
19. INTEGRAL P.C.C. CURB AND GUTTER, TYPE 1
29. CRUSHER RUN BASE COURSE (VARIABLE DEPTH)

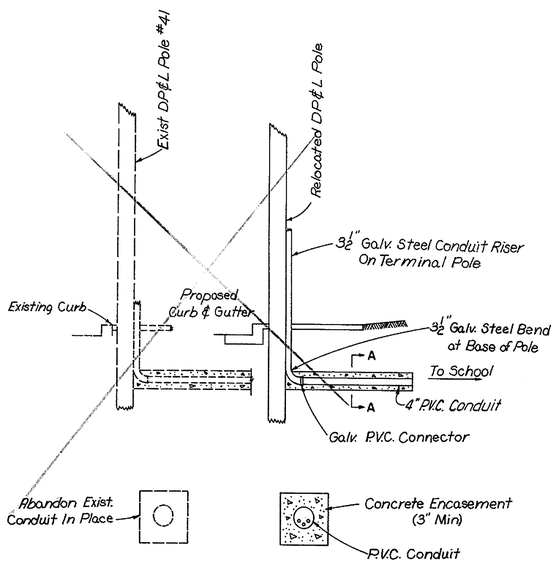

SECTION A-A
RELOCATION OF 12,000 V ELECTRIC SERVICE TO KREBS SCHOOL

NO SCALE

INSTALLED BY OTHERS
W.O. #19.

TYPICAL SECTIONS

COUNTY	CONTRACT	P.R.A. REG. NO.	STATE	FED. AID PROJECT NO.	SHEET NO.	TOTAL SHEETS
NEW CASTLE	71-02-009	2	DEL		21	301

RELOCATED DELAWARE ROUTE 141
THRU NEWPORT

PREL. TRACING G.B.M. DESIGN H.H.D CHKD. A.N.

REVISIONS

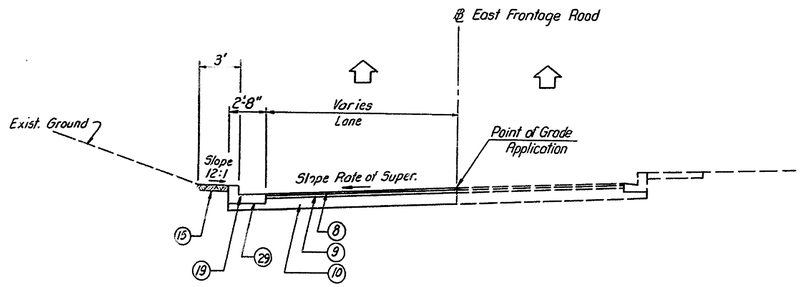

EAST FRONTAGE ROAD
STA. 39+00.00 TO STA. 39+20.17

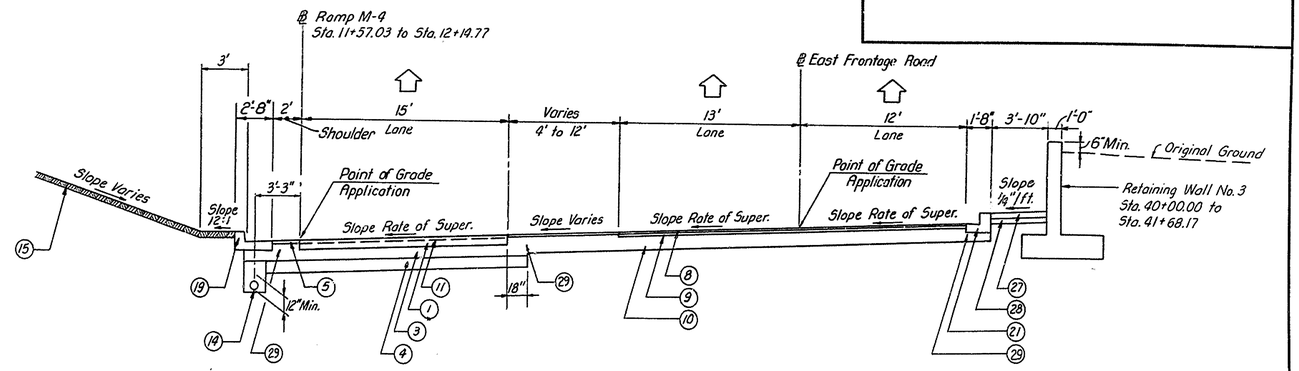

RAMP M - 4
STA. 11+57.03 TO STA. 12+14.77

EAST FRONTAGE ROAD 20.00
STA. 40+90.86 TO STA. 41+51.15

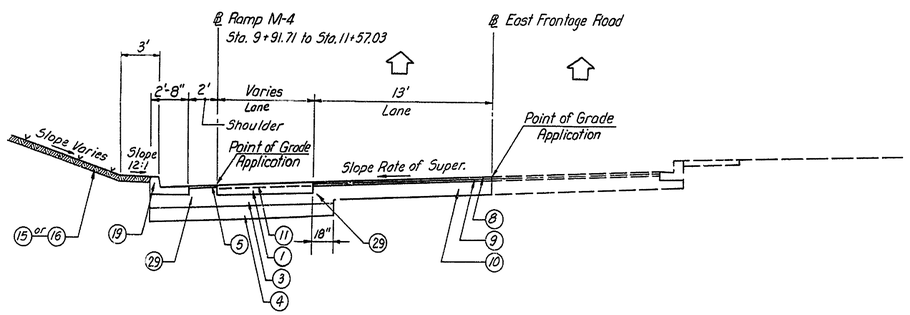

RAMP M - 4
STA. 9+91.71 TO STA. 11+57.03

EAST FRONTAGE ROAD
STA. 39+20.17 TO STA. 39+50.00

LEGEND

1. 9" REINFORCED P.C.C. PAVEMENT
3. 8" CRUSHER RUN BASE COURSE
4. 10" BORROW TYPE A
5. 2" HOT-MIX, HOT LAID ASPHALTIC CONCRETE WEARING COURSE, TYPE C
6. 4" CRUSHER RUN BASE COURSE
7. BORROW, TYPE A (VARIABLE DEPTH)
8. 1 1/2" HOT-MIX, HOT LAID ASPHALTIC CONCRETE WEARING COURSE, TYPE C — 8A 2"
9. 2 1/2" HOT-MIX, HOT LAID ASPHALTIC CONCRETE SURFACE COURSE, TYPE B — 9A 3"
10. 10" CRUSHER RUN BASE COURSE — 10A 12"
11. WIRE MESH OR BAR REINFORCEMENT
14. 6" PERFORATED PIPE U-DRAIN
15. 4" TOPSOIL, SEEDING AND MULCHING
16. CROWNVETCH SEEDING AND MULCHING
19. INTEGRAL P.C.C. CURB AND GUTTER, TYPE 1
21. INTEGRAL P.C.C. CURB AND GUTTER, TYPE 3
22. P.C.C. CURB, TYPE 1
27. 4" P.C.C. PAVEMENT
28. 4" SELECT BORROW
29. CRUSHER RUN BASE COURSE (VARIABLE DEPTH)

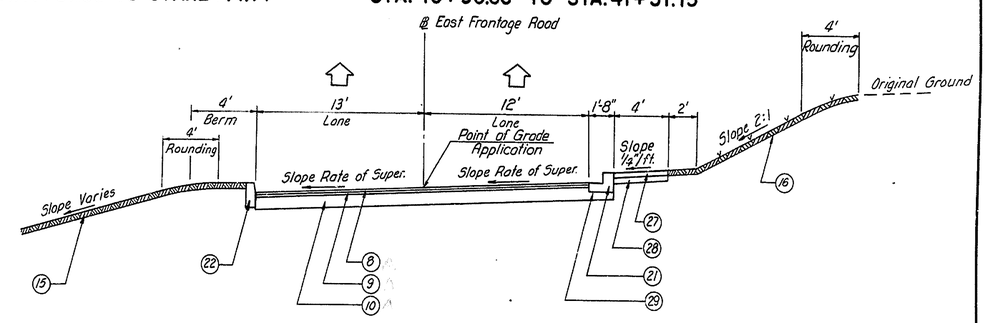

EAST FRONTAGE ROAD
STA. 41+51.15 TO STA. 42+88.57
20.00

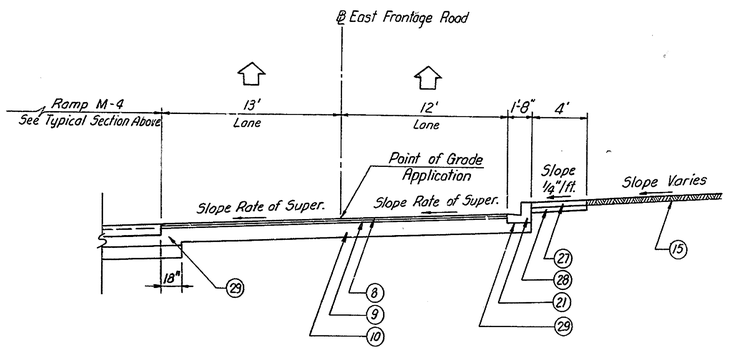

EAST FRONTAGE ROAD
STA. 39+50.00 TO STA. 40+90.86

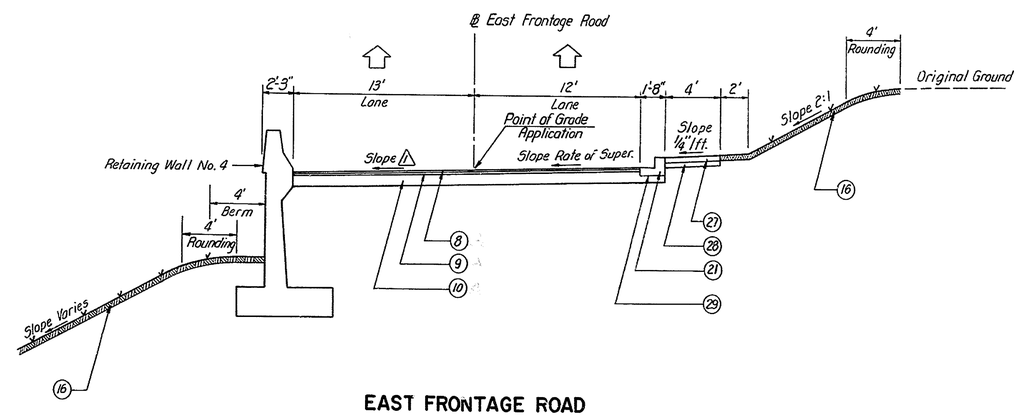

EAST FRONTAGE ROAD
STA. 42+88.57 TO STA. 44+70.00

1 Slope Rate of Super Sta. 42+88.57 to Sta. 44+30.00
Slope 1/4"/ft. Sta. 44+30.00 to Sta. 44+70.00

TYPICAL SECTIONS

COUNTY	CONTRACT	P.R.A. REG. NO.	STATE	FED. AID PROJECT NO.	SHEET NO.	TOTAL SHEETS
NEW CASTLE	71-02-009	2	DEL.		22	301

RELOCATED DELAWARE ROUTE 141
THRU NEWPORT

PREL. TRACING G.B.M. DESIGN G.S. CHKD. A.N.

REVISIONS

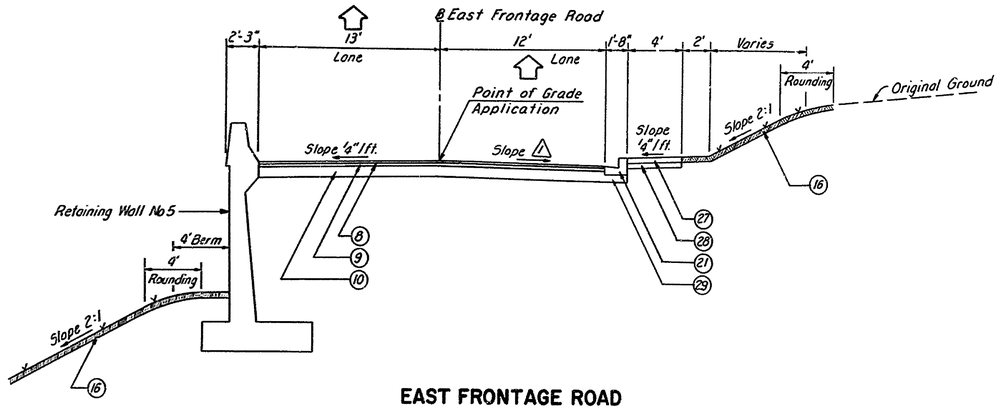

EAST FRONTAGE ROAD
STA. 44+70.00 TO STA. 45+97.71

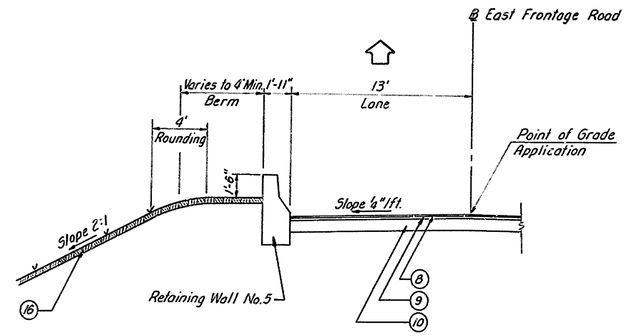

EAST FRONTAGE ROAD
PART SECTION
STA. 53+79.87 TO STA. 58+54.02

△1 Slope Rate of Super.
Sta. 44+70 to Sta. 45+10
Slope 1/4"/ft.
Sta. 45+10 to Sta. 45+97.71

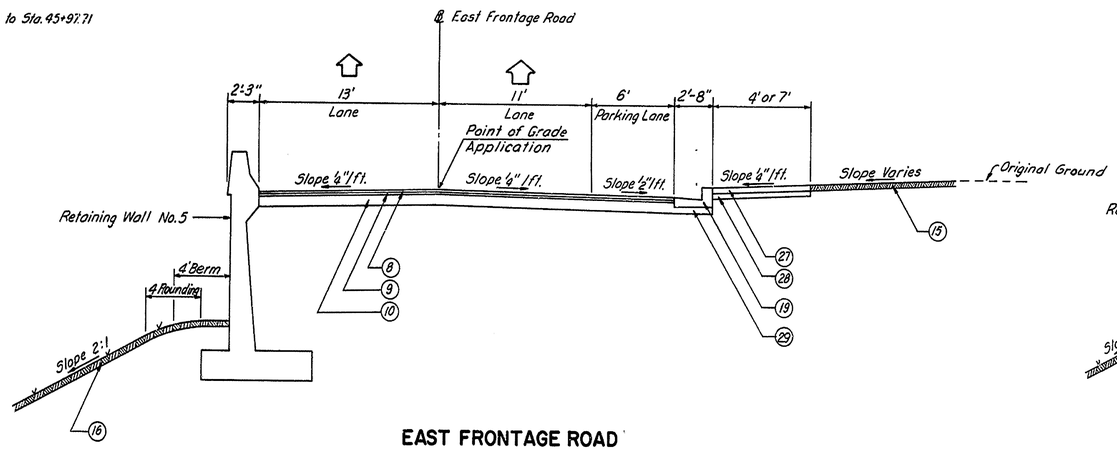

EAST FRONTAGE ROAD
STA. 46+69.75 TO STA. 60+07.58

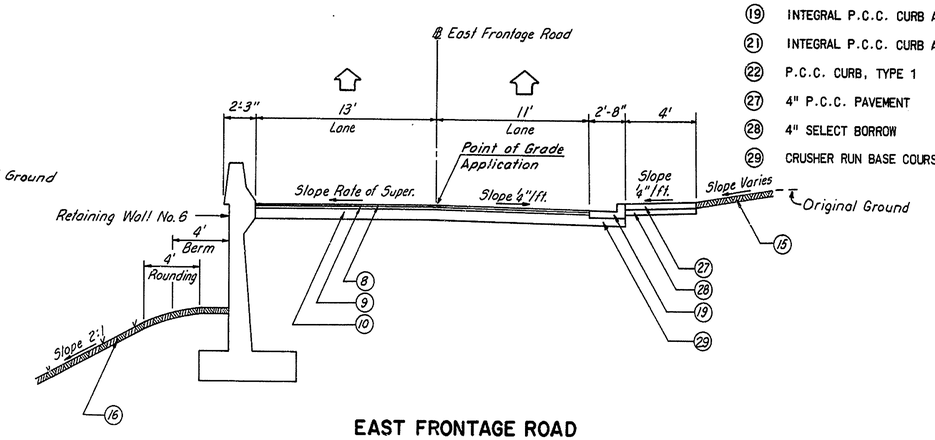

EAST FRONTAGE ROAD
STA. 61+21.88 TO STA. 61+75.62

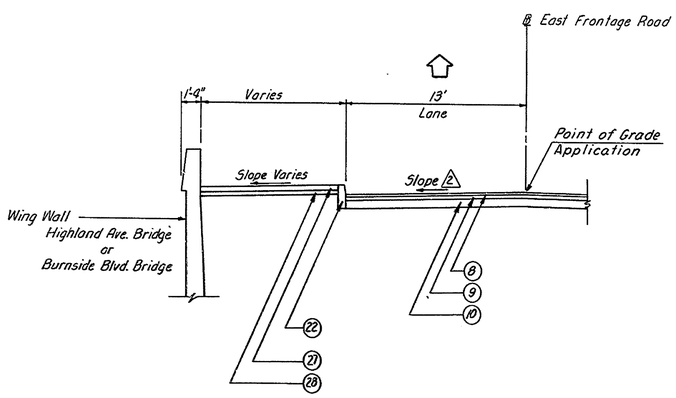

EAST FRONTAGE ROAD
PART SECTION
STA. 45+65.40 TO STA. 47+72.40
STA. 59+73.02 TO STA. 61+55.23

△2 Slope 1/4"/ft.
Sta. 45+65.40 to Sta. 47+72.40
Sta. 59+73.02 to Sta. 61+15.62
Slope Rate of Super.
Sta. 61+15.62 to Sta. 61+55.23

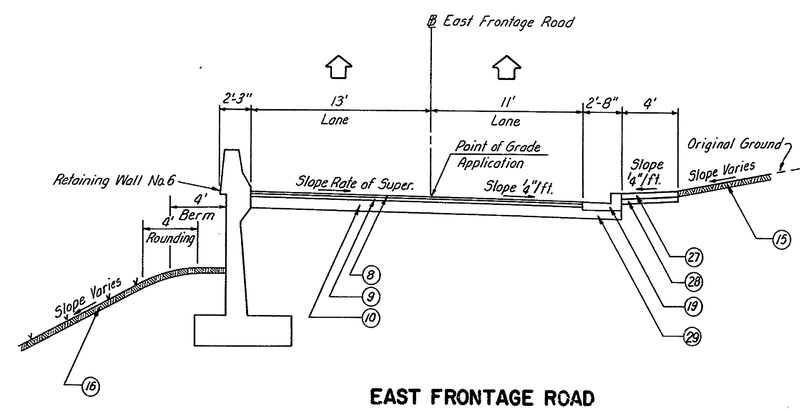

EAST FRONTAGE ROAD
STA. 61+75.62 TO STA. 68+81.12

LEGEND

(8) 2" 1-1/2" HOT-MIX, HOT LAID ASPHALTIC CONCRETE WEARING COURSE, TYPE C

(9) 3" 2 1/2" HOT-MIX, HOT LAID ASPHALTIC CONCRETE SURFACE COURSE, TYPE B

(10) 12" 10" CRUSHER RUN BASE COURSE

(15) 4" TOPSOIL, SEEDING AND MULCHING

(16) CROWNVETCH SEEDING AND MULCHING

(19) INTEGRAL P.C.C. CURB AND GUTTER, TYPE 1

(21) INTEGRAL P.C.C. CURB AND GUTTER, TYPE 3

(22) P.C.C. CURB, TYPE 1

(27) 4" P.C.C. PAVEMENT

(28) 4" SELECT BORROW

(29) CRUSHER RUN BASE COURSE (VARIABLE DEPTH)

TYPICAL SECTIONS

COUNTY	CONTRACT	F.B.A. REG. NO.	STATE	FED. AID PROJECT NO.	SHEET NO.	TOTAL SHEETS
NEW CASTLE	71-02-009	2	DEL.		23	301

RELOCATED DELAWARE ROUTE 141
THRU NEWPORT

PREL. TRACING G.B.M. DESIGN H.A.D. CHKD. A.N.

REVISIONS

△1 Slope 1/4"/ft. Sta. 22+54.05 to Sta. 23+00.00

△1 Slope Rate of Super. Sta. 23+00.00 to Sta. 23+24.00

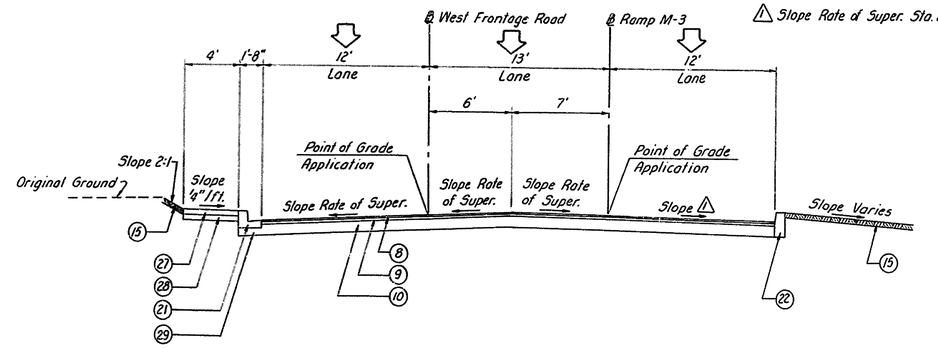

WEST FRONTAGE ROAD
STA. 38+92.00 TO STA. 39+29.64

RAMP M-3
STA. 22+54.05 TO STA. 23+24.00

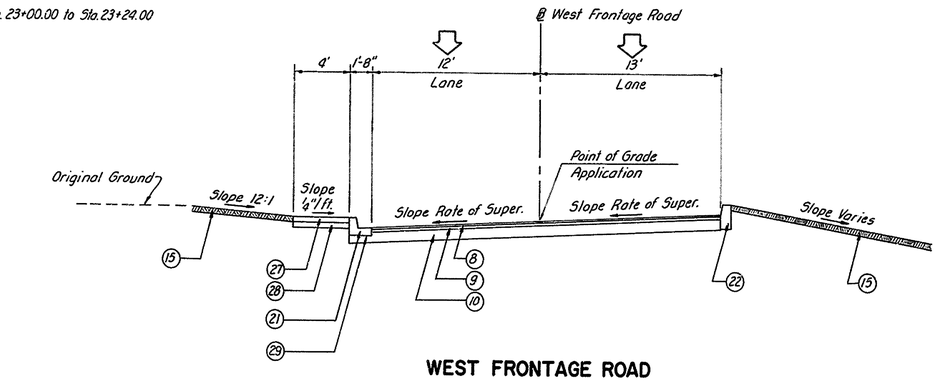

WEST FRONTAGE ROAD
STA. 40+60.76 TO STA. 42+56.93

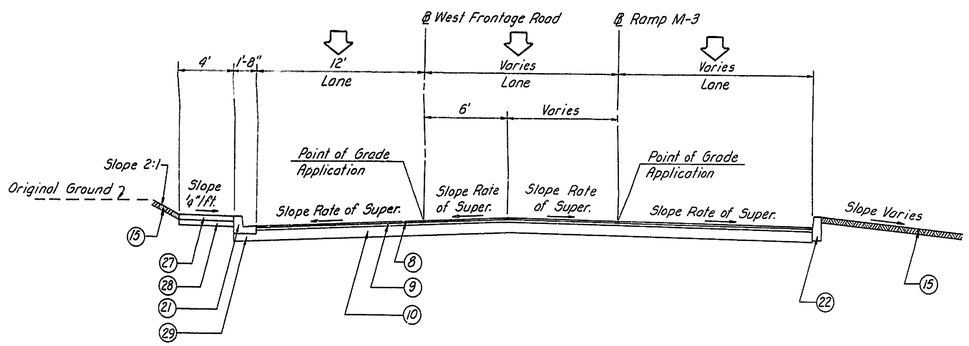

WEST FRONTAGE ROAD
STA. 39+29.64 TO STA. 39+43.89

RAMP M-3
STA. 22+16.27 TO STA. 22+54.05

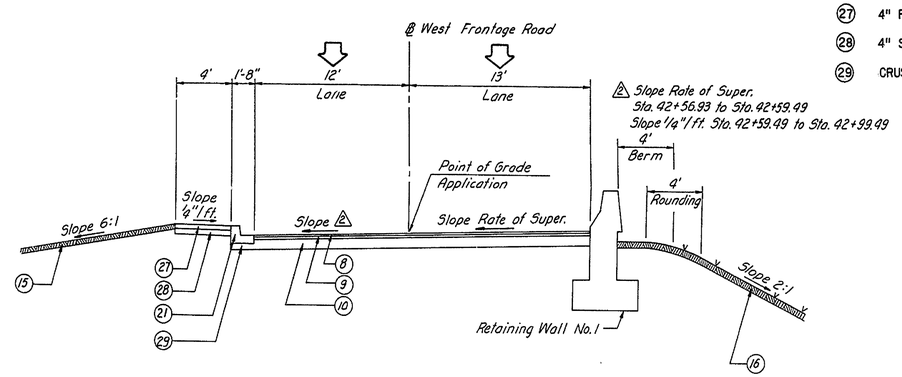

WEST FRONTAGE ROAD
STA. 42+56.93 TO STA. 42+99.49

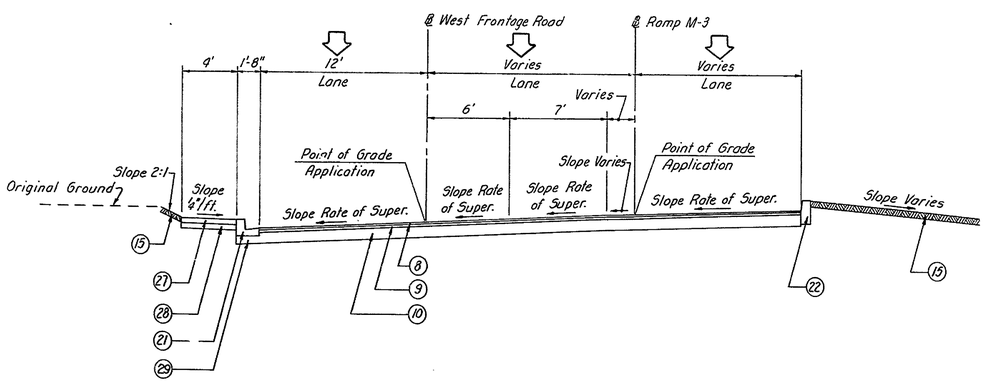

WEST FRONTAGE ROAD
STA. 39+43.89 TO STA. 40+60.76

RAMP M-3
STA. 21+40.71 TO STA. 22+16.27

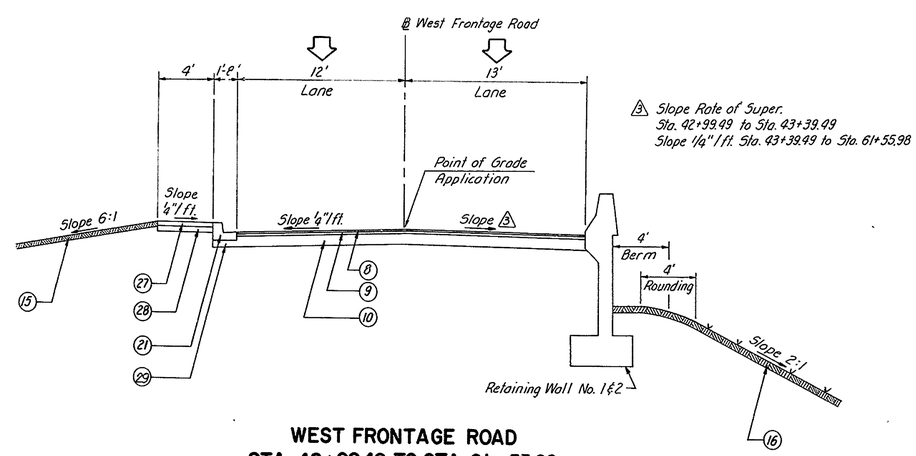

WEST FRONTAGE ROAD
STA. 42+99.49 TO STA. 61+55.98

LEGEND

- (8) 1 1/2" HOT-MIX, HOT LAID ASPHALTIC CONCRETE WEARING COURSE, TYPE C
- (9) 2 1/2" HOT-MIX, HOT LAID ASPHALTIC CONCRETE SURFACE COURSE, TYPE B
- (10) 10" CRUSHER RUN BASE COURSE
- (15) 4" TOPSOIL, SEEDING AND MULCHING
- (16) CROWNVETCH SEEDING AND MULCHING
- (21) INTEGRAL P.C.C. CURB AND GUTTER, TYPE 3
- (22) P.C.C. CURB, TYPE 1
- (27) 4" P.C.C. PAVEMENT
- (28) 4" SELECT BORROW
- (29) CRUSHER RUN BASE COURSE (VARIABLE DEPTH)

TYPICAL SECTIONS

COUNTY	CONTRACT	P.R.A. REG. NO.	STATE	FED. AID PROJECT NO.	SHEET NO.	TOTAL SHEETS
NEW CASTLE	71-02-009	2	DEL		24	301

RELOCATED DELAWARE ROUTE 141
THRU NEWPORT

PREL. TRACING G.B.M. DESIGN H.A.D. CHKD. A.N.

REVISIONS

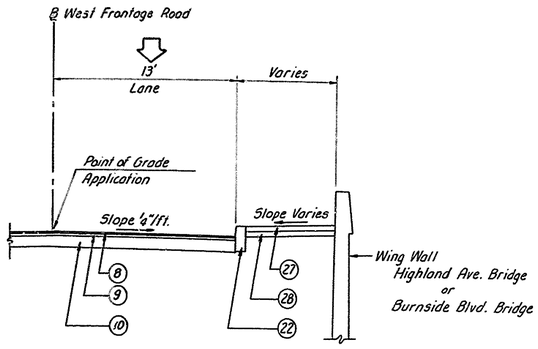

WEST FRONTAGE ROAD
PART SECTION
STA. 45+52.93 TO STA. 47+67.92
STA. 59+62.73 TO STA. 60+53.30

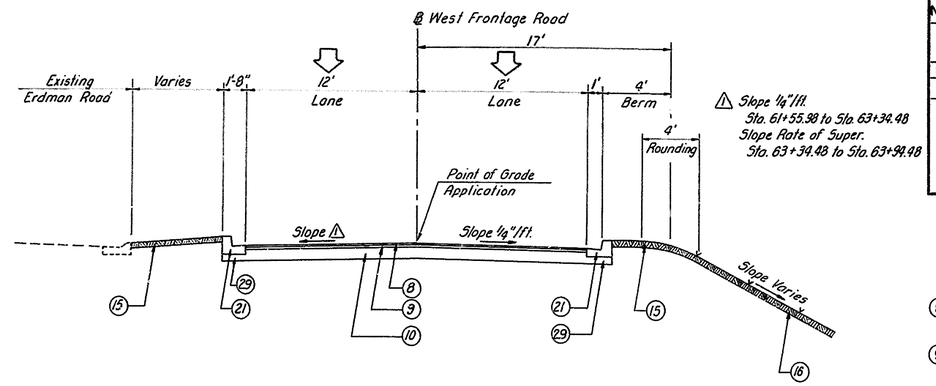

WEST FRONTAGE ROAD
STA. 61+55.98 TO STA. 63+94.48

LEGEND

- (8) 1 1/2" HOT-MIX, HOT LAID ASPHALTIC CONCRETE WEARING COURSE, TYPE C
- (9) 2 1/2" HOT-MIX, HOT LAID ASPHALTIC CONCRETE SURFACE COURSE, TYPE B
- (10) 10" CRUSHER RUN BASE COURSE
- (15) 4" TOPSOIL, SEEDING AND MULCHING
- (16) CROWNVETCH SEEDING AND MULCHING
- (21) INTEGRAL P.C.C. CURB AND GUTTER, TYPE 3
- (22) P.C.C. CURB, TYPE 1
- (27) 4" P.C.C. PAVEMENT
- (28) 4" SELECT BORROW
- (29) CRUSHER RUN BASE COURSE (VARIABLE DEPTH)

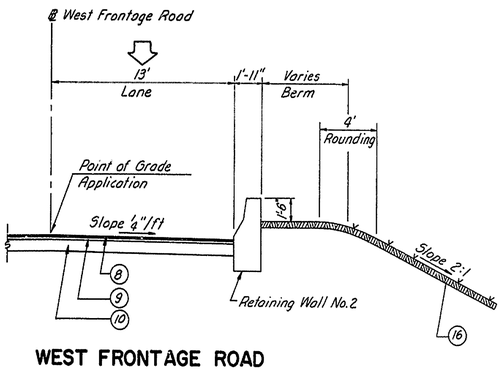

WEST FRONTAGE ROAD
PART SECTION
STA. 53+37.29 TO STA. 59+30.79

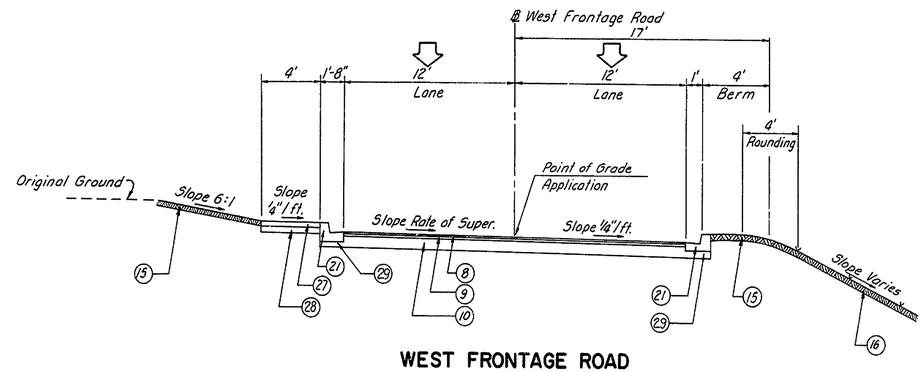

WEST FRONTAGE ROAD
STA. 63+94.48 TO STA. 67+48.09

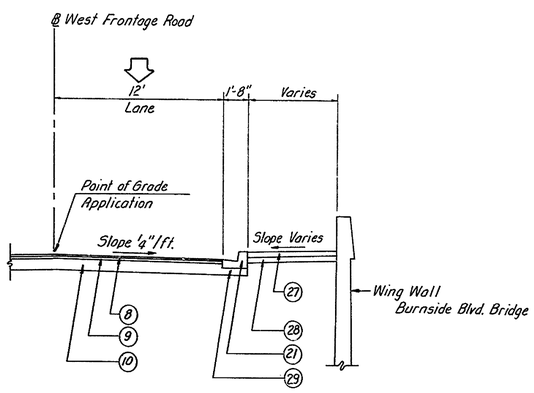

WEST FRONTAGE ROAD
PART SECTION
STA. 60+53.30 TO STA. 61+55.98

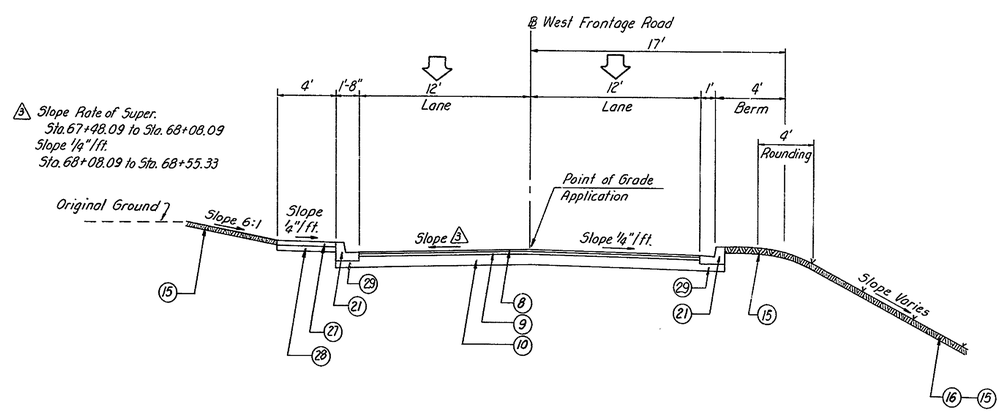

WEST FRONTAGE ROAD
STA. 67+48.09 TO STA. 68+55.33

TYPICAL SECTIONS

COUNTY	CONTRACT	P. B. & REG. NO.	STATE	FED. AID PROJECT NO.	SHEET NO.	TOTAL SHEETS
NEW CASTLE	71-02-009	2	DEL.		25	301

RELOCATED DELAWARE ROUTE 141
THRU NEWPORT

PREL. TRACING G.B.M. DESIGN H.A.D. CHKD. A.N.

REVISIONS

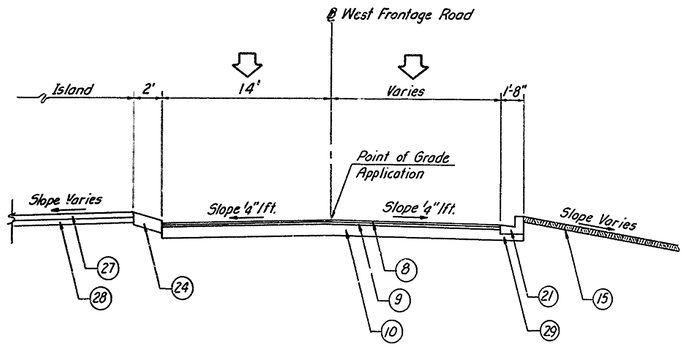

WEST FRONTAGE ROAD
STA. 68+55.33 TO STA. 69+47.34

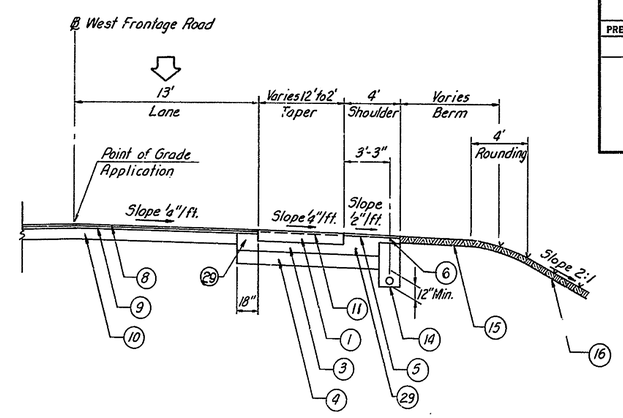

WEST FRONTAGE ROAD
PART SECTION
STA. 71+55.00 TO STA. 72+45.00

LEGEND

1. 9" REINFORCED P.C.C. PAVEMENT
3. 8" CRUSHER RUN BASE COURSE
4. 10" BORROW TYPE A
5. 2" HOT-MIX, HOT LAID ASPHALTIC CONCRETE WEARING COURSE, TYPE C
6. 4" CRUSHER RUN BASE COURSE
7. BORROW, TYPE A (VARIABLE DEPTH)
8. 1 1/2" HOT-MIX, HOT LAID ASPHALTIC CONCRETE WEARING COURSE, TYPE C
9. 2 1/2" HOT-MIX, HOT LAID ASPHALTIC CONCRETE SURFACE COURSE, TYPE B
10. 10" CRUSHER RUN BASE COURSE
11. WIRE MESH OR BAR REINFORCEMENT
14. 6" PERFORATED PIPE U-DRAIN
15. 4" TOPSOIL, SEEDING AND MULCHING
16. CROWNVETCH SEEDING AND MULCHING
19. INTEGRAL P.C.C. CURB AND GUTTER, TYPE 1
21. INTEGRAL P.C.C. CURB AND GUTTER, TYPE 3
24. P.C.C. PARKWAY CURB
27. 4" P.C.C. PAVEMENT
28. 4" SELECT BORROW
29. CRUSHER RUN BASE COURSE (VARIABLE DEPTH)

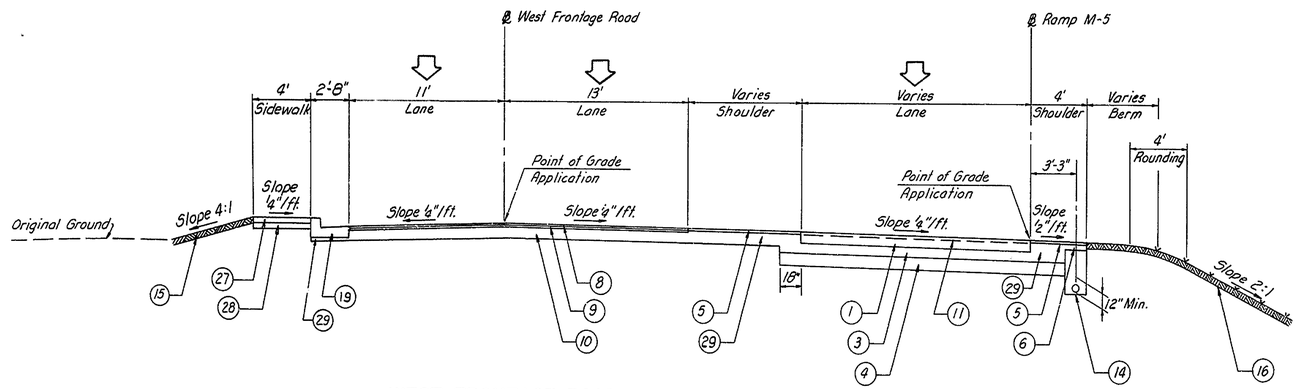

WEST FRONTAGE ROAD
STA. 69+47.34 TO STA. 70+30.14

RAMP M - 5
STA. 12+75.12 TO STA. 13+57.97

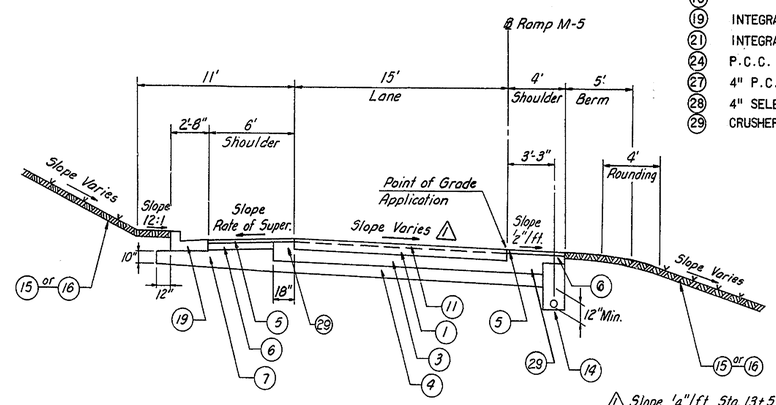

△ Slope 1/4"/1ft. Sta. 13+57+97 to Sta. 14+06.61
Slope Rate of Super. Sta. 14+06.61 to Sta. 17+88.94

RAMP M-5
STA. 13+57.97 TO STA. 17+88.94

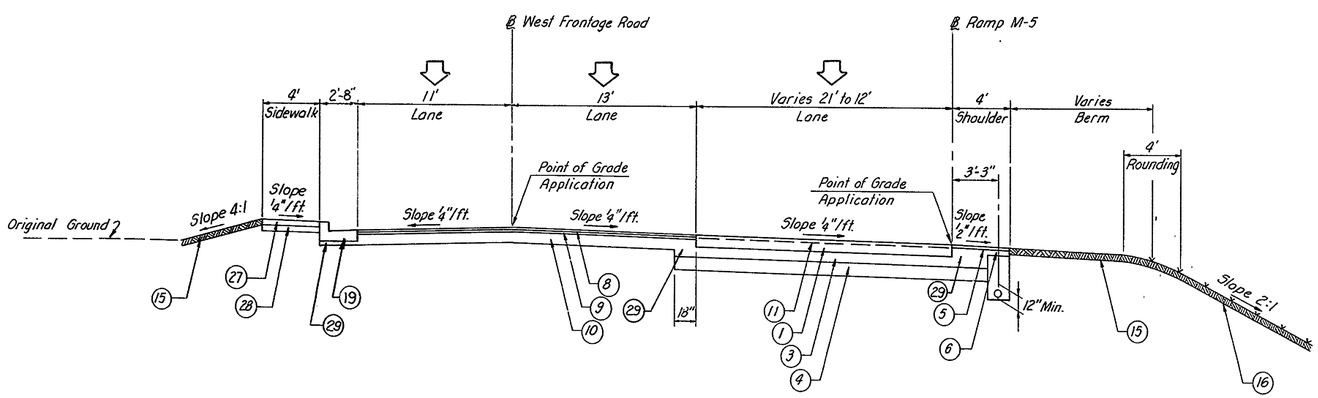

WEST FRONTAGE ROAD
STA. 70+30.14 TO STA. 71+55.00

RAMP M - 5
STA. 11+51.45 TO STA. 12+75.12

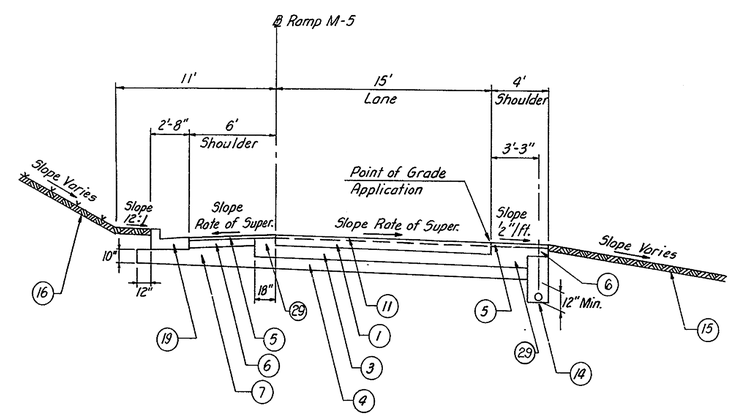

RAMP M-5
STA. 17+88.94 TO STA. 18+85.95

TYPICAL SECTIONS

COUNTY	CONTRACT	FEDERAL REGION	STATE	FEDERAL AID PROJECT NO.	SHEET NO.	TOTAL SHEETS
NEW CASTLE	74-02-0109	2	DEL.		236	301

RELOCATED DELAWARE ROUTE 141
THRU NEWPORT

PREL. TRACING: G.P.M. DESIGN: G.S. CHKD. T.N.

REVISIONS

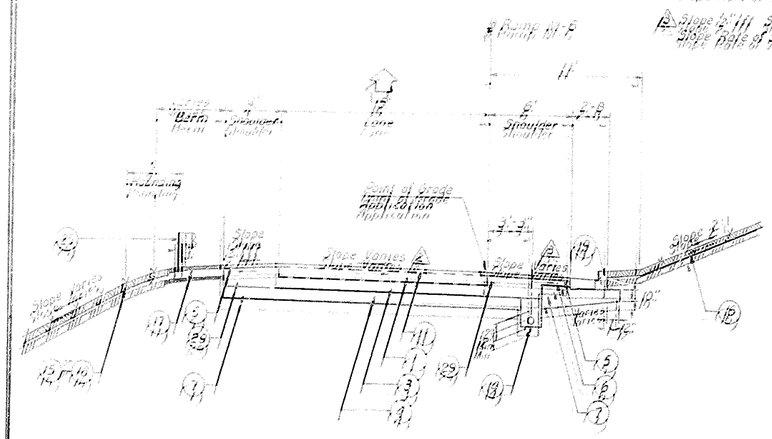

RAMP M-6
STA. 14+25.66 TO STA. 21+90.71

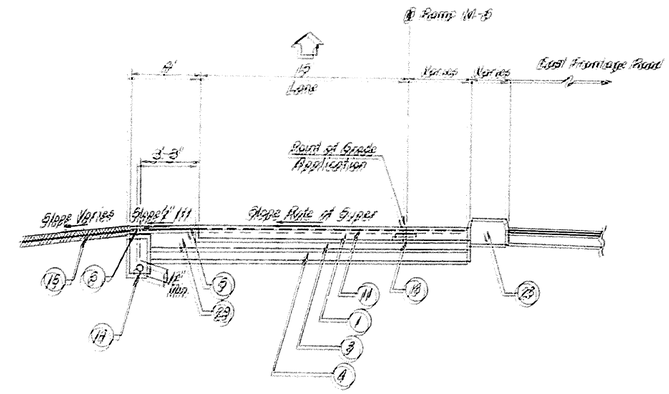

RAMP M-6
STA. 22+47.75 TO STA. 22+99.18

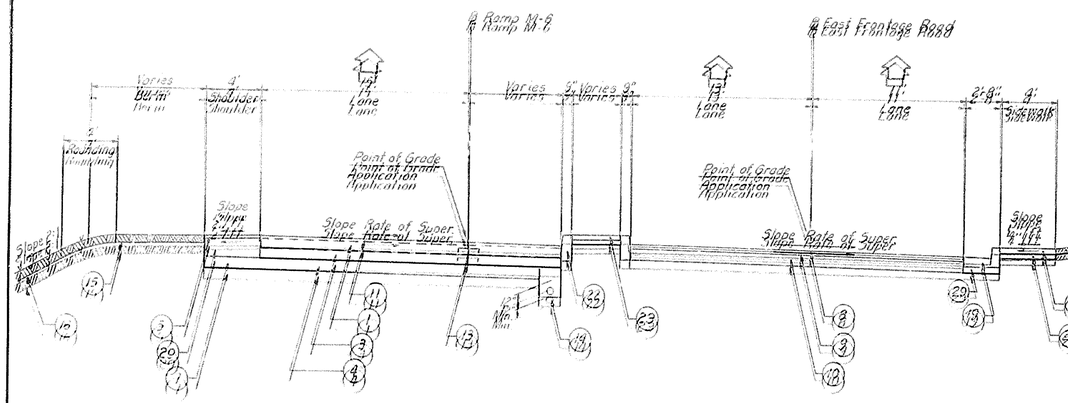

RAMP M-6
STA. 21+90.71 TO STA. 22+35.71

EAST FRONTAGE ROAD
STA. 68+81.12 TO STA. 70+67.51

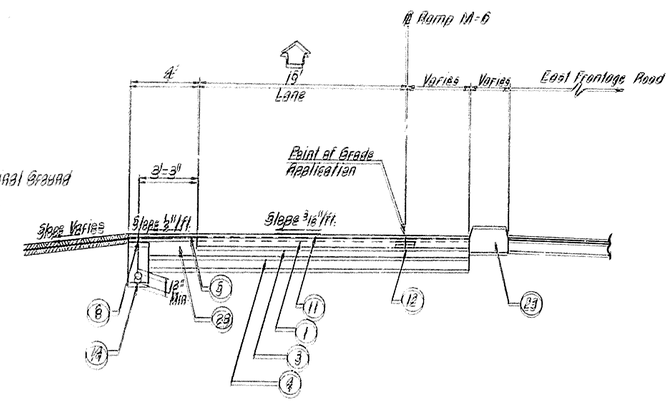

RAMP M-6
STA. 22+99.18 TO STA. 23+91.87

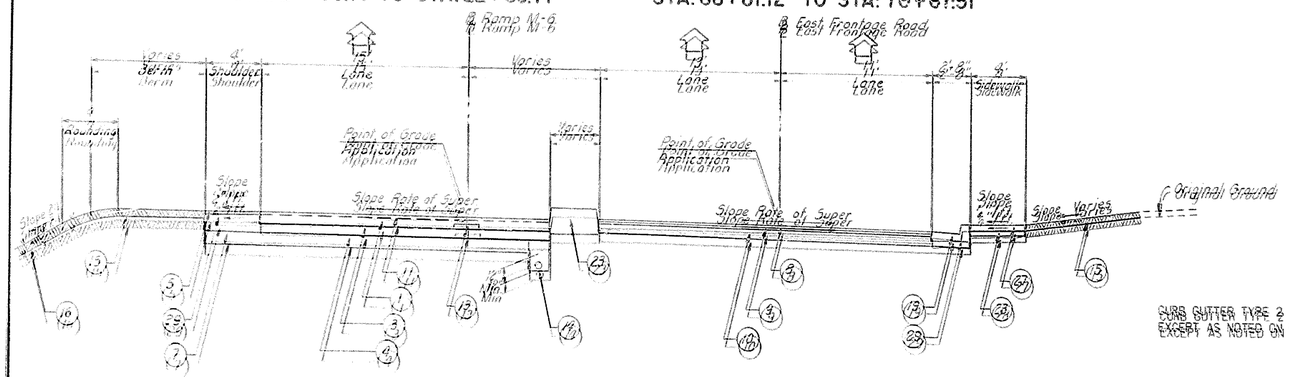

RAMP M-6
STA. 22+35.71 TO STA. 22+47.75

EAST FRONTAGE ROAD
STA. 70+67.51 TO STA. 72+22.90

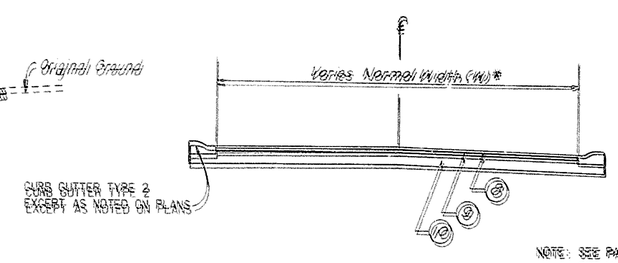

SIDE ROADS

LEGEND

1. 9" REINFORCED P.C.C. PAVEMENT
3. 8" CRUSHER RUN BASE COURSE
4. 10" BORROW TYPE A
5. 2" HOT-MIX, HOT LAID ASPHALTIC CONCRETE WEARING COURSE, TYPE C
6. 4" CRUSHER RUN BASE COURSE
7. BORROW, TYPE A (VARIABLE DEPTH)
8. 1 1/2" HOT-MIX, HOT LAID ASPHALTIC CONCRETE WEARING COURSE, TYPE C
9. 2 1/2" HOT-MIX, HOT LAID ASPHALTIC CONCRETE SURFACE COURSE, TYPE B
10. 10" CRUSHER RUN BASE COURSE
11. WIRE MESH OR BAR REINFORCEMENT
12. DOWELLED LONGITUDINAL SAW-CUT JOINT
13. DOWELLED LONGITUDINAL CONSTRUCTION JOINT
14. 6" PERFORATED PIPE U-DRAIN
15. TOPSOIL, SEEDING AND MULCHING
16. CROWNVETCH SEEDING AND MULCHING
17. BITUMINOUS SURFACE TREATMENT AND SOIL STERILANT (4' WIDTH)
18. INTEGRAL P.C.C. CURB AND GUTTER, TYPE 1
* 23. P.C.C. CURB, SPECIAL TYPE A OR B
25. GALVANIZED STEEL BEAM GUARD RAIL
29. CRUSHER RUN BASE COURSE (VARIABLE DEPTH)

* FOR P.C.C. CURB SPECIAL TYPE SEE SHEET NO. 46

SIDE ROAD	(W)*
BALSAM TERRACE	32.0'
BURNSIDE BLVD.	30.0'
HIGHLAND AVE.	22.4'
LYNAM AVE.	21.0'
KIMENSKI RD.	20.1'
WASHINGTON AVE.	20.0'
KRESS SCHOOL DRIVE	20.1'

NOTE: SEE PAVEMENT DETAIL PLAN FOR VARIABLE WIDTHS & CURBS TRANSITIONS AT THE INTERSECTIONS OF SIDE ROADS

TYPICAL SECTIONS

COUNTY	CONTRACT	P.R.A. REG. NO.	STATE	FED. AID PROJECT NO.	SHEET NO.	TOTAL SHEETS
NEW CASTLE	71-02-009	2	DEL.		27	301

RELOCATED DELAWARE ROUTE 141
THRU NEWPORT

PREL. TRACING R.L.H. DESIGN R.L.H. CHKD. G.S.

REVISIONS

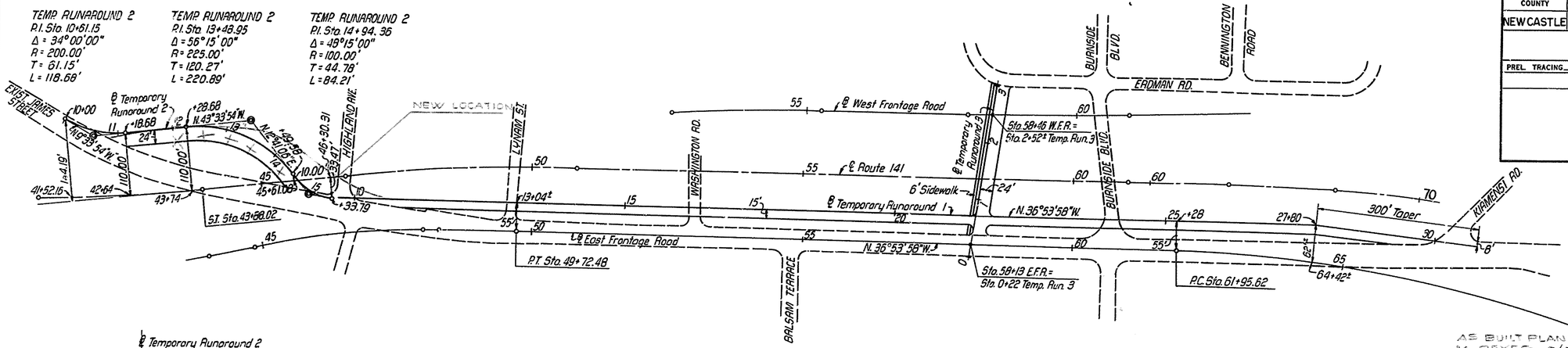

AS BUILT PLANS SHOWN IN RED BY M. REYES. 8/7/81.

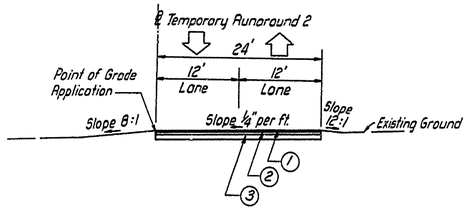

TYPICAL SECTION
RUNAROUND 2

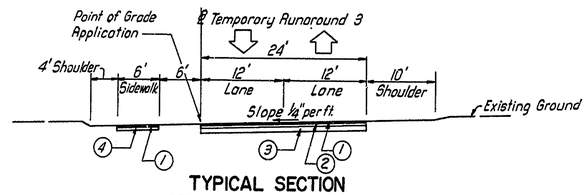

TYPICAL SECTION
STA. 0+50 TO STA. 1+50
STA. 2+30 TO STA. 3+10

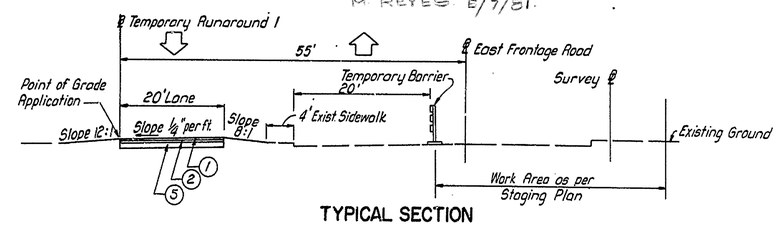

TYPICAL SECTION
RUNAROUND 1

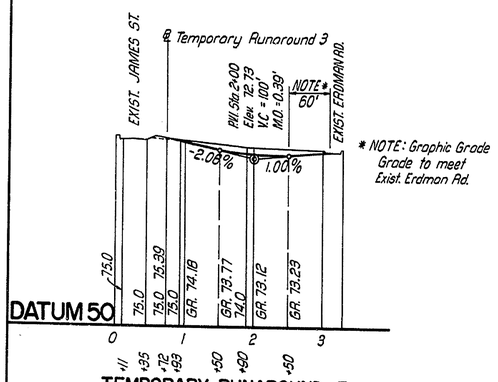

TEMPORARY RUNAROUND 3

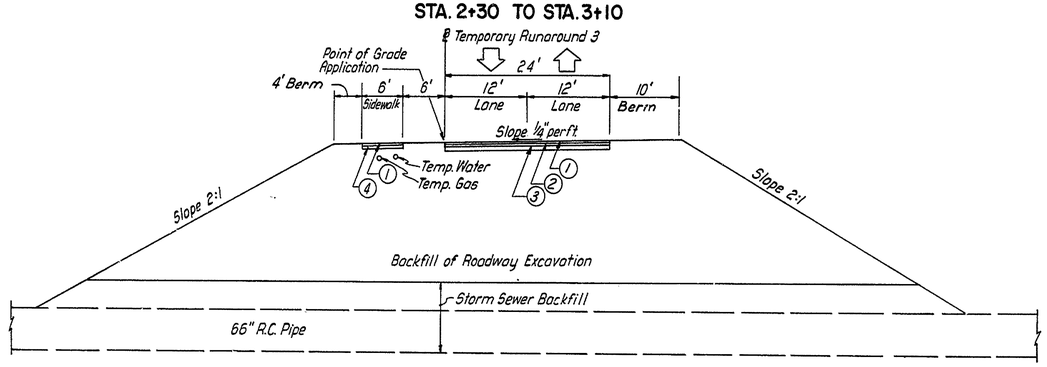

TYPICAL SECTION
STA. 1+50 TO STA. 2+30

LEGEND

1. 1 1/2" HOT MIX, HOT LAID ASPHALTIC CONCRETE WEARING COURSE, TYPE C
2. 2 1/2" HOT MIX, HOT LAID ASPHALTIC CONCRETE WEARING COURSE, TYPE B
3. 8" CRUSHER RUN BASE COURSE
4. 4" CRUSHER RUN BASE COURSE
5. 10" CRUSHER RUN BASE COURSE

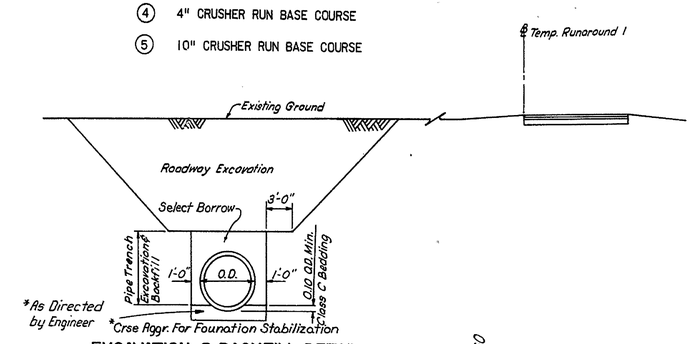

EXCAVATION & BACKFILL DETAIL
FOR STORM SEWER

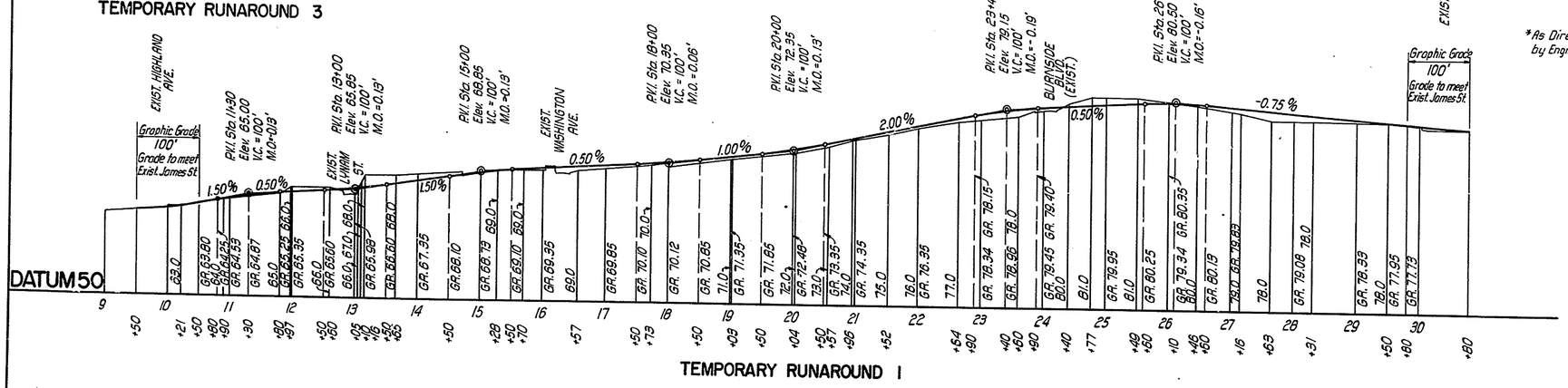

TEMPORARY RUNAROUND 1

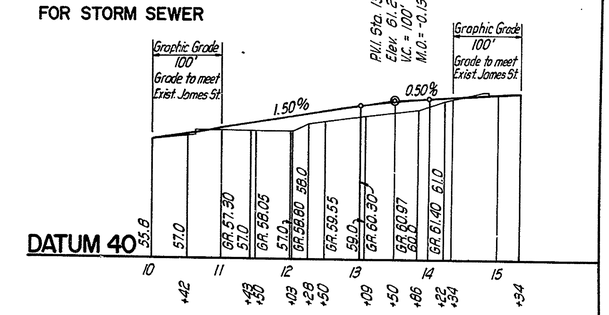

TEMPORARY RUNAROUND 2

COUNTY	CONTRACT	P.R.A. REG. NO.	STATE	FED. AID PROJECT NO.	SHEET NO.	TOTAL SHEETS
NEWCASTLE	71-02-009	2	DEL.		28	301

RELOCATED DELAWARE ROUTE 141
THRU NEWPORT

PREL. TRACING R.L.H. DESIGN P.C.S. CHKD. G.S.

REVISIONS

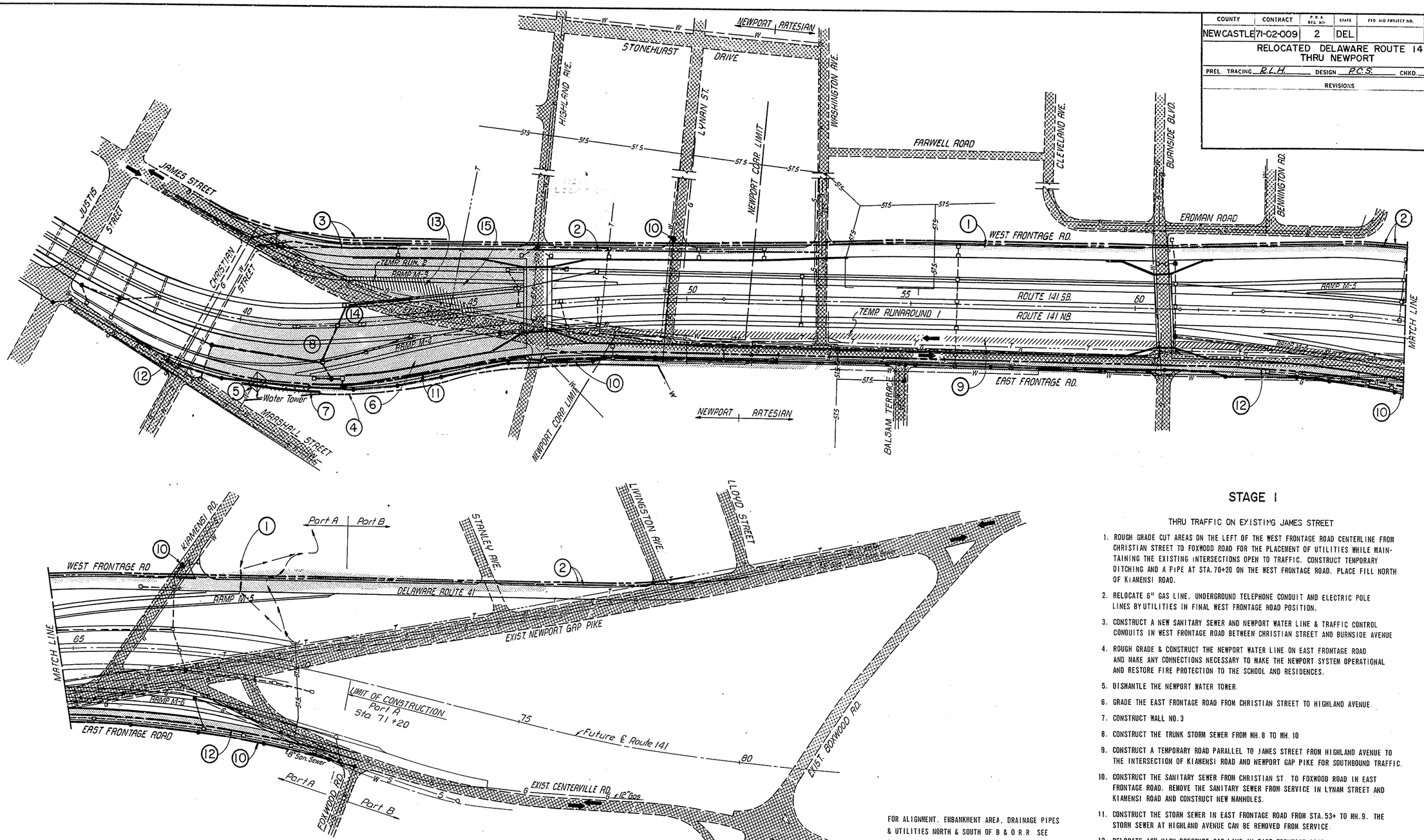

STAGE I

THRU TRAFFIC ON EXISTING JAMES STREET

1. ROUGH GRADE CUT AREAS ON THE LEFT OF THE WEST FRONTAGE ROAD CENTERLINE FROM CHRISTIAN STREET TO FOXWOOD ROAD FOR THE PLACEMENT OF UTILITIES WHILE MAINTAINING THE EXISTING INTERSECTIONS OPEN TO TRAFFIC. CONSTRUCT TEMPORARY DITCHING AND A PIPE AT STA. 70+20 ON THE WEST FRONTAGE ROAD. PLACE FILL NORTH OF KIAMENSI ROAD.
2. RELOCATE 6" GAS LINE. UNDERGROUND TELEPHONE CONDUIT AND ELECTRIC POLE LINES BY UTILITIES IN FINAL WEST FRONTAGE ROAD POSITION.
3. CONSTRUCT A NEW SANITARY SEWER AND NEWPORT WATER LINE & TRAFFIC CONTROL CONDUITS IN WEST FRONTAGE ROAD BETWEEN CHRISTIAN STREET AND BURNSIDE AVENUE
4. ROUGH GRADE & CONSTRUCT THE NEWPORT WATER LINE ON EAST FRONTAGE ROAD AND MAKE ANY CONNECTIONS NECESSARY TO MAKE THE NEWPORT SYSTEM OPERATIONAL AND RESTORE FIRE PROTECTION TO THE SCHOOL AND RESIDENCES.
5. DISMANTLE THE NEWPORT WATER TOWER.
6. GRADE THE EAST FRONTAGE ROAD FROM CHRISTIAN STREET TO HIGHLAND AVENUE.
7. CONSTRUCT WALL NO. 3
8. CONSTRUCT THE TRUNK STORM SEWER FROM MH. 8 TO MH. 10
9. CONSTRUCT A TEMPORARY ROAD PARALLEL TO JAMES STREET FROM HIGHLAND AVENUE TO THE INTERSECTION OF KIAMENSI ROAD AND NEWPORT GAP PIKE FOR SOUTHBOUND TRAFFIC.
10. CONSTRUCT THE SANITARY SEWER FROM CHRISTIAN ST. TO FOXWOOD ROAD IN EAST FRONTAGE ROAD. REMOVE THE SANITARY SEWER FROM SERVICE IN LYNAN STREET AND KIAMENSI ROAD AND CONSTRUCT NEW MANHOLES.
11. CONSTRUCT THE STORM SEWER IN EAST FRONTAGE ROAD FROM STA. 53+ TO MH. 9. THE STORM SEWER AT HIGHLAND AVENUE CAN BE REMOVED FROM SERVICE.
12. RELOCATE 12" HIGH PRESSURE GAS LINE IN EAST FRONTAGE ROAD.
13. CONSTRUCT A TEMPORARY RUNAROUND AT STA. 43 FOR TRAFFIC ON JAMES STREET.
14. CONSTRUCT TRUNK STORM SEWER FROM MH. NO. 10 ACROSS JAMES STREET.
15. REMOVE TEMPORARY RUNAROUND AT STA. 43 FROM SERVICE AND GRADE THE AREA WEST OF JAMES STREET AND SOUTH OF HIGHLAND AVENUE.

FOR ALIGNMENT, EMBANKMENT AREA, DRAINAGE PIPES & UTILITIES NORTH & SOUTH OF B & O R.R. SEE PLANS - PART B

FOR TEMPORARY RUNAROUNDS PLAN, PROFILES & TYPICAL SECTIONS SEE SHEET NO. 27

FOR GENERAL POSITION OF UTILITIES IN FRONTAGE ROADS SEE TYPICAL SECTION SHEET NO. 19

LEGEND

EXISTING		PROPOSED		PROPOSED	
—W— —W—	WATER		SAN. SEWER		ROADS OPEN TO TRAFFIC
—S—	SAN. SEWER		PILES FOR BRIDGE ABUTMENTS & WALLS		TEMP. ROADS & SIDEWALKS
—T— —T—	TELEPHONE		SAN. & STORM SEWERS & NEWPORT WATER SERVICE		EXCAVATION AREA
—STS— —STS—	STORM SEWER		PRIVATE UTILITY COMPANIES GAS, TELEPHONE & WATER		ROADWAY PAVING, BRIDGE & WALL RELATED CONSTRUCTION
—G—	GAS		STORM DRAINAGE SYSTEM		

COUNTY	CONTRACT	P.B.A. REG. NO.	STATE	FED. AID PROJECT NO.	SHEET NO.	TOTAL SHEETS
NEWCASTLE	71-02-009	2	DEL.		29	301

RELOCATED DELAWARE ROUTE 141
THRU NEWPORT

PREL. TRACING RLH DESIGN P.C.S. CHKD. P.C.S.

REVISIONS

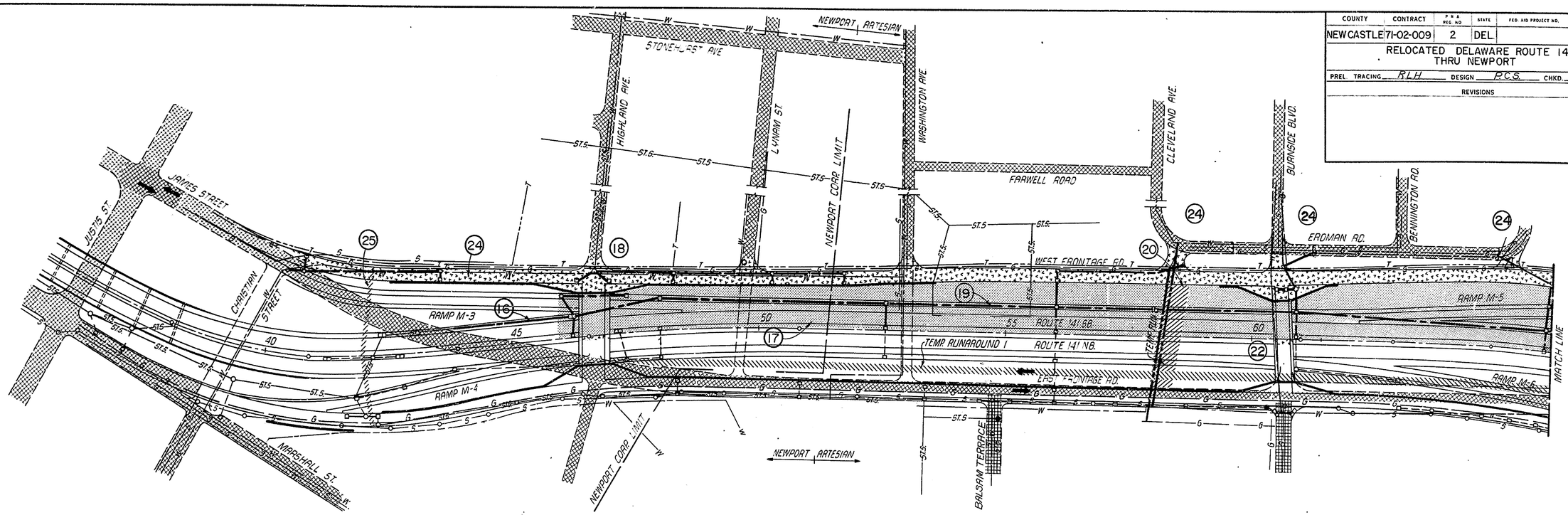

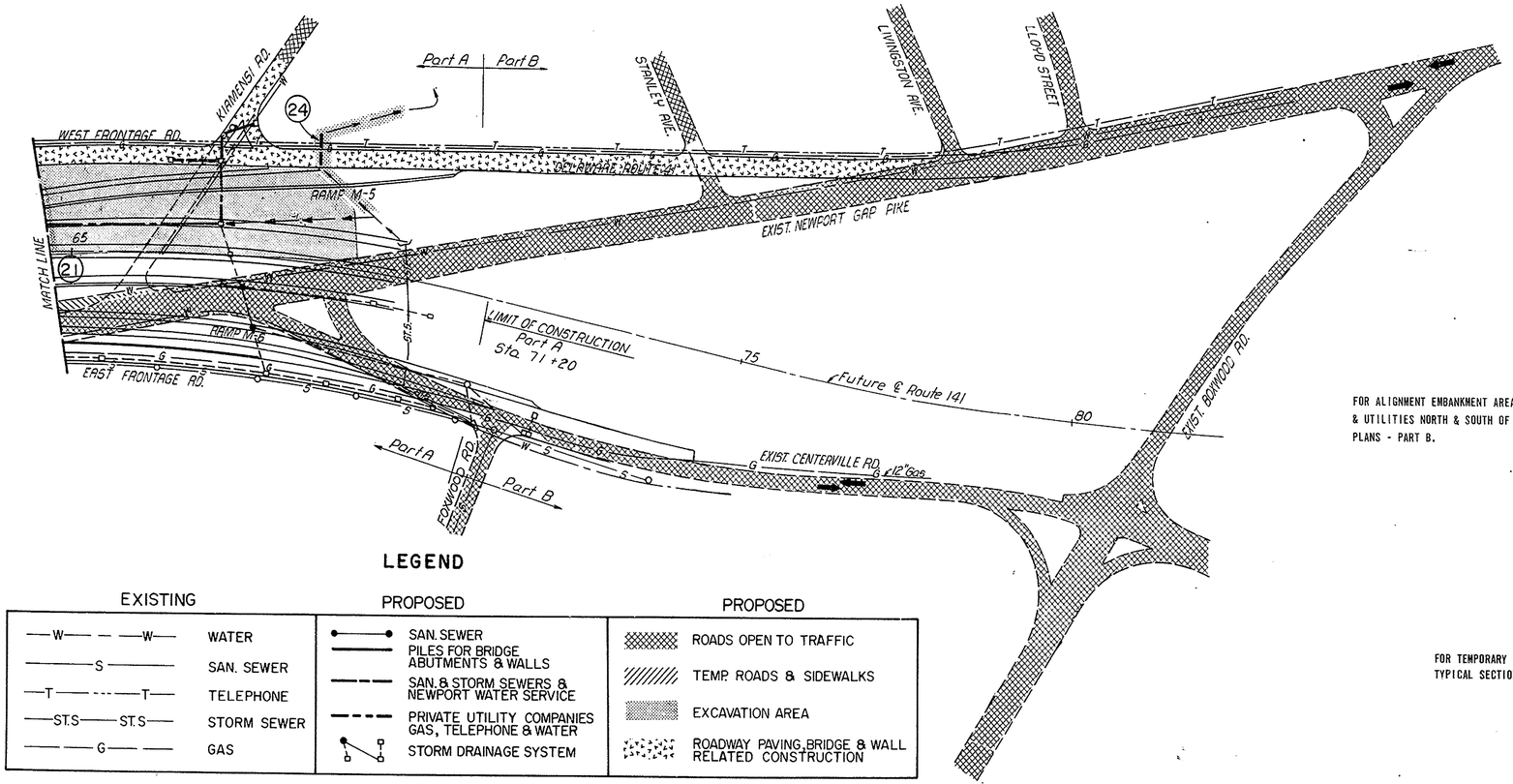

STAGE 2

THRU TRAFFIC ON EXISTING JAMES STREET

16. CONSTRUCT TRUNK STORM SEWER FROM JAMES STREET TO MH. 12.
17. GRADE WEST PORTION OF EXCAVATION ROUTE 141 STA. 46 TO STA. 59+50
18. DRIVE PILES FOR WALLS NO. 1 AND 2, AND WEST ABUTMENT AND PIER FOR THE HIGHLAND AVENUE BRIDGE.
19. CONSTRUCT TRUNK STORM SEWER MH. 12 TO ROUTE 141 STA. 59+50.
20. CONSTRUCT BACKFILL FOR TEMPORARY RUNAROUND FOR BURNSIDE BLVD. BRIDGE. UTILITY COMPANIES WILL PLACE TEMPORARY GAS AND WATER SERVICES BEFORE THE CONTRACTOR PAVES THE TEMPORARY RUNAROUND AND SIDEWALK.
21. GRADE WEST PORTION OF EXCAVATION ROUTE 141 STA. 59+50 TO STA. 69
22. DRIVE PILES FOR WEST ABUTMENT AND PIER OF THE BURNSIDE BLVD. BRIDGE.
23. CONSTRUCT TRUNK STORM SEWER FROM ROUTE 141 STA. 59+50 TO MH. # 18 & DIVERT EXISTING DRAINAGE.
24. PLUG TEMPORARY PIPE AT STA. 70+20 ON THE WEST FRONTAGE ROAD. COMPLETE DRAINAGE, CURBS, WALLS, SIDEWALK AND PAVING FOR THE WEST FRONTAGE ROAD FROM CHRISTIAN STREET TO STATE ROUTE 141.
25. CONSTRUCT A TEMPORARY BITUMINOUS SIDEWALK FOR SCHOOL CHILDREN AT ROUTE 141 STA. 42+60 ON STATE ROUTE 141.

FOR ALIGNMENT EMBANKMENT AREA. DRAINAGE PIPES & UTILITIES NORTH & SOUTH OF B.& O.R.R. SEE PLANS - PART B.

FOR TEMPORARY RUNAROUNDS PLAN, PROFILES & TYPICAL SECTIONS SEE SHEET NO. 27

LEGEND

EXISTING		PROPOSED		PROPOSED	
—W— — —W—	WATER		SAN. SEWER		ROADS OPEN TO TRAFFIC
—S—	SAN. SEWER		PILES FOR BRIDGE ABUTMENTS & WALLS		TEMP. ROADS & SIDEWALKS
—T— - - —T—	TELEPHONE		SAN. & STORM SEWERS & NEWPORT WATER SERVICE		EXCAVATION AREA
—ST.S— ST.S—	STORM SEWER		PRIVATE UTILITY COMPANIES GAS, TELEPHONE & WATER		ROADWAY PAVING, BRIDGE & WALL RELATED CONSTRUCTION
—G—	GAS		STORM DRAINAGE SYSTEM		

COUNTY	CONTRACT	P B A REG NO	STATE	FED AID PROJECT NO.	SHEET NO	TOTAL SHEETS
NEW CASTLE	71-02-009	2	DEL.		30	301

RELOCATED DELAWARE ROUTE 141
THRU NEWPORT

PREL. TRACING R.L.H. DESIGN P.C.S. CHKD. G.S.

REVISIONS

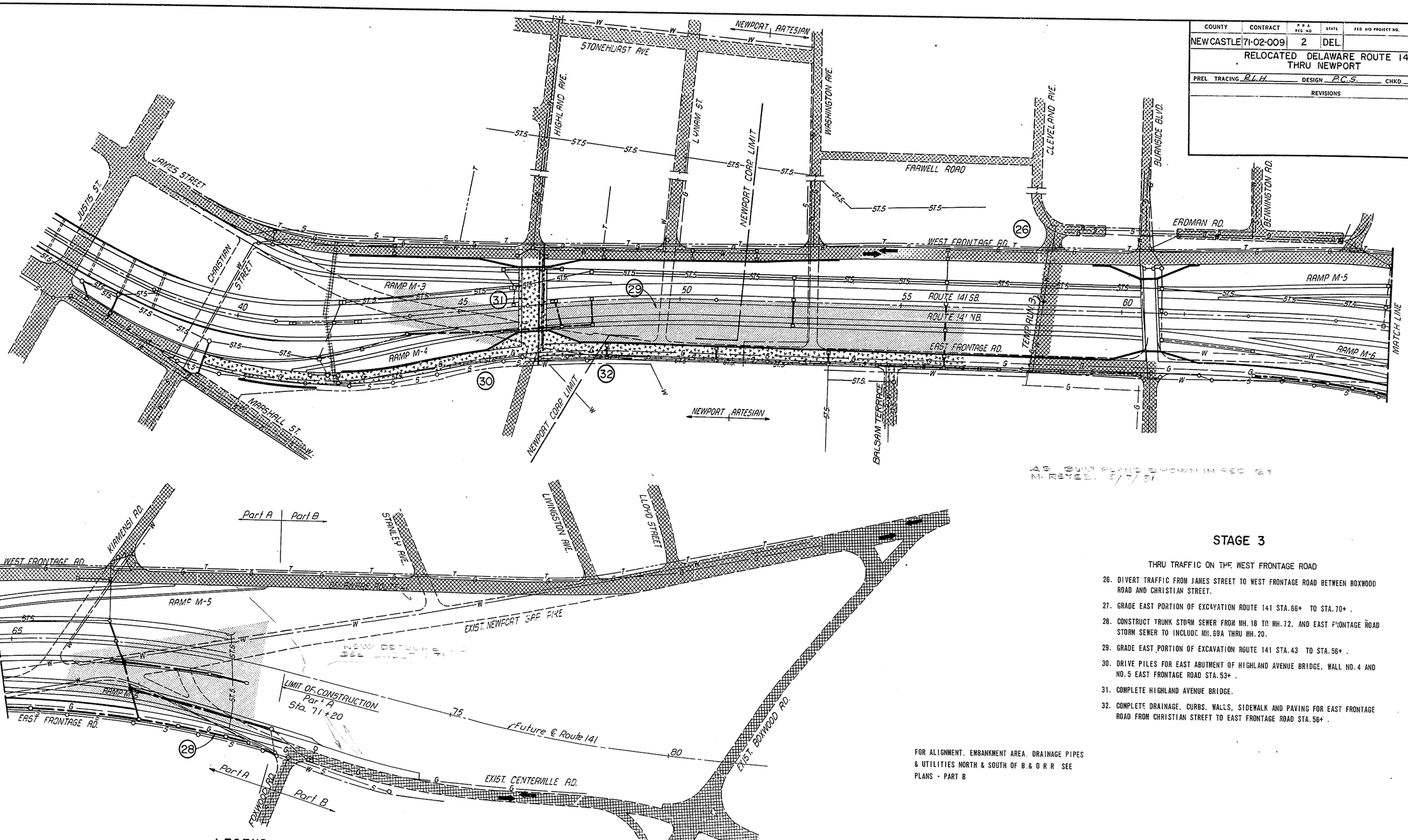

AS BUILT PLANS SHOWN IN RED BY M. REYES. 8/7/81

STAGE 3

THRU TRAFFIC ON THE WEST FRONTAGE ROAD

26. DIVERT TRAFFIC FROM JAMES STREET TO WEST FRONTAGE ROAD BETWEEN BOXWOOD ROAD AND CHRISTIAN STREET.
27. GRADE EAST PORTION OF EXCAVATION ROUTE 141 STA. 66+ TO STA. 70+ .
28. CONSTRUCT TRUNK STORM SEWER FROM MH. 18 TO MH. 72, AND EAST FRONTAGE ROAD STORM SEWER TO INCLUDE MH. 69A THRU MH. 20.
29. GRADE EAST PORTION OF EXCAVATION ROUTE 141 STA. 43 TO STA. 56+ .
30. DRIVE PILES FOR EAST ABUTMENT OF HIGHLAND AVENUE BRIDGE, WALL NO. 4 AND NO. 5 EAST FRONTAGE ROAD STA. 53+ .
31. COMPLETE HIGHLAND AVENUE BRIDGE.
32. COMPLETE DRAINAGE, CURBS, WALLS, SIDEWALK AND PAVING FOR EAST FRONTAGE ROAD FROM CHRISTIAN STREET TO EAST FRONTAGE ROAD STA. 56+ .

FOR ALIGNMENT, EMBANKMENT AREA, DRAINAGE PIPES & UTILITIES NORTH & SOUTH OF B.& O R R SEE PLANS - PART B

FOR TEMPORARY RUNAROUNDS PLAN, PROFILES & TYPICAL SECTIONS, SEE SHEET NO. 27

LEGEND

EXISTING		PROPOSED	PROPOSED
—W— — —W—	WATER	SAN. SEWER	ROADS OPEN TO TRAFFIC
—S—	SAN. SEWER	PILES FOR BRIDGE ABUTMENTS & WALLS	TEMP. ROADS & SIDEWALKS
—T— - - —T—	TELEPHONE	SAN. & STORM SEWERS & NEWPORT WATER SERVICE	EXCAVATION AREA
—ST.S— ST.S—	STORM SEWER	PRIVATE UTILITY COMPANIES GAS, TELEPHONE & WATER	ROADWAY PAVING, BRIDGE & WALL RELATED CONSTRUCTION
—G—	GAS	STORM DRAINAGE SYSTEM	

COUNTY	CONTRACT	P.D.A. REG. NO.	STATE	FED. AID PROJECT NO.	SHEET NO.	TOTAL SHEETS
NEW CASTLE	71-02-009	2	DEL.		31	301

RELOCATED DELAWARE ROUTE 141
THRU NEWPORT

PREL. TRACING R.L.H. DESIGN P.C.S. CHKD. P.C.S.

REVISIONS

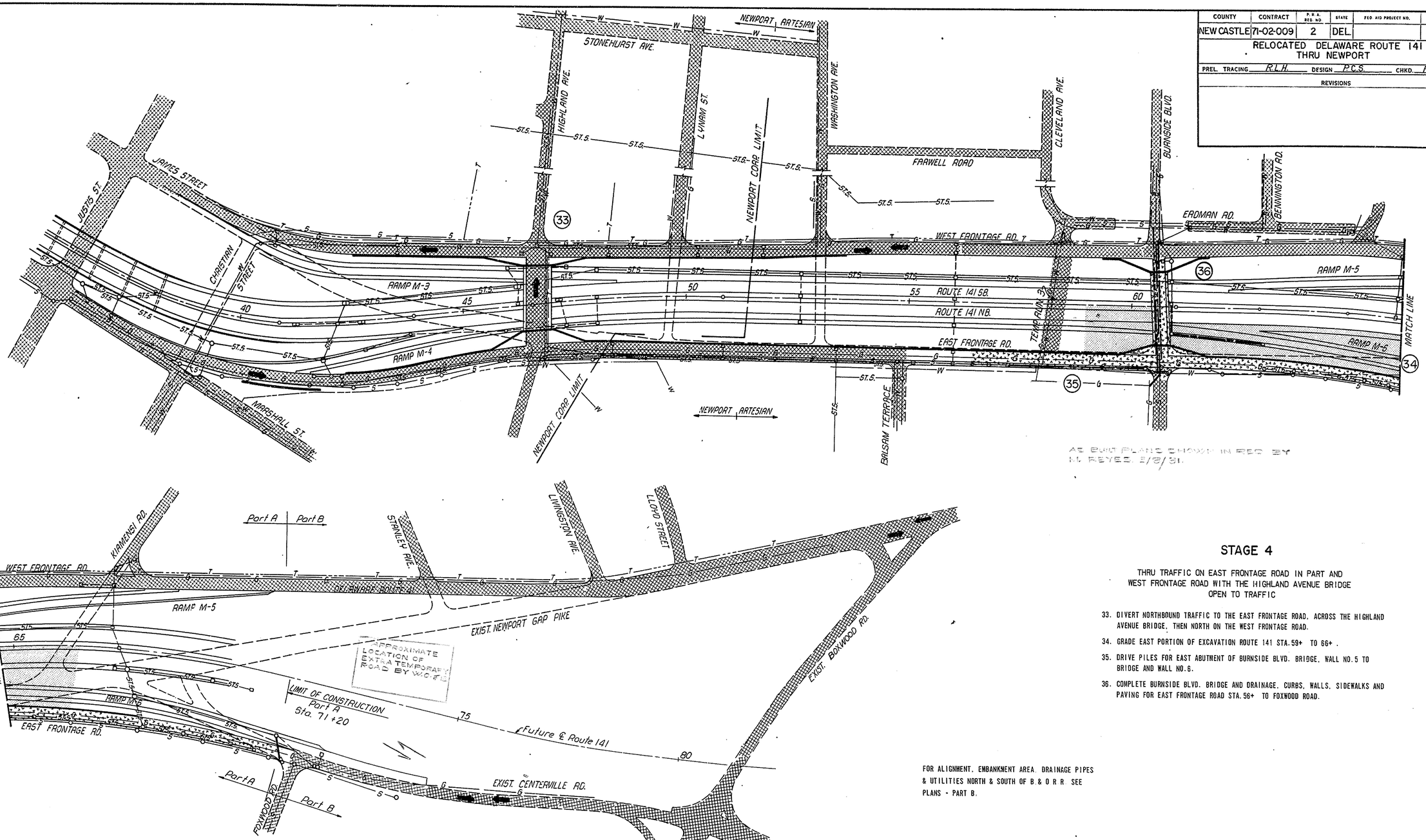

AS BUILT PLANS SHOWN IN RED BY M. REYES. 2/2/81.

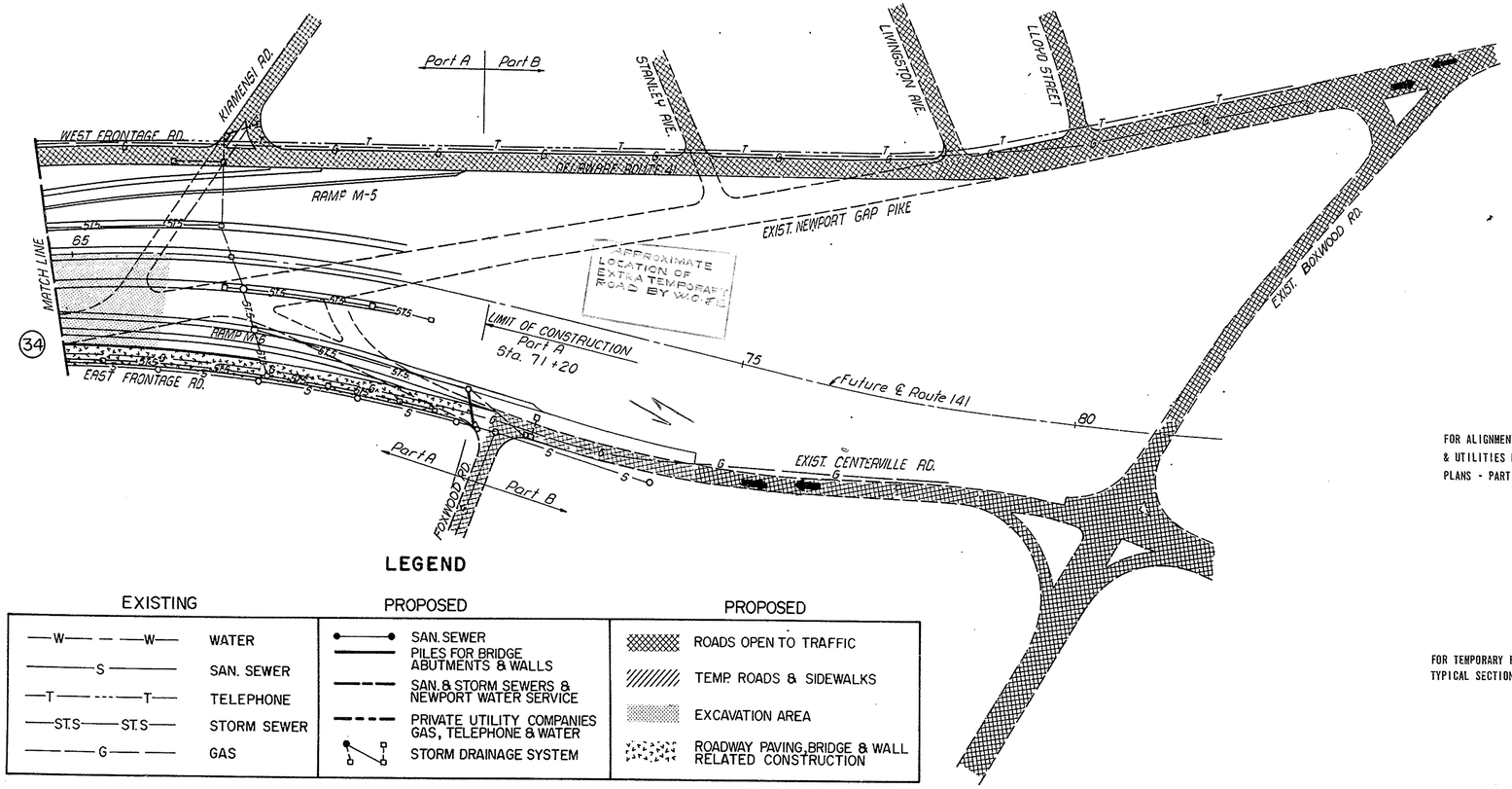

STAGE 4

THRU TRAFFIC ON EAST FRONTAGE ROAD IN PART AND WEST FRONTAGE ROAD WITH THE HIGHLAND AVENUE BRIDGE OPEN TO TRAFFIC

33. DIVERT NORTHBOUND TRAFFIC TO THE EAST FRONTAGE ROAD, ACROSS THE HIGHLAND AVENUE BRIDGE, THEN NORTH ON THE WEST FRONTAGE ROAD.
34. GRADE EAST PORTION OF EXCAVATION ROUTE 141 STA.59+ TO 66+ .
35. DRIVE PILES FOR EAST ABUTMENT OF BURNSIDE BLVD. BRIDGE, WALL NO.5 TO BRIDGE AND WALL NO.6.
36. COMPLETE BURNSIDE BLVD. BRIDGE AND DRAINAGE, CURBS, WALLS, SIDEWALKS AND PAVING FOR EAST FRONTAGE ROAD STA.56+ TO FOXWOOD ROAD.

FOR ALIGNMENT, EMBANKMENT AREA, DRAINAGE PIPES & UTILITIES NORTH & SOUTH OF B.&O.R.R. SEE PLANS - PART B.

FOR TEMPORARY HOMAROUNDS PLAN, PROFILES & TYPICAL SECTIONS, SEE SHEET NO 27

LEGEND

EXISTING		PROPOSED	PROPOSED
—W— — —W—	WATER	SAN. SEWER	ROADS OPEN TO TRAFFIC
—S—	SAN. SEWER	PILES FOR BRIDGE ABUTMENTS & WALLS	TEMP. ROADS & SIDEWALKS
—T— - - —T—	TELEPHONE	SAN. & STORM SEWERS & NEWPORT WATER SERVICE	EXCAVATION AREA
—ST.S— ST.S—	STORM SEWER	PRIVATE UTILITY COMPANIES GAS, TELEPHONE & WATER	ROADWAY PAVING, BRIDGE & WALL RELATED CONSTRUCTION
— — G — —	GAS	STORM DRAINAGE SYSTEM	

COUNTY	CONTRACT	P.B.A. REG. NO.	STATE	FED. AID PROJECT NO.	SHEET NO.	TOTAL SHEETS
NEW CASTLE	71-02-009	2	DEL.		32	301

RELOCATED DELAWARE ROUTE 141
THRU NEWPORT

PREL. TRACING R.L.H. DESIGN P.C.S. CHKD. P.C.S.

REVISIONS

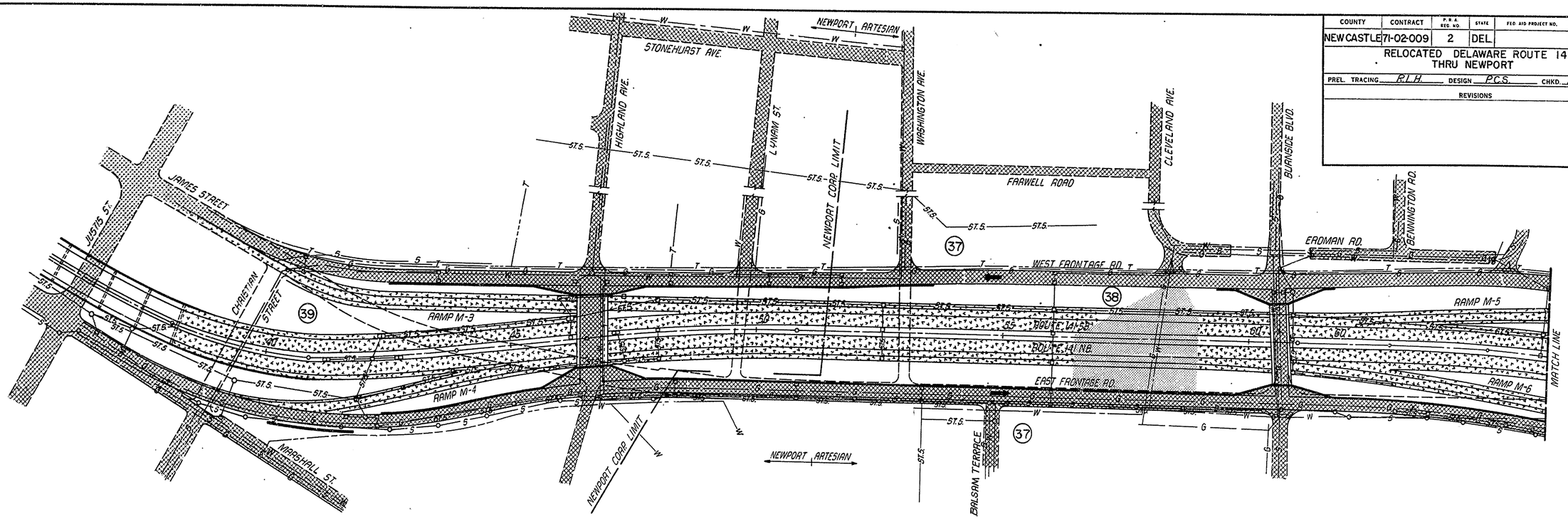

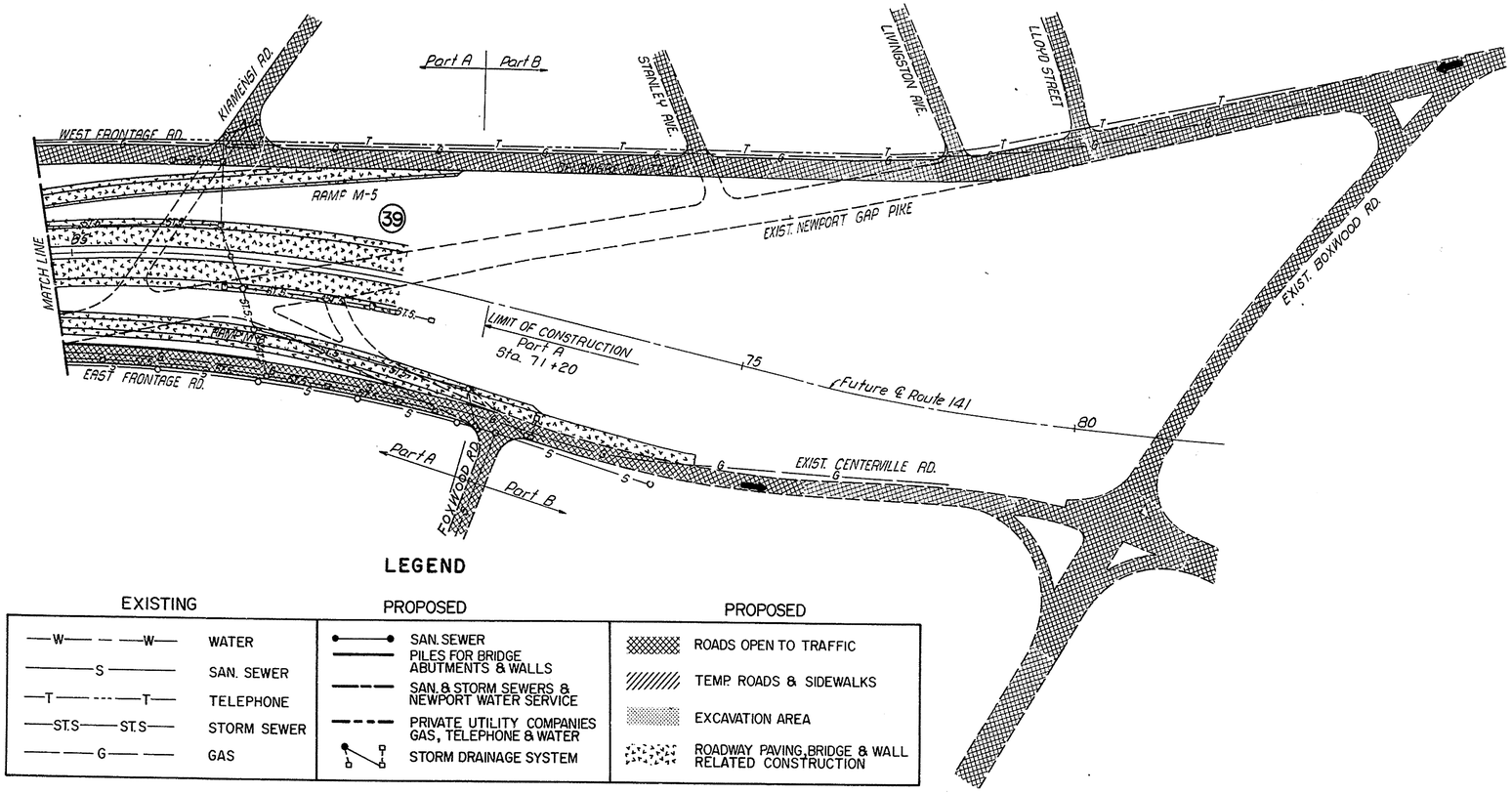

STAGE 5

THRU TRAFFIC ON EAST AND WEST FRONTAGE ROADS

37. PLACE DIRECTIONAL TRAFFIC ON EAST AND WEST FRONTAGE ROADS.
38. REMOVE TEMPORARY RUNAROUND FOR BURNSIDE BLVD. BRIDGE, COMPLETE EXCAVATION FOR DEPRESSED AREA.
39. COMPLETE DEPRESSED AREA PAVEMENT AND RAMPS.

FOR ALIGNMENT, EMBANKMENT AREA, DRAINAGE PIPES & UTILITIES NORTH & SOUTH OF B.& O.R.R. SEE PLANS - PART B

FOR TEMPORARY RUNAROUNDS PLAN, PROFILES & TYPICAL SECTIONS, SEE SHEET NO. 27

LEGEND

EXISTING		PROPOSED		PROPOSED	
—W— — —W—	WATER	SAN. SEWER		ROADS OPEN TO TRAFFIC	
—S—	SAN. SEWER	PILES FOR BRIDGE ABUTMENTS & WALLS		TEMP. ROADS & SIDEWALKS	
—T— - - —T—	TELEPHONE	SAN. & STORM SEWERS & NEWPORT WATER SERVICE		EXCAVATION AREA	
—ST.S— ST.S—	STORM SEWER	PRIVATE UTILITY COMPANIES GAS, TELEPHONE & WATER		ROADWAY PAVING, BRIDGE & WALL RELATED CONSTRUCTION	
—G—	GAS	STORM DRAINAGE SYSTEM			

STEEL REINFORCEMENT

(UNLESS OTHERWISE NOTED ALL DEFORMED BAR SHALL MEET THE FOLLOWING REQUIREMENTS)

NO. 4 BAR - ASTM A-615 GRADE 40 OR 60
NO. 5 BAR - ASTM A-615 GRADE 60
NO. 6 BAR - ASTM A-615 GRADE 60

COUNTY	CONTRACT	P.W.A. REG. NO.	STATE	FED. AID PROJECT NO.	SHEET NO.	TOTAL SHEETS
	2 DEL				33	301

STANDARD SHEET P-3
9" CONTINUOUSLY REINFORCED P.C.C. PAVEMENT

PREL. TRACING J.T.B. DESIGN A.D. CHKD. A.D.

REVISIONS

APPROVED R.R. Bohn DIRECTOR OF HIGHWAYS 12-7-73 DATE
R.E. Funsetti CHIEF ENGINEER 12/7/73 DATE

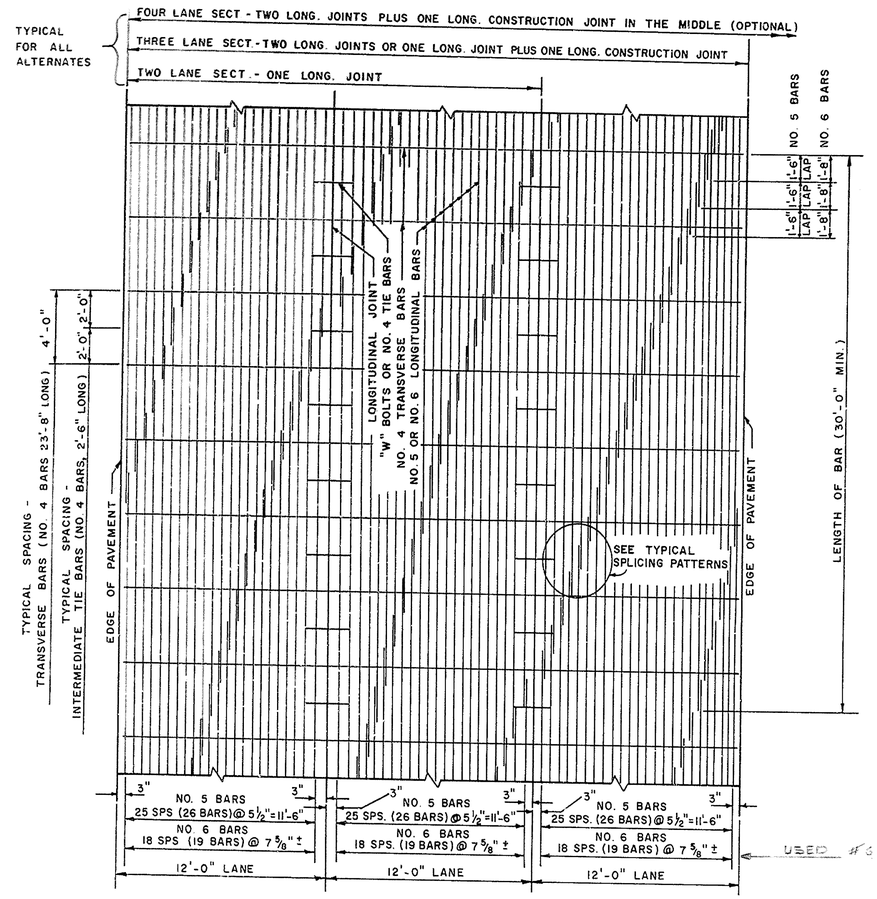

PLAN VIEW

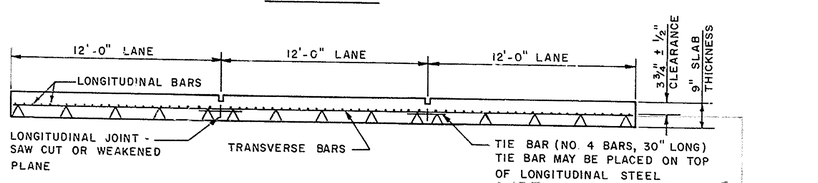

NOTE:
STEEL REINF. MUST BE PRE-SET.

TRANSVERSE SECTION
SHOWING NO. 5 BARS

BAR REINFORCEMENT
CONSTRUCTION METHOD 1-9

1 0 1 2 3 4 5

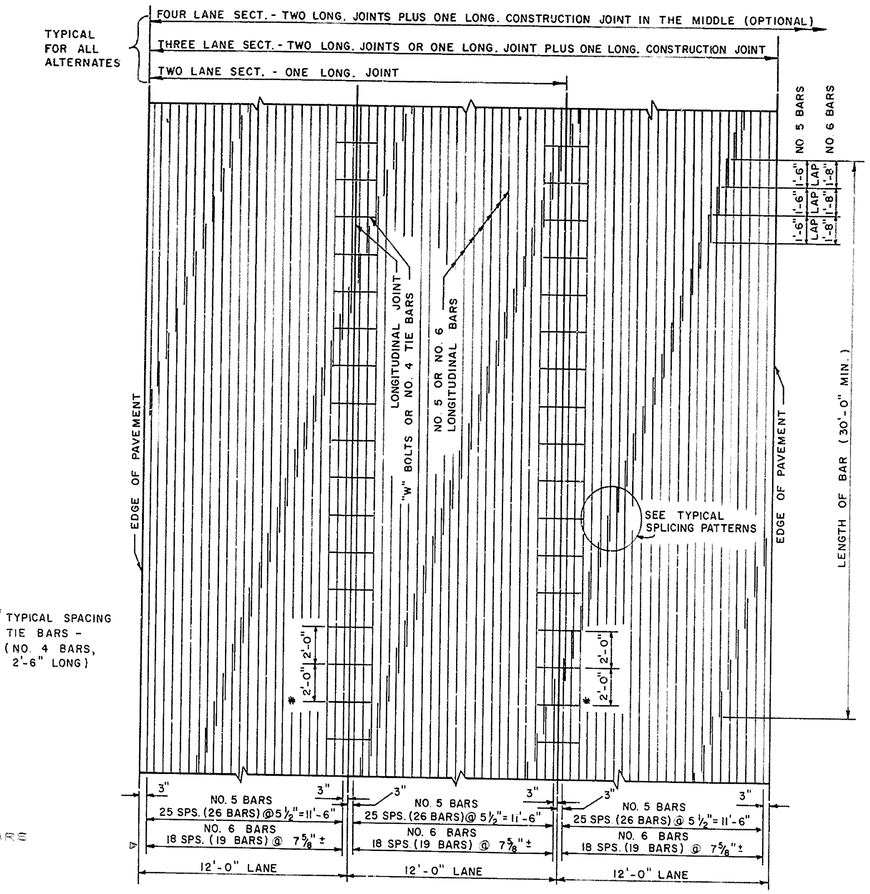

* TYPICAL SPACING TIE BARS - (NO. 4 BARS, 2'-6" LONG)

PLAN VIEW

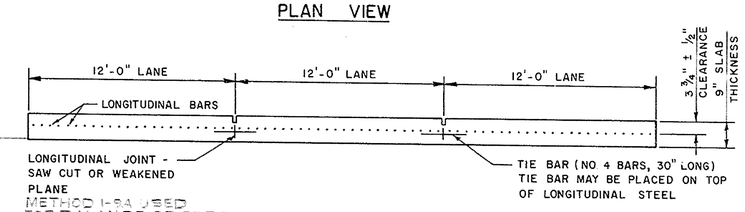

TRANSVERSE SECTION
SHOWING NO. 5 BARS

BAR REINFORCEMENT
CONSTRUCTION METHOD 1-9A

1 0 1 2 3 4 5

NOTE:
THIS CONSTRUCTION METHOD WILL BE PERMITTED ONLY IF THE CONTRACTOR HAS EQUIPMENT DESIGNED SPECIFICALLY TO LOCATE THE STEEL AS REQUIRED.

TYPICAL SPLICING PATTERNS

NO. 1

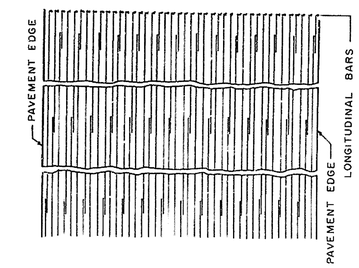

NO. 2

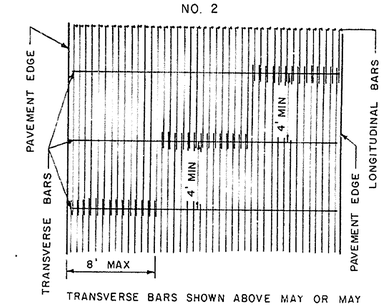

TRANSVERSE BARS SHOWN ABOVE MAY OR MAY NOT BE USED SEE METHOD 1-9 OR 1-9A
MINIMUM STAGGER OF SPLICES : 4'

NO. 3

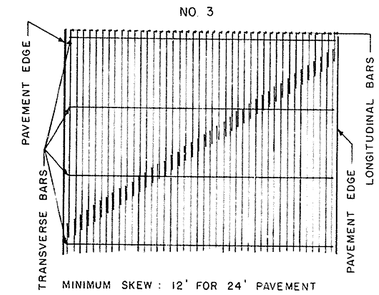

MINIMUM SKEW : 12' FOR 24' PAVEMENT

NOTE:
IN SPLICING PATTERNS NO 1 AND NO 2, MAXIMUM NUMBER OF LONGITUDINAL BARS SPLICED AT ONE LOCATION = 2/3 NUMBER PER TRAFFIC LANE (12'), MINIMUM STAGGER = 4'. CONTRACTOR MAY USE OTHER PATTERNS IF APPROVED IN WRITING BY THE ENGINEER.

(NO SCALE)

COUNTY	CONTRACT	P.K.A. REG. NO.	STATE	FED. AID PROJECT NO.	SHEET NO.	TOTAL SHEETS
		2	DEL.		34	301

STANDARD SHEET P-4

DETAILS - 9" CONTINUOUSLY REINFORCED P.C.C. PAVEMENT

PREL. TRACING J.T.B. DESIGN A.D CHKD. A.D

REVISIONS

APPROVED R. P. Sharp 12-7-73
DIRECTOR OF HIGHWAYS DATE

R. E. Tomastik 12/7/73
CHIEF ENGINEER DATE

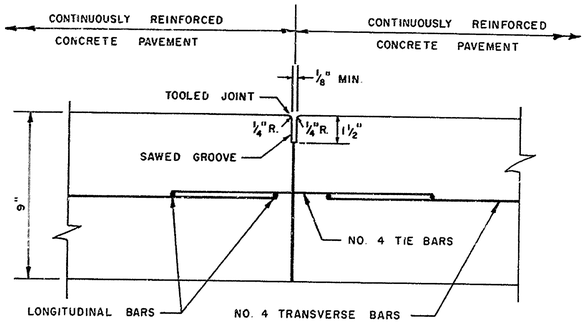

LONGITUDINAL CONSTRUCTION JOINT

NOTE:
NO. 5 TIE BARS, OR "W" BOLTS, AT 2'-0" ON CENTER REQUIRED AT MIDDLE LONGITUDINAL JOINT FOR 4 LANES (NO. 4 BARS AT ALL OTHER LOCATIONS EXCEPT TIES FOR RAMP CONNECTION).
ACCUMULATION OF EXCESS FINISHING GROUT AT JOINT FACE SHALL BE REMOVED PRIOR TO PLACEMENT OF ADJOINING CONCRETE PAVEMENT.

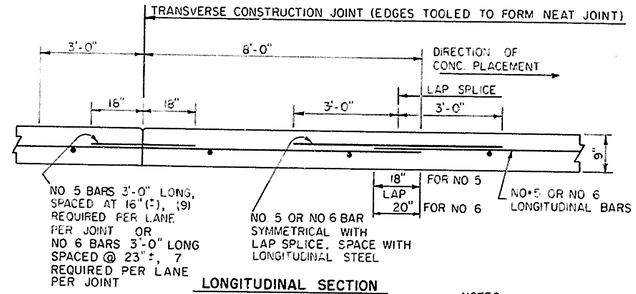

LONGITUDINAL SECTION SHOWING TRANSVERSE CONSTRUCTION JOINT

NOTES:
ALTERNATE METHODS OF PROVIDING REQUIRED TIE STEEL AREA WILL BE PERMITTED WHEN APPROVED IN WRITING BY THE ENGINEER

EXTRA BAR METHOD APPLIES ONLY TO LAPS FALLING WITHIN AN AREA FROM 8' BEYOND TO 3' BEHINE THE TRANSVERSE CONSTRUCTION JOINT

NOTES:
REFER TO SPECIAL PROVISIONS FOR DETAILS OF LONGITUDINAL JOINT CONSTRUCTION

EXTRA BAR METHOD

BAR REINFORCEMENT
CONSTRUCTION METHOD 1-9, 1-9A

VIBRATION WITH HAND MANIPULATED MECHANICAL VIBRATORS REQUIRED ADJACENT TO ALL TRANSVERSE CONSTRUCTION JOINTS

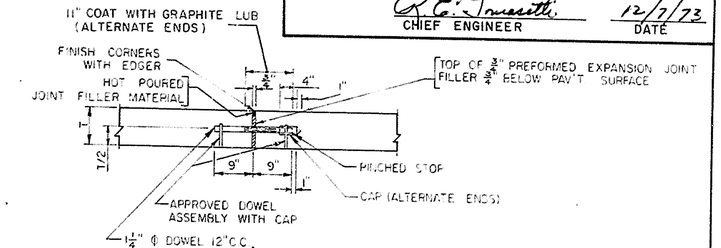

EXPANSION JOINT WITH LOAD TRANSFER DEVICE DETAIL

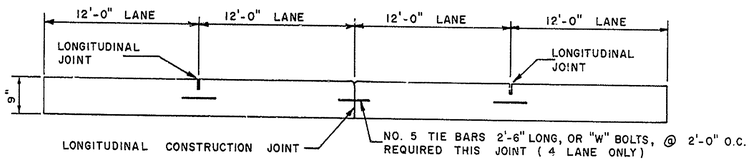

TRANSVERSE SECTION
(FOUR LANE ONLY)

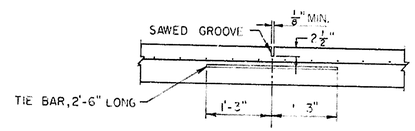

LONGITUDINAL SAW CUT JOINT DETAIL

REFER TO SPECIAL PROVISIONS FOR DETAILS ON WEAKENED PLANE JOINT AS ALTERNATE TO SAWING. TIE BAR MAY BE PLACED ON TOP OR BOTTOM OF LONGITUDINAL STEEL REINFORCEMENT.

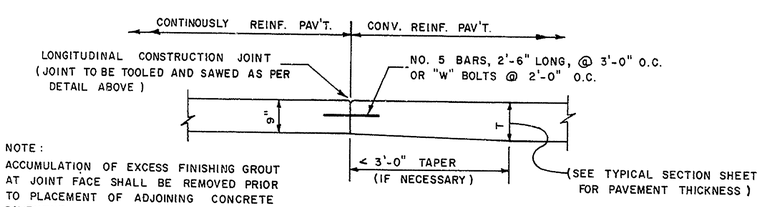

NOTE:
ACCUMULATION OF EXCESS FINISHING GROUT AT JOINT FACE SHALL BE REMOVED PRIOR TO PLACEMENT OF ADJOINING CONCRETE PAVEMENT.

SECTION A-A

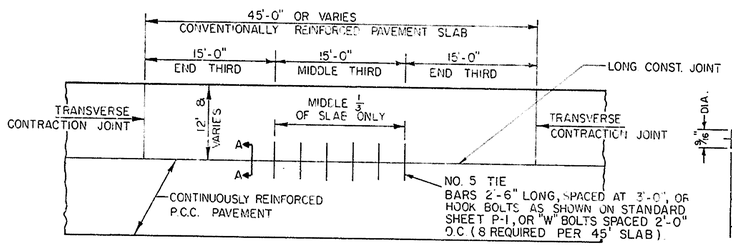

ADJACENT CONVENTIONAL & CONTINUOUSLY REINFORCED PAVEMENTS
(RAMP & MAINLINE CONNECTION)

PLAN VIEW

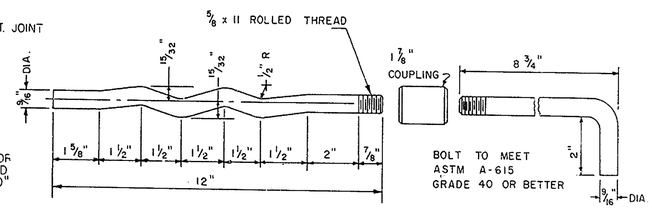

ASSEMBLED "W" BOLT SHALL HAVE A MINIMUM BREAKING LOAD OF 16,000 LBS.

NOTE:
ALTERNATE "W" BOLT CONFIGURATIONS SHALL BE SUBMITTED TO THE ENGINEER FOR APPROVAL.

"W" BOLT DETAIL

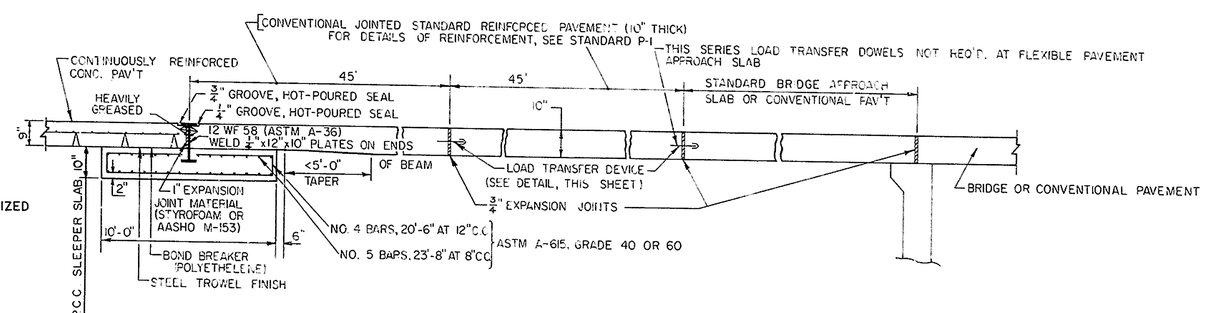

TERMINAL JOINT DETAIL

NOTES (TERMINAL JOINT DETAILS):
AFTER ASSEMBLY, WF BEAM TO BE HOT-DIPPED GALVANIZED IN ACCORDANCE WITH ASTM A-123 (BEAM TO BE FABRICATED TO MATCH PAVEMENT CROWN OR SLOPE).

ALL AREAS OF CONTACT BETWEEN THE WF BEAM ASSEMBLY AND ADJOINING PAVEMENTS SHALL BE LUBRICATED WITH GRAPHITE OR GREASE.

GENERAL NOTES:
(1) SEE TYPICAL SECTION SHEETS FOR PAVEMENT CROWN/TRANSVERSE SLOPE AND POINT OF GRADE APPLICATION
(2) HOOK BOLTS MAY BE USED WHEN PLACING FORMED CONCRETE PAVEMENT.
(3) DETAIL FOR HOOK BOLTS CAN BE FOUND ON STANDARD SHEET P-1.
(4) "W" BOLTS SHALL BE MECHANICALLY INSERTED.
(5) SAWED JOINTS SHALL BE SEALED WITH HOT-POURED SEALANT.

COUNTY	CONTRACT	STATE	FED. AID PROJ. NO.	SHEET	TOTAL SHEETS
2	DEL			35	301

STANDARD SHEET P-5
8" CONTINUOUSLY REINFORCED PCC PAVEMENT

PREL. TRACING J T B DESIGN A D CHKD A D

REVISIONS

APPROVED R. M. Weber 12-7-73
DIRECTOR OF HIGHWAYS DATE

R. E. Truscotti 12/7/73
CHIEF ENGINEER DATE

STEEL REINFORCEMENT

(UNLESS OTHERWISE NOTED ALL DEFORMED BAR SHALL MEET THE FOLLOWING REQUIREMENTS)

NO. 4 BAR - ASTM A-615 GRADE 40 OR 60
NO. 5 BAR - ASTM A-615 GRADE 60
NO. 6 BAR - ASTM A-615 GRADE 60

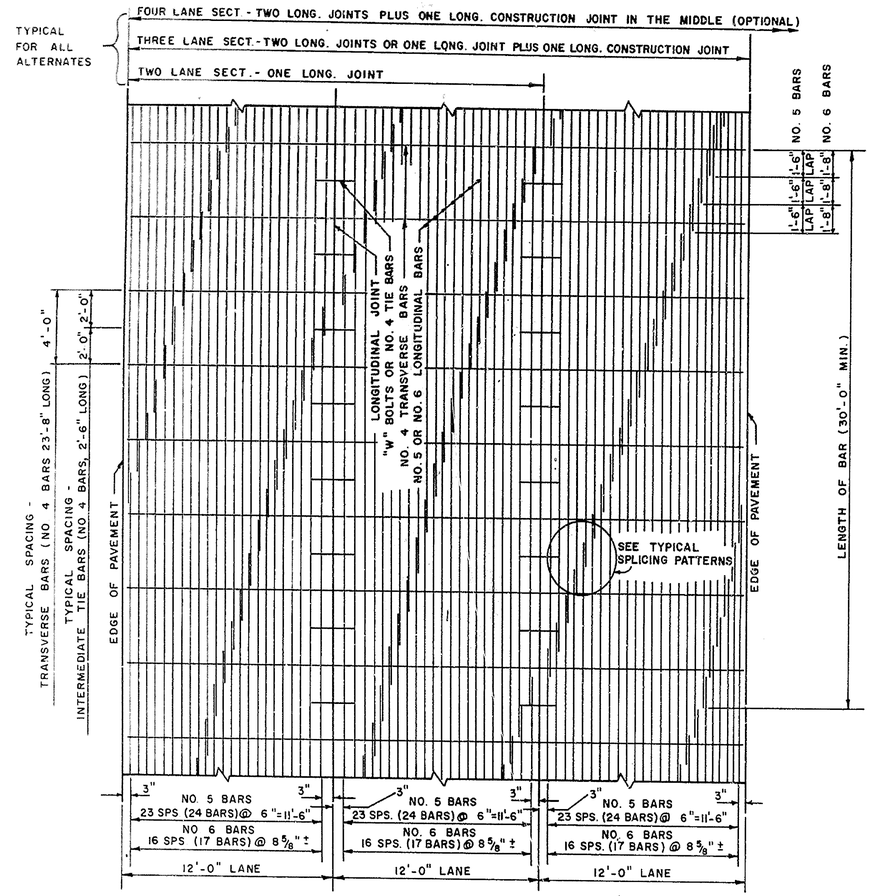

PLAN VIEW

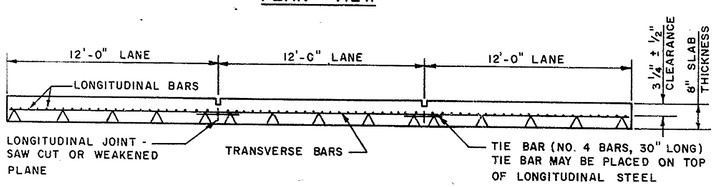

NOTE
STEEL REINF. MUST BE PRE-SET.

TRANSVERSE SECTION
SHOWING NO. 5 BARS

BAR REINFORCEMENT
CONSTRUCTION METHOD 1-8

1 0 1 2 3 4 5

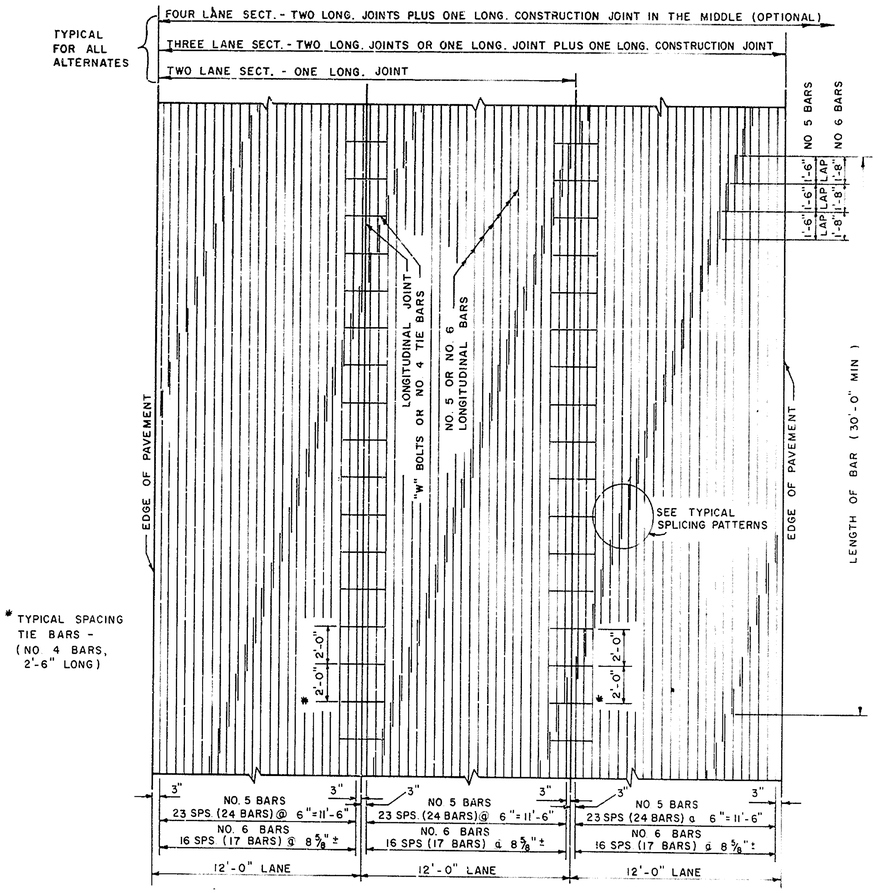

PLAN VIEW

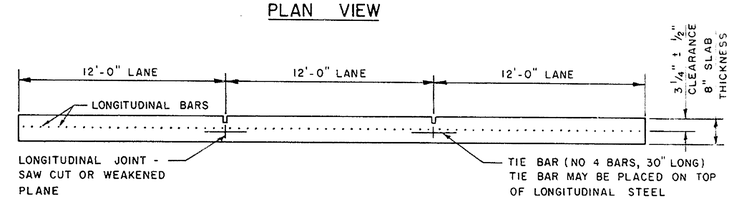

TRANSVERSE SECTION
SHOWING NO. 5 BARS

BAR REINFORCEMENT
CONSTRUCTION METHOD 1-8A

1 0 1 2 3 4 5

NOTE:
THIS CONSTRUCTION METHOD WILL BE PERMITTED ONLY IF THE CONTRACTOR HAS EQUIPMENT DESIGNED SPECIFICALLY TO LOCATE THE STEEL AS REQUIRED.

TYPICAL SPLICING PATTERNS

NO 1

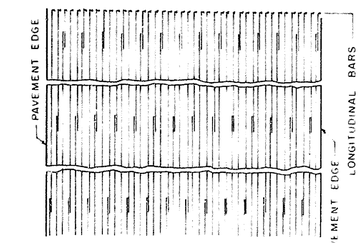

NO 2

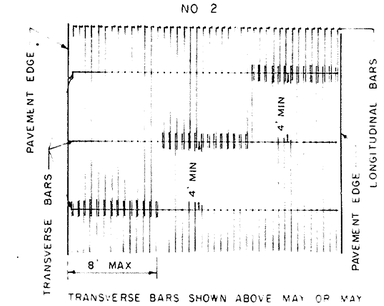

TRANSVERSE BARS SHOWN ABOVE MAY OR MAY NOT BE USED SEE METHOD 1-8 OR 1-8A
MINIMUM STAGGER OF SPLICES 4

NO 3

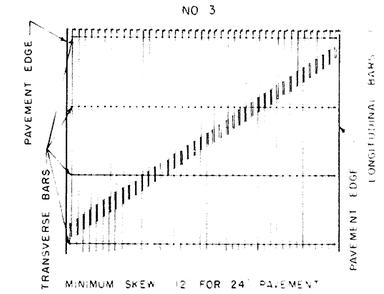

MINIMUM SKEW 12 FOR 24' PAVEMENT

NOTE
IN SPLICING PATTERNS NO 1 AND NO 2, MAXIMUM NUMBER OF LONGITUDINAL BARS SPLICED AT ONE LOCATION = 2/3 NUMBER PER TRAFFIC LANE (12'). MINIMUM STAGGER = 4'. CONTRACTOR MAY USE OTHER PATTERNS IF APPROVED IN WRITING BY THE ENGINEER

(NO SCALE)

COUNTY	CONTRACT	STATE	SHEET NO.	TOTAL SHEETS
	2 DEL.			35A 301

STANDARD SHEET P-6

DETAILS - 8" CONTINUOUSLY REINFORCED P.C.C. PAVEMENT

PREL. TRACING J.T.B. DESIGN A.D. CHKD. A.D.

REVISIONS

APPROVED DIRECTOR OF HIGHWAYS — DATE 12-7-73

CHIEF ENGINEER — DATE 12/7/73

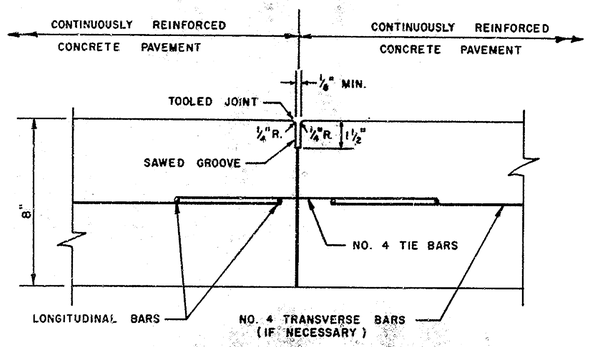

LONGITUDINAL CONSTRUCTION JOINT

NOTE:

NO. 5 TIE BARS, OR "W" BOLTS, AT 2'-0" ON CENTER REQUIRED AT MIDDLE LONGITUDINAL JOINT FOR 4 LANES (NO. 4 BARS AT ALL OTHER LOCATIONS EXCEPT TIES FOR RAMP CONNECTION).

ACCUMULATION OF EXCESS FINISHING GROUT AT JOINT FACE SHALL BE REMOVED PRIOR TO PLACEMENT OF ADJOINING CONCRETE PAVEMENT.

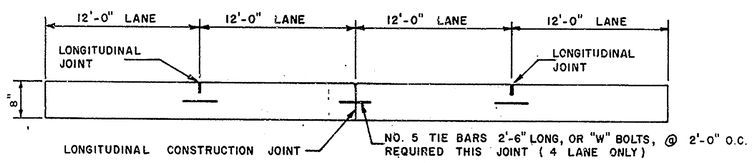

TRANSVERSE SECTION

(FOUR LANE ONLY)

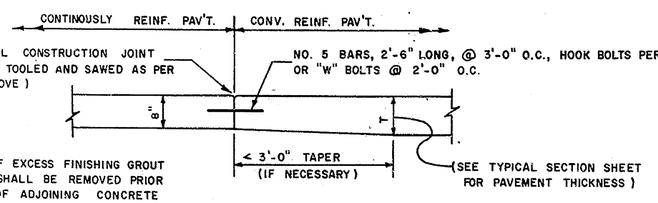

NOTE:

ACCUMULATION OF EXCESS FINISHING GROUT AT JOINT FACE SHALL BE REMOVED PRIOR TO PLACEMENT OF ADJOINING CONCRETE PAVEMENT.

SECTION A-A

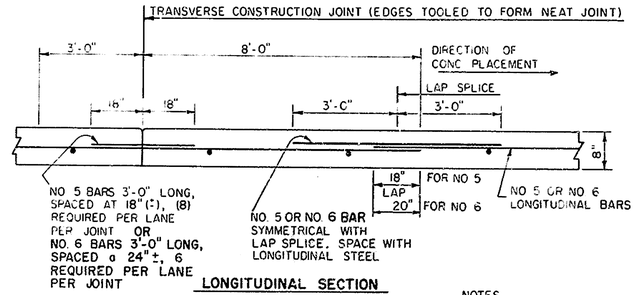

LONGITUDINAL SECTION

SHOWING TRANSVERSE CONSTRUCTION JOINT

NOTES

ALTERNATE METHODS OF PROVIDING REQUIRED TIE STEEL AREA WILL BE PERMITTED WHEN APPROVED IN WRITING BY THE ENGINEER

EXTRA BAR METHOD APPLIES ONLY TO LAPS FALLING WITHIN AN AREA FROM 8' BEYOND TO 3' BEHIND THE TRANSVERSE CONSTRUCTION JOINT

NOTES.

REFER TO SPECIAL PROVISIONS FOR DETAILS OF LONGITUDINAL JOINT CONSTRUCTION

EXTRA BAR METHOD

BAR REINFORCEMENT

CONSTRUCTION METHOD 1-8, 1-8A

VIBRATION WITH HAND MANIPULATED MECHANICAL VIBRATORS REQUIRED ADJACENT TO ALL TRANSVERSE CONSTRUCTION JOINTS

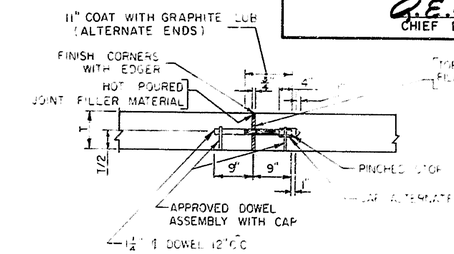

EXPANSION JOINT WITH LOAD TRANSFER DEVICE DETAIL

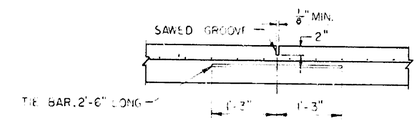

LONGITUDINAL SAW CUT JOINT DETAIL

REFER TO SPECIAL PROVISIONS FOR DETAILS ON WEAKENED PLANE JOINT AS ALTERNATE TO DRAWING. TIE BAR MAY BE PLACED ON TOP OR BOTTOM OF LONGITUDINAL STEEL REINFORCEMENT

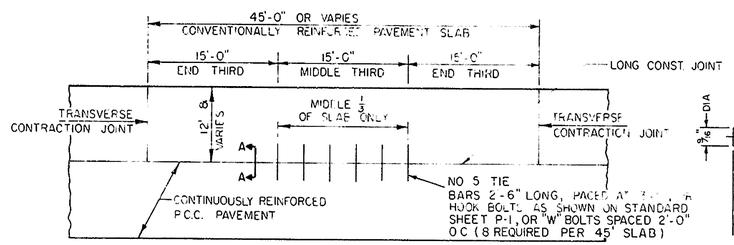

ADJACENT CONVENTIONAL & CONTINUOUSLY REINFORCED PAVEMENTS

(RAMP & MAINLINE CONNECTION)

PLAN VIEW

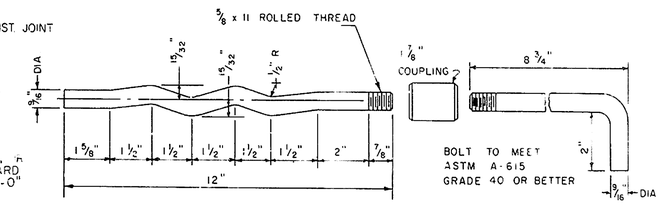

ASSEMBLED "W" BOLT SHALL HAVE A MINIMUM BREAKING LOAD OF 16,000 LBS

"W" BOLT DETAIL

NOTE

ALTERNATE "W" BOLT CONFIGURATIONS SHALL BE SUBMITTED TO THE ENGINEER FOR APPROVAL

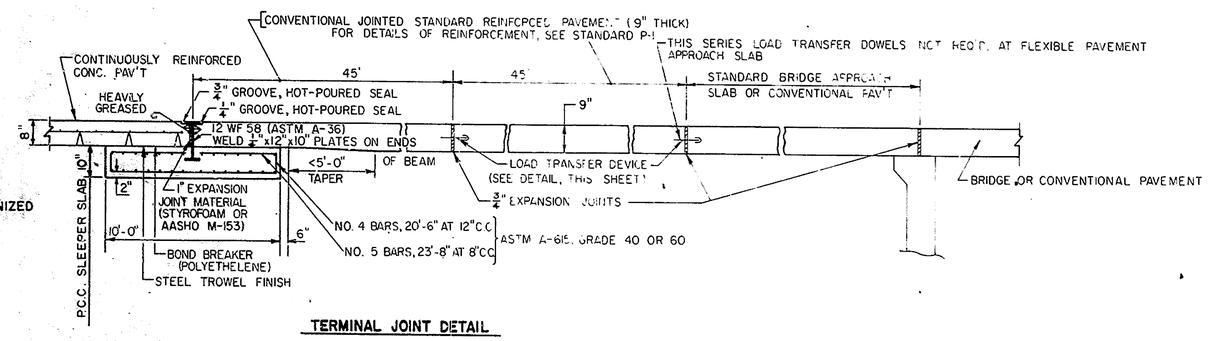

NOTES (TERMINAL JOINT DETAILS):

AFTER ASSEMBLY, WF BEAM TO BE HOT-DIPPED GALVANIZED IN ACCORDANCE WITH ASTM A-123 (BEAM TO BE FABRICATED TO MATCH PAVEMENT CROWN OR SLOPE).

ALL AREAS OF CONTACT BETWEEN THE WF BEAM ASSEMBLY AND ADJOINING PAVEMENTS SHALL BE LUBRICATED WITH GRAPHITE OR GREASE.

TERMINAL JOINT DETAIL

GENERAL NOTES:

(1) SEE TYPICAL SECTION SHEETS FOR PAVEMENT CROWN/TRANSVERSE SLOPE AND POINT OF GRADE APPLICATION
(2) HOOK BOLTS MAY BE USED WHEN PLACING FORMED CONCRETE PAVEMENT
(3) DETAIL FOR HOOK BOLTS CAN BE FOUND ON STANDARD SHEET P-1
(4) "W" BOLTS SHALL BE MECHANICALLY INSERTED
(5) SAWED JOINTS SHALL BE SEALED WITH HOT-POURED SEALANT

COUNTY	CONTRACT	P. R. A. RES. NO.	STATE	FED. AID PROJECT NO.	SHEET NO.	TOTAL SHEETS
NEW CASTLE	71-02-009	2	DEL.		36	301

RELOCATED DELAWARE ROUTE 141
THRU NEWPORT

PREL. TRACING R.L.H. DESIGN C.R.W. CHKD. C.R.W.

REVISIONS

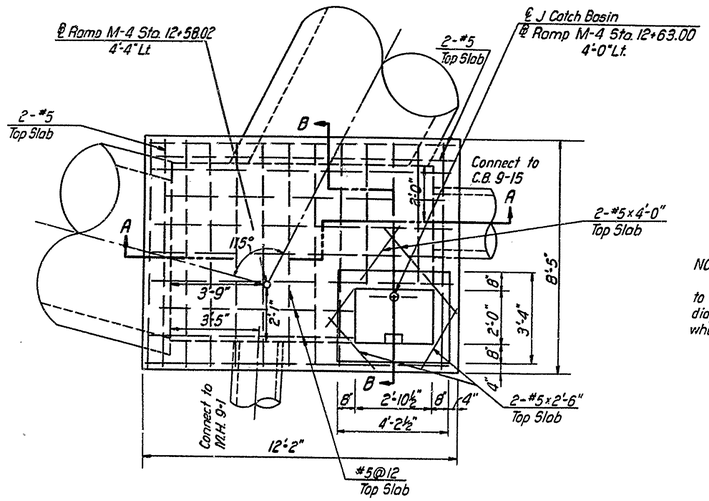

PLAN

NOTE:
Wall Reinforcement to be fabricated to fit around pipe openings. Place extra diagonal #5 bars around pipe openings where possible.

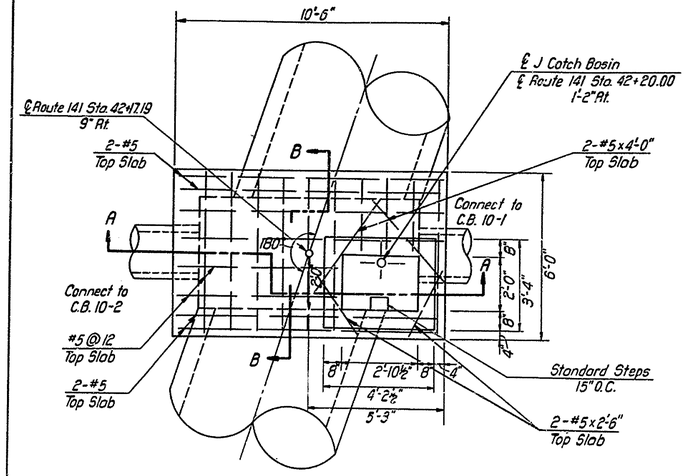

PLAN

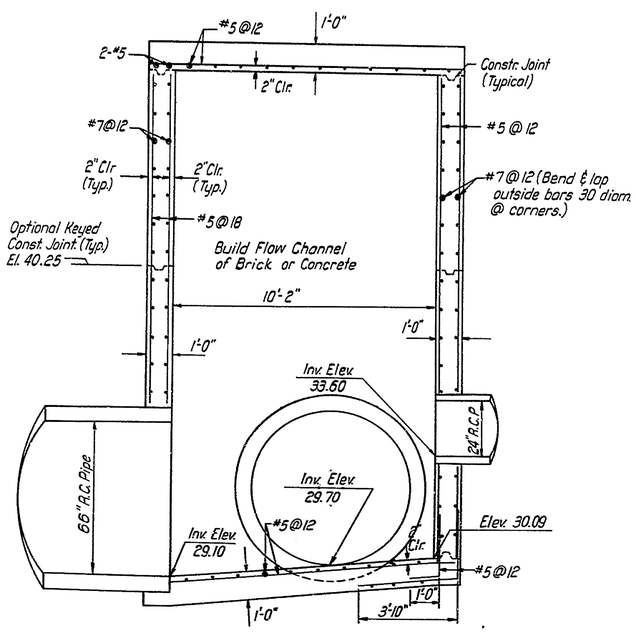

SECTION A-A

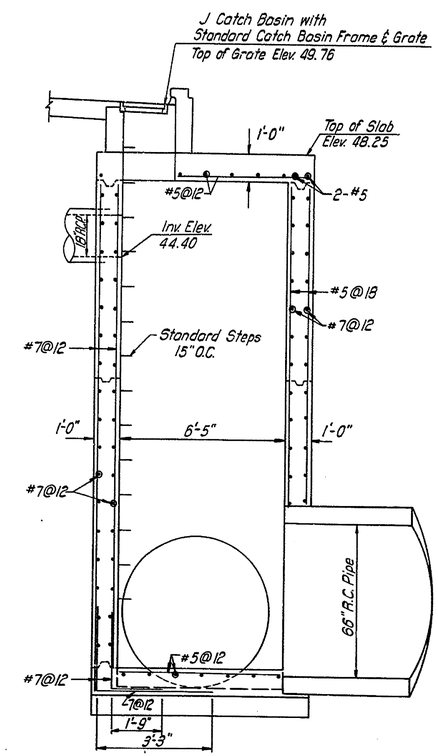

SECTION B-B

MANHOLE No.9

SCALE 3/8"=1'-0"

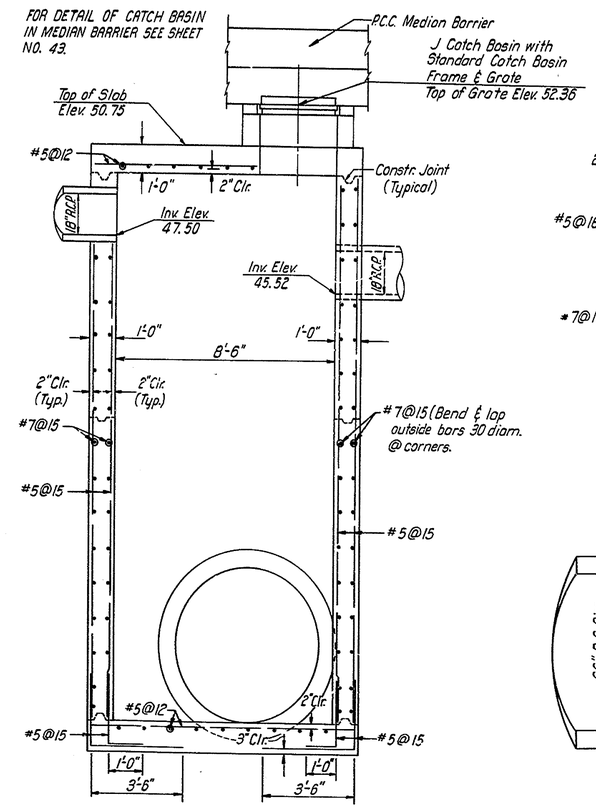

SECTION A-A

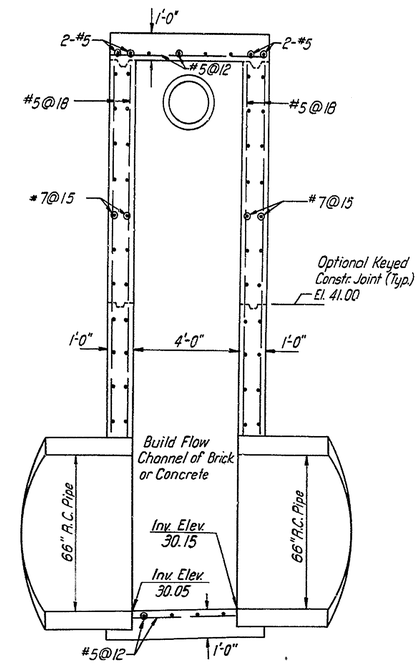

SECTION B-B

MANHOLE No.10

SCALE 3/8"=1'-0"

MANHOLE DETAILS

COUNTY	CONTRACT	F.B.A. REG. NO.	STATE	FED. AID PROJECT NO.	SHEET NO.	TOTAL SHEETS
NEW CASTLE	71-02-009	2	DEL.		37	301

RELOCATED DELAWARE ROUTE 141
THRU NEWPORT

PREL. TRACING R.L.H. DESIGN C.R.W. CHKD. C.R.W.

REVISIONS

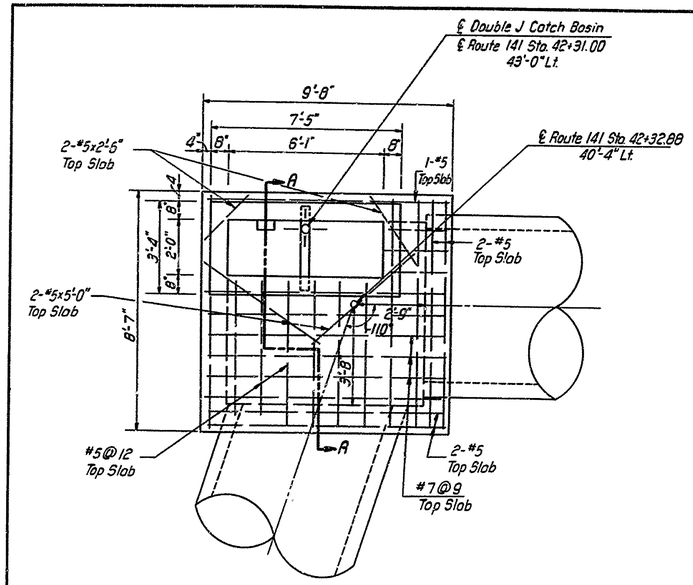

PLAN

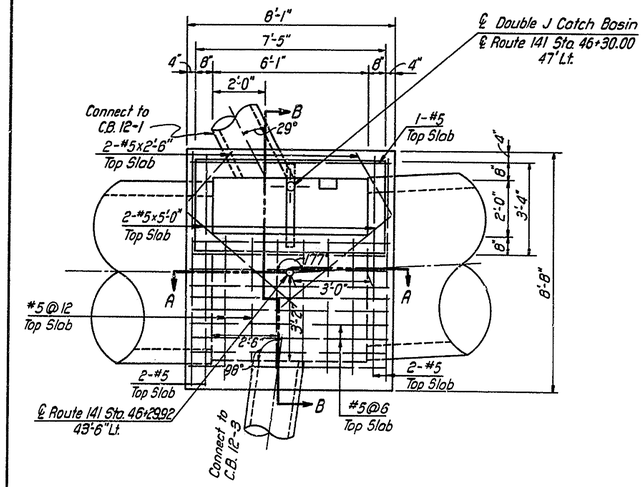

PLAN

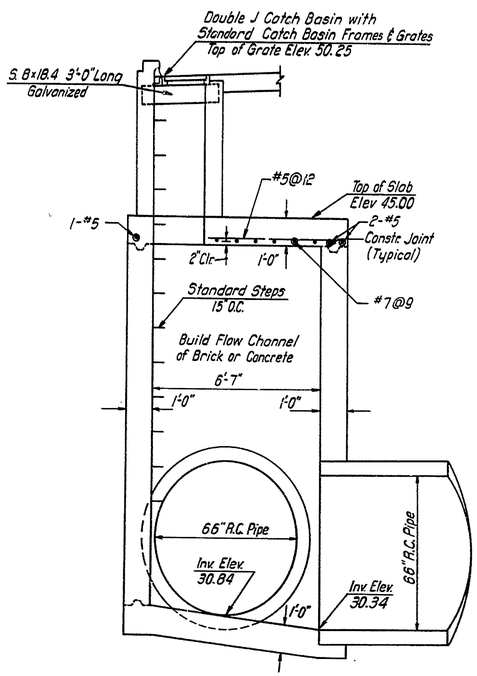

SECTION A-A

NOTE:
FOR WALL & BOTTOM SLAB REINFORCEMENT SEE MANHOLE 9, SHEET NO. 36

MANHOLE No. 11

SCALE 3/8" = 1'-0"

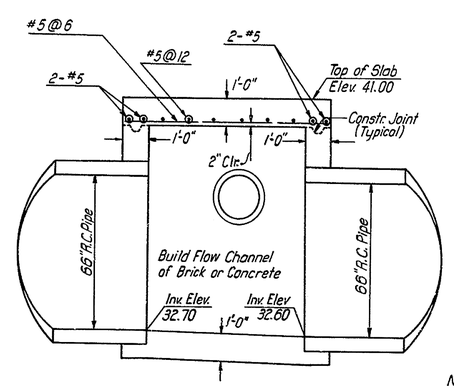

SECTION A-A

NOTE:
FOR WALL & BOTTOM SLAB REINFORCEMENT SEE MANHOLE 16, SHEET NO. 39

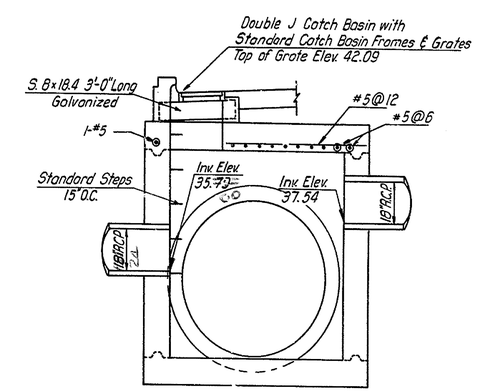

SECTION B-B

MANHOLE No 12

SCALE 3/8" = 1'-0"

MANHOLE DETAILS

COUNTY	CONTRACT	P.R.A. REG. NO.	STATE	FED. AID PROJECT NO.	SHEET NO	TOTAL SHEETS
NEW CASTLE	71-02-009	2	DEL		38	301

RELOCATED DELAWARE ROUTE 141
THRU NEWPORT

PREL. TRACING R.L.H. DESIGN C.R.W. CHKD. C.R.W.

REVISIONS

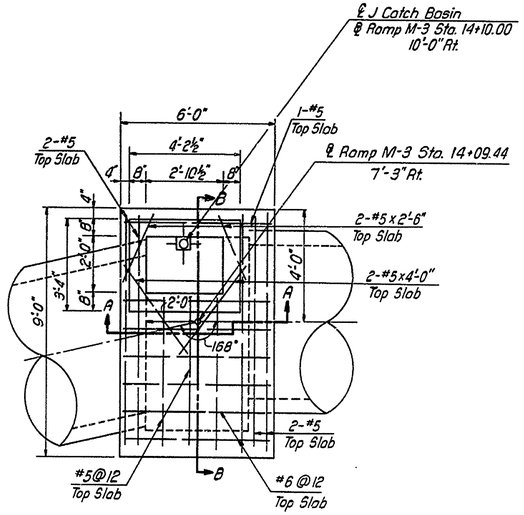

PLAN

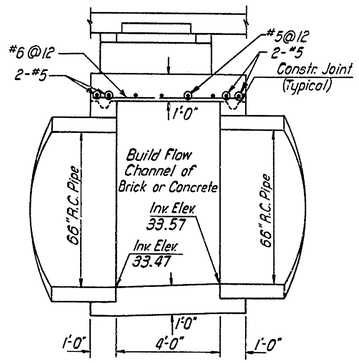

SECTION A-A

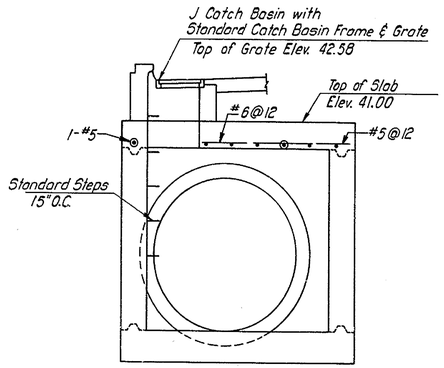

SECTION B-B

NOTE:
FOR WALL & BOTTOM SLAB REINFORCEMENT SEE MANHOLE 16, SHEET NO. 39

MANHOLE No. 13

SCALE 3/8"=1'-0"

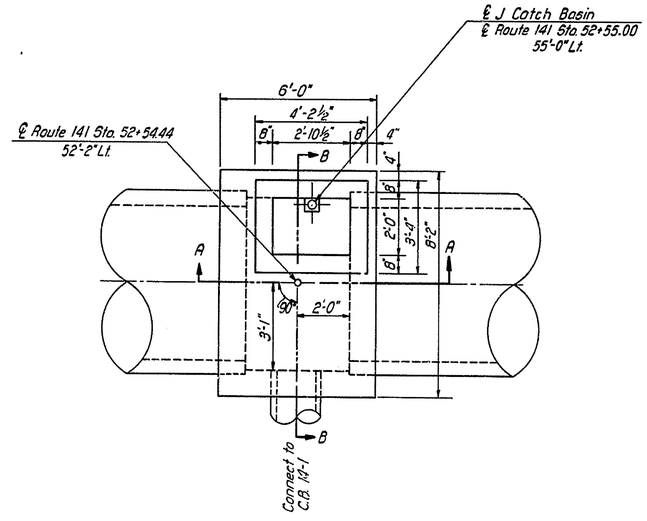

PLAN

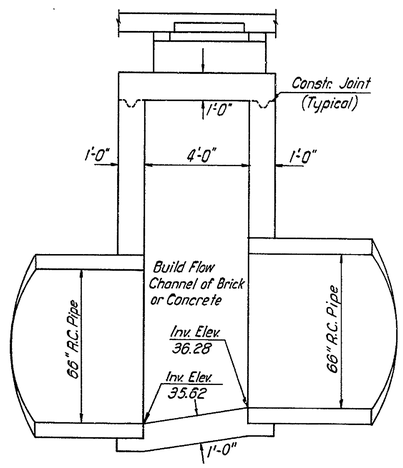

SECTION A-A

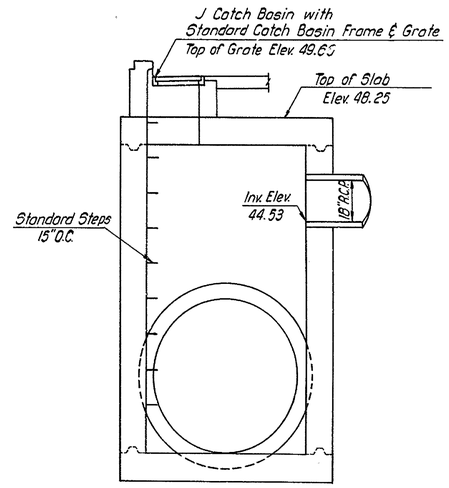

SECTION B-B

NOTE:
FOR TOP SLAB REINFORCEMENT SEE MANHOLE 13, THIS SHEET
FOR WALL & BOTTOM SLAB REINFORCEMENT SEE MANHOLE 16, SHEET NO. 39

MANHOLE No. 14

SCALE 3/8"=1'-0"

MANHOLE DETAILS

COUNTY	CONTRACT	P.R.A. REG. NO.	STATE	FED. AID PROJECT NO.	SHEET NO.	TOTAL SHEETS
NEW CASTLE	71-02-009	2	DEL.		39	301

RELOCATED DELAWARE ROUTE 141
THRU NEWPORT

PREL. TRACING R.L.H. DESIGN C.R.W. CHKD. G.S.

REVISIONS

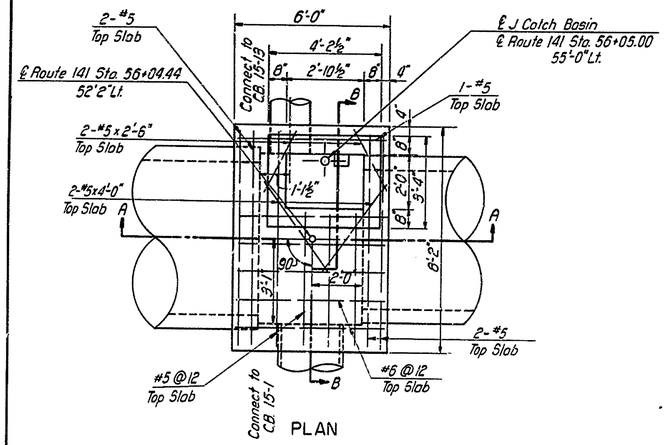

PLAN

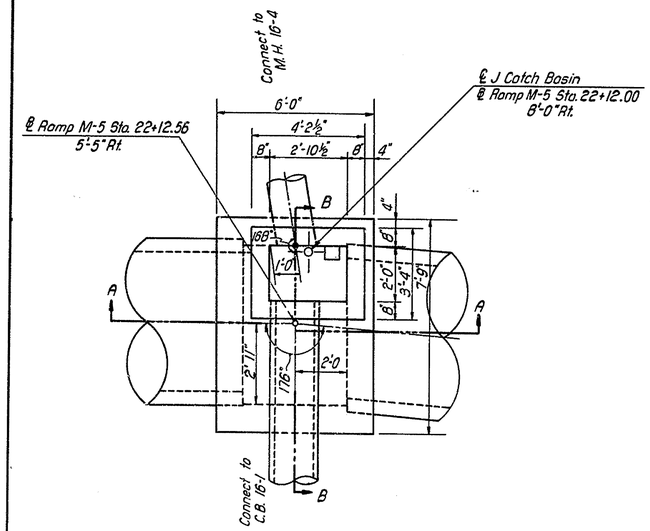

PLAN

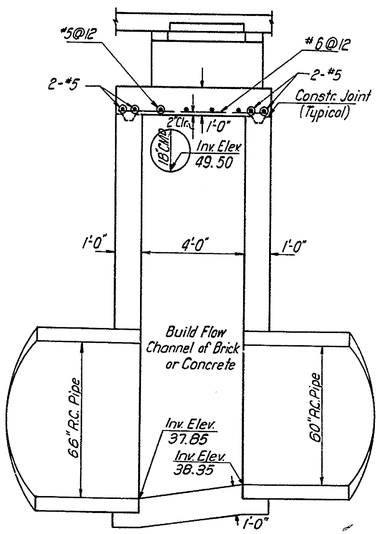

SECTION A-A

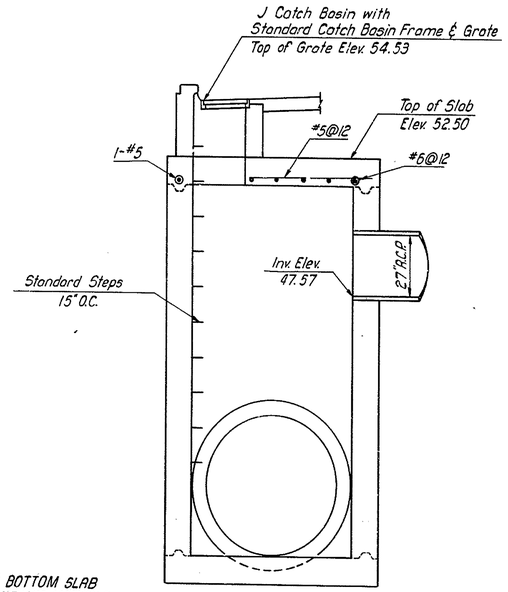

SECTION B-B

NOTE:
FOR WALL & BOTTOM SLAB REINFORCEMENT SEE MANHOLE 16, THIS SHEET.

MANHOLE No. 15

SCALE 3/8"=1'-0"

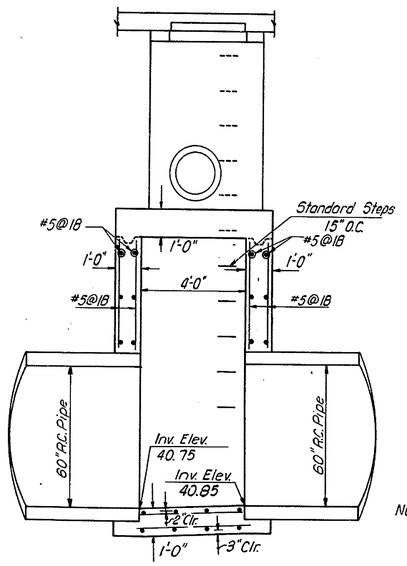

SECTION A-A

NOTE:
FOR TOP SLAB REINF. SEE MANHOLE 9 SHEET NO. 36

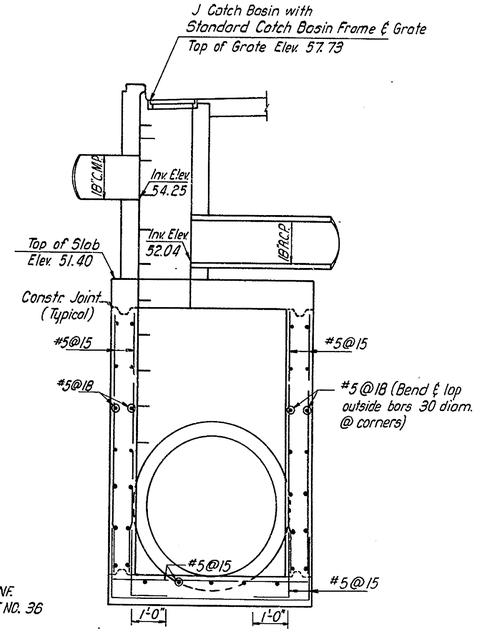

SECTION B-B

MANHOLE No. 16

SCALE 3/8"=1'-0"

MANHOLE DETAILS

COUNTY	CONTRACT	P. R. A. REG. NO.	STATE	FED. AID PROJECT NO.	SHEET NO.	TOTAL SHEETS
NEW CASTLE	71-02-009	2	DEL.		40	301

RELOCATED DELAWARE ROUTE 141
THRU NEWPORT

PREL. TRACING R.L.H. DESIGN C.R.W. CHKD. G.S.

REVISIONS

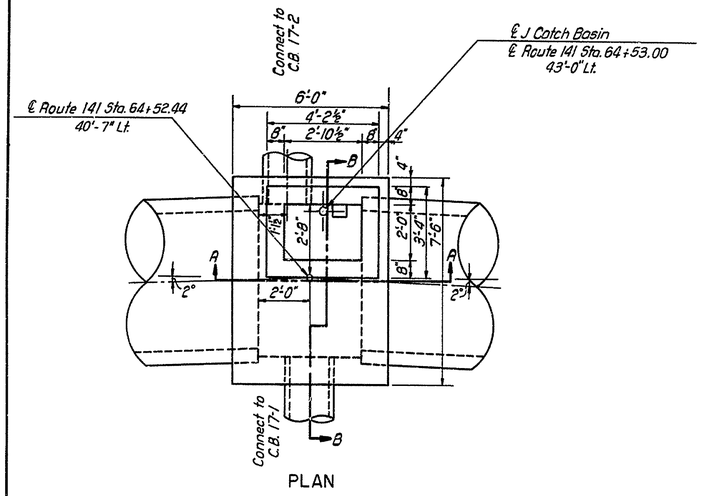

PLAN

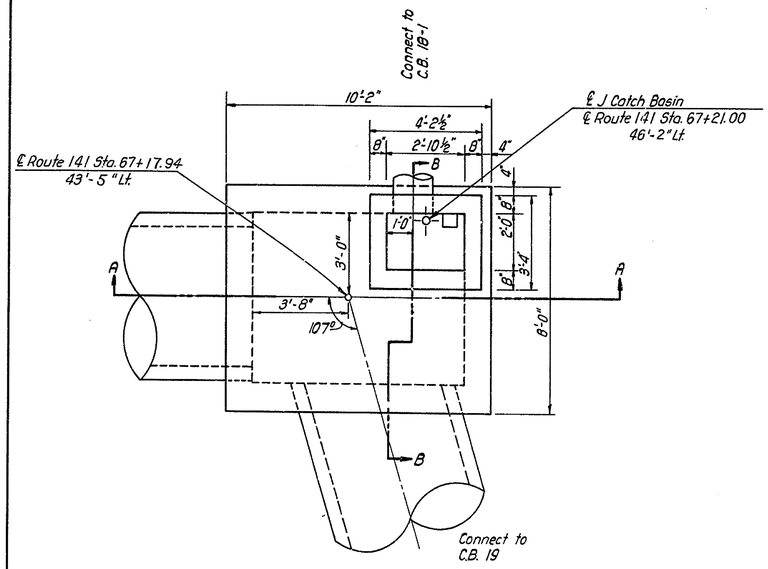

PLAN

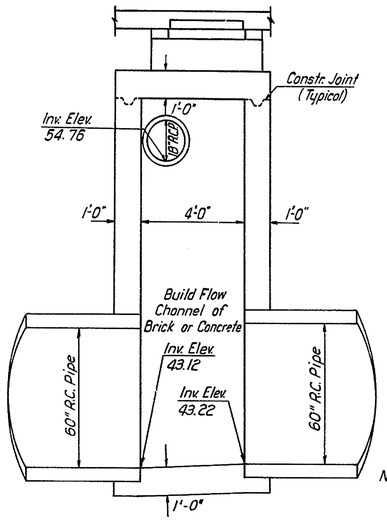

SECTION A-A

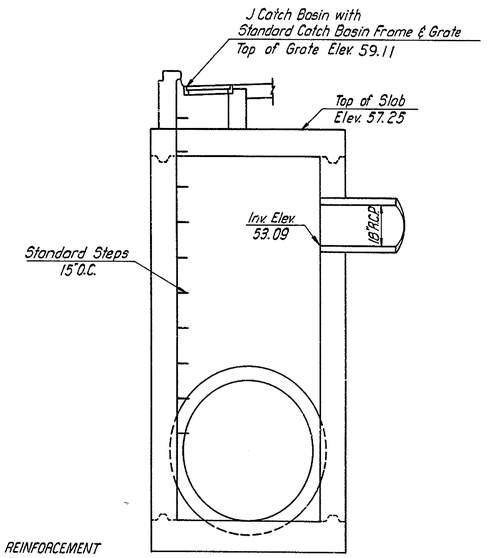

SECTION B-B

NOTE:
FOR TOP SLAB REINFORCEMENT SEE MANHOLE 13, SHEET NO. 38

FOR WALL & BOTTOM SLAB REINFORCEMENT SEE MANHOLE 16, SHEET NO. 39

MANHOLE No. 17

SCALE 3/8" = 1'-0"

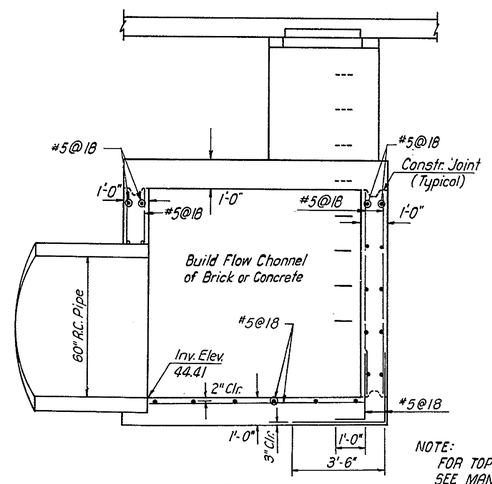

SECTION A-A

NOTE:
FOR TOP SLAB REINFORCEMENT SEE MANHOLE 9, SHEET NO. 36

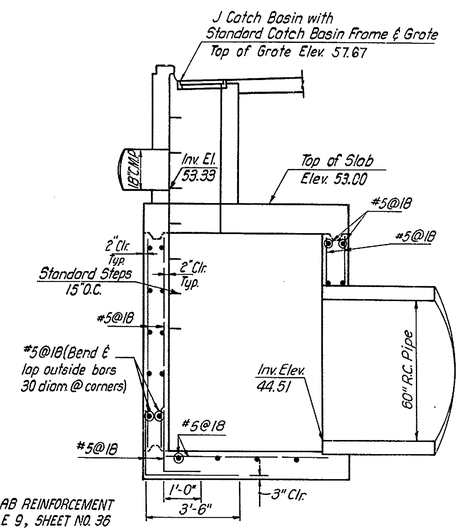

SECTION B-B

MANHOLE No. 18

SCALE 3/8" = 1'-0"

MANHOLE DETAILS

COUNTY	CONTRACT	F.A.P.A. REG. NO.	STATE	FED. AID PROJECT NO.	SHEET NO.	TOTAL SHEETS
NEW CASTLE	71-02-009	2	DEL.		41	301

RELOCATED DELAWARE ROUTE 141
THRU NEWPORT

PREL. TRACING R.L.H. DESIGN C.P.W. CHKD. C.P.W.

REVISIONS

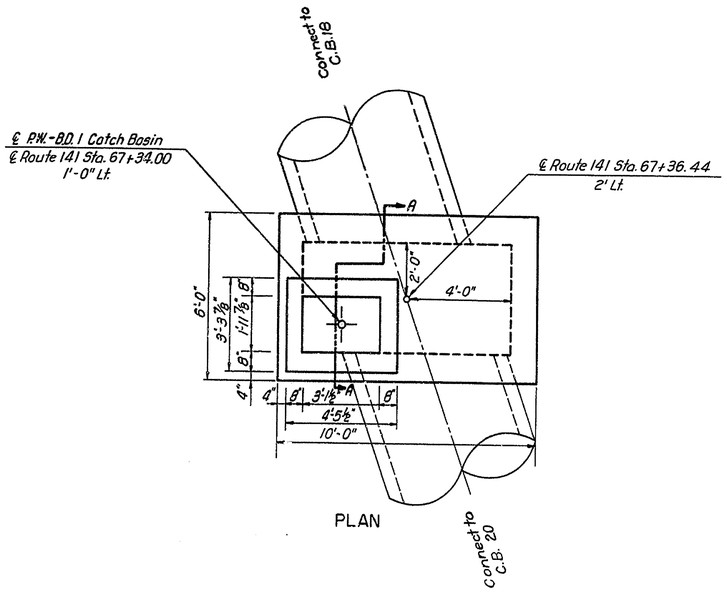

PLAN

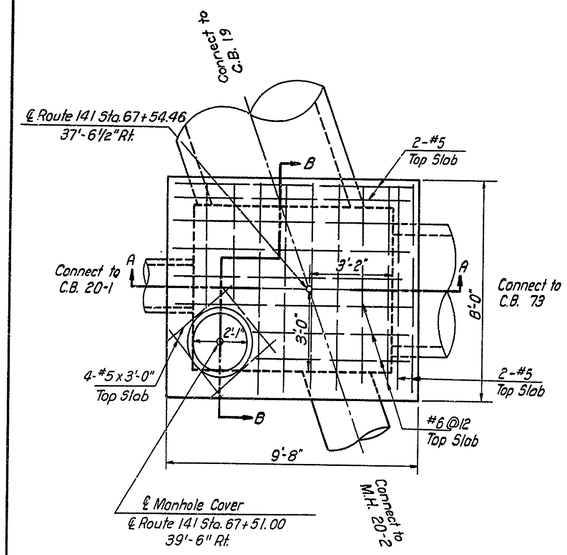

PLAN

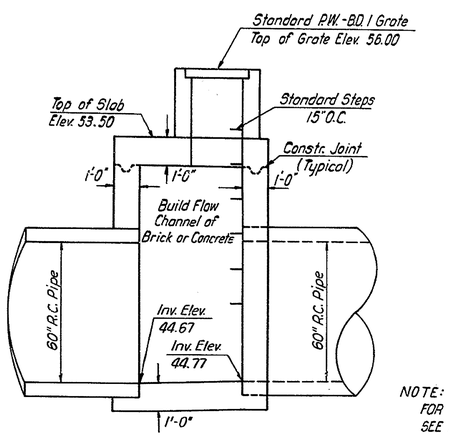

SECTION A-A

NOTE:
FOR TOP SLAB REINFORCEMENT SEE MANHOLE 13, SHEET NO. 38
FOR WALL & BOTTOM SLAB REINFORCEMENT SEE MANHOLE 16, SHEET NO. 39

MANHOLE No. 19

SCALE 3/8"=1'-0"

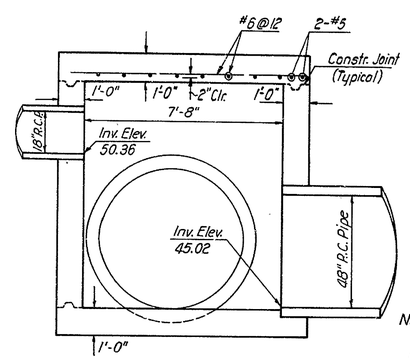

SECTION A-A

NOTE:
FOR WALL & BOTTOM SLAB REINFORCEMENT SEE MANHOLE 16, SHEET NO. 39

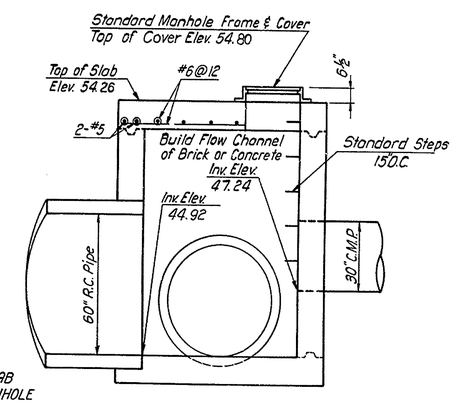

SECTION B-B

MANHOLE No. 20

SCALE 3/8"=1'-0"

MANHOLE DETAILS

COUNTY	CONTRACT	F. H. A. REG. NO.	STATE	FED. AID PROJECT NO.	SHEET NO.	TOTAL SHEETS
NEW CASTLE	71-02-009	2	DEL.		42	301

RELOCATED DELAWARE ROUTE 141
THRU NEWPORT

PREL. TRACING R.L.H. DESIGN H.R.D. CHKD. C.R.W.

REVISIONS

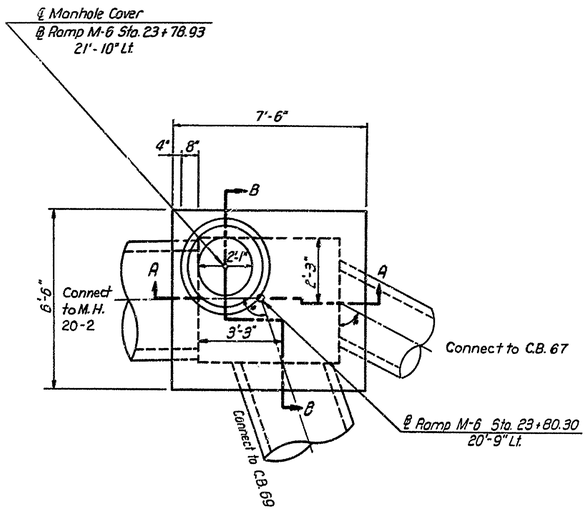

PLAN

*NOTE:
DIRECTION OF PIPES TO CATCH BASINS 67 & 69 TO BE VERIFIED IN THE FIELD PRIOR TO CONSTRUCTION OF MANHOLE NO. 69A

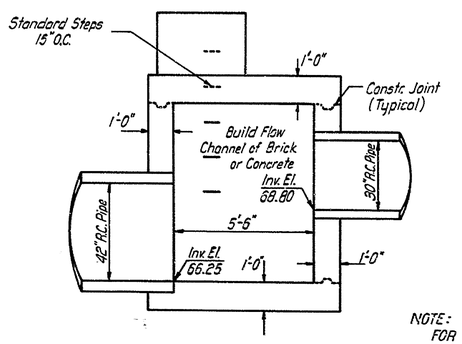

SECTION A-A

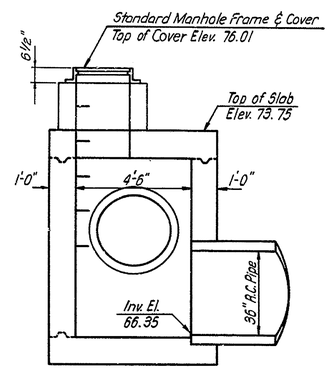

SECTION B-B

NOTE:
FOR TOP SLAB REINFORCEMENT SEE MANHOLE 20, SHEET NO. 41

FOR WALL & BOTTOM SLAB REINFORCEMENT SEE MANHOLE 18, SHEET NO. 40

MANHOLE No. 69A

SCALE 3/8" = 1'-0"

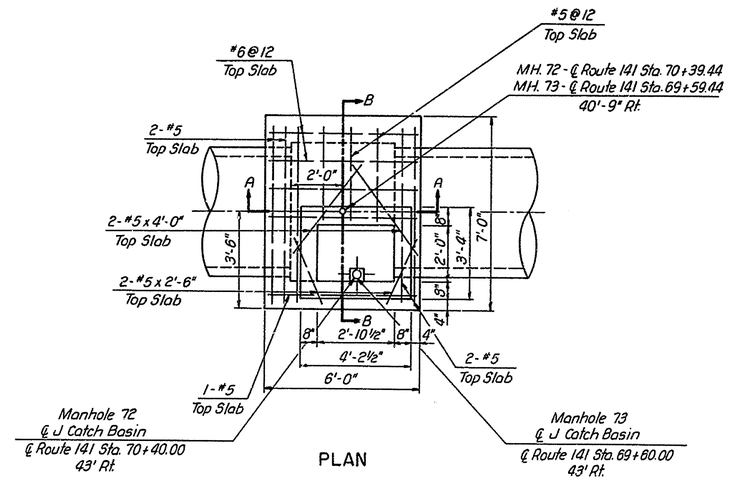

PLAN

NOTE:
The Storm Sewer is to be extended under Future Contract. The Contractor will cooperate with the adjacent Contractor in accordance with section 105.07 of the standard specifications in placing the future pipe at this manhole.
In case the future contract has not been awarded, the Contractor will provide an opening for 48" Pipe & wooden form with bracing for the pipe opening.

MANHOLE No. 72 & 73

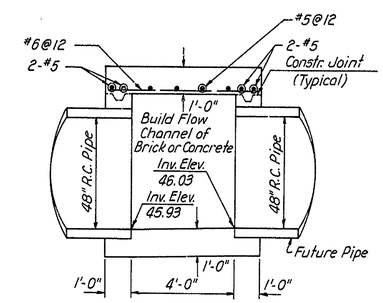

SECTION A-A

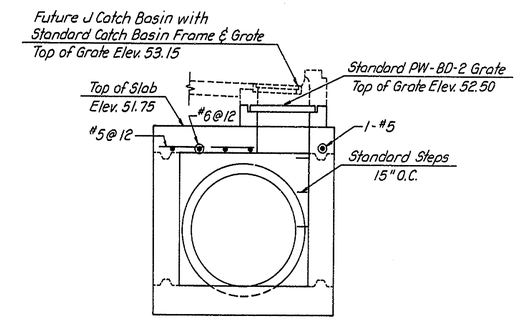

SECTION B-B

MANHOLE No. 72

SCALE 3/8" = 1'-0"

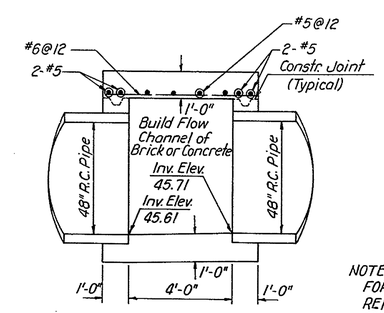

SECTION A-A

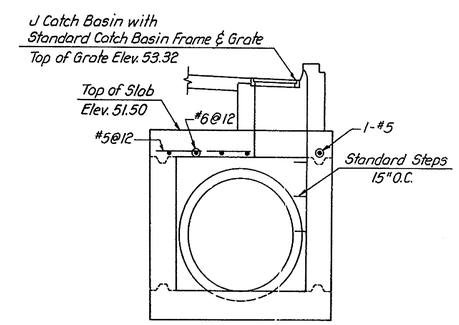

SECTION B-B

NOTE:
FOR WALL & BOTTOM SLAB REINFORCEMENT SEE MANHOLE 16, SHEET NO. 39

MANHOLE No. 73

SCALE 3/8" = 1'-0"

MANHOLE DETAILS

COUNTY	CONTRACT	P.R.A. REG. NO.	STATE	FED. AID PROJECT NO.	SHEET NO.	TOTAL SHEETS
NEWCASTLE	71-02-009	2	DEL.		43	301

RELOCATED DELAWARE ROUTE 141
THRU NEWPORT

PREL. TRACING R.L.H. DESIGN H.R.D. CHKD. G.S.

REVISIONS

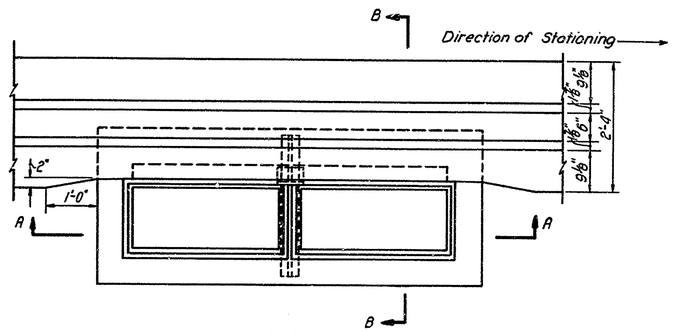

PLAN

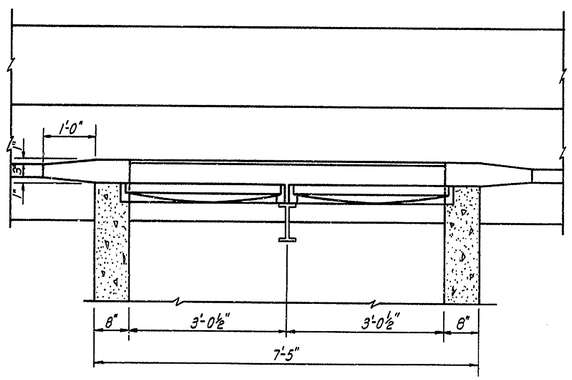

SECTION A-A

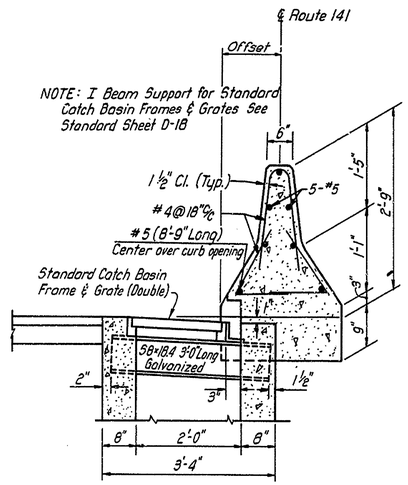

SECTION B-B

DETAIL
DOUBLE A MODIFIED CATCH BASIN
IN MEDIAN BARRIER

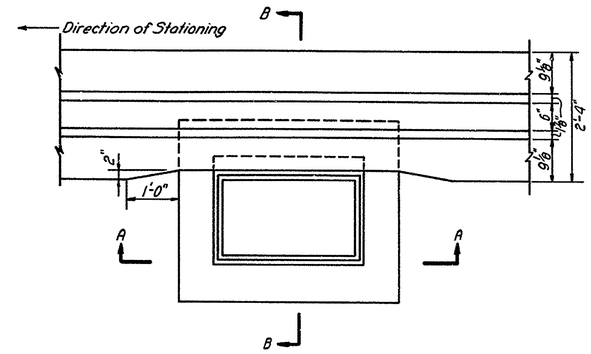

PLAN

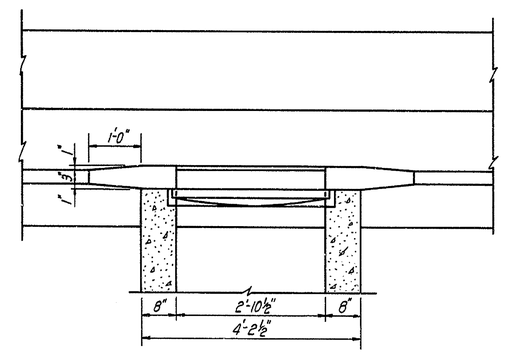

SECTION A-A

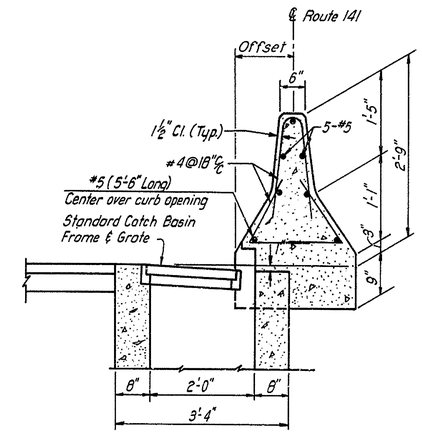

SECTION B-B

DETAIL
A MODIFIED CATCH BASIN
IN MEDIAN BARRIER

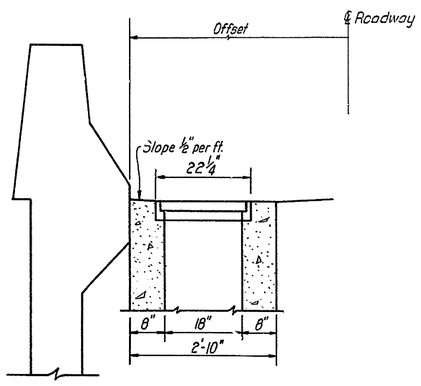

DETAIL
B CATCH BASIN
AT RETAINING WALLS

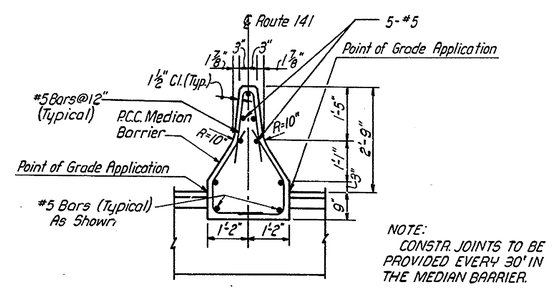

DETAIL
P.C.C. MEDIAN BARRIER
ROUTE 141 STA. 40+88.02 TO STA. 45+82.15

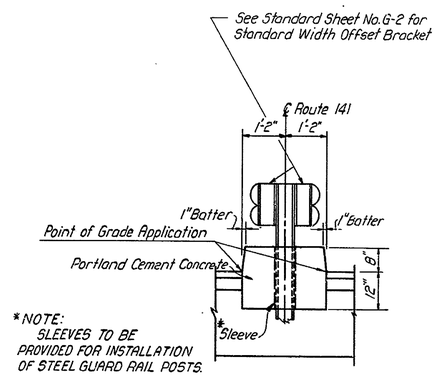

DETAIL TYPE C
STEEL POST GUARD RAIL
ROUTE 141 STA. 47+21.90 TO STA. 52+44.51

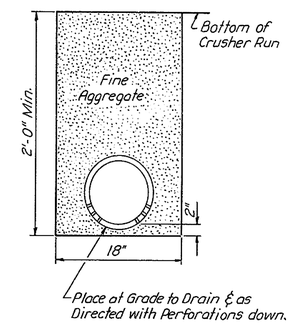

DETAIL
6" PERFORATED UNDERDRAIN

MEDIAN BARRIER &
DRAINAGE DETAILS

COUNTY	CONTRACT	P.N.A. REG. NO.	STATE	FED. AID PROJECT NO.	SHEET NO.	TOTAL SHEETS
NEW CASTLE	71-02-009	2	DEL.		44	301

RELOCATED DELAWARE ROUTE 141
THRU NEWPORT

PREL. TRACING R.L.H. DESIGN H.R.D. CHKD. G.S.

REVISIONS

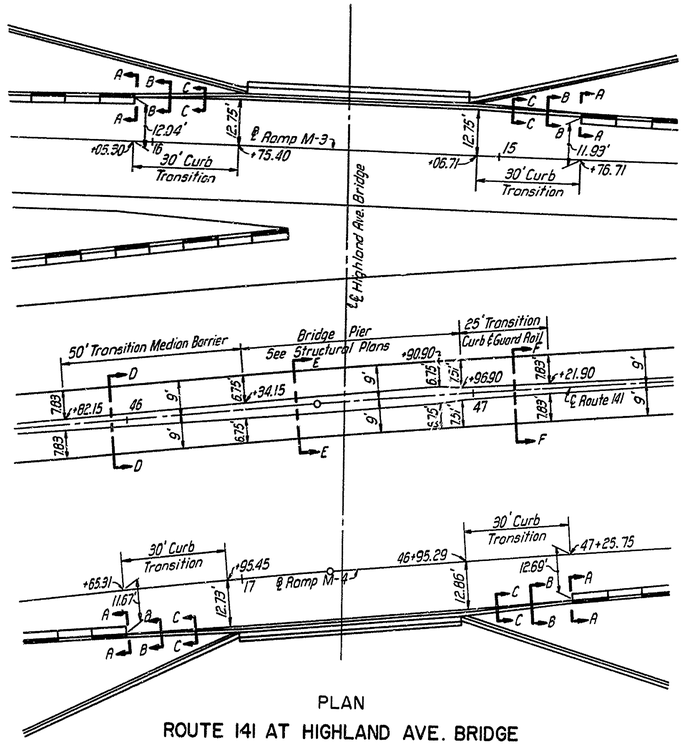

PLAN
ROUTE 141 AT HIGHLAND AVE. BRIDGE

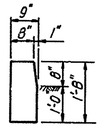

SECTION A-A

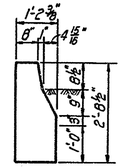

SECTION B-B

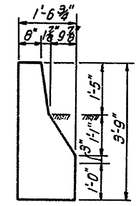

SECTION C-C

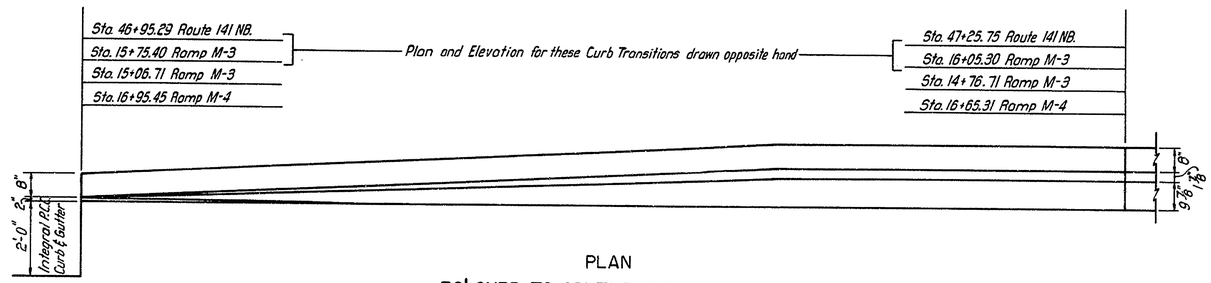

PLAN
30' CURB TO ABUTMENT TRANSITION

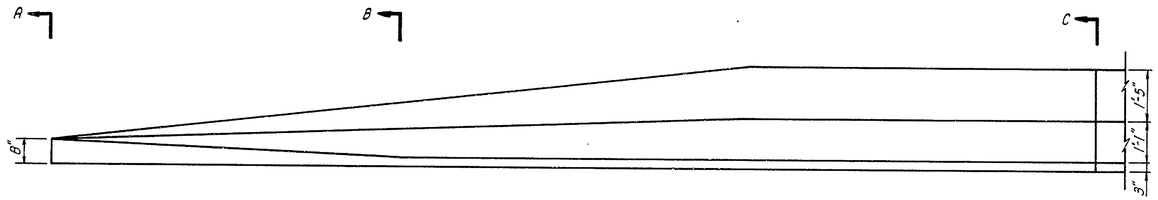

ELEVATION
30' CURB TO ABUTMENT TRANSITION

NOTE:
CONSTR. JOINTS TO BE PROVIDED EVERY 30' IN THE MEDIAN BARRIER.

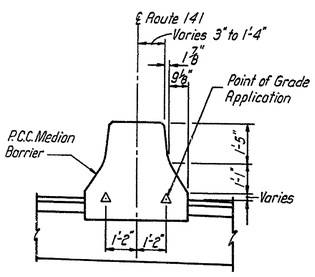

SECTION D-D

*NOTE:
SLEEVES TO BE PROVIDED FOR INSTALLATION OF STEEL GUARD RAIL POSTS.

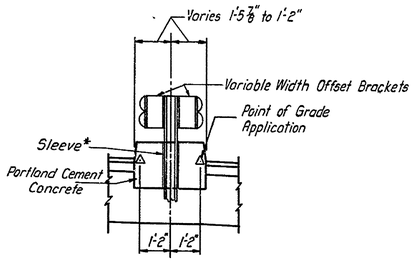

SECTION F-F

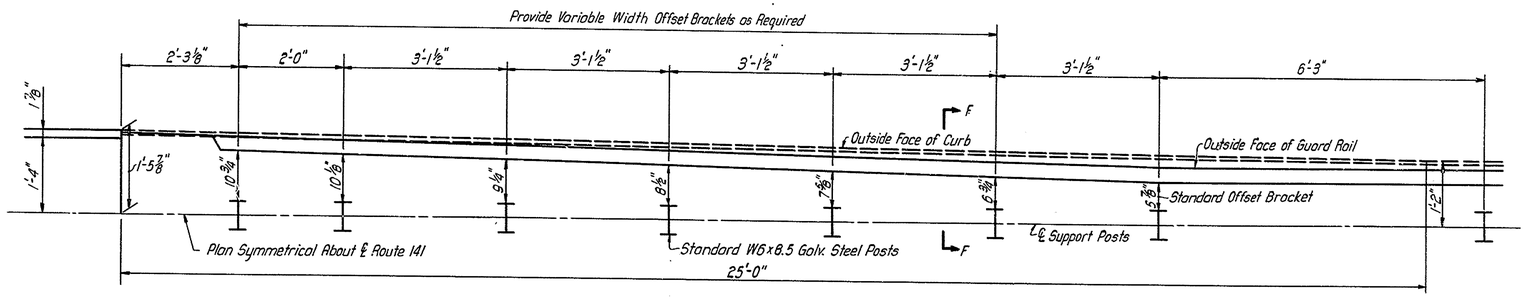

PLAN
25' CURB & GUARD RAIL TRANSITION

NOTE: FOR SECTION E-E SEE STRUCTURAL PLAN SHEET NO. 128

HIGHLAND AVE. BRIDGE

MEDIAN & CURB TRANSITION DETAILS

COUNTY	CONTRACT	P. R. A. REG. NO.	STATE	FED. AID PROJECT NO.	SHEET NO.	TOTAL SHEETS
NEW CASTLE	71-02-009	2	DEL		45	301

RELOCATED DELAWARE ROUTE 141
THRU NEWPORT

PREL. TRACING R.L.H. DESIGN H.A.D. CHKD. G.S.

REVISIONS

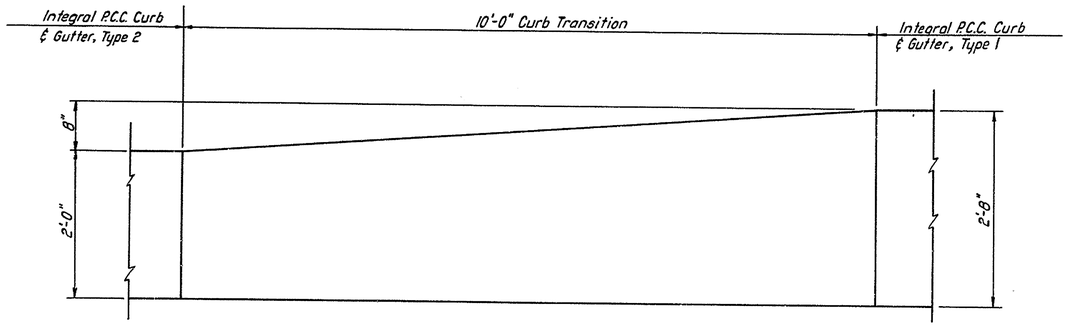

BASE PLAN

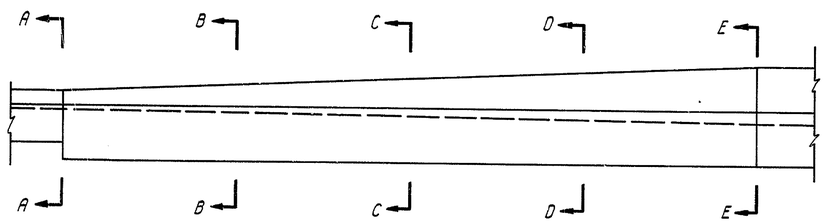

ELEVATION

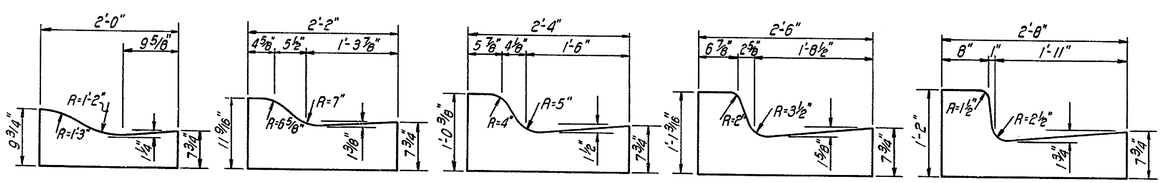

SECTION A-A SECTION B-B SECTION C-C SECTION D-D SECTION E-E

DETAILS
10' CURB TRANSITION
TYPE 1

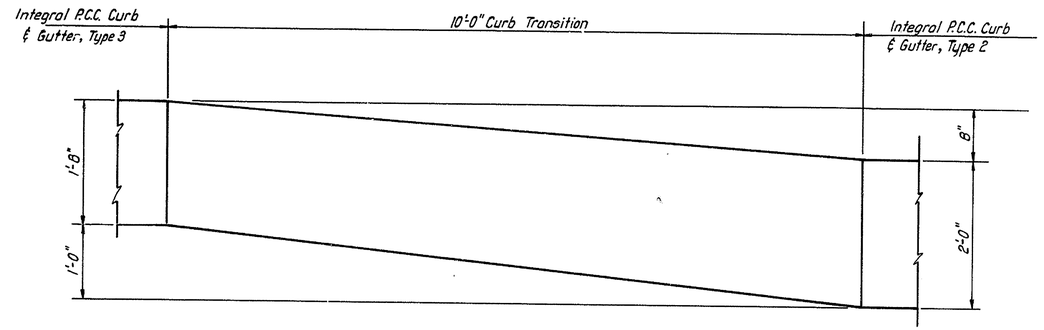

BASE PLAN

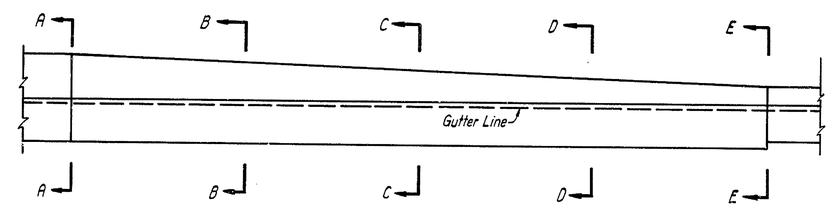

ELEVATION

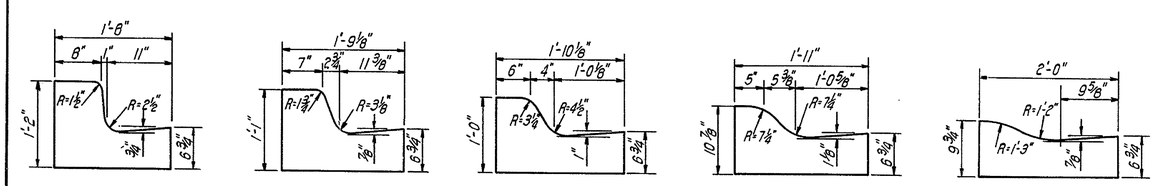

SECTION A-A SECTION B-B SECTION C-C SECTION D-D SECTION E-E

DETAILS
10' CURB TRANSITION
TYPE 2

CURB TRANSITION DETAILS

COUNTY	CONTRACT	P. U. A. REG. NO.	STATE	FED. AID PROJECT NO.	SHEET NO.	TOTAL SHEETS
NEW CASTLE	71-02-009	2	DEL.		46	301

RELOCATED DELAWARE ROUTE 141
THRU NEWPORT

PREL. TRACING R.L.H. DESIGN H.A.D. CHKD. G.S.

REVISIONS

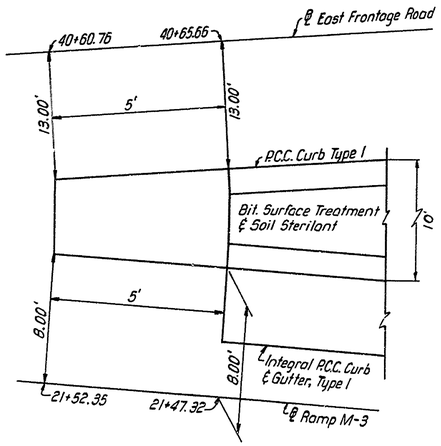

PLAN
RAMP M-3 & WEST FRONTAGE ROAD

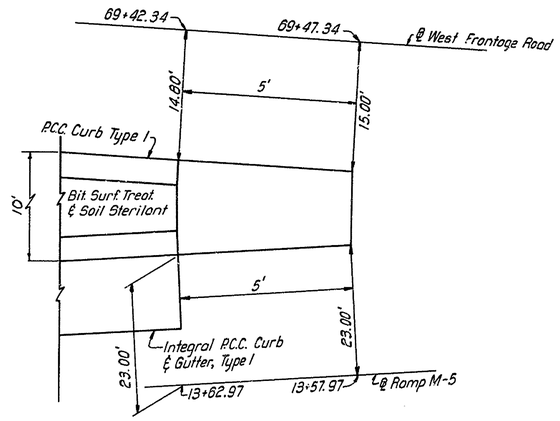

PLAN
RAMP M-5 & WEST FRONTAGE ROAD

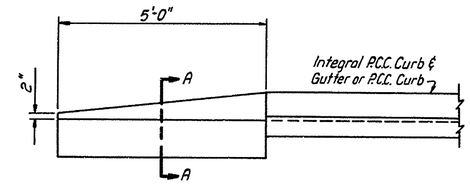

TYPICAL ELEVATION

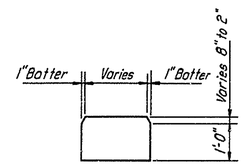

SECTION A-A

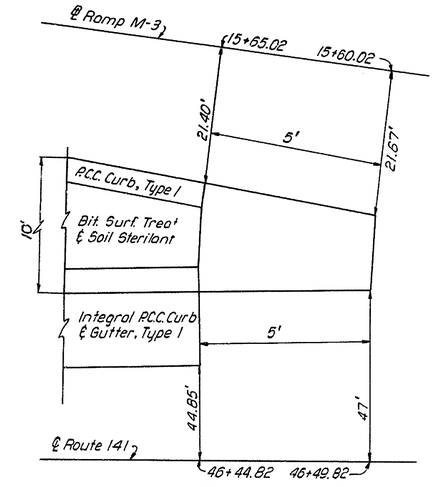

PLAN
RAMP M-3 & ROUTE 141 SOUTHBOUND

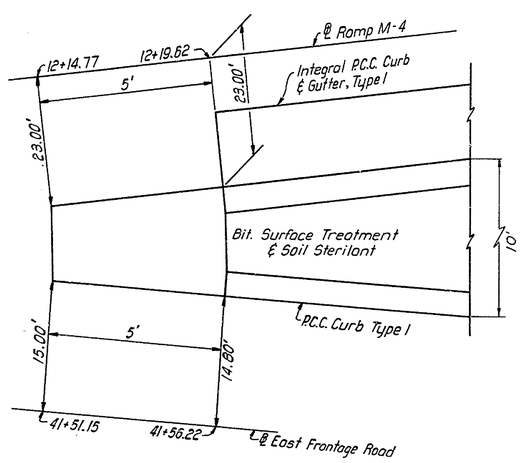

PLAN
RAMP M-4 & EAST FRONTAGE ROAD

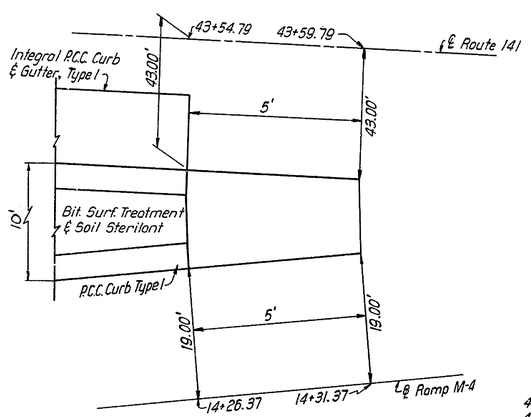

PLAN
RAMP M-4 & ROUTE 141

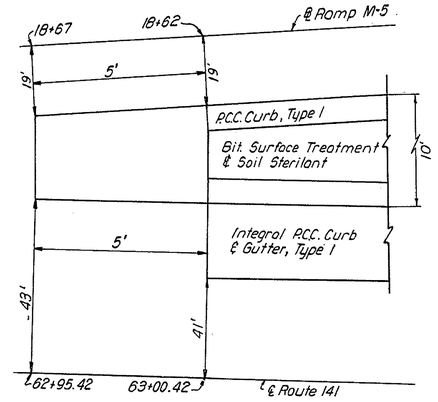

PLAN
RAMP M-5 & ROUTE 141 SOUTHBOUND

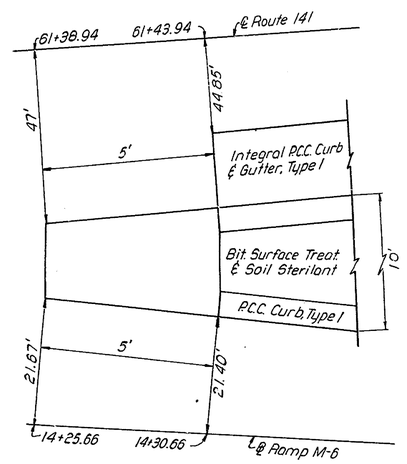

PLAN
RAMP M-6 & ROUTE 141 NORTHBOUND

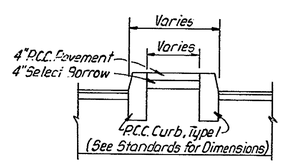

TYPE A
EAST FRONTAGE ROAD
STA. 70+22.51 TO STA. 70+67.51

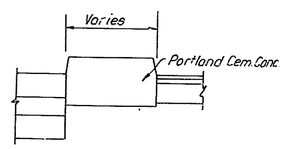

TYPE B
EAST FRONTAGE ROAD
STA. 70+67.51 TO STA. 72+22.90

P.C.C. CURB SPECIAL &
CURB TERMINAL DETAILS

COUNTY	CONTRACT	P.B.A. REG. NO.	STATE	FED. AID PROJECT NO.	SHEET NO.	TOTAL SHEETS
NEW CASTLE	71-02-009	2	DEL.		47	301

RELOCATED DELAWARE ROUTE 141
THRU NEWPORT

PREL. TRACING GBS DESIGN CRW CHKD. RCN

REVISIONS

DRAINAGE TABULATION

STRUCTURE						PIPE							
NO.	STATION *	OFFSET FEET	TYPE	ELEV. TOP	ELEV. INV.	RUN	SIZE INCHES	TYPE	LENGTH FEET	SLOPE FT/FT	INVERT INLET	INVERT OUTLET	CONSTRUCTION NOTES
20-13	62+97 EFR	13 RT.	J-CB	80.17	76.23								
						20-13 TO 20-12	18	R.C.	65	.0075	76.23	75.75	
20-12	63+65 EFR	13 RT.	J-CB	79.66	75.65								
						20-12 TO 20-11	18	R.C.	97	.0075	75.65	74.92	
20-11	64+65 EFR	13 RT.	J-CB	78.91	74.82								
						20-11 TO 20-10	18	R.C.	52	.0050	74.82	74.56	
20-10	65+20 EFR	13 RT.	J-CB	78.63	74.46								
						20-10 TO 20-9	18	R.C.	49	.0050	74.46	74.21	
20-9	65+72.28 EFR	13 RT.	J-CB	78.55	74.11								SUMP
						20-9 TO 20-8	18	R.C.	76	.0060	74.11	73.65	
20-8	66+51 EFR	13 RT.	J-CB	78.74	73.55								
						20-8 TO 20-3	18	R.C.	251	.0084	73.55	71.44	
20-7	DELETED												
20-6	71+59 EFR	13 RT.	J-CB	76.05	72.37								
						20-6 TO 20-5	18	R.C.	56	.0040	72.37	72.14	
20-5	71+00 EFR	13 RT.	J-CB	76.38	72.04								
						20-5 TO 20-4	18	R.C.	107	.0040	72.04	71.61	
20-4	69+90 EFR	13 RT.	J-CB	77.43	71.51								
						20-4 TO 20-3	18	R.C.	82	.0040	71.51	71.18	
20-3	69+05 EFR	13 RT.	J-CB	78.28	71.08								
						20-3 TO 20-2	18	R.C.	61	.0300	71.08	69.25	
20-2	20+50 RAMP M-6	17 LT.	B-MH.	76.78	63.78								
						20-2 TO 20	30	C.M.	57	Varies	63.78	47.24	SLOPE PIPE
20-1	67+19.00 141 ℄	43 RT.	J-CB	54.77	50.50								
						20-1 TO 20	18	R.C.	28	.0050	50.50	50.36	
20	67+51 141 ℄	39.5 RT.	SPECIAL MH.	54.80	44.92								FOR DETAIL SEE SHEET NO. 41
						20 TO 19	60	R.C.	38	.0040	44.92	44.77	TRUNK STORM SEWER
72	70+40 141 ℄	43 RT	SPECIAL MH.	53.15	45.93								FOR DETAIL SEE SHEET NO.42
						72 TO 73	48	R.C.	74	.0030	45.93	45.71	
69A	23+78.93 RAMP M-6	22.58 LT.	SPECIAL MH.	76.01	66.25								FOR DETAIL SEE SHEET NO.42
						69A TO 20-2	42	R.C.	322	.0075	66.25	63.83	
73	69+60 141 ℄	43 RT.	SPECIAL MH.	53.32	45.61								FOR DETAIL SEE SHEET NO.42
						73 TO 20	48	R.C.	195	.0030	45.61	45.02	
19	67+34 141 ℄	1 LT.	SPECIAL MH.	56.00	46.67								FOR DETAIL SEE SHEET NO.41
						19 TO 18	60	R.C.	40	.0040	44.67	44.51	TRUNK STORM SEWER
18-4	69+42 WFR	43 LT.	J-CB. MOD.	70.09	66.12								
						18-4 TO 18-3	18	R.C.	58	.0050	66.12	65.83	
18-3	68+86 WFR	23 LT.	J-CB. MOD.	70.14	65.73								
						18-3 TO 18-1	18	R.C.	34	.0050	65.73	65.56	
18-2	67+98 WFR	13 RT.	J-CB. MOD.	70.73	66.72								
						18-2 TO 18-1	18	R.C.	74	.0157	66.72	65.56	
18-1	68+75 WFR	13 RT.	J-CB. MOD.	70.21	65.46								SUMP
						18-1 TO 18	18	C.M.	75	Varies	65.46	53.33	SLOPE PIPE
18	67+21 141 ℄	46.2 LT.	SPECIAL MH.	57.67	44.41								FOR DETAIL SEE SHEET NO.40
						18 TO 17	60	R.C.	264	.0045	44.41	43.22	TRUNK STORM SEWER
17-3	65+95 WFR	13 RT.	J-CB. MOD.	74.71	71.20								
						17-3 TO 17-2	15	C.M.	38	Varies	71.20	58.17	SLOPE PIPE
17-2	17+05 RAMP M-5	23 RT.	J-CB	62.75	58.07								
						17-2 TO 17	18	R.C.	44	.0752	58.07	54.76	
17-1	64+53 141 ℄	1 LT.	PW-BD 1	57.68	53.29								
						17-1 TO 17	18	R.C.	40	.0050	53.29	53.09	

* ℄ STATION OF CATCH BASIN GRATE OR MANHOLE COVER

DRAINAGE TABULATION (Cont.)

STRUCTURE						PIPE							
NO.	STATION *	OFFSET FEET	TYPE	ELEV. TOP	ELEV. INV.	RUN	SIZE INCHES	TYPE	LENGTH FEET	SLOPE FT/FT	INVERT INLET	INVERT OUTLET	CONSTRUCTION NOTES
17	64+53 141 ℄	34 LT.	SPECIAL MH.	59.11	43.12								FOR DETAIL SEE SHEET NO.40
						17 TO 16	60	R.C.	504	.0045	43.12	40.85	TRUNK STORM SEWER
16-7	60+68 WFR	27 LT	J-CB. MOD.	75.79	72.04								
						16-7 TO 16-4	18	R.C.	48	.0050	72.04	71.80	
16-6	19+12.01 BURNSIDE BLVD.	13 RT.	A-CB.	75.84	70.17								
						16-6 TO 16-5	18	R.C.	22	.0050	70.17	70.06	
16-5	19+12.01 BURNSIDE BLVD.	13 LT.	A-CB.	75.84	69.96								SUMP
						16-5 TO 16-4	18	R.C.	8	.0050	69.96	69.92	
16-4	19+12.01 BURNSIDE BLVD.	23 LT.	B-MH.	76.75	65.75								
						16-4 TO 16	18	C.M.	36	Varies	65.75	54.25	
16-3	14+50 RAMP M-6	8 RT.	J-CB	58.55	54.05								
						16-3 TO 16-2	18	R.C.	207	.0060	54.05	52.81	
16-2	12+40 RAMP M-6	3.33 RT.	W-MH.	57.91	52.71								
						16-2 TO 16-1	18	R.C.	62	.0050	52.71	52.40	
16-1	60+89 ℄ 141	1 LT.	PW-BD 1	58.33	52.30								
						16-1 TO 16	18	R.C.	52	.0050	52.30	52.04	
16	22+12 RAMP M-5	8 RT.	SPECIAL MH.	57.73	40.35								FOR DETAIL SEE SHEET NO. 39
					65.67	16 TO 15	60	R.C.	480	.0050	40.75	38.35	TRUNK STORM SEWER
15-14	56+02 WFR	13 LT.	J-CB. MOD.	69.18	64.60								
						15-14 TO 15-13	18	R.C.	22	.0050	64.60	64.49	
15-13	56+02 WFR	13 RT.	B-CB	69.22	64.39								
						15-13 TO 15	18	C.M.	56	Varies	64.39	49.50	SLOPE PIPE
15-12	60+87 EFR	34 RT.	DBL. J-CB.	80.07	76.50								SUMP
						15-12 TO 15-11	21	R.C.	46	.0080	76.50	76.12	
15-11	60+38 EFR	34 RT.	DBL. J-CB.	79.70	76.02								
						15-11 TO 15-10	21	R.C.	14	.0200	76.02	75.74	
15-10	60+30 EFR	18 RT.	W-MH.	79.73	75.64								
						15-10 TO 15-9	21	R.C.	302	.0218	75.64	69.07	
15-9	57+25 EFR	19 RT.	J-CB	73.03	68.97								
						15-9 TO 15-4	21	R.C.	117	.0218	68.97	66.42	
15-8	10+32 BALSAM TERR.	10 LT.	EXIST. MH.	71.02	67.93								
						15-8 TO 15-6	18	R.C.	10	.0125	67.93	67.80	
15-7	54+50 EFR	19 RT.	J-CB	70.24	66.24								
						15-7 TO 15-6	18	R.C.	38	.0060	66.24	66.01	
15-6	54+91 EFR	18 RT.	STD. MH.	70.81	65.91								
						15-6 TO 15-5	18	R.C.	19	.0100	65.91	65.72	
15-5	55+11 EFR	19 RT.	J-CB	70.49	65.62								SUMP
						15-5 TO 15-4	18	R.C.	90	.0100	65.62	64.72	
15-4	56+05 EFR	19 RT.	J-CB	71.37	64.62								
						15-4 TO 15-3	24	R.C.	26	.0250	64.62	63.97	
15-3	56+05 EFR	13 LT.	B-CB	71.73	63.87								
						15-3 TO 15-2	24	C.M.	50	Varies	63.87	49.50	SLOPE PIPE
15-2	56+05 ℄ 141	55 RT.	J-CB	54.53	49.25								
						15-2 TO 15-1	27	R.C.	55	.0150	49.25	48.42	
15-1	56+05 ℄ 141	1 LT.	PW-BD 1	55.17	48.32								
						15-1 TO 15	27	R.C.	50	.0150	48.32	47.57	
15	56+05 ℄ 141	55 LT.	SPECIAL MH.	54.53	37.35								FOR DETAIL SEE SHEET NO. 39
						15 TO 14	66	R.C.	348	.0045	37.85	36.28	TRUNK STORM SEWER
14-2	52+55 ℄ 141	55 RT.	J-CB	49.66	45.16								
						14-2 TO 14-1	18	R.C.	55	.0050	45.16	44.88	
14-1	52+55 ℄ 141	1 LT.	PW-BD 1	50.29	44.78								
						14-1 TO 14	18	R.C.	50	.0050	44.78	44.53	
14	52+55 ℄ 141	55 LT.	SPECIAL MH.	49.66	35.62								FOR DETAIL SEE SHEET NO. 38
						14 TO 13	66	R.C.	454	.0045	35.62	33.57	TRUNK STORM SEWER

COUNTY	CONTRACT	P.R.A. REG. NO.	STATE	FED. AID PROJECT NO.	SHEET NO.	TOTAL SHEETS
NEW CASTLE	71-02-009	2	DEL.		48	301

RELOCATE DELAWARE ROUTE 141
THRU NEWPORT

PREL. TRACING GBS DESIGN C.R.W. CHKD. R.C.N.

REVISIONS

9-4-74 Lowered Invert of Inlet to W-MH (9-1) R.R.

DRAINAGE TABULATION (Cont.)

STRUCTURE NO.	STATION *	OFFSET FEET	TYPE	ELEV. TOP	ELEV. INV.	PIPE RUN	SIZE INCHES	TYPE	LENGTH FEET	SLOPE FT/FT	INVERT INLET	INVERT OUTLET	CONSTRUCTION NOTES
13	14+10 RAMP M-3	10 RT.	SPECIAL MH.	42.58	33.42								FOR DETAIL SEE SHEET NO. 38
					35.20	13 TO 12	66	R.C.	170	.0045	33.47	32.70	TRUNK STORM SEWER
12-3	46+23 ℄ 141	2 LT.	A-MOD	42.32	37.75		24						
						12-3 TO 12	18	R.C.	42	.0050	37.75	37.54	
12-2	14+74.58 RAMP M-3	11.87 RT.	J-CB	41.77	36.77								SUMP
						12-2 TO 12-1	18	R.C.	129	.0050	36.77	36.12	
12-1	16+07.50 RAMP M-3	12 RT.	J-CB	42.07	36.02								
						12-1 TO 12	18	R.C.	45	.0050	36.02	35.79	
12	46+30 ℄ 141	47 LT.	SPECIAL MH.	42.09	32.60								FOR DETAIL SEE SHEET NO. 37
						12 TO 11	66	R.C.	390	.0045	32.60	30.84	TRUNK STORM SEWER
11	42+31 ℄ 141	43 LT.	SPECIAL MH.	50.25	30.34								FOR DETAIL SEE SHEET NO. 37
						11 TO 10	66	R.C.	49	.0045	30.34	30.19	TRUNK STORM SEWER
10-2	41+25 ℄ 141	1.17 RT.	DBL. A-MOD.	55.36	50.50								
						10-2 TO 10	18	R.C.	92	.0326	50.50	47.50	
10-1	42+75 ℄ 141	1.17 RT.	DBL. A-MOD.	50.63	45.78								
						10-1 TO 10	18	R.C.	52	.0050	45.78	45.52	
10	42+20 ℄ 141	1.17 RT.	SPECIAL MH.	52.36	30.05								FOR DETAIL SEE SHEET NO. 36
						10 TO 9	66	R.C.	70	.0050	30.05	29.70	TRUNK STORM SEWER
9-21	48+00 ℄ 141	1.17 LT.	A-CB	42.32	38.17								
						9-21 TO 9-20	18	R.C.	55	.0030	36.17	36.00	
9-20	48+00 ℄ 141	55 RT.	J-CB	40.31	35.90								
						9-20 TO 9-19	18	R.C.	63	.0045	35.90	35.62	
9-19	47+15.84 ℄ 141	1.25 LT.	DBL. A-CB	41.98	35.83								SUMP
						9-19 TO 9-18	18	R.C.	61	.0035	35.83	35.62	
9-18	47+35.42 ℄ 141	57 RT.	DBL. J-CB	39.90	35.52								SUMP
						9-18 TO 9-17	24	R.C.	142	.0030	35.52	35.09	
9-17	16+61.58 RAMP M-4	11.51 RT.	DBL. J-CB	41.25	34.99								
						9-17 TO 9-16	24	R.C.	200	.0030	34.99	34.20	
9-16	43+52.68 ℄ 141	43 RT.	J-CB	47.51	34.18								
						9-16 TO 9-15	24	R.C.	82	.0030	34.10	33.93	
9-15	13+40 RAMP M-4	4 LT.	J-CB	48.92	33.83								
						9-15 TO 9	24	R.C.	75	.0030	33.83	33.60	
9-14	53+40 EFR	13 LT.	B-CB	69.79	66.22								
						9-14 TO 9-13	18	R.C.	30	.0050	66.22	66.07	
9-13	53+33 EFR	19 RT.	J-CB	69.38	65.97								
						9-13 TO 9-12	18	R.C.	132	.0079	65.97	64.93	
9-12	52+00 EFR	19 RT.	J-CB	68.25	64.83								
						9-12 TO 9-10	18	R.C.	111	.0090	64.83	63.83	
9-11	50+86 EFR	13 LT.	B-CB	67.64	64.10								
						9-11 TO 9-10	18	R.C.	27	.0100	64.10	63.83	
9-10	50+86 EFR	19 RT.	J-CB	67.28	63.73								
						9-10 TO 9-8	18	R.C.	237	.0081	63.73	61.81	
9-9	48+46 EFR	13 LT.	B-CB	66.13	62.59								
						9-9 TO 9-8	18	R.C.	27	.0289	62.59	61.81	
9-8	48+46 EFR	19 RT.	J-CB	65.77	61.71								
						9-8 TO 9-7	18	R.C.	172	.0100	61.71	59.99	
9-7	46+71 EFR	19 RT.	J-CB	65.03	59.89								
						9-7 TO 9-6	18	R.C.	49	.0100	59.89	59.40	
9-6	46+18 EFR	15 RT.	J-CB. MOD.	64.32	59.30								
						9-6 TO 9-5	18	R.C.	104	.0177	59.30	57.45	
9-5	45+10 EFR	13 RT.	J-CB. MOD.	61.03	57.35								
						9-5 TO 9-4	18	R.C.	264	.0281	57.35	49.37	
9-4	42+23 EFR	9.33 RT.	W-MH.	52.75	49.27								
						9-4 TO 9-3	18	R.C.	23	.0417	49.27	48.31	
9-3	42+23 EFR	13 LT.	A-CB	51.83	48.21								
						9-3 TO 9-1	18	R.C.	23	.0330	48.21	47.45	
9-2	41+61 EFR	15 LT.	A-CB	51.27	47.63								
						9-2 TO 9-1	18	R.C.	36	.0050	47.63	47.45	
9-1	42+00 EFR	10.35 LT.	W-MH.	51.70	47.35								
						9-1 TO 9	18	R.C.	38	~~.0776~~ .037	~~47.35~~ 46.02	44.40	
9	12+63 RAMP M-4	4 LT.	SPECIAL MH.	49.76	29.10								FOR DETAIL SEE SHEET NO. 36
						9 TO 8	66	R.C.	266	.0050	29.10	27.77	TRUNK STORM SEWER

* ℄ STATION OF CATCH BASIN GRATE OR MANHOLE COVER

DRAINAGE TABULATION (Cont.)

STRUCTURE NO.	STATION *	OFFSET FEET	TYPE	ELEV. TOP	ELEV. INV.	PIPE RUN	SIZE INCHES	TYPE	LENGTH FEET	SLOPE FT/FT	INVERT INLET	INVERT OUTLET	CONSTRUCTION NOTES
32-4	43+40 WFR	13 RT.	B-CB.	55.72	51.74								
						32-4 TO 32-3	15	R.C.	22	.0050	51.72	51.63	
32-3	43+40 WFR	13 LT.	J-CB. MOD.	55.68	51.53								
						32-3 TO 32-1	15	R.C.	275	.0100	51.53	48.78	
32-2	40+68 WFR	13 LT.	J-CB. MOD.	52.66	49.28								
						32-2 TO 32-1	15	R.C.	28	.0050	49.28	49.14	
32-1	21+45 RAMP M-3	8 RT.	J-CB. MOD.	54.05	48.44								
						32-1 TO 32	15	R.C.	28	.0200	48.44	47.88	
32	21+72 RAMP M-3	7 LT.	EXISTING MH.	54.03	EXIST.								MODIFY EXISTING MANHOLE
31-8	46+95 WFR	13 RT.	A-CB.	59.95	56.20								SUMP
						31-8 TO 31	18	R.C.	38	.0050	56.20	56.01	
31-7	46+20 WFR	13 RT.	A-CB.	59.75	56.00								
						31-7 TO 31	18	R.C.	44	.0050	56.00	55.78	
31-6	51+67 WFR	13 RT.	B-CB.	62.74	58.74								
						31-6 TO 31-5	18	R.C.	22	.0050	58.74	58.63	
31-5	51+67 WFR	13 LT.	J-CB. MOD.	62.70	58.53								
						31-5 TO 31-3	18	R.C.	143	.0100	58.53	57.10	
31-4	50+20 WFR	13 RT.	B-CB.	61.18	57.18								
						31-4 TO 31-3	18	R.C.	22	.0050	57.18	57.07	
31-3	50+20 WFR	13 LT.	J-CB. MOD.	61.14	56.97								
						31-3 TO 31-1	18	R.C.	196	.0040	56.97	56.18	
31-2	48+20 WFR	13 RT.	B-CB.	60.39	56.39								
						31-2 TO 31-1	18	R.C.	22	.0050	56.39	56.28	
31-1	48+20 WFR	13 LT.	J-CB. MOD.	60.35	56.08								
						31-1 TO 31	18	R.C.	154	.0040	56.08	55.46	
31	46+62 WFR	12 LT.	STD. MH.	59.82	EXIST.								CONSTRUCT MH. AROUND EXIST. 36" R.C. STORM SEWER
30	10+44 KREBS SCHOOL DR.	23.5 RT.	W-MH.	67.20	62.37±								BUILD MH. OVER EXIST. 18" R.C. PIPE FIELD CHECK PRIOR TO
						30 TO 9-6	18	C.M.	16	0.161±	62.37±	59.80	CONSTRUCTION
29	64+67.80 WFR	32 LT.	B-CB	76.2	72.36								
						29 TO 17-3	15	R.C.	132	.0080	72.36	71.30	
28	61+32.20 WFR	44 LT.	B-CB	76.4	72.66								
						28 TO 16-7	15	R.C.	58	.0090	72.66	72.14	
27	58+56 WFR	18 LT.	J-CB. MOD.	73.0	69.25								
						27 TO 15-14	15	R.C.	292	.0155	69.25	64.70	

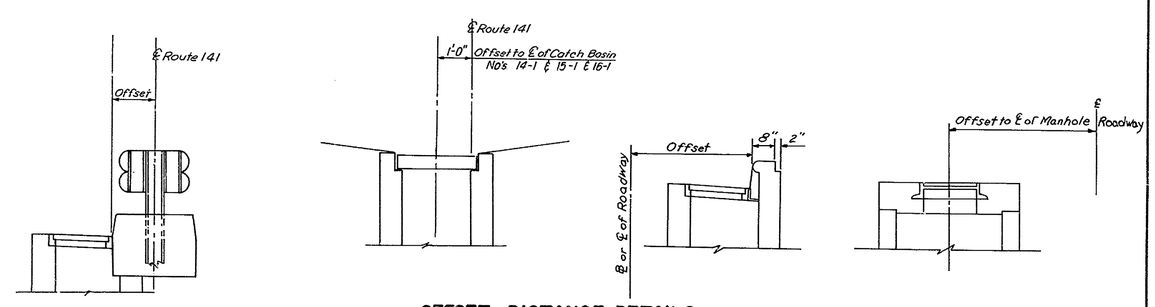

OFFSET DISTANCE DETAILS

COUNTY	CONTRACT	P. R. A. REG. NO.	STATE	FED. AID PROJECT NO.	SHEET NO.	TOTAL SHEETS
NEW CASTLE	71-02-009	2	DEL.		49	301

RELOCATED DELAWARE ROUTE 141
THRU NEWPORT

PREL. TRACING R.P.C. DESIGN H.A.D. CHKD. G.S.

REVISIONS

9-4-74 Relocated proposed Sanitary Sewer in East Frontage Road R.R.

NOTE:
FOR LOCATION & DESIGN DETAILS OF THE STRUCTURES, WALLS, CORE BORINGS, WATER RELOCATIONS, SANITARY SEWERS, ROADWAY LIGHTING, TRAFFIC CONTROL CONDUITS, AND SIGNS & SIGN DETAILS SEE PLANS AS TABULATED ON INDEX OF DRAWINGS SHEET NO. 2

FOR TYPICAL SECTIONS SEE SHEET NO'S. 15, 20, 21 & 23
FOR TRAFFIC PLAN & CONSTRUCTION SEQUENCE SEE SHEET NO'S. 27 TO 32
FOR DETAILS SEE SHEET NO'S. 33, 34, 35, 43 & 46
FOR STORM DRAINAGE TABULATION & INVERT ELEVATIONS SEE SHEET NO. 47 & 48
FOR CONTOUR GRADING & DRAINAGE PLAN SEE SHEET NO. 59
FOR PAVEMENT ELEVATIONS & JOINT LAYOUT SEE SHEET NO. 69
FOR PROFILE SEE SHEET NO'S. 79, 86, 87, 92 & 96

COUNTY	CONTRACT	P.R.A. REG. NO.	STATE	FED. AID PROJECT NO.	SHEET NO.	TOTAL SHEETS
NEW CASTLE	71-02-009	2	DEL.		50	301

RELOCATED DELAWARE ROUTE 141
THRU NEWPORT

PREL. TRACING R.P.C. DESIGN H.A.O. CHKD. G.S.

REVISIONS

9-4-74 Relocated Proposed Sanitary Sewer in East Frontage Road and Construct Type "D" M.H. for wall vault. R.R.

FOR TYPICAL SECTIONS SEE SHEET NO'S. 15, 16, 20, 21 & 22

FOR TRAFFIC PLAN & CONSTRUCTION SEQUENCE SEE SHEET NO'S. 27 TO 32

FOR DETAILS SEE SHEET NO'S. 33, 34, 35, 36, 37, 42, 43 & 46

FOR STORM DRAINAGE TABULATION & INVERT ELEVATIONS SEE SHEET NO'S. 47 & 48

FOR CONTOUR GRADING & DRAINAGE PLAN SEE SHEET NO. 60

FOR PAVEMENT ELEVATIONS & JOINT LAYOUT SEE SHEET NO. 70

FOR PROFILE SEE SHEET NO'S. 79, 80, 85, 86, 87, 92 & 96

BUILD TYPE "D" M.H. OVER EXISTING WELL RIGHT OF EAST FRONTAGE ROAD AT STA. 40+95±

COUNTY	CONTRACT	P. R. A. REG. NO.	STATE	FED. AID PROJECT NO.	SHEET NO.	TOTAL SHEETS
NEW CASTLE	71-02-009	2	DEL.		51	301

RELOCATED DELAWARE ROUTE 141
THRU NEWPORT

PREL. TRACING R.P.C. DESIGN H.R.D. CHKD. G.S.

REVISIONS

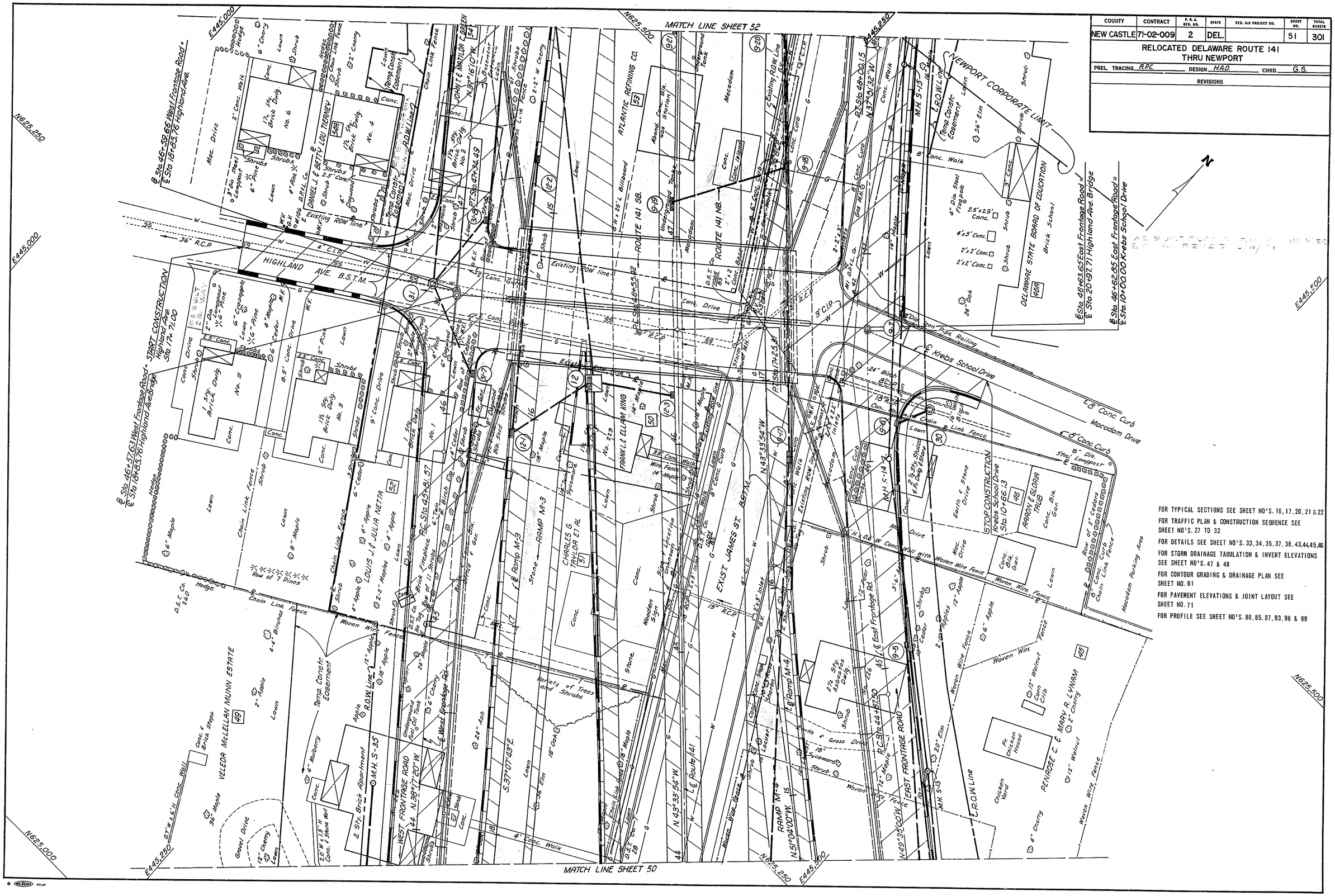

FOR TYPICAL SECTIONS SEE SHEET NO'S. 16, 17, 20, 21 & 22

FOR TRAFFIC PLAN & CONSTRUCTION SEQUENCE SEE SHEET NO'S. 27 TO 32

FOR DETAILS SEE SHEET NO'S. 33, 34, 35, 37, 38, 43, 44, 45, 46

FOR STORM DRAINAGE TABULATION & INVERT ELEVATIONS SEE SHEET NO'S. 47 & 48

FOR CONTOUR GRADING & DRAINAGE PLAN SEE SHEET NO. 61

FOR PAVEMENT ELEVATIONS & JOINT LAYOUT SEE SHEET NO. 71

FOR PROFILE SEE SHEET NO'S. 80, 85, 87, 93, 96 & 99

COUNTY	CONTRACT	P. R. A. REG. NO.	STATE	FED. AID PROJECT NO.	SHEET NO.	TOTAL SHEETS
NEW CASTLE	71-02-009	2	DEL.		52	301

RELOCATED DELAWARE ROUTE 141
THRU NEWPORT

PREL. TRACING R.P.C. DESIGN H.A.D. CHKD. G.S.

REVISIONS

FOR TYPICAL SECTIONS SEE SHEET NO'S. 17, 22 & 23

FOR TRAFFIC PLAN & CONSTRUCTION SEQUENCE SEE SHEET NO'S. 27 TO 32

FOR DETAILS SEE SHEET NO'S. 33, 34, 35, 38, 43, 45 & 46

FOR STORM DRAINAGE TABULATION & INVERT ELEVATIONS SEE SHEET NO'S. 47 & 48

FOR CONTOUR GRADING & DRAINAGE PLAN SEE SHEET NO. 62

FOR PAVEMENT ELEVATIONS & JOINT LAYOUT SEE SHEET NO. 72

FOR PROFILE SEE SHEET NO'S. 81, 85, 93, 96 & 97

COUNTY	CONTRACT	P. B. A. REG. NO.	STATE	FED. AID PROJECT NO.	SHEET NO.	TOTAL SHEETS
NEW CASTLE	71-02-009	2	DEL.		53	301

RELOCATED DELAWARE ROUTE 141
THRU NEWPORT

PREL. TRACING R.P.C. DESIGN H.A.D CHKD. G.S.

REVISIONS

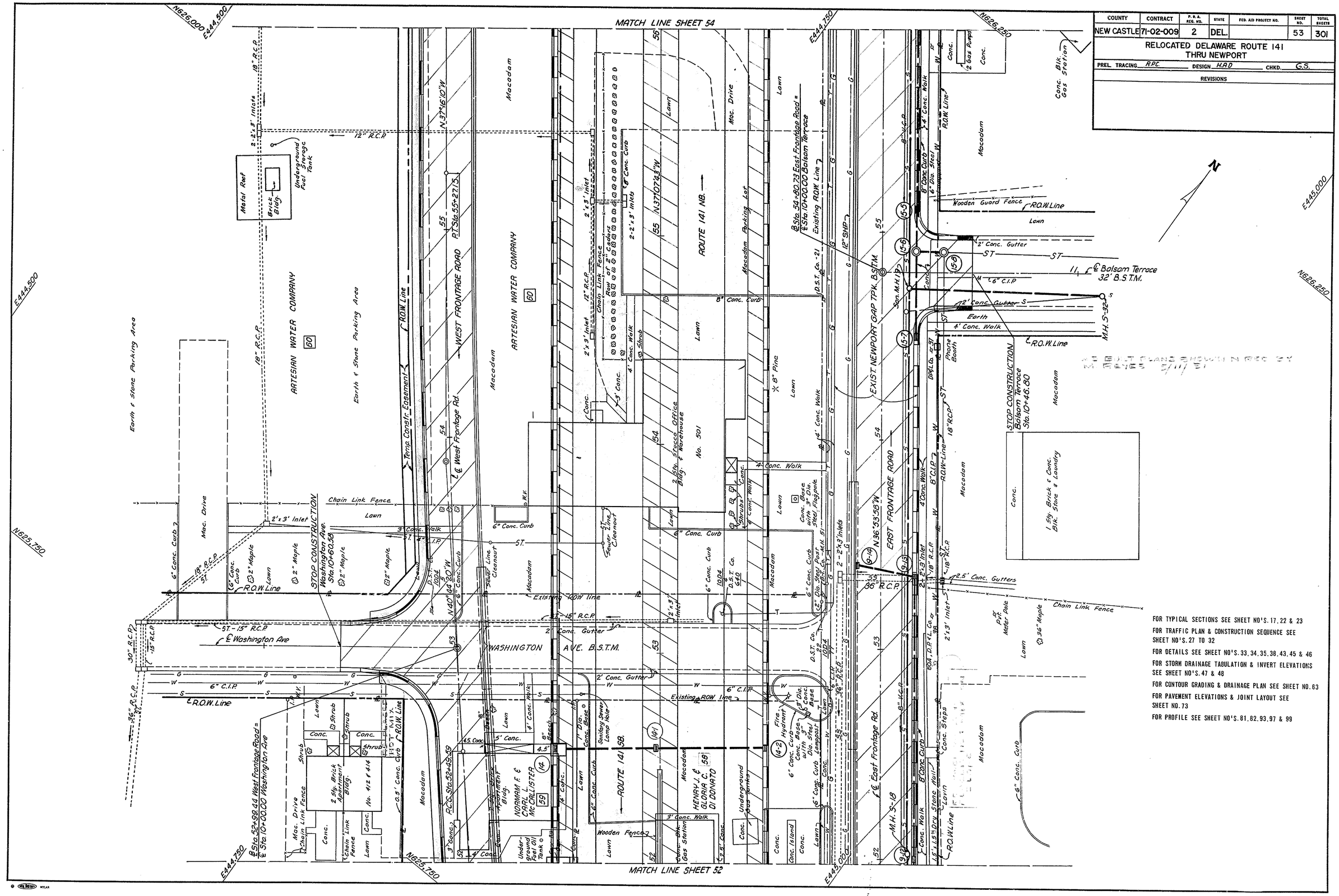

FOR TYPICAL SECTIONS SEE SHEET NO'S. 17, 22 & 23

FOR TRAFFIC PLAN & CONSTRUCTION SEQUENCE SEE SHEET NO'S. 27 TO 32

FOR DETAILS SEE SHEET NO'S. 33, 34, 35, 38, 43, 45 & 46

FOR STORM DRAINAGE TABULATION & INVERT ELEVATIONS SEE SHEET NO'S. 47 & 48

FOR CONTOUR GRADING & DRAINAGE PLAN SEE SHEET NO. 63

FOR PAVEMENT ELEVATIONS & JOINT LAYOUT SEE SHEET NO. 73

FOR PROFILE SEE SHEET NO'S. 81, 82, 93, 97 & 99

COUNTY	CONTRACT	P.R.A. REG. NO.	STATE	FED. AID PROJECT NO.	SHEET NO.	TOTAL SHEETS
NEW CASTLE	71-02-009	2	DEL.		54	301

RELOCATED DELAWARE ROUTE 141
THRU NEWPORT

PREL. TRACING R.P.C. DESIGN H.R.D. CHKD. G.S.

REVISIONS

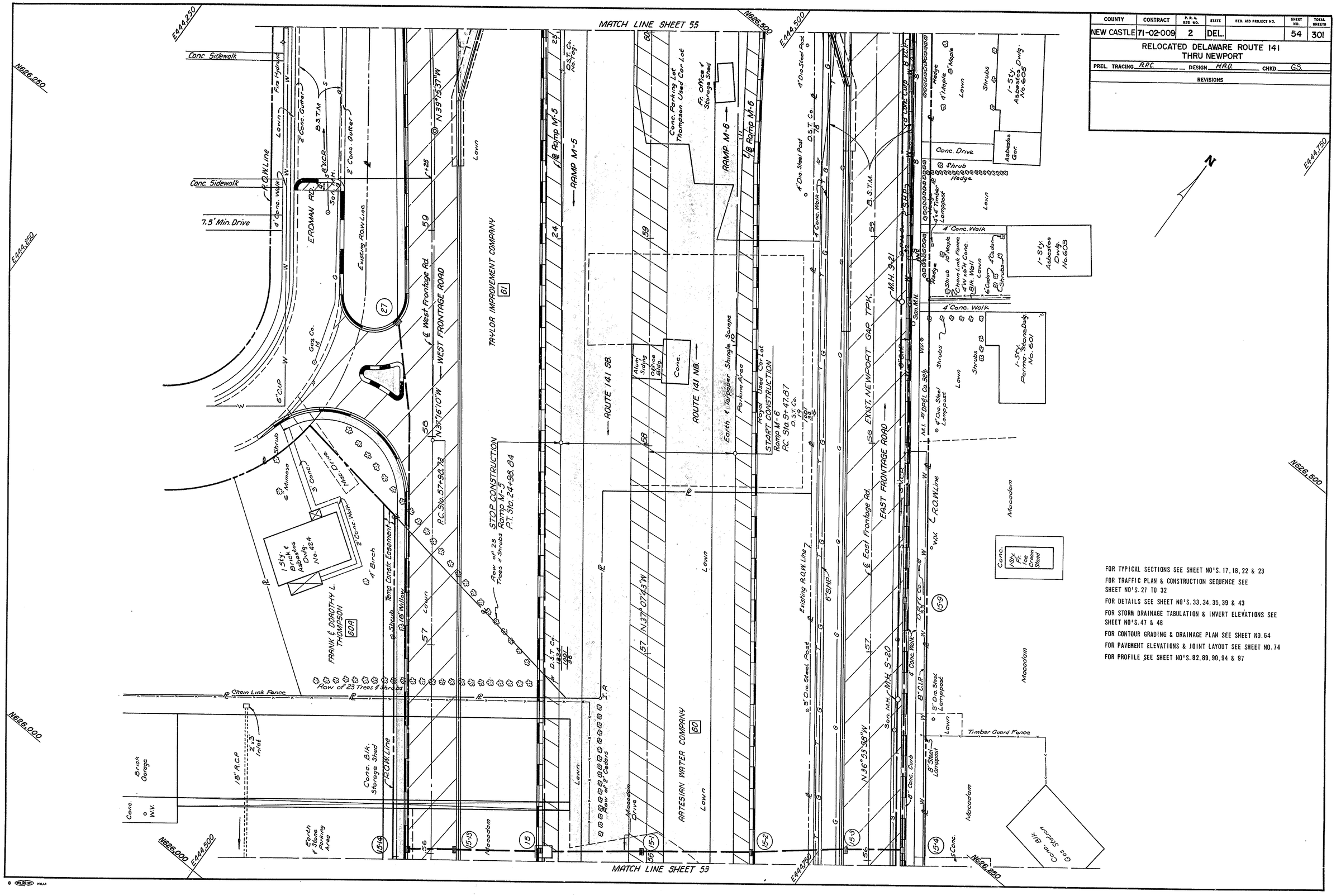

FOR TYPICAL SECTIONS SEE SHEET NO'S. 17, 18, 22 & 23

FOR TRAFFIC PLAN & CONSTRUCTION SEQUENCE SEE SHEET NO'S. 27 TO 32

FOR DETAILS SEE SHEET NO'S. 33, 34, 35, 39 & 43

FOR STORM DRAINAGE TABULATION & INVERT ELEVATIONS SEE SHEET NO'S. 47 & 48

FOR CONTOUR GRADING & DRAINAGE PLAN SEE SHEET NO. 64

FOR PAVEMENT ELEVATIONS & JOINT LAYOUT SEE SHEET NO. 74

FOR PROFILE SEE SHEET NO'S. 82, 89, 90, 94 & 97

COUNTY	CONTRACT	P.R.A. REG. NO.	STATE	FED. AID PROJECT NO.	SHEET NO.	TOTAL SHEETS
NEW CASTLE	71-02-009	2	DEL.		55	301

RELOCATED DELAWARE ROUTE 141
THRU NEWPORT

PREL. TRACING R.P.C. DESIGN H.A.D. CHKD. G.S.

REVISIONS

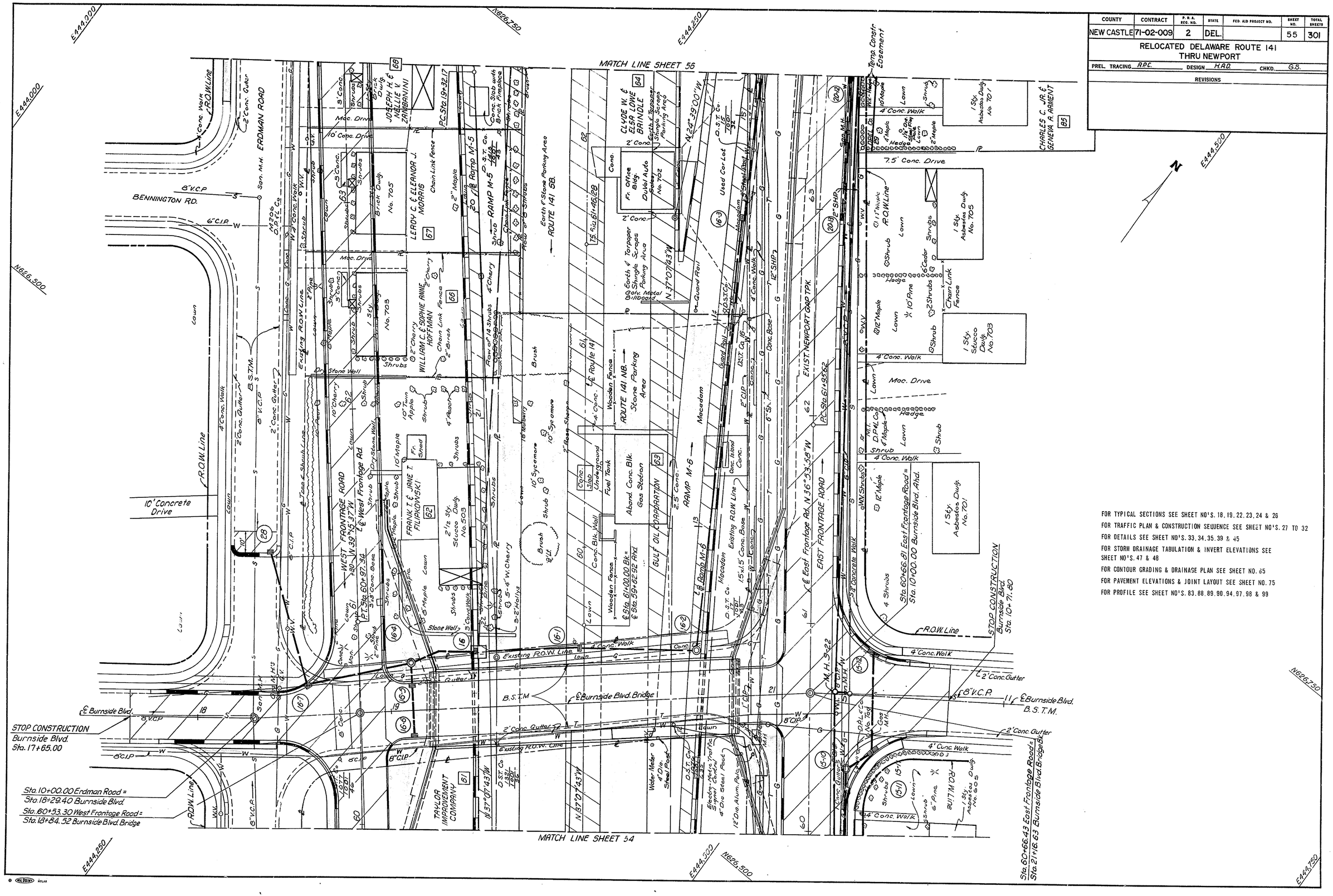

FOR TYPICAL SECTIONS SEE SHEET NO'S. 18, 19, 22, 23, 24 & 26
FOR TRAFFIC PLAN & CONSTRUCTION SEQUENCE SEE SHEET NO'S. 27 TO 32
FOR DETAILS SEE SHEET NO'S. 33, 34, 35, 39 & 45
FOR STORM DRAINAGE TABULATION & INVERT ELEVATIONS SEE SHEET NO'S. 47 & 48
FOR CONTOUR GRADING & DRAINAGE PLAN SEE SHEET NO. 65
FOR PAVEMENT ELEVATIONS & JOINT LAYOUT SEE SHEET NO. 75
FOR PROFILE SEE SHEET NO'S. 83, 88, 89, 90, 94, 97, 98 & 99

COUNTY	CONTRACT	P.R.A. REG. NO.	STATE	FED. AID PROJECT NO.	SHEET NO.	TOTAL SHEETS
NEW CASTLE	71-02-009	2	DEL.		56	301

RELOCATED DELAWARE ROUTE 141
THRU NEWPORT

PREL. TRACING R.P.C. DESIGN H.A.D. CHKD. G.S.

REVISIONS

FOR TYPICAL SECTIONS SEE SHEET NO'S. 18, 19, 22, 24, 25 & 26

FOR TRAFFIC PLAN & CONSTRUCTION SEQUENCE SEE SHEET NO'S. 27 TO 32

FOR DETAILS SEE SHEET NO'S. 33, 34, 35, 40

FOR STORM DRAINAGE TABULATION & INVERT ELEVATIONS SEE SHEET NO'S. 47 & 48

FOR CONTOUR GRADING & DRAINAGE PLAN SEE SHEET NO. 66

FOR PAVEMENT ELEVATIONS & JOINT LAYOUT SEE SHEET NO. 76

FOR PROFILE SEE SHEET NO'S. 83, 84, 88, 90, 94 & 98

COUNTY	CONTRACT	P.R.A. REG. NO.	STATE	FED. AID PROJECT NO.	SHEET NO.	TOTAL SHEETS
NEW CASTLE	71-02-009	2	DEL.		57	301

RELOCATED DELAWARE ROUTE 141
THRU NEWPORT

PREL. TRACING R.P.C. DESIGN H.A.D. CHKD. G.S.

REVISIONS

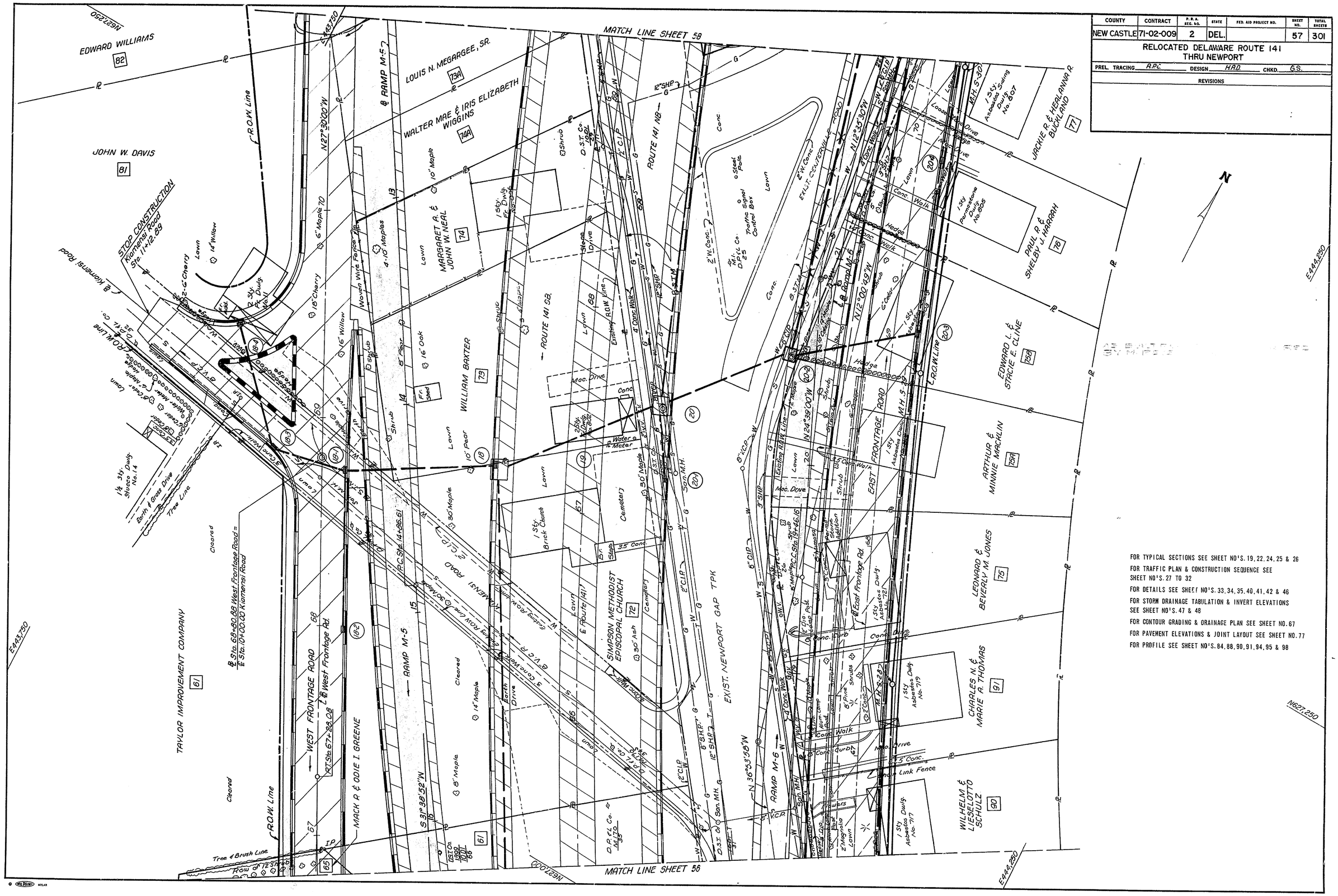

FOR TYPICAL SECTIONS SEE SHEET NO'S. 19, 22, 24, 25 & 26
FOR TRAFFIC PLAN & CONSTRUCTION SEQUENCE SEE SHEET NO'S. 27 TO 32
FOR DETAILS SEE SHEET NO'S. 33, 34, 35, 40, 41, 42 & 46
FOR STORM DRAINAGE TABULATION & INVERT ELEVATIONS SEE SHEET NO'S. 47 & 48
FOR CONTOUR GRADING & DRAINAGE PLAN SEE SHEET NO. 67
FOR PAVEMENT ELEVATIONS & JOINT LAYOUT SEE SHEET NO. 77
FOR PROFILE SEE SHEET NO'S. 84, 88, 90, 91, 94, 95 & 98

COUNTY	CONTRACT	F. R. A. REG. NO.	STATE	FED. AID PROJECT NO.	SHEET NO.	TOTAL SHEETS
NEW CASTLE	71-02-009	2	DEL.		58	301

RELOCATED DELAWARE ROUTE 141
THRU NEWPORT

PREL. TRACING R.P.C. DESIGN H.A.D. CHKD. G.S.

REVISIONS

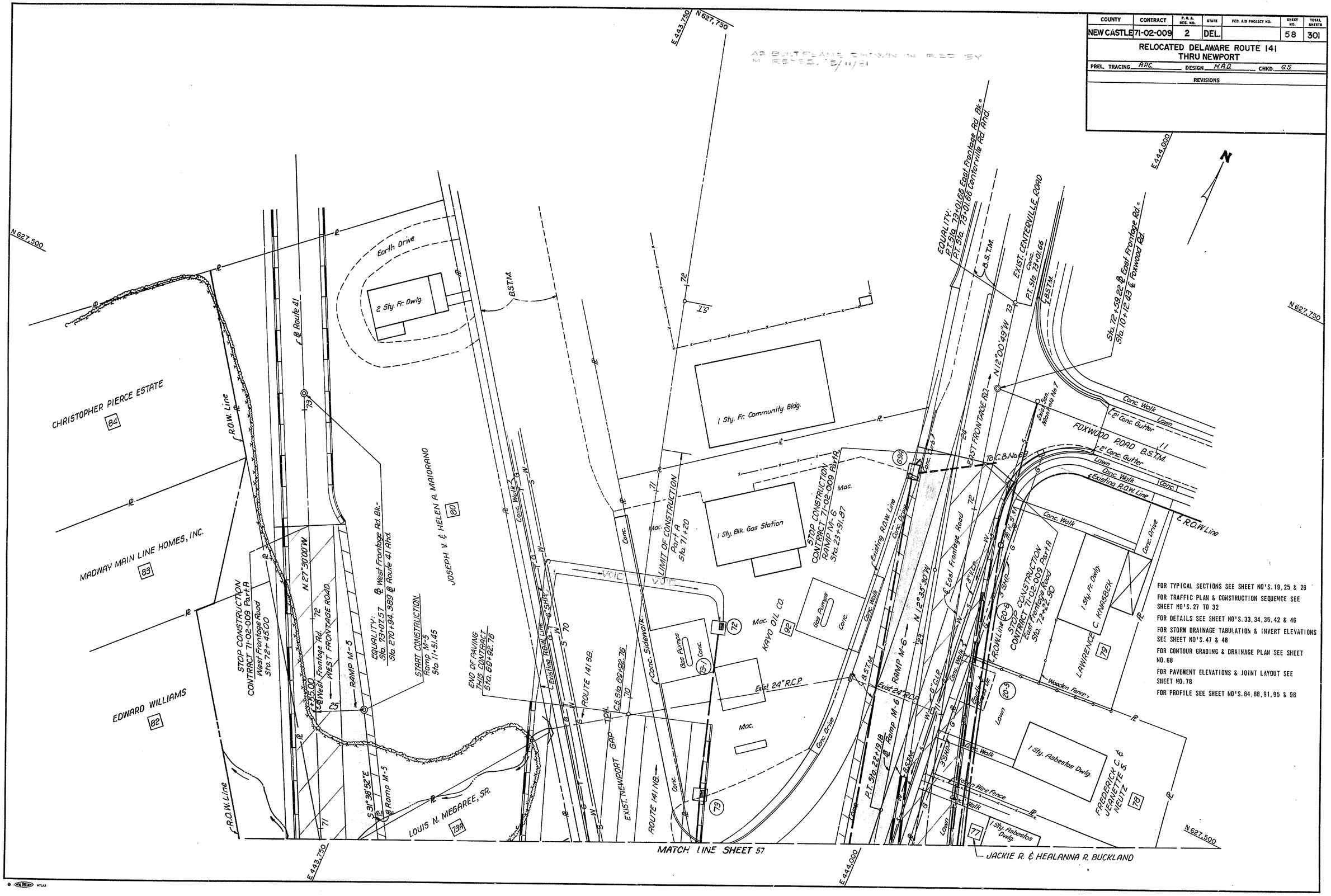

COUNTY	CONTRACT	P.R.A. REG. NO.	STATE	FED. AID PROJECT NO.	SHEET NO.	TOTAL SHEETS
NEW CASTLE	71-02-009	2	DEL.		59	301

RELOCATED DELAWARE ROUTE 141
THRU NEWPORT

PREL. TRACING R.W.H. DESIGN H.A.D. CHKD. G.S.

REVISIONS

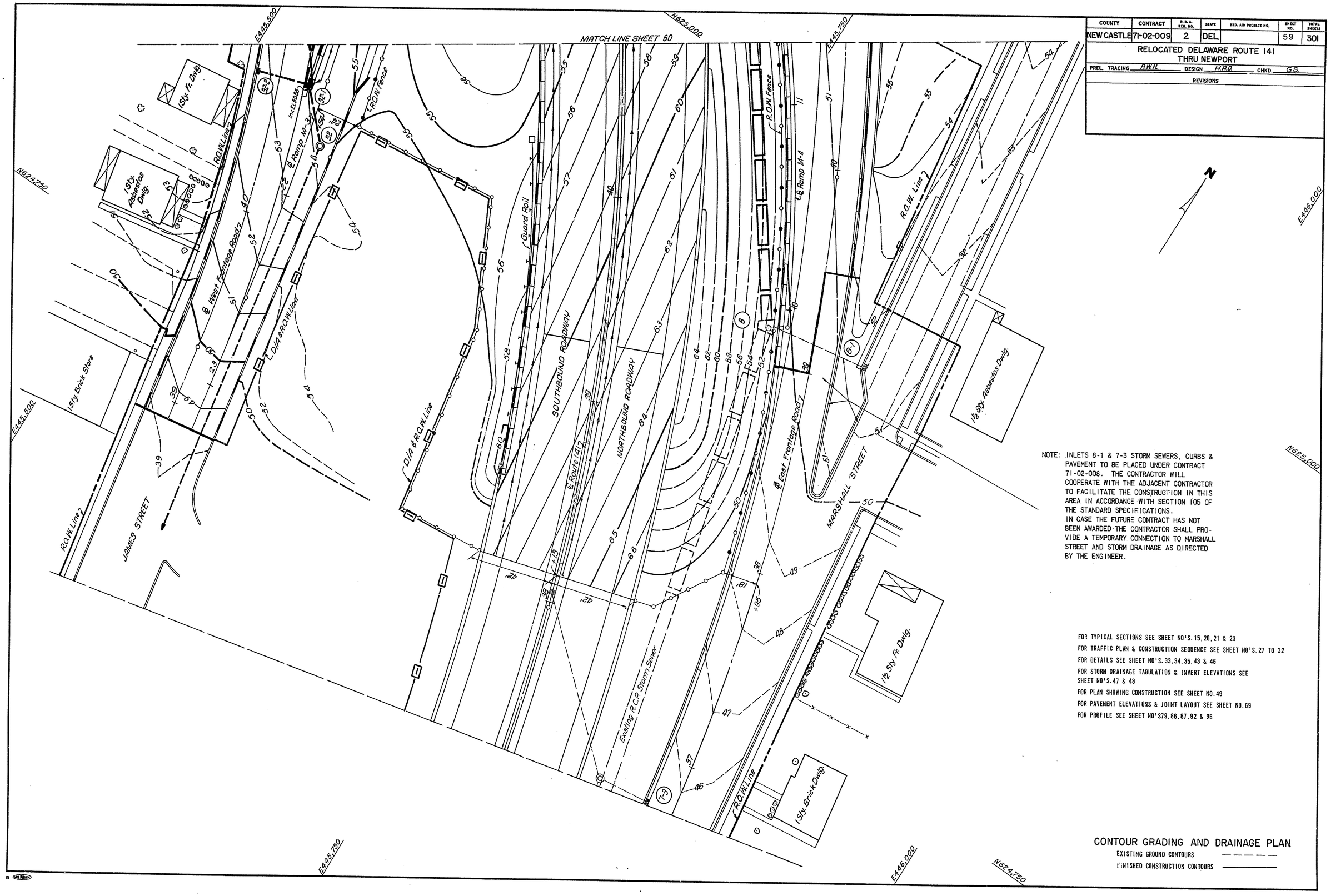

NOTE: INLETS 8-1 & 7-3 STORM SEWERS, CURBS & PAVEMENT TO BE PLACED UNDER CONTRACT 71-02-008. THE CONTRACTOR WILL COOPERATE WITH THE ADJACENT CONTRACTOR TO FACILITATE THE CONSTRUCTION IN THIS AREA IN ACCORDANCE WITH SECTION 105 OF THE STANDARD SPECIFICATIONS.
IN CASE THE FUTURE CONTRACT HAS NOT BEEN AWARDED THE CONTRACTOR SHALL PROVIDE A TEMPORARY CONNECTION TO MARSHALL STREET AND STORM DRAINAGE AS DIRECTED BY THE ENGINEER.

FOR TYPICAL SECTIONS SEE SHEET NO'S. 15, 20, 21 & 23
FOR TRAFFIC PLAN & CONSTRUCTION SEQUENCE SEE SHEET NO'S. 27 TO 32
FOR DETAILS SEE SHEET NO'S. 33, 34, 35, 43 & 46
FOR STORM DRAINAGE TABULATION & INVERT ELEVATIONS SEE SHEET NO'S. 47 & 48
FOR PLAN SHOWING CONSTRUCTION SEE SHEET NO. 49
FOR PAVEMENT ELEVATIONS & JOINT LAYOUT SEE SHEET NO. 69
FOR PROFILE SEE SHEET NO'S 79, 86, 87, 92 & 96

CONTOUR GRADING AND DRAINAGE PLAN

EXISTING GROUND CONTOURS — — — — —
FINISHED CONSTRUCTION CONTOURS ————

COUNTY	CONTRACT	P. R. A. REG. NO.	STATE	FED. AID PROJECT NO.	SHEET NO.	TOTAL SHEETS
NEW CASTLE	71-02-009	2	DEL.		60	301

RELOCATED DELAWARE ROUTE 141
THRU NEWPORT

PREL. TRACING R.L.H. DESIGN G.S. CHKD. R.C.N.

REVISIONS

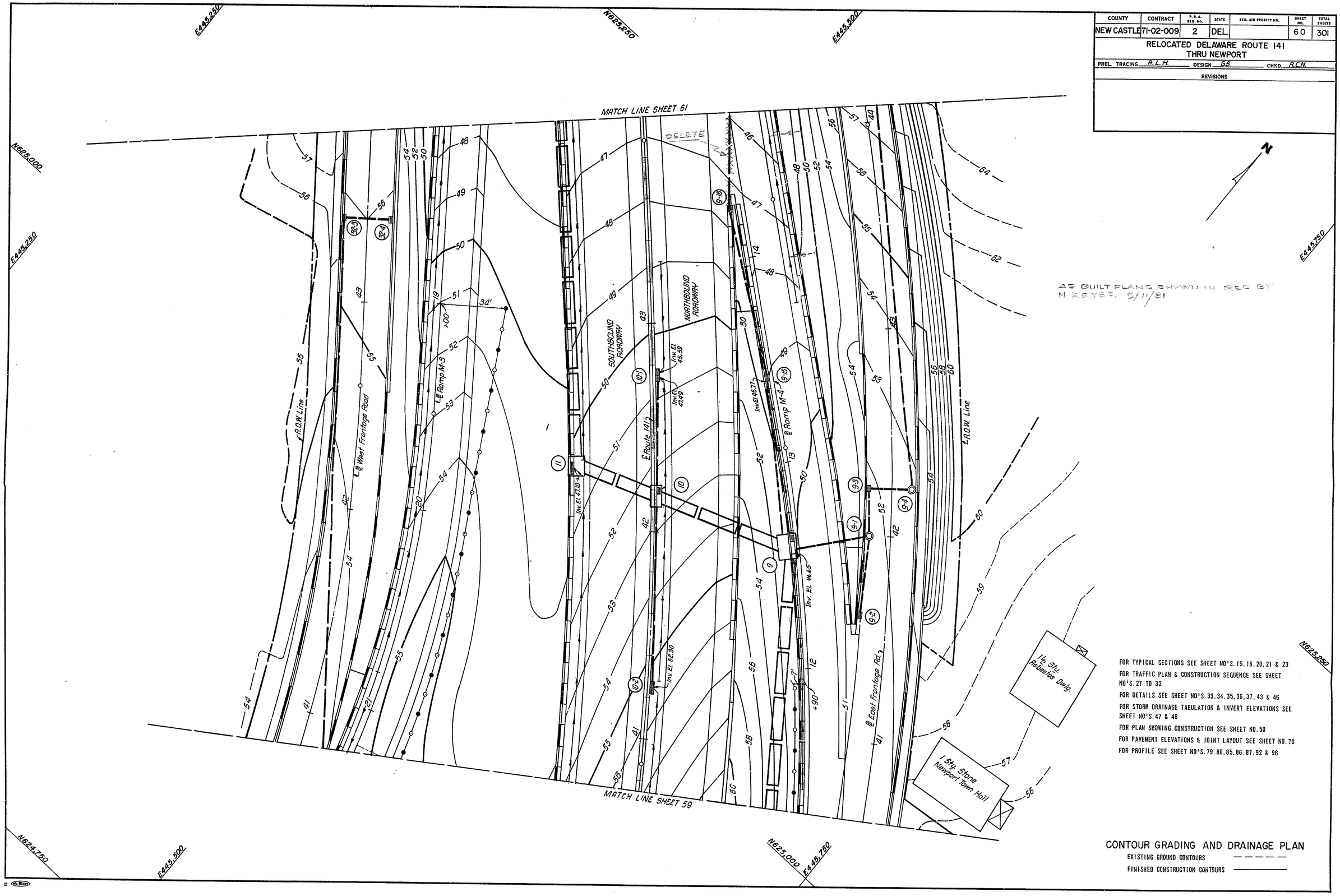

FOR TYPICAL SECTIONS SEE SHEET NO'S. 15, 16, 20, 21 & 23

FOR TRAFFIC PLAN & CONSTRUCTION SEQUENCE SEE SHEET NO'S. 27 TO 32

FOR DETAILS SEE SHEET NO'S. 33, 34, 35, 36, 37, 43 & 46

FOR STORM DRAINAGE TABULATION & INVERT ELEVATIONS SEE SHEET NO'S. 47 & 48

FOR PLAN SHOWING CONSTRUCTION SEE SHEET NO. 50

FOR PAVEMENT ELEVATIONS & JOINT LAYOUT SEE SHEET NO. 70

FOR PROFILE SEE SHEET NO'S. 79, 80, 85, 86, 87, 92 & 96

CONTOUR GRADING AND DRAINAGE PLAN

EXISTING GROUND CONTOURS — — — — —

FINISHED CONSTRUCTION CONTOURS ————

COUNTY	CONTRACT	P.R.A. REG. NO.	STATE	FED. AID PROJECT NO.	SHEET NO.	TOTAL SHEETS
NEW CASTLE	71-02-009	2	DEL.		61	301

RELOCATED DELAWARE ROUTE 141
THRU NEWPORT

PREL. TRACING R.L.H. DESIGN G.S. CHKD. R.C.N.

REVISIONS

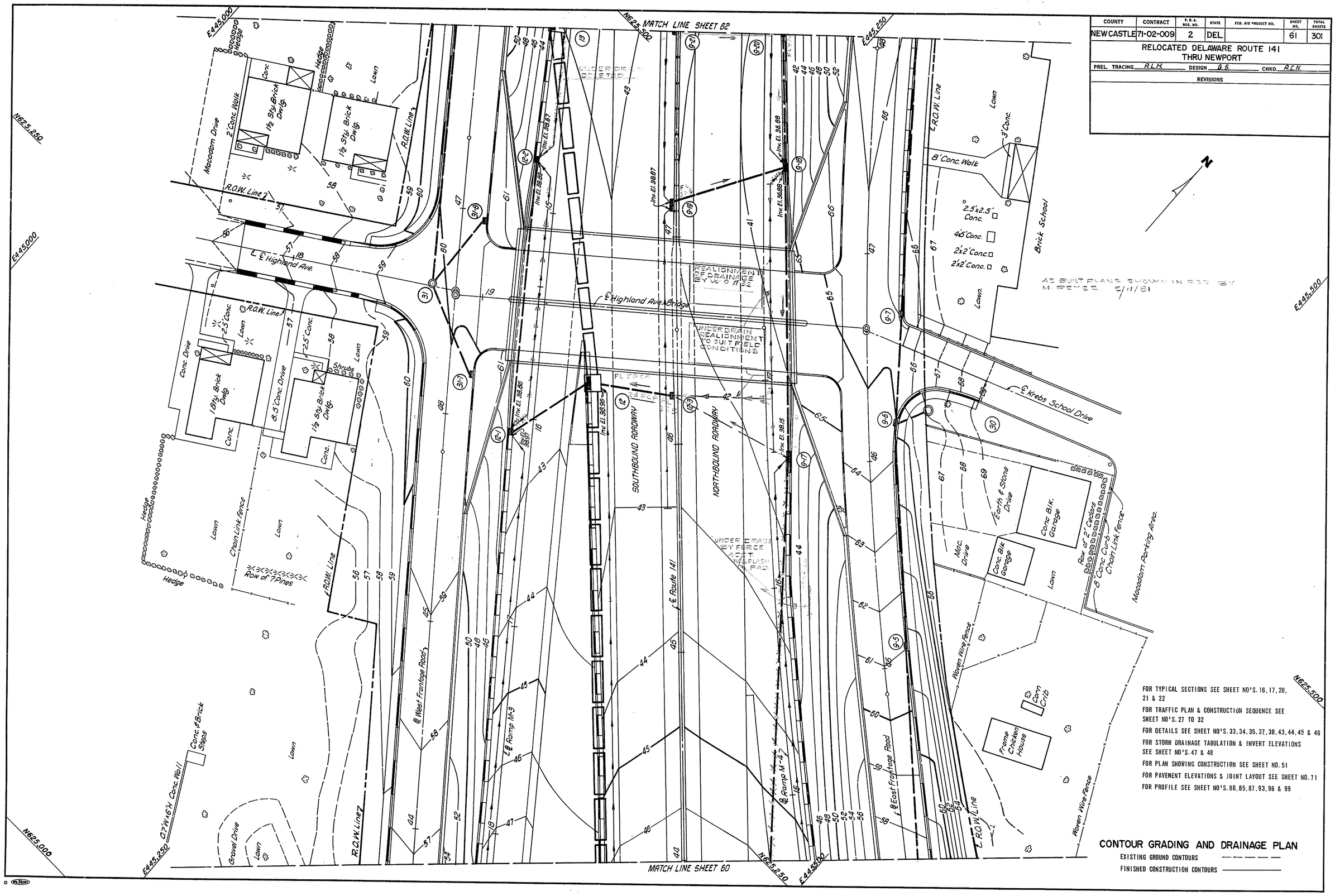

FOR TYPICAL SECTIONS SEE SHEET NO'S. 16, 17, 20, 21 & 22

FOR TRAFFIC PLAN & CONSTRUCTION SEQUENCE SEE SHEET NO'S. 27 TO 32

FOR DETAILS SEE SHEET NO'S. 33, 34, 35, 37, 38, 43, 44, 45 & 46

FOR STORM DRAINAGE TABULATION & INVERT ELEVATIONS SEE SHEET NO'S. 47 & 48

FOR PLAN SHOWING CONSTRUCTION SEE SHEET NO. 51

FOR PAVEMENT ELEVATIONS & JOINT LAYOUT SEE SHEET NO. 71

FOR PROFILE SEE SHEET NO'S. 80, 85, 87, 93, 96 & 99

CONTOUR GRADING AND DRAINAGE PLAN

EXISTING GROUND CONTOURS — — — — —

FINISHED CONSTRUCTION CONTOURS ————

COUNTY	CONTRACT	F.B.A. REG. NO.	STATE	FED. AID PROJECT NO.	SHEET NO.	TOTAL SHEETS
NEW CASTLE	71-02-009	2	DEL.		62	301

RELOCATED DELAWARE ROUTE 141
THRU NEWPORT

PREL. TRACING R.L.H. DESIGN G.S. CHKD. A.C.N.

REVISIONS

FOR TYPICAL SECTIONS SEE SHEET NO'S. 17, 22 & 23

FOR TRAFFIC PLAN & CONSTRUCTION SEQUENCE SEE SHEET NO'S. 27 TO 32

FOR DETAILS SEE SHEET NO'S. 33, 34, 35, 38, 43, 45 & 46

FOR STORM DRAINAGE TABULATION & INVERT ELEVATIONS SEE SHEET NO'S. 47 & 48

FOR PLAN SHOWING CONSTRUCTION SEE SHEET NO. 52

FOR PAVEMENT ELEVATIONS & JOINT LAYOUT SEE SHEET NO. 72

FOR PROFILE SEE SHEET NO'S. 81, 85, 93, 96 & 97

CONTOUR GRADING AND DRAINAGE PLAN

EXISTING GROUND CONTOURS — — — — —

FINISHED CONSTRUCTION CONTOURS ————

COUNTY	CONTRACT	P.D.A. REG. NO.	STATE	FED. AID PROJECT NO.	SHEET NO.	TOTAL SHEETS
NEWCASTLE	71-02-009	2	DEL.		63	301

RELOCATED DELAWARE ROUTE 141
THRU NEWPORT

PREL. TRACING R.L.H. DESIGN G.S. CHKD. A.C.N.

REVISIONS

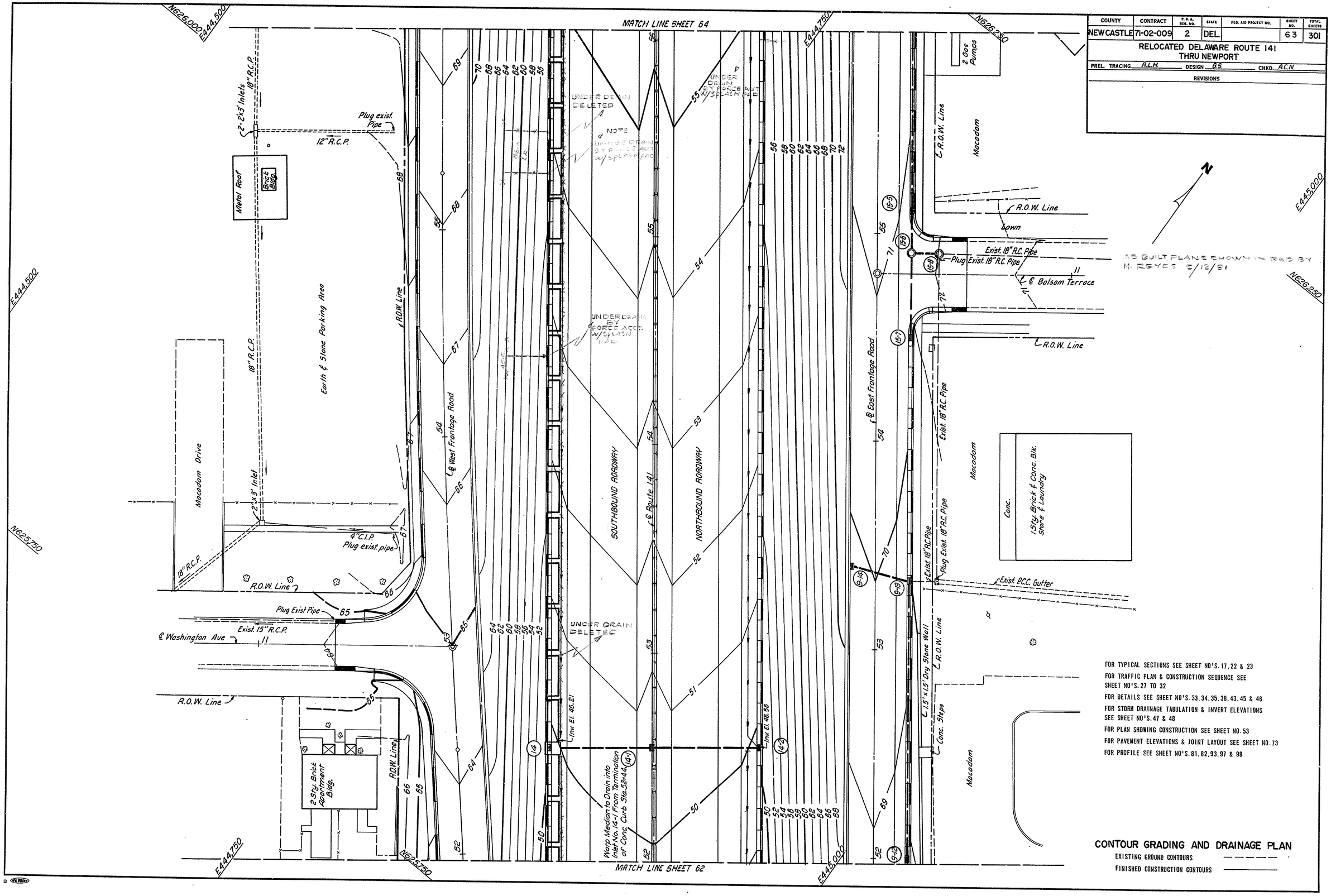

FOR TYPICAL SECTIONS SEE SHEET NO'S. 17, 22 & 23

FOR TRAFFIC PLAN & CONSTRUCTION SEQUENCE SEE SHEET NO'S. 27 TO 32

FOR DETAILS SEE SHEET NO'S. 33, 34, 35, 38, 43, 45 & 46

FOR STORM DRAINAGE TABULATION & INVERT ELEVATIONS SEE SHEET NO'S. 47 & 48

FOR PLAN SHOWING CONSTRUCTION SEE SHEET NO. 53

FOR PAVEMENT ELEVATIONS & JOINT LAYOUT SEE SHEET NO. 73

FOR PROFILE SEE SHEET NO'S. 81, 82, 93, 97 & 99

CONTOUR GRADING AND DRAINAGE PLAN

EXISTING GROUND CONTOURS

FINISHED CONSTRUCTION CONTOURS

COUNTY	CONTRACT	P. R. A. REG. NO.	STATE	FED. AID PROJECT NO.	SHEET NO.	TOTAL SHEETS
NEW CASTLE	71-02-009	2	DEL.		64	301

RELOCATED DELAWARE ROUTE 141
THRU NEWPORT

PREL. TRACING R.L.H. DESIGN G.S. CHKD. R.C.N.

REVISIONS

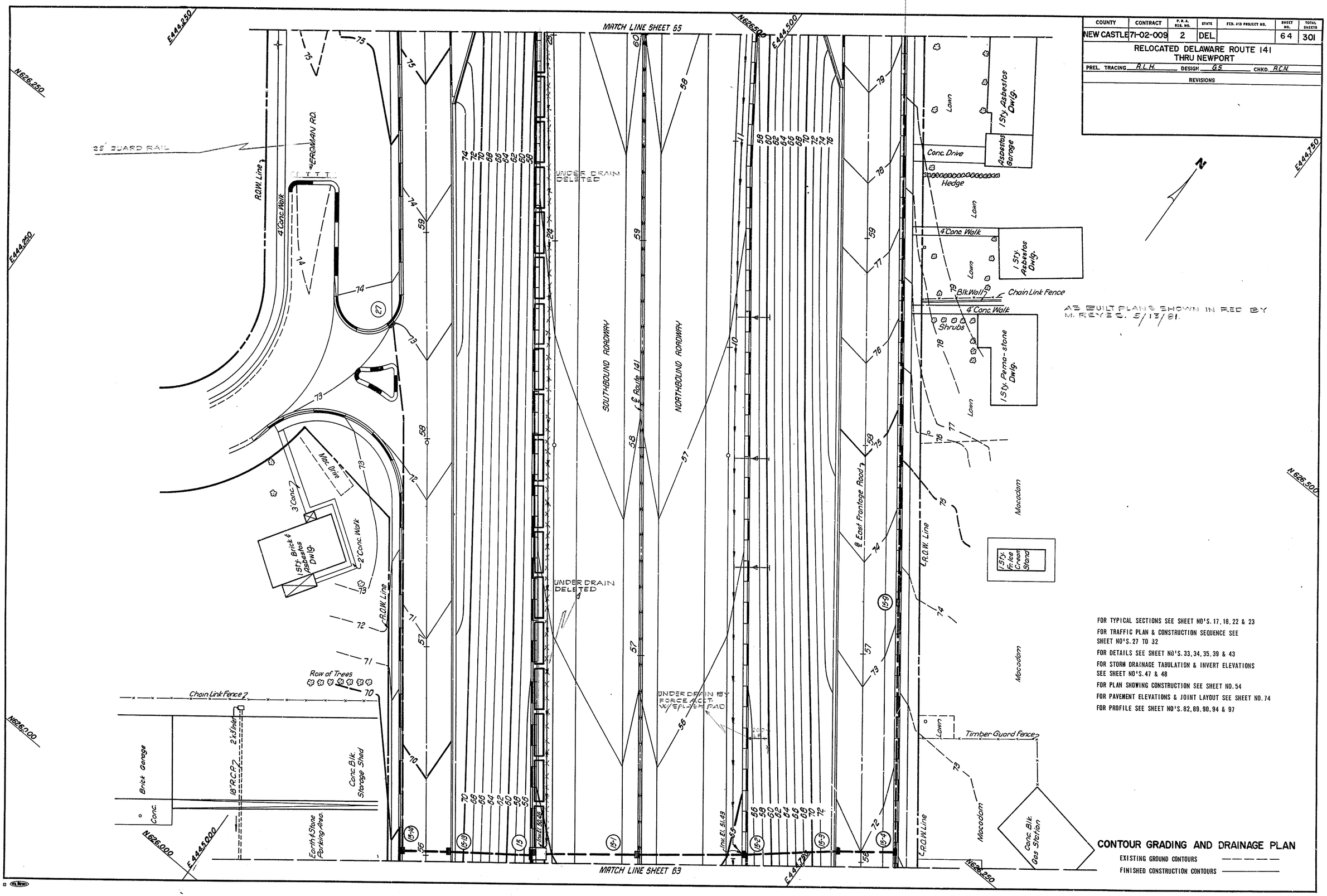

FOR TYPICAL SECTIONS SEE SHEET NO'S. 17, 18, 22 & 23

FOR TRAFFIC PLAN & CONSTRUCTION SEQUENCE SEE SHEET NO'S. 27 TO 32

FOR DETAILS SEE SHEET NO'S. 33, 34, 35, 39 & 43

FOR STORM DRAINAGE TABULATION & INVERT ELEVATIONS SEE SHEET NO'S. 47 & 48

FOR PLAN SHOWING CONSTRUCTION SEE SHEET NO. 54

FOR PAVEMENT ELEVATIONS & JOINT LAYOUT SEE SHEET NO. 74

FOR PROFILE SEE SHEET NO'S. 82, 89, 90, 94 & 97

CONTOUR GRADING AND DRAINAGE PLAN

EXISTING GROUND CONTOURS

FINISHED CONSTRUCTION CONTOURS

COUNTY	CONTRACT	P. R. A. REG. NO.	STATE	FED. AID PROJECT NO.	SHEET NO.	TOTAL SHEETS
NEWCASTLE	71-02-009	2	DEL.		65	301

RELOCATED DELAWARE ROUTE 141
THRU NEWPORT

PREL. TRACING R.L.H. DESIGN G.S. CHKD. G.S.

REVISIONS

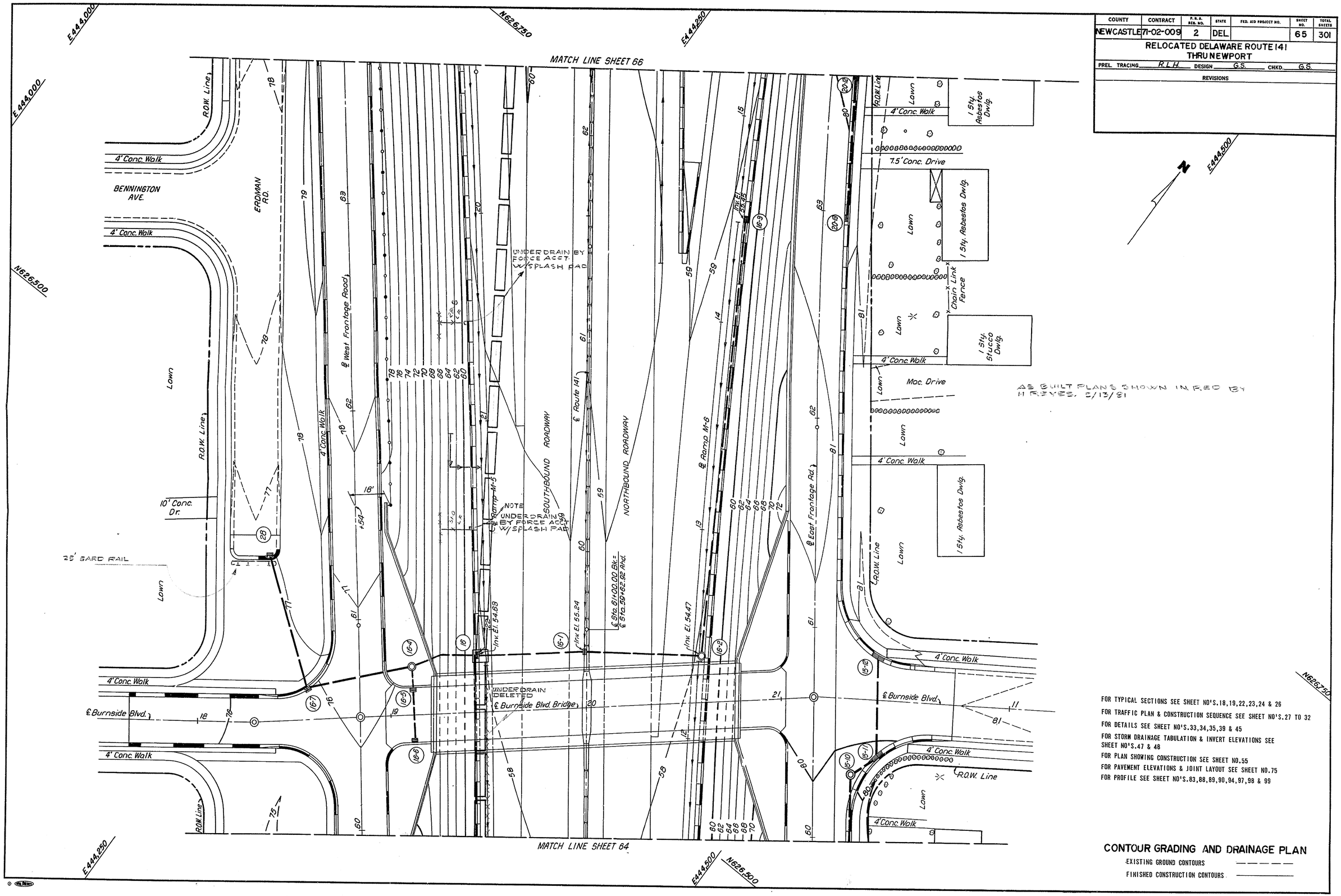

FOR TYPICAL SECTIONS SEE SHEET NO'S.18,19,22,23,24 & 26
FOR TRAFFIC PLAN & CONSTRUCTION SEQUENCE SEE SHEET NO'S.27 TO 32
FOR DETAILS SEE SHEET NO'S.33,34,35,39 & 45
FOR STORM DRAINAGE TABULATION & INVERT ELEVATIONS SEE SHEET NO'S.47 & 48
FOR PLAN SHOWING CONSTRUCTION SEE SHEET NO.55
FOR PAVEMENT ELEVATIONS & JOINT LAYOUT SEE SHEET NO.75
FOR PROFILE SEE SHEET NO'S.83,88,89,90,94,97,98 & 99

CONTOUR GRADING AND DRAINAGE PLAN

EXISTING GROUND CONTOURS — — — — —
FINISHED CONSTRUCTION CONTOURS ————

COUNTY	CONTRACT	F.P.A. REG. NO.	STATE	FED. AID PROJECT NO.	SHEET NO.	TOTAL SHEETS
NEW CASTLE	71-02-009	2	DEL.		66	301

RELOCATED DELAWARE ROUTE 141
THRU NEWPORT

PREL. TRACING R.L.H. DESIGN G.S. CHKD. G.S.

REVISIONS

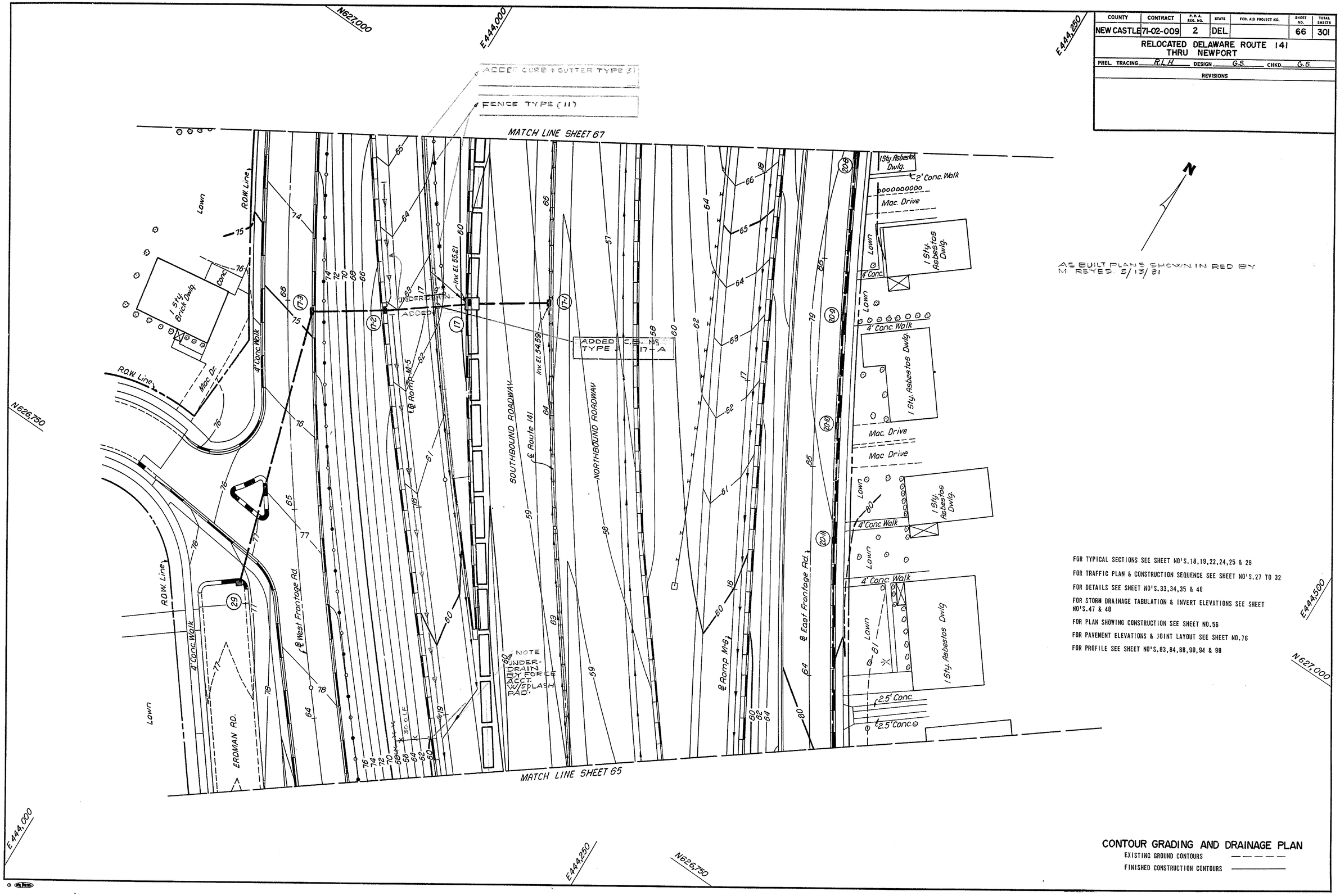

FOR TYPICAL SECTIONS SEE SHEET NO'S.18,19,22,24,25 & 26

FOR TRAFFIC PLAN & CONSTRUCTION SEQUENCE SEE SHEET NO'S.27 TO 32

FOR DETAILS SEE SHEET NO'S.33,34,35 & 40

FOR STORM DRAINAGE TABULATION & INVERT ELEVATIONS SEE SHEET NO'S.47 & 48

FOR PLAN SHOWING CONSTRUCTION SEE SHEET NO.56

FOR PAVEMENT ELEVATIONS & JOINT LAYOUT SEE SHEET NO.76

FOR PROFILE SEE SHEET NO'S.83,84,88,90,94 & 98

CONTOUR GRADING AND DRAINAGE PLAN

EXISTING GROUND CONTOURS — — — — —

FINISHED CONSTRUCTION CONTOURS ————

COUNTY	CONTRACT	F. R. A. REG. NO.	STATE	FED. AID PROJECT NO.	SHEET NO.	TOTAL SHEETS
NEW CASTLE	71-02-009	2	DEL.		67	301

RELOCATED DELAWARE ROUTE 141
THRU NEWPORT

PREL. TRACING R.L.H. DESIGN G.S. CHKD. G.S.

REVISIONS

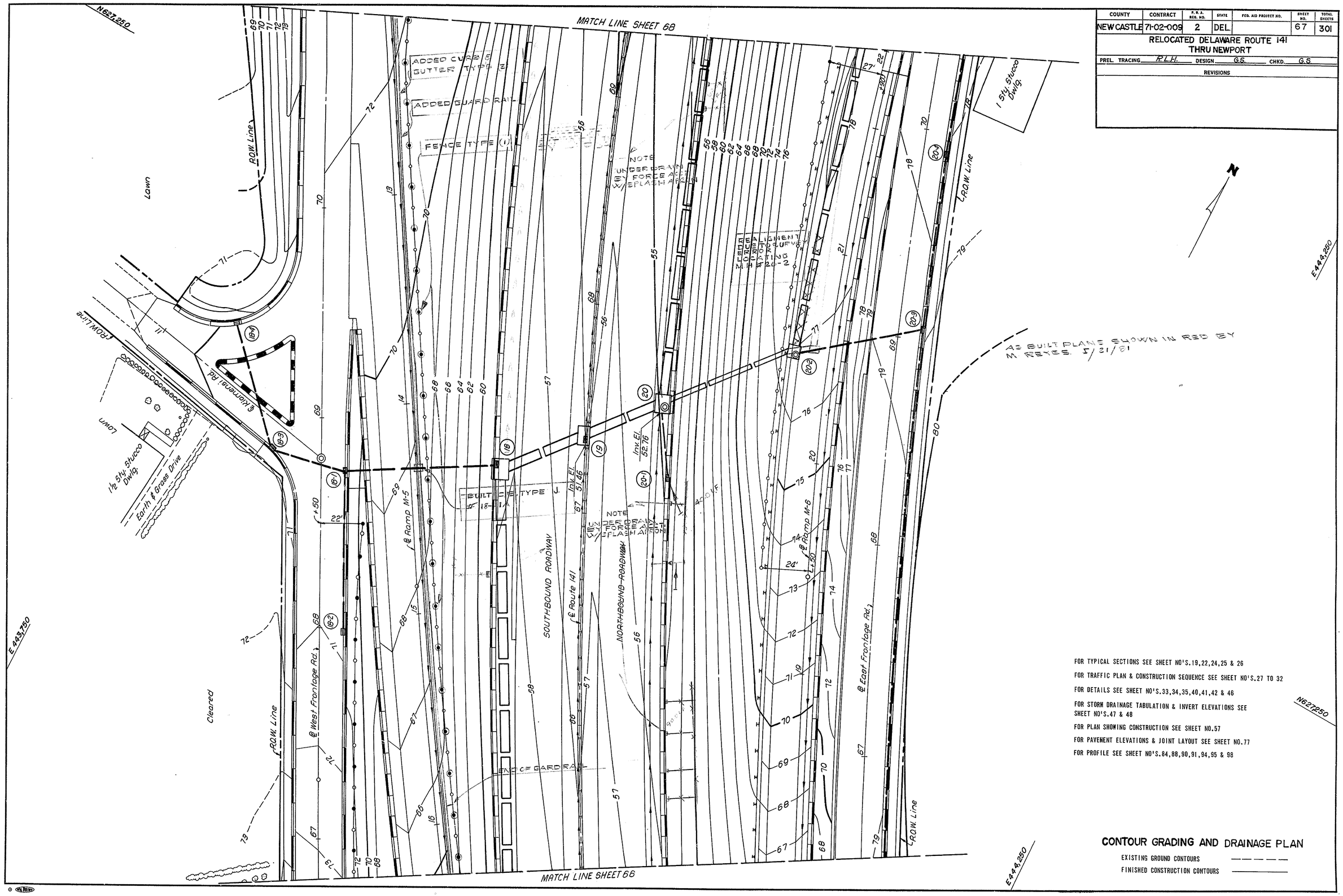

FOR TYPICAL SECTIONS SEE SHEET NO'S.19,22,24,25 & 26

FOR TRAFFIC PLAN & CONSTRUCTION SEQUENCE SEE SHEET NO'S.27 TO 32

FOR DETAILS SEE SHEET NO'S.33,34,35,40,41,42 & 46

FOR STORM DRAINAGE TABULATION & INVERT ELEVATIONS SEE SHEET NO'S.47 & 48

FOR PLAN SHOWING CONSTRUCTION SEE SHEET NO.57

FOR PAVEMENT ELEVATIONS & JOINT LAYOUT SEE SHEET NO.77

FOR PROFILE SEE SHEET NO'S.84,88,90,91,94,95 & 98

CONTOUR GRADING AND DRAINAGE PLAN

EXISTING GROUND CONTOURS — — — — —

FINISHED CONSTRUCTION CONTOURS ————

COUNTY	CONTRACT	F. B. A. REG. NO.	STATE	FED. AID PROJECT NO.	SHEET NO.	TOTAL SHEETS
NEWCASTLE	71-02-009	2	DEL.		68	301

RELOCATED DELAWARE ROUTE 141
THRU NEWPORT

PREL. TRACING _____ DESIGN _____ CHKD. _____

REVISIONS

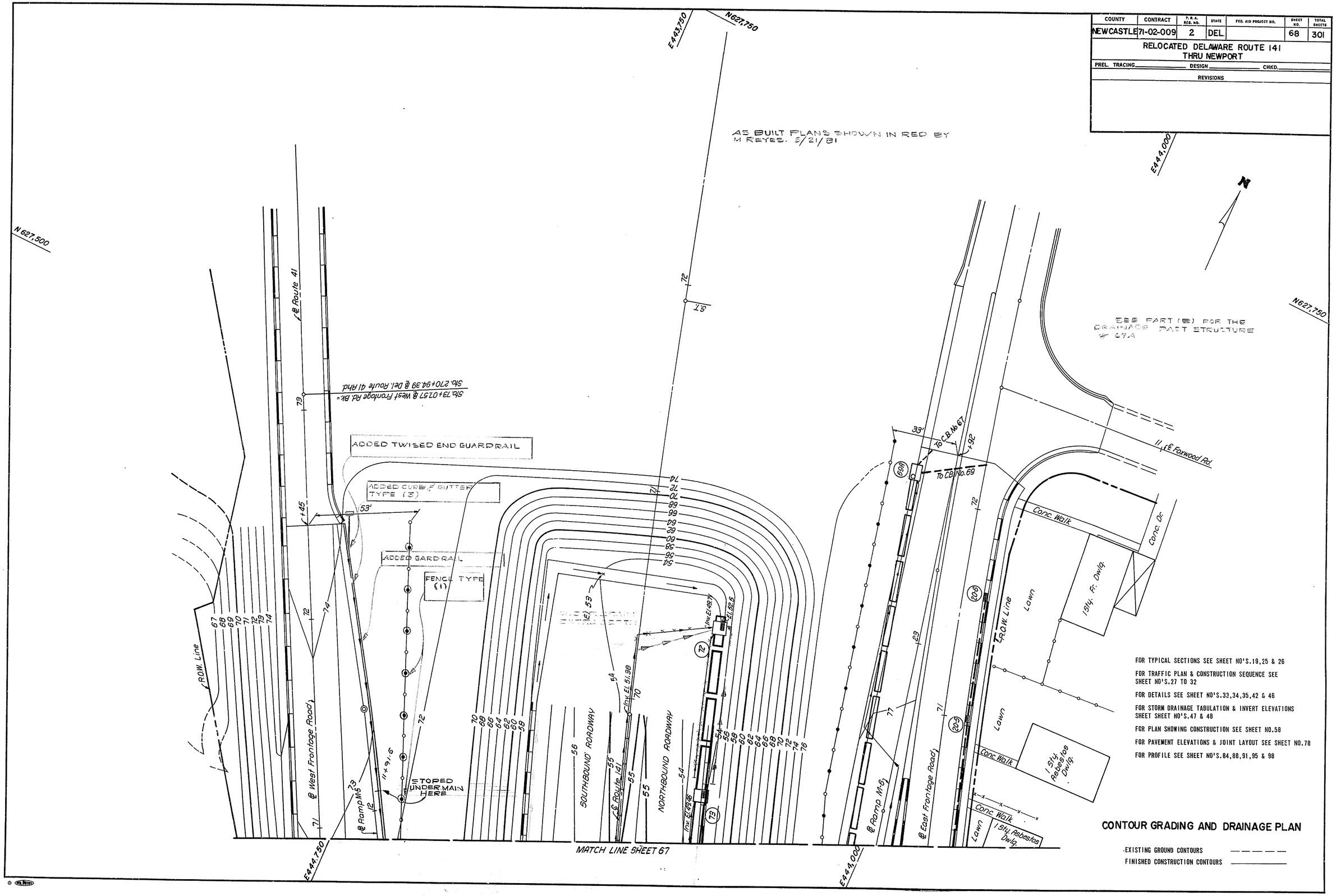

COUNTY	CONTRACT	P.R.A. REG. NO.	STATE	FED. AID PROJECT NO.	SHEET NO.	TOTAL SHEETS
NEW CASTLE	71-02-009	2	DEL		69	301

RELOCATED DELAWARE ROUTE 141
THRU NEWPORT

PREL. TRACING R.L.H. DESIGN P.C.N. CHKD. H.A.D.

REVISIONS

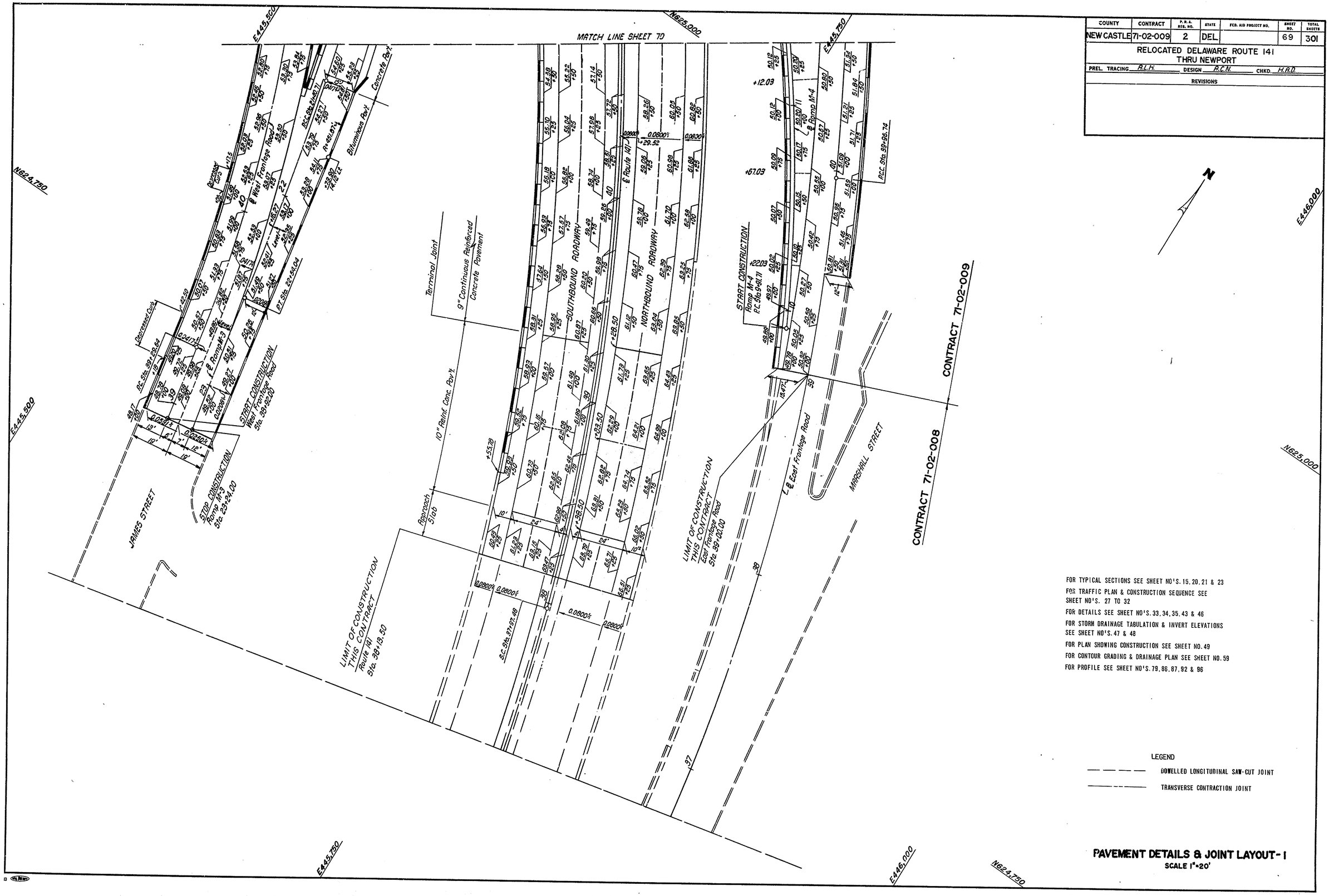

FOR TYPICAL SECTIONS SEE SHEET NO'S. 15, 20, 21 & 23

FOR TRAFFIC PLAN & CONSTRUCTION SEQUENCE SEE SHEET NO'S. 27 TO 32

FOR DETAILS SEE SHEET NO'S. 33, 34, 35, 43 & 46

FOR STORM DRAINAGE TABULATION & INVERT ELEVATIONS SEE SHEET NO'S. 47 & 48

FOR PLAN SHOWING CONSTRUCTION SEE SHEET NO. 49

FOR CONTOUR GRADING & DRAINAGE PLAN SEE SHEET NO. 59

FOR PROFILE SEE SHEET NO'S. 79, 86, 87, 92 & 96

LEGEND

DOWELLED LONGITUDINAL SAW-CUT JOINT

TRANSVERSE CONTRACTION JOINT

PAVEMENT DETAILS & JOINT LAYOUT - I

SCALE 1" = 20'

COUNTY	CONTRACT	P.R.A. REG. NO.	STATE	FED. AID PROJECT NO.	SHEET NO.	TOTAL SHEETS
NEW CASTLE	71-02-009	2	DEL.		70	301

RELOCATED DELAWARE ROUTE 141
THRU NEWPORT

PREL. TRACING R.L.H. DESIGN R.C.N. CHKD. H.R.D.

REVISIONS

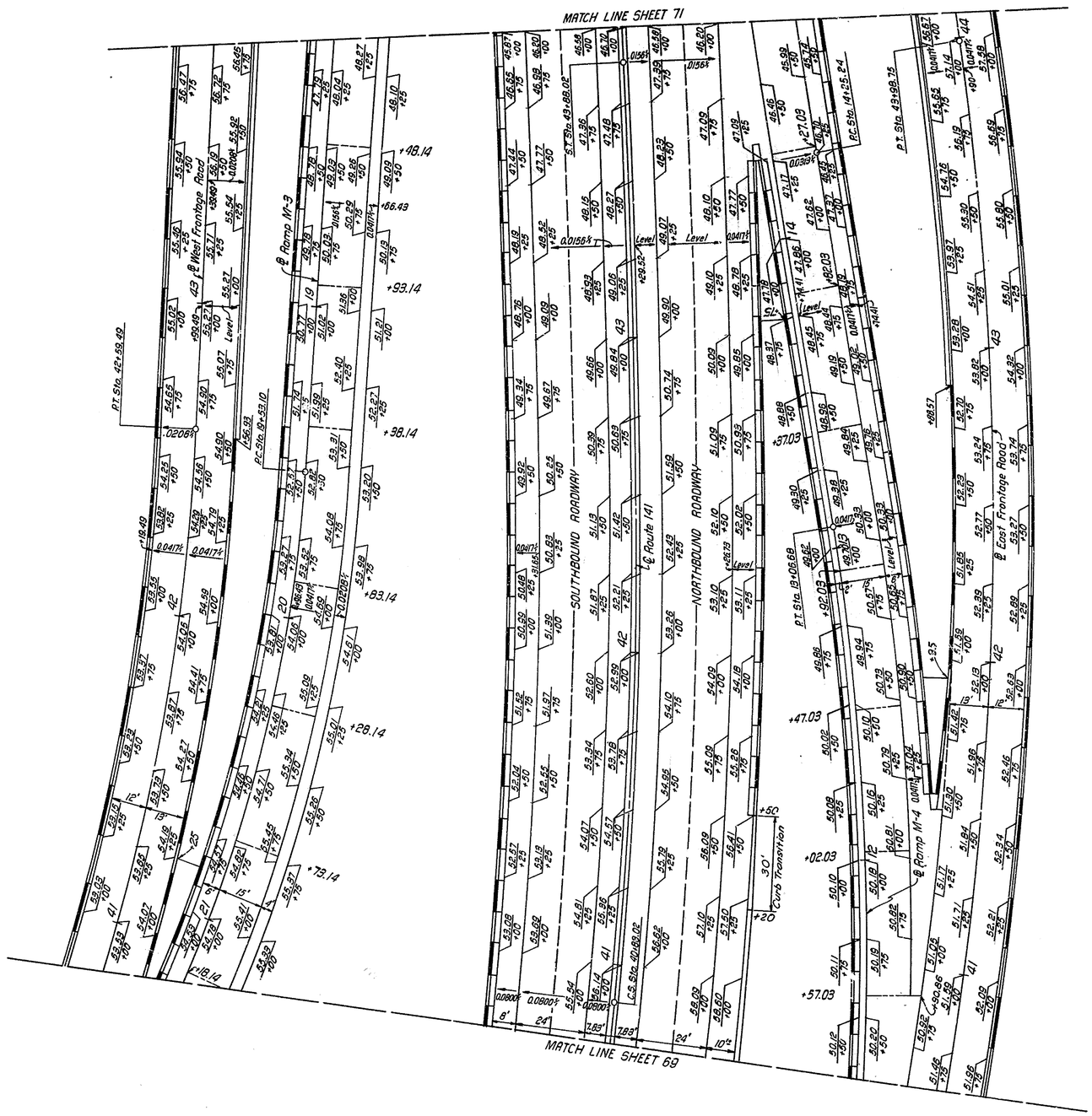

FOR TYPICAL SECTIONS SEE SHEET NO'S. 15, 16, 20, 21 & 23
FOR TRAFFIC PLAN & CONSTRUCTION SEQUENCE SEE SHEET NO'S. 27 TO 32
FOR DETAILS SEE SHEET NO'S. 33, 34, 35, 36, 37, 43 & 46
FOR STORM DRAINAGE TABULATION & INVERT ELEVATIONS SEE SHEET NO'S. 47 & 48
FOR PLAN SHOWING CONSTRUCTION SEE SHEET NO. 50
FOR CONTOUR GRADING & DRAINAGE PLAN SEE SHEET NO. 60
FOR PROFILE SEE SHEET NO'S. 79, 80, 85, 86, 87, 92 & 96

LEGEND

DOWELLED LONGITUDINAL SAW-CUT JOINT

TRANSVERSE CONTRACTION JOINT

PAVEMENT DETAILS & JOINT LAYOUT - 2

SCALE 1" = 20'

COUNTY	CONTRACT	P.B.A. REG. NO.	STATE	FED. AID PROJECT NO.	SHEET NO.	TOTAL SHEETS
NEW CASTLE	71-02-009	2	DEL.		71	301

RELOCATED DELAWARE ROUTE 141
THRU NEWPORT

PREL. TRACING R.L.H. DESIGN A.C.N. CHKD. H.R.D.

REVISIONS

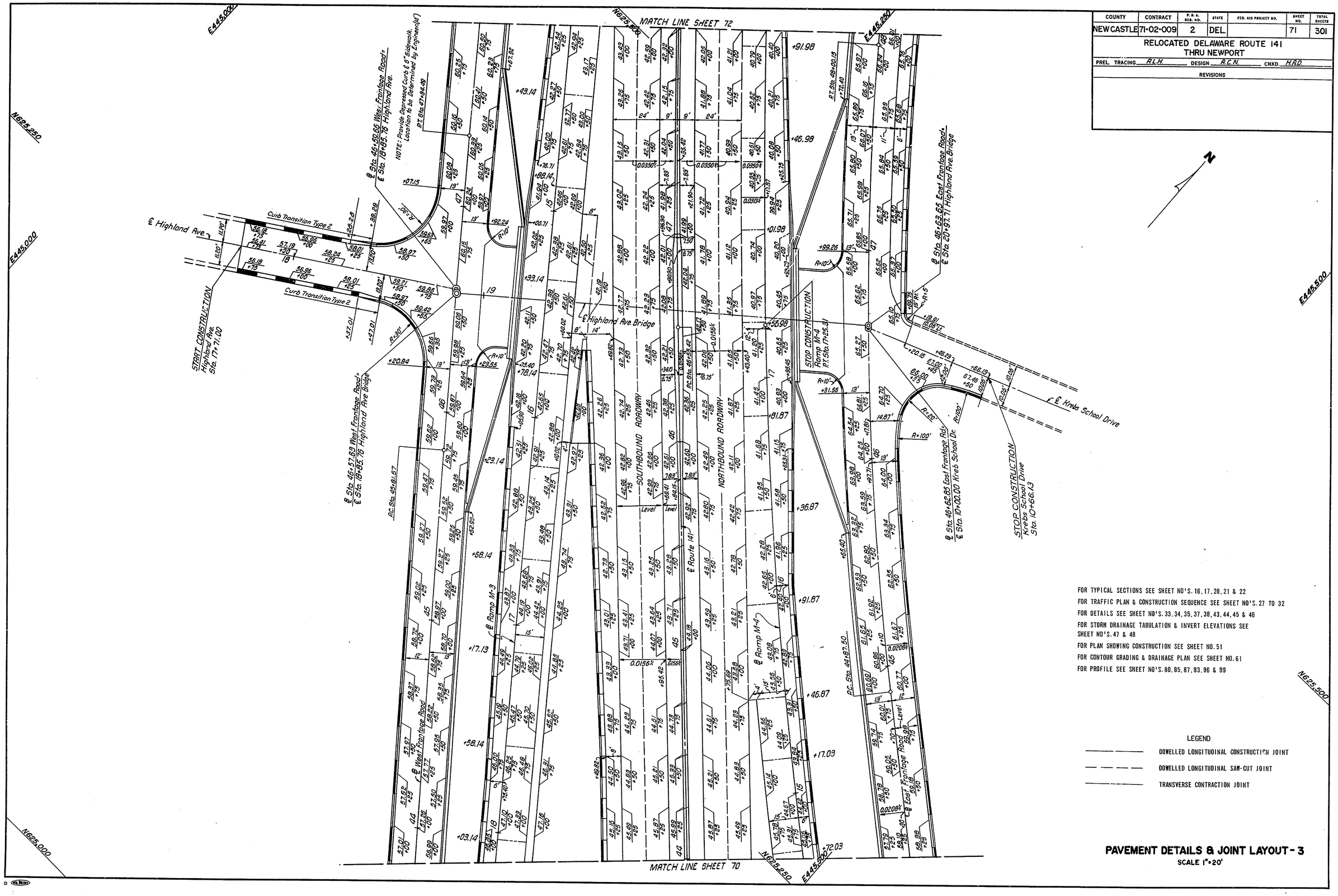

FOR TYPICAL SECTIONS SEE SHEET NO'S. 16, 17, 20, 21 & 22
FOR TRAFFIC PLAN & CONSTRUCTION SEQUENCE SEE SHEET NO'S. 27 TO 32
FOR DETAILS SEE SHEET NO'S. 33, 34, 35, 37, 38, 43, 44, 45 & 46
FOR STORM DRAINAGE TABULATION & INVERT ELEVATIONS SEE SHEET NO'S. 47 & 48
FOR PLAN SHOWING CONSTRUCTION SEE SHEET NO. 51
FOR CONTOUR GRADING & DRAINAGE PLAN SEE SHEET NO. 61
FOR PROFILE SEE SHEET NO'S. 80, 85, 87, 93, 96 & 99

LEGEND

- DOWELLED LONGITUDINAL CONSTRUCTION JOINT
- DOWELLED LONGITUDINAL SAW-CUT JOINT
- TRANSVERSE CONTRACTION JOINT

PAVEMENT DETAILS & JOINT LAYOUT - 3

SCALE 1" = 20'

COUNTY	CONTRACT	P. B. A. REG. NO.	STATE	FED. AID PROJECT NO.	SHEET NO.	TOTAL SHEETS
NEW CASTLE	71-02-009	2	DEL.		72	301

RELOCATED DELAWARE ROUTE 141
THRU NEWPORT

PREL. TRACING R.L.H. DESIGN R.C.N. CHKD. H.A.D.

REVISIONS

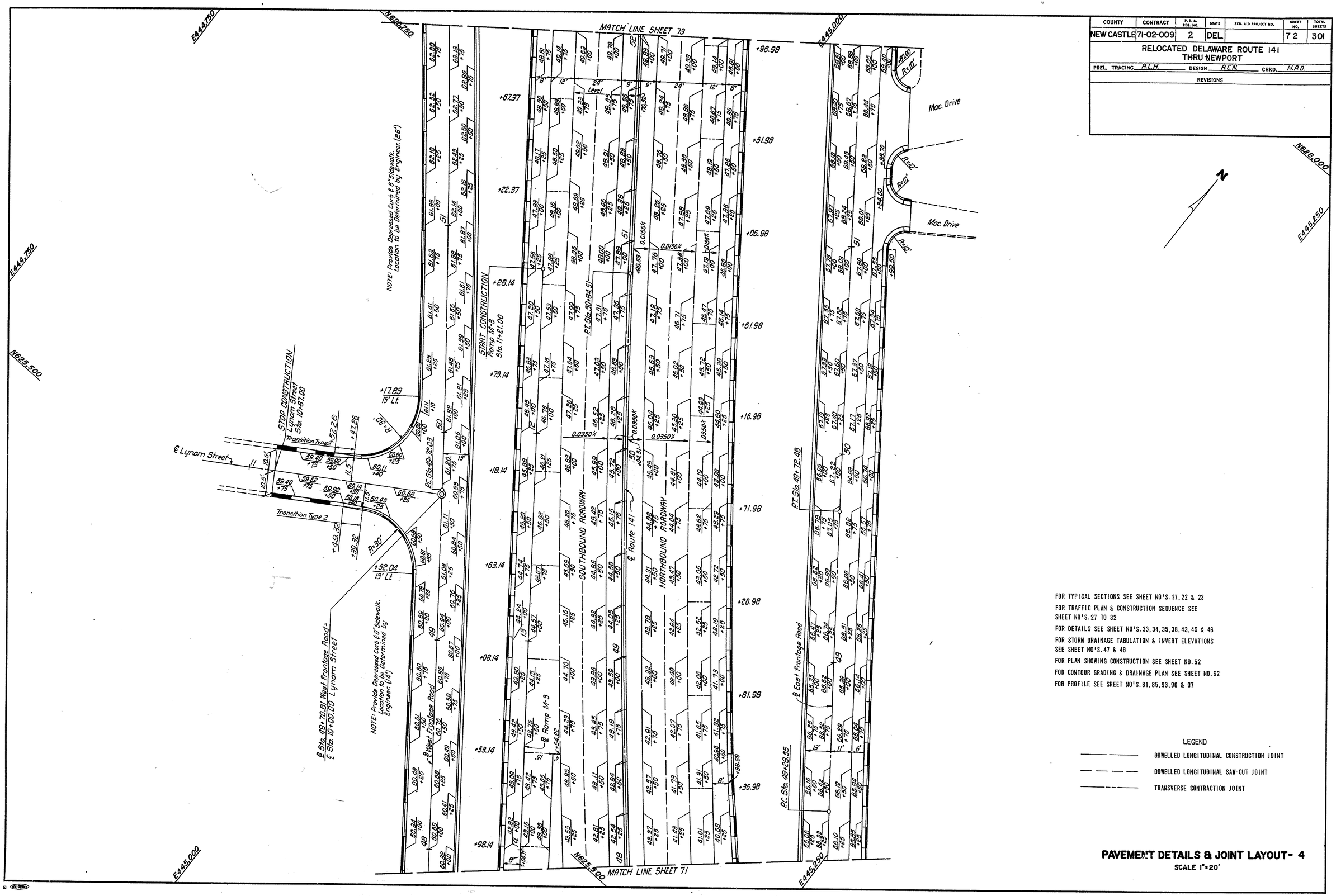

FOR TYPICAL SECTIONS SEE SHEET NO'S. 17, 22 & 23

FOR TRAFFIC PLAN & CONSTRUCTION SEQUENCE SEE SHEET NO'S. 27 TO 32

FOR DETAILS SEE SHEET NO'S. 33, 34, 35, 38, 43, 45 & 46

FOR STORM DRAINAGE TABULATION & INVERT ELEVATIONS SEE SHEET NO'S. 47 & 48

FOR PLAN SHOWING CONSTRUCTION SEE SHEET NO. 52

FOR CONTOUR GRADING & DRAINAGE PLAN SEE SHEET NO. 62

FOR PROFILE SEE SHEET NO'S. 81, 85, 93, 96 & 97

LEGEND

DOWELLED LONGITUDINAL CONSTRUCTION JOINT

DOWELLED LONGITUDINAL SAW-CUT JOINT

TRANSVERSE CONTRACTION JOINT

PAVEMENT DETAILS & JOINT LAYOUT- 4

SCALE 1"=20'

COUNTY	CONTRACT	P.R.A. REG. NO.	STATE	FED. AID PROJECT NO.	SHEET NO.	TOTAL SHEETS
NEW CASTLE	71-02-009	2	DEL		73	301

RELOCATED DELAWARE ROUTE 141
THRU NEWPORT

PREL. TRACING R.L.H. DESIGN R.C.N. CHKD. H.A.D.

REVISIONS

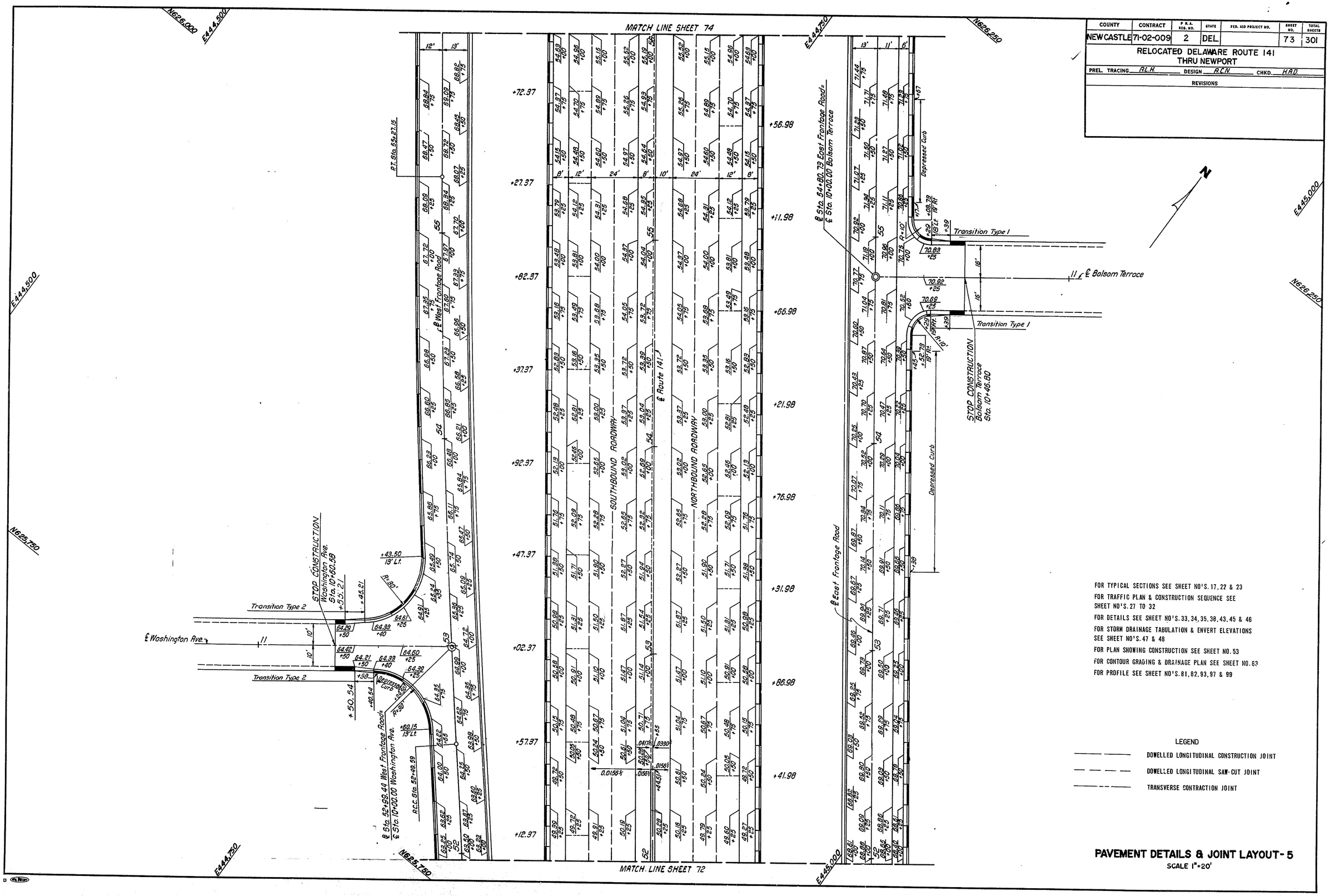

FOR TYPICAL SECTIONS SEE SHEET NO'S. 17, 22 & 23
FOR TRAFFIC PLAN & CONSTRUCTION SEQUENCE SEE SHEET NO'S. 27 TO 32
FOR DETAILS SEE SHEET NO'S. 33, 34, 35, 38, 43, 45 & 46
FOR STORM DRAINAGE TABULATION & ENVERT ELEVATIONS SEE SHEET NO'S. 47 & 48
FOR PLAN SHOWING CONSTRUCTION SEE SHEET NO. 53
FOR CONTOUR GRADING & DRAINAGE PLAN SEE SHEET NO. 63
FOR PROFILE SEE SHEET NO'S. 81, 82, 93, 97 & 99

LEGEND

- DOWELLED LONGITUDINAL CONSTRUCTION JOINT
- DOWELLED LONGITUDINAL SAW-CUT JOINT
- TRANSVERSE CONTRACTION JOINT

PAVEMENT DETAILS & JOINT LAYOUT - 5

SCALE 1" = 20'

COUNTY	CONTRACT	P. B.A. REG. NO.	STATE	FED. AID PROJECT NO.	SHEET NO.	TOTAL SHEETS
NEW CASTLE	71-02-009	2	DEL		74	301

RELOCATED DELAWARE ROUTE 141
THRU NEWPORT

PREL. TRACING R.L.H. DESIGN B.C.N. CHKD. H.A.D.

REVISIONS

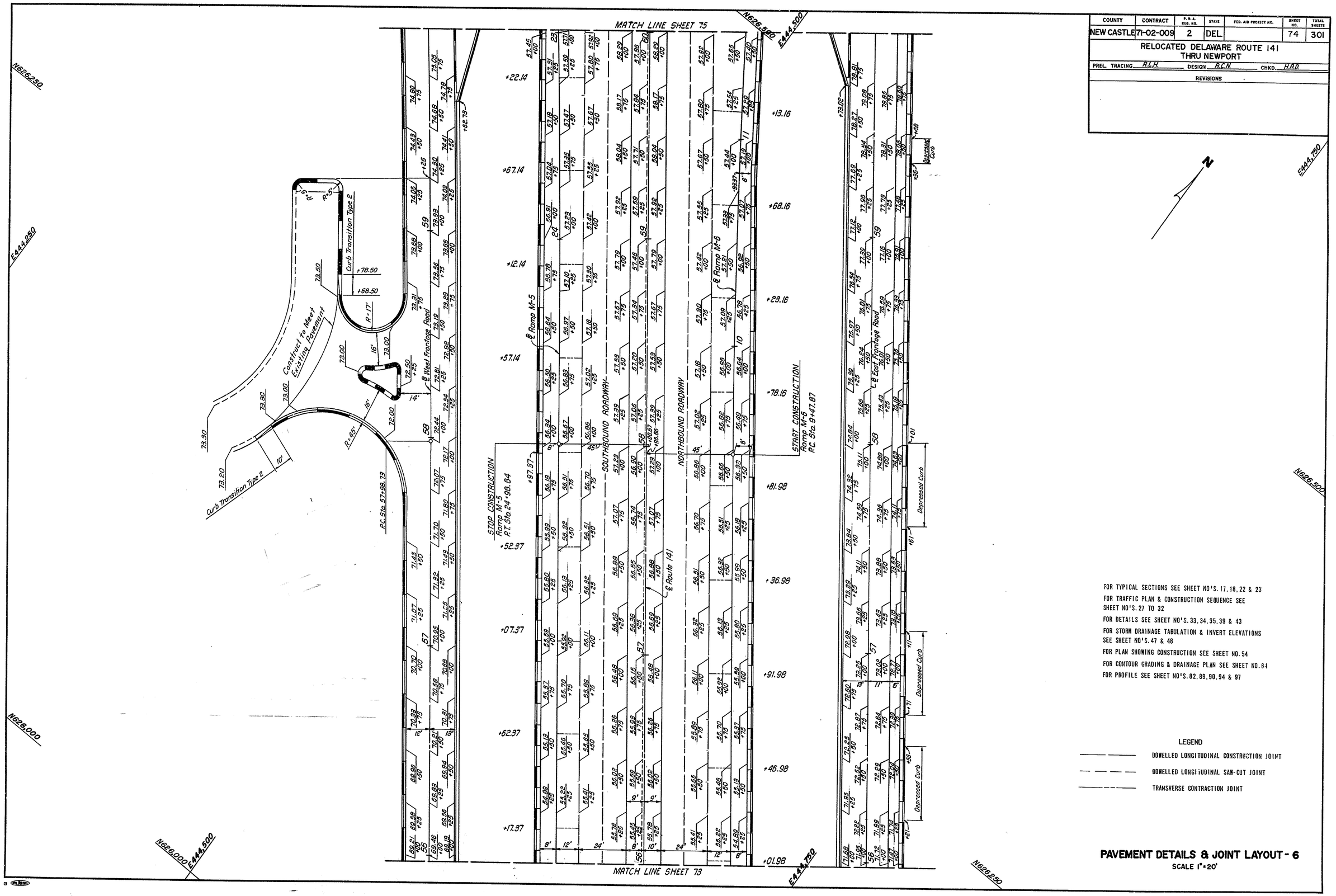

FOR TYPICAL SECTIONS SEE SHEET NO'S. 17, 18, 22 & 23

FOR TRAFFIC PLAN & CONSTRUCTION SEQUENCE SEE SHEET NO'S. 27 TO 32

FOR DETAILS SEE SHEET NO'S. 33, 34, 35, 39 & 43

FOR STORM DRAINAGE TABULATION & INVERT ELEVATIONS SEE SHEET NO'S. 47 & 48

FOR PLAN SHOWING CONSTRUCTION SEE SHEET NO. 54

FOR CONTOUR GRADING & DRAINAGE PLAN SEE SHEET NO. 64

FOR PROFILE SEE SHEET NO'S. 82, 89, 90, 94 & 97

LEGEND

DOWELLED LONGITUDINAL CONSTRUCTION JOINT

DOWELLED LONGITUDINAL SAW-CUT JOINT

TRANSVERSE CONTRACTION JOINT

PAVEMENT DETAILS & JOINT LAYOUT - 6

SCALE 1" = 20'

COUNTY	CONTRACT	P.R.A. REG. NO.	STATE	FED. AID PROJECT NO.	SHEET NO.	TOTAL SHEETS
NEWCASTLE	71-02-009	2	DEL.		75	301

RELOCATED DELAWARE ROUTE 141
THRU NEWPORT

PREL. TRACING R.L.H. DESIGN G.S. CHKD. G.S.

REVISIONS

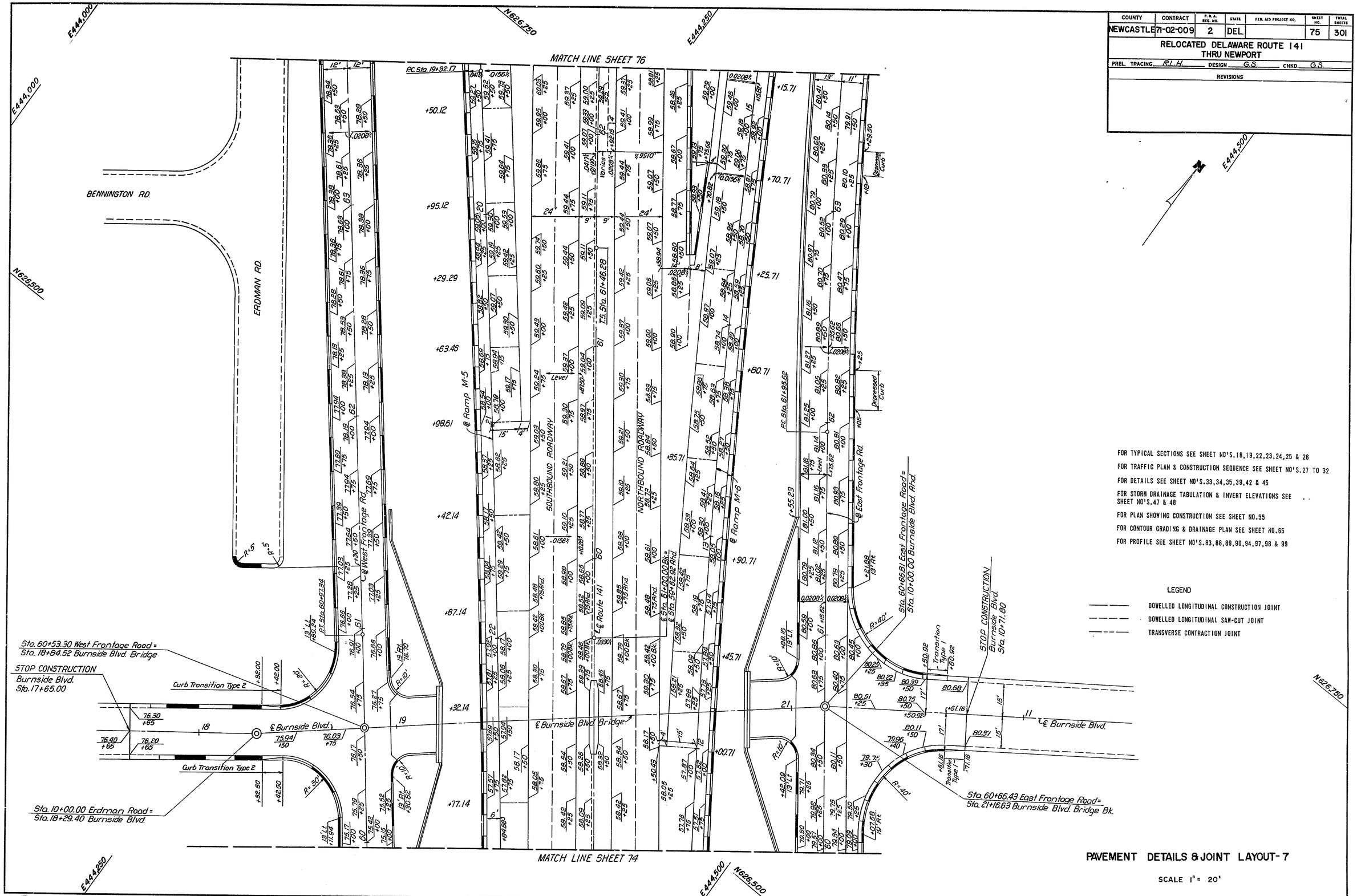

FOR TYPICAL SECTIONS SEE SHEET NO'S.18,19,22,23,24,25 & 26

FOR TRAFFIC PLAN & CONSTRUCTION SEQUENCE SEE SHEET NO'S.27 TO 32

FOR DETAILS SEE SHEET NO'S.33,34,35,39,42 & 45

FOR STORM DRAINAGE TABULATION & INVERT ELEVATIONS SEE SHEET NO'S.47 & 48

FOR PLAN SHOWING CONSTRUCTION SEE SHEET NO.55

FOR CONTOUR GRADING & DRAINAGE PLAN SEE SHEET NO.65

FOR PROFILE SEE SHEET NO'S.83,86,89,90,94,97,98 & 99

LEGEND

- DOWELLED LONGITUDINAL CONSTRUCTION JOINT
- DOWELLED LONGITUDINAL SAW-CUT JOINT
- TRANSVERSE CONTRACTION JOINT

PAVEMENT DETAILS & JOINT LAYOUT-7

SCALE 1" = 20'

COUNTY	CONTRACT	P.R.A. REG. NO.	STATE	FED. AID PROJECT NO.	SHEET NO.	TOTAL SHEETS
NEW CASTLE	71-02-009	2	DEL		76	301

RELOCATED DELAWARE ROUTE 141
THRU NEWPORT

PREL. TRACING R.L.H. DESIGN G.S. CHKD. G.S.

REVISIONS

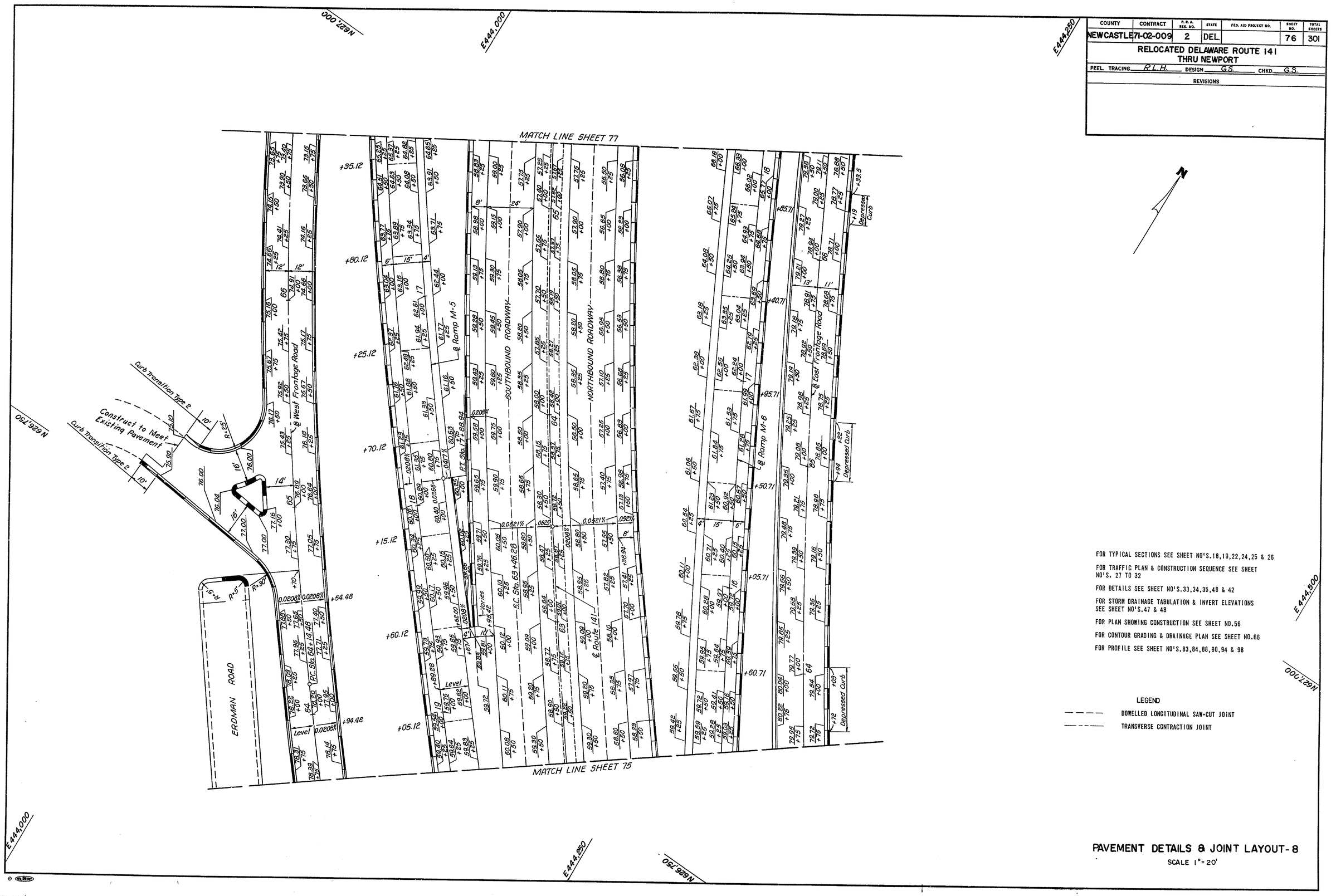

FOR TYPICAL SECTIONS SEE SHEET NO'S.18,19,22,24,25 & 26

FOR TRAFFIC PLAN & CONSTRUCTION SEQUENCE SEE SHEET NO'S. 27 TO 32

FOR DETAILS SEE SHEET NO'S.33,34,35,40 & 42

FOR STORM DRAINAGE TABULATION & INVERT ELEVATIONS SEE SHEET NO'S.47 & 48

FOR PLAN SHOWING CONSTRUCTION SEE SHEET NO.56

FOR CONTOUR GRADING & DRAINAGE PLAN SEE SHEET NO.66

FOR PROFILE SEE SHEET NO'S.83,84,88,90,94 & 98

LEGEND

- - - - DOWELLED LONGITUDINAL SAW-CUT JOINT

— — — TRANSVERSE CONTRACTION JOINT

PAVEMENT DETAILS & JOINT LAYOUT-8

SCALE 1"=20'

COUNTY	CONTRACT	P.R.A. REG. NO.	STATE	FED. AID PROJECT NO.	SHEET NO.	TOTAL SHEETS
NEWCASTLE	71-02-009	2	DEL.		77	301

RELOCATED DELAWARE ROUTE 141
THRU NEWPORT

PREL. TRACING R.L.H. DESIGN G.S. CHKD. G.S.

REVISIONS

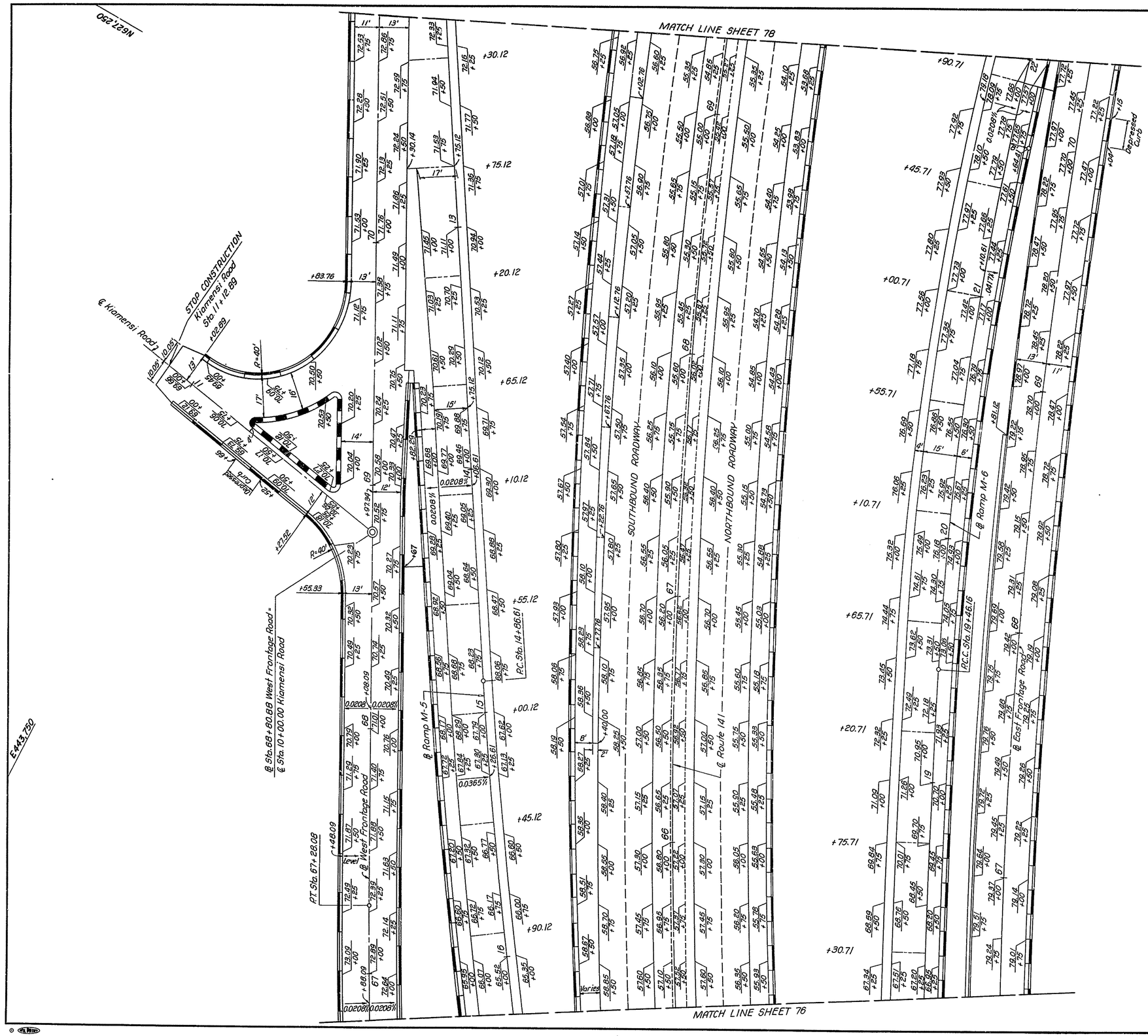

FOR TYPICAL SECTIONS SEE SHEET NO'S.19,22,24,25 & 26

FOR TRAFFIC PLAN & CONSTRUCTION SEQUENCE SEE SHEET NO'S.27 TO 32

FOR DETAILS SEE SHEET NO'S.33,34,35,40,41,42 & 46

FOR STORM DRAINAGE TABULATION & INVERT ELEVATIONS SEE SHEET NO'S.47 & 48

FOR PLAN SHOWING CONSTRUCTION SEE SHEET NO.57

FOR CONTOUR GRADING & DRAINAGE PLAN SEE SHEET NO.67

FOR PROFILE SEE SHEET NO'S.84,88,91,94,95 & 98

LEGEND

- DOWELLED LONGITUDINAL CONSTRUCTION JOINT
- DOWELLED LONGITUDINAL SAW-CUT JOINT
- TRANSVERSE CONTRACTION JOINT

PAVEMENT DETAILS & JOINT LAYOUT- 9

SCALE 1" = 20'

COUNTY	CONTRACT	P. B. A. REG. NO.	STATE	FED. AID PROJECT NO.	SHEET NO.	TOT.AL SHEETS
NEWCASTLE	71-02-009	2	DEL.		78	301

RELOCATED DELAWARE ROUTE 141
THRU NEWPORT

PREL. TRACING _____ DESIGN _____ CHKD. _____

REVISIONS

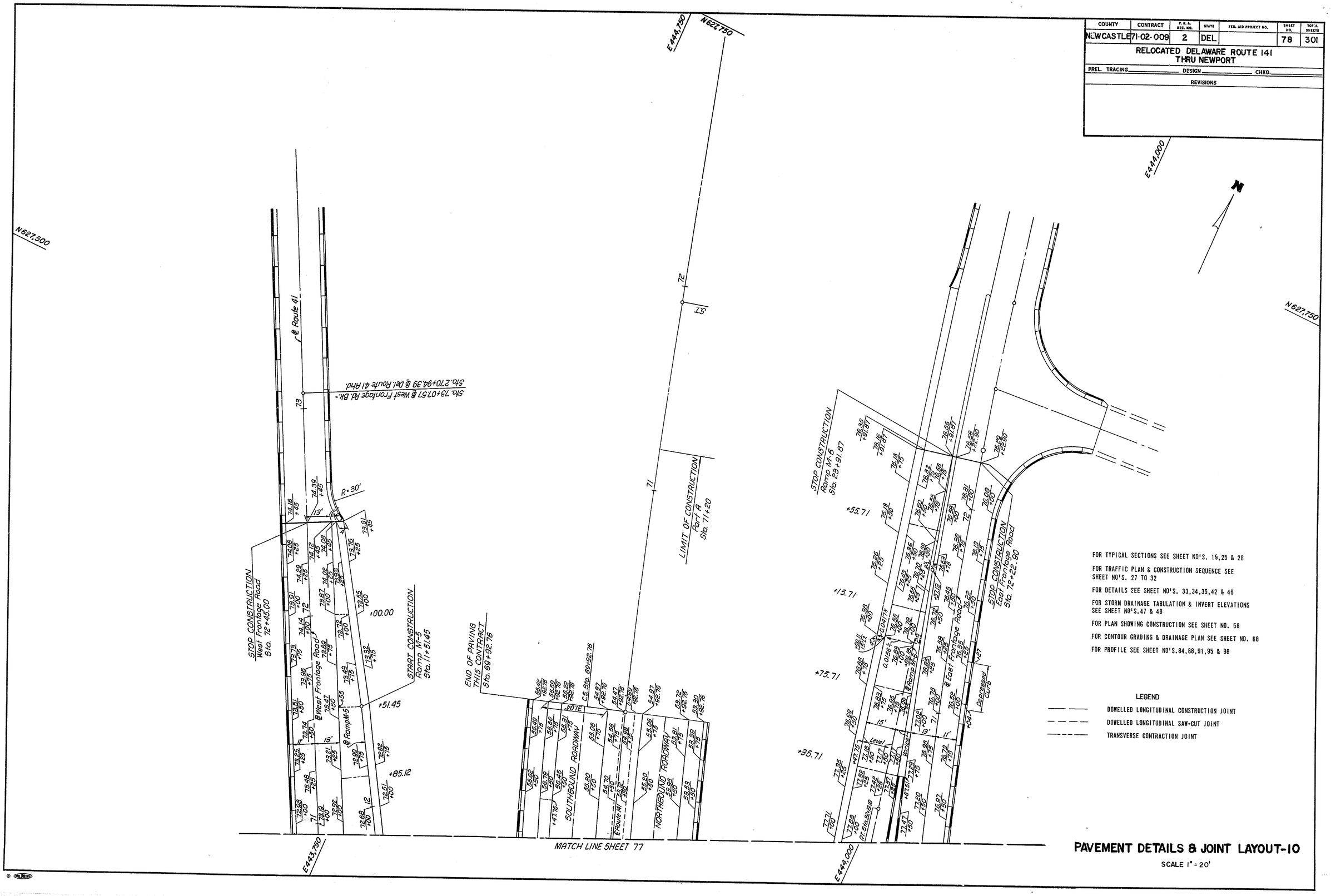

PAVEMENT DETAILS & JOINT LAYOUT-10

SCALE 1" = 20'

COUNTY	CONTRACT	P.R.A. REG. NO.	STATE	FED. AID PROJECT NO.	SHEET NO.	TOTAL SHEETS
NEW CASTLE	71-02-009	2	DEL.		79	301

RELOCATED DELAWARE ROUTE 141
THRU NEWPORT

PREL. TRACING R.L.H. DESIGN H.R.D. CHKD. R.C.N.

REVISIONS

FOR PLAN SEE SHEET NO'S. 49 & 50
FOR TYPICAL SECTIONS SEE SHEET NO. 15

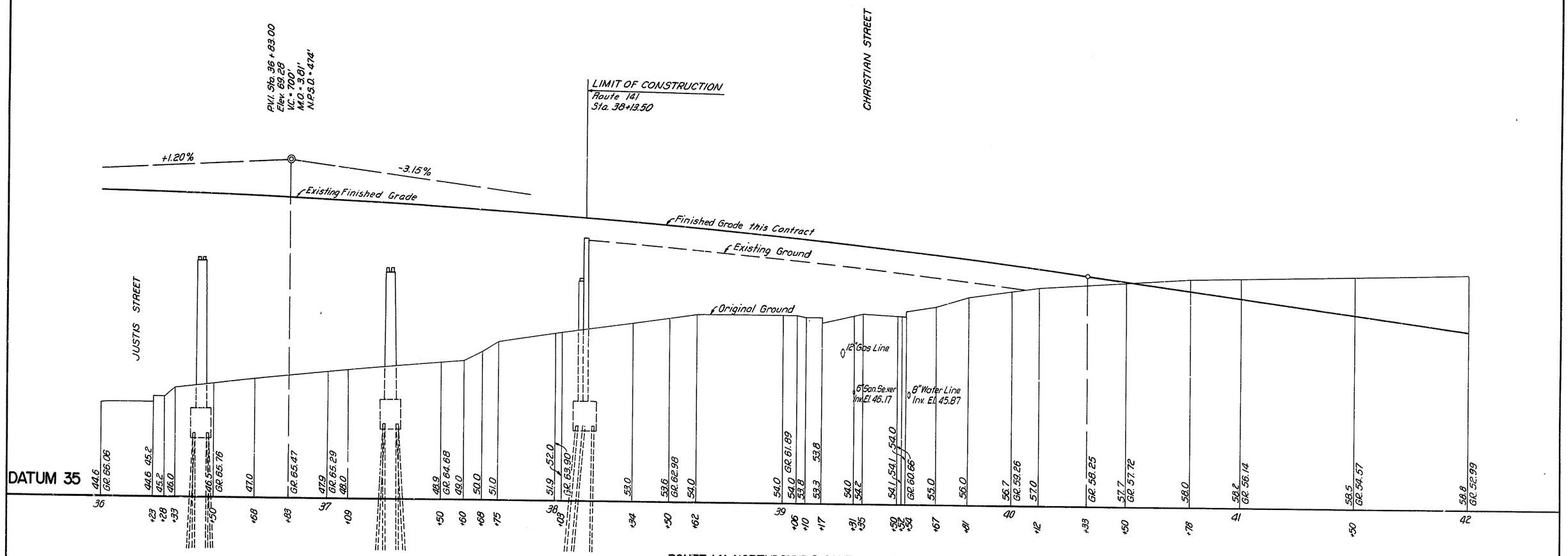

ROUTE 141 NORTHBOUND & SOUTHBOUND

COUNTY	CONTRACT	P. R. A. REG. NO.	STATE	FED. AID PROJECT NO.	SHEET NO.	TOTAL SHEETS
NEW CASTLE	71-02-009	2	DEL.		80	301

RELOCATED DELAWARE ROUTE 141
THRU NEWPORT

PREL. TRACING A.W.H. DESIGN H.P.D. CHKD. A.C.N.

REVISIONS

FOR PLAN SEE SHEET NO'S. 50 & 51
FOR TYPICAL SECTIONS SEE SHEET NO'S. 15, 16 & 17

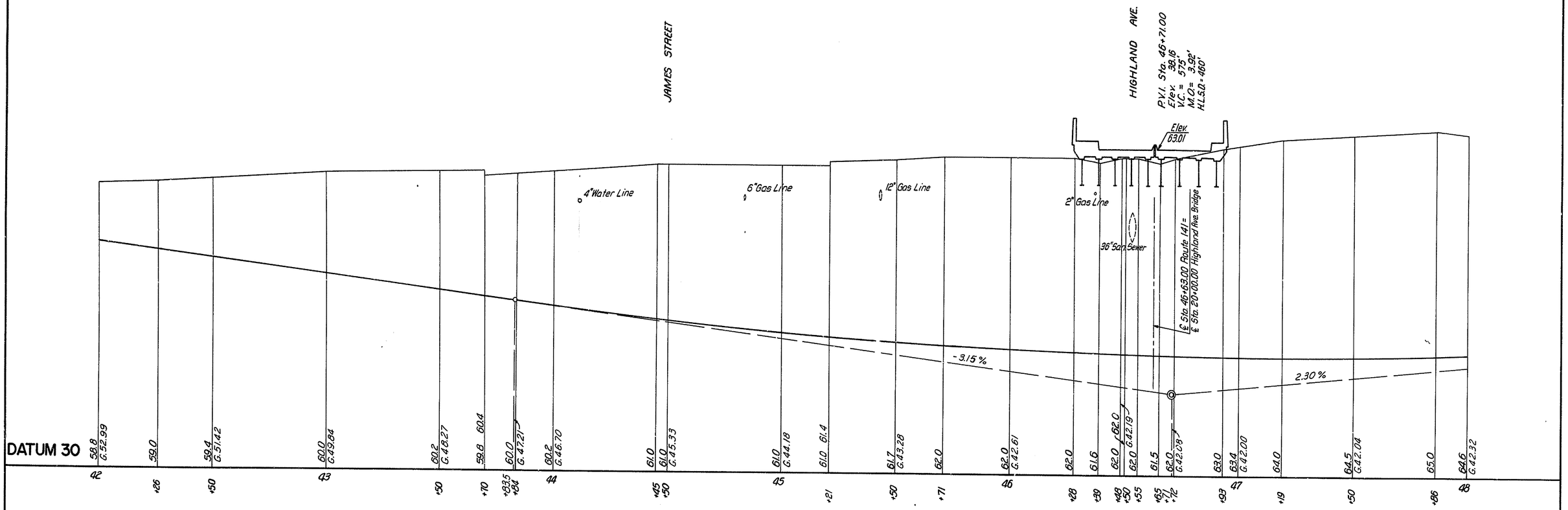

ROUTE 141 NORTHBOUND & SOUTHBOUND

COUNTY	CONTRACT	P.R.A. REG. NO.	STATE	FED. AID PROJECT NO.	SHEET NO.	TOTAL SHEETS
NEW CASTLE	71-02-009	2	DEL.		81	301

RELOCATED DELAWARE ROUTE 141
THRU NEWPORT

PREL. TRACING R.L.H. DESIGN H.A.D. CHKD. R.C.N.

REVISIONS

FOR PLAN SEE SHEET NO'S. 52 & 53
FOR TYPICAL SECTIONS SEE SHEET NO. 17

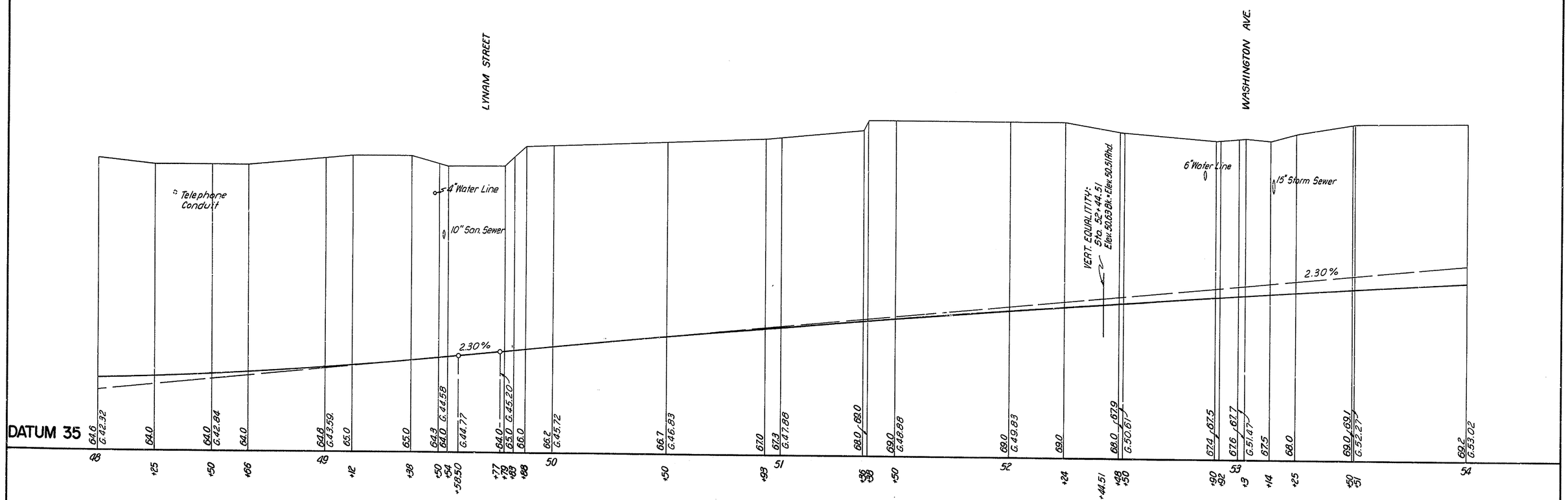

ROUTE 141 NORTHBOUND & SOUTHBOUND

COUNTY	CONTRACT	P. R. A. REG. NO.	STATE	FED. AID PROJECT NO.	SHEET NO.	TOTAL SHEETS
NEW CASTLE	71-02-009	2	DEL.		82	301

RELOCATED DELAWARE ROUTE 141
THRU NEWPORT

PREL. TRACING RWH DESIGN HAD CHKD. RCN

REVISIONS

FOR PLAN SEE SHEET NO'S. 53 & 54
FOR TYPICAL SECTIONS SEE SHEET NO'S. 17 & 18

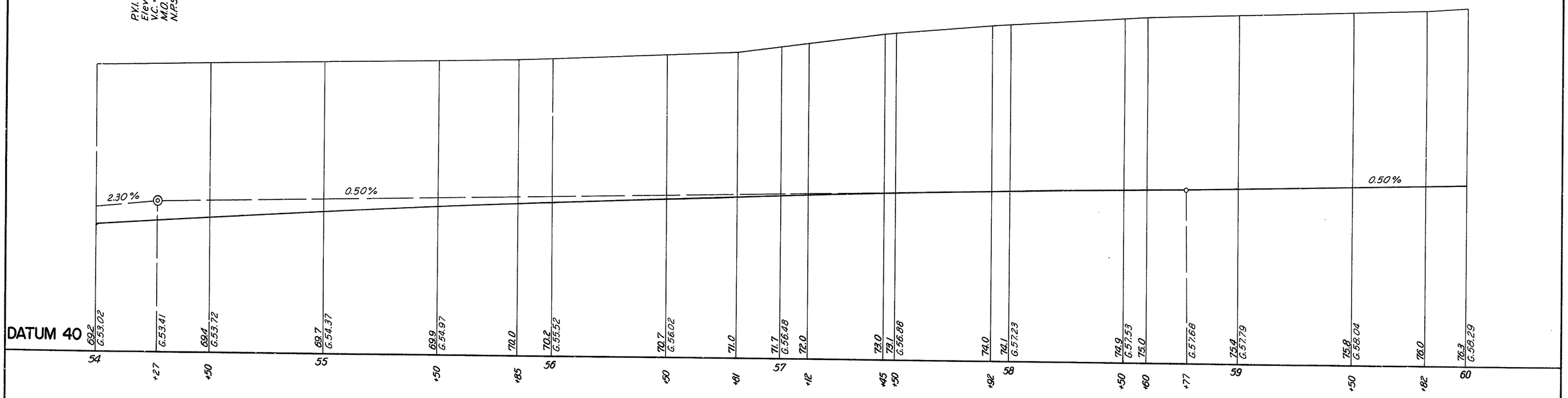

ROUTE 141 NORTHBOUND & SOUTHBOUND

COUNTY	CONTRACT	P. R. A. REG. NO.	STATE	FED. AID PROJECT NO.	SHEET NO.	TOTAL SHEETS
NEW CASTLE	71-02-009	2	DEL.		83	301

RELOCATED DELAWARE ROUTE 141
THRU NEWPORT

PREL. TRACING R.P.C. DESIGN G.S. CHKD. R.L.H.

REVISIONS

FOR PLAN SEE SHEET NO'S. 55 & 56
FOR TYPICAL SECTIONS SEE SHEET NO'S. 18 & 19

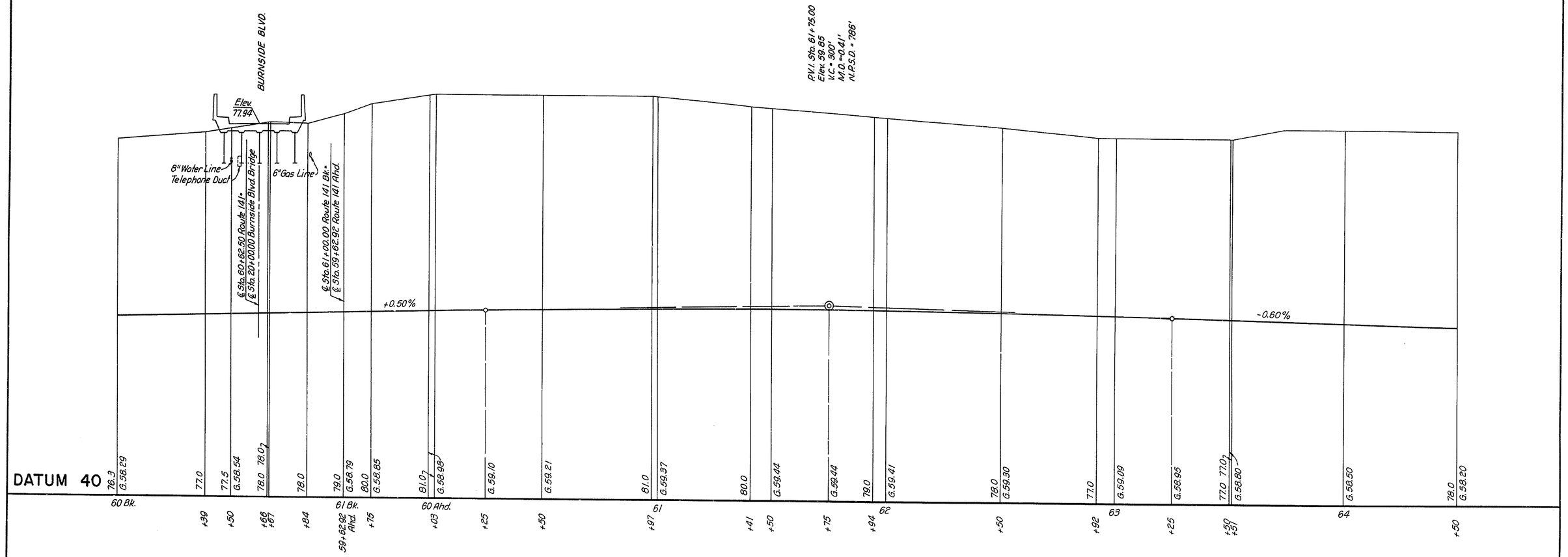

ROUTE 141 NORTHBOUND & SOUTHBOUND

COUNTY	CONTRACT	F. B. A. REG. NO.	STATE	FED. AID PROJECT NO.	SHEET NO.	TOTAL SHEETS
NEWCASTLE	71-02-009	2	DEL.		84	301

RELOCATED DELAWARE ROUTE 141
THRU NEWPORT

PREL. TRACING R.P.C. DESIGN G.S. CHKD. R.I.H.

REVISIONS

FOR PLAN SEE SHEET NO'S. 57 & 58
FOR TYPICAL SECTIONS SEE SHEET NO'S. 18 & 19

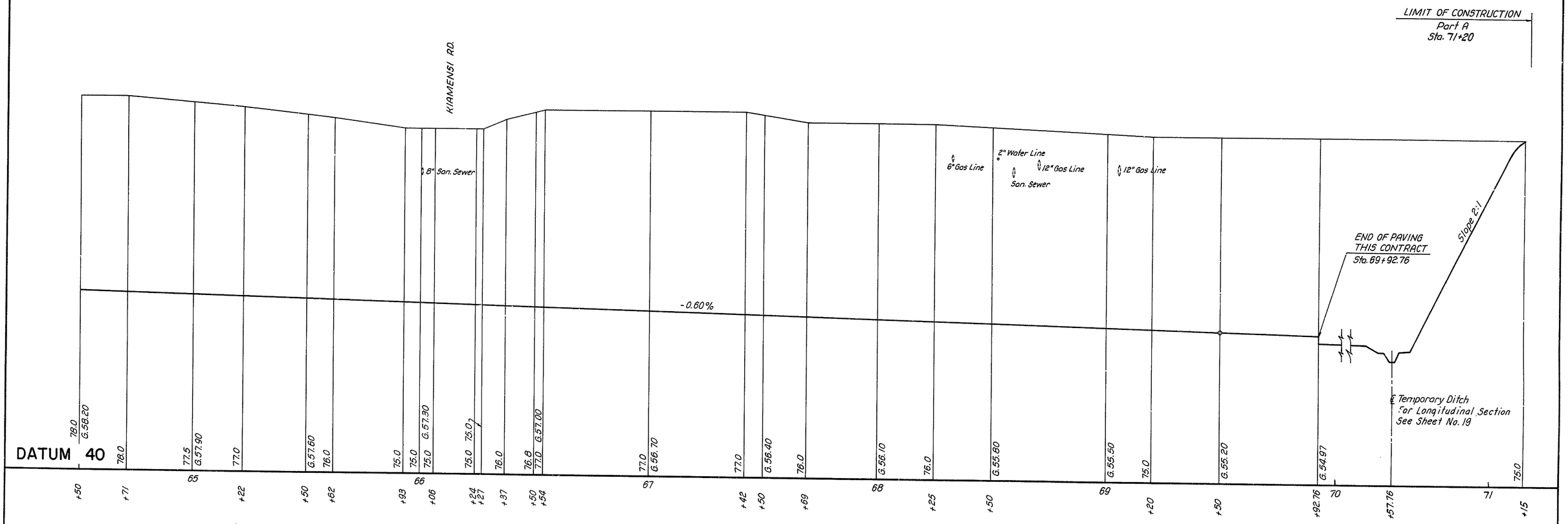

ROUTE 141 NORTHBOUND & SOUTHBOUND

COUNTY	CONTRACT	P.R.A. REG. NO.	STATE	FED. AID PROJECT NO.	SHEET NO.	TOTAL SHEETS
NEW CASTLE	71-02-009	2	DEL.		85	301

RELOCATED DELAWARE ROUTE 141
THRU NEWPORT

PREL. TRACING R.W.H. DESIGN H.A.D. CHKD. R.C.N.

REVISIONS

FOR PLAN SEE SHEET NO'S. 50, 51 & 52

FOR TYPICAL SECTIONS SEE SHEET NO'S. 17 & 20

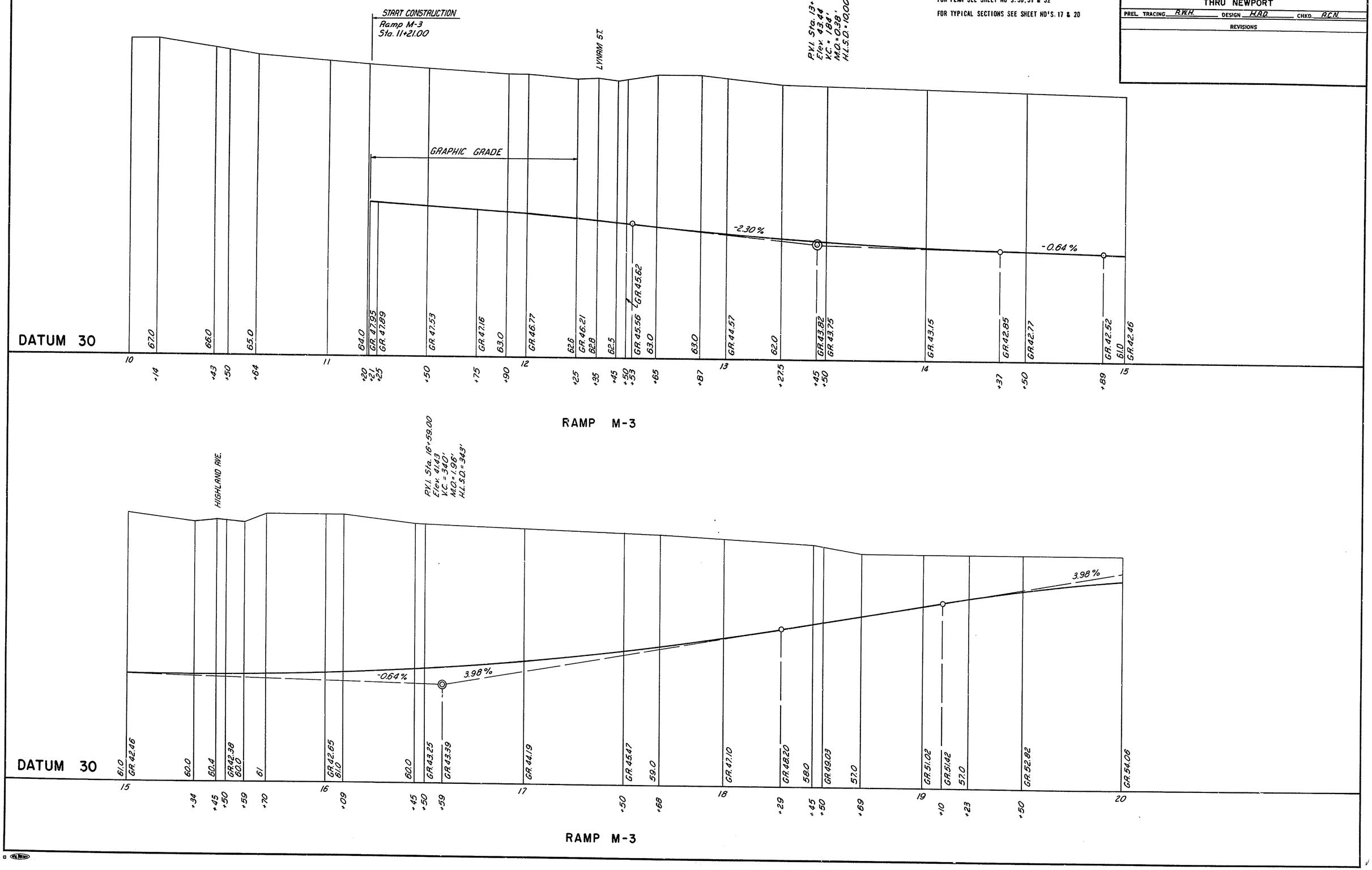

COUNTY	CONTRACT	P. S. & E. REG. NO.	STATE	FED. AID PROJECT NO.	SHEET NO.	TOTAL SHEETS
NEW CASTLE	71-02-009	2	DEL.		86	301

RELOCATED DELAWARE ROUTE 141
THRU NEWPORT

PREL. TRACING R.W.H. DESIGN H.A.D. CHKD. A.C.N.

REVISIONS

FOR PLAN SEE SHEET NO'S. 49 & 50

FOR TYPICAL SECTIONS SEE SHEET NO'S. 20 & 23

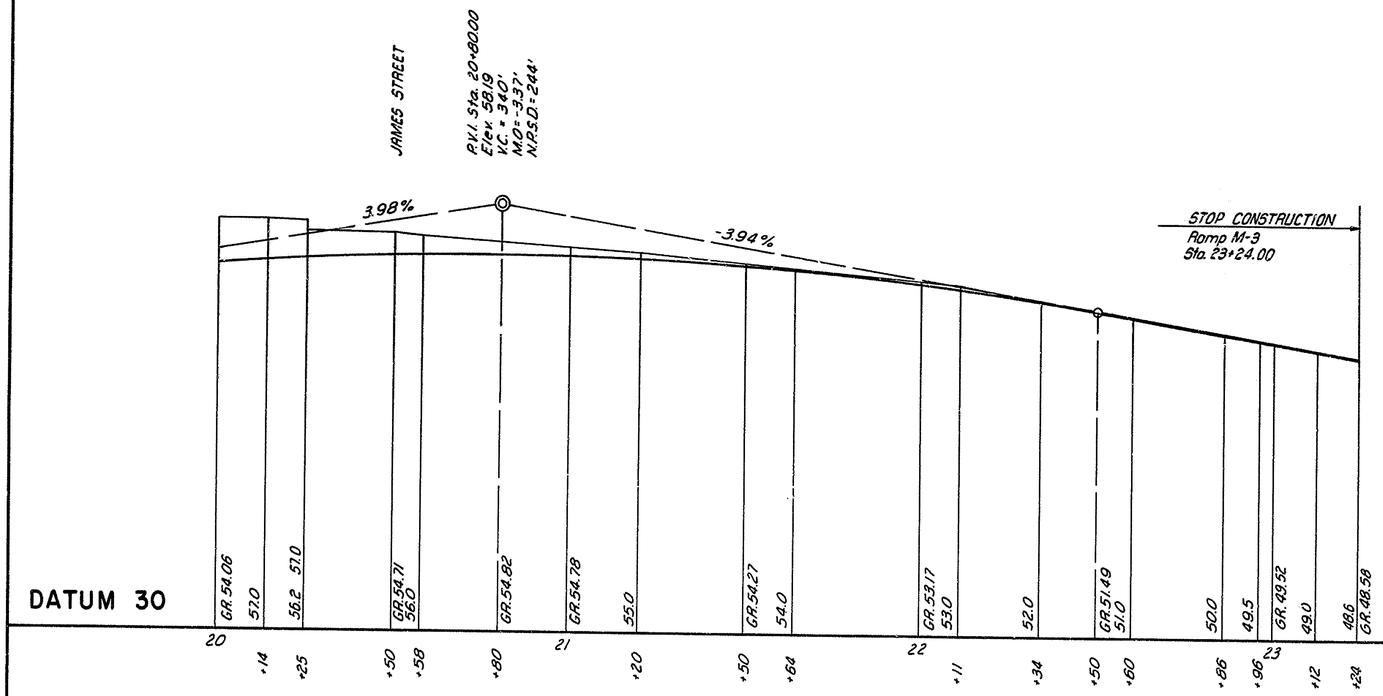

RAMP M-3

COUNTY	CONTRACT	P.R.A. REG. NO.	STATE	FED. AID PROJECT NO.	SHEET NO.	TOTAL SHEETS
NEW CASTLE	71-02-009	2	DEL.		87	301

RELOCATED DELAWARE ROUTE 141
THRU NEWPORT

PREL. TRACING RWH. DESIGN H.A.D. CHKD. A.C.N.

REVISIONS

FOR PLAN SEE SHEET NO'S. 49, 50 & 51
FOR TYPICAL SECTIONS SEE SHEET NO'S. 16, 20 & 21

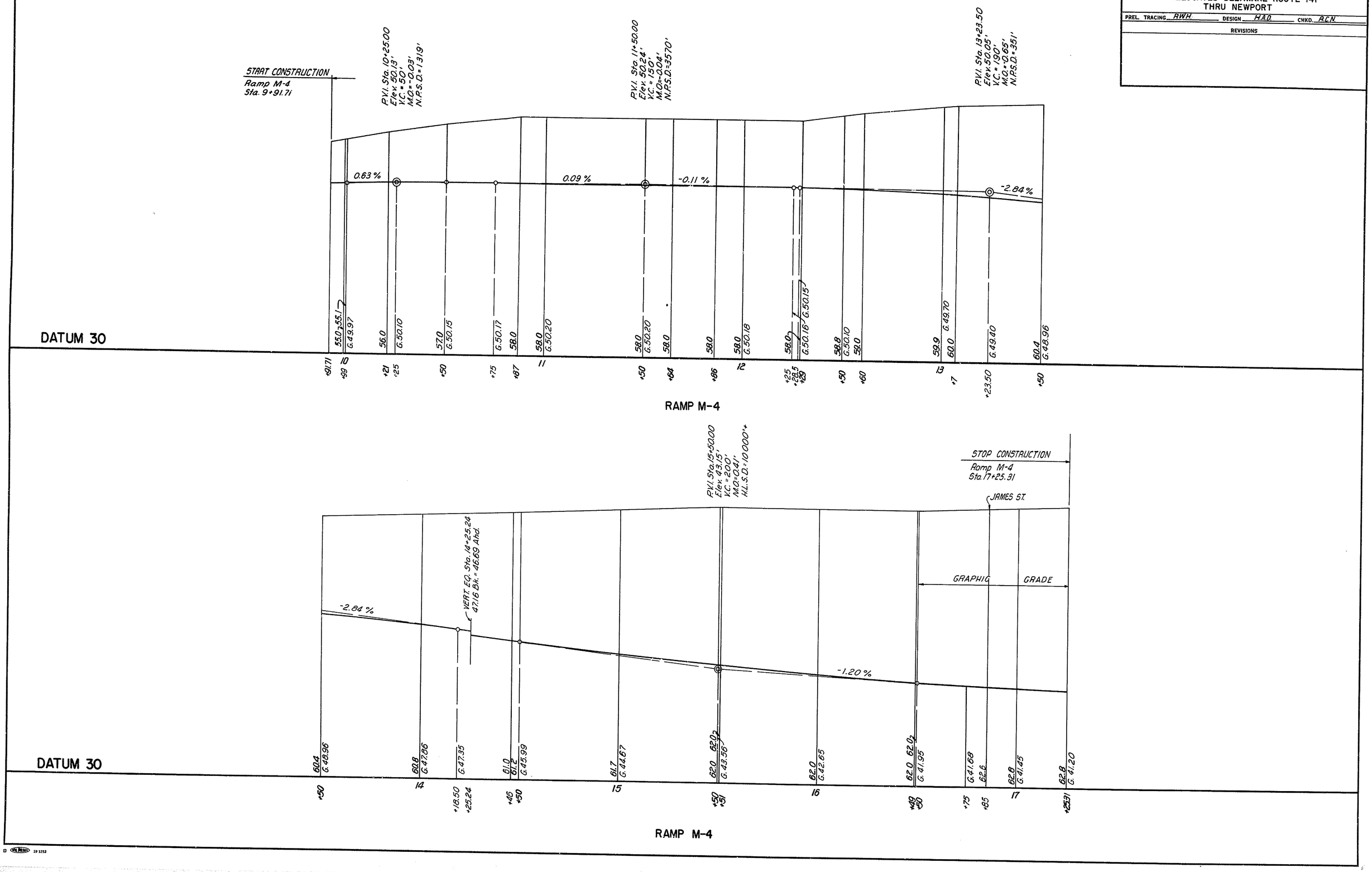

COUNTY	CONTRACT	P. R. A. REG. NO.	STATE	FED. AID PROJECT NO.	SHEET NO.	TOTAL SHEETS
NEW CASTLE	71-02-009	2	DEL.		88	301

RELOCATED DELAWARE ROUTE 141
THRU NEWPORT

PREL. TRACING A.L.H. DESIGN H.A.D. CHKD. A.C.N.

REVISIONS

FOR PLAN SEE SHEET NO'S. 55, 56, 57 & 58

FOR TYPICAL SECTIONS SEE SHEET NO'S. 18 & 25

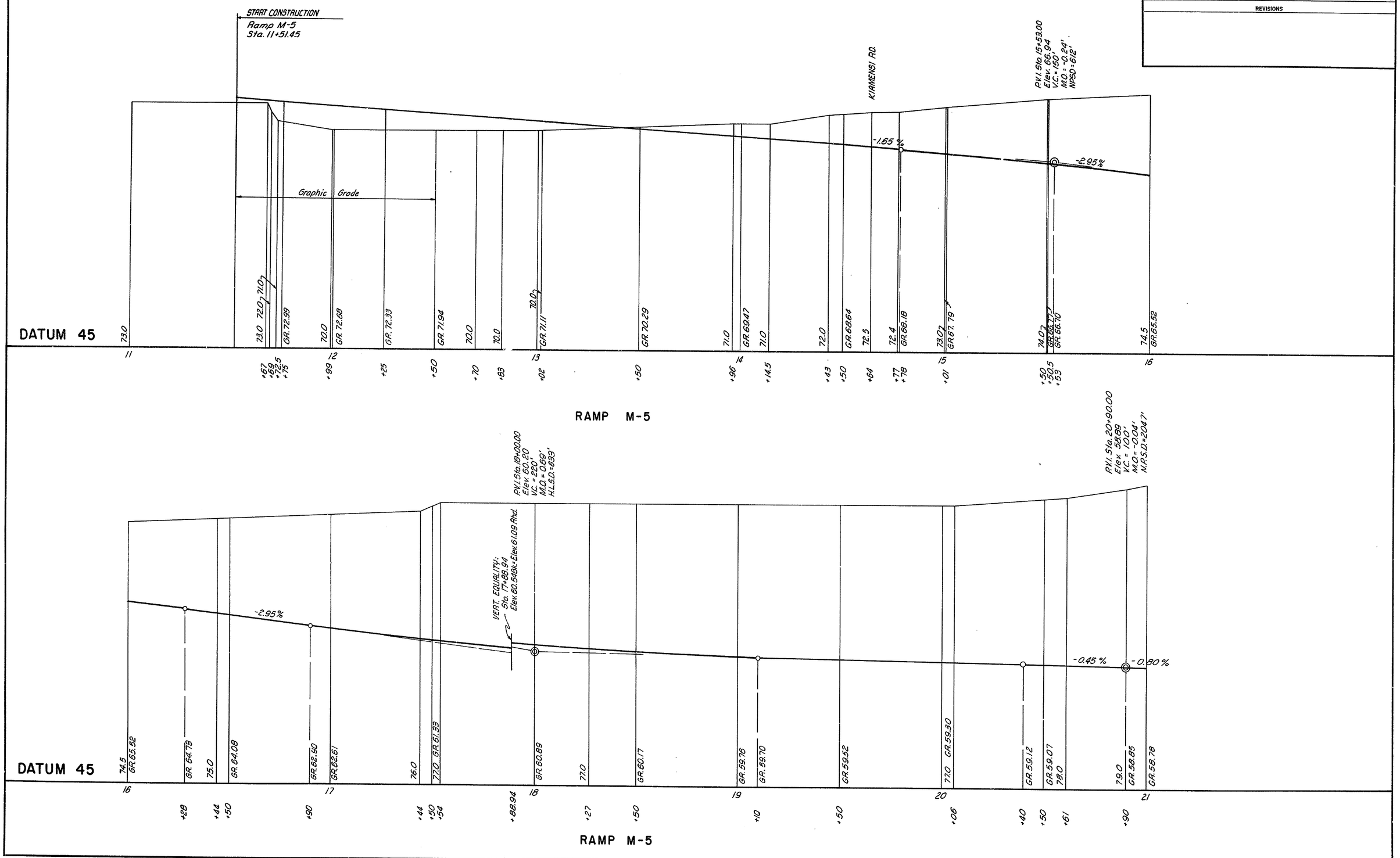

COUNTY	CONTRACT	P.B.A. REG. NO.	STATE	FED. AID PROJECT NO.	SHEET NO.	TOTAL SHEETS
NEW CASTLE	71-02-009	2	DEL.		89	301

RELOCATED DELAWARE ROUTE 141
THRU NEWPORT

PREL. TRACING R.P.C. DESIGN H.A.D. CHKD. A.C.N.

REVISIONS

FOR PLAN SEE SHEET NO. 54 & 55

FOR TYPICAL SECTIONS SEE SHEET NO. 18

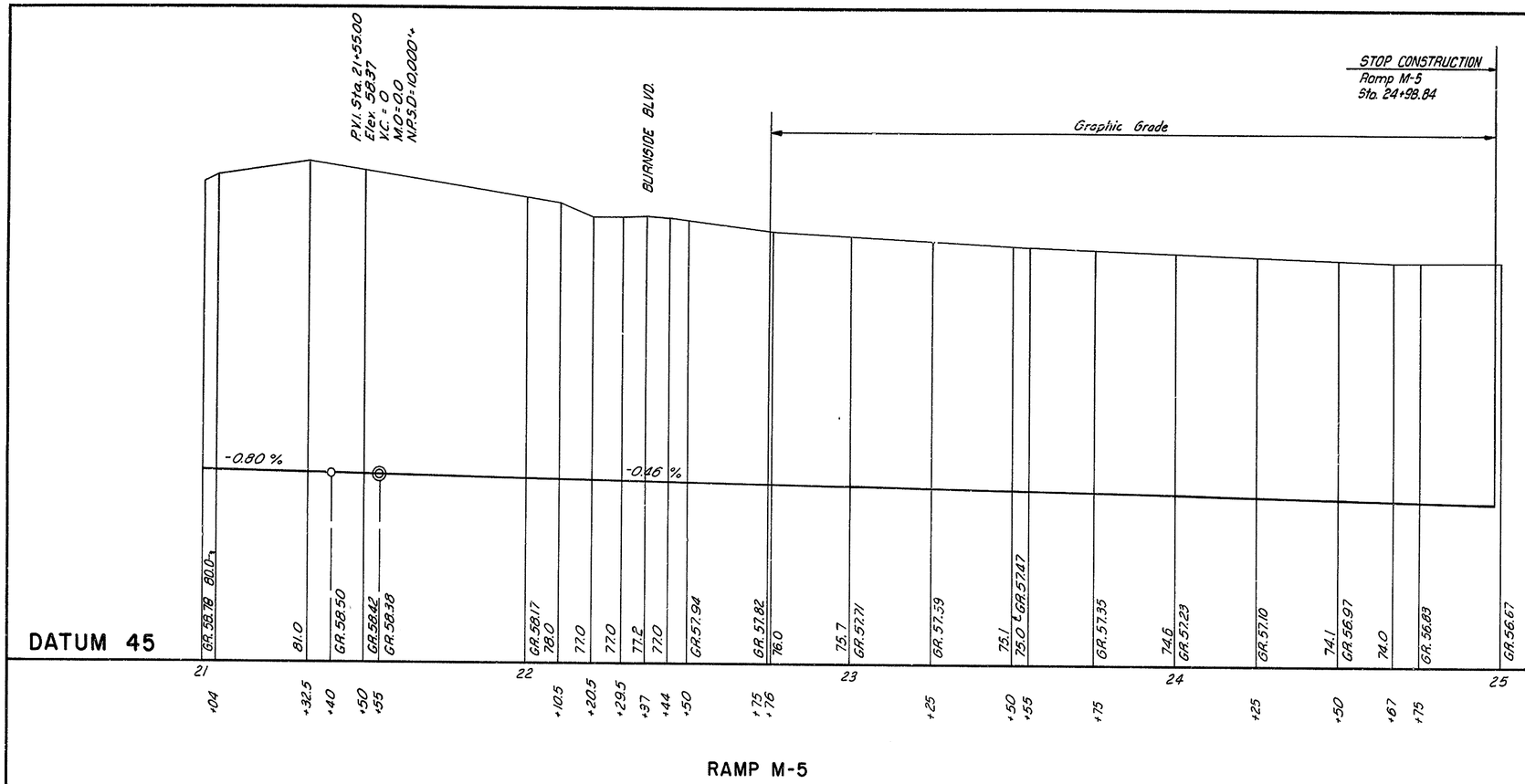

RAMP M-5

COUNTY	CONTRACT	P.R.A. REG. NO.	STATE	FED. AID PROJECT NO.	SHEET NO.	TOTAL SHEETS
NEW CASTLE	71-02-009	2	DEL		90	301

RELOCATED DELAWARE ROUTE 141
THRU NEWPORT

PREL. TRACING R.W.H. DESIGN H.A.D. CHKD. A.C.N.

REVISIONS

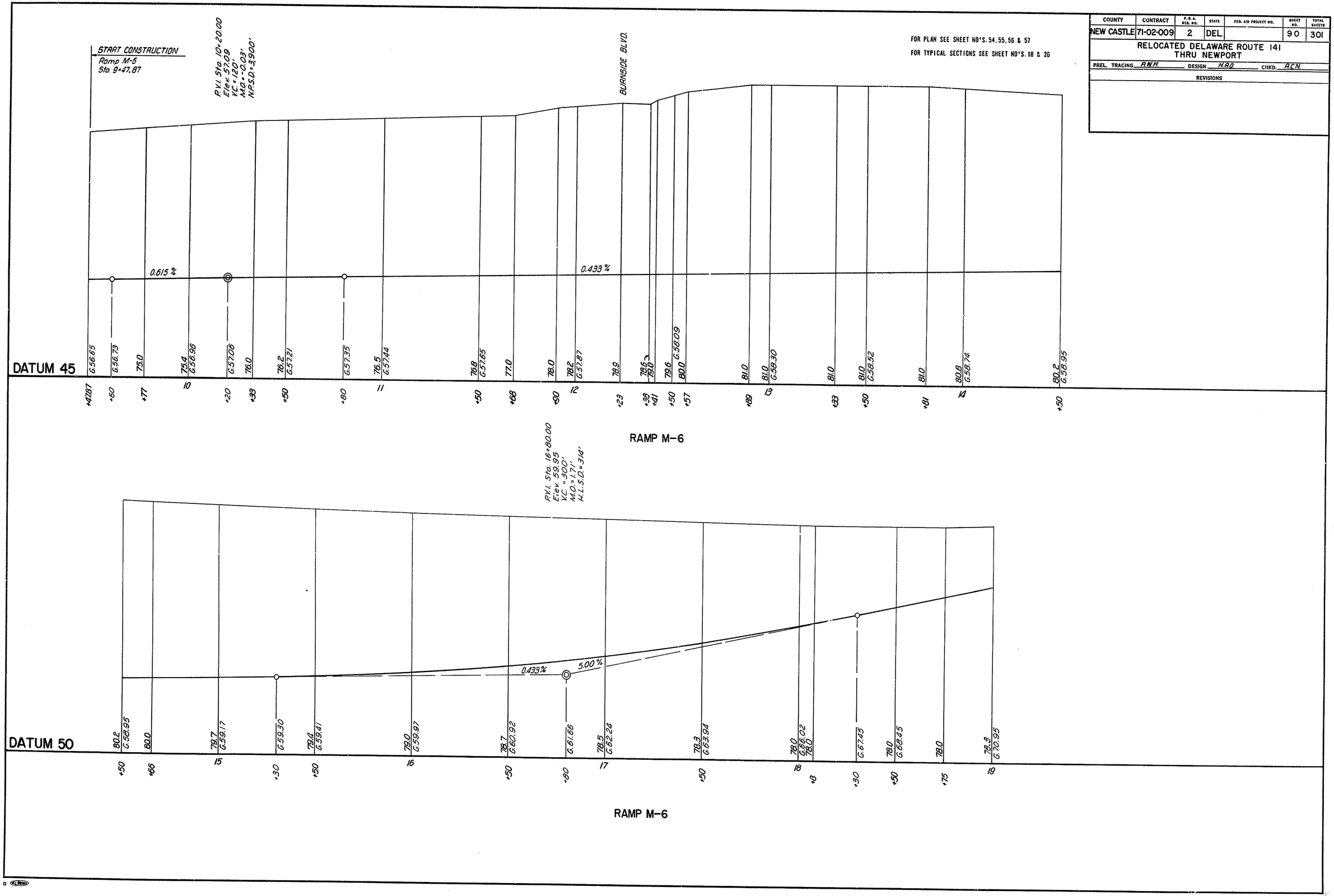

COUNTY	CONTRACT	P.R.A. REG. NO.	STATE	FED. AID PROJECT NO.	SHEET NO.	TOTAL SHEETS
NEW CASTLE	71-02-009	2	DEL.		91	301

RELOCATED DELAWARE ROUTE 141
THRU NEWPORT

PREL. TRACING ALB DESIGN H.A.D CHKD. R.C.N.

REVISIONS

FOR PLAN SEE SHEET NO'S. 57 & 58

FOR TYPICAL SECTIONS SEE SHEET NO. 26

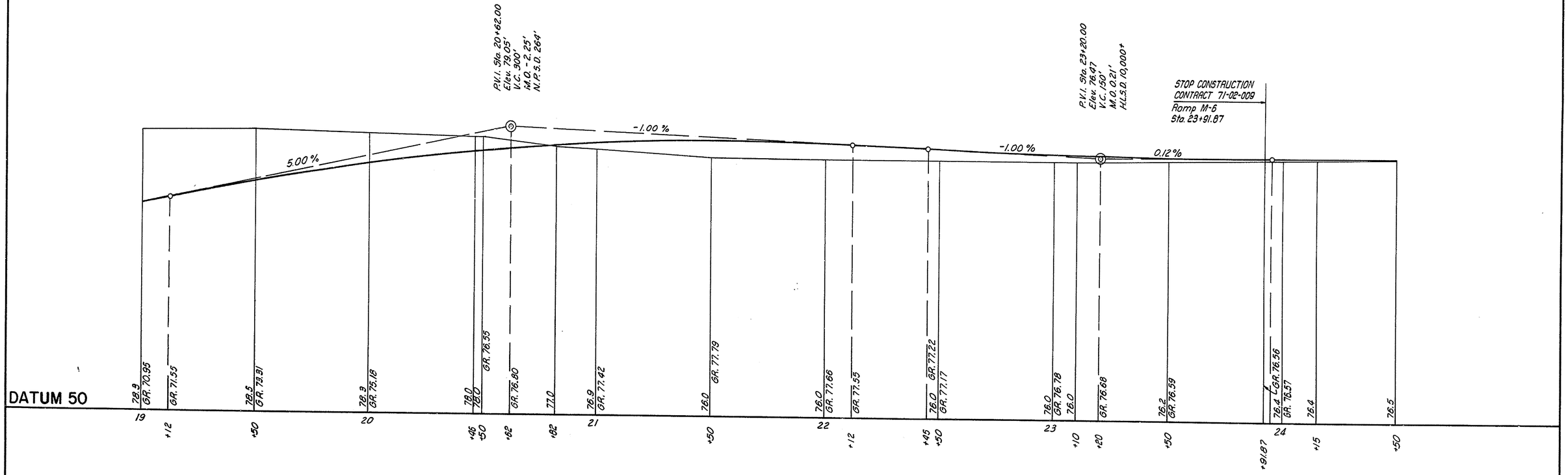

RAMP M-6

COUNTY	CONTRACT	P. R. A. REG. NO.	STATE	FED. AID PROJECT NO.	SHEET NO.	TOTAL SHEETS
NEW CASTLE	71-02-009	2	DEL.		92	301

RELOCATED DELAWARE ROUTE 141
THRU NEWPORT

PREL. TRACING R.L.B DESIGN H.A.D CHKD. R.C.N.

REVISIONS

FOR PLAN SEE SHEET NO'S. 49, 50 & 51
FOR TYPICAL SECTIONS SEE SHEET NO. 21

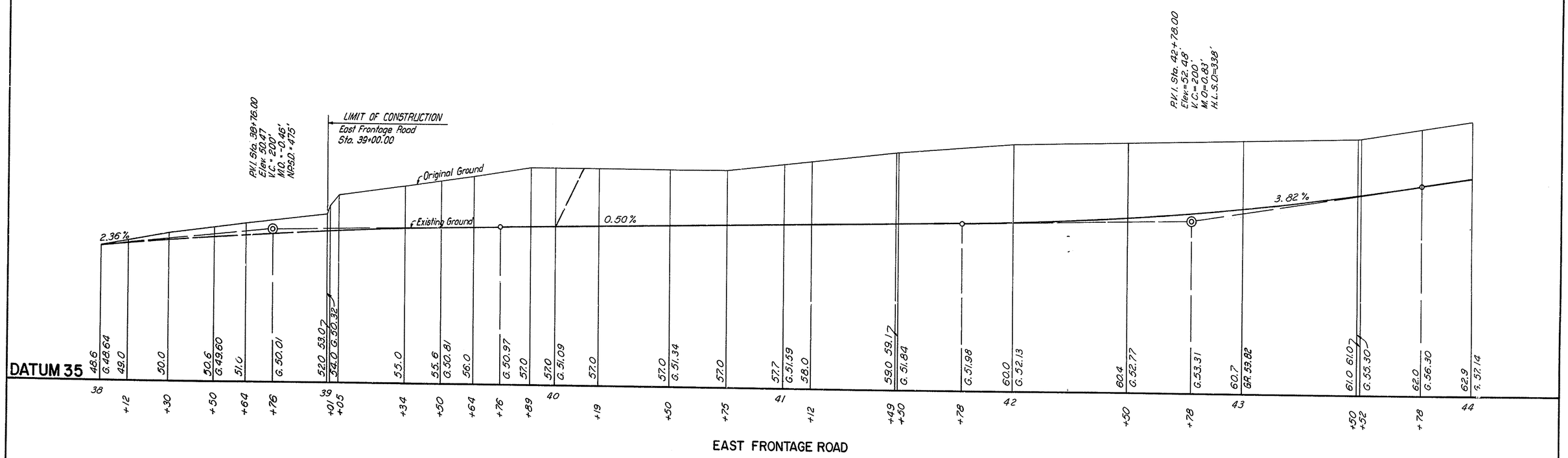

COUNTY	CONTRACT	P. R. A. REG. NO.	STATE	FED. AID PROJECT NO.	SHEET NO.	TOTAL SHEETS
NEW CASTLE	71-02-009	2	DEL.		93	301

RELOCATED DELAWARE ROUTE 141
THRU NEWPORT

PREL. TRACING R.L.H. DESIGN H.A.D. CHKD. A.C.N.

REVISIONS

FOR PLAN SEE SHEET NO'S. 51, 52 & 53

FOR TYPICAL SECTIONS SEE SHEET NO'S. 21 & 22

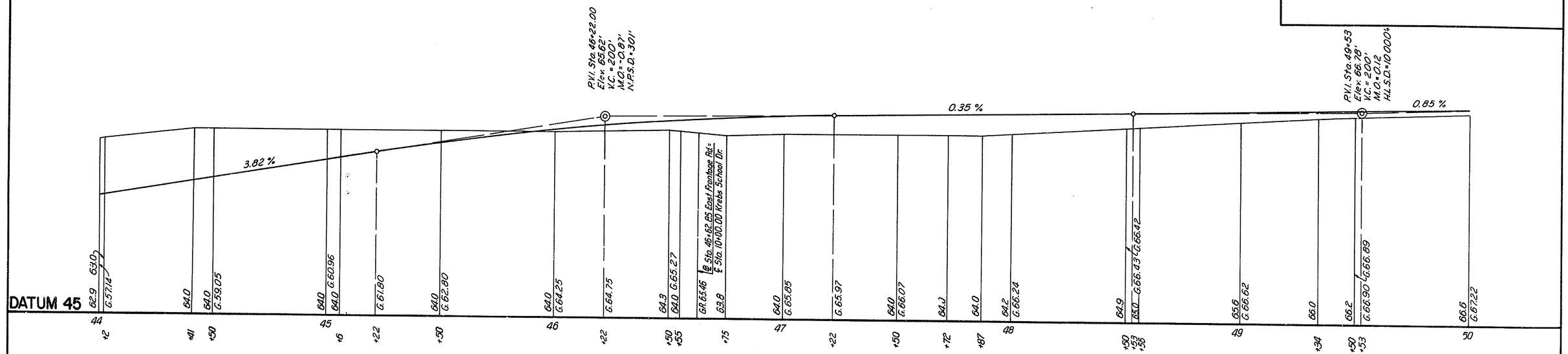

EAST FRONTAGE ROAD

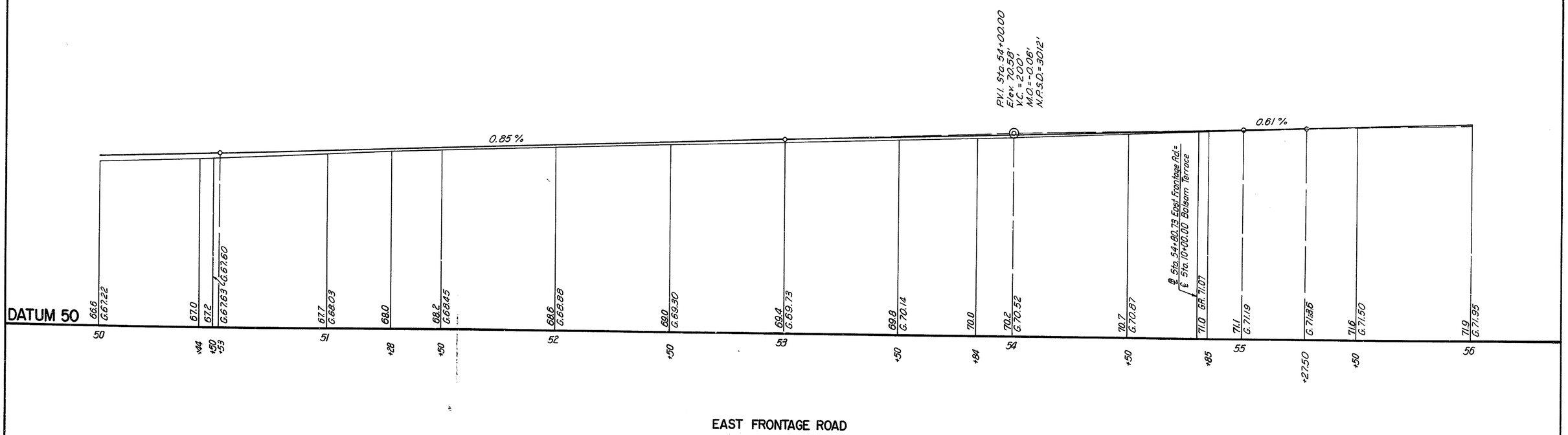

EAST FRONTAGE ROAD

COUNTY	CONTRACT	P. R. A. REG. NO.	STATE	FED. AID PROJECT NO.	SHEET NO.	TOTAL SHEETS
NEW CASTLE	71-02-009	2	DEL.		94	301

RELOCATED DELAWARE ROUTE 141
THRU NEWPORT

PREL. TRACING R.L.B. DESIGN H.A.D. CHKD. G.S.

REVISIONS

FOR PLAN SEE SHEET NO'S. 54, 55, 56 & 57
FOR TYPICAL SECTIONS SEE SHEET NO. 22

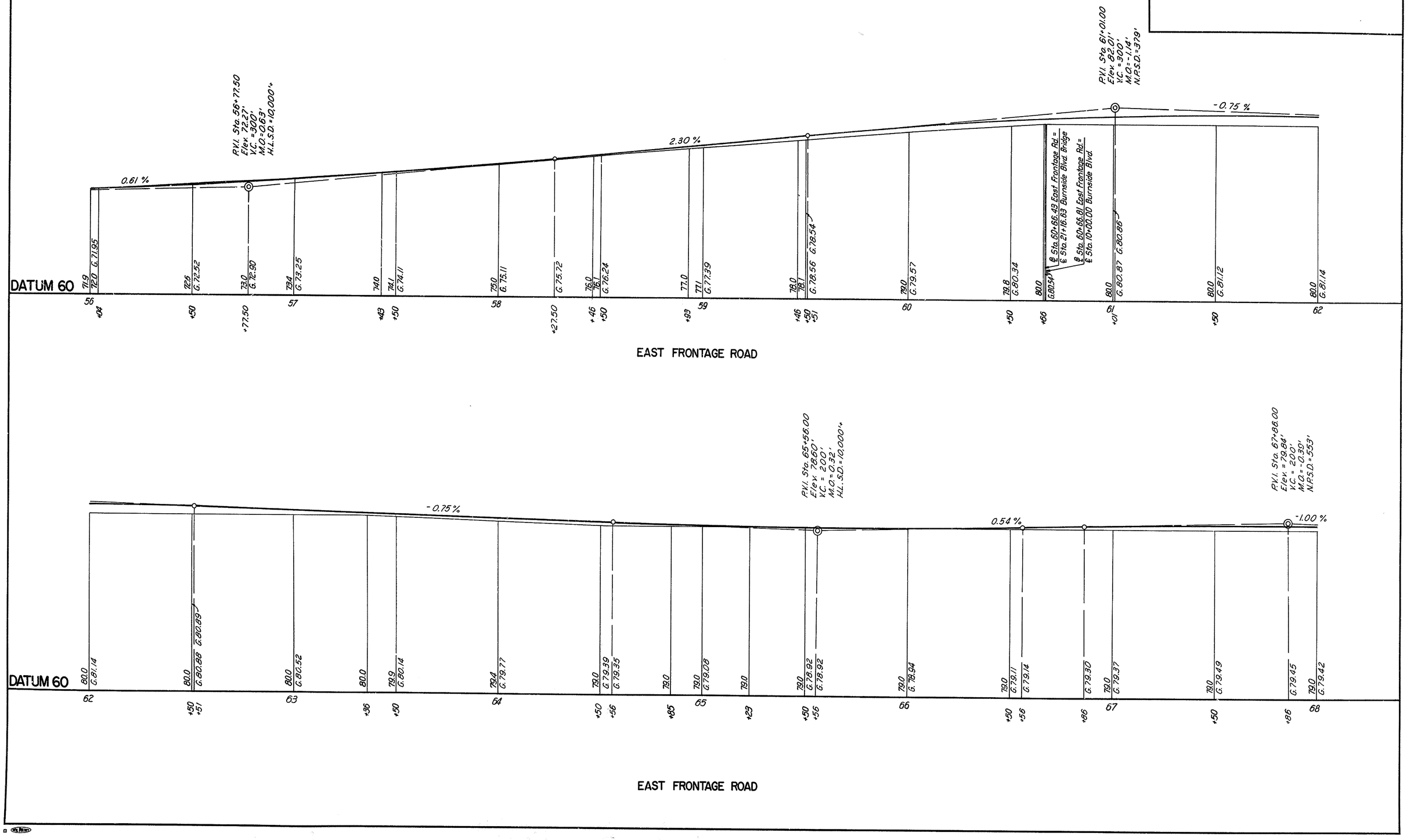

COUNTY	CONTRACT	P.R.A. REG. NO.	STATE	FED. AID PROJECT NO.	SHEET NO.	TOTAL SHEETS
NEW CASTLE	71-02-009	2	DEL.		95	301

RELOCATED DELAWARE ROUTE 141
THRU NEWPORT

PREL. TRACING R.L.H. DESIGN H.A.D. CHKD. A.C.N.

REVISIONS

FOR PLAN SEE SHEET NO'S. 57 & 58

FOR TYPICAL SECTIONS SEE SHEET NO'S. 22 & 26

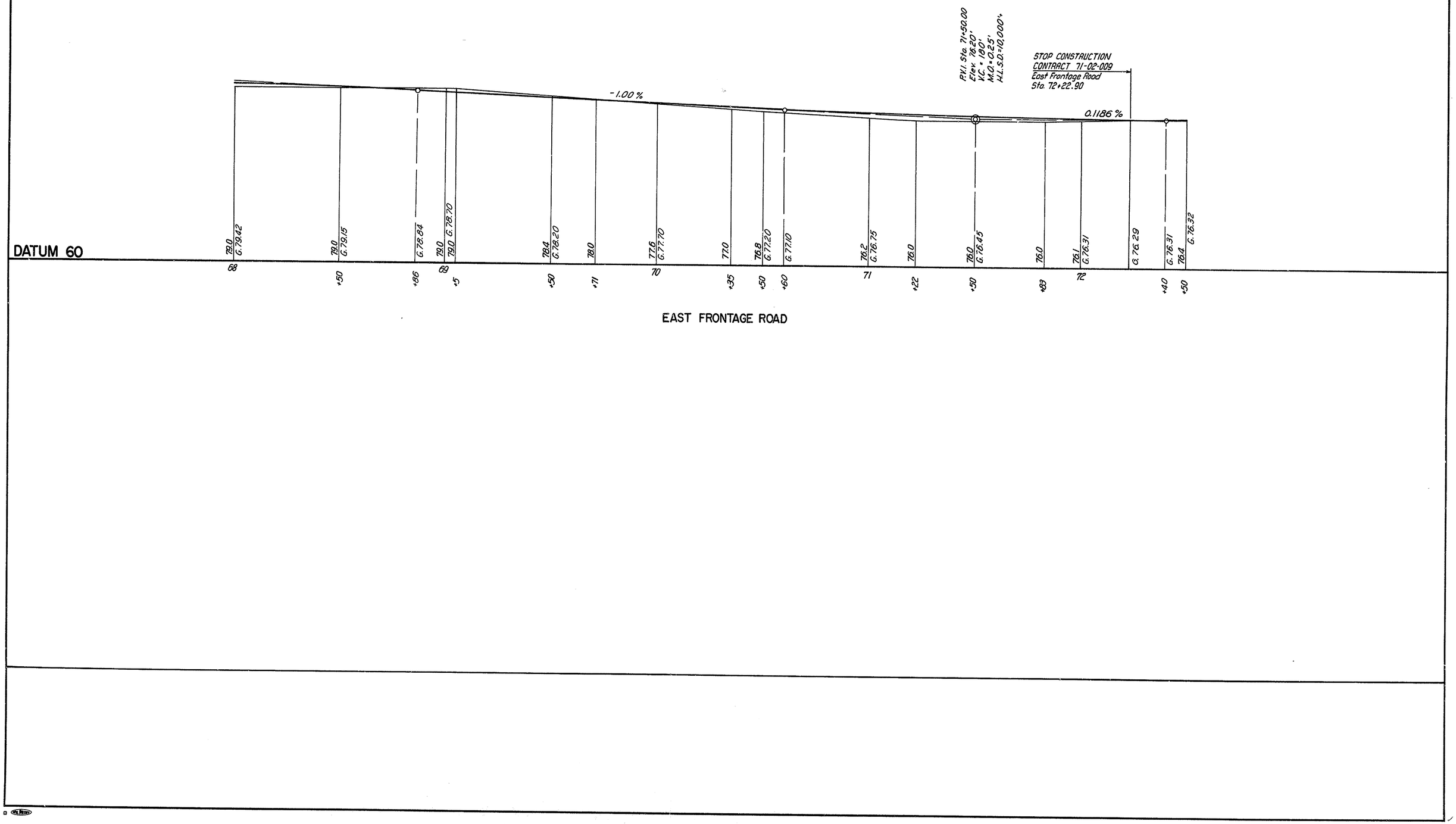

COUNTY	CONTRACT	P. R. A. REG. NO.	STATE	FED. AID PROJECT NO.	SHEET NO.	TOTAL SHEETS
NEW CASTLE	71-02-009	2	DEL		96	301

RELOCATED DELAWARE ROUTE 141
THRU NEWPORT

PREL. TRACING R.L.H. DESIGN H.A.D. CHKD. A.C.N.

REVISIONS

FOR PLAN SEE SHEET NO'S. 49, 50, 51 & 52

FOR TYPICAL SECTIONS SEE SHEET NO. 23

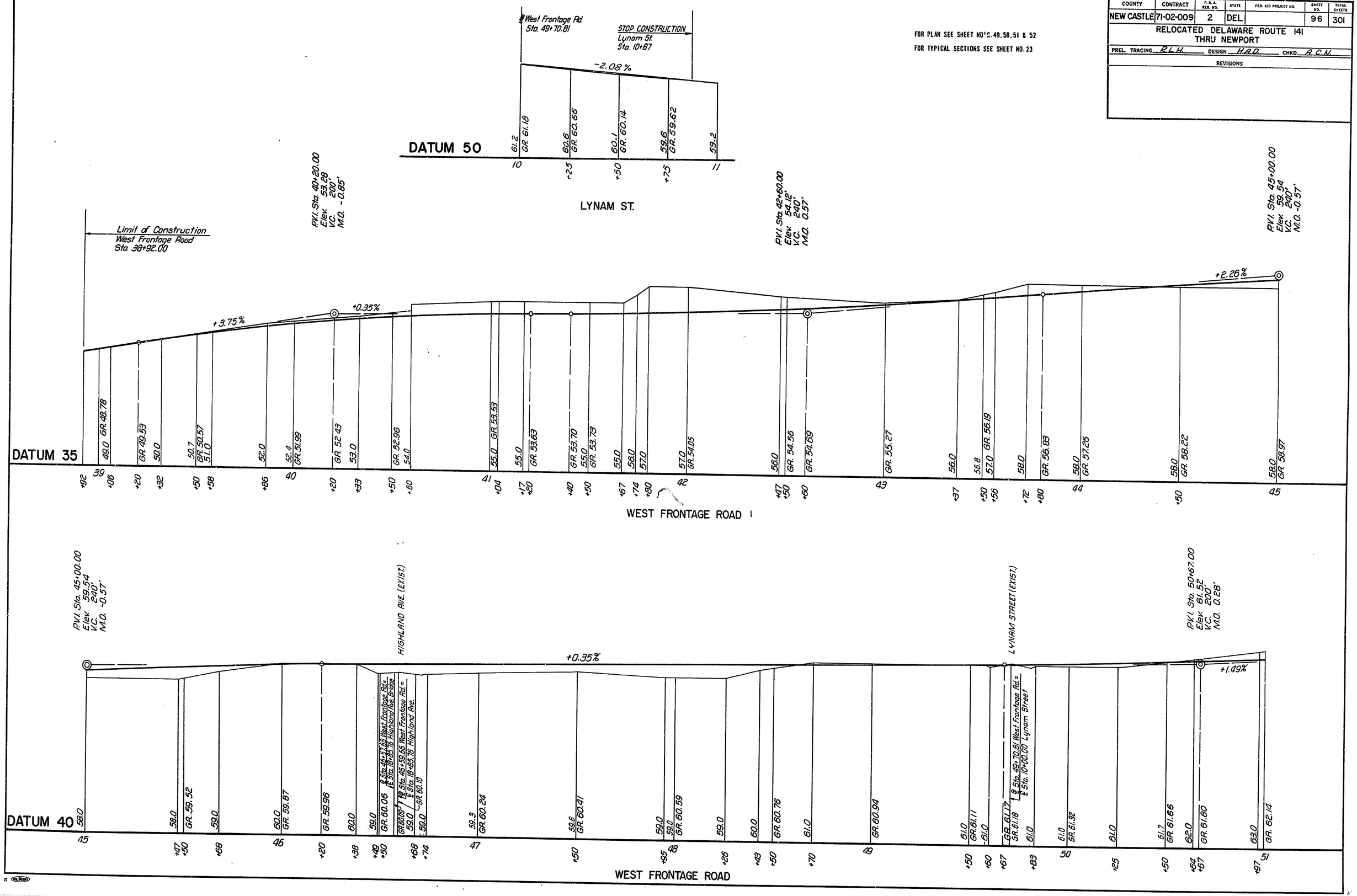

COUNTY	CONTRACT	ST. R. A. REG. NO.	STATE	FED. AID PROJECT NO.	SHEET NO.	TOTAL SHEETS
NEW CASTLE	71-02-009	2	DEL.		97	301

RELOCATED DELAWARE ROUTE 141
THRU NEWPORT

PREL. TRACING R.W.H. DESIGN H.A.D. CHKD. A.C.N.

REVISIONS

FOR PLAN SEE SHEET NO'S. 52, 53, 54 & 55

FOR TYPICAL SECTIONS SEE SHEET NO'S. 23 & 24

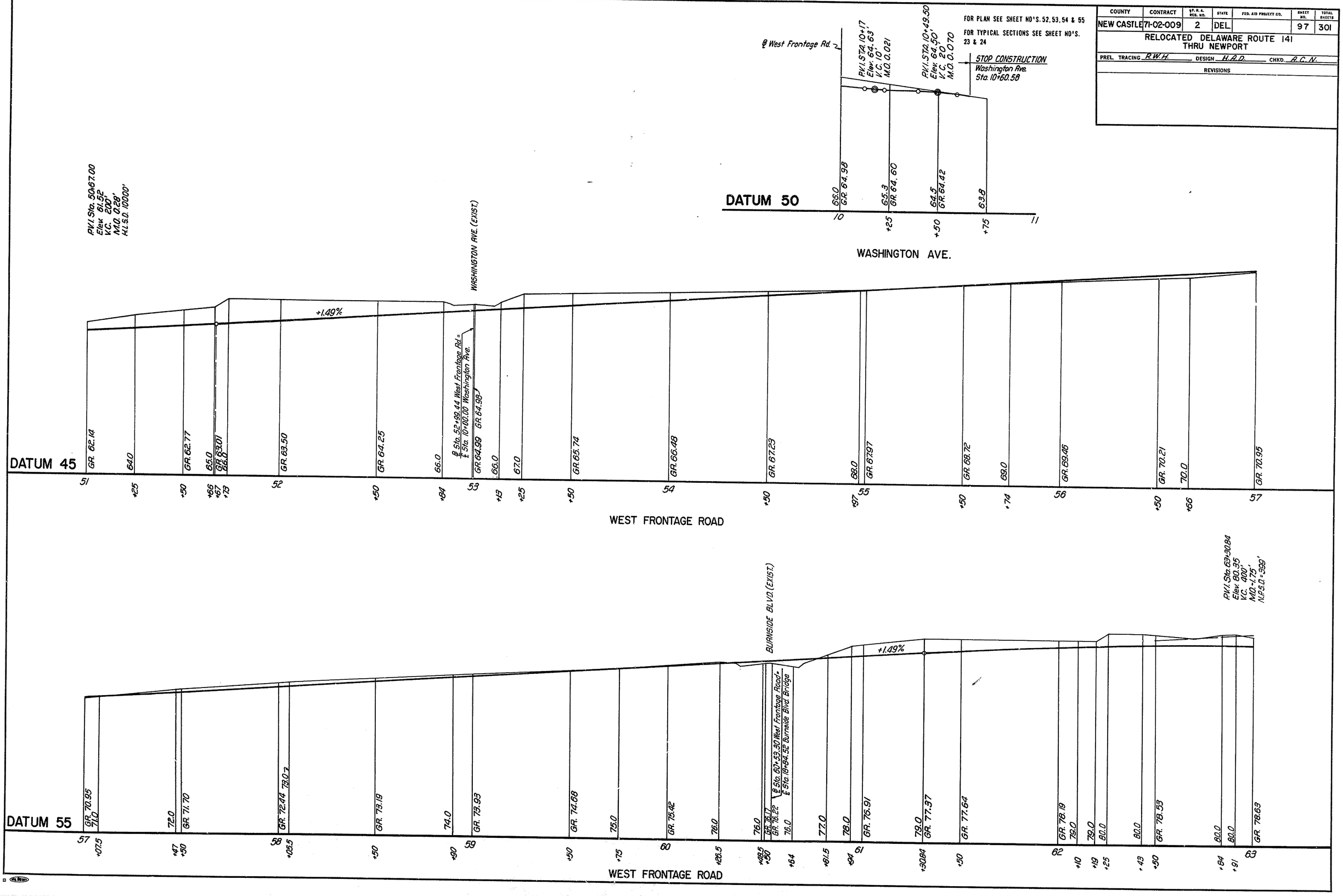

COUNTY	CONTRACT	F. P. A. REG. NO.	STATE	FED. AID PROJECT NO.	SHEET NO.	TOTAL SHEETS
NEW CASTLE	71-02-009	2	DEL.		98	301

RELOCATED DELAWARE ROUTE 141
THRU NEWPORT

PREL. TRACING R.L.H. DESIGN H.A.D. CHKD. A.C.N.

REVISIONS

FOR PLAN SEE SHEET NO'S. 55, 56, 57 & 58
FOR TYPICAL SECTIONS SEE SHEET NO'S. 24 & 25

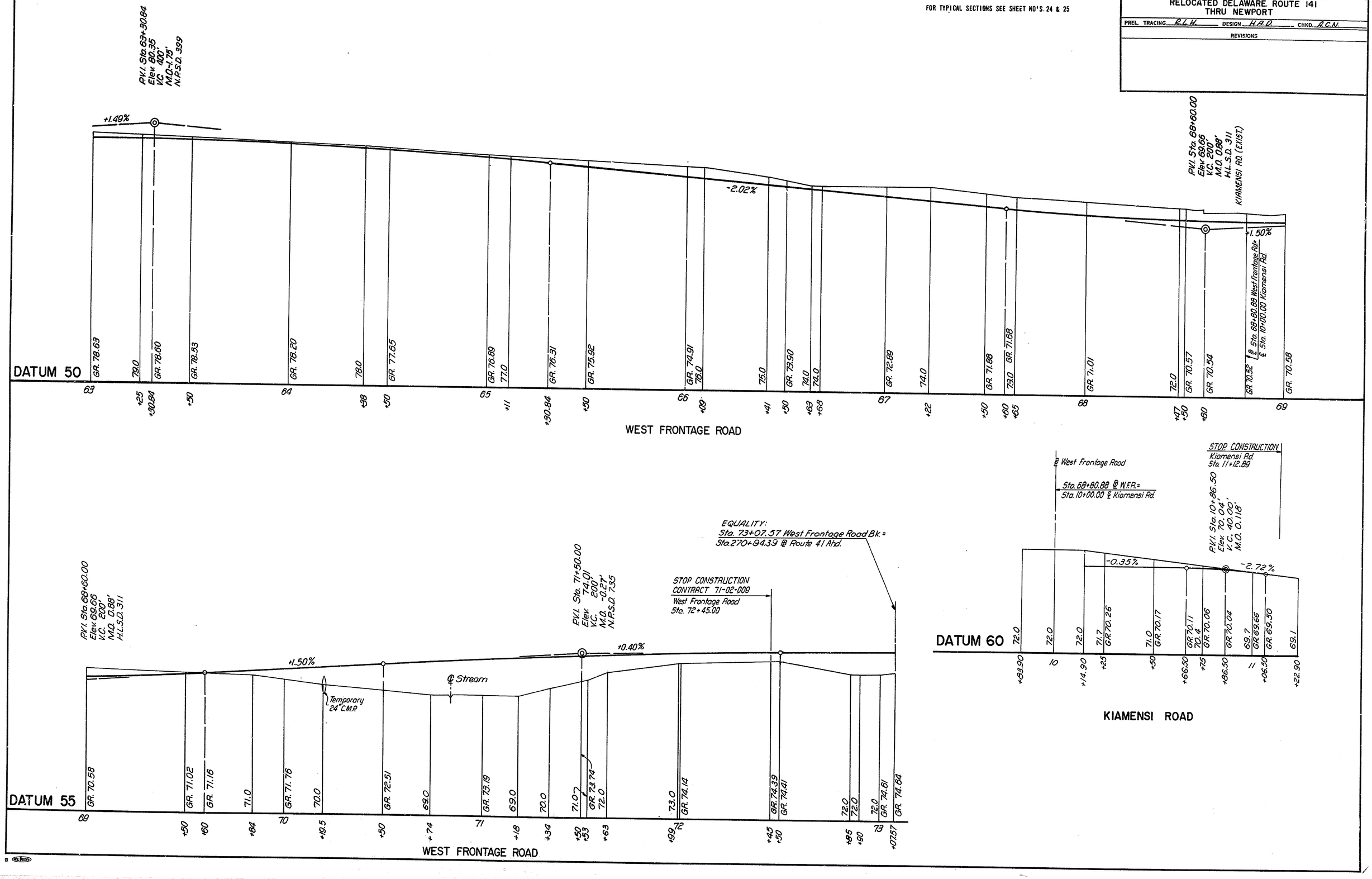

COUNTY	CONTRACT	P.R.A. REG. NO.	STATE	FED. AID PROJECT NO.	SHEET NO.	TOTAL SHEETS
NEW CASTLE	71-02-009	2	DEL.		99	301

RELOCATED DELAWARE ROUTE 141
THRU NEWPORT

PREL. TRACING R.W.H. DESIGN H.A.D. CHKD. A.C.N.

REVISIONS

FOR PLAN SEE SHEET NO'S. 51, 53 & 55

FOR TYPICAL SECTIONS SEE SHEET NO. 26

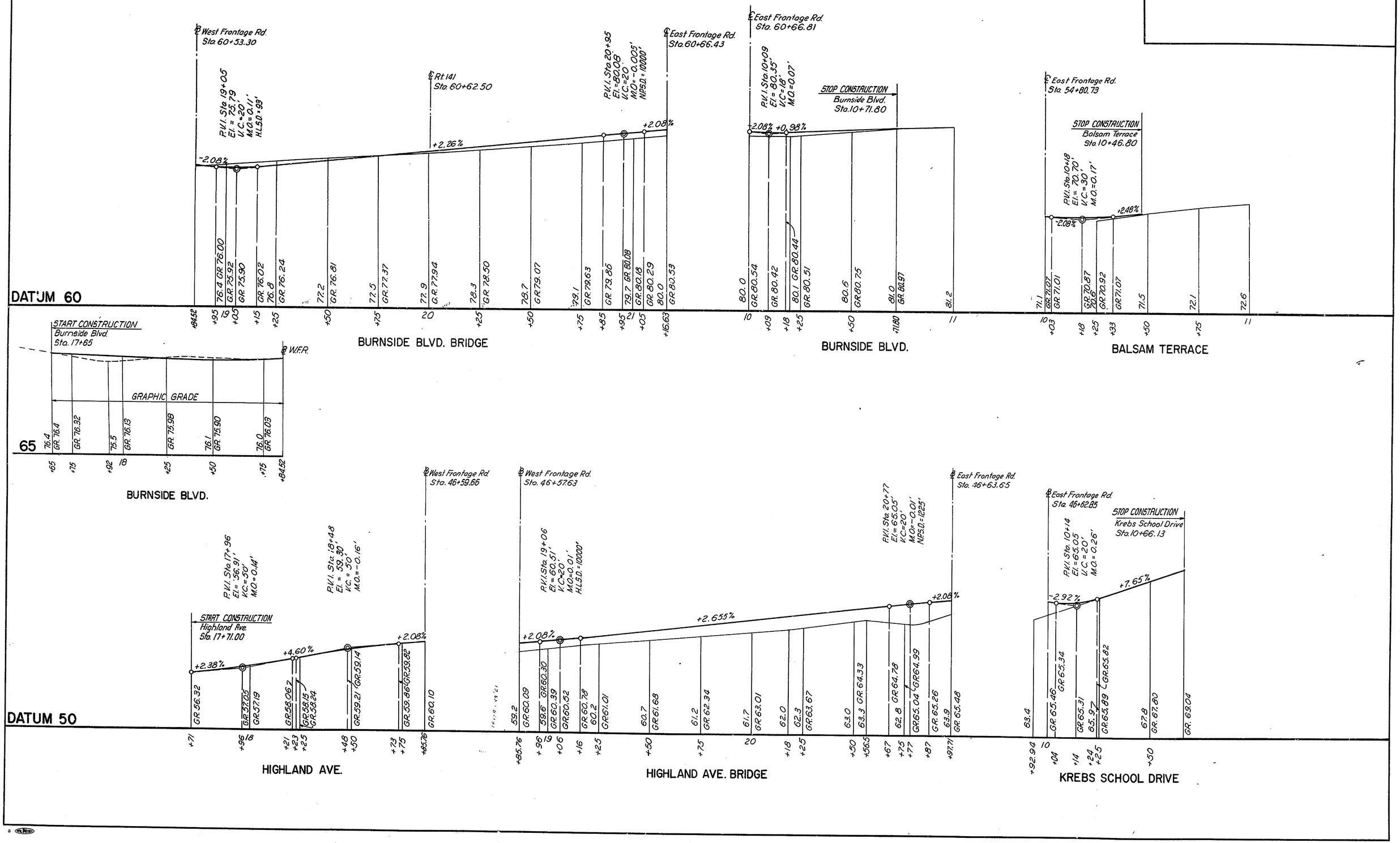

COUNTY	CONTRACT	P.R.A. REG. NO.	STATE	FED. AID PROJECT NO.	SHEET NO.	TOTAL SHEETS
NEW CASTLE	71-02-009	2	DEL		100	301

NO.	REVISIONS	BY	DATE
1	Deleted General Note "Excavation for Structures"	R.R.	2-7-74

INDEX OF STRUCTURAL DRAWINGS

100. TITLE SHEET & GENERAL NOTES
101. PERSPECTIVE
102. GENERAL PLAN ——————————STA.38+97.00 TO STA.44+00.00
103. GENERAL PLAN——————————STA.44+00.00 TO STA.49+19.00
104. GENERAL PLAN——————————STA.49+19.00 TO STA.54+25.00
105. GENERAL PLAN——————————STA.54+25.00 TO STA.59+25.00
106. GENERAL PLAN——————————STA.59+25.00 TO STA.62+01.00
107. GENERAL PLAN——————————STA.62+01.00 TO STA.66+70.00
108. GENERAL PLAN——————————STA.66+70.00 TO STA.69+02.00
109. TYPICAL SECTIONS
110. TYPICAL SECTIONS
111. TYPICAL SECTIONS
112. PROFILE GRADE DATA
113. ARCHITECTURAL DETAILS
114. PARAPET PROTECTIVE FENCE DETAILS

HIGHLAND AVENUE BRIDGE

115. GENERAL PLAN AND LONGITUDINAL SECTION
116. STAKE-OUT PLAN
117. WESTBOUND SLAB PLAN
118. PROTECTIVE BARRIER DETAILS AND LONGITUDINAL SECTION
119. EASTBOUND SLAB PLAN
120. TYPICAL SLAB CROSS SECTION AND BAR SCHEDULE
121. FRAMING PLAN AND STRUCTURAL STEEL DETAILS
122. BEAM ELEVATION
123. CAMBER BLOCKING DIAGRAM
124. ARMORED PREFORMED NEOPRENE COMPRESSION DAM
125. ARMORED PREFORMED NEOPRENE COMPRESSION DAM
126. SIGN SUPPORT DETAILS
127. SIGN SUPPORT DETAILS
128. PIER - PLAN, ELEVATION AND BAR SCHEDULE
129. PILE LOCATION PLAN - WEST AND EAST ABUTMENTS
130. WEST ABUTMENT PLAN AND ELEVATION
131. WEST ABUTMENT - WING A PLAN AND ELEVATION
132. WEST ABUTMENT - WING B PLAN AND ELEVATION
133. WEST ABUTMENT DETAILS
134. WEST ABUTMENT BAR SCHEDULE
135. EAST ABUTMENT PLAN AND ELEVATION
136. EAST ABUTMENT - WING C PLAN AND ELEVATION
137. EAST ABUTMENT - WING D PLAN AND ELEVATION
138. EAST ABUTMENT DETAILS
139. EAST ABUTMENT BAR SCHEDULE
140. APPROACH SLABS - WEST AND EAST ABUTMENTS

BURNSIDE BOULEVARD BRIDGE

141. GENERAL PLAN AND LONGITUDINAL SECTION
142. STAKE-OUT PLAN
143. SLAB PLAN
144. TYPICAL SLAB CROSS SECTION AND BAR SCHEDULE
145. FRAMING PLAN AND STRUCTURAL STEEL DETAILS
146. BEAM ELEVATION AND CAMBER BLOCKING DIAGRAM
147. ARMORED PREFORMED NEOPRENE COMPRESSION DAM
148. ARMORED PREFORMED NEOPRENE COMPRESSION DAM
149. SIGN SUPPORT DETAILS
150. SIGN SUPPORT DETAILS
151. PIER - PLAN, ELEVATION AND BAR SCHEDULE
152. PILE LOCATION PLAN - WEST AND EAST ABUTMENTS
153. WEST ABUTMENT PLAN AND ELEVATION
154. WEST ABUTMENT - WING A PLAN AND ELEVATION
155. WEST ABUTMENT - WING B PLAN AND ELEVATION
156. WEST ABUTMENT DETAILS
157. WEST ABUTMENT BAR SCHEDULE
158. EAST ABUTMENT PLAN AND ELEVATION
159. EAST ABUTMENT - WING C PLAN AND ELEVATION
160. EAST ABUTMENT - WING D PLAN AND ELEVATION
161. EAST ABUTMENT DETAILS
162. EAST ABUTMENT BAR SCHEDULE
163. APPROACH SLABS - WEST AND EAST ABUTMENTS

RETAINING WALL NO.1 - WEST FRONTAGE ROAD

164. PILE LOCATION PLAN - STA.42+56.93 TO STA.45+52.93
165. PLAN AND ELEVATION - STA.42+56.93 TO STA.43+60.93
166. PLAN AND ELEVATION - STA.43+60.93 TO STA.45+52.93
167. RETAINING WALL NO.1 AND NO.2 - BAR SCHEDULE

RETAINING WALL NO.2 - WEST FRONTAGE ROAD

168. PILE LOCATION PLAN - STA.47+67.92 TO STA.51+51.32
169. PILE LOCATION PLAN - STA.51+51.32 TO STA.59+62.73
170. PLAN AND ELEVATION - STA.47+67.92 TO STA.49+59.92
171. PLAN AND ELEVATION - STA.49+59.92 TO STA.51+51.32
172. PLAN AND ELEVATION - STA.51+51.32 TO STA.53+37.29
173. PLAN AND ELEVATION - STA.53+37.29 TO STA.57+21.91
174. PLAN AND ELEVATION - STA.57+21.91 TO STA.59+62.73

RETAINING WALL NO.3 - EAST FRONTAGE ROAD

175. PLAN, ELEVATION AND BAR SCHEDULE - STA.40+00.00 TO STA.41+68.25

RETAINING WALL NO.4 - EAST FRONTAGE ROAD

176. PILE LOCATION PLAN - STA.42+88.57 TO STA.45+65.40
177. PLAN AND ELEVATION - STA.42+88.57 TO STA.43+73.81
178. PLAN AND ELEVATION - STA.43+73.81 TO STA.45+65.40
179. RETAINING WALL NO.4 AND NO.5 - BAR SCHEDULE

RETAINING WALL NO.5 - EAST FRONTAGE ROAD

180. PILE LOCATION PLAN - STA.47+72.40 TO STA.51+55.87
181. PILE LOCATION PLAN - STA.51+55.87 TO STA.59+73.02
182. PLAN AND ELEVATION - STA.47+72.40 TO STA.49+63.88
183. PLAN AND ELEVATION - STA.49+63.88 TO STA.51+55.87
184. PLAN AND ELEVATION - STA.51+55.87 TO STA.53+15.87
185. PLAN AND ELEVATION - STA.53+15.87 TO STA.54+75.87
186. PLAN AND ELEVATION - STA.54+75.87 TO STA.58+54.02
187. PLAN AND ELEVATION - STA.58+54.02 TO STA.59+73.02

RETAINING WALL NO.6 - EAST FRONTAGE ROAD

188. PILE LOCATION PLAN - STA.61+55.23 TO STA.65+37.18
189. PILE LOCATION PLAN - STA.65+37.18 TO STA.68+81.82
190. PLAN AND ELEVATION - STA.61+55.23 TO STA.63+46.33
191. PLAN AND ELEVATION - STA.63+46.33 TO STA.65+37.18
192. PLAN AND ELEVATION - STA.65+37.18 TO STA.67+28.04
193. PLAN AND ELEVATION - STA.67+28.04 TO STA.68+81.82
194. BAR SCHEDULE
195. PARAPET TRANSITION - CURB TO RETAINING WALL
196. PARAPET TRANSITION - WING WALL TO RETAINING WALL

VIADUCT

197. ABUTMENT NO.2 - PAVEMENT RELIEF JOINT
198. ABUTMENT NO.2 - NB.& SB. APPROACH SLABS
199. ABUTMENT NO.2 - BARRIER WALL

GENERAL NOTES

SPECIFICATIONS: DESIGN CRITERIA IS BASED ON "1969 STANDARD SPECIFICATIONS FOR HIGHWAY BRIDGES", AMERICAN ASSOCIATION OF STATE HIGHWAY OFFICIALS, INCLUDING THE 1970, 1971 & 1972 INTERIM SPECIFICATIONS.

CONSTRUCTION: MATERIAL AND WORKMANSHIP SHALL BE IN ACCORDANCE WITH THE STATE OF DELAWARE, DEPARTMENT OF HIGHWAYS AND TRANSPORTATION, DIVISION OF HIGHWAYS STANDARD SPECIFICATIONS DATED JUNE 1, 1970 UNLESS OTHERWISE NOTED AND/OR SPECIFIED BY THE SPECIAL PROVISIONS.

WELDING: 1969 AWS "SPECIFICATIONS FOR WELDED HIGHWAY AND RAILWAY BRIDGES" AND/OR AS MODIFIED BY SPECIAL PROVISIONS.

LIVE LOAD: HS20-44

DEAD LOAD: INCLUDES 25 LBS. PER SQ. FT. FOR FUTURE WEARING SURFACE ON THE DECK SLAB. INCLUDES 15 LBS. PER SQ. FT. FOR USE OF PERMANENT METAL DECK FORMS, SEE SPECIAL PROVISIONS.

ELEVATIONS: ELEVATIONS ARE BASED ON U.S.C.& G.S. DATUM 1929.

BORINGS: THE SUBSOIL DATA AND INTERPRETATIONS DO NOT FORM A PART OF THIS CONTRACT, AND WILL BE AVAILABLE TO THE BIDDERS FOR THEIR INFORMATION ONLY. AVAILABLE SOIL SAMPLES TAKEN AT THE SITE MAY BE EXAMINED BY ARRANGEMENT WITH THE DIVISION OF HIGHWAYS. THE CONTRACTOR SHALL MAKE HIS OWN INTERPRETATION AND JUDGEMENTS OF THE BORING RESULTS AND ASSUME FULL RESPONSIBILITY FOR SAME.

~~EXCAVATION FOR STRUCTURES: THE DEPTH OF EXCAVATION MEASURED FOR PAYMENT SHALL BE THE VERTICAL DISTANCE FROM THE BOTTOM OF CONCRETE TO THE GROUND LINE EXISTING AT THE TIME OF EXCAVATION. THE HORIZONTAL LIMITS OF EXCAVATION FOR PAYMENT SHALL BE 1'-6" BEYOND THE FACE OF CONCRETE. SEE THE SPECIAL PROVISIONS FOR EXCAVATION REQUIREMENTS IN THE AREA OF THE NEWPORT TOWN HALL BUILDING.~~

PORTLAND CEMENT CONCRETE MASONRY: PCCM SUPERSTRUCTURE SHALL BE CONTROLLED CONCRETE WITH A MINIMUM 28 DAY COMPRESSIVE STRENGTH OF 4,500 P.S.I., ALL OTHER CONCRETE SHALL HAVE A MINIMUM 28 DAY COMPRESSIVE STRENGTH OF 3,000 P.S.I. (fc = 1,200 P.S.I. ALL CONCRETE). ALL EXPOSED EDGES OF CONCRETE SHALL BE CHAMFERED 3/4" x 3/4" UNLESS OTHERWISE SHOWN. CONCRETE IN AREAS UNDER BEARINGS SHALL BE CONSTRUCTED IN ACCORDANCE WITH SECTION 606.58 OF THE STANDARD SPECIFICATIONS, TO THE ELEVATIONS SHOWN ON THE PLANS.

BAR REINFORCEMENT: BAR REINFORCEMENT SHALL MEET THE REQUIREMENTS FOR DEFORMED BILLET-STEEL BARS FOR CONCRETE REINFORCEMENT, A.S.T.M. A615 GRADE 40. BARS SHALL BE DETAILED IN ACCORDANCE WITH THE CURRENT A.C.I. MANUAL OF STANDARD PRACTICE FOR DETAILING REINFORCED CONCRETE STRUCTURES. LAPPED SPLICES, UNLESS OTHERWISE NOTED ARE TO BE A MINIMUM OF 24 DIAMETERS.

DECK SLABS: STAY-IN-PLACE FORMS FOR THE DECK SLABS SHALL BE USED. DECK SLABS SHALL BE CURED FOR AT LEAST 7 DAYS BEFORE CURBS AND PARAPETS ARE PLACED.

FOUNDATIONS:

SPREAD FOOTINGS - RETAINING WALL NO.2 - WEST FRONTAGE ROAD STA.53+27.29 TO STA.59+30.79
MAXIMUM DESIGN FOUNDATION PRESSURE = 0.55 TONS PER SQ. FT.
RETAINING WALL NO.3 - FULL LENGTH: MAXIMUM DESIGN FOUNDATION PRESSURE = 1.15 TONS PER SQ. FT.
RETAINING WALL NO.5 - EAST FRONTAGE ROAD STA.53+79.87 TO STA.58+54.02.
MAXIMUM DESIGN FOUNDATION PRESSURE = 0.55 TONS PER SQ. FT.

PILE FOOTINGS - HIGHLAND AVE. AND BURNSIDE BLVD. BRIDGES - ABUTMENT WINGS AND PIERS.
RETAINING WALL NO.1 - FULL LENGTH.
RETAINING WALL NO.2 - WEST FRONTAGE ROAD STA.47+67.92 TO STA.53+27.29 AND STA.59+30.79 TO STA.59+62.73.
RETAINING WALL NO.4 - FULL LENGTH.
RETAINING WALL NO.5 - EAST FRONTAGE ROAD STA.47+72.40 TO STA.53+79.87 AND STA.58+54.02 TO STA.59+73.02.
RETAINING WALL NO.6 - FULL LENGTH.
BARRIER WALL - FULL LENGTH.

PILES: ALL PILES SHALL BE CAST-IN-PLACE CONCRETE PILES (12 INCH 7 GAGE) DRIVEN TO A MINIMUM BEARING CAPACITY OF 40 TONS PER PILE. PILES SHALL NOT BE DRIVEN UNTIL THE EXCAVATION FOR STRUCTURES IS COMPLETED TO THE BOTTOM OF FOOTING ELEVATIONS.

ABUTMENT BACKWALLS: ABUTMENT BACKWALLS ABOVE BRIDGE SEATS SHALL NOT BE PLACED UNTIL AFTER SUPERSTRUCTURE STEEL HAS BEEN ERECTED AND DECK SLAB HAS BEEN PLACED.

GENERAL NOTES CONTINUED

UTILITIES: FOR A LIST OF THE UTILITY COMPANIES, SEE THE TABLES ON THE PLAN SHEET TITLED "SUMMARY OF STRUCTURAL QUANTITIES". THE SIZE AND NUMBER OF THE UTILITIES ALONG WITH THE RESPONSIBILITY OF WORK TO BE DONE IS SHOWN IN THE TABLES. ALL HANGER ASSEMBLIES AND PIPE HANGERS SHALL BE HOT-DIPPED GALVANIZED IN ACCORDANCE WITH SECTION 606.05(K) OF THE STANDARD SPECIFICATIONS. AFTER THE UTILITIES HAVE BEEN INSTALLED, THE CONTRACTOR SHALL GROUT THE OPENINGS AND WATERPROOF THE REAR FACES OF THE ABUTMENT BACKWALLS AS DIRECTED BY THE ENGINEER IN THE FIELD. ALL MATERIALS REQUIRED TO CLOSE THE UTILITY OPENINGS IN THE ABUTMENT BACKWALLS WILL BE FURNISHED BY THE CONTRACTOR.

STRUCTURAL STEEL AND STEELWORK: ALL STRUCTURAL STEEL SHALL CONFORM TO A.A.S.H.O. DESIGNATION M222 (ASTM A588) UNLESS OTHERWISE NOTED.

STRUCTURAL STEEL WITH A.A.S.H.O. DESIGNATION M222 (ASTM A588) SHALL BE GRADE 50.

ALL DIMENSIONS SHOWN ON THE PLANS ARE FOR THE STRUCTURES AT A NORMAL TEMPERATURE OF +68° F.

TO AVOID OVERSIGHT, THE SHOP DRAWINGS SHALL SHOW CLEARLY THE NATURE, DIMENSIONS AND LOCATIONS OF ALL WELDS, BOLT SIZES, OPEN HOLES, ETC.

ANCHOR BOLTS SHALL BE HOT-DIPPED GALVANIZED IN ACCORDANCE WITH SECTION 606.05 (K) OF THE STANDARD SPECIFICATIONS.

ALL FASTENERS SHALL BE 7/8"Φ HIGH STRENGTH BOLTS, UNLESS OTHERWISE NOTED.

ROLLED BEAMS SHALL BE CAMBERED AS SHOWN ON THE DRAWINGS. THE FABRICATOR SHALL ALLOW FOR LOSS OF CAMBER DUE TO WELDING.

NO WELDED FIELD SPLICES WILL BE PERMITTED.

ALL HOLES IN THE BOTTOM FLANGES OF THE DIAPHRAGMS FOR UTILITY HANGERS SHALL BE MADE IN THE FABRICATOR'S SHOP.

DELAWARE
DEPARTMENT OF HIGHWAYS & TRANSPORTATION
DIVISION OF HIGHWAYS

STATE ROUTE 141 THRU NEWPORT

RETAINING WALLS AND OVERPASSES

TITLE SHEET AND GENERAL NOTES

D. G.W.S.	SCALE	APPROVED BY:
T. G.W.S.	NONE	
C. L.W.H.		BRIDGE ENGINEER

COUNTY	CONTRACT	P.R.A. REG. NO.	STATE	FED. AID PROJECT NO.	SHEET NO.	TOTAL SHEETS
NEW CASTLE	71-02-009	2	DEL.		101	301

NO.	REVISIONS	BY	DATE

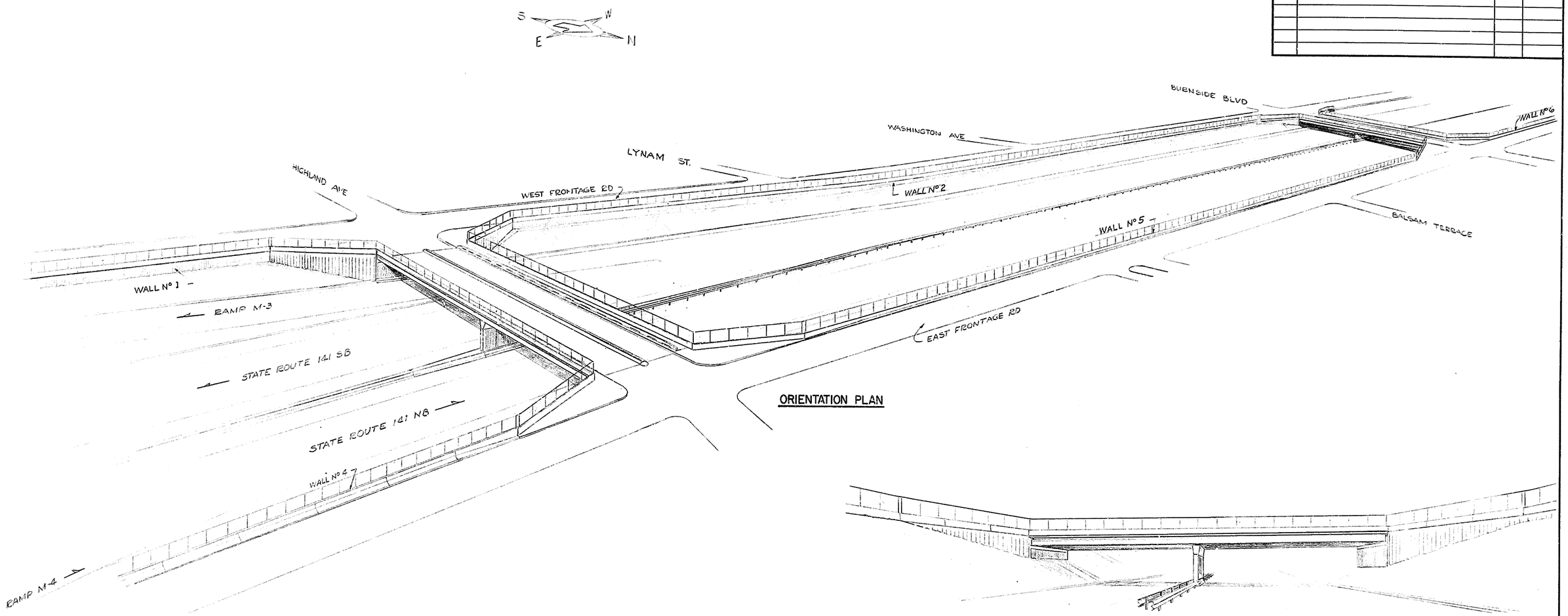

ORIENTATION PLAN

BURNSIDE BOULEVARD BRIDGE
LOOKING NORTH

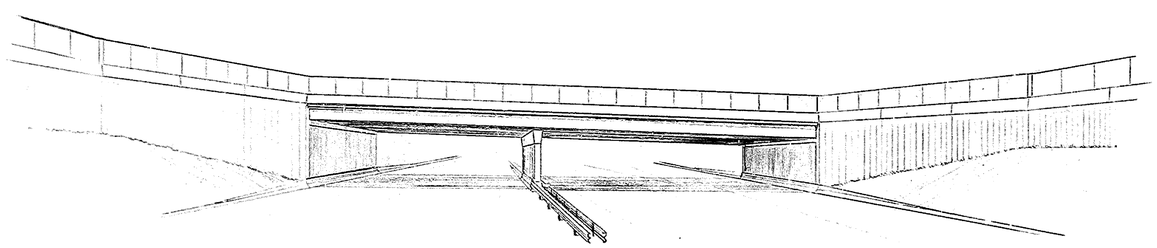

HIGHLAND AVENUE BRIDGE
LOOKING SOUTH

DELAWARE
DEPARTMENT OF HIGHWAYS & TRANSPORTATION
DIVISION OF HIGHWAYS

STATE ROUTE 141 THRU NEWPORT

RETAINING WALLS AND OVERPASSES

PERSPECTIVE

D. CHS	SCALE	APPROVED BY:
T. CHS	NONE	
C.		BRIDGE ENGINEER

8 VAN BRIDGE 19 1253

COUNTY	CONTRACT	P. R. A. REG. NO.	STATE	FED. AID PROJECT NO.	SHEET NO.	TOTAL SHEETS
NEW CASTLE	71-02-009	2	DEL.		102	301

NO.	REVISIONS	BY	DATE

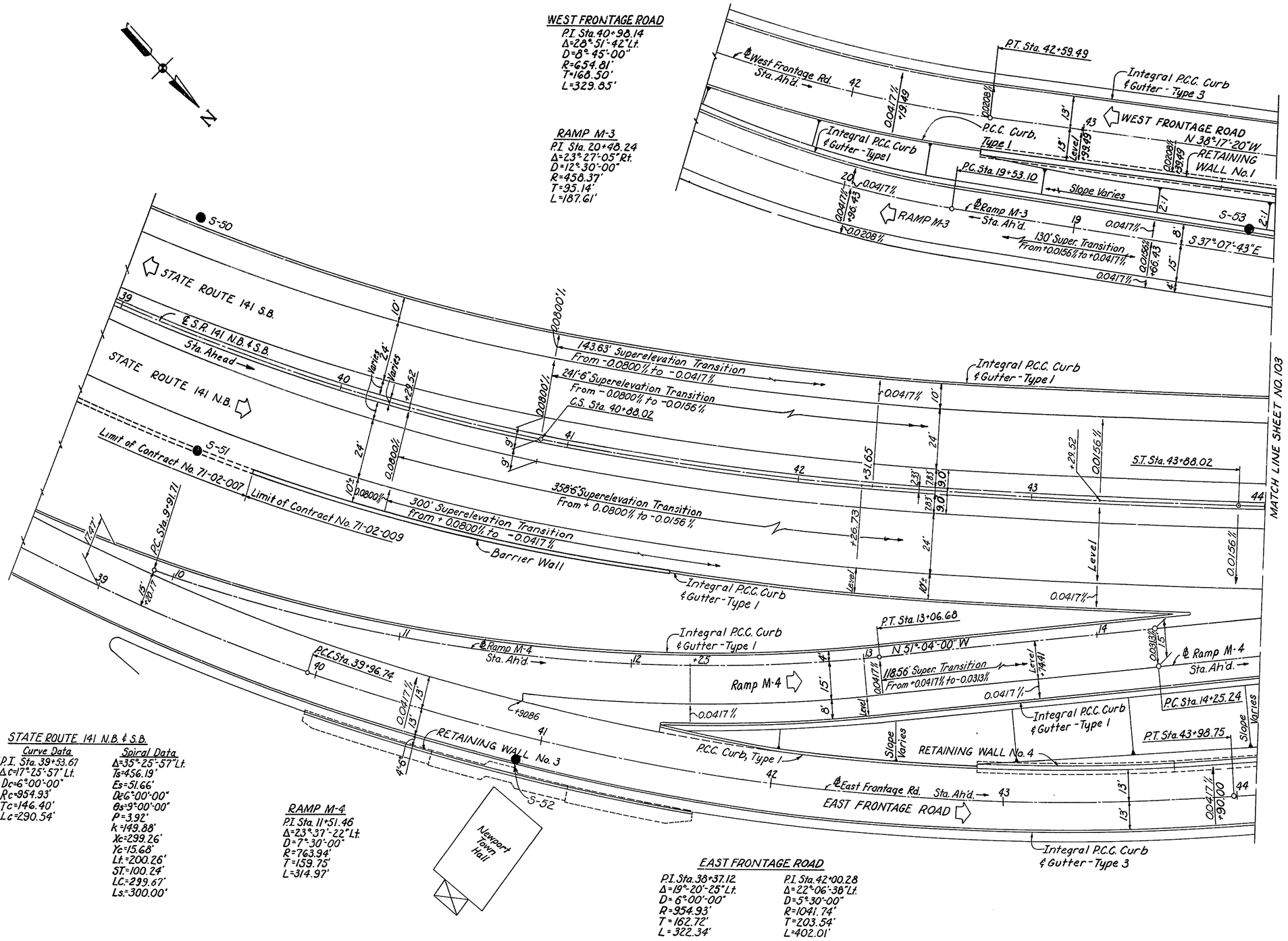

NOTES

1. For limits of cross slopes, see Typical Sections, Sheet No. 109 thru Sheet No. 111
2. For details of Retaining Wall No. 1, see Sheet No. 164 thru Sheet No. 167
3. For details of Retaining Wall No. 3, see Sheet No. 175
4. For details of Retaining Wall No. 4, see Sheet No. 176 thru Sheet No. 179
5. For Profile Grade Data, see Sheet No. 112

STATE ROUTE 141 N.B. & S.B.

Curve Data

I.P.I. Sta. 39+53.67
Δc=17°-25'-57" Lt.
Dc=6°-00'-00"
Rc=954.93'
Tc=146.40'
Lc=290.54'

Spiral Data

Δ=35°-25'-57" Lt.
Ts=456.19'
Es=51.66'
Dc=6°-00'-00"
θs=9°-00'-00"
P=3.92'
k=149.88'
Xc=299.26'
Yc=15.68'
Lt.=200.26'
ST.=100.24'
LC.=299.67'
Ls.=300.00'

RAMP M-4

P.I. Sta. 11+51.46
Δ=23°-37'-22" Lt.
D=7°-30'-00"
R=763.94'
T=159.75'
L=314.97'

EAST FRONTAGE ROAD

P.I. Sta. 38+37.12
Δ=19°-20'-25" Lt.
D=6°-00'-00"
R=954.93'
T=162.72'
L=322.34'

P.I. Sta. 42+00.28
Δ=22°-06'-38" Lt.
D=5°-30'-00"
R=1041.74'
T=203.54'
L=402.01'

DELAWARE DEPARTMENT
OF HIGHWAYS & TRANSPORTATION
DIVISION OF HIGHWAYS

STATE ROUTE 141 THRU NEWPORT

RETAINING WALLS AND OVERPASSES

GENERAL PLAN

STA. 38+97.00 TO STA 44+00.00

D.W.B.C. T.R.G.S. C.W.B.C.	SCALE 1" = 20'	APPROVED BY: BRIDGE ENGINEER

COUNTY	CONTRACT	F.A.P. REG. NO.	STATE	FED. AID PROJECT NO.	SHEET NO.	TOTAL SHEETS
NEW CASTLE	71-02-009	2	DEL.		103	301

NO.	REVISIONS	BY	DATE

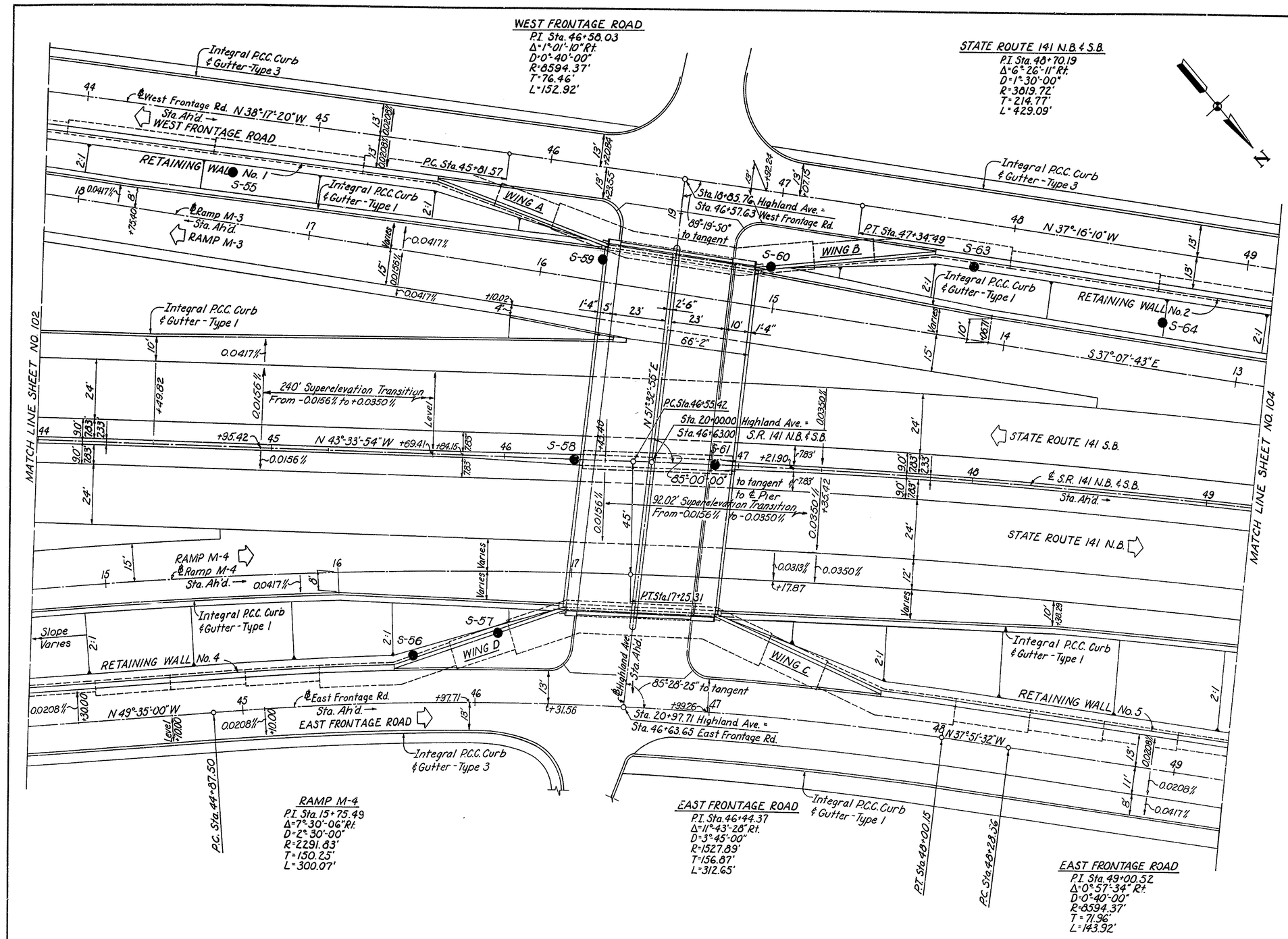

RAMP M-4
P.I. Sta. 15+75.49
Δ=7°-30'-06" Rt.
D=2°-30'-00"
R=2291.83'
T=150.25'
L=300.07'

EAST FRONTAGE ROAD
P.I. Sta. 46+44.37
Δ=11°-43'-28" Rt.
D=3°-45'-00"
R=1527.89'
T=156.87'
L=312.65'

EAST FRONTAGE ROAD
P.I. Sta. 49+00.52
Δ=0°-57'-34" Rt.
D=0°-40'-00"
R=8594.37'
T=71.96'
L=143.92'

NOTES

1. For limits of cross slopes, see Typical Sections Sheet No. 109 thru Sheet No. 111
2. For details of Retaining Wall No. 1, see Sheet No. 164 thru Sheet No. 167
3. For details of Retaining Wall No. 2, see Sheet No. 168 thru Sheet No. 174
4. For details of Retaining Wall No. 4, see Sheet No. 176 thru Sheet No. 179
5. For details of Retaining Wall No. 5, see Sheet No. 180 thru Sheet No. 187
6. For details of Highland Ave. Bridge, see Sheet No. 115 thru Sheet No. 140
7. For Profile Grade Data, see Sheet No. 112

DELAWARE DEPARTMENT
OF HIGHWAYS & TRANSPORTATION
DIVISION OF HIGHWAYS

STATE ROUTE 141 THRU NEWPORT

RETAINING WALLS AND OVERPASSES
GENERAL PLAN
STA. 44+00.00 TO STA 49+19.00

D.W.B.C.	SCALE	APPROVED BY:
T.R.G.S.	1" = 20'	
C.W.B.C.		BRIDGE ENGINEER

COUNTY	CONTRACT	P. R. A. REG. NO.	STATE	FED. AID PROJECT NO.	SHEET NO.	TOTAL SHEETS
NEW CASTLE	71-02-009	2	DEL.		104	301

NO.	REVISIONS	BY	DATE

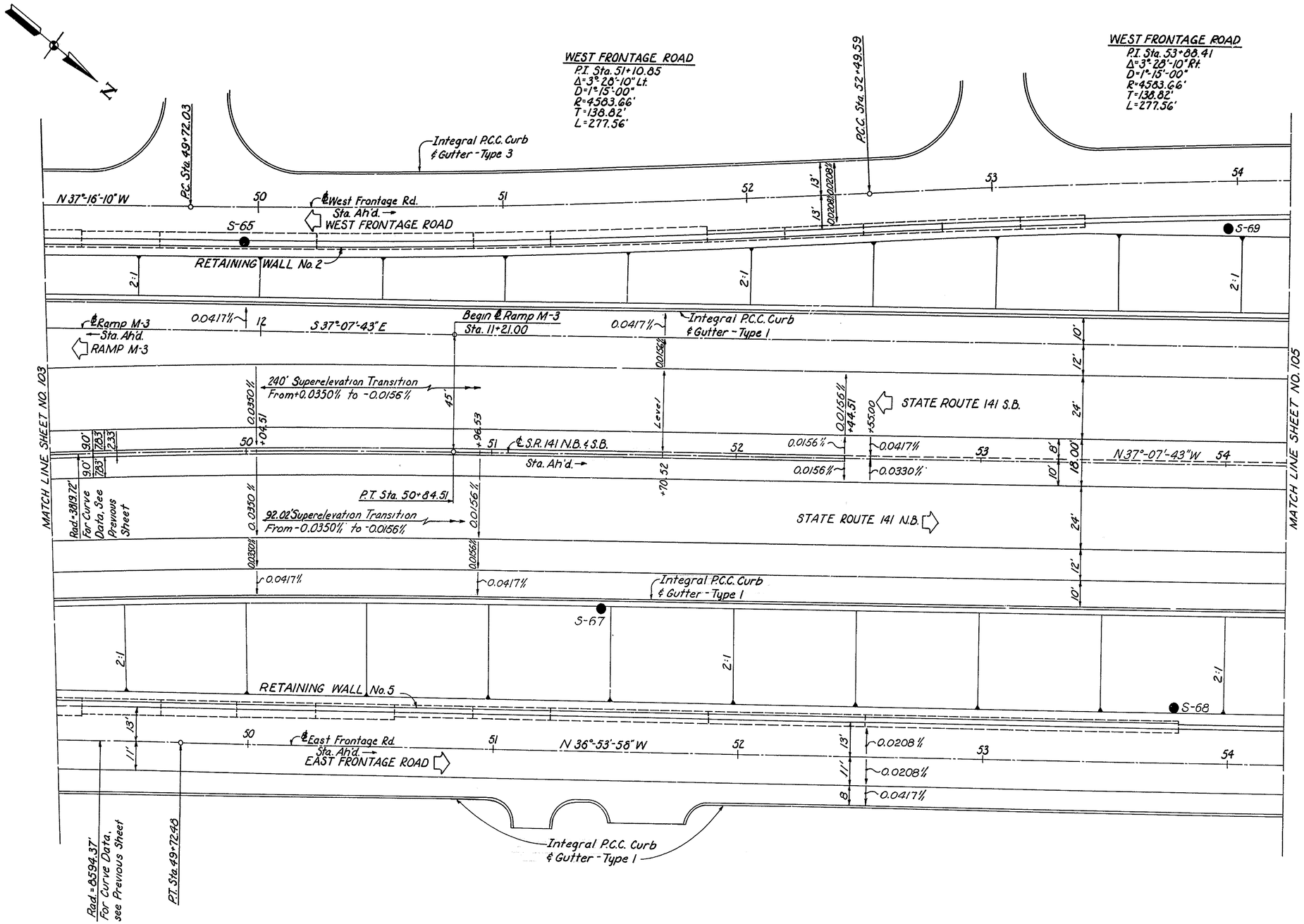

NOTES

1. For limits of cross slopes, see Typical Sections Sheet No. 109 thru Sheet No. 111
2. For details of Retaining Wall No. 2, see Sheet No. 168 thru Sheet No. 174
3. For details of Retaining Wall No. 5, see Sheet No. 180 thru Sheet No. 187
4. For Profile Grade Data, see Sheet No. 112

DELAWARE DEPARTMENT
OF HIGHWAYS & TRANSPORTATION
DIVISION OF HIGHWAYS

STATE ROUTE 141 THRU NEWPORT

RETAINING WALLS AND OVERPASSES
GENERAL PLAN

STA. 49+19.00 TO STA. 54+25.00

D. W. B. C.	SCALE	APPROVED BY:
T. R. G. S.	1" = 20'	
C. W. B. C.		BRIDGE ENGINEER

COUNTY	CONTRACT	P. R. A. REG. NO.	STATE	FED. AID PROJECT NO.	SHEET NO.	TOTAL SHEETS
NEW CASTLE	71-02-009	2	DEL.		105	301

NO.	REVISIONS	BY	DATE

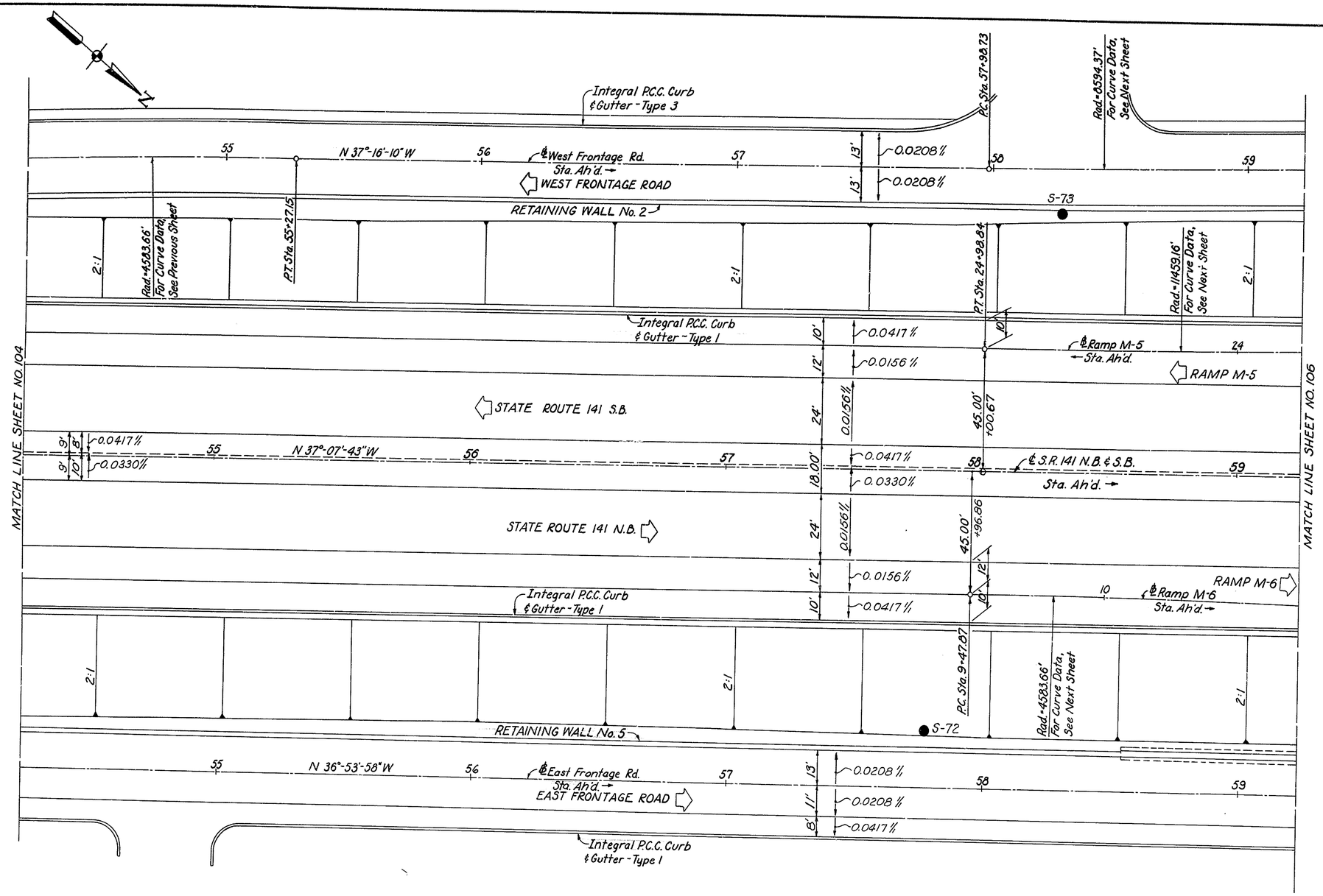

NOTES

1. For limits of cross slopes, see Typical Sections Sheet No. 109 thru Sheet No. 111
2. For details of Retaining Wall No. 2, see Sheet No. 168 thru Sheet No. 174
3. For details of Retaining Wall No. 5, see Sheet No. 180 thru Sheet No. 187
4. For Profile Grade Data, see Sheet No. 112

DELAWARE DEPARTMENT
OF HIGHWAYS & TRANSPORTATION
DIVISION OF HIGHWAYS

STATE ROUTE 141 THRU NEWPORT

RETAINING WALLS AND OVERPASSES
GENERAL PLAN

STA 54+25.00 TO STA. 59+25.00

D. W.B.C. T. R.G.S. C. W.B.C.	SCALE 1" = 20'	APPROVED BY: BRIDGE ENGINEER

COUNTY	CONTRACT	P.E.A. REG. NO.	STATE	FED AID PROJECT NO.	SHEET NO.	TOTAL SHEETS
NEW CASTLE	71-02-009	2	DEL.		106	301

NO.	REVISIONS	BY	DATE

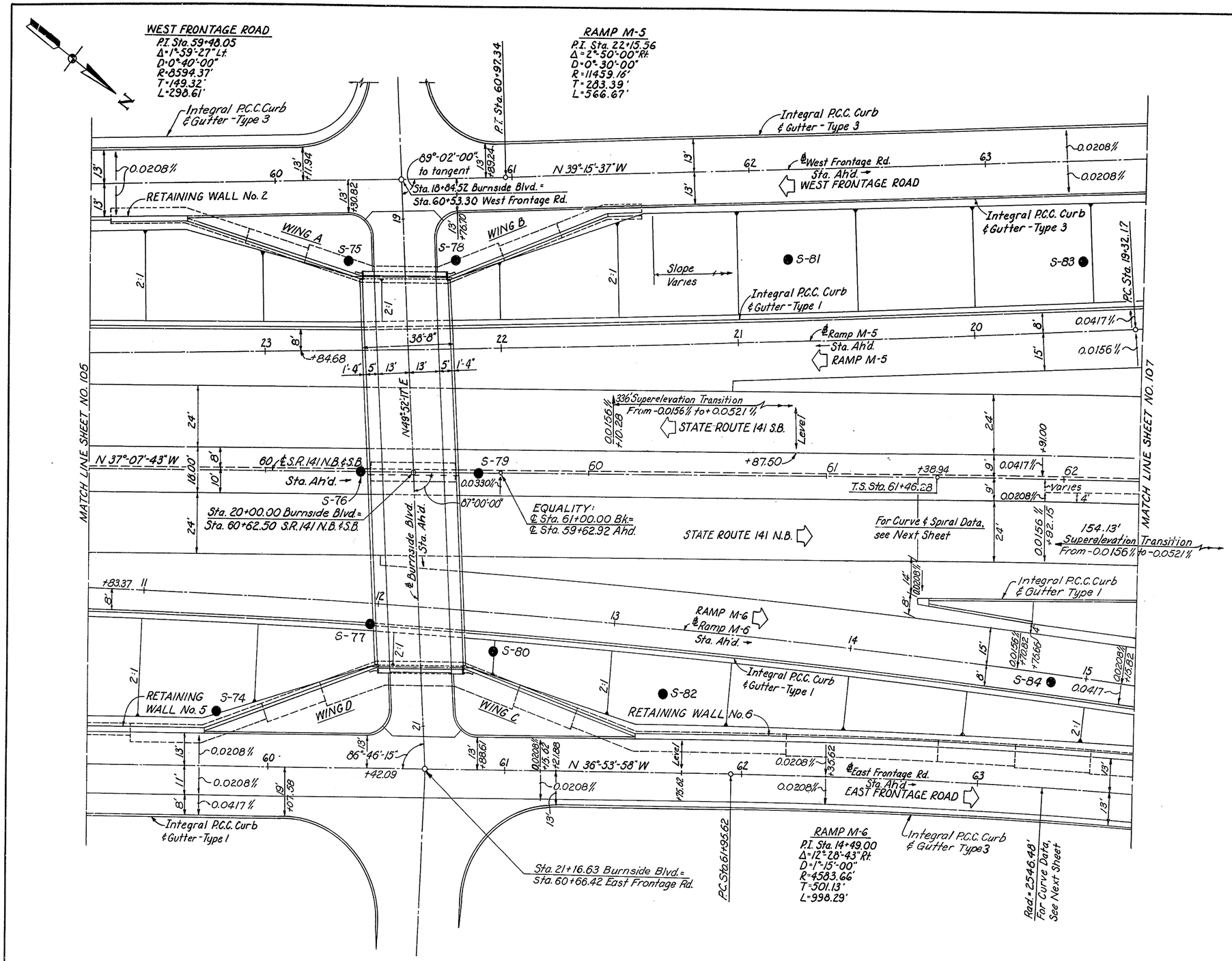

NOTES

1. For limits of cross slopes, see Typical Sections Sheet No. 109 thru Sheet No. 111
2. For details of Retaining Wall No. 2, see Sheet No. 168 thru Sheet No. 174
3. For details of Retaining Wall No. 5, see Sheet No. 180 thru Sheet No. 187
4. For details of Retaining Wall No. 6, see Sheet No. 188 thru Sheet No. 196
5. For details of Burnside Blvd. Bridge, see Sheet No. 141 thru Sheet No. 163
6. For Profile Grade Data, see Sheet No. 112

DELAWARE DEPARTMENT OF HIGHWAYS & TRANSPORTATION
DIVISION OF HIGHWAYS

STATE ROUTE 141 THRU NEWPORT

RETAINING WALLS AND OVERPASSES

GENERAL PLAN

STA. 59+25.00 TO STA. 62+01.00

D. W.B.C.	SCALE	APPROVED BY:
T. R.G.S.	1" = 20'	
C. W.B.C.		BRIDGE ENGINEER

COUNTY	CONTRACT	P.R.A. REG. NO.	STATE	FED AID PROJECT NO.	SHEET NO.	TOTAL SHEETS
NEW CASTLE	71-02-009	2	DEL.		107	301

NO.	REVISIONS	BY	DATE

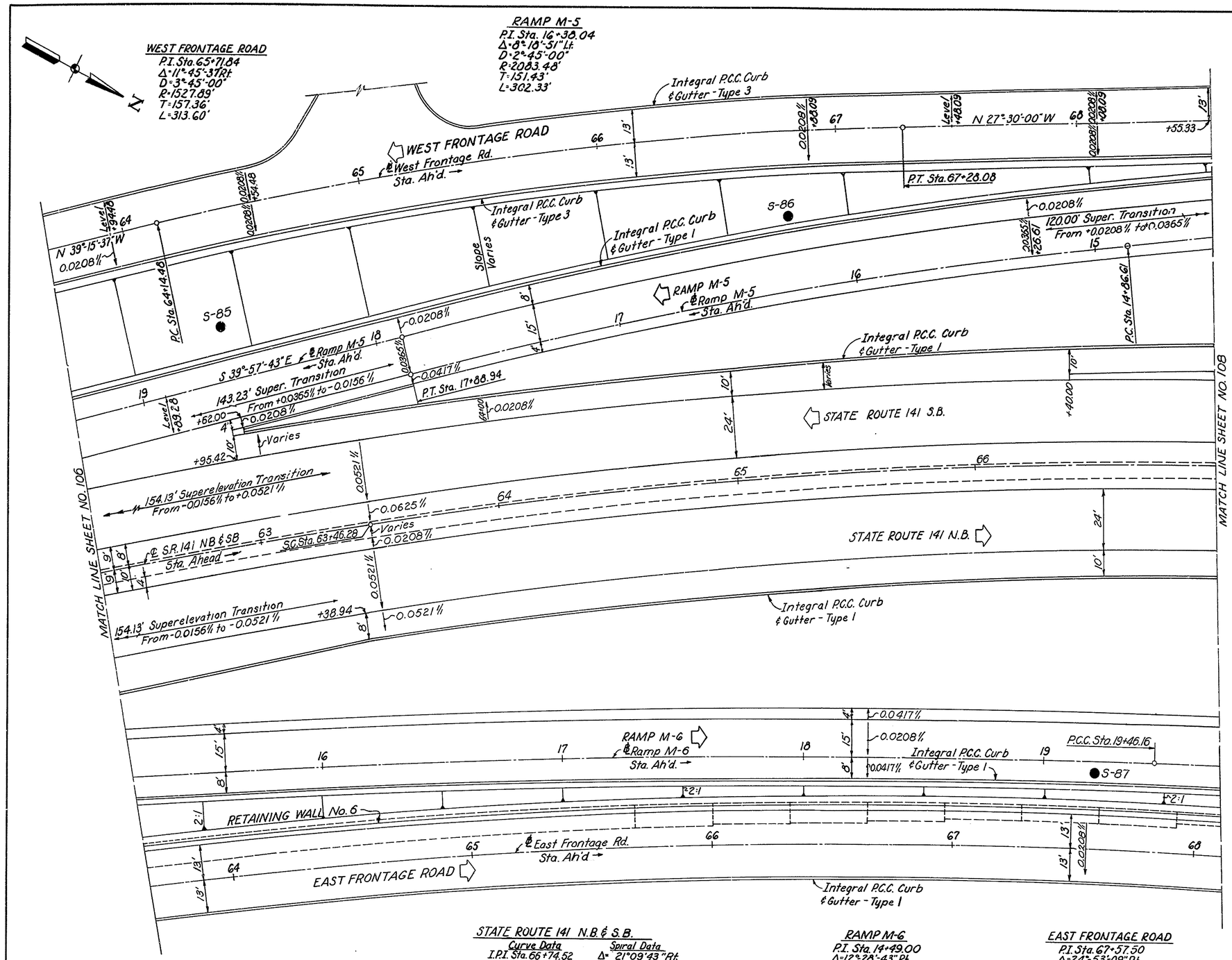

NOTES

1. For limits of cross slopes, see Typical Sections Sheet No. 109 thru Sheet No. 111
2. For details of Retaining Wall No. 6, see Sheet No. 188 thru Sheet No. 196
3. For Profile Grade Data, see Sheet No. 112

STATE ROUTE 141 N.B. & S.B.

Curve Data

I.P.I. Sta. 66+74.52
Δc= 16°09'43"Rt.
Dc= 2°30'00"
Rc= 2291.83'
Tc= 325.40'
Lc= 646.78

Spiral Data

Δ= 21°09'43"Rt.
Ts= 528.25'
Es= 40.38'
Dc= 2°30'00"
θs= 2°30'00"
P= 0.73'
k= 99.99'
Xc= 199.96'
Yc= 2.91'
LT= 133.35'
ST.= 66.68'
LC= 199.98'
Ls= 200.00'

RAMP M-6

P.I. Sta. 14+49.00
Δ=12°-28'-43"Rt.
D=1°-15'-00"
R=4583.66'
T=501.13'
L=998.29'

EAST FRONTAGE ROAD

P.I. Sta. 67+57.50
Δ=24°-53'-09"Rt.
D=2°-15'-00"
R=2546.48'
T=561.88'
L=1106.04'

DELAWARE DEPARTMENT
OF HIGHWAYS & TRANSPORTATION
DIVISION OF HIGHWAYS

STATE ROUTE 141 THRU NEWPORT

RETAINING WALLS AND OVERPASSES
GENERAL PLAN

STA. 62+01.00 TO STA. 66+70.00

	SCALE	APPROVED BY:
D. W.B.C. T. R.G.S. C. W.B.C.	1" = 20'	BRIDGE ENGINEER

COUNTY	CONTRACT	P. R. A. REG. NO.	STATE	FED. AID PROJECT NO.	SHEET NO.	TOTAL SHEETS
NEW CASTLE	71-02-009	2	DEL.		108	301

NO.	REVISIONS	BY	DATE

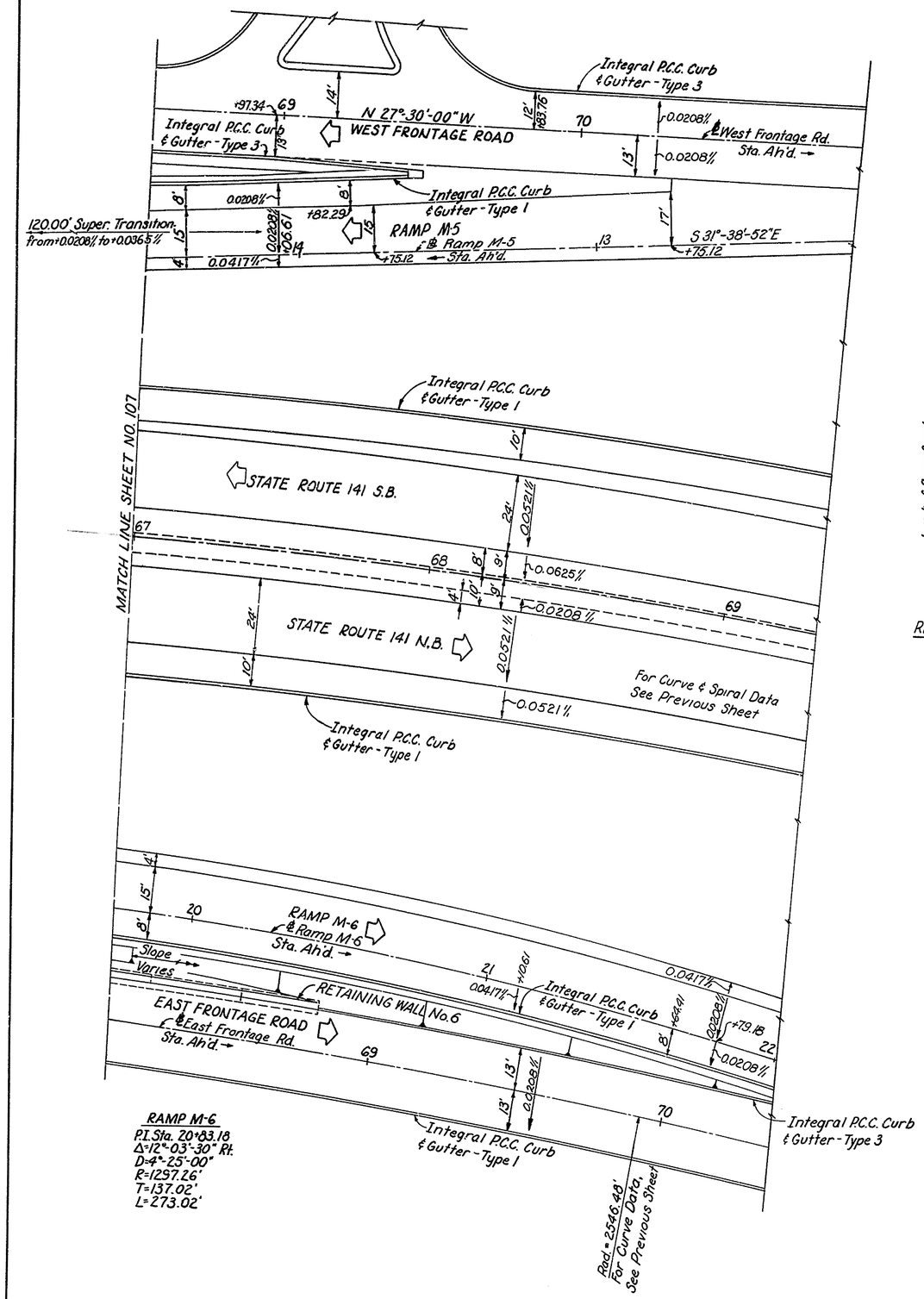

RAMP M-6
P.I. Sta. 70+83.18
Δ=12°-03'-30" Rt.
D=4°-25'-00"
R=1297.26'
T=137.02'
L=273.02'

See Sections Below

① ½ Cubic Yard Coarse Aggregate at each Weep Hole. See Standard Specifications Section 602.32. (Payment included in Item 602.)

② Clay Base (Payment included in Item 602.)

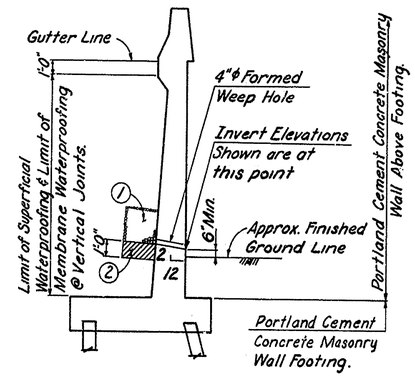

RETAINING WALL SECTION (SHOWN)
WING SECTION SIMILAR
No Scale

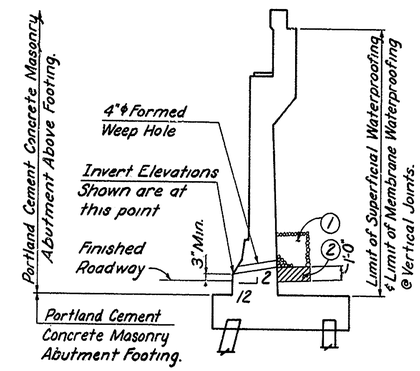

ABUTMENT SECTION (HIGHLAND AVE. SHOWN)
BURNSIDE BLVD. SIMILAR
No Scale

WEEP HOLE DRAINAGE SYSTEM

DRAINAGE NOTES

1. For location and invert elevations of the Weep Hole Drainage System see Abutment, Wing Wall and Retaining Wall Elevation sheets.
2. Weep Holes shall be constructed in the manner and at the locations indicated on the plans. There will be no additional payment made for this work. See Standard Specifications and Special Provisions.

NOTES

1. For limits of cross slopes, see Typical Sections Sheet No. 109 thru Sheet No. 111
2. For details of Retaining Wall No. 6, see Sheet No. 188 thru Sheet No. 196
3. For Profile Grade Data, see Sheet No. 112

DELAWARE DEPARTMENT OF HIGHWAYS & TRANSPORTATION
DIVISION OF HIGHWAYS

STATE ROUTE 141 THRU NEWPORT

RETAINING WALLS AND OVERPASSES

GENERAL PLAN & DRAINAGE DETAILS
STA. 66+70.00 TO STA. 69+02.00

D.W.B.C.	SCALE	APPROVED BY:
T.R.G.S.	1" = 20'	
C.W.B.C.		BRIDGE ENGINEER

COUNTY	CONTRACT	P.E. & REG. NO.	STATE	FED. AID PROJECT NO.	SHEET NO.	TOTAL SHEETS
NEW CASTLE	71-02-009	2	DEL.		109	301

NO.	REVISIONS	BY	DATE

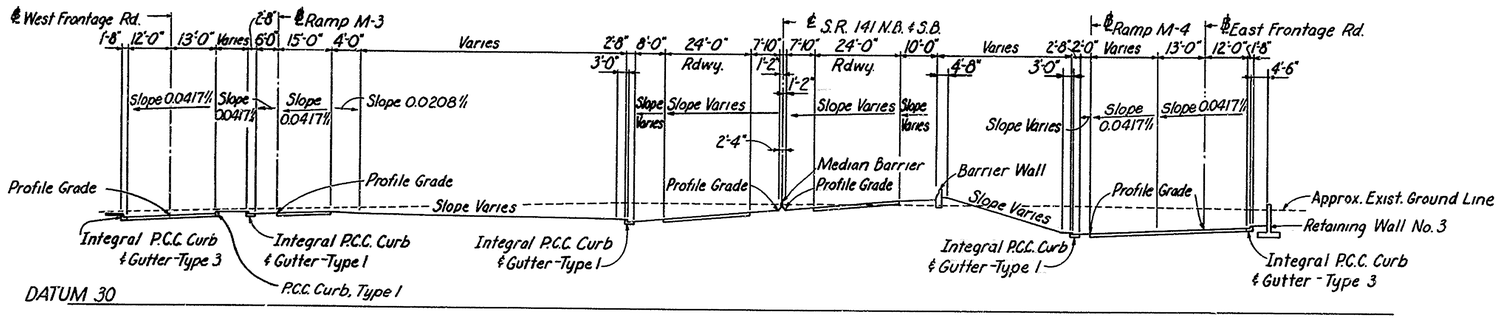

SECTION RADIAL THRU STA. 41+00.00
ON STATE ROUTE 141 N.B. & S.B.

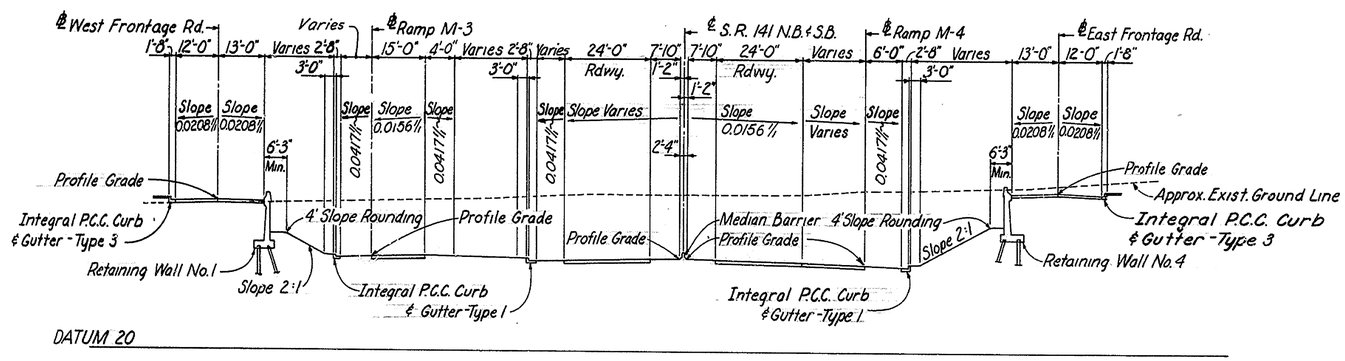

SECTION RADIAL THRU STA. 45+00.00
ON STATE ROUTE 141 N.B. & S.B.

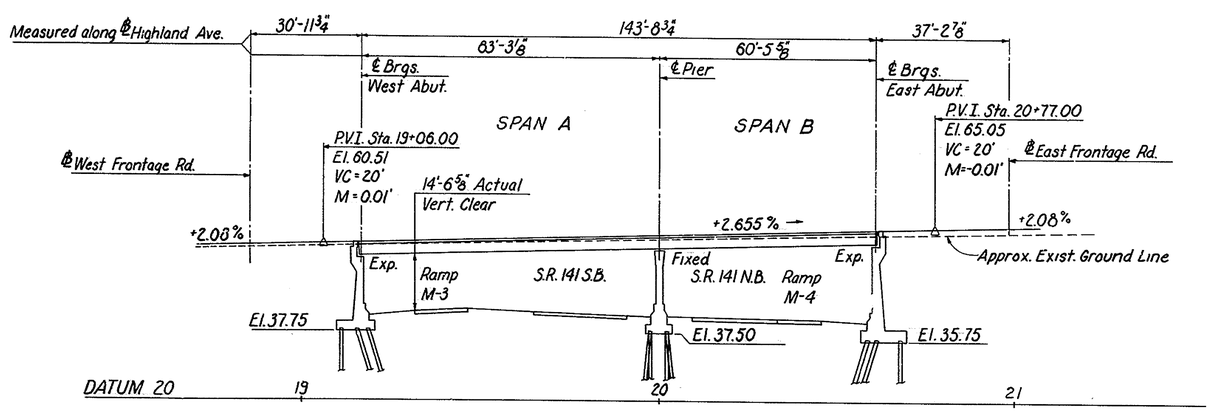

LONGITUDINAL SECTION ALONG ℄ HIGHLAND AVENUE
STA. 46+63.00 S.R. 141 N.B. & S.B.

DELAWARE
DEPARTMENT OF HIGHWAYS & TRANSPORTATION
DIVISION OF HIGHWAYS

STATE ROUTE 141 THRU NEWPORT
RETAINING WALLS AND OVERPASSES

TYPICAL SECTIONS

D.W.B.C. T.R.G.S. C.W.B.C.	SCALE 1" = 20'	APPROVED BY: BRIDGE ENGINEER

COUNTY	CONTRACT	P. R. A. REG. NO.	STATE	FED. AID PROJECT NO.	SHEET NO.	TOTAL SHEETS
NEW CASTLE	71-02-009	2	DEL.		110	301

NO.	REVISIONS	BY	DATE

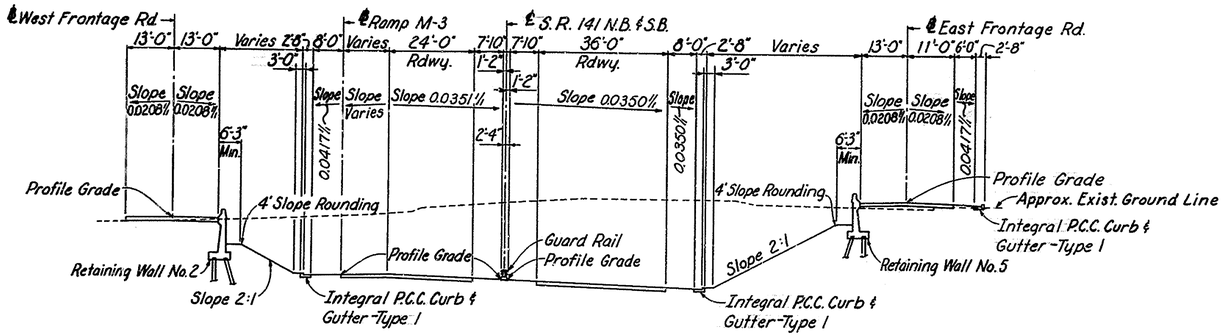

DATUM 20

SECTION RADIAL THRU STA. 50+00.00
ON STATE ROUTE 141 N.B. & S.B.

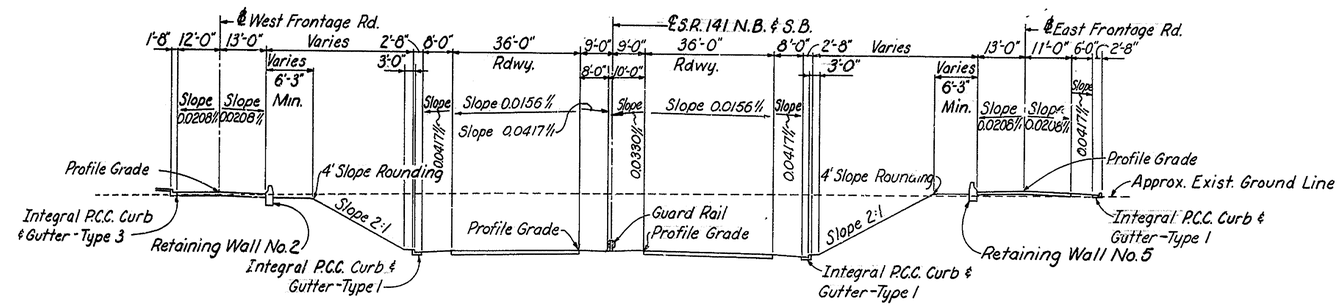

DATUM 30

SECTION RADIAL THRU STA. 56+00.00
ON STATE ROUTE 141 N.B. & S.B.

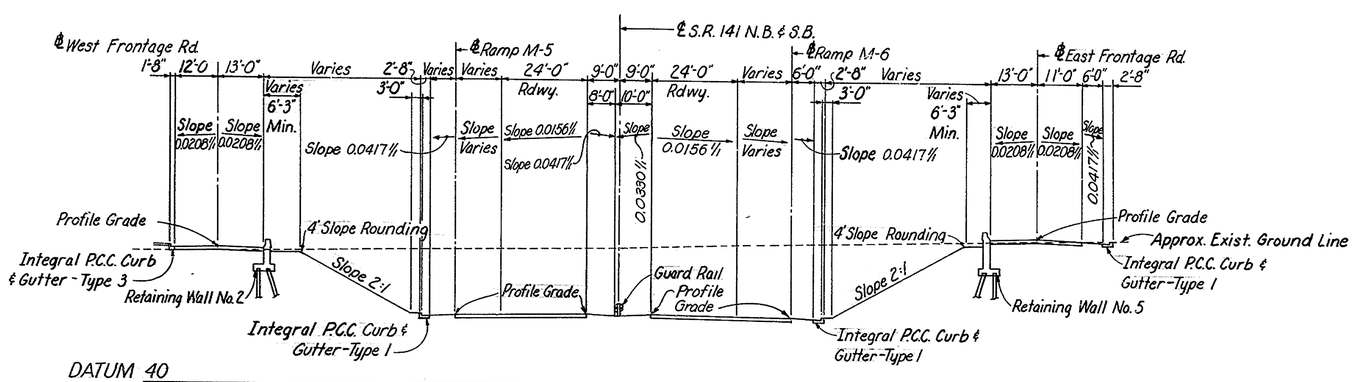

DATUM 40

SECTION RADIAL THRU STA. 59+50.00
ON STATE ROUTE 141 N.B. & S.B.

DELAWARE
DEPARTMENT OF HIGHWAYS & TRANSPORTATION
DIVISION OF HIGHWAYS

STATE ROUTE 141 THRU NEWPORT

RETAINING WALLS AND OVERPASSES

TYPICAL SECTIONS

	SCALE	APPROVED BY:
D. W.B.C. T. R.G.S. C. W.B.C.	1" = 20'	BRIDGE ENGINEER

19 1253

COUNTY	CONTRACT	P.R.A. REG. NO.	STATE	FED. AID PROJECT NO.	SHEET NO.	TOTAL SHEETS
NEW CASTLE	71-02-009	2	DEL.		111	301

NO.	REVISIONS	BY	DATE

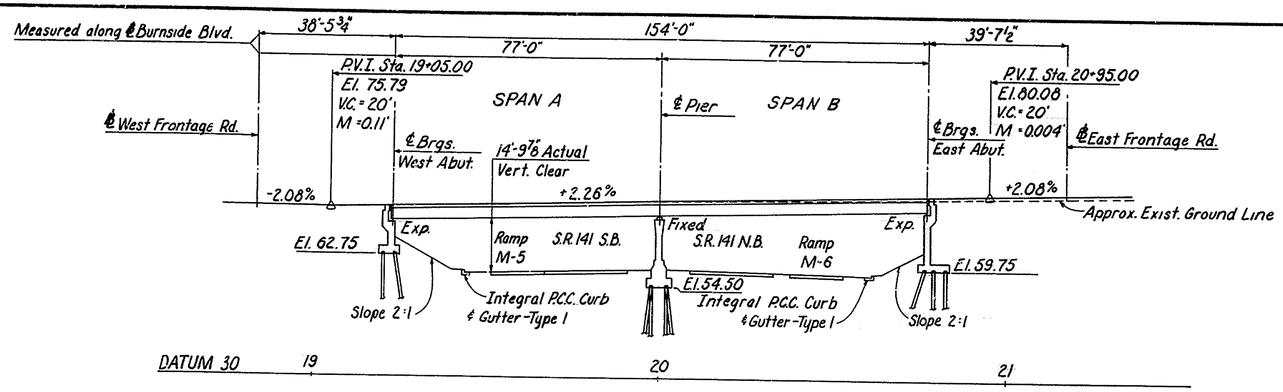

LONGITUDINAL SECTION ALONG ℄ BURNSIDE BOULEVARD
STA. 60+62.50 S.R. 141 N.B. & S.B.

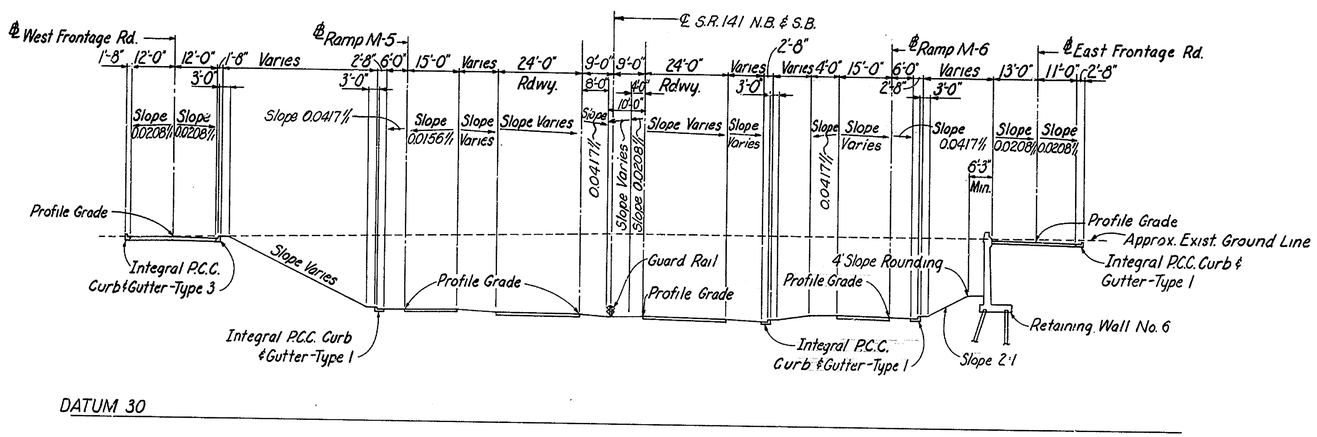

SECTION RADIAL THRU STA. 62+00.00
ON STATE ROUTE 141 N.B. & S.B.

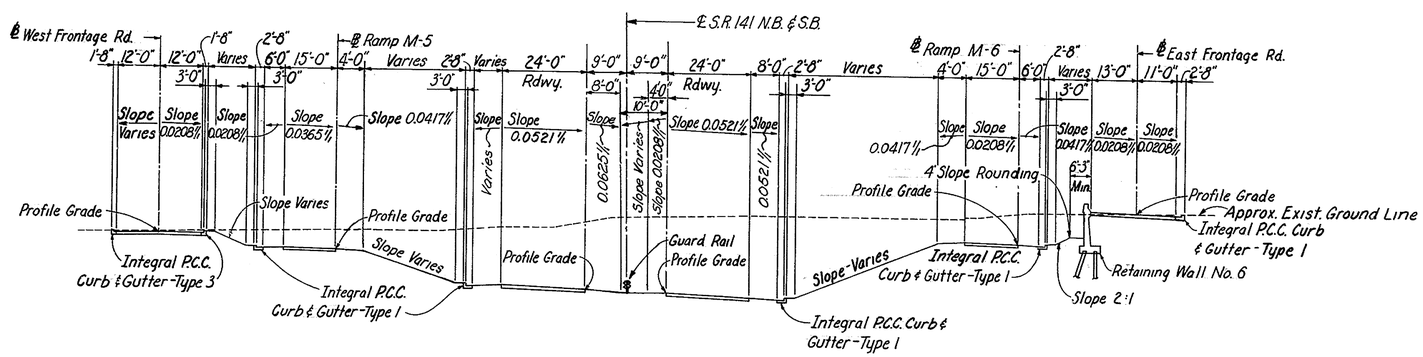

SECTION RADIAL THRU STA. 66+00.00
ON STATE ROUTE 141 S.B. N.B. & S.B.

DELAWARE
DEPARTMENT OF HIGHWAYS & TRANSPORTATION
DIVISION OF HIGHWAYS

STATE ROUTE 141 THRU NEWPORT

RETAINING WALLS AND OVERPASSES

TYPICAL SECTIONS

D.W.B.C.	SCALE	APPROVED BY:
T.R.G.S.	1" = 20'	
C.W.B.C.		BRIDGE ENGINEER

COUNTY	CONTRACT	F.H.A. REP. NO.	STATE	FED AID PROJECT NO.	SHEET NO.	TOTAL SHEETS
NEW CASTLE	71-02-009	2	DEL.		112	301

NO.	REVISIONS	BY	DATE

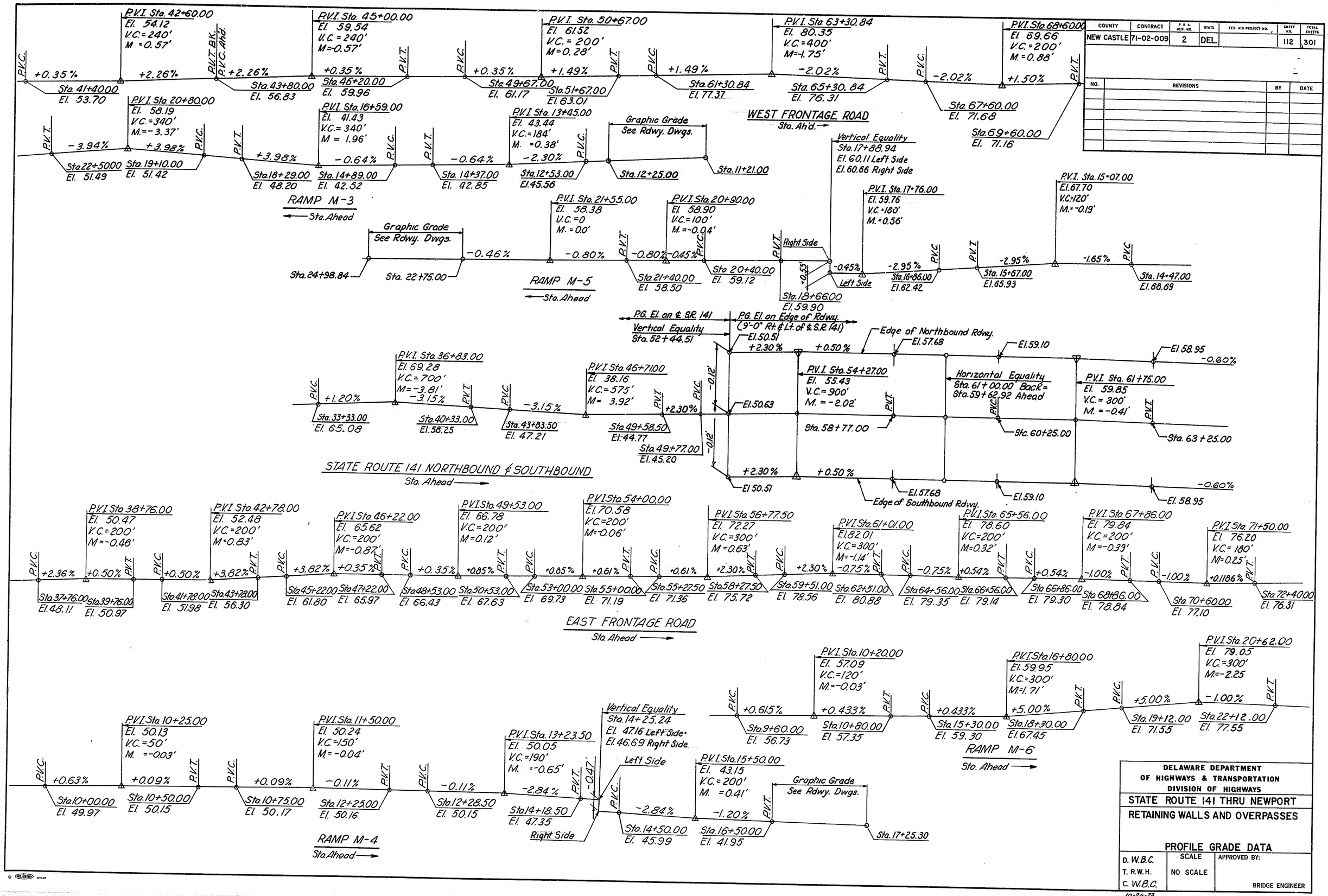

DELAWARE DEPARTMENT OF HIGHWAYS & TRANSPORTATION
DIVISION OF HIGHWAYS

STATE ROUTE 141 THRU NEWPORT

RETAINING WALLS AND OVERPASSES

PROFILE GRADE DATA

D. W.B.C.	SCALE	APPROVED BY:
T. R.W.H.	NO SCALE	
C. W.B.C.		BRIDGE ENGINEER

10-26-73

COUNTY	CONTRACT	F. B. A. RES. NO.	STATE	FED. AID PROJECT NO.	SHEET NO.	TOTAL SHEETS
NEW CASTLE	71-02-009	2	DEL.		113	301

NO.	REVISIONS	BY	DATE

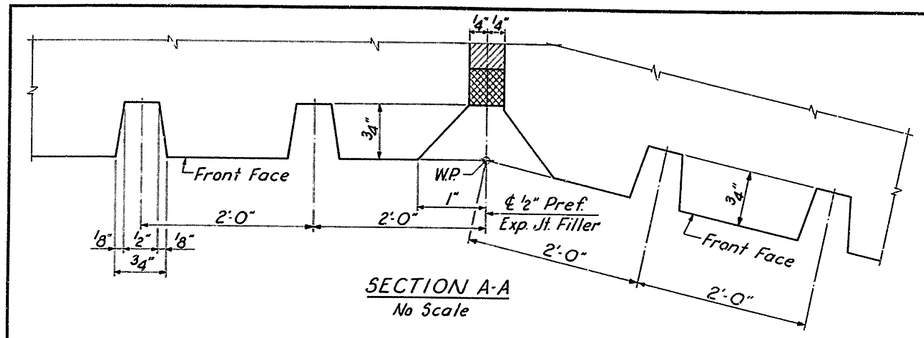

SECTION A-A
No Scale

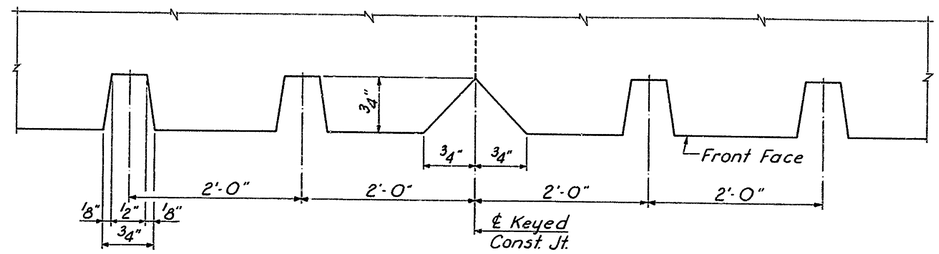

SECTION B-B
No Scale

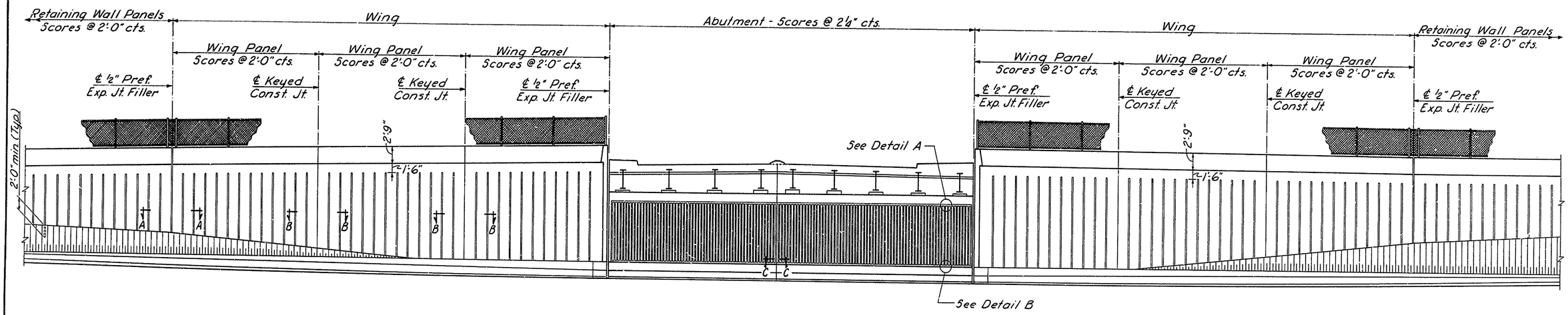

ELEVATION-ABUTMENT
Scale: 1/8" = 1'-0"

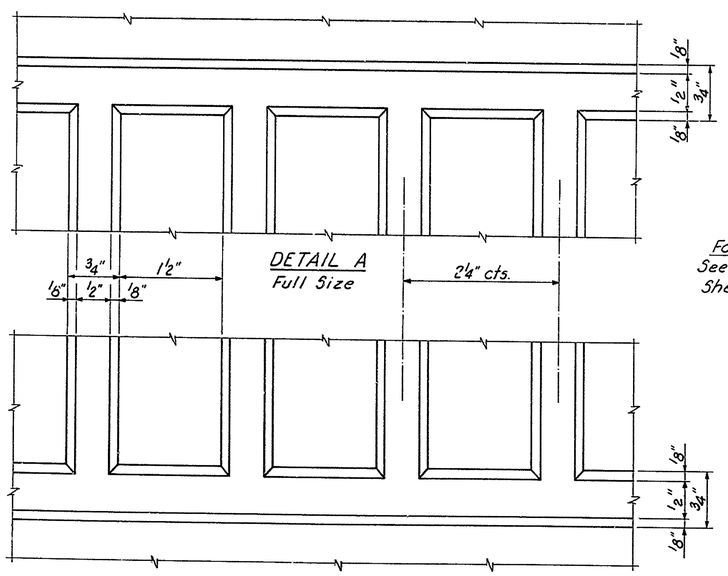

DETAIL A
Full Size

DETAIL B
Full Size

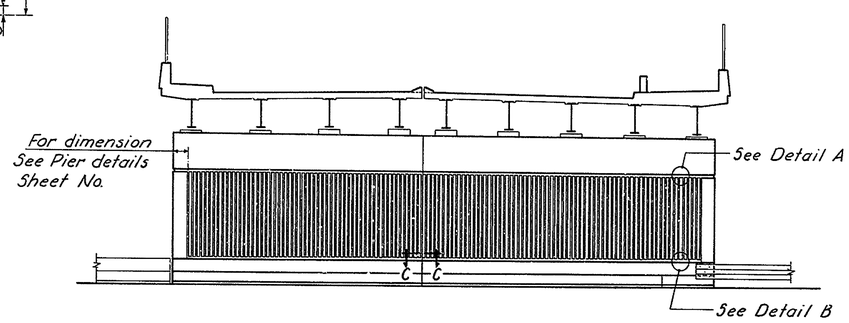

ELEVATION-PIER
Scale: 1/8" = 1'-0"

Note:
Elevation Views shown are at Highland Ave. Bridge looking West. Details at Burnside Blvd. Bridge are similar.

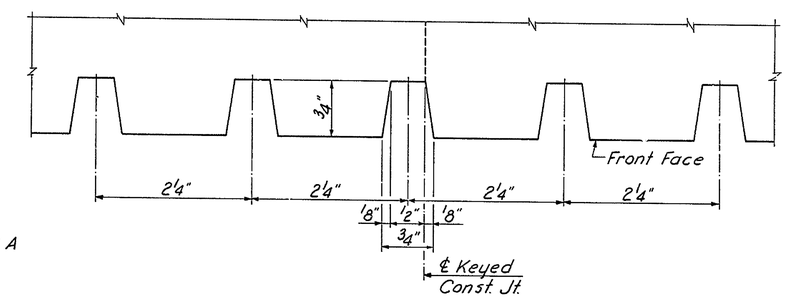

SECTION C-C
Full Size

DELAWARE
DEPARTMENT OF HIGHWAYS & TRANSPORTATION
DIVISION OF HIGHWAYS

STATE ROUTE 141 THRU NEWPORT

RETAINING WALLS AND OVERPASSES

ARCHITECTURAL DETAILS

D. R.S.W.	SCALE	APPROVED BY:
T. R.S.W.	AS NOTED	
C. S.M.S.		BRIDGE ENGINEER

3 KEUFFEL & ESSER CO. 19 1253

COUNTY	CONTRACT	P.R.A. RES. NO.	STATE	FED. AID PROJECT NO.	SHEET NO.	TOTAL SHEETS
NEW CASTLE	71-02-009	2	DEL.		114	301

NO.	REVISIONS	BY	DATE

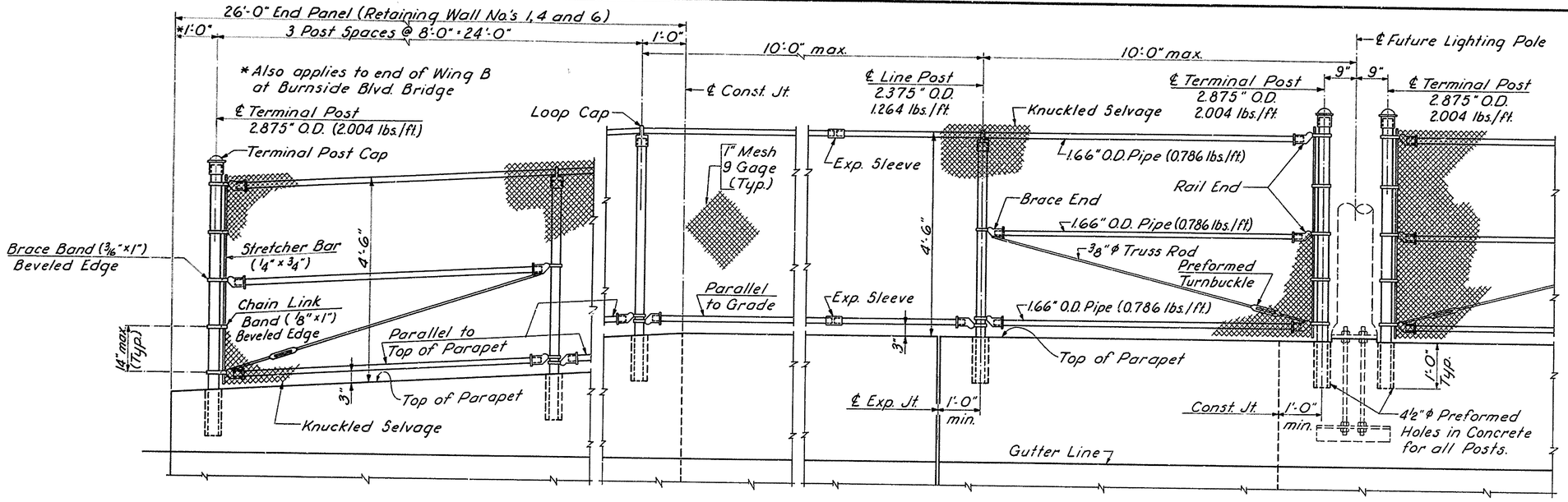

INSIDE ELEVATION

NOTES

1. Materials and workmanship shall be in accordance with the Standard Specifications and Special Provisions.
2. All materials shall be Aluminum-Alloy except as noted in the Special Provisions.
3. The Fabric shall be either Aluminum or Gray Vinyl Coated Steel, 1" Mesh, 9 Gage. See Special Provisions.
4. Posts shall be truly vertical and rails shall be parallel to Top of Parapet.
5. If Lighting Poles are not installed, gaps shall be closed with a separate piece of fabric.
6. At Expansion Joints, the fabric and rails shall be free to expand or contract. Expansion Sleeve to be placed at each Expansion Joint and as required.

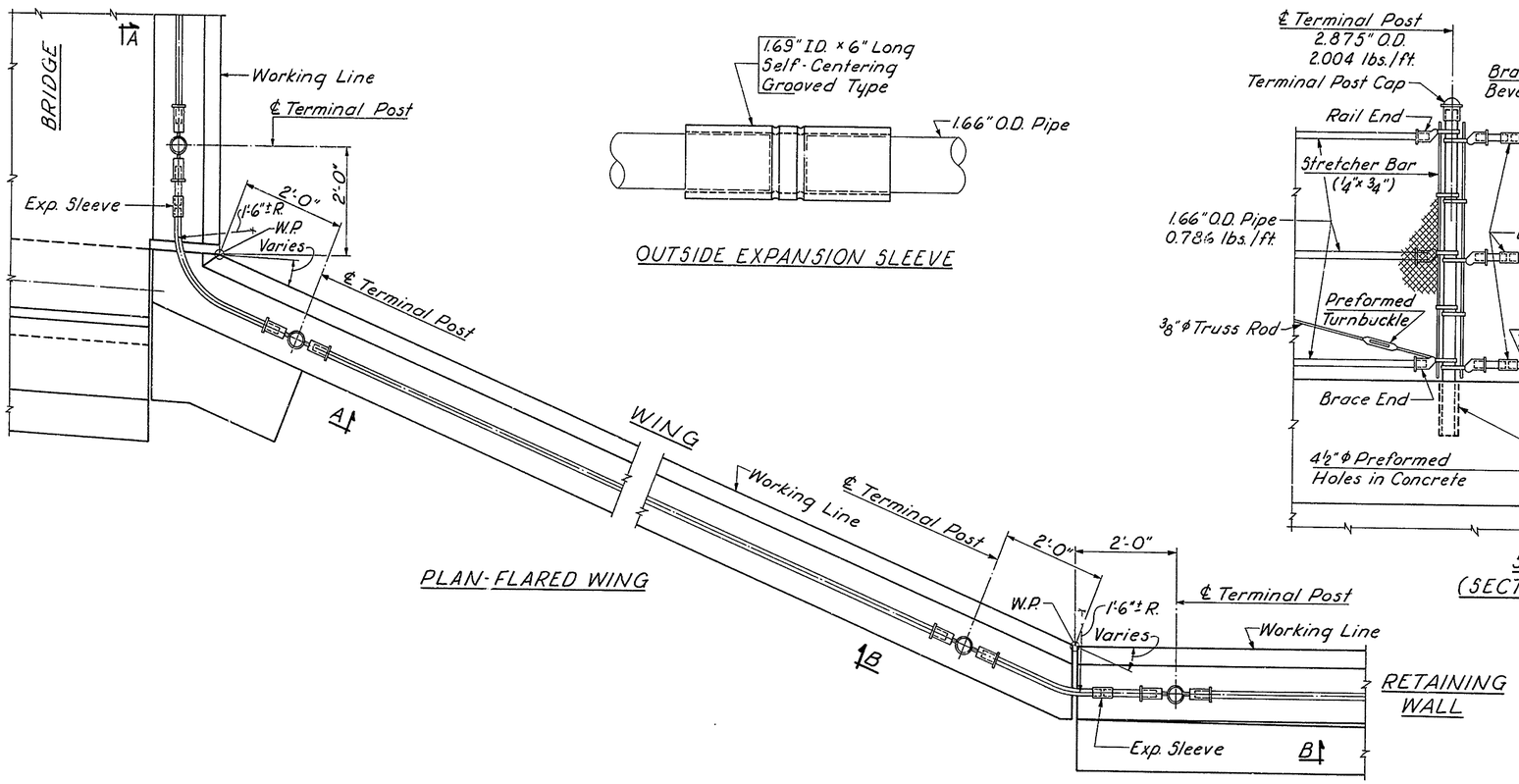

PLAN-FLARED WING

OUTSIDE EXPANSION SLEEVE

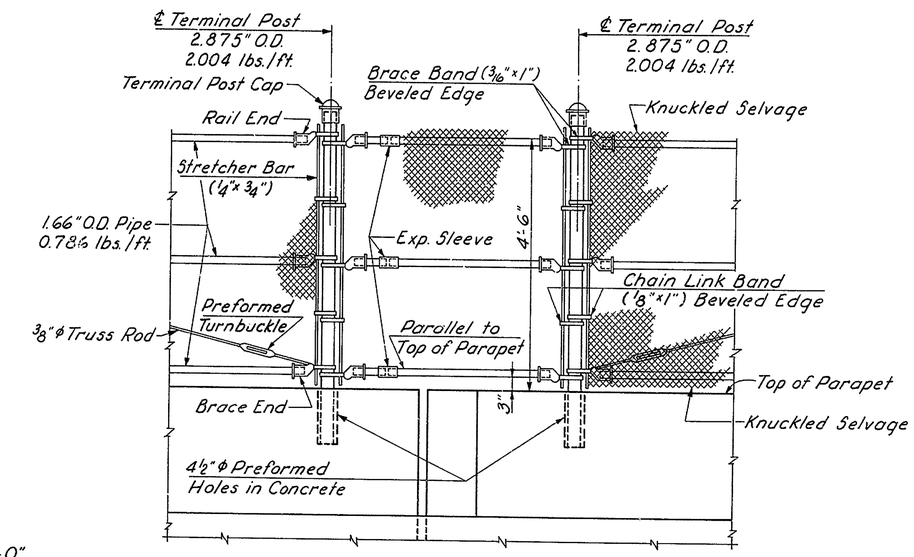

SECTION A-A
(SECTION B-B SIMILAR)

DELAWARE
DEPARTMENT OF HIGHWAYS & TRANSPORTATION
DIVISION OF HIGHWAYS

STATE ROUTE 141 THRU NEWPORT

RETAINING WALLS AND OVERPASSES

PARAPET PROTECTIVE FENCE DETAILS

D. R.S.W.	SCALE	APPROVED BY:
T. R.S.W.	3/4" = 1'-0"	
C. S.M.S.		BRIDGE ENGINEER

COUNTY	CONTRACT	P.R.A. REG. NO.	STATE	FED. AID PROJECT NO.	SHEET NO.	TOTAL SHEETS
NEW CASTLE	71-02-009	2	DEL.		115	301

NO.	REVISIONS	BY	DATE
1	Delete Sign Panels and Supports	R.R.	9-10-74

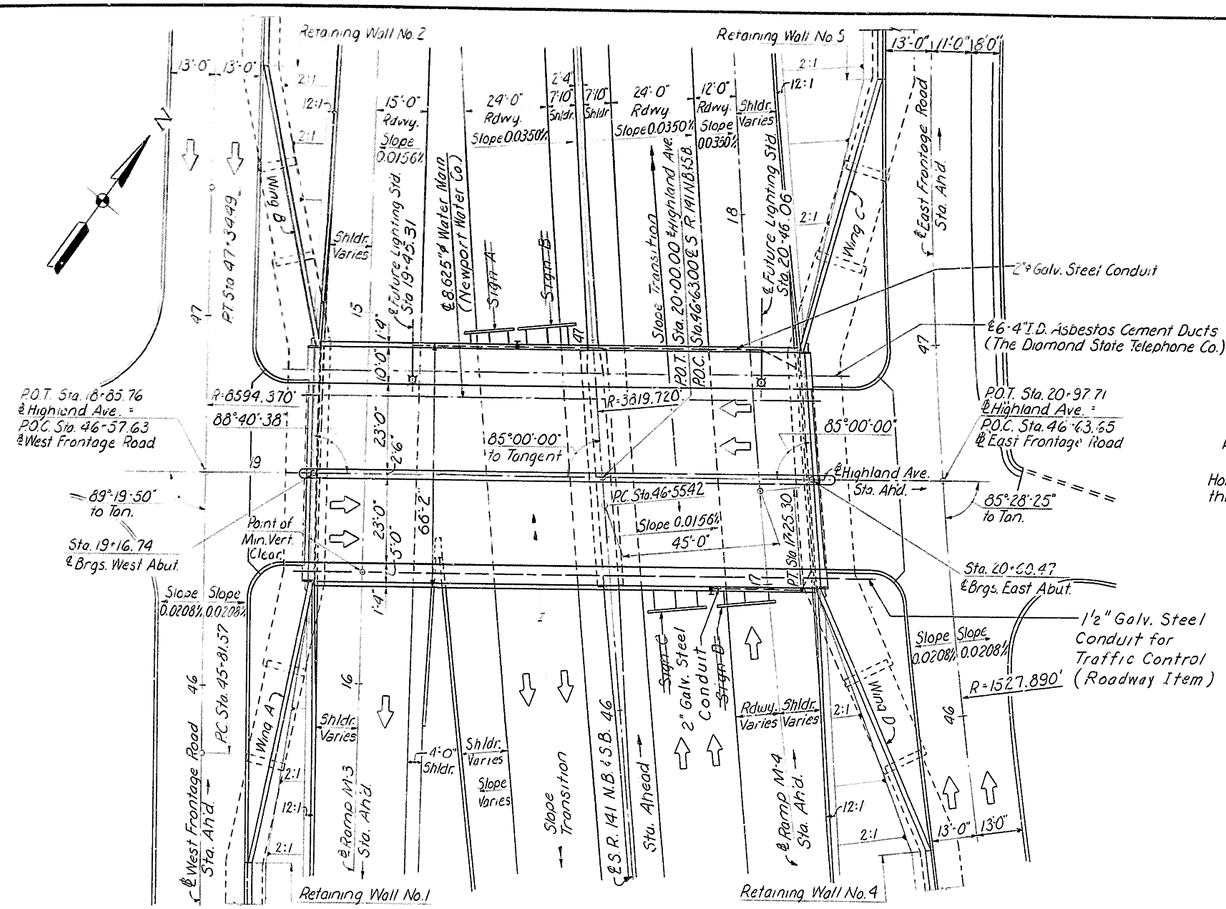

PLAN
Scale: 1"=20'

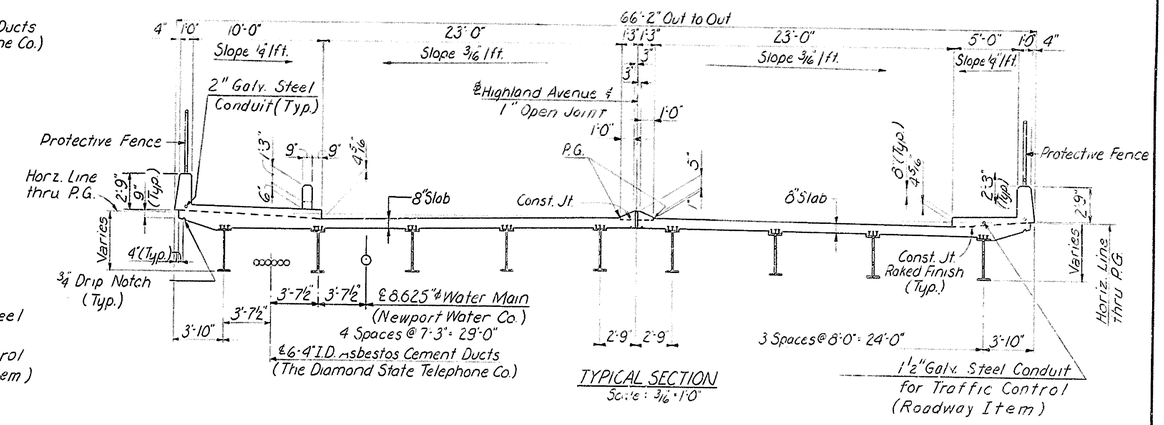

TYPICAL SECTION
Scale: 3/16"=1'-0"

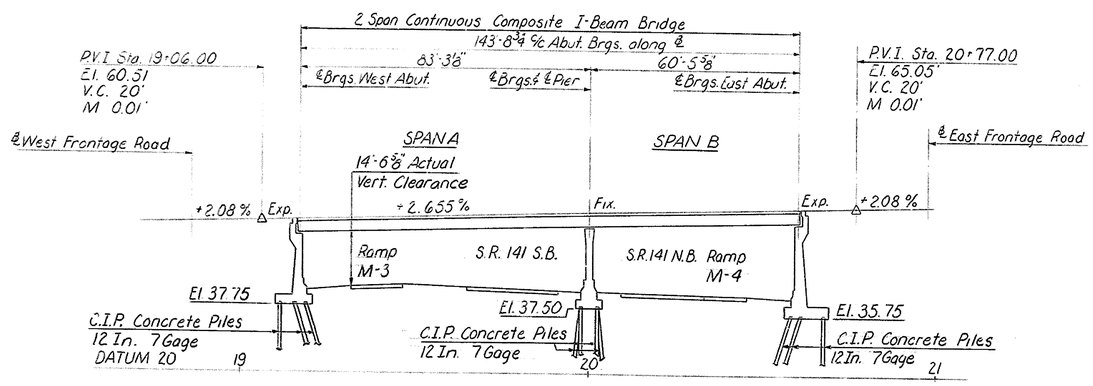

LONGITUDINAL SECTION ALONG ℄ HIGHLAND AVENUE
Scale: 1"=20'

DELAWARE DEPARTMENT OF HIGHWAYS & TRANSPORTATION
DIVISION OF HIGHWAYS

STATE ROUTE 141 THRU NEWPORT
HIGHLAND AVENUE BRIDGE

GENERAL PLAN AND LONGITUDINAL SECTION

D. L.W.H.	SCALE	APPROVED BY:
T. R.G.S.	AS NOTED	
C. S.M.S.		BRIDGE ENGINEER

COUNTY	CONTRACT	P.R.A. REG. NO.	STATE	FED. AID PROJECT NO.	SHEET NO.	TOTAL SHEETS
NEW CASTLE	71-02-009	2	DEL.		116	301

NO.	REVISIONS	BY	DATE

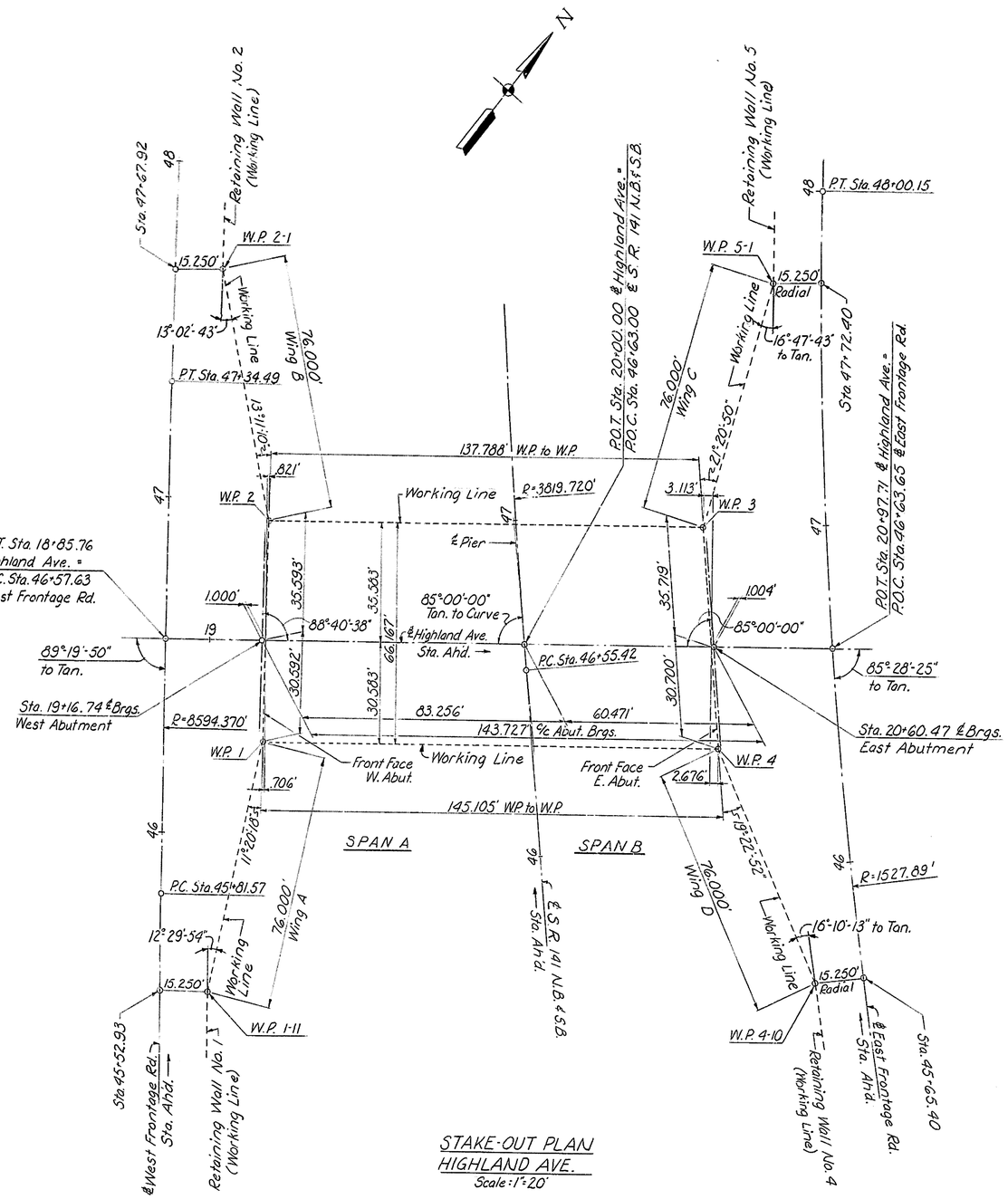

STAKE-OUT PLAN
HIGHLAND AVE.
Scale: 1"=20'

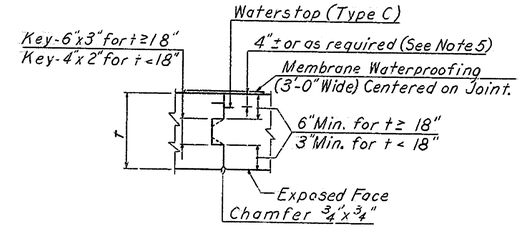

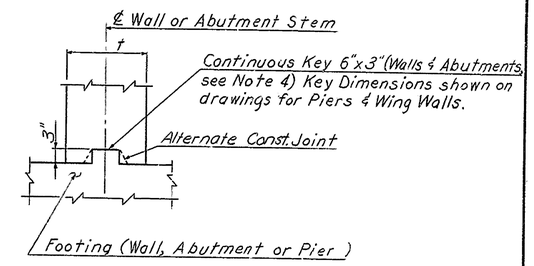

CONSTRUCTION JOINTS
No Scale

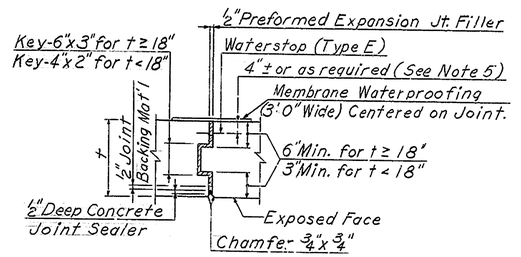

EXPANSION JOINT
(Flush Expansion Joint Similar Except Omit Key)
No Scale

NOTES

1. Key dimensions are nominal and may vary ± ½".
2. The Key in "Keyed Joints" shall be stopped one foot from the top of wall or abutment bridge seat.
3. Waterstops shall be stopped one foot from top of wall.
4. 6" Minimum, t/3 maximum.
5. Waterstop to be placed inside of reinforcement bars.
6. 3" Sides of Key may be sloped ¼"± to facilitate removal of forms.

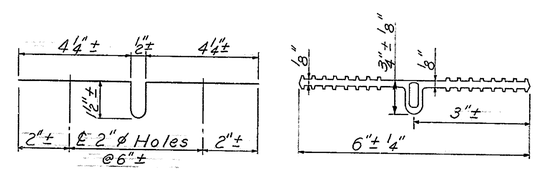

METAL
Copper Sheet: 16 oz./sq.ft.
TYPE E-1

POLYVINYL CHLORIDE
TYPE E-2

WATERSTOPS FOR EXPANSION JOINTS
No Scale

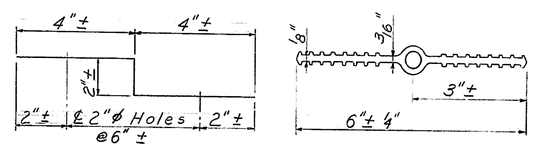

METAL
Copper Sheet: 16 oz./sq.ft.
TYPE C-1

POLYVINYL CHLORIDE
TYPE C-2

WATERSTOPS FOR CONSTRUCTION JOINTS
No Scale

NOTES

1. Material and Workmanship shall be in accordance with this drawing, the Standard Specifications, and the Special Provisions.
2. Provide holes or slots in waterstop, as required, when necessary to accomodate reinforcement bars.
3. When installing plastic Waterstop, a split form technique shall be used. Bending of the Waterstops along the face of the form shall not be permitted.

DELAWARE DEPARTMENT
OF HIGHWAYS & TRANSPORTATION
DIVISION OF HIGHWAYS

STATE ROUTE 141 THRU NEWPORT
HIGHLAND AVENUE BRIDGE

STAKE-OUT PLAN

D. L.W.H.	SCALE	APPROVED BY:
T. R.G.S. & C.V.L.	AS NOTED	
C. S.M.S.		BRIDGE ENGINEER

COUNTY	CONTRACT	P.R.A. REG. NO.	STATE	FED. AID PROJECT NO.	SHEET NO.	TOTAL SHEETS
NEW CASTLE	71-02-009	2	DEL.		117	301

NO.	REVISIONS	BY	DATE

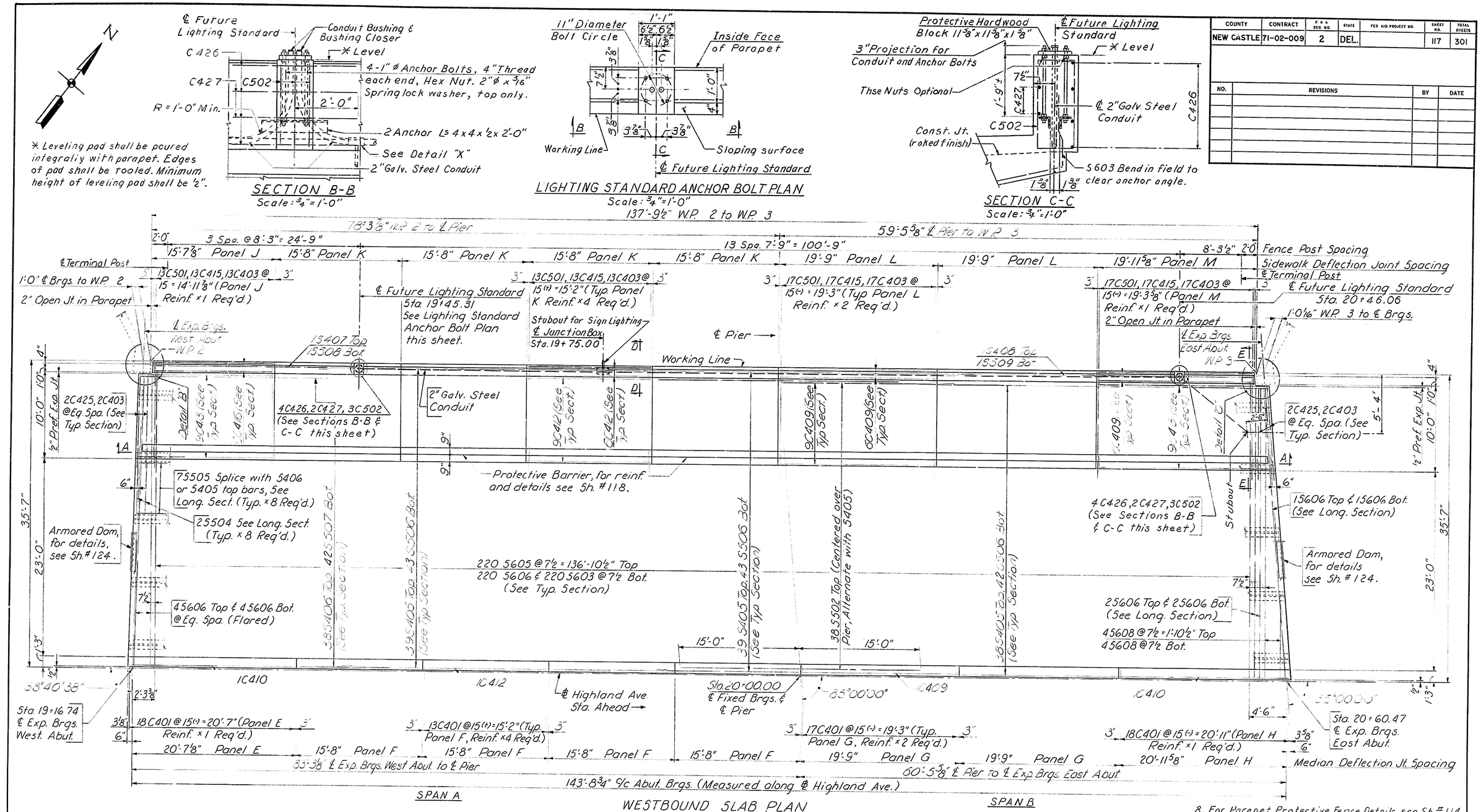

8. For Parapet Protective Fence Details, see Sh. #114.

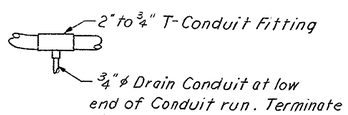

DETAIL "X"

Notes:

1. For General Notes, see Sheet #100.
2. For Eastbound Slab Plan, Deflection Joint Details, and Median Details, see Sheet #119.
3. For Typical Slab Cross Section and Bar Schedule, see Sheet #120.
4. For Protective Barrier Detail, Detail B, Detail C and Longitudinal Section, see Sheet #118.
5. For Table of Grade Elevations and Dead Load Deflections, see Sheet #123.
6. See the Roadway Lighting Plans for location of conduit and electrical details not shown.
7. For Sections D-D & E-E, see Sheet #119.

DELAWARE DEPARTMENT OF HIGHWAYS & TRANSPORTATION
DIVISION OF HIGHWAYS

STATE ROUTE 141 THRU NEWPORT

HIGHLAND AVENUE BRIDGE

WESTBOUND SLAB PLAN

D. R.S.M.	SCALE	APPROVED BY:
T. V.B.B.	AS NOTED	
C. W.B.C.		BRIDGE ENGINEER

COUNTY	CONTRACT	P.R. & REG. NO.	STATE	FED. AID PROJECT NO.	SHEET NO.	TOTAL SHEETS
NEW CASTLE	71-02-009	2	DEL.		118	301

NO.	REVISIONS	BY	DATE

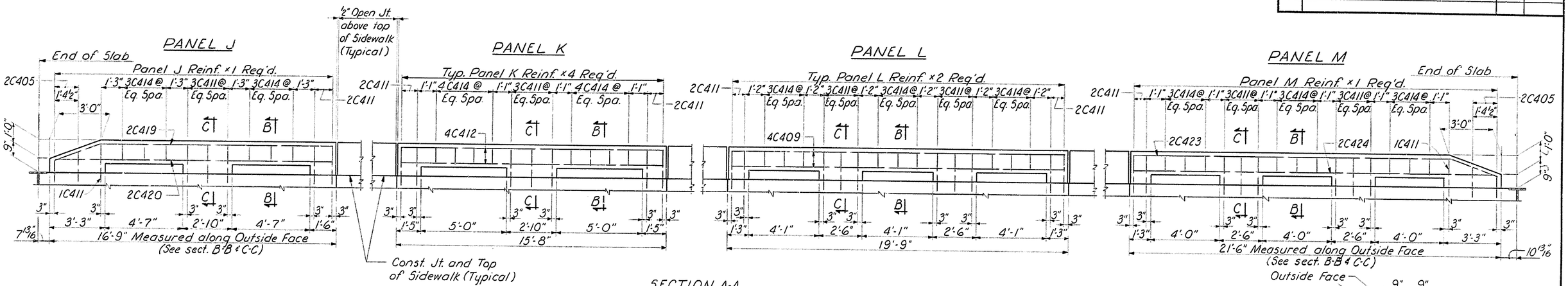

SECTION A-A
PROTECTIVE BARRIER DETAIL
Scale: 3/8" = 1'-0"

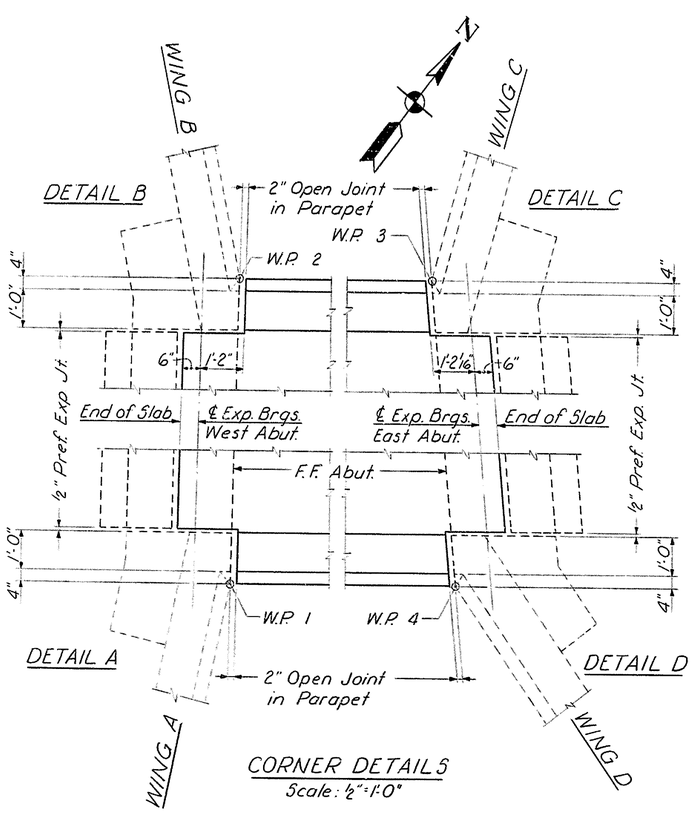

CORNER DETAILS
Scale: ½" = 1'-0"

Note:
Armored Dam not shown.

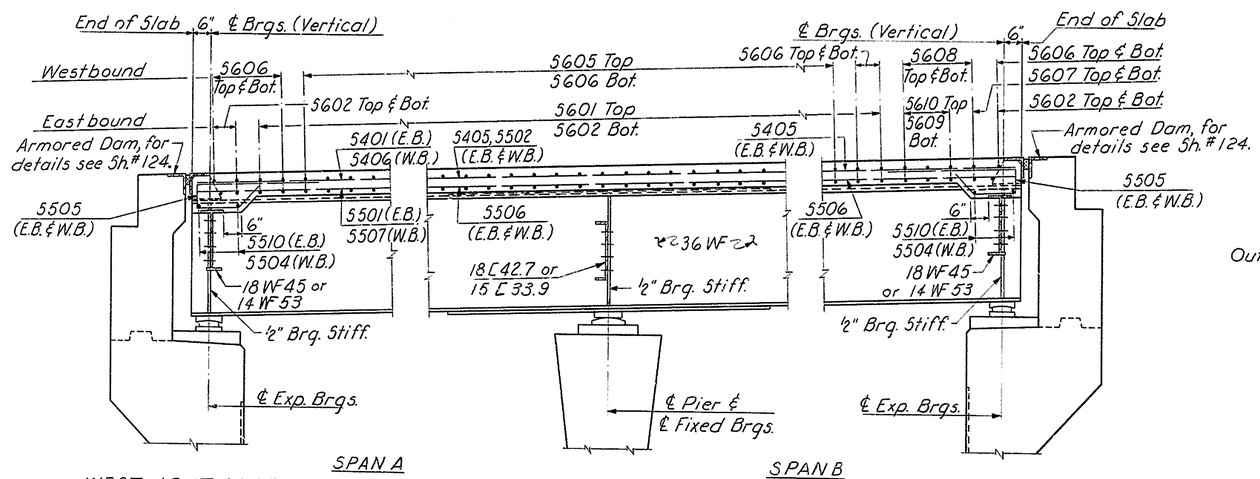

LONGITUDINAL SECTION
Scale: ½" = 1'-0"

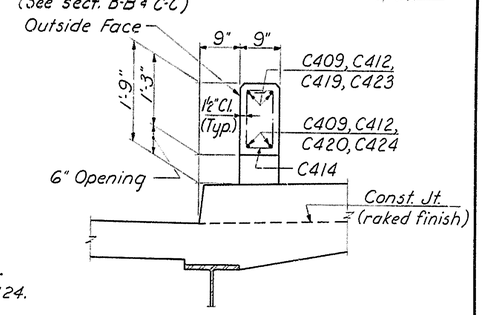

SECTION B-B
Scale: 3/4" = 1'-0"

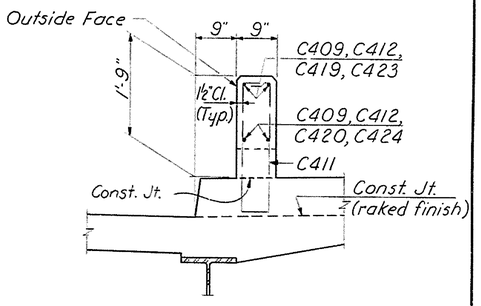

SECTION C-C
Scale: 3/4" = 1'-0"

DELAWARE
DEPARTMENT OF HIGHWAYS & TRANSPORTATION
DIVISION OF HIGHWAYS

STATE ROUTE 141 THRU NEWPORT

HIGHLAND AVENUE BRIDGE

PROTECTIVE BARRIER DETAILS & LONGITUDINAL SECTION

D. R.S.M.	SCALE	APPROVED BY:
T. V.B.B.	AS NOTED	
C. S.M.S.		BRIDGE ENGINEER

COUNTY	CONTRACT	P.S.A. REG. NO.	STATE	FED. AID PROJECT NO.	SHEET NO.	TOTAL SHEETS
NEW CASTLE	71-02-009	2	DEL.		119	301

NO.	REVISIONS	BY	DATE

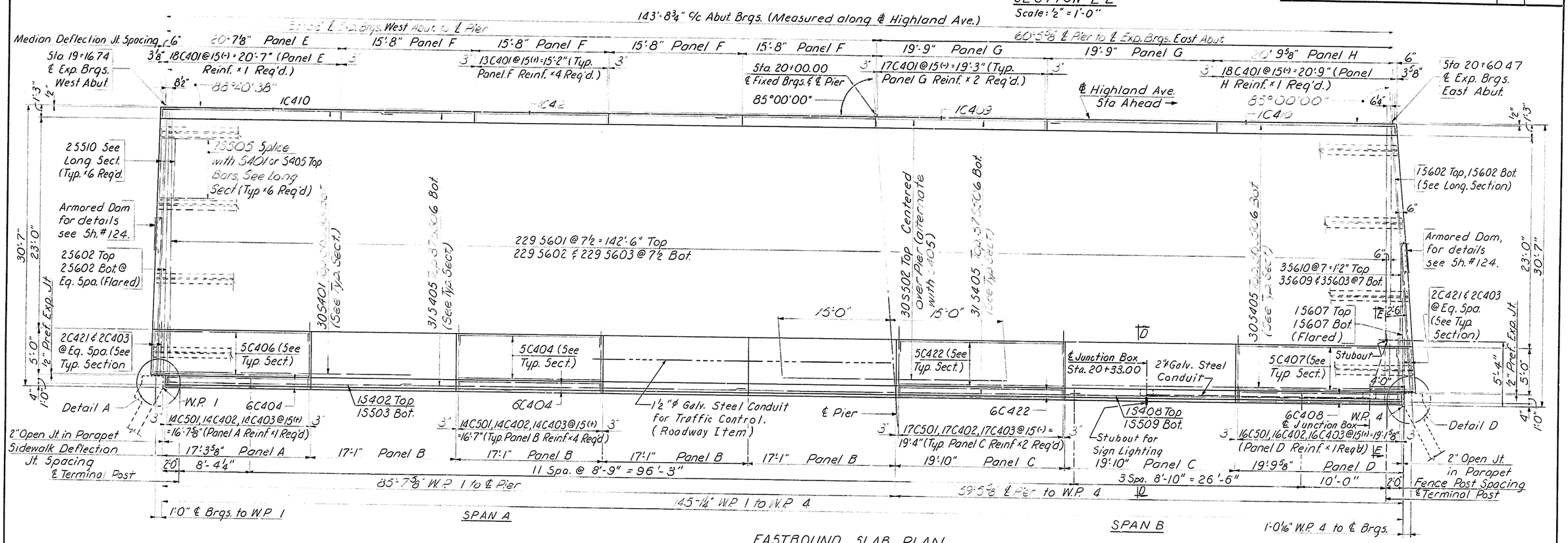

EASTBOUND SLAB PLAN
Scale: 3/16" = 1'-0"

SECTION D-D
Scale: ½" = 1'-0"

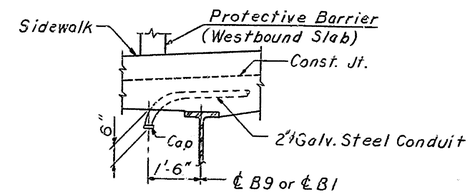

SECTION E-E
Scale: ½" = 1'-0"

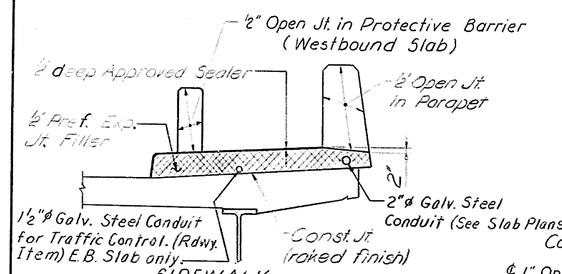

SIDEWALK DEFLECTION JOINT DETAIL
Scale: ½" = 1'-0"

Westbound shown, Eastbound similar except as noted

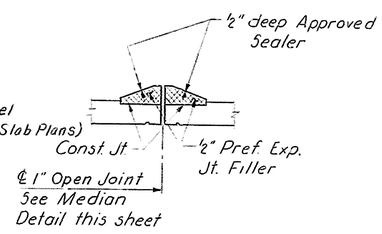

MEDIAN DEFLECTION JOINT DETAIL
Scale: ½" = 1'-0"

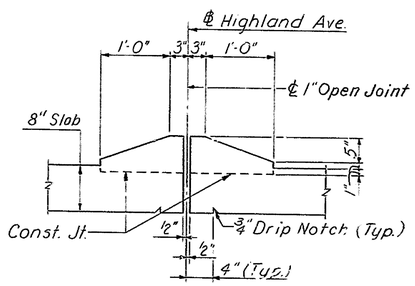

MEDIAN DETAIL
Scale: 1" = 1'-0"

For median reinforcement, see Typical Slab Cross Section, Sheet #120.

Notes:
1. For General Notes, see Sheet #100.
2. For Westbound Slab Plan, see Sheet #117.
3. For Typical Slab Cross Section and Bar Schedule, see Sheet #120.
4. For Longitudinal Section, Detail A and Detail D, see Sheet #118.
5. For Table of Grade Elevations and Dead Load Deflections, see Sheet #123.
6. See the Roadway Lighting Plans for location of conduit and electrical details not shown.
7. For Parapet Protective Fence Details, see Sheet #114.

DELAWARE DEPARTMENT OF HIGHWAYS & TRANSPORTATION
DIVISION OF HIGHWAYS

STATE ROUTE 141 THRU NEWPORT

HIGHLAND AVENUE BRIDGE

EASTBOUND SLAB PLAN

D. R.S.M.	SCALE	APPROVED BY:
T. V.B.B.	AS NOTED	
C. W.B.C.		BRIDGE ENGINEER

COUNTY	CONTRACT	P.R.A. REG. NO.	STATE	FED. AID PROJECT NO.	SHEET NO.	TOTAL SHEETS
NEW CASTLE	71-02-009	2	DEL.		120	301

NO.	REVISIONS	BY	DATE

BENDING DIAGRAMS

Note: All dimensions are out to out.

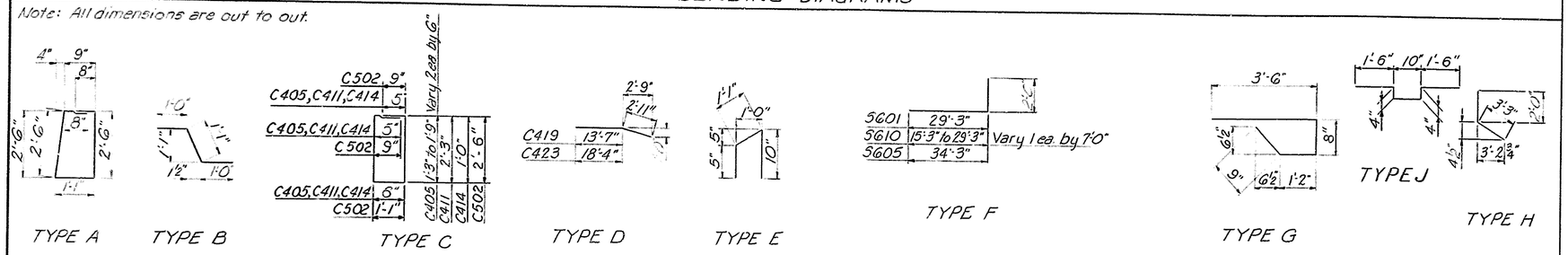

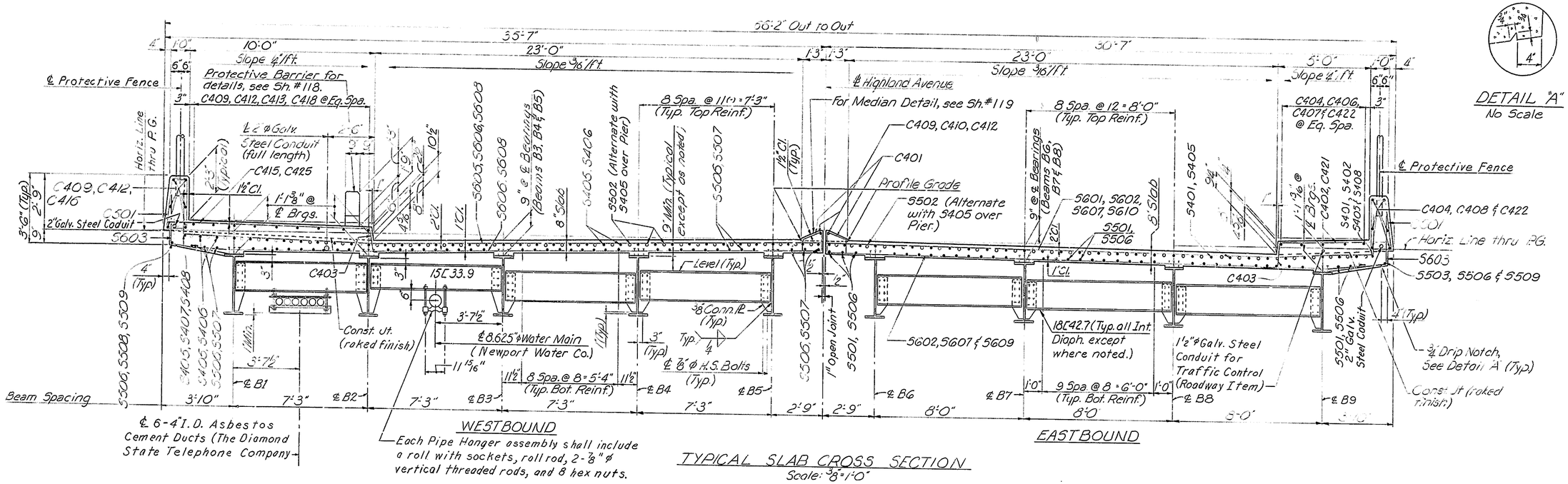

TYPICAL SLAB CROSS SECTION
Scale: 3/8" = 1'-0"

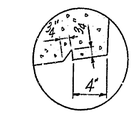

DETAIL "A"
No Scale

SUPERSTRUCTURE BAR SCHEDULE

See top of sheet for Bending Diagrams.

Mark	Size	No.	Length	Vary	Type
C401	#4	244	2'-4"		E
C402	↓	120	6'-0"		Str.
C403		244	3'-1"		B
C404		50	16'-10"		Str.
C405		4	3'-10" to 4'-10"	2 ea. by 1'-0"	C
C406		5	18'-6"		Str.
C407		5	20'-8" to 21'-0"	1 ea. by 1"	Str.
C408		6	19'-4"		Str.
C409		48	19'-5"		Str.
C410		4	20'-10"		Str.
C411		63	5'-10"		C
C412		84	15'-4"		Str.
C413		9	16'-11" to 17'-5"	3 ea. by 3"	Str.
C414		65	3'-4"		C
C415		116	11'-0"		Str.
C416		6	15'-2"		Str.
C418		9	21'-0" to 21'-8"	1 ea. by 1"	Str.
C419		2	16'-6"		D
C420	↓	2	16'-5"		Str.
C421	#4	4	4'-7"		Str.

Mark	Size	No.	Length	Vary	Type
C422	#4	22	19'-6"		Str.
C423	↑	2	21'-3"		D
C424	↓	2	21'-2"		Str.
C425	#4	4	9'-6"		Str.
C426	#4	8	4'-6"		J
C427	#4	4	4'-0"		Str.
C501	#5	236	7'-5"		A
C502	#5	6	7'-7"		C
S401	#4	30	27'-9" to 31'-3"	2 ea. by 3"	Str.
S402	↑	1	29'-9"		Str.
S405		208	40'-0"		Str.
S406		38	24'-6" to 27'-6"	2 ea. by 2"	Str.
S407	↓	1	21'-9"		Str.
S408	#4	2	38'-9"		Str.

Mark	Size	No.	Length	Vary	Type
S501	#5	36	28'-11" to 31'-9"	2 ea. by 2"	Str.
S502	↑	68	30'-0"		Str.
S503		1	30'-6"		Str.
S504		16	6'-0"		Str.
S505		98	6'-1"		G
S506		238	40'-0"		Str.
S507		42	24'-11" to 28'-3"	2 ea. by 2"	Str.
S508	↓	1	22'-6"		Str.
S509	#5	2	38'-9"		Str.
S510	#5	12	6'-9"		Str.
S601	#6	229	31'-3"		F
S602	↑	235	28'-10"		Str.
S603		452	5'-3"		H
S605		220	36'-3"		F
S606		234	33'-8"		Str.
S607		2	10'-6"		F
S608		8	7'-0" to 28'-0"	2 ea. by 7'-0"	Str.
S609	↓	3	17'-3" to 31'-3"	1 ea. by 7'-0"	Str.
S610	#6	3	14'-10" to 28'-10"	1 ea. by 7'-0"	F

Mark	Size	No.	Length	Vary	Type

DELAWARE DEPARTMENT OF HIGHWAYS & TRANSPORTATION
DIVISION OF HIGHWAYS

STATE ROUTE 141 THRU NEWPORT

HIGHLAND AVENUE BRIDGE

TYPICAL SLAB CROSS SECTION AND BAR SCHEDULE

D. R.S.M.	SCALE	APPROVED BY:
T. V.B.B.	AS NOTED	
C. S.M.S.		BRIDGE ENGINEER

COUNTY	CONTRACT	P. & A. REG. NO.	STATE	FED. AID PROJECT NO.	SHEET NO.	TOTAL SHEETS
NEW CASTLE	71-02-009	2	DEL.		121	301

NO.	REVISIONS	BY	DATE
1.	Delete sign Panels and Supports	R.R.	9-10-74

NOTES

1. For General Notes, see Sh. # 100.
2. For Intermediate Diaphragm detail, see Sh. # 120.
3. For Beam Elevation, see Sh. # 122.
4. For Camber Blocking Diagram, see Sh. # 123.
5. For End Diaphragm and Armored Dam details, see Sh. # 124 & 125.

~~6. For Sign Support Details, see Sh. # 126 & 127.~~

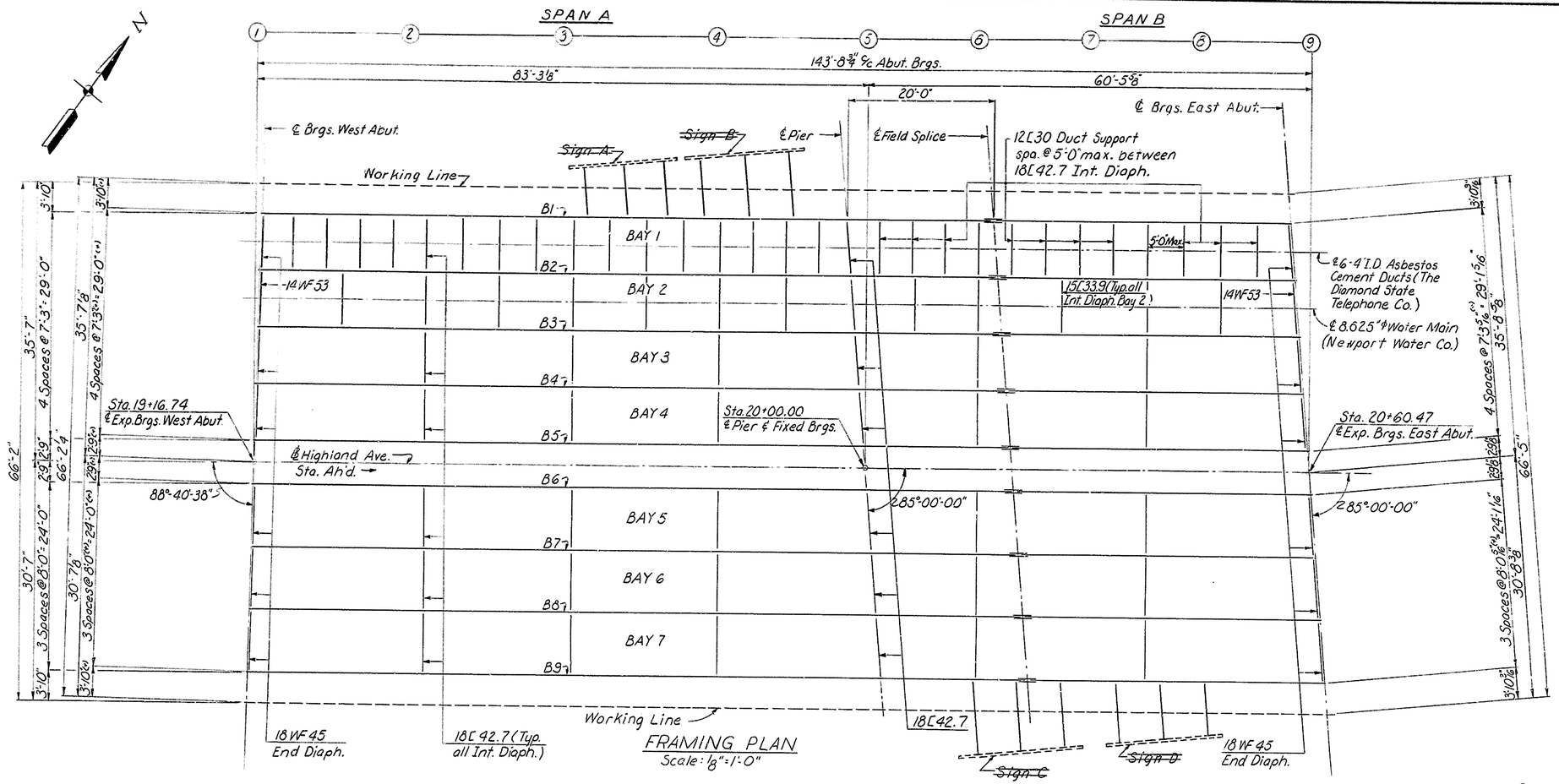

FRAMING PLAN
Scale: 1/8" = 1'-0"

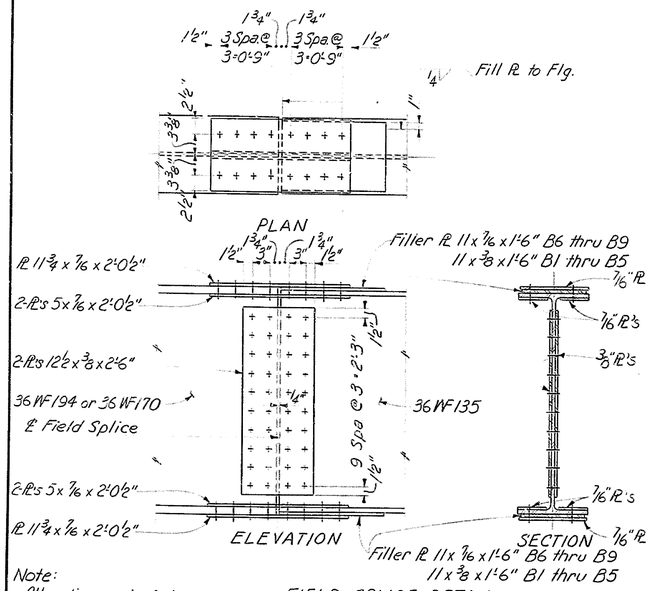

Note:
All splice material is M 222 Steel.

FIELD SPLICE DETAIL
Scale: 1" = 1'-0"

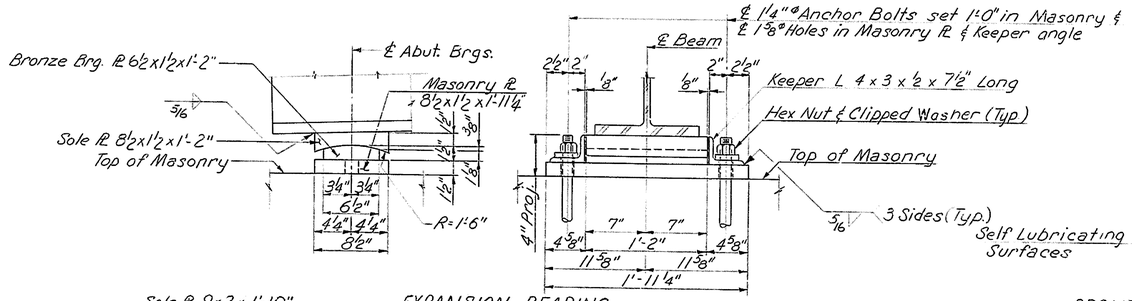

EXPANSION BEARING
Scale: 1 1/2" = 1'-0"

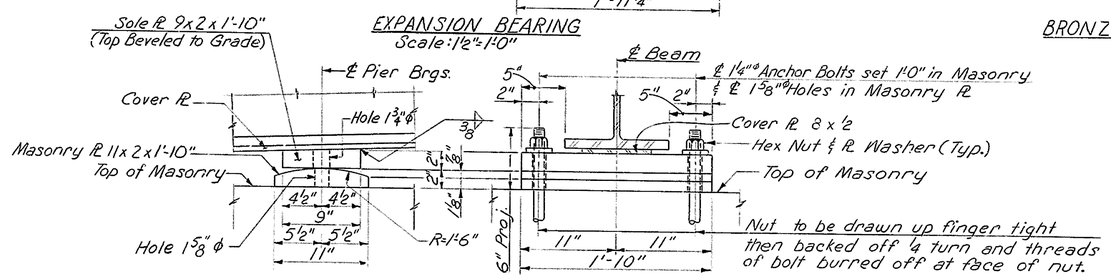

FIXED BEARING
Scale: 1 1/2" = 1'-0"

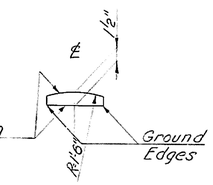

BRONZE BEARING PLATE DETAIL
Scale: 1 1/2" = 1'-0"

Provide smooth transition between welds at sides and ends of Plate.

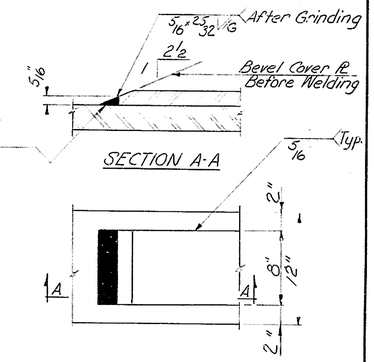

COVER PLATE DETAILS
No Scale

DELAWARE DEPARTMENT OF HIGHWAYS & TRANSPORTATION
DIVISION OF HIGHWAYS

STATE ROUTE 141 THRU NEWPORT

HIGHLAND AVENUE BRIDGE

FRAMING PLAN AND STRUCTURAL STEEL DETAILS

D. R.S.M. T. WARRGS C.S.M.S.	SCALE AS NOTED	APPROVED BY: BRIDGE ENGINEER

COUNTY	CONTRACT	P.R.A. REG. NO.	STATE	FED. AID PROJECT NO.	SHEET NO.	TOTAL SHEETS
NEW CASTLE	71-02-009	2	DEL.		122	301

NO.	REVISIONS	BY	DATE

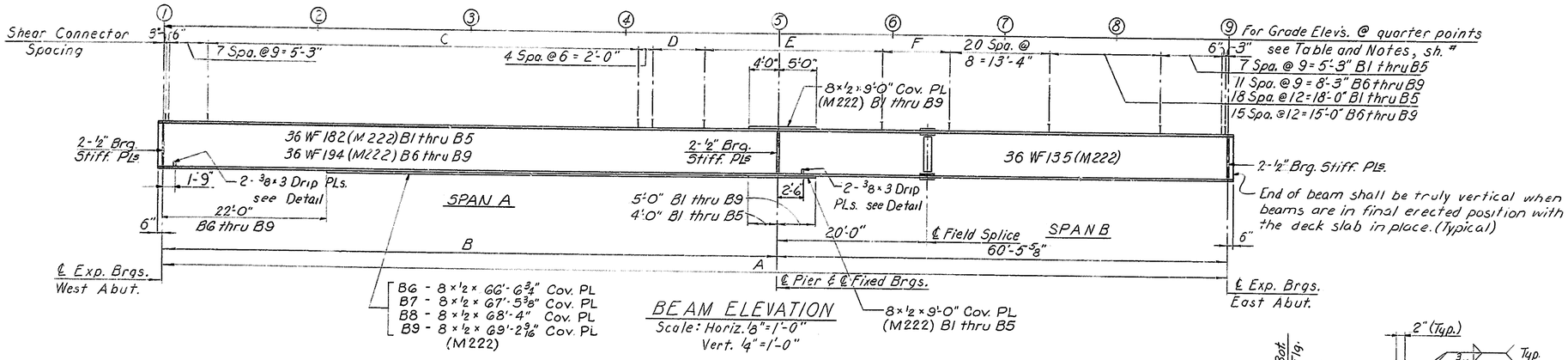

BEAM ELEVATION
Scale: Horiz. 1/8" = 1'-0"
Vert. 1/4" = 1'-0"

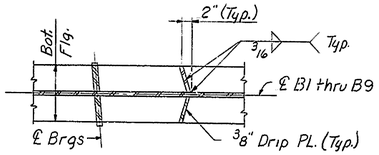

DRIP PLATE DETAIL
No Scale

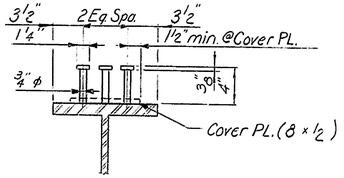

SHEAR CONNECTOR DETAIL
Scale: 1 1/2" = 1'-0"

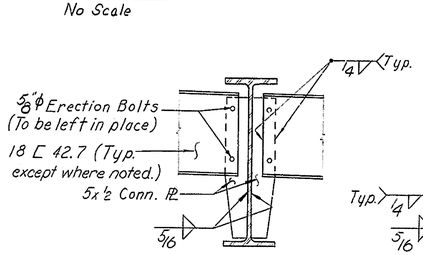

INTERMEDIATE DIAPHRAGM

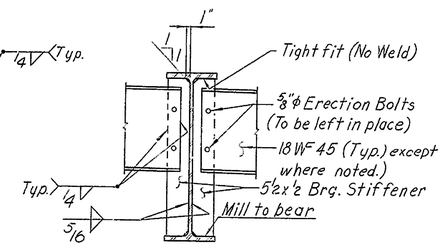

END DIAPHRAGM

ALTERNATE DIAPHRAGM CONNECTION DETAILS
Scale: 3/4" = 1'-0"

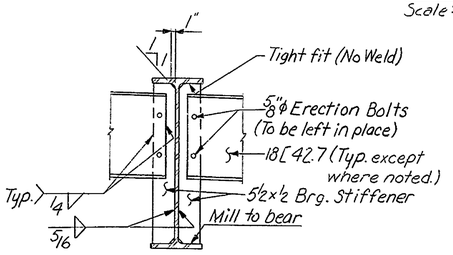

DIAPHRAGM @ PIER
Scale: 3/4" = 1'-0"

BEAM TABLE

BEAM	DIMENSIONS A	DIMENSIONS B	SHEAR CONNECTOR SPACING C	D	E	F
B1	140'-2 9/16"	79'-8 15/16"	55 Spa. @ 12 = 55'-0"	3 Spa. @ 27 = 6'-9"	6 Spa. @ 48 = 24'-0"	4 Spa. @ 27(+) = 9'-1 9/16"
B2	141'-0 3/16"	80'-6 9/16"	56 Spa. @ 12 = 56'-0"	3 Spa. @ 26 = 6'-6"	6 Spa. @ 48 = 24'-0"	4 Spa. @ 27(+) = 9'-2 3/16"
B3	141'-9 15/16"	81'-4 3/16"	56 Spa. @ 12 = 56'-0"	3 Spa. @ 29 = 7'-3"	6 Spa. @ 48 = 24'-0"	4 Spa. @ 27(+) = 9'-2 13/16"
B4	142'-7 7/16"	82'-1 13/16"	57 Spa. @ 12 = 57'-0"	3 Spa. @ 29 = 7'-3"	6 Spa. @ 48 = 24'-0"	4 Spa. @ 27(+) = 9'-0 7/16"
B5	143'-5 1/16"	82'-11 7/16"	58 Spa. @ 12 = 58'-0"	3 Spa. @ 28 = 7'-0"	6 Spa. @ 48 = 24'-0"	4 Spa. @ 27(+) = 9'-1 1/16"
B6	144'-0 3/8"	83'-6 3/4"	60 Spa. @ 12 = 60'-0"	3 Spa. @ 24 = 6'-0"	6 Spa. @ 48 = 24'-0"	4 Spa. @ 26(+) = 8'-8 3/8"
B7	144'-11"	84'-5 3/8"	61 Spa. @ 12 = 61'-0"	3 Spa. @ 24 = 6'-0"	6 Spa. @ 48 = 24'-0"	4 Spa. @ 26(+) = 8'-7"
B8	145'-9 5/8"	85'-4"	62 Spa. @ 12 = 62'-0"	3 Spa. @ 24 = 6'-0"	6 Spa. @ 48 = 24'-0"	4 Spa. @ 25(+) = 8'-5 5/8"
B9	146'-8 3/16"	86'-2 9/16"	63 Spa. @ 12 = 63'-0"	3 Spa. @ 24 = 6'-0"	6 Spa. @ 48 = 24'-0"	4 Spa. @ 25(+) = 8'-4 9/16"

TABLE OF MAXIMUM REACTIONS & SHEARS

BEAM	LOAD	REACTIONS-KIPS WEST ABUT.	PIER	EAST ABUT.	SHEARS-KIPS LEFT OF PIER	RIGHT OF PIER
B1 thru B5	D.L. 1	35.6	101.8	21.1	55.0	46.8
	D.L. 2	14.0	37.1	8.8	20.2	16.9
	L.L.	50.2	63.3	47.0	49.2	46.6
	Imp.	11.1	13.6	11.8	10.6	11.3
	Total	110.9	215.8	88.7	135.0	121.6
B6 thru B8	D.L. 1	38.2	106.3	20.1	58.1	48.1
	D.L. 2	14.0	35.6	7.9	19.6	15.9
	L.L.	53.3	66.7	49.6	50.8	49.2
	Imp.	12.0	15.2	12.9	12.8	12.5
	Total	117.5	223.8	90.5	141.3	125.7
B9	D.L. 1	39.9	110.7	20.5	60.7	50.1
	D.L. 2	14.1	35.9	7.8	19.8	16.0
	L.L.	44.8	62.1	41.3	48.2	45.5
	Imp.	9.9	14.0	10.6	10.5	11.5
	Total	108.7	222.7	80.2	139.2	123.1

TABLE OF MAXIMUM MOMENTS (KIP-FT.) & STRESSES (K.S.I.)

BEAM	LOAD	SPAN A Pos. Mom.	Stress	PIER Neg. Mom.	Stress	SPAN B Pos. Mom.	Stress
B1 thru B5	D.L. 1	563.6	10.89	778.6	12.46	181.7	4.97
	D.L. 2	232.8	3.55	245.4	3.92	88.4	1.82
	L.L.	653.7	8.91	349.8	5.60	447.7	8.28
	S.W.L.L.	77.6	1.07	62.4	1.00	43.5	0.82
	Imp.	158.8	2.17	89.6	1.43	122.7	2.27
	Total	1686.5	26.59	1525.8	24.41	884.0	18.16
B6 thru B8	D.L. 1	645.0	10.14	850.5	12.89	54.6	4.23
	D.L. 2	246.6	3.08	243.7	3.69	75.3	1.54
	L.L.	774.8	8.65	406.2	6.15	495.1	9.13
	S.W.L.L.	54.5	0.61	41.7	0.63	27.3	0.50
	Imp.	184.4	2.06	102.7	1.56	133.6	2.47
	Total	1905.3	24.54	1644.8	24.92	885.9	17.87
B9	D.L. 1	683.1	10.74	893.5	13.54	154.4	4.23
	D.L. 2	251.6	3.14	249.1	3.77	73.2	1.50
	L.L.	718.8	8.02	379.0	5.74	454.1	8.39
	S.W.L.L.	55.5	0.62	42.6	0.64	27.3	0.50
	Imp.	170.4	1.91	95.5	1.45	122.6	2.25
	Total	1879.4	24.43	1659.7	25.14	831.6	16.87

DELAWARE DEPARTMENT
OF HIGHWAYS & TRANSPORTATION
DIVISION OF HIGHWAYS

STATE ROUTE 141 THRU NEWPORT

HIGHLAND AVENUE BRIDGE

BEAM ELEVATION

D. R.S.M.	SCALE	APPROVED BY:
T. C.V.L.	AS NOTED	
C.S.M.S.		BRIDGE ENGINEER

COUNTY	CONTRACT	P.R.A. REG. NO.	STATE	FED. AID PROJECT NO.	SHEET NO.	TOTAL SHEETS
NEW CASTLE	71-02-009	2	DEL.		123	301

NO.	REVISIONS	BY	DATE

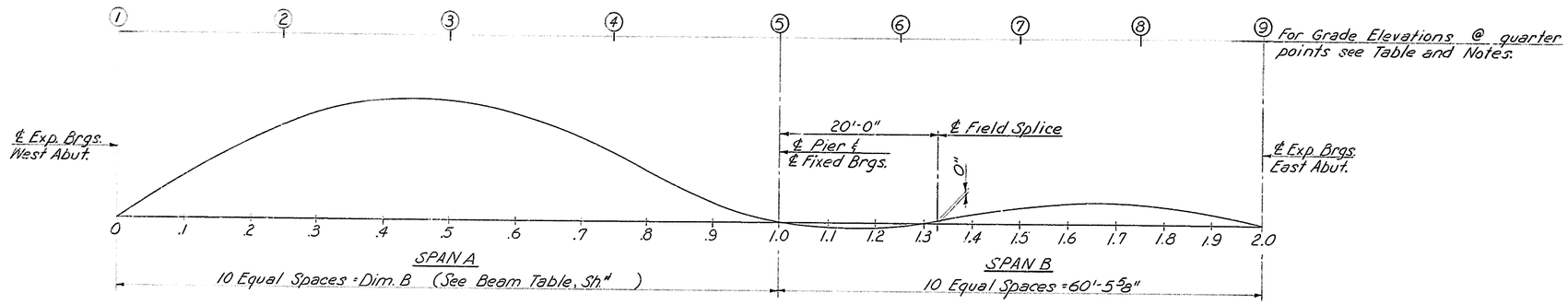

CAMBER BLOCKING DIAGRAM

No Scale

BEAMS B1 thru B5																					
Due to weight of Steel	0	1/8	3/16	1/4	5/16	5/16	1/4	3/16	1/8	1/16	0	0	0	0	0	1/16	1/16	1/16	1/16	0	0
Due to weight of Deck Slab	0	3/8	3/4	1	1 1/16	1 1/16	15/16	11/16	7/16	3/16	0	-1/16	-1/16	0	1/16	1/8	3/16	3/16	1/8	1/16	0
*Due to Superimposed D.L.	0	1/8	3/16	1/4	5/16	5/16	1/4	3/16	1/8	1/16	0	0	0	0	1/16	1/16	1/16	1/16	1/16	0	0
Total Dead Load Camber	0	5/8	1 1/8	1 1/2	1 11/16	1 11/16	1 7/16	1 1/16	11/16	5/16	0	-1/16	-1/16	0	1/8	1/4	5/16	5/16	1/4	1/16	0
BEAMS B6 thru B9																					
Due to weight of Steel	0	1/8	1/4	5/16	3/8	3/8	5/16	1/4	1/8	1/16	0	0	0	0	0	0	1/16	1/16	1/16	0	0
Due to weight of Deck Slab	0	1/2	13/16	1 1/4	1 7/16	1 7/16	1 5/16	15/16	9/16	1/4	0	-1/16	-1/16	-1/16	0	1/16	1/8	1/8	1/8	1/16	0
*Due to Superimposed D.L.	0	1/8	3/16	1/4	1/4	1/4	1/4	3/16	1/8	1/16	0	0	0	0	0	0	1/16	1/16	0	0	0
Total Dead Load Camber	0	3/4	1 3/8	1 13/16	2 1/16	2 1/16	1 7/8	1 3/8	13/16	3/8	0	-1/16	-1/16	-1/16	0	1/16	1/4	1/4	3/16	1/16	0

*Does not include Future wearing surface.

CAMBER: Beams shall be cambered for Total Dead Load Camber as indicated in the Camber Blocking Diagram. No camber for vertical curvature is required. Beams shall not be cambered more than shown.

Beams shall be shop assembled to the correct blocking elevations of splices before reaming or drilling splices, and likewise shall be field assembled before bolting.

If beam section over the pier does not have the indicated camber, then the blocking elevations for the remaining beam sections shall be adjusted accordingly.

In the Table of Grade Elevations and Dead Load Deflections, the deflections given are for dead load due to the weight of concrete only. After all beams have been assembled, elevations shall be taken along the tops of beams at points where the grade elevations are shown. The difference between these two elevations plus the amount of deflection listed at each point will be the thickness of the slab and haunch over the top of beam at the centerline of beam. The minimum slab and haunch depth over the centerline of beam shall not be less than shown on the Typical Cross Section Sh.#120

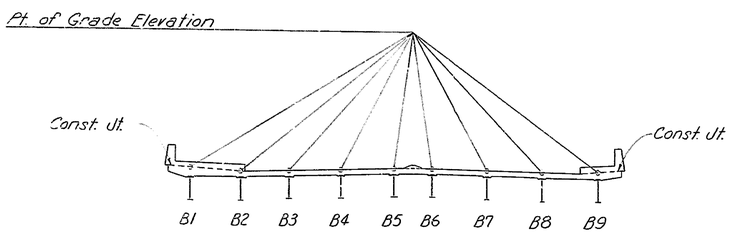

GRADE ELEVATION POINTS

TABLE OF GRADE ELEVATIONS AND DEAD LOAD DEFLECTIONS IN FEET

Beam	B1	B2	B3	B4	B5	Def'l.	B6	B7	B8	B9	Def'l.
Point	Grade El.	Grade El.	Grade El.	Grade El.	Grade El.		Grade El.	Grade El.	Grade El.	Grade El.	
1	60.711	60.460	60.556	60.665	60.773	0	60.770	60.640	60.510	60.532	0
2	61.241	60.995	61.096	61.210	61.324	0.091	61.325	61.201	61.077	61.105	0.113
3	61.770	61.529	61.636	61.755	61.875	0.115	61.879	61.761	61.643	61.677	0.139
4	62.299	62.064	62.176	62.300	62.425	0.063	62.434	62.322	62.209	62.249	0.105
5	62.829	62.598	62.716	62.846	62.976	0	62.989	62.882	62.776	62.821	0
6	62.230	63.000	63.117	63.247	63.377	-0.003	63.390	63.284	63.177	63.223	-0.007
7	63.631	63.401	63.518	63.648	63.779	0.015	63.791	63.685	63.579	63.624	0.009
8	64.033	63.803	63.920	64.050	64.180	0.017	64.193	64.086	63.980	64.026	0.014
9	64.434	64.204	64.321	64.451	64.581	0	64.594	64.488	64.381	64.427	0

DELAWARE DEPARTMENT
OF HIGHWAYS & TRANSPORTATION
DIVISION OF HIGHWAYS

STATE ROUTE 141 THRU NEWPORT

HIGHLAND AVENUE BRIDGE

CAMBER BLOCKING DIAGRAM

D. R.S.M.	SCALE	APPROVED BY:
T. W.A.R.	AS NOTED	
C. S.M.S.		BRIDGE ENGINEER

COUNTY	CONTRACT	F.H.A. REG. NO.	STATE	FED. AID PROJECT NO.	SHEET NO.	TOTAL SHEETS
NEW CASTLE	71-02-009	2	DEL.		124	301

NO.	REVISIONS	BY	DATE

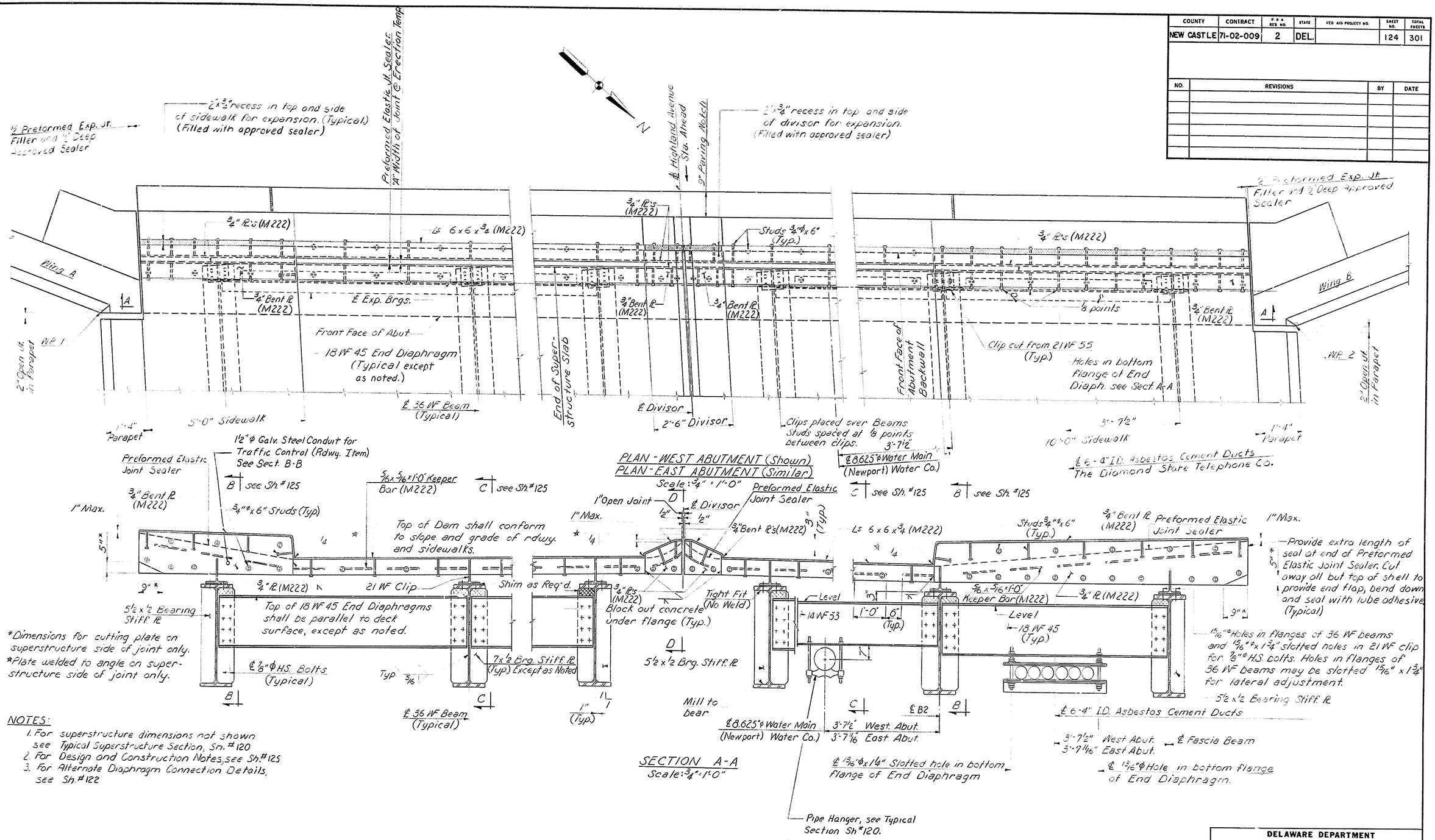

NOTES:

1. For superstructure dimensions not shown see Typical Superstructure Section, Sh. #120
2. For Design and Construction Notes, see Sh. #125
3. For Alternate Diaphragm Connection Details, see Sh. #122

DELAWARE DEPARTMENT OF HIGHWAYS & TRANSPORTATION
DIVISION OF HIGHWAYS

STATE ROUTE 141 THRU NEWPORT

HIGHLAND AVENUE BRIDGE

ARMORED PREFORMED NEOPRENE COMPRESSION DAM

D. WBC	SCALE	APPROVED BY:
T. WAR	AS NOTED	
C.S.M.S.		BRIDGE ENGINEER

COUNTY	CONTRACT	P.B.A. REG. NO.	STATE	FED. AID PROJECT NO.	SHEET NO.	TOTAL SHEETS
NEW CASTLE	71-02-009	2	DEL.		125	301

NO.	REVISIONS	BY	DATE

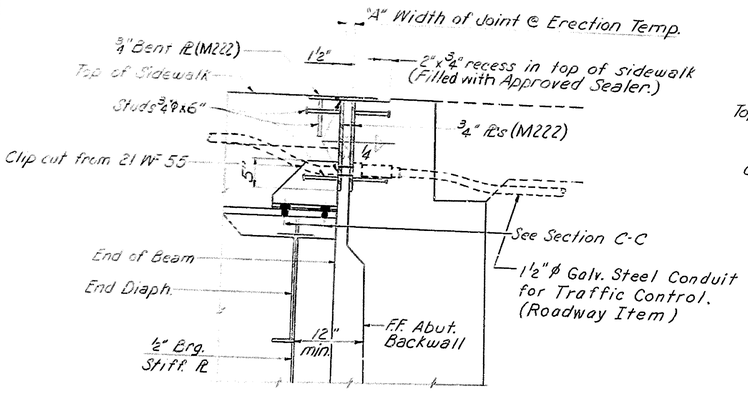

SECTION B-B
Scale: 1"=1'-0"

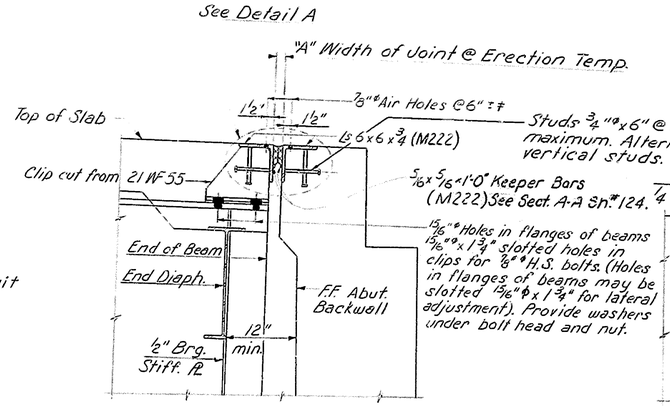

SECTION C-C
Scale: 1"=1'-0"

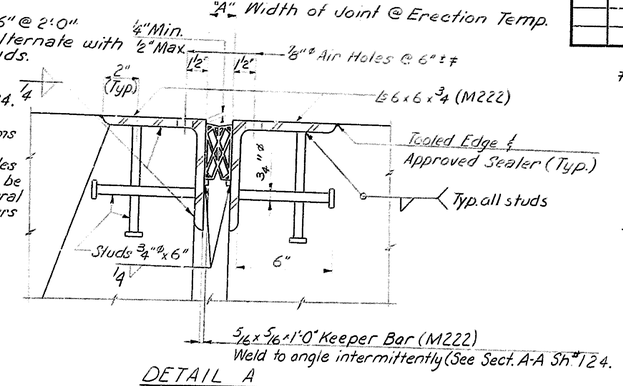

DETAIL A
Scale: 3"=1'-0"

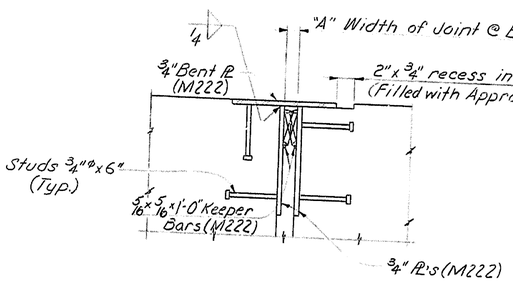

SECTION D-D
Scale: 1½"=1'-0"

Concrete shall be placed under the angles and vibrated until the concrete is forced through the ⅞" # holes. Strike off excess concrete. After concrete has cured, inspect the holes and remove unsound concrete. Clean the holes with an air jet and fill with an approved sealer.

DESIGN AND CONSTRUCTION NOTES

1. All material and workmanship shall be in accordance with this drawing, the Standard Specifications and the Special Provisions.
2. These drawings shall be used in the preparation of Shop Drawings. Shop Drawings shall show complete details such as size of seal, compression-deflection characteristics, joint opening at time of erection - Dimension "A", method of installation and design calculations.
3. Shop drawings shall show details for temporary connections used for shipping, erection and adjustment purposes. The complete dam shall be shop assembled with the Preformed Elastic Joint Sealer installed in the shop in accordance with the Special Provisions.
4. One coat of asphalt cement paint shall be applied to steel surfaces sliding on concrete.

DELAWARE DEPARTMENT
OF HIGHWAYS & TRANSPORTATION
DIVISION OF HIGHWAYS

STATE ROUTE 141 THRU NEWPORT

HIGHLAND AVENUE BRIDGE

ARMORED PREFORMED NEOPRENE COMPRESSION DAM

D. W.B.C.	SCALE	APPROVED BY:
T. W.A.R.	AS NOTED	
C. S.M.S.		BRIDGE ENGINEER

COUNTY	CONTRACT	P. R. A. REF. NO.	STATE	FED. AID PROJECT NO.	SHEET NO.	TOTAL SHEETS
NEW CASTLE	71-02-009	2	DEL		126	301

NO.	REVISIONS	BY	DATE
1.	Delete Sign Panel and Supports	M. M.	9-10-74

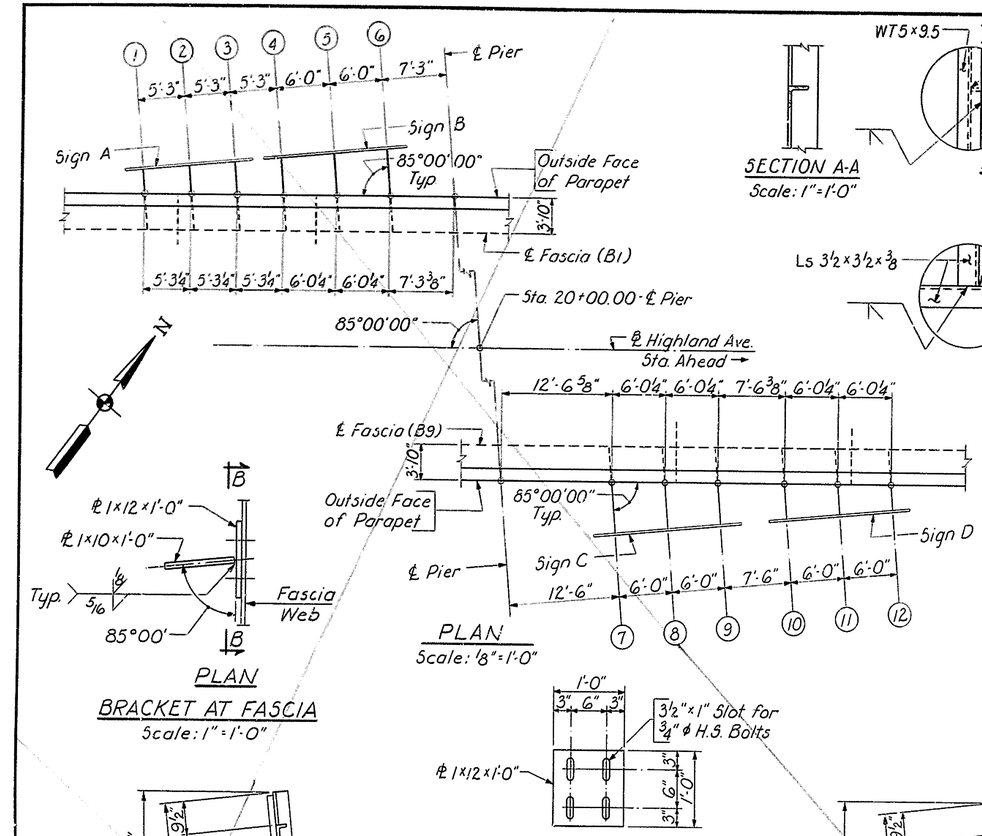

NOTES

1. All steel components shall be structural steel A.S.T.M. A588.
2. All steel components shall be hot-dipped galvanized in accordance with Section 606.05(K) of the Standard Specifications.
3. Galvanizing shall be done after all welding and drilling has been completed.
4. For details of Sign Supports ⑦ thru ⑫, see Sh. 127
5. For details of Lateral Bracing, see Sh. 127

DELAWARE
DEPARTMENT OF HIGHWAYS & TRANSPORTATION
DIVISION OF HIGHWAYS

STATE ROUTE 141 THRU NEWPORT
HIGHLAND AVENUE BRIDGE

SIGN SUPPORT DETAILS

D: R. S. W.	SCALE	APPROVED BY:
T: R. S. W.	AS NOTED	
C: J. J. S.		BRIDGE ENGINEER

COUNTY	CONTRACT	P. B. A. REG. NO.	STATE	FED. AID PROJECT NO.	SHEET NO.	TOTAL SHEETS
NEW CASTLE	71-02-009	2	DEL		127	301

NO.	REVISIONS	BY	DATE
1	Delete Sign Panels and Supports	P.R.	9-10-74

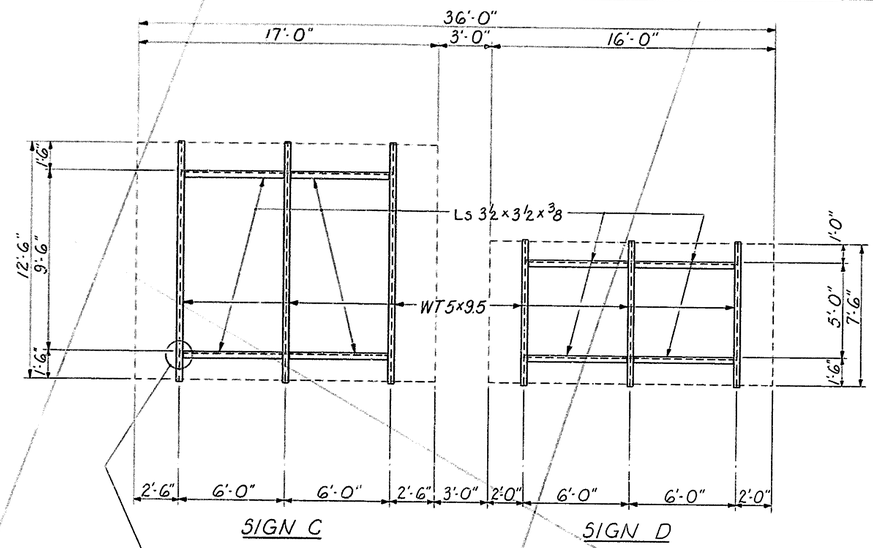

SIGN SUPPORT ELEVATION
Scale: ¼"=1'-0"

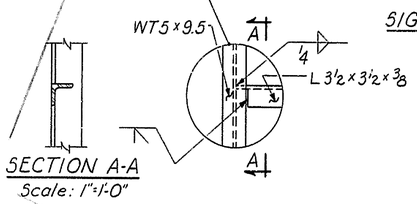

SECTION A-A
Scale: 1"=1'-0"

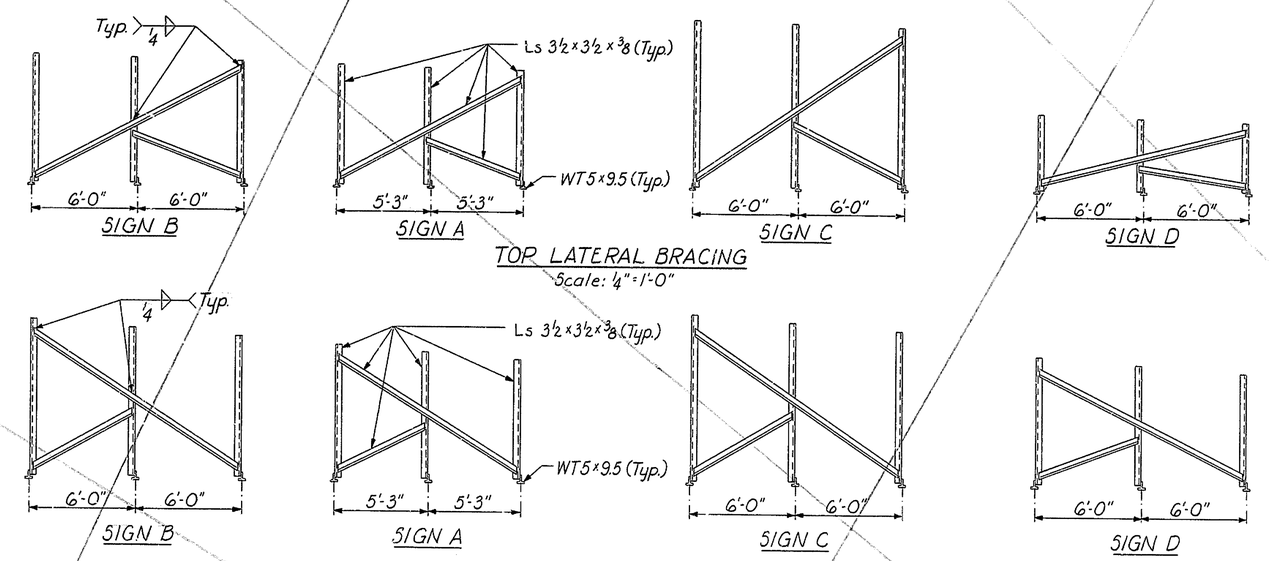

TOP LATERAL BRACING
Scale: ¼"=1'-0"

BOTTOM LATERAL BRACING
Scale: ¼"=1'-0"

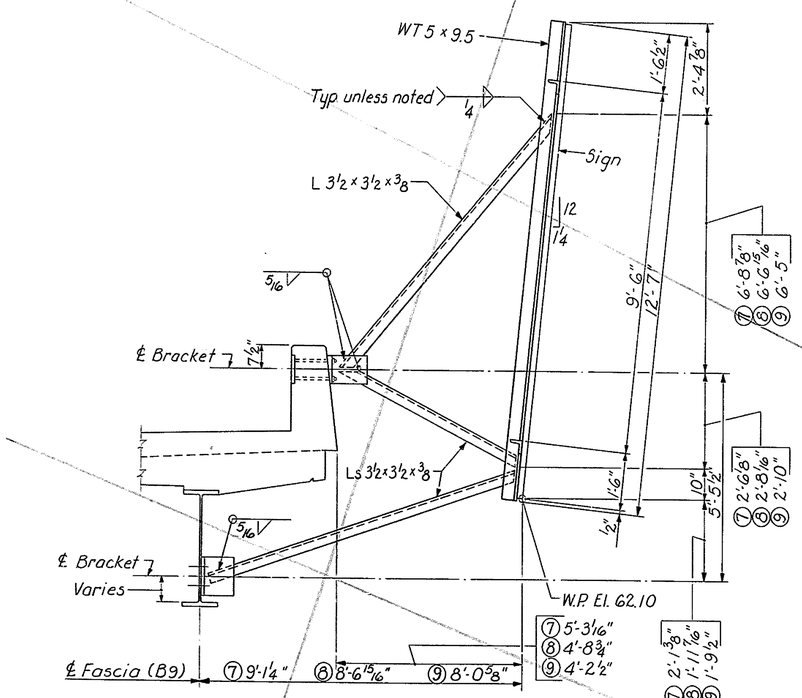

SUPPORTS 7, 8 & 9
SUPPORT 7 SHOWN
Scale: ½"=1'-0"

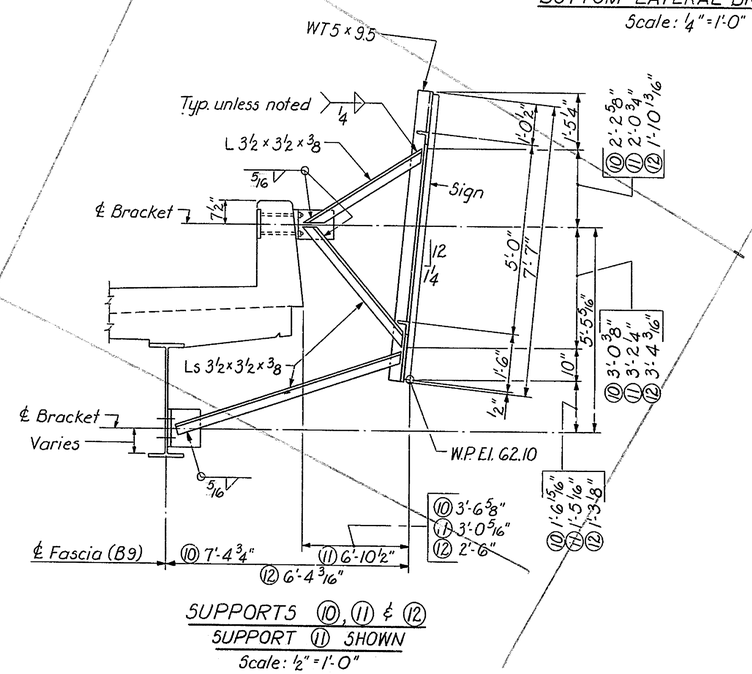

SUPPORTS 10, 11 & 12
SUPPORT 11 SHOWN
Scale: ½"=1'-0"

DELAWARE
DEPARTMENT OF HIGHWAYS & TRANSPORTATION
DIVISION OF HIGHWAYS

STATE ROUTE 141 THRU NEWPORT

HIGHLAND AVENUE BRIDGE

SIGN SUPPORT DETAILS

D: R.S.W.	SCALE	APPROVED BY:
T: R.S.W.	AS NOTED	
C: J. J. S.		BRIDGE ENGINEER

8 VEL PRINT 19 1253

COUNTY	CONTRACT	P.B.A. RES. NO.	STATE	FED. AID PROJECT NO.	SHEET NO.	TOTAL SHEETS
NEW CASTLE	71-02-009	2	DEL.		128	301

NO.	REVISIONS	BY	DATE

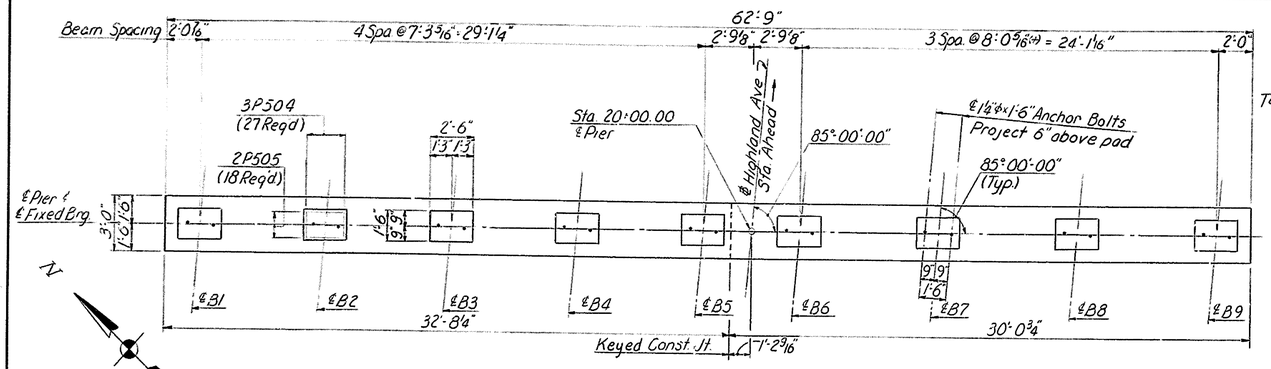

CAP PLAN
Scale: 1/4" = 1'-0"

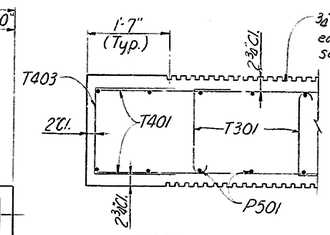

SECTION A-A (shown)
Section C-C opposite hand
Scale: 3/4" = 1'-0"

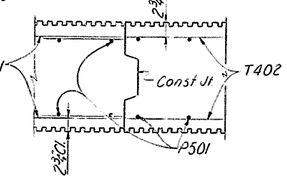

SECTION B-B
Scale: 3/4" = 1'-0"

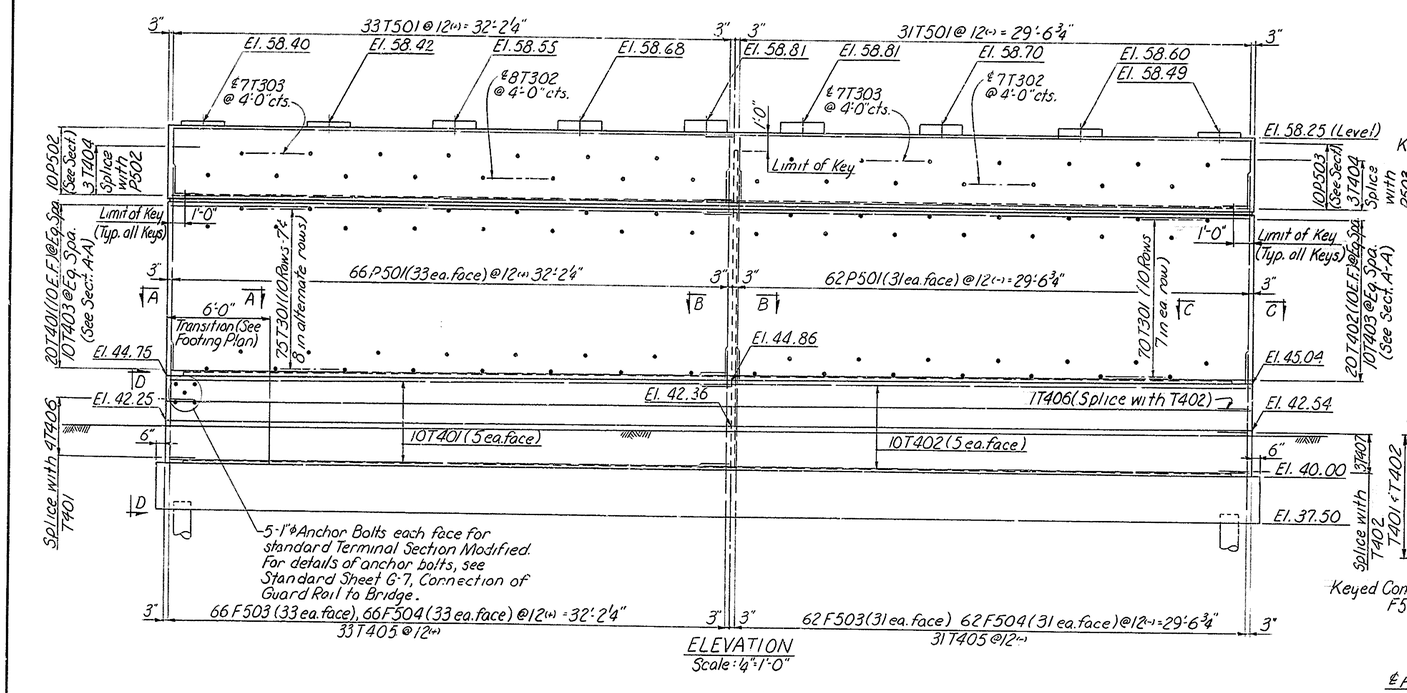

ELEVATION
Scale: 1/4" = 1'-0"

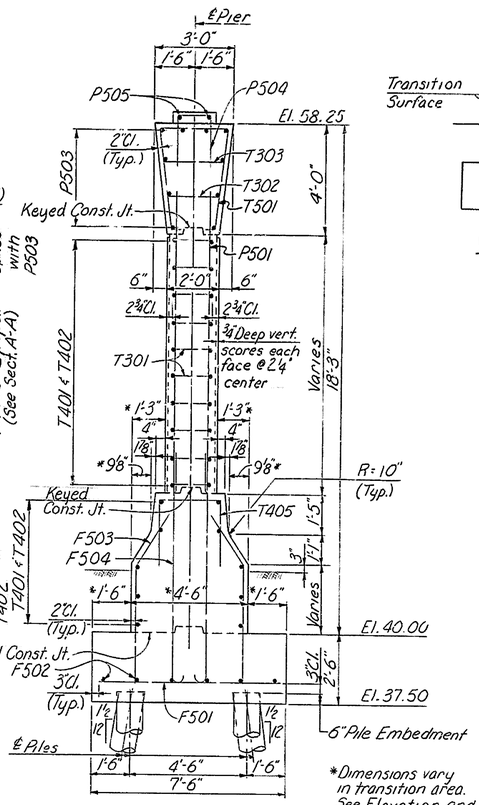

TYPICAL SECTION
Scale: 3/8" = 1'-0"

*Dimensions vary in transition area. See Elevation and Footing Plan.

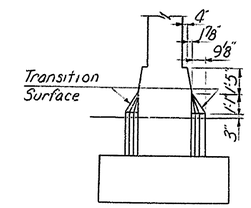

VIEW D-D
Scale: 1/4" = 1'-0"

BAR SCHEDULE

Mark	Size	No.	Length	Vary	Type
F501	#5	43	7'-0"		Str.
F502	#5	12	32'-6"		Str.
F503	#5	128	6'-3"		B
F504	#5	128	8'-8"		F
P501	#5	128	10'-9"		Str.
P502	#5	10	32'-3"		Str.
P503	#5	10	31'-0"		Str.
P504	#5	27	4'-4"		D
P505	#5	18	2'-2"		Str.
T501	#5	64	11'-1"		C
T401	#4	30	32'-3"		Str.
T402	#4	30	31'-0"		Str.
T403	#4	20	4'-0"		D
T404	#4	6	4'-2" to 4'-10"	2 ea. by 4"	D
T405	#4	64	6'-4"		D
T406	#4	5	4'-10"		D
T407	#4	3	6'-6"		D
T301	#3	145	2'-7"		E
T302	#3	15	3'-1"		E
T303	#3	14	3'-5"		E

BENDING DIAGRAMS

Note
All dimensions are out to out.

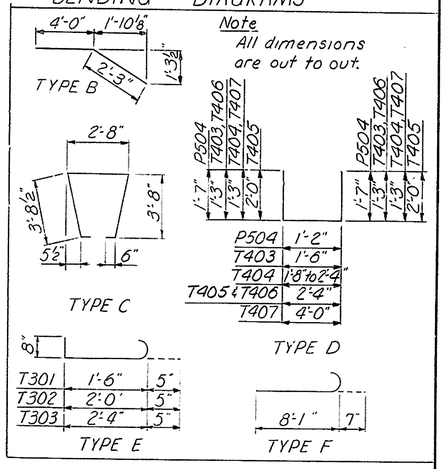

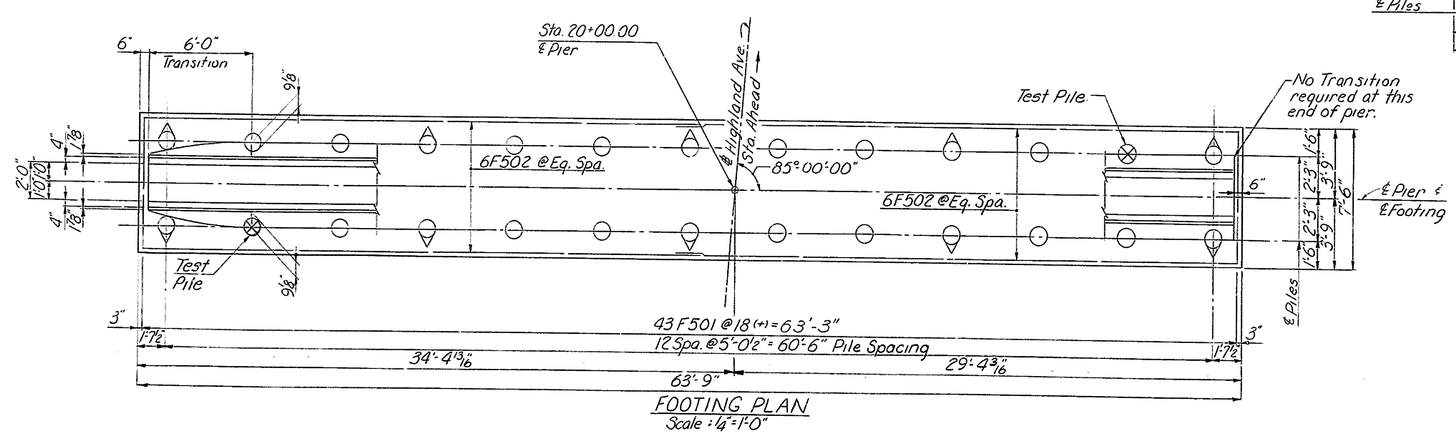

FOOTING PLAN
Scale: 1/4" = 1'-0"

PIER NOTES

1. For General Notes, see Sh. #100
2. For Architectural Details, see Sh. #113
3. For Pile Details, see Sh. #164
4. All Piles shall be Cast-In-Place Concrete Piles. 12 In. 7 Gage.
5. Maximum design pile load = 40 Tons/Pile.
6. ⟐ Denotes battered piles and direction of batter. Batter = 1½:12.
7. ⊗ Denotes Steel Shell Test Pile.

DELAWARE DEPARTMENT
OF HIGHWAYS & TRANSPORTATION
DIVISION OF HIGHWAYS

STATE ROUTE 141 THRU NEWPORT
HIGHLAND AVENUE BRIDGE

PIER
PLAN, ELEVATION AND BAR SCHEDULE

D.S.M.S.	SCALE	APPROVED BY:
T.S.P.H.&RGS	AS NOTED	
C.S.M.S.		BRIDGE ENGINEER

COUNTY	CONTRACT	P.B.A. REG. NO.	STATE	FED. AID PROJECT NO.	SHEET NO.	TOTAL SHEETS
NEW CASTLE	71-02-009	2	DEL.		129	301

NO.	REVISIONS	BY	DATE

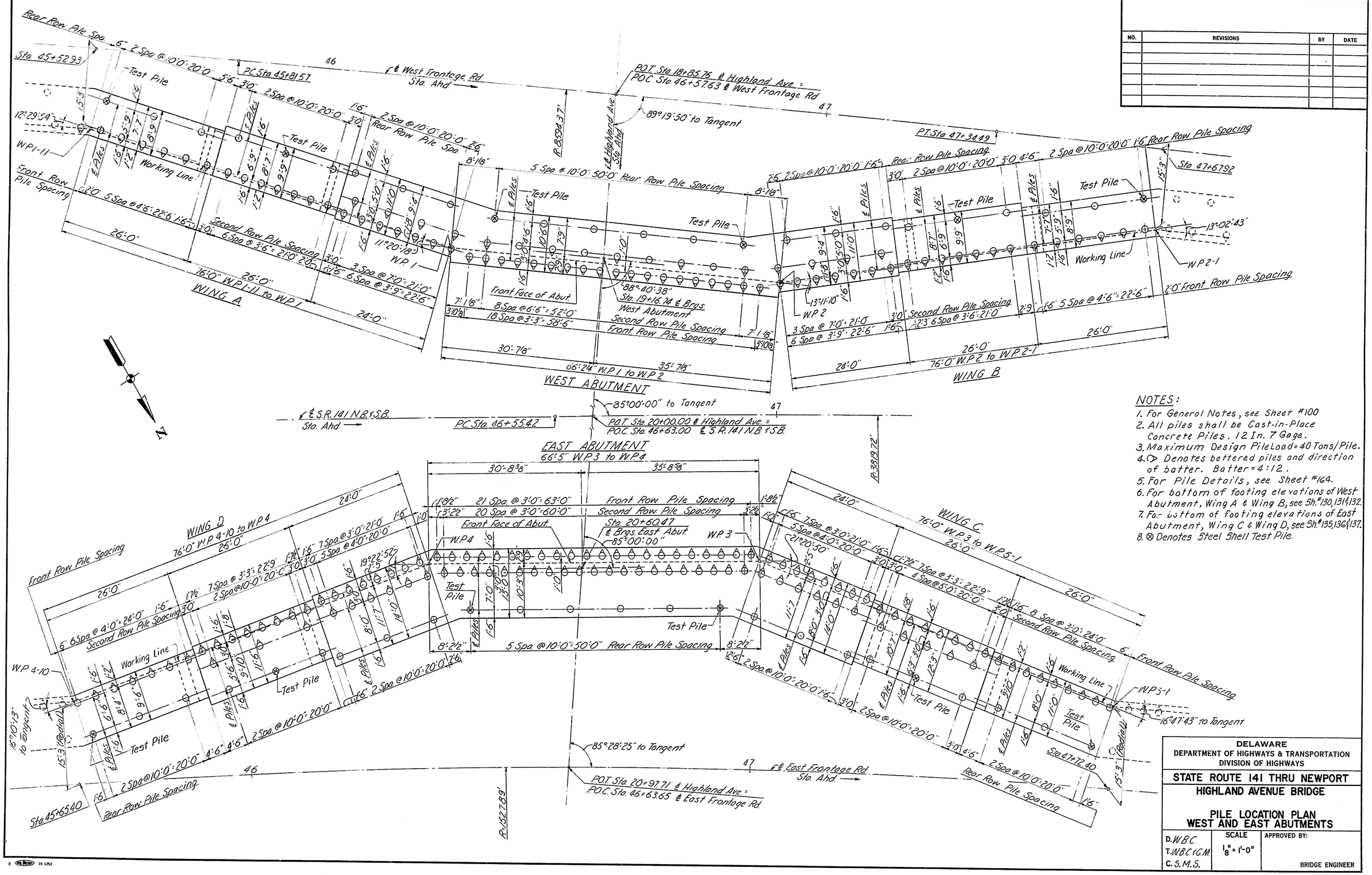

NOTES:

1. For General Notes, see Sheet #100
2. All piles shall be Cast-in-Place Concrete Piles. 12 In. 7 Gage.
3. Maximum Design Pile Load = 40 Tons/Pile.
4. ⊗ Denotes battered piles and direction of batter. Batter = 4:12.
5. For Pile Details, see Sheet #164.
6. For bottom of footing elevations of West Abutment, Wing A & Wing B, see Sh.#130, 131 & 132.
7. For bottom of footing elevations of East Abutment, Wing C & Wing D, see Sh.#135, 136 & 137.
8. ⊗ Denotes Steel Shell Test Pile.

DELAWARE
DEPARTMENT OF HIGHWAYS & TRANSPORTATION
DIVISION OF HIGHWAYS

STATE ROUTE 141 THRU NEWPORT
HIGHLAND AVENUE BRIDGE

PILE LOCATION PLAN
WEST AND EAST ABUTMENTS

D.W.B.C.	SCALE	APPROVED BY:
T.W.B.C. & G.M.	1/8" = 1'-0"	
C.S.M.S.		BRIDGE ENGINEER

COUNTY	CONTRACT	P.R.A. REG. NO.	STATE	FED. AID PROJECT NO.	SHEET NO.	TOTAL SHEETS
NEW CASTLE	71-02-009	2	DEL.		130	301

NO.	REVISIONS	BY	DATE

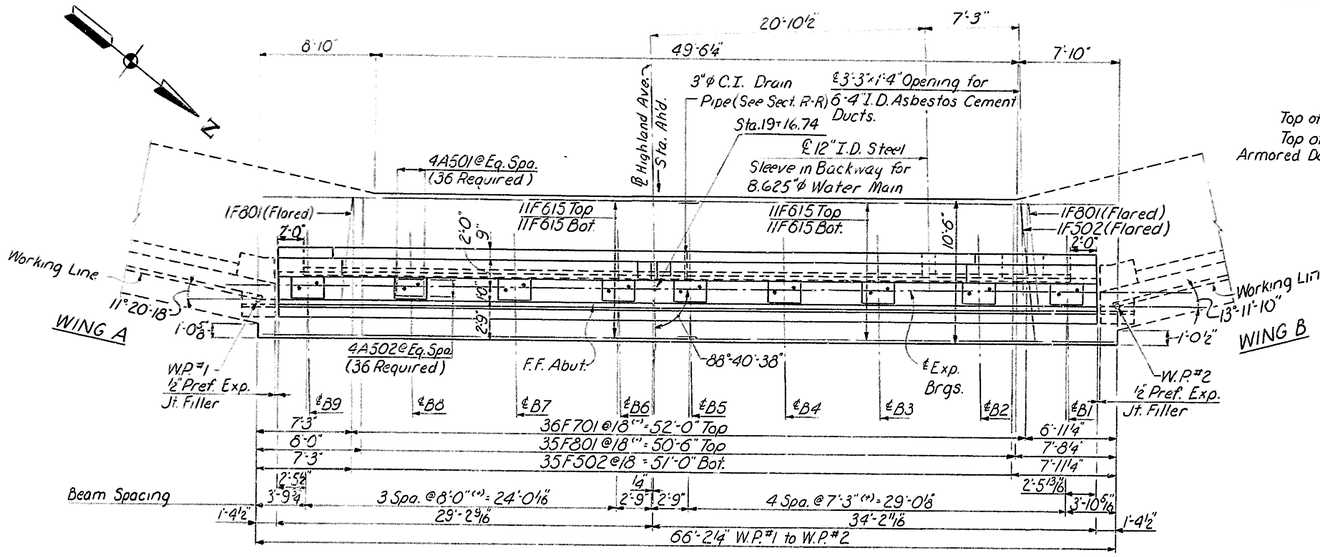

PLAN - WEST ABUTMENT
Scale: 3/16" = 1'-0"

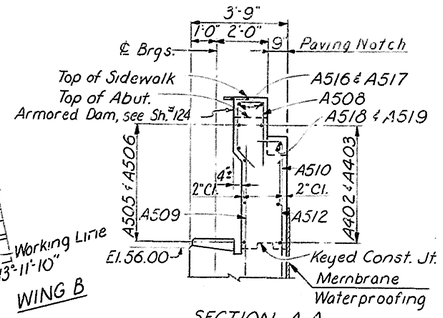

SECTION A-A
Scale: 3/8" = 1'-0"

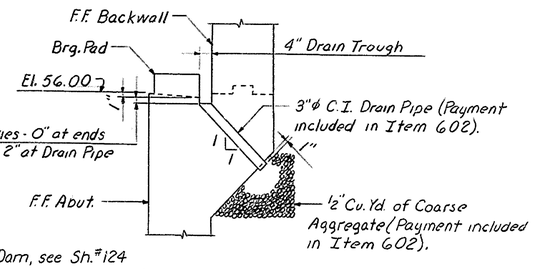

SECTION R-R
Scale: ½" = 1'-0"

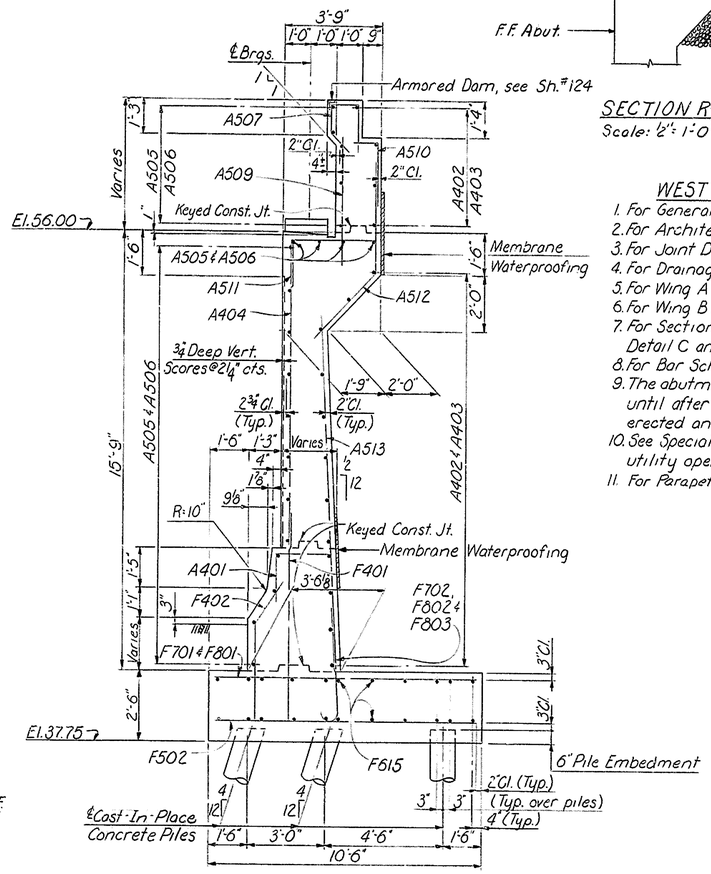

TYPICAL SECTION
Scale: 3/8" = 1'-0"

WEST ABUTMENT NOTES

1. For General Notes, see Sh. #100.
2. For Architectural Details, see Sh. #113.
3. For Joint Details, see Sh. #116.
4. For Drainage Details, see Sh. #108.
5. For Wing A Plan & Elevation see Sh. #131.
6. For Wing B Plan & Elevation see Sh. #132.
7. For Sections B-B thru J-J, Detail A, Detail B, Detail C and Bearing Pad Detail, see Sh. #133.
8. For Bar Schedule, see Sh. #134.
9. The abutment backwall shall not be placed until after the structural steel has been erected and the deck slab placed.
10. See Special Provisions for grouting the utility opening in the abutment backwall.
11. For Parapet Protective Fence Details, see Sh. #114.

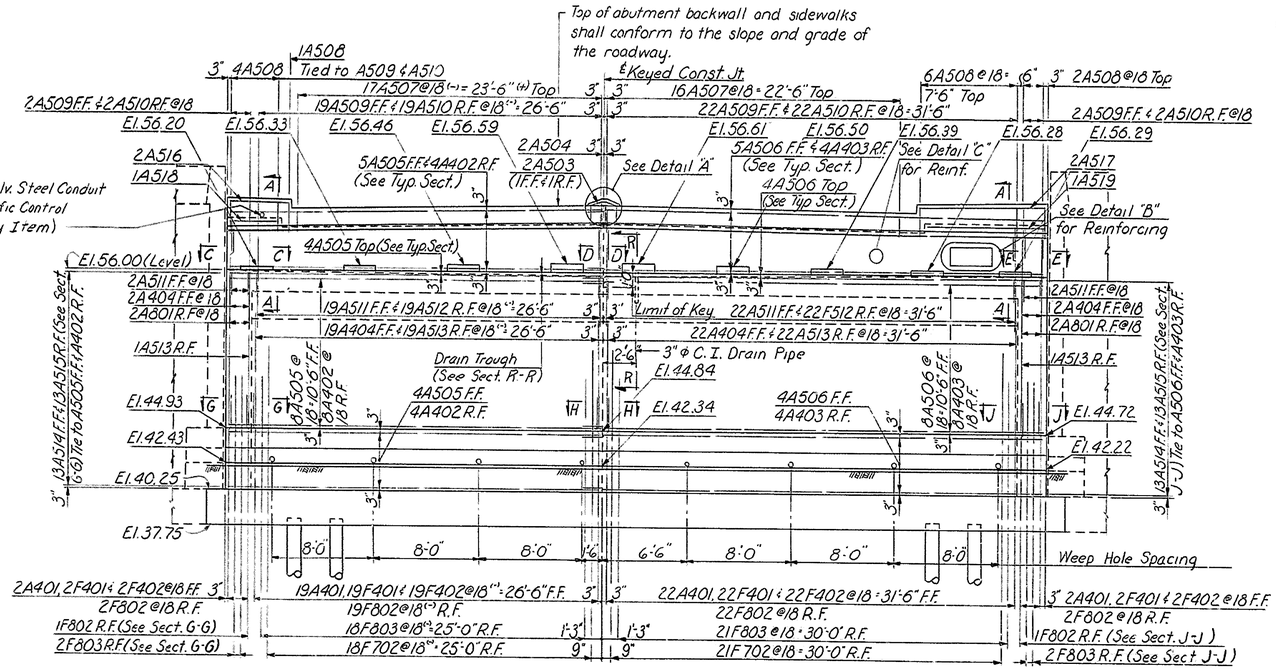

ELEVATION
Scale: 3/16" = 1'-0"

Note:
Cut and bend the horizontal and vertical abutment backwall reinforcement in the field to provide 3" clearance to the utility opening. Additional reinforcement is shown on Sh. #133

DELAWARE DEPARTMENT OF HIGHWAYS & TRANSPORTATION
DIVISION OF HIGHWAYS

STATE ROUTE 141 THRU NEWPORT

HIGHLAND AVENUE BRIDGE

WEST ABUTMENT
PLAN & ELEVATION

D.W.B.C.	SCALE	APPROVED BY:
T.R.G.S.	AS NOTED	
C.S.M.S.		BRIDGE ENGINEER

COUNTY	CONTRACT	P.D.A. REG. NO.	STATE	FED. AID PROJECT NO.	SHEET NO.	TOTAL SHEETS
NEW CASTLE	71-02-009	2	DEL.		131	301

NO.	REVISIONS	BY	DATE

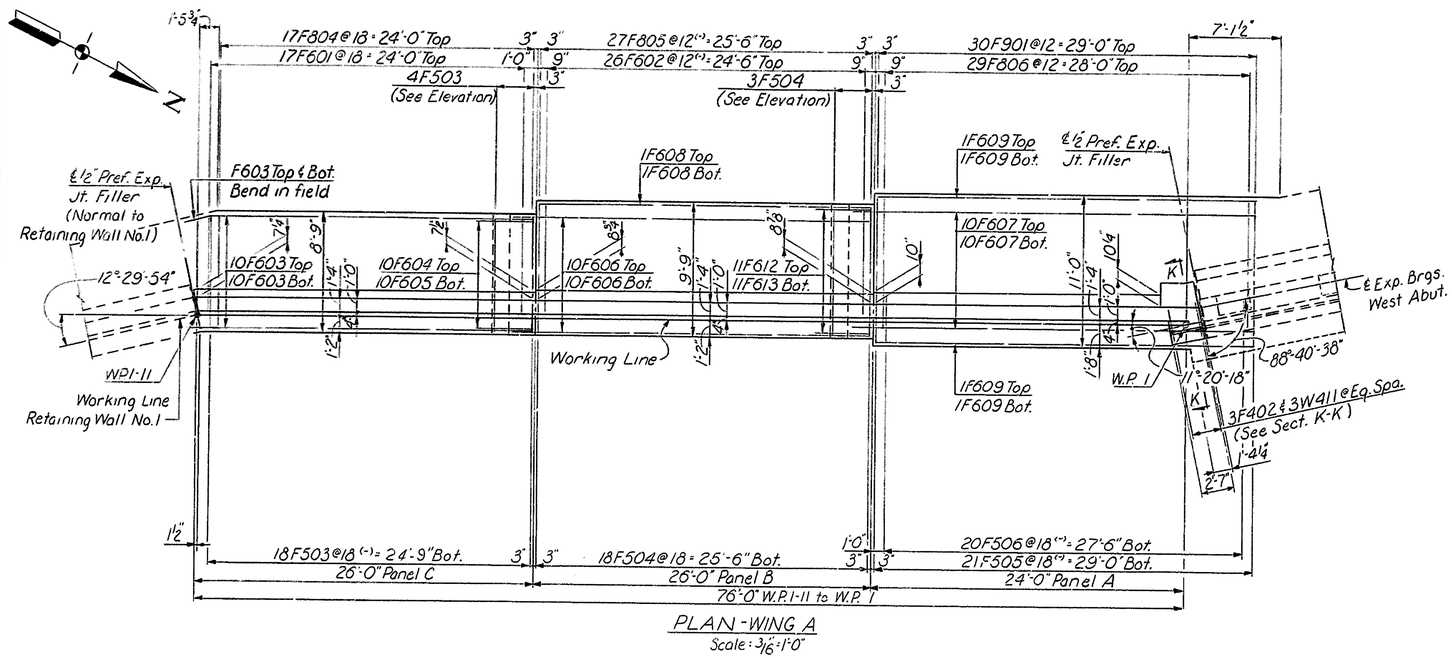

PLAN - WING A
Scale: 3/16" = 1'-0"

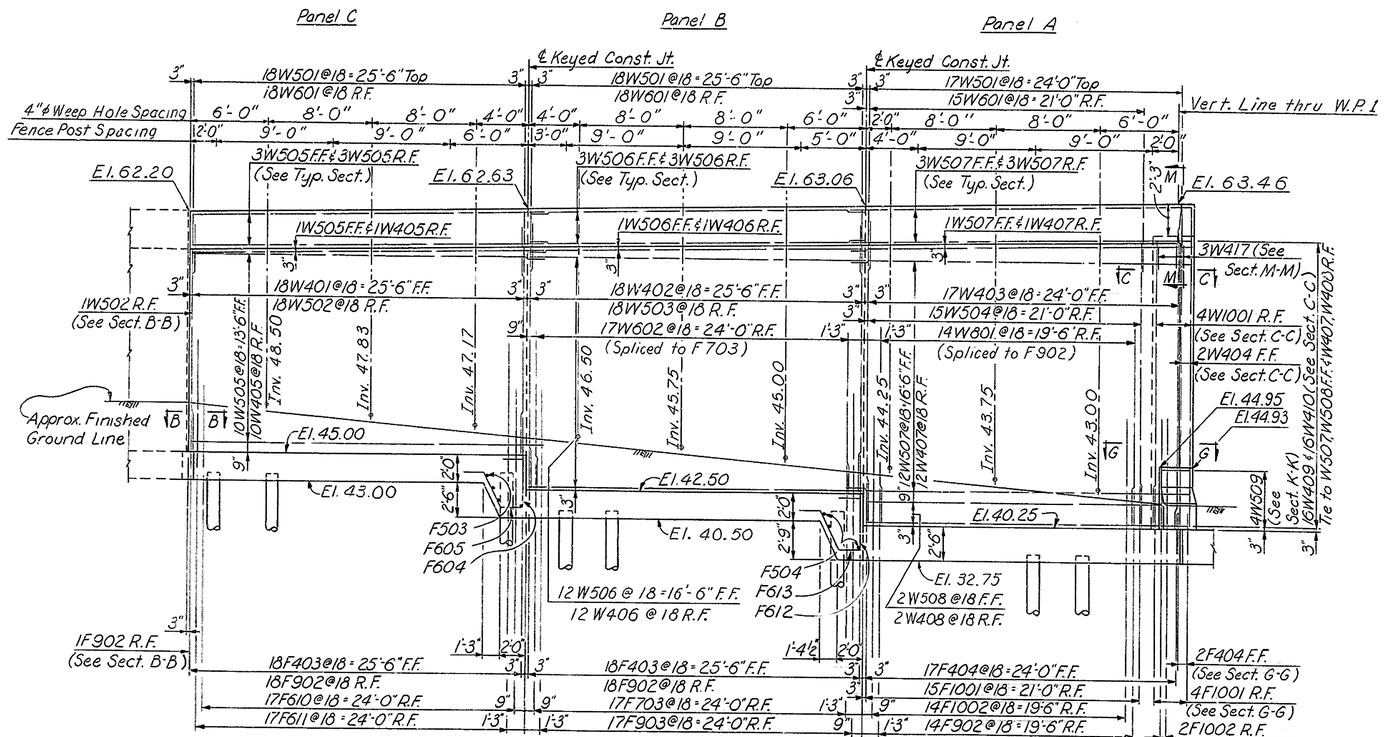

ELEVATION
Scale: 3/16" = 1'-0"

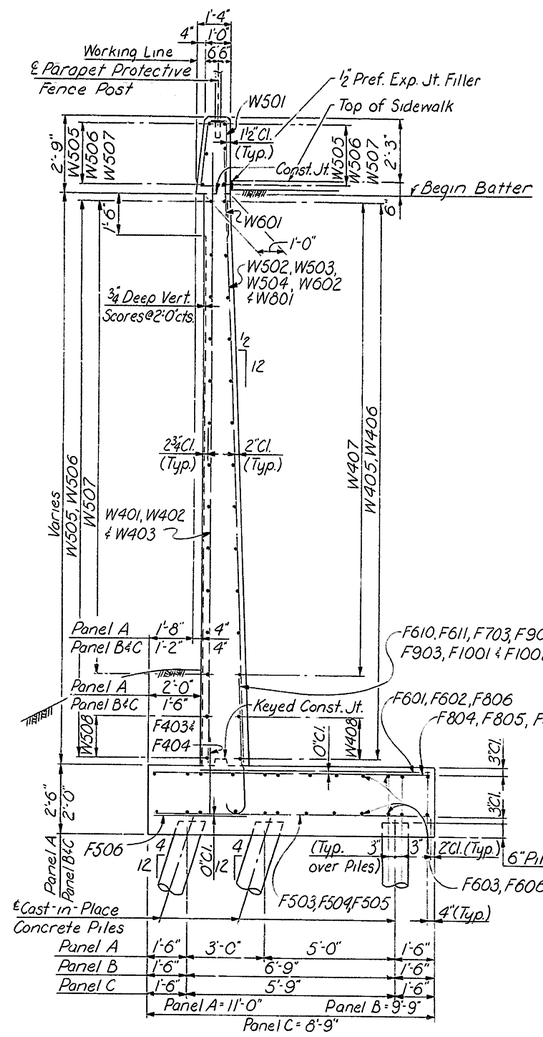

TYPICAL SECTION
Scale: 3/8" = 1'-0"

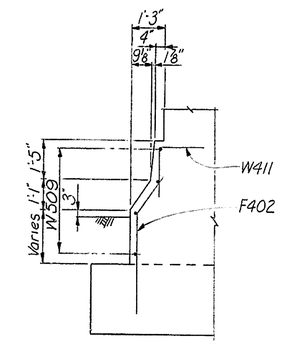

SECTION K-K
Scale: 3/8" = 1'-0"

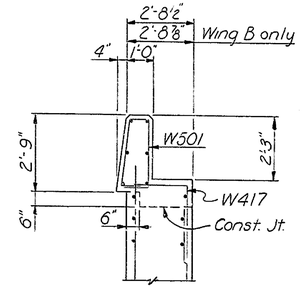

SECTION M-M
Scale: 3/8" = 1'-0"

For West Abutment Notes, See Sh. #130.

DELAWARE DEPARTMENT OF HIGHWAYS & TRANSPORTATION
DIVISION OF HIGHWAYS

STATE ROUTE 141 THRU NEWPORT
HIGHLAND AVENUE BRIDGE

WEST ABUTMENT - WING A
PLAN & ELEVATION

D. W.B.C.	SCALE	APPROVED BY:
T. R.G.S.	AS NOTED	
C.S.M.S.		BRIDGE ENGINEER

COUNTY	CONTRACT	P.R.A. REG. NO.	STATE	FED AID PROJECT NO.	SHEET NO.	TOTAL SHEETS
NEW CASTLE	71-02-009	2	DEL.		132	301

NO.	REVISIONS	BY	DATE

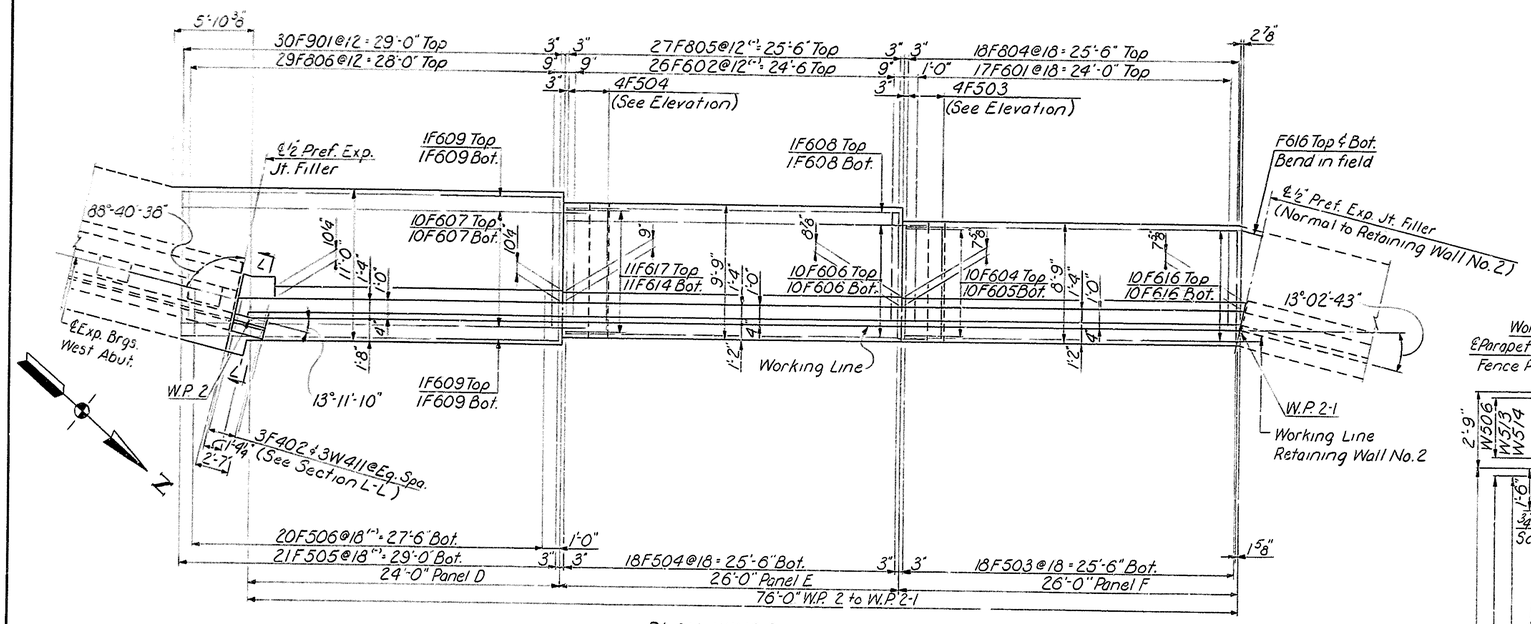

PLAN - WING B
Scale: 3/16" = 1'-0"

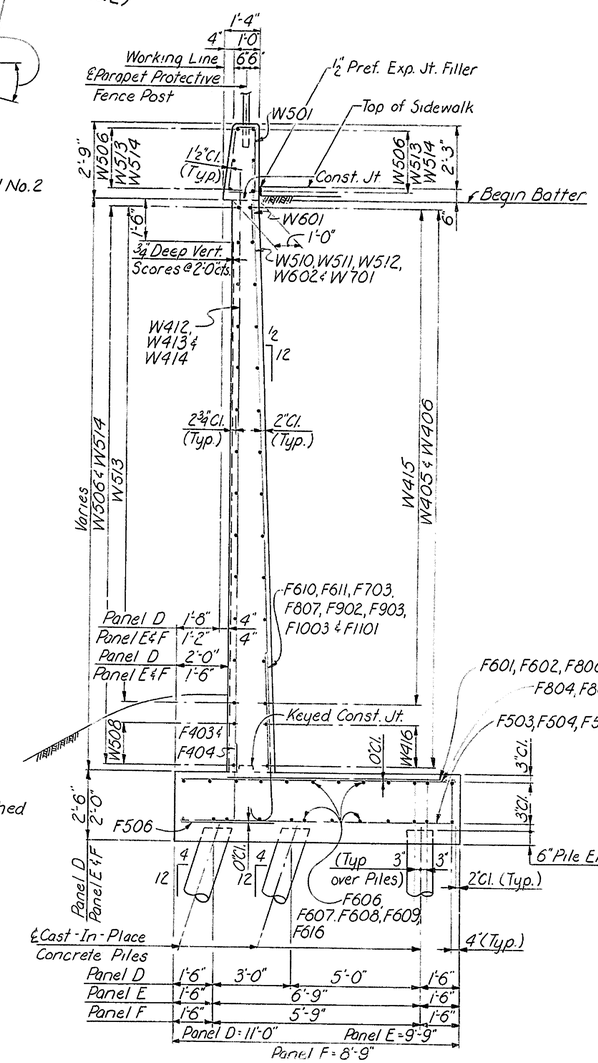

TYPICAL SECTION
Scale: 3/8" = 1'-0"

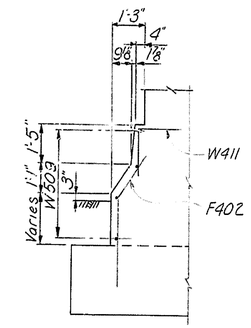

SECTION L-L
Scale: 3/16" = 1'-0"

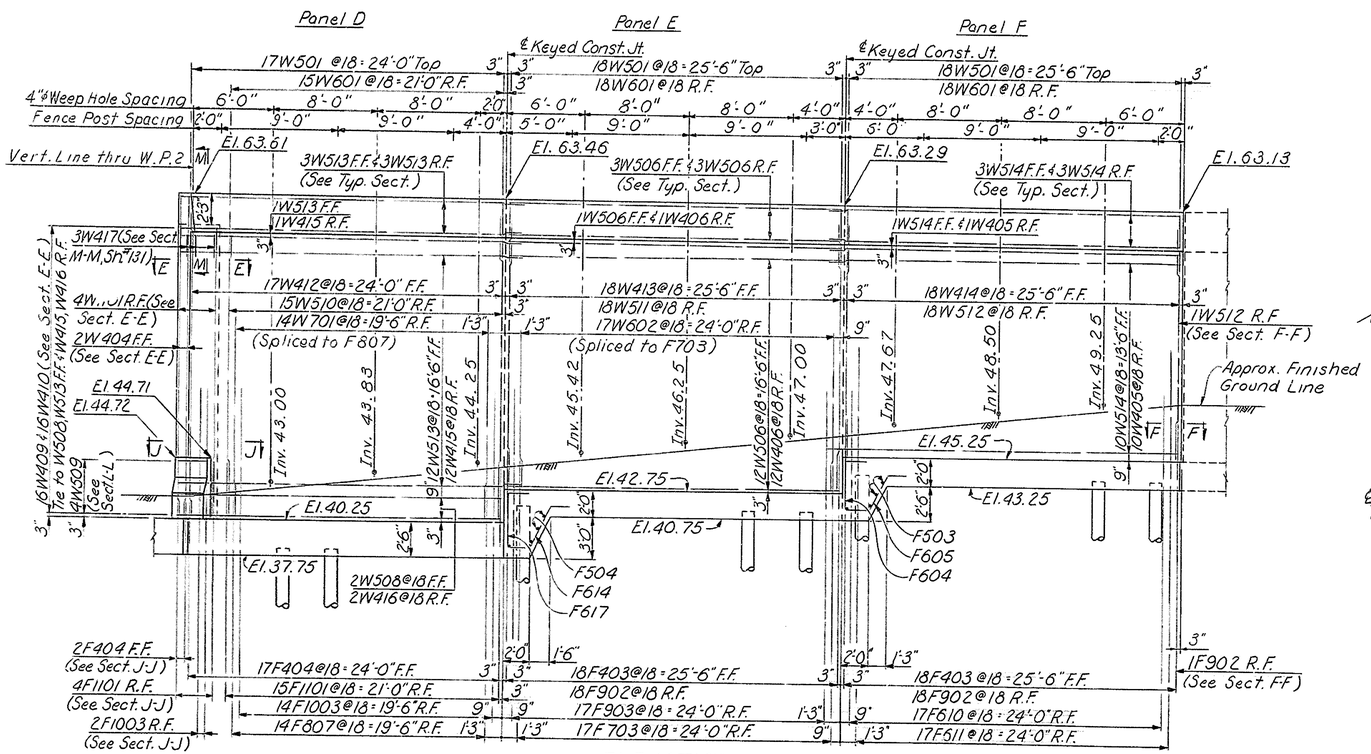

ELEVATION
Scale: 3/16" = 1'-0"

For West Abutment Notes, See Sh. # 130.
For Section M-M, See Sh. # 131.

DELAWARE DEPARTMENT OF HIGHWAYS & TRANSPORTATION
DIVISION OF HIGHWAYS

STATE ROUTE 141 THRU NEWPORT

HIGHLAND AVENUE BRIDGE

WEST ABUTMENT – WING B
PLAN & ELEVATION

D.W.B.C.	SCALE	APPROVED BY:
T.R.G.S.	AS NOTED	
C.S.M.S.		BRIDGE ENGINEER

COUNTY	CONTRACT	P. B. A. REG. NO.	STATE	FED. AID PROJECT NO.	SHEET NO.	TOTAL SHEETS
NEW CASTLE	71-02-009	2	DEL.		133	301

NO.	REVISIONS	BY	DATE

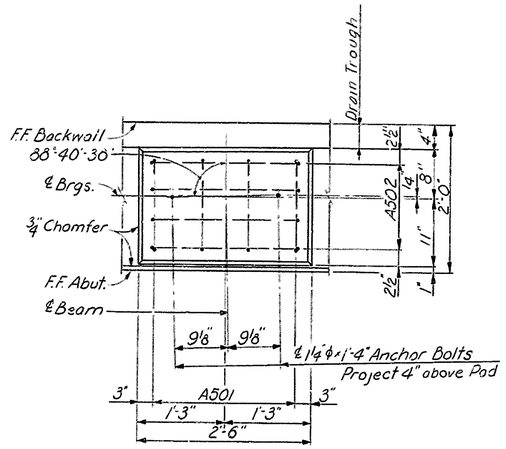

PAD DETAIL
Scale: 1" = 1'-0"

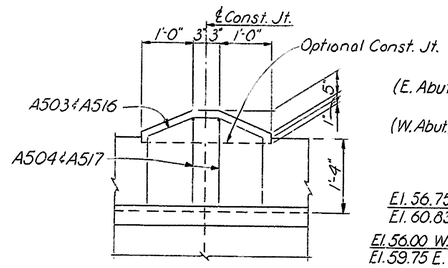

DETAIL "A"
Scale: ¾" = 1'-0"

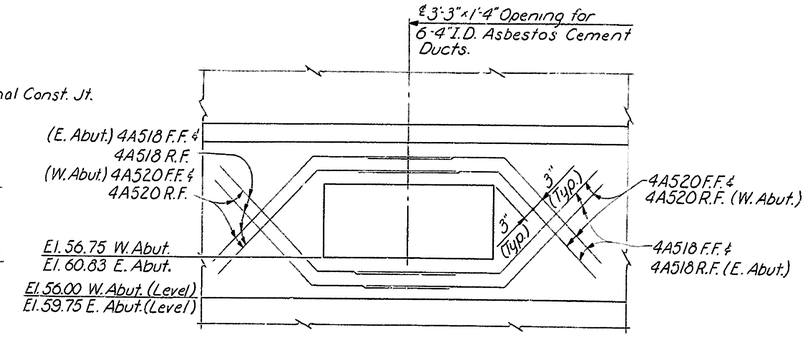

DETAIL "B"
Scale: ¾" = 1'-0"

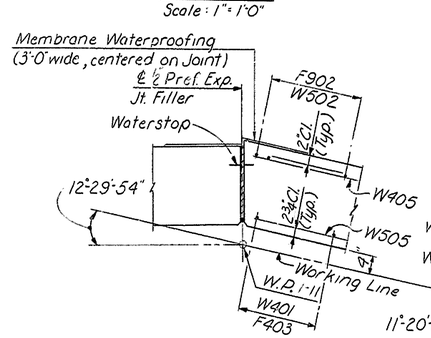

SECTION B-B
Scale: ¾" = 1'-0"

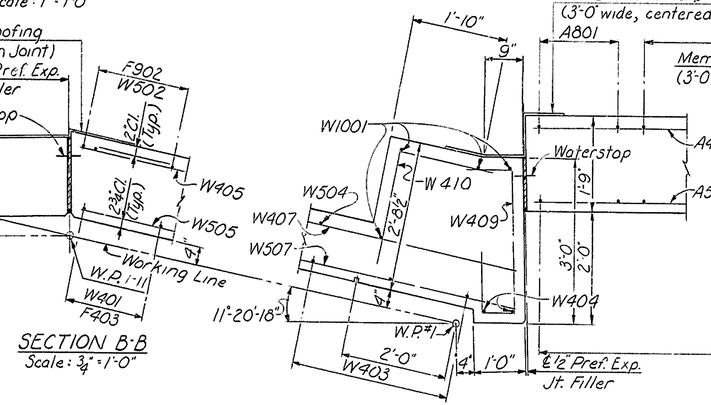

SECTION C-C
Scale: ¾" = 1'-0"

SECTION D-D
Scale: ¾" = 1'-0"

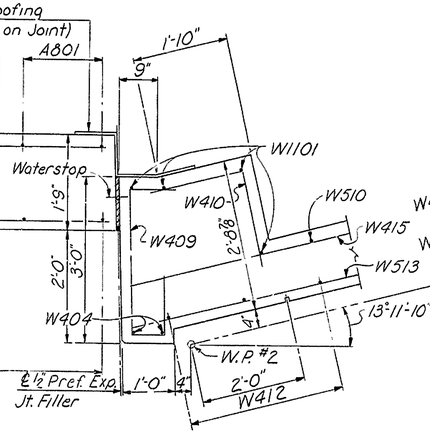

SECTION E-E
Scale: ¾" = 1'-0"

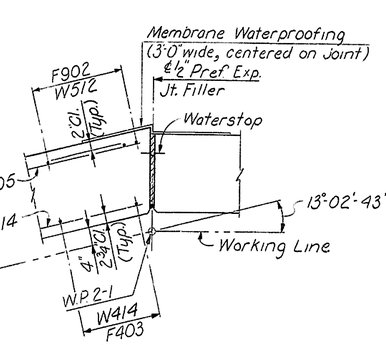

SECTION F-F
Scale: ¾" = 1'-0"

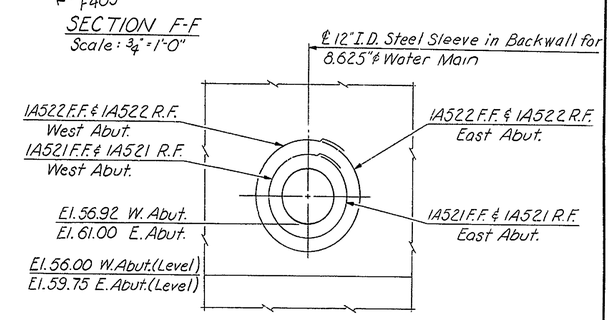

DETAIL "C"
Scale: ¾" = 1'-0"

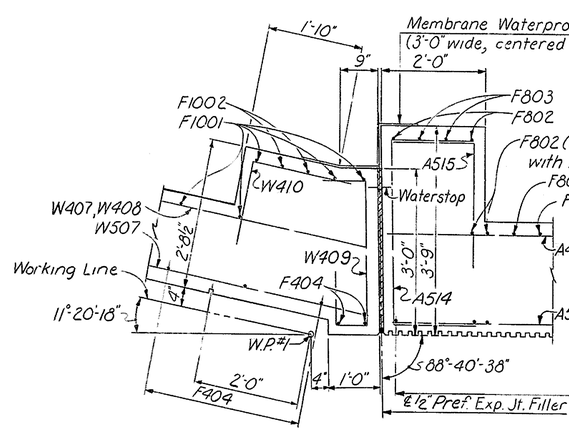

SECTION G-G
Scale: ¾" = 1'-0"

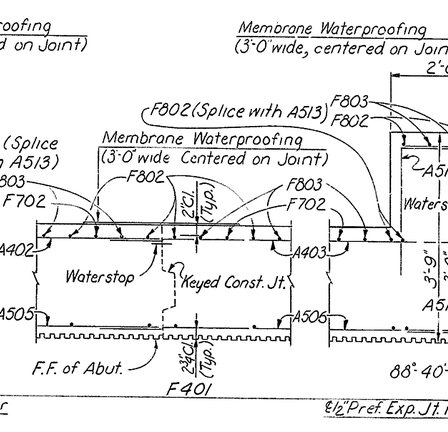

SECTION H-H
Scale: ¾" = 1'-0"

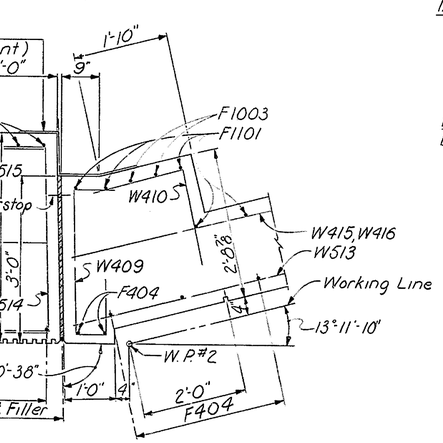

SECTION J-J
Scale: ¾" = 1'-0"

For West Abutment Notes, See Sh. # 130.

DELAWARE DEPARTMENT OF HIGHWAYS & TRANSPORTATION
DIVISION OF HIGHWAYS

STATE ROUTE 141 THRU NEWPORT
HIGHLAND AVENUE BRIDGE

WEST ABUTMENT DETAILS

D. W. B. C.	SCALE	APPROVED BY:
T. R. G. S.	AS NOTED	
C. S. M. S.		BRIDGE ENGINEER

BAR SCHEDULE WEST ABUTMENT

Mark	Size	No. Req'd. Abut.	No. Req'd. Wing A	No. Req'd. Wing B	Length	Type	Bending Dimensions A	B	C	D	E	F
F401	#4	45			7'-3"	Str.						
F402	#4	45	3	3	5'-6"	B	3'-6"	1'-7½"	2'-0"	1'-2"	0"	
F403	#4		36	36	2'-3"	Str.						
F404	#4		19	19	2'-9"	Str.						
F502	#5	36			10'-2"	Str.						
F503	#5		22	22	8'-5"	Str.						
F504	#5		21	22	9'-5"	Str.						
F505	#5		21	21	10'-8"	Str.						
F506	#5		20	20	3'-3"	Str.						
F601	#6		17	17	7'-0"	Str.						
F602	#6		26	26	7'-10"	Str.						
F603	#6		20		26'-3"	Str.						
F604	#6		10	10	5'-0"	C	1'-6"	3'-6"	0"			
F605	#6		10	10	5'-10"	B	1'-6"	1'-3"	2'-10"	2'-6"	1'-6"	
F606	#6		20	20	27'-8"	Str.						
F607	#6		20	20	31'-2"	Str.						
F608	#6		2	2	25'-8"	Str.						
F609	#6		4	4	29'-2"	Str.						
F610	#6		17	17	6'-9"	A	8"	6'-1"				
F611	#6		17	17	10'-0"	A	8"	9'-4"				
F612	#6		11		5'-3"	C	1'-6"	3'-9"	0"			
F613	#6		11		6'-1"	B	1'-6"	1'-4½"	3'-1"	2'-9"	1'-6"	
F614	#6			11	6'-4"	B	1'-6"	1'-6"	3'-4"	3'-0"	1'-6"	
F615	#6	44			34'-0"	Str.						
F616	#6			20	27'-6"	Str.						
F617	#6			11	5'-6"	C	1'-6"	4'-0"	0"			
F701	#7	36			10'-2"	Str.						
F702	#7	39			7'-0"	A	9"	6'-3"				
F703	#7		17	17	4'-2"	A	9"	3'-5"				
F801	#8	37			7'-10"	Str.						
F802	#8	47			5'-1"	A	10"	4'-3"				
F803	#8	43			6'-5"	A	10"	5'-7"				
F804	#8		17	18	8'-5"	Str.						
F805	#8		27	27	9'-5"	Str.						
F806	#8		29	29	9'-0"	Str.						
F807	#8			14	5'-1"	A	10"	4'-3"				
F901	#9		30	30	10'-8"	Str.						
F902	#9		51	37	5'-7"	A	1'-0"	4'-7"				
F903	#9		17	17	9'-7"	A	1'-0"	8'-7"				
F1001	#10		19		6'-0"	A	1'-1"	4'-11"				
F1002	#10		16		10'-9"	A	1'-1"	9'-8"				
F1003	#10			16	12'-3"	A	1'-1"	11'-2"				
F1101	#11			19	7'-2"	A	1'-2"	6'-0"				
A401	#4	45			3'-11"	C	1'-9"	2'-2"	0"			
A402	#4	16			28'-11"	Str.						
A403	#4	16			35'-0"	Str.						
A404	#4	45			11'-0"	Str.						
A501	#5	36			4'-9"	C	1'-9"	1'-3"	1'-9"			
A502	#5	36			5'-8"	C	1'-9"	2'-2"	1'-9"			
A503	#5	2			4'-8"	G	1'-2"	4	10"	6"	11"	
A504	#5	2			3'-4"	C	1'-5"	6"	1'-5"			
A505	#5	21			28'-11"	Str.						
A506	#5	21			35'-3"	Str.						
A507	#5	33			4'-7"	F	6½"	6½"	9"	1'-0"	1'-1"	1'-9"
A508	#5	13			5'-11"	F	6½"	6½"	9"	1'-8"	1'-1"	2'-5"
A509	#5	45			4'-9"	Str.						
A510	#5	45			3'-0"	C	1'-0"	2'-0"	0"			
A511	#5	45			4'-9"	C	1'-6"	3'-3"				
A512	#5	41			6'-0"	B	4'-6"	2'-5⅜"	3'-6"	2'-5⅜"		
A513	#5	43			12'-9"	Str.						
A514	#5	26			6'-4"	C	1'-6"	3'-4"	1'-6"			
A515	#5	26			3'-9"	C	1'-6"	2'-3"				
A516	#5	2			4'-8"	Str.						
A517	#5	2			9'-8"	Str.						
A518	#5	1			3'-10"	Str.						
A519	#5	1			9'-0"	Str.						
*A520	#5	16			5'-4"	B	2'-8"	1'-10½"	2'-8"	1'-10½"		
*A521	#5	2			6'-0"	H	1'-6"	1'-3"				
*A522	#5	2			7'-7"	H	2'-0"	1'-3"				
A801	#8	4			19'-3"	Str.						
W401	#4		18		16'-0"	Str.						
W402	#4		18		18'-9"	Str.						
W403	#4		17		21'-6"	Str.						
W404	#4		2	2	23'-0"	Str.						
W405	#4		11	11	27'-0"	Str.						
W406	#4		13	13	26'-0"	Str.						
W407	#4		13		25'-10"	Str.						
W408	#4		2		24'-8"	Str.						
W409	#4		16	16	5'-1"	E	9"	7"	1'-2"	2'-7"		
W410	#4		16	16	4'-0"	C	2'-0"	2'-0"	0"			
W411	#4		3	3	3'-6"	C	1'-9"	1'-9"	0"			
W412	#4			17	21'-8"	Str.						
W413	#4			18	19'-0"	Str.						
W414	#4			18	16'-4"	Str.						
W415	#4			13	26'-3"	Str.						
W416	#4			2	25'-0"	Str.						
W417	#4		3	3	4'-0"	C	1'-10"	2'-2"	0"			
W501	#5		53	53	7'-8"	D	2'-6"	11¼"	9¼"	3½"	2'-6¼"	
W502	#5		19		14'-5"	Str.						
W503	#5		18		17'-4"	Str.						
W504	#5		15		20'-0"	Str.						
W505	#5		17		27'-1"	Str.						
W506	#5		19	19	26'-0"	Str.						
W507	#5		19		26'-3"	Str.						
W508	#5		2	2	25'-0"	Str.						
W509	#5		4	4	2'-3"	Str.						
W510	#5			15	20'-4"	Str.						
W511	#5			18	17'-8"	Str.						
W512	#5			19	15'-0"	Str.						
W513	#5			19	26'-6"	Str.						
W514	#5			17	27'-3"	Str.						
W601	#6		51	51	3'-6"	Str.						
W602	#6		17	17	11'-6"	Str.						
W701	#7			14	14'-8"	Str.						
W801	#8		14		14'-4"	Str.						
W1001	#10		4		20'-9"	Str.						
W1101	#11			4	21'-0"	Str.						

BENDING DIAGRAM

Note: All dimensions are out to out.

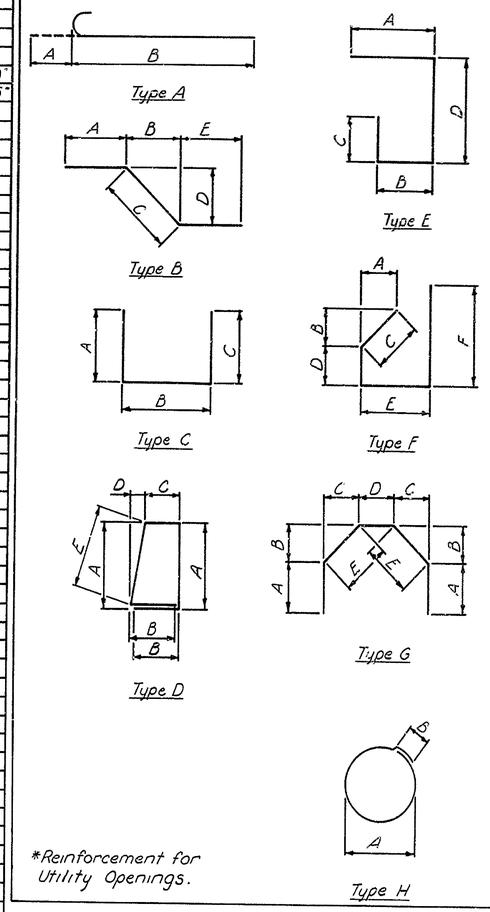

*Reinforcement for Utility Openings.

COUNTY	CONTRACT	P.B.A. REG. NO.	STATE	FED. AID PROJECT NO.	SHEET NO.	TOTAL SHEETS
NEW CASTLE	71-02-009	2	DEL		134	301

NO.	REVISIONS	BY	DATE

DELAWARE
DEPARTMENT OF HIGHWAYS & TRANSPORTATION
DIVISION OF HIGHWAYS

STATE ROUTE 141 THRU NEWPORT

HIGHLAND AVENUE BRIDGE

WEST ABUTMENT
BAR SCHEDULE

D. W.B.C.
T. R.G.S.
C. S.M.S.

SCALE: AS NOTED

APPROVED BY:

BRIDGE ENGINEER

COUNTY	CONTRACT	F.H.A. REG. NO.	STATE	FED. AID PROJECT NO.	SHEET NO.	TOTAL SHEETS
NEW CASTLE	71-02-009	2	DEL.		135	301

NO.	REVISIONS	BY	DATE
1	Revised ℄ Brg. Sta. on Plan View	T.F.F.	12-2-74

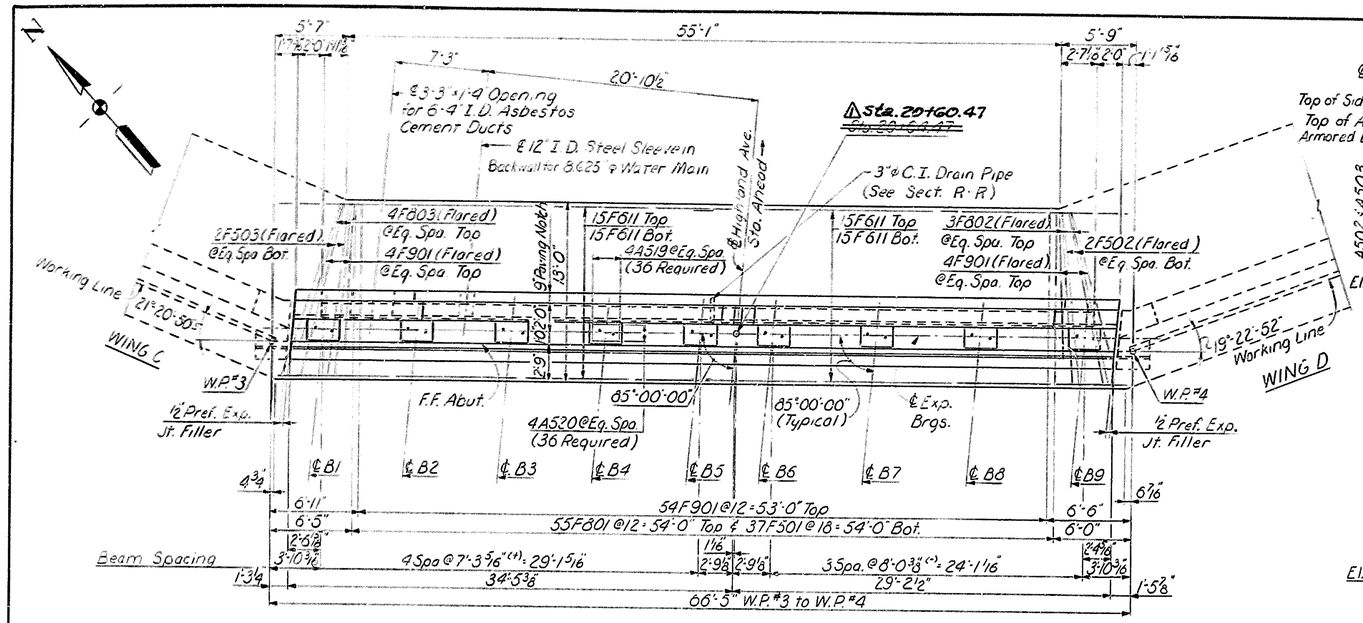

PLAN-EAST ABUTMENT
Scale: 3/16" = 1'-0"

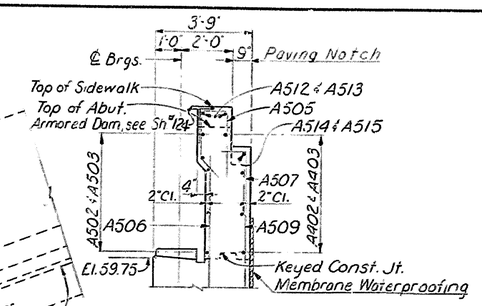

SECTION A-A
Scale: 3/8" = 1'-0"

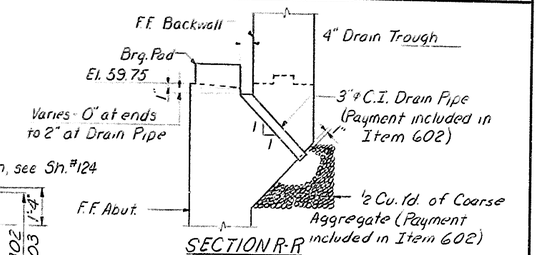

SECTION R-R
Scale: 1/2" = 1'-0"

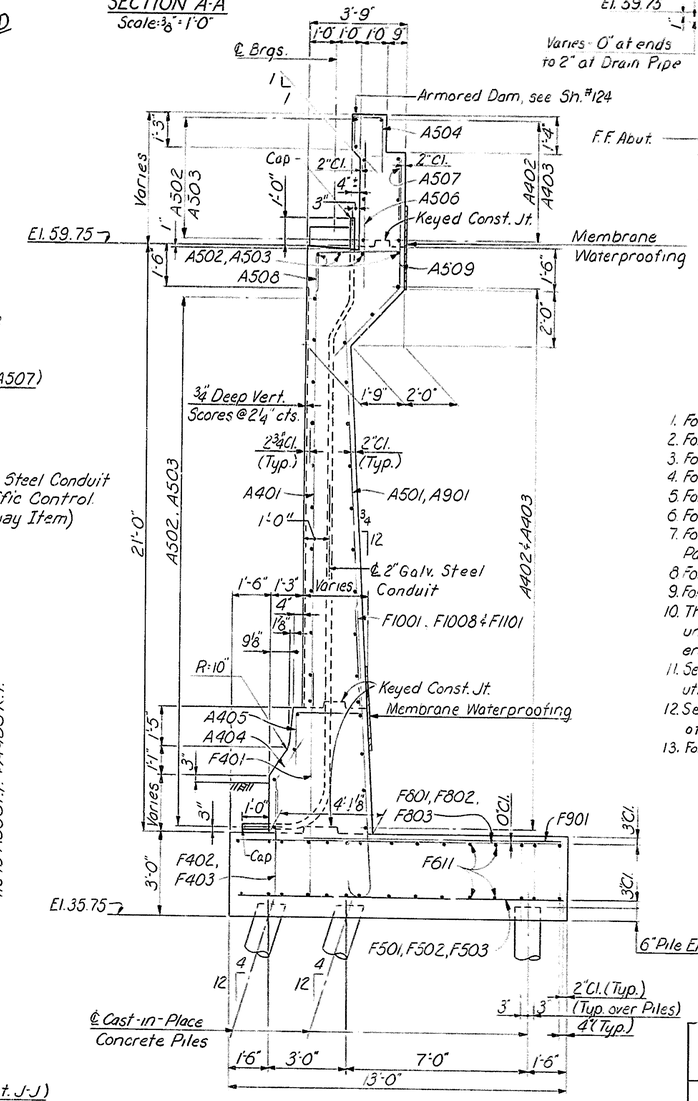

TYPICAL SECTION
Scale: 3/8" = 1'-0"

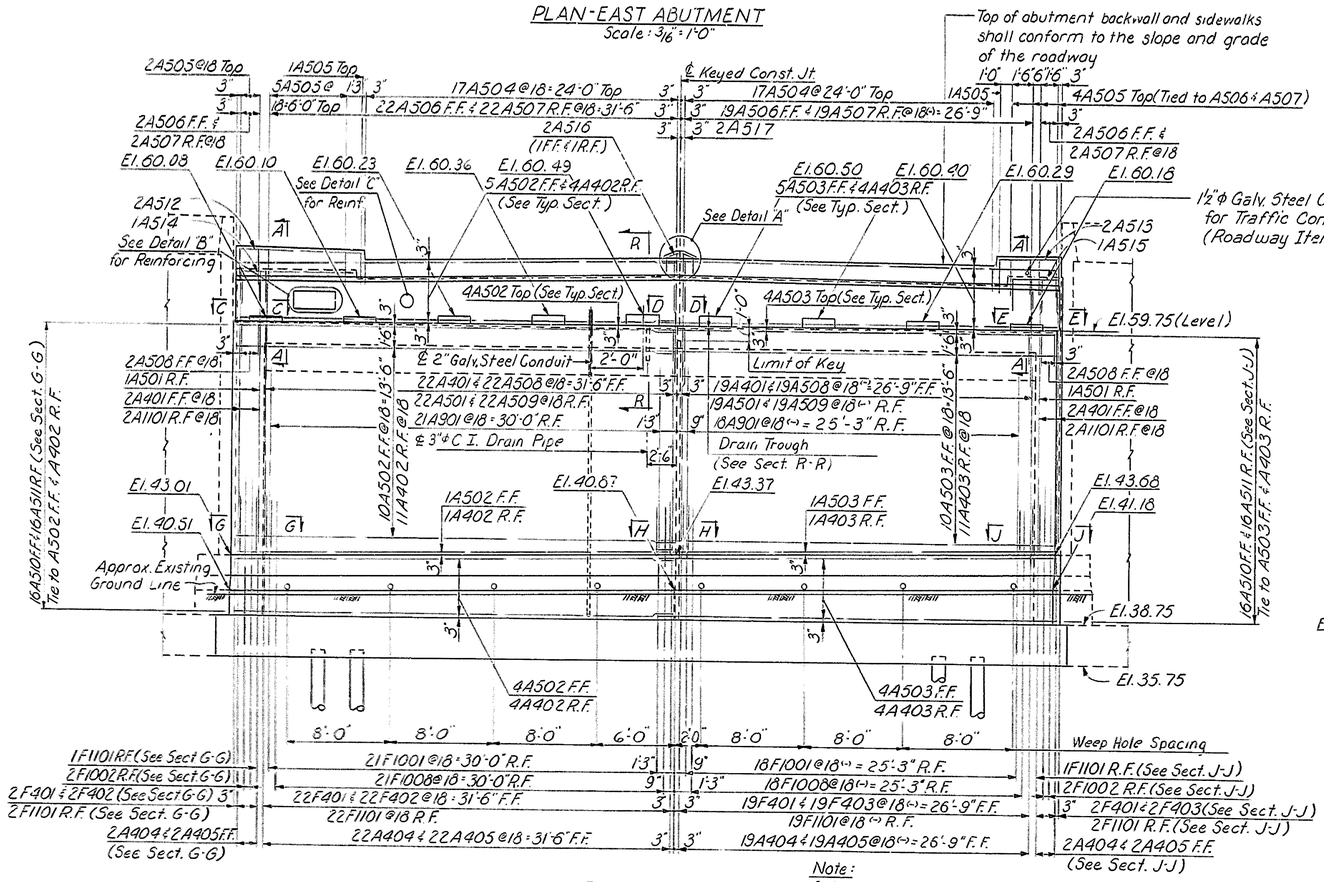

ELEVATION
Scale: 3/16" = 1'-0"

EAST ABUTMENT NOTES

1. For General Notes, see Sh.#100
2. For Architectural Details, see Sh.#113.
3. For Joint Details, see Sh.#116.
4. For Drainage Details see Sh.#108.
5. For Wing C Plan & Elevation, see Sh.#136.
6. For Wing D Plan & Elevation, see Sh.#137.
7. For Sections B-B thru J-J and Bearing Pad Detail, see Sh.#138.
8. For Details A, B & C, see Sh.#133.
9. For Bar Schedule, see Sh.#139.
10. The abutment backwall shall not be placed until after the structural steel has been erected and the deck slab placed.
11. See Special Provisions for grouting the utility opening in the abutment backwall.
12. See the Roadway Lighting Plans for location of conduit and electrical details not shown.
13. For Parapet Protective Fence Details, see Sh.#114.

DELAWARE DEPARTMENT OF HIGHWAYS & TRANSPORTATION
DIVISION OF HIGHWAYS

STATE ROUTE 141 THRU NEWPORT
HIGHLAND AVENUE BRIDGE

EAST ABUTMENT
PLAN & ELEVATION

D. W. B. C.	SCALE	APPROVED BY:
T. R. G. S.	AS NOTED	
C. S. M. S.		BRIDGE ENGINEER

COUNTY	CONTRACT	P.E.A. REG. NO.	STATE	FED. AID PROJECT NO.	SHEET NO.	TOTAL SHEETS
NEW CASTLE	71-02-009	2	DEL.		136	301

NO.	REVISIONS	BY	DATE

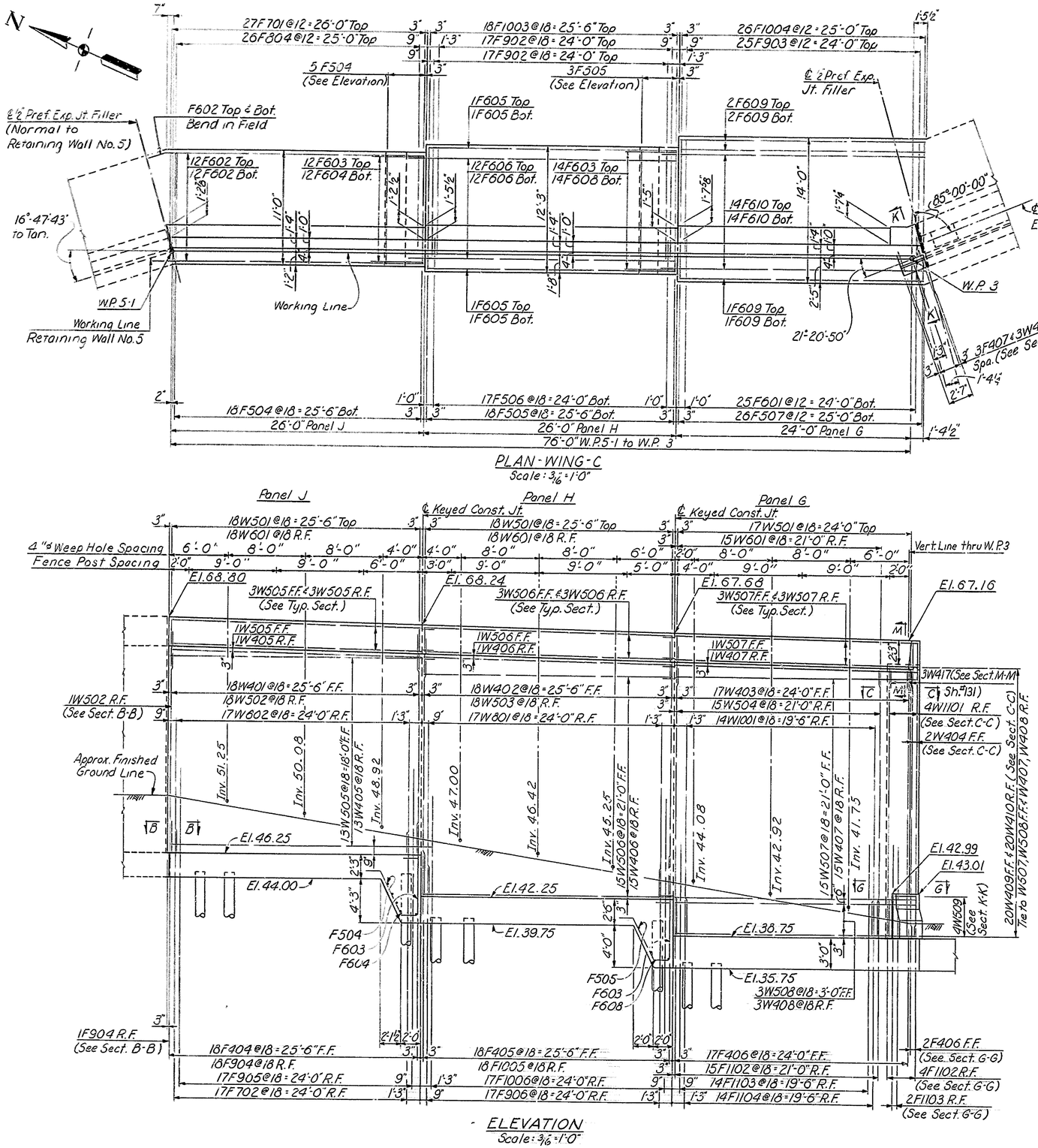

PLAN - WING - C
Scale: 3/16" = 1'-0"

ELEVATION
Scale: 3/16" = 1'-0"

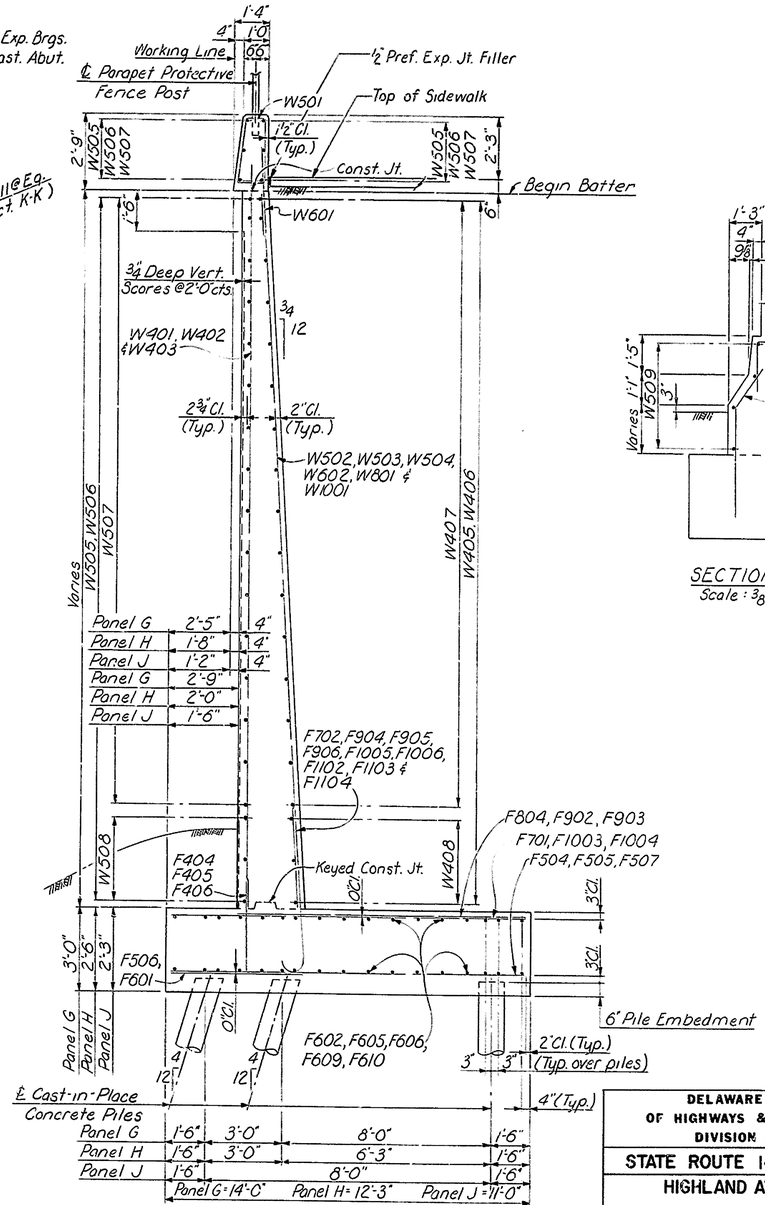

TYPICAL SECTION
Scale: 3/8" = 1'-0"

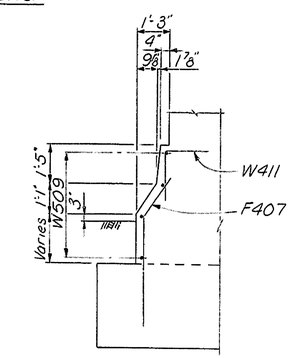

SECTION K-K
Scale: 3/8" = 1'-0"

For East Abutment Notes, see Sh. #135
For Section M-M, see Sh. #131

DELAWARE DEPARTMENT OF HIGHWAYS & TRANSPORTATION
DIVISION OF HIGHWAYS

STATE ROUTE 141 THRU NEWPORT
HIGHLAND AVENUE BRIDGE

EAST ABUTMENT - WING C
PLAN & ELEVATION

D. W.B.C.	SCALE	APPROVED BY:
T. R.G.S.	AS NOTED	
C. S.M.S.		BRIDGE ENGINEER

COUNTY	CONTRACT	P. & A. REG. NO.	STATE	FED. AID PROJECT NO.	SHEET NO.	TOTAL SHEETS
NEW CASTLE	71-02-009	2	DEL.		137	301

NO.	REVISIONS	BY	DATE

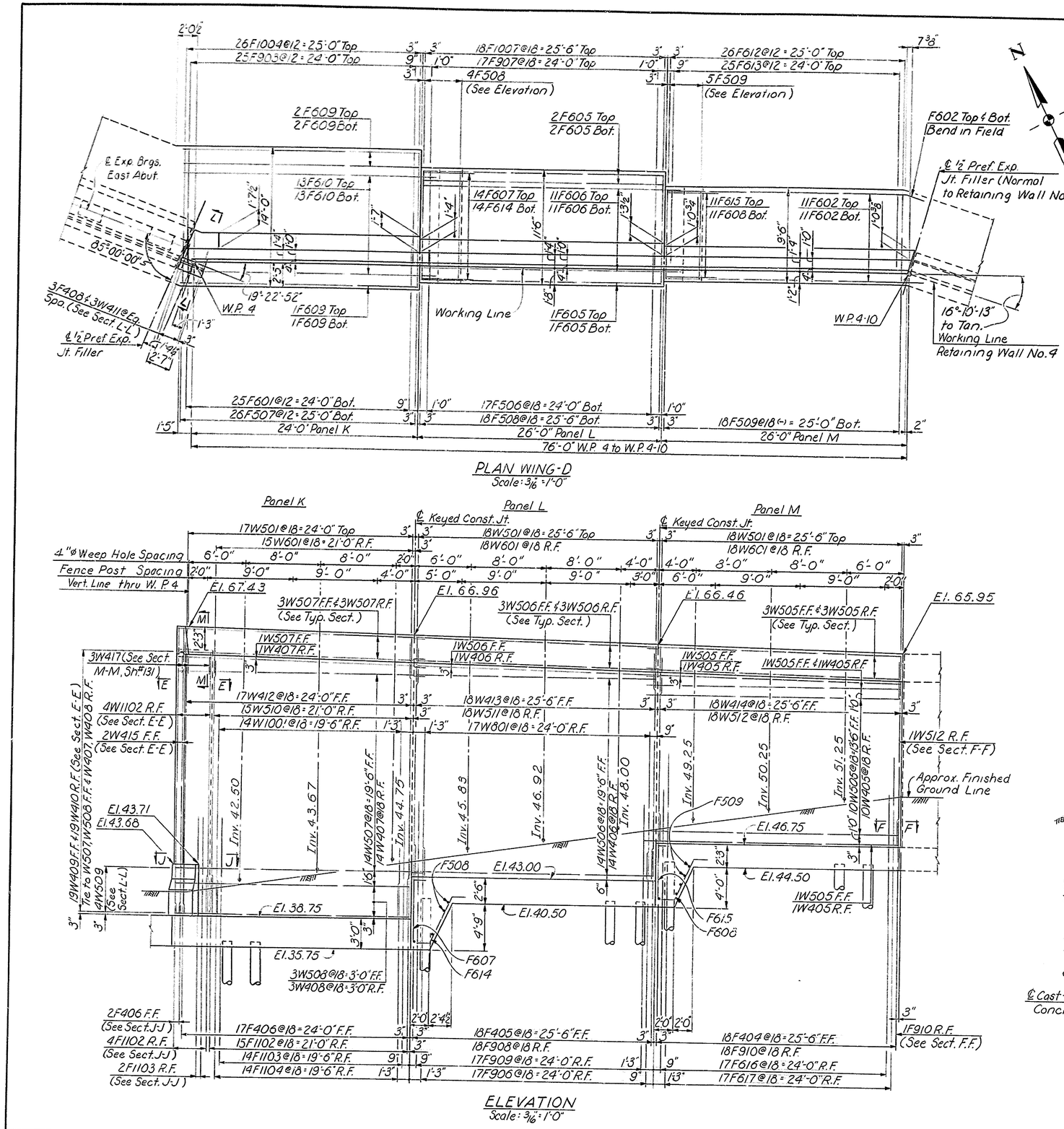

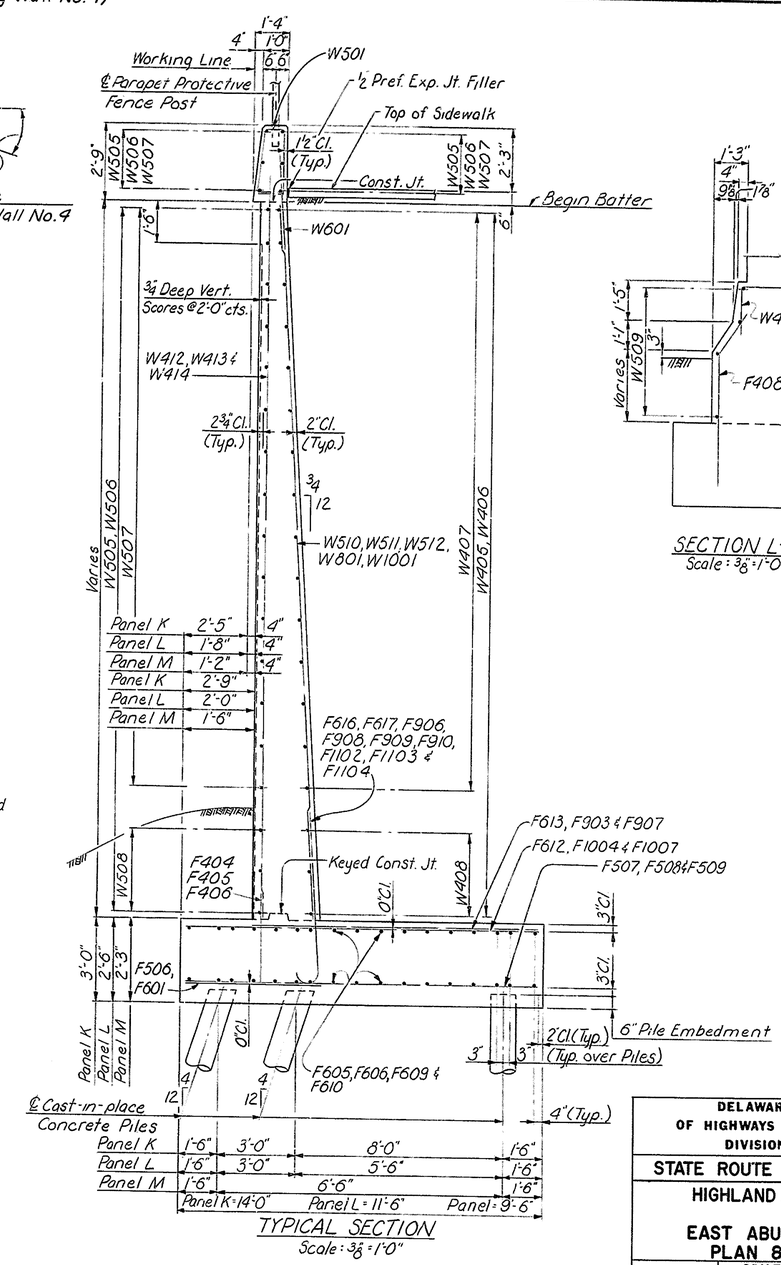

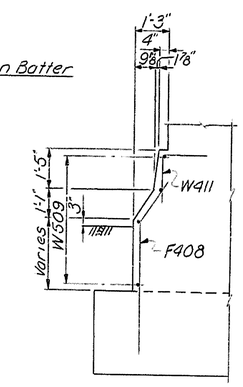

For East Abutment Notes, see Sh. #135
For Section M-M, see Sh. #131

DELAWARE DEPARTMENT OF HIGHWAYS & TRANSPORTATION
DIVISION OF HIGHWAYS

STATE ROUTE 141 THRU NEWPORT
HIGHLAND AVENUE BRIDGE

EAST ABUTMENT - WING D
PLAN & ELEVATION

D. W.B.C.	SCALE	APPROVED BY:
T. R.G.S.	AS NOTED	
C. S.M.S.		BRIDGE ENGINEER

COUNTY	CONTRACT	P. & A. REP. NO.	STATE	FED. AID PROJECT NO.	SHEET NO.	TOTAL SHEETS
NEW CASTLE	71-02-009	2	DEL.		138	301

NO.	REVISIONS	BY	DATE

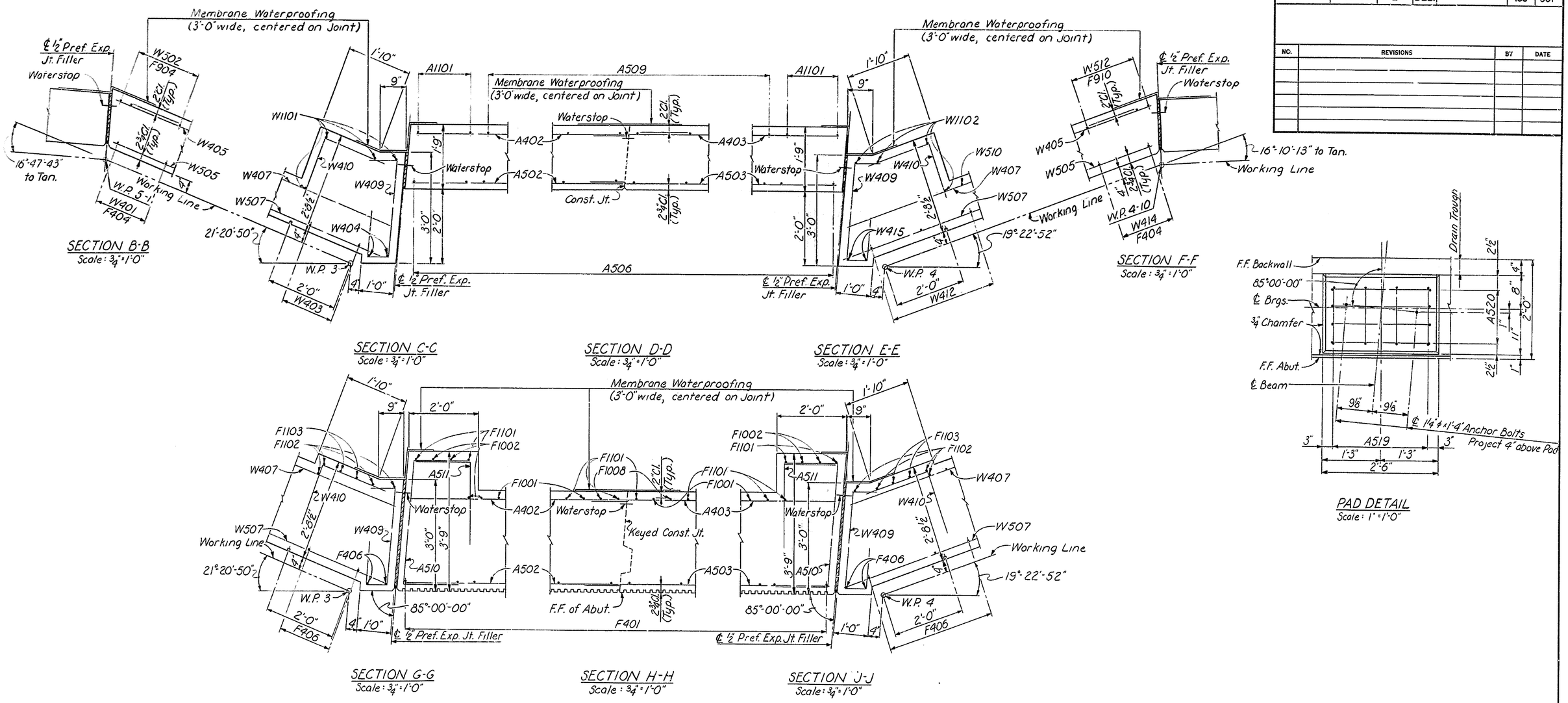

For West Abutment Notes, see Sh. # 135

DELAWARE DEPARTMENT OF HIGHWAYS & TRANSPORTATION
DIVISION OF HIGHWAYS

STATE ROUTE 141 THRU NEWPORT

HIGHLAND AVENUE BRIDGE

EAST ABUTMENT DETAILS

D. W.B.C.	SCALE	APPROVED BY:
T. R.G.S.	AS NOTED	
C. S.M.S.		BRIDGE ENGINEER

BAR SCHEDULE EAST ABUTMENT

Mark	Size	No. Req'd Abut.	No. Req'd Wing C	No. Req'd Wing D	Length	Type	Bending Dimensions A	B	C	D	E	F
F401	#4	45			8'-9"	Str.						
F402	#4	24			4'-0"	Str.						
F403	#4	21			3'-9"	Str.						
F404	#4		18	18	2'-6"	Str.						
F405	#4		18	18	2'-9"	Str.						
F406	#4		19	19	3'-3"	Str.						
F407	#4		3		5'-9"	B	3'-9"	1'-7½"	2'-0"	1'-2"	0"	
F408	#4			3	6'-9"	B	4'-9"	1'-7½"	2'-0"	1'-2"	0"	
F501	#5	37			12'-8"	Str.						
F502	#5	2			13'-5"	Str.						
F503	#5	2			13'-4" to 13'-7"	Str.	Vary lea. by 3"					
F504	#5		23		10'-8"	Str.						
F505	#5		21		11'-11"	Str.						
F506	#5		17	17	3'-1"	Str.						
F507	#5		26	26	13'-8"	Str.						
F508	#5			22	11'-2"	Str.						
F509	#5			23	9'-2"	Str.						
F601	#6		25	25	4'-6"	Str.						
F602	#6		24	22	27'-9"	Str.						
F603	#6		26		7'-0"	C	1'-6"	5'-6"	0"			
F604	#6		12		7'-9"	B	1'-6"	2'-1½"	4'-9"	4'-3"	1'-6"	
F605	#6		4	6	25'-8"	Str.						
F606	#6		24	22	27'-10"	Str.						
F607	#6			14	7'-9"	C	1'-6"	6'-3"	0"			
F608	#6		14	11	7'-6"	B	1'-6"	2'-0"	4'-6"	4'-0"	1'-6"	
F609	#6		6	6	25'-3"	Str.						
F610	#6		28	26	27'-3"	Str.						
F611	#6	60			33'-8"	Str.						
F612	#6			26	9'-2"	Str.						
F613	#6			25	7'-4"	Str.						
F614	#6			14	8'-4"	B	1'-6"	2'-4½"	5'-4"	4'-9"	1'-6"	
F615	#6			11	6'-9"	C	1'-6"	5'-3"	0"			
F616	#6			17	7'-6"	A	8"	6'-10"				
F617	#6			17	11'-3"	A	8"	10'-7"				
F701	#7		27		10'-8"	Str.						
F702	#7		17		4'-5"	A	9"	3'-8"				
F801	#8	55			12'-8"	Str.						
F802	#8	3			12'-9" to 13'-0"	Str.	Vary lea. by 1½"					
F803	#8	4			12'-9" to 13'-3"	Str.	Vary lea. by 2"					
F804	#8		26		8'-10"	Str.						
F901	#9	62			10'-9"	Str.						
F902	#9		34		10'-5"	Str.						
F903	#9		25	25	11'-4"	Str.						
F904	#9		19		5'-6"	A	1'-0"	4'-6"				
F905	#9		17		10'-10"	A	1'-0"	9'-10"				
F906	#9		17	17	5'-7"	A	1'-0"	4'-7"				
F907	#9			17	9'-4"	Str.						
F908	#9			18	5'-10"	A	1'-0"	4'-10"				
F909	#9			17	10'-5"	A	1'-0"	9'-5"				
F910	#9			19	5'-4"	A	1'-0"	4'-4"				
F1001	#10	39			10'-10"	A	1'-1"	9'-9"				
F1002	#10	4			13'-4"	A	1'-1"	12'-3"				
F1003	#10		18		11'-11"	Str.						
F1004	#10		26	26	13'-8"	Str.						
F1005	#10		18		6'-6"	A	1'-1"	5'-5"				
F1006	#10		17		12'-0"	A	1'-1"	10'-11"				
F1007	#10			18	11'-2"	Str.						
F1008	#10	39			11'-4"	A	1'-1"	10'-3"				

Mark	Size	No. Req'd Abut.	No. Req'd Wing C	No. Req'd Wing D	Length	Type	Bending Dimensions A	B	C	D	E	F
F1101	#11	47			11'-2"	A	1'-2"	10'-0"				
F1102	#11		19	19	7'-4"	A	1'-2"	6'-2"				
F1103	#11		16	16	13'-3"	A	1'-2"	12'-1"				
F1104	#11		14	14	6'-11"	A	1'-2"	5'-9"				
A401	#4	45			15'-9"	Str.						
A402	#4	20			34'-0"	Str.						
A403	#4	20			30'-3"	Str.						
A404	#4	45			3'-6"	B	1'-6"	1'-7½"	2'-0"	1'-2"	0"	
A405	#4	45			4'-3"	C	1'-9"	2'-6"	0"			
A501	#5	43			14'-0"	Str.						
A502	#5	24			34'-0"	Str.						
A503	#5	24			30'-7"	Str.						
A504	#5	34			4'-7"	F	6½"	6½"	9"	1'-0"	1'-1"	1'-9"
A505	#5	13			5'-11"	F	6½"	6½"	9"	1'-8"	1'-1"	2'-5"
A506	#5	45			5'-0"	Str.						
A507	#5	45			3'-6"	C	1'-3"	2'-3"	0"			
A508	#5	45			5'-6"	C	2'-3"	3'-3"	0"			
A509	#5	41			8'-0"	B	4'-6"	2'-5⅝"	3'-6"	2'-5⅝"	0"	
A510	#5	32			6'-4"	C	1'-6"	3'-4"	1'-6"			
A511	#5	32			3'-9"	C	1'-6"	2'-3"	0"			
A512	#5	2			9'-8"	Str.						
A513	#5	2			4'-8"	Str.						
A514	#5	1			9'-0"	Str.						
A515	#5	1			3'-10"	Str.						
A516	#5	2			4'-8"	G	1'-2"	4"	10"	6"	11"	
A517	#5	2			3'-4"	C	1'-5"	6"	1'-5"			
*A518	#5	16			5'-4"	B	2'-8"	1'-10½"	2'-8"	1'-10½"	0"	
A519	#5	36			4'-9"	C	1'-9"	1'-3"	1'-9"			
A520	#5	36			5'-8"	C	1'-9"	2'-2"	1'-9"			
*A521	#5	2			6'-0"	H	1'-6"	1'-3"				
*A522	#5	2			7'-7"	H	2'-0"	1'-3"				
A901	#9	39			14'-0"	Str.						
A1101	#11	4			19'-4"	Str.						
W401	#4		18		20'-10"	Str.						
W402	#4		18		24'-3"	Str.						
W403	#4		17		26'-8"	Str.						
W404	#4		2		28'-3"	Str.						
W405	#4		14	13	27'-0"	Str.						
W406	#4		16	15	25'-8"	Str.						
W407	#4		16	15	25'-9"	Str.						
W408	#4		3	3	25'-0"	Str.						
W409	#4		20	19	5'-1	E	9"	7"	1'-2"	2'-7"		
W410	#4		20	19	4'-0"	C	2'-0"	2'-0"	0"			
W411	#4		3	3	3'-6"	C	1'-9"	1'-9"	0"			
W412	#4			17	27'-0"	Str.						
W413	#4			18	22'-3"	Str.						
W414	#4			18	18'-0"	Str.						
W415	#4			2	28'-6"	Str.						
W417	#4		3	3	4'-0"	C	1'-10"	2'-2"	0"			
W501	#5		53	53	7'-8"	D	2'-6"	11¼"	9¼"	3½"	2'-6¼"	
W502	#5		19		19'-0"	Str.						
W503	#5		18		22'-6"	Str.						
W504	#5		15		25'-6"	Str.						
W505	#5		20	19	28'-6"	Str.						
W506	#5		22	21	25'-8"	Str.						
W507	#5		22	21	26'-9"	Str.						
W508	#5		3	3	25'-4"	Str.						
W509	#5		4	4	2'-3"	Str.						
W510	#5			15	25'-5"	Str.						
W511	#5			18	20'-8"	Str.						
W512	#5			19	16'-5"	Str.						

Mark	Size	No. Req'd Abut.	No. Req'd Wing C	No. Req'd Wing D	Length	Type
W601	#6		51	51	3'-6"	Str.
W602	#6		17		13'-0"	Str.
W801	#8		17	17	16'-10"	Str.
W1001	#10		14	14	19'-8"	Str.
W1101	#11		4		26'-0"	Str.
W1102	#11			4	26'-3"	Str.

BENDING DIAGRAM

Note: All dimensions are out to out.

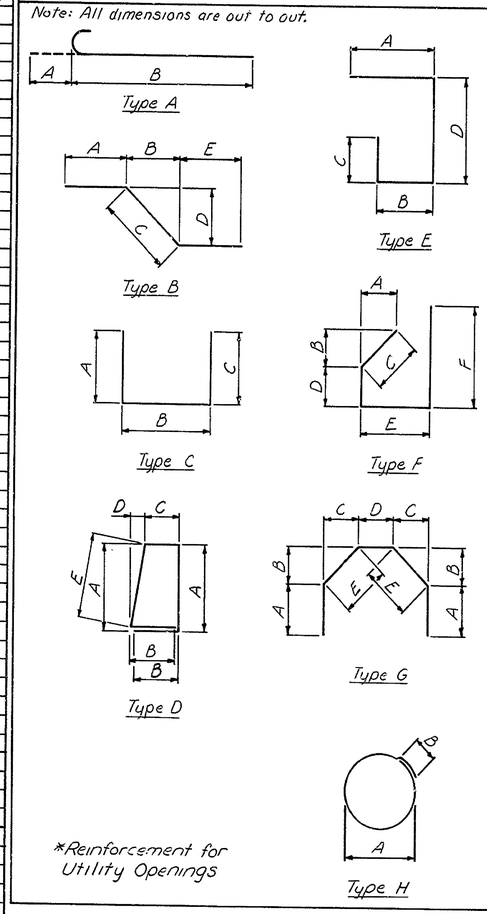

*Reinforcement for Utility Openings

COUNTY	CONTRACT	P & A REQ. NO.	STATE	FED. AID PROJECT NO.	SHEET NO.	TOTAL SHEETS
NEW CASTLE	71-02-009	2	DEL.		139	301

NO.	REVISIONS	BY	DATE

DELAWARE DEPARTMENT
OF HIGHWAYS & TRANSPORTATION
DIVISION OF HIGHWAYS

STATE ROUTE 141 THRU NEWPORT
HIGHLAND AVENUE BRIDGE

EAST ABUTMENT
BAR SCHEDULE

D. W.B.C.
T. R.G.S.
C. S.M.S.

SCALE: AS NOTED

APPROVED BY:
BRIDGE ENGINEER

COUNTY	CONTRACT	P.R.A. REG. NO.	STATE	FED. AID PROJECT NO.	SHEET NO.	TOTAL SHEETS
NEW CASTLE	71-02-009	2	DEL.		140	301

NO.	REVISIONS	BY	DATE

Dimensions prefixed thus (*) are measured along Gutter Line
Dimensions prefixed thus (✱) are measured along Rear Face of Curb

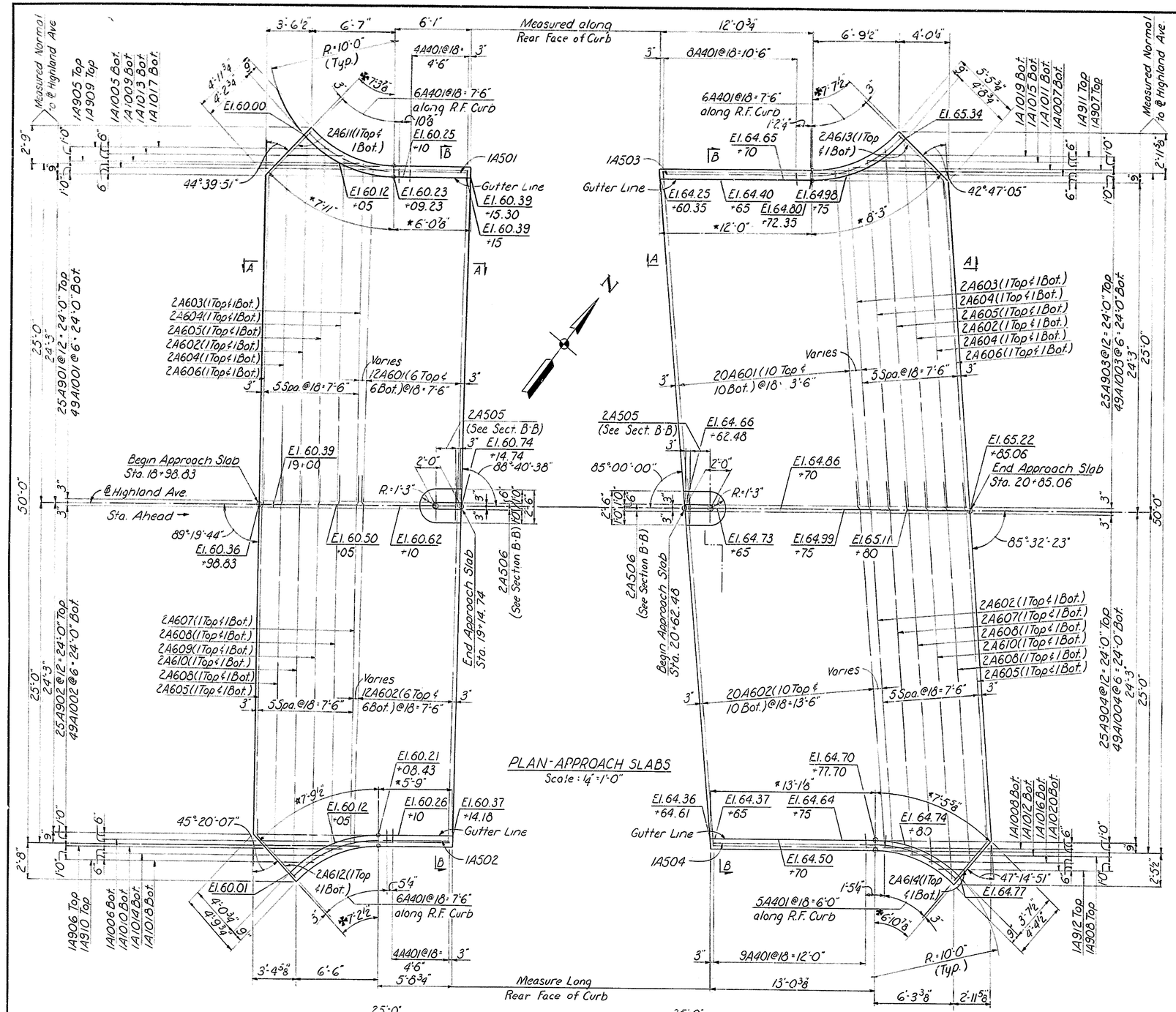

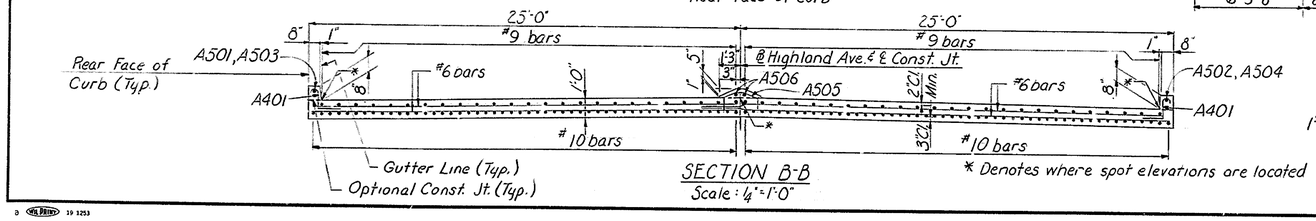

SECTION B-B
Scale: 1/4"=1'-0"

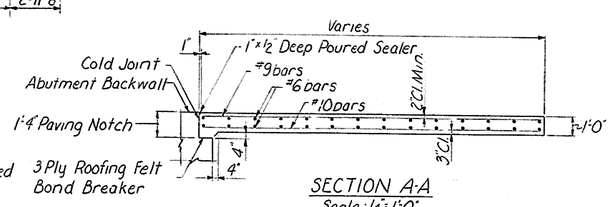

SECTION A-A
Scale: 1/4"=1'-0"

BAR SCHEDULE

Mark	Size	No.	Length	Vary	Type
A401	#4	48	2'-8"		A
A501	#5	1	13'-4"		B
A502	#5	1	12'-11"		B
A503	#5	1	19'-7"		B
A504	#5	1	20'-11"		B
A505	#5	4	3'-10"		D
A506	#5	4	4'-6"		E
A601	#6	32	24'-9"		Str.
A602	#6	38	27'-0"		Str.
A603	#6	4	25'-0"		Str.
A604	#6	8	25'-7"		Str.
A605	#6	8	26'-6"		Str.
A606	#6	4	24'-0"		Str.
A607	#6	4	27'-6"		Str.
A608	#6	8	28'-0"		Str.
A609	#6	2	28'-6"		Str.
A610	#6	4	29'-3"		Str.
A611	#6	2	6'-6"		C
A612	#6	2	6'-4"		C
A613	#6	2	7'-0"		C
A614	#6	2	5'-11"		C
A901	#9	25	15'-7" to 15'-11"	5 ea. by 1"	Str.
A902	#9	25	15'-3" to 15'-7"	5 ea. by 1"	Str.
A903	#9	25	22'-3" to 22'-7"	5 ea. by 1"	Str.
A904	#9	25	21'-11" to 22'-3"	5 ea. by 1"	Str.
A905	#9	1	6'-6"		Str.
A906	#9	1	6'-0"		Str.
A907	#9	1	6'-3"		Str.
A908	#9	1	5'-3"		Str.
A909	#9	1	3'-0"		Str.
A910	#9	1	2'-6"		Str.
A911	#9	1	3'-3"		Str.
A912	#9	1	2'-0"		Str.
A1001	#10	49	15'-7" to 15'-10"	7 ea. by 1/2"	Str.
A1002	#10	49	15'-4" to 15'-7"	7 ea. by 1/2"	Str.
A1003	#10	49	22'-3" to 22'-6"	7 ea. by 1/2"	Str.
A1004	#10	49	22'-0" to 22'-3"	7 ea. by 1/2"	Str.
A1005	#10	1	15'-3"		Str.
A1006	#10	1	15'-0"		Str.
A1007	#10	1	21'-9"		Str.
A1008	#10	1	21'-3"		Str.
A1009	#10	1	6'-6"		Str.
A1010	#10	1	6'-0"		Str.
A1011	#10	1	6'-3"		Str.
A1012	#10	1	5'-3"		Str.
A1013	#10	1	4'-6"		Str.
A1014	#10	1	4'-0"		Str.
A1015	#10	1	4'-9"		Str.
A1016	#10	1	3'-6"		Str.
A1017	#10	1	3'-0"		Str.
A1018	#10	1	2'-6"		Str.
A1019	#10	1	3'-3"		Str.
A1020	#10	1	2'-0"		Str.

Bending Diagrams

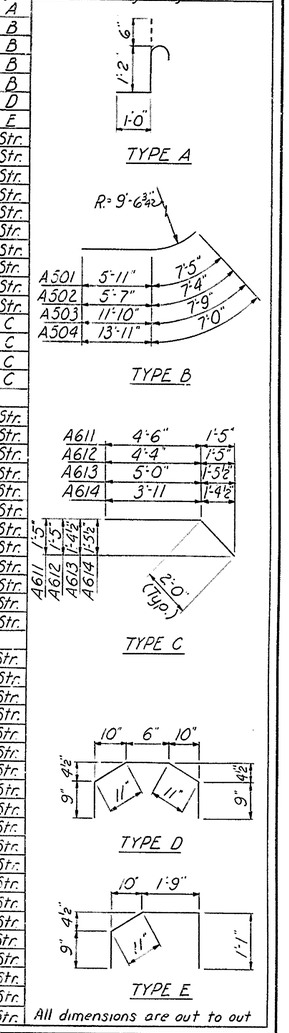

DELAWARE
DEPARTMENT OF HIGHWAYS & TRANSPORTATION
DIVISION OF HIGHWAYS

STATE ROUTE 141 THRU NEWPORT
HIGHLAND AVENUE BRIDGE

APPROACH SLABS
WEST & EAST ABUTMENTS

D. R.G.S.
T. R.G.S.
C. W.B.C.

SCALE: AS NOTED

APPROVED BY:

BRIDGE ENGINEER

10-25-73

COUNTY	CONTRACT	P.R.A. REG. NO.	STATE	FED. AID PROJECT NO.	SHEET NO.	TOTAL SHEETS
NEW CASTLE	71-02-009	2	DEL.		141	301

NO.	REVISIONS	BY	DATE
1	Delete Sign Panels and Supports	R.R.	9-10-74
2	Revised Location of Conduit & 6" TRANSITE DUCTS (TYP.)	T.F.F.	12-9-75

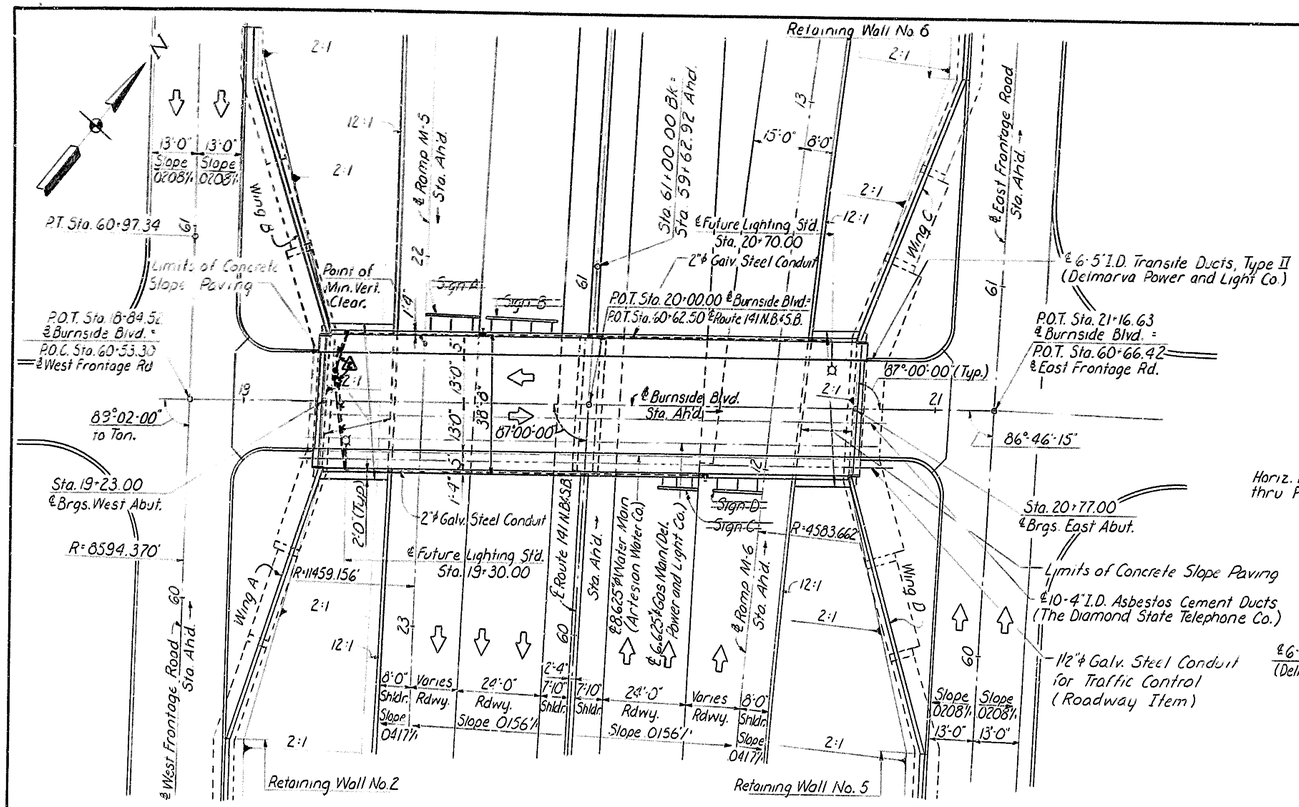

PLAN
Scale: 1" = 20'

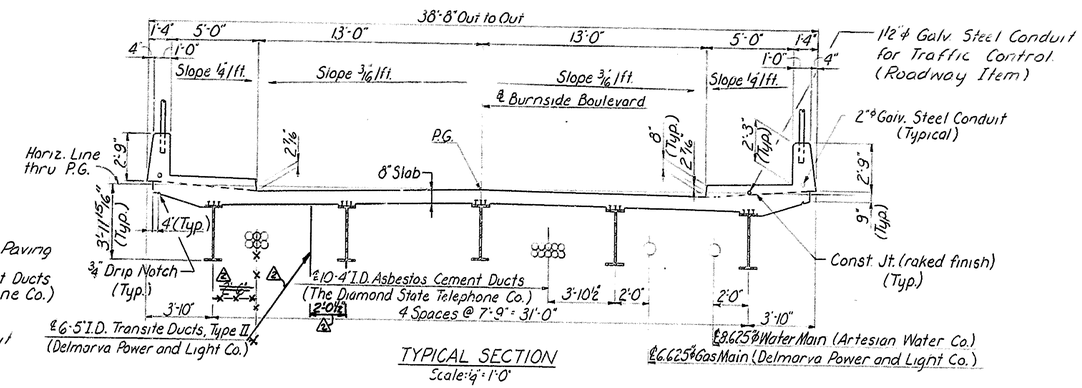

TYPICAL SECTION
Scale: ¼" = 1'-0"

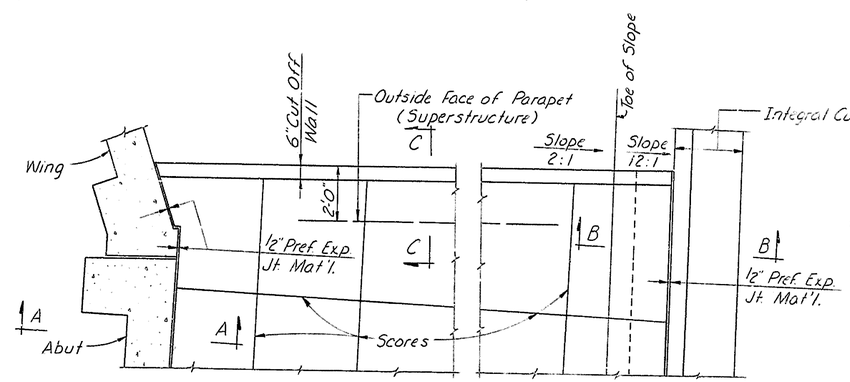

PLAN-CONCRETE SLOPE PAVING
Scale: 3/8" = 1'-0"

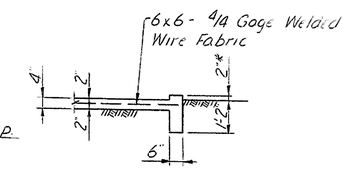

SECTION C-C
Scale: 3/8" = 1'-0"

*Terminate at rear face of Integral Curb and Gutter.

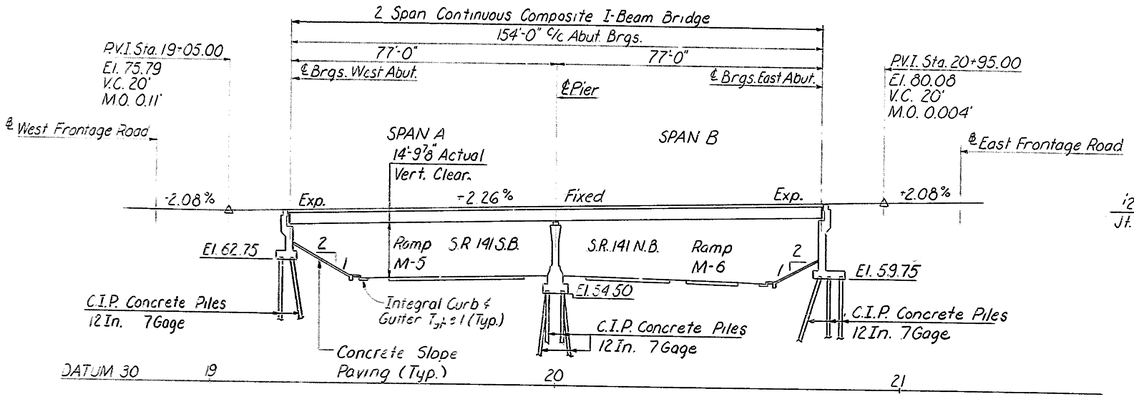

LONGITUDINAL SECTION ALONG ℄ BURNSIDE BOULEVARD
Scale: 1" = 20'

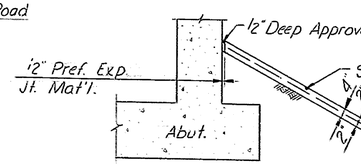

SECTION A-A
Scale: 3/8" = 1'-0"

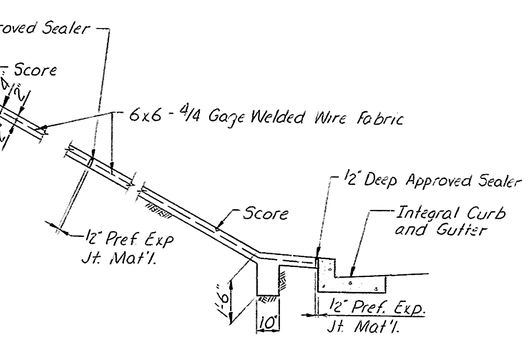

SECTION B-B
Scale: 3/8" = 1'-0"

DELAWARE DEPARTMENT OF HIGHWAYS & TRANSPORTATION
DIVISION OF HIGHWAYS

STATE ROUTE 141 THRU NEWPORT
BURNSIDE BOULEVARD BRIDGE

GENERAL PLAN AND LONGITUDINAL SECTION

D.L.W.H. T.R.G.S. C.S.M.S.	SCALE AS NOTED	APPROVED BY: BRIDGE ENGINEER

COUNTY	CONTRACT	P.R.A. REV. NO.	STATE	FED. A/D PROJECT NO.	SHEET NO.	TOTAL SHEETS
NEW CASTLE	71-02-009	2	DEL.		142	301

NO.	REVISIONS	BY	DATE

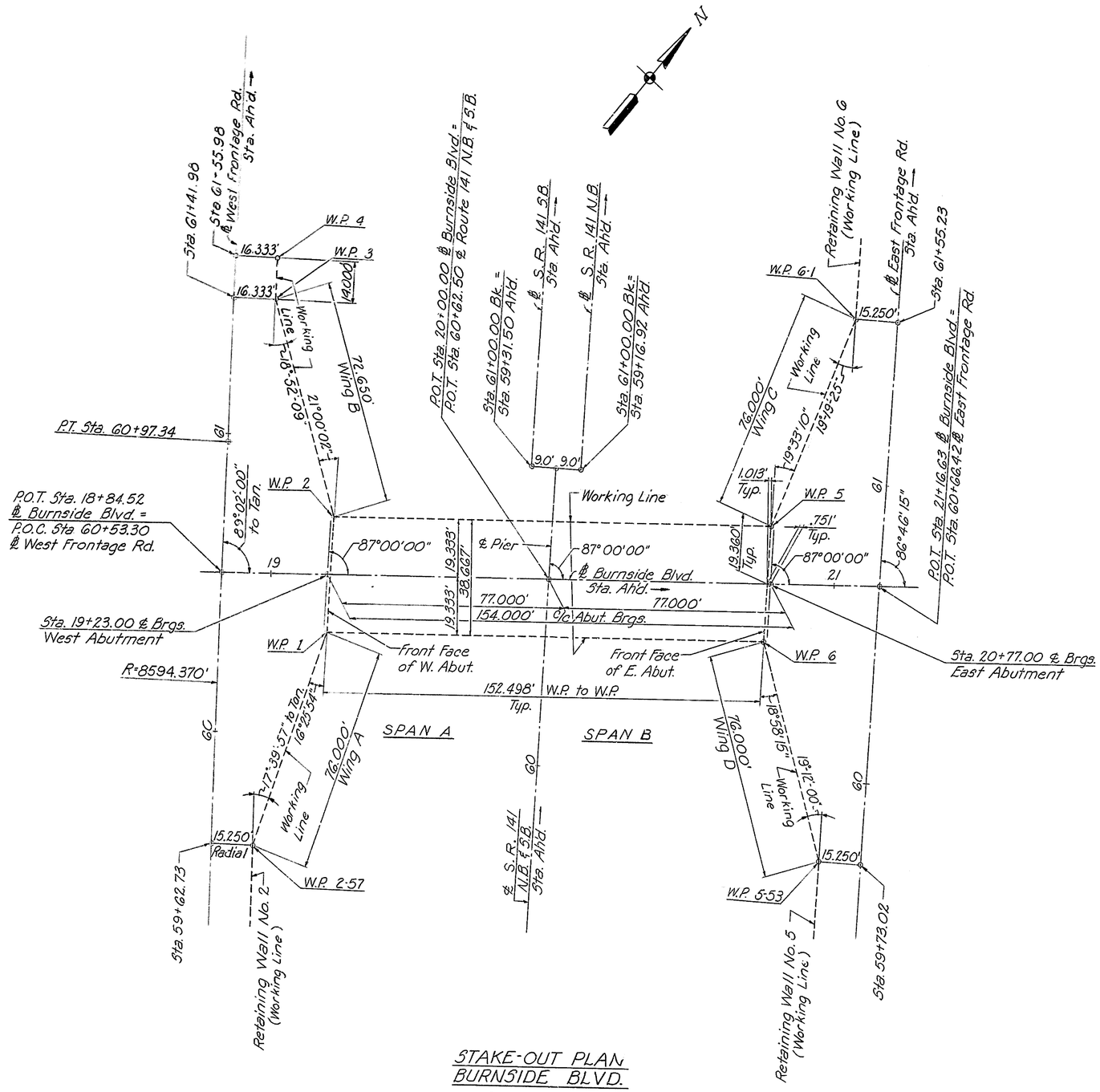

STAKE-OUT PLAN
BURNSIDE BLVD.
Scale: 1" = 20'

DELAWARE DEPARTMENT OF HIGHWAYS & TRANSPORTATION
DIVISION OF HIGHWAYS

STATE ROUTE 141 THRU NEWPORT

BURNSIDE BOULEVARD BRIDGE

STAKE-OUT PLAN

D. L.W.H.	SCALE	APPROVED BY:
T. W.B.C.	AS NOTED	
C. S.M.S.		BRIDGE ENGINEER

COUNTY	CONTRACT	F.A.A. REG. NO.	STATE	FED. AID PROJECT NO.	SHEET NO.	TOTAL SHEETS
NEW CASTLE	71-02-009	2	DEL.		143	301

NO.	REVISIONS	BY	DATE
1	Revised 2" Conduit Loc., Section D-D & Plan	T.F.F.	12-9-75

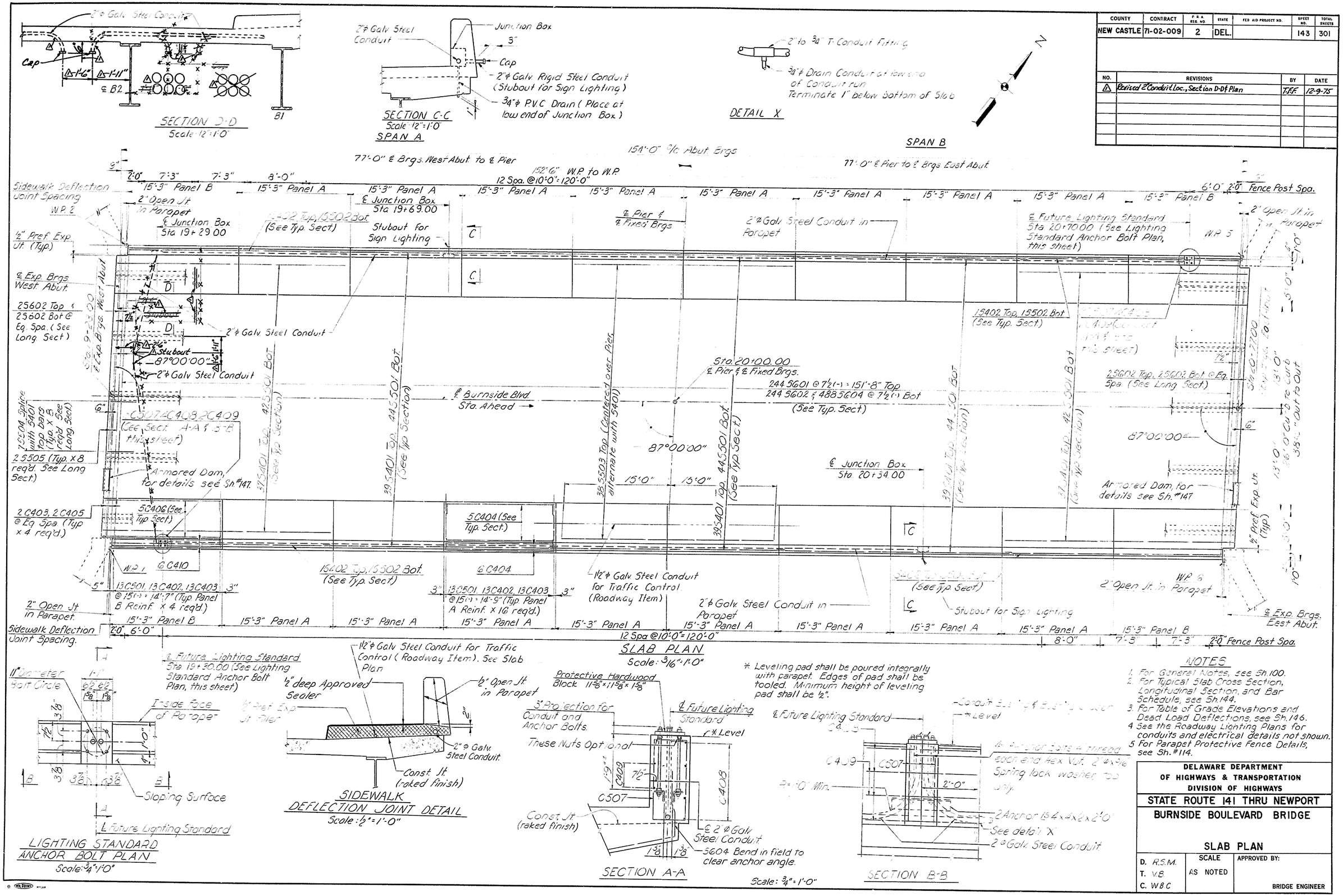

NOTES

1. For General Notes, see Sh. 100.
2. For Typical Slab Cross Section, Longitudinal Section, and Bar Schedule, see Sh. 144.
3. For Table of Grade Elevations and Dead Load Deflections, see Sh. 146.
4. See the Roadway Lighting Plans for conduits and electrical details not shown.
5. For Parapet Protective Fence Details, see Sh. #114.

DELAWARE DEPARTMENT OF HIGHWAYS & TRANSPORTATION
DIVISION OF HIGHWAYS

STATE ROUTE 141 THRU NEWPORT

BURNSIDE BOULEVARD BRIDGE

SLAB PLAN

D. R.S.M.	SCALE	APPROVED BY:
T. V.B.	AS NOTED	
C. W.B.C.		BRIDGE ENGINEER

COUNTY	CONTRACT	P.R.A. RES. NO.	STATE	FED AID PROJECT NO.	SHEET NO.	TOTAL SHEETS
NEW CASTLE	71-02-009	2	DEL.		144	301

NO.	REVISIONS	BY	DATE
1	Relocated Transite Ducts from Stringer B1 to B2 Side	T.F.F.	12-9-75

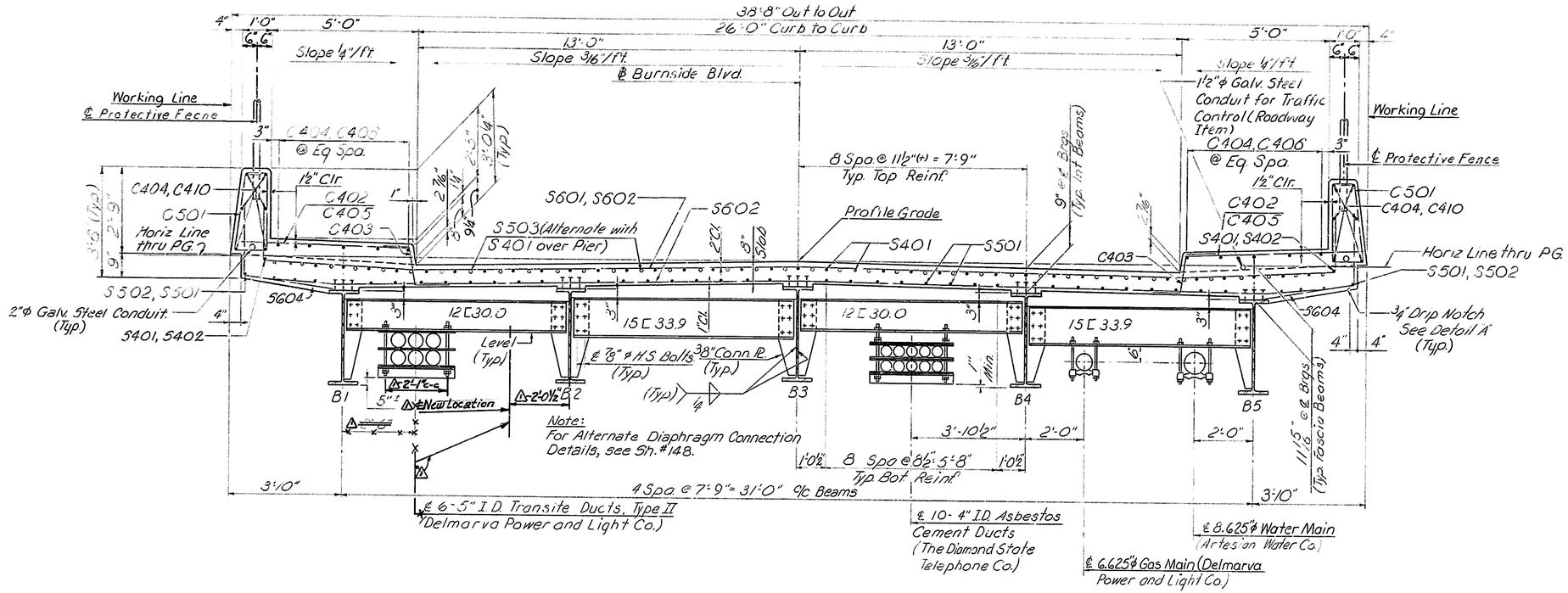

TYPICAL SLAB CROSS SECTION
Scale: ½"=1'-0"

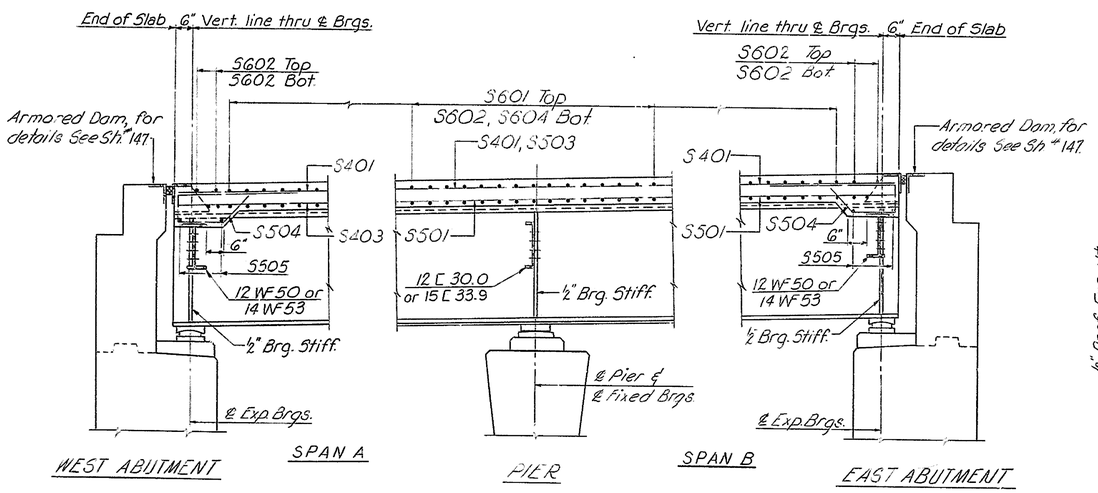

LONGITUDINAL SECTION
Scale: ½"=1'-0"
Note: Utilities not shown on this Section.

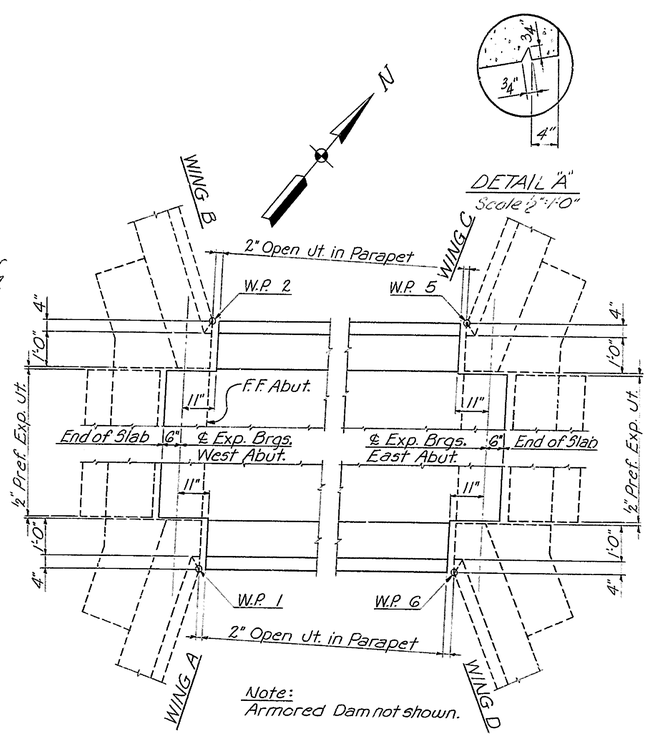

CORNER DETAILS
Scale: ½"=1'-0"

DETAIL "A"
Scale ½"=1'-0"

SUPERSTRUCTURE BAR SCHEDULE

Mark	Size	No.	Length	Type
C501	#5	260	7'-5"	A
C402	#4	260	6'-0"	Str.
C403	#4	268	3'-1"	B
C404	#4	176	14'-11"	Str.
C405	#4	8	4'-7"	Str.
C406	#4	20	16'-1"	Str.
C507	#5	6	7'-7"	G
C408	#4	8	4'-6"	H
C409	#4	4	4'-0"	Str.
C410	#4	24	14'-9"	Str.
S601	#6	244	40'-5"	C
S602	#6	252	35'-7"	Str.
S604	#6	488	5'-3"	E
S501	#5	216	32'-0"	Str.
S502	#5	4	30'-6"	Str.
S503	#5	38	30'-0"	Str.
S504	#5	56	6'-2"	F
S505	#5	16	6'-5"	Str.
S401	#4	191	31'-10"	Str.
S402	#4	4	30'-4"	Str.

BENDING DIAGRAMS

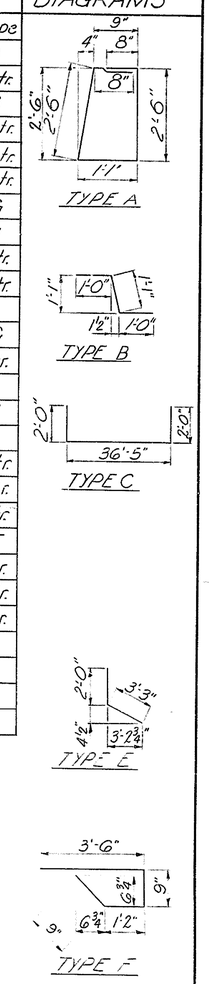

Note: All dimensions are out to out.

DELAWARE DEPARTMENT OF HIGHWAYS & TRANSPORTATION
DIVISION OF HIGHWAYS

STATE ROUTE 141 THRU NEWPORT
BURNSIDE BOULEVARD BRIDGE
TYPICAL SLAB CROSS SECTION AND BAR SCHEDULE

D. R.S.M.	SCALE	APPROVED BY:
T. V.B.	AS NOTED	
C. W.B.C.		BRIDGE ENGINEER

COUNTY	CONTRACT	P.B.A. REG. NO.	STATE	FED. AID PROJECT NO.	SHEET NO.	TOTAL SHEETS
NEW CASTLE	71-02-009	2	DEL.		145	301

NO.	REVISIONS	BY	DATE
1	Delete Sign Panels and Supports	R.R.	7-10-94
2	Relocate Transite Ducts to B2 Stringer Side	T.F.F.	12-9-75

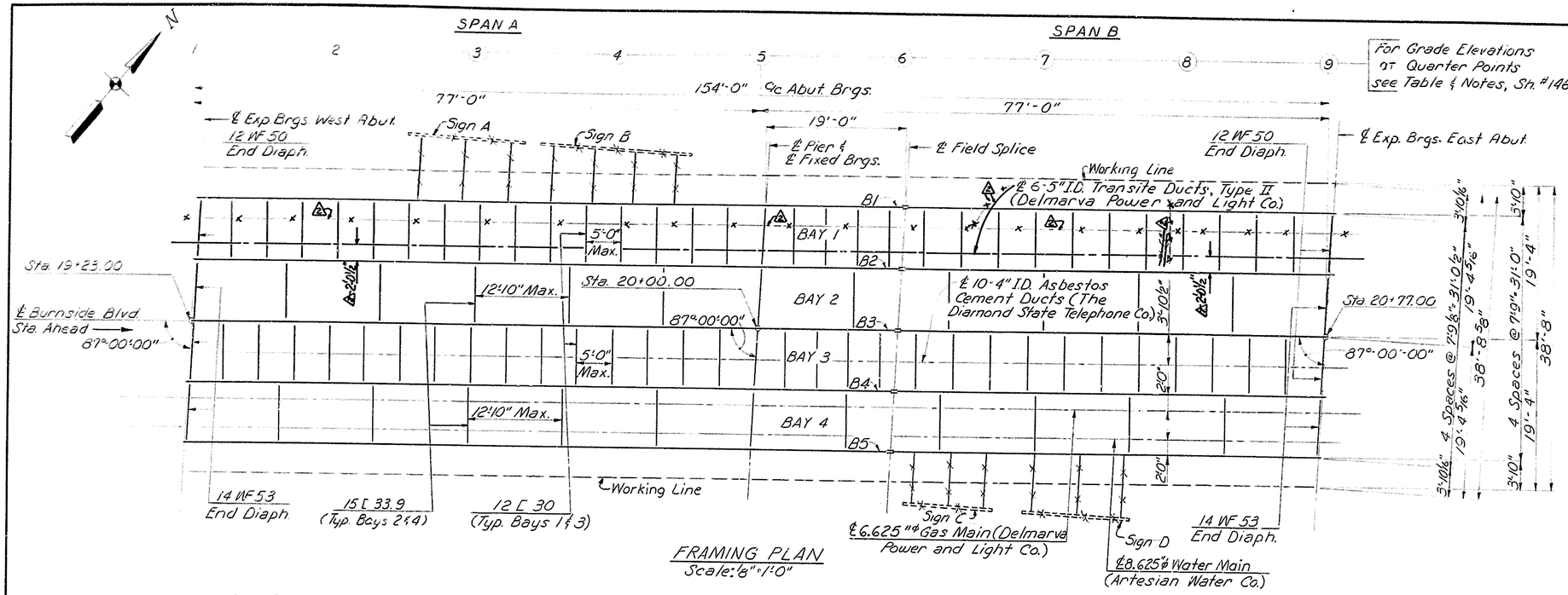

FRAMING PLAN
Scale: 1/8" = 1'-0"

NOTES

1. For General Notes, see Sh. #100.
2. For Intermediate Diaphragm details, see Sh. #144.
3. For Beam Elevation and Camber Blocking Diagram, see, Sh. #146.
4. For End Diaphragm and Armored Dam details, see Sh. #147 & 148.
5. ~~For Sign Support Details, see Sh. #149 & 150.~~

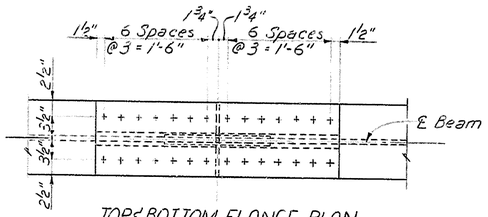

TOP & BOTTOM FLANGE PLAN

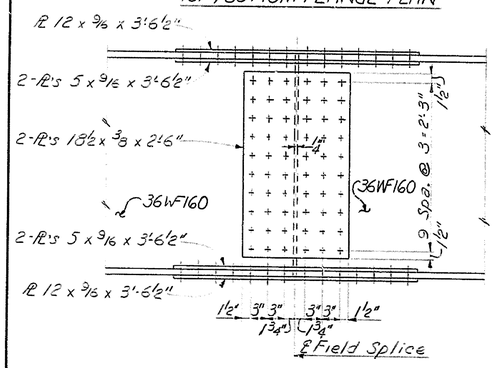

ELEVATION

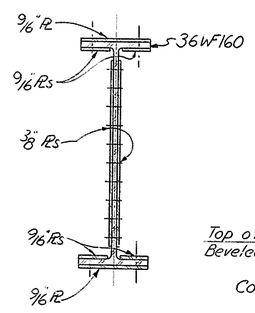

SECTION

FIELD SPLICE DETAILS
Scale: 1" = 1'-0"

Note: All splice material is M222 Steel.

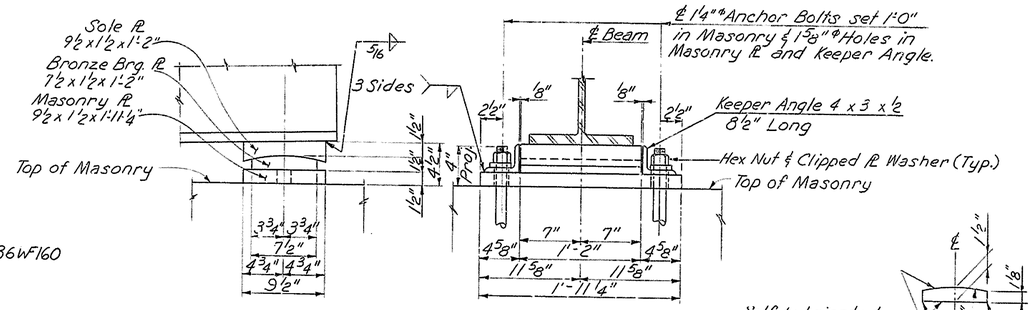

EXPANSION BEARING
Scale: 1 1/2" = 1'-0"

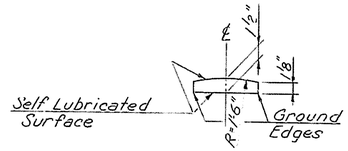

BRONZE BRG. PL DETAIL
Scale: 1 1/2" = 1'-0"

Provide smooth transition between welds at sides and ends of Plate.

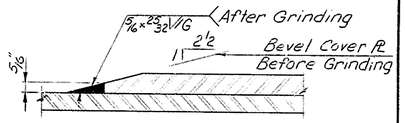

SECTION A-A

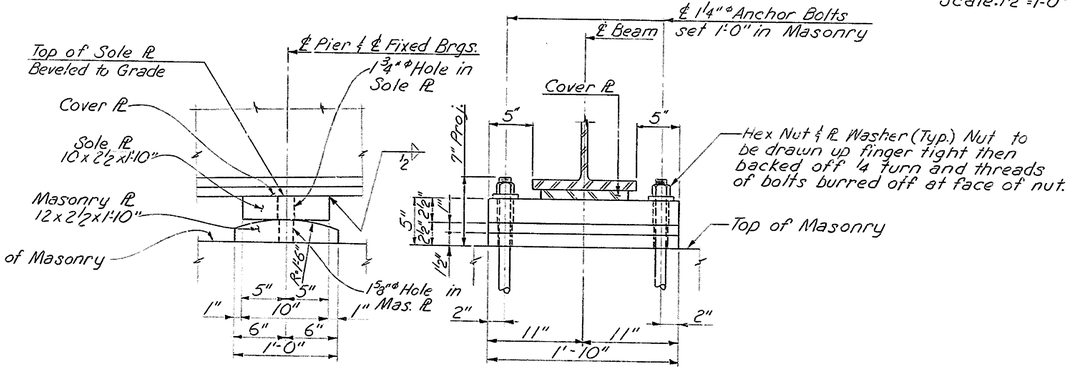

FIXED BEARING
Scale: 1 1/2" = 1'-0"

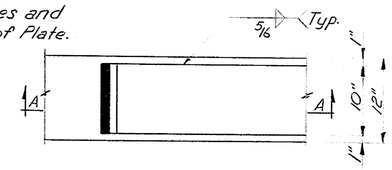

COVER PLATE DETAILS
No Scale

DELAWARE DEPARTMENT OF HIGHWAYS & TRANSPORTATION
DIVISION OF HIGHWAYS

STATE ROUTE 141 THRU NEWPORT

BURNSIDE BOULEVARD BRIDGE

FRAMING PLAN AND STRUCTURAL STEEL DETAILS

D. R.S.M. T. JBS & WAR C. S.M.S.	SCALE AS NOTED	APPROVED BY: BRIDGE ENGINEER

COUNTY	CONTRACT	P.R.A. REG. NO.	STATE	FED AID PROJECT NO.	SHEET NO.	TOTAL SHEETS
NEW CASTLE	71-02-009	2	DEL.		146	301

NO.	REVISIONS	BY	DATE

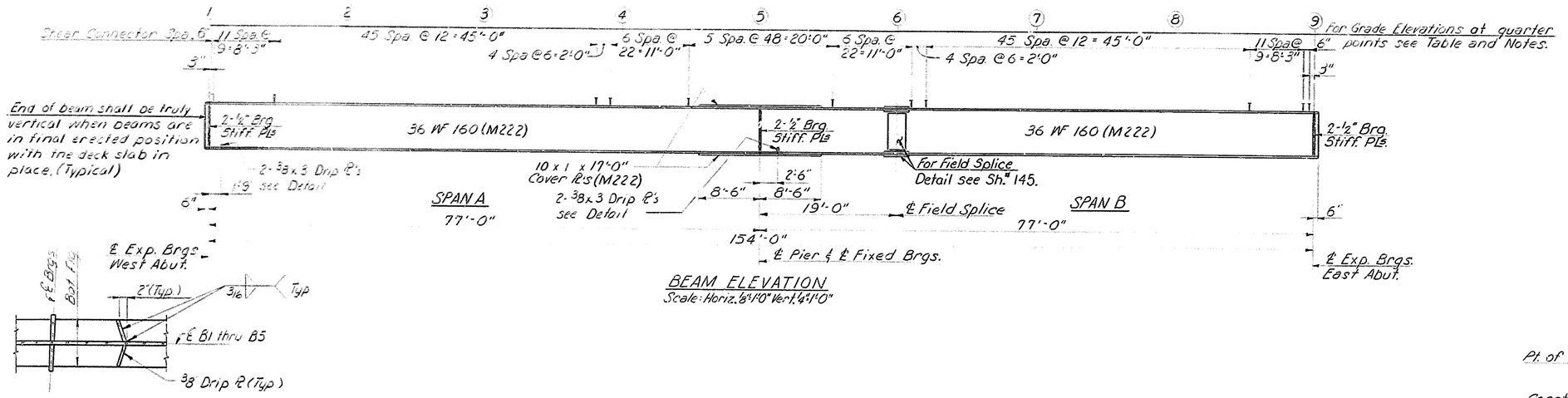

BEAM ELEVATION
Scale: Horiz. 1/8"=1'-0" Vert. 1/4"=1'-0"

DRIP PLATE DETAIL
No Scale

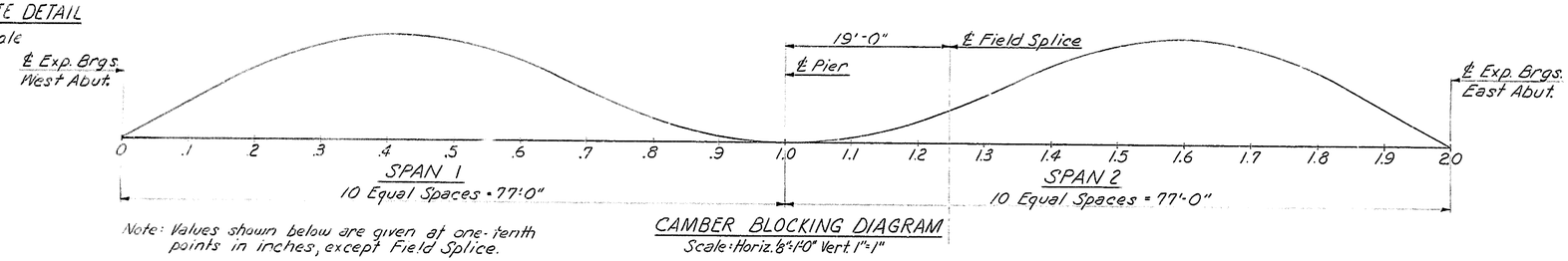

CAMBER BLOCKING DIAGRAM
Scale: Horiz. 1/8"=1'-0" Vert. 1"=1"

Note: Values shown below are given at one-tenth points in inches, except Field Splice.

Due to weight of Steel	0	1/8	1/4	3/8	3/8	3/8	5/16	3/16	1/8	0	0	0	1/8	3/16	3/16	5/16	3/8	3/8	3/8	1/4	1/8	0
Due to weight of Deck Slab	0	5/16	9/16	3/4	13/16	3/4	5/8	7/16	3/16	1/16	0	1/16	3/16	5/16	7/16	5/8	3/4	13/16	3/4	9/16	5/16	0
*Due to superimposed D.L.	0	1/16	3/16	1/4	1/4	1/4	3/16	1/8	1/16	0	0	0	1/16	1/8	1/8	3/16	1/4	1/4	1/4	3/16	1/16	0
Total Dead Load Camber	0	1/2	1	1 3/8	1 7/16	1 3/8	1 1/8	3/4	3/8	1/16	0	1/16	3/8	5/8	3/4	1 1/8	1 3/8	1 7/16	1 3/8	1	1/2	0

*Does not include Future Wearing Surface.

TABLE OF GRADE ELEVATIONS AND DEAD LOAD DEFLECTIONS IN FEET

Beam Point	B1 Grade El.	B2 Grade El.	B3 Grade El.	B4 Grade El.	B5 Grade El.	Defl.
1	76.125	76.085	76.197	76.067	76.088	0
2	76.560	76.520	76.632	76.502	76.523	.072
3	76.995	76.955	77.067	76.937	76.958	.085
4	77.430	77.390	77.502	77.372	77.393	.037
5	77.865	77.825	77.937	77.807	77.828	0
6	78.300	78.260	78.372	78.242	78.263	.037
7	78.735	78.695	78.807	78.677	78.699	.085
8	79.170	79.130	79.242	79.112	79.134	.072
9	79.605	79.565	79.677	79.547	79.569	0

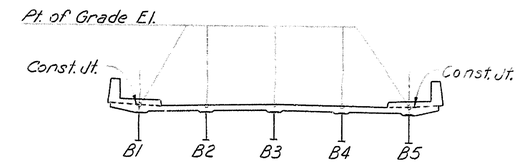

GRADE ELEVATION POINTS

CAMBER: Beams shall be cambered for Total Dead Load Camber as indicated in the Camber Blocking Diagram. No camber for vertical curvature is required. Beams shall not be cambered more than shown.

Beams shall be shop assembled to the correct blocking elevations of splices before reaming or drilling splices, and likewise shall be field assembled before bolting.

If beam section over the pier does not have the indicated camber, then the blocking elevations for the remaining beam sections shall be adjusted accordingly.

In the Table of Grade Elevations and Dead Load Deflections, the deflections given are for dead load due to the weight of concrete only. After all beams have been assembled, elevations shall be taken along tops of beams at points where the grade elevations are shown. The difference between these two elevations plus the amount of deflection listed at each point will be the thickness of the slab and haunch over the top of beam at the centerline of beam. The minimum slab and haunch depth over the centerline of beam shall not be less than 8".

TABLE OF MAXIMUM REACTIONS & SHEARS

Beam	Load	Reactions - Kips Pt. 0	Pt. 1.0	Pt. 2.0	Shears - Kips Lt. Pt. 1.0	Rt. Pt. 1.0
B1 & B5	DL.1	33.9	120.0	33.9	60.0	60.0
	DL.2	15.0	48.1	15.0	24.1	24.1
	L.L.	44.3	67.0	44.3	48.5	48.5
	Imp.	10.0	13.8	10.0	10.7	10.7
	Total	103.2	248.9	103.2	143.3	143.3
B2 thru B4	DL.1	32.5	115.0	32.5	57.5	57.5
	DL.2	15.0	48.1	15.0	24.1	24.1
	L.L.	52.4	71.5	52.4	52.1	52.1
	Imp.	12.0	14.9	12.0	11.5	11.5
	Total	111.9	249.5	111.9	145.2	145.2

TABLE OF MAXIMUM MOMENTS (KIP-FT.) AND STRESSES (KSI.)

Beam	Load	Spans A & B Pos. Mom.	Stress	Pier Neg. Mom.	Stress
B1 & B5	DL.1	466.2	10.34	1004.5	13.81
	DL.2	221.4	3.75	348.2	4.79
	L.L.	607.1	9.25	404.9	5.57
	L.L. swk.	70.4	1.07	75.0	1.03
	Imp.	150.5	2.29	100.4	1.38
	Total	1515.6	26.70	1933.0	26.58
B2 thru B4	DL.1	446.7	9.90	962.4	13.23
	DL.2	222.1	3.74	346.5	4.76
	L.L.	656.8	9.98	437.0	6.00
	L.L. swk.	70.4	1.05	74.7	1.02
	Imp.	162.9	2.47	107.4	1.47
	Total	1558.9	27.14	1928.0	26.48

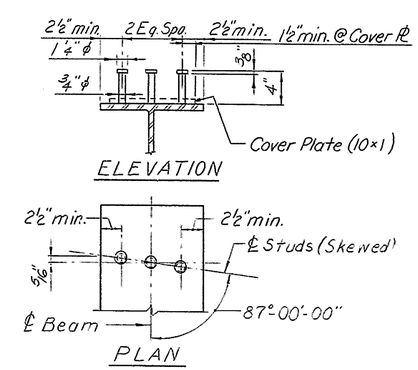

SHEAR CONNECTOR DETAILS

DELAWARE DEPARTMENT OF HIGHWAYS & TRANSPORTATION
DIVISION OF HIGHWAYS

STATE ROUTE 141 THRU NEWPORT

BURNSIDE BOULEVARD BRIDGE

BEAM ELEVATION AND CAMBER BLOCKING DIAGRAM

D.R.S.M. T.W.B.C.&W.A.R. C.S.M.S.	SCALE AS NOTED	APPROVED BY: BRIDGE ENGINEER

COUNTY	CONTRACT	F.H.A. REG. NO.	STATE	FED. AID PROJECT NO.	SHEET NO.	TOTAL SHEETS
NEW CASTLE	71-02-009	2	DEL.		147	301

NO.	REVISIONS	BY	DATE
1	Relocate Transite Ducts to B2 Stringer Side	T.F.F.	12-9-75

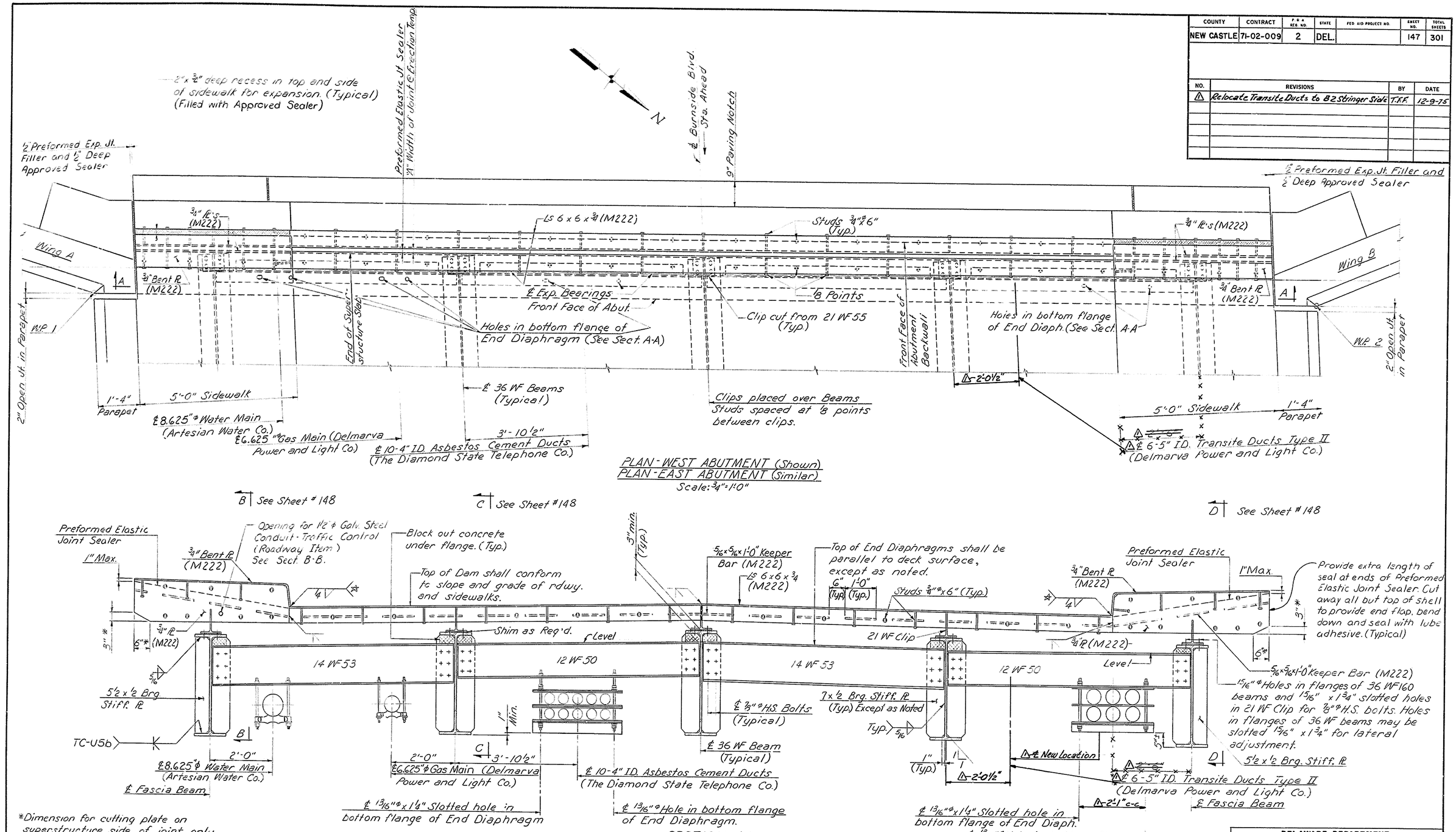

PLAN - WEST ABUTMENT (Shown)
PLAN - EAST ABUTMENT (Similar)
Scale: 3/4" = 1'-0"

SECTION A-A
Scale: 3/4" = 1'-0"

*Dimension for cutting plate on superstructure side of joint only.

*Plate welded to angle on superstructure side of joint only.

NOTES

1. For superstructure dimensions not shown see Typical Superstructure Section on Sh. # 144.
2. For Design and Construction Notes, and Alternate Diaphragm Connection Details, see Sh. # 148.

DELAWARE DEPARTMENT OF HIGHWAYS & TRANSPORTATION
DIVISION OF HIGHWAYS

STATE ROUTE 141 THRU NEWPORT
BURNSIDE BOULEVARD BRIDGE

ARMORED PREFORMED NEOPRENE COMPRESSION DAM

D.L.W.H.S.W.B.C.	SCALE	APPROVED BY:
T. W.A.R.	AS NOTED	
C. S.M.S.		BRIDGE ENGINEER

COUNTY	CONTRACT	F.H.A. REG. NO.	STATE	FED AID PROJECT NO.	SHEET NO.	TOTAL SHEETS
NEW CASTLE	71-02-009	2	DEL.		148	301

NO.	REVISIONS	BY	DATE

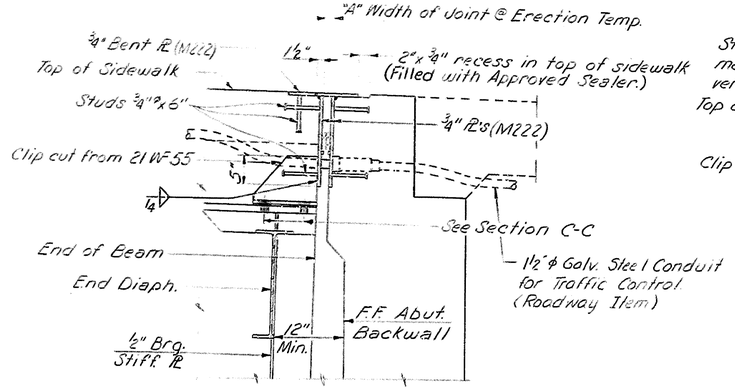

SECTION B-B (Shown)
SECTION D-D (Similar)
Scale: 1" = 1'-0"

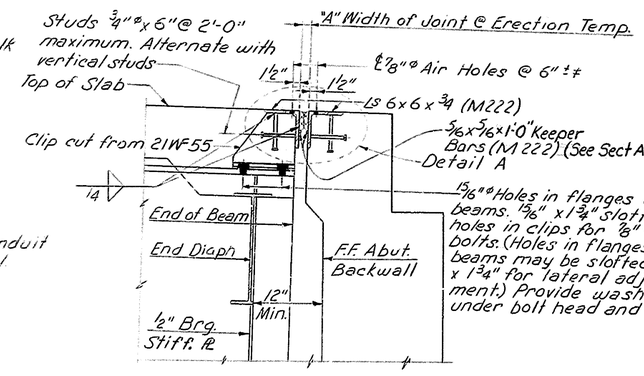

SECTION C-C
Scale: 1" = 1'-0"

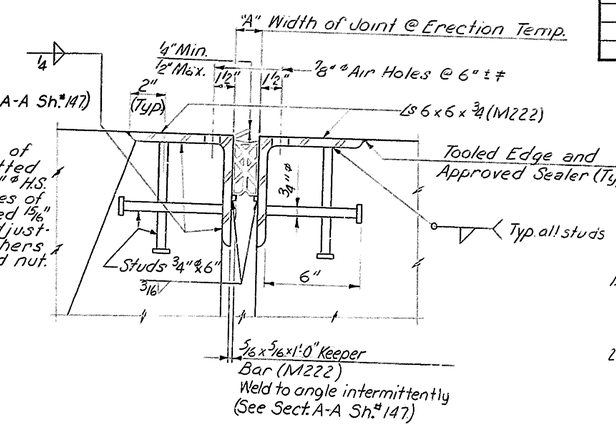

DETAIL A
Scale: 3" = 1'-0"

‡ Concrete shall be placed under the angles and vibrated until the concrete is forced through the 7/8"ø holes. Strike off excess concrete. After concrete has cured, inspect the holes and remove unsound concrete. Clean the holes with an air jet and fill with an approved sealer.

DESIGN AND CONSTRUCTION NOTES

1. All material and workmanship shall be in accordance with this drawing, the Standard Specifications and the Special Provisions.
2. These drawings shall be used in the preparation of Shop Drawings. Shop Drawing shall show complete details; such as size of seal, compression-deflection characteristics, joint opening at time of erection - Dimension, method of installation and design calculations.
3. Shop drawings shall show details for temporary connections used for shipping, erection and adjustment purposes. The complete dam shall be shop assembled with the Preformed Elastic Joint Sealer installed in the shop in accordance with the Special Provisions.
4. One coat of asphalt cement paint shall be applied to steel surfaces sliding on concrete.

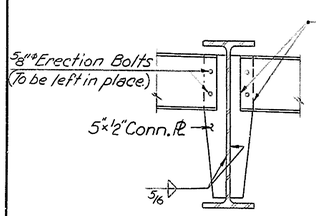

INTERMEDIATE DIAPHRAGM

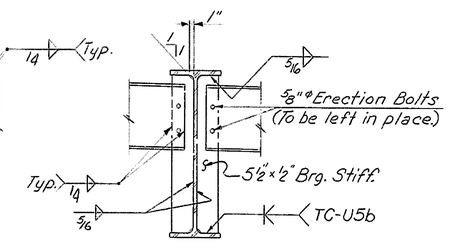

END DIAPHRAGM

ALTERNATE DIAPHRAGM CONNECTION DETAILS
Scale: 3/4" = 1'-0"

DELAWARE DEPARTMENT
OF HIGHWAYS & TRANSPORTATION
DIVISION OF HIGHWAYS

STATE ROUTE 141 THRU NEWPORT

BURNSIDE BOULEVARD BRIDGE

ARMORED PREFORMED NEOPRENE COMPRESSION DAM

D. L.W.H.&W.B.C. T. W.A.R. C.S.M.S.	SCALE AS NOTED	APPROVED BY: BRIDGE ENGINEER

COUNTY	CONTRACT	P.R.A. REG. NO.	STATE	FED. AID PROJECT NO.	SHEET NO.	TOTAL SHEETS
NEW CASTLE	71-02-009	2	DEL.		149	301

NO.	REVISIONS	BY	DATE
1.	Delete Sign Panels and Supports	R.R.	9-10-94

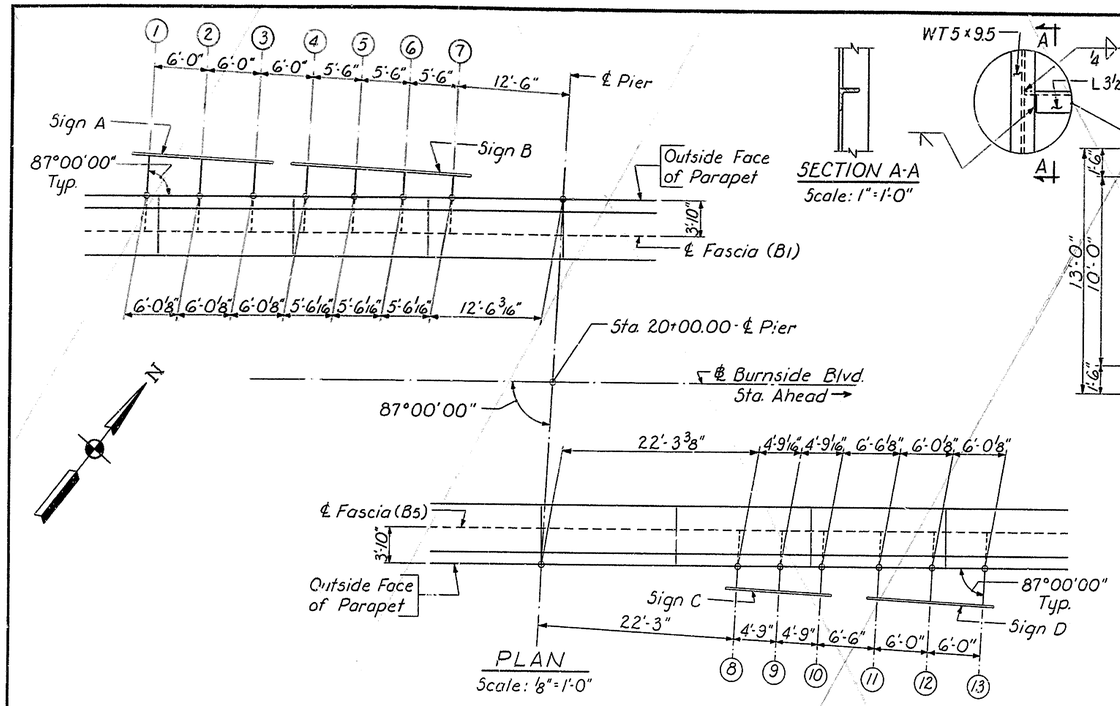

PLAN
Scale: 1/8" = 1'-0"

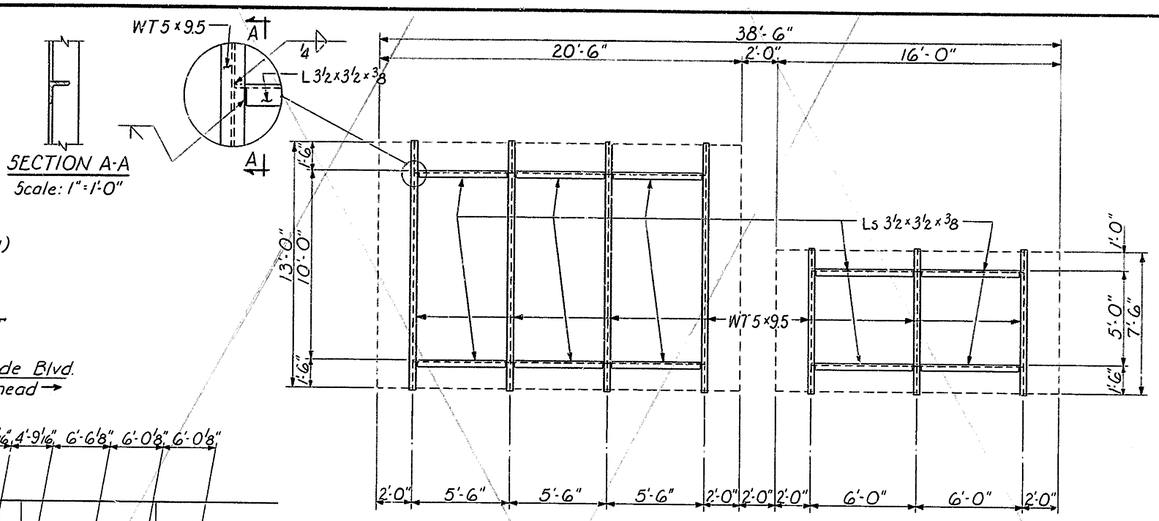

SIGN SUPPORT ELEVATION
Scale: 1/4" = 1'-0"

SECTION A-A
Scale: 1" = 1'-0"

NOTES

1. All steel components shall be structural steel A.S.T.M. A588.
2. All steel components shall be hot-dipped galvanized in accordance with Section 606.05 (k) of the Standard Specifications.
3. Galvanizing shall be done after all welding and drilling has been completed.
4. For details of Sign Supports ⑧ thru ⑬, see Sh. 150.
5. For details of Lateral Bracing, see Sh. 150.

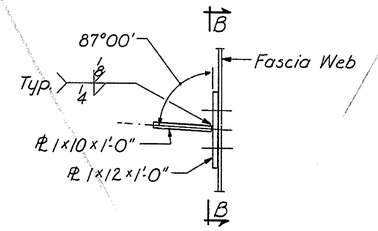

PLAN

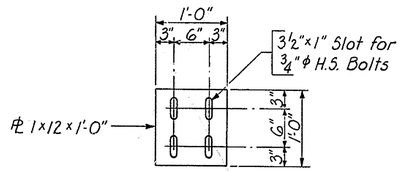

SECTION B-B

BRACKET AT FASCIA
Scale: 1" = 1'-0"

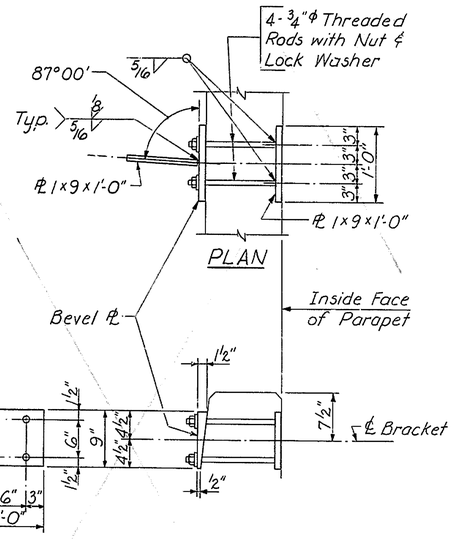

BRACKET AT PARAPET
Scale: 1" = 1'-0"

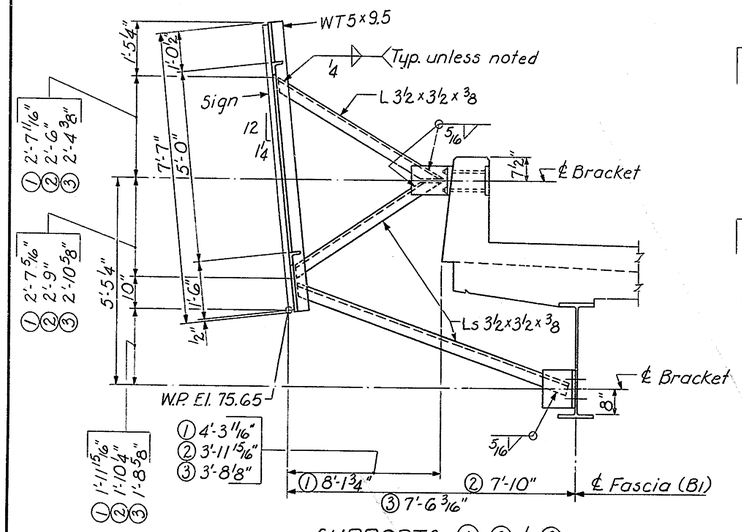

SUPPORTS ①, ② & ③
SUPPORT ① SHOWN
Scale: 1/2" = 1'-0"

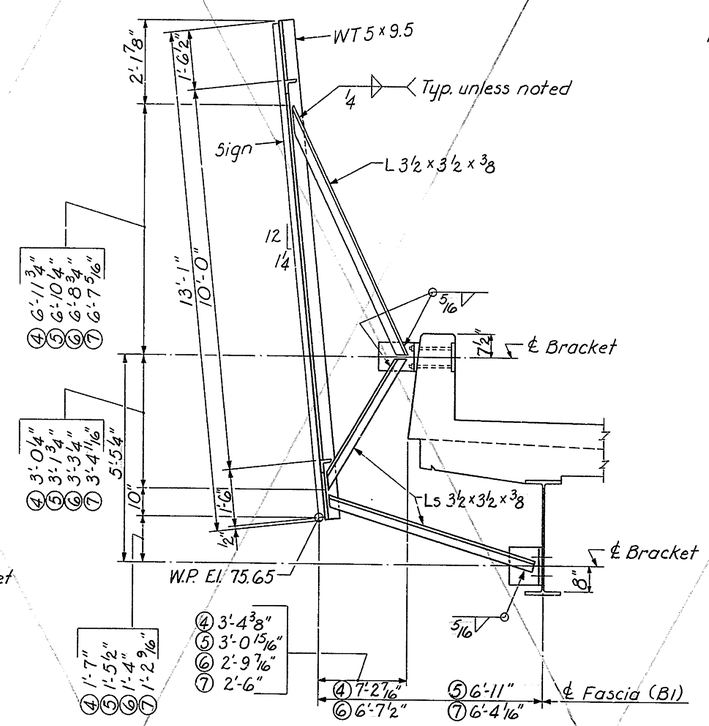

SUPPORTS ④, ⑤, ⑥ & ⑦
SUPPORT ⑦ SHOWN
Scale: 1/2" = 1'-0"

DELAWARE
DEPARTMENT OF HIGHWAYS & TRANSPORTATION
DIVISION OF HIGHWAYS

STATE ROUTE 141 THRU NEWPORT
BURNSIDE BOULEVARD BRIDGE

SIGN SUPPORT DETAILS

D: R.S.W.	SCALE	APPROVED BY:
T: R.S.W.	AS NOTED	
C: J. J. S.		BRIDGE ENGINEER

COUNTY	CONTRACT	P.R.A. REG. NO.	STATE	FED. AID PROJECT NO.	SHEET NO.	TOTAL SHEETS
NEW CASTLE	71-02-009	2	DEL		150	301

NO.	REVISIONS	BY	DATE
1.	Delete Sign Panels and Supports	R.R.	9-10-74

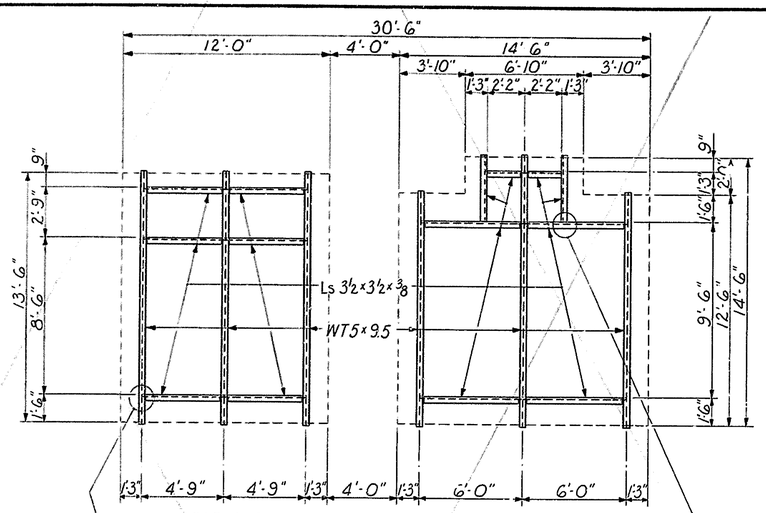

SIGN SUPPORT ELEVATION
Scale: ¼"=1'-0"

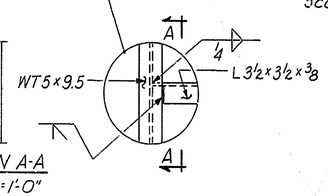

SECTION A-A
Scale: 1"=1'-0"

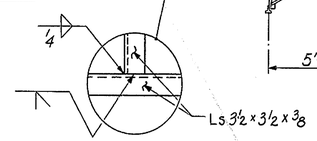

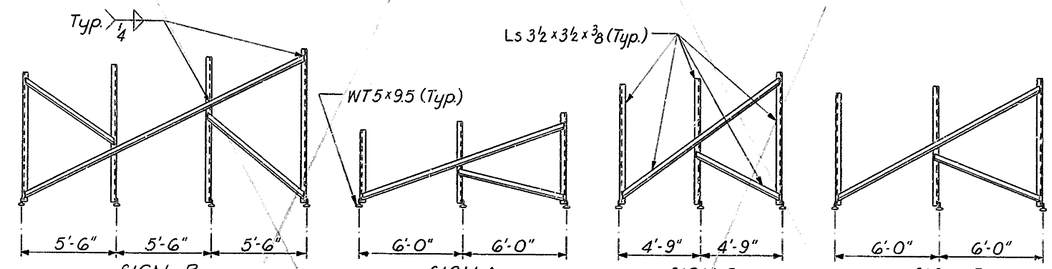

TOP LATERAL BRACING
Scale: ¼"=1'-0"

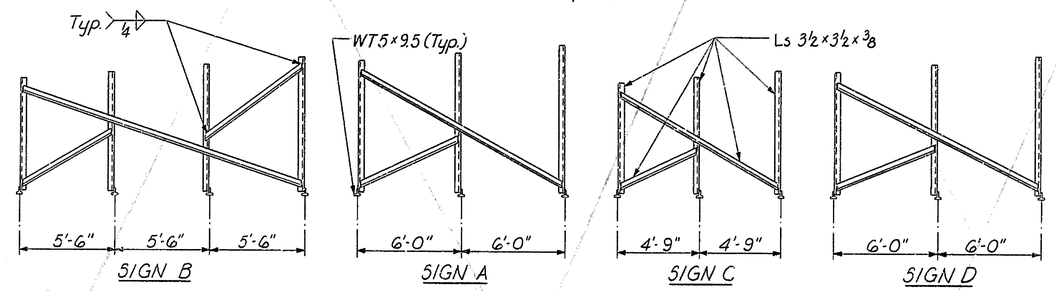

BOTTOM LATERAL BRACING
Scale: ¼"=1'-0"

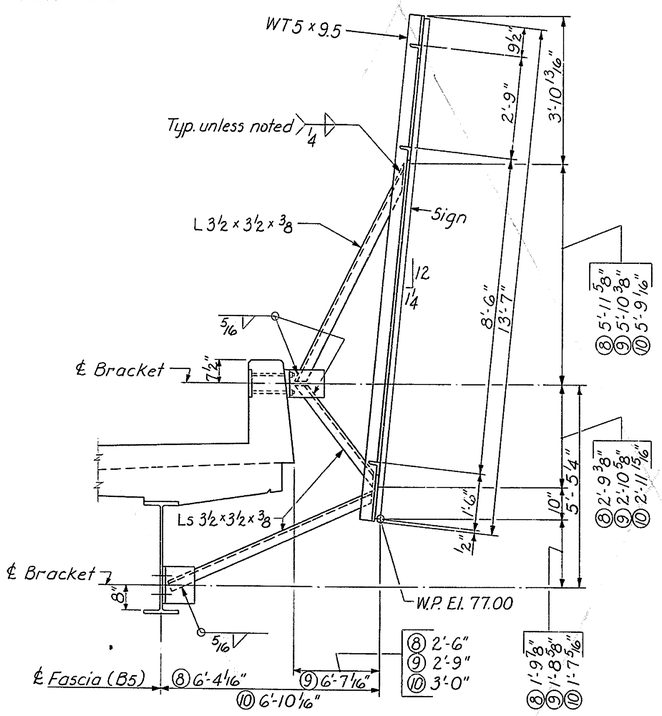

SUPPORTS ⑧, ⑨ & ⑩
SUPPORT ⑧ SHOWN
Scale: ½"=1'-0"

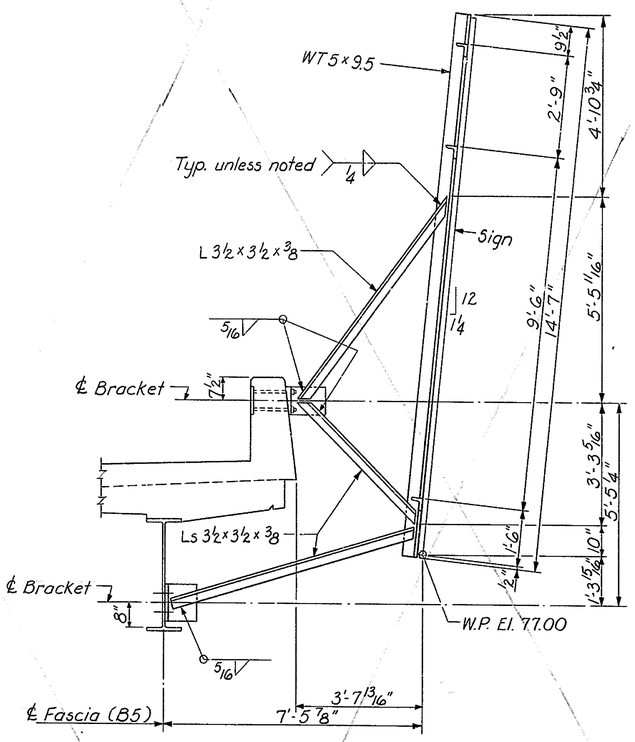

SUPPORT ⑫
Scale: ½"=1'-0"

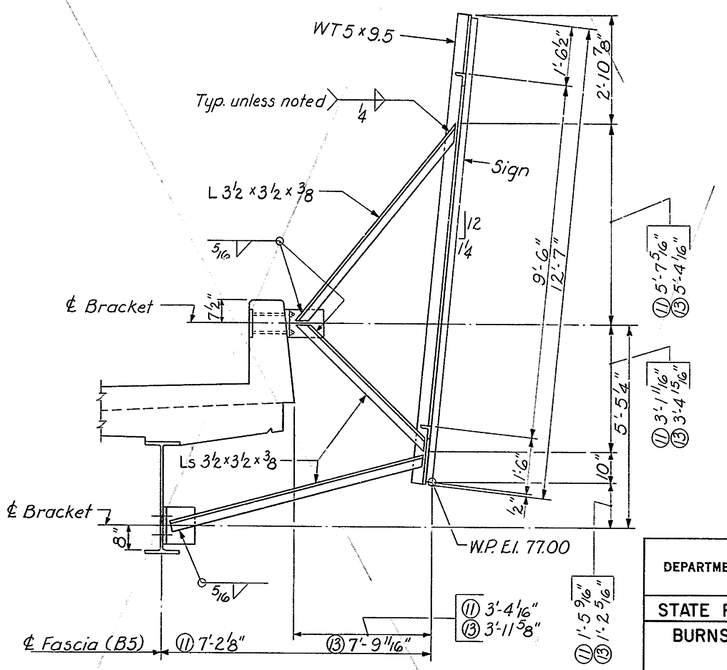

SUPPORTS ⑪ & ⑬
SUPPORT ⑬ SHOWN
Scale: ½"=1'-0"

DELAWARE
DEPARTMENT OF HIGHWAYS & TRANSPORTATION
DIVISION OF HIGHWAYS

STATE ROUTE 141 THRU NEWPORT
BURNSIDE BOULEVARD BRIDGE

SIGN SUPPORT DETAILS

D: R.S.W.	SCALE	APPROVED BY:
T: R.S.W.	AS NOTED	
C: J.J.S.		BRIDGE ENGINEER

COUNTY	CONTRACT	F.P.A. REG. NO.	STATE	FED. AID PROJECT NO.	SHEET NO.	TOTAL SHEETS
NEW CASTLE	71-02-009	2	DEL.		151	301

NO.	REVISIONS	BY	DATE

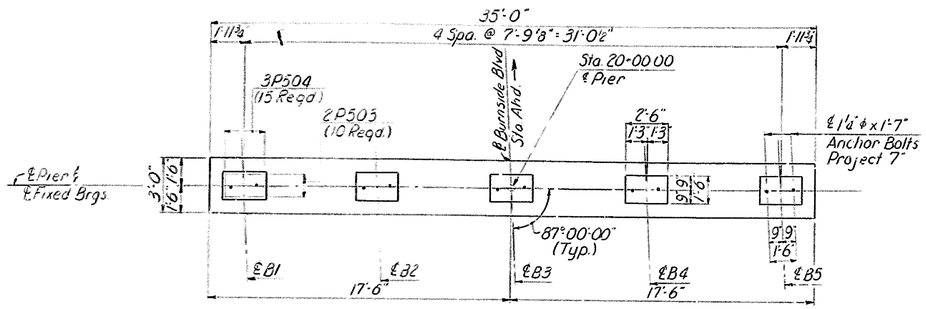

PLAN
Scale: ⅛" = 1'-0"

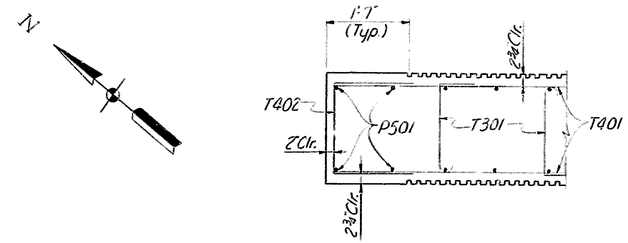

SECTION A-A
Scale: ¾" = 1'-0"

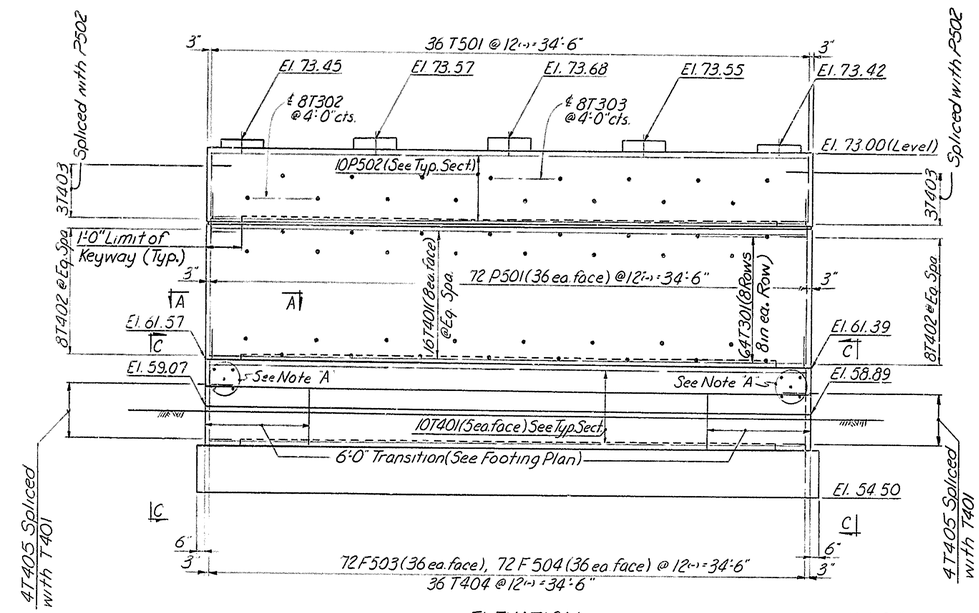

ELEVATION
Scale: ¼" = 1'-0"

Note "A"
5-1" ϕ Anchor Bolts each face for Standard Terminal Section Modified. For details of anchor bolts, see Standard Sheet G-7 Connection of Guard Rail to Bridge.

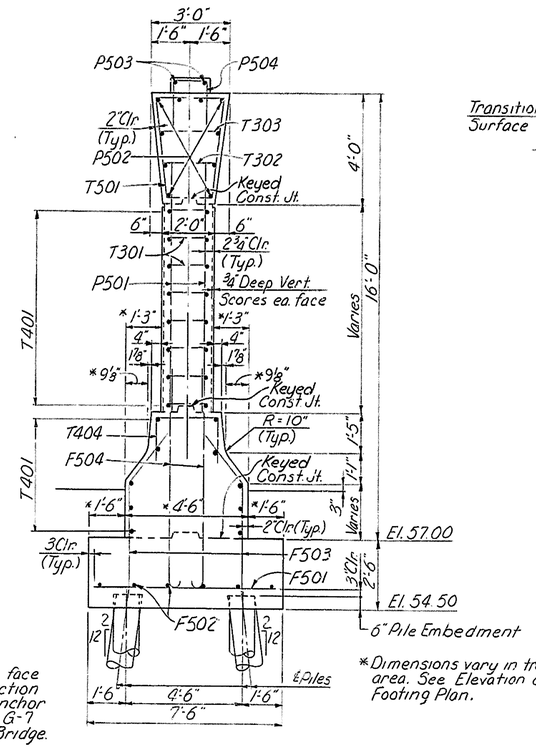

TYPICAL SECTION
Scale: ⅜" = 1'-0"

*Dimensions vary in transition area. See Elevation and Footing Plan.

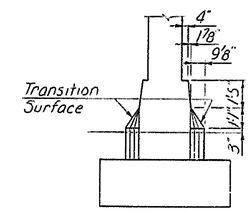

VIEW C-C
Scale: ¼" = 1'-0"

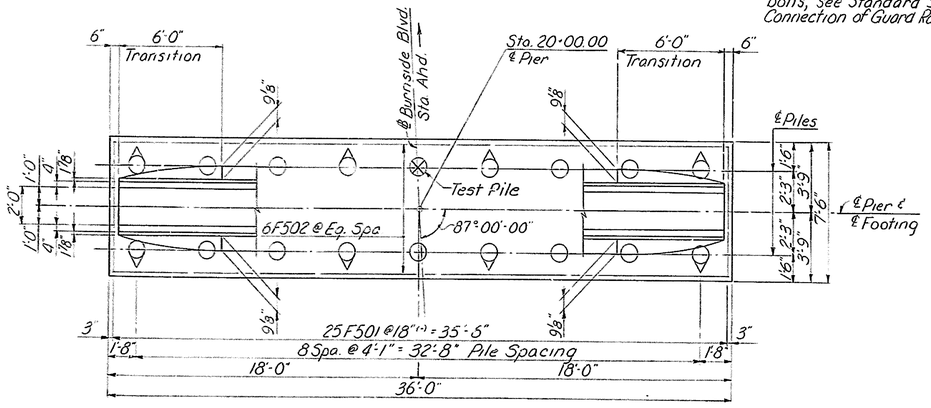

FOOTING PLAN
Scale: ¼" = 1'-0"

PIER BAR SCHEDULE BURNSIDE BLVD.

Mark	Size	No.	Length	Vary	Type
F501	#5	25	7'-2"		Str.
F502	#5	6	35'-6"		Str.
F503	#5	72	6'-1"		B
F504	#5	72	8'-2"		F
P501	#5	72	9'-3"		Str.
P502	#5	10	34'-5"		Str.
P503	#5	10	2'-3"		Str.
P504	#5	15	4'-4"		D
T501	#5	36	11'-1"		C
T401	#4	26	34'-9"		Str.
T402	#4	16	4'-0"		D
T403	#4	6	4'-2" to 4'-10"	2 each by 4"	D
T404	#4	36	5'-6"		D
T405	#4	8	4'-10"		D
T301	#3	64	2'-7"		E
T302	#3	8	3'-1"		E
T303	#3	8	3'-5"		E

BENDING DIAGRAMS

Note: All dimensions are out to out.

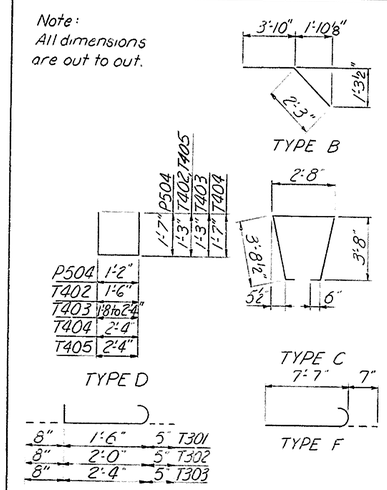

PIER NOTES

1. For General Notes, see Sh. #100.
2. For Architectural Details, see Sh. #113.
3. For Pile Details, see Sh. #164.
4. All piles shall be Cast-In-Place Concrete Piles. 12 In. 7 Gage.
5. Maximum design pile load = 40 Tons / Pile.
6. ⟐ Denotes battered piles and direction of batter. Batter = 1/2 : 12.
7. ⊗ Denotes Steel Shell Test Piles.

DELAWARE DEPARTMENT OF HIGHWAYS & TRANSPORTATION
DIVISION OF HIGHWAYS

STATE ROUTE 141 THRU NEWPORT

BURNSIDE BOULEVARD BRIDGE

PIER
PLAN, ELEVATION AND BAR SCHEDULE

D. S.M.S.	SCALE	APPROVED BY:
T. R.G.S.t.S.P.H.	AS NOTED	
C. S.M.S.		BRIDGE ENGINEER

COUNTY	CONTRACT	P.B.A. RTE. NO.	STATE	FED. AID PROJECT NO.	SHEET NO.	TOTAL SHEETS
NEW CASTLE	71-02-009	2	DEL.		152	301

NO.	REVISIONS	BY	DATE

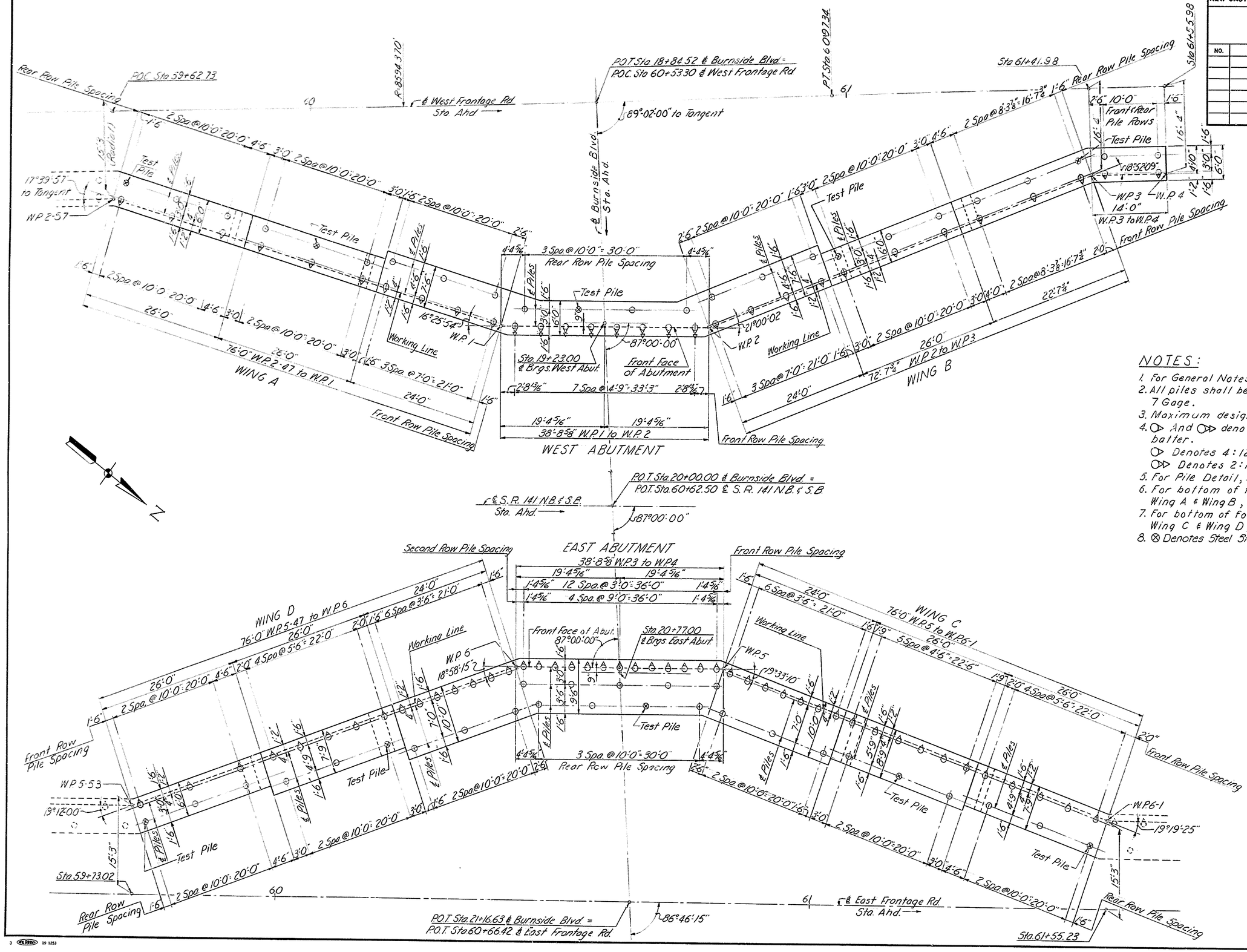

NOTES:

1. For General Notes, see Sheet #100.
2. All piles shall be Cast-in-Place Concrete Piles. 12 In. 7 Gage.
3. Maximum design pile load = 40 Tons / Pile.
4. ⊘ And ⊘⊳ denotes battered piles and direction of batter.
   - ⊘ Denotes 4:12 batter.
   - ⊘⊳ Denotes 2:12 batter.
5. For Pile Detail, see Sheet #164.
6. For bottom of footing elevations of West Abutment, Wing A & Wing B, see Sheets #153, 154 & 155.
7. For bottom of footing elevations of East Abutment, Wing C & Wing D, see Sheets #158, 159 & 160.
8. ⊗ Denotes Steel Shell Test Piles.

DELAWARE
DEPARTMENT OF HIGHWAYS & TRANSPORTATION
DIVISION OF HIGHWAYS

STATE ROUTE 141 THRU NEWPORT

BURNSIDE BOULEVARD BRIDGE

PILE LOCATION PLAN
WEST AND EAST ABUTMENTS

D. R.W.C.	SCALE	APPROVED BY:
T. R.W.C. & G.M.	1/8" = 1'-0"	
C. S.M.S.		BRIDGE ENGINEER

COUNTY	CONTRACT	P.B.A. REG. NO.	STATE	FED. AID PROJECT NO.	SHEET NO.	TOTAL SHEETS
NEW CASTLE	71-02-009	2	DEL.		153	301

NO.	REVISIONS	BY	DATE
1	Relocate 2" Conduit & Hole in Backwall for Utilities	T.F.F.	12-9-75

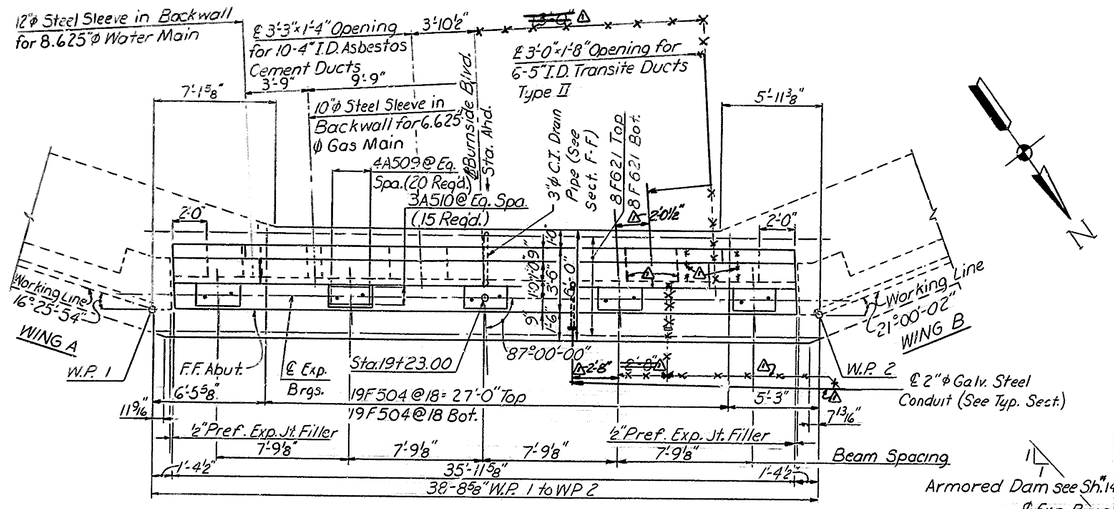

PLAN - WEST ABUTMENT
Scale: ¼" = 1'-0"

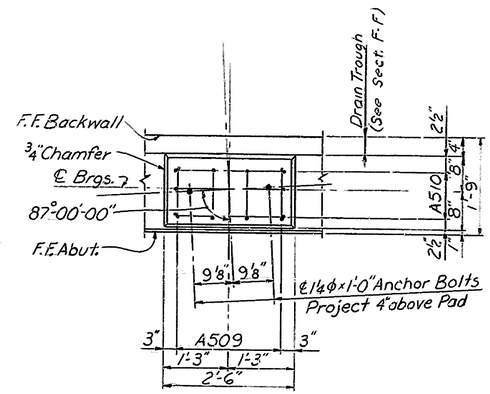

PAD DETAIL
Scale: ¾" = 1'-0"

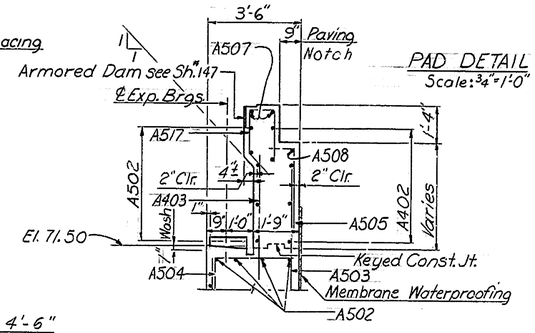

SECTION A-A
Scale: ⅜" = 1'-0"

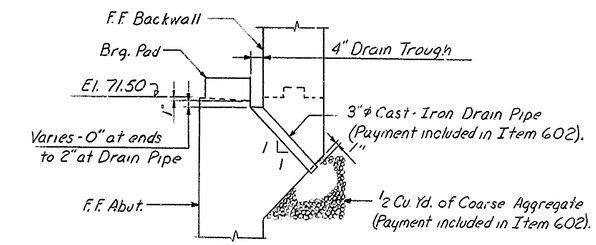

SECTION F-F
Scale: ½" = 1'-0"

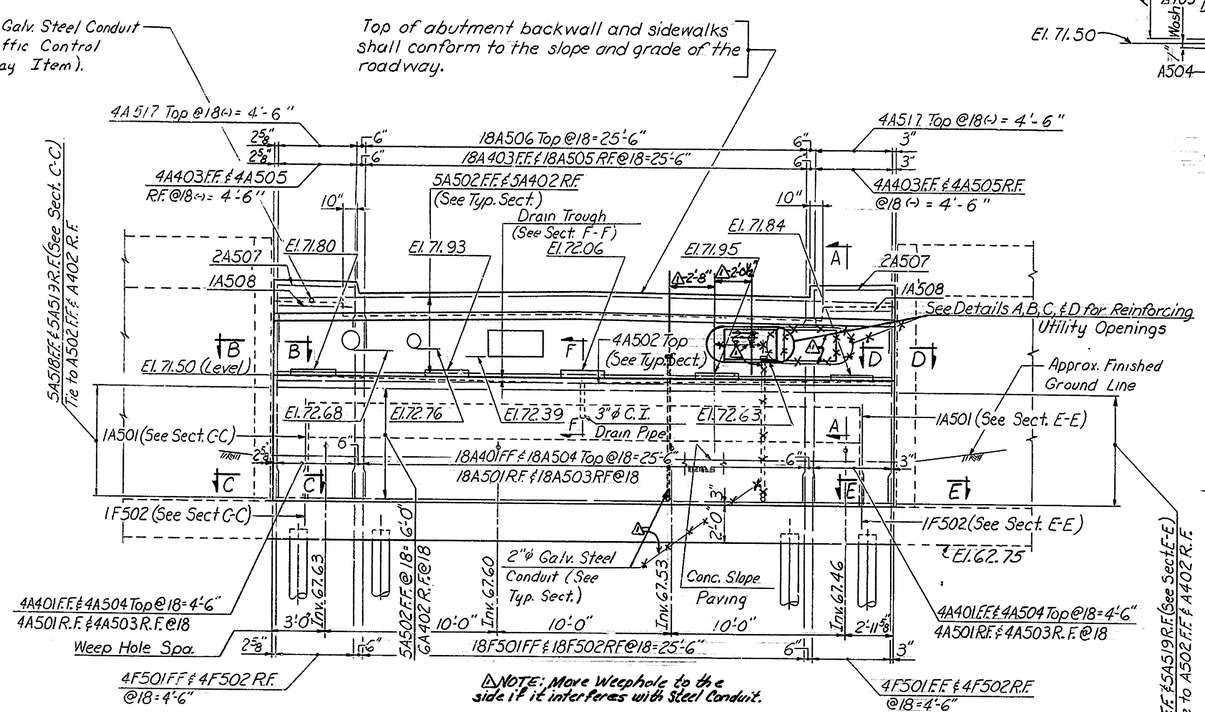

ELEVATION
Scale: ¼" = 1'-0"

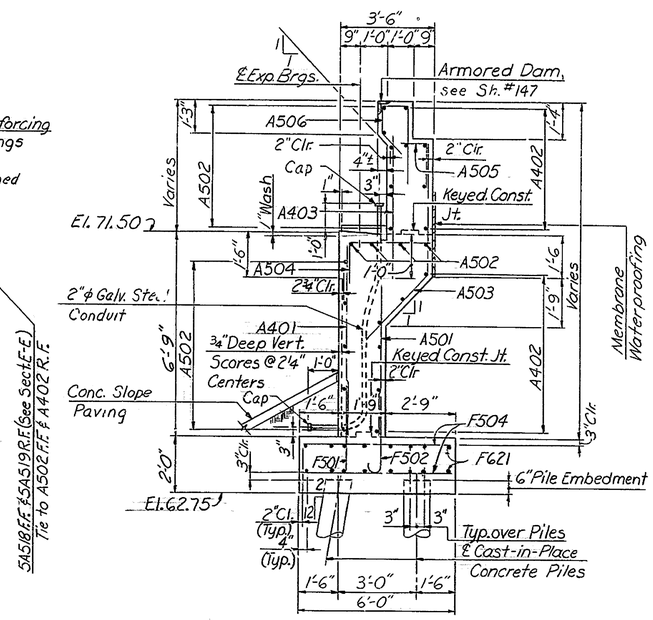

TYPICAL SECTION
Scale: ⅜" = 1'-0"

WEST ABUTMENT NOTES

1. For General Notes, see Sh. #100
2. For Architectural Details, see Sh. #113
3. For Weep Hole Drainage Details see Sh. #108
4. For Joint Details, see Sh. #116
5. For Wing A Plan & Elevation, see Sh. #154
6. For Wing B Plan & Elevation, see Sh. #155
7. For Sections B-B thru G-G and Details A thru D, see Sh. #156
8. For Bar Schedule, see Sh. #157
9. The abutment backwall shall not be placed until the Structural Steel has been erected and the deck slab placed.
10. See Special Provisions for grouting the utility openings in the abutment backwall.
11. Cut and bend the vertical and horizontal abutment backwall reinforcement in the field to provide 3" Clearance to the utility openings. Additional reinforcing is shown on Sh. #156
12. See the Roadway Lighting Plans for conduits and electrical details not shown.
13. For Parapet Protective Fence Details, see Sh. #114

DELAWARE DEPARTMENT OF HIGHWAYS & TRANSPORTATION
DIVISION OF HIGHWAYS

STATE ROUTE 141 THRU NEWPORT

BURNSIDE BOULEVARD BRIDGE

WEST ABUTMENT
PLAN & ELEVATION

D.W.B.C.	SCALE	APPROVED BY:
T.W.R.W.	AS NOTED	
C.S.M.S.		BRIDGE ENGINEER

COUNTY	CONTRACT	P.F.A. REG. NO.	STATE	FED. AID PROJECT NO.	SHEET NO.	TOTAL SHEETS
NEW CASTLE	71-02-009	2	DEL.		154	301

NO.	REVISIONS	BY	DATE

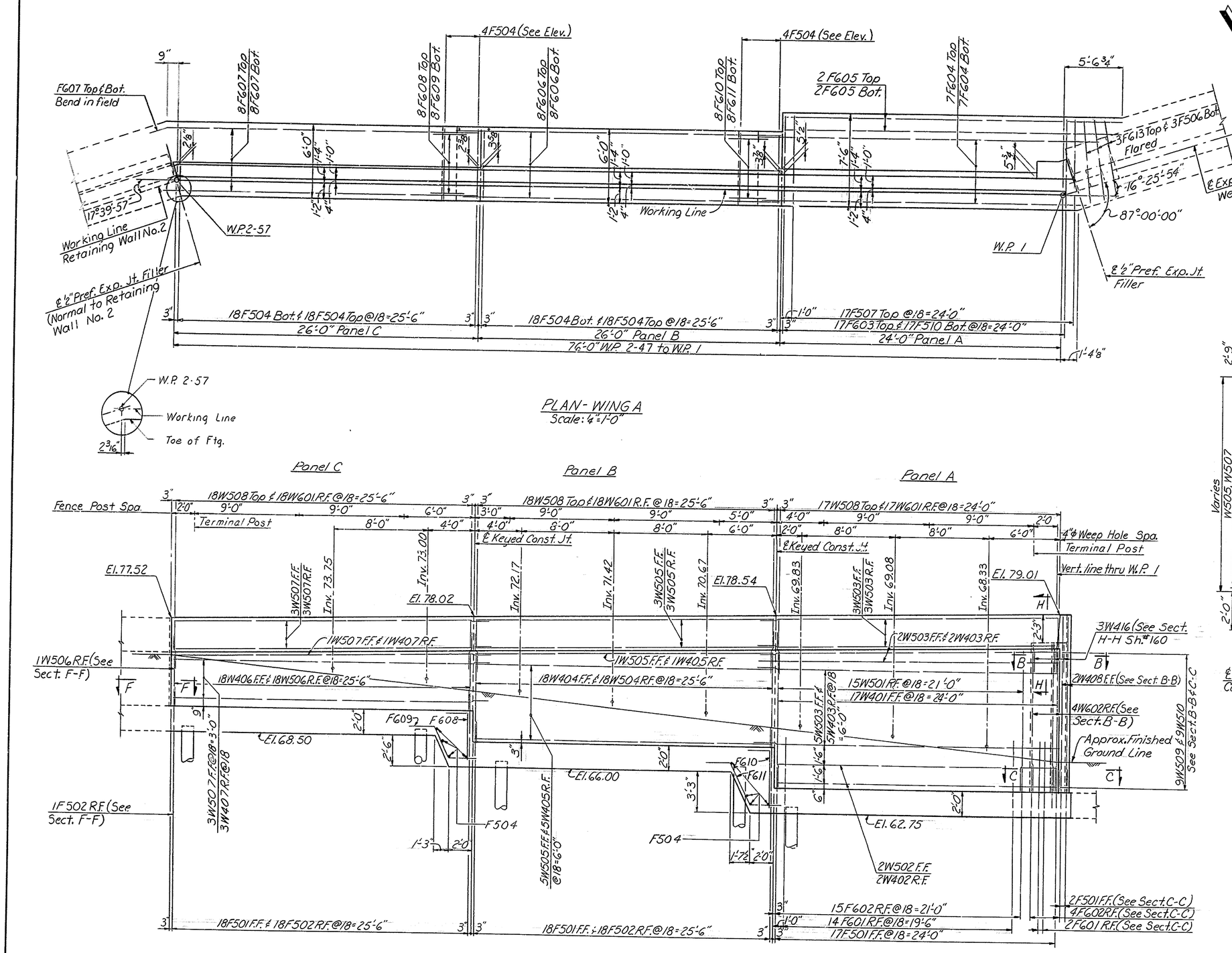

PLAN - WING A
Scale: ¼" = 1'-0"

ELEVATION
Scale: ¼" = 1'-0"

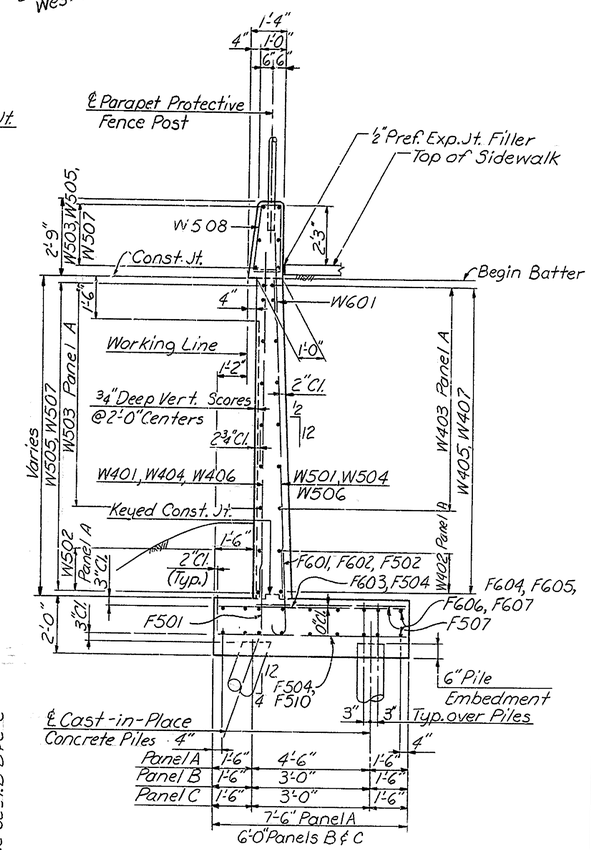

TYPICAL SECTION
Scale: ⅜" = 1'-0"

For West Abutment Notes, See Sh. #153

DELAWARE DEPARTMENT OF HIGHWAYS & TRANSPORTATION
DIVISION OF HIGHWAYS

STATE ROUTE 141 THRU NEWPORT
BURNSIDE BOULEVARD BRIDGE

WEST ABUTMENT -- WING A
PLAN & ELEVATION

D. W.B.C.	SCALE	APPROVED BY:
T. W.R.W.	AS NOTED	
C.S.M.S.		BRIDGE ENGINEER

COUNTY	CONTRACT	P. & A. REG. NO.	STATE	FED. AID PROJECT NO.	SHEET NO.	TOTAL SHEETS
NEW CASTLE	71-02-009	2	DEL.		155	301

NO.	REVISIONS	BY	DATE

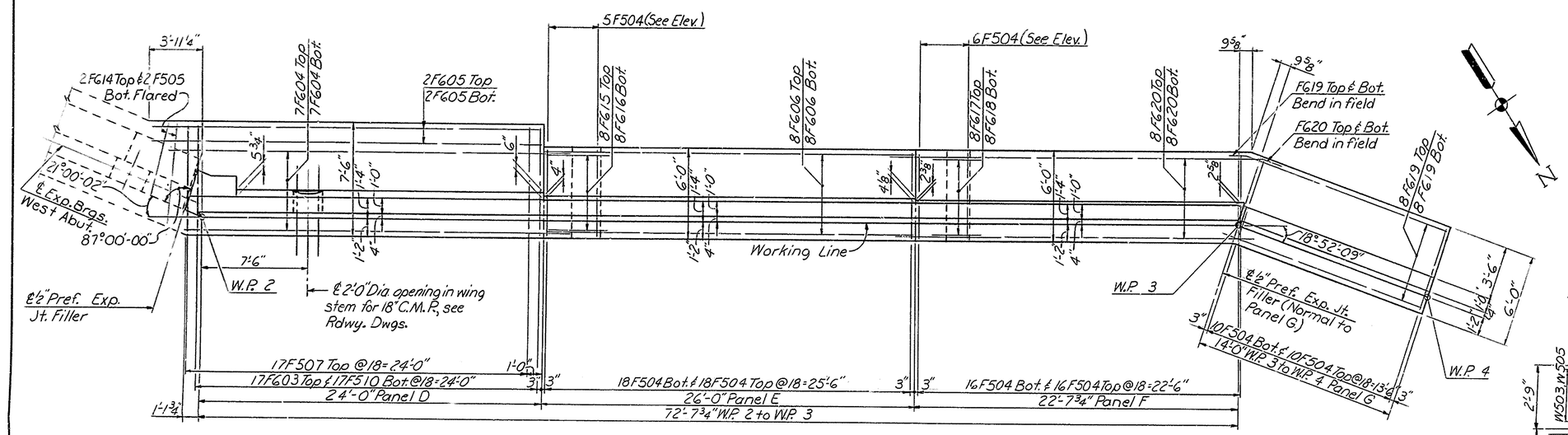

PLAN - WING B
Scale: 1/4" = 1'-0"

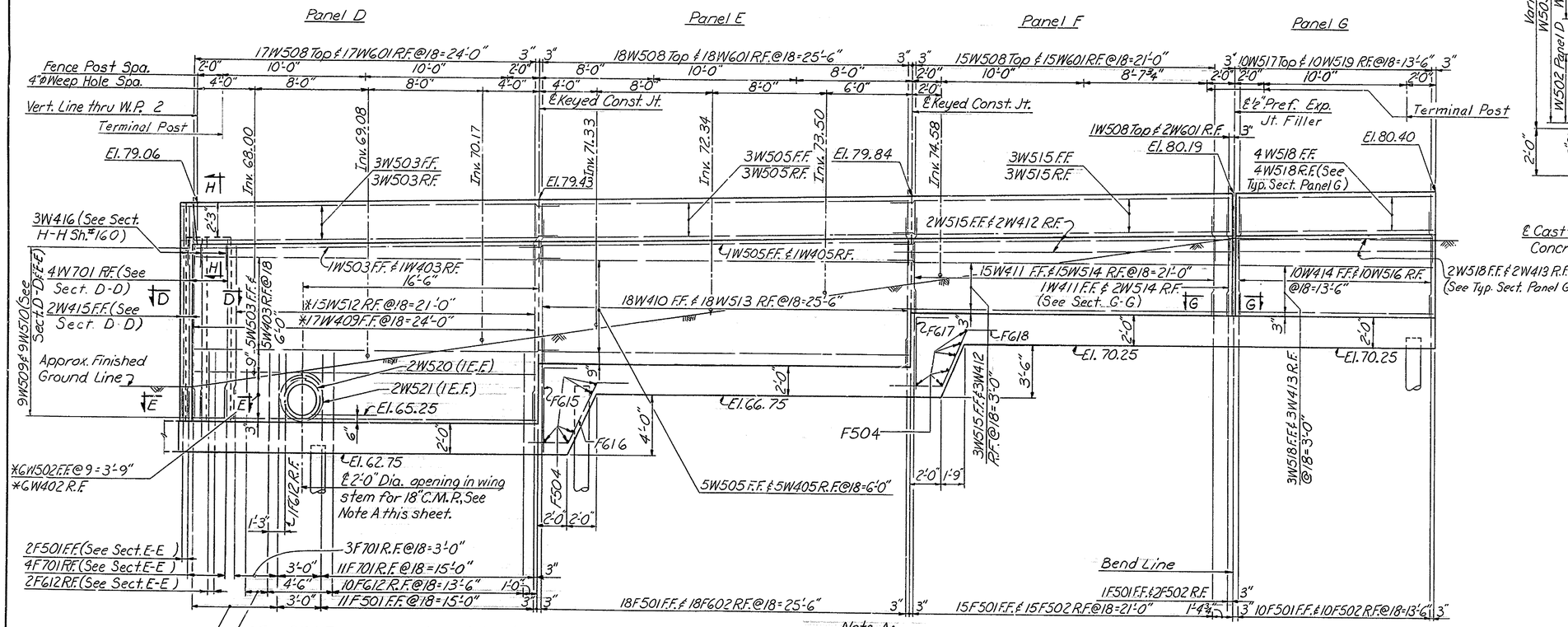

* Cut bars in the field as req'd. to provide 2'-0" Dia. opening.

ELEVATION
Scale: 1/4" = 1'-0"

Note A:
After the 18" C.M.P. has been installed, the Contractor shall grout the opening and waterproof the rear face of the wing stem as directed by the Engineer in the field.

For West Abutment Notes, see Sh. #153

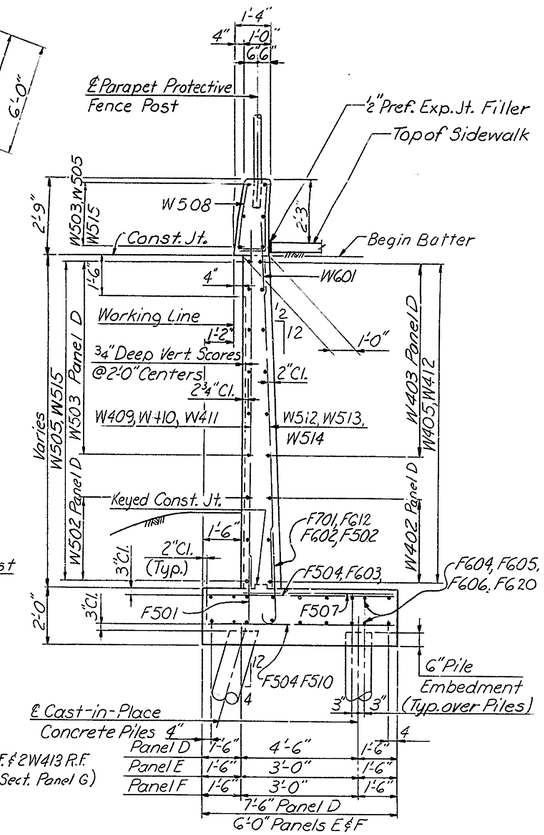

TYPICAL SECTION
Scale: 3/8" = 1'-0"

For Typical Section, Panel G, see Sh. #161

DELAWARE DEPARTMENT OF HIGHWAYS & TRANSPORTATION
DIVISION OF HIGHWAYS

STATE ROUTE 141 THRU NEWPORT
BURNSIDE BOULEVARD BRIDGE
WEST ABUTMENT - WING B
PLAN & ELEVATION

D.W.B.C. T.W.R.W. C.S.M.S.	SCALE AS NOTED	APPROVED BY: BRIDGE ENGINEER

COUNTY	CONTRACT	P. & A. REG. NO.	STATE	FED. AID PROJECT NO.	SHEET NO.	TOTAL SHEETS
NEW CASTLE	71-02-009	2	DEL.		156	301

NO.	REVISIONS	BY	DATE

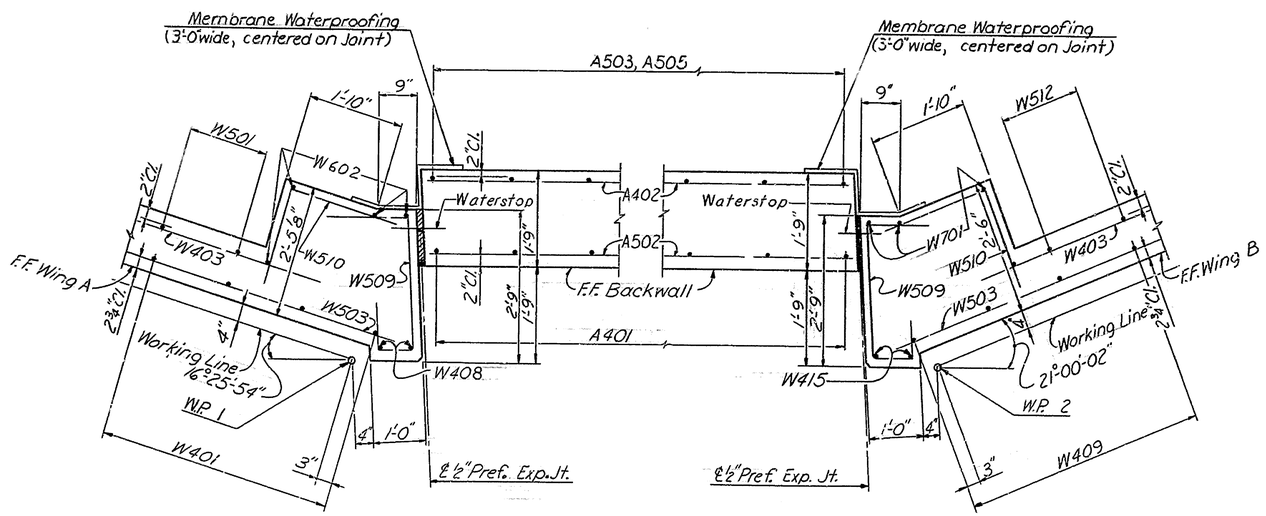

SECTION B-B
Scale: 3/4" = 1'-0"

SECTION D-D
Scale: 3/4" = 1'-0"

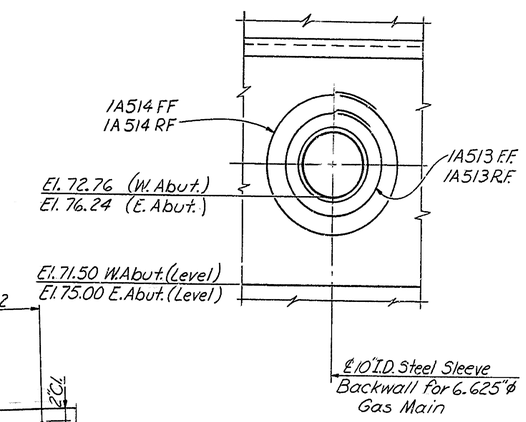

DETAIL C
Scale: 1" = 1'-0"

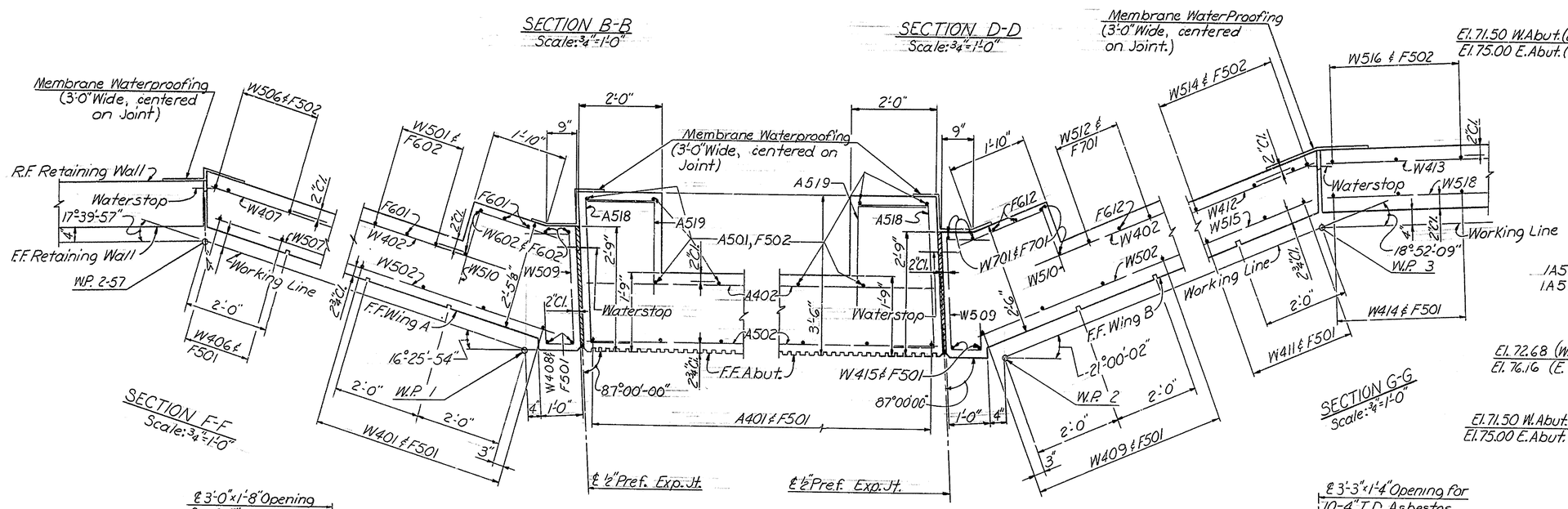

SECTION F-F
Scale: 3/4" = 1'-0"

SECTION C-C
Scale: 3/4" = 1'-0"

SECTION E-E
Scale: 3/4" = 1'-0"

SECTION G-G
Scale: 3/4" = 1'-0"

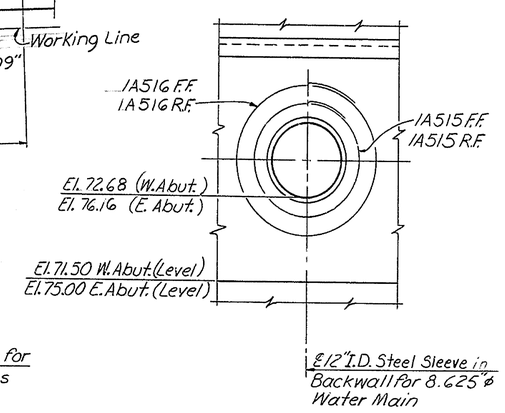

DETAIL D
Scale: 1" = 1'-0"

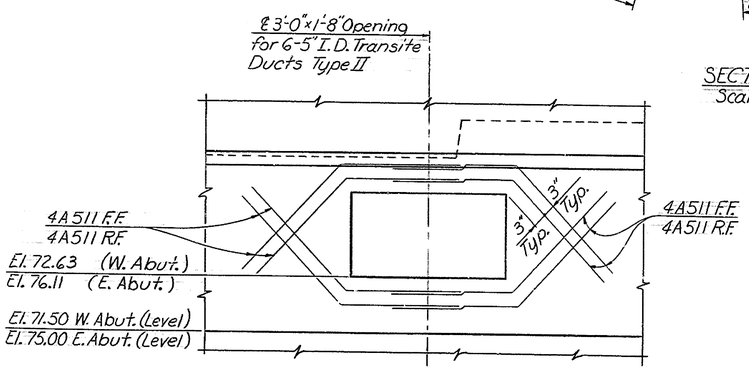

DETAIL A
Scale: 3/4" = 1'-0"

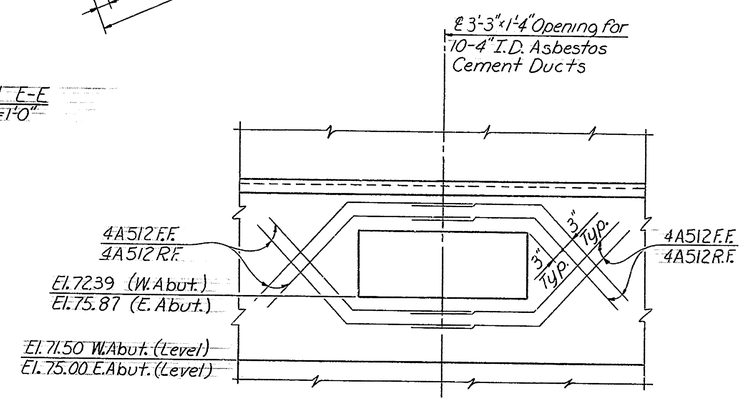

DETAIL B
Scale: 3/4" = 1'-0"

For West Abutment Notes, see Sh. 153

DELAWARE DEPARTMENT
OF HIGHWAYS & TRANSPORTATION
DIVISION OF HIGHWAYS

STATE ROUTE 141 THRU NEWPORT
BURNSIDE BOULEVARD BRIDGE

WEST ABUTMENT
DETAILS

D. WBC	SCALE	APPROVED BY:
T. WRW	AS NOTED	
C.S.M.S.		BRIDGE ENGINEER

BAR SCHEDULE WEST ABUTMENT

Mark	Size	No. Req'd. About.	No. Req'd. Wing A	No. Req'd. Wing B	Length	Type	Bending Dimensions A	B	C	D	E	F
F501	#5	26	55	62	2'-6"	Str.						
F502	#5	28	37	27	3'-1"	A	7"	2'-6"				
F504	#5	38	80	99	5'-8"	Str.						
F505	#5			2	6'-2" to 6'-8"	Str.	Vary one each by 6"					
F506	#5		3		6'-2" to 6'-10"	Str.	Vary one each by 4"					
F507	#5		17	17	5'-7"	Str.						
F510	#5		17	17	7'-2"	Str.						
F601	#6		16		6'-0"	A	8"	5'-4"				
F602	#6		19	18	3'-10"	A	8"	3'-2"				
F603	#6		17	17	7'-2"	Str.						
F604	#6		14	14	27'-6"	Str.						
F605	#6		4	4	29'-6"	Str.						
F606	#6		16	16	27'-8"	Str.						
F607	#6		16		27'-3"	Str.						
F608	#6		8		5'-0"	C	1'-6"	3'-6"	0"			
F609	#6		8		5'-9"	B	1'-6"	2'-9"	1'-6"	1'-3"	2'-6"	
F610	#6		8		5'-9"	C	1'-6"	4'-3"	0"			
F611	#6		8		6'-8"	B	1'-6"	3'-8"	1'-6"	1'-7½"	3'-3"	
F612	#6			15	6'-6"	A	8"	5'-10"				
F613	#6		3		6'-2" to 6'-10"	Str.	Vary one each by 4"					
F614	#6			2	6'-2" to 6'-8"	Str.	Vary one each by 6"					
F615	#6			8	6'-6"	C	1'-6"	5'-0"	0"			
F616	#6			8	7'-6"	B	1'-6"	4'-6"	1'-6"	2'-0"	4'-0"	
F617	#6			8	6'-0"	C	1'-6"	4'-6"	0"			
F618	#6			8	7'-0"	B	1'-6"	4'-0"	1'-6"	1'-9"	3'-6"	
F619	#6			16	15'-0"	Str.						
F620	#6			16	24'-9"	Str.						
F621	#6	16			38'-9"	Str.						
F701	#7			18	4'-2"	A	9"	3'-5"				
A401	#4	26			6'-6"	Str.						
A402	#4	11			35'-6"	Str.						
A403	#4	26			4'-6"	Str.						
A501	#5	28			4'-6"	Str.						
A502	#5	14			35'-6"	Str.						
A503	#5	26			8'-0"	F	3'-6"	3'-2⅛"	3'-2⅛"	4'-6"		
A504	#5	26			4'-4"	C	1'-3"	3'-1"	0"			
A505	#5	26			3'-6"	C	1'-3"	2'-3"	0"			
A506	#5	18			4'-6"	H	1'-9"	1'-0"	1'-0"	9"	6½"	6½"
A507	#5	4			4'-6"	Str.						
A508	#5	2			4'-0"	Str.						
A509	#5	20			4'-6"	C	1'-9"	1'-0"	1'-9"			
A510	#5	15			5'-8"	C	1'-9"	2'-2"	1'-9"			
A511*	#5	16			5'-3"	F	2'-7"	1'-10⅝"	1'-10⅝"	2'-8"		
A512*	#5	16			4'-8"	F	2'-5"	1'-7"	1'-7"	2'-3"		
A513*	#5	2			5'-5"	G	1'-4"	1'-3"				
A514*	#5	2			7'-0"	G	1'-10"	1'-3"				
A515*	#5	2			6'-0"	G	1'-6"	1'-3"				
A516*	#5	2			7'-7"	G	2'-0"	1'-3"				
A517	#5	8			5'-10"	H	2'-5"	1'-0"	1'-8"	9"	6½"	6½"
A518	#5	10			6'-6"	C	1'-8"	3'-2"	1'-8"			
A519	#5	10			3'-8"	C	1'-8"	2'-0"	0"			
W401	#4		17		13'-0"	Str.						
W402	#4		2	6	22'-6"	Str.						
W403	#4		7	6	23'-6"	Str.						
W404	#4		18		8'-9"	Str.						
W405	#4		6	6	25'-8"	Str.						
W406	#4		18		5'-9"	Str.						
W407	#4		4		27'-0"	Str.						
W408	#4		2		14'-0"	Str.						
W409	#4			17	13'-0"	Str.						
W410	#4			18	9'-6"	Str.						
W411	#4			16	6'-3"	Str.						
W412	#4			5	23'-6"	Str.						
W413	#4			5	13'-8"	Str.						
W414	#4			10	6'-6"	Str.						
W415	#4			2	14'-0"	Str.						
W416	#4		3	3	4'-0"	C	1'-10"	2'-2"	0"			
W501	#5		15		11'-0"	Str.						
W502	#5		2	6	24'-3"	Str.						
W503	#5		13	12	25'-9"	Str.						
W504	#5		18		7'-3"	Str.						
W505	#5		12	12	25'-8"	Str.						
W506	#5		19		4'-3"	Str.						
W507	#5		10		27'-0"	Str.						
W508	#5		53	51	7'-8"	D	2'-6¼"	9¼"	2'-6"	11¼"	11¼"	3½"
W509	#5		9	9	4'-7"	E	6"	1'-0"	2'-4"	9"		
W510	#5		9	9	4'-2"	C	1'-11"	2'-3"	0"			
W512	#5			15	11'-3"	Str.						
W513	#5			18	7'-8"	Str.						
W514	#5			17	4'-7"	Str.						
W515	#5			11	23'-10"	Str.						
W516	#5			10	5'-0"	Str.						
W517	#5			10	5'-7"	D	2'-6"	9"	2'-0"	4"	0"	3½"
W518	#5			13	13'-8"	Str.						
W519	#5			10	4'-7"	I	1'-6"	1'-4"	1'-2½"	1'-2½"	1'-9"	
W520*	#5			2	9'-3"	G	2'-7¼"	1'-3"				
W521*	#5			2	10'-10"	G	3'-1¼"	1'-3"				
W601	#6		53	52	4'-0"	Str.						
W602	#6		4		11'-9"	Str.						
W701	#7			4	11'-9"	Str.						

* Reinforcement for Utility Openings.

BENDING DIAGRAMS

All dimensions are out to out.

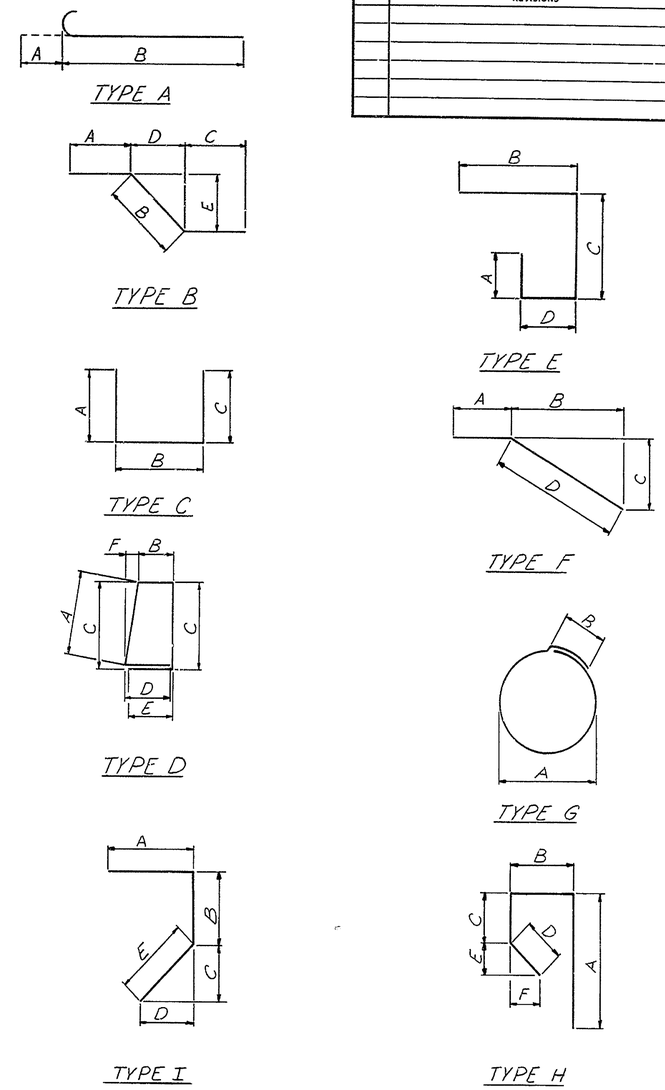

COUNTY	CONTRACT	P.R.A. REG. NO.	STATE	FED. AID PROJECT NO.	SHEET NO.	TOTAL SHEETS
NEW CASTLE	71-02-009	2	DEL.		157	301

NO.	REVISIONS	BY	DATE

DELAWARE DEPARTMENT
OF HIGHWAYS & TRANSPORTATION
DIVISION OF HIGHWAYS

STATE ROUTE 141 THRU NEWPORT
BURNSIDE BOULEVARD BRIDGE

WEST ABUTMENT
BAR SCHEDULE

D. W. B. C.
T. W. R. W.
C. S. M. S.

SCALE: NONE

APPROVED BY:
BRIDGE ENGINEER

COUNTY	CONTRACT	P.R.A. REG. NO.	STATE	FED. AID PROJECT NO.	SHEET NO.	TOTAL SHEETS
NEW CASTLE	71-02-009	2	DEL.		158	301

NO.	REVISIONS	BY	DATE
1	Revised Location in Backwall for Transite Ducts	T.F.F.	12-9-75

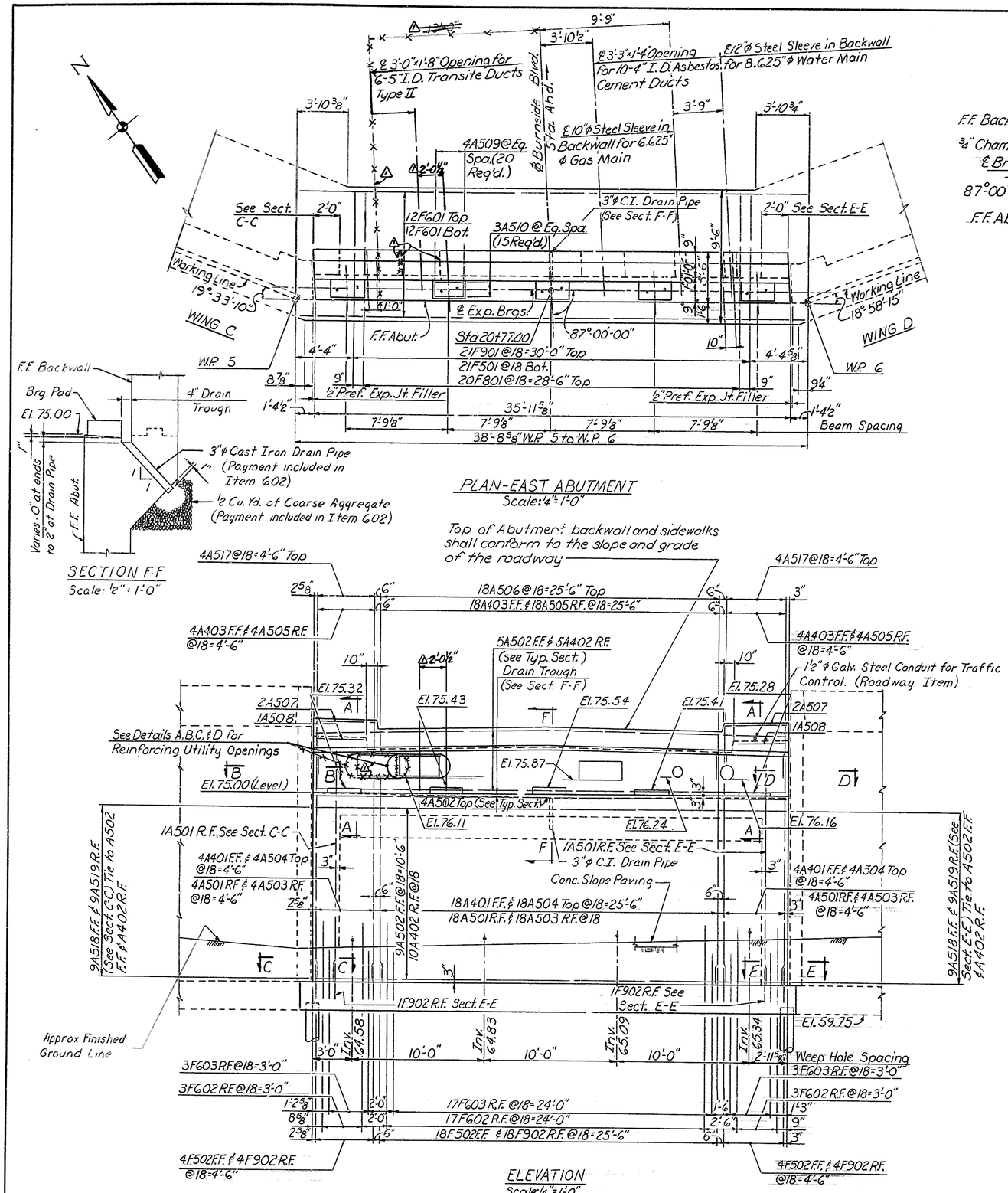

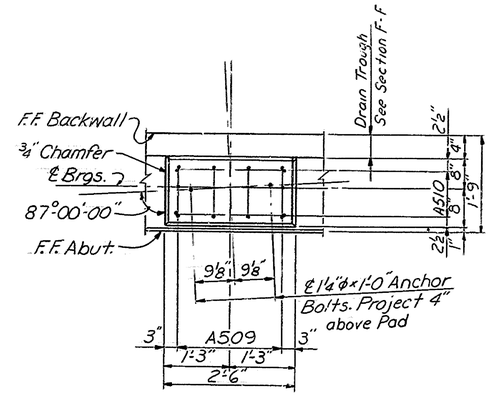

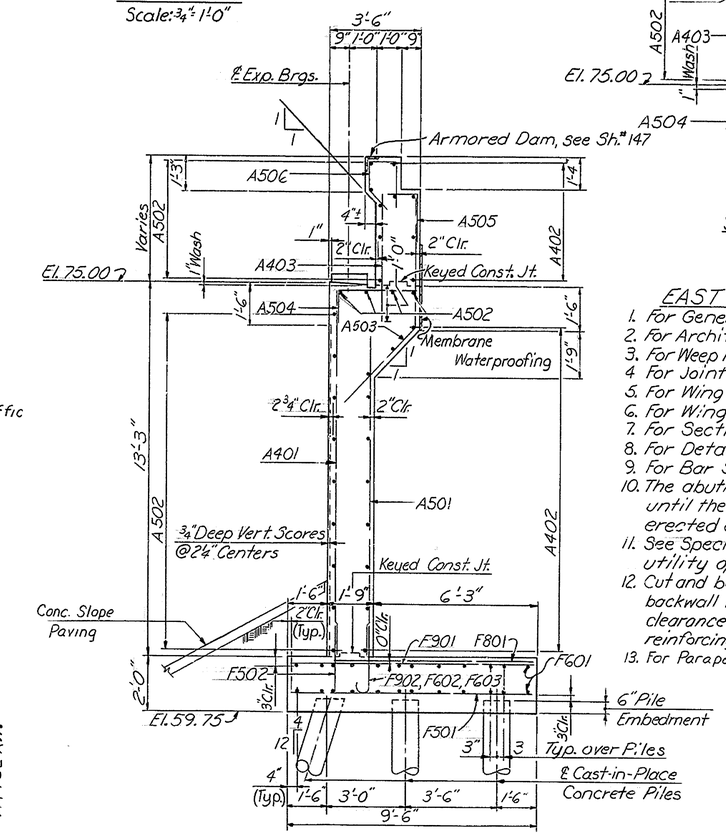

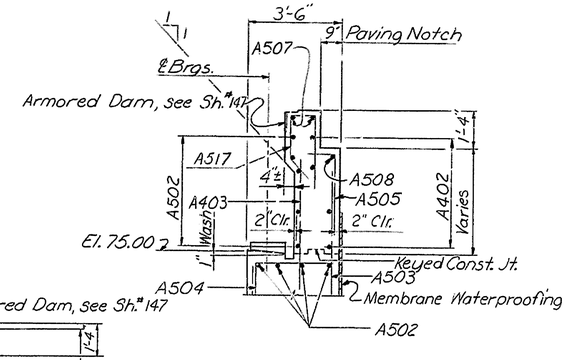

EAST ABUTMENT NOTES

1. For General Notes, see Sh. # 100.
2. For Architectural Details, see Sh. # 113.
3. For Weep Hole Drainage Details see Sh. # 108.
4. For Joint Details, see Sh. # 116.
5. For Wing C Plan & Elevation, see Sh. # 159.
6. For Wing D Plan & Elevation, see Sh. # 160.
7. For Sections B-B thru G-G, see Sh. # 161.
8. For Details A thru D, see Sh. # 156.
9. For Bar Schedule, see Sh. # 162.
10. The abutment backwall shall not be placed until the structural steel has been erected and the deck slab placed.
11. See Special Provisions for grouting the utility openings in the abutment backwall.
12. Cut and bend the horizontal and vertical abutment backwall reinforcement in the field to provide 3" clearance to the utility openings. Additional reinforcing is shown on Sh. # 156.
13. For Parapet Protective Fence Details, see Sh. # 114.

DELAWARE DEPARTMENT OF HIGHWAYS & TRANSPORTATION
DIVISION OF HIGHWAYS

STATE ROUTE 141 THRU NEWPORT
BURNSIDE BOULEVARD BRIDGE

EAST ABUTMENT
PLAN & ELEVATION

D. W.B.C	SCALE	APPROVED BY:
T. W.R.W	AS NOTED	
C. S.M.S.		BRIDGE ENGINEER

COUNTY	CONTRACT	P.R.A. REG. NO.	STATE	FED. AID PROJECT NO.	SHEET NO.	TOTAL SHEETS
NEW CASTLE	71-02-009	2	DEL.		159	301

NO.	REVISIONS	BY	DATE

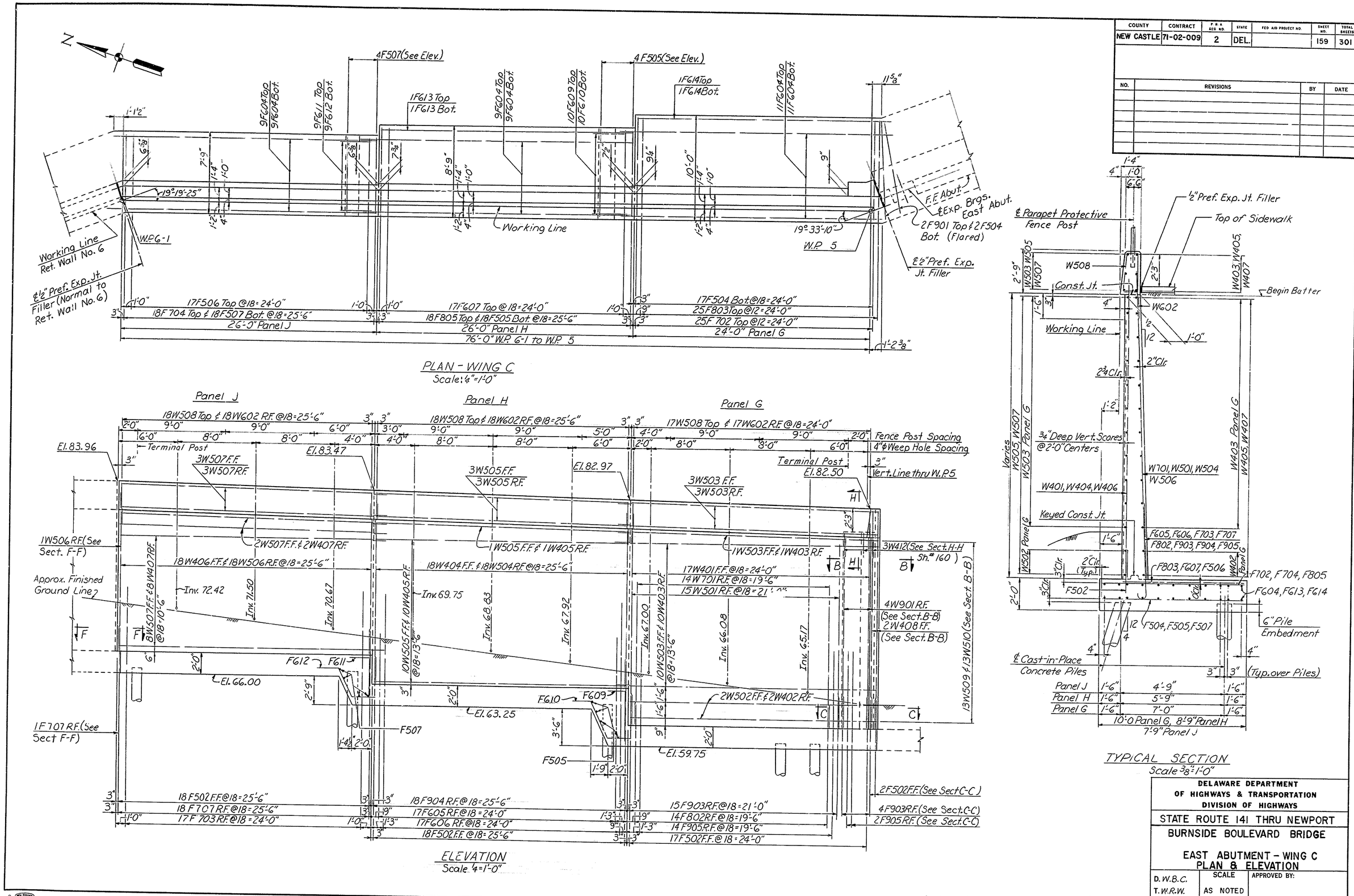

For East Abutment Notes, see Sh. # 158

DELAWARE DEPARTMENT OF HIGHWAYS & TRANSPORTATION
DIVISION OF HIGHWAYS

STATE ROUTE 141 THRU NEWPORT

BURNSIDE BOULEVARD BRIDGE

EAST ABUTMENT - WING C
PLAN & ELEVATION

D.W.B.C.	SCALE	APPROVED BY:
T.W.R.W.	AS NOTED	
C.S.M.S.		BRIDGE ENGINEER

COUNTY	CONTRACT	P.B.A. REG. NO.	STATE	FED. AID PROJECT NO.	SHEET NO.	TOTAL SHEETS
NEW CASTLE	71-02-009	2	DEL.		160	301

NO.	REVISIONS	BY	DATE

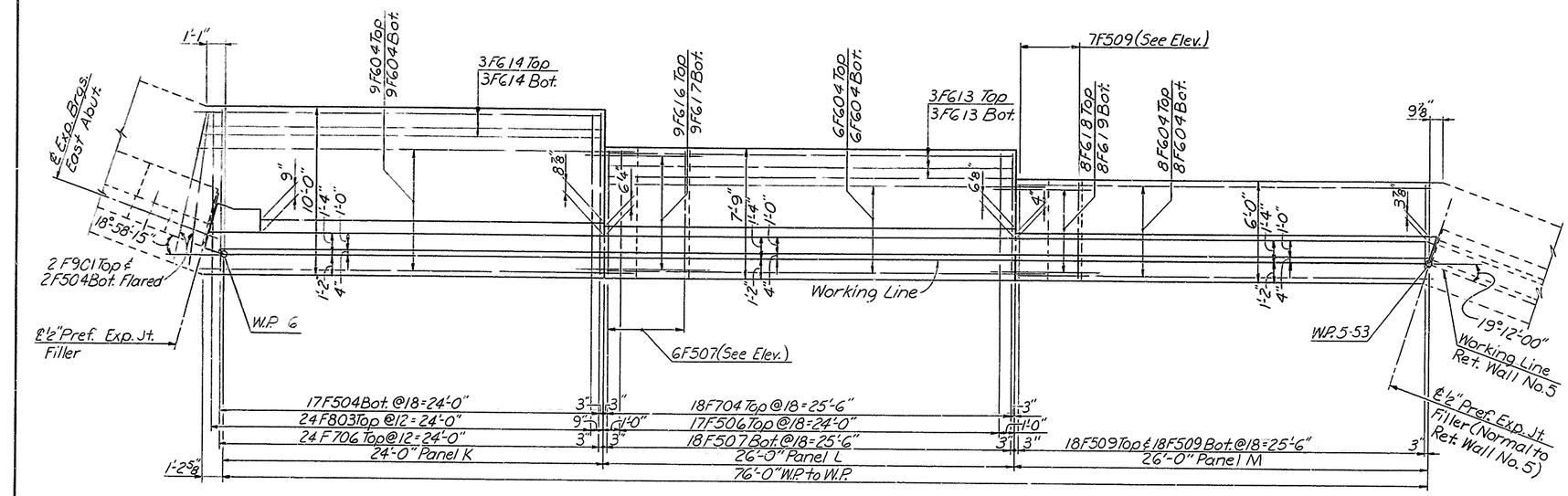

PLAN - WING D
Scale 1/4" = 1'-0"

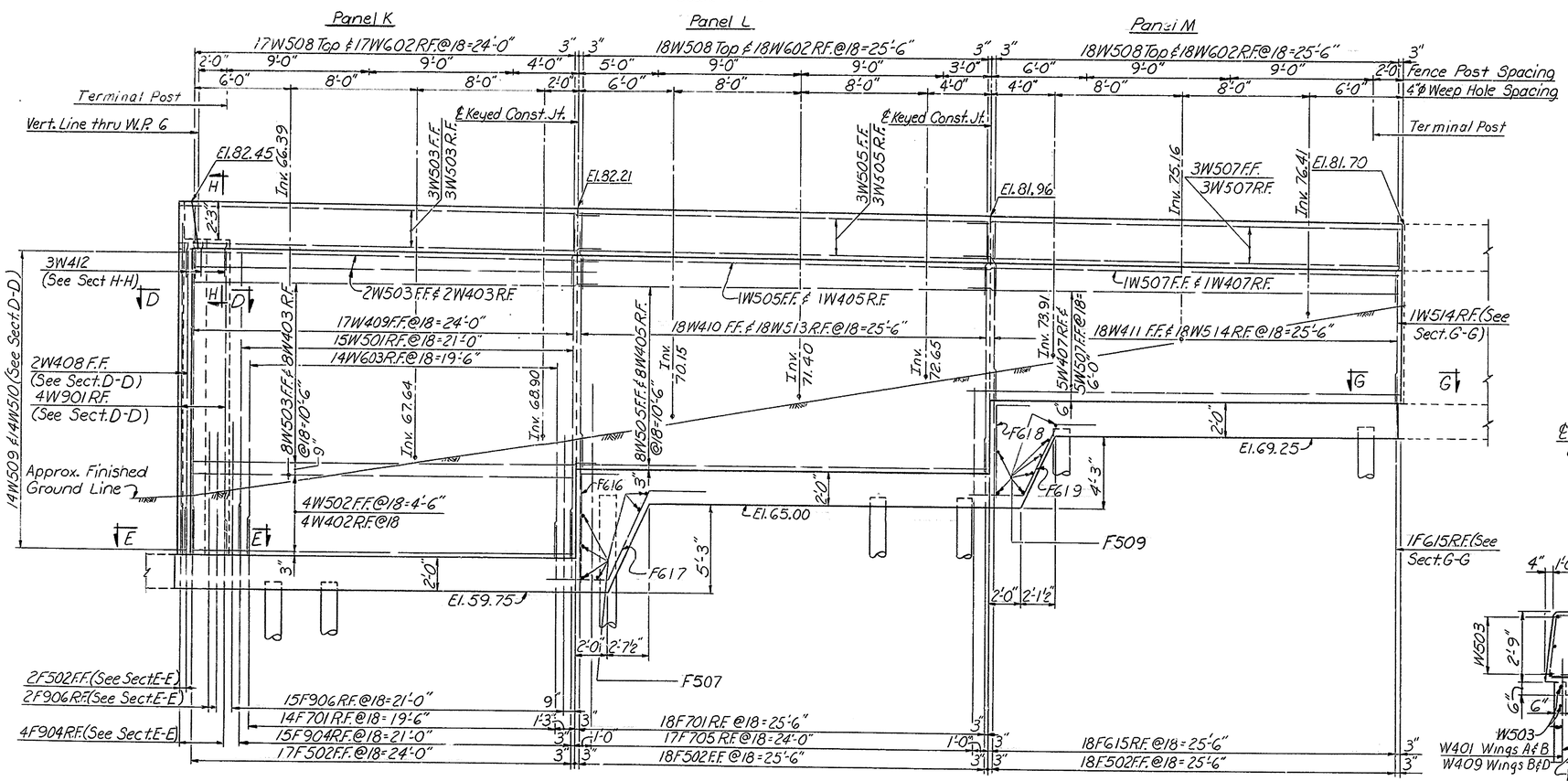

ELEVATION
Scale 1/4" = 1'-0"

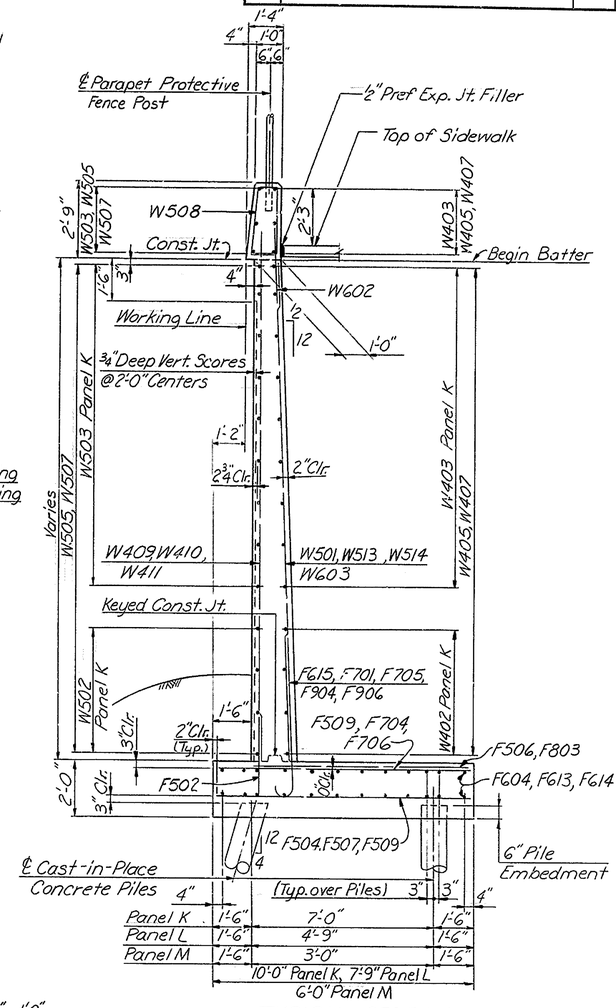

TYPICAL SECTION
Scale 3/8" = 1'-0"

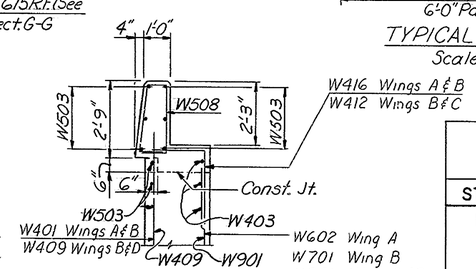

SECTION H-H
Scale: 3/8" = 1'-0"

For East Abutment Notes, see Sh. #158

DELAWARE DEPARTMENT OF HIGHWAYS & TRANSPORTATION
DIVISION OF HIGHWAYS

STATE ROUTE 141 THRU NEWPORT

BURNSIDE BOULEVARD BRIDGE

EAST ABUTMENT – WING D
PLAN & ELEVATION

D. W.B.C.	SCALE	APPROVED BY:
T. W.R.W.	AS NOTED	
C. S.M.S.		BRIDGE ENGINEER

COUNTY	CONTRACT	P. D. A. REG. NO.	STATE	FED. AID PROJECT NO.	SHEET NO.	TOTAL SHEETS
NEW CASTLE	71-02-009	2	DEL.		161	301

NO.	REVISIONS	BY	DATE

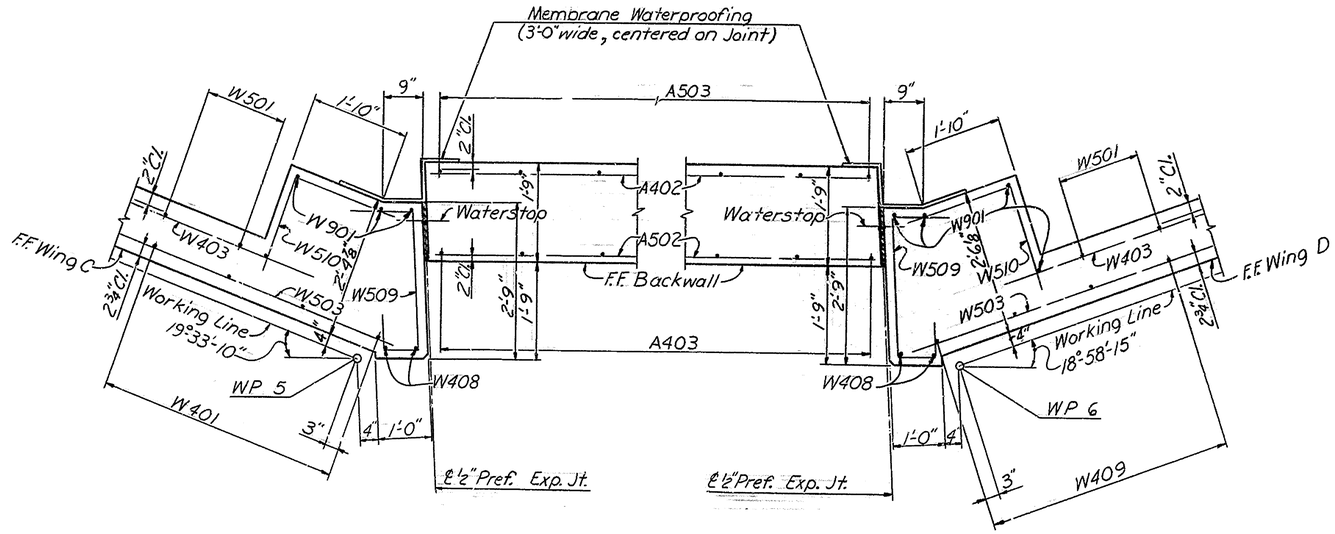

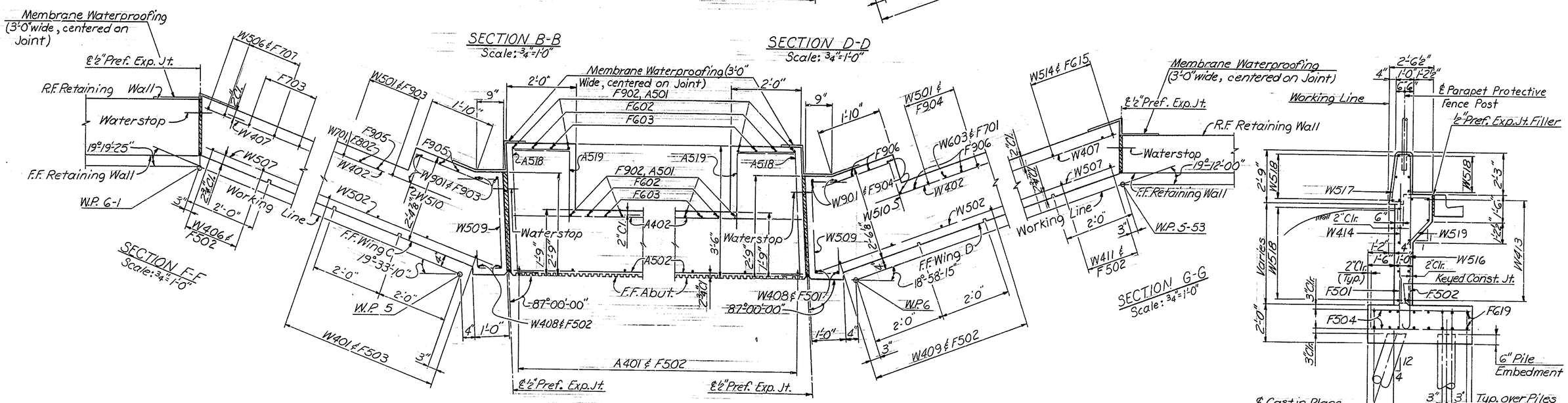

TYPICAL SECTION
WING B - PANEL G
Scale: 3/8"=1'-0"

For Plan and Elevation, see Sh. #155

For East Abutment Notes, see Sh. #158

DELAWARE DEPARTMENT
OF HIGHWAYS & TRANSPORTATION
DIVISION OF HIGHWAYS

STATE ROUTE 141 THRU NEWPORT

BURNSIDE BOULEVARD BRIDGE

EAST ABUTMENT
DETAILS

D.W.B.C.	SCALE	APPROVED BY:
T.W.R.W.	AS NOTED	
C.S.M.S.		BRIDGE ENGINEER

BAR SCHEDULE EAST ABUTMENT

Mark	Size	No. Req'd. Abut	No. Req'd. Wing C	No. Req'd. Wing D	Length	Type	Bending Dimensions A	B	C	D	E	F
F501	#5	21			9'-2"	Str.						
F502	#5	26	55	55	2'-6"	Str.						
F504	#5		19	19	9'-8"	Str.						
F505	#5		22		8'-5"	Str.						
F506	#5		17	17	5'-10"	Str.						
F507	#5		22	24	7'-5"	Str.						
F509	#5			43	5'-8"	Str.						
F601	#6	24			38'-9"	Str.						
F602	#6	23			7'-5"	A	8"	6'-9"				
F603	#6	23			5'-6"	A	8"	4'-10"				
F604	#6		58	46	27'-6"	Str.						
F605	#6		17		6'-9"	A	8"	6'-1"				
F606	#6		17		10'-0"	A	8"	9'-4"				
F607	#6		17		7'-0"	Str.						
F609	#6		10		6'-0"	C	1'-6"	4'-6"				
F610	#6		10		6'-11"	B	1'-6"	3'-11"	1'-6"	1'-9"	3'-6"	
F611	#6		9		5'-3"	C	1'-6"	3'-9"				
F612	#6		9		6'-1"	B	1'-6"	3'-1"	1'-6"	1'-4½"	2'-9"	
F613	#6		2	6	25'-8"	Str.						
F614	#6		2	6	26'-0"	Str.						
F615	#6			19	3'-10"	A	8"	3'-2"				
F616	#6			9	7'-9"	C	1'-6"	6'-3"				
F617	#6			9	8'-11"	B	1'-6"	5'-11"	1'-6"	2'-7½"	5'-3"	
F618	#6			8	6'-9"	C	1'-6"	5'-3"				
F619	#6			8	7'-9"	B	1'-6"	4'-9"	1'-6"	2'-1½"	4'-3"	
F701	#7			32	4'-2"	A	9"	3'-5"				
F702	#7		25		9'-8"	Str.						
F703	#7		17		7'-7"	A	9"	6'-10"				
F704	#7		18	18	7'-5"	Str.						
F705	#7			17	7'-1"	A	9"	6'-4"				
F706	#7			24	9'-8"	Str.						
F707	#7		19		4'-3"	A	9"	3'-6"				
F801	#8	20			8'-1"	Str.						
F802	#8		14		4'-7"	A	10"	3'-9"				
F803	#8		25	24	9'-8"	Str.						
F805	#8		18		8'-5"	Str.						
F901	#9	21	2	2	9'-2"	Str.						
F902	#9	28			5'-1"	A	1'-0"	4'-1"				
F903	#9		19		5'-3"	A	1'-0"	4'-3"				
F904	#9		18	19	5'-2"	A	1'-0"	4'-2"				
F905	#9		16		9'-2"	A	1'-0"	8'-2"				
F906	#9			17	9'-7"	A	1'-0"	8'-7"				
A401	#4	26			13'-0"	Str.						
A402	#4	15			35'-8"	Str.						
A403	#4	26			5'-0"	Str.						
A501	#5	28			11'-3"	Str.						
A502	#5	18			35'-8"	Str.						
A503	#5	26			8'-3"	F	4'-9"	2'-5¾"	2'-5¾"	3'-6"		
A504	#5	26			4'-5"	C	1'-3"	3'-2"	0"			
A505	#5	26			2'-11"	C	1'-0"	1'-11"	0"			
A506	#5	18			4'-6"	H	1'-9"	1'-0"	1'-0"	9"	6⅜"	6⅜"
A507	#5	4			4'-6"	Str.						
A508	#5	2			4'-0"	Str.						
A509	#5	20			4'-6"	C	1'-9"	1'-0"	1'-9"			
A510	#5	15			5'-8"	C	1'-9"	2'-2"	1'-9"			
A511 *	#5	16			5'-3"	F	2'-7"	1'-10⅝"	1'-10⅝"	2'-8"		
A512 *	#5	16			4'-8"	F	2'-5"	1'-7"	1'-7"	2'-3"		
A513 *	#5	2			5'-5"	G	1'-4"	1'-3"				
A514 *	#5	2			7'-0"	G	1'-10"	1'-3"				
A515 *	#5	2			6'-0"	G	1'-6"	1'-3"				
A516 *	#5	2			7'-7"	G	2'-0"	1'-3"				
A517	#5	8			5'-10"	H	2'-5"	1'-0"	1'-8"	9"	6⅜"	6⅜"
A518	#5	18			6'-6"	C	1'-8"	3'-2"	1'-8"			
A519	#5	18			3'-8"	C	1'-8"	2'-0"	0"			
W401	#4		17		19'-6"	Str.						
W402	#4		2	4	24'-7"	Str.						
W403	#4		11	10	25'-9"	Str.						
W404	#4		18		16'-6"	Str.						
W405	#4		11	9	25'-8"	Str.						
W406	#4		18		14'-3"	Str.						
W407	#4		2	6	27'-3"	Str.						
W408	#4		2	2	20'-6"	Str.						
W409	#4			17	19'-0"	Str.						
W410	#4			18	13'-6"	Str.						
W411	#4			18	9'-0"	Str.						
W412	#4		3	3	4'-0"	C	1'-10"	2'-2"	0"			
W501	#5		15	15	17'-9"	Str.						
W502	#5		2	4	24'-10"	Str.						
W503	#5		17	16	26'-3"	Str.						
W504	#5		18		14'-10"	Str.						
W505	#5		17	15	25'-8"	Str.						
W506	#5		19		12'-7"	Str.						
W507	#5		16	12	27'-3"	Str.						
W508	#5		53	53	7'-8"	D	2'-6⅞"	9¼"	2'-6"	11¼"	11¼"	3½"
W509	#5		13	14	4'-7"	E	6"	1'-0"	2'-4"	9"		
W510	#5		13	14	4'-2"	C	1'-11"	2'-3"				
W513	#5			18	12'-1"	Str.						
W514	#5			19	7'-6"	Str.						
W602	#6		53	53	4'-0"	Str.						
W603	#6			14	11'-6"	Str.						
W701	#7		14		12'-2"	Str.						
W901	#9		4	4	18'-4"	Str.						

BENDING DIAGRAMS

All dimensions are out to out.

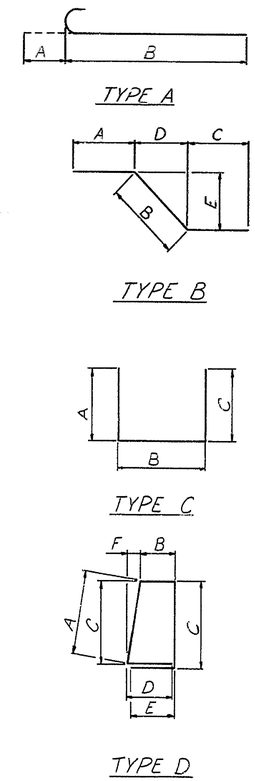

COUNTY	CONTRACT	P & A REG. NO	STATE	FED. AID PROJECT NO.	SHEET NO.	TOTAL SHEETS
NEW CASTLE	71-02-009	2	DEL.		162	301

NO.	REVISIONS	BY	DATE

* Reinforcement for Utiliy Openings. See sheet #156

DELAWARE DEPARTMENT
OF HIGHWAYS & TRANSPORTATION
DIVISION OF HIGHWAYS

STATE ROUTE 141 THRU NEWPORT
BURNSIDE BOULEVARD BRIDGE

EAST ABUTMENT
BAR SCHEDULE

D. W. B. C T. W. R. W. C. S. M. S.	SCALE AS NOTED	APPROVED BY: BRIDGE ENGINEER

COUNTY	CONTRACT	P.R.A. REG. NO.	STATE	FED. AID PROJECT NO.	SHEET NO.	TOTAL SHEETS
NEW CASTLE	71-02-009	2	DEL		163	301

NO.	REVISIONS	BY	DATE

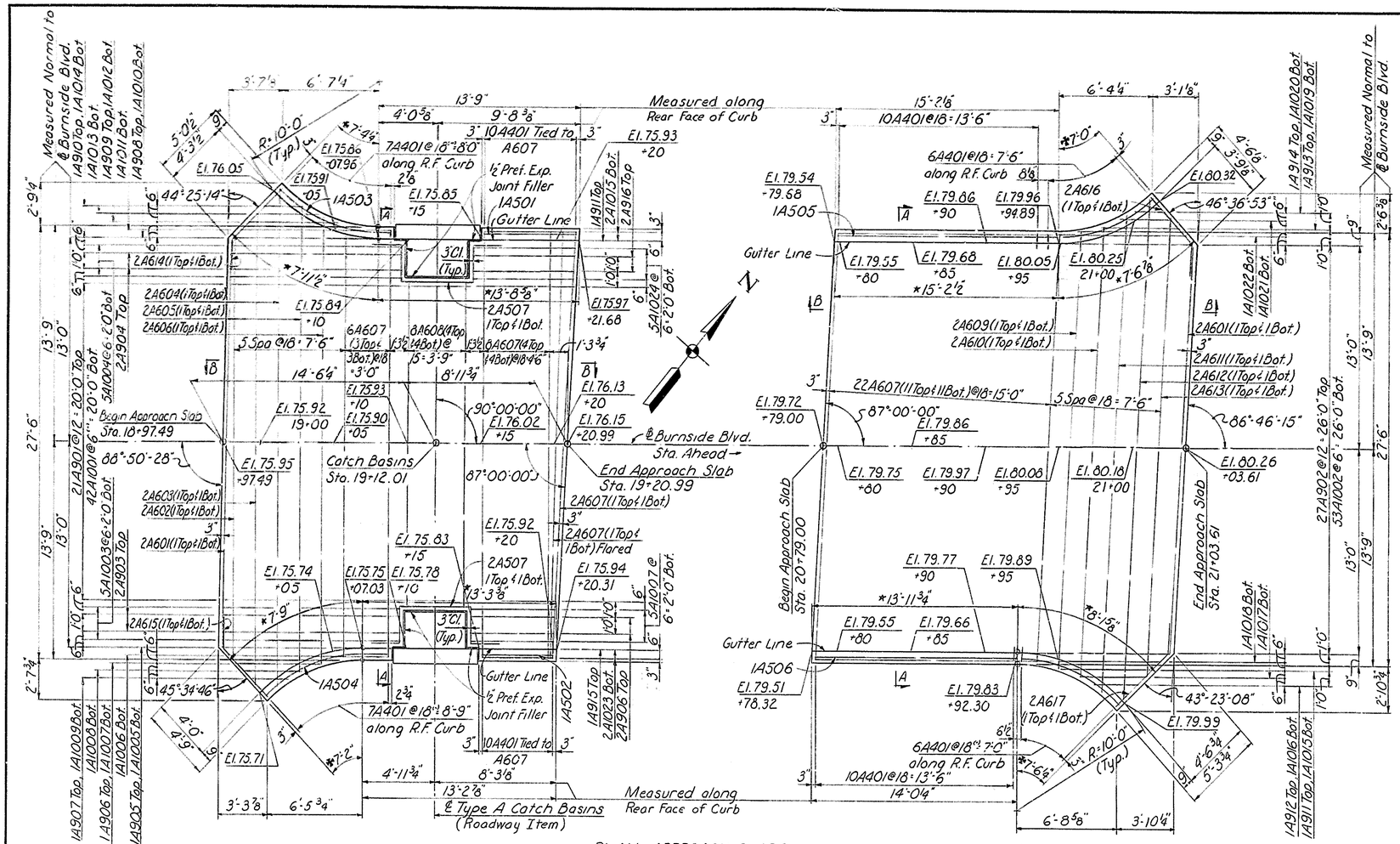

PLAN - APPROACH SLABS
Scale: 1/4"=1'-0"

Note:
1. Dimensions prefixed thus (*), are measured along Gutter Line.
2. Dimensions prefixed thus (✱), are measured along Rear Face of Curb.

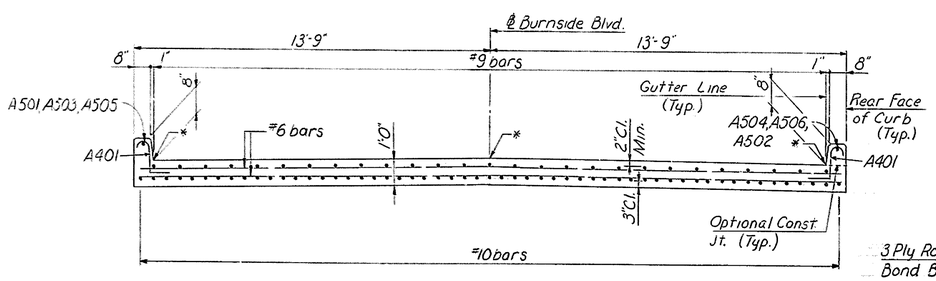

SECTION A-A
Scale: 3/8"=1'-0"

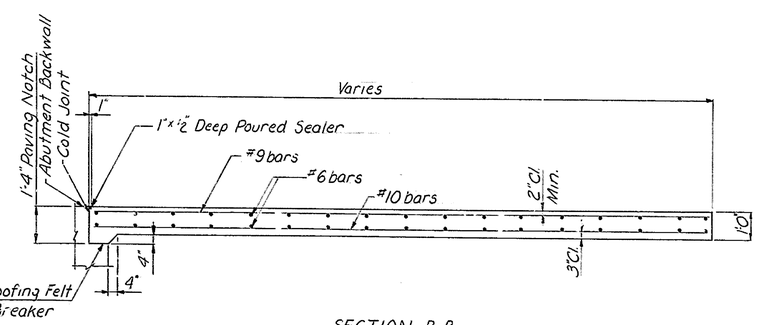

SECTION B-B
Scale: 3/8"=1'-0"

*Denotes where spot elevations are located.

BAR SCHEDULE

Mark	Size	No.	Length	Vary	Type	Bending Diagrams
A401	#4	66	2'-8"		A	
A501	#5	1	6'-5"		Str.	
A502	#5	1	5'-0"		Str.	
A503	#5	1	8'-6"		B	
A504	#5	1	9'-3"		B	
A505	#5	1	22'-2"		B	
A506	#5	1	21'-6"		B	
A507	#5	4	12'-10"		C	
A601	#6	4	26'-0"		Str.	
A602	#6	2	27'-0"		Str.	
A603	#6	2	30'-0"		Str.	
A604	#6	2	31'-6"		Str.	
A605	#6	2	29'-8"		Str.	
A606	#6	2	28'-4"		Str.	
A607	#6	40	27'-2"		Str.	
A608	#6	8	20'-8"		Str.	
A609	#6	2	27'-9"		Str.	
A610	#6	2	28'-8"		Str.	
A611	#6	2	30'-4"		Str.	
A612	#6	2	31'-9"		Str.	
A613	#6	2	29'-7"		Str.	
A614	#6	2	6'-8"		D	
A615	#6	2	6'-5"		D	
A616	#6	2	6'-2"		D	
A617	#6	2	7'-0"		D	
A901	#9	21	22'-10" to 23'-4"	3 ea. by 1"	Str.	
A902	#9	27	24'-2"		Str.	
A903	#9	2	12'-2"		Str.	
A904	#9	2	11'-8"		Str.	
A905	#9	1	11'-4"		Str.	
A906	#9	3	5'-9"		Str.	
A907	#9	1	2'-9"		Str.	
A908	#9	1	10'-9"		Str.	
A909	#9	1	6'-0"		Str.	
A910	#9	1	2'-9"		Str.	
A911	#9	2	6'-3"		Str.	
A912	#9	1	3'-0"		Str.	
A913	#9	1	5'-9		Str.	
A914	#9	1	2'-0"		Str.	
A915	#9	1	5'-0"		Str.	
A916	#9	2	7'-0"		Str.	
A1001	#10	42	22'-10" to 23'-4"	6 ea. by 1"	Str.	
A1002	#10	53	24'-2"		Str.	
A1003	#10	5	12'-2"		Str.	
A1004	#10	5	11'-8"		Str.	
A1005	#10	1	11'-4"		Str.	
A1006	#10	1	11'-0"		Str.	
A1007	#10	6	5'-9"		Str.	
A1008	#10	1	4'-0"		Str.	
A1009	#10	1	2'-9"		Str.	
A1010	#10	1	10'-9"		Str.	
A1011	#10	1	10'-3"		Str.	
A1012	#10	1	6'-0"		Str.	
A1013	#10	1	4'-4"		Str.	
A1014	#10	1	2'-9"		Str.	
A1015	#10	3	6'-3"		Str.	
A1016	#10	1	3'-0"		Str.	
A1017	#10	1	4'-6"		Str.	
A1018	#10	1	23'-6"		Str.	
A1019	#10	1	5'-9"		Str.	
A1020	#10	1	2'-0"		Str.	
A1021	#10	1	3'-6"		Str.	
A1022	#10	1	23'-9"		Str.	
A1023	#10	2	5'-0"		Str.	
A1024	#10	5	7'-0"		Str.	

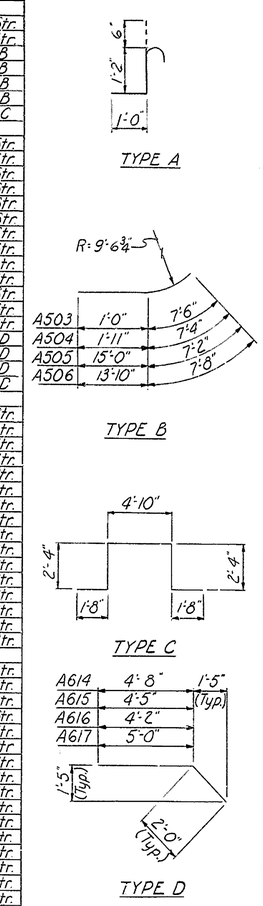

DELAWARE
DEPARTMENT OF HIGHWAYS & TRANSPORTATION
DIVISION OF HIGHWAYS

STATE ROUTE 141 THRU NEWPORT

BURNSIDE BOULEVARD BRIDGE

APPROACH SLABS
WEST & EAST ABUTMENTS

D. R.G.S.
T. R.G.S.
C. W.B.C.

SCALE: AS NOTED

APPROVED BY:
BRIDGE ENGINEER

10-25-73

COUNTY	CONTRACT	F.H.A. REG. NO.	STATE	FED. AID PROJ'CT NO.	SHEET NO.	TOTAL SHEETS
NEW CASTLE	71-C2-009	2	DEL.		164	301

NO.	REVISIONS	BY	DATE

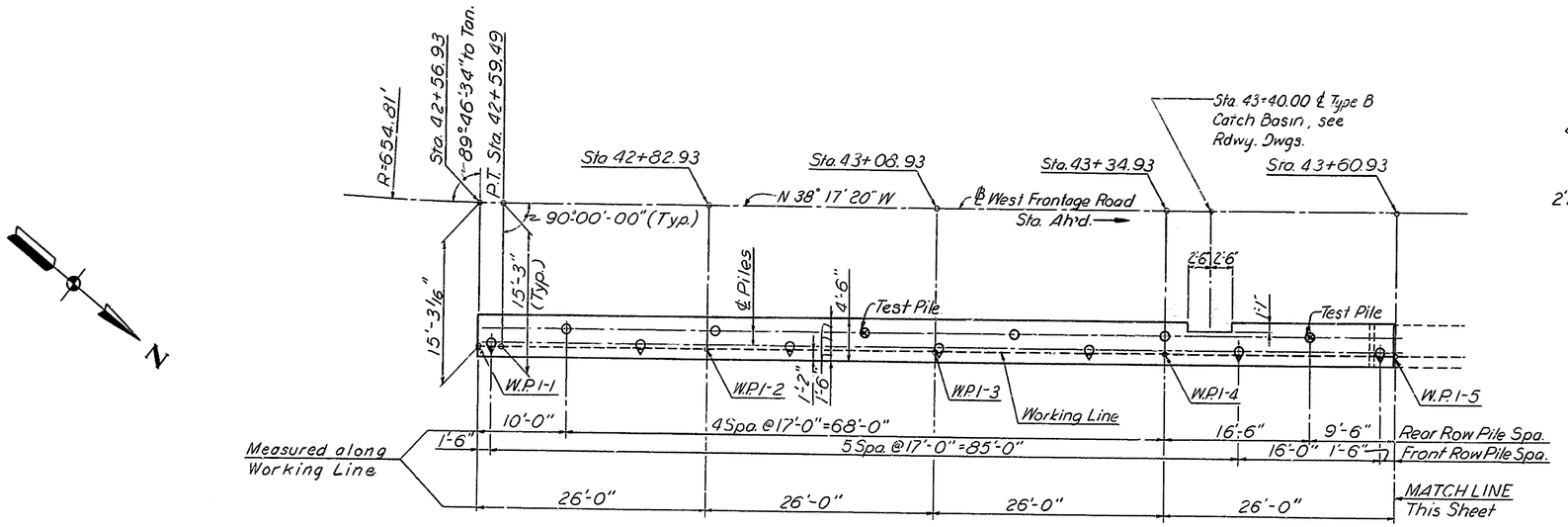

RETAINING WALL NO. 1 PILE LOCATION PLAN

STA. 42+56.93 TO STA. 43+60.93

Scale: 1/8" = 1'-0"

For Bottom of Footing Elevations, See Sh. # 165

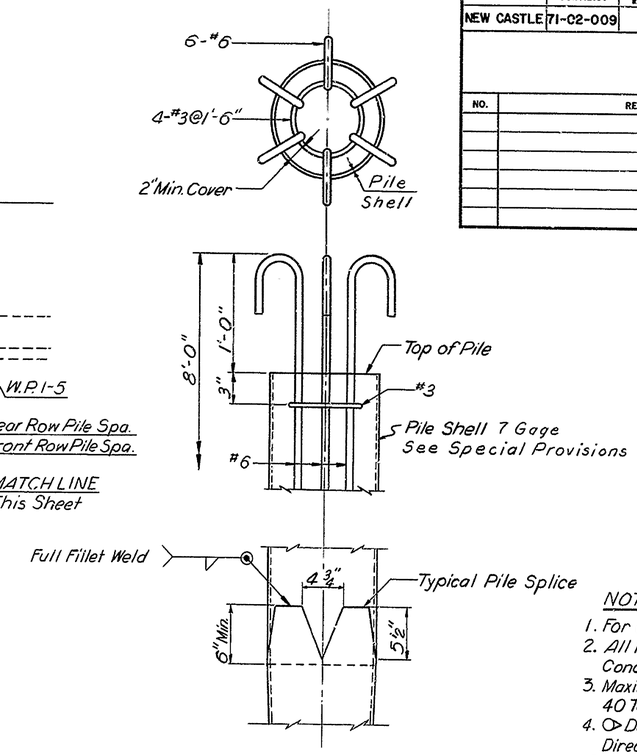

PILE DETAIL

No Scale

NOTES:

1. For General Notes, See Sh. # 100
2. All Piles Shall be Cast-In-Place Concrete Piles. 12 In. 7 Gage.
3. Maximum Design Pile Load = 40 Tons/Pile.
4. ⊳ Denotes Battered Piles and Direction of Batter. Batter = 4:12
5. ⊗ Denotes Steel Shell Test Pile.

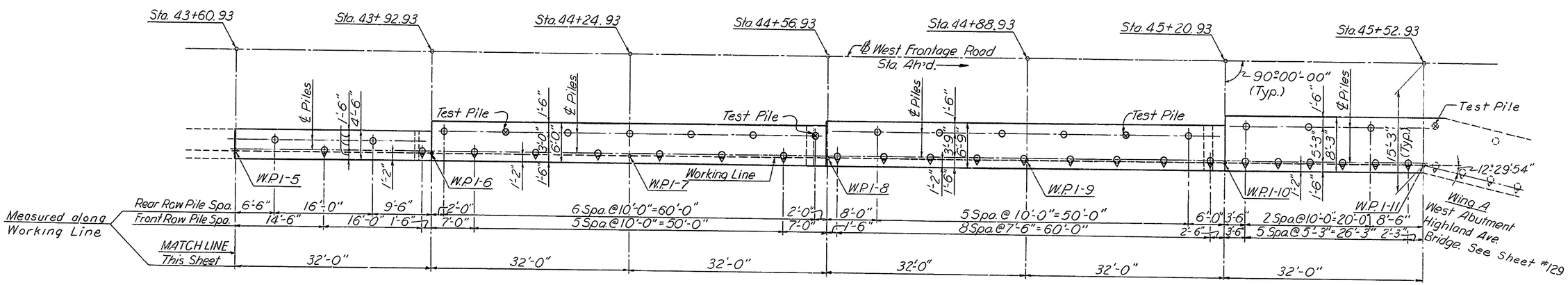

RETAINING WALL NO. 1 PILE LOCATION PLAN

STA. 43+60.93 TO STA. 45+52.93

Scale: 1/8" = 1'-0"

For Bottom of Footing Elevations, See Sh. # 166

DELAWARE
DEPARTMENT OF HIGHWAYS & TRANSPORTATION
DIVISION OF HIGHWAYS

STATE ROUTE 141 THRU NEWPORT

RETAINING WALL NO. 1

PILE LOCATION PLAN

STA. 42+56.93 TO STA. 45+52.93

WEST FRONTAGE ROAD

D. W.B.C.	SCALE	APPROVED BY:
T. R.W.H.	AS NOTED	
C. J.B.S.		BRIDGE ENGINEER

8 Del. Print 19 1253

COUNTY	CONTRACT	F.B.A. REG. NO.	STATE	FED AID PROJECT NO.	SHEET NO.	TOTAL SHEETS
NEW CASTLE	71-02-009	2	DEL.		165	301

NO.	REVISIONS	BY	DATE

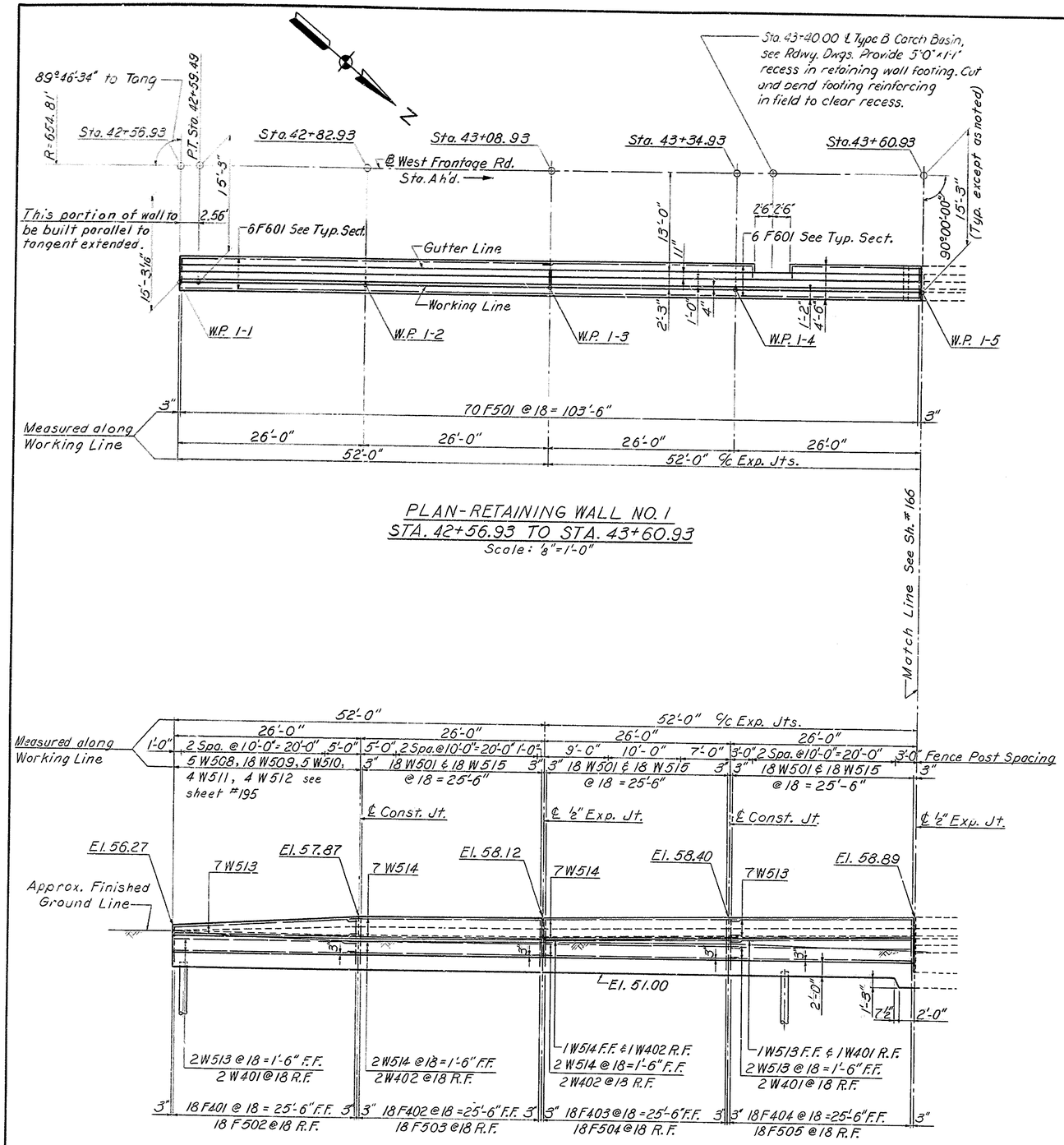

PLAN-RETAINING WALL NO. 1
STA. 42+56.93 TO STA. 43+60.93
Scale: 1/8" = 1'-0"

ELEVATION
Scale: 1/8" = 1'-0"

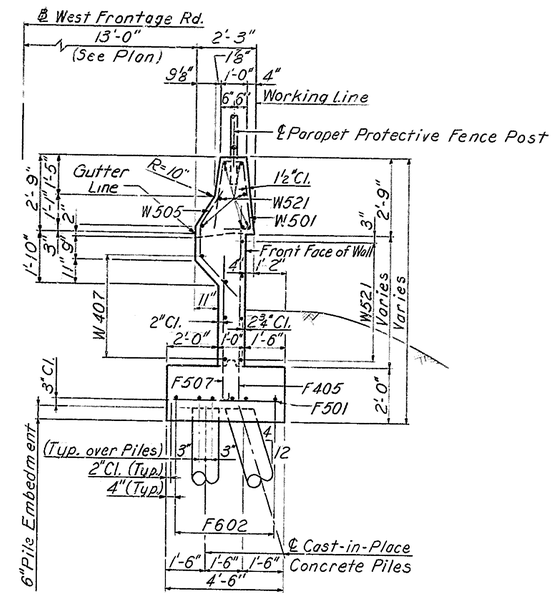

TYPICAL SECTION
STA. 43+60.93 TO STA. 43+92.93
Scale: 3/8" = 1'-0"

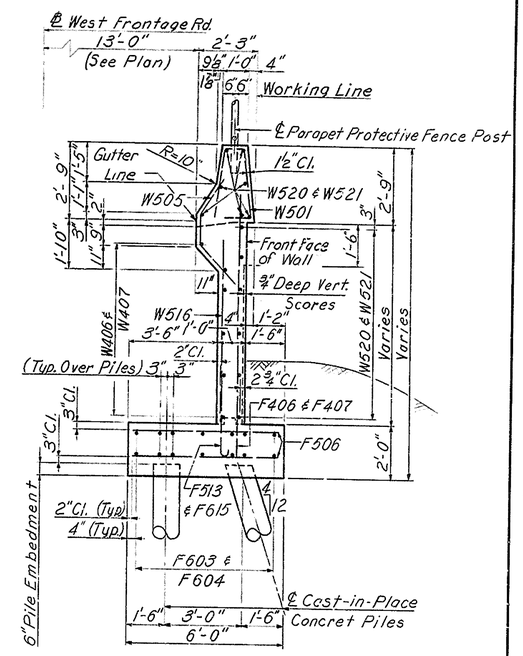

TYPICAL SECTION
STA. 43+92.93 TO STA. 44+56.93
Scale: 3/8" = 1'-0"

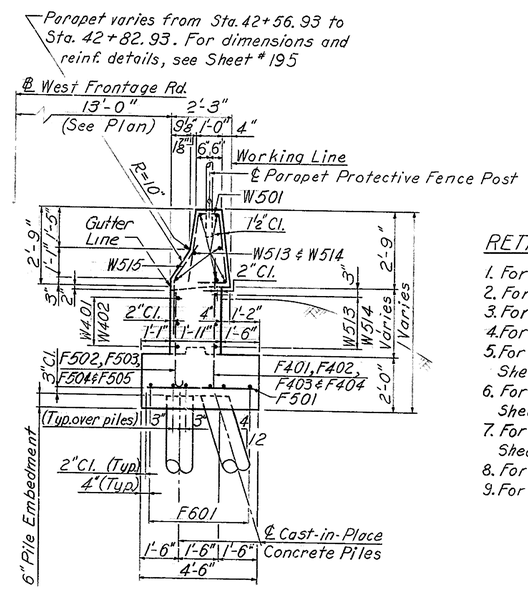

TYPICAL SECTION
STA. 42+56.93 TO STA. 43+60.93
Scale: 3/8" = 1'-0"

RETAINING WALL NO. 1 NOTES

1. For General Notes, see Sheet # 100
2. For Architectural Details, see Sheet # 113
3. For Weep Hole Drainage Details see sheet # 108
4. For Joint Details, see Sheet # 116
5. For Parapet Transition - Curb to Retaining Wall, see Sheet # 195
6. For Parapet Transition - Wing Wall to Retaining Wall, see Sheet # 196
7. For Plan & Elevation - Sta. 43+60.93 to Sta. 45+52.93, see Sheet # 166
8. For Bar Schedule, see Sheet # 167
9. For Parapet Protective Fence Details see Sheet # 114

DELAWARE DEPARTMENT OF HIGHWAYS & TRANSPORTATION
DIVISION OF HIGHWAYS

STATE ROUTE 141 THRU NEWPORT

RETAINING WALL NO. 1

PLAN AND ELEVATION
STA. 42+56.93 TO STA. 43+60.93
WEST FRONTAGE ROAD

D. W.B.C.	SCALE	APPROVED BY:
T. C.V.L.	AS NOTED	
C.J. B.S.		BRIDGE ENGINEER

COUNTY	CONTRACT	P.E.A. REG. NO.	STATE	FED. AID PROJECT NO.	SHEET NO.	TOTAL SHEETS
NEW CASTLE	71-02-009	2	DEL.		166	301

NO.	REVISIONS	BY	DATE

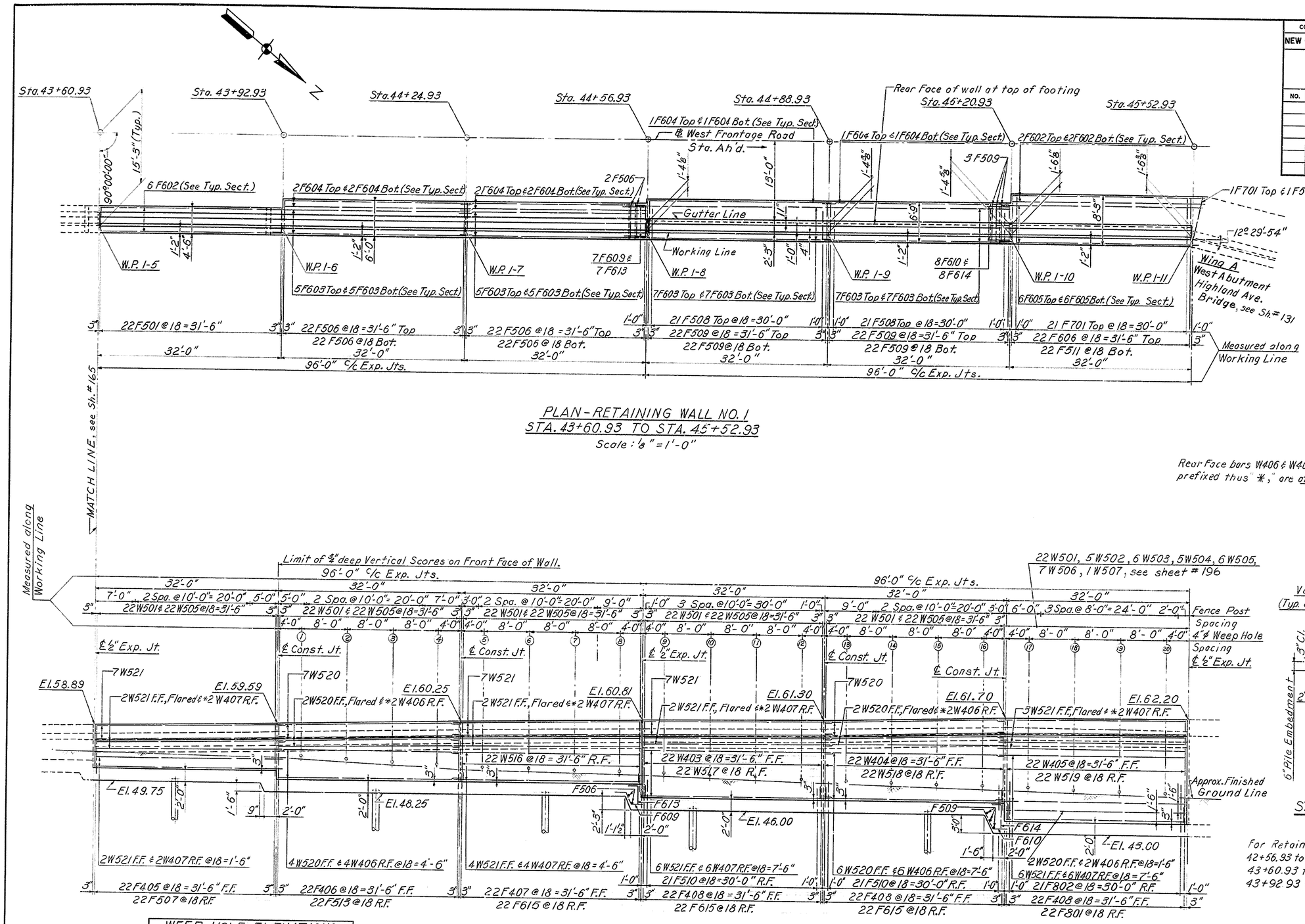

PLAN - RETAINING WALL NO. 1
STA. 43+60.93 TO STA. 45+52.93
Scale: 1/8" = 1'-0"

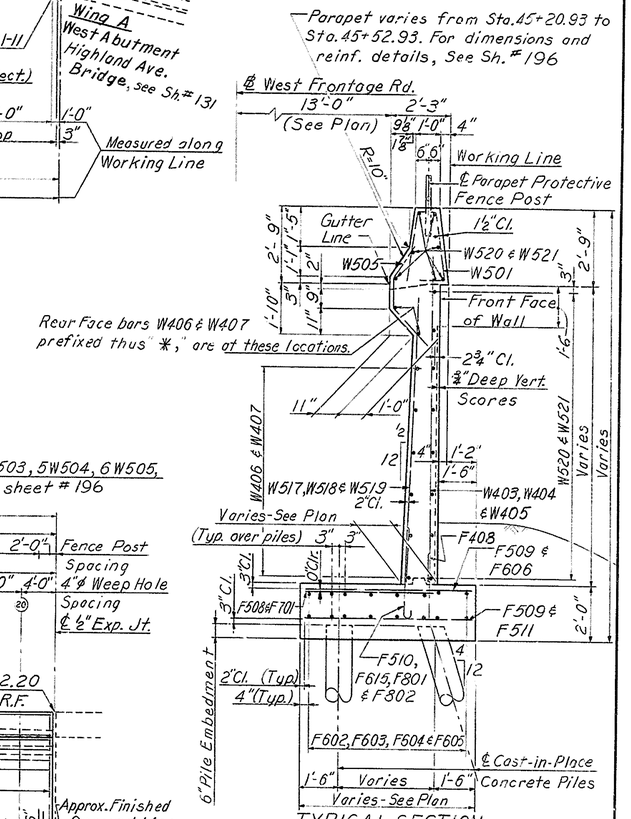

TYPICAL SECTION
STA. 44+56.93 TO STA. 45+52.93
Scale: 3/8" = 1'-0"

For Retaining Wall No. 1 Notes, Typical Section - Sta. 42+56.93 to Sta. 43+60.93 and Typical Section - Sta. 43+60.93 to Sta. 43+92.93, Typical Section - Sta. 43+92.93 to Sta. 44+56.93 see Sheet # 165

WEEP HOLE ELEVATIONS					
#	INVERT	#	INVERT	#	INVERT
1	54.17	8	52.25	15	50.80
2	53.67	9	52.08	16	50.67
3	53.33	10	51.75	17	50.33
4	53.00	11	51.50	18	50.17
5	52.67	12	51.25	19	50.00
6	52.50	13	51.17	20	49.83
7	52.33	14	51.00		

ELEVATION
Scale: 1/8" = 1'-0"

DELAWARE DEPARTMENT OF HIGHWAYS & TRANSPORTATION
DIVISION OF HIGHWAYS

STATE ROUTE 141 THRU NEWPORT

RETAINING WALL NO. 1
PLAN AND ELEVATION
STA. 43+60.93 TO STA. 45+52.93
WEST FRONTAGE ROAD

D. W.B.C.	SCALE	APPROVED BY:
T. C.V.L.	AS NOTED	
C. J. B.S.		BRIDGE ENGINEER

COUNTY	CONTRACT	P. & A. REG. NO.	STATE	FED. AID PROJECT NO.	SHEET NO.	TOTAL SHEETS
NEW CASTLE	71-02-009	2	DEL.		167	301

NO.	REVISIONS	BY	DATE

RETAINING WALL NO. 1 BAR SCHEDULE

MARK	SIZE	NO.	LENGTH	TYPE	BENDING DIMENSIONS A	B	C	D	E	F
F401	#4	18	4'-4"	Str.						
F402	↑	18	4'-8"	Str.						
F403		18	4'-11"	Str.						
F404		18	5'-5"	Str.						
F405		22	7'-4"	Str.						
F406		22	9'-6"	Str.						
F407	↓	22	10'-1"	Str.						
F408	#4	66	2'-3"	Str.						
F501	#5	92	4'-2"	Str.						
F502	↑	18	3'-10"	F	3'-3"	7"				
F503		18	4'-0"	F	3'-5"	7"				
F504		18	4'-2"	F	3'-7"	7"				
F505		18	4'-6"	F	3'-11"	7"				
F506		90	5'-8"	Str.						
F507		22	6'-3"	F	5'-8"	7"				
F508		42	5'-0"	Str.						
F509		91	6'-5"	Str.						
F510	↓	42	4'-10"	F	4'-3"	7"				
F511	#5	23	7'-11"	Str.						
F513	#5	22	8'-5"	F	7'-10"	7"				
F601	#6	12	52'-6"	Str.						
F602	↑	10	33'-9"	Str.						
F603		48	33'-6"	Str.						
F604		12	32'-7"	Str.						
F605		12	35'-3"	Str.						
F606	↓	22	7'-11"	Str.						

MARK	SIZE	NO.	LENGTH	TYPE	BENDING DIMENSIONS A	B	C	D	E	F
F609	#6	7	5'-8"	E	1'-6"	2'-8"	1'-6"	1'-5"	2'-3"	
F610	#6	8	6'-4"	E	1'-6"	3'-4"	1'-6"	1'-6"	3'-0"	
F613	#6	7	4'-9"	G	1'-6"	3'-3"				
F614	#6	8	5'-6"	G	1'-6"	4'-0"				
F615	#6	66	3'-10"	F	3'-2"	8"				
F701	#7	22	6'-10"	Str.						
F801	#8	22	4'-7"	F	3'-9"	10"				
F802	#8	21	9'-5"	F	8'-7"	10"				
W401	#4	5	25'-8"	Str.						
W402	↑	5	26'-10"	Str.						
W403		22	11'-6"	Str.						
W404		22	12'-0"	Str.						
W405		22	15'-9"	Str.						
W406	↓	16	31'-8"	Str.						
W407	#4	26	32'-10"	Str.						

MARK	SIZE	NO.	LENGTH	TYPE	BENDING DIMENSIONS A	B	C	D	E	F
W501	#5	186	6'-9"	A	See Diagram					
W502	↑	5	4'-9"	B	2'-0"	1'-3"	1'-6"	1'-5"	1'-5"	
W503		6	4'-9"	C	1'-6"	1'-3"	9¾"	See Diagram		
W504		5	4'-9"	C	1'-6"	1'-0½"	1'-0⅝"	See Diagram		
W505		116	4'-9"	C	1'-6"	10⅜"	1'-2¾"	See Diagram		
W506		7	33'-2"	Str.						
W507		1	23'-0"	Str.						
W508		5	6'-4" to 7'-1" Vary 1ea. by 2¼"	H	2'-2" to 2'-6" 1ea. by 1"	9" to 10" 1ea. by 1¼"	2'-2" to 2'-6" 1ea. by 1"	1'-3"	3" to 3½" 1ea. by ⅛"	2'-1⅞" to 2'-5⅞" 1ea. by 1"
W509		18	3'-0"	D	1'-6"	1'-6"	Varies 10⅜" to 1'-6"	Varies 1'-2¾" to 0"		
W510		5	5'-7¼" to 6'-4¼" Vary 1ea. by 2¼"	H	1'-9" to 2'-1" 1ea. by 1"	10¼ to 11¼" 1ea. by ¼"	1'-9" to 2'-1" 1ea. by 1"	1'-3"	2½" to 3" 1ea. by ⅛"	1'-8⅞" to 2'-0⅞" 1ea. by 1"
W511		4	5'-0½" to 5'-7¼" Vary 1ea. by 2¼"	H	1'-5" to 1'-8" 1ea. by 1"	11½" to 1'-0¼" 1ea. by ¼"	1'-5" to 1'-8" 1ea. by 1"	1'-3"	2" to 2⅜" 1ea. by ⅛"	1'-4⅞" to 1'-7⅞" 1ea. by 1"
W512		4	4'-5¼" to 5'-0" Vary 1ea. by 2¼"	H	1'-1" to 1'-4" 1ea. by 1"	1'-0¼" to 1'-1" 1ea. by ¼"	1'-1" to 1'-4" 1ea. by 1"	1'-3"	2¼" to 1⅞" 1ea. by ⅛"	1'-1" to 1'-4" 1ea. by 1"
W513		19	25'-8"	Str.						
W514		19	27'-1"	Str.						
W515		54	3'-3"	D	1'-9"	1'-6"	10⅜"	1'-2¾"		
W516		22	7'-0"	Str.						
W517		22	9'-8"	Str.						
W518		22	10'-0"	Str.						
W519		22	13'-8"	Str.						
W520	↓	30	31'-8"	Str.						
W521	#5	48	33'-1"	Str.						

RETAINING WALL NO. 2 BAR SCHEDULE

MARK	SIZE	NO.	LENGTH	TYPE	BENDING DIMENSIONS A	B	C	D	E	F
F401	#4	286	2'-3"	Str.						
F402	↑	22	6'-0"	Str.						
F403		44	5'-9"	Str.						
F404		22	5'-6"	Str.						
F405	↓	18	4'-8"	Str.						
F406	#4	22	6'-4"	Str.						
F501	#5	22	5'-11"	F	5'-4"	7"				
F502	↑	64	4'-10"	F	4'-3"	7"				
F503		22	8'-2"	Str.						
F504	↓	92	6'-8"	Str.						
F505	#5	42	5'-2"	Str.						
F507	#5	44	6'-2"	Str.						
F508	#5	396	5'-8"	Str.						
F510	#5	110	3'-5"	F	2'-10"	7"				
F511	↑	22	6'-2"	F	5'-7"	7"				
F512		22	5'-7"	F	5'-0"	7"				
F513		22	5'-4"	F	4'-9"	7"				
F514	↓	18	4'-1"	F	3'-6"	7"				
F515	#5	108	4'-2"	Str.						
F601	#6	21	6'-4"	F	5'-8"	8"				
F602	↑	21	9'-5"	F	8'-9"	8"				
F603		132	3'-10"	F	3'-2"	8"				
F604		4	34'-0"	Str.						
F605		16	35'-6"	Str.						
F606	↓	4	31'-10"	Str.						
F607	#6	78	32'-11"	Str.						

MARK	SIZE	NO.	LENGTH	TYPE	BENDING DIMENSIONS A	B	C	D	E	F
F608	#6	24	33'-4"	Str.						
F609	↑	74	34'-3"	Str.						
F610		44	6'-2"	Str.						
F611		56	33'-8"	Str.						
F612	↓	9	6'-3"	G	1'-6"	4'-9"				
F613	#6	9	7'-3"	E	1'-6"	4'-3"	1'-6"	2'-0"	3'-9"	
F620	#6	6	25'-8"	Str.						
F623	#6	6	4'-6"	G	1'-6"	3'-0"				
F624	#6	42	5'-5"	F	4'-9"	8"				
F625	#6	6	5'-3"	E	1'-6"	2'-3"	1'-6"	1'-0"	2'-0"	
F701	#7	22	4'-2"	F	3'-5"	9"				
F801	#8	32	8'-2"	Str.						
F901	#9	22	5'-1"	F	4'-1"	1'-0"				
W401	#4	22	15'-8"	Str.						
W402	↑	45	31'-8"	Str.						
W403		63	32'-10"	Str.						
W404		44	12'-0"	Str.						
W405		44	11'-0"	Str.						
W406	↓	22	9'-10"	Str.						
W407		44	9'-2"	Str.						
W408	#4	66	8'-0"	Str.						

MARK	SIZE	NO.	LENGTH	TYPE	BENDING DIMENSIONS A	B	C	D	E	F
W409	#4	22	6'-10"	Str.						
W410	#4	22	6'-9"	Str.						
W411	#4	3	27'-1"	Str.						
W501	#5	414	6'-9"	A	See Diagram					
W502	↑	5	4'-9"	B	2'-0"	1'-3"	1'-6"	1'-5"	1'-5"	
W503		6	4'-9"	C	1'-6"	1'-3"	9¾"	See Diagram		
W504		5	4'-9"	C	1'-6"	1'-0½"	1'-0⅝"	See Diagram		
W505		248	4'-9"	C	1'-6"	10⅜"	1'-2¾"	See Diagram		
W506		14	33'-2"	Str.						
W507		2	23'-0"	Str.						
W508		22	14'-0"	Str.						
W509		99	31'-8"	Str.						
W510		157	33'-1"	Str.						
W511		44	10'-3"	Str.						
W512		44	9'-2"	Str.						
W513		22	8'-6"	Str.						
W514		44	7'-4"	Str.						
W515		44	6'-2"	Str.						
W516		22	6'-0"	Str.						
W517		44	5'-11"	Str.						
W518		150	3'-3"	D	1'-9"	1'-6"	10⅜"	1'-2¾"		
W519		10	27'-1"	Str.						
W520	↓	408	4'-8"	H	2'-0"	8"	2'-0"	0"	2⅝"	1'-11⅞"
W521	#5	2	16'-10"	Str.						

BENDING DIAGRAMS

All dimensions are out to out.

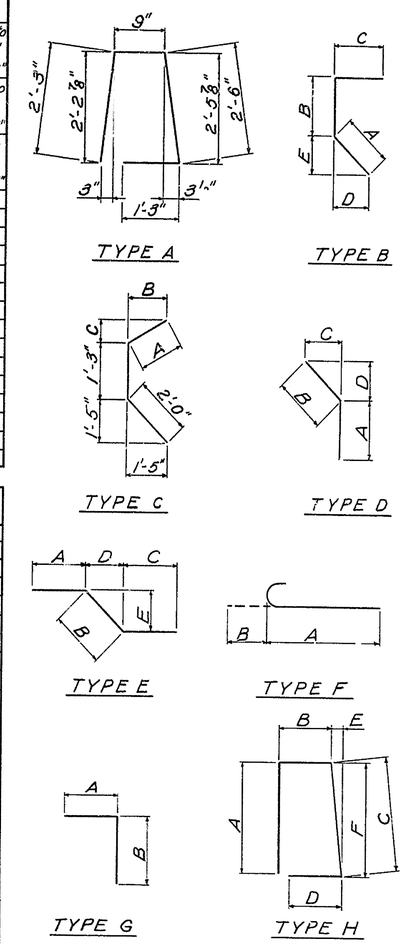

DELAWARE
DEPARTMENT OF HIGHWAYS & TRANSPORTATION
DIVISION OF HIGHWAYS

STATE ROUTE 141 THRU NEWPORT

RETAINING WALL NO. 1
RETAINING WALL NO. 2

BAR SCHEDULE

D. W.B.C.	SCALE	APPROVED BY:
T. C.V.L.	NONE	
C. J. B.S.		BRIDGE ENGINEER

COUNTY	CONTRACT	P.E.A. REG. NO.	STATE	FED. AID PROJECT NO.	SHEET NO.	TOTAL SHEETS
NEW CASTLE	71-02-009	2	DEL.		168	301

NO.	REVISIONS	BY	DATE

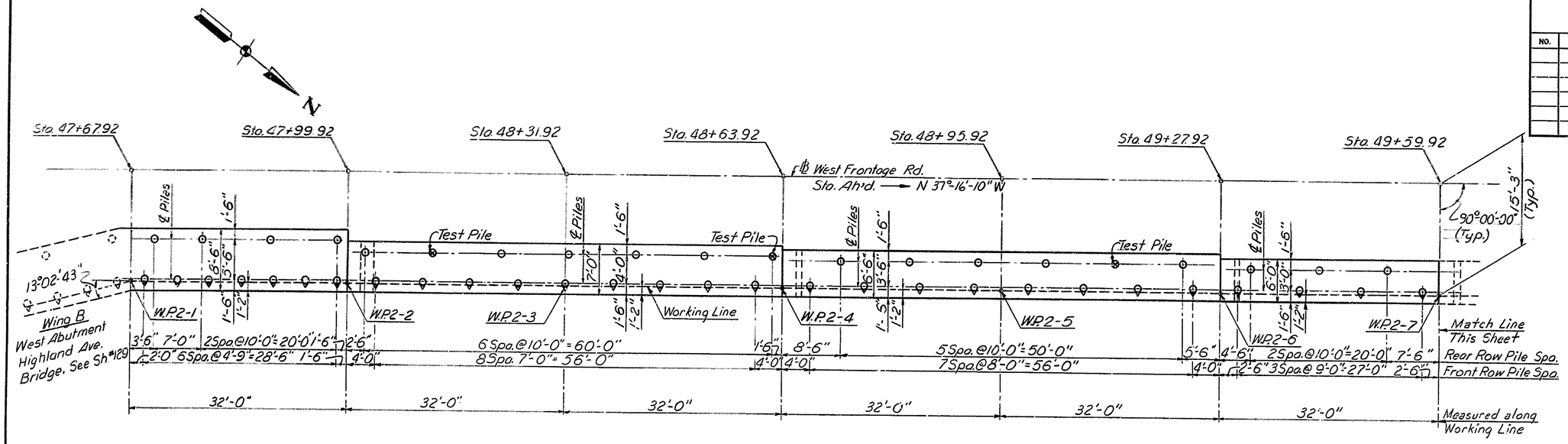

RETAINING WALL NO. 2 PILE LOCATION PLAN

STA. 47+67.92 TO STA. 49+59.92

Scale: 1/8" = 1'-0"

For Bottom of Footing Elevations, See Sh.# 170

NOTES:

1. For General Notes, See Sh.# 100
2. All Piles Shall be Cast-In-Place Concrete Piles. 12 In. 7 Gage.
3. Maximum Design Pile Load = 40 Tons/Pile.
4. ⊙ Denotes Battered Piles and Direction of Batter. Batter = 4:12.
5. For Pile Details, See Sh.# 164
6. ⊗ Denotes Steel Shell Test Pile.

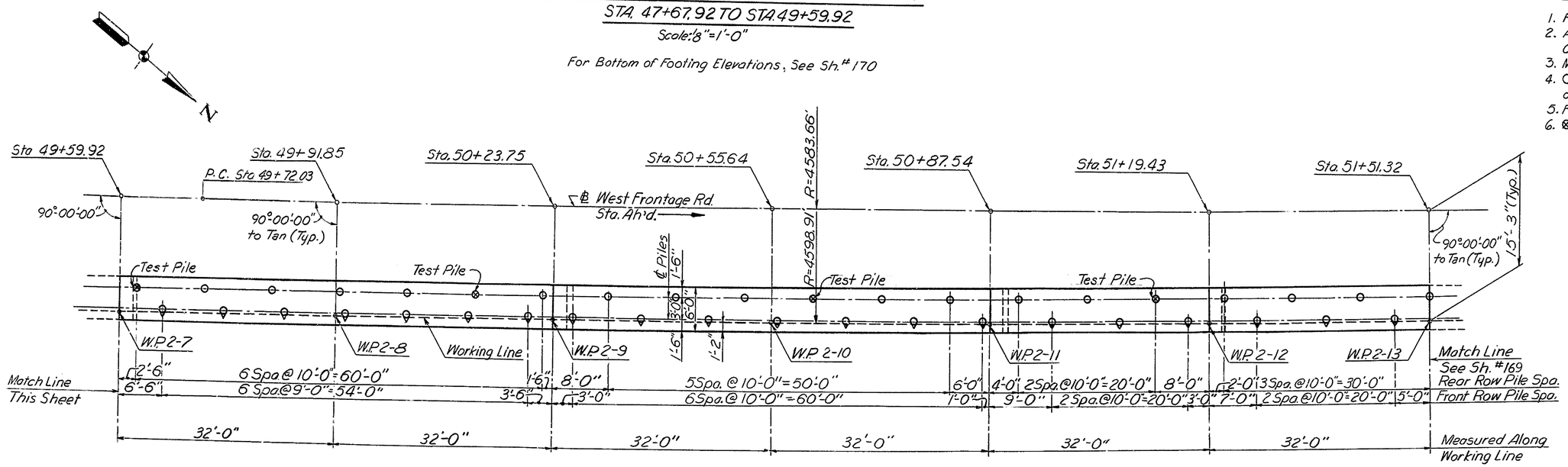

RETAINING WALL NO. 2 PILE LOCATION PLAN

STA. 49+59.92 TO STA. 51+51.32

Scale: 1/8" = 1'-0"

For Bottom of Footing Elevations, See Sh.# 171

DELAWARE
DEPARTMENT OF HIGHWAYS & TRANSPORTATION
DIVISION OF HIGHWAYS

STATE ROUTE 141 THRU NEWPORT

RETAINING WALL NO. 2

PILE LOCATION PLAN
STA. 47+67.92 TO STA. 51+51.32
WEST FRONTAGE ROAD

D.W.B.C.	SCALE	APPROVED BY:
T.R.W.H.	AS NOTED	
C.J.B.S.		BRIDGE ENGINEER

COUNTY	CONTRACT	P.R.A. REG. NO.	STATE	FED. AID PROJECT NO.	SHEET NO.	TOTAL SHEETS
NEW CASTLE	71-02-009	2	DEL.		169	301

NO.	REVISIONS	BY	DATE

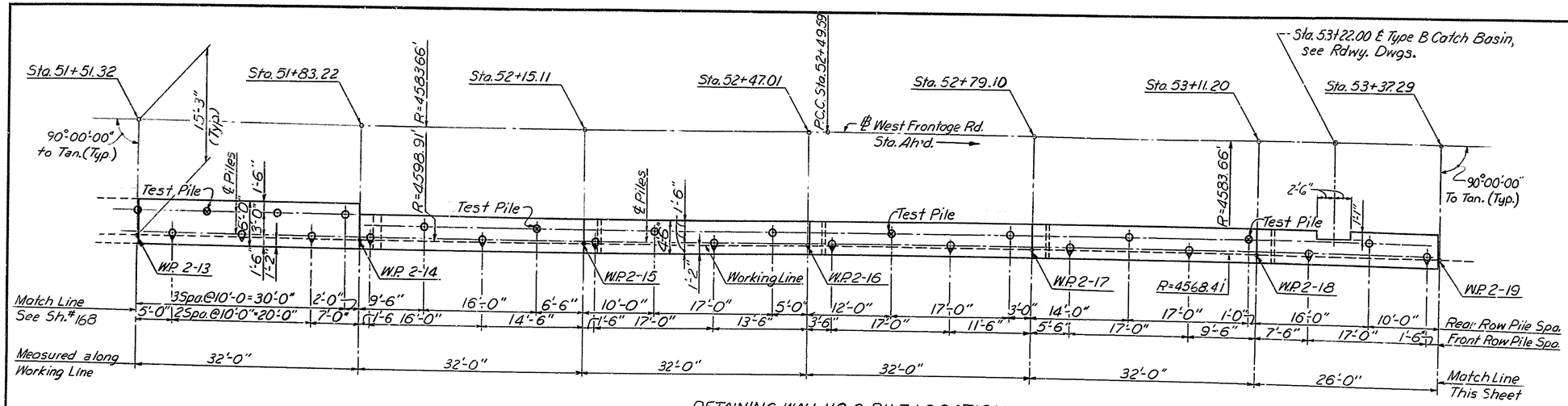

RETAINING WALL NO. 2 PILE LOCATION PLAN
STA. 51+51.32 TO STA. 53+37.29

Scale: 1/8" = 1'-0"

For Bottom of Footing Elevations, See Sh.#

NOTES:

1. For General Notes, See Sh.#100
2. All Piles Shall be Cast-In-Place Concrete Piles, 12 In. 7 Gage.
3. Maximum Design Pile Load = 40 Tons/Pile.
4. ⊙ Denotes Battered Piles and Direction of Batter. Batter = 4:12.
5. For Pile Detail, See Sh.#164
6. ⊗ Denotes Steel Shell Test Pile.

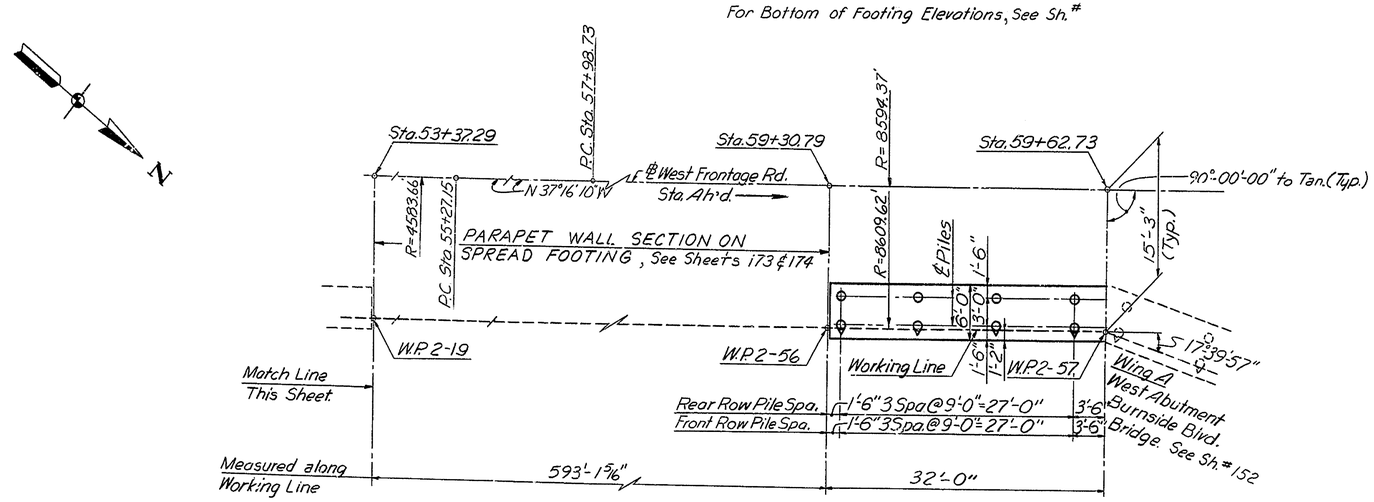

RETAINING WALL NO. 2 PILE LOCATION PLAN
STA. 53+37.29 TO STA. 59+62.73

Scale: 1/8" = 1'-0"

For Bottom of Footing Elevations, See Sh.# 174

DELAWARE
DEPARTMENT OF HIGHWAYS & TRANSPORTATION
DIVISION OF HIGHWAYS

STATE ROUTE 141 THRU NEWPORT

RETAINING WALL NO. 2
PILE LOCATION PLAN
STA. 51+51.32 TO STA. 59+62.73
WEST FRONTAGE ROAD

D. W.B.C.	SCALE	APPROVED BY:
T. R.W.H.	AS NOTED	
C. J.B.S.		BRIDGE ENGINEER

COUNTY	CONTRACT	P.R.A. REG. NO.	STATE	FED. AID PROJECT NO.	SHEET NO.	TOTAL SHEETS
NEW CASTLE	71-02-009	2	DEL		170	301

NO.	REVISIONS	BY	DATE

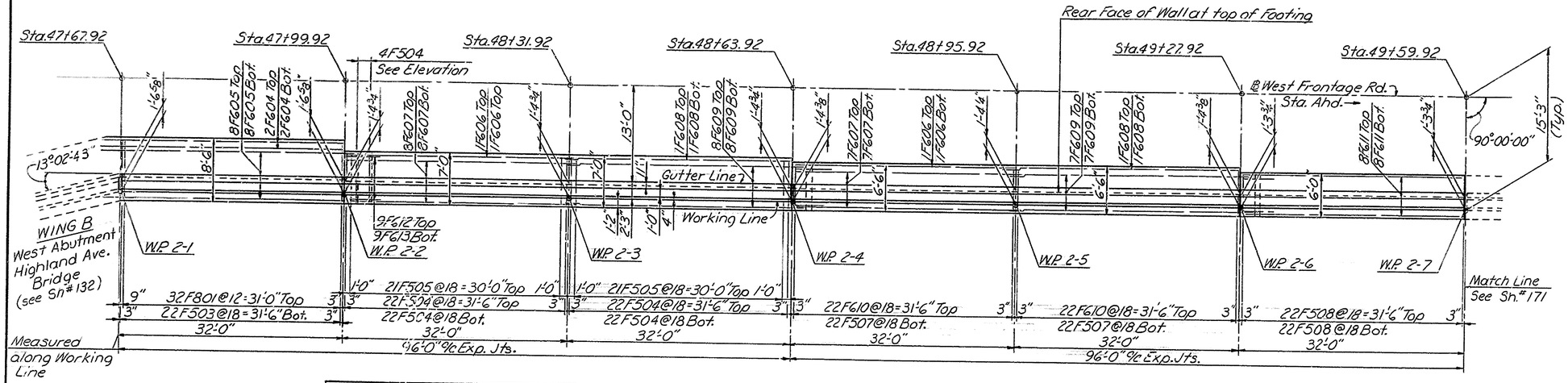

WEEP HOLE ELEVATIONS					
#	INVERT	#	INVERT	#	INVERT
1	50.33	10	52.17	19	53.50
2	50.67	11	52.25	20	53.68
3	50.92	12	52.43	21	53.75
4	51.25	13	52.50	22	54.00
5	51.42	14	52.66	23	54.18
6	51.50	15	52.75	24	54.26
7	51.67	16	53.00		
8	51.83	17	53.17		
9	52.00	18	53.33		

PLAN-RETAINING WALL NO. 2
STA. 47+67.92 to STA. 49+59.92
Scale: 1/8" = 1'-0"

RETAINING WALL NO. 2 NOTES

1. For General Notes, see Sh. # 100
2. For Architectural Details, see Sh. # 113
3. For Weep Hole Drainage Details, see Sh. # 108
4. For Joint Details, see Sh. # 116
5. For Parapet Transition - Wing Wall to Retaining Wall, see Sh. # 196
6. For Plan & Elevation - Sta. 49+59.92 to Sta. 51+51.32, see Sh. # 171
7. For Plan & Elevation - Sta. 51+51.32 to Sta. 53+37.29, see Sh. # 172
8. For Plan & Elevation - Sta. 53+37.29 to Sta. 57+21.91, see Sh. # 173
9. For Plan & Elevation - Sta. 57+21.91 to Sta. 59+62.73, see Sh. # 174
10. For Bar Schedule, see Sh. # 167

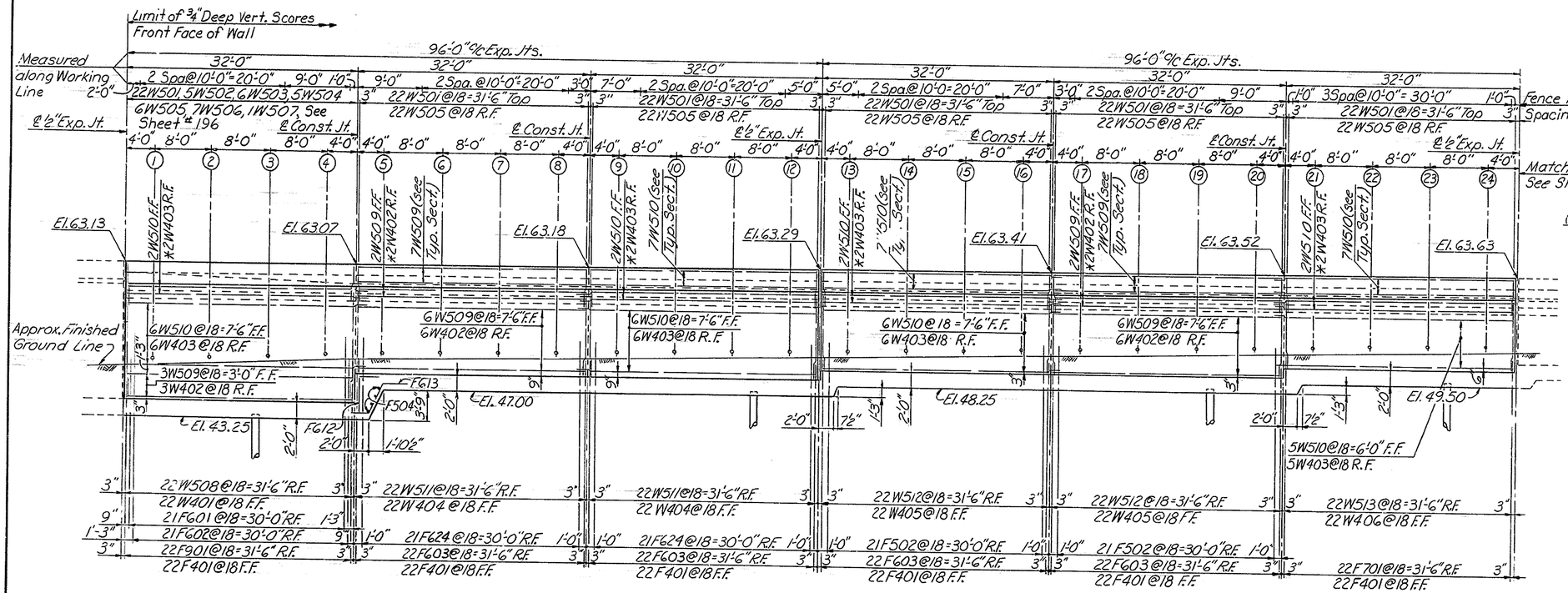

ELEVATION
Scale: 1/8" = 1'-0"

Parapet varies from Sta. 47+67.92 to Sta. 47+99.92. For dimensions and reinf. details see sh. # 196

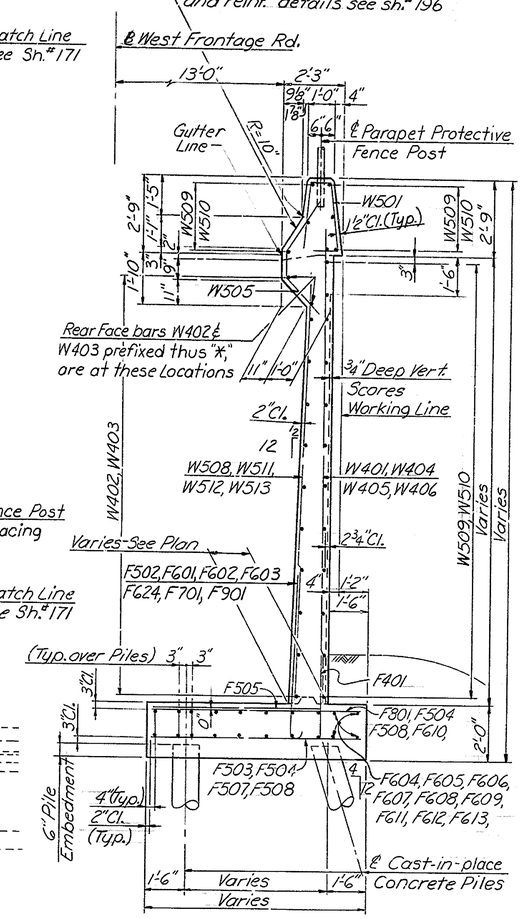

TYPICAL SECTION
STA. 47+67.92 to STA. 49+59.92
Scale: 3/8" = 1'-0"

DELAWARE
DEPARTMENT OF HIGHWAYS & TRANSPORTATION
DIVISION OF HIGHWAYS

STATE ROUTE 141 THRU NEWPORT

RETAINING WALL NO. 2

PLAN AND ELEVATION
STA. 47+67.92 TO STA. 49+59.92
WEST FRONTAGE ROAD

D. W. B. C.	SCALE	APPROVED BY:
T. W. R. W.	AS NOTED	
C. J. B. S.		BRIDGE ENGINEER

COUNTY	CONTRACT	P.R.A. FED. NO.	STATE	FED. AID PROJECT NO.	SHEET NO.	TOTAL SHEETS
NEW CASTLE	71-02-009	2	DEL.		171	301

NO.	REVISIONS	BY	DATE

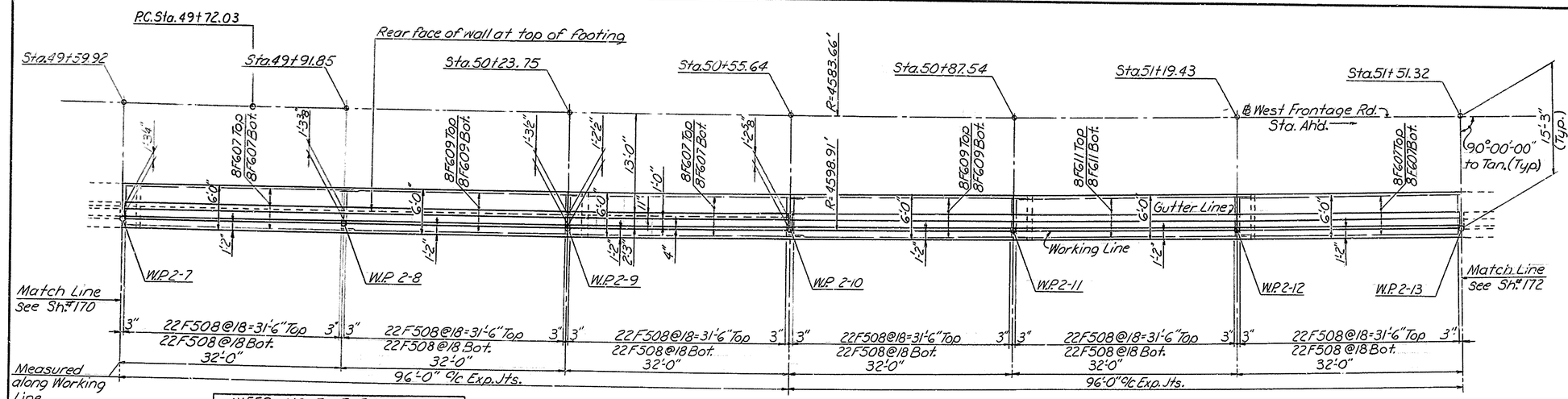

WEEP HOLE ELEVATIONS					
#	INVERT	#	INVERT	#	INVERT
25	54.50	34	56.50	43	58.43
26	54.75	35	56.68	44	58.50
27	55.00	36	56.83	45	58.75
28	55.17	37	57.00	46	59.00
29	55.33	38	57.25	47	59.25
30	55.50	39	57.50	48	59.50
31	55.83	40	57.75		
32	56.00	41	58.00		
33	56.25	42	58.17		

PLAN - RETAINING WALL NO. 2
STA. 49+59.92 to STA. 51+51.32
Scale: 1/8" = 1'-0"

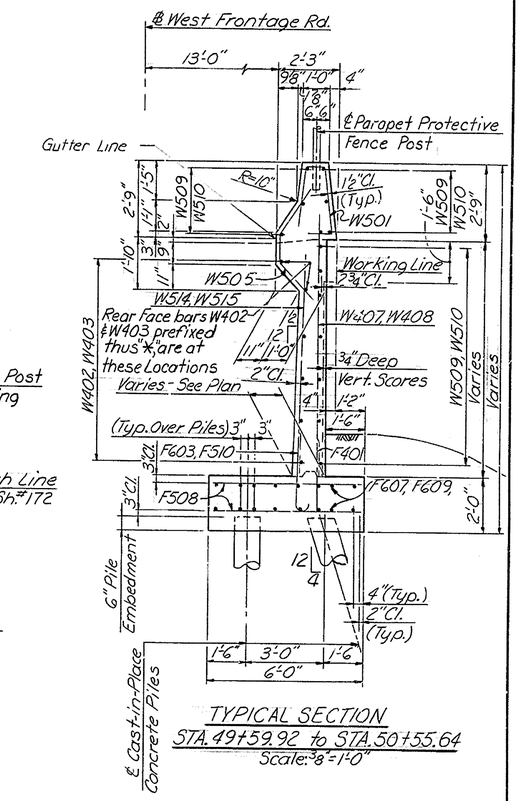

TYPICAL SECTION
STA. 49+59.92 to STA. 50+55.64
Scale: 3/8" = 1'-0"

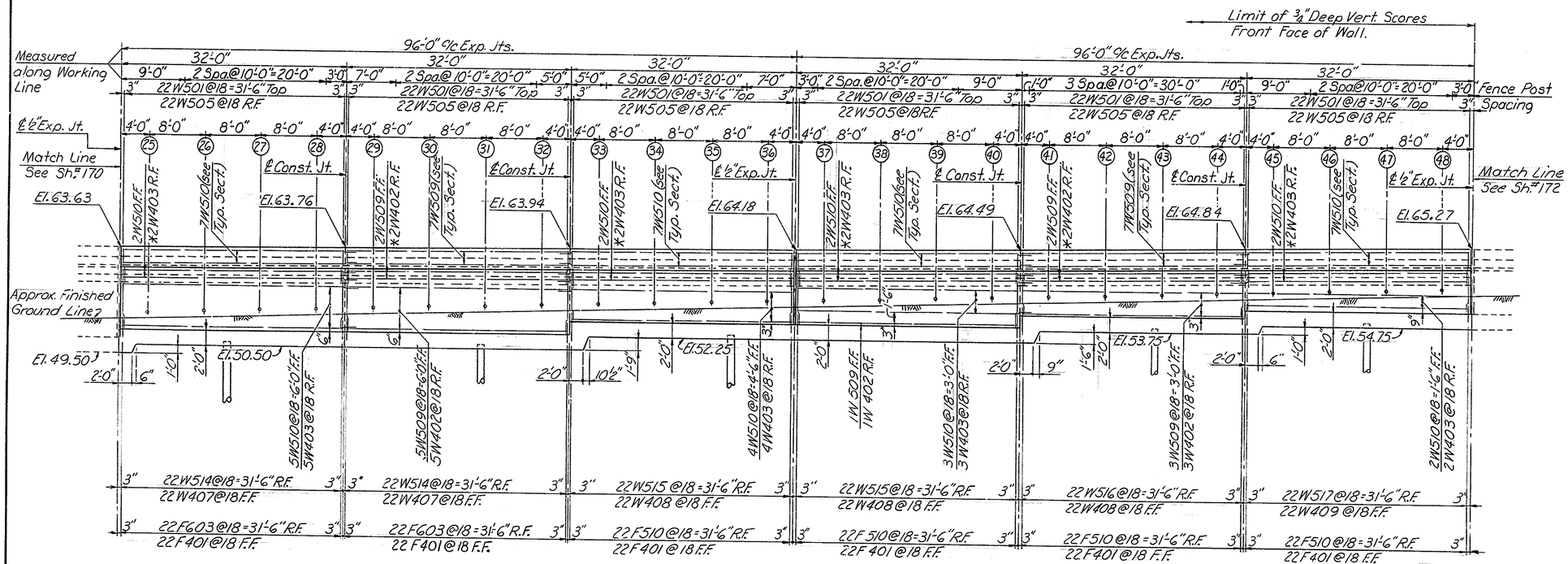

ELEVATION
Scale: 1/8" = 1'-0"

NOTES:
For Typical Section - Sta. 50+55.64 to Sta. 51+51.32, see Sh. #174
For Retaining Wall No. 2 Notes, see Sh. #170

DELAWARE
DEPARTMENT OF HIGHWAYS & TRANSPORTATION
DIVISION OF HIGHWAYS

STATE ROUTE 141 THRU NEWPORT

RETAINING WALL NO. 2

PLAN AND ELEVATION
STA. 49+59.92 TO STA. 51+51.32
WEST FRONTAGE ROAD

D.W.B.C.	SCALE	APPROVED BY:
T.W.R.W	AS NOTED	
C.J.B.S.		BRIDGE ENGINEER

COUNTY	CONTRACT	P.B.A. BER. NO.	STATE	FED. AID PROJECT NO.	SHEET NO.	TOTAL SHEETS
NEW CASTLE	71-02-009	2	DEL		172	301

NO.	REVISIONS	BY	DATE

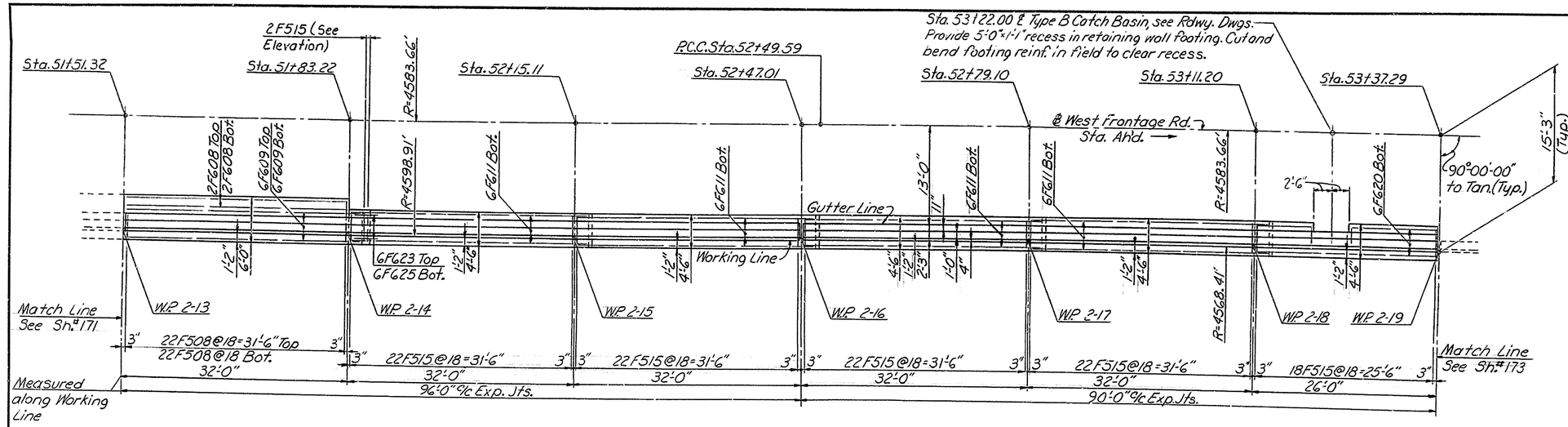

PLAN - RETAINING WALL NO. 2
STA. 51+51.32 to STA. 53+37.29
Scale: 1/8" = 1'-0"

WEEP HOLE ELEVATIONS					
#	INVERT	#	INVERT	#	INVERT
49	59.83	53	60.92		
50	60.08	54	61.08		
51	60.33	55	61.33		
52	60.67	56	61.67		

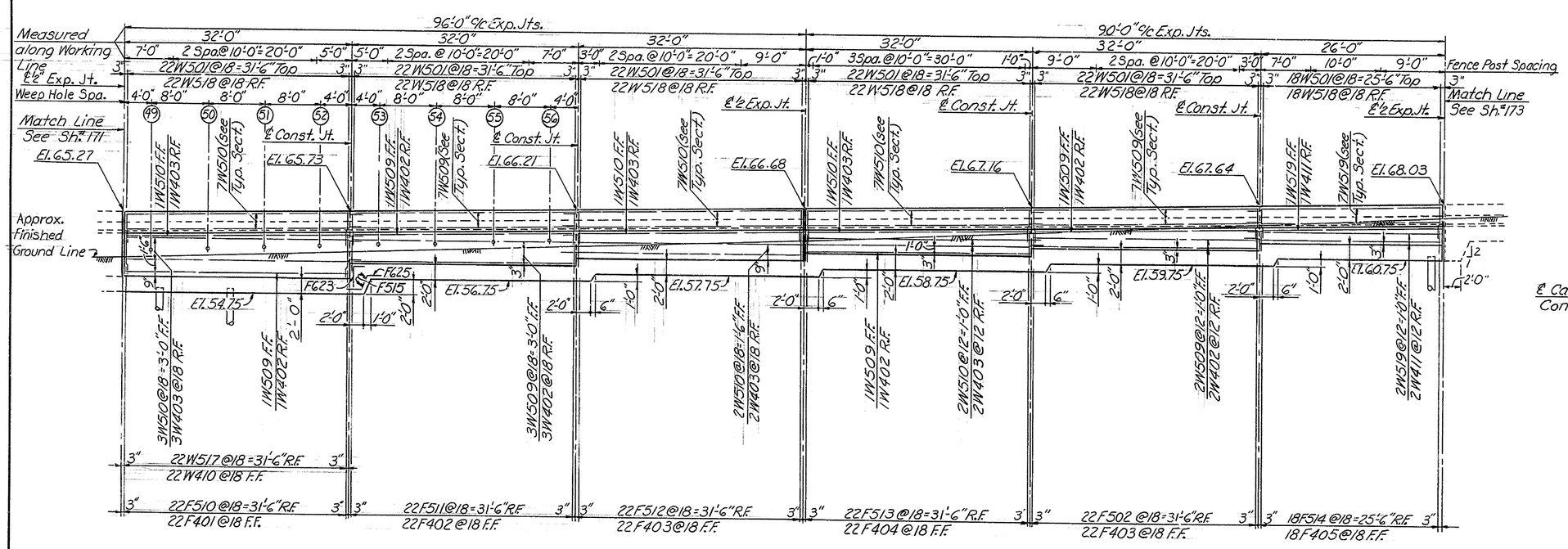

ELEVATION
Scale: 1/8" = 1'-0"

1. For Typical Section Sta. 51+83.22 to Sta. 53+37.29, see Sh. #174
2. For Retaining Wall No. 2 Notes, see Sh. #170

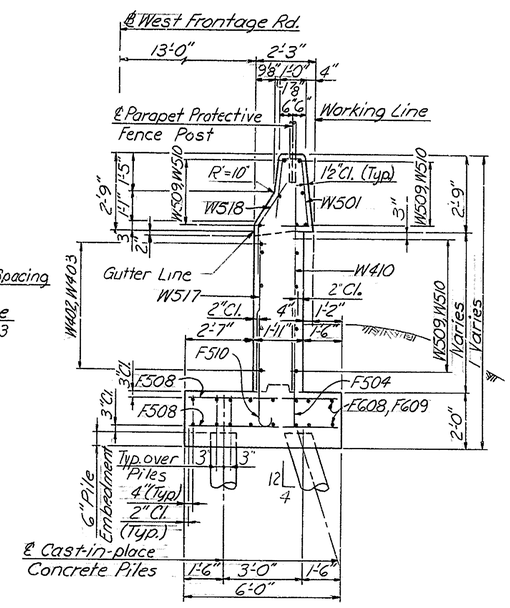

TYPICAL SECTION
STA. 51+51.32 to STA. 51+83.22
Scale: 3/8" = 1'-0"

DELAWARE
DEPARTMENT OF HIGHWAYS & TRANSPORTATION
DIVISION OF HIGHWAYS

STATE ROUTE 141 THRU NEWPORT

RETAINING WALL NO. 2
PLAN AND ELEVATION
STA. 51+51.32 TO STA. 53+37.29
WEST FRONTAGE ROAD

D.W.B.C.	SCALE	APPROVED BY:
T.W.R.W.	AS NOTED	
C.J.B.S.		BRIDGE ENGINEER

COUNTY	CONTRACT	P.R.A. REG. NO.	STATE	FED. AID PROJECT NO.	SHEET NO.	TOTAL SHEETS
NEW CASTLE	71-02-009	2	DEL.		173	301

NO.	REVISIONS	BY	DATE

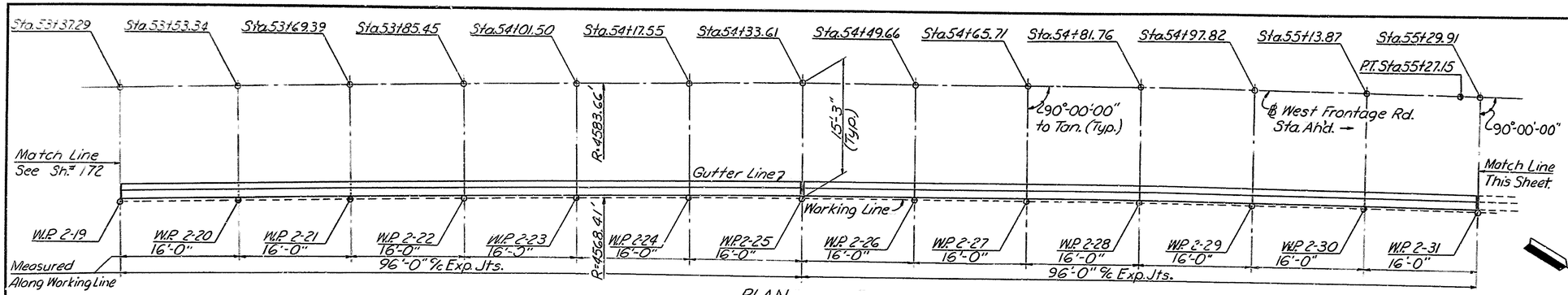

PLAN
Scale: 1/8"=1'-0"

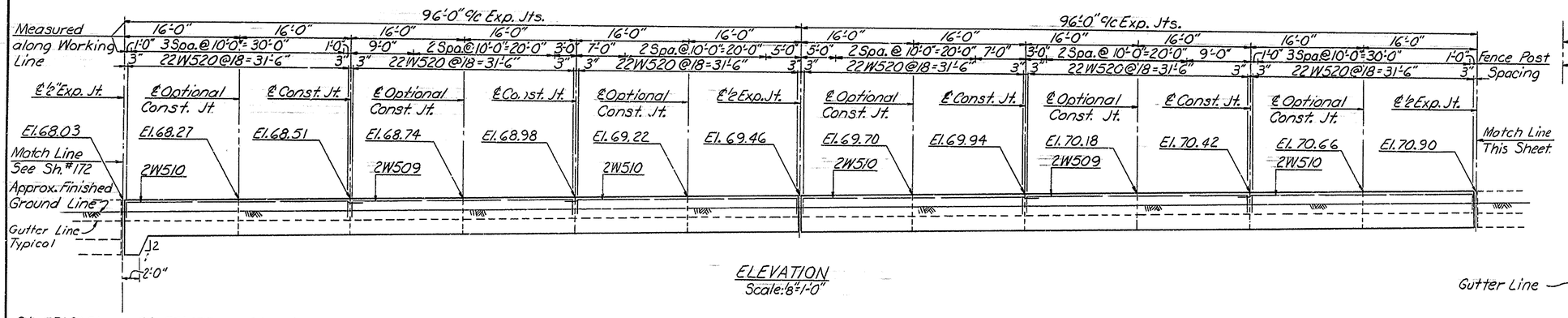

ELEVATION
Scale: 1/8"=1'-0"

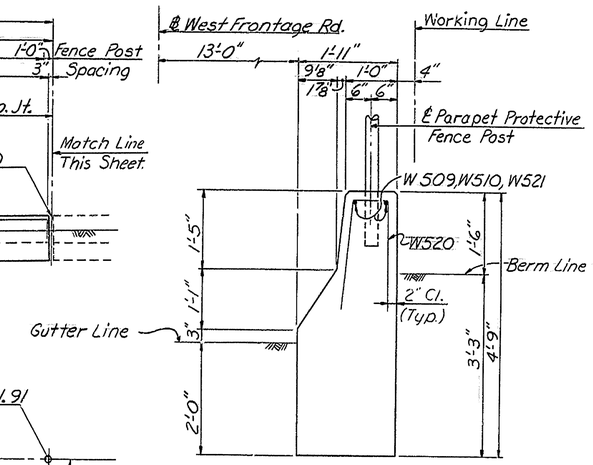

TYPICAL SECTION
STA. 53+37.29 to STA. 59+30.79
Scale: 3/4"=1'-0"

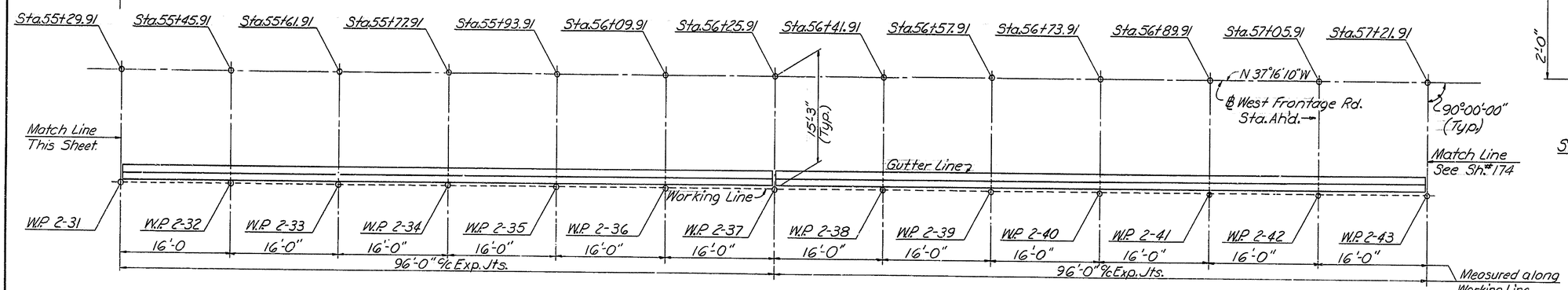

PLAN
Scale: 1/8"=1'-0"

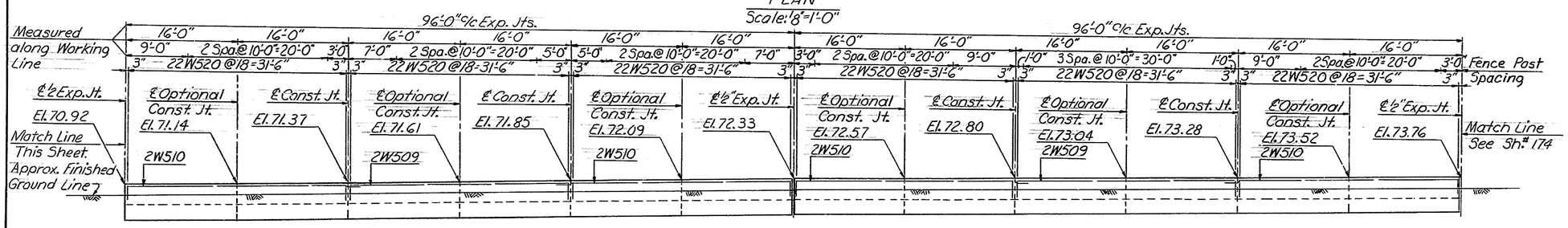

ELEVATION
Scale: 1/8"=1'-0"

For Retaining Wall No. 2 Notes, see Sh.# 170

DELAWARE
DEPARTMENT OF HIGHWAYS & TRANSPORTATION
DIVISION OF HIGHWAYS

STATE ROUTE 141 THRU NEWPORT

RETAINING WALL NO. 2

PLAN AND ELEVATION
STA. 53+37.29 TO STA. 57+21.91
WEST FRONTAGE ROAD

D.W.B.C.	SCALE	APPROVED BY:
T.W.R.W.	AS NOTED	
C.J.B.S.		BRIDGE ENGINEER

COUNTY	CONTRACT	F.A.P. RES. NO.	STATE	FED. AID PROJECT NO.	SHEET NO.	TOTAL SHEETS
NEW CASTLE	71-02-009	2	DEL.		174	301

NO.	REVISIONS	BY	DATE

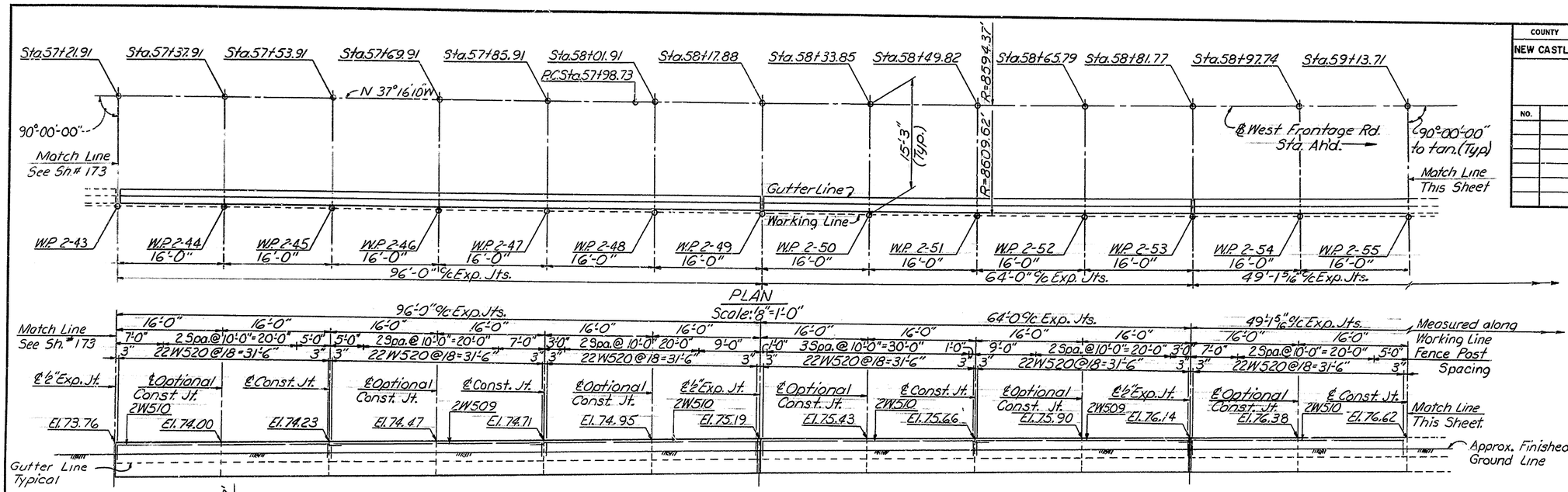

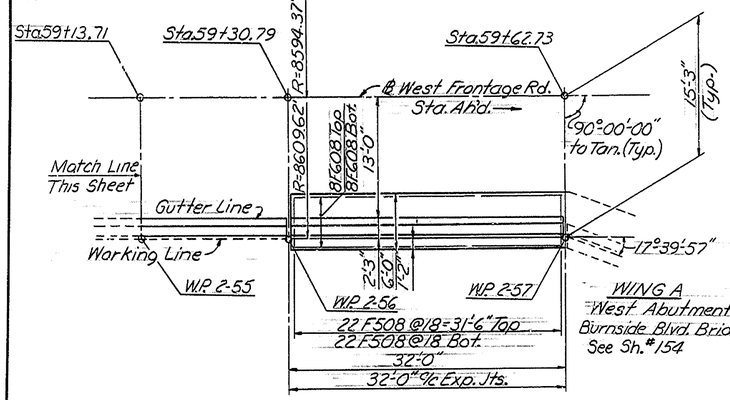

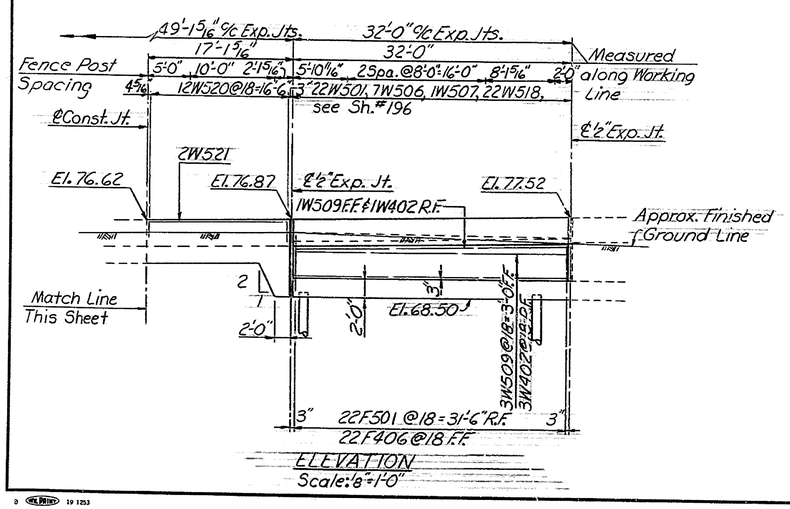

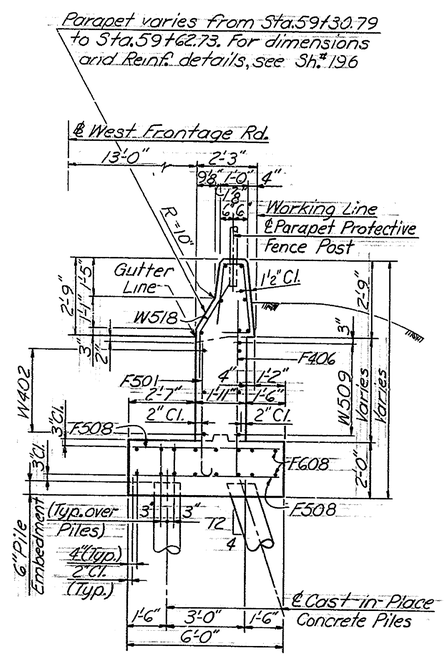

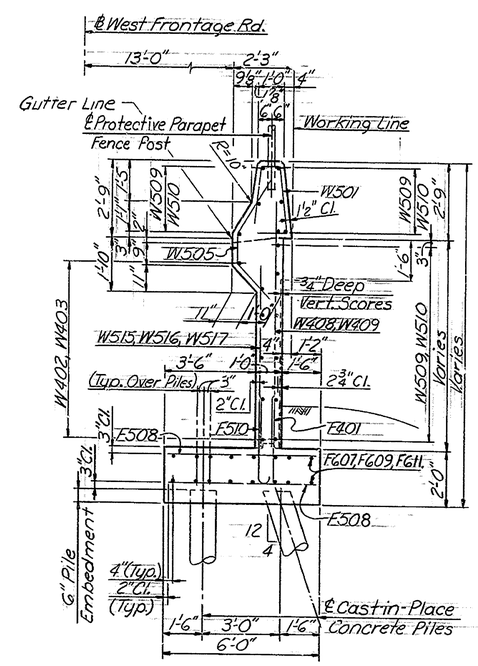

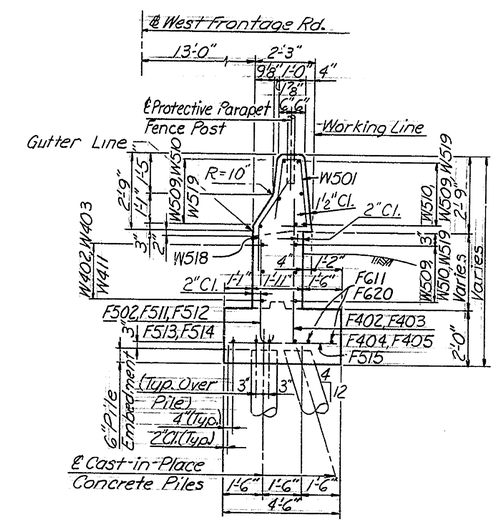

For Retaining Wall No.2 Notes, see Sh.# 170

DELAWARE
DEPARTMENT OF HIGHWAYS & TRANSPORTATION
DIVISION OF HIGHWAYS

STATE ROUTE 141 THRU NEWPORT

RETAINING WALL NO. 2

PLAN AND ELEVATION
STA. 57+21.91 TO STA. 59+62.73
WEST FRONTAGE ROAD

D. W. B.C.	SCALE	APPROVED BY:
T. W. R. W.	AS NOTED	
C. J. B. S.		BRIDGE ENGINEER

COUNTY	CONTRACT	F.S.A. REG. NO.	STATE	FED. AID PROJECT NO.	SHEET NO.	TOTAL SHEETS
NEW CASTLE	71-02-009	2	DEL.		175	301

NO.	REVISIONS	BY	DATE

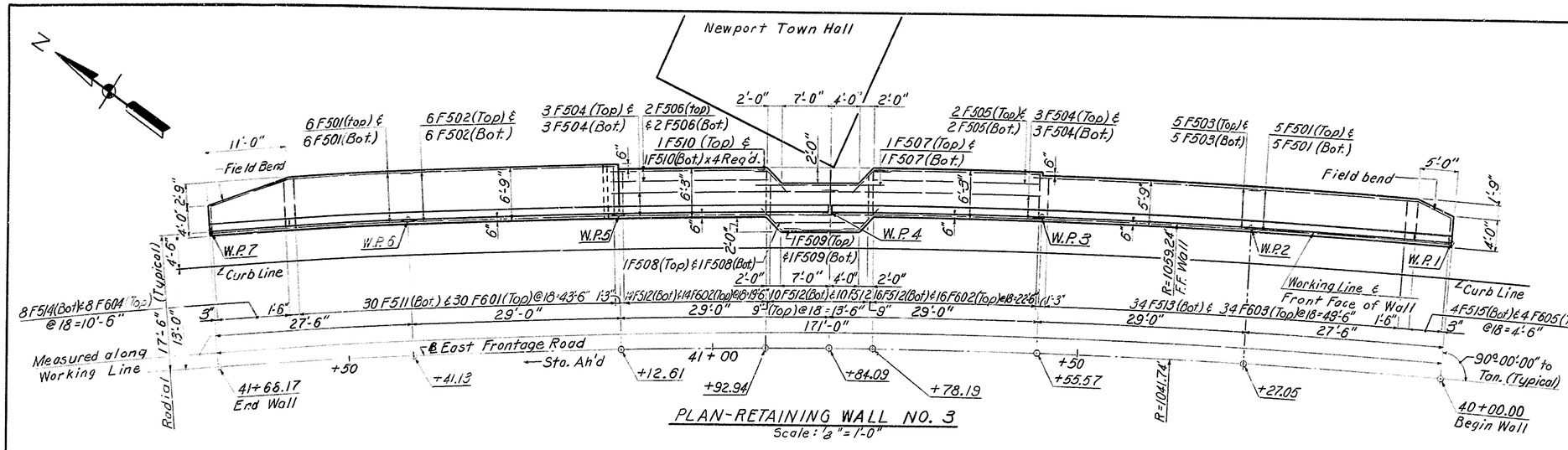

PLAN-RETAINING WALL NO. 3

Scale: 1/8" = 1'-0"

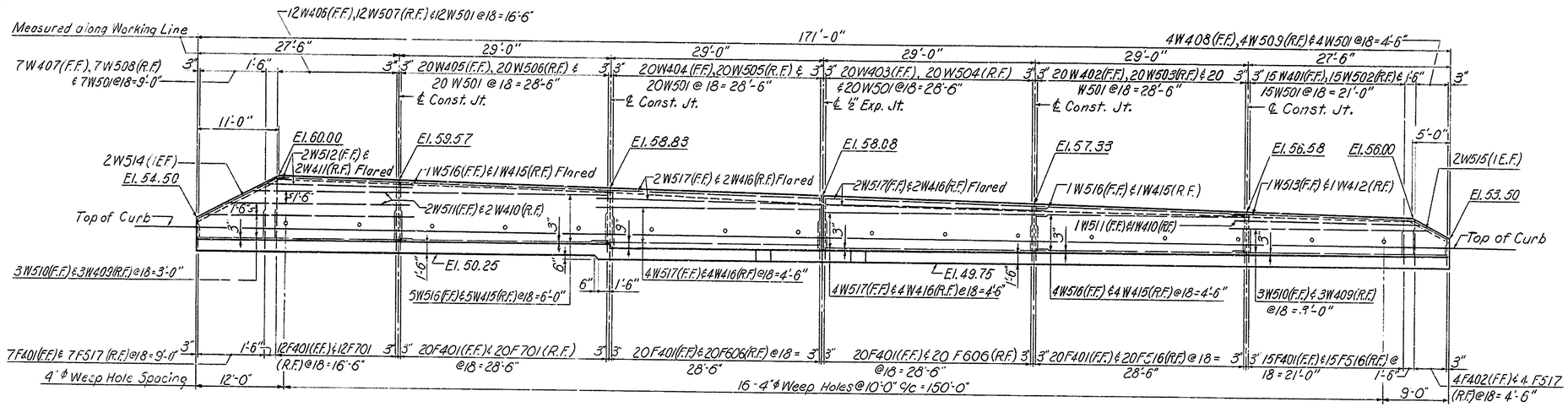

ELEVATION

Scale: 1/8" = 1'-0"

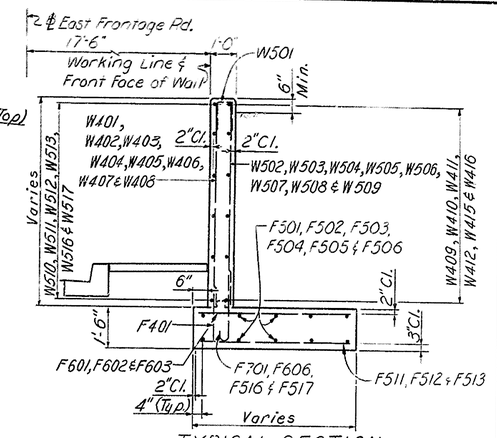

TYPICAL SECTION

STA. 40+00.00 TO STA. 40+78.19

STA. 40+92.94 TO STA. 41+68.17

Scale: 3/8" = 1'-0"

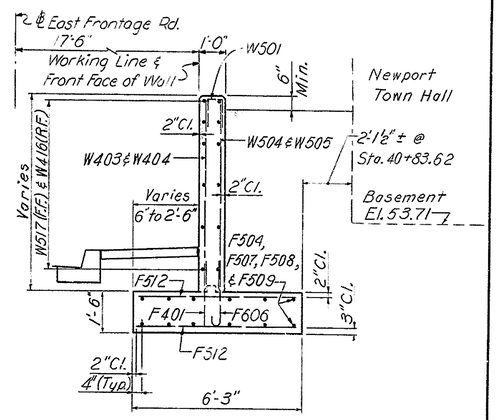

TYPICAL SECTION

STA. 40+78.19 TO STA. 40+92.94

Scale: 3/8" = 1'-0"

BAR SCHEDULE - RETAINING WALL NO. 3

Mark	Size	No.	Length	Vary	Type
F 401	#4	114	3'-11"		Str.
F 402	#4	4	3'-3"		Str.
F 501	#5	22	28'-0"		Str.
F 502	#5	12	29'-10"		Str.
F 503	#5	10	30'-10"		Str.
F 504	#5	12	30'-4"		Str.
F 505	#5	4	22'-8"		Str.
F 506	#5	4	21'-6"		Str.
F 507	#5	2	17'-6"		Str.
F 508	#5	2	13'-0"		Str.
F 509	#5	2	11'-0"		Str.
F 510	#5	8	6'-0"		1
F 511	#5	30	6'-5"		Str.
F 512	#5	50	5'-11"		Str.
F 513	#5	34	5'-5"		Str.
F 514	#5	8	3'-8" to 6'-0"	Vary lea. by 4"	Str.
F 515	#5	4	3'-8" to 5'-2"	Vary lea. by 6"	Str.
F 516	#5	35	3'-1"		2
F 517	#5	11	3'-10"		2
F 601	#6	30	6'-5"		Str.
F 602	#6	30	5'-11"		Str.

Mark	Size	No.	Length	Vary	Type
F 603	#6	34	5'-5"		Str.
F 604	#6	8	3'-8" to 6'-0"	Vary lea. by 4"	Str.
F 605	#6	4	3'-8" to 5'-2"	Vary lea. by 6"	Str.
F 606	#6	40	5'-4"		2
F 701	#7	32	5'-8"		2
W 401	#4	15	4'-7"		Str.
W 402	#4	20	5'-2"		Str.
W 403	#4	20	5'-11"		Str.
W 404	#4	20	6'-8"		Str.
W 405	#4	20	6'-11"		Str.
W 406	#4	12	7'-8"		Str.
W 407	#4	7	2'-6" to 7'-0"	Vary lea. by 9"	Str.
W 408	#4	4	2'-2" to 4'-5"	Vary lea. by 9"	Str.
W 409	#4	6	28'-11"		Str.
W 410	#4	3	24'-11"		Str.
W 411	#4	2	18'-6"		Str.
W 412	#4	1	23'-9"		Str.

Mark	Size	No.	Length	Vary	Type
W 415	#4	11	28'-8"		Str.
W 416	#4	12	30'-1"		Str.
W 501	#5	118	5'-8"		3
W 502	#5	15	4'-7"		Str.
W 503	#5	20	5'-2"		Str.
W 504	#5	20	5'-11"		Str.
W 505	#5	20	6'-8"		Str.
W 506	#5	20	6'-11"		Str.
W 507	#5	12	7'-8"		Str.
W 508	#5	7	2'-6" to 7'-0"	Vary lea. by 9"	Str.
W 509	#5	4	2'-2" to 4'-5"	Vary lea. by 9"	Str.
W 510	#5	6	28'-11"		Str.
W 511	#5	3	24'-11"		Str.
W 512	#5	2	18'-6"		Str.
W 513	#5	1	24'-1"		Str.
W 514	#5	2	13'-10"		4
W 515	#5	2	7'-2"		4
W 516	#5	11	28'-8"		Str.
W 517	#5	12	30'-5"		Str.

BENDING DIAGRAMS

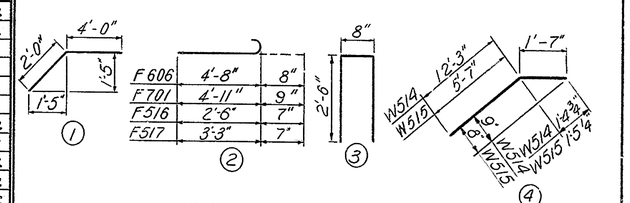

All dimensions are out to out.

NOTES

1. For General Notes, see Sheet #100.
2. For Joint Details, see Sheet #116.
3. See Special Provisions for protection of Newport Town Hall during construction.
4. For Weep Hole Drainage Details, see Sheet #108.

DELAWARE DEPARTMENT OF HIGHWAYS & TRANSPORTATION
DIVISION OF HIGHWAYS

STATE ROUTE 141 THRU NEWPORT

RETAINING WALL NO. 3

PLAN, ELEVATION AND BAR SCHEDULE

STA. 40+00.00 TO STA. 41+68.25
EAST FRONTAGE ROAD

D.W.B.C.	SCALE	APPROVED BY:
T.C.V.L.	AS NOTED	
C.J.B.S.		BRIDGE ENGINEER

COUNTY	CONTRACT	P.R.A. REG. NO.	STATE	FED. AID PROJECT NO.	SHEET NO.	TOTAL SHEETS
NEW CASTLE	71-02-009	2	DEL.		176	301

NO.	REVISIONS	BY	DATE

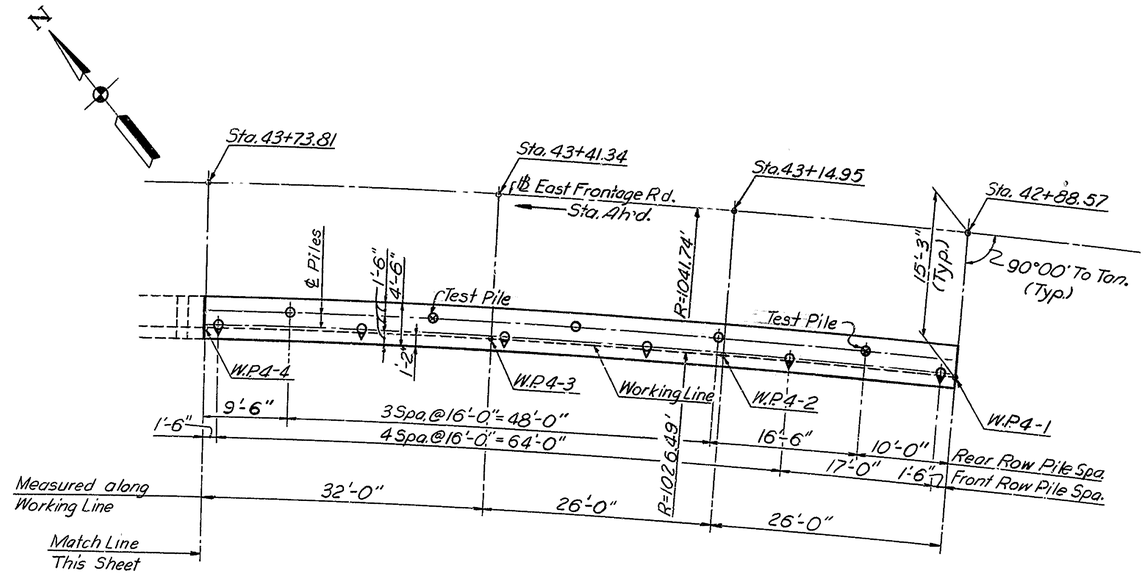

RETAINING WALL NO. 4 PILE LOCATION PLAN
STA. 42+88.57 TO STA. 43+73.81

Scale: 1/8" = 1'-0"

For Bottom of Footing Elevations, See sh. #177

NOTES:

1. For General Notes, See Sh. #100
2. All Piles Shall be Cast-In-Place Concrete Piles. 12 In. 7 Gage.
3. Maximum Design Pile Load = 40 Tons/Pile.
4. ⟐ Denotes Battered Piles and Direction of Batter. Batter = 4:12.
5. For Pile Detail, See Sh. #164
6. ⊗ Denotes Steel Shell Test Pile.

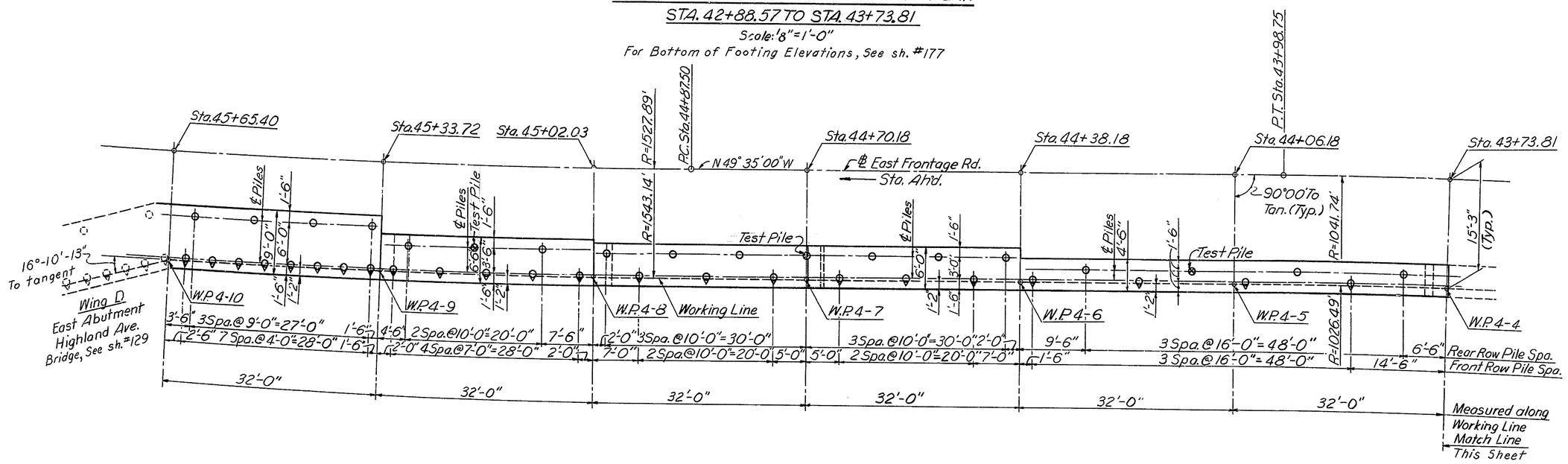

RETAINING WALL NO. 4 PILE LOCATION PLAN
STA. 43+73.81 TO STA. 45+65.40

Scale: 1/8" = 1'-0"

For Bottom of Footing Elevations, See Sh. #178

DELAWARE
DEPARTMENT OF HIGHWAYS & TRANSPORTATION
DIVISION OF HIGHWAYS

STATE ROUTE 141 THRU NEWPORT

RETAINING WALL NO. 4
PILE LOCATION PLAN
STA. 42+88.57 TO STA. 45+65.40
EAST FRONTAGE ROAD

D. W.B.C.	SCALE	APPROVED BY:
T. R.W.H.	AS NOTED	
C. J.B.S.		BRIDGE ENGINEER

3 VAL PRINT 19 1253

COUNTY	CONTRACT	F. B. A. REF. NO.	STATE	FED. AID PROJECT NO.	SHEET NO.	TOTAL SHEETS
NEW CASTLE	71-02-009	2	DEL		177	301

NO.	REVISIONS	BY	DATE

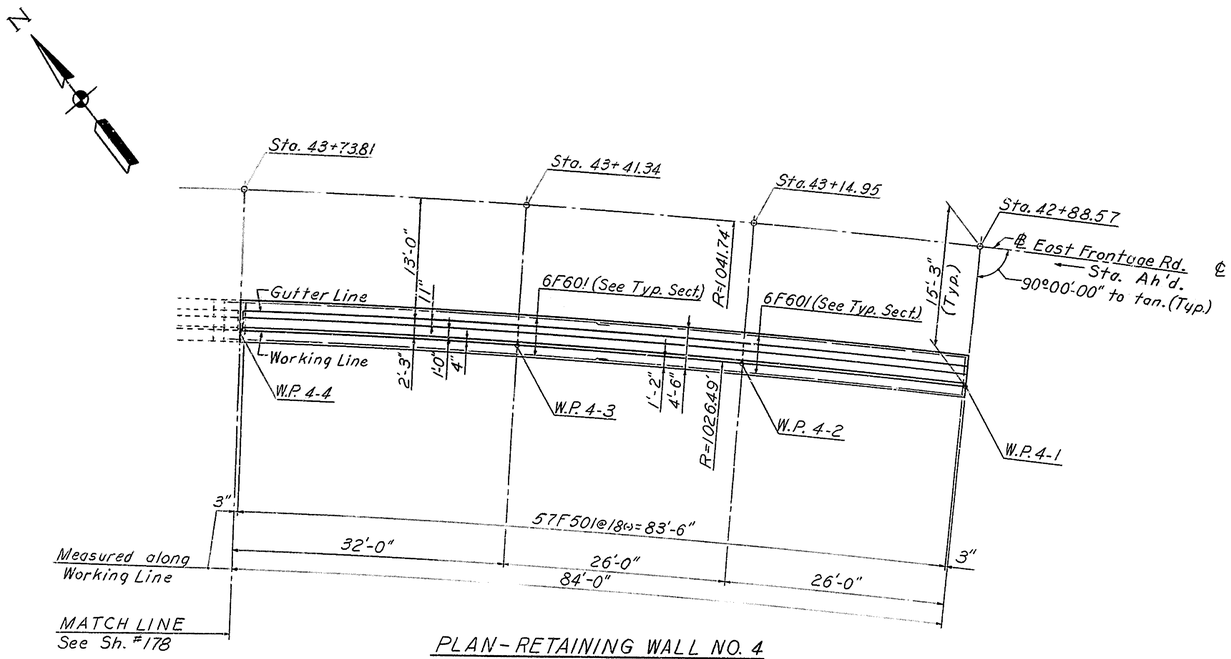

PLAN - RETAINING WALL NO. 4
STA. 42+88.57 TO STA. 43+73.81

Scale: 1/8"=1'-0"

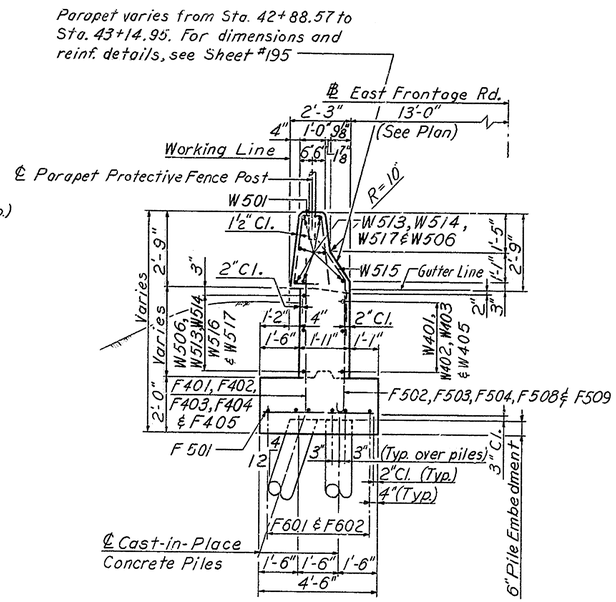

TYPICAL SECTION
STA. 42+88.57 TO STA. 44+38.18

Scale: 3/8"=1'-0"

RETAINING WALL NO. 4 NOTES

1. For General Notes, see Sheet #100
2. For Architectural Details, see Sheet #113
3. For 4" ϕ Weep Hole Drainage Details, see Sheet #108
4. For Joint Details, see Sheet #116
5. For Parapet Transition-Curb to Retaining Wall, see Sheet #195
6. For Parapet Transition-Wing Wall to Retaining Wall, see Sheet #196
7. For Plan and Elevation - Sta. 43+73.81 to Sta. 45+65.40, see Sheet #178
8. For Bar Schedule, see Sheet #179

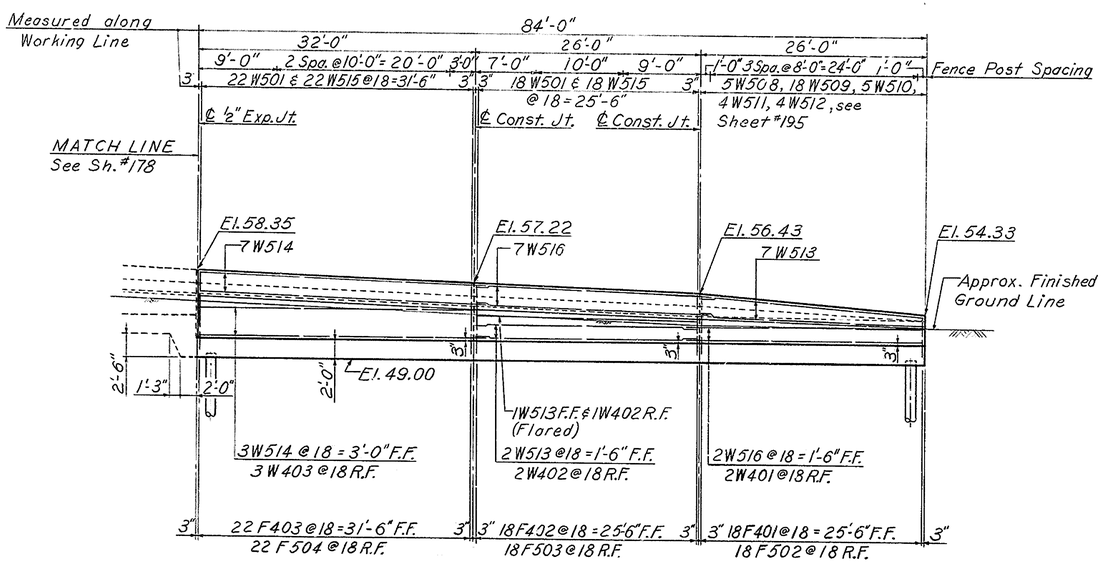

ELEVATION
Scale: 1/8"=1'-0"

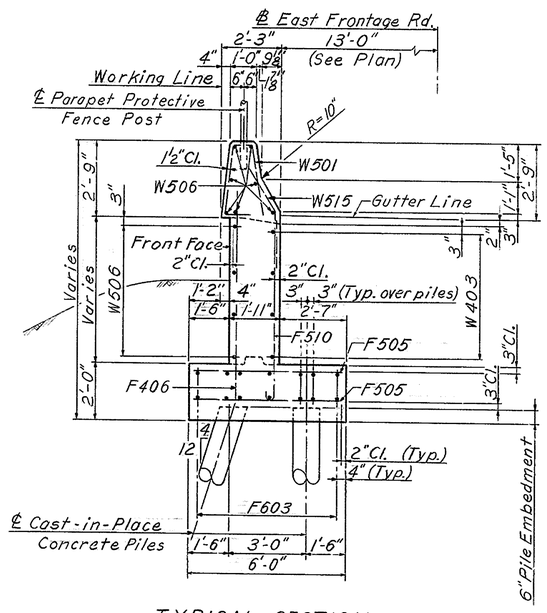

TYPICAL SECTION
STA. 44+38.18 TO STA. 44+70.18

Scale: 3/8"=1'-0"

DELAWARE
DEPARTMENT OF HIGHWAYS & TRANSPORTATION
DIVISION OF HIGHWAYS

STATE ROUTE 141 THRU NEWPORT

RETAINING WALL NO. 4
PLAN AND ELEVATION
STA. 42+88.57 TO STA. 43+73.81
EAST FRONTAGE ROAD

D. W.B.C.	SCALE	APPROVED BY:
T. C.V.L.	AS NOTED	
C. J.B.S.		BRIDGE ENGINEER

COUNTY	CONTRACT	F.P.A. REG. NO.	STATE	FED. AID PROJECT NO.	SHEET NO.	TOTAL SHEETS
NEW CASTLE	71-02-009	2	DEL.		178	301

NO.	REVISIONS	BY	DATE

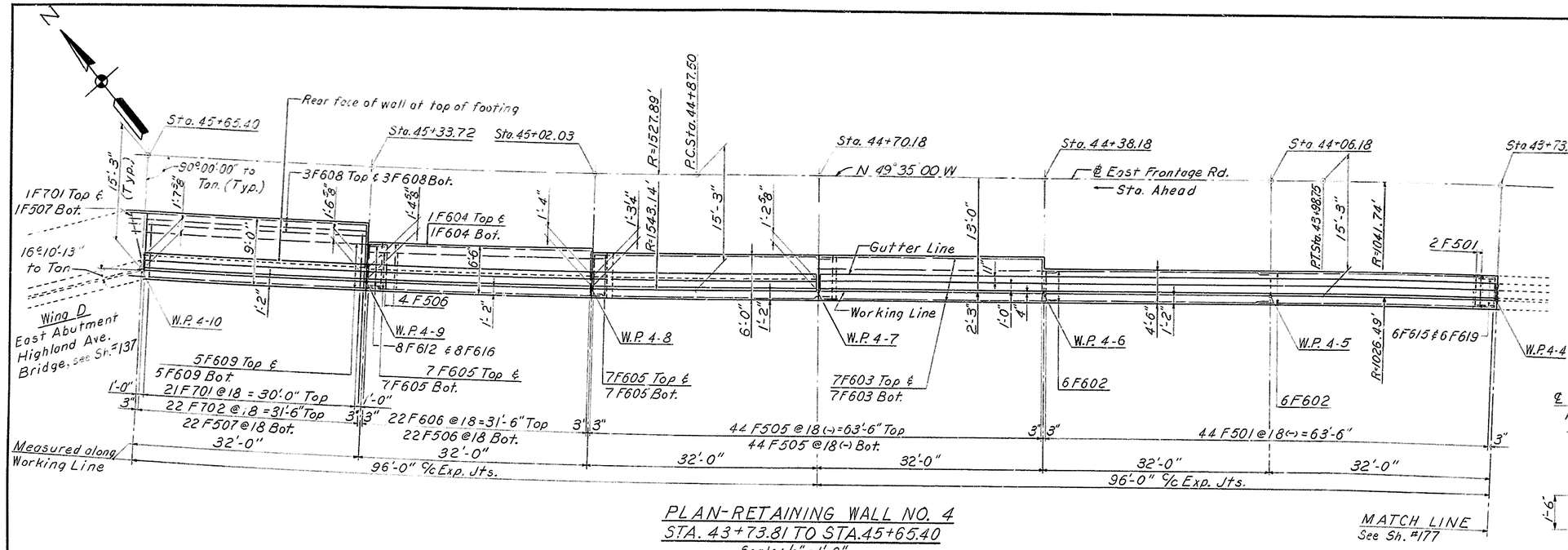

PLAN-RETAINING WALL NO. 4
STA. 43+73.81 TO STA. 45+65.40
Scale: 1/8" = 1'-0"

Parapet varies from Sta. 45+33.72 to Sta. 45+65.40. For dimensions and reinf. details, see Sheet #196

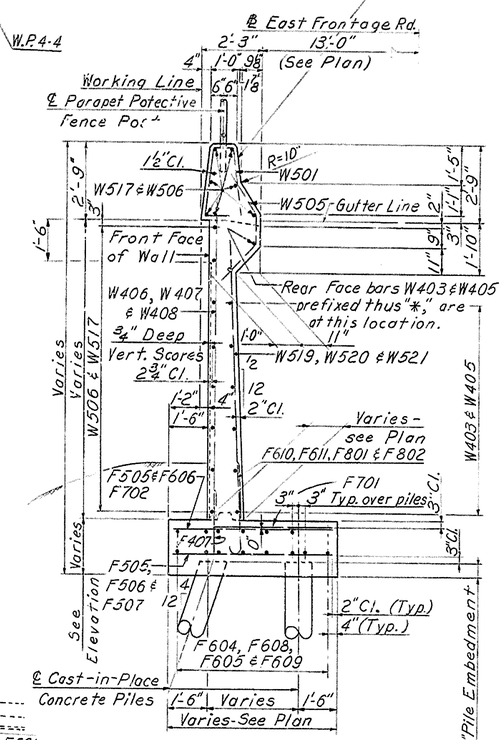

TYPICAL SECTION
STA. 44+70.18 TO STA. 45+65.40
Scale: 3/8" = 1'-0"

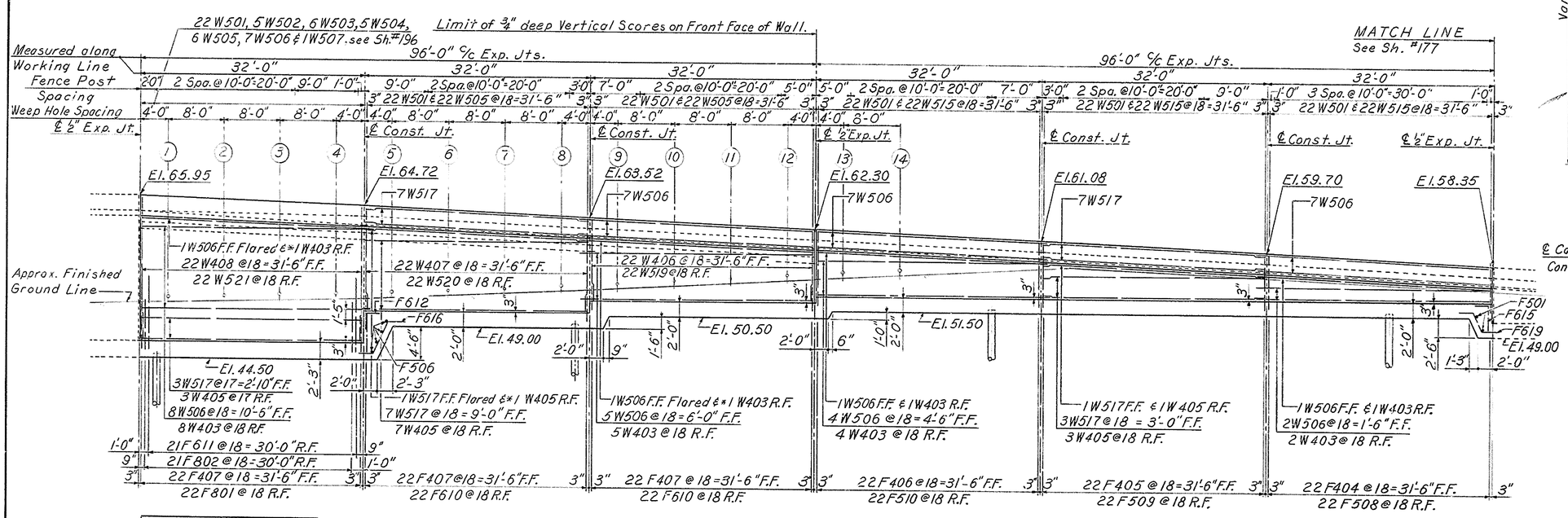

ELEVATION
Scale: 1/8" = 1'-0"

WEEP HOLE ELEVATIONS			
#	INVERT	#	INVERT
1	52.33	8	54.16
2	52.50	9	54.50
3	52.67	10	55.00
4	53.00	11	55.33
5	53.17	12	55.75
6	53.54	13	56.17
7	53.75	14	56.50

For Retaining Wall No. 4 Notes, see Sh. #177
For Typical Section - Sta. 42+88.57 to Sta. 44+38.18 and Typical Section - Sta. 44+38.18 to Sta. 44+70.18, see Sheet #177

DELAWARE
DEPARTMENT OF HIGHWAYS & TRANSPORTATION
DIVISION OF HIGHWAYS

STATE ROUTE 141 THRU NEWPORT

RETAINING WALL NO. 4

PLAN AND ELEVATION
STA. 43+73.81 TO STA. 45+65.40
EAST FRONTAGE ROAD

D. W.B.C.	SCALE	APPROVED BY:
T. C.V.L.	AS NOTED	
C. J. B.S.		BRIDGE ENGINEER

COUNTY	CONTRACT	P.R.J. REG. NO.	STATE	FED. AID PROJECT NO.	SHEET NO.	TOTAL SHEETS
NEW CASTLE	71-02-009	2	DEL.		179	301

NO.	REVISIONS	BY	DATE

RETAINING WALL NO. 4 BAR SCHEDULE

MARK	SIZE	NO.	LENGTH	TYPE	BENDING DIMENSIONS A	B	C	D	E	F
F401	# 4	18	4'-3"	Str.						
F402	↑	18	5'-9"	Str.						
F403		22	6'-8"	Str.						
F404		22	5'-5"	Str.						
F405		22	6'-9"	Str.						
F406	↓	22	8'-3"	Str.						
F407	# 4	66	3'-3"	Str.						
F501	# 5	103	4'-2"	Str.						
F502	↑	18	3'-10"	F	3'-3"	7"				
F503		18	4'-6"	F	3'-11"	7"				
F504		22	5'-4"	F	4'-9"	7"				
F505		88	5'-8"	Str.						
F506		26	6'-2"	Str.						
F507		23	8'-8"	Str.						
F508		22	4'-1"	F	3'-6"	7"				
F509	↓	22	5'-4"	F	4'-9"	7"				
F510	#5	22	6'-8"	F	6'-1"	7"				
F601	# 6	12	43'-5"	Str.						
F602	↑	12	33'-6"	Str.						
F603		14	31'-10"	Str.						
F604		2	31'-8"	Str.						
F605	↓	28	33'-8"	Str.						
F606	# 6	22	6'-2"	Str.						
F608	# 6	6	33'-10"	Str.						
F609	# 6	10	35'-3"	Str.						

MARK	SIZE	NO.	LENGTH	TYPE	BENDING DIMENSIONS A	B	C	D	E	F
F610	# 6	44	3'-10"	F	3'-2"	8"				
F611	# 6	21	10'-5"	F	9'-9"	8"				
F612	# 6	8	7'-0"	G	1'-6"	5'-6"				
F615	# 6	6	5'-0"	G	1'-6"	3'-6"				
F616	# 6	8	8'-0"	E	1'-6"	5'-0"	1'-6"	2'-3"	4'-6"	
F619	# 6	6	5'-10"	E	1'-6"	2'-10"	1'-6"	1'-3"	2'-6"	
F701	# 7	22	7'-6"	Str.						
F702	# 7	22	8'-8"	Str.						
F801	# 8	22	4'-10"	F	4'-0"	10"				
F802	# 8	21	7'-10"	F	7'-0"	10"				
W401	# 4	2	26'-10"	Str.						
W402	#4	3	25'-8"	Str.						
W403	#4	26	32'-10"	Str.						
W405	#4	15	31'-8"	Str.						
W406	#4	22	8'-11"	Str.						
W407	#4	22	11'-8"	Str.						
W408	# 4	22	17'-1"	Str.						

MARK	SIZE	NO.	LENGTH	TYPE	BENDING DIMENSIONS A	B	C	D	E	F
W501	# 5	172	6'-9"	A	See Diagram					
W502	↑	5	4'-9"	B	2'-0"	1'-3"	1'-6"	1'-5"	1'-5"	
W503		6	4'-9"	C	1'-6"	1'-3"	9¾"	See Diagram		
W504		5	4'-9"	C	1'-6"	1'-0½"	1'-0⅝"	See Diagram		
W505		50	4'-9"	C	1'-6"	10⅜"	1'-2¾"	See Diagram		
W506		51	33'-4"	Str.						
W507		1	22'-6"	Str.						
W508		5	6'-4" to 7'-1" Vary lea. by 2¼"	H	2'-2" to 2'-6" lea. by 1"	9" to 10" lea. by ¼"	2'-2" to 2'-6" lea. by 1"	1'-3"	3" to 3½" lea. by ⅛"	2'-1⅞" to 2'-5⅞" lea. by 1"
W509		18	3'-0"	D	1'-6"	1'-6"	Varies 10⅜" to 1'-6"	Varies 1'-2¾" to 0"		
W510		5	5'-7¼" to 6'-4¼" Vary lea. by 2¼"	H	1'-9" to 2'-1" lea. by 1"	10¼" to 11¼" lea. by ¼"	1'-9" to 2'-1" lea. by 1"	1'-3"	2⅛" to 3" lea. by ⅛"	1'-8⅞" to 2'-0⅞" lea. by 1"
W511		4	5'-0½" to 5'-7¼" Vary lea. by 2¼"	H	1'-5" to 1'-8" lea. by 1"	11½" to 1'-0¼" lea. by ¼"	1'-5" to 1'-8" lea. by 1"	1'-3"	2" to 2⅜" lea. by ⅛"	1'-4⅞" to 1'-7⅞" lea. by 1"
W512		4	4'-5¼" to 4'-11" Vary lea. by 2¼"	H	1'-1" to 1'-4" lea. by 1"	1'-0¼" to 1'-1" lea. by ¼"	1'-1" to 1'-4" lea. by 1"	1'-3"	2¼" to 1⅞" lea. by ⅛"	1'-1" to 1'-4" lea. by 1"
W513		10	25'-8"	Str.						
W514		10	33'-1"	Str.						
W515		106	3'-3"	D	1'-9"	1'-6"	10⅜"	1'-2¾"		
W516	↓	9	27'-1"	Str.						
W517	# 5	29	31'-8"	Str.						
W519	# 5	22	7'-5"	Str.						
W520	# 5	22	10'-0"	Str.						
W521	# 5	22	15'-6"	Str.						

BENDING DIAGRAMS

All dimensions are out to out.

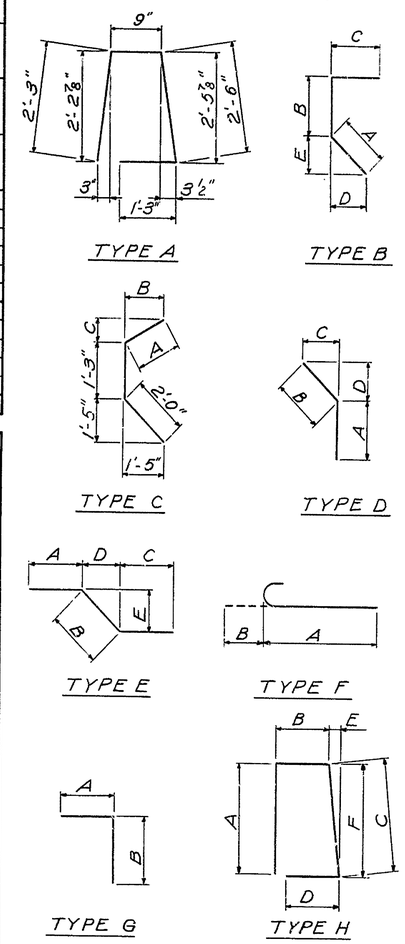

RETAINING WALL NO.5 BAR SCHEDULE

MARK	SIZE	NO.	LENGTH	TYPE	BENDING DIMENSIONS A	B	C	D	E	F
F401	# 4	198	2'-3"	Str.						
F402	↑	22	7'-5"	Str.						
F403		44	6'-9"	Str.						
F404		44	5'-11"	Str.						
F405		44	5'-3"	Str.						
F406		88	4'-3"	Str.						
F407		19	4'-9"	Str.						
F408	↓	22	2'-6"	Str.						
F409	# 4	19	5'-6"	Str.						
F501	# 5	22	10'-5"	Str.						
F502	↑	27	8'-8"	Str.						
F503		26	7'-8"	Str.						
F504		22	6'-11"	Str.						
F505		44	6'-5"	Str.						
F506		21	5'-0"	Str.						
F507		66	3'-5"	F	2'-10"	7"				
F508		22	6'-10"	F	6'-3"	7"				
F509		22	6'-3"	F	5'-8"	7"				
F510		44	5'-6"	F	4'-11"	7"				
F511		198	5'-8"	Str.						
F512		285	4'-2"	Str.						
F513		65	4'-11"	F	4'-4"	7"				
F514		88	3'-11"	F	3'-4"	7"				
F515		19	4'-5"	F	3'-10"	7"				
F516	↓	22	4'-10"	F	4'-3"	7"				
F517	# 5	19	5'-0"	F	4'-5"	7"				
F601	# 6	21	10'-5"	F	9'-9"	8"				
F602	↑	21	6'-5"	F	5'-9"	8"				
F603		22	3'-10"	F	3'-2"	8"				
F604		32	6'-11"	Str.						
F605		10	34'-0"	Str.						
F606		28	35'-10"	Str.						
F607	↓	154	33'-8"	Str.						
F608	# 6	10	31'-8"	Str.						
F610	# 6	18	44'-3"	Str.						

MARK	SIZE	NO.	LENGTH	TYPE	BENDING DIMENSIONS A	B	C	D	E	F
F611	# 6	10	7'-0"	E	1'-6"	4'-1"	1'-6"	1'-9"	3'-6"	
F612	↑	10	6'-0"	G	1'-6"	4'-6"				
F613		9	6'-4"	E	1'-6"	3'-4"	1'-6"	1'-6"	3'-0"	
F614	# 6	9	5'-6"	G	1'-6"	4'-0"				
F616	# 6	12	44'-3"	Str.						
F618	# 6	22	5'-8"	Str.						
F619	# 6	6	5'-6"	E	1'-6"	2'-6"	1'-6"	1'-1½"	2'-3"	
F701	# 7	21	8'-0"	F	7'-3"	9"				
F702	↑	66	4'-2"	F	3'-5"	9"				
F703		31	9'-1"	Str.						
F704	↓	22	7'-6"	Str.						
F705	# 7	32	7'-8"	Str.						
F801	# 8	44	4'-7"	F	3'-9"	10"				
F802	↑	21	7'-6"	F	6'-8"	10"				
F803		32	10'-5"	Str.						
F804	# 8	21	8'-8"	Str.						
F901	# 9	21	9'-7"	F	8'-7"	1'-0"				
F902	# 9	21	5'-4"	F	4'-4"	1'-0"				
F1001	#10	22	5'-10"	F	4'-9"	1'-1"				
W401	# 4	51	31'-8"	Str.						
W402	↑	70	33'-0"	Str.						
W403		22	20'-3"	Str.						
W404		22	17'-0"	Str.						
W405		22	14'-9"	Str.						
W406		22	13'-4"	Str.						
W407		22	12'-0"	Str.						
W408		22	10'-9"	Str.						
W409		22	9'-5"	Str.						
W410	# 4	22	8'-2"	Str.						

MARK	SIZE	NO.	LENGTH	TYPE	BENDING DIMENSIONS A	B	C	D	E	F
W411	# 4	22	6'-11"	Str.						
W412	↑	3	28'-6"	Str.						
W413	↓	3	27'-2"	Str.						
W414	# 4	22	8'-9"	Str.						
W501	# 5	500	6'-9"	A	See Diagram					
W502	↑	10	4'-9"	B	2'-0"	1'-3"	1'-6"	1'-5"	1'-5"	
W503		12	4'-9"	C	1'-6"	1'-3"	9¾"	See Diagram		
W504		10	4'-9"	C	1'-6"	1'-0½"	1'-0⅝"	See Diagram		
W505		210	4'-9"	C	1'-6"	10⅜"	1'-2¾"	See Diagram		
W506		186	33'-3"	Str.						
W507		2	22'-6"	Str.						
W508		110	31'-8"	Str.						
W509		2	27'-3"	Str.						
W510		22	19'-0"	Str.						
W511		22	16'-0"	Str.						
W512		22	13'-0"	Str.						
W513		22	11'-0"	Str.						
W514		22	9'-8"	Str.						
W515		22	8'-3"	Str.						
W516		22	7'-0"	Str.						
W517		22	6'-0"	Str.						
W518		22	4'-7"	Str.						
W519	↓	258	3'-3"	D	1'-9"	1'-6"	10⅜"	1'-2¾"		
W520	# 5	326	4'-8"	H	2'-0"	8"	2'-0"	0"	2⅝"	1'-11⅞"
W522	# 5	10	28'-5"	Str.						
W523	# 5	10	27'-2"	Str.						
W524	# 5	22	7'-1"	Str.						
W801	# 8	21	13'-3"	Str.						

DELAWARE
DEPARTMENT OF HIGHWAYS & TRANSPORTATION
DIVISION OF HIGHWAYS

STATE ROUTE 141 THRU NEWPORT

RETAINING WALL NO. 4
RETAINING WALL NO. 5

BAR SCHEDULE

D. W.B.C.	SCALE	APPROVED BY:
T. C.V.L.	NONE	
C. J.B.S.		BRIDGE ENGINEER

© DELPRINT 19 1253

COUNTY	CONTRACT	P.R.A. REG. NO.	STATE	FED. AID PROJECT NO.	SHEET NO.	TOTAL SHEETS
NEW CASTLE	71-02-009	2	DEL.		180	301

NO.	REVISIONS	BY	DATE

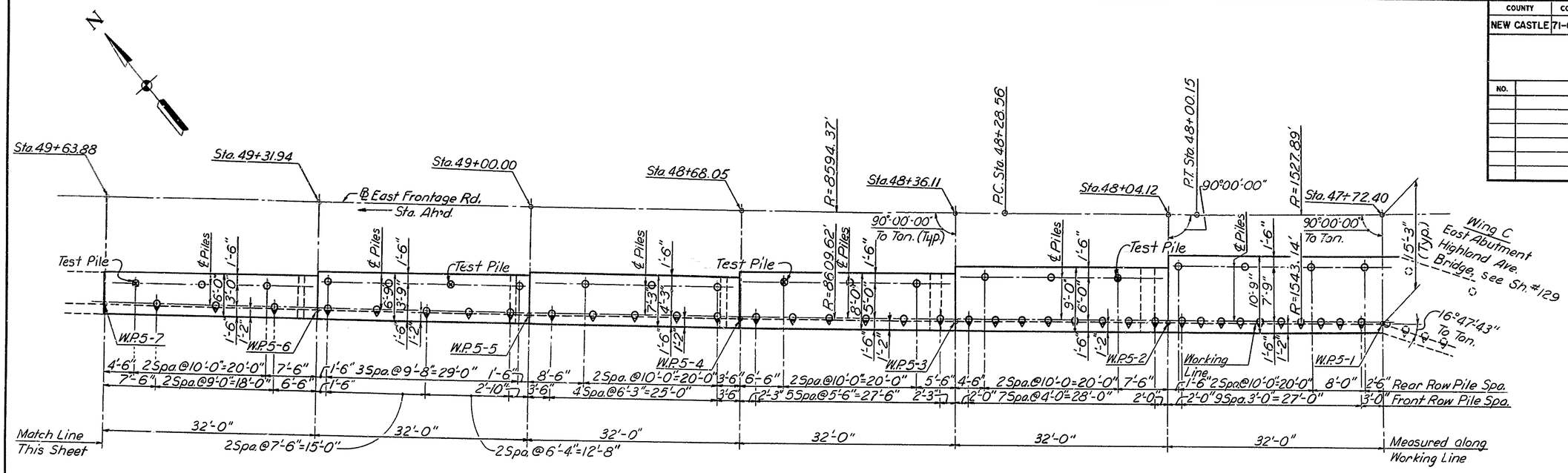

RETAINING WALL NO. 5 PILE LOCATION PLAN
STA. 47+72.40 TO STA. 49+63.88
Scale: 1/8"=1'-0"

For Bottom of Footing Elevations, see Sh.# 182

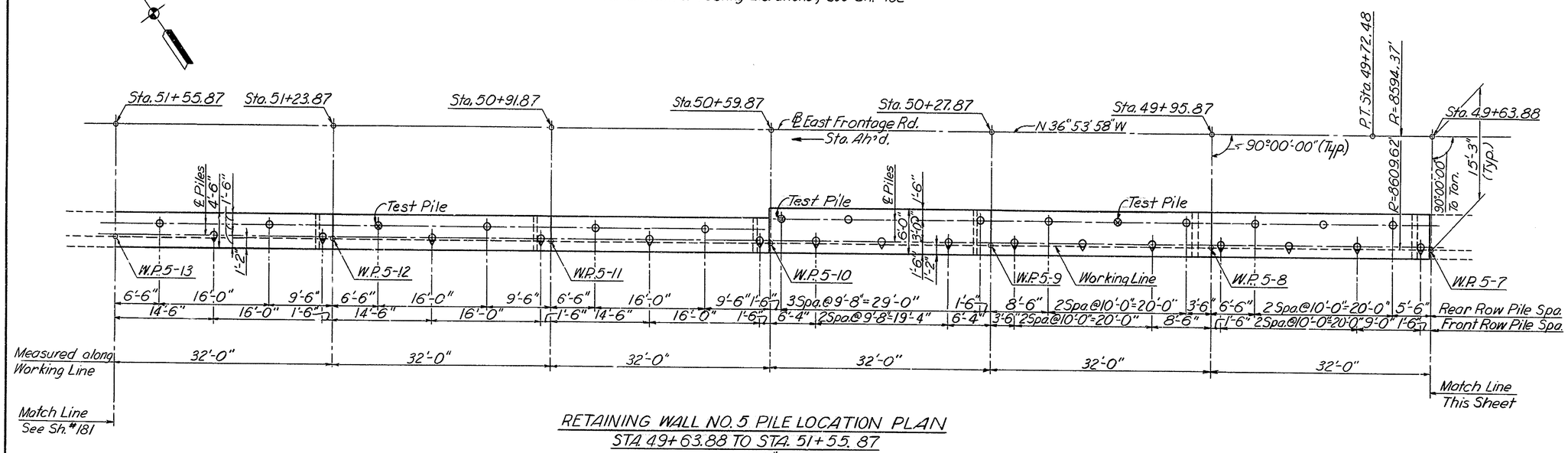

RETAINING WALL NO. 5 PILE LOCATION PLAN
STA. 49+63.88 TO STA. 51+55.87
Scale: 1/8"=1'-0"

For Bottom of Footing Elevations, see Sh.# 183

NOTES:

1. For General Notes, see Sh.#100
2. All Piles Shall be Cast-In-Place Concrete Piles. 12 In. 7 Gage.
3. Maximum Design Pile Load = 40 Tons/Pile.
4. ⊙ Denotes Battered Piles and Direction of Batter. Batter = 4:12.
5. For Pile Detail, see Sh.#164
6. ⊗ Denotes Steel Shell Test Pile.

DELAWARE
DEPARTMENT OF HIGHWAYS & TRANSPORTATION
DIVISION OF HIGHWAYS

STATE ROUTE 141 THRU NEWPORT

RETAINING WALL NO. 5
PILE LOCATION PLAN
STA. 47+72.40 TO STA. 51+55.87
EAST FRONTAGE ROAD

D. W.B.C.	SCALE	APPROVED BY:
T. R.W.H.	AS NOTED	
C. J.B.S.		BRIDGE ENGINEER

COUNTY	CONTRACT	P. R. A. REG. NO.	STATE	FED. AID PROJECT NO.	SHEET NO.	TOTAL SHEETS
NEW CASTLE	71-02-009	2	DEL.		181	301

NO.	REVISIONS	BY	DATE

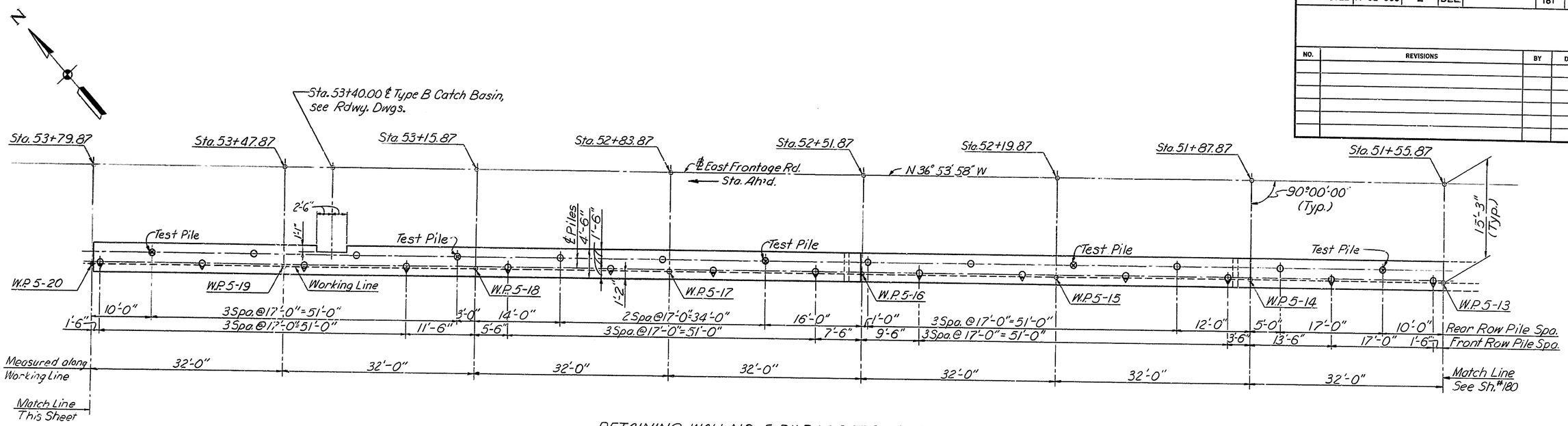

RETAINING WALL NO. 5 PILE LOCATION PLAN

STA. 51+55.87 TO STA. 53+79.87

Scale: 1/8" = 1'-0"

For Bottom of Footing Elevations, see Sh. #184 & Sh. #185

NOTES:

1. For General Notes, see Sh. #100
2. All Piles Shall be Cast-In-Place Concrete Piles. 12 In. 7 Gage.
3. Maximum Design Pile Load = 40 Tons/Pile.
4. ⊙ Denotes Battered Piles and Direction of Batter. Batter = 4:12
5. For Pile Detail, see Sh. #164
6. ⊗ Denotes Steel Shell Test Pile.

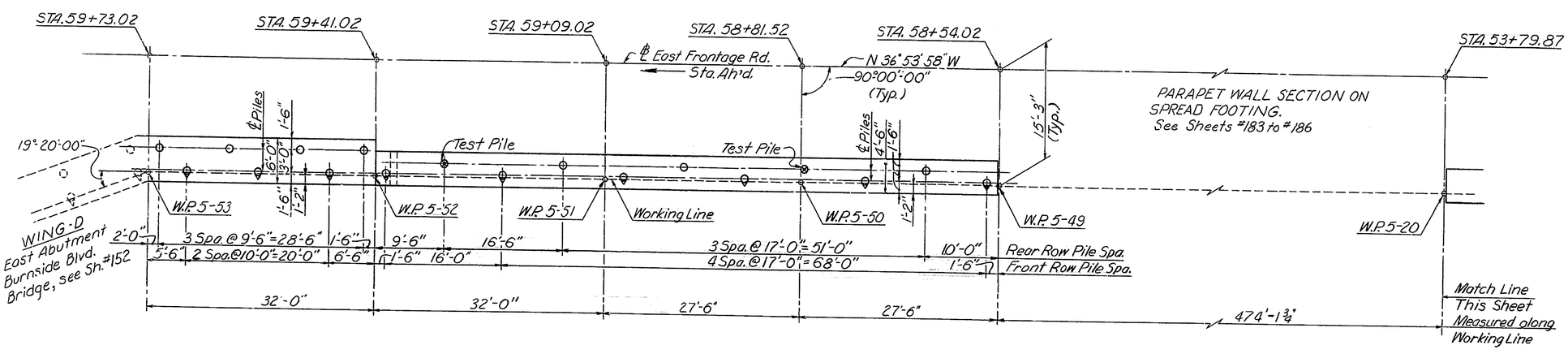

RETAINING WALL NO. 5 PILE LOCATION PLAN

STA. 53+79.87 TO STA. 59+73.02

Scale: 1/8" = 1'-0"

For Bottom of Footing Elevations, see Sh. # 187

DELAWARE
DEPARTMENT OF HIGHWAYS & TRANSPORTATION
DIVISION OF HIGHWAYS

STATE ROUTE 141 THRU NEWPORT

RETAINING WALL NO. 5
PILE LOCATION PLAN
STA. 51+55.87 TO STA. 59+73.02
EAST FRONTAGE ROAD

D. W.B.C.	SCALE	APPROVED BY:
T. R.W.H.	AS NOTED	
C. J.B.S.		BRIDGE ENGINEER

3 VAL PRINT 19 1253

COUNTY	CONTRACT	P.R.A. REG. NO.	STATE	FED. AID PROJECT NO.	SHEET NO.	TOTAL SHEETS
NEW CASTLE	71-02-009	2	DEL.		182	301

NO.	REVISIONS	BY	DATE

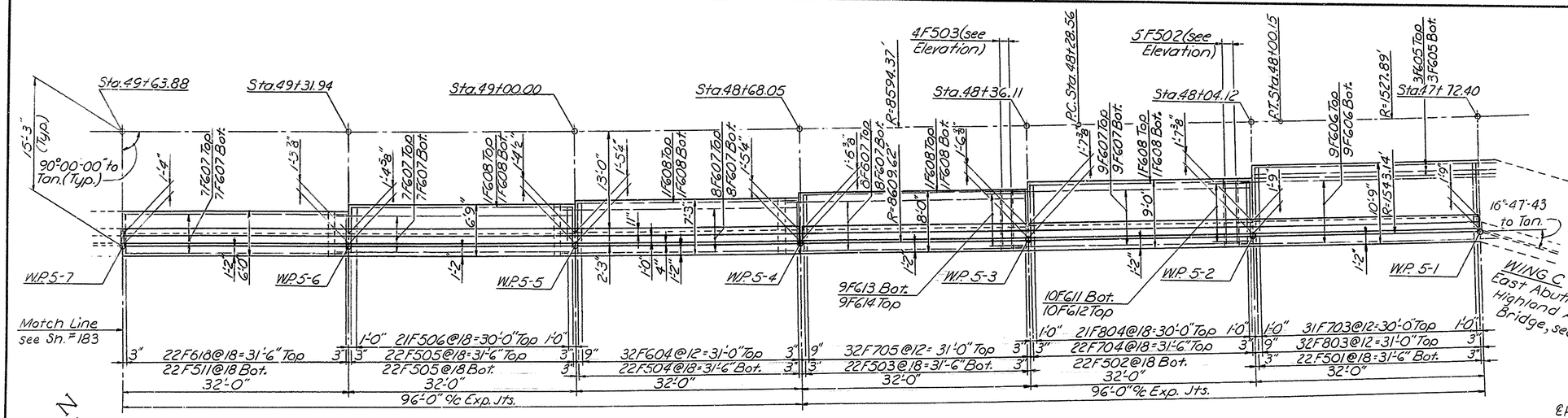

Parapet varies from Sta.47+72.40 to Sta.48+04.12. For dimensions and reinf. details see Sh. #196

PLAN - RETAINING WALL NO. 5
STA. 47+72.40 to STA. 49+63.88
Scale: 1/8" = 1'-0"

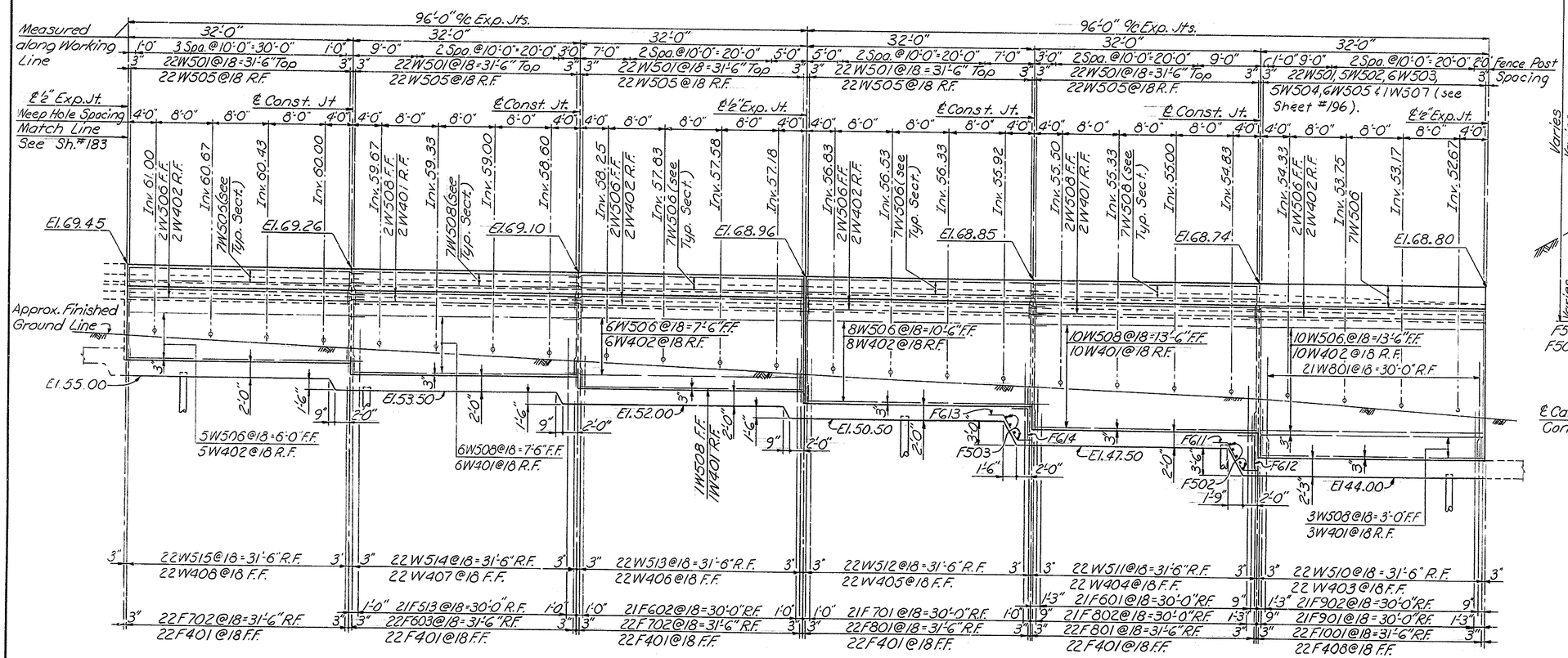

ELEVATION
Scale: 1/8" = 1'-0"

For Retaining Wall No. 5 Notes, see Sh. #183

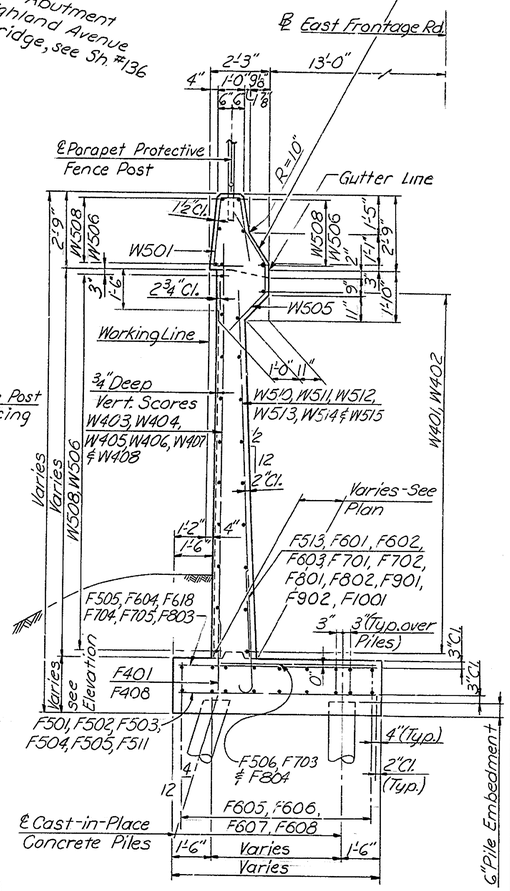

TYPICAL SECTION
STA. 47+72.40 to STA. 49+63.88
Scale: 3/8" = 1'-0"

DELAWARE
DEPARTMENT OF HIGHWAYS & TRANSPORTATION
DIVISION OF HIGHWAYS

STATE ROUTE 141 THRU NEWPORT

RETAINING WALL NO. 5

PLAN AND ELEVATION
STA. 47+72.40 TO STA. 49+63.88
EAST FRONTAGE ROAD

D.W.B.C.	SCALE	APPROVED BY:
T.W.R.W.	AS NOTED	
C. J.B.S.		BRIDGE ENGINEER

COUNTY	CONTRACT	P.B.A. REG. NO.	STATE	FED. AID PROJECT NO.	SHEET NO.	TOTAL SHEETS
NEW CASTLE	71-02-009	2	DEL.		183	301

NO.	REVISIONS	BY	DATE

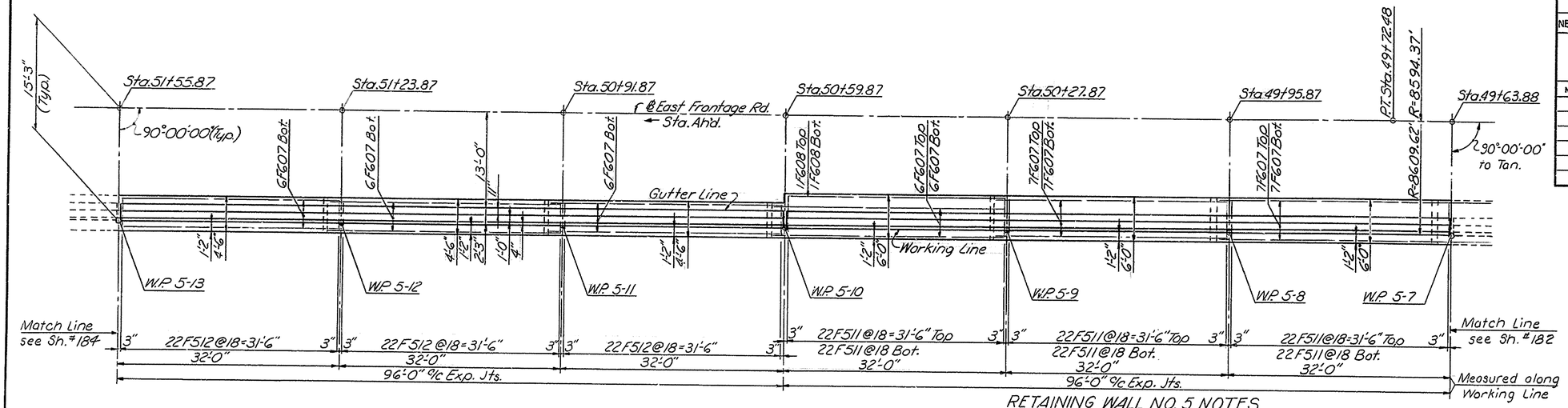

N

PLAN - RETAINING WALL NO. 5
STA.49+63.88 TO STA.51+55.87
Scale: 1/8"=1'-0"

RETAINING WALL NO. 5 NOTES

1. For General Notes, see Sh.# 100
2. For Architectural Details, see Sh.#113
3. For Weep Hole Drainage Details, see Sh.# 108
4. For Joint Details, see Sh.#116
5. For Parapet Transition-Wing Wall to Retaining Wall, see Sh.# 196
6. For Plan & Elevations – Sta. 47+72.40 to Sta. 49+63.88, see Sh.#182
7. For Plan & Elevation – Sta. 51+55.87 to Sta. 53+15.87, see Sh.# 184
8. For Plan & Elevation – Sta. 53+15.87 to Sta. 54+75.87, see Sh.# 185
9. For Plan & Elevation – Sta. 54+75.87 to Sta. 58+54.02, see Sh.# 186
10. For Plan & Elevation – Sta. 58+54.02 to Sta. 59+73.02, see Sh.# 187
11. For Bar Schedule, see Sh.#179

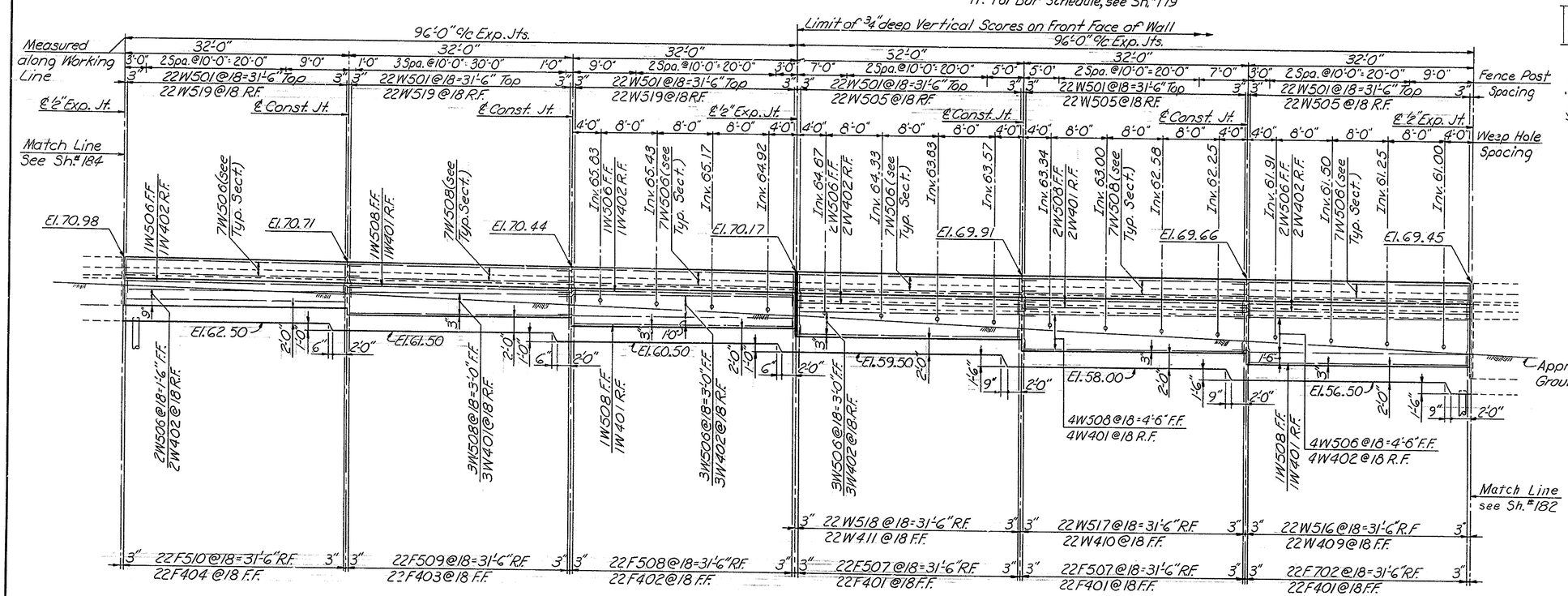

ELEVATION
Scale: 1/8"=1'-0"

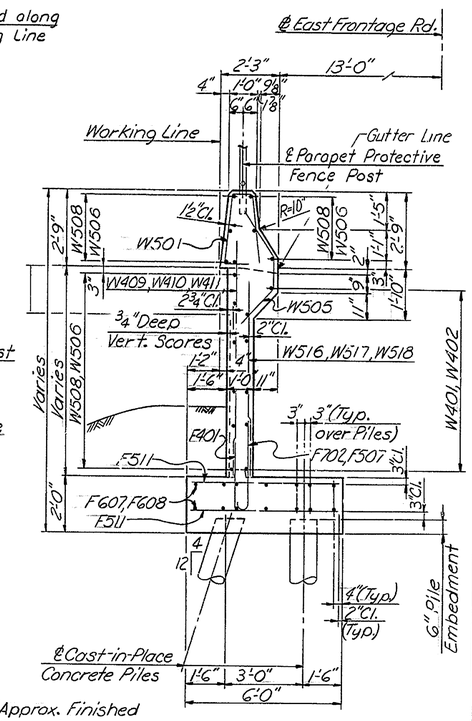

TYPICAL SECTION
STA.49+63.88 to STA.50+59.87
Scale: 3/8"=1'-0"

DELAWARE
DEPARTMENT OF HIGHWAYS & TRANSPORTATION
DIVISION OF HIGHWAYS

STATE ROUTE 141 THRU NEWPORT

RETAINING WALL NO. 5

PLAN AND ELEVATION
STA. 49+63.88 TO STA.51+55.87
EAST FRONTAGE ROAD

D.W.B.C. T.W.R.W. C.J.B.S.	SCALE AS NOTED	APPROVED BY: BRIDGE ENGINEER

COUNTY	CONTRACT	P.R.A. REV. NO.	STATE	FED. AID PROJECT NO.	SHEET NO.	TOTAL SHEETS
NEW CASTLE	71-02-009	2	DEL.		184	301

NO.	REVISIONS	BY	DATE

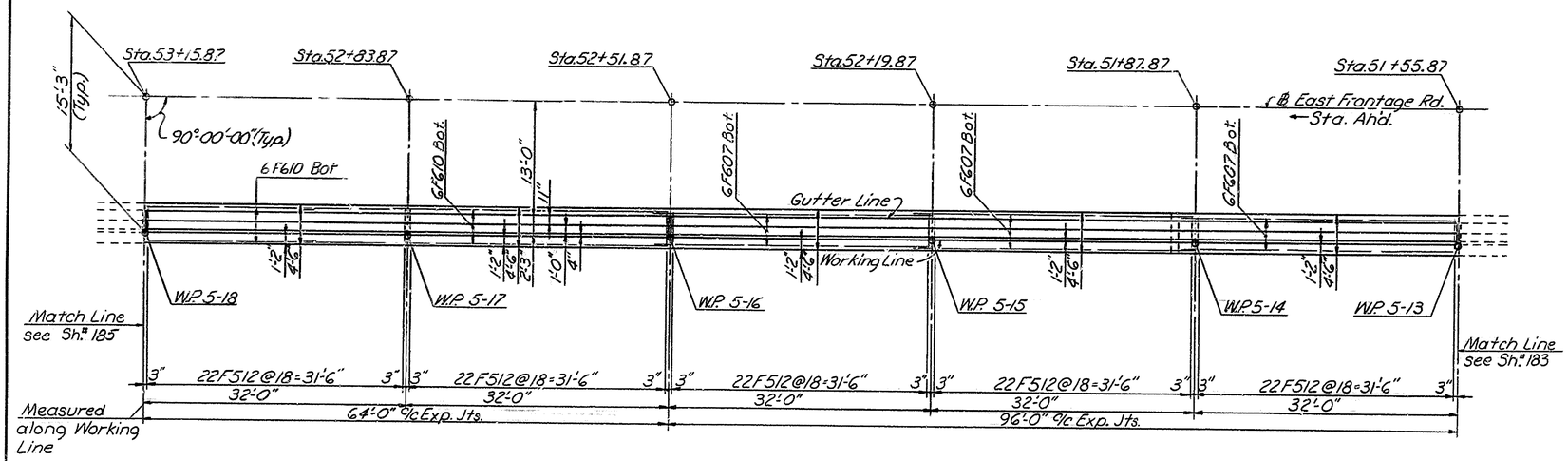

PLAN-RETAINING WALL NO.5
STA.51+55.87 TO STA.53+15.87
Scale: 1/8"=1'-0"

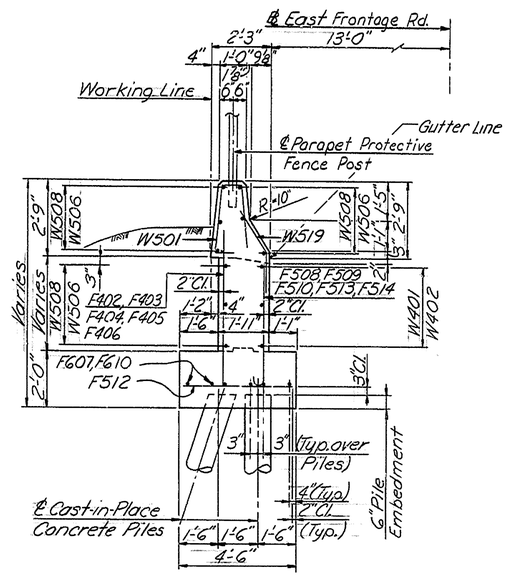

TYPICAL SECTION
STA.50+59.87 TO STA.53+15.87
Scale: 3/8"=1'-0"

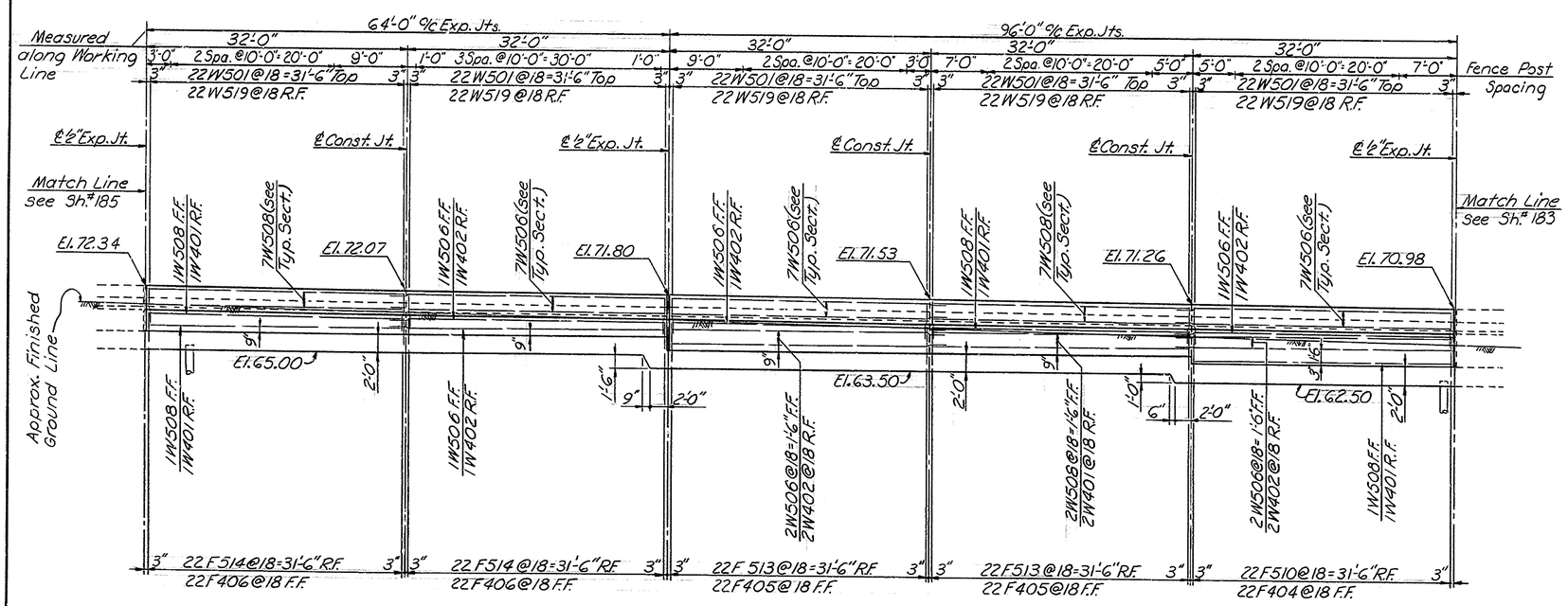

ELEVATION
Scale: 1/8"=1'-0"

For Retaining Wall No. 5 Notes, see Sh.# 183

DELAWARE
DEPARTMENT OF HIGHWAYS & TRANSPORTATION
DIVISION OF HIGHWAYS

STATE ROUTE 141 THRU NEWPORT

RETAINING WALL NO. 5

PLAN AND ELEVATION
STA. 51+55.87 TO STA.53+15.87
EAST FRONTAGE ROAD

D.W.B.C.	SCALE	APPROVED BY:
T.W.R.W.	AS NOTED	
C.J.B.S.		BRIDGE ENGINEER

19 1253

COUNTY	CONTRACT	P. R. A. REG. NO.	STATE	FED. AID PROJECT NO.	SHEET NO.	TOTAL SHEETS
NEW CASTLE	71-02-009	2	DEL.		185	301

NO.	REVISIONS	BY	DATE

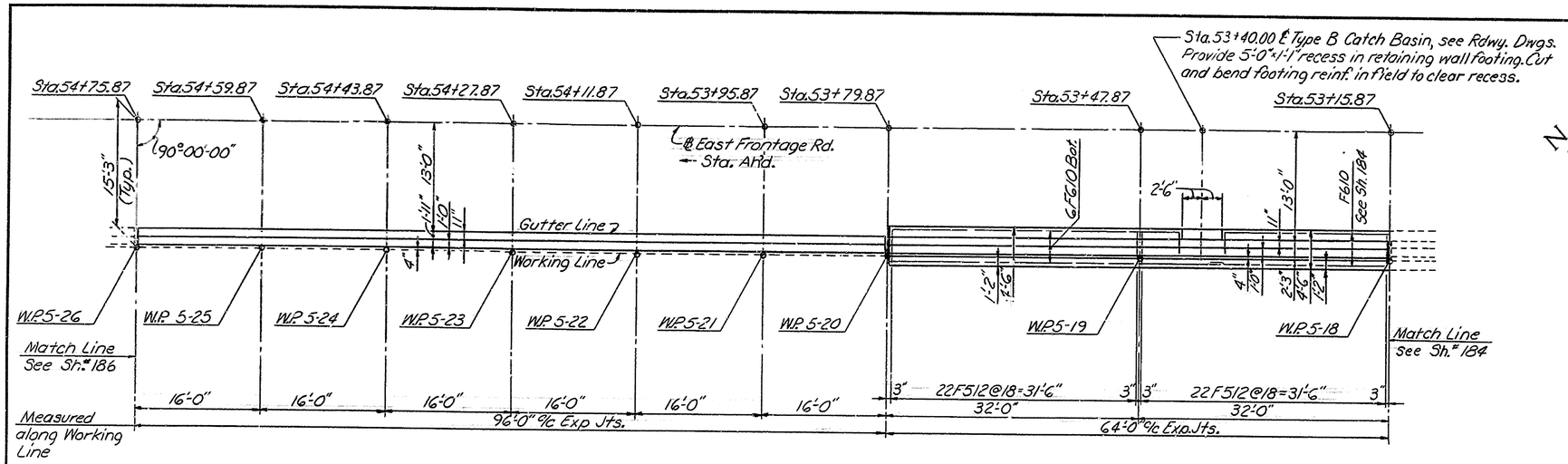

PLAN-RETAINING WALL NO. 5
STA.53+15.87 TO STA.54+75.87
Scale: 1/8"=1'-0"

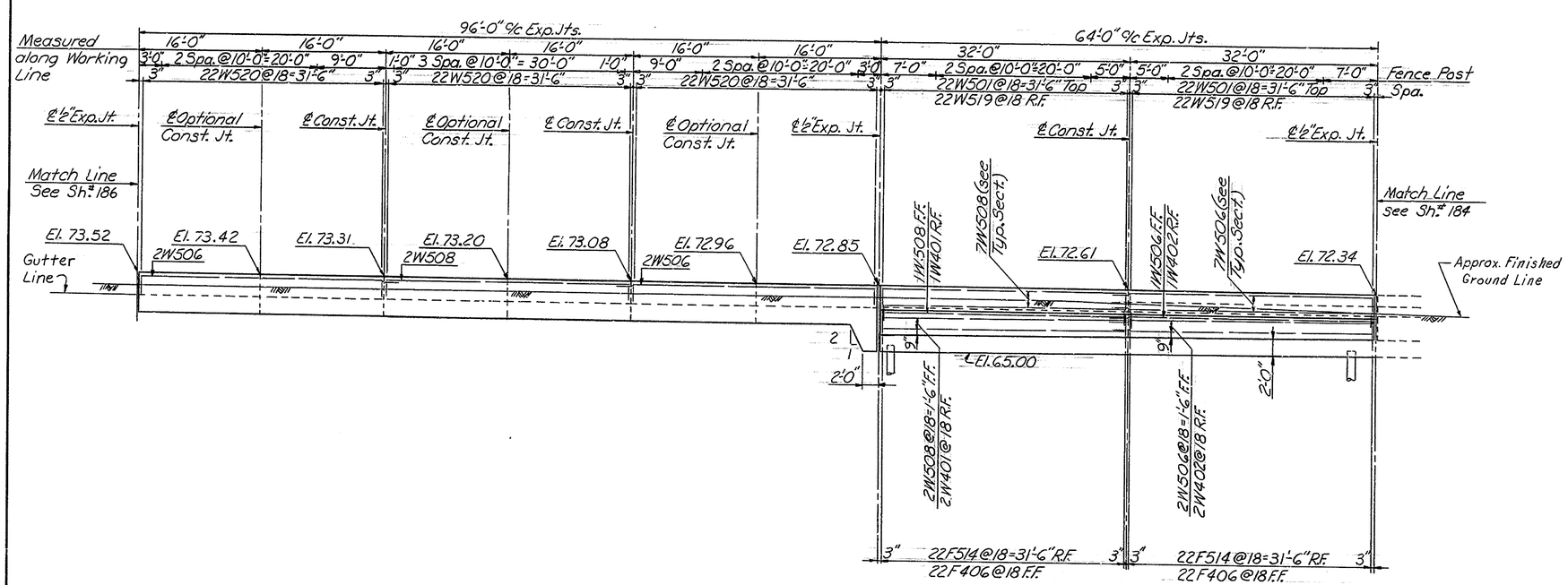

ELEVATION
Scale: 1/8"=1'-0"

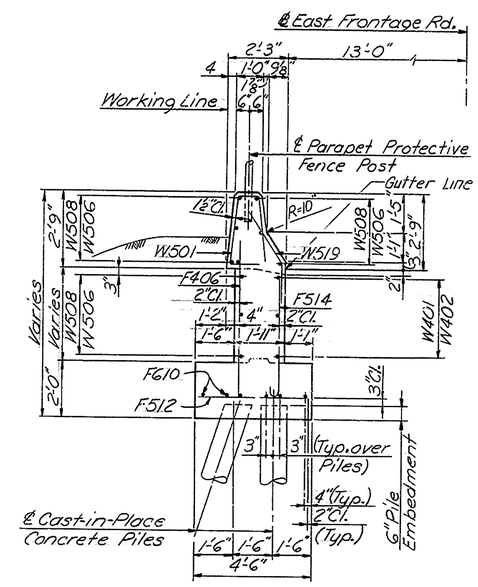

TYPICAL SECTION
STA. 53+15.87 TO STA.53+79.87
Scale: 3/8"=1'-0"

For Retaining Wall No.5 Notes, see Sh.# 183

DELAWARE
DEPARTMENT OF HIGHWAYS & TRANSPORTATION
DIVISION OF HIGHWAYS

STATE ROUTE 141 THRU NEWPORT

RETAINING WALL NO. 5
PLAN AND ELEVATION
STA. 53+15.87 TO STA.54+75.87
EAST FRONTAGE ROAD

D.W.B.C.	SCALE	APPROVED BY:
T.W.R.W.	AS NOTED	
C.J.B.S.		BRIDGE ENGINEER

COUNTY	CONTRACT	P. R. A. REG. NO.	STATE	FED. AID PROJECT NO.	SHEET NO.	TOTAL SHEETS
NEW CASTLE	71-02-009	2	DEL.		186	301

NO.	REVISIONS	BY	DATE

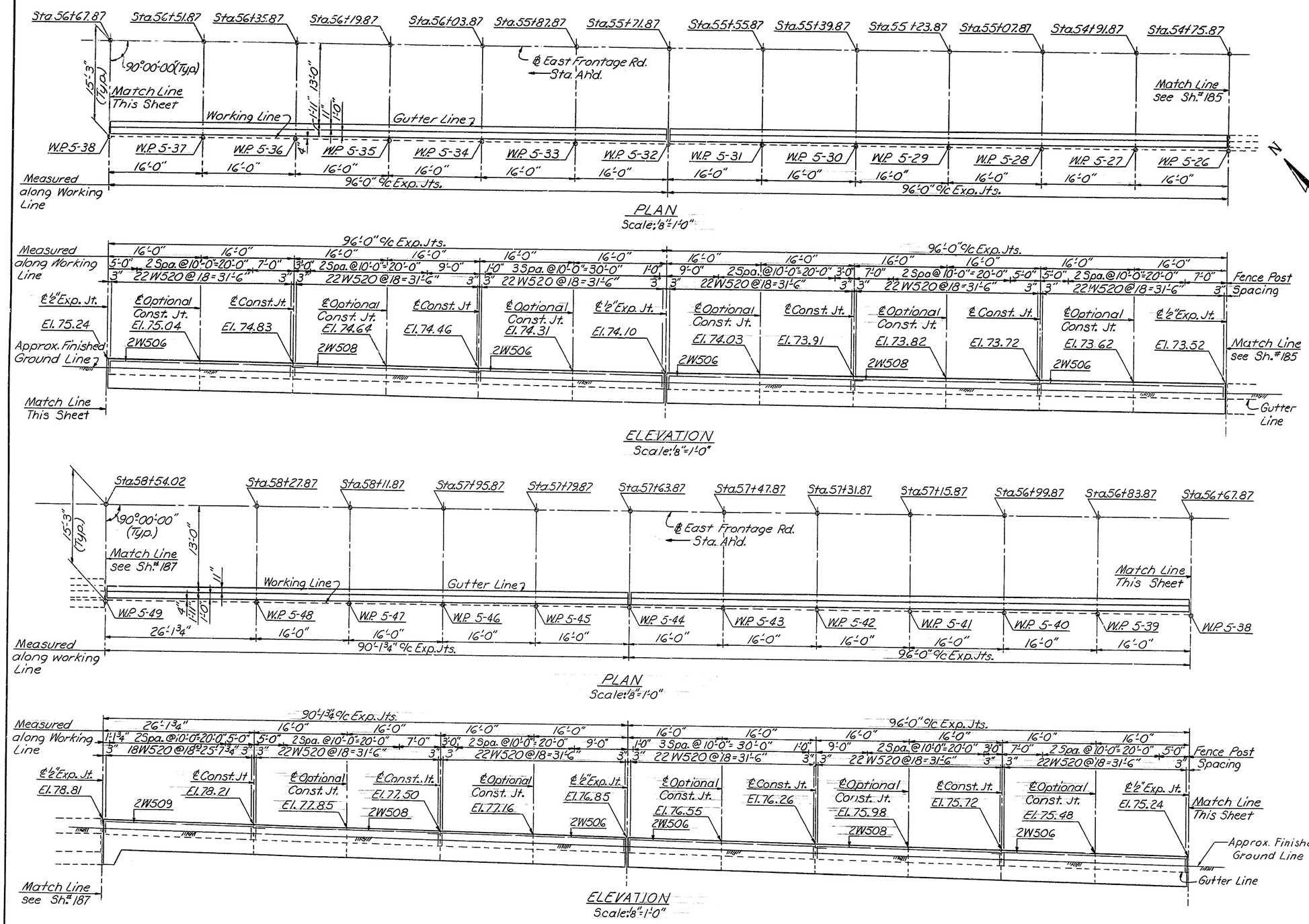

For Retaining Wall No. 5 Notes, see Sh.#183

DELAWARE
DEPARTMENT OF HIGHWAYS & TRANSPORTATION
DIVISION OF HIGHWAYS

STATE ROUTE 141 THRU NEWPORT

RETAINING WALL NO. 5

PLAN AND ELEVATION
STA. 54+75.87 TO STA. 58+54.02
EAST FRONTAGE ROAD

D. W.B.C.	SCALE	APPROVED BY:
T. W.R.W.	AS NOTED	
C.J.B.S.		BRIDGE ENGINEER

D C B A

COUNTY	CONTRACT	P.B.A. P/R. NO.	STATE	FED. AID PROJECT NO.	SHEET NO.	TOTAL SHEETS
NEW CASTLE	71-02-009	2	DEL		187	301

NO.	REVISIONS	BY	DATE

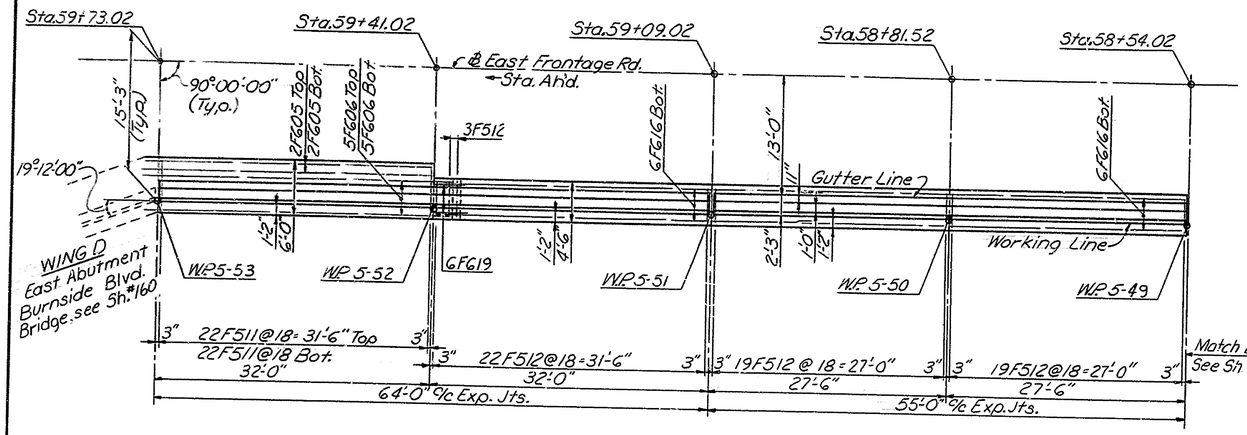

PLAN-RETAINING WALL NO. 5
STA.59+73.02 TO STA.58+54.02
Scale: 1/8"=1'-0"

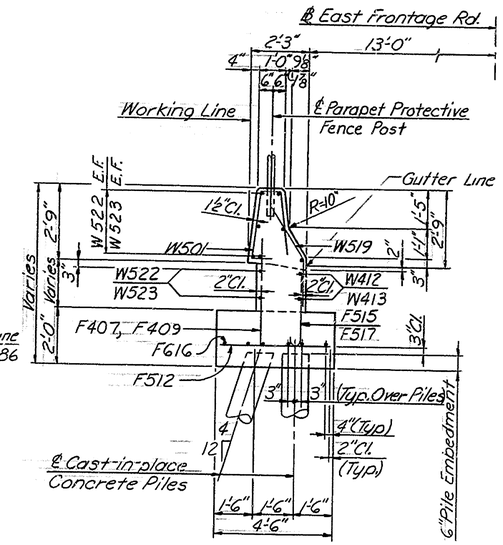

TYPICAL SECTION
STA.58+54.02 TO STA.59+09.02
Scale: 3/8"=1'-0"

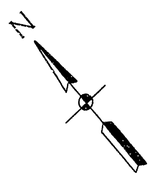

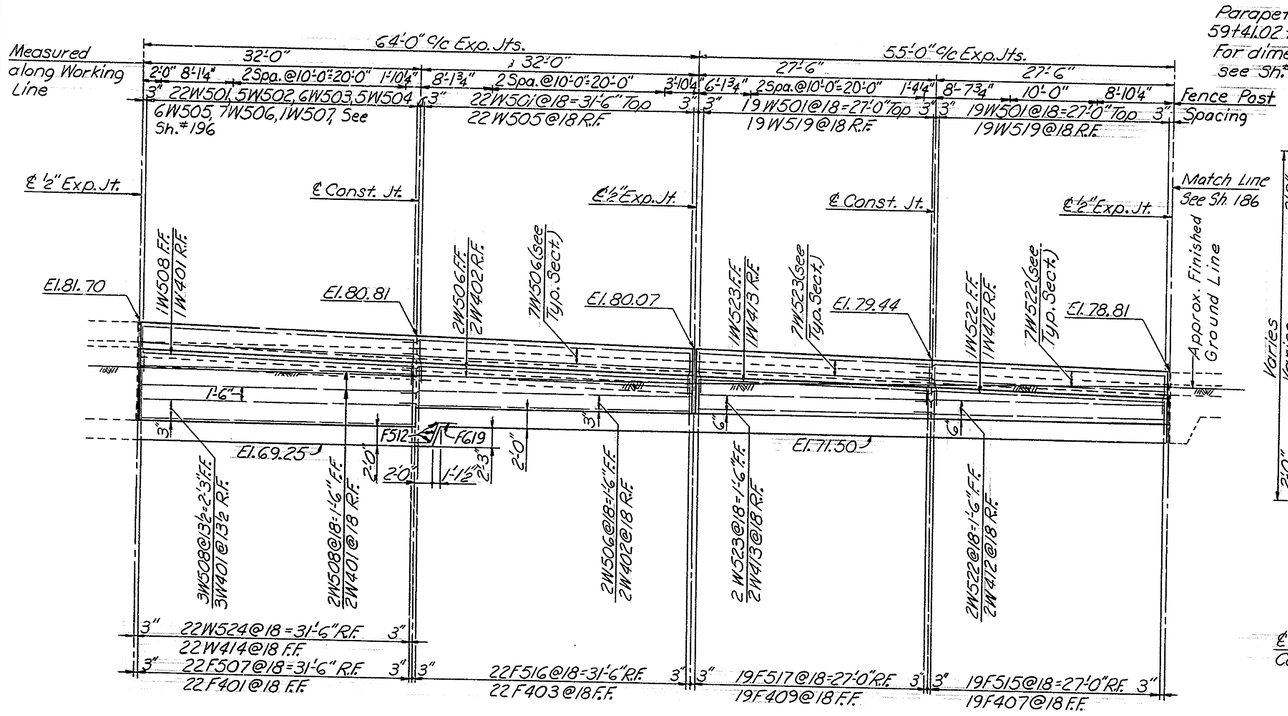

ELEVATION
Scale: 1/8"=1'-0"

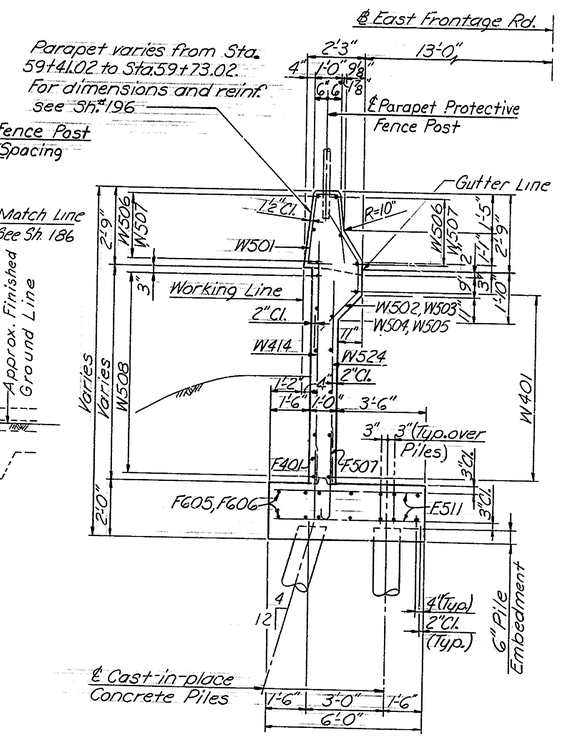

TYPICAL SECTION
STA.59+41.02 TO STA.59+73.02
Scale: 3/8"=1'-0"

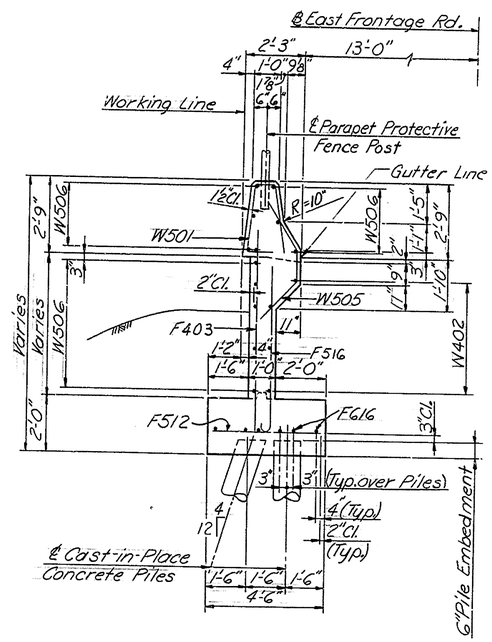

TYPICAL SECTION
STA.59+09.02 TO STA.59+41.02
Scale: 3/8"=1'-0"

For Retaining Wall No.5 Notes, see Sh. #183

DELAWARE
DEPARTMENT OF HIGHWAYS & TRANSPORTATION
DIVISION OF HIGHWAYS

STATE ROUTE 141 THRU NEWPORT

RETAINING WALL NO. 5

PLAN AND ELEVATION
STA. 58+54.02 TO STA.59+73.02
EAST FRONTAGE ROAD

D.W.B.C.	SCALE	APPROVED BY:
T.W.R.W.	AS NOTED	
C. J. B.S.		BRIDGE ENGINEER

COUNTY	CONTRACT	P. R. A. REG. NO.	STATE	FED. AID PROJECT NO.	SHEET NO.	TOTAL SHEETS
NEW CASTLE	71-02-009	2	DEL.		188	301

NO.	REVISIONS	BY	DATE

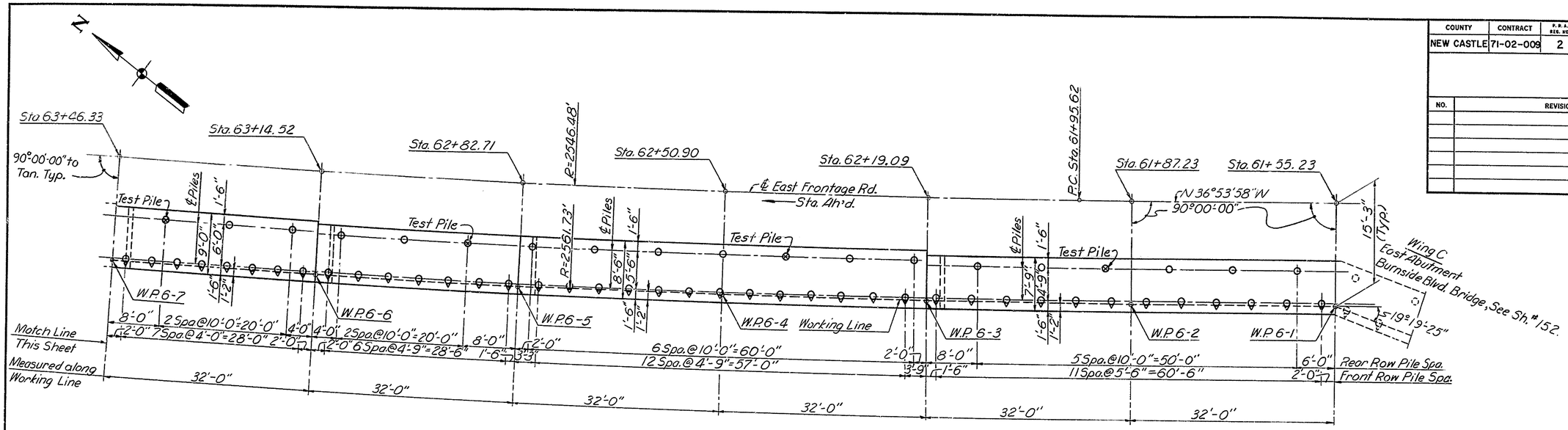

RETAINING WALL NO. 6 PILE LOCATION PLAN
STA. 61+55.23 TO STA. 63+46.33

Scale: 1/8" = 1'-0"

For Bottom of Footing Elevations, See Sh. # 190.

NOTES:

1. For General Notes, See Sh. # 100.
2. All Piles Shall be Cast-In-Place Concrete Piles. 12 In. 7 Gage.
3. Maximum Design Pile Load = 40 Tons/Pile.
4. ⊙ Denotes Battered Piles and Direction of Batter. Batter = 4:12.
5. For Pile Detail, See Sh. # 164.
6. ⊗ Denotes Steel Shell Test Pile.

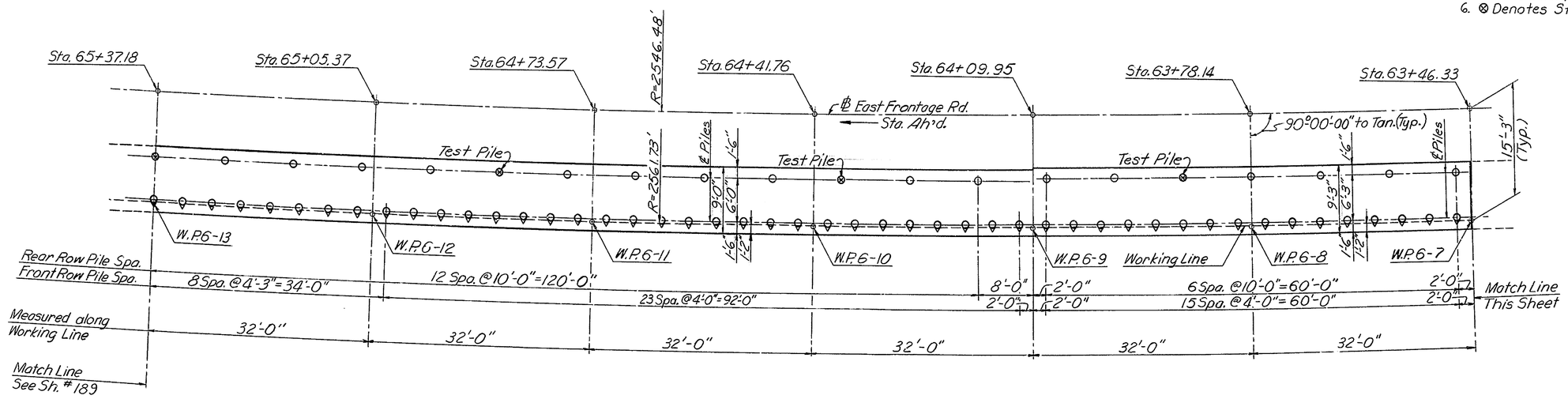

RETAINING WALL NO. 6 PILE LOCATION PLAN
STA. 63+46.33 TO STA. 65+37.18

Scale: 1/8" = 1'-0"

For Bottom of Footing Elevations, See Sh. # 191.

DELAWARE
DEPARTMENT OF HIGHWAYS & TRANSPORTATION
DIVISION OF HIGHWAYS

STATE ROUTE 141 THRU NEWPORT

RETAINING WALL NO. 6
PILE LOCATION PLAN
STA. 61+55.23 TO STA. 65+37.18
EAST FRONTAGE ROAD

D. W.B.C.	SCALE	APPROVED BY:
T. R.W.H.	AS NOTED	
C. J.B.S.		BRIDGE ENGINEER

COUNTY	CONTRACT	P.R.A. REG. NO.	STATE	FED. AID PROJECT NO.	SHEET NO.	TOTAL SHEETS
NEW CASTLE	71-02-009	2	DEL.		189	301

NO.	REVISIONS	BY	DATE

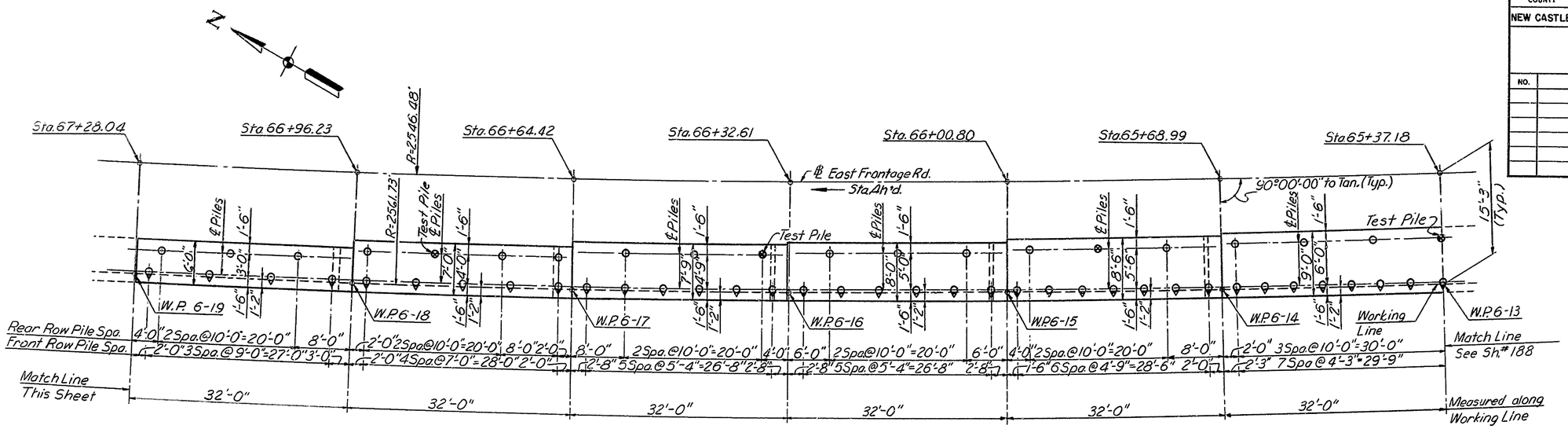

RETAINING WALL NO. 6 PILE LOCATION PLAN
STA. 65+37.18 TO STA. 67+28.04

Scale: 1/6" = 1'-0"

For Bottom of Footing Elevations, See Sh.# 192.

NOTES:

1. For General Notes, See Sh.# 100.
2. All Piles Shall be Cast-In-Place Concrete Piles 12 In. 7 Gage.
3. Maximum Design Pile Load = 40 Tons/Pile.
4. ⟐ Denotes Battered Piles and Direction of Batter. Batter = 4:12
5. For Pile Detail, See Sh.# 164.
6. ⊗ Denotes Steel Shell Test Pile.

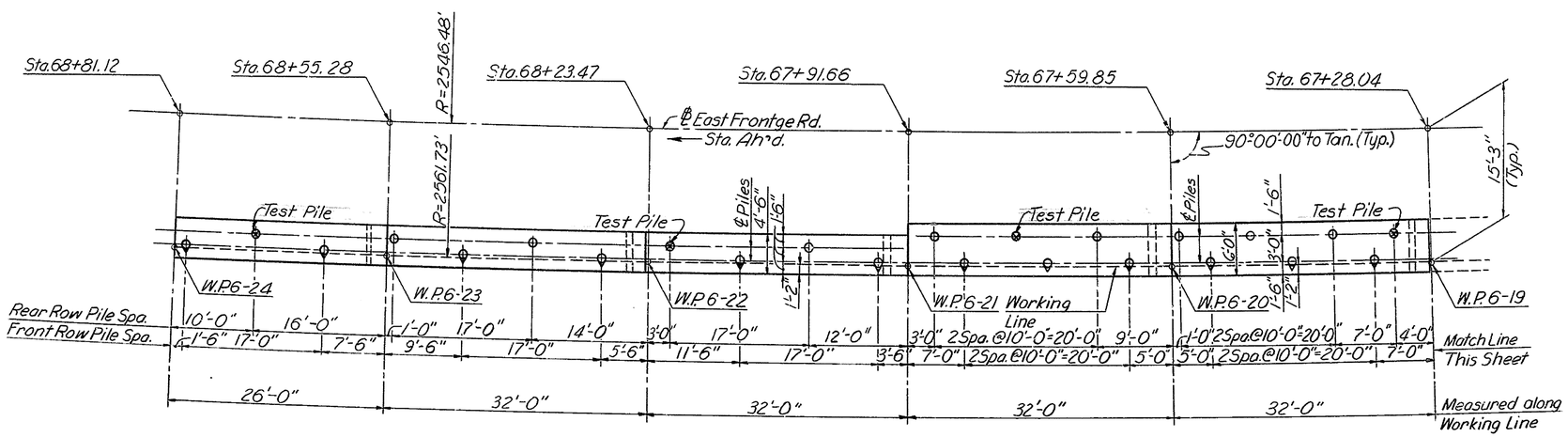

RETAINING WALL NO. 6 PILE LOCATION PLAN
STA. 67+28.04 TO STA. 68+81.12

Scale: 1/8" = 1'-0"

For Bottom of Footing Elevations, See Sh.# 193.

DELAWARE DEPARTMENT OF HIGHWAYS & TRANSPORTATION
DIVISION OF HIGHWAYS

STATE ROUTE 141 THRU NEWPORT

RETAINING WALL NO. 6
PILE LOCATION PLAN
STA. 65+37.18 TO STA. 68+81.12
EAST FRONTAGE ROAD

D. W.B.C.	SCALE	APPROVED BY:
T. R.W.H.	AS NOTED	
C. J. B.S.		BRIDGE ENGINEER

COUNTY	CONTRACT	P.R.A. REG. NO.	STATE	FED. AID PROJECT NO.	SHEET NO.	TOTAL SHEETS
NEW CASTLE	71-02-009	2	DEL.		190	301

NO.	REVISIONS	BY	DATE

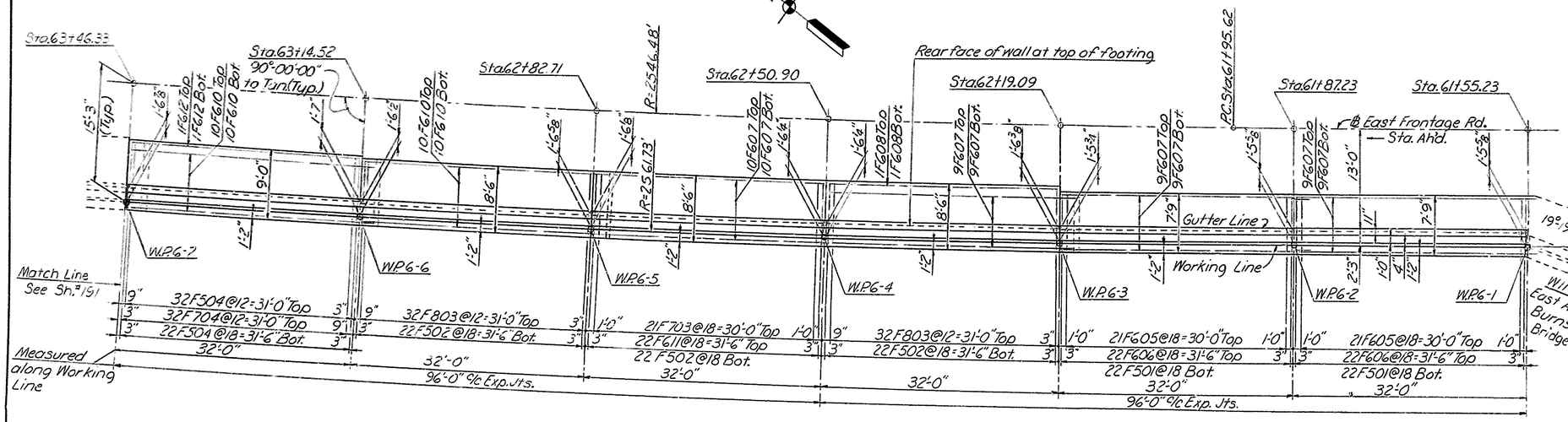

PLAN-RETAINING WALL NO. 6
STA. 61+55.23 to STA. 63+46.33
Scale: 1/8"=1'-0"

RETAINING WALL NO. 6 NOTES

1. For General Notes, see Sh.#100.
2. For Architectural Details, see Sh.#113.
3. For Drainage Details, see Sh.#108
4. For Joint Details, see Sh.#116.
5. For Parapet Transition - Curb to Retaining Wall, see Sh.#195.
6. For Parapet Transition - Wing Wall to Retaining Wall, see Sh.#196.
7. For Bar Schedule, see Sh.#194
8. For Plan & Elevation - Sta. 63+46.33 to Sta. 65+37.18, see Sh.#191.
9. For Plan & Elevation - Sta. 65+37.18 to Sta. 67+28.04, see Sh.#192.
10. For Plan & Elevation - Sta. 67+28.04 to Sta. 68+81.82, see Sh.#193.

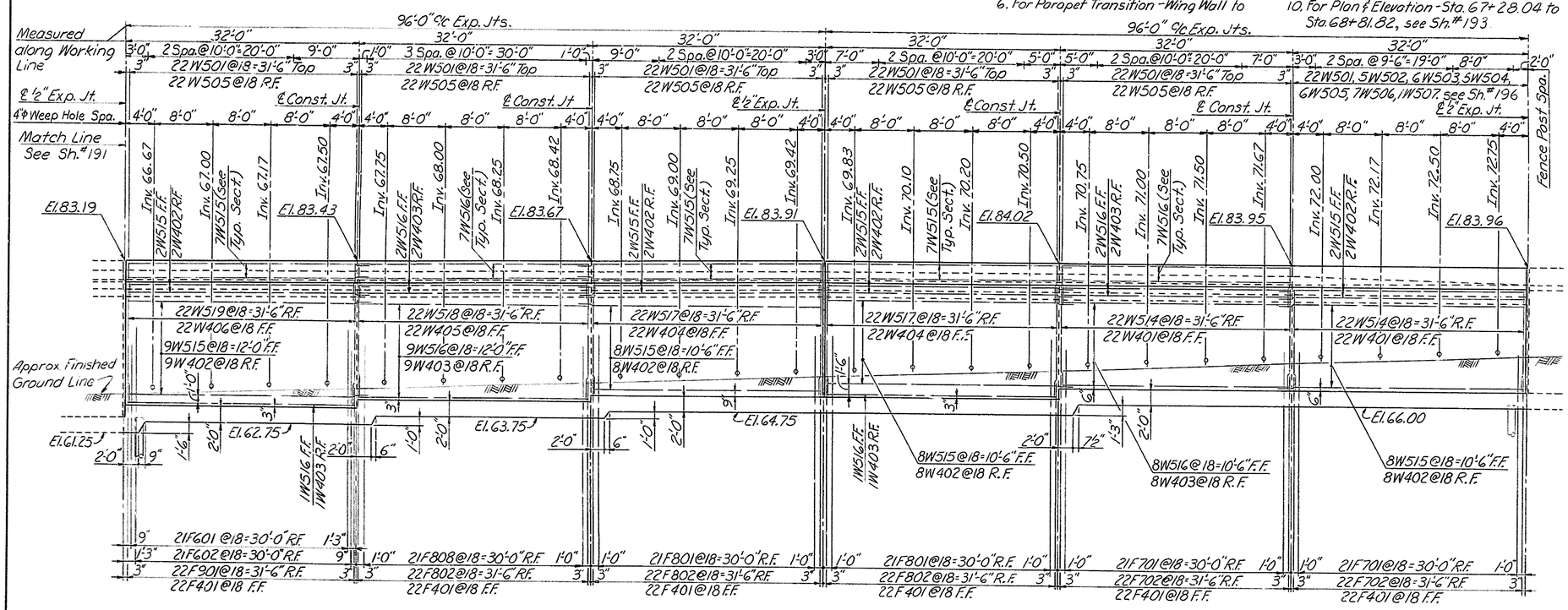

ELEVATION
Scale: 1/8"=1'-0"

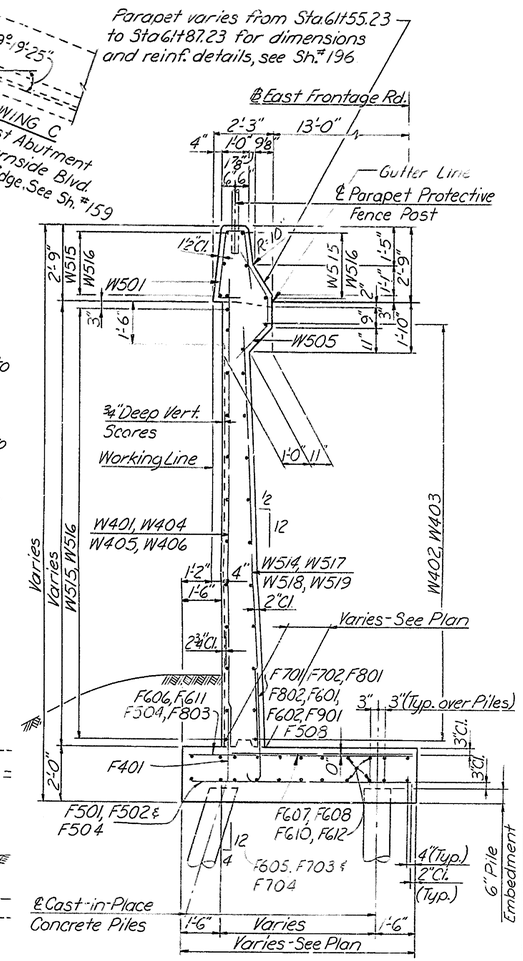

TYPICAL SECTION
STA. 61+55.23 to STA. 63+46.33
Scale: 3/8"=1'-0"

DELAWARE DEPARTMENT
OF HIGHWAYS & TRANSPORTATION
DIVISION OF HIGHWAYS

STATE ROUTE 141 THRU NEWPORT

RETAINING WALL NO. 6

PLAN AND ELEVATION
STA. 61+55.23 TO STA. 63+46.33
EAST FRONTAGE ROAD

D.W.B.C.	SCALE	APPROVED BY:
T.W.R.W.	AS NOTED	
C.J.B.S.		BRIDGE ENGINEER

COUNTY	CONTRACT	P.R.A. REG. NO.	STATE	FED. AID PROJECT NO.	SHEET NO.	TOTAL SHEETS
NEW CASTLE	71-02-009	2	DEL.		191	301

NO.	REVISIONS	BY	DATE

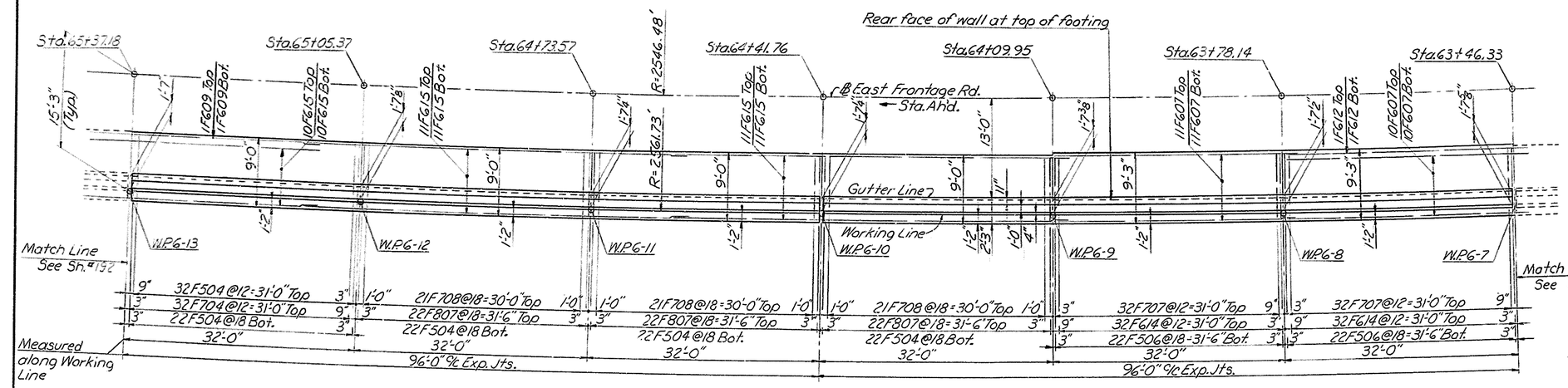

PLAN-RETAINING WALL NO.6
STA.63+46.33 to STA.65+37.18
Scale: 1/8"=1'-0"

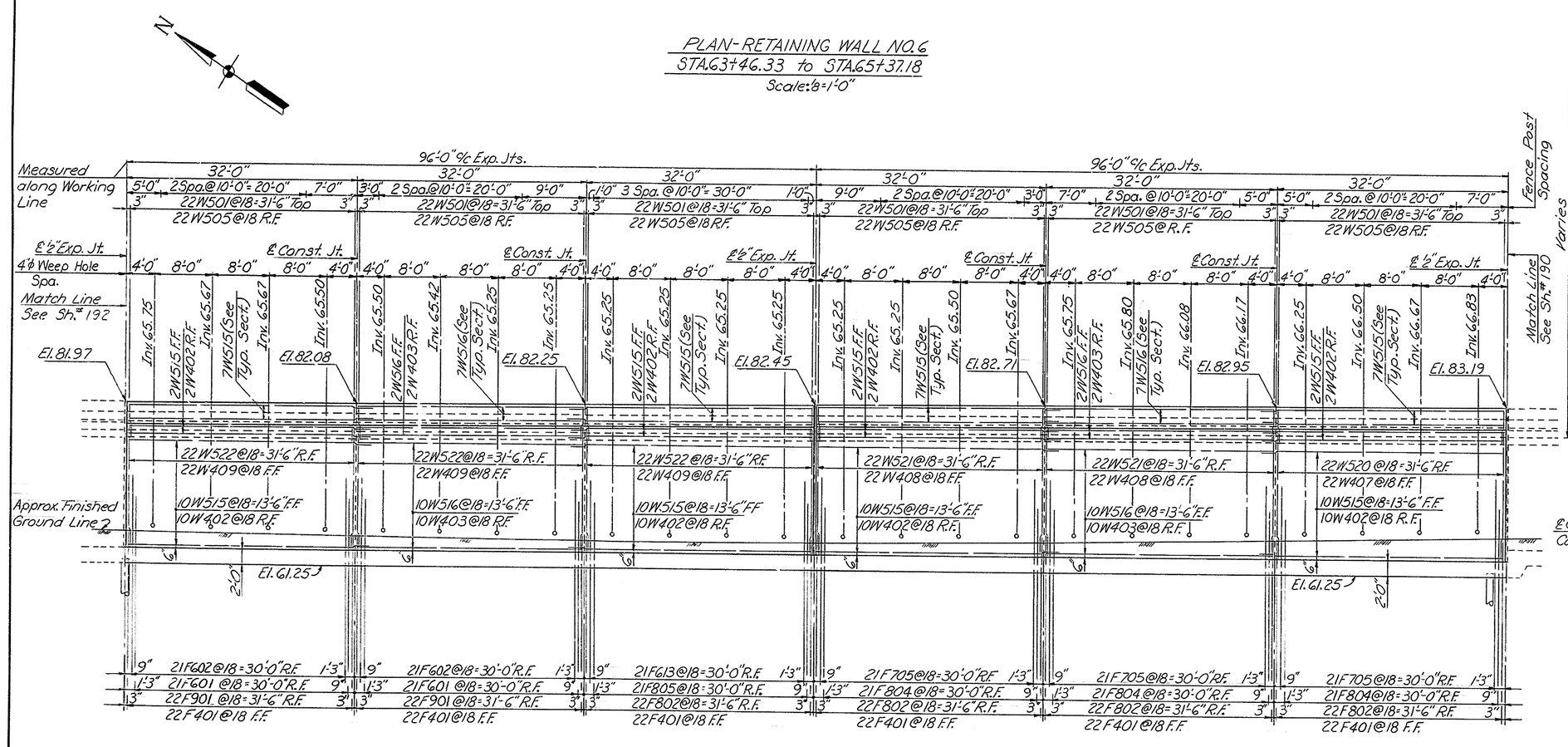

ELEVATION
Scale: 1/8"=1'-0"

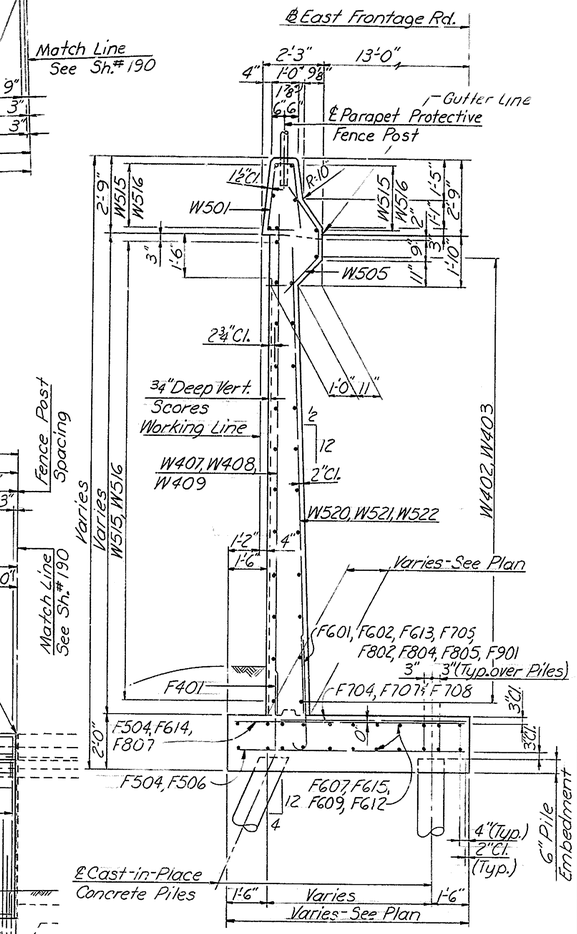

TYPICAL SECTION
STA.63+46.33 to STA.65+37.18
Scale: 3/8"=1'-0"

For Retaining Wall No. 6 Notes, see Sh.#190.

DELAWARE
DEPARTMENT OF HIGHWAYS & TRANSPORTATION
DIVISION OF HIGHWAYS

STATE ROUTE 141 THRU NEWPORT

RETAINING WALL NO. 6

PLAN AND ELEVATION
STA. 63+46.33 TO STA.65+37.18
EAST FRONTAGE ROAD

D.W.B.C.	SCALE	APPROVED BY:
T.W.R.W.	AS NOTED	
C.J.B.S.		BRIDGE ENGINEER

COUNTY	CONTRACT	F.R.A. REG. NO.	STATE	FED. AID PROJECT NO.	SHEET NO.	TOTAL SHEETS
NEW CASTLE	71-02-009	2	DEL.		192	301

NO.	REVISIONS	BY	DATE

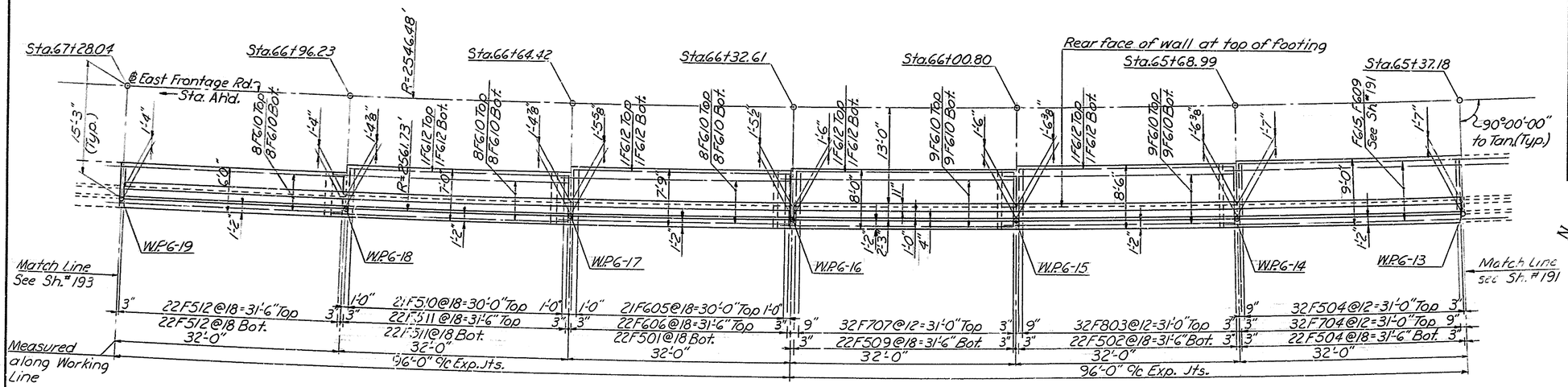

PLAN-RETAINING WALL NO.6
STA.65+37.18 to STA.67+28.04
Scale: 1/8"=1'-0"

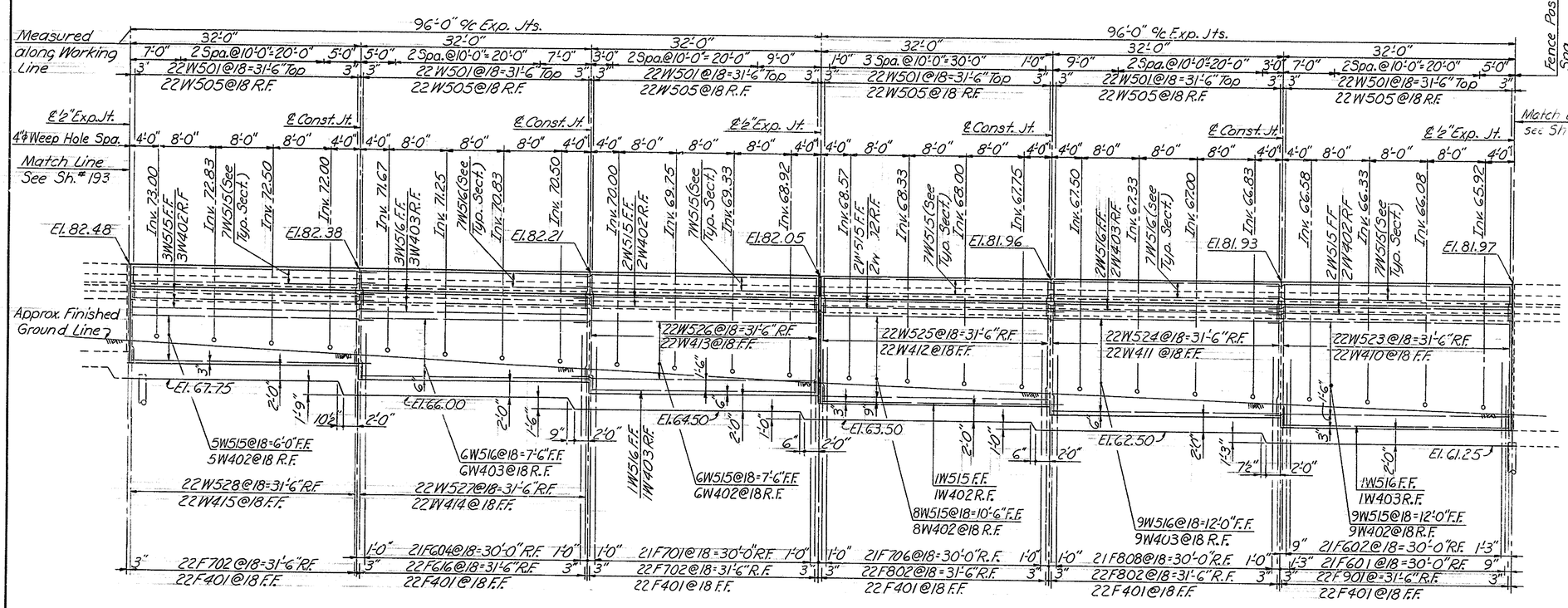

ELEVATION
Scale: 1/8"=1'-0"

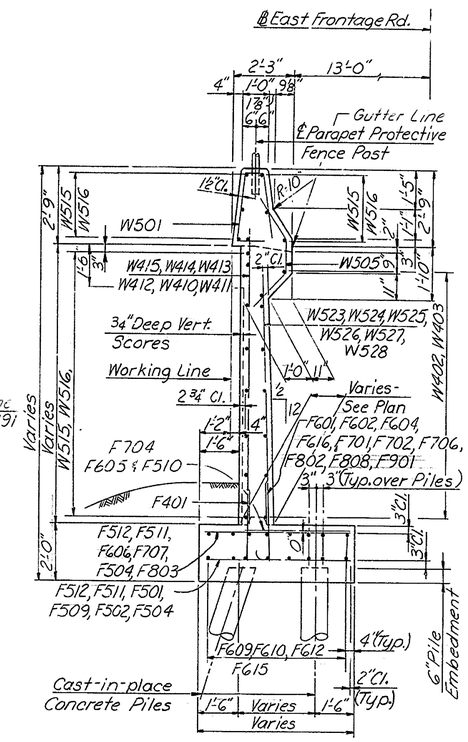

TYPICAL SECTION
STA.65+37.18 to STA.67+28.04
Scale: 1/8"=1'-0"

For Retaining Wall No. 6 Notes, see Sh.#190

DELAWARE
DEPARTMENT OF HIGHWAYS & TRANSPORTATION
DIVISION OF HIGHWAYS

STATE ROUTE 141 THRU NEWPORT

RETAINING WALL NO. 6

PLAN AND ELEVATION
STA. 65+37.18 TO STA.67+28.04
EAST FRONTAGE ROAD

D.W.B.C.	SCALE	APPROVED BY:
T.W.R.W.	AS NOTED	
C.J.B.S.		BRIDGE ENGINEER

COUNTY	CONTRACT	P.B.A. REG. NO.	STATE	FED. AID PROJECT NO.	SHEET NO.	TOTAL SHEETS
NEW CASTLE	71-02-009	2	DEL		193	301

NO.	REVISIONS	BY	DATE

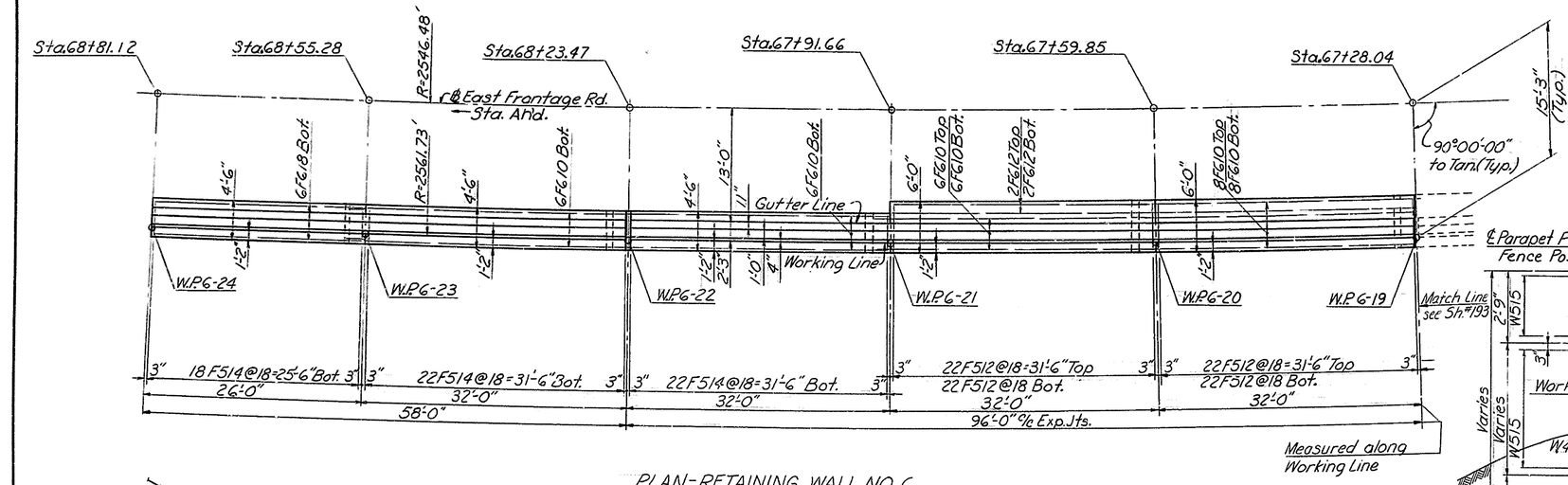

PLAN-RETAINING WALL NO. 6
STA.67+28.04 to STA.68+81.12
Scale: 1/8"=1'-0"

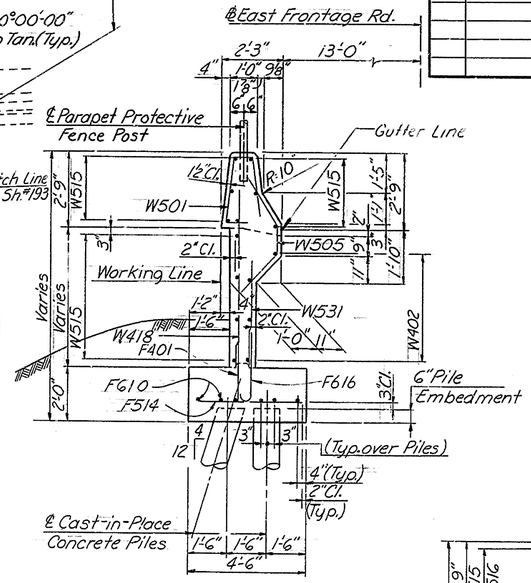

TYPICAL SECTION
STA.67+91.66 to STA.68+23.47
Scale: 3/8"=1'-0"

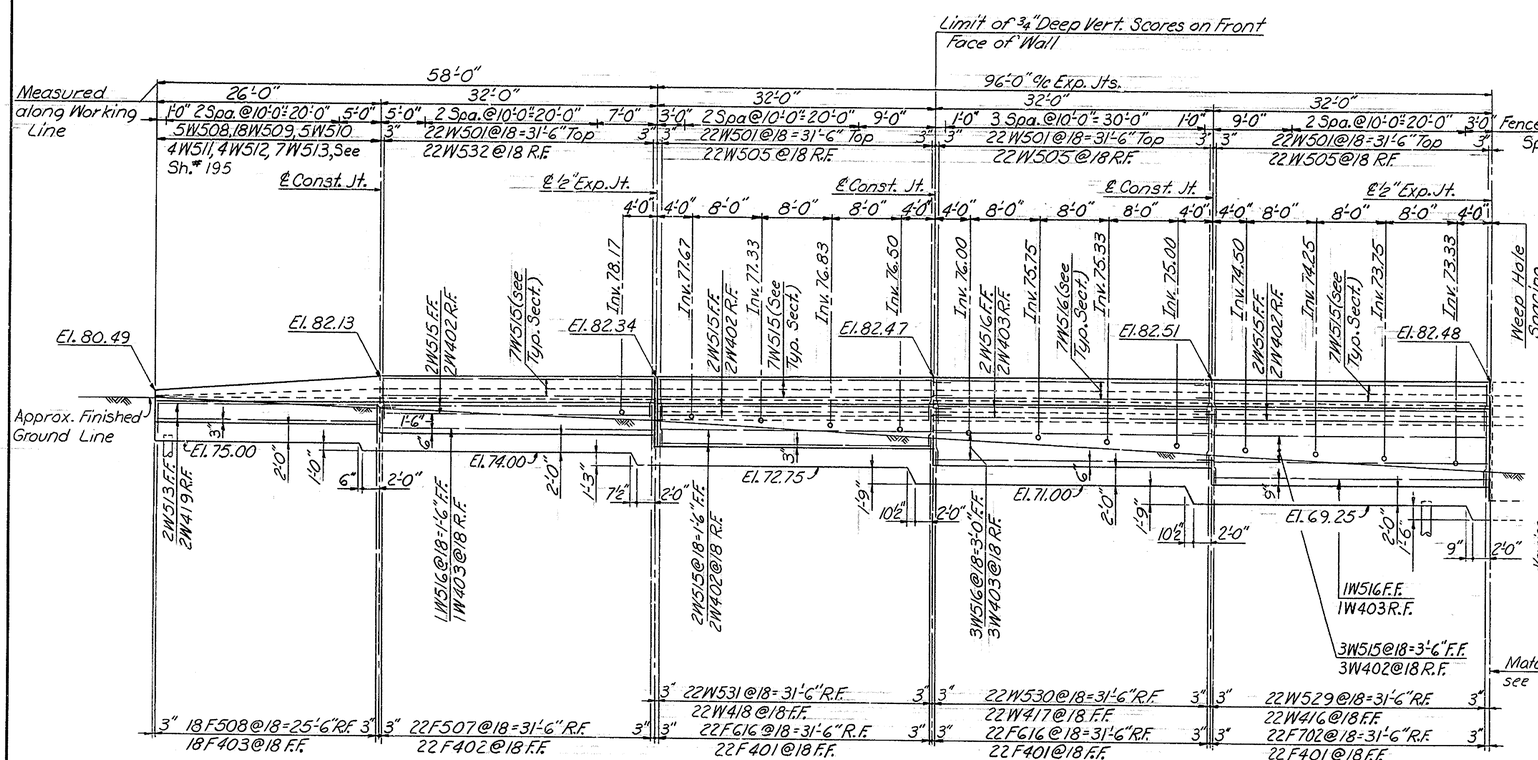

ELEVATION
Scale: 1/8"=1'-0"

For Retaining Wall No. 6 Notes, see Sh.#190.

Parapet varies from Sta.68+55.28 to Sta.68+81.12. For dimensions and reinf. details, see sh.# 195.

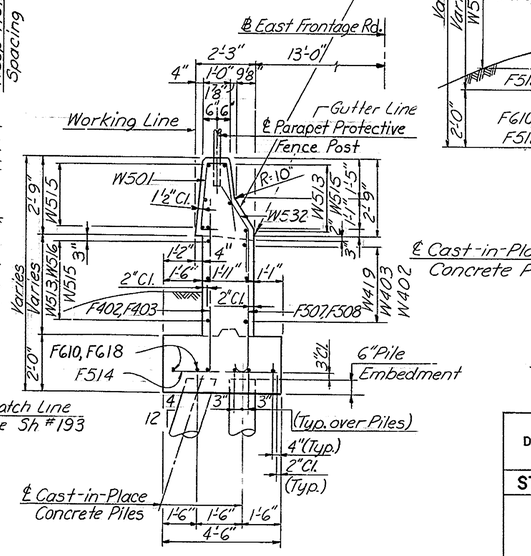

TYPICAL SECTION
STA. 68+23.47 to STA.68+81.12
Scale: 3/8"=1'-0"

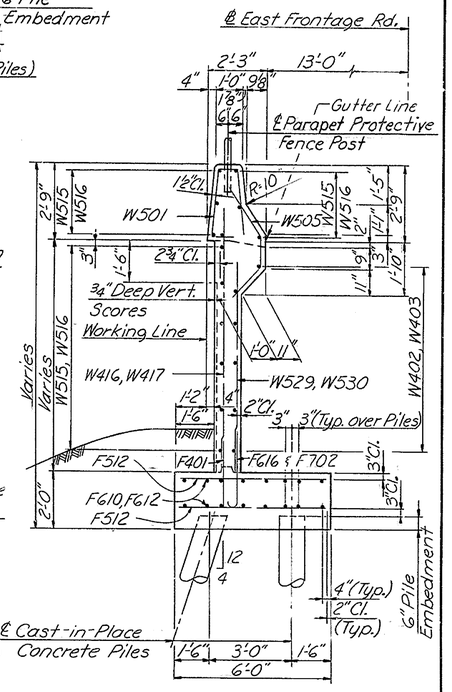

TYPICAL SECTION
STA. 67+28.04 to STA.67+91.66
Scale: 3/8"=1'-0"

DELAWARE
DEPARTMENT OF HIGHWAYS & TRANSPORTATION
DIVISION OF HIGHWAYS

STATE ROUTE 141 THRU NEWPORT

RETAINING WALL NO. 6

PLAN AND ELEVATION
STA. 67+28.04 TO STA.68+81.82
EAST FRONTAGE ROAD

D. W. B.C.	SCALE	APPROVED BY:
T. W. R. W.	AS NOTED	
C. J. B. S.		BRIDGE ENGINEER

RETAINING WALL NO. 6 BAR SCHEDULE

MARK	SIZE	NO.	LENGTH	TYPE	BENDING DIMENSIONS A	B	C	D	E	F
F401	#4	462	2'-6"	Str.						
F402	#4	22	5'-10"	Str.						
F403	#4	18	4'-0"	Str.						
F501	#5	66	7'-5"	Str.						
F502	#5	88	8'-2"	Str.						
F504	#5	228	8'-8"	Str.						
F506	#5	44	8'-11"	Str.						
F507	↑	22	5'-4"	F	4'-9"	7"				
F508		18	4'-0"	F	3'-5"	7"				
F509		22	7'-8"	Str.						
F510		21	5'-2"	Str.						
F511		44	6'-8"	Str.						
F512	#5	132	5'-8"	Str.						
F514	#5	62	4'-2"	Str.						
F601	#6	84	6'-10"	F	6'-2"	8"				
F602	#6	84	9'-11"	F	9'-3"	8"				
						8"				
F604	#6	21	5'-5"	F	4'-9"	8"				
F605	↑	63	6'-1"	Str.						
F606		66	7'-5"	Str.						
F607		116	33'-5"	Str.						
F608		2	31'-5"	Str.						
F609		2	53'-6"	Str.						
F610		164	33'-8"	Str.						
F611		22	8'-2"	Str.						
F612		16	31'-8"	Str.						
F613		21	10'-5"	F	9'-9"	8"				
F614		64	8'-11"	Str.						
F615		64	55'-6"	Str.						
F616	#6	66	3'-10"	F	3'-2"	8"				
F618	#6	6	25'-8"	Str.						
F701	#7	63	7'-0"	F	6'-3"	9"				
F702	↑	110	4'-2"	F	3'-5"	9"				
F703		21	7'-1"	Str.						
F704		96	7'-4"	Str.		-				
F705		63	11'-0"	F	10'-3"	9"				
F706		21	8'-0"	F	7'-3"	9"				
F707	↓	96	7'-8"	Str.						
F708	#7	63	7'-6"	Str.						
F801	#8	42	8'-7"	F	7'-9"	10"				
F802	↑	198	4'-7"	F	3'-9"	10"				
F803		96	8'-2"	Str.						
F804	↓	63	7'-1"	F	6'-3"	10"				
F805	#8	21	7'-6"	F	6'-8"	10"				
F807	#8	66	8'-8"	Str.						
F808	#8	42	9'-1"	F	8'-3"	10"				
F901	#9	88	5'-1"	F	4'-1"	1'-0"				

MARK	SIZE	NO.	LENGTH	TYPE	BENDING DIMENSIONS A	B	C	D	E	F
W401	#4	44	14'-3"	Str.						
W402	↑	137	33'-0"	Str.						
W403		76	31'-8"	Str.						
W404		44	15'-5"	Str.						
W405		22	16'-2"	Str.						
W406		22	16'-11"	Str.						
W407		22	18'-2"	Str.						
W408		44	18'-0"	Str.						
W409		66	17'-8"	Str.						
W410		22	17'-0"	Str.						
W411		22	15'-8"	Str.						
W412		22	14'-9"	Str.						
W413		22	13'-11"	Str.						
W414		22	12'-8"	Str.						
W415		22	11'-0"	Str.						
W416		22	9'-6"	Str.						
W417		22	7'-9"	Str.						
W418	↓	22	6'-0"	Str.						
W419	#4	2	25'-8"	Str.						
W501	#5	484	6'-9"	A	See Diagram					
W502	↑	5	4'-9"	B	2'-0"	1'-3"	1'-6"	1'-5"	1'-5"	
W503		6	4'-9"	C	1'-6"	1'-3"	9¾"	See Diagram		
W504		5	4'-9"	C	1'-6"	1'-0½"	1'-0⅜"	See Diagram		
W505		446	4'-9"	C	1'-6"	10⅝"	1'-2¾"	See Diagram		
W506		7	33'-4"	Str.						
W507		1	22'-6"	Str.						
W508		5	6'-4" to 7'-1" Vary lea. by 2¼"	H	2'-2" to 2'-6" lea. by 1"	9" to 13" lea. by ¼"	2'-2" to 2'-6" lea. by 1"	1'-3"	3" to 3½" lea. by ⅛"	2'-1⅞" to 2'-5⅞" lea. by 1"
W509		18	3'-0"	D	1'-6"	1'-6"	Varies 10⅜" to 1'-6"	Varies 1'-2¾" to 0"		
W510		5	5'-7¼" to 6'-4¼" Vary lea. by 2¼"	H	1'-9" to 2'-1" lea. by 1"	10¼" to 11¼" lea. by ¼"	1'-9" to 2'-1" lea. by 1"	1'-3'	2'2" to 3" lea. by ⅛"	1'-8⅞" to 2'-0⅞" lea. by 1"
W511		4	5'-0½" to 5'-7¼" Vary lea. by 2¼"	H	1'-5" to 1'-8" lea. by 1"	11½" to 1'-0¼" lea. by ¼"	1'-5" to 1'-8" lea. by 1"	1'-3"	2" to 2⅜" lea. by ⅛"	1'-4⅞" to 1'-7⅞" lea. by 1"
W512		4	4'-5¼" to 5'-0" Vary lea. by 2¼"	H	1'-1" to 1'-4" lea. by 1"	1'-0¼" to 1'-1" lea. by ¼"	1'-1" to 1'-4" lea. by 1"	1'-3"	2¼" to 1⅞" lea. by ⅛"	1'-1" to 1'-4" lea. by 1"
W513		9	25'-8"	Str.						
W514		44	12'-8"	Str.						
W515		236	33'-3"	Str.						
W516		125	31'-8"	Str.						
W517		44	13'-10"	Str.						
W518		22	14'-3"	Str.						
W519		22	15'-1"	Str.						
W520		22	16'-4"	Str.						
W521		44	16'-0"	Str.						
W522		66	15'-8"	Str.						
W523		22	15'-0"	Str.						
W524		22	13'-6"	Str.						
W525		22	13'-0"	Str.						
W526		22	12'-1"	Str.						
W527		22	10'-9"	Str.						
W528		22	9'-5"	Str.						
W529		22	7'-8"	Str.						
W530		22	6'-2"	Str.						
W531	↓	22	4'-1"	Str.						
W532	#5	22	3'-0"	D	1'-6"	1'-6"	10⅝"	1'-2¾"		

BENDING DIAGRAMS

All dimensions are out to out.

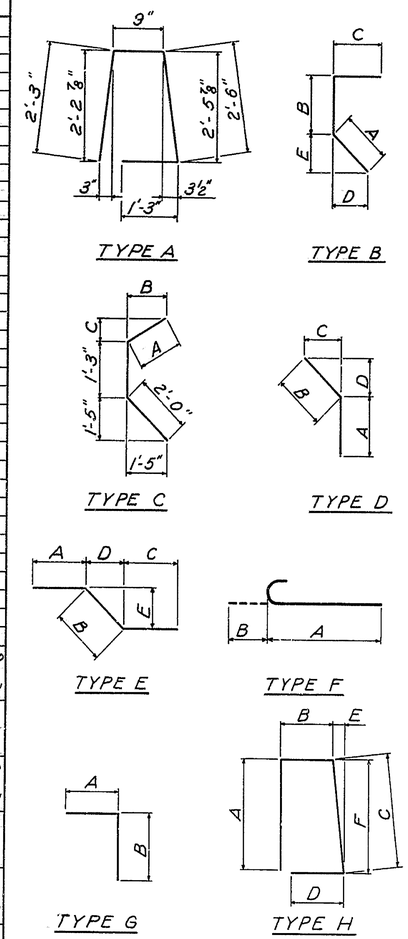

COUNTY	CONTRACT	P.R.A. REG. NO.	STATE	FED. AID PROJECT NO.	SHEET NO.	TOTAL SHEETS
NEW CASTLE	71-02-009	2	DEL.		194	301

NO.	REVISIONS	BY	DATE

DELAWARE
DEPARTMENT OF HIGHWAYS & TRANSPORTATION
DIVISION OF HIGHWAYS

STATE ROUTE 141 THRU NEWPORT

RETAINING WALL NO. 6

BAR SCHEDULE

D. W.B.C.	SCALE	APPROVED BY:
T. C.V.L.	NONE	
C. J.B.S.		BRIDGE ENGINEER

COUNTY	CONTRACT	P.C.A. REG. NO.	STATE	FED AID PROJECT NO.	SHEET NO.	TOTAL SHEETS
NEW CASTLE	71-02-009	2	DEL.		195	301

NO.	REVISIONS	BY	DATE

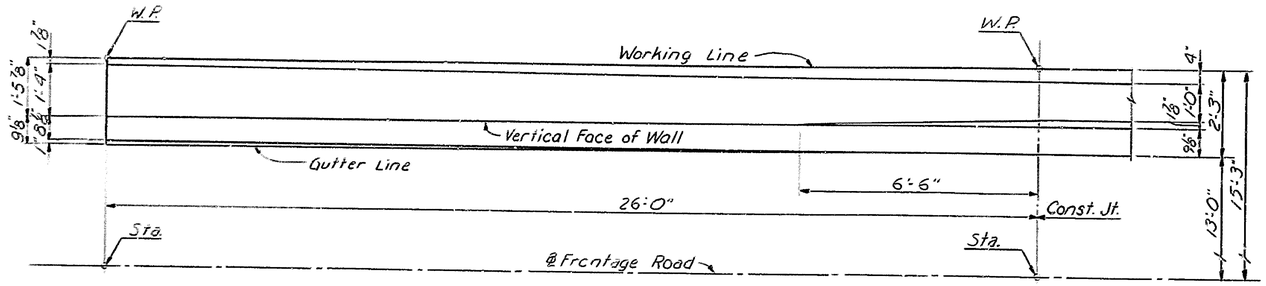

Note:
For stations, elevations and working point numbers see the appropriate wall sheets.

PLAN
Scale: ½"=1'-0"

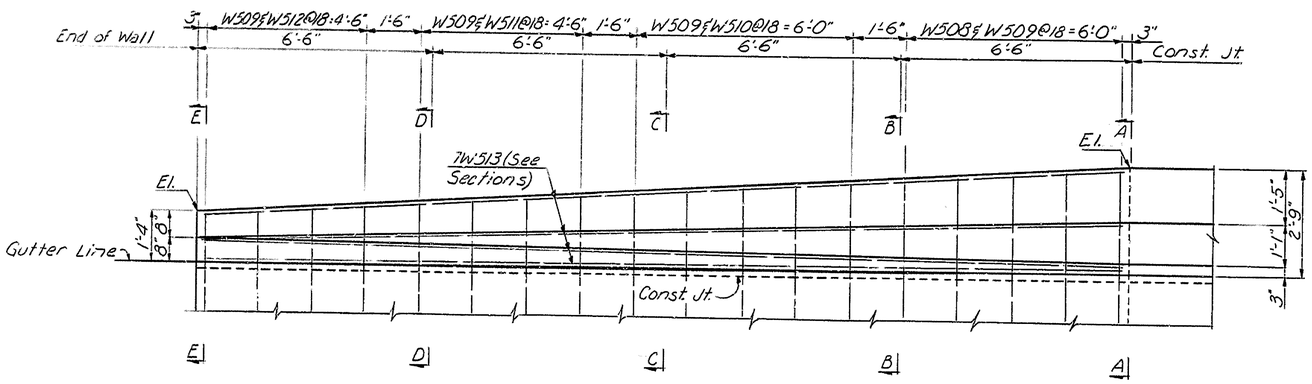

REAR FACE ELEVATION
Scale: ½"=1'-0"

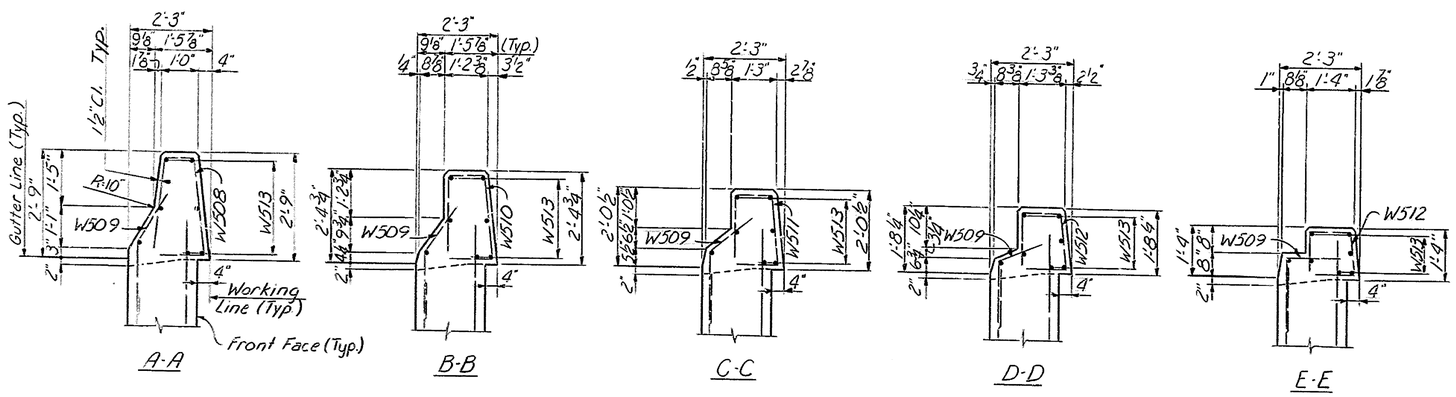

SECTIONS
Scale: ½"=1'-0"

DELAWARE DEPARTMENT
OF HIGHWAYS & TRANSPORTATION
DIVISION OF HIGHWAYS

STATE ROUTE 141 THRU NEWPORT

RETAINING WALLS

PARAPET TRANSITION
CURB TO RETAINING WALL

D.W.B.C.	SCALE	APPROVED BY:
T.W.S.J.	AS NOTED	
C.J.B.S.		BRIDGE ENGINEER

COUNTY	CONTRACT	F.H.A. REG. NO.	STATE	FED. AID PROJECT NO.	SHEET NO.	TOTAL SHEETS
NEW CASTLE	71-02-009	2	DEL.		196	301

NO.	REVISIONS	BY	DATE

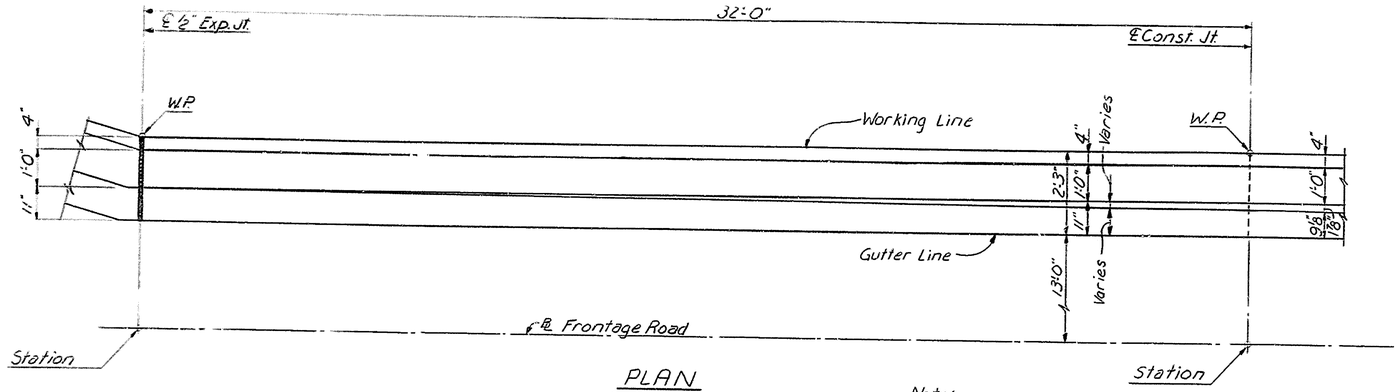

PLAN
Scale: ½"=1'-0"

Note:
For stations, elevations and working point numbers see the appropriate wall sheets.

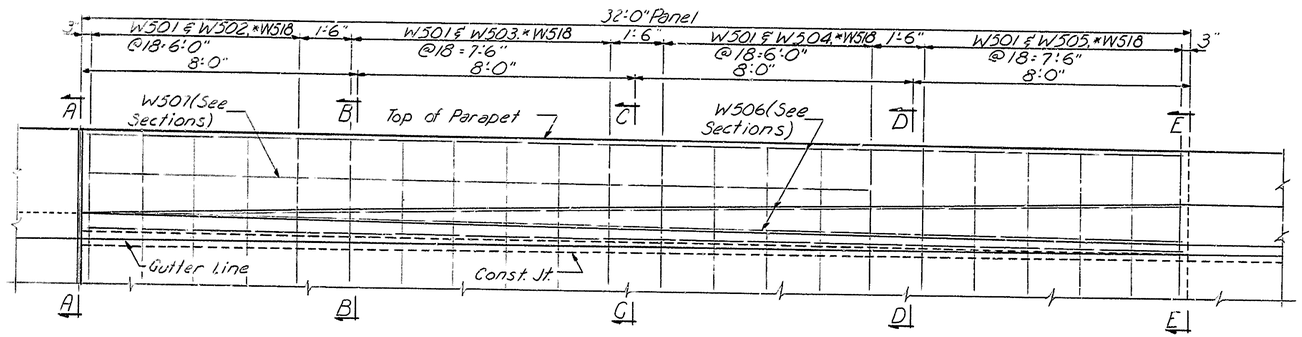

REAR FACE ELEVATION
Scale: ½"=1'-0"

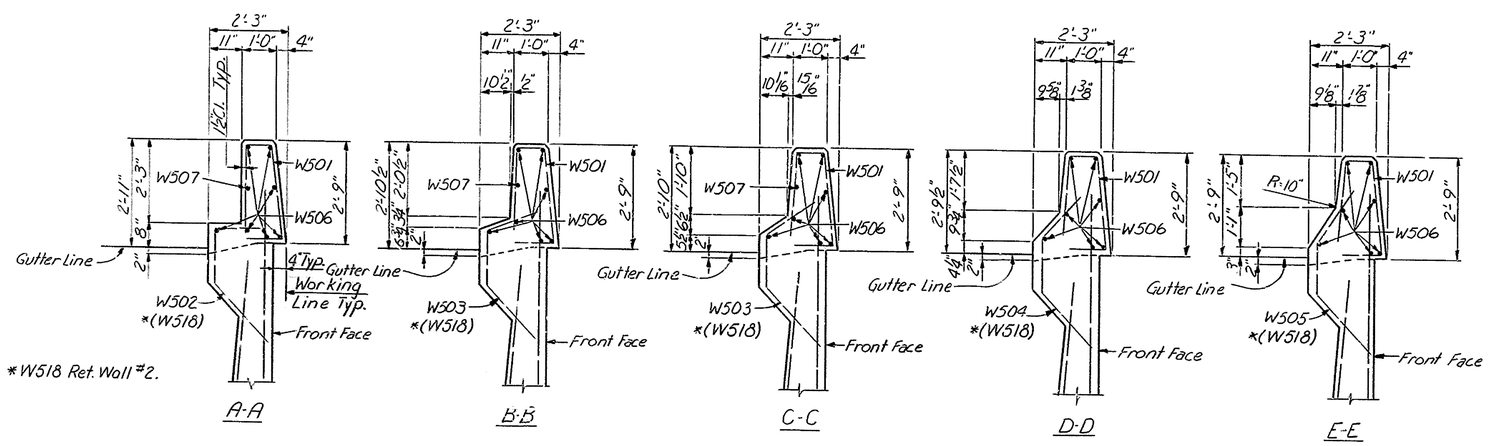

SECTIONS
Scale: ½"=1'-0"

DELAWARE DEPARTMENT
OF HIGHWAYS & TRANSPORTATION
DIVISION OF HIGHWAYS

STATE ROUTE 141 THRU NEWPORT

RETAINING WALLS

PARAPET TRANSITION
WING WALL TO RETAINING WALL

D.W.B.C.	SCALE	APPROVED BY:
T.W.S.J.	AS NOTED	
C.J.B.S.		BRIDGE ENGINEER

COUNTY	CONTRACT	P.R.A. REG. NO.	STATE	FED. AID PROJECT NO.	SHEET NO	TOTAL SHEETS
NEW CASTLE	71-02-009	2	DEL.		197	301

NO.	REVISIONS	BY	DATE

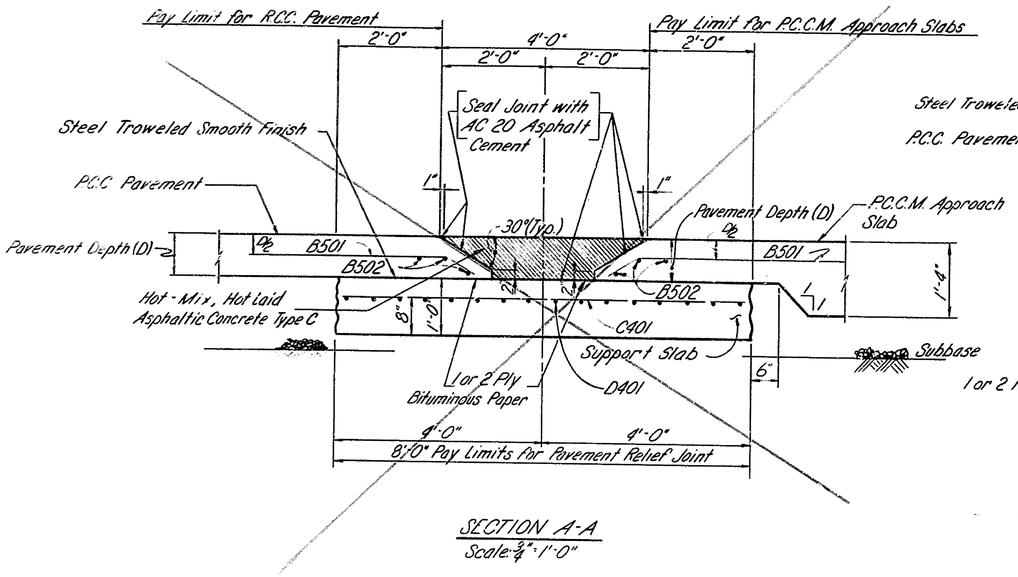

SECTION A-A
Scale: 3/4"=1'-0"

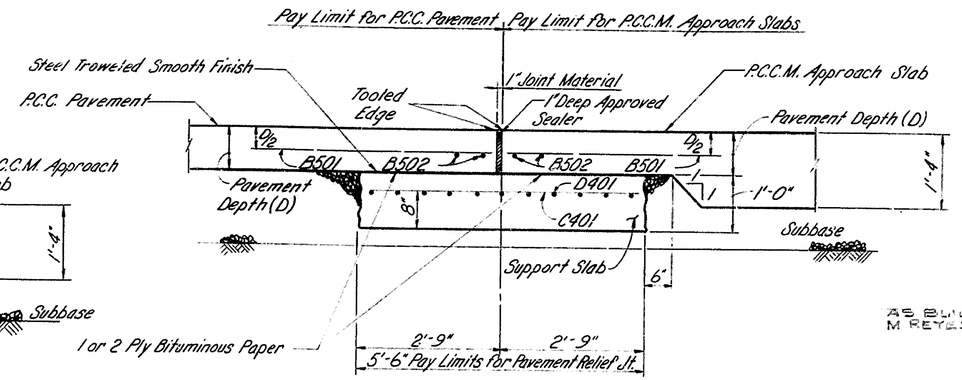

SECTION B-B
Scale: 3/4"=1'-0"

AS BUILT PLANS SHOWN IN RED BY M REYES. 5/21/81

TYPE 2 RELIEF JOIN INSTALLED

Notes:

1. Material, workmanship and method of payment shall be in accordance with the Standard Specifications and the Special Provisions.
2. Portions of B bars which are outside of the indicated pay lines are to be included in the price bid for the complete Joint.

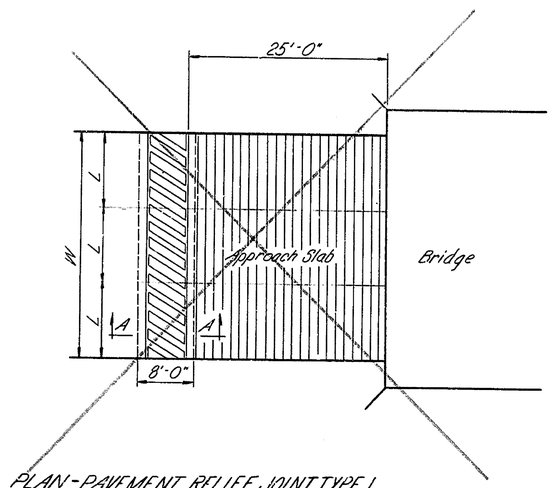

PLAN-PAVEMENT RELIEF JOINT TYPE 1
No Scale

Notation:

W = Total Width of Approach Slab, Ft. (Pay Limit for Relief Joint.)
L = Lane Width, Ft.
N = Number of Lanes

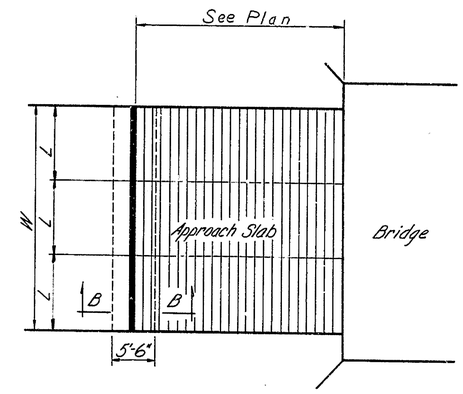

PLAN - PAVEMENT RELIEF JOINT TYPE 2
No Scale

‡ Includes beveled portion of Approach Slab within the 4'-0" pay limit lines.
* Calculated using 145#/ft³
** Beveled portion of Pavement slab has been converted to equivalent design depth of main line pavement

PAVEMENT RELIEF JOINT TYPE 1

SCHEDULE OF REINFORCING STEEL

Mark	Size	Spacing C-C	Length	No. Req'd	Weight/Ft. Transverse Measure Lbs.
B501	#5	12"	4'-0"	(L+1)×N	8.34
B502	#5	6"	L minus 4"	6×N	6.26
C401	#4	6"	7'-8"	(W+1)×2	10.25
D401	#4	6"	W minus 4"	16	10.69

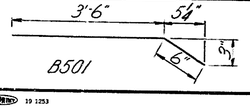

APPROXIMATE QUANTITIES PER FOOT OF TRANSVERSE MEASURE

	Pavement Depth (D) 8"	9"	10"
‡ C.Y. P.C.C.M. (Support Slab)	.33	.34	.35
Lbs. Reinforcing Steel	35.54	35.54	35.54
* Tons Hot-Mix, Hot Laid Asphaltic Concrete Type C	.14	.15	.16
** Sq Yds P.C.C. Pavement	.064	.072	.080

PAVEMENT RELIEF JOINT TYPE 2

APPROXIMATE QUANTITIES PER FOOT OF TRANSVERSE MEASURE

	Pavement Depth (D) 8"	9"	10"
C.Y. P.C.C.M. (Support Slab)	.20	.20	.20
Lbs Reinforcing Steel	26.76	26.76	26.76
1" Joint Material S.F.	.58	.67	.75
1" Approved Sealer Lin. Ft.	1	1	1

SCHEDULE OF REINFORCING STEEL

Mark	Size	Spacing C-C	Length	No. Req'd	Weight/Ft. Transverse Measure Lbs
C401	#4	6"	5'-2"	(W+1)×2	6.90
D401	#4	6"	W minus 4"	11	7.35
B501	#5	12"	4'-0"	(L+1)×N	8.34
B502	#5	6"	L minus 4"	4×N	4.17

DELAWARE
DEPARTMENT OF HIGHWAYS & TRANSPORTATION
DIVISION OF HIGHWAYS

STATE ROUTE 141 THRU NEWPORT

VIADUCT

PAVEMENT RELIEF JOINTS

D. KRS	SCALE	APPROVED BY:
T. KRS JFS	AS NOTED	
C. R.S.M		BRIDGE ENGINEER

COUNTY	CONTRACT	P. R. A. BLE. NO.	STATE	FED. AID PROJECT NO.	SHEET NO.	TOTAL SHEETS
NEW CASTLE	71-02-009	2	DEL.		198	301

NO.	REVISIONS	BY	DATE

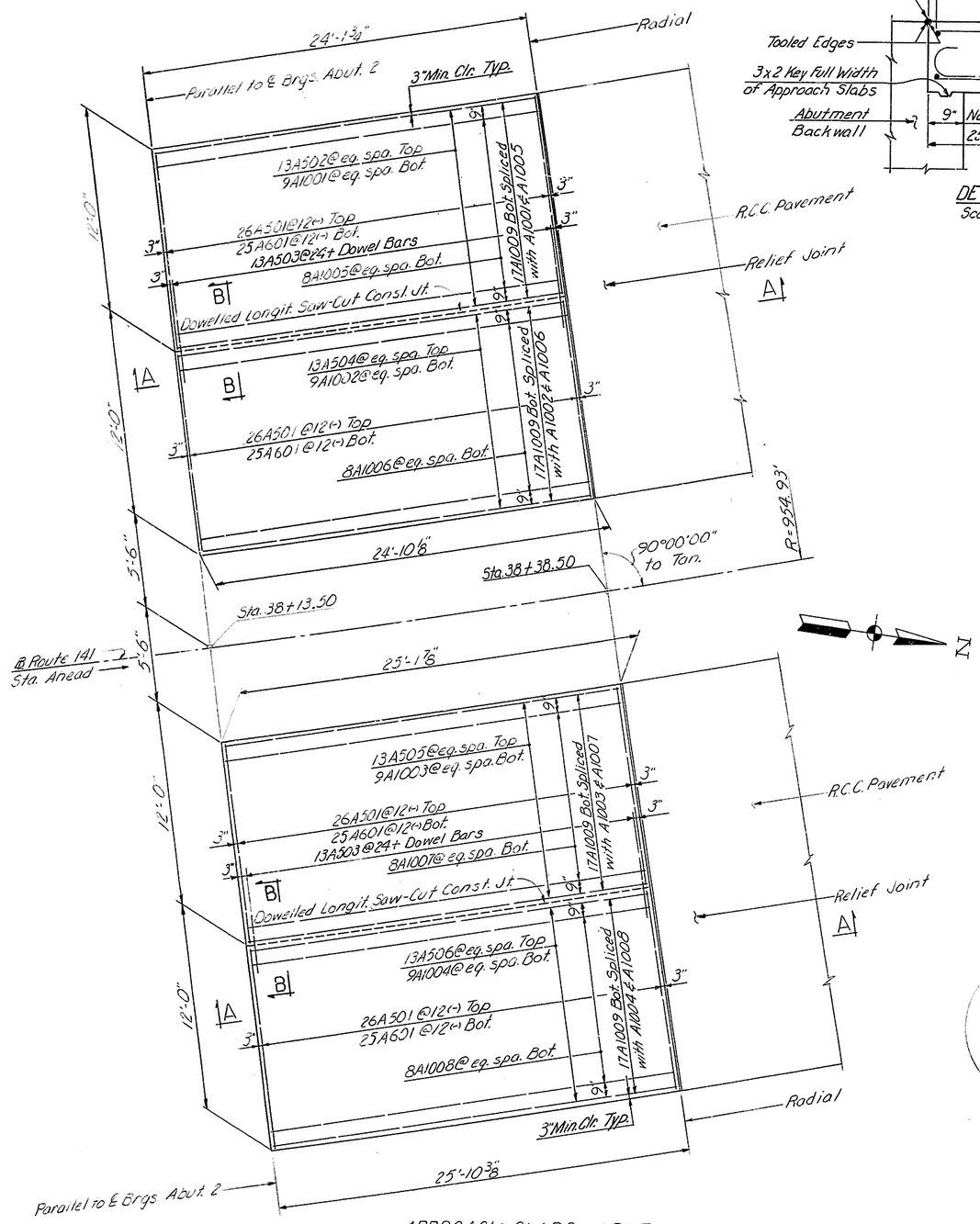

APPROACH SLABS ABUT. 2
Scale: 1/4"=1'-0"

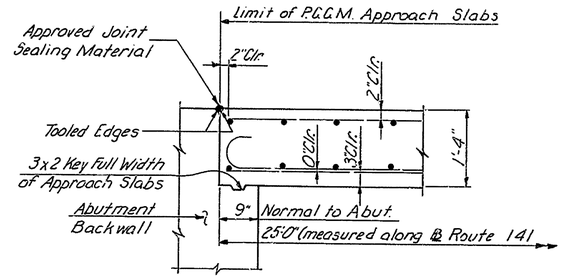

DETAIL A
Scale: 3/4"=1'-0"

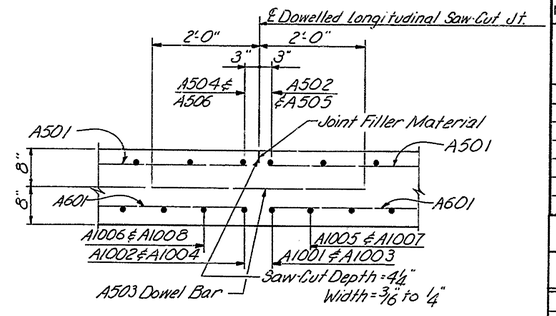

SECTION B-B
Scale: 3/4"=1'-0"

NOTES:

1. Materials, workmanship and method of payments shall be in accordance with Section 602 of the Standard Specifications.
2. Approach Slab Quantities are included in the Summary of Structural Quantities.
3. Concrete for Approach Slabs shall be Portland Cement Concrete Masonry Approach Slabs.
4. For Construction Joint Details see Standard Drawing P-1. The cost of furnishing the Hook-Bolt Dowels and providing the construction joints shall be included in the unit price bid for Portland Cement Concrete Masonry-Approach Slabs.

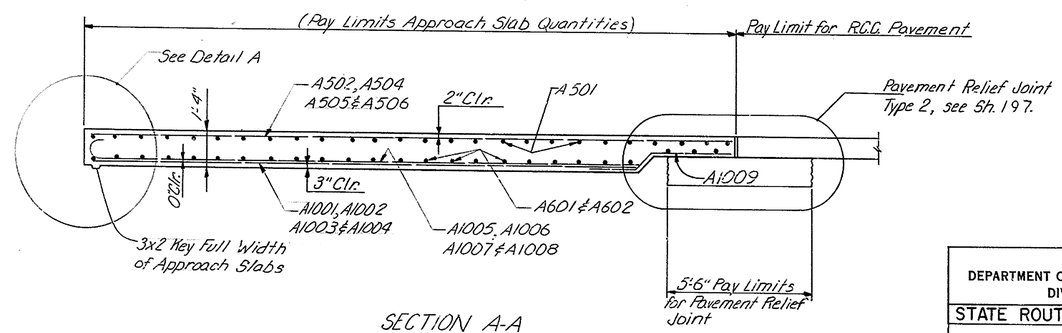

SECTION A-A
Scale: 3/8"=1'-0"

BAR SCHEDULE

Mark	Size	Length	Type	No. S.B.	No. N.B.	Total No.
A501	#5	11'-7"	Str.	52	52	104
A502	#5	23'-10"	Str.	13		13
A503	#5	4'-0"	Str.	13	13	26
A504	#5	24'-2"	Str.	13		13
A505	#5	24'-10"	Str.		13	13
A506	#5	25'-2"	Str.		13	13
A601	#6	11'-7"	Str.	50	50	100
A1001	#10	20'-1"	Str.	9		9
A1002	#10	20'-5"	Str.	9		9
A1003	#10	21'-1"	Str.		9	9
A1004	#10	21'-4"	Str.		9	9
A1005	#10	21'-2"	A	8		8
A1006	#10	21'-6"	A	8		8
A1007	#10	22'-2"	A		8	8
A1008	#10	22'-5"	A		8	8
A1009	#10	7'-6"	B	34	34	68

BENDING DIAGRAMS

TYPE A — All dimensions are out to out.

1'-1"	20'-1"	A1005
1'-1"	20'-5"	A1006
1'-1"	21'-1"	A1007
1'-1"	21'-4"	A1008

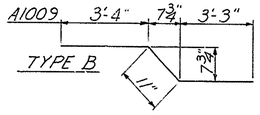

DELAWARE
DEPARTMENT OF HIGHWAYS & TRANSPORTATION
DIVISION OF HIGHWAYS

STATE ROUTE 141 THRU NEWPORT
VIADUCT

ABUTMENT 2
N.B. & S.B. APPROACH SLABS

D.R.S.M. T.M.R.S. & W.S.J. C.K.R.S.	SCALE AS NOTED	APPROVED BY: BRIDGE ENGINEER

COUNTY	CONTRACT	P. R. A. REG. NO.	STATE	FED. AID PROJECT NO.	SHEET NO.	TOTAL SHEETS
NEW CASTLE	71-02-009	2	DEL		199	301

NO.	REVISIONS	BY	DATE

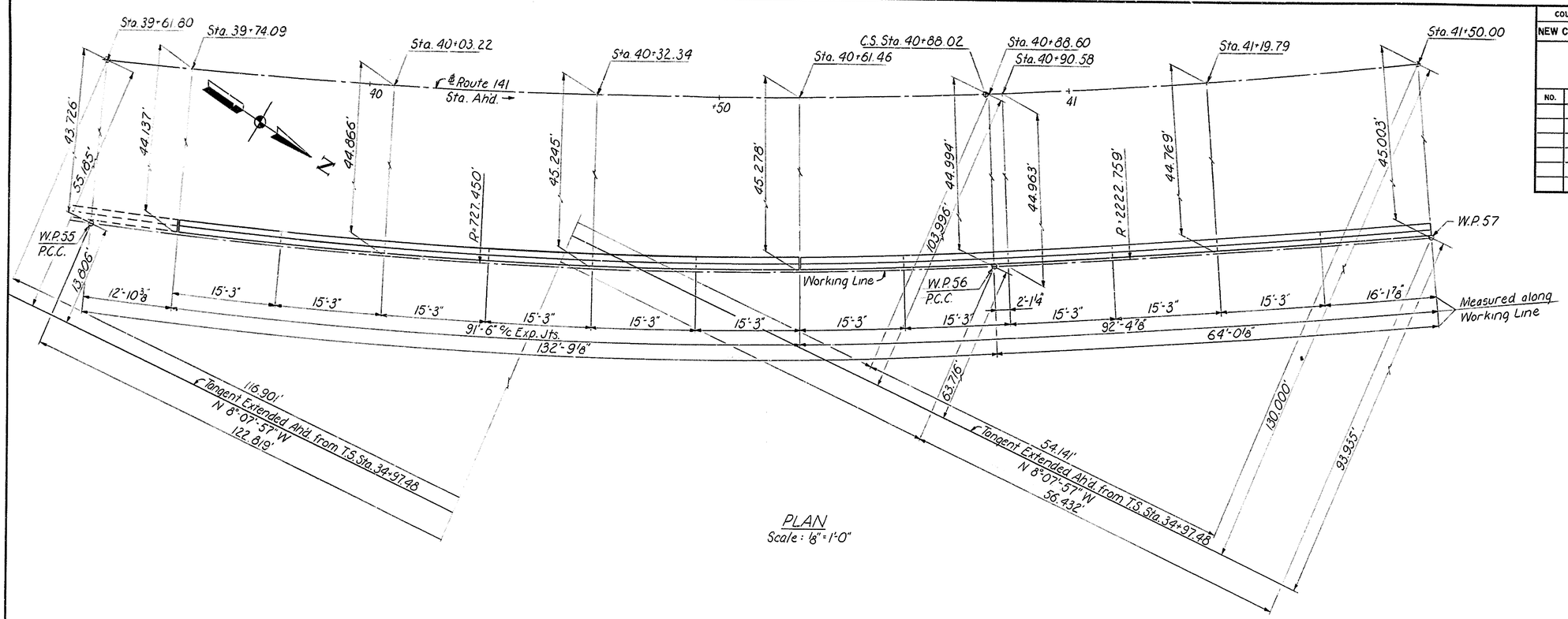

PLAN
Scale: ⅛" = 1'-0"

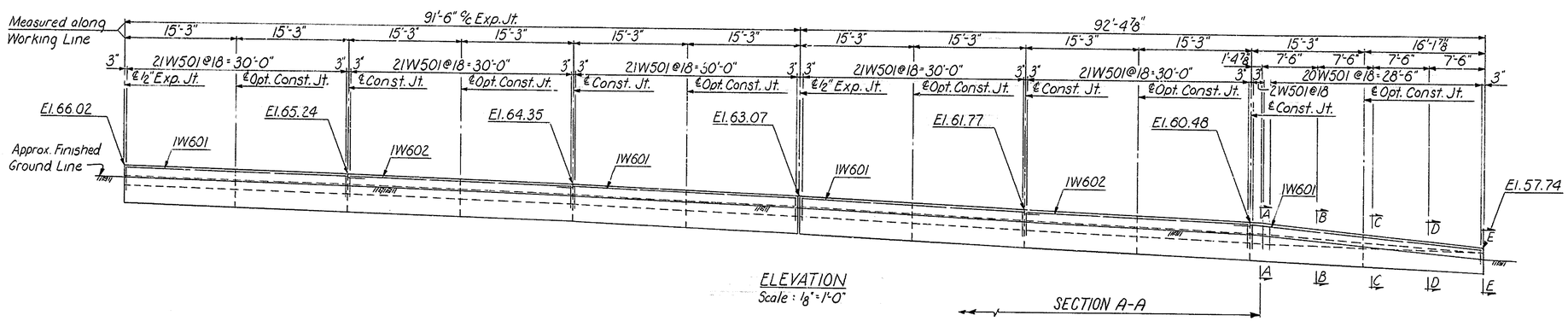

ELEVATION
Scale: ⅛" = 1'-0"

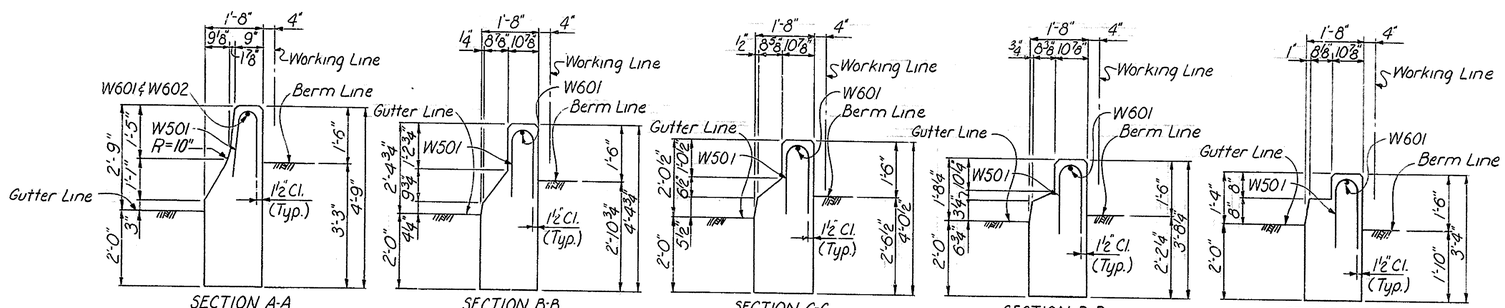

SECTION A-A
Scale: ½" = 1'-0"

SECTION B-B
Scale: ½" = 1'-0"

SECTION C-C
Scale: ½" = 1'-0"

SECTION D-D
Scale: ½" = 1'-0"

SECTION E-E
Scale: ½" = 1'-0"

BAR SCHEDULE

Mark	Size	No.	Length	Vary	Type
W501	#5	127	4'-7"		A
W601	#6	4	32'-6"		Str.
W602	#6	2	30'-2"		Str.

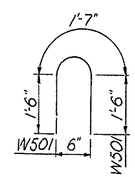

TYPE A

Notes:
1. For Geometric Layout, See Sheet #79 & 86 Contract 71-02-007 (Viaduct Substructure).
2. For Construction & Expansion Joint Details, See Sheet #116.

DELAWARE
DEPARTMENT OF HIGHWAYS & TRANSPORTATION
DIVISION OF HIGHWAYS

STATE ROUTE 141 THRU NEWPORT
BARRIER WALL
PLAN AND ELEVATION
STA. 39+74.09 TO STA. 41+50.00
BASE LINE STATE ROUTE 141

D. L.W.H.	SCALE	APPROVED BY:
T. R.G.S.	AS NOTED	
C. J.B.S.		BRIDGE ENGINEER

COUNTY	CONTRACT	P.R.A. REG. NO.	STATE	FED. AID PROJECT NO.	SHEET NO.	TOTAL SHEETS
NEWCASTLE	71-02-009	2	DEL.		200	301

RELOCATED DELAWARE ROUTE 141
THRU NEWPORT

PREL. TRACING R.L.B. DESIGN R.M.K. CHKD.

REVISIONS

SOILS CLASSIFICATION

GENERAL CLASSIFICATION	GRANULAR MATERIALS (35% OR LESS PASSING A NO. 200 SIEVE.)							SILT-CLAY MATERIALS (MORE THAN 35% PASSING A NO. 200 SIEVE.)					
GROUP CLASSIFICATION	A-1		A-3	A-2				A-4	A-5	A-6	A-7*		A-8
	a	b		4	5	6	7				5	6	
STANDARD SYMBOL	a	b		4	5	6	7				5	6	
SIEVE ANALYSIS PERCENT PASSING NO. 10	50 MAX.		51 MIN.										
NO. 40	30 MAX.	50 MAX.	10 MAX.	35 MAX.	35 MAX.	35 MAX.	35 MAX.	35 MIN.	36 MIN.	36 MIN.	36 MIN.	36 MIN.	
NO. 200	15 MAX.	25 MAX.											
CHARACTERISTICS OF FRACTION PASSING NO. 40 LIQUID LIMIT				40 MAX.	41 MIN.	40 MAX.	41 MIN.	40 MAX.	41 MIN.	40 MAX.	41 MIN.	41 MIN.	42-400
PLASTICITY INDEX	6 MAX.	6 MAX.	N.P.	10 MAX.	10 MAX.	11 MIN.	11 MIN.	10 MAX.	10 MAX.	11 MIN.	11 MIN.	11 MIN.	0-60
GROUP INDEX	0		0	0		4 MAX.		8 MAX.	12 MAX.	16 MAX.	20 MAX.		
GENERAL SUBGRADE RATING	EXCELLENT		GOOD	GOOD		FAIR		POOR	POOR	POOR	VERY POOR		UNSAT.
MATERIAL	WELL GRADED GRAVELS AND SANDS.		CLEAN SAND & GRAVELLY SAND.	POORLY GRADED, SILTY OR CLAYEY SANDS AND GRAVEL.				SILTY SOILS	ELASTIC SILTS	PLASTIC CLAYS	EXPANSIVE PLASTIC CLAYS		MUCK-PEAT

*P.I. OF A-7-5 ≦ L.L.-30
*P.I. OF A-7-6 > L.L.-30

GENERAL NOTES

1. THE INFORMATION SHOWN BY THIS PROFILE & BORINGS RELATIVE TO THE CHARACTER OF SUBSURFACE MATERIAL HAS BEEN SECURED FOR THE EXCLUSIVE USE OF THE DELAWARE STATE HIGHWAY DEPARTMENT IN DESIGNING THE PROJECT, AND THIS INFORMATION IS NOT TO BE USED FOR COMPUTATION OF PRICES BID. THERE IS NO EXPRESSED OR IMPLIED AGREEMENT THAT THE DEPTHS OR THE CHARACTER OF THE MATERIAL HAVE BEEN CORRECTLY INDICATED AND BIDDERS SHALL TAKE INTO ACCOUNT THE POSSIBILITY THAT CONDITIONS AFFECTING THE COST OR QUANTITIES OF WORK TO BE DONE MAY DIFFER FROM THOSE INDICATED.
2. THE BORING OPERATIONS WERE SUPERVISED BY GANNETT, FLEMING CORDDRY & CARPENTER INC.

ABBREVIATIONS

BR.	BROWN	MED.	MEDIUM
C	COARSE	OCCA.	OCCASIONAL
COMP.	COMPACT	REC.	RECOVERY
DK	DARK	SDY.	SANDY
DECOMP.	DECOMPOSED	SI	SILT
F	FINE	T	TRACE
F.C.	FINE TO COARSE	T.F.	TRACE FINE
F.M.	FINE TO MEDIUM	T.F.M.	TRACE FINE TO MEDIUM
FRAGS.	FRAGMENTS	T.F.C.	TRACE FINE TO COARSE
GRAV.	GRAVEL	V	VERY
GY	GRAY	W/	WITH
HRS.	HOURS	W/S	WITH SOME
LT.	LIGHT	W/T	WITH TRACE
LIT.	LITTLE	YELL	YELLOW
MAT.	MATERIAL		

LEGEND FOR AUGER AND ROADWAY BORING LOGS

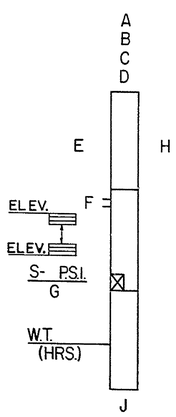

A. AUGER BORING NOMENCLATURE.
R. ROADWAY BORING NO. BORINGS ARE DISTURBED SAMPLE BORINGS USING 3" O.D. SPLIT BARREL TUBE WITH A MINIMUM LENGTH OF 18" FOR SAMPLE AND 8" O.D. HOLLOW STEM AUGER.
A. AUGER BORING NO. BORINGS ARE DISTURBED SAMPLE BORINGS USING 12" AUGER OBTAINING SAMPLES APPROXIMATELY EVERY 5' FOR LABORATORY TESTS & VISUAL CLASSIFICATION.
A'. AUGER BORING NO. BORINGS ARE DISTURBED SAMPLE BORINGS USING 6" CONTINUOUS FLIGHT ANGER OBTAINING SAMPLES APPROXIMATELY EVERY 5' FOR LABORATORY TESTS & VISUAL CLASSIFICATION.
B. STATION OF BORINGS FROM CENTERLINE OF ROUTE 141 & N.B.℄.
C. DISTANCE AND DIRECTION OF OFFSET OF BORINGS FROM CENTERLINE OF ROUTE 141 & N.B.℄.
D. ELEVATION OF GROUND SURFACE.
E. DEPTH OF SOIL STRATA IN FEET.
F. PENETRATION RESISTANCE ENCOUNTERED IN ADVANCING THE 3" O.D. SAMPLER. RECORDED IN NUMBER OF BLOWS OF 300 LB. HAMMER WITH 18" FALL PER 6" OF PENETRATION. BLOWS INDICATED ARE FOR LAST 12" OF AN 18" DRIVE.
G. LENGTH OF SAMPLE RECOVERED.
H. SOIL CLASSIFICATION & LABORATORY SAMPLE NUMBER.
J. DEPTH OF BORING IN FEET.
W.T. ELEVATION OF GROUND WATER AS OBSERVED IN BORING.
S-P.S.I. UNDISTURBED SAMPLE OBTAINED AND P.S.I. USED TO PUSH 3" O.D. THIN WALLED TUBE TO THE DEPTH OF THE SAMPLE.

ELEV.
ELEV.
RANGE OF GROUND WATER LEVELS OBSERVED IN OBSERVATION WELLS DURING THE 1970 FALL, 1970-71 WINTER AND SPRING OF 1971.

LEGEND FOR STRUCTURE BORING LOGS

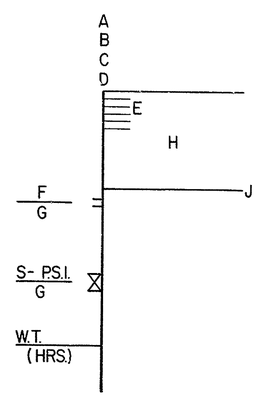

A. BORING NO. ALL BORINGS ARE DISTURBED SAMPLE BORINGS USING A 2" O.D. SPLIT BARREL TUBE WITH A MINIMUM LENGTH OF 18" FOR SAMPLE AND 3 1/2" I.D. CASING.
B. STATION OF BORING FROM CENTERLINE OF ROUTE 141 & N.B.℄.
C. DISTANCE AND DIRECTION OF OFFSET OF BORING FROM CENTERLINE OF ROUTE 141 & N.B.℄.
D. ELEVATION OF GROUND SURFACE.
E. PENETRATION RESISTANCE ENCOUNTERED IN ADVANCING CASING. RECORDED IN NUMBER OF BLOWS OF 300 LB. HAMMER WITH 18" FALL PER FOOT OF PENETRATION OR AS OTHERWISE NOTED.
F. PENETRATION RESISTANCE ENCOUNTERED IN ADVANCING THE 2" O.D. SAMPLER. RECORDED IN NUMBER OF BLOWS OF 140 LB. HAMMER WITH 30" FALL PER 6" OF PENETRATION. BLOWS INDICATED ARE FOR LAST 12" OF AN 18" DRIVE.
G. LENGTH OF SAMPLE RECOVERED.
H. DESCRIPTION OF MATERIAL FROM FIELD BORING LOGS.
J. ELEVATION AT CHANGE IN DESCRIPTION OF MATERIAL.
W.T. ELEVATION OF GROUND WATER AS OBSERVED IN BORING.
S-P.S.I. UNDISTURBED SAMPLE OBTAINED AND P.S.I. USED TO PUSH 3" O.D. THIN WALLED TUBE TO THE DEPTH OF THE SAMPLE.

COUNTY	CONTRACT	P. R. R. REG. NO.	STATE	FED. AID PROJECT NO.	SHEET NO.	TOTAL SHEETS
NEW CASTLE	71-02-009	2	DEL.		201	301

RELOCATED DELAWARE ROUTE 141
THRU NEWPORT

PREL. TRACING H.J.F. DESIGN R.M.K. CHKD.

REVISIONS

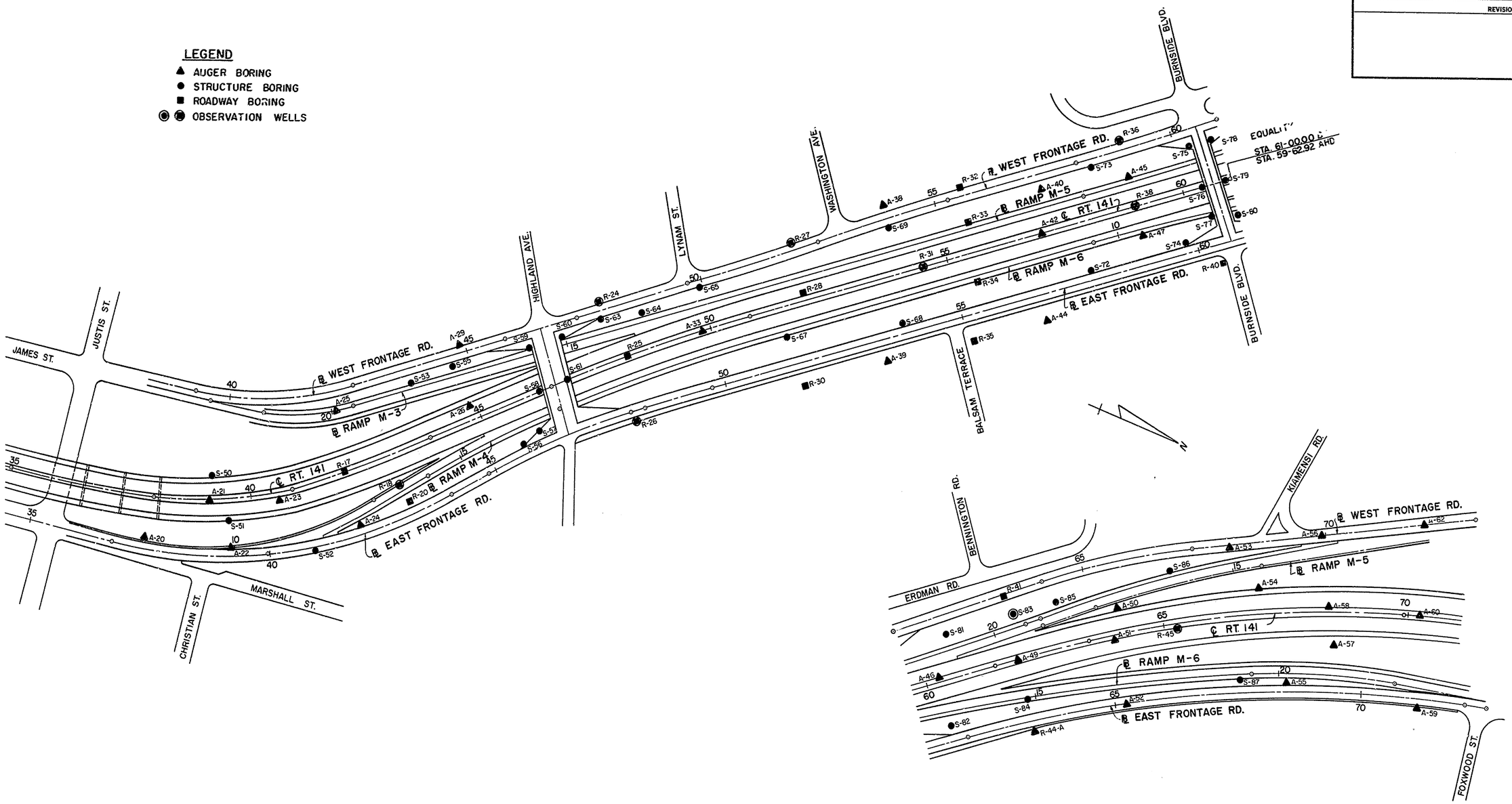

BORING LOCATION PLAN

SCALE 1" = 100'

COUNTY	CONTRACT	P.R.A. REG. NO.	STATE	FED. AID PROJECT NO.	SHEET NO.	TOTAL SHEETS
NEW CASTLE	71-02-009	2	DEL.		202	301

RELOCATED DELAWARE ROUTE 141
THRU NEWPORT

PREL. TRACING R.L.B. DESIGN R.M.K. CHKD.

REVISIONS

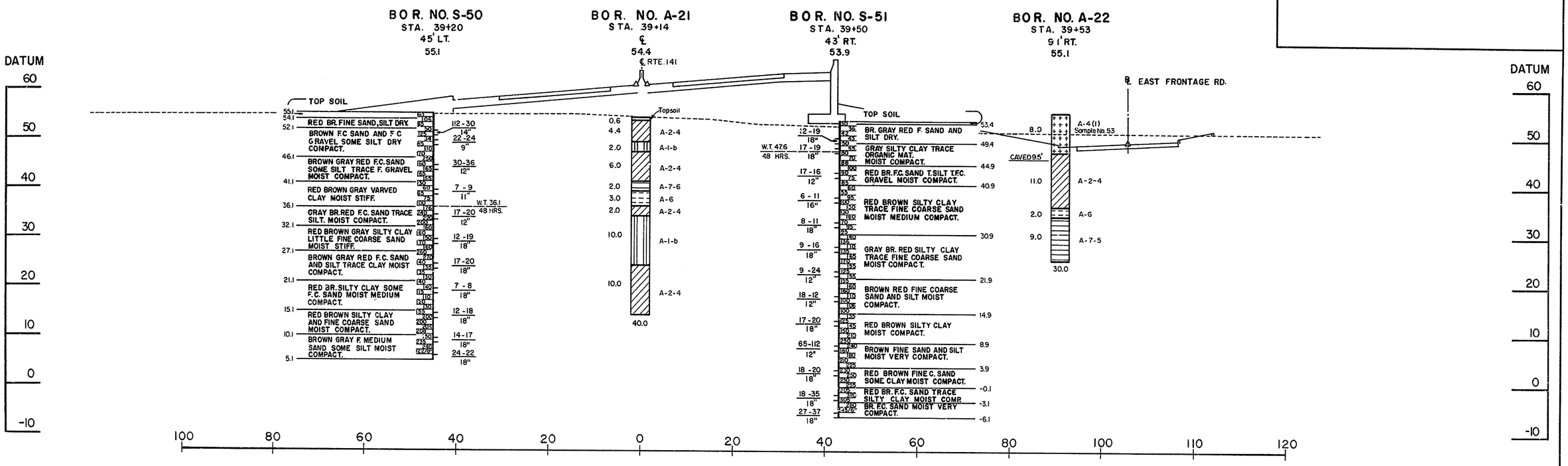

CROSS SECTION STA. 39+00

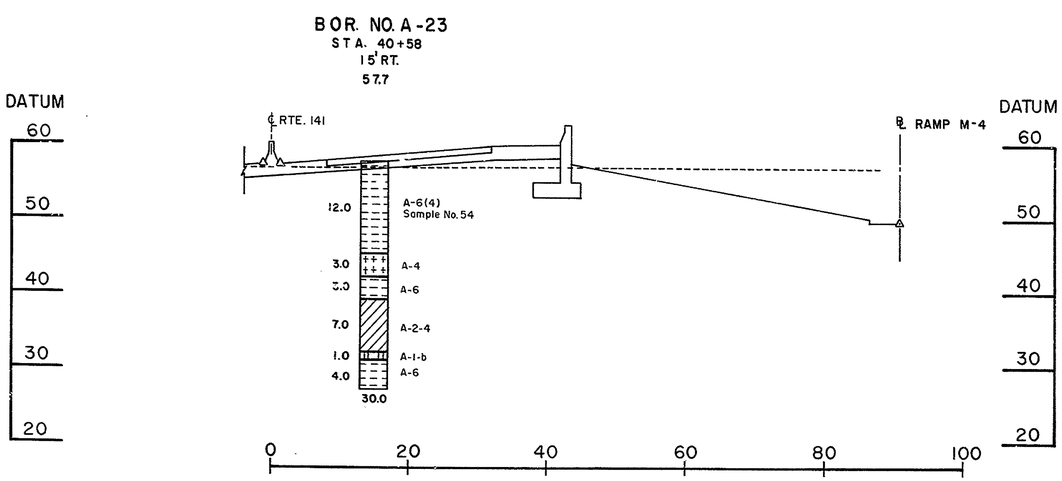

CROSS SECTION STA. 40+00
RIGHT OF RTE. 141 ℄

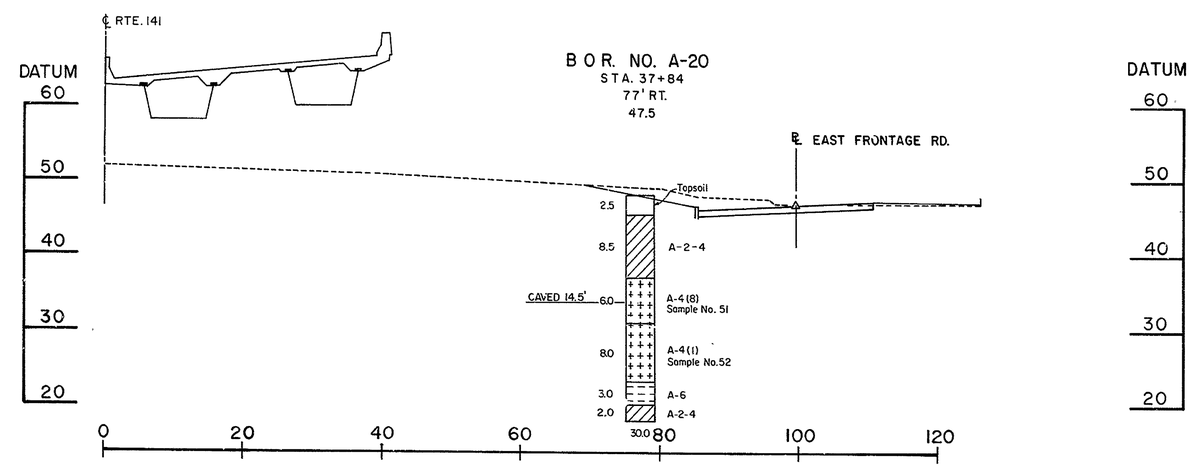

CROSS SECTION STA. 38+00
RIGHT OF RTE. 141 ℄

Sample No.	Boring No.	Station No.	Offset	Classification	L.L.	P.I.	% Aggr.	% C.Sand	% F.Sand	% Silt	% Clay	% Finer 0.02M.M.	% Nat.M.	Max.Dens. Lbs/C.F.	% O.M.	% C.B.R.
51	A-20	37+84 ℄ Rte. 141	77' RT.	A-4(8)	36	9	0	8	14	42	36	54	—	—	—	—
52	A-20	37+84 ℄ Rte. 141	77' RT.	A-4(1)	21	1	1	14	47	31	7	14	—	—	—	—
53	A-22	39+53 ℄ Rte. 141	91' RT.	A-4(1)	23	6	7	11	44	29	9	15	—	126	10	17
54	A-23	40+58 ℄ Rte. 141	15' RT.	A-6(4)	32	11	1	19	29	36	15	28	—	120	13	21

COUNTY	CONTRACT	P.R.A. REG. NO.	STATE	FED. AID PROJECT NO.	SHEET NO.	TOTAL SHEETS
NEW CASTLE	71-02-009	2	DEL.		203	301

RELOCATED DELAWARE ROUTE 141
THRU NEWPORT

PREL. TRACING H.J.F. DESIGN R.M.K. CHKD.

REVISIONS

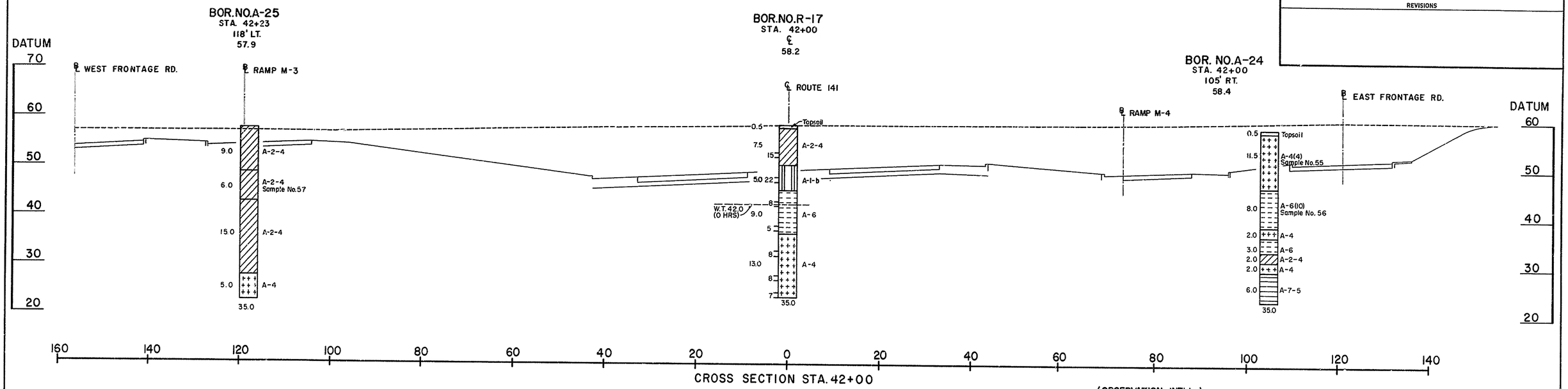

CROSS SECTION STA. 42+00

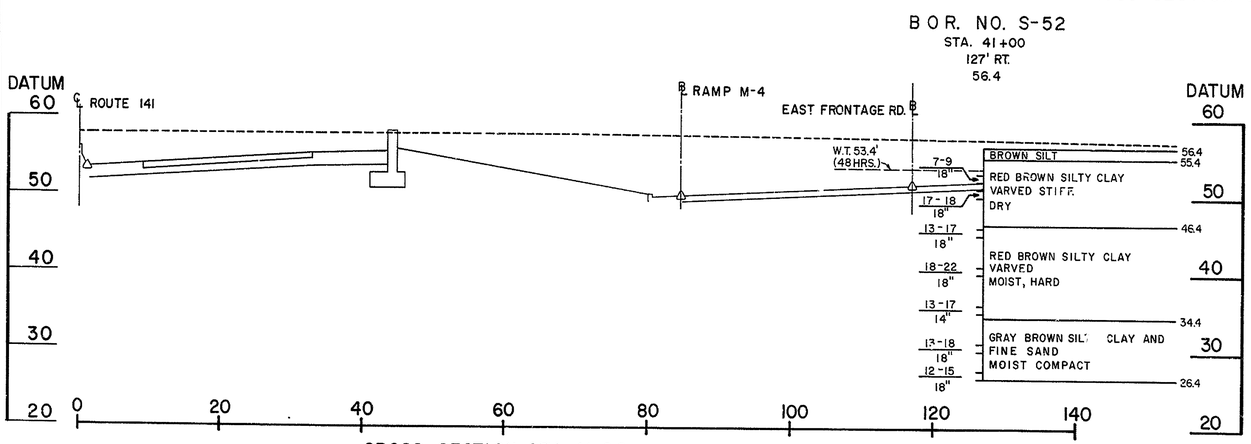

CROSS SECTION STA. 41+00
RIGHT OF ℄

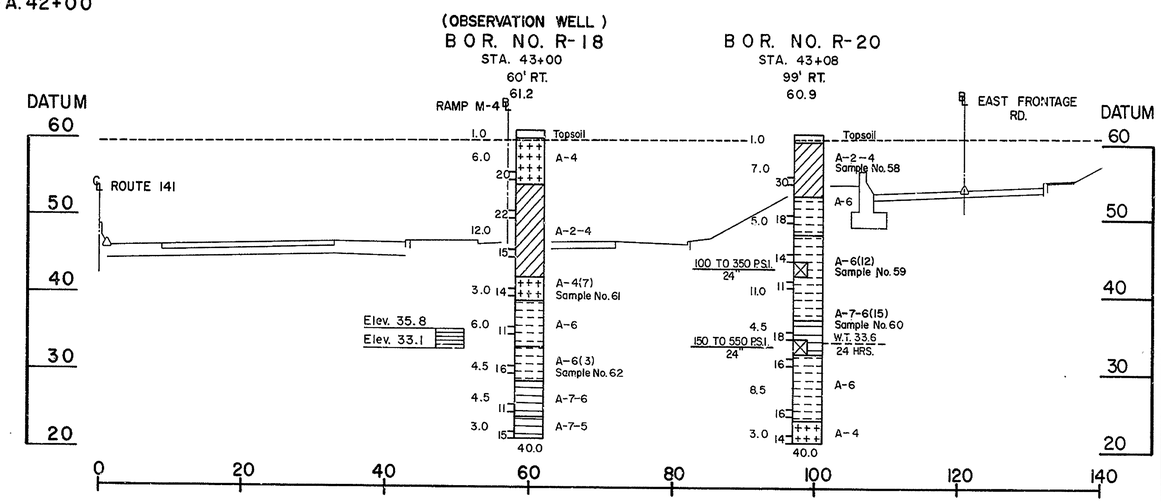

CROSS SECTION STA. 43+00
RIGHT OF ℄

Sample No.	Boring No.	Station No.	Offset	Classification	L.L.	P.I.	% Aggr.	% C.Sand	% F.Sand	% Silt	% Clay	% Finer 0.02M.M.	% Nat.M.	Max.Dens. Lbs/C.F.	% O.M.	% C.B.R.	Spec.Grav. -4
55	A-24	42+00 ℄ Rte. 141	105' RT.	A-4(4)	29	8	3	15	25	39	18	29	—	120	14	8	—
56	A-24	42+00 ℄ Rte. 141	105' RT.	A-6(10)	37	14	0	2	23	41	34	47	—	—	—	—	—
57	A-25	42+23 ℄ Rte. 141	118' LT.	A-2-4	NP	NP	5	17	61	16	1	9	—	115	12	30	—
58	R-20	43+08 ℄ Rte. 141	99' RT.	A-2-4	NP	NP	1	19	55	13	12	16	10	—	—	—	—
59	R-20	43+08 ℄ Rte. 141	99' RT.	A-6(12)	39	19	0	1	23	31	45	59	24	—	—	—	2.69
60	R-20	43+08 ℄ Rte. 141	99' RT.	A-7-6(15)	46	24	0	3	20	20	57	64	23	—	—	—	—
61	R-18	43+00 ℄ Rte. 141	60' RT.	A-4(7)	30	5	0	0	29	45	26	38	17	—	—	—	—
62	R-18	43+00 ℄ Rte. 141	60' RT.	A-5(3)	29	12	0	12	41	19	28	35	13	—	—	—	—

COUNTY	CONTRACT	P. R. A. REG. NO.	STATE	FED. AID PROJECT NO.	SHEET NO.	TOTAL SHEETS
NEW CASTLE	71-02-009	2	DEL.		204	301

RELOCATED DELAWARE ROUTE 141
THRU NEWPORT

PREL. TRACING R.L.B. DESIGN R.M.K. CHKD.

REVISIONS

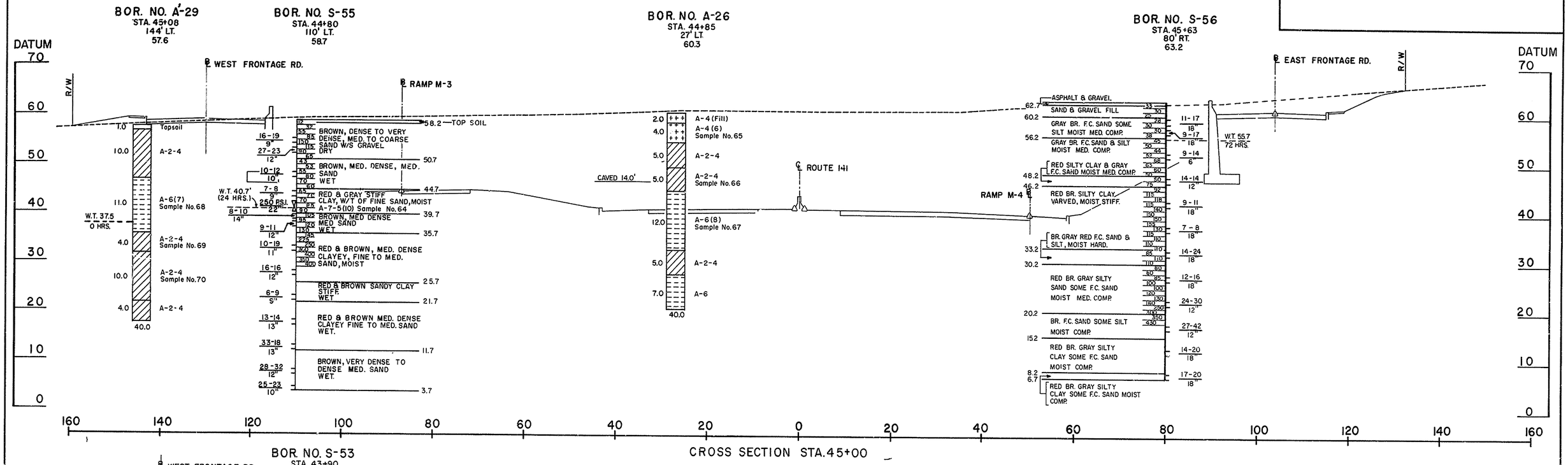

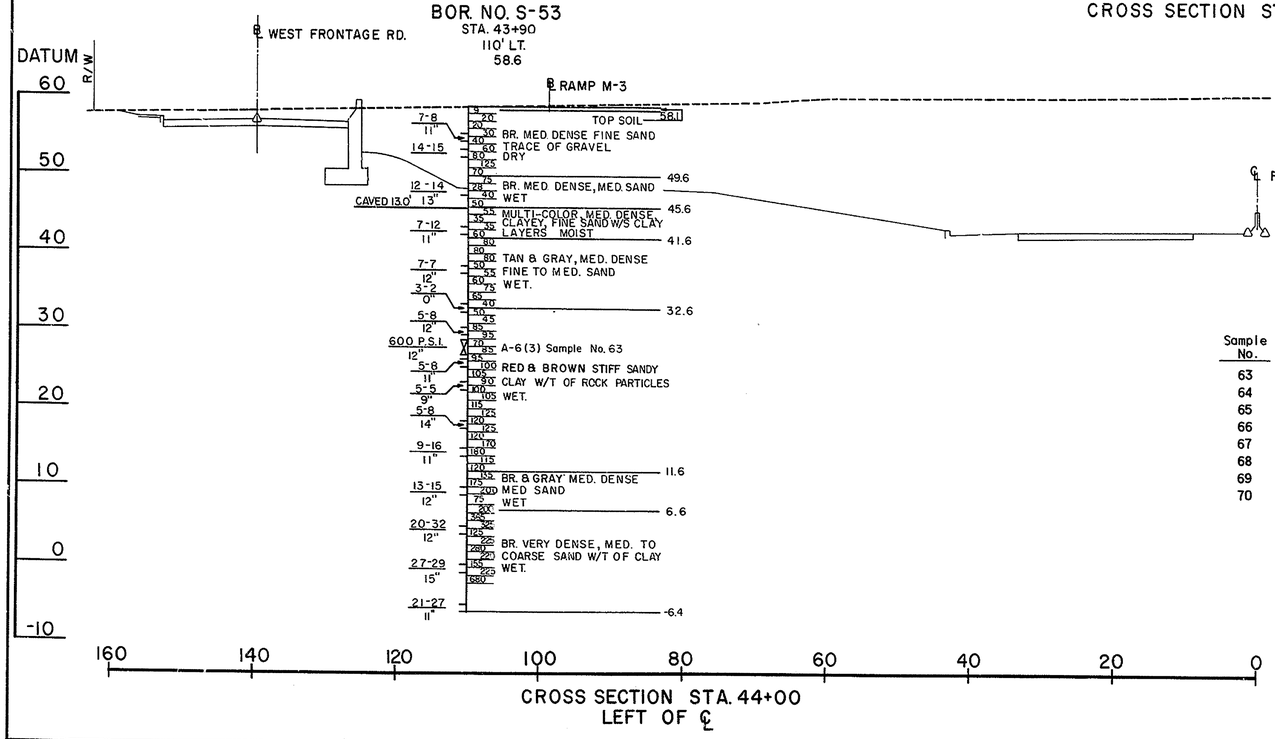

Sample No.	Boring No.	Station No.	Offset	Classification	L.L.	P.I.	% Aggr.	% C.Sand	% F.Sand	% Silt	% Clay	% Finer 0.02M.M.	% Nat.M.	Max.Dens. Lbs/C.F.	% O.M.	% C.B.R.	Spec.Grav. - 4
63	S-53	43+90 ℄ Rte.141	110' LT.	A-6(3)	37	14	13	18	25	14	30	35	16	—	—	—	—
64	S-55	44+80 ℄ Rte.141	110' LT.	A-7-5(10)	45	12	0	0	13	56	31	57	26	—	—	—	2.77
65	A-26	44+85 ℄ Rte.141	27' LT.	A-4(6)	29	10	3	11	20	41	25	43	16	—	—	—	—
66	A-26	44+85 ℄ Rte.141	27' LT.	A-2-4	NP	NP	0	21	58	21	0	2	—	—	—	—	—
67	A-26	44+85 ℄ Rte.141	27' LT.	A-6(8)	36	14	0	6	26	36	32	41	—	111	16	3	—
68	A'-29	45+08 ℄ Rte.141	144' LT.	A-6(7)	33	11	0	2	28	46	24	37	—	—	—	—	—
69	A'-29	45+08 ℄ Rte.141	144' LT.	A-2-4	NP	NP	0	7	63	21	9	18	17	—	—	—	—
70	A'-29	45+08 ℄ Rte.141	144' LT.	A-2-4	NP	NP	2	20	60	11	7	11	22	—	—	—	—

COUNTY	CONTRACT	P.R.A. REG. NO.	STATE	FED. AID PROJECT NO.	SHEET No.	TOTAL SHEETS
NEWCASTLE	71-02-009	2	DEL.		205	301

RELOCATED DELAWARE ROUTE 141
THRU NEWPORT

PREL. TRACING R.L.B. DESIGN R.M.K. CHKD.

REVISIONS

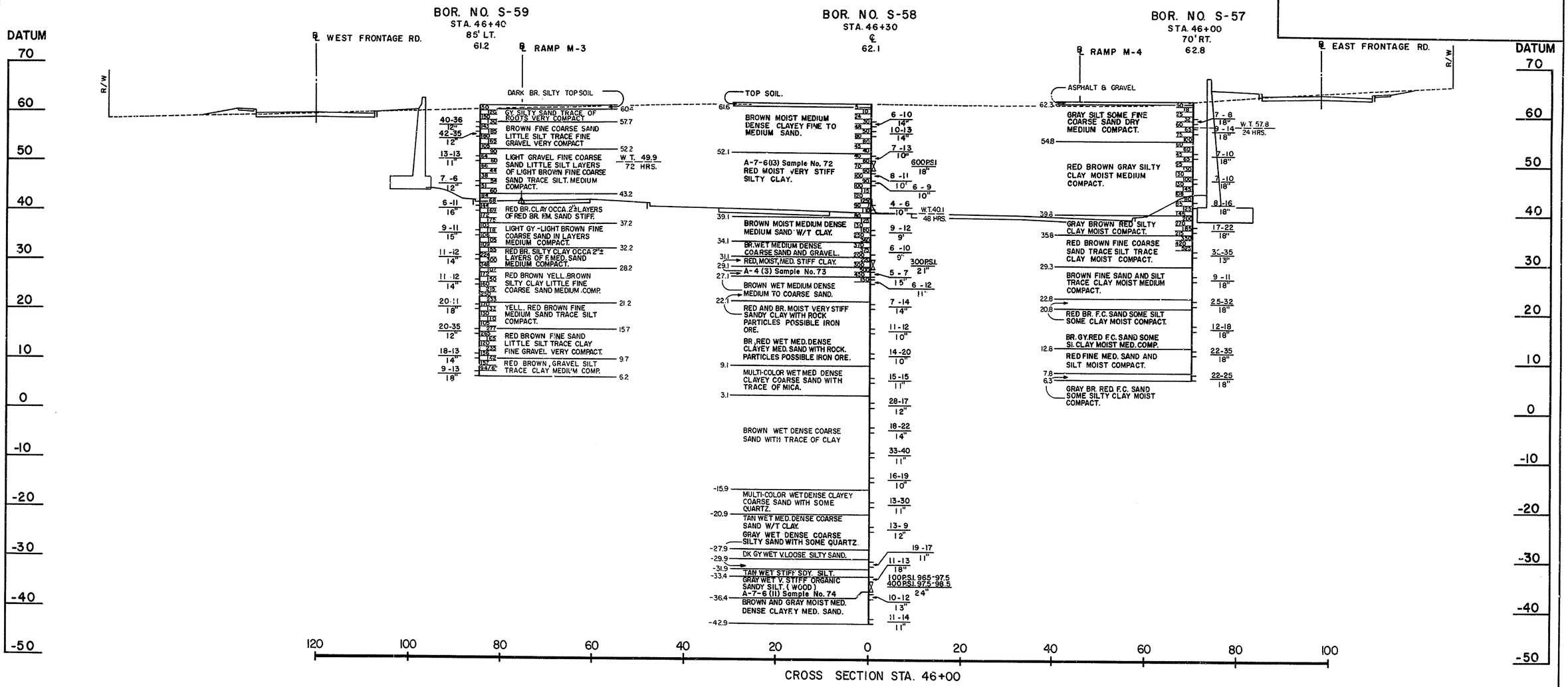

Sample No.	Boring No.	Station No.	Offset	Classification	L.L.	P.I.	% Aggr.	% C.Sand	% F.Sand	% Silt	% Clay	% Finer 0.02M.M.	% Nat.M.	Spec.Grav. - 4
72	S-58	46+30 ℄ Rte.141	℄	A-7-6(13)	44	20	0	1	18	34	47	63	25	2.72
73	S-58	46+30 ℄ Rte.141	℄	A-4(3)	24	8	0	16	35	18	31	37	17	—
74	S-58	46+30 ℄ Rte.141	℄	A-7-6(11)	52	27	0	9	39	19	33	43	23	—

COUNTY	CONTRACT	P.R.A. REG. NO.	STATE	FED. AID PROJECT NO.	SHEET NO.	TOTAL SHEETS
NEWCASTLE	71-02-009	2	DEL.		206	301

RELOCATED DELAWARE ROUTE 141
THRU NEWPORT

PREL. TRACING H.J.F. DESIGN R.M.K. CHKD.

REVISIONS

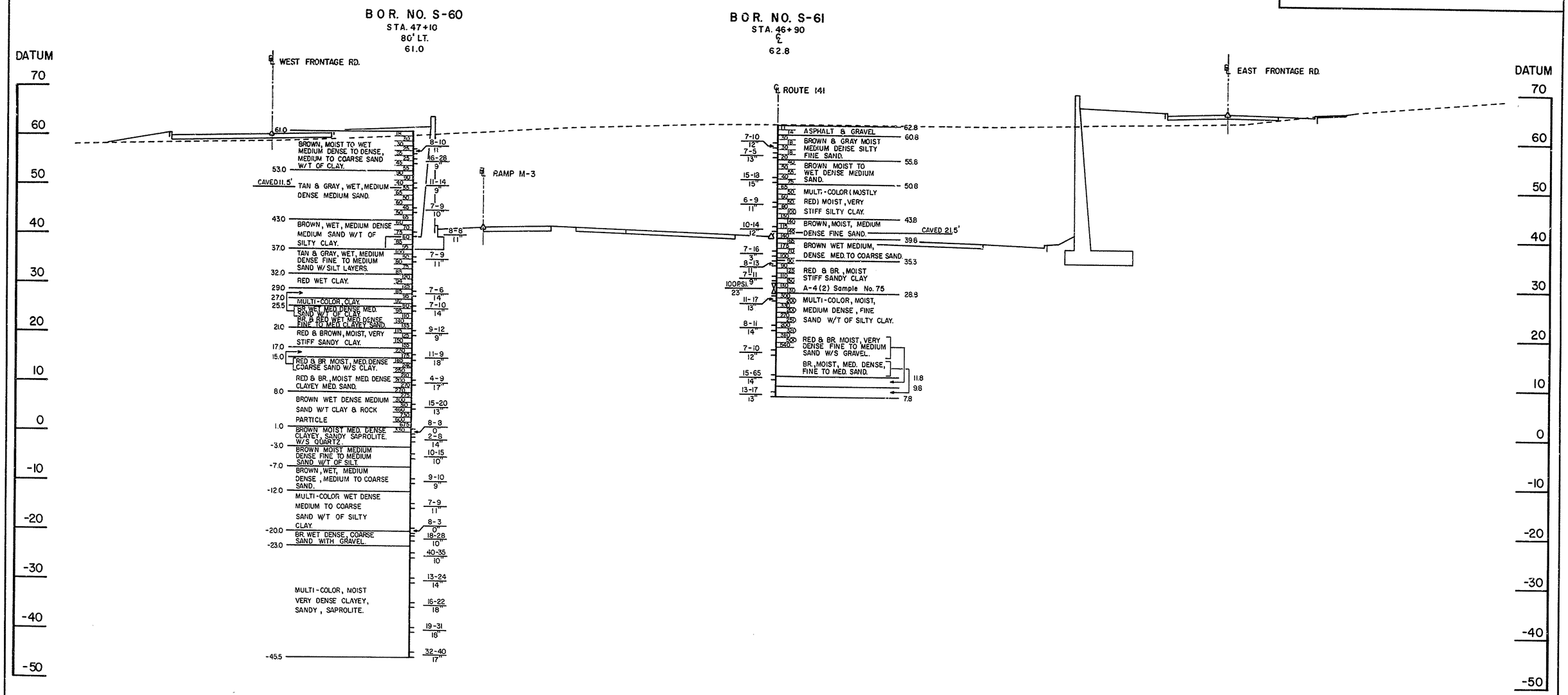

Sample No.	Boring No.	Station No.	Offset	Classification	L.L.	P.I.	% Aggr.	% C.Sand	% F.Sand	% Silt	% Clay	% Finer 0.02M.M.	% Nat.M.	Spec.Grav. - 4
75	S-61	46+90 ℄ Rte. 141	℄	A-4(2)	21	7	0	3	53	17	27	29	14	2.69

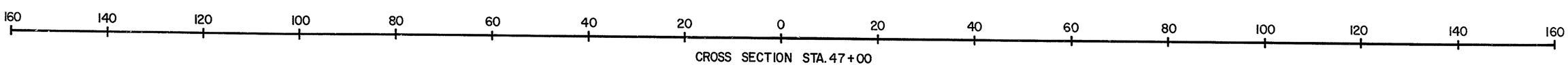

COUNTY	CONTRACT	P.R.A. REG. NO.	STATE	FED. AID PROJECT NO.	SHEET NO.	TOTAL SHEETS
NEWCASTLE	71-02-009	2	DEL.		207	301

RELOCATED DELAWARE ROUTE 141
THRU NEWPORT

PREL. TRACING R.L.B. DESIGN R.M.K. CHKD.

REVISIONS

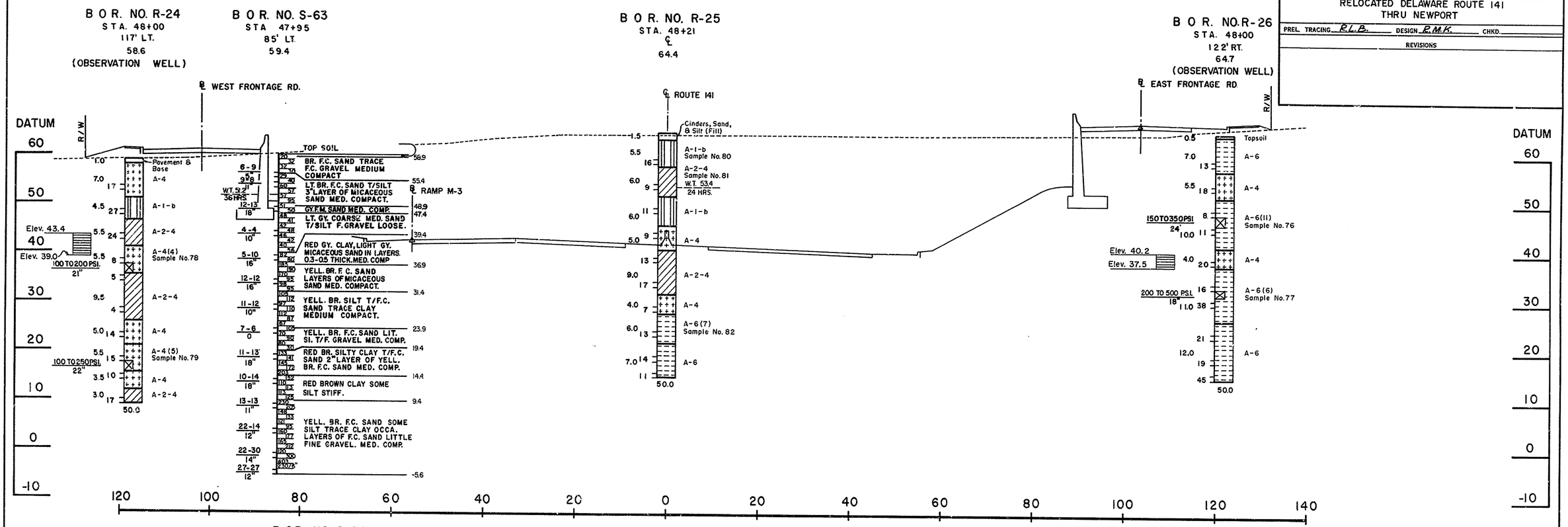

CROSS SECTION STA. 48+00

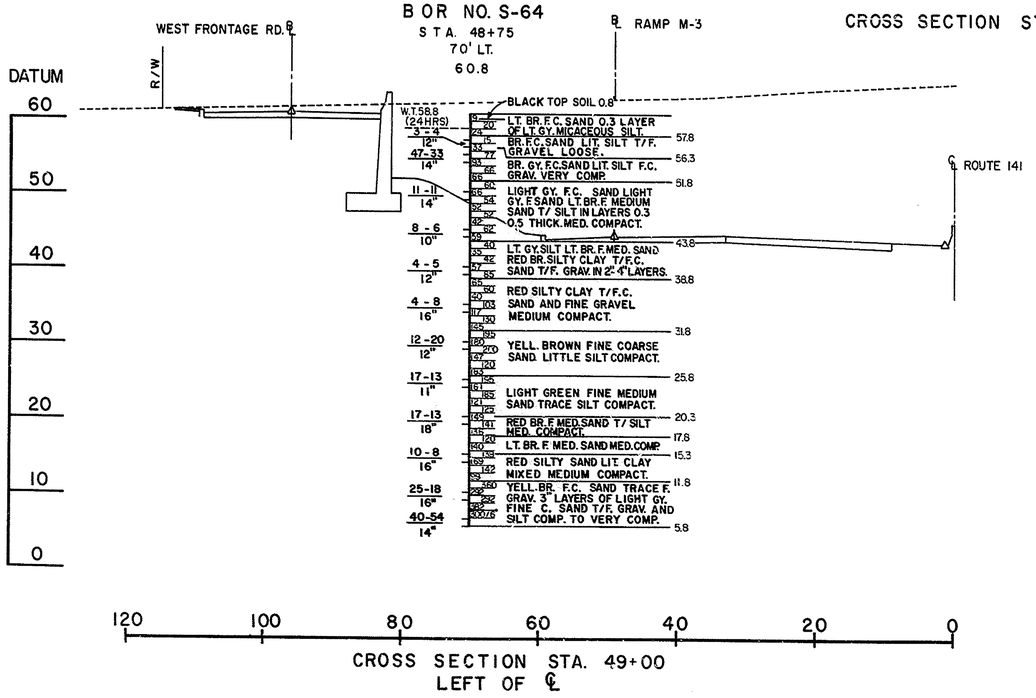

CROSS SECTION STA. 49+00
LEFT OF ℄

Sample No.	Boring No.	Station No.	Offset	Classification	L.L.	P.I.	% Aggr.	% C.Sand	% F.Sand	% Silt	% Clay	% Finer 0.02M.M.	% Nat.M.	Spec.Grav. - 4
76	R-26	48+00 ℄ Rte. 141	122' Rt.	A-6(11)	40	18	0	1	25	37	37	50	21	2.82
77	R-26	48+00 ℄ Rte. 141	122' Rt.	A-6(6)	27	11	0	1	35	23	41	47	17	2.70
78	R-24	48+00 ℄ Rte. 141	117' Lt.	A-4(4)	24	3	0	3	41	37	19	30	22	2.65
79	R-24	48+00 ℄ Rte. 141	117' Lt.	A-4(5)	24	9	0	6	36	22	36	42	16	—
80	R-25	48+21 ℄ Rte. 141	℄	A-1-b	NP	NP	10	40	35	10	5	10	8	—
81	R-25	48+21 ℄ Rte. 141	℄	A-2-4	NP	NP	9	29	45	10	7	11	19	—
82	R-25	48+21 ℄ Rte. 141	℄	A-6(7)	35	15	0	10	30	26	34	45	20	—

COUNTY	CONTRACT	P. R. A. REG. NO.	STATE	FED. AID PROJECT NO.	SHEET NO.	TOTAL SHEETS
NEW CASTLE	71-02-009	2	DEL.		208	301

RELOCATED DELAWARE ROUTE 141
THRU NEWPORT

PREL. TRACING H.J.F. DESIGN R.M.K. CHKD.

REVISIONS

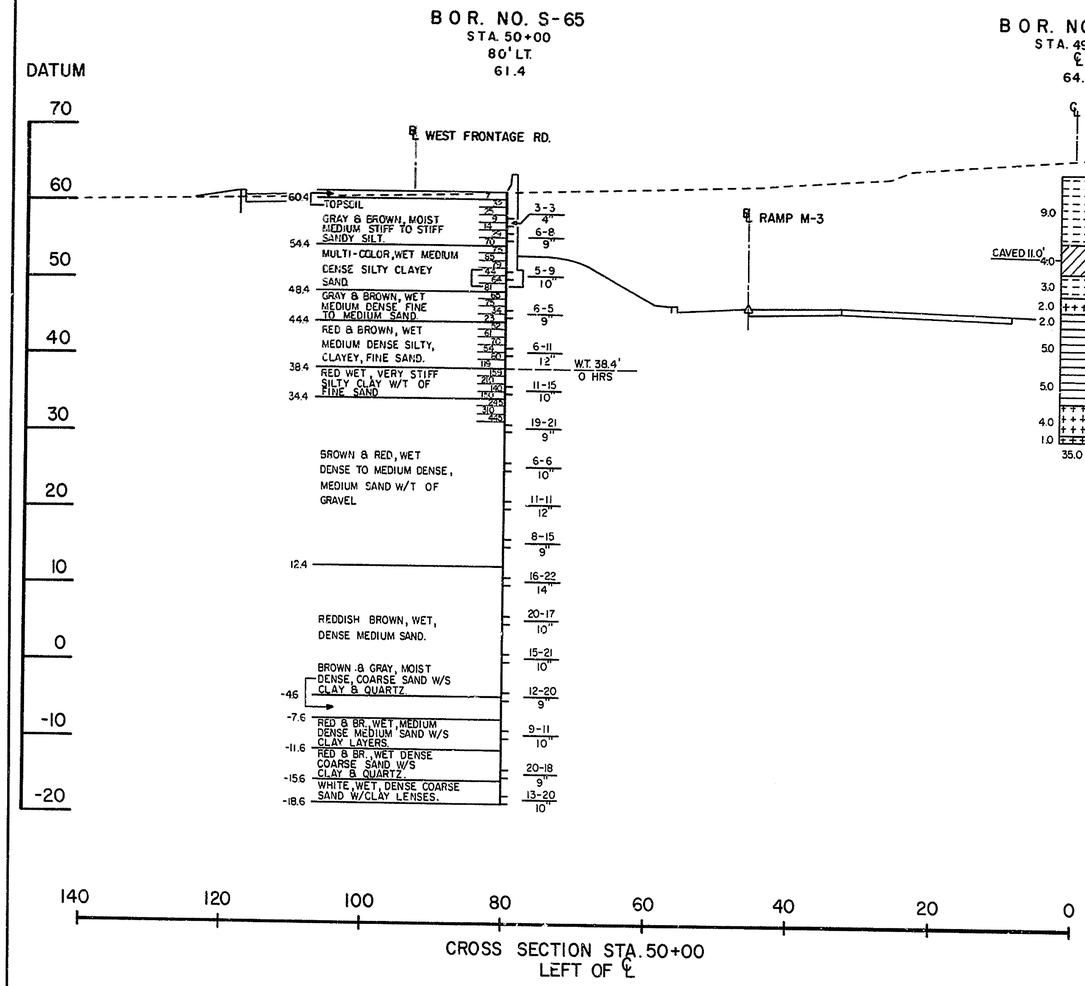

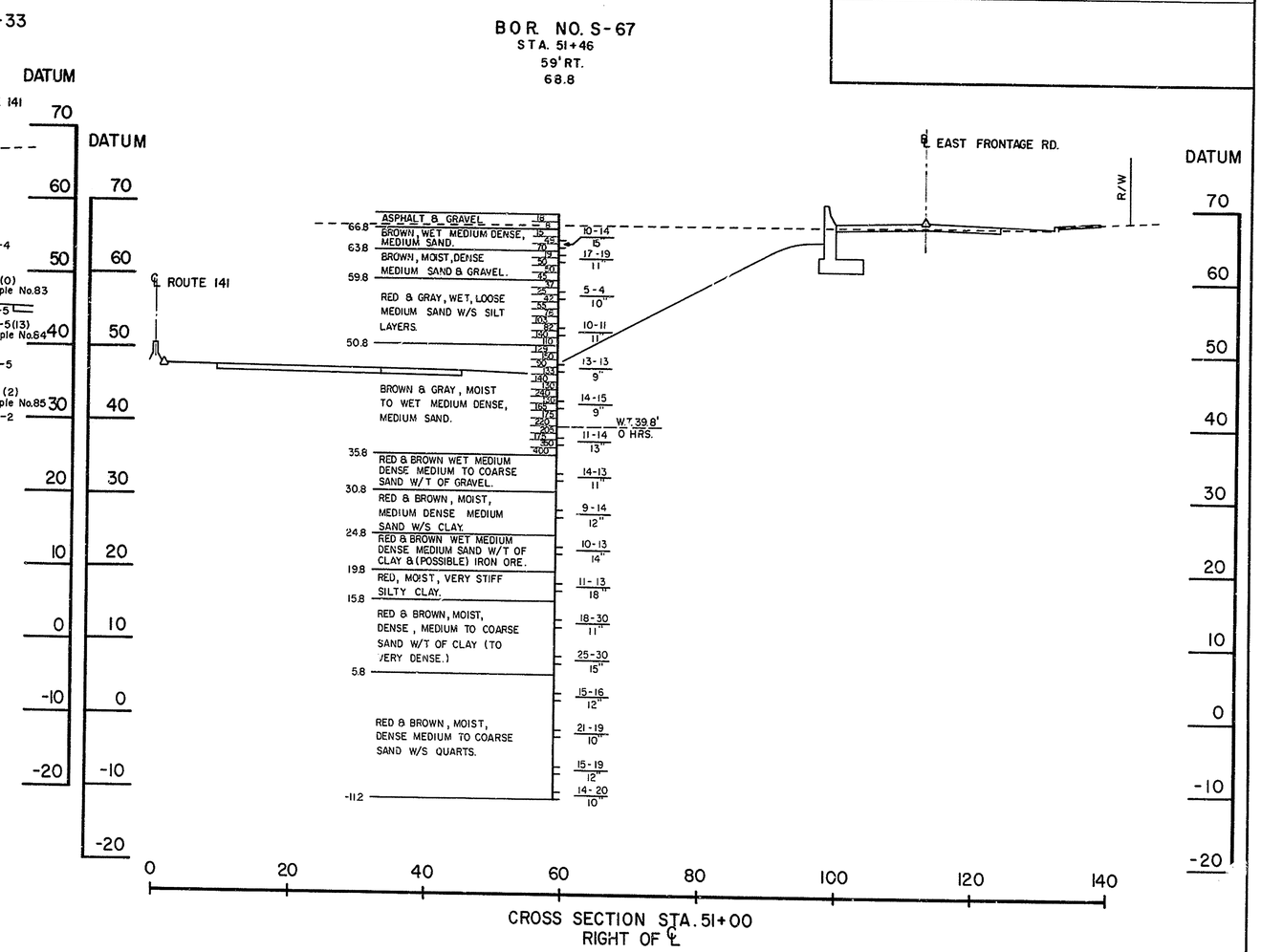

Sample No.	Boring No.	Station No.	Offset	Classification	L.L.	P.I.	% Aggr.	% C.Sand	% F.Sand	% Silt	% Clay	% Finer 0.02M.M.	% Nat.M.	Max.Dens. Lbs/C.F.	% O.M.	% C.B.R.
83	A-33	49+81 ℄ Rte.141	℄	A-4(0)	21	2	0	3	60	27	10	20	16	—	—	—
84	A-33	49+81 ℄ Rte.141	℄	A-7-5(13)	49	17	1	4	12	34	49	72	—	106	19	4
85	A-33	49+81 ℄ Rte.141	℄	A-4(2)	24	8	4	7	46	18	25	31	15	—	—	—

COUNTY	CONTRACT	P. R. A. REG. NO.	STATE	FED. AID PROJECT NO.	SHEET NO.	TOTAL SHEETS
NEW CASTLE	71-02-009	2	DEL.		209	301

RELOCATED DELAWARE ROUTE 141
THRU NEWPORT

PREL. TRACING H.J.F. DESIGN R.M.K. CHKD.

REVISIONS

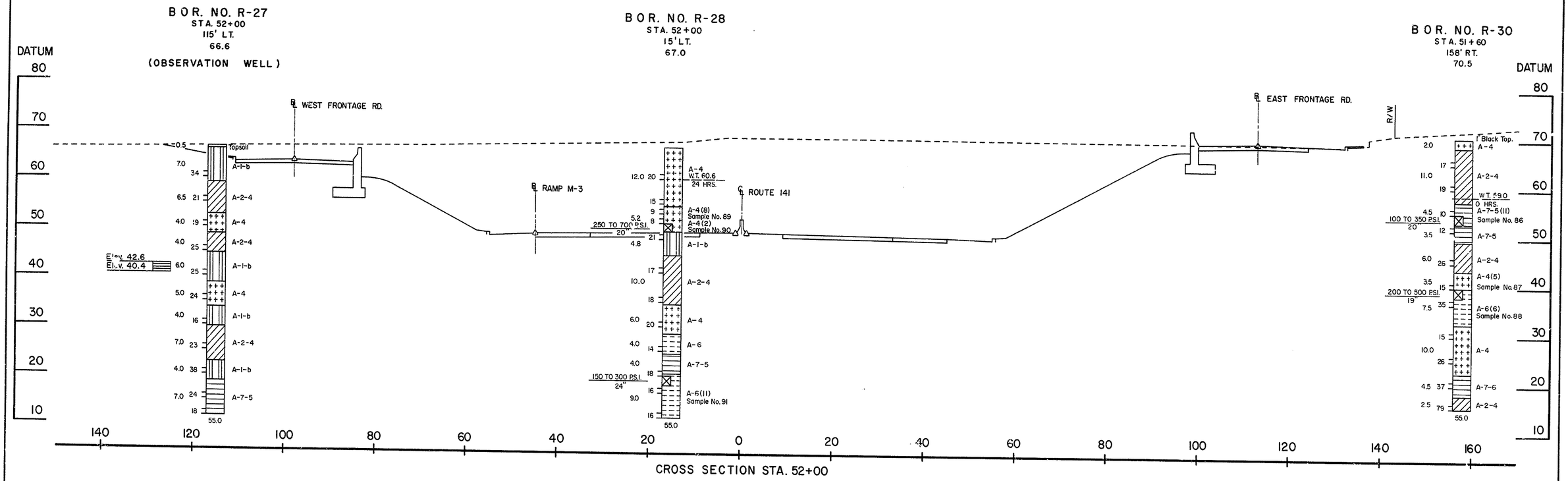

Sample No.	Boring No.	Station No.	Offset	Classification	L.L.	P.I.	% Aggr.	% C.Sand	% F.Sand	% Silt	% Clay	% Finer 0.02M.M.	% Nat.M.	Spec.Grav. -4
86	R-30	51+60 ℄ Rte.141	158' Rt.	A-7-5(11)	45	15	0	0	5	31	64	88	29	—
87	R-30	51+60 ℄ Rte.141	158' Rt.	A-4(5)	25	9	0	8	32	21	39	47	20	—
88	R-30	51+60 ℄ Rte.141	158' Rt.	A-6(6)	30	11	0	7	28	19	46	54	22	2.68
89	R-28	52+00 ℄ Rte.141	15' Lt.	A-4(8)	40	9	0	0	9	54	37	67	21	—
90	R-28	52+00 ℄ Rte.141	15' Lt.	A-4(2)	NP	NP	0	12	41	31	16	28	16	—
91	R-28	52+00 ℄ Rte.141	15' Lt.	A-6(11)	37	17	0	4	23	24	49	57	20	—

COUNTY	CONTRACT	P. R. A. RTE. NO.	STATE	FED. AID PROJECT NO.	SHEET NO.	TOTAL SHEETS
NEW CASTLE	71-02-009	2	DEL.		210	301

RELOCATED DELAWARE ROUTE 141
THRU NEWPORT

PREL. TRACING R.L.B. DESIGN R.M.K. CHKD.

REVISIONS

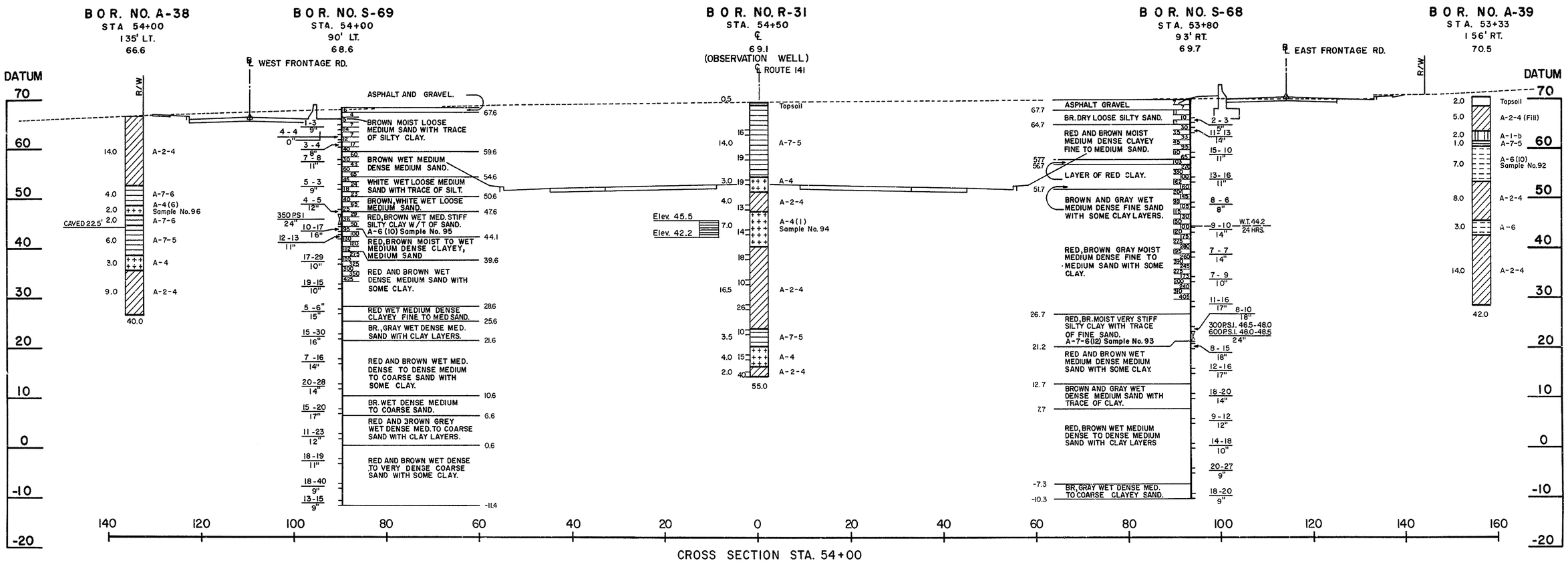

Sample No.	Boring No.	Station No.	Offset	Classification	L.L.	P.I.	% Aggr.	% C.Sand	% F.Sand	% Silt	% Clay	% Finer 0.02M.M.	% Nat.M.	Spec.Grav. -4
92	A-39	53+33 ℄ Rte.141	156' Rt.	A-6(10)	40	14	1	1	19	36	43	52	—	—
93	S-68	53+80 ℄ Rte.141	93' Rt.	A-7-6(12)	44	19	0	1	10	20	69	78	28	2.84
94	R-31	54+50 ℄ Rte.141	℄	A-4(1)	24	5	14	10	38	21	17	23	15	—
95	S-69	54+00 ℄ Rte.141	90' Lt.	A-6(10)	39	15	0	3	21	24	52	63	22	—
96	A-38	54+00 ℄ Rte.141	135' Lt.	A-4(6)	26	2	0	0	34	49	17	33	18	—

COUNTY	CONTRACT	P.R.A. REV. NO.	STATE	FED. AID PROJECT NO.	SHEET NO.	TOTAL SHEETS
NEW CASTLE	71-02-009	2	DEL.		211	301

RELOCATED DELAWARE ROUTE 141
THRU NEWPORT

PREL. TRACING H.J.F. DESIGN R.M.K. CHKD.

REVISIONS

Sample No.	Boring No.	Station No.	Offset	Classification	L.L.	P.I.	% Aggr.	% C.Sand	% F.Sand	% Silt	% Clay	% Finer 0.02M.M.	% Nat.M.	Max.Dens. Lbs/C.F.	% O.M.	% C.B.R.	Spec.Grav. - 4
97	R-35	55+14 ℄ Rte.141	162' Rt.	A-4(8)	31	9	0	0	27	37	36	54	22	—	—	—	2.62
98	R-35	55+14 ℄ Rte.141	162' Rt.	A-6(10)	36	16	0	3	18	22	57	66	23	—	—	—	2.76
99	R-34	55+50 ℄ Rte.141	58' Rt.	A-4(3)	28	10	5	16	29	21	29	40	16	—	—	—	—
100	R-34	55+50 ℄ Rte.141	58' Rt.	A-6(11)	39	21	0	5	27	20	48	57	20	—	—	—	2.70
101	R-33	55+60 ℄ Rte.141	58' Lt.	A-7-6(14)	48	20	0	2	12	32	54	75	29	—	—	—	2.77
102	R-33	55+60 ℄ Rte.141	58' Lt.	A-6(4)	29	11	0	8	37	19	36	44	19	—	—	—	—
103	R-33	55+60 ℄ Rte.141	58' Lt.	A-4(2)	22	8	1	15	38	18	28	34	15	—	—	—	—
104	R-33	55+60 ℄ Rte.141	58' Lt.	A-2-4	NP	NP	0	25	52	14	9	13	13	—	—	—	—
105	A-44	56+68 ℄ Rte.141	164' Rt.	A-6(3)	38	11	5	15	30	34	16	24	—	—	—	—	—
106	A-44	56+68 ℄ Rte.141	164' Rt.	A-2-4	14	NP	2	28	46	10	14	17	12	—	—	—	—
107	A-42	57+00 ℄ Rte.141	℄	A-4(5)	23	5	2	18	21	44	15	32	11	—	—	—	—
108	A-42	57+00 ℄ Rte.141	℄	A-7-5(10)	44	14	0	2	12	54	32	54	—	107	18	5	—
109	A-40	57+22 ℄ Rte.141	81' Lt.	A-6(10)	39	14	0	6	18	34	42	55	—	—	—	—	—

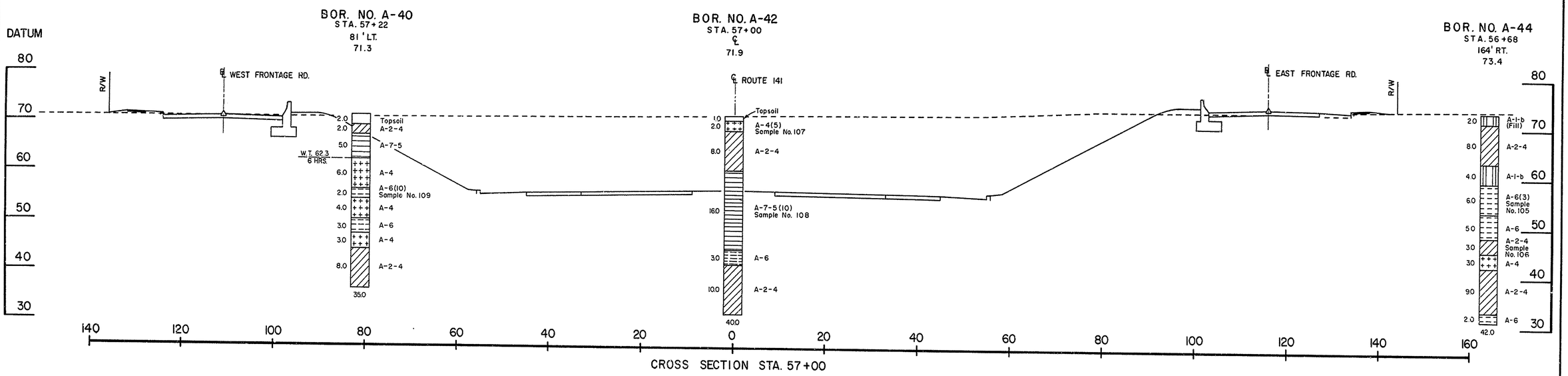

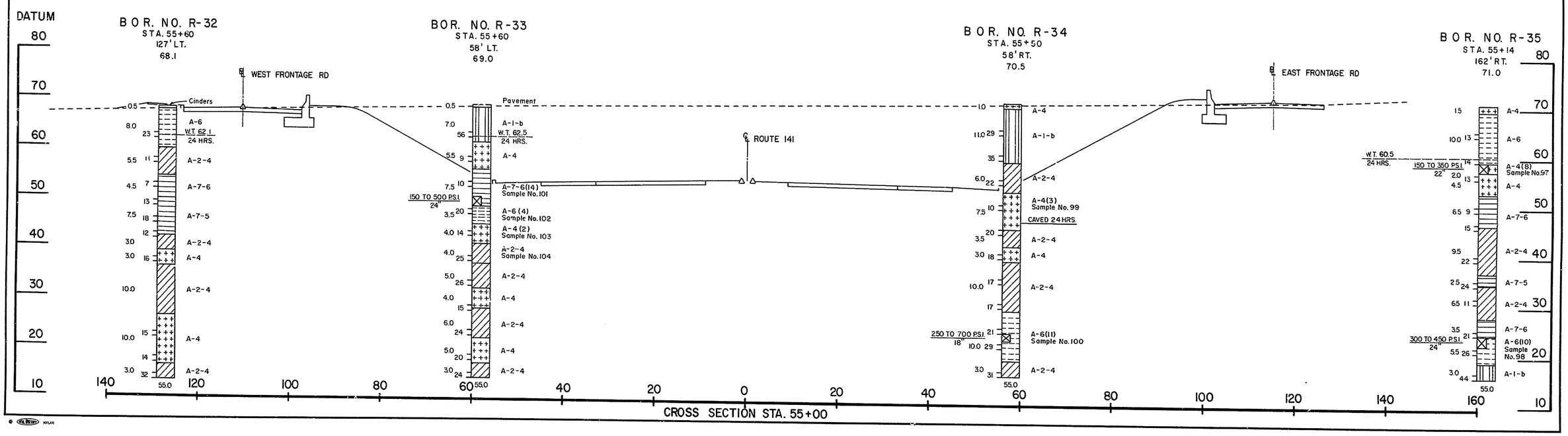

COUNTY	CONTRACT	P.R.A. REG. NO.	STATE	FED. AID PROJECT NO.	SHEET NO.	TOTAL SHEETS
NEW CASTLE	71-02-009	2	DEL.		212	301

RELOCATED DELAWARE ROUTE 141
THRU NEWPORT

PREL. TRACING R.L.B. DESIGN R.M.K. CHKD.

REVISIONS

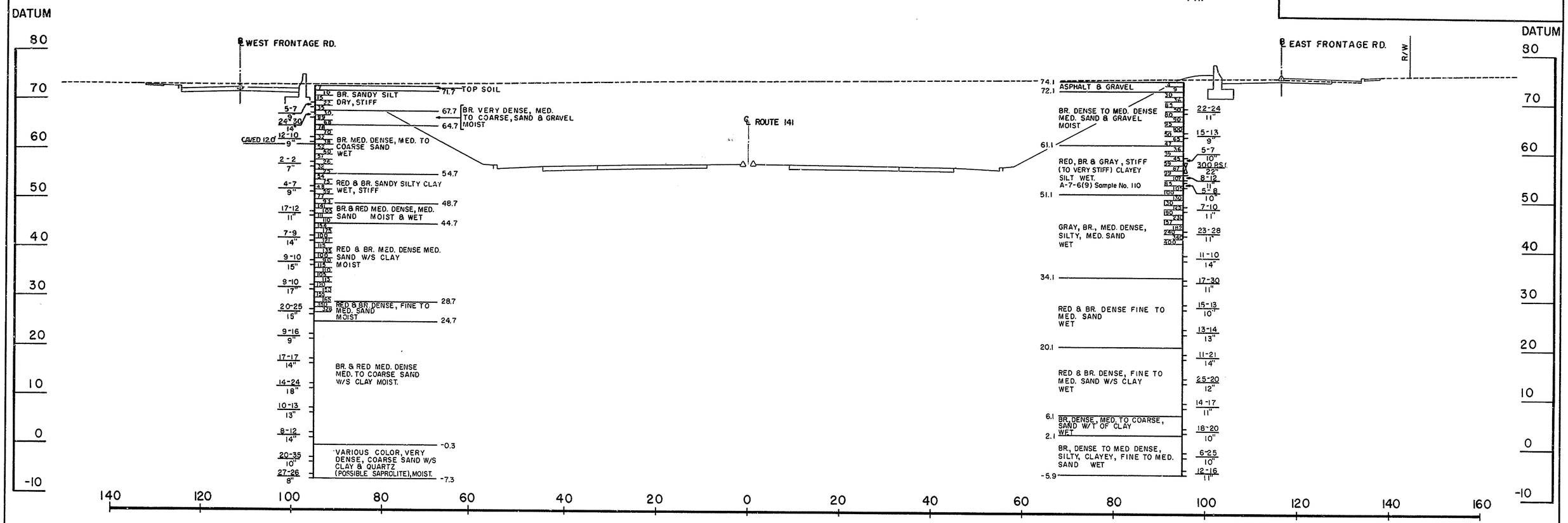

CROSS SECTION STA. 58+00

Sample No.	Boring No.	Station No.	Offset	Classification	L.L.	P.I.	% Aggr.	% C.Sand	% F.Sand	% Silt	% Clay	% Finer 0.02M.M.	% Nat.M.	Spec.Grav. - 4
110	S-72	57+80 ℄ Rte. 141	95' Rt.	A-7-6(9)	41	12	0	1	6	37	56	76	27	2.75

COUNTY	CONTRACT	P.R.A. REV. NO.	STATE	FED. AID PROJECT NO.	SHEET NO.	TOTAL SHEETS
NEW CASTLE	71-02-009	2	DEL.		213	301

RELOCATED DELAWARE ROUTE 141
THRU NEWPORT

PREL. TRACING H.J.F. DESIGN R.M.K. CHKD.

REVISIONS

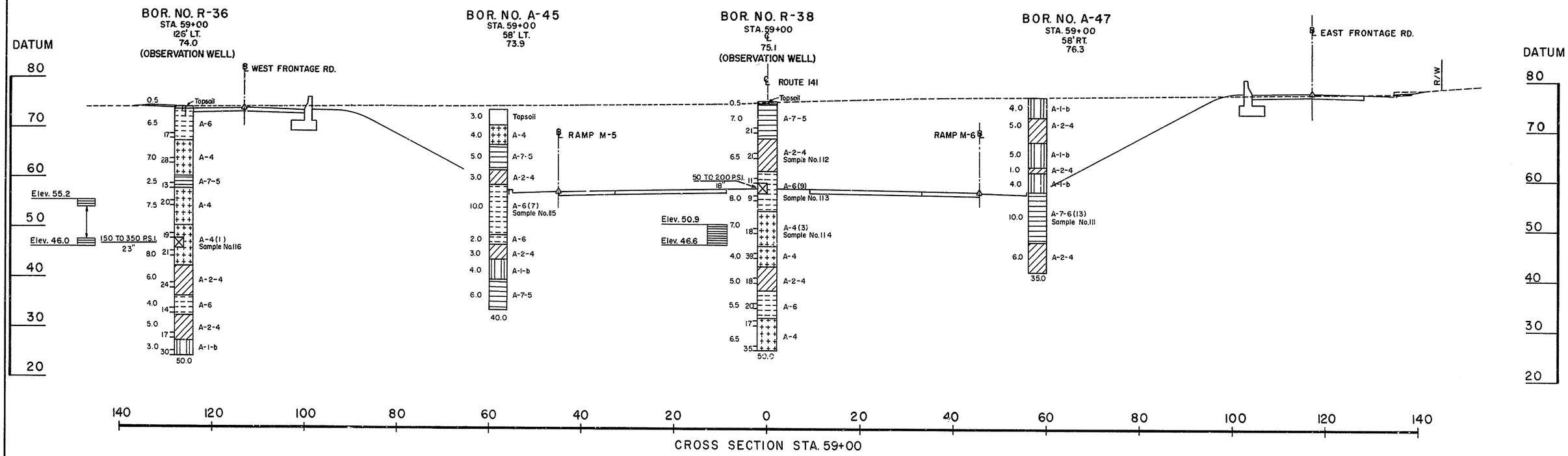

Sample No.	Boring No.	Station No.	Offset	Classification	L.L.	P.I.	% Aggr.	% C.Sand	% F.Sand	% Silt	% Clay	% Finer 0.02M.M.	% Nat.M.	Max.Dens. Lbs/C.F.	% O.M.	% C.B.R.	Spec.Grav. - 4
111	A-47	59+00 ℄ Rte.141	58' Rt.	A -7 -6(13)	45	19	0	5	13	41	41	58	—	110	18	6	—
112	R-38	59+00 ℄ Rte.141	℄	A -2 -4	NP	NP	1	25	52	13	9	16	10	—	—	—	—
113	R-38	59+00 ℄ Rte.141	℄	A -6(9)	33	13	0	10	18	24	48	57	21	—	—	—	—
114	R-38	59+00 ℄ Rte.141	℄	A -4(3)	24	9	0	2	50	24	24	31	14	—	—	—	—
115	A-45	59+00 ℄ Rte.141	58' Lt.	A -6(7)	34	13	0	8	29	21	42	50	—	114	15	5	—
116	R-36	59+00 ℄ Rte.141	126' Lt.	A -4(1)	20	6	0	14	47	15	24	29	13	—	—	—	2.69

COUNTY	CONTRACT	P.B.A. REG. NO.	STATE	FED. AID PROJECT NO.	SHEET NO.	TOTAL SHEETS
NEWCASTLE	71-02-009	2	DEL.		214	301

RELOCATED DELAWARE ROUTE 141
THRU NEWPORT

PREL. TRACING R.L.B. DESIGN R.M.K. CHKD.

REVISIONS

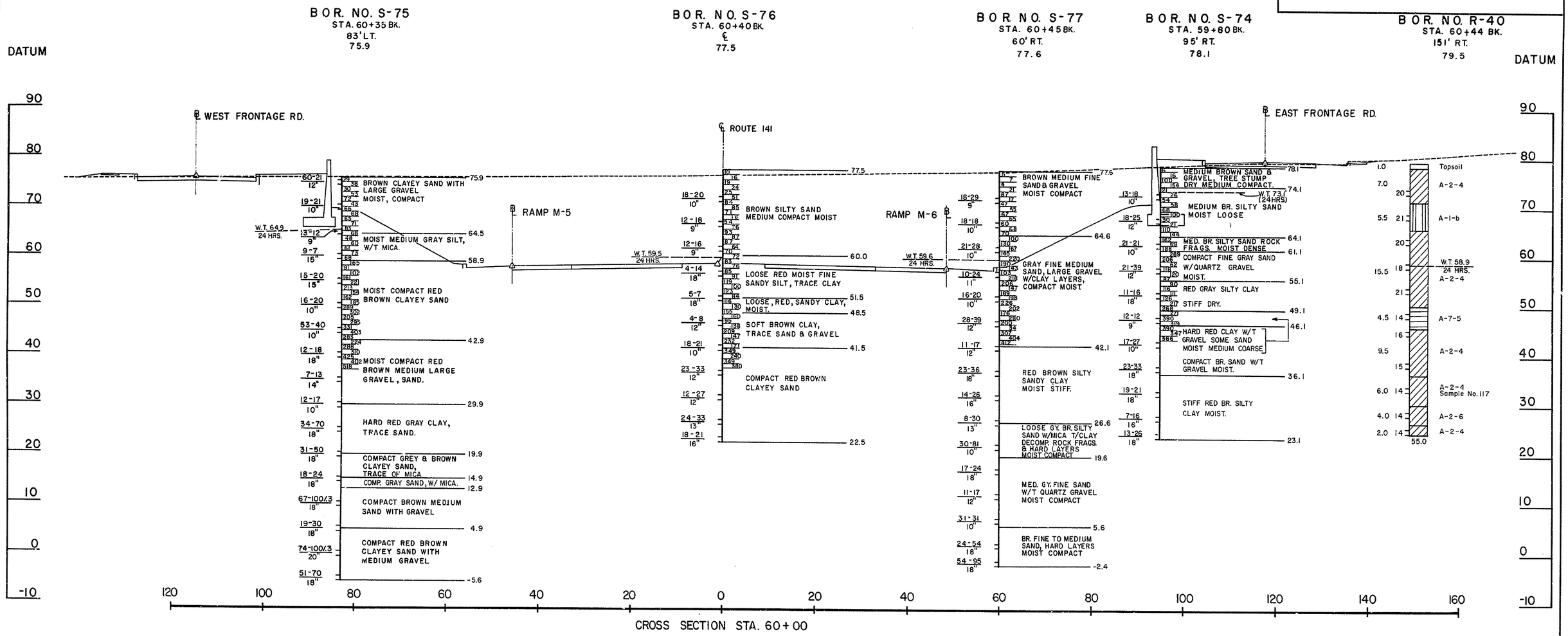

Sample No.	Boring No.	Station No.	Offset	Classification	L.L.	P.I.	% Aggr.	% C.Sand	% F.Sand	% Silt	% Clay	% Finer 0.02M.M.	% Nat.M.
117	R-40	60+44 ℄ Rte. 141	151' Rt.	A-2-4	NP	NP	2	39	37	11	11	16	15

COUNTY	CONTRACT	P.B.A. REG. NO.	STATE	FED. AID PROJECT NO.	SHEET NO.	TOTAL SHEETS
NEWCASTLE	71-02-009	2	DEL.		215	301

RELOCATED DELAWARE ROUTE 141
THRU NEWPORT

PREL. TRACING H.J.F. DESIGN R.M.K. CHKD.

REVISIONS

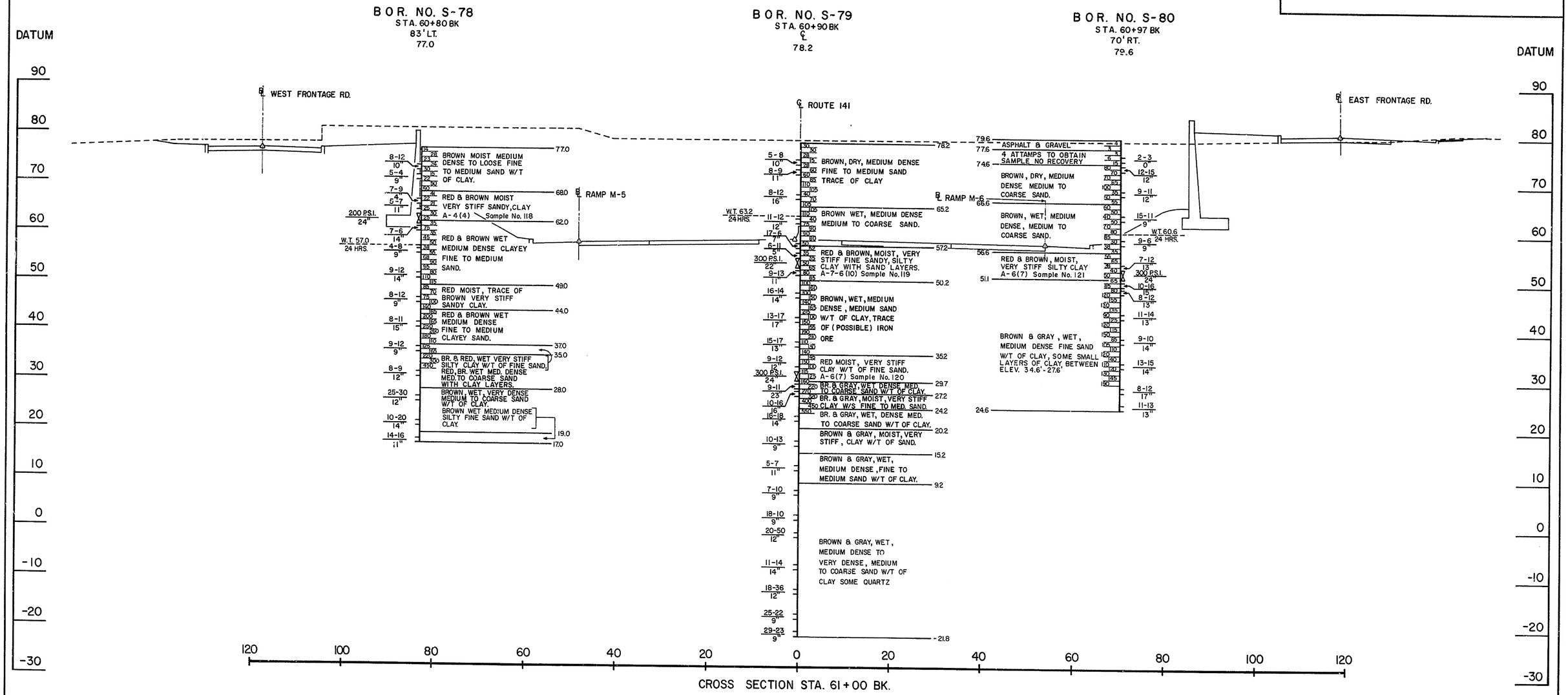

Sample No.	Boring No.	Station No.	Offset	Classification	L.L.	P.I.	% Aggr.	% C.Sand	% F.Sand	% Silt	% Clay	% Finer 0.02M.M.	% Nat.M.	Spec.Grav. - 4
118	S-78	60+80 BK. ℄ Rte.141	83' Lt.	A-4(4)	21	7	0	14	29	21	36	44	15	2.70
119	S-79	60+90 BK. ℄ Rte.141	℄	A-7-6(10)	43	14	0	2	16	40	42	65	24	2.74
120	S-79	60+90 BK. ℄ Rte.141	℄	A-6(7)	34	13	0	6	29	28	37	49	20	2.65
121	S-80	60+97 BK. ℄ Rte.141	70' Rt.	A-6(7)	34	15	0	10	32	14	44	48	19	—

COUNTY	CONTRACT	P.R.S. REG. NO.	STATE	FED AID PROJECT NO.	SHEET NO.	TOTAL SHEETS
NEWCASTLE	71-02-009	2	DEL.		216	301

RELOCATED DELAWARE ROUTE 141
THRU NEWPORT

PREL. TRACING R.L.B. DESIGN R.M.K. CHKD.

REVISIONS

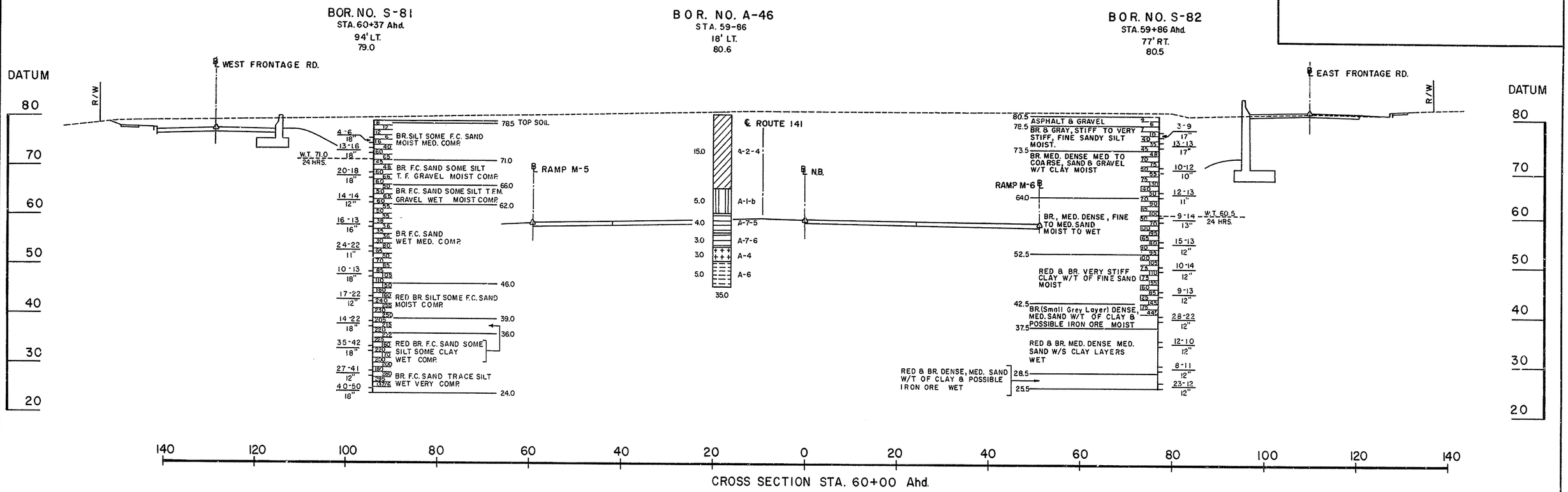

COUNTY	CONTRACT	P. B. A. RES. NO.	STATE	FED. A/D PROJECT NO.	SHEET NO.	TOTAL SHEETS
NEWCASTLE	71-02-009	2	DEL.		217	301

RELOCATED DELAWARE ROUTE 141
THRU NEWPORT

PREL. TRACING H.J.F. DESIGN R.M.K. CHKD.

REVISIONS

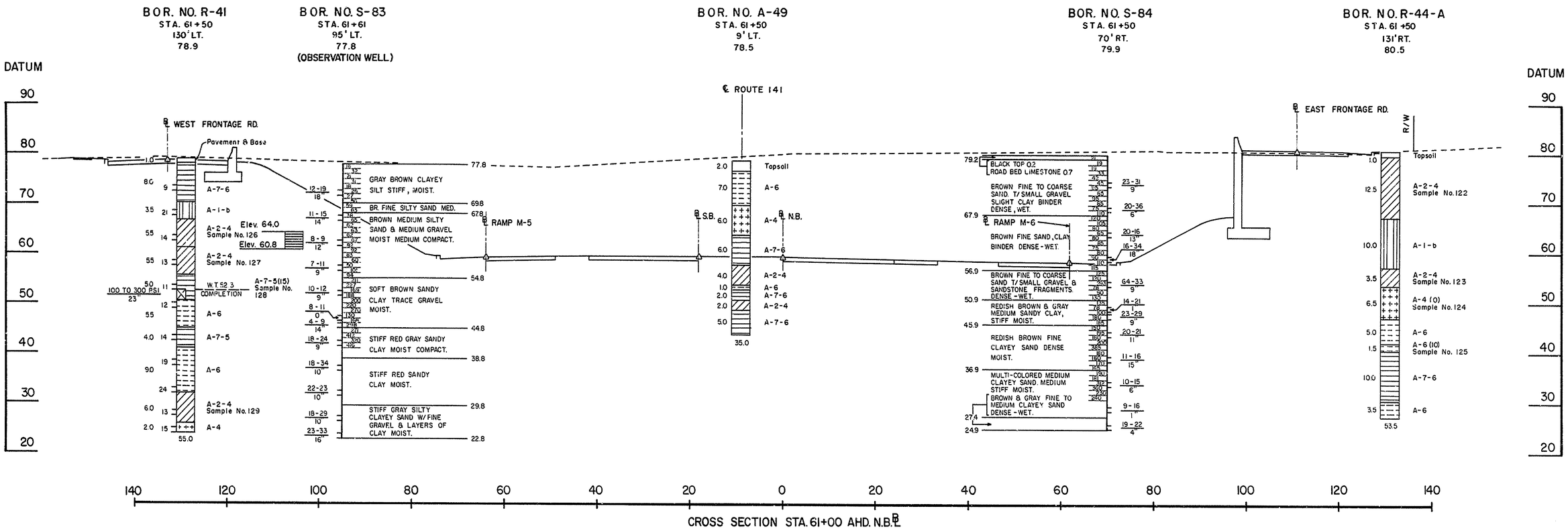

Sample No.	Boring No.	Station No.	Offset	Classification	L.L.	P.I.	% Aggr.	% C.Sand	% F.Sand	% Silt	% Clay	% Finer 0.02M.M.	% Nat.M.	Max.Dens. Lbs/C.F.	% O.M.	% C.B.R.
122	R-44-A	61+50 NB. ℄	131' Rt.	A-2-4	29	5	25	29	16	18	12	17	—	126	11	25
123	R-44-A	61+50 NB. ℄	131' Rt.	A-2-4	17	5	16	30	25	15	14	21	14	—	—	—
124	R-44-A	61+50 NB. ℄	131' Rt.	A-4(0)	19	5	3	19	42	17	19	25	16	—	—	—
125	R-44-A	61+50 NB. ℄	131' Rt.	A-6(10)	40	15	0	5	16	28	51	69	25	—	—	—
126	R-41	61+50 NB. ℄	130' Lt.	A-2-4	17	3	5	16	46	17	16	21	15	—	—	—
127	R-41	61+50 NB. ℄	130' Lt.	A-2-4	NP	NP	0	16	57	17	10	15	13	—	—	—
128	R-41	61+50 NB. ℄	130' Lt.	A-7-5(15)	53	21	0	5	17	19	59	68	29	—	—	—
129	R-41	61+50 NB. ℄	130' Lt.	A-2-4	NP	NP	0	26	42	12	20	24	12	—	—	—

COUNTY	CONTRACT	P. R. A. REG. NO.	STATE	FED. AID PROJECT NO.	SHEET NO.	TOTAL SHEETS
NEWCASTLE	71-02-009	2	DEL.		218	301

RELOCATED DELAWARE ROUTE 141
THRU NEWPOPT

PREL. TRACING R.L.B. DESIGN R.M.K. CHK'D

REVISIONS

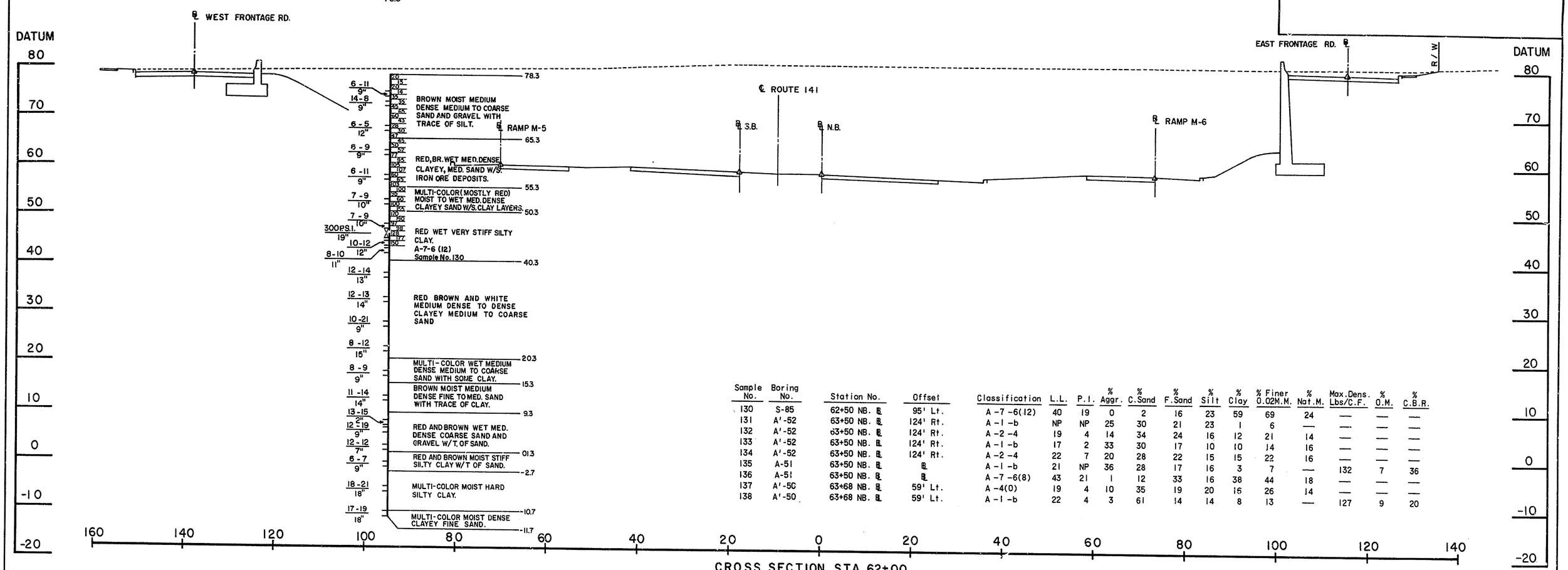

Sample No.	Boring No.	Station No.	Offset	Classification	L.L.	P.I.	% Aggr.	% C.Sand	% F.Sand	% Silt	% Clay	% Finer 0.02M.M.	% Nat.M.	Max.Dens. Lbs/C.F.	% O.M.	% C.B.R.
130	S-85	62+50 NB. ℄	95' Lt.	A-7-6(12)	40	19	0	2	16	23	59	69	24	—	—	—
131	A'-52	63+50 NB. ℄	124' Rt.	A-1-b	NP	NP	25	30	21	23	1	6	—	—	—	—
132	A'-52	63+50 NB. ℄	124' Rt.	A-2-4	19	4	14	34	24	16	12	21	14	—	—	—
133	A'-52	63+50 NB. ℄	124' Rt.	A-1-b	17	2	33	30	17	10	10	14	16	—	—	—
134	A'-52	63+50 NB. ℄	124' Rt.	A-2-4	22	7	20	28	22	15	15	22	16	—	—	—
135	A-51	63+50 NB. ℄	℄	A-1-b	21	NP	36	28	17	16	3	7	—	132	7	36
136	A-51	63+50 NB. ℄	℄	A-7-6(8)	43	21	1	12	33	16	38	44	18	—	—	—
137	A'-50	63+68 NB. ℄	59' Lt.	A-4(0)	19	4	10	35	19	20	16	26	14	—	—	—
138	A'-50	63+68 NB. ℄	59' Lt.	A-1-b	22	4	3	61	14	14	8	13	—	127	9	20

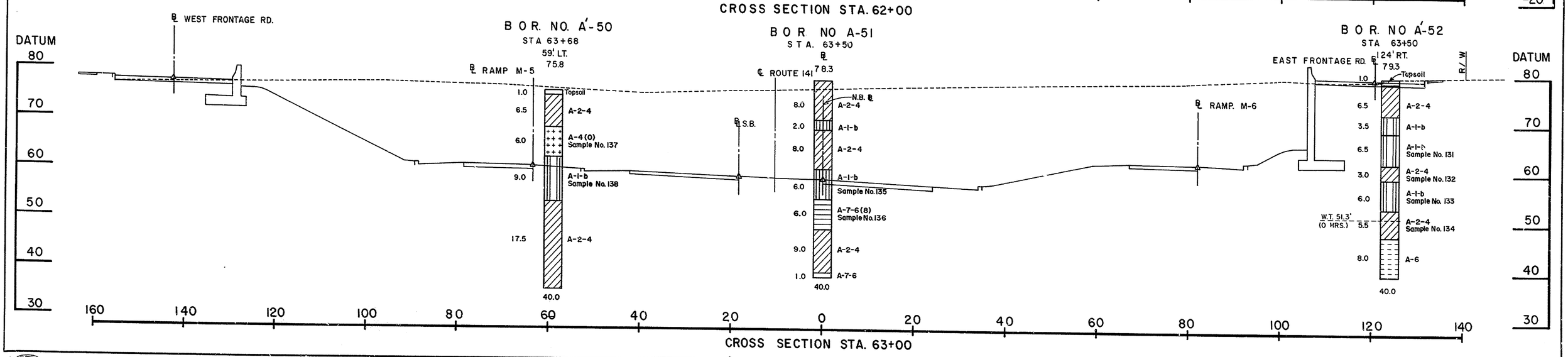

COUNTY	CONTRACT	F.B.A. REG. NO.	STATE	FED. AID PROJECT NO.	SHEET NO.	TOTAL SHEETS
NEWCASTLE	71-02-009	2	DEL.		219	301

RELOCATED DELAWARE ROUTE 141
THRU NEWPORT

PREL. TRACING R.L.B. DESIGN R.M.K. CHKD.

REVISIONS

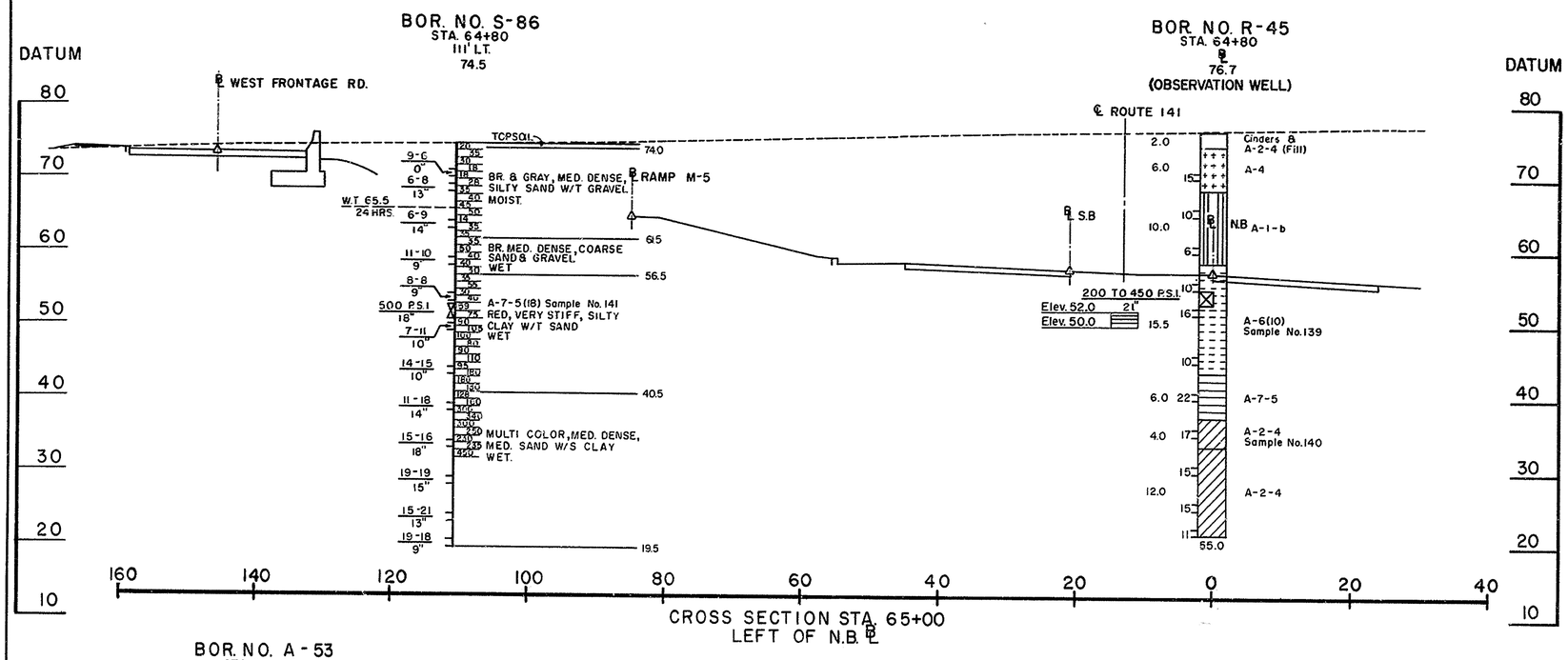

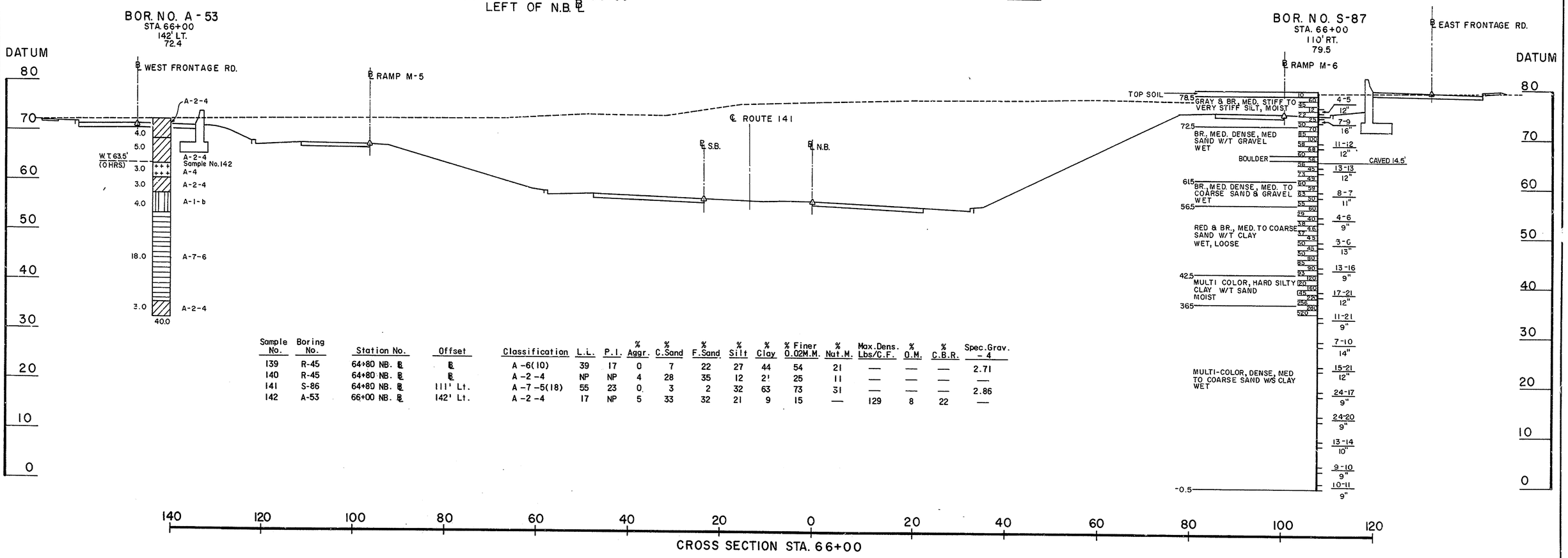

Sample No.	Boring No.	Station No.	Offset	Classification	L.L.	P.I.	% Aggr.	% C.Sand	% F.Sand	% Silt	% Clay	% Finer 0.02M.M.	% Nat.M.	Max.Dens. Lbs/C.F.	% O.M.	% C.B.R.	Spec.Grav. - 4
139	R-45	64+80 NB. ℄	℄	A-6(10)	39	17	0	7	22	27	44	54	21	—	—	—	2.71
140	R-45	64+80 NB. ℄	℄	A-2-4	NP	NP	4	28	35	12	21	25	11	—	—	—	—
141	S-86	64+80 NB. ℄	111' Lt.	A-7-5(18)	55	23	0	3	2	32	63	73	31	—	—	—	2.86
142	A-53	66+00 NB. ℄	142' Lt.	A-2-4	17	NP	5	33	32	21	9	15	—	129	8	22	—

COUNTY	CONTRACT	P. R. R. REG. F/O.	STATE	FED. AID PROJECT NO.	SHEET NO.	TOTAL SHEETS
NEW CASTLE	71-02-009	2	DEL.		220	301

RELOCATED DELAWARE ROUTE 141
THRU NEWPORT

PREL. TRACING H.J.F. DESIGN P.M.K. CHKD.

REVISIONS

BOR. NO. A-54
STA. 66+50
62' LT.
74.0

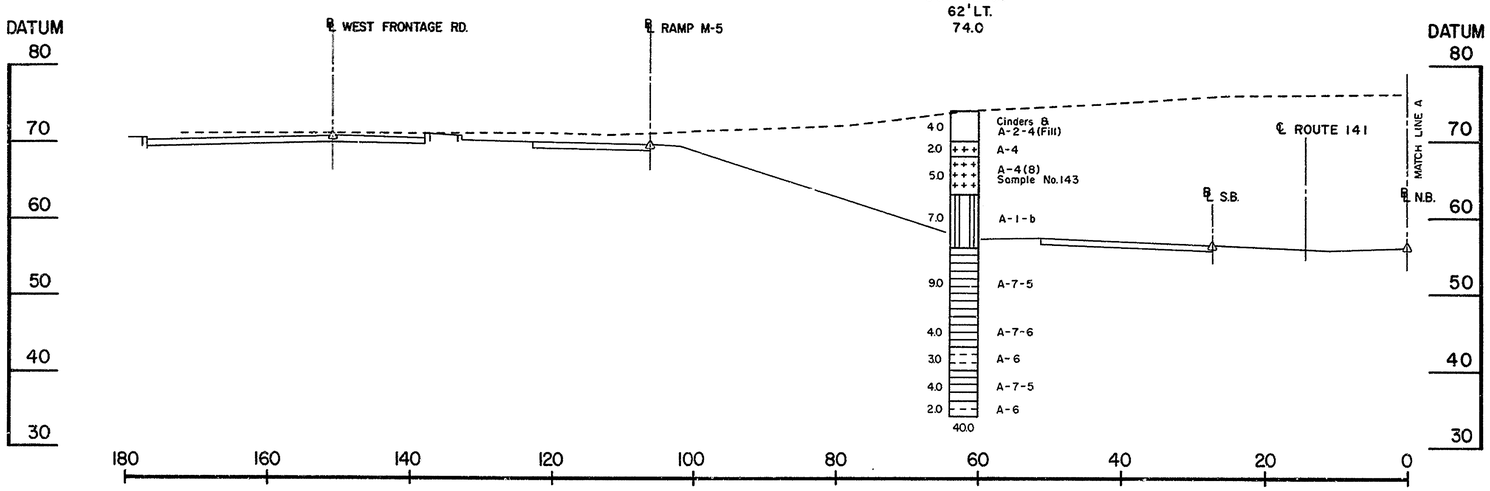

CROSS SECTION STA. 67+00
LEFT OF N.B. ℄

BOR. NO. A-55
STA. 67+00
120' RT.
79.2

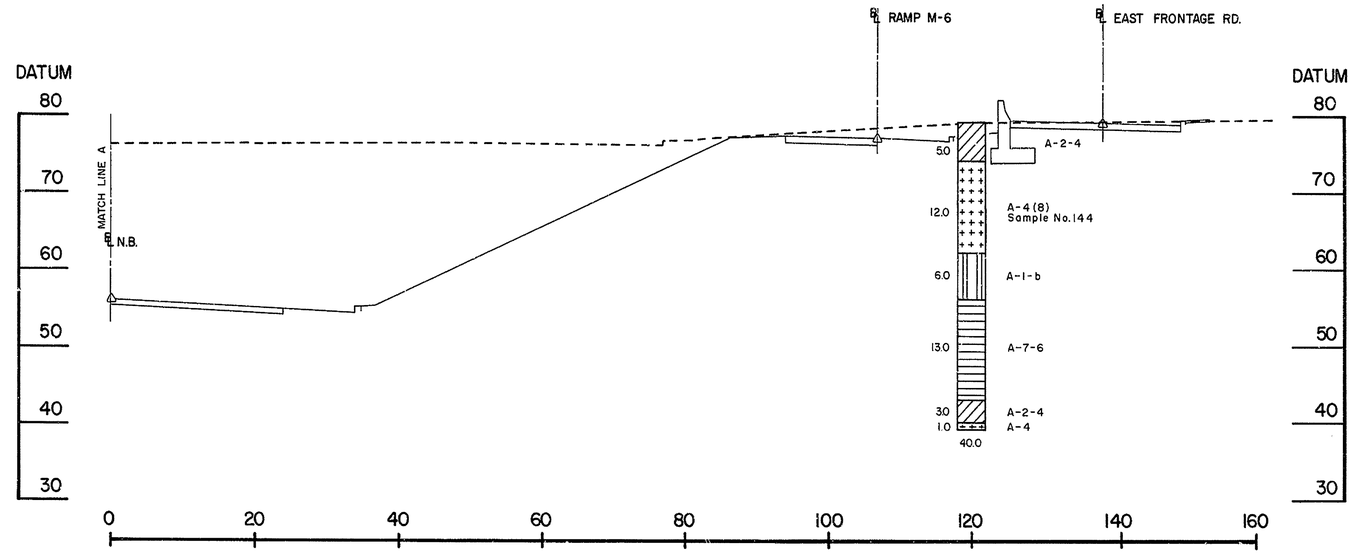

CROSS SECTION STA. 67+00
RIGHT OF N.B. ℄

Sample No.	Boring No.	Station No.	Offset	Classification	L.L.	P.I.	% Aggr.	% C.Sand	% F.Sand	% Silt	% Clay	% Finer 0.02M.M.	% Nat.M.	Max.Dens. Lbs/C.F.	% O.M.	% C.B.R.
143	A-54	66+50 NB. ℄	62' Lt.	A-4(8)	28	6	2	6	5	63	24	45	—	116	14	6
144	A-55	67+00 NB. ℄	120' Rt.	A-4(8)	31	7	0	2	4	75	19	44	—	—	—	—

COUNTY	CONTRACT	P.R.A. REG. NO.	STATE	FED. AID PROJECT NO.	SHEET NO.	TOTAL SHEETS
NEW CASTLE	71-02-009	2	DEL.		221	301

RELOCATED DELAWARE ROUTE 141
THRU NEWPORT

PREL. TRACING H.J.F. DESIGN R.M.K. CHKD.

REVISIONS

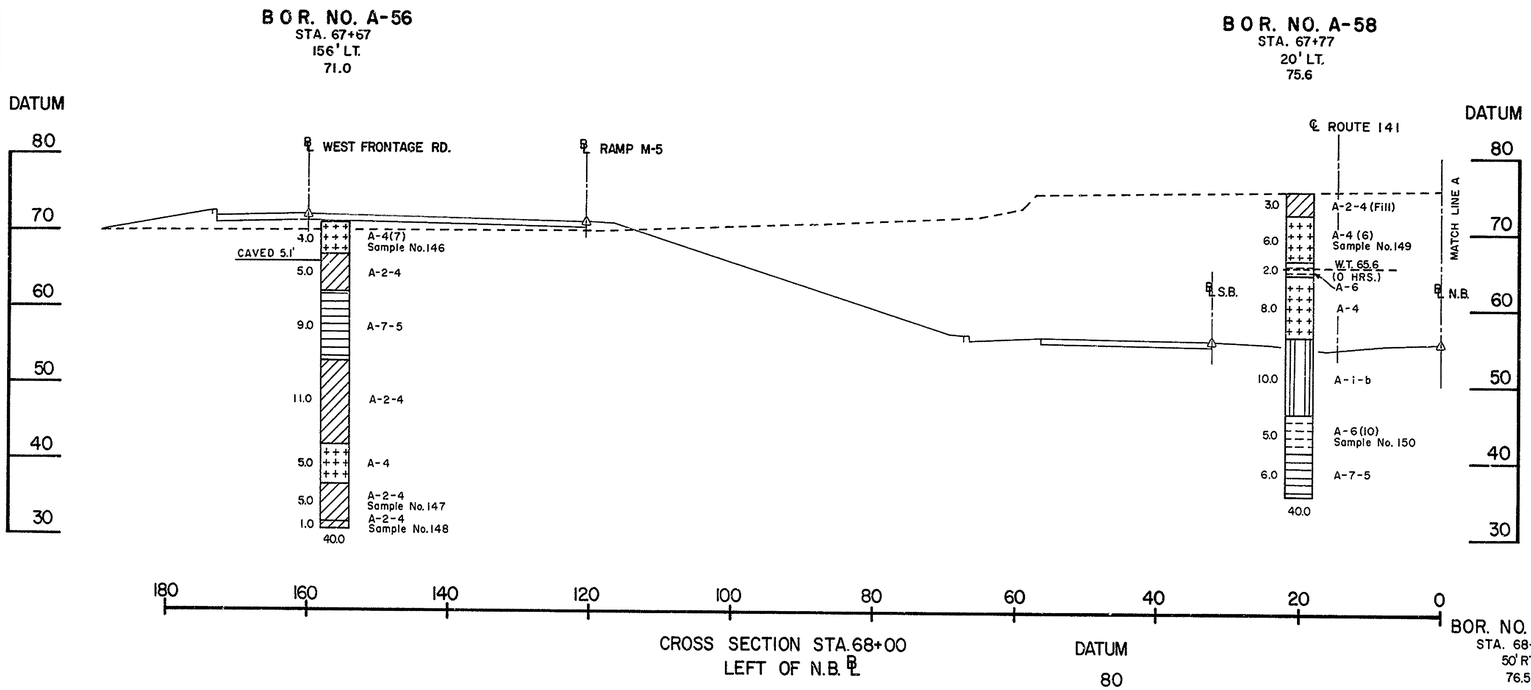

CROSS SECTION STA.68+00
LEFT OF N.B. ℄

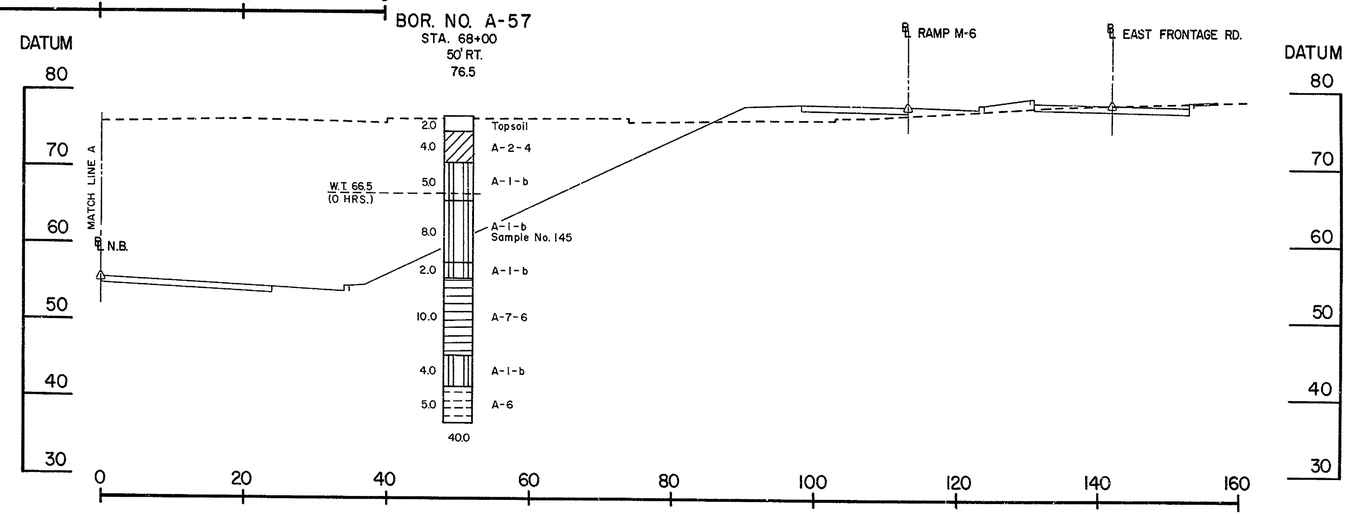

CROSS SECTION STA.68+00
RIGHT OF N.B. ℄

Sample No.	Boring No.	Station No.	Offset	Classification	L.L.	P.I.	% Aggr.	% C.Sand	% F.Sand	% Silt	% Clay	% Finer 0.02M.M.	% Nat.M.	Max.Dens. Lbs/C.F.	% O.M.	% C.B.R.
145	A-57	68+00 NB. ℄	50' Rt.	A-1-b	19	NP	19	50	20	8	3	5	—	—	—	—
146	A-56	67+67 NB. ℄	156' Lt.	A-4(7)	21	4	2	13	16	61	8	25	—	122	10	13
147	A-56	67+67 NB. ℄	156' Lt.	A-2-4	17	2	5	25	40	13	17	25	13	—	—	—
148	A-56	67+67 NB. ℄	156' Lt.	A-2-4	17	5	6	31	30	14	19	25	14	—	—	—
149	A-58	67+77 NB. ℄	20' Lt.	A-4(6)	26	6	7	17	13	41	22	39	—	—	—	—
150	A-58	67+77 NB. ℄	20' Lt.	A-6(10)	37	15	2	6	17	26	49	63	25	—	—	—

COUNTY	CONTRACT	F.P.A. RTE. NO.	STATE	FED. AID PROJECT NO.	SHEET NO.	TOTAL SHEETS
NEWCASTLE	71-02-009	2	DEL.		222	301

RELOCATED DELAWARE ROUTE 141
THRU NEWPORT

PREL. TRACING R.L.B. DESIGN R.M.K. CHKD.

REVISIONS

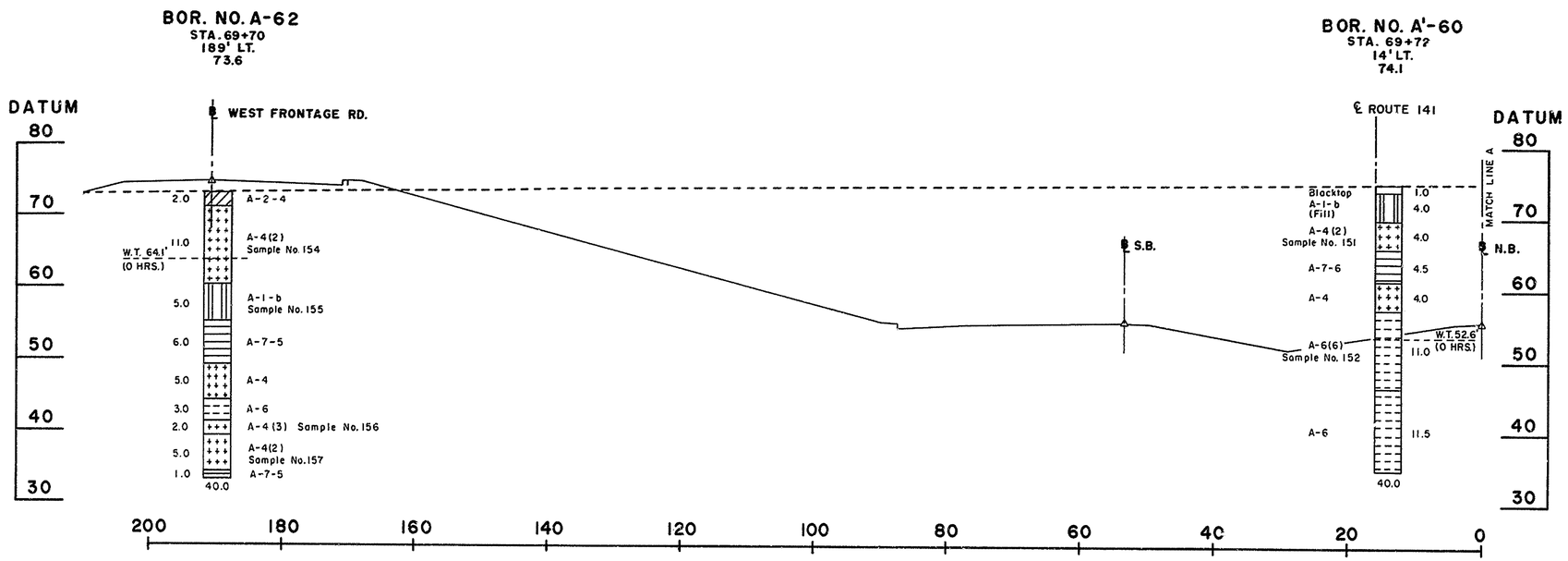

CROSS SECTION STA. 70+00
LEFT N.B. ℄

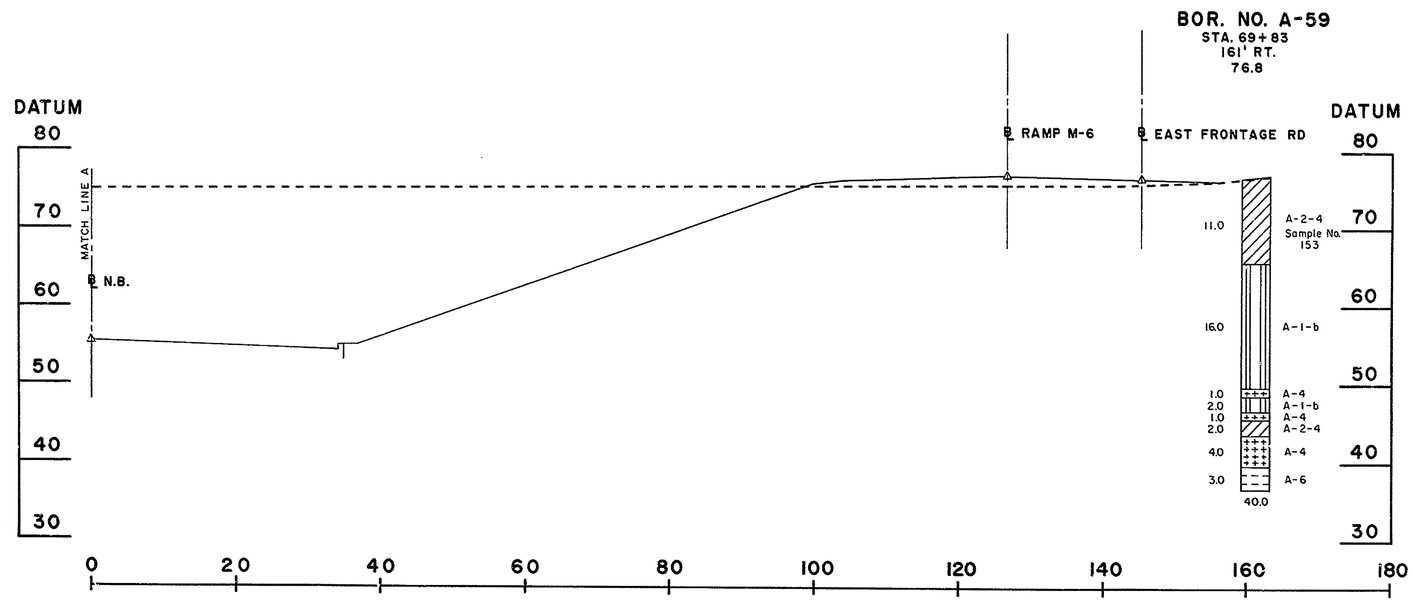

CROSS SECTION STA. 70+00
RIGHT N.B. ℄

Sample No.	Boring No.	Station No.	Offset	Classification	L.L.	P.I.	% Aggr.	% C.Sand	% F.Sand	% Silt	% Clay	% Finer 0.02M.M.	% Nat.M.	Max.Dens. Lbs/C.F.	% O.M.	% C.B.R.
151	A'-60	69+72 NB. ℄	14' LT.	A-4(2)	20	3	14	26	17	30	13	28	16	—	—	—
152	A'-60	69+72 NB. ℄	14' LT.	A-6(6)	30	13	3	15	21	34	27	33	—	120	12	8
153	A-59	69+83 NB. ℄	161' RT.	A-2-4	21	2	23	22	20	32	3	16	—	132	8	14
154	A-62	69+70 NB. ℄	189' LT.	A-4(2)	23	5	13	23	18	39	7	17	—	—	—	—
155	A-62	69+70 NB. ℄	189' LT.	A-1-b	NP	NP	22	36	25	10	7	11	12	—	—	—
156	A-62	69+70 NB. ℄	189' LT.	A-4(3)	21	5	1	15	34	24	26	38	17	—	—	—
157	A-62	69+70 NB. ℄	189' LT.	A-4(2)	21	4	12	16	28	19	15	28	15	—	—	—

COUNTY	CONTRACT	P.R.A. REG. NO.	STATE	FED. AID PROJECT NO.	SHEET NO.	TOTAL SHEETS
NEW CASTLE	71-02-009	2	DEL.		223	301

RELOCATED DELAWARE ROUTE 141
THRU NEWPORT

PREL. TRACING R.L.H. DESIGN P.C.S. CHKD. D.W.

REVISIONS

Increased size of water line in W. Frontage Rd - Sta. 40+50 to 49+40 RR 3-20-74
9-4-74 Construct well vault over existing well in East Frontage Road R.R.

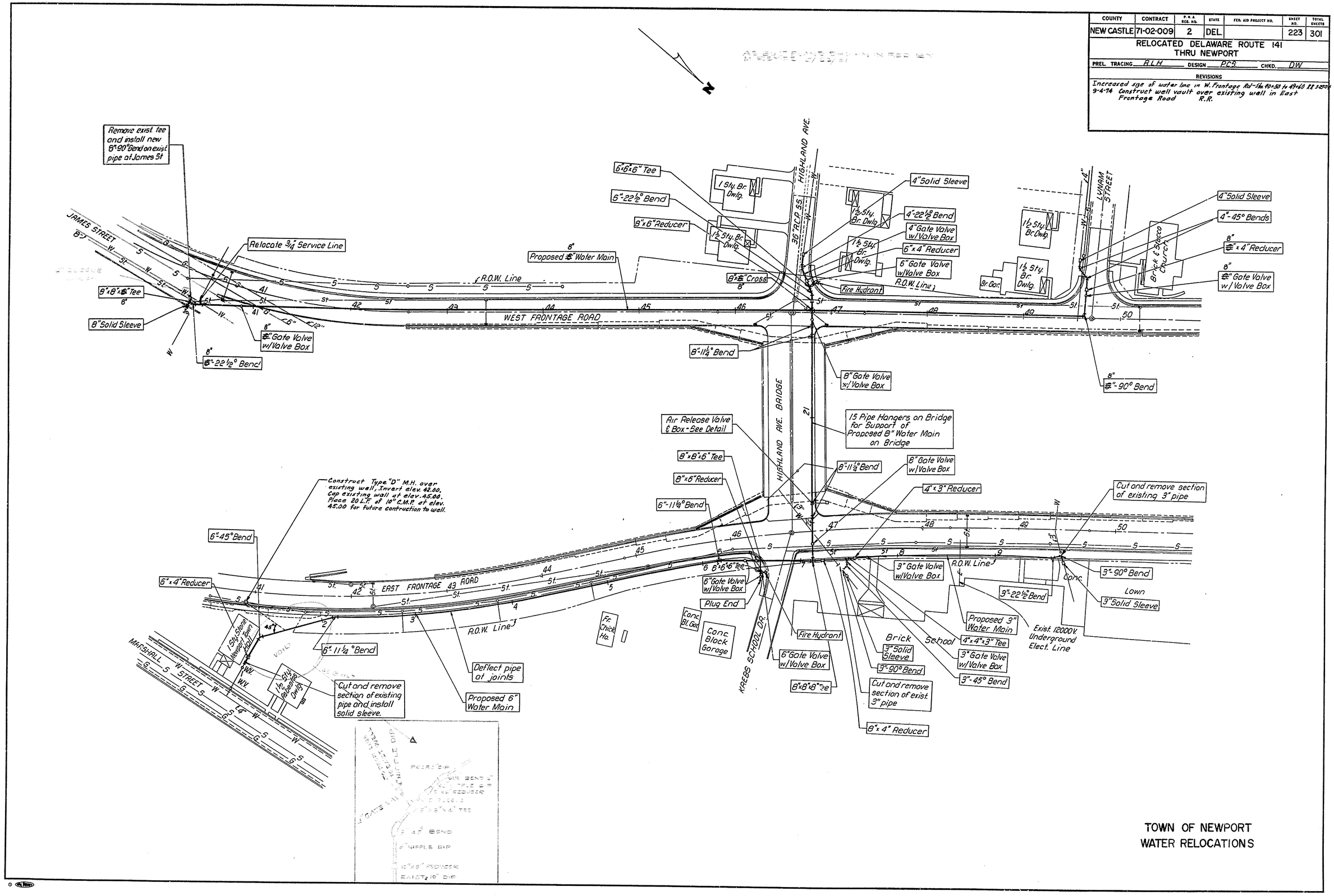

TOWN OF NEWPORT
WATER RELOCATIONS

COUNTY	CONTRACT	P.R.A. REG. NO.	STATE	FED. AID PROJECT NO.	SHEET NO.	TOTAL SHEETS
NEWCASTLE	71-02-009	2	DEL.		224	301

RELOCATED DELAWARE ROUTE 141
THRU NEWPORT

PREL. TRACING R.L.H. DESIGN P.C.S. CHKD. D.W.

REVISIONS

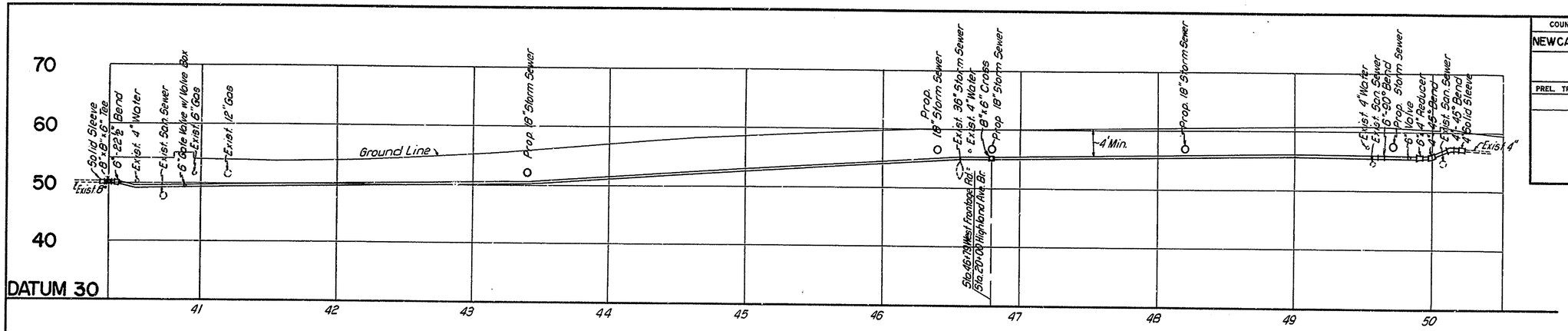

WEST FRONTAGE ROAD WATER RELOCATION

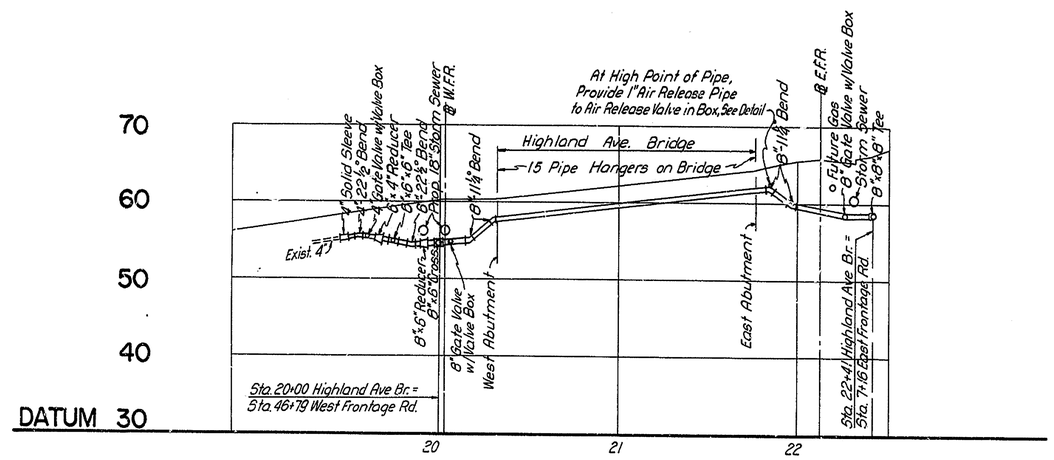

HIGHLAND AVE. WATER RELOCATION

NOTE:
Fittings installed in the vertical position shall be provided with mechanical joint retainer glands.

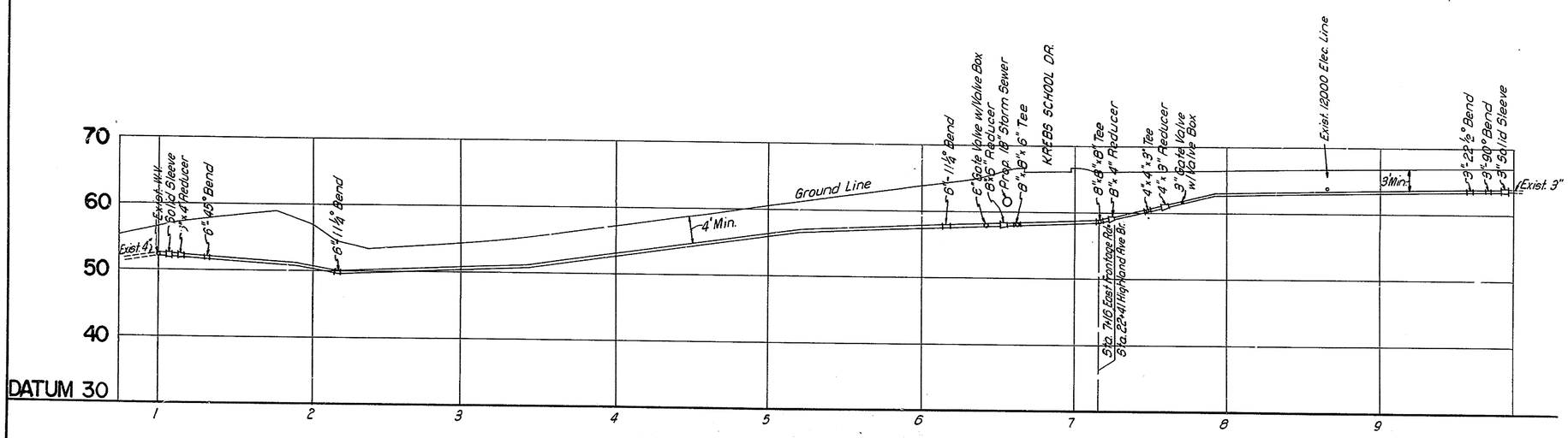

EAST FRONTAGE ROAD WATER RELOCATION

TOWN OF NEWPORT
WATER RELOCATIONS

COUNTY	CONTRACT	P.R.A. REG. NO.	STATE	FED. AID PROJECT NO.	SHEET NO.	TOTAL SHEETS
NEW CASTLE	71-02-009	2	DEL.		225	301

RELOCATED DELAWARE ROUTE 141
THRU NEWPORT

PREL. TRACING R.P.C. DESIGN D.T.W. CHKD. D.T.W.

REVISIONS

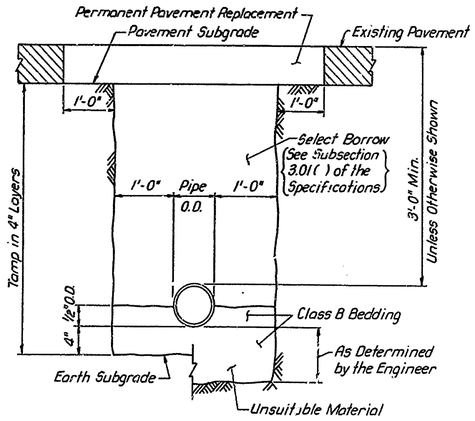

TYPICAL DETAIL
WATER MAIN TRENCH IN PAVED STREET
No Scale

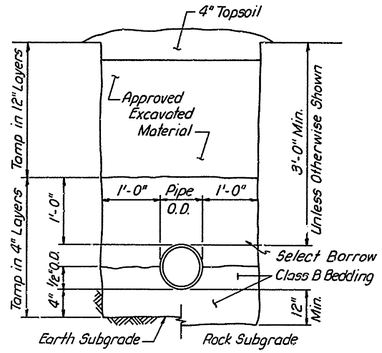

TYPICAL DETAIL
WATER MAIN TRENCH
No Scale

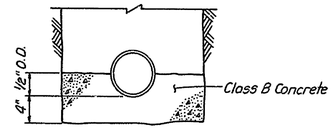

TYPICAL DETAIL
CLASS A BEDDING
No Scale

GENERAL NOTES

1. LOCATION AND DEPTH OF EXISTING WATER MAINS AND OTHER UTILITY LINES SHALL BE VERIFIED BY THE CONTRACTOR BY THE EXCAVATION OF TEST PITS IN ADVANCE OF CONSTRUCTION. HAND EXCAVATION ONLY WILL BE PERMITTED IN THE IMMEDIATE VICINITY OF THE UTILITY LINES.
2. THE CONTRACTOR SHALL NOT CUT THE EXISTING WATER MAINS UNTIL THE RELOCATED WATER MAINS HAVE BEEN TESTED, STERILIZED AND FLUSHED.
3. THE CUTTING AND REMOVAL OF THE EXISTING WATER MAINS FROM SERVICE SHALL BE PERFORMED AT A TIME STIPULATED BY THE TOWN OF NEWPORT.
4. EXCAVATION, BACKFILLING & COMPACTION OF THE PIPE TRENCH IS INCLUDED IN THE INSTALLATION COST OF PIPES.

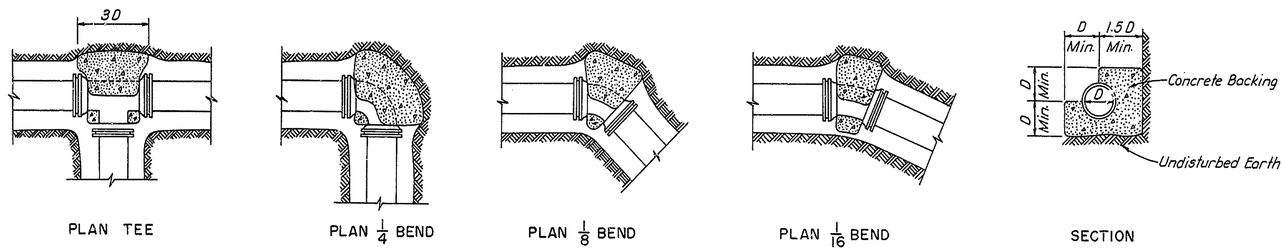

Note:
For pressure less than 150 p.s.i. and minimum soil bearing values of 4000 p.s.f.

STANDARD DETAILS OF REACTION BACKING AT BENDS AND TEES
No Scale

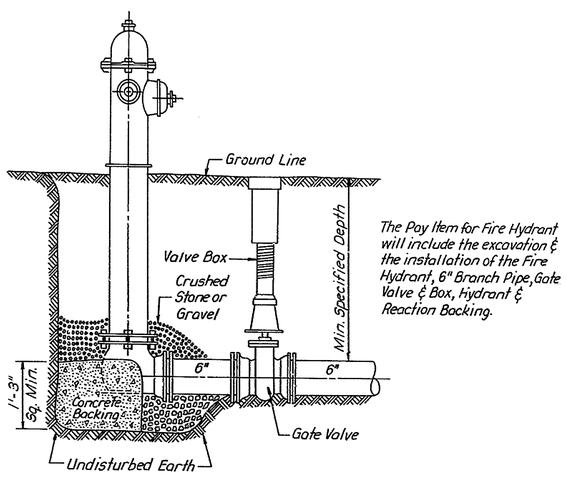

The Pay Item for Fire Hydrant will include the excavation & the installation of the Fire Hydrant, 6" Branch Pipe, Gate Valve & Box, Hydrant & Reaction Backing.

DETAIL
FIRE HYDRANT SETTING
No Scale

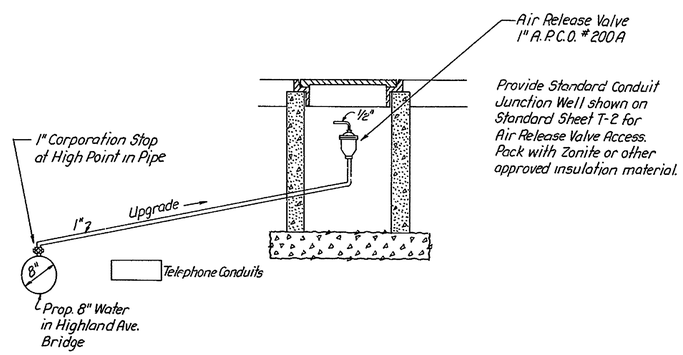

Provide Standard Conduit Junction Well shown on Standard Sheet T-2 for Air Release Valve Access. Pack with Zonite or other approved insulation material.

AIR RELEASE VALVE DETAIL
No Scale

TOWN OF NEWPORT WATER RELOCATIONS SUMMARY OF QUANTITIES

SECTION	SP	SP	SP	SP	SP	SP	SP	SP	SP	SP	SP
UNIT	L.F.	L.F.	L.F.	L.F.	EA.	EA.	EA.	EA.	EA.	LBS.	EA.
LOCATION	3" D.I. PIPE CLASS 2	4" D.I. PIPE CLASS 2	6" D.I. PIPE CLASS 2	8" D.I. PIPE CLASS 2	3" GATE VALVE WITH VALVE BOX	4" GATE VALVE WITH VALVE BOX	6" GATE VALVE WITH VALVE BOX	8" GATE VALVE WITH VALVE BOX	FIRE HYDRANT COMPLETE	CAST IRON FITTINGS & PIPE HANGERS	AIR RELEIF VALVE COMPLETE
WEST FRONTAGE ROAD		34	960	15			2		1	1,335	
HIGHLAND AVE.& BRIDGE		20	16	250		1		2	1	1,420	1
EAST FRONTAGE ROAD	245	36	574	70	2		2			1,830	
TOTALS	245	90	1,550	335	2	1	4	2	2	4,585	1

SELECT BORROW TO BE FURNISHED AND PAID FOR AS SPECIFIED UNDER SECTION 210 A

COUNTY	CONTRACT	F.B.A. REG. NO.	STATE	FED. AID PROJECT NO.	SHEET NO.	TOTAL SHEETS
NEWCASTLE	71-02-009	2	DEL.		226	301

RELOCATED DELAWARE ROUTE 141
THRU NEWPORT

PREL. TRACING R.A. DESIGN A.F.G. CHKD. W.J.S.

REVISIONS

2-7-74 Revised Note of Manufactors, Sewer Cover & Steps R.R.

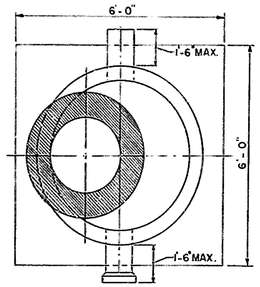

PLAN SECTION "A-A" "B-B"

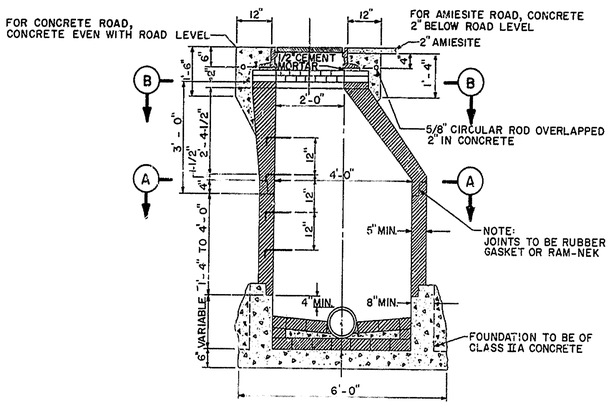

48" PRECAST
REINFORCED CONCRETE MANHOLE

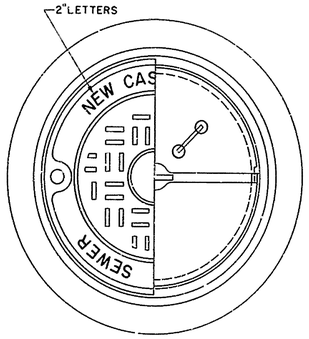

BOTH FRAME AND COVER MACHINED
MATERIAL - CAST IRON - ASTM A-48 - CLASS 30
DESIGN No 8-9960
RICHARD FOUNDRY SALES
FREDERICK, MARYLAND
OR EQUAL AS APPROVED BY NEW CASTLE COUNTY

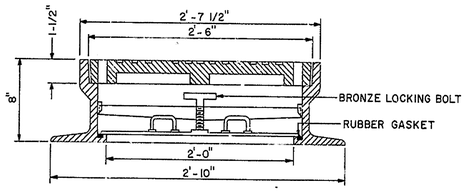

WATERTIGHT MANHOLE
FRAME & COVER

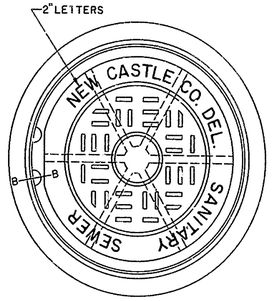

BOTH FRAME AND COVER MACHINED
MATERIAL - CAST IRON - ASTM A-48 - CLASS 30
WEIGHT OF COVER - 170 LB.
WEIGHT OF FRAME - 180 LB.
DESIGN NO. 110179
RICHARD FOUNDRY SALES
FREDERICK, MARYLAND
OR EQUAL AS APPROVED BY NEW CASTLE COUNTY

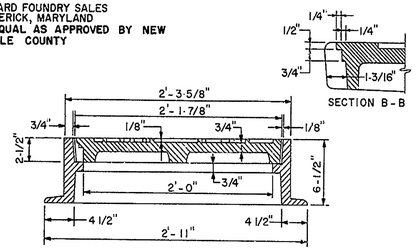

HEAVY DUTY TRAFFIC TYPE
MANHOLE FRAME & COVER

NOTE:
RISERS TO BE ENCASED IN CLASS IV B CONCRETE UNLESS OTHERWISE DIRECTED NO RISER SHALL BE HIGHER THAN A DISTANCE THAT WILL PERMIT A COVER OF AT LEAST 5' AT THE END OF A LATERAL SEWER CONNECTED TO SAME.

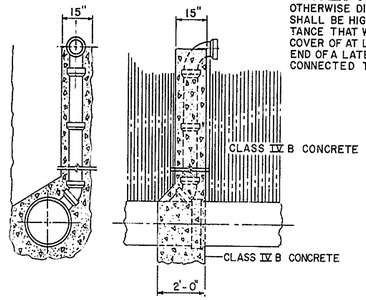

DETAIL OF RISING HOUSE CONNECTION

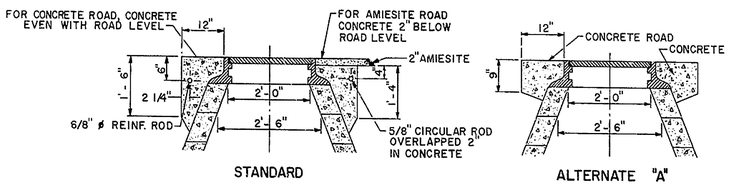

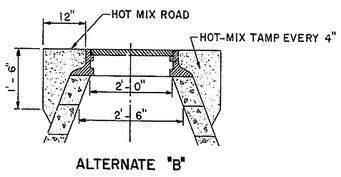

SEALING RINGS FOR TOP OF MANHOLES

NOTE:
THIS DETAIL TO BE USED IN AREAS WHERE UNSTABLE MATERIAL IS ENCOUNTERED WHEN AND AS DIRECTED BY THE ENGINEER.
THIS DETAIL APPLIES TO SOLID SHEATING ONLY.

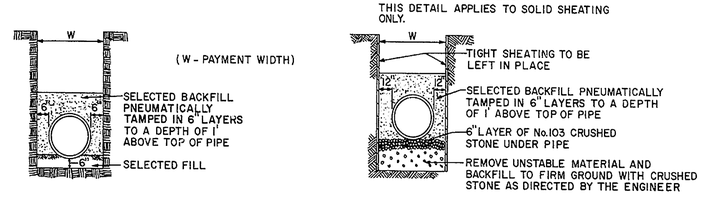

TYPICAL TRENCH DETAILS

DESIGN No. P-1080
RICHARD FOUNDRY SALES
FREDERICK, MARYLAND
OR EQUAL AS APPROVED BY NEW CASTLE COUNTY

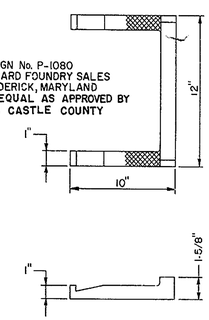

CAST IRON OR
GALVANIZED
MANHOLE STEP

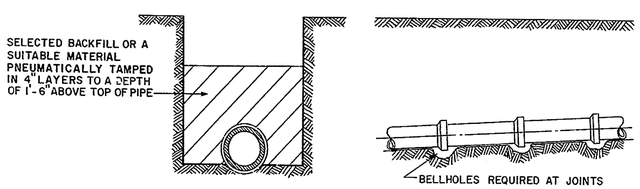

BEDDING DETAIL
(FOR STABLE MATERIAL)

SANITARY SEWER RELOCATION
DETAILS

COUNTY	CONTRACT	F.A.P. REG. NO.	STATE	FED. AID PROJECT NO.	SHEET NO.	TOTAL SHEETS
NEW CASTLE	71-02-009	2	DEL.		227	301

RELOCATED DELAWARE ROUTE 141
THRU NEWPORT

PREL TRACING R.A. DESIGN A.F.G. CHKD W.J.S.

REVISIONS

9-4-74 Relocated proposed sanitary sewer in East Frontage Road R.A.

LEGEND

- PROPOSED SANITARY SEWER AND STANDARD MANHOLE
- EXISTING SANITARY SEWER
- EXISTING WATER MAIN
- EXISTING GAS MAIN
- EXISTING STORM SEWER
- EXISTING UNDERGROUND TELEPHONE CONDUIT
- INDICATES PAVED ROAD SURFACE AND CURB
- INDICATES PAVED ROAD SURFACE
- W.T.C. — WATERTIGHT MANHOLE FRAME AND COVER
- ESVC — EXTRA STRENGTH VITRIFIED CLAY PIPE

GENERAL NOTES

1. ALL ELEVATIONS ARE ON U.S.C.&G.S. DATUM
2. ALL INVERTS OF EXISTING SEWERS WHERE PROPOSED CONNECTIONS ARE TO BE MADE, SHALL BE VERIFIED BY THE CONTRACTOR BEFORE ANY CONSTRUCTION BEGINS
3. SEE HIGHWAY DRAWINGS FOR LOCATION OF ALL EXISTING UTILITIES

* SELECT BORROW- TO BE PROVIDED AND PAID FOR UNDER SUBSECTION 202.18

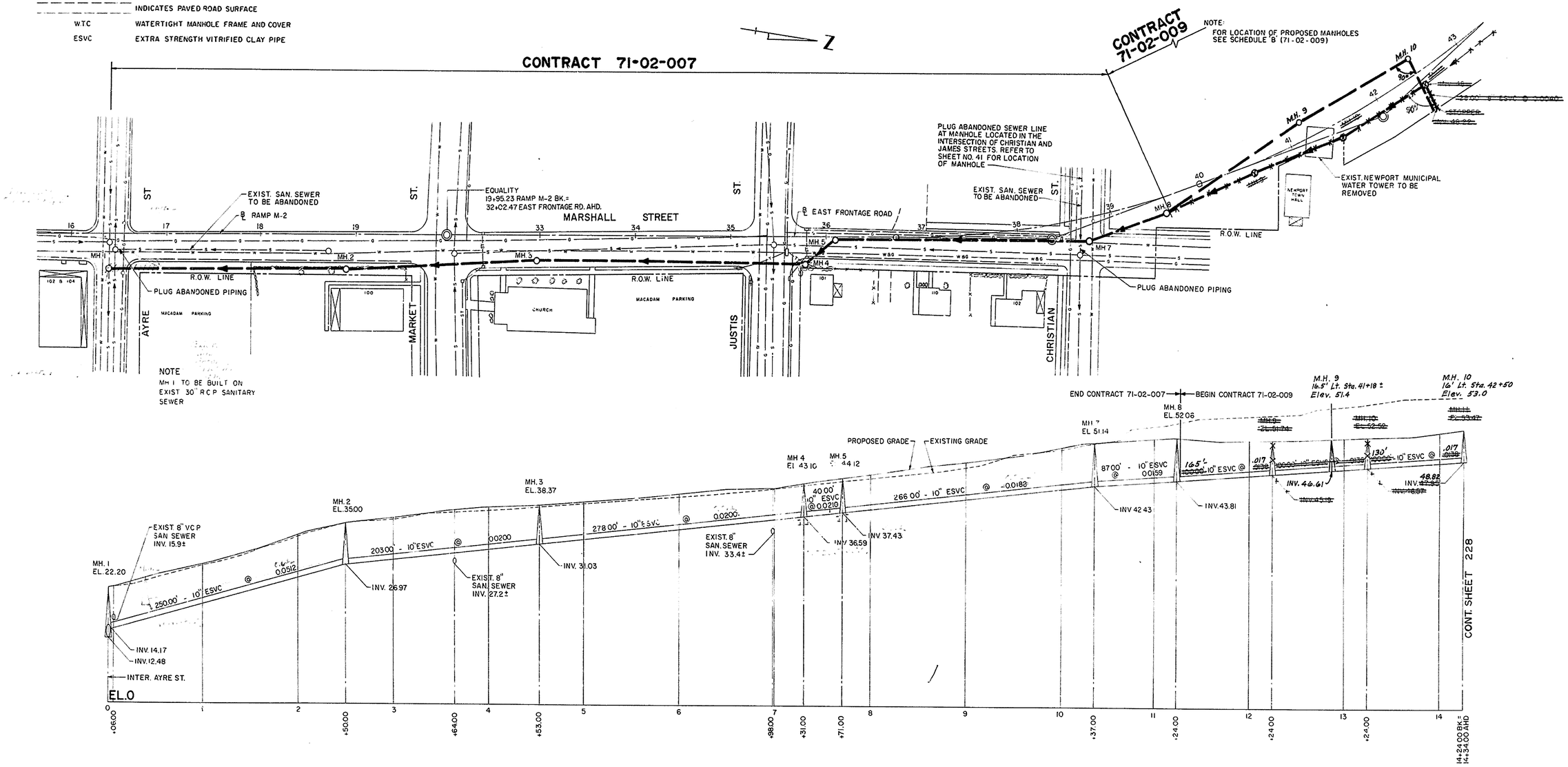

SANITARY SEWER RELOCATION
PLAN AND PROFILE

COUNTY	CONTRACT	F.H.A. REG. NO.	STATE	FED. AID PROJECT NO.	SHEET NO.	TOTAL SHEETS
NEW CASTLE	71-02-009	2	DEL.		228	301

RELOCATED DELAWARE ROUTE 141
THRU NEWPORT

PREL. TRACING R.A. DESIGN A.F.G. CHKD. W.J.S.

REVISIONS

9-4-74 Relocated proposed Sanitary Sewer in East Frontage Road R.A.

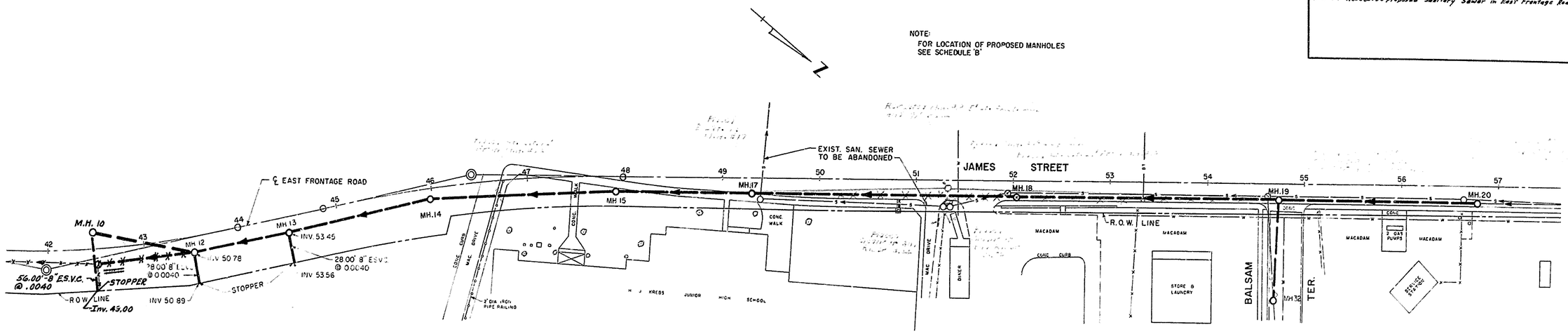

NOTE:
MH 32 TO BE BUILT ON EXIST 8" V.C.P. SANITARY SEWER

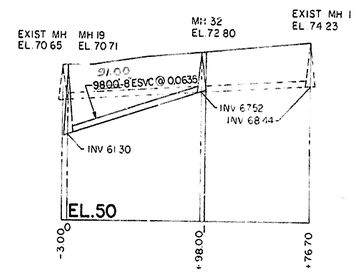

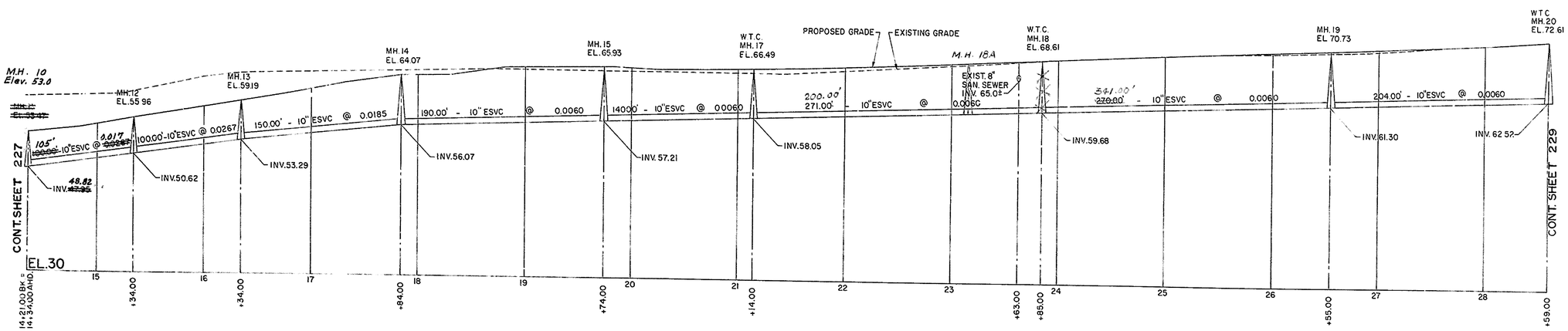

SANITARY SEWER RELOCATION
PLAN AND PROFILE

COUNTY	CONTRACT	F.B.A. REG. NO.	STATE	FED. AID PROJECT NO.	SHEET NO.	TOTAL SHEETS
NEW CASTLE	71-02-009	2	DEL.		229	301

RELOCATED DELAWARE ROUTE 141
THRU NEWPORT

PREL. TRACING R.A. DESIGN A.F.G. CHKD. W.J.S.

REVISIONS

NOTE:
FOR LOCATION OF PROPOSED MANHOLES
SEE SCHEDULE 'B'

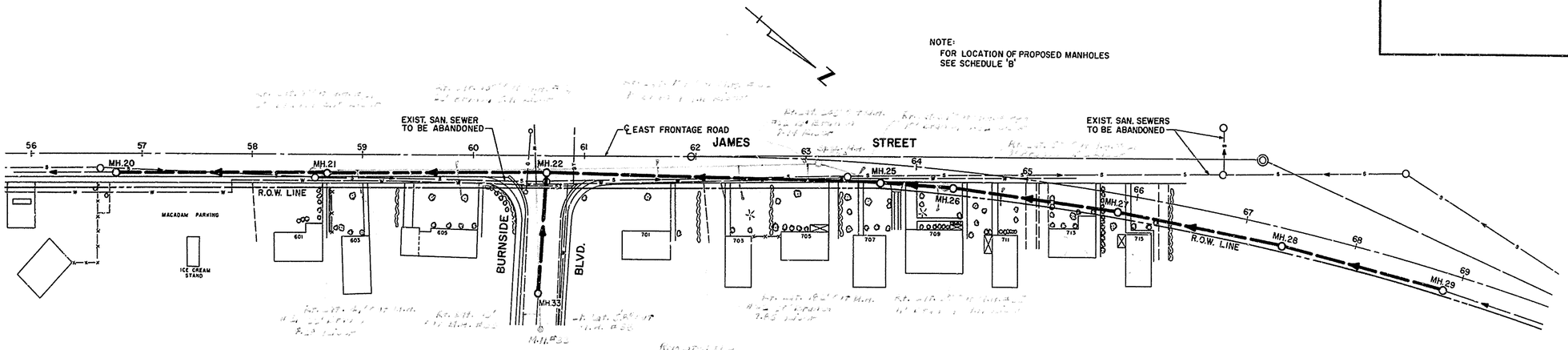

NOTE:
MH.33 TO BE BUILT ON EXIST.
8" V.C.P. SAN. SEWER

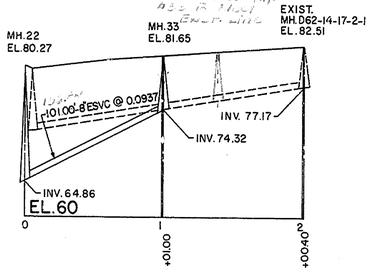

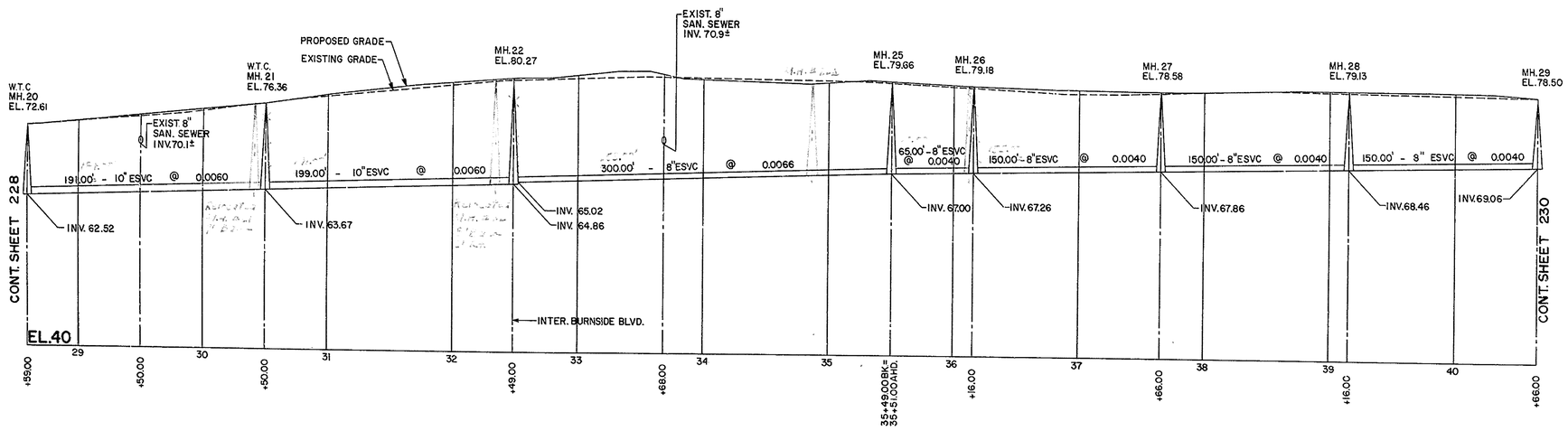

SANITARY SEWER RELOCATION
PLAN AND PROFILE

COUNTY	CONTRACT	P.R.A. REG. NO	STATE	FED. AID PROJECT NO.	SHEET NO.	TOTAL SHEETS
NEW CASTLE	71-02-009	2	DEL.		230	301

RELOCATED DELAWARE ROUTE 141
THRU NEWPORT

PREL. TRACING R.A. DESIGN A.F.G. CHKD. W.J.S.

REVISIONS

NOTE:
FOR LOCATION OF PROPOSED MANHOLES
SEE SCHEDULE 'B'

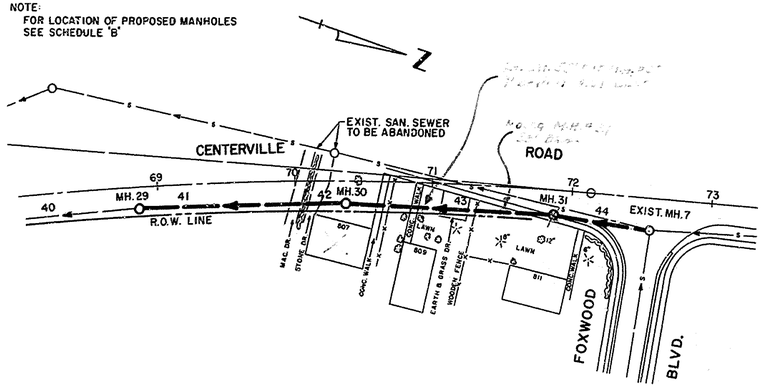

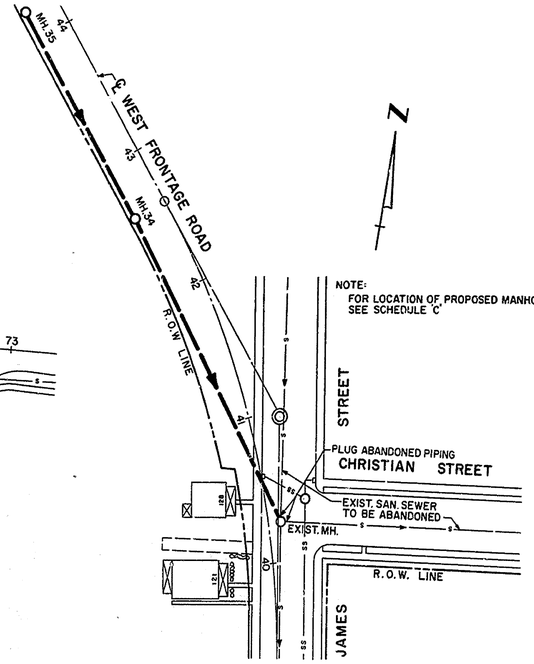

NOTE:
FOR LOCATION OF PROPOSED MANHOLES
SEE SCHEDULE 'C'

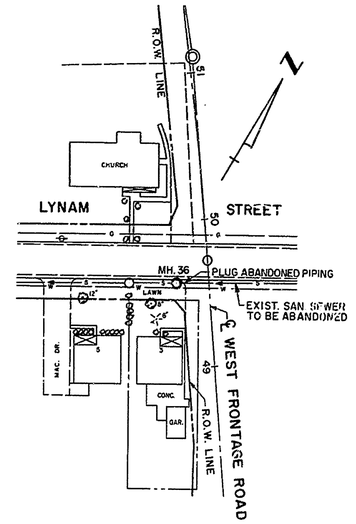

NOTE:
MH.36 TO BE BUILT
ON EXIST. 8" V.C.P.
SANITARY SEWER

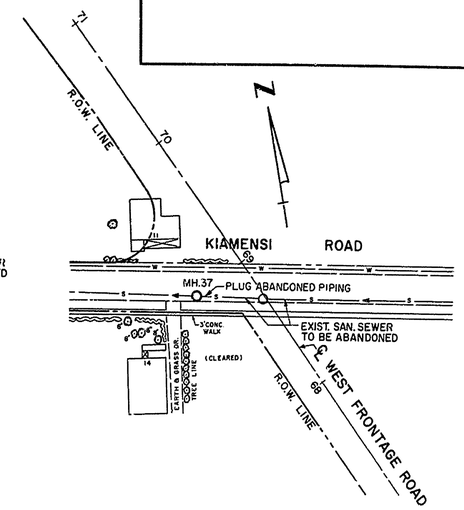

NOTE:
MH.37 TO BE BUILT
ON EXIST. 8" V.C.P.
SANITARY SEWER

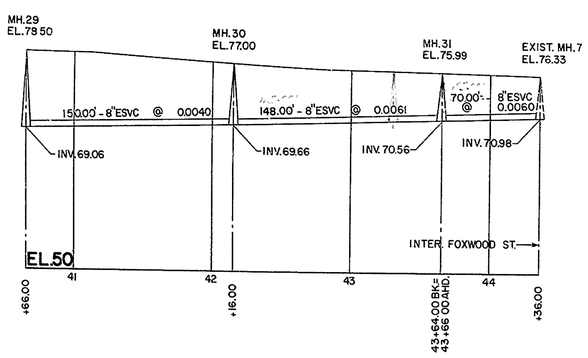

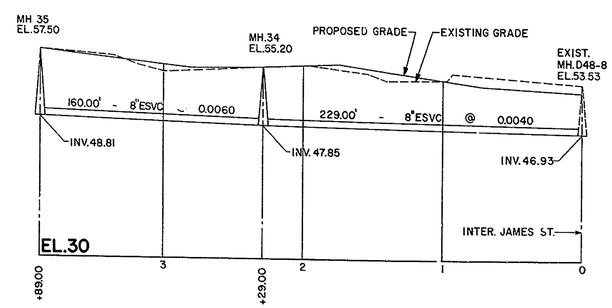

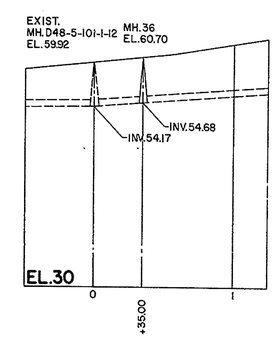

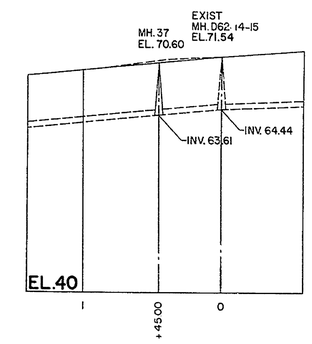

SANITARY SEWER RELOCATION
PLAN AND PROFILE

COUNTY	CONTRACT	P. R. A. REG. NO.	STATE	FED. AID PROJECT NO.	SHEET NO.	TOTAL SHEETS
NEW CASTLE	71-02-009	2	DEL.		231	301

RELOCATED DELAWARE ROUTE 141
THRU NEWPORT

PREL. TRACING R.A. DESIGN A.F.G. CHKD. W. J.S.

REVISIONS

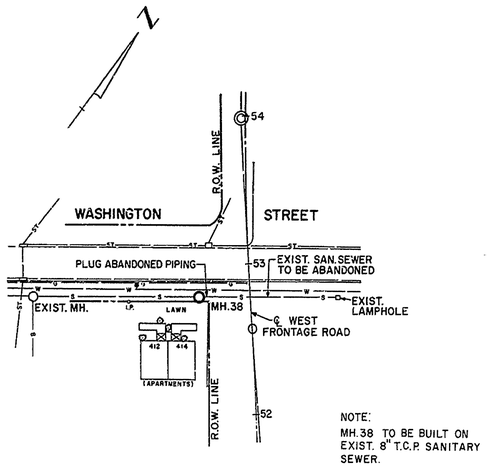

NOTE:
MH.38 TO BE BUILT ON EXIST. 8" T.C.P. SANITARY SEWER.

SUMMARY OF QUANTITIES PART A (FOR INFORMATION ONLY)	
DESCRIPTION	QUANTITY
8" EXTRA STRENGTH VITRIFIED CLAY PIPE	1855 L.F.
10" EXTRA STRENGTH VITRIFIED CLAY PIPE	2115 L.F.
EARTH TRENCH EXCAVATION	3375 C.Y.
SELECT BACKFILL *	550 C.Y.
CONSTRUCTION OF MANHOLES	27 EACH
EXCAVATION BELOW SUBGRADE	35 C.Y.
BACKFILL - CRUSHED STONE	35 C.Y.
ROCK EXCAVATION	34 C.Y.
P.C.C. MASONRY	18 C.Y.
HOT MIX, HOT LAID ASP. CONC. PAVT.	56 TONS
CRUSHER RUN BASE COURSE, 4"	300 S.Y.
CRUSHER RUN BASE COURSE, 8"	60 S.Y.

SELECT BORROW TO BE FURNISHED AND PAID FOR AS SPECIFIED UNDER SECTION 210 A.

SEE SHEET NO. 268 FOR RELOCATION OF SANITARY SEWER PART B

SCHEDULE B		
MANHOLE NO.	℄ STATION EAST FRONTAGE RD.	OFF-SET DISTANCE
9	40+54	9.0'
10	41+53	16.0'
11	42+52	16.0'
12	43+50	16.0'
13	44+49	16.0'
14	46+01	10.0'
15	47+93	14.0'
17	49+32	14.0'
18	52+03	14.0'
19	54+73	14.0'
20	56+77	14.0'
21	58+68	14.0'
22	60+67	13.0'
25	63+68	16.5'
26	64+33	16.5'
27	65+84	16.5'
28	67+35	16.5'
29	68+86	16.5'
30	70+36	16.5'
31	71+86	16.5'

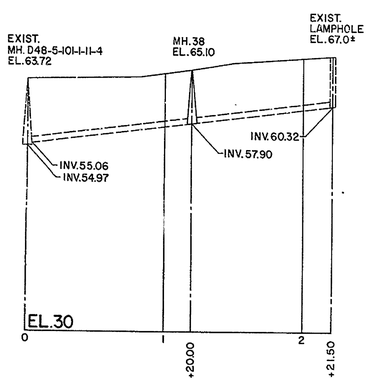

SCHEDULE C		
MANHOLE NO.	℄ STATION WEST FRONTAGE RD.	OFF-SET DISTANCE
34	42+60	24.0'
35	44+20	24.0'

SANITARY SEWER RELOCATION
PLAN AND PROFILE

ROADWAY LIGHTING

COUNTY	CONTRACT	P. R. A. REG. NO.	STATE	FED. AID PROJECT NO.	SHEET NO.	TOTAL SHEETS
NEW CASTLE	71-02-009	2	DEL		232	301

RELOCATED DELAWARE ROUTE 141
THRU NEWPORT

PREL. TRACING _____ DESIGN _____ CHKD. _____

REVISIONS

EQUALITY: STA. 61+00.00 = STA. 59+62.92

ROUTE OR RAMP	SECTION NUMBER / UNIT / LOCATION	LUMINAIRE IDENTIFICATION NUMBER	S.P. EA. LIGHTING POLE & 12'-0" DAVIT ARM, TRANSFORMER BASE MOUNTED	S.P. EA. LIGHTING POLE & 10'-0" DAVIT ARM, TRANSFORMER BASE MOUNTED	S.P. EA. LIGHTING POLE & 10'-0" DAVIT ARM WITH ANCHOR BASE PARAPET MOUNTED	S.P. EA. LIGHTING POLE & 6'-0" DAVIT ARM WITH ANCHOR BASE PARAPET MOUNTED	S.P. EA. LUMINAIRE, 400 WATT HIGH PRESSURE SODIUM VAPOR LAMP	S.P. EA. LUMINAIRE, 400 WATT MERCURY VAPOR LAMP	S.P. EA. UNDERPASS LUMINAIRE 250 WATT HIGH PRESSURE SODIUM VAPOR LAMP	S.P. EA. LIGHTING POLE BASE	S.P. EA. ROADWAY LIGHTING JUNCTION BOX	S.P. EA. JUNCTION BOX, SPECIAL	S.P. EA. CONDUIT DUCT MARKER	S.P. L.S. ELECTRIC POWER SUPPLY SYSTEM	S.P. L.F. 2" HIGH IMPACT PVC CONDUIT UNDER SODDED OR SOFT SURFACE	S.P. L.F. UNDER PAVEMENT CROSSING 1-2" GALV. STEEL CONDUIT ENCASED	S.P. L.F. 2" GALV. STEEL CONDUIT ON STRUCTURE	S.P. L.F. 2" GALV. FLEXIBLE STEEL CONDUIT ON STRUCTURE	S.P. L.F. #2 AWG CABLE	S.P. L.F. #4 AWG CABLE	S.P. L.F. #6 AWG CABLE	S.P. L.F. #8 AWG CABLE	SP EA CONDUIT JUNCTION WELLS (PRECAST)	REMARKS
RTE.141	40+00 RT.																							
	40+13 LT.	D1-9	1				1			1													1	SIGN LIGHTING CONNECTION
	41+65 RT.	E1-9	1				1			1														
	43+70 LT.	D2-8	1				1			1														
	45+92 LT.	D1-8	1				1			1														
	46+61 RT.																							
	46+62 RT.											1												MOUNTED ON ABUTMENT BACKWALL
	46+65 RT.	E2-8							1		1													CONNECTION TO STRUCTURE
	48+40 RT.	E1-7	1				1			1														MOUNTED ON F.F. OF ABUTMENT
	49+55 LT.																							
	49+98 LT.	D2-6	1				1			1													1	SIGN LIGHTING CONNECTION
	50+30 RT.	E2-7	1				1			1														
	52+58 LT.	D1-6	1				1			1														
	53+00 RT.	E1-6	1				1			1														
	54+15 RT.																							
	54+58 LT.	D1-5	1				1			1													1	SIGN LIGHTING CONNECTION
	55+30 RT.	E2-6	1				1			1														
	55+65 LT.																							
	56+88 LT.	D2-5	1				1			1													1	SIGN LIGHTING CONNECTION
	57+60 RT.	E1-5	1				1			1														
	59+18 LT.	D2-4	1				1			1														
	59+90 RT.	E2-5	1				1			1														
	60+68 LT.											1												MOUNTED ON ABUTMENT BACKWALL
	60+81 LT.																						1	CONNECTION TO STRUCTURE
	60+11 LT.	D1-4	1				1			1														
	62+94 RT.	E1-2	1				1			1														
	64+66 LT.	D2-2	1				1			1														
	66+20 RT.	E2-2	1				1			1														
	67+74 LT.	D1-2	1				1			1														
	69+24 RT.	E1-1	1				1			1														CONDUIT CROSSING
RAMP M-3	14+10 RT.	D1-7	1				1			1														
	16+40 RT.& LT.	D2-7		1			1			1														
	18+80 RT.	D1-10		1			1			1														CONDUIT CROSSING
	21+60 LT.	D2-9		1			1			1														
RAMP M-4	10+50 LT.	E2-10		1			1			1														
	12+80 LT.	E2-9		1			1			1														
	15+26 RT.	E1-8	1				1			1														CONDUIT CROSSING
RAMP M-5	11+50 LT.													1										
	11+85 LT.	D2-1		1			1			1														POWER SUPPLY
	14+35 LT.	D1-1		1			1			1														
	16+85 RT.	D1-3		1			1			1														
	19+35 RT.	D2-3	1				1			1														CONDUIT CROSSING
RAMP M-6	13+65 RT.	E1-4	1				1			1														
	15+95 RT.	E2-3		1			1			1														
	18+45 RT.	E2-4		1			1			1														CONDUIT CROSSING
	20+95 RT.	E1-3		1			1			1														
	23+45 LT.	E2-1		1			1			1														
HIGHLAND AVE.	19+44 LT.	E2-11			1			1																ON STRUCTURE
	20+45.5 LT.	E1-10			1			1																ON STRUCTURE
BURNSIDE BLVD.	19+30 RT.	D2-10				1		1																ON STRUCTURE
	20+77 LT.	D1-11				1		1																ON STRUCTURE
	ENTIRE PROJECT												9		7,400	475	50	15	10,600	4,000	4,730	3,500		
	TOTALS		25	12	2	2	37	4	1	37	1	2	9	L.S.	7,400	475	50	15	10,600	4,000	4,730	3,500	5	

GENERAL NOTES

1. ALL MATERIALS AND WORKMANSHIP SHALL BE IN ACCORDANCE WITH DELAWARE DEPARTMENT OF TRANSPORTATION. DIVISION OF HIGHWAYS. STANDARD SPECIFICATIONS 1970 AND THE SPECIAL PROVISIONS.
2. ELECTRICAL MATERIALS FURNISHED UNDER THIS CONTRACT SHALL BE NEW AND THE BEST OF THEIR RESPECTIVE KIND AND GRADE AND SHALL BE AS APPROVED BY THE ENGINEER AND SHALL BEAR THE MANUFACTURES AND UNDERWRITERS LABEL WHERE SUCH A LISTING HAS BEEN ESTABLISHED. THE WORK SHALL MEET THE REQUIREMENTS OF THE FOLLOWING:
   - NATIONAL ELECTRIC CODE
   - NATIONAL BOARD OF FIRE UNDERWRITERS
   - NATIONAL ELECTRICAL MANUFACTURES ASSN.
   - NATIONAL SAFETY CODE
   - INSULATED POWER CABLE ENGINEERING ASSN.
3. THIS IS A FEDERAL AID PROJECT AND AS SUCH IS SUBJECT TO INSPECTION BY REPRESENTATIVES OF THE FEDERAL HIGHWAY ADMINISTRATION.
4. SIGN LIGHTING CIRCUITS HAVE BEEN INTERGRATED INTO THE ROADWAY LIGHTING CIRCUITS, SEE CIRCUIT SCHEMATICS.
5. ANCHOR BOLTS FOR THE LIGHTING POLES SHALL BE SET BY THE TEMPLATES FURNISHED BY THE MANUFACTURER OF THE POLES.
6. CABLE SHALL BE COLOR CODED PER SPECFICIATIONS.
7. LUMINAIRES ARE TO BE MOUNTED PERPENDICULAR TO THE BASE LINE OF WHICH THEY ARE STATIONED.
8. FOR BRIDGES UP TO 500 FEET IN LENGTH, THE CONDUIT SHALL BE GROUNDED WITH NO.4 UNINSULATED COPPER WIRE TO AN APPROVED 1"x10' COPPERCLAD ROD.
9. THE CONTRACTOR SHALL ARRANGE TO ENERGIZE AND OPERATE THE LIGHTING SYSTEM, FOR 7 CONSECUTIVE 24-HOUR DAYS WITH THE POWER SERVICE WHICH WILL PROVIDE ENERGY FOR THE PERMANENT OPERATION OF THE SYSTEM, AND SHALL PROVIDE THE ENGINEER WITH A GRAPHIC RECORD OF THE SERVICE VOLTAGE AT THE CONTROL CABINET COVERING THE PERIOD OF 24-HOURS PER DAY FOR 7 DAYS, DURING WHICH TIME ALL ELECTRICAL EQUIPMENT INSTALLED SHALL BE IN NORMAL OPERATION (LIGHTS ON AT NIGHT AND OFF IN THE DAYTIME). AFTER THE LIGHTS HAVE BEEN IN NORMAL SERVICE FOR AT LEAST 100 HOURS. THE CONTRACTOR SHALL MAKE FOOTCANDLE READINGS AT THE ROAD LEVEL AFTER IT IS COMPLETELY DARK. THESE READINGS SHALL BE MADE AT LOCATIONS DESIGNATED BY THE ENGINEER; PARTICULAR ATTENTION SHALL BE GIVEN TO POINTS MIDWAY BETWEEN LUMINAIRES AND TO SUSPECT LOW-LUMEN POINTS. LUMINAIRES SHALL BE ADJUSTED AS REQUIRED TO ELIMINATE DARK POINTS.
10. CONDUIT JUNCTION WELLS SHALL BE CONSTRUCTED AS SHOWN ON STANDARD DRAWING T-2.

COUNTY	CONTRACT	P.R.A. REG. NO.	STATE	FED. AID PROJECT NO.	SHEET NO.	TOTAL SHEETS
NEW CASTLE	71-02-009	2	DEL		233	301

RELOCATED DELAWARE ROUTE 141
THRU NEWPORT

PREL. TRACING _____ DESIGN _____ CHKD. _____

REVISIONS

⚠ REVISED SERVICE CONNECTION 5/10/78 S.C. Miller chs

VOID

LEGEND

- Lighting Standard Pole and Luminaire, 400w Type III (Transformer Base)
- Lighting Standard Pole and Luminaire, 400w Type III (Anchor Base)
- Conduit Duct Marker
- 2" Galv. Steel underpavement crossing - encased.
- 2" P.V.C. Conduit under Sodded or Soft Surface
- 2" Galv. Steel Conduit in Structure (Structure Item)
- Underpass Luminaire, 250w (Wall Mount)
- Roadway Lighting Junction Box or Conduit Junction Well
- Roadway Lighting, Junction Box Spec.
- Junction Box on Structure (Structure Item)
- 3#4 Indicates Number and AWG size Conductors in Conduit
- 0+00 — Station No. Location; E1-1 — Luminaire No.; Leg Connection; Circuit Designation No.

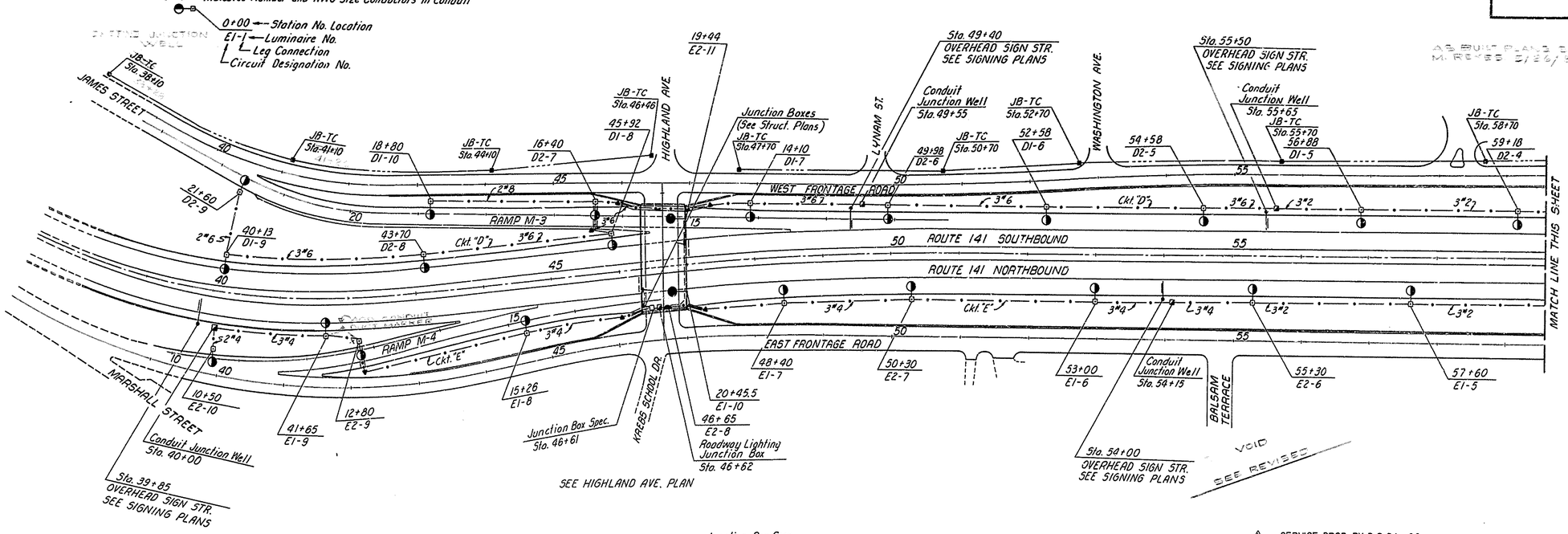

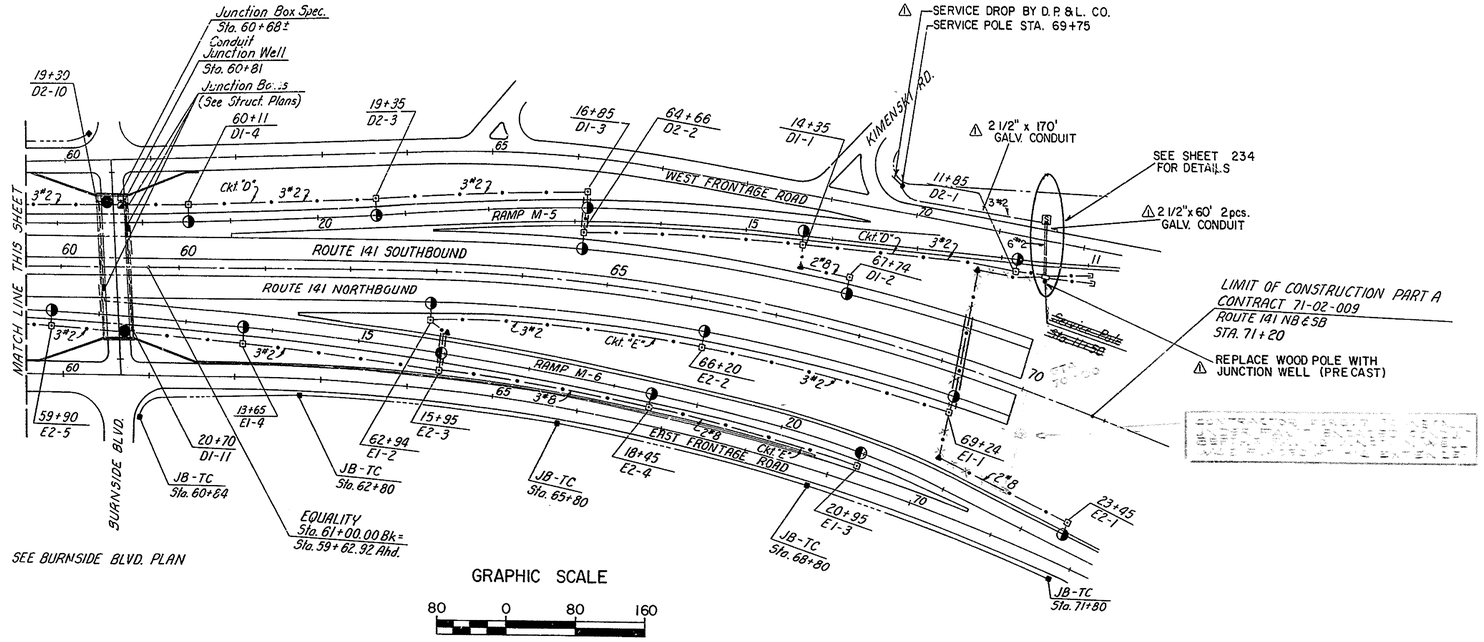

GRAPHIC SCALE

80 0 80 160

TRAFFIC CONTROL LEGEND

- JB-TC (Junction Well - pre-cast)
- 1½" Galv. Conduit

COUNTY	CONTRACT	P.R.A. REG. NO.	STATE	FED. AID PROJECT NO.	SHEET NO.	TOTAL SHEETS
NEW CASTLE	71-02-009	2	DEL.		234	301

RELOCATED DELAWARE ROUTE 141
THRU NEWPORT

PREL. TRACING _____ DESIGN _____ CHKD. _____

REVISIONS

⚠ REVISED SERVICE CONNECTION 5/10/78 S.C. Valle chs

VOID

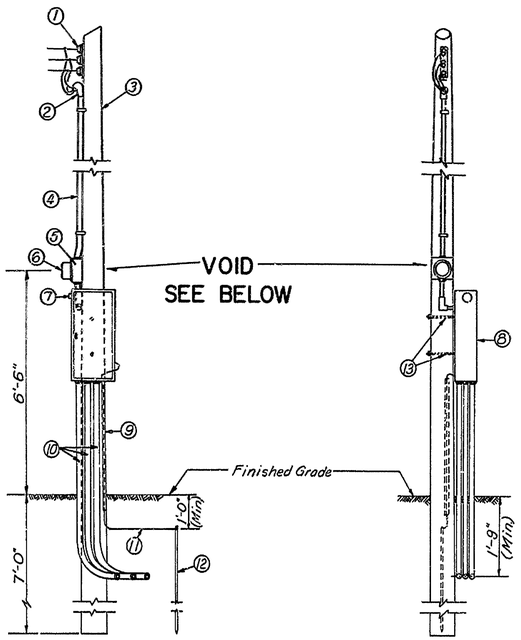

ELEVATIONS OF SERVICE POLE
NO SCALE

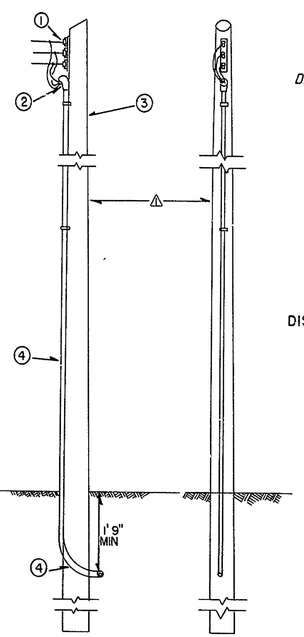

① SECONDARY RACK
② WEATHERHEAD
③ 35'-0" CLASS 3 POLE CREOSOTED FULL LENGTH
④ ~~2"~~ 2 1/2" GALVANIZED STEEL CONDUIT
~~⑤ METER SOCKET PROVIDED BY UTILITY COMPANY (INSTALLED BY CONTRACTOR) IF REQ'D. BY DEPT. OF HWYS.~~
~~⑥ WATT HOUR METER PROVIDED BY UTILITY COMPANY (INSTALLED BY CONTRACTOR) IF REQ'D. BY DEPT. OF HWYS.~~
~~⑦ LIGHTNING ARRESTER~~
~~⑧ STANDARD CONTROL CABINET NEMA TYPE 4 CONSTRUCTION~~
~~⑨ CREOSOTED WOOD MOULDING FOR GROUND WIRE COVER~~
~~⑩ 3-2"Φ GALVANIZED STEEL CONDUIT FOR LIGHTING FEEDERS~~
~~⑪ #6 MINIMUM BARE COPPER WIRE~~
~~⑫ 3/4"x10'-0" (MIN.) COPPER CLAD GROUND ROD WITH EXOTHERMIC WELD TO GROUND WIRE~~
~~⑬ 2-5/8"x14" MACHINE BOLTS, GALVANIZED~~

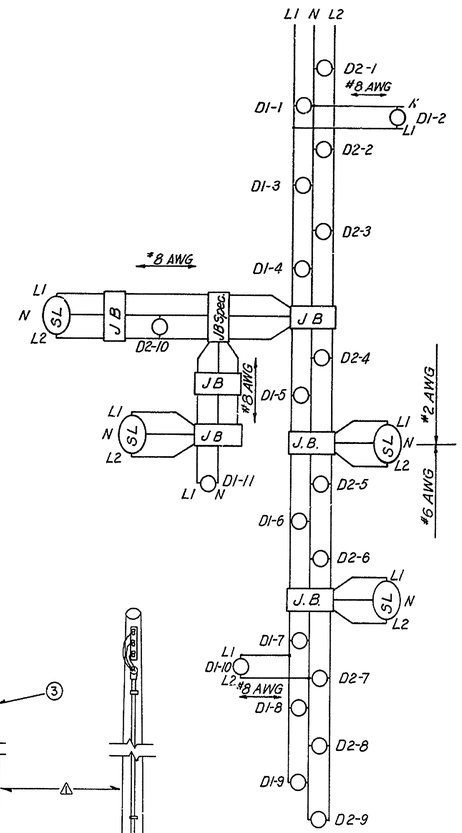

CIRCUIT D
DISTRIBUTION BREAKERS - 40 AMPS

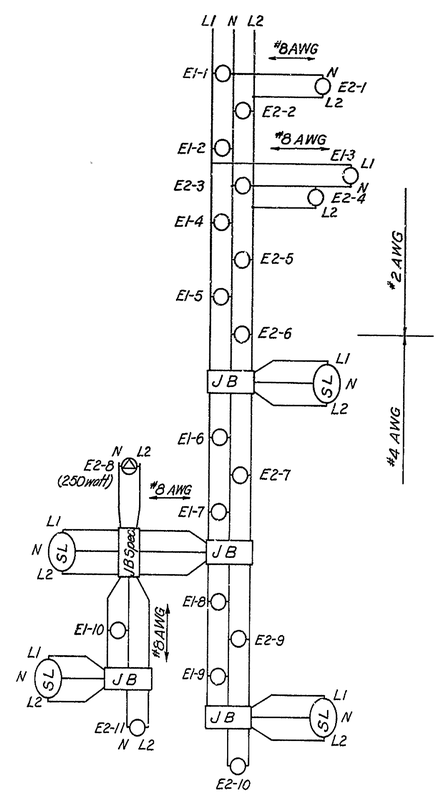

CIRCUIT E
DISTRIBUTION BREAKERS - 40 AMPS

LEGEND

○ 400 WATT LUMINAIRE
(SL) SIGN LIGHTING CONNECTION
△ 250 WATT LUMINAIRE

⚠
REMOVE SERVICE POLE AND LIGHTING CONTROL CABINET. PLACE PRECAST JUNCTION WELL IN ITS PLACE AND BRING ALL CONDUITS TO JUNCTION WELL. EXTEND 2 pcs. OF 2 1/2" GALV. CONDUIT FROM JUNCTION WELL TO SMALL SIGNAL CABINET BASE.

(1-CONDUIT FOR 71-02-009
1-CONDUIT FOR 76-08-008)

AS BUILT PLANS SHOWN IN RED BY M. REYES 5/20/81

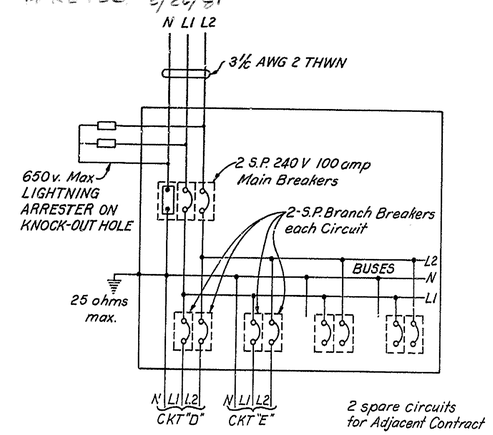

WIRING DIAGRAM FOR CONTROL CABINET
NO SCALE

All conductors from the load side of the main breakers to the line side of the branch breakers shall be AWG 2 THWN. See circuit schematics for branch breaker sizes. Main Breakers are sized for this contract only.

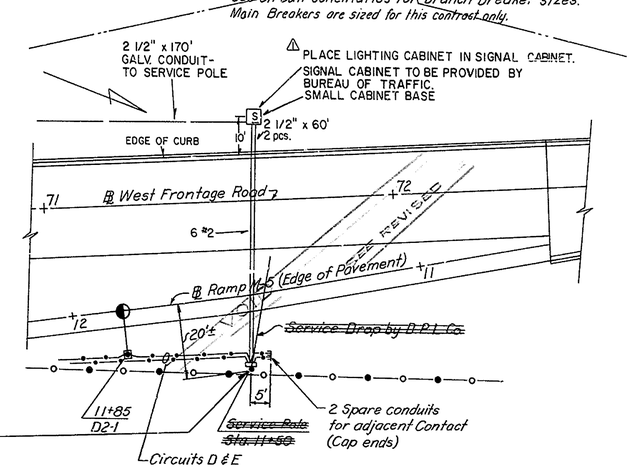

SITE PLAN
ELECTRIC POWER SUPPLY SYSTEM
SCALE 1" = 20'

COUNTY	CONTRACT	P.R.A. REG. NO	STATE	FED. AID PROJECT NO	SHEET NO	TOTAL SHEETS
NEWCASTLE	71-02-009	2	DEL		235	301

RELOCATED DELAWARE ROUTE 141
THRU NEWPORT

PREL TRACING _____ DESIGN _____ CHKD _____

REVISIONS

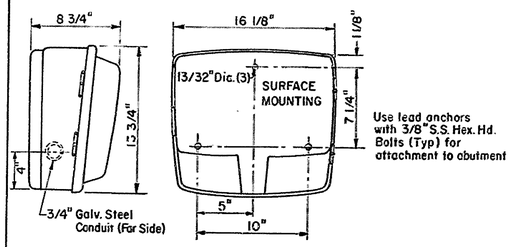

MOUNTING DETAIL FOR UNDERPASS LUMINAIRE AT STA. 46+65

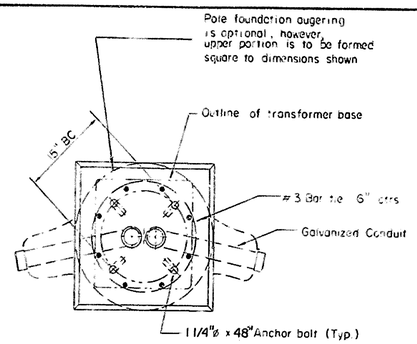

PLAN

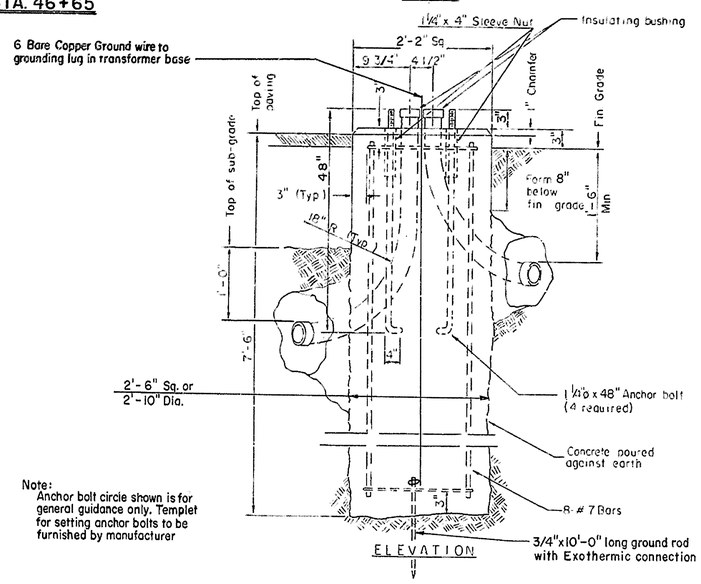

Note:
Anchor bolt circle shown is for general guidance only. Templet for setting anchor bolts to be furnished by manufacturer

ELEVATION

LIGHT POLE FOUNDATION DETAIL

Scale: 1" = 1'-0"

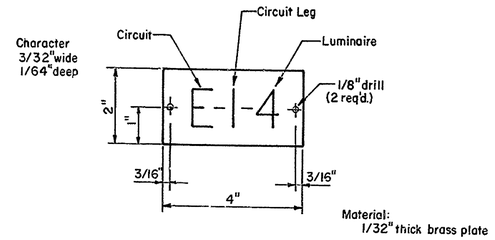

IDENTIFICATION TAG DETAIL

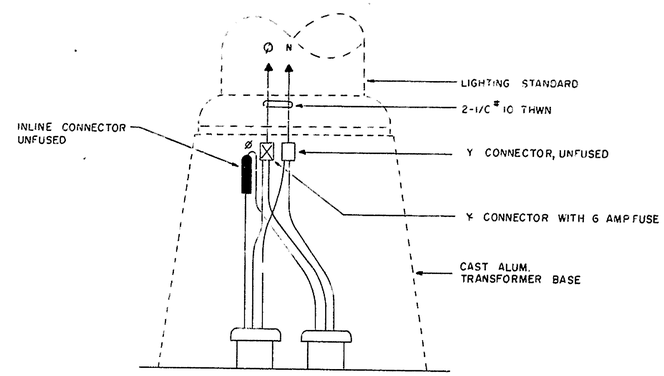

TYPICAL LUMINAIRE CONNECTION

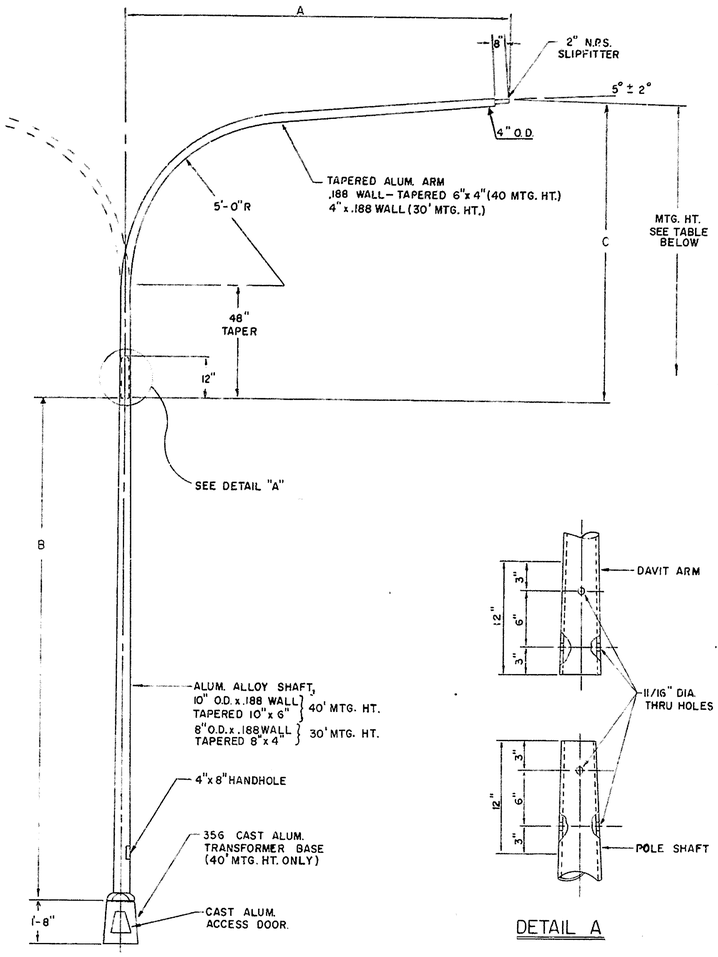

DAVIT ARM LIGHTING POLE

DETAIL A

LIGHTING POLE 40' MH
(WITH TRANSFORMER BASE)

A	B	C
15'	28'-4"	10'-0" ± 2"
12'	28'-7"	9'-9" ± 2"
10'	28'-9"	9'-7" ± 2"

LIGHTING POLE 30' MH
(WITH ANCHOR BASE)

A	B	C
6'	17'-9"	9'-3" ± 2"
10'	17'-5"	9'-7" ± 2"

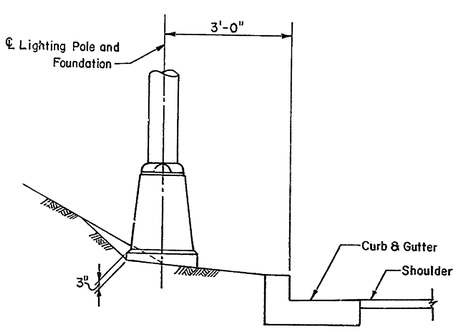

CURB CLEARANCE

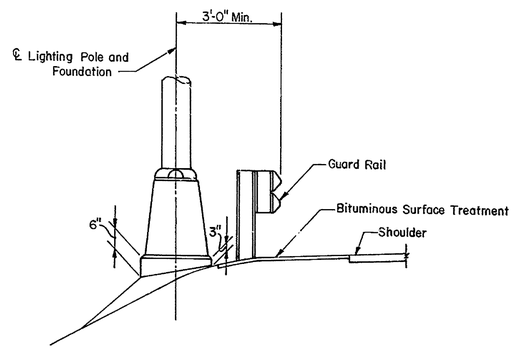

GUARD RAIL CLEARANCE

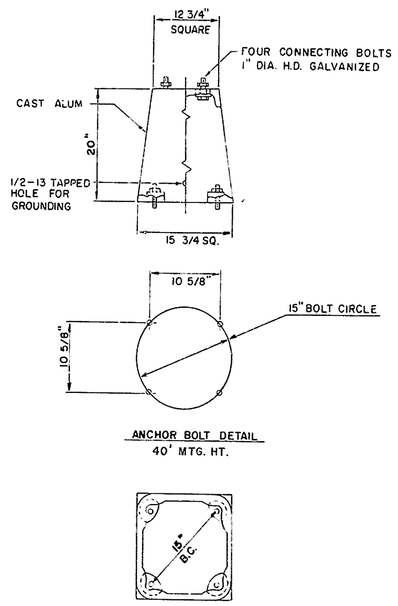

ANCHOR BOLT DETAIL
40' MTG. HT.

TRANSFORMER BASE DETAIL
40' MTG. HT.

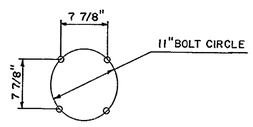

ANCHOR BOLT DETAIL
30' MTG. HT.

COUNTY	CONTRACT	F. R. A. REG. NO.	STATE	FED. AID PROJECT NO.	SHEET NO.	TOTAL SHEETS
NEW CASTLE	71-02-009	2	DEL		236	301

RELOCATED DELAWARE ROUTE 141
THRU NEWPORT

PREL. TRACING _____ DESIGN _____ CHKD. _____

REVISIONS

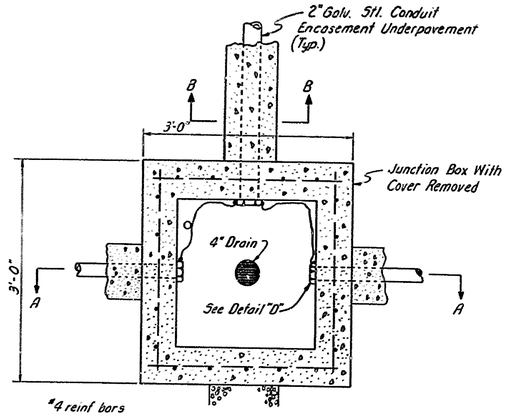

PLAN
SCALE: 1" = 1'-0"

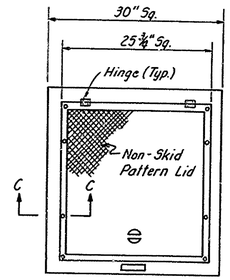

JUNCTION BOX FRAME & COVER
SCALE: 1" = 1'-0"

Note: Use on Galv. Steel Conduit only.

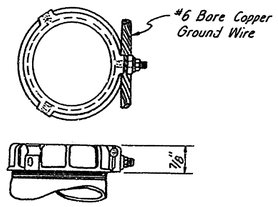

DETAIL D
GROUNDING BUSHING TYP.
NO SCALE

Note: Directional arrows as required.
Arrow and letter depth 1/2 inch.

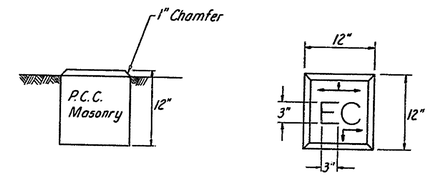

CONDUIT DUCT MARKER

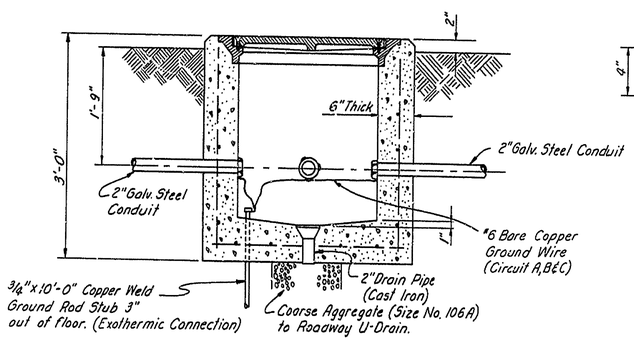

SECTION A-A

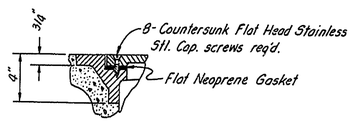

SECTION C-C
NO SCALE

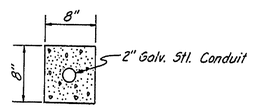

SECTION B-B
SCALE: 1" = 1'-0"

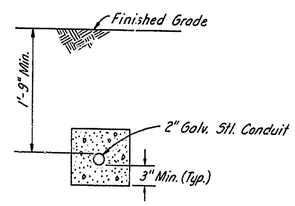

CONDUIT ENCASEMENT
NO SCALE

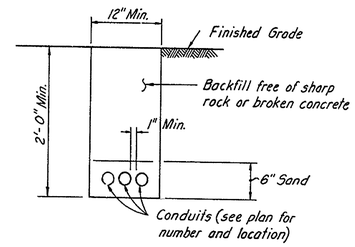

2" PVC CONDUIT
UNDER SODDED OR SOFT SURFACE
NO SCALE

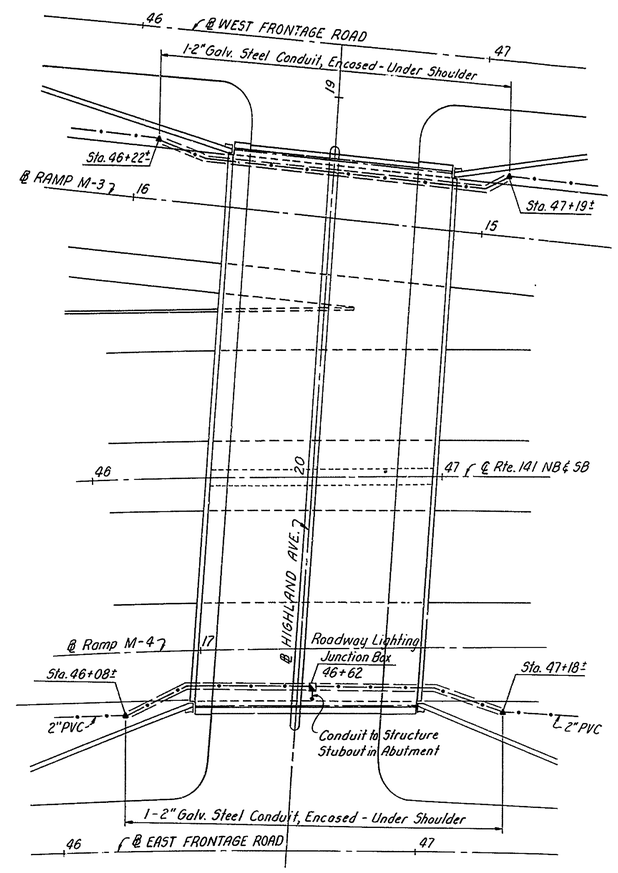

LOCATION OF ENCASED CONDUITS UNDER SHOULDERS
AT HIGHLAND AVE. BRIDGE

ROADWAY LIGHTING
JUNCTION BOX & DETAILS
AT STA. 46+62 RT.

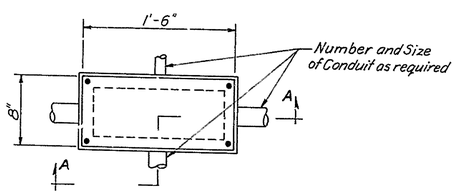

PLAN

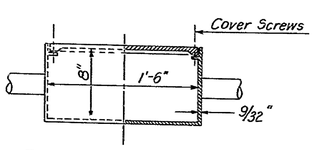

ELEVATION SECTION
A-A

JUNCTION BOX ON STRUCTURE

COUNTY	CONTRACT	P. R. A. REG. NO.	STATE	FED. AID PROJECT NO.	SHEET NO.	TOTAL SHEETS
NEW CASTLE	71-02-C09	2	DEL.		237	301

RELOCATED DELAWARE ROUTE 141
THRU NEWPORT

PREL. TRACING _____ DESIGN _____ CHKD. _____

REVISIONS

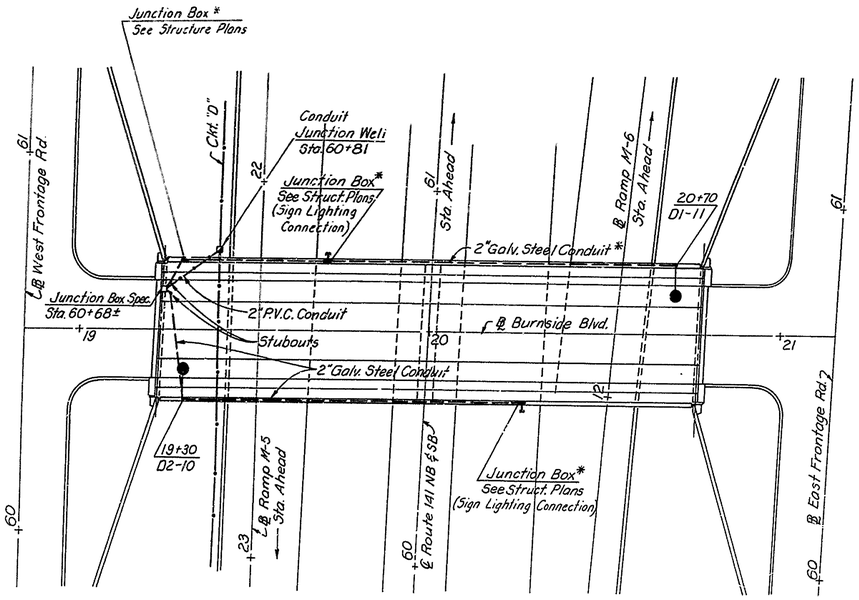

PLAN
BURNSIDE BLVD. OVER ROUTE 141

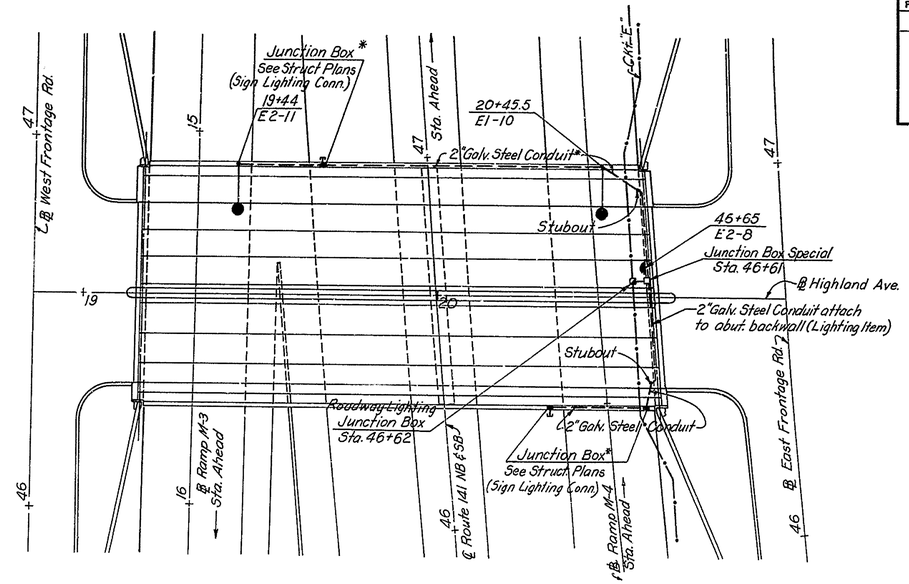

PLAN
HIGHLAND AVE. OVER ROUTE 141

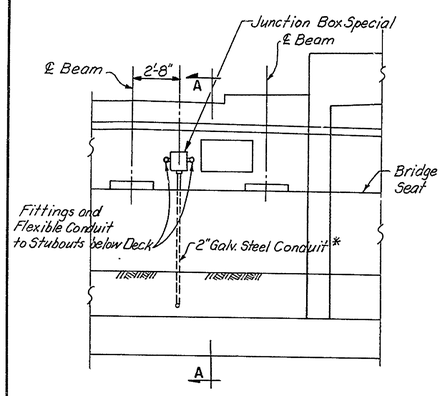

PART ELEVATION
WEST ABUTMENT
BURNSIDE BLVD. BRIDGE

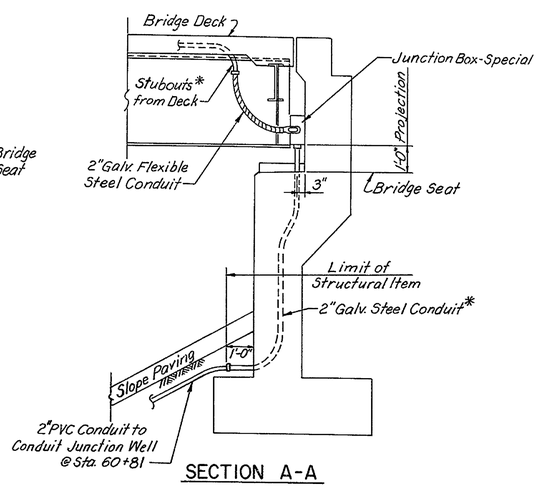

SECTION A-A

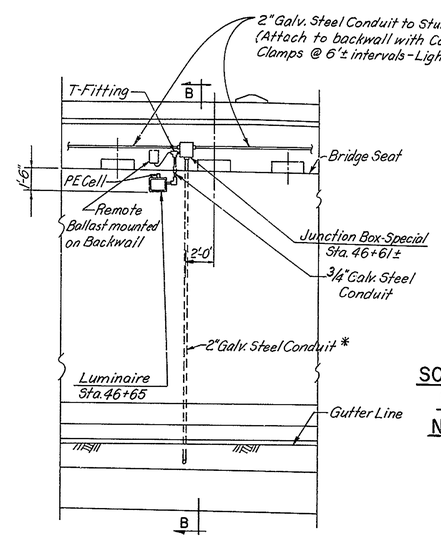

PART ELEVATION
EAST ABUTMENT
HIGHLAND AVE. BRIDGE

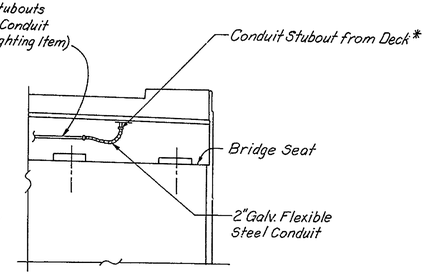

PART ELEVATION
SOUTH CORNER EAST ABUT.
HIGHLAND AVE. BRIDGE
NORTH CORNER SIMILAR

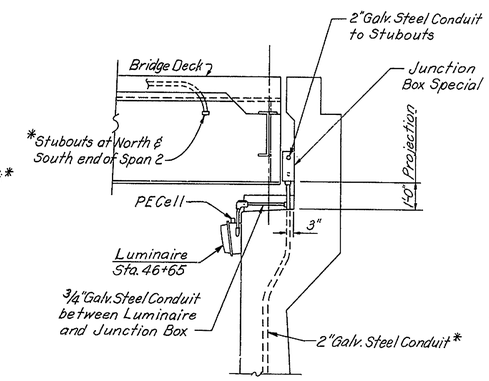

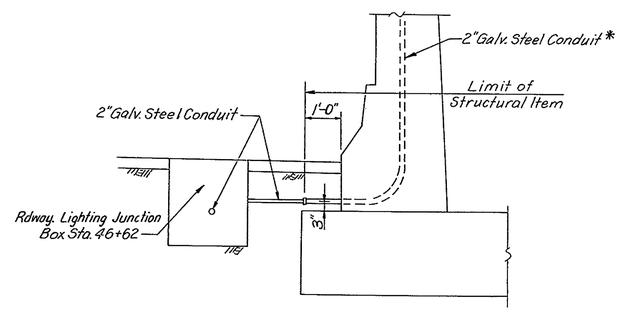

SECTION B-B

*Structure Item

COUNTY	CONTRACT	P.R.A. REG. NO.	STATE	FED. AID PROJECT NO.	SHEET NO.	TOTAL SHEETS
	71-02-009	2	DEL.		238	301

RELOCATED DELAWARE 141
THRU NEWPORT

PREL. TRACING _____ DESIGN C. H. SHORT CHKD. _____
9/25/73
REVISIONS

TRAFFIC CONTROL SHEET I

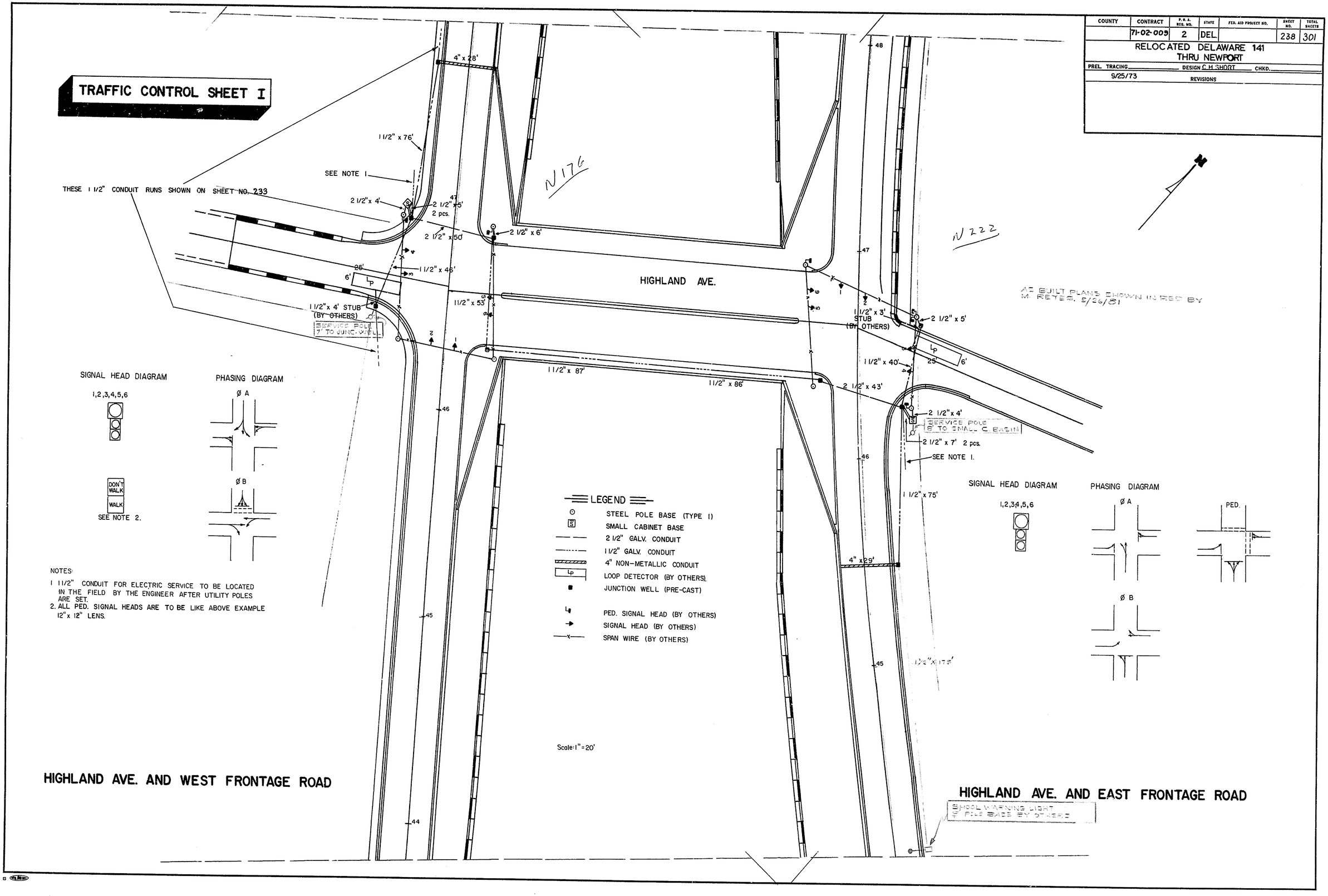

NOTES:

1. 1 1/2" CONDUIT FOR ELECTRIC SERVICE TO BE LOCATED IN THE FIELD BY THE ENGINEER AFTER UTILITY POLES ARE SET.
2. ALL PED. SIGNAL HEADS ARE TO BE LIKE ABOVE EXAMPLE 12" x 12" LENS.

COUNTY	CONTRACT	P.B.A. REG. NO.	STATE	FED. AID PROJECT NO.	SHEET NO.	TOTAL SHEETS
N C	71-02-009	2	DEL		239	301

RELOCATED DELAWARE 141
THRU NEWPORT

PREL. TRACING _____ DESIGN C. H. SHORT CHKD. _____

9/25/73

REVISIONS

TRAFFIC CONTROL SHEET II

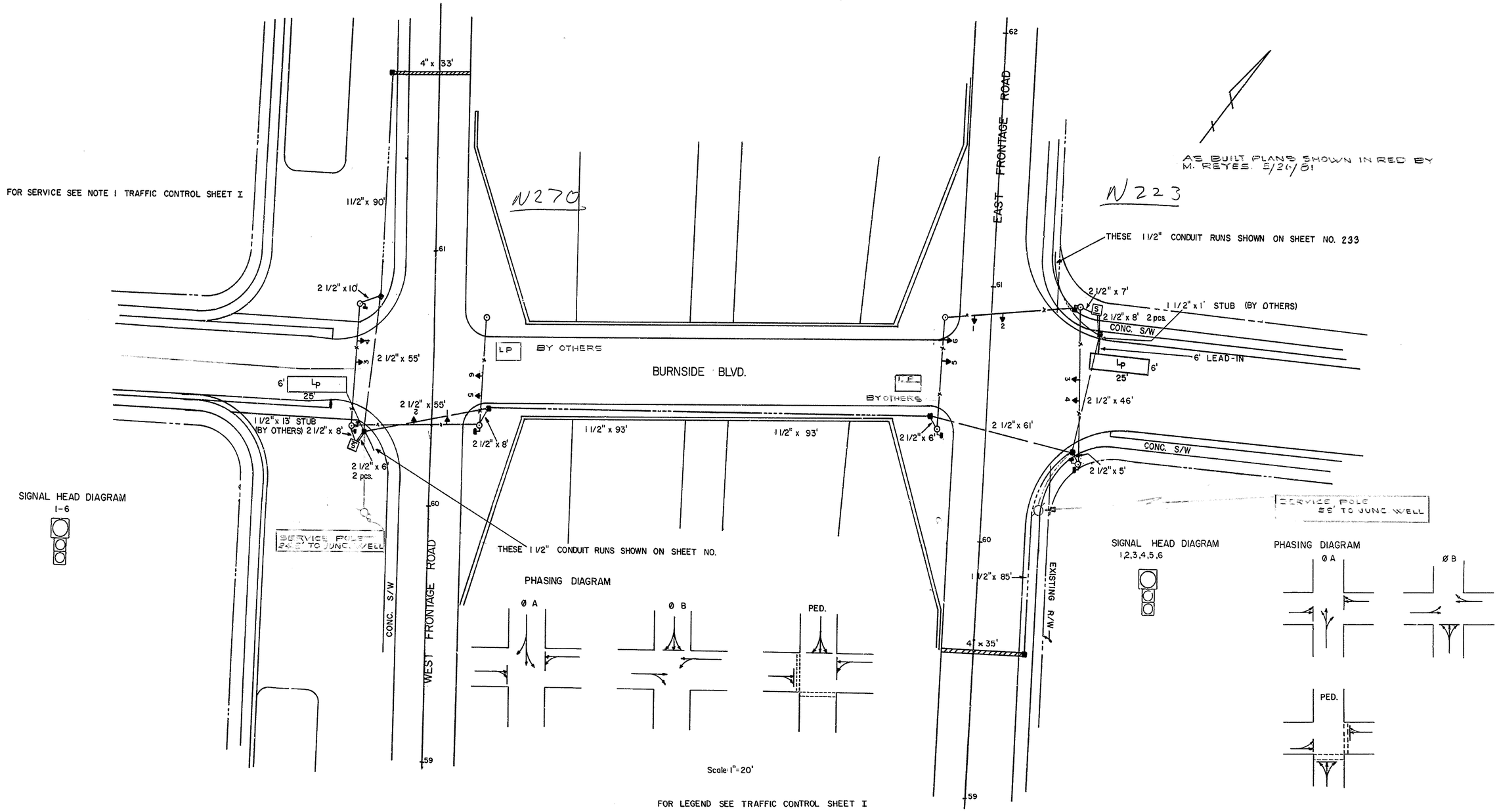

BURNSIDE BLVD. AND WEST FRONTAGE ROAD

BURNSIDE BLVD. AND EAST FRONTAGE ROAD

COUNTY	CONTRACT	P.M.A. REG. NO.	STATE	FED. AID PROJECT NO.	SHEET NO.	TOTAL SHEETS
NEW CASTLE	71-02-009	2	DEL		240	301

RELOCATED DELAWARE ROUTE 141
THRU NEWPORT

PREL. TRACING _____ DESIGN _____ CHKD. _____

REVISIONS

Delete Sign Panels and Supports P.R. 9-16-94

SIGN SUMMARY

SIGN NO.	PLAN SHEET NO.	TYPE *	PANEL NO.				TOTAL AREA (SQ.FT.)	LOCATION
17	241	C	3-19				180.75	STA.39+85 S.R.141 RT.
18	↓	B	3-20				30.00	STA.45+55 S.R.141 LT.
19		HB	3-21	3-22			332.50	STA.46+26.19 S.R.141 RT.
20		HB	3-23	3-24			397.75	STA.47+03.96 S.R.141 LT.
21		C	3-25				169.25	STA.49+40 S.R.141 LT.
22		C	3-26				194.91	STA.54+00 S.R.141 RT.
23		C	3-25				169.25	STA.55+50 S.R.141 LT.
24		HB	3-27	3-26			356.91	STA.60+41.14 S.R.141 RT.
25	↓	HB	3-28	3-29			386.50	STA.60+83.86 S.R.141 LT.
26	241	B	3-30				30.00	STA.62+52 S.R.141 RT.

* "B" REPRESENTS BREAKAWAY TYPE GROUND MOUNTED SIGN, "C" REPRESENTS CANTILEVER SIGN & "HB" REPRESENTS HIGHWAY BRIDGE MOUNTED SIGNS

QUANTITIES FOR SIGNING

SECTION NO.	DESCRIPTION OF ITEM	UNIT	QUANTITY
206	ROCK EXCAVATION FOR STRUCTURES (CANTILEVERS)	CU.YDS.	10
207	EXCAVATION FOR STRUCTURES	CU.YDS.	135
602	PORTLAND CEMENT MASONRY (MISC.)	CU.YDS.	36
605	BAR REINFORCEMENT (MISC.)	LBS.	2,600
S.P.	SIGN PANELS	SQ.FT.	2,247.82
S.P.	CANTILEVER SIGN STRUCTURES		
S.P.	SIGN NO. 17	LUMP SUM	LUMP SUM
S.P.	SIGN NO. 21	LUMP SUM	LUMP SUM
S.P.	SIGN NO. 22	LUMP SUM	LUMP SUM
S.P.	SIGN NO. 23	LUMP SUM	LUMP SUM
S.P.	BREAKAWAY TYPE GROUND MOUNTED SIGN SUPPORTS & FOUNDATIONS		
S.P.	SIGN NO. 18 (W6x8.5)	LUMP SUM	LUMP SUM
S.P.	SIGN NO. 26 (W6x8.5)	LUMP SUM	LUMP SUM
S.P.	ELECTRICAL WORK FOR CANTILEVER & HIGHWAY BRIDGE MOUNTED SIGNS		
S.P.	SIGN NO. 17	LUMP SUM	LUMP SUM
S.P.	SIGN NO. 19	LUMP SUM	LUMP SUM
S.P.	SIGN NO. 20	LUMP SUM	LUMP SUM
S.P.	SIGN NO. 21	LUMP SUM	LUMP SUM
S.P.	SIGN NO. 22	LUMP SUM	LUMP SUM
S.P.	SIGN NO. 23	LUMP SUM	LUMP SUM
S.P.	SIGN NO. 24	LUMP SUM	LUMP SUM
S.P.	SIGN NO. 25	LUMP SUM	LUMP SUM

GENERAL NOTES FOR SIGNS

IDENTIFICATION OF SIGNS

THE SIGN NUMBER SHOWN ON THE PLANS REPRESENTS A COMPLETE SIGN ASSEMBLY INCLUDING PANEL OR PANELS, SUPPORTS, FOUNDATIONS, AND ILLUMINATIONS WHERE REQUIRED, IN THE LOCATIONS SHOWN ON THE PLANS.

IN GENERAL, THE SIGN ASSEMBLIES ARE DIVIDED INTO TWO CATEGORIES AS FOLLOWS:

ROADSIDE SIGNS - SIGNS WHICH DO NOT PROJECT OVER THE PAVEMENT OR SHOULDERS.

OVERHEAD SIGNS - SIGNS WHICH ARE PARTIALLY OR ENTIRELY OVER THE PAVEMENT OR SHOULDERS.

CANTILEVER SIGN STRUCTURES AND FOUNDATIONS

REFER TO SHEET NUMBERS 242 & 246 OF THE CONTRACT PLANS.

IDENTIFICATION OF SIGN PANELS

SIGN PANELS ARE DIVIDED INTO TWO CATEGORIES, i.e.

1. FOR ROADSIDE INSTALLATION - NON ILLUMINATED.
2. FOR OVERHEAD INSTALLATION - ILLUMINATED. WHICH INCLUDE ALL THE SIGN PANELS ON CANTILEVER SIGN SUPPORTS & SIGN PANELS MOUNTED ON HIGHWAY BRIDGES.

COLORS

COLORS WHEN COMPARED IN NATURAL DAYTIME LIGHT, SHALL MATCH THE COLOR TOLERANCE CHARTS FOR SIGNS, AVAILABLE FROM THE FEDERAL HIGHWAY ADMINISTRATION.

LOCATION OF SIGNS

SIGN LOCATIONS ARE INDICATED ON THE PLANS. ADJUSTMENTS IN SIGN LOCATIONS MAY BE REQUIRED BY THE ENGINEER, DUE TO FIELD CONDITIONS, AND TO ASSURE THE PROPER FUNCTIONING OF THE SIGN FOR ITS INTENDED PURPOSE. PRIOR TO ACTUAL CONSTRUCTION, THE CONTRACTOR WILL SECURE APPROVAL OF THE SIGN LOCATION.

ORIENTATION OF SIGN FACES

SIGNS SHALL NORMALLY BE ERECTED WITH FACES VERTICAL AND NORMAL TO THE CENTERLINE OF THE LANE WHICH THE SIGN SERVES. IF NECESSARY TO AVOID SPECULAR REFLECTION, THE FACES OF ROADSIDE SIGNS MAY BE TURNED AWAY FROM THE ROADWAY, OR TILTED UP AS MUCH AS 3 DEGREES. WHERE LANES DIVIDE, OR ON SHARP CURVES, FACES SHALL BE ORIENTED TO BE MOST EFFECTIVE FOR DAY AND NIGHT VIEWING, AND TO AVOID OBJECTIONABLE REFLECTION. AFTER INSTALLATION IS COMPLETED, THE SIGNS WILL BE INSPECTED BY THE ENGINEER, AT NIGHT, AND DURING THE DAY. SPECULAR REFLECTION WILL BE ELIMINATED OR MINIMIZED BY ADJUSTMENT OF THE SIGN FACES, AT THE CONTRACTOR'S EXPENSE.

SIGN PANELS

SIGN PANELS SHALL HAVE A BACKGROUND OF PERMANENTLY APPLIED GREEN OR YELLOW "ENCAPSULATED LENS WIDE ANGLE REFLECTIVE SHEETING". LEGEND AND BORDERS FOR SIGN PANELS SHALL BE FORMED FROM "ENCAPSULATED LENS WIDE ANGLE RELECTIVE SHEETING" OF THE COLOR NOTED ON THE PANEL DRAWINGS, AND SHALL BE PERMANENTLY APPLIED TO ALUMINUM SHEETING TO FORM DEMOUNTABLE COPY. THE LEGEND AND BORDER SHALL BE MOUNTED ON THE SIGN PANEL USING EMBOSSED ALUMINUM FRAMES. THE FRAMES SHALL BE PAINTED WITH WHITE OR BLACK BAKED ENAMEL AND FITTED WITH ATTACHMENTS FOR BOLTING TO THE SIGN PANEL. ALL LETTERS, SHIELDS, AND ARROWS ON THE PANELS SHALL BE PROPERLY SPACED AND CENTERED.

DESIGN SPECIFICATIONS

1. 1969 A.A.S.H.O. STANDARD SPECIFICATIONS FOR HIGHWAY BRIDGES & INTERIM SPECIFICATIONS DATED 1970, 1971 & 1972.
2. 1968 A.A.S.H.O. SPECIFICATIONS FOR THE DESIGN AND CONSTRUCTION OF STRUCTURAL SUPPORTS FOR HIGHWAY SIGNS.

CONSTRUCTION SPECIFICATIONS

1. 1970 STANDARD SPECIFICATIONS OF THE DELAWARE STATE HIGHWAY DEPARTMENT.
2. SPECIAL PROVISIONS PREPARED FOR THIS CONTRACT.

DESIGN WIND

80 MILES PER HOUR.

ALTERNATE DESIGNS - OVERHEAD SIGN BRIDGES AND FOUNDATIONS

IN PLACE OF THE PLAN CONSTRUCTION, THE CONTRACTOR MAY AT HIS OPTION, SUBMIT FOR APPOVAL AN ALTERNATE DESIGN, OR DESIGNS, FOR THE OVERHEAD SIGN BRIDGES. A PARTIAL LIST OR ACCEPTABLE DESIGNS IS AS FOLLOWS:

1. UNION METAL MANUFACTURING COMPANY - SECTION E.
2. U.S. STEEL CORPORATION - HIGHWAY HARDWARE NOTEBOOK VOL.1, SECTION 3.
3. PFAFF AND KENDALL - NEWARK, NEW JERSEY - ALUMINUM BOX TRUSS SIGN SPANS - BULLETION NO.bt-1.

ALTERNATE FOUNDATION DESIGNS WILL ALSO BE SUBMITTED TO CONFORM WITH THE REQUIREMENTS OF THE SUPERSTRUCTURE DESIGNS.

FOR MATERIALS SPECIFICATIONS, REFER TO THE SPECIAL PROVISIONS & STANDARD SPECIFICATIONS.

CONCRETE & BAR REINFORCEMENT

ALL REINFORCED CONCRETE SHALL HAVE A MINIMUM 28 DAY COMPRESSIVE STRENGTH OF 3000 POUNDS PER SQUARE INCH.

BAR REINFORCEMENT SHALL BE OF BILLET STEEL, INTERMEDIATE GRADE (ASTM: A15). LAPS IN BAR REINFORCEMENT SHALL BE 24 DIAMETERS, UNLESS OTHERWISE NOTED. COVER SHALL BE 2" (MIN.) FOR PEDESTAL, 3" (MIN.) FOR FOOTINGS.

ALL EXPOSED CONCRETE EDGES SHALL BE CHAMFERRED 3/4".

SIGN SUMMARY, QUANTITIES
AND
GENERAL NOTES

COUNTY	CONTRACT	F.R.A. RES. NO.	STATE	FED. AID PROJECT NO.	SHEET NO.	TOTAL SHEETS
NEW CASTLE	71-02-009	2	DEL.		241	301

RELOCATED DELAWARE ROUTE 141
THRU NEWPORT

PREL. TRACING _____ DESIGN _____ CHKD. _____

REVISIONS

1. Delete Sign Panels and Supports R.R. 9-10-74

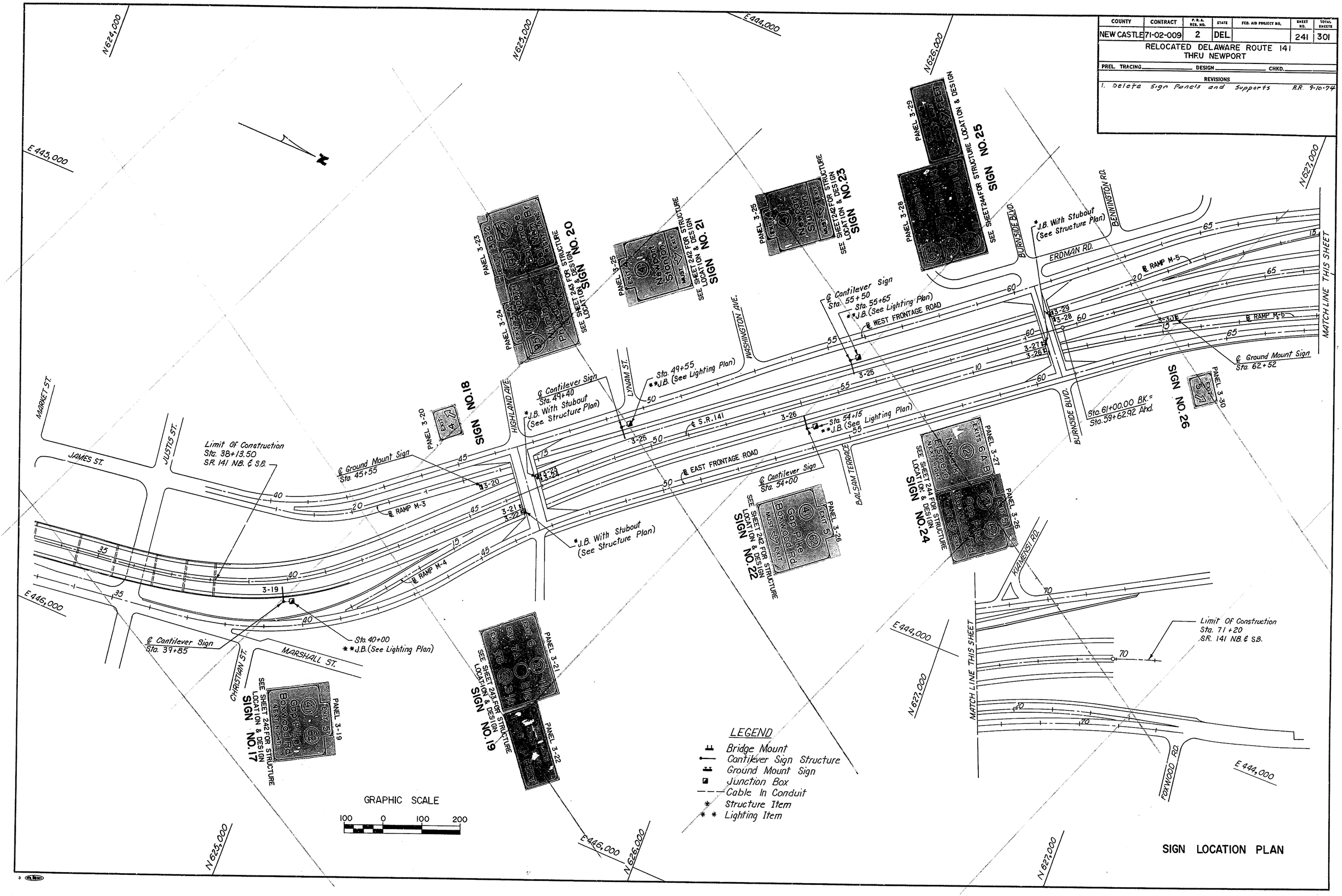

COUNTY	CONTRACT	P.R.A. REG. NO.	STATE	FED. AID PROJECT NO.	SHEET NO.	TOTAL SHEETS
NEW CASTLE	71-02-009	2	DEL.		242	301

RELOCATED DELAWARE ROUTE 141
THRU NEWPORT

PREL. TRACING _____ DESIGN _____ CHKD. _____

REVISIONS

1. Delete sign panels and supports R.R. 9-10-94

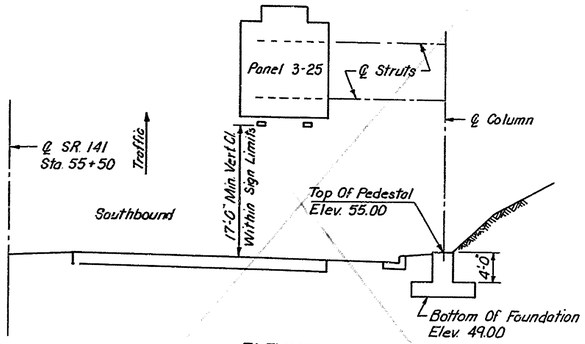

ELEVATION
Scale 1" = 10'-0"
SIGN NO. 23

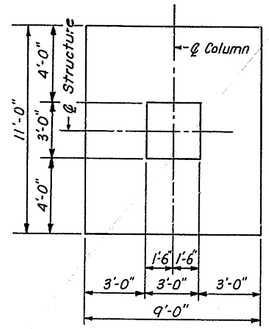

PLAN OF FOUNDATION (TYP.)

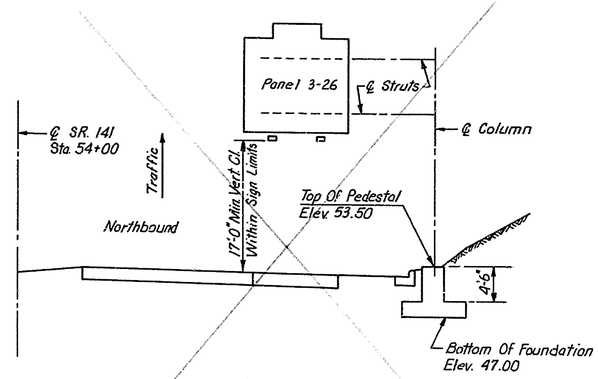

ELEVATION
Scale 1" = 10'-0"
SIGN NO. 22

NOTES:

- SEE "CANTILEVER SIGN SUPPORTS - STANDARD DETAILS" SHEET FOR GENERAL NOTES AND ELEVATION OF CANTILEVER SUPPORTS.
- FOUNDATIONS SHALL BE PLACED ON UNDISTURBED MATERIAL, OR ON FILL MADE BY CONTROLLED COMPACTION, AND AT DEPTH UNAFFECTED BY FROST. NO FOUNDATION CONSTRUCTION WILL BE BEGUN UNTIL THE ENGINEER HAS INSPECTED THE EXCAVATION, AND APPROVED THE CHARACTER AND CONDITION OF THE EXPOSED FOUNDATION MATERIAL.
- FOUNDATION DETAILS SHOWN ON THE CONTRACT PLANS ARE OF A GENERAL NATURE, AND ARE SUBJECT TO ALTERATIONS AND MODIFICATIONS, WHEN ORDERED BY THE DIRECTOR. TO MEET THE REQUIREMENTS OF FIELD CONDITIONS.
- FOR FULL DETAILS FOR PANELS 3-19, 3-25 AND 3-26, SEE "SIGN PANEL DETAIL" SHEETS.

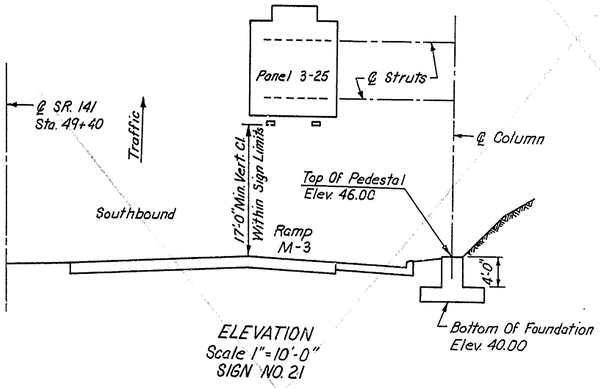

ELEVATION
Scale 1" = 10'-0"
SIGN NO. 21

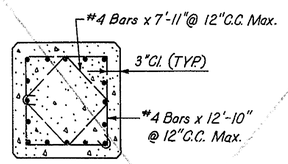

SECTION B-B

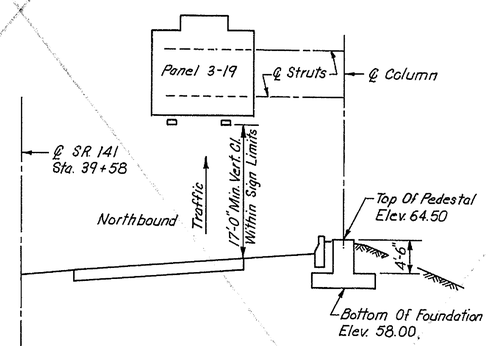

ELEVATION
Scale 1" = 10'-0"
SIGN NO. 17

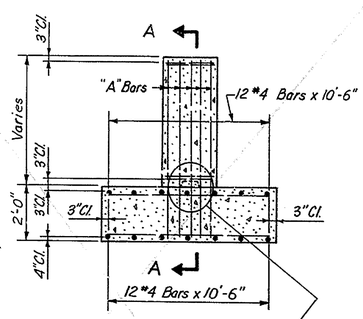

ELEVATION (TYP.)

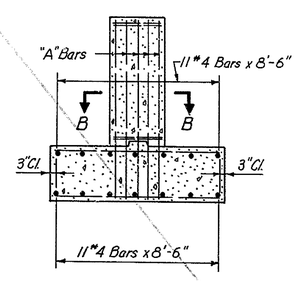

SECTION A-A

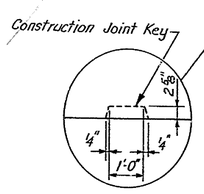

"A" BAR		
BAR SIZE	A	LENGTH
8	1'-1"	B+2'-6"

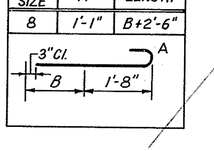

TABLE OF ESTIMATED SIGN BRIDGE QUANTITIES

SECTION NO.	ITEM	UNIT	QUANTITY			
			39+58	49+40	54+00	55+50
207	EXCAVATION FOR STRUCTURES	CU.YDS.	35	32	35	32
602	PORTLAND CEMENT CONCRETE MASONRY (MISC.)	CU.YDS.	9	9	9	9
605	BAR REINFORCEMENT	LBS.	660	645	660	645
S.P.	SUPPORT STRUCTURES	L.S.	LUMP SUM	LUMP SUM	LUMP SUM	LUMP SUM
S.P.	ELECTRICAL WORK	L.S.	LUMP SUM	LUMP SUM	LUMP SUM	LUMP SUM
S.P.	SIGN PANELS	SQ.FT.	180.75	169.25	194.91	169.25

CANTILEVER SIGN STRUCTURES

STA. 39+58 SR. 141 NB. SIGN NO. 17
STA. 49+40 SR. 141 SB. SIGN NO. 21
STA. 54+00 SR. 141 NB. SIGN NO. 22
STA. 55+50 SR. 141 SB. SIGN NO. 23

COUNTY	CONTRACT	F.B.A. RES. NO.	STATE	FED. AID PROJECT NO.	SHEET NO.	TOTAL SHEETS
NEW CASTLE	71-02-009	2	DEL.		243	301

RELOCATED DELAWARE ROUTE 141
THRU NEWPORT

PREL. TRACING _____ DESIGN _____ CHKD. _____

REVISIONS

1. Delete Sign Panels and Supports R.R. 9-10-74

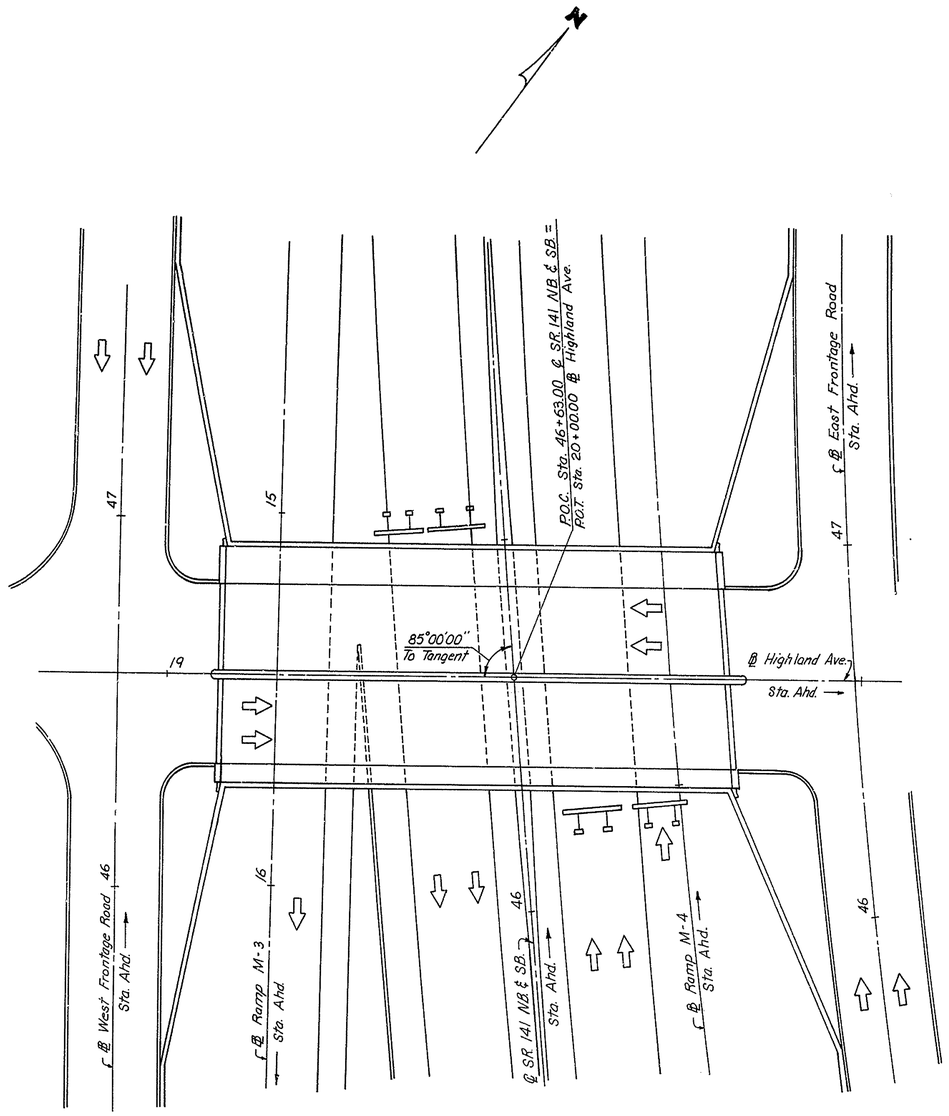

PLAN
Scale 1"=20'

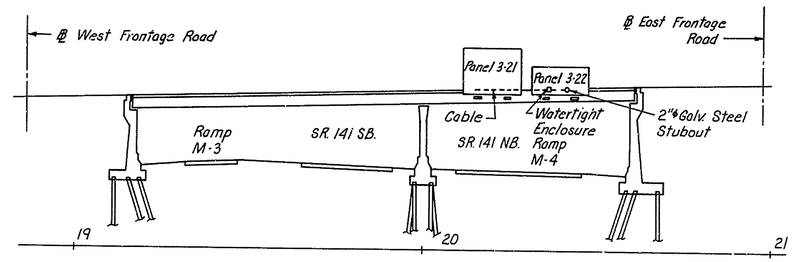

ELEVATION
STA. 46+26.19 SR. 141 N.B.
SIGN NO. 19

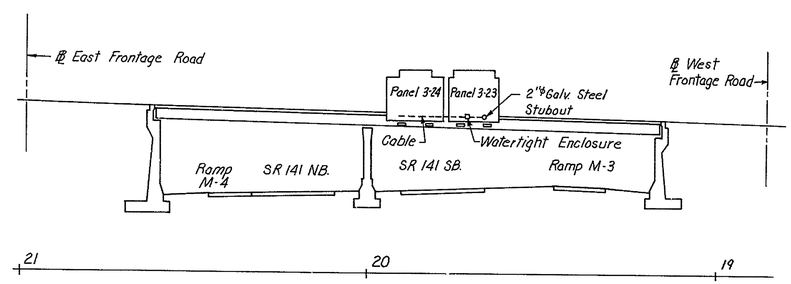

ELEVATION
STA. 47+03.96 SR. 141 S.B.
SIGN NO. 20

NOTES:

- FOR FULL DETAILS FOR PANELS 3-21, 3-22, 3-23 & 3-24 SEE SIGN PANEL DETAIL SHEETS
- FOR DETAILS OF SIGN LIGHTING SEE SIGN LIGHTING DETAIL SHEET
- FOR LOCATION OF SIGN STRUCTURE AND SIGN SUPPORTS SEE BRIDGE DRAWINGS

TABLE OF ESTIMATED SIGN QUANTITIES

SECTION NO.	ITEM	UNIT	QUANTITY	
			46+26.19	47+03.96
S.P.	ELECTRICAL WORK		LUMP SUM	LUMP SUM
S.P.	SIGN PANELS		332.50	397.75

SIGN STRUCTURES ON
HIGHLAND AVENUE BRIDGE
STA. 46+26.19 SR. 141 NB. SIGN NO. 19
STA. 47+03.96 SR. 141 SB. SIGN NO. 20
SCALE 1"=20'

COUNTY	CONTRACT	P. R. A. REG. NO.	STATE	FED. AID PROJECT NO.	SHEET NO.	TOTAL SHEETS
NEW CASTLE	71-02-009	2	DEL.		244	301

RELOCATED DELAWARE ROUTE 141
THRU NEWPORT

PREL. TRACING _____ DESIGN _____ CHKD. _____

REVISIONS

1. Delete Sign Panels and Supports R.R. 9-10-74

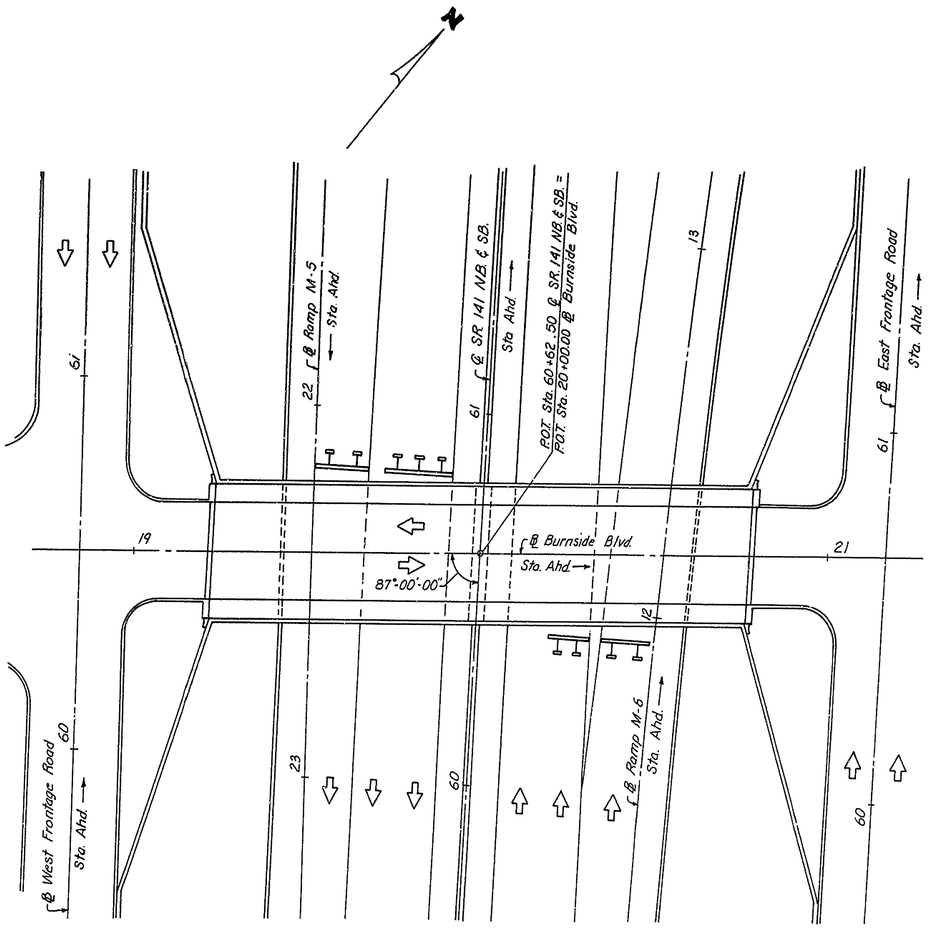

PLAN
Scale = 1"-20'

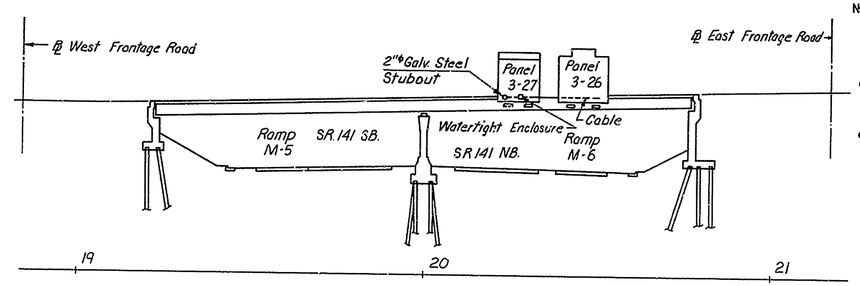

ELEVATION
STA. 60+41.14 SR. 141 NB.
SIGN NO. 24

NOTES:

- FOR FULL DETAILS FOR PANELS 3-26, 3-27, 3-28 & 3-29 SEE SIGN PANEL DETAIL SHEETS
- FOR DETAILS OF SIGN LIGHTING SEE SIGN LIGHTING DETAIL SHEET
- FOR LOCATION OF SIGN STRUCTURE AND SIGN SUPPORTS SEE BRIDGE DRAWINGS

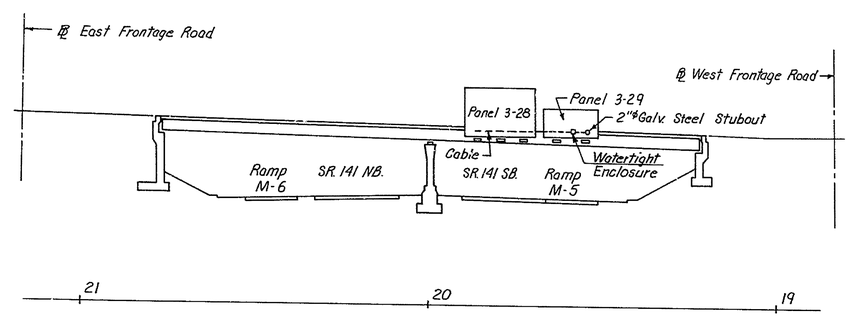

ELEVATION
STA. 60+83.86 SR. 141 SB.
SIGN NO. 25

TABLE OF ESTIMATED SIGN QUANTITIES

SECTION NO.	ITEM	UNIT	QUANTITY	
			60+41.14	60+83.86
S.P.	ELECTRICAL WORK		LUMP SUM	LUMP SUM
S.P.	SIGN PANELS		356.91	386.50

SIGN STRUCTURES ON
BURNSIDE BLVD. BRIDGE
STA. 60+41.14 SR. 141 NB. SIGN NO. 24
STA. 60+83.86 SR. 141 SB. SIGN NO. 25
SCALE 1"=20'

COUNTY	CONTRACT	P. R. A. REG. NO.	STATE	FED. AID PROJECT NO.	SHEET NO.	TOTAL SHEETS
NEW CASTLE	71-02-009	2	DEL.		245	301

RELOCATED DELAWARE ROUTE 141
THRU NEWPORT

PREL. TRACING _____ DESIGN _____ CHKD. _____

REVISIONS

1. Delete Sign Panels and Supports RR 9-10-74

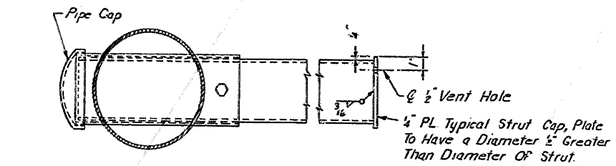

SECTION A-A

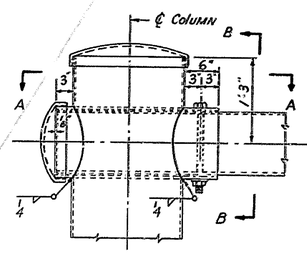

ELEVATION
STRUT CONNECTION

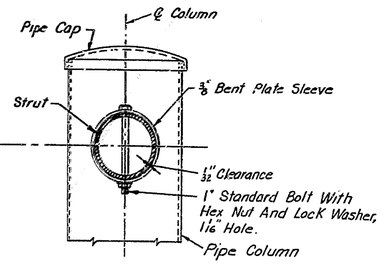

SECTION B-B

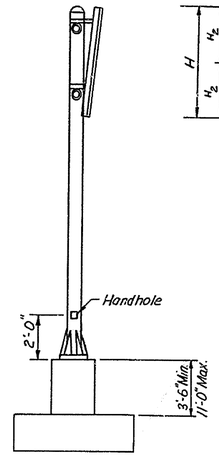

SIDE VIEW

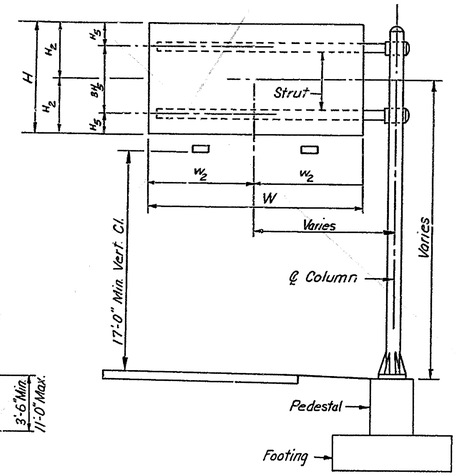

FRONT VIEW

DOUBLE STRUT SIGN

NOTE:
Provide Additional Brackets As Required At 6'-0" Max. Spacing.

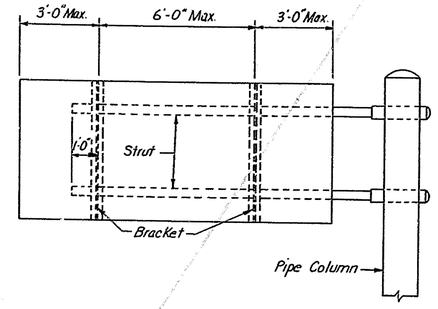

TYPICAL BRACKET SPACING DIAGRAMS FOR CANTILEVERS

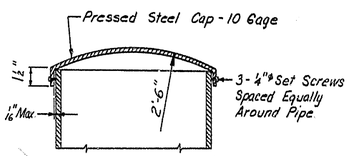

SECTION A-A

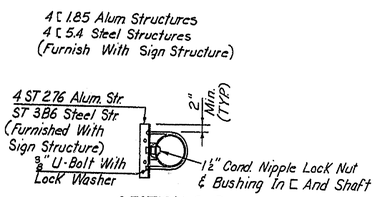

SECTION D-D

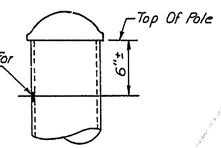

MOUNTING HOLE FOR
PHOTOELECTRIC CONTROL
NO Scale

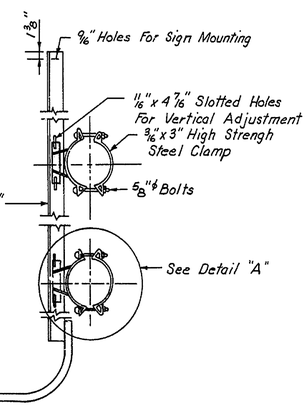

SIGN BRACKET DETAILS
No Scale

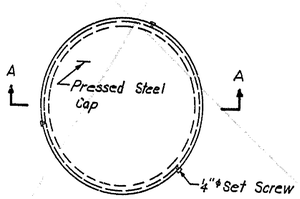

PIPE CAP DETAIL

NOTE:
All Material For Base Details And Cap Plates Shall Be Structural Steel A.S.T.M.-A 36. All Anchor Bolts Shall Be Structural Steel A.S.T.M.-A441.

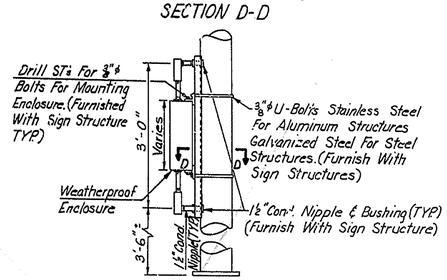

DETAIL OF SUPPORT FOR CIRCUIT BREAKER PANEL

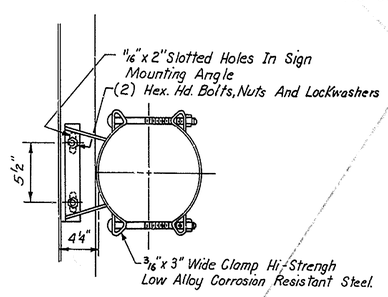

DETAIL "A"
No Scale

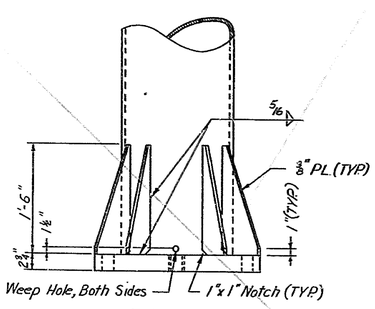

ELEVATION

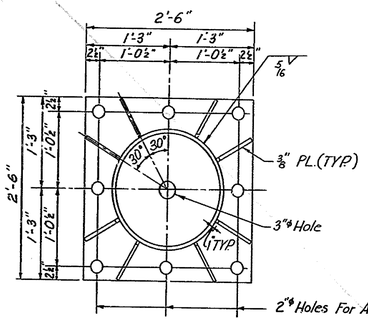

PLAN OF COLUMN BASE

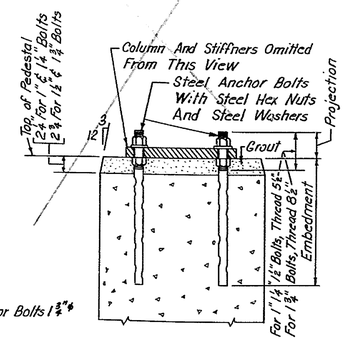

ANCHOR BOLT DETAIL FOR CANTILEVER

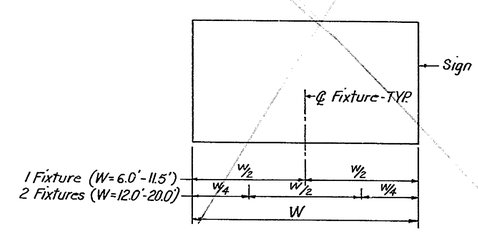

LIGHT FIXTURE SPACING

NOTES FOR CANTILEVER SIGN SUPPORTS

DESIGN PLANS, WORKING DRAWINGS:

- THE OVERHEAD SIGN SUPPORTS AND RELATED STRUCTURES DETAILED ON THE PLANS REPRESENT AN ACCEPTABLE TYPE OF CONSTRUCTION REQUIRED FOR THE CONTRACT.
- THE CONTRACTOR SHALL SUBMIT FOR APPROVAL A COMPLETE SET OF DESIGN COMPUTATIONS AND DETAIL PLANS FOR THE PROPOSED SIGN SUPPORTS, CANTILEVER SIGN SUPPORTS, SIGN PANELS AND THEIR SUPPORTS, ELECTRICAL CONDUIT AND LIGHTING INSTALLATIONS, AND ALL INCIDENTAL CONSTRUCTION REQUIRED TO COMPLETE THIS PORTION OF THE CONTRACT, AND HE SHALL NOT PROCEED WITH THE WORK UNTIL HIS PROPOSED DESIGN PLANS HAVE BEEN REVIEWED AND APPROVED BY THE ENGINEER.
- DESIGN SHALL BE IN ACCORDANCE WITH A.A.S.H.O. SPECIFICATIONS FOR STRUCTURAL SUPPORTS FOR HIGHWAY SIGNS, COPYRIGHT 1968 WITH WIND SPEED OF 80 M.P.H.

SIGN LOCATIONS:

- THE APPROXIMATE LOCATIONS OF THE SIGN STRUCTURES ARE INDICATED ON THE CONTRACT PLANS; HOWEVER, THE CONTRACTER SHALL NOT PROCEED WITH THE ORDERING OF MATERIALS OR THE EXCAVATION FOR THE FOUNDATIONS FOR ANY OF THESE STRUCTURES UNTIL THE ENGINEER, OR HIS AUTHORIZED REPRESENTATIVE, HAS BEEN GIVEN THE OPPORTUNITY TO EXAMINE, VERIFY AND APPROVE THE ACTUAL FIELD LOCATIONS.
- THE CONTRACTOR SHALL BE RESONSIBLE FOR THE PROPER ELEVATION AND ORIENTATION OF ALL SIGNS TO BE ERECTED ON THE OVERHEAD STRUCTURES, AND SHALL VERIFY IN THE FIELD ALL VERTICAL AND HORIZONTAL CLEARANCES, SPAN LENGTHS, AND CONTROL DIMENSIONS FOR EACH INSTALLATION, BEFORE THE PREPARATION OF SHOP PLANS, WORKING DRAWINGS AND ACTUAL CONSTRUCTION OPERATIONS.

CANTILEVER SIGN SUPPORT STANDARD DETAILS

COUNTY	CONTRACT	P. R. A. REG. NO.	STATE	FED. AID PROJECT NO.	SHEET NO.	TOTAL SHEETS
NEW CASTLE	71-02-009				246	301

RELOCATED DELAWARE ROUTE 141
THRU NEWPORT

PREL. TRACING _____ DESIGN _____ CHKD. _____

REVISIONS

1. Delete Sign Panels and Supports R.R. 9-10-74

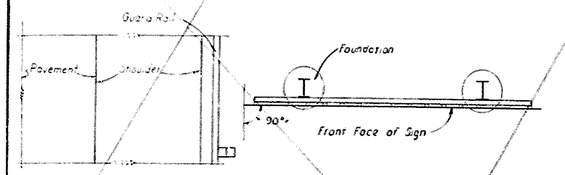

PLAN VIEW

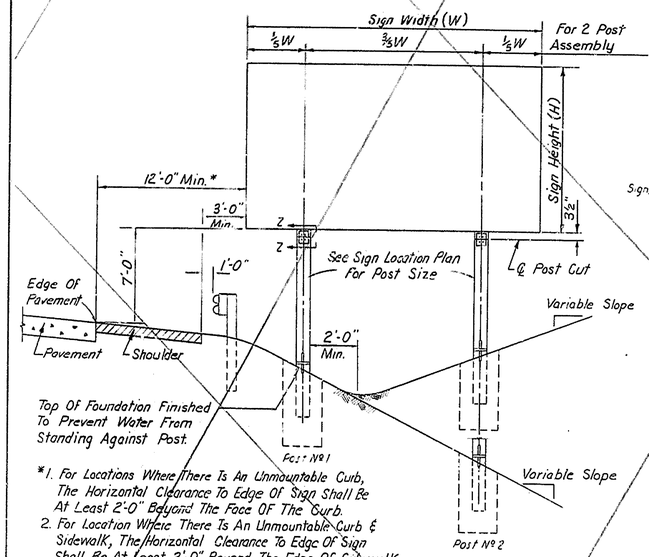

*1. For Locations Where There Is An Unmountable Curb, The Horizontal Clearance To Edge Of Sign Shall Be At Least 2'-0" Beyond The Face Of The Curb.
2. For Location Where There Is An Unmountable Curb & Sidewalk, The Horizontal Clearance To Edge Of Sign Shall Be At Least 2'-0" Beyond The Edge Of Sidewalk

SIGN ELEVATION

END VIEW

TYPICAL INSTALLATION DETAILS

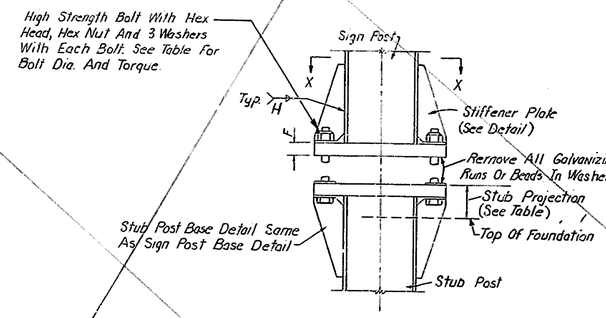

BASE CONNECTION

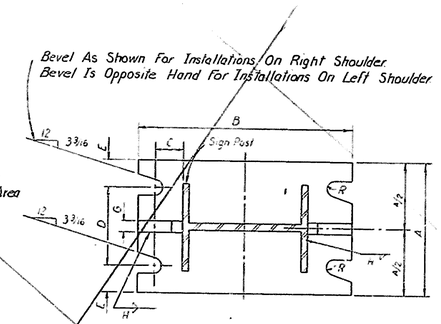

SECTION X-X

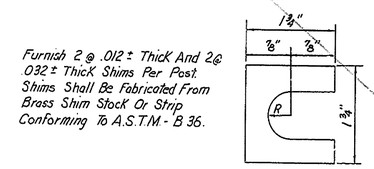

SHIM DETAIL

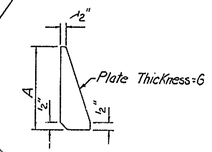

STIFFENER PLATE DETAIL

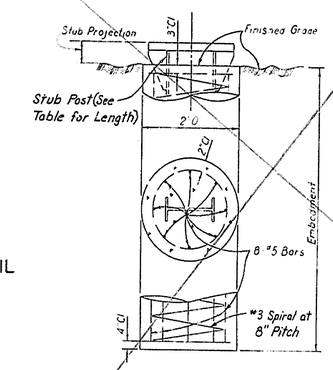

FOUNDATION DETAIL

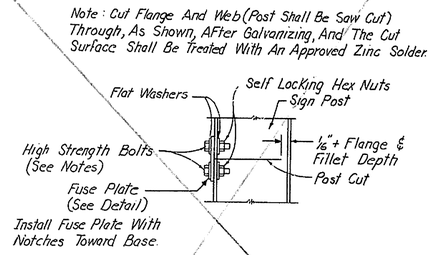

SECTION Z-Z

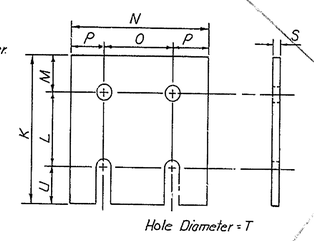

FUSE PLATE

NOTES

Design conforms with 1968 AASHO Specifications for Design and Construction of Structural Supports for Highway Signs

Materials and fabrication shall conform to the requirements of the Delaware State Highway Department Standard Specification June 1, 1970 and the Special Provisions.

All structural steel shall conform to A.S.T.M.-A441. Flange holes for fuse bolts shall be drilled.

All high strength bolts, nuts and washers shall conform to A.S.T.M.-A325

Tighten the high strength bolts in the base plate connection only to the torque shown in the table. Do not over tighten.

Notched steel fuse plates shall conform to the requirements of A.S.T.M.-A441. All holes shall be drilled. All plate cuts shall preferably be saw cuts, however, flame cutting will be permitted provided all edges are ground. Metal projecting beyond the plane of the plate face will not be tolerated.

All bolts other than high strength bolts shall conform to A.S.T.M.-A307, class A.

All structural steel, bolts, nuts and washers shall be galvanized as per A.S.T.M.-A123.

Steel shall be galvanized after fabrication except as noted

FABRICATION NOTE

All friction fuse bolts shall be tightened in the shop following a method approved by the engineer. Tightening shall be to such a degree as to obtain the following residual tension in each bolt.

BOLT SIZE	MIN RESIDUAL TENSION
½" Dia.	19,200 Lbs.
⅝" Dia.	28,400 Lbs.
¾" Dia.	36,050 Lbs.

PROCEDURE FOR ASSEMBLY OF BASE CONNECTION

1. Assemble post to stub with bolts and with one flat washer on each bolt between plates.
2. Shim as required to plumb post
3. Tighten all bolts the maximum possible with 12 to 15 inch wrench to bed washers and shims and to clean bolt threads then loosen each bolt in turn and retighten in a systematic order to the prescribed torque. (See Table) Wrench will be available by Contractor for the Engineer's Use in Inspection
4. Burr threads at junction with nut using a center punch to prevent nut loosening.

SCHEDULE FOR BREAKAWAY SIGN SUPPORTS

SIGN Nº	SHEET Nº	FOUNDATION QUANTITIES: REINFORCEMENT LBS	FOUNDATION QUANTITIES: PCC MASONRY CY	SIGN PANEL Nº	SIGN PANEL W	SIGN PANEL H	SIGN POST SIZE	SIGN POST LENGTH 1	SIGN POST LENGTH 2
18		55	0.70	3-20	6'-0"	5'-0"	W6x8.5	12'-0"	12'-0"
26		55	0.70	3-30	6'-0"	5'-0"	W6x8.5	12'-0"	12'-0"

POST SIZE	FOUNDATION DATA: EMBEDMENT	FOUNDATION DATA: STUB LENGTH	FOUNDATION DATA: STUB PROJ.	CONNECTION DATA: BOLT SIZE	CONNECTION DATA: TORQUE	A	B	C	D	E	F	G	H	R	FUSE PLATE DATA: BOLT DIAM.	K	L	M	N	O	P	U	S	T
W6X8.5	3'-0"	2'-0"	3"	⅝"	450#	5"	2"	1¼"	2¾	1⅛	¾	½	¼	1/32"	⅝"φ	4⅜"	2½"	1⅛"	4½"	2¼"	1⅛"	¾"	¼"	1 1/16"φ

TYPICAL DETAILS
BREAKAWAY TYPE
GROUND MOUNTED SIGN SUPPORTS

COUNTY	CONTRACT	P R A REQ NO	STATE FED AID PROJECT NO	SHEET NO	TOTAL SHEETS
NEW CASTLE	71-02-009	2	DEL.	247	301

RELOCATED DELAWARE ROUTE 141
THRU NEWPORT

PREL. TRACING ——— DESIGN ——— CHKD

REVISIONS

1. Delete Sign Panels and Supports R.R. 9-10-77

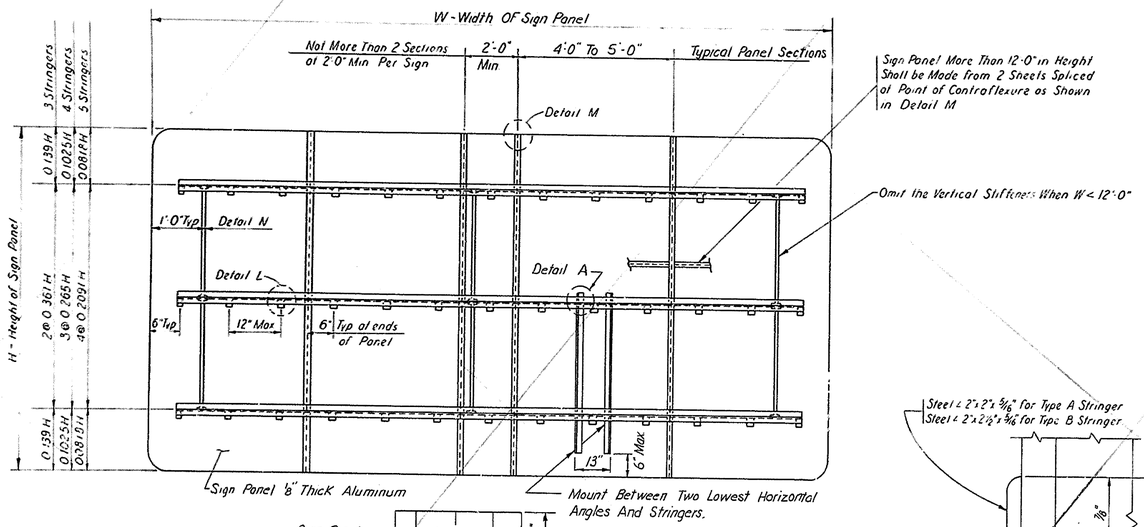

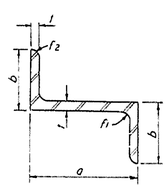

HORIZONTAL STRINGERS

HORIZONTAL STRINGERS						
TYPE	a	b	t	Wt.	f1	f2
A	2 3/8"	1 1/4"	3/16"	100	3/16"	1/8"
B	3"	2 1/16"	1/4"	233	5/16"	1/4"

NUMBER AND TYPE OF HORIZONTAL STRINGERS				
HEIGHT H	TY. A STRINGER		TY. B STRINGER	
	No	Max. W	No.	Max. W
6'-6"	3	17'-6"	3	24'-0"
7'-6"	3	16'-6"	3	
8'-0"	3	16'-0"	3	
8'-6"	3	15'-6"	3	
9'-0"	4	17'-6"	4	
9'-6"	4	17'-0"	4	
10'-0"	4	16'-6"	4	
10'-6"	4	16'-6"	4	
11'-0"	4	16'-0"	4	
11'-6"	4	15'-6"	4	
12'-0"	5	17'-0"	5	
12'-6"	5	16'-6"	5	
13'-0"	5	16'-6"	5	
13'-6"	5	16'-0"	5	
14'-0"	5	16'-0"	5	24'-0"

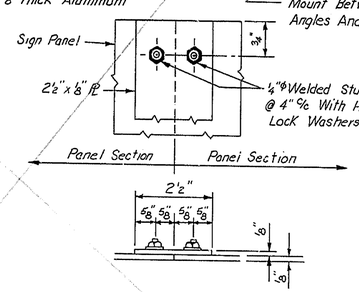

DETAIL M
(Backing Strip)

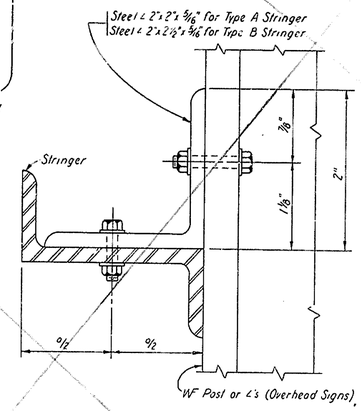

SECTION A-A

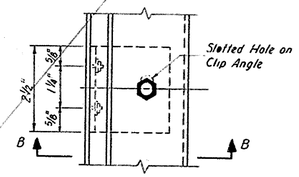

DETAIL L

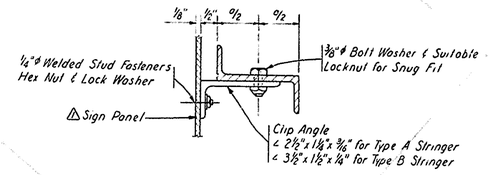

SECTION B-B

PANEL ATTACHMENT
TO
HORIZONTAL STRINGERS

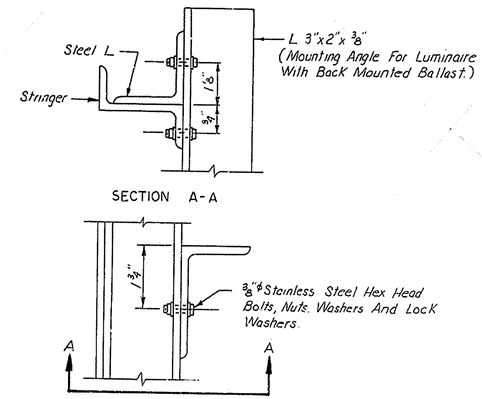

SECTION A-A

DETAIL A

MOUNTING ANGLE FOR
BALLAST AND LUMINAIRE

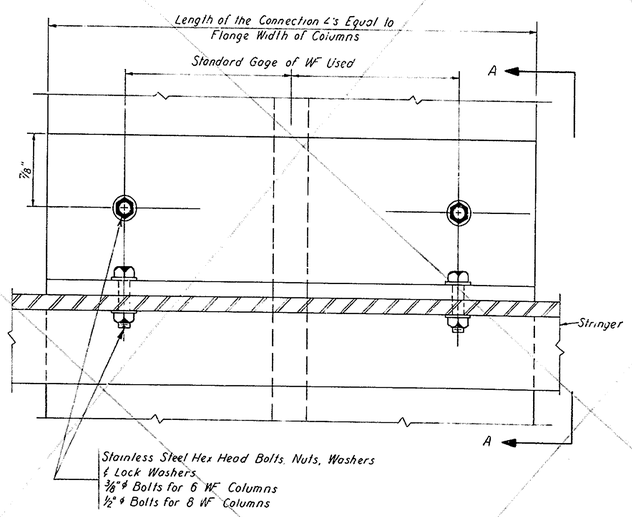

STRINGER ATTACHMENT
TO
STEEL WF POST FOR ROADSIDE SIGNS

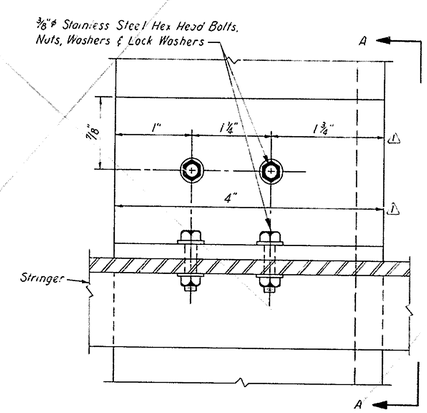

STRINGER ATTACHMENT
TO
STEEL ANGLES FOR OVERHEAD SIGNS

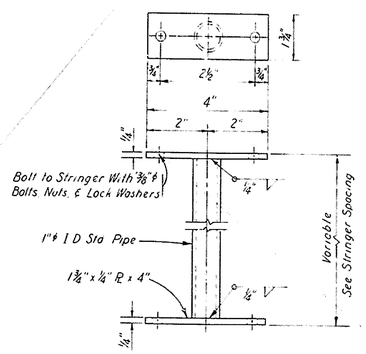

DETAIL N
(Vertical Stiffener)

TYPICAL DETAILS

MULTIPLE SHEET SIGN PANELS
NO SCALE

COUNTY	CONTRACT	P.R.A. REQ. NO.	STATE	FED. AID PROJECT NO.	SHEET NO.	TOTAL SHEETS
NEW CASTLE	71-02-009	2	DEL.		248	301

RELOCATED DELAWARE ROUTE 141
THRU NEWPORT

PREL. TRACING _____ DESIGN _____ CHKD. _____

REVISIONS

1. Delete Sign Panels and Supports R.R. 9-10-94

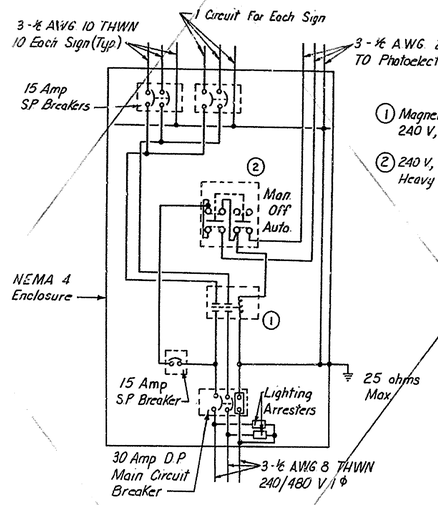

① Magnetic Control Contractor - 240 V, 4 Pole, 30 Amp, 240 V, 60 HZ., Operating Coil.

② 240 V, 3 Position, Selector Switch, Maintained Contact, Heavy Duty Control Station.

CONTROL CABINET SCHEMATIC
WIRING DIAGRAM (TYPICAL)

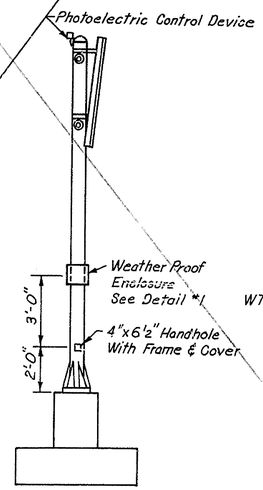

SIDE VIEW

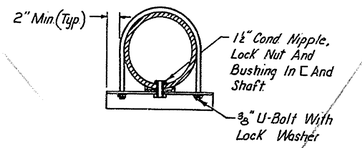

SECTION "A-A"

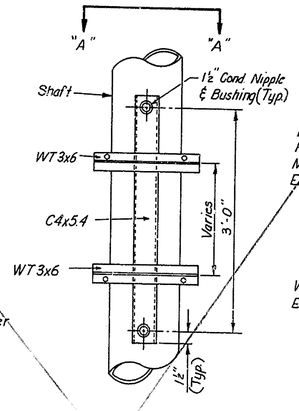

FRONT VIEW

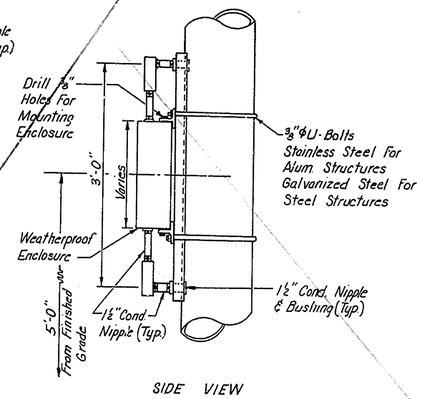

SIDE VIEW

DETAIL 1

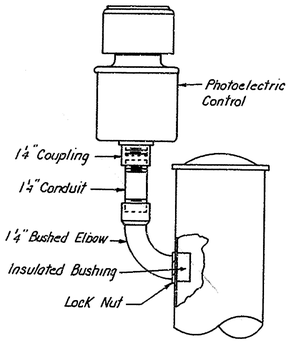

TYPICAL MOUNTING OF
PHOTOELECTRIC CONTROL

NOTES:

UNDER THE CONTRACT ITEMS "ELECTRICAL WORK FOR SIGN BRIDGE NO. (AS NOTED)" THE CONTRACTOR SHALL FURNISH AND INSTALL ALL SIGN LUMINAIRES, PHOTOELECTRIC CONTROL CELL CONDUITS AND CONDUIT CONNECTORS, CONDULETS, WEATHERPROOF BALLAST UNITS AND SUPPORTS, AS WELL AS ALL FASTENERS, CABLES, WIRING, AND ACCESSORIES REQUIRED FOR A COMPLETE INSTALLATION UP TO THE DESIGNATED SERVICE CONNECTION POINT FOR EACH OVERHEAD SIGN. ALL MATERIALS AND WORKMANSHIP SHALL CONFORM WITH THE 1971 NATIONAL ELECTRICAL CODE OF THE NATIONAL BOARD OF FIRE UNDERWRITERS.

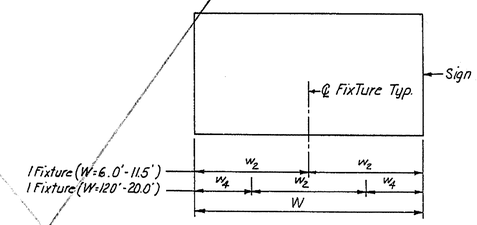

LIGHT FIXTURE SPACING

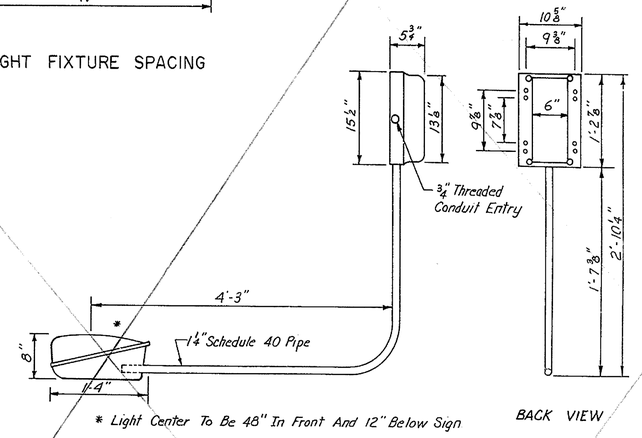

TYPICAL LIGHTING FIXTURE

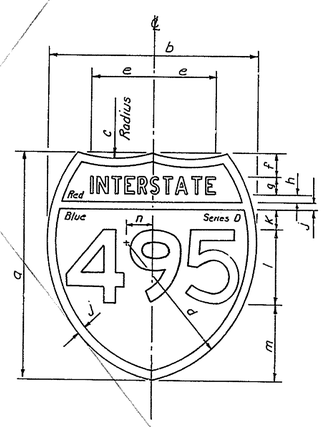

INTERSTATE SHIELD ON GUIDE SIGNS

DIMENSION	18" NUMERALS	
	2 DIGITS	3 DIGITS
a	36"	36"
b	36"	45"
c	22 1/2"	36"
d	22 1/2"	25 1/2"
e	11 11/16"	11 11/16"
f	3"	3"
g	3 3/4"	3 3/4"
h	3/4"	3/4"
j	3/4"	3/4"
k	1 1/2"	1 1/2"
l	18"	18"
m	8 1/4"	8 1/4"
n	4 1/2"	3"

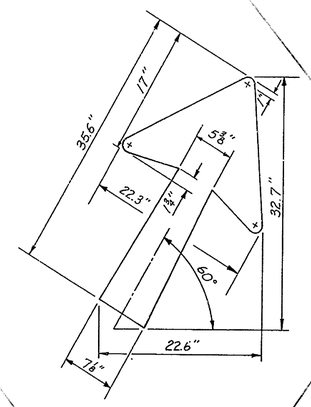

TYPE "A" ARROW

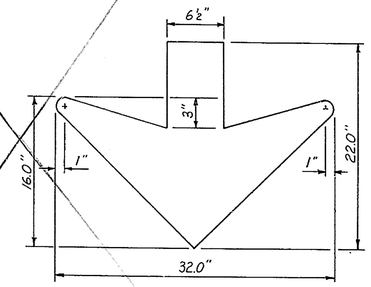

TYPE "B" ARROW

SHIELDS & ARROWS ON GUIDE SIGNS
AND
SIGN LIGHTING DETAILS
NO SCALE

COUNTY	CONTRACT	P.B.R. REG. NO.	STATE	FED. AID PROJECT NO.	SHEET NO.	TOTAL SHEETS
NEW CASTLE	71-02-009	2	DEL.		249	301

RELOCATED DELAWARE ROUTE 141
THRU NEWPORT

PREL. TRACING _____ DESIGN _____ CHKD. _____

REVISIONS

1. Delete sign Panels and supports R.R. 9-10-74

PANEL NO.	SHEET NO.	QUANTITY	LEGEND	SIZE WIDTH	SIZE HEIGHT	EXIT PANEL	TOTAL AREA	COLOR LEGEND	COLOR BACKGR'D	BORDER WIDTH	BORDER RADIUS	ARROW TYPE	ARROW SIZE	SHIELD SIZE	SHIELD NUMERALS
3-19		1	EXIT 5 / 41 62 / Gap Pike / Boxwood Rd. / NEXT RIGHT (10"-15", 9", 36", 12", 16"-12", 12", 16"-12", 12", 10", 12", 12")	14'-6"	11'-6"	2'-0" x 7'-0"	180.75 SQ.FT.	W	G	2"	12"	—	—	36"	18
3-20		1	EXIT 4 (10", 8", 15", 12", 15")	6'-0"	5'-0"	—	30.00 SQ.FT.	W	G	2"	9"	A	22.6	—	—
3-21		1	EXIT 6 2 1½ / EXIT 7A 2½ / EXIT 7B 48 3¼ (10"-15", 12", 10"-15", 9", 10"-15", 9", 11")	17'-0"	12'-6"	—	212.50 SQ.FT.	W	G	2"	12"	—	—	36"	18
3-22		1	THIS LANE / MUST EXIT / 1200 FEET (10", 12", 10", 12", 15"-22", 12", 12")	16'-0"	7'-6"	—	120.00 SQ.FT.	B	Y	2"	9"	B	32"	—	—
3-23		1	EXITS 3B-2 / 95 295 / Baltimore / Del Mem Br / RIGHT LANE (10"-15", 9", 16"-12", 12", 16"-12", 12", 10", 12", 12")	14'-6"	11'-6"	2'-0" x 11'-8"	190.00 SQ.FT.	W	G	2"	12"	—	—	45" x 36"	18
3-24		1	EXIT 3 A / 95 495 NORTH / Wilmington / Philadelphia / LEFT LANE (10"-15", 9", 12", 12", 16"-12", 36", 16"-12", 12", 10", 12", 12")	16'-6"	11'-6"	2'-0" x 9'-0"	207.75 SQ.FT.	W	G	2"	12"	—	—	45" x 36"	18
3-25		2	EXIT 4 / 4 / Newport / Stanton / MUST ⇩ EXIT (10"-15", 9", 36", 12", 16"-12", 12", 16"-12", 12", 10"-22", 15", 9")	12'-6"	12'-6"	2'-0" x 6'-6"	169.25 SQ.FT.	W	G	2"	12"	B	32"	36"	18
3-26		2	EXIT 5 / 41 62 / Gap Pike / Boxwood Rd / MUST ⇩ EXIT (10"-15", 9", 36", 12", 16"-12", 12", 16"-12", 12", 10"-22", 15", 9")	14'-6"	12'-6"	2'-0" x 6'-10"	194.91 SQ.FT.	W	G	2"	12"	B	32"	36"	18

COUNTY	CONTRACT	P. & A. REG. NO.	STATE	FED. AID PROJECT NO.	SHEET NO.	TOTAL SHEETS
NEW CASTLE	71-02-009	2	DEL		250	301

RELOCATED DELAWARE ROUTE 141
THRU NEWPORT

PREL. TRACING _____ DESIGN _____ CHKD. _____

REVISIONS

1. Delete Sign Panels and Supports R.R. 9-18-74

PANEL NO.	SHEET NO.	QUANTITY	LEGEND	SIZE WIDTH	SIZE HEIGHT	EXIT PANEL	TOTAL AREA	COLOR LEGEND	COLOR BACKGR'D	BORDER WIDTH	BORDER RADIUS	ARROW TYPE	ARROW SIZE	SHIELD SIZE	SHIELD NUMERALS
3-27		1	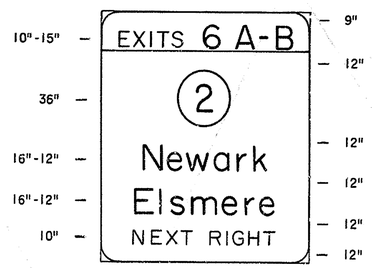	12'-0"	11'-6"	2'-0" x 12'-0"	162.00 SQ.FT.	W	G	2"	12"	—	—	36"	18"
3-28		1	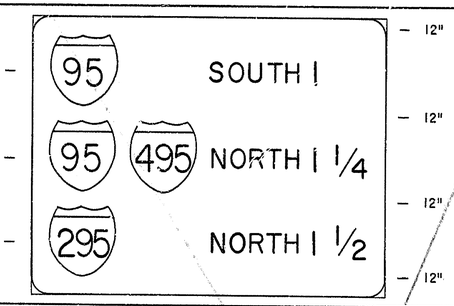	20'-6"	13'-0"	—	266.50 SQ.FT.	W	G	2"	12"	—	—	45" x 36"	18"
3-29		1	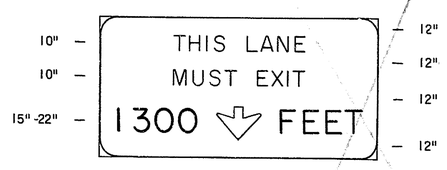	16'-0"	7'-6"	—	120.00 SQ.FT.	B	Y	2"	9"	B	32"	—	—
3-30		1	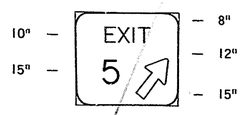	6'-0"	5'-0"	—	30.00 SQ.FT.	W	G	2"	9"	A	22.6	—	—

PANEL NO.	SHEET NO.	QUANTITY	LEGEND	SIZE WIDTH	SIZE HEIGHT	EXIT PANEL	TOTAL AREA	COLOR LEGEND	COLOR BACKGR'D	BORDER WIDTH	BORDER RADIUS	ARROW TYPE	ARROW SIZE	SHIELD SIZE	SHIELD NUMERALS