P.R.A. Req. No.	State
2	DEL.

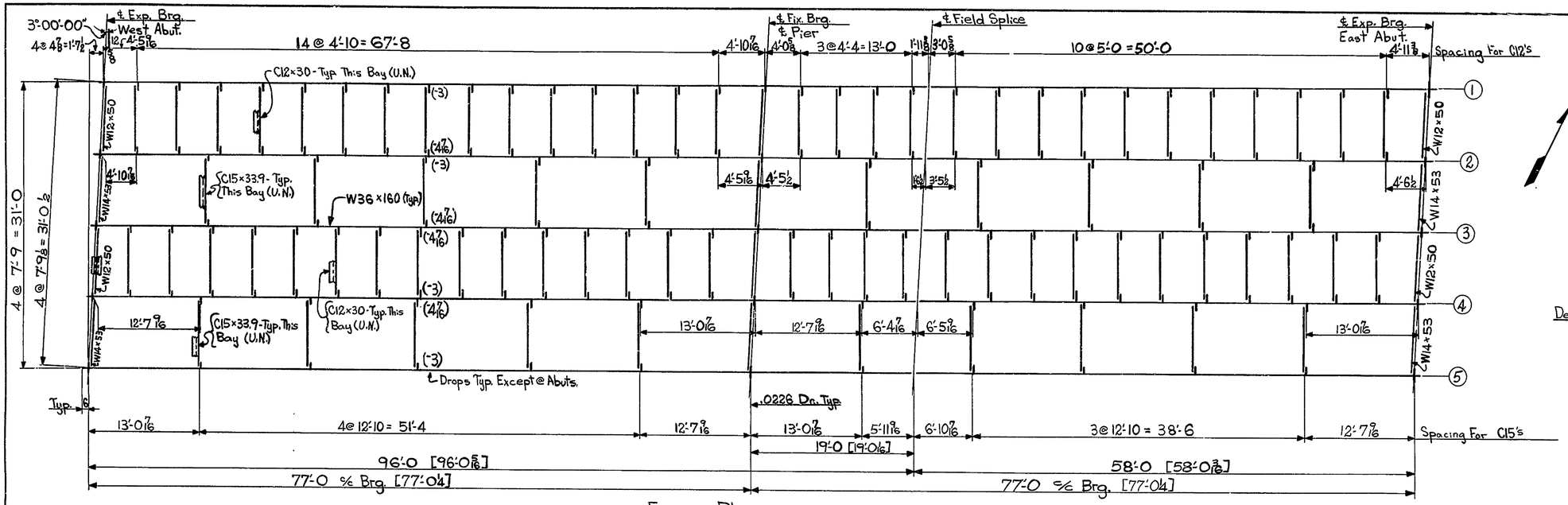

Figuring Plan

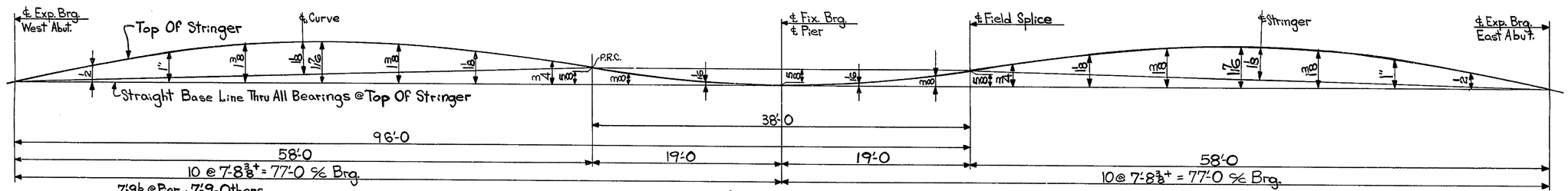

Camber Diagram

Scale: Horiz. 3/16" = 1'-0; Vert. - Half Scale

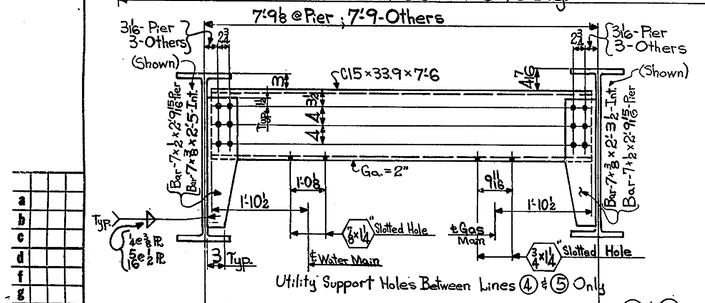

(As Shown) Intermediate Diaphragms Between Lines 4 & 5

(Opp. Hand) Intermediate Diaphragms Between Lines 2 & 3

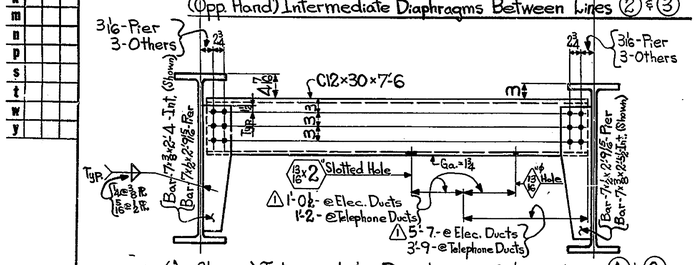

(As Shown) Intermediate Diaphragms Between Lines 1 & 2

(Opp. Hand - Except Utility Holes) - Int. Diaphragms Between Lines 3 & 4

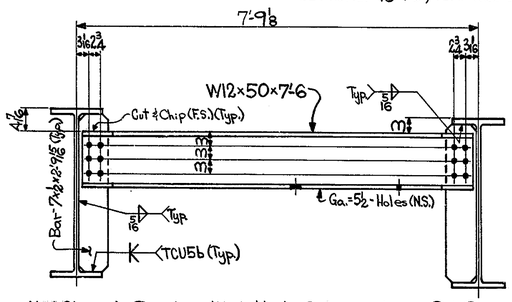

(As Shown) Diaph. @ West Abut. Between Lines 1 & 2

(As Shown) Diaph. @ East Abut. Between Lines 3 & 4

(Opp. Hand) Diaph. @ West Abut. Between Lines 3 & 4

(Opp. Hand) Diaph. @ East Abut. Between Lines 1 & 2

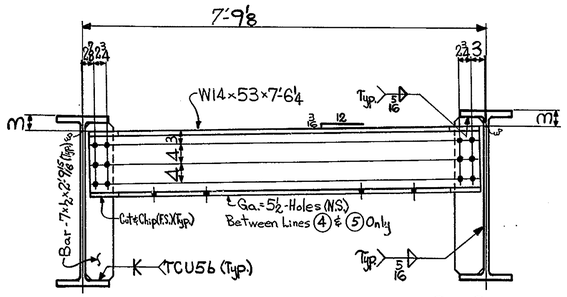

(As Shown) Diaph. @ West Abut. Between Lines 4 & 5

(As Shown) Diaph. @ East Abut. Between Lines 2 & 3

(Opp. Hand) Diaph. @ West Abut. Between Lines 2 & 3

(Opp. Hand) Diaph. @ East Abut. Between Lines 4 & 5

For Location Of Utility Support Holes @ Abuts. See Int. Diaph. Layouts

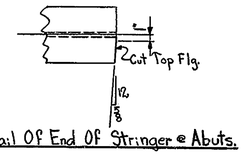

Detail Of End Of Stringer @ Abuts.

Notes:

1. All Dimensions Are Given Horizontally (U.N.) Dimensions Noted Thus: [77'-0 1/4] Are Sloping Dimensions.
2. Ends Of Stringers & End Brg. Stiffs. To Be Vertical.
3. Diaphragm Spacing For Intermediate Diaphragms Is Given To Back Of Channel.
4. Dimensions Shown Thus: (3) Are This Distances From Top Of Stringer To Top Of Diaph.
5. All Field Connections To Be Made With ⅞" HS. (A325) Weath-R Bolts.
6. All Steel To Be A.S.T.M. - A588 - Grade 50 (U.N.)

NO.	REVISION	DATE
1	ELECT. DUCTS RELOCATED	1-21-76

HIGH STEEL STRUCTURES, INC.
1911 OLD PHILADELPHIA PIKE
LANCASTER, PA.

Figuring Plan
Burnside Blvd. Bridge Over Rte. 141
Burnside Blvd. Sta. 19+23.00
Dept. Of Highways & Transportation - Division Of Highways
State Of Delaware
New Castle County, Delaware

STATE CONT. OR REF. NO. 71-02-009 CONTRACTOR Greggo & Ferrara, Inc.
MADE BY RKL CHECKED BY C.W. DATE 11-26-74
Lanc. CONTRACT NO. D-7477 DRAWING NO. WS1

APPROVED
DELAWARE STATE HIGHWAY DEPT.
DATE December 19, 1974

Lancaster Print-O-Stat

P.R.A. REG. NR.	STATE
2	DEL.

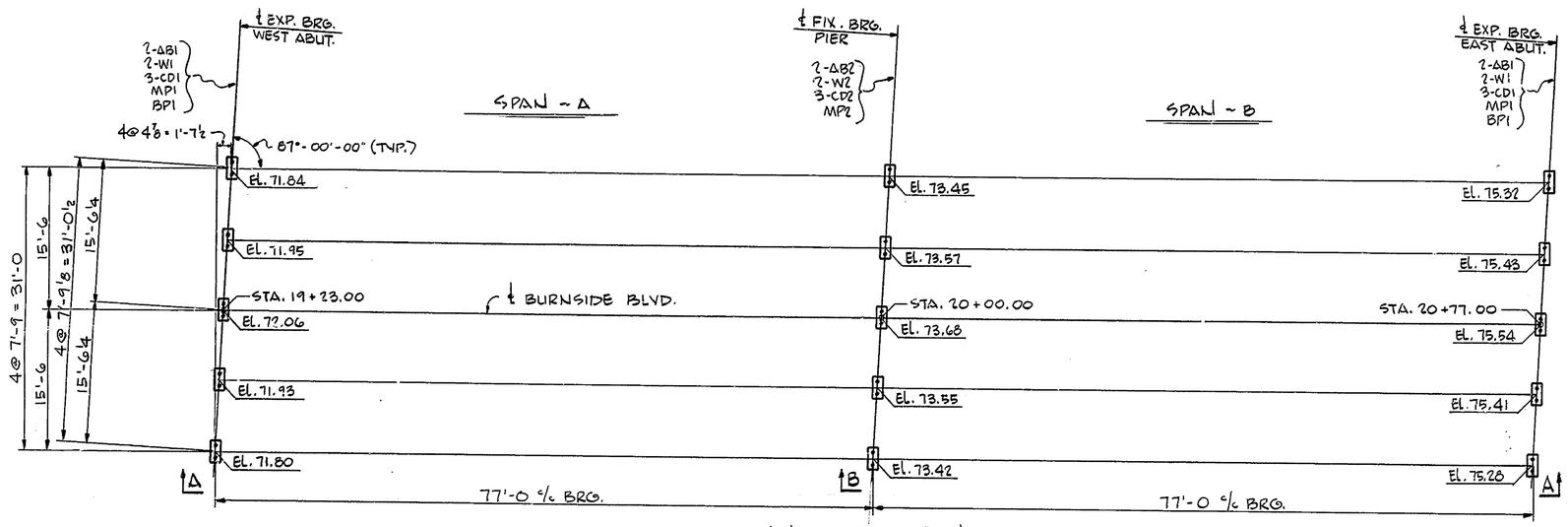

ANCHOR BOLT PLAN

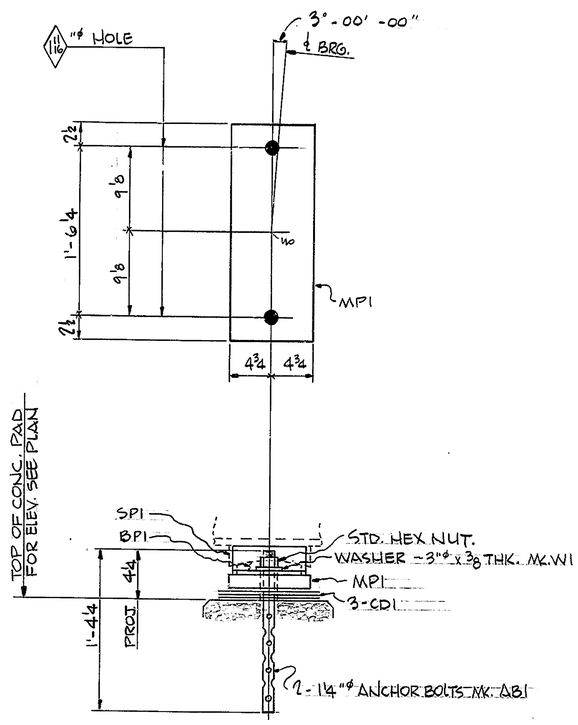

SECTION ~ A

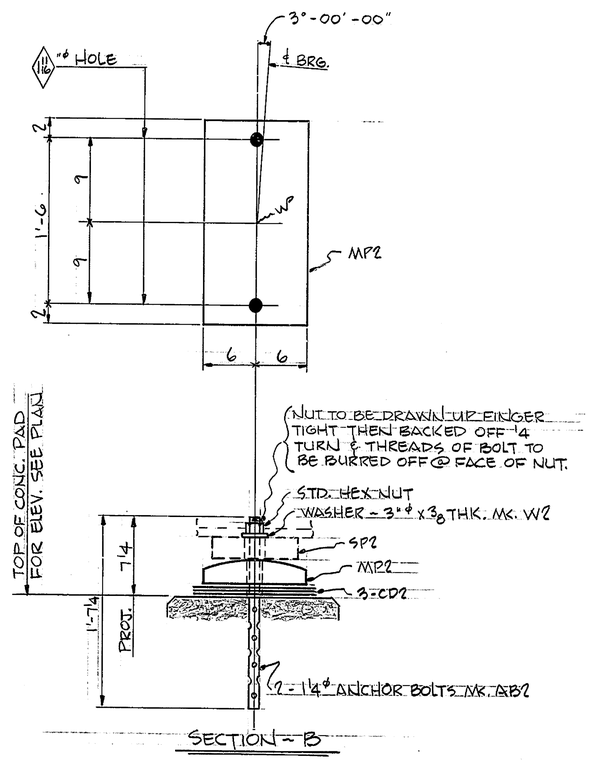

SECTION ~ B

NOTES:

ANCHOR BOLTS ARE FURNISHED BY HIGH STEEL STRUCTURES, INC. & SET BY OTHERS.
ANCHOR BOLT SETTINGS MUST BE EXACT IN EVERY DETAIL IN ACCORDANCE WITH THIS DWG.
ALL DIMENSIONS ARE GIVEN HORIZONTALLY.
ELEVATIONS ARE GIVEN TO TOP OF CONC. PAD.

APPROVED
DELAWARE STATE HIGHWAY DEPT.
DATE December 2, 1974

NO.	REVISION	DATE

HIGH STEEL STRUCTURES, INC.
1911 OLD PHILADELPHIA PIKE
LANCASTER, PA.

ANCHOR BOLT PLAN
BURNSIDE BLVD. BRIDGE OVER RTE. 141
BURNSIDE BLVD. STA. 19+23.00
DEPT. OF HIGHWAYS & TRANSPORTATION - DIV. OF HWYS.
STATE OF DELAWARE
NEW CASTLE COUNTY, DEL.

STATE CONT. OR REF. NO. 71-02-009 CONTRACTOR GREGGO & FERRARA, INC.
MADE BY K.M.A. CHECKED BY RKL DATE 11-21-74
LANC. CONTRACT NO. D-7477 DRAWING NO. E1

Lancaster Print-O-Stat

P.R.A. REG. No.	STATE
2	DEL.

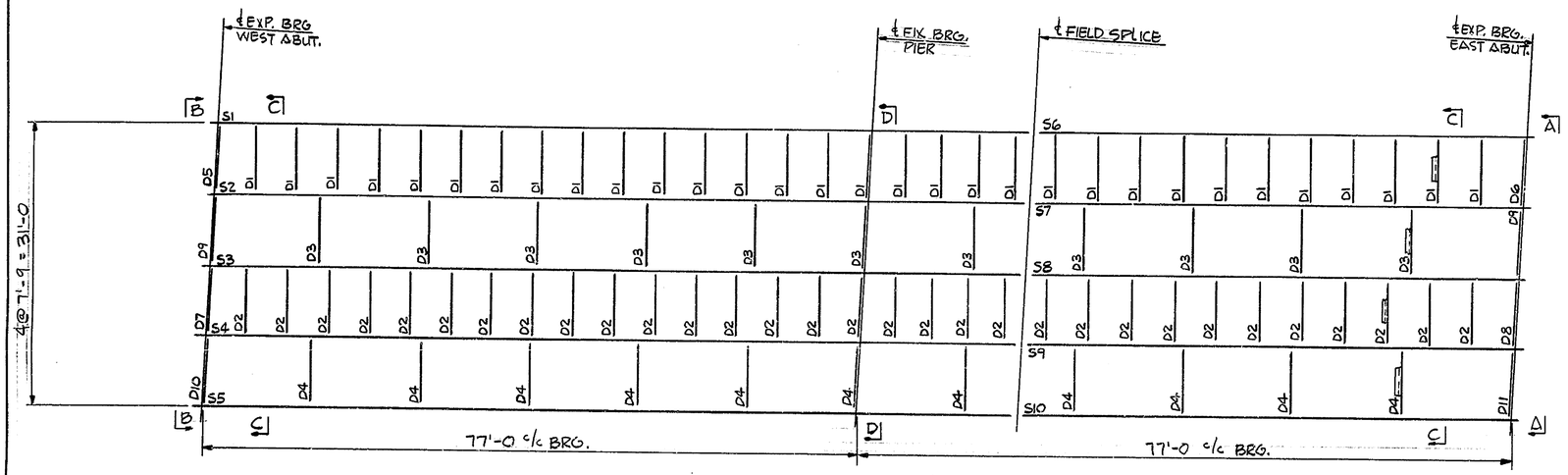

ERECTION PLAN

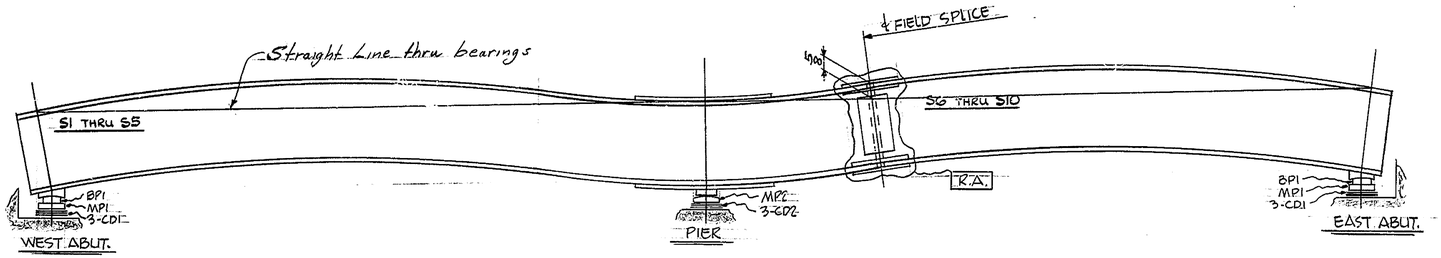

REAM ASSEMBLY DIAGRAM

ASSEMBLE STRINGERS. REAM HOLES MK. R.A. TO $\frac{15}{16}$-φ.
SEE PLAN ABOVE FOR REAMING ONE LINE OF STRINGERS.

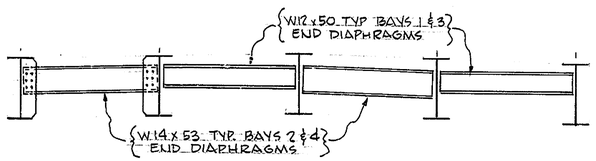

(AS SHOWN) SECTION A-A
(OPP. HAND) SECTION B-B

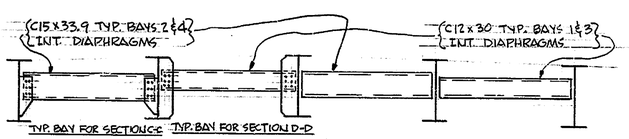

SECTIONS C-C & D-D

NOTES:

All FIELD CONNECTIONS TO BE MADE WITH $\frac{7}{8}$"φ H.S. BOLTS. (A325 - WEATH-R) (U.N.)
STUD SHEAR CONNECTORS NOT FURNISHED OR INSTALLED BY HIGH STEEL STRUCTURES, INC.
ALL DIMENSIONS ARE GIVEN HORIZONTALLY.
ALL STEEL TO BE A.S.T.M. A588 WEATHERING. (U.N.)

FIELD BOLT SUMMARY

$\frac{7}{8}$"φ H.S. WEATH-R BOLTS (A325) w/ HVY. HEX. HD. & NUT
FOR DIAPH. - 245 @ 2" LG.
FOR DIAPH. - 880 @ 2¼" LG.
FOR WEB SPL. - 310 @ 2¾" LG.
FOR FLG. SPL. - 285 @ 3½" LG.
1,720 - HARD. FLAT WASHERS FOR $\frac{7}{8}$"φ H.S. WEATH-R BOLTS (A325)

APPROVED
DELAWARE STATE HIGHWAY DEPT.
DATE February 28, 1975

NO.	REVISION	DATE

HIGH STEEL STRUCTURES, INC.
1911 OLD PHILADELPHIA PIKE
LANCASTER, PA.

ERECTION PLAN
BURNSIDE BLVD. BRIDGE OVER RTE. 141
BURNSIDE BLVD. STA. 19+23.00
DEPT. OF HIGHWAYS & TRANSPORTATION - DIV. OF HIGHWAYS
STATE OF DELAWARE
NEW CASTLE COUNTY, DEL.

STATE CONT. OR REF. NO. 71-02-009 CONTRACTOR GREGGO & FERRARA, INC.
MADE BY K.M.A. CHECKED BY DW DATE 2-21-75
LANC. CONTRACT NO. D-7477 DRAWING NO. E2

Lancaster Print-O-Stat

P.R.A. REG. NO.	STATE	
2	DEL.	

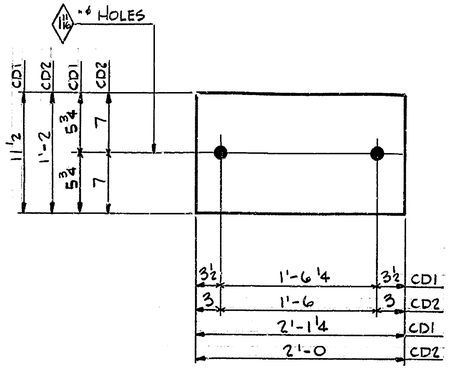

30- PCS. CANVAS DUCK -(11½ x 12 oz. x 2'-1¼) MK. CD1
15- PCS. CANVAS DUCK -(14 x 12 oz. x 2'-0) MK. CD2

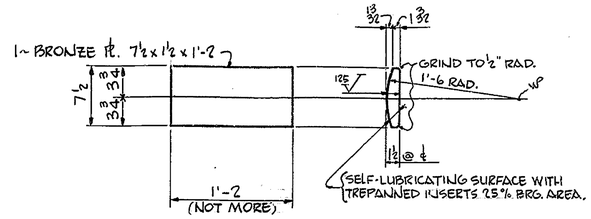

10- BRONZE PLS. MK. BP1 Wt. 44.3 Lbs. Ea.
MAT'L. SPEC. A.S.T.M. B22 - ALLOY B

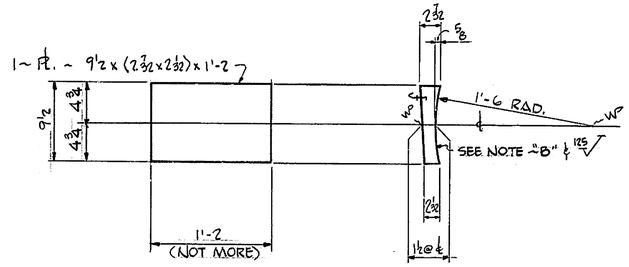

10 - SOLE PLS. MK. SP1
Wt. 56.5 Lbs. Ea.

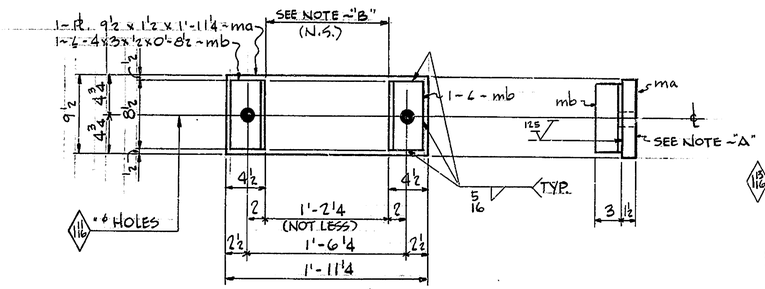

10 - MASONRY PLS. MK. MP1
Wt. 110. Lbs. Ea.

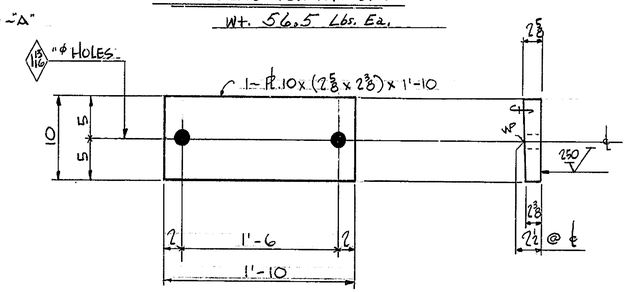

5 - SOLE PLS. MK. SP2 Wt. 156. Lbs. Ea.

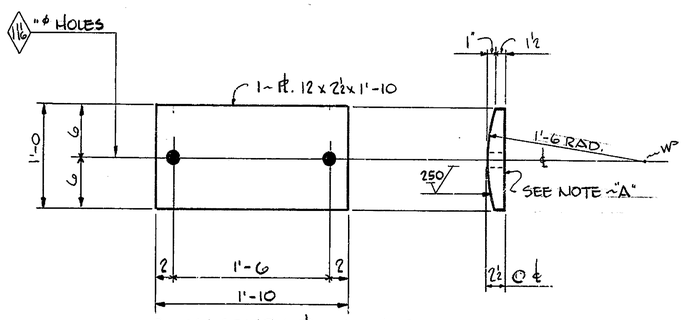

5 - MASONRY PLS. MK. MP2
Wt. 150. Lbs. Ea.

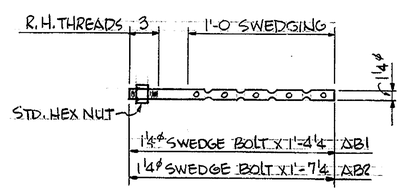

20 - ANCHOR BOLTS MK. AB1 Wt. 134. Lbs.
10 - ANCHOR BOLTS MK. AB2 Wt. 77. Lbs.

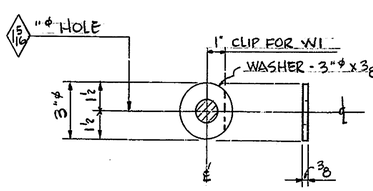

20 - WASHERS - MK. W1 Wt. 11.5 Lbs.
10 - WASHERS - MK. W2 6. Lbs.

NOTES:

THREADS OF ANCHOR BOLTS ARE TO BE COATED WITH OIL BEFORE SHIPMENT.
ALL STEEL TO BE A.S.T.M. A588 WEATHERING. (U.N.)

NOTE -"A"

SURFACES INDICATED ARE TO BE STRAIGHT & TRUE; FINISH IF NECESSARY.

NOTE -"B"

APPLY ONE COAT OF HOT WHITE LEAD & TALLOW.

SHOP NOTE

HOLES: AS NOTED
BOLTS: NONE
PAINT: NONE

APPROVED
DELAWARE STATE HIGHWAY DEPT.
DATE December 2, 1974

	m
a	10
b	20
c	
d	
f	
g	
h	
k	
m	
n	
p	
s	
t	
w	
y	

NO.	REVISION	DATE

HIGH STEEL STRUCTURES, INC.
1911 OLD PHILADELPHIA PIKE
LANCASTER, PA.

BEARING DETAILS
BURNSIDE BLVD. BRIDGE OVER RTE. 141
BURNSIDE BLVD. STA. 19+23.00
DEPT. OF HIGHWAYS & TRANSPORTATION - DIV. OF HWYS.
STATE OF DELAWARE
NEW CASTLE COUNTY, DELAWARE

STATE CONT. OR REF. NO. 71-02-009 CONTRACTOR GREGGO & FERRARA, INC.
MADE BY K.M.A. CHECKED BY RKL DATE 11-21-74
LANC. CONTRACT NO. D-7477 DRAWING NO. 1 OF 6

Print-O-Stat

P.R.A. REG. NO.	STATE
2	DEL.

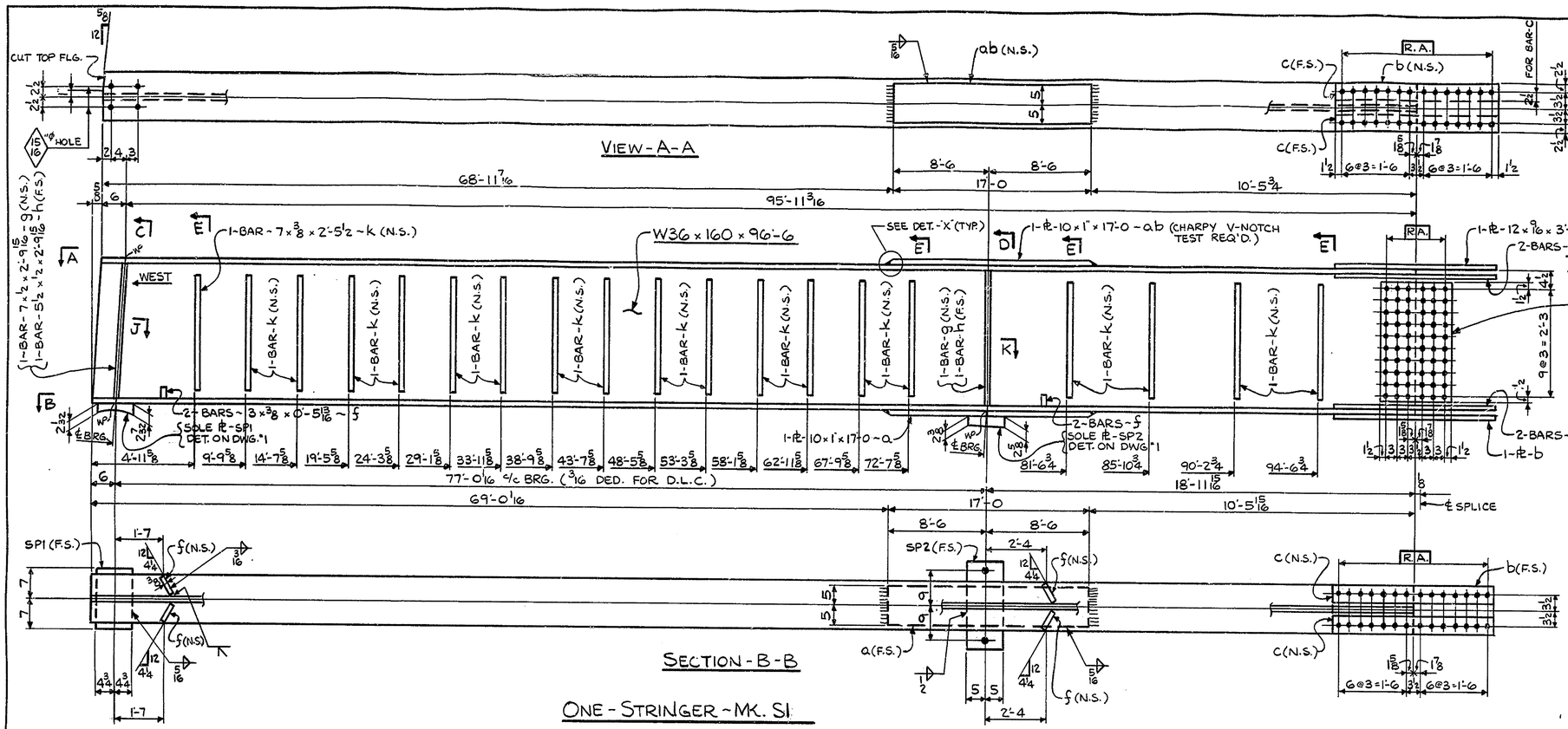

SECTION-B-B

ONE-STRINGER-MK. S1

Wt. 17,915. Lbs.

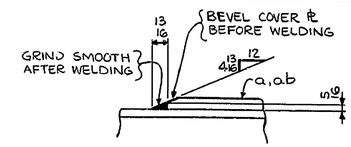

DETAIL-"X"

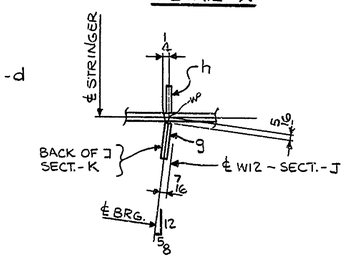

SECTIONS-J & K.

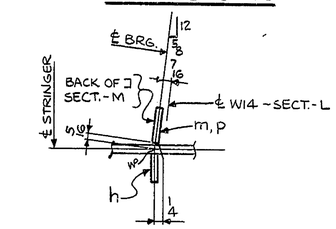

SECTIONS-L & M

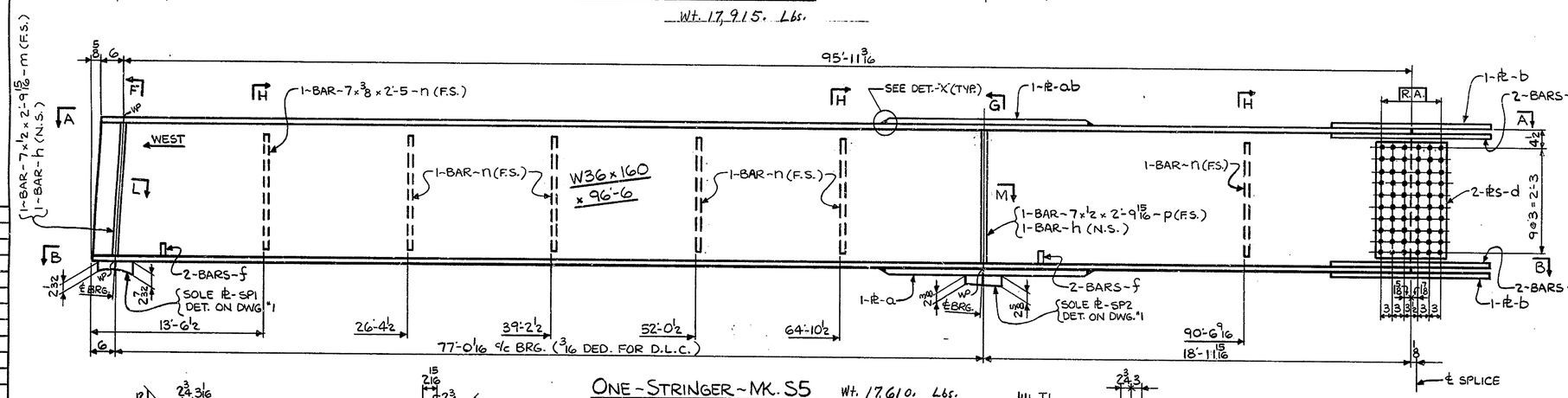

ONE-STRINGER-MK. S5 Wt. 17,610. Lbs.

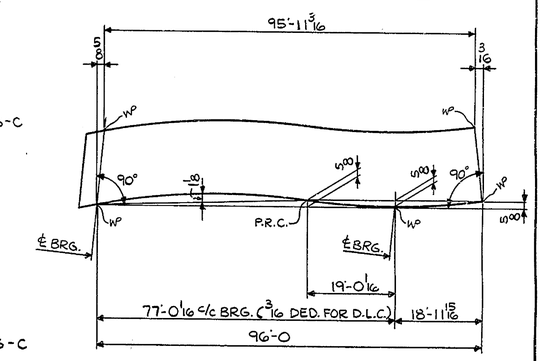

CAMBER DIAGRAM

	a
a	2
b	4 2
c	8
d	4
f	8
g	2
h	4
k	19
m	1
n	6
p	1
s	
t	
w	
y	

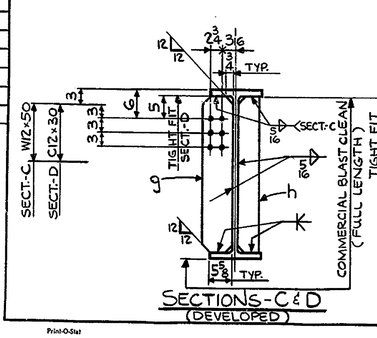

SECTIONS-C & D (DEVELOPED)

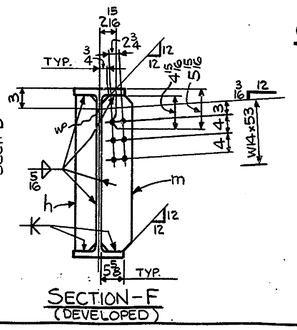

SECTION-F (DEVELOPED)

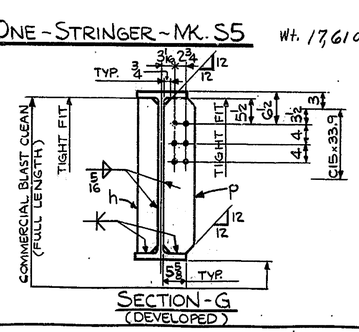

SECTION-G (DEVELOPED)

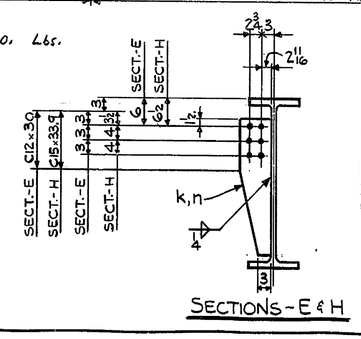

SECTIONS-E & H

COMMERCIAL BLAST CLEANING TO BE DONE IN ACCORDANCE WITH SSPC-SP6-63

APPROVED
DELAWARE STATE HIGHWAY DEPT.
DATE February 28, 1975

SHOP NOTE

HOLES: 15/16" ϕ (U.N.)
BOLTS: NONE
PAINT: NONE

ALL STEEL TO BE A.S.T.M. A588 WEATHERING

RA NOTE:
HOLES MARKED RA TO BE SUB-PUNCHED 11/16" AND REAMED TO 15/16" WITH CONNECTING PARTS ASSEMBLED AND MATCH MARKED SEE DWG. E2

NO.	REVISION	DATE

HIGH STEEL STRUCTURES, INC.
1911 OLD PHILADELPHIA PIKE
LANCASTER, PA.

STRINGERS
BURNSIDE BLVD. BRIDGE OVER RTE. 141
BURNSIDE BLVD. STA. 19+23.00
DEPT. OF HIGHWAYS & TRANSPORTATION - DIV. OF HIGHWAYS
STATE OF DELAWARE
NEW CASTLE COUNTY, DELAWARE

STATE CONT. OR REF. NO. 71-02-009 CONTRACTOR GREGGO & FERRARA, INC.
MADE BY T.G.T. CHECKED BY DN DATE 2-21-75
LANC. CONTRACT NO. D-7477 DRAWING NO. 2 OF 6

Print-O-Stat

P.R.A. REG. NO.	STATE	
2	DEL.	

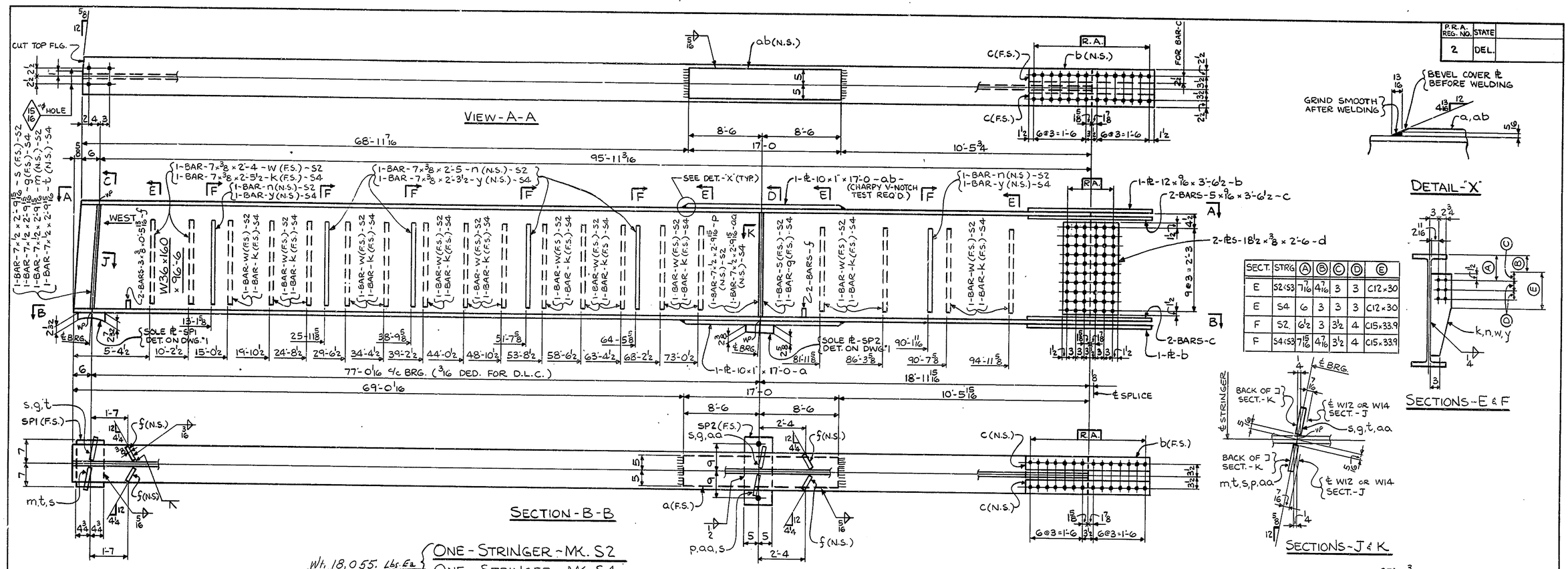

SECT.	STRG	Ⓐ	Ⓑ	Ⓒ	Ⓓ	Ⓔ
E	S2&S3	7 7/16	4 7/16	3	3	C12×30
E	S4	6	3	3	3	C12×30
F	S2	6½	3	3½	4	C15×33.9
F	S4&S3	7 15/16	4 7/16	3½	4	C15×33.9

Wt. 18,055. Lbs. Ea { ONE - STRINGER - MK. S2 / ONE - STRINGER - MK. S4

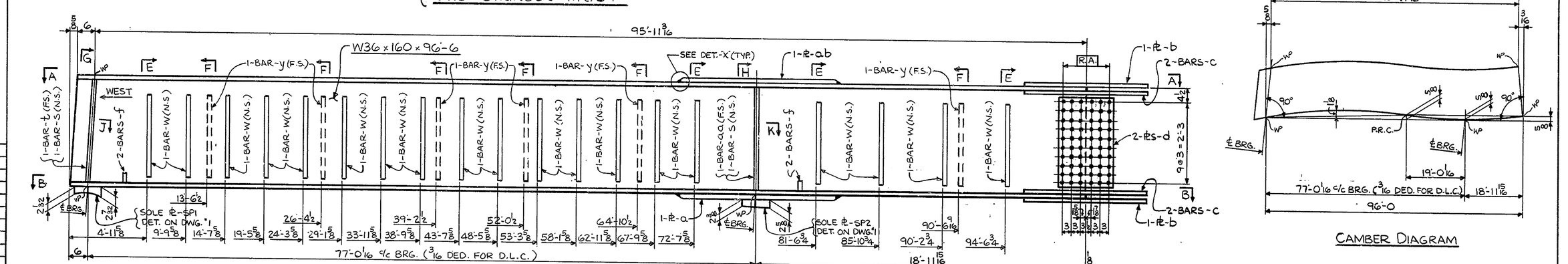

ONE - STRINGER - MK. S3

Wt. 18,055. Lbs.

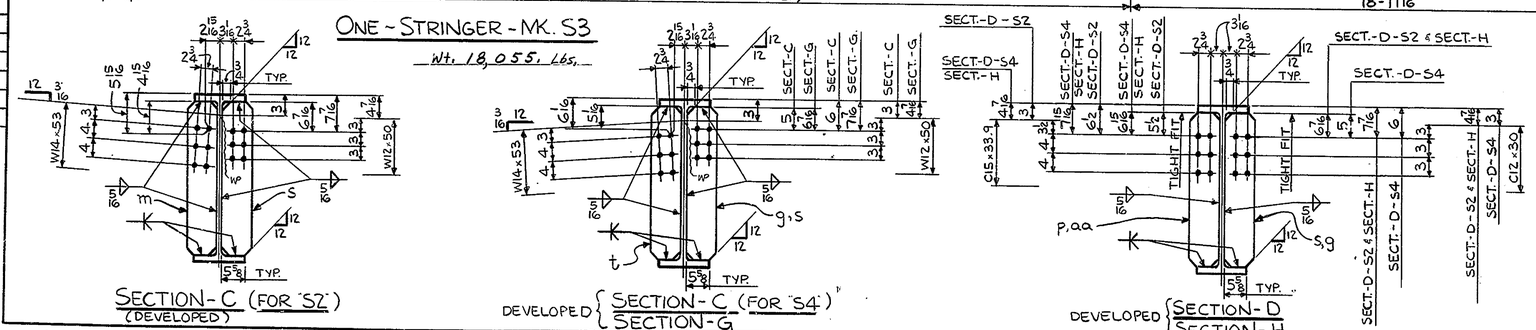

		a
a	3	2
b	6	3
c	12	
d	6	
f	12	
g	2	
h		
k	19	
m	1	
n	6	
p	1	
s	4	
t	2	
w	38	
y	12	

CAMBER DIAGRAM

APPROVED
DELAWARE STATE HIGHWAY DEPT.
DATE February 28, 1975

SHOP NOTE

HOLES: 15/16" (U.N.)
BOLTS: NONE
PAINT: NONE

ALL STEEL TO BE A.S.T.M. A588 WEATHERING

NOTE
HOLES MARKED TO BE SUB-PUNCHED 11/16" ϕ AND REAMED TO 15/16" WITH CONNECTING PARTS ASSEMBLED AND MATCH MARKED SEE DWG. E2

NO.	REVISION	DATE

HIGH STEEL STRUCTURES, INC.
1911 OLD PHILADELPHIA PIKE
LANCASTER, PA.

STRINGERS
BURNSIDE BLVD. BRIDGE OVER RTE. 141
BURNSIDE BLVD. STA. 19+23.00
DEPT. OF HIGHWAYS & TRANSPORTATION - DIV. OF HIGHWAYS
STATE OF DELAWARE
NEW CASTLE COUNTY, DELAWARE

STATE CONT. OR REF. NO. 71-02-009 CONTRACTOR GREGGO & FERRARA, INC.
MADE BY T.G.T. CHECKED BY DAI DATE 2-21-75
LANC. CONTRACT NO. D-7477 DRAWING NO. 3 OF 6

P.R.A. REG. NO.	STATE
2	DEL.

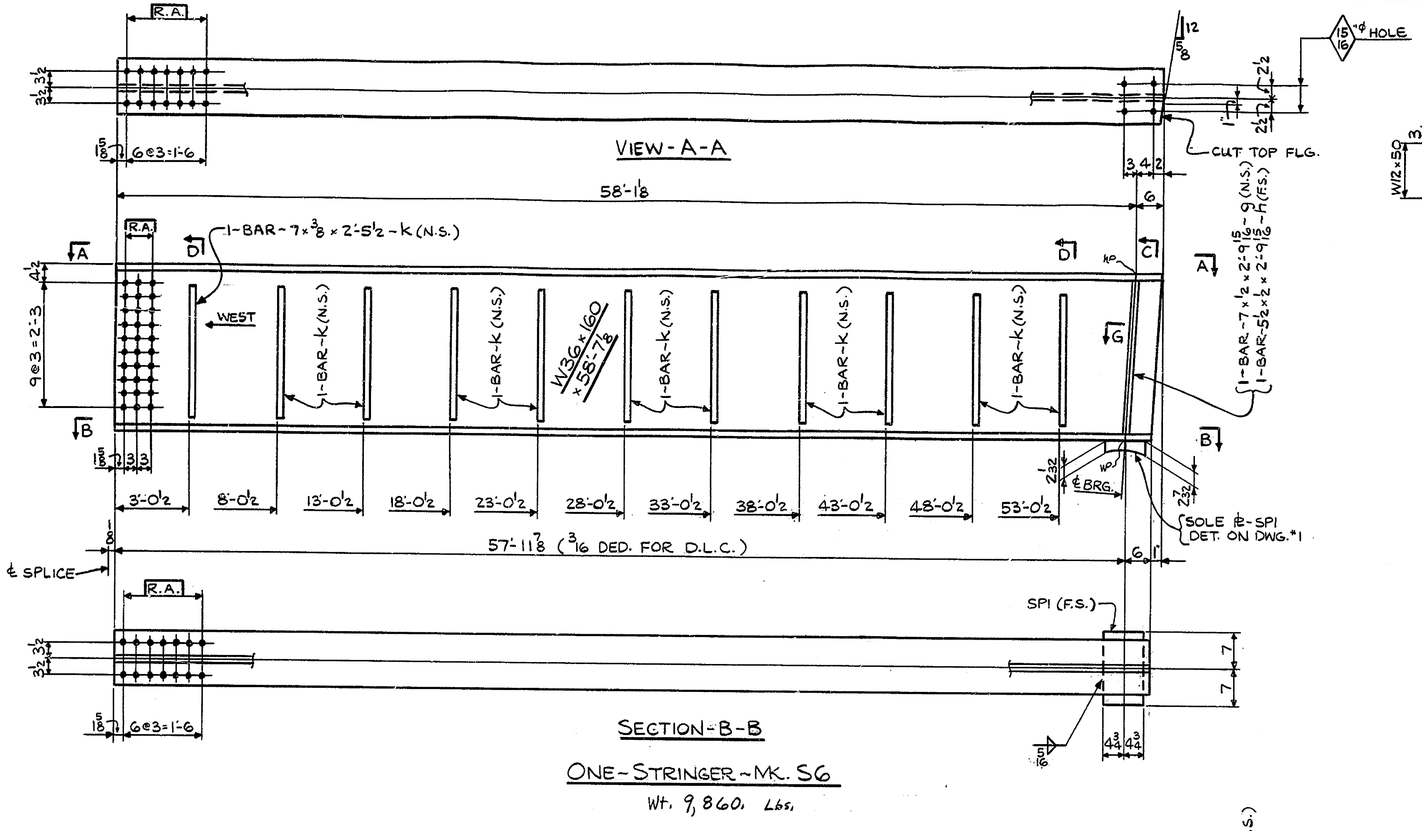

SECTION-B-B

ONE-STRINGER-MK. S6

Wt. 9,860. Lbs.

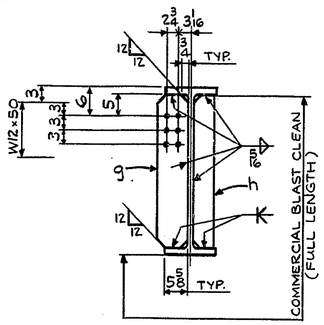

SECTION-C
(DEVELOPED)

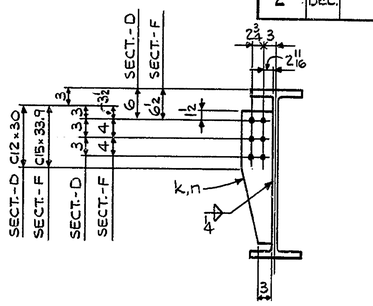

SECTIONS-D & F

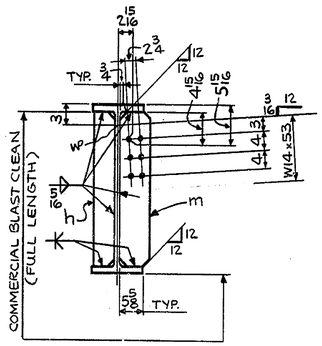

SECTION-E
(DEVELOPED)

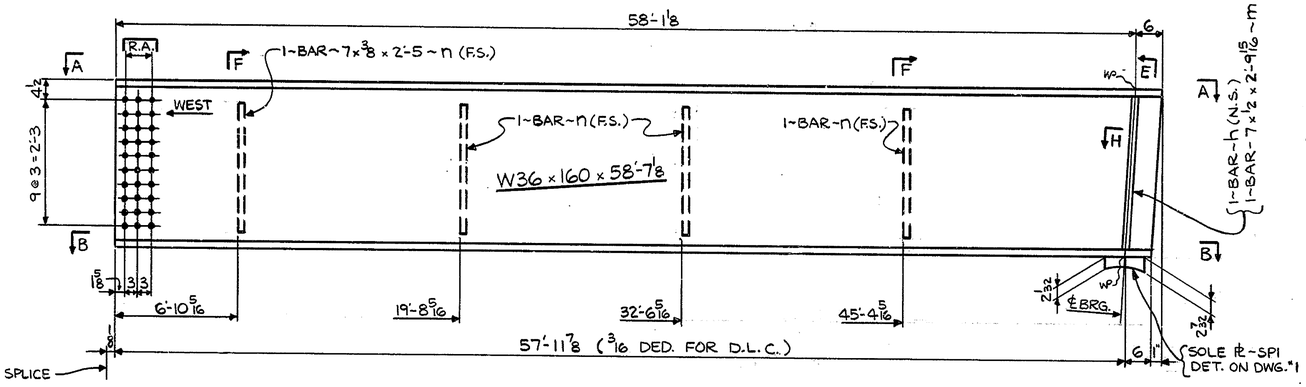

ONE-STRINGER-MK. S10 Wt. 9,695. Lbs.

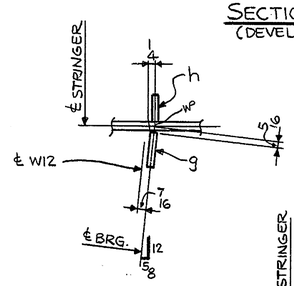

SECTION-G

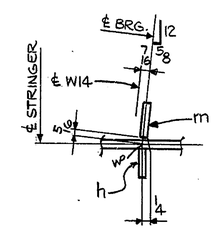

SECTION-H

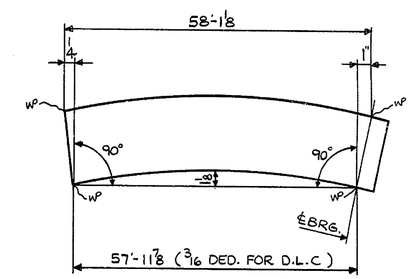

CAMBER DIAGRAM

COMMERCIAL BLAST CLEANING TO BE DONE IN ACCORDANCE WITH SSPC-SP6-63

SHOP NOTE

HOLES: 15/16" φ (U.N.)
BOLTS: NONE
PAINT: NONE

ALL STEEL TO BE A.S.T.M. A588 WEATHERING

APPROVED
DELAWARE STATE HIGHWAY DEPT.
DATE February 28, 1975

R.A. NOTE:
HOLES MARKED R.A. TO BE SUB-PUNCHED 11/16" AND REAMED TO 15/16" WITH CONNECTING PARTS ASSEMBLED AND MATCH MARKED. SEE DWG. E2

NO.	REVISION	DATE

HIGH STEEL STRUCTURES, INC.
1911 OLD PHILADELPHIA PIKE
LANCASTER, PA.

STRINGERS
BURNSIDE BLVD. BRIDGE OVER RTE. 141
BURNSIDE BLVD. STA. 19+23.00
DEPT. OF HIGHWAYS & TRANSPORTATION-DIV. OF HIGHWAYS
STATE OF DELAWARE
NEW CASTLE COUNTY, DELAWARE

STATE CONT. OR REF. NO. 71-02-009 CONTRACTOR GREGGO & FERRARA, INC.
MADE BY T.G.T. CHECKED BY DAV DATE 2-21-75
LANC. CONTRACT NO. D-7477 DRAWING NO. 4 OF 6

a	
b	
c	
d	
f	
g	1
h	2
k	11
m	1
n	4
p	
s	
t	
w	
y	

Lancaster Print-O-Stat

P.R.A. REG. NO	STATE
2	DEL

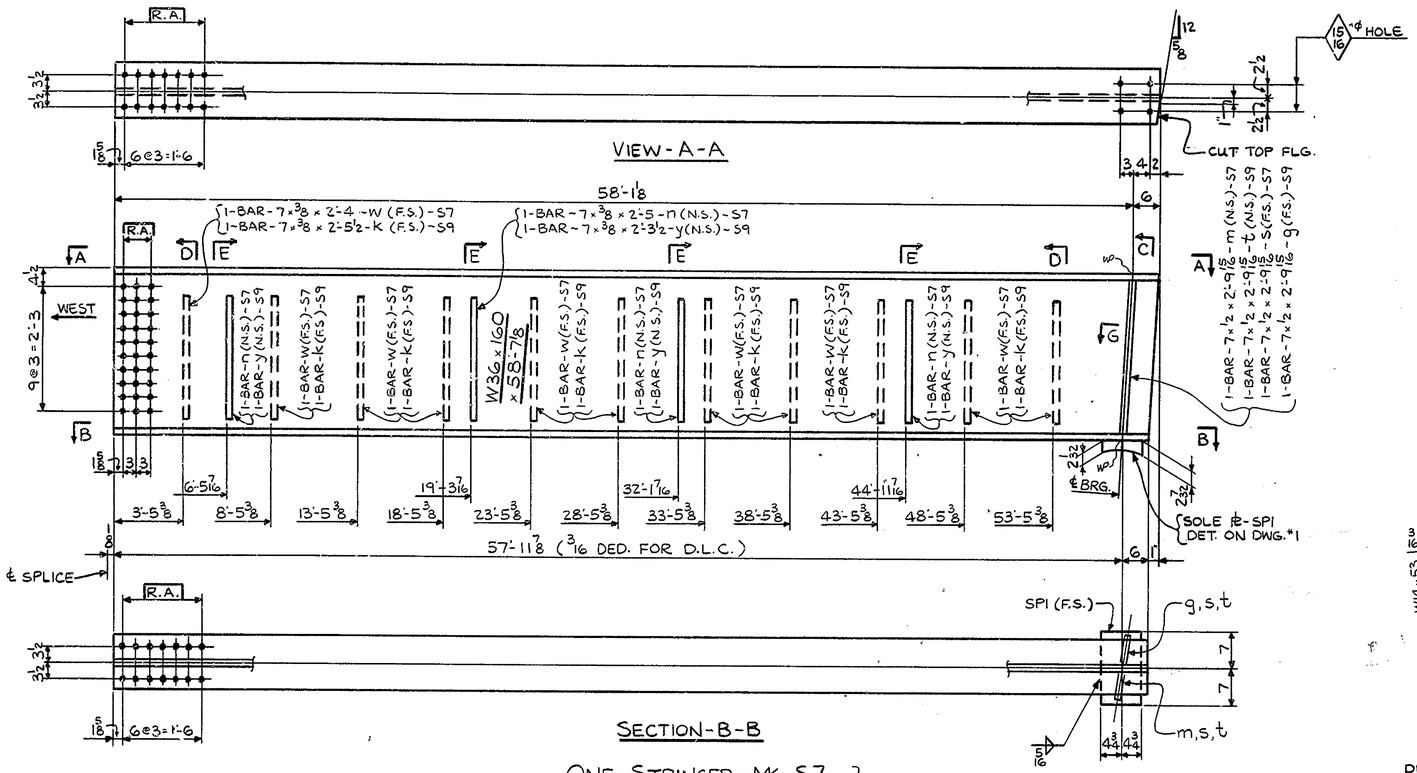

SECTION-B-B

ONE-STRINGER-MK. S7
ONE-STRINGER-MK. S9
Wt. 9,895. Lbs. Ea

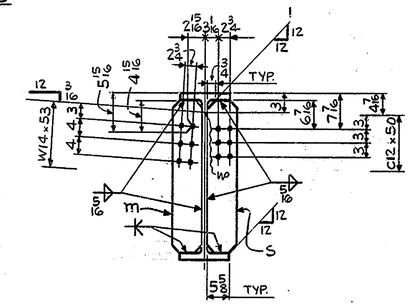

SECTION-C (FOR "S7")
(DEVELOPED)

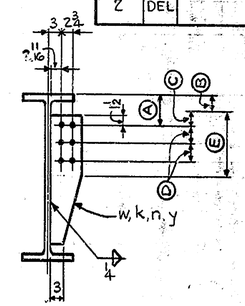

SECTIONS-D & E

SECT.	STRG	Ⓐ	Ⓑ	Ⓒ	Ⓓ	Ⓔ
D	S7&S8	7 7/16	4 7/16	3	3	C12x30
D	S9	6	3	3	3	C12x30
E	S7	6½	3	3½	4	C15x33.9
E	S8&S9	7 15/16	4 7/16	3½	4	C15x33.9

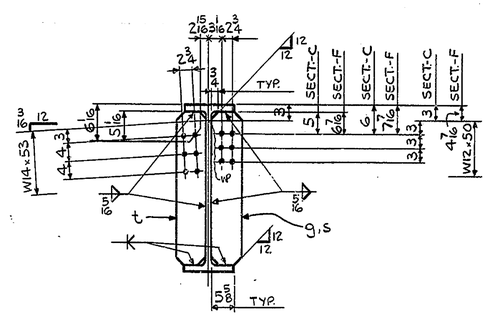

DEVELOPED { SECTION-C (FOR "S9") / SECTION-F

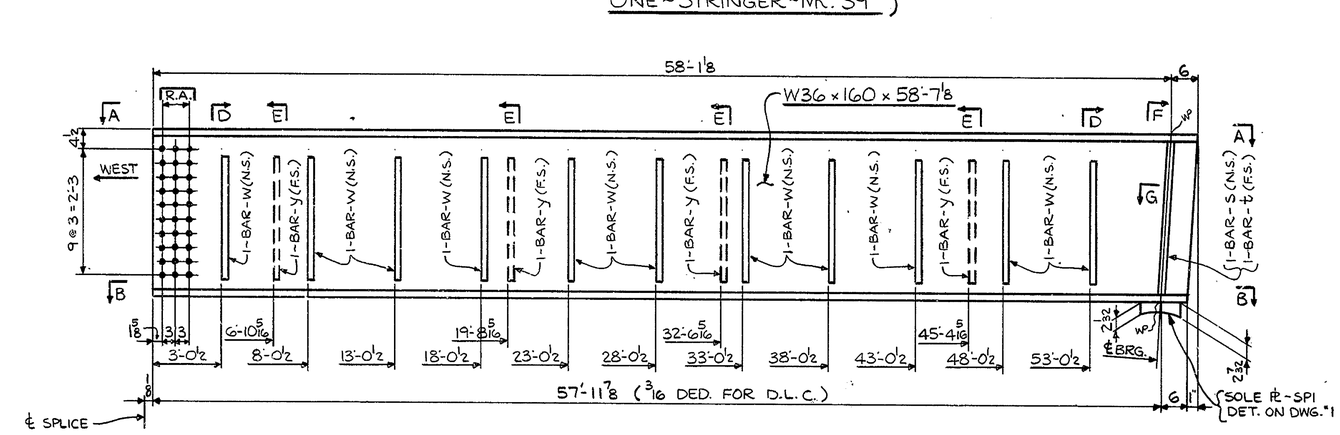

ONE-STRINGER-MK. S8 Wt. 9,895. Lbs.

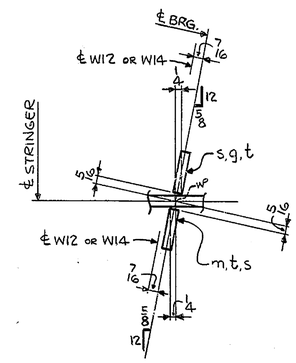

SECTION-G

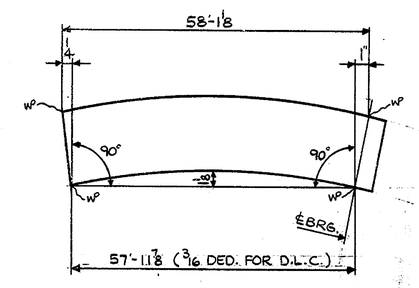

CAMBER DIAGRAM

a		
b		
c		
d		
f		
g	1	
h		
k	11	
m	1	
n	4	
p		
s	2	
t	2	
w	22	
y	8	

APPROVED
DELAWARE STATE HIGHWAY DEPT.
DATE February 28, 1975

SHOP NOTE
HOLES: 15/16" (U.N.)
BOLTS: NONE
PAINT: NONE

ALL STEEL TO BE A.S.T.M. A588 WEATHERING

RA NOTE:
HOLES MARKED RA TO BE SUB-PUNCHED 11/16" AND REAMED TO 15/16" WITH CONNECTING PARTS ASSEMBLED AND MATCH MARKED. SEE DWG. E2

NO.	REVISION	DATE

HIGH STEEL STRUCTURES, INC.
1911 OLD PHILADELPHIA PIKE
LANCASTER, PA.

STRINGERS
BURNSIDE BLVD. BRIDGE OVER RTE 141
BURNSIDE BLVD. STA. 19+23.00
DEPT. OF HIGHWAYS & TRANSPORTATION-DIV. OF HIGHWAYS
STATE OF DELAWARE
NEW CASTLE COUNTY, DELAWARE

STATE CONT. OR REF. NO. 71-02-009 CONTRACTOR GREGGO & FERRARA INC.
MADE BY T.G.T. CHECKED BY DN DATE 2-21-75
LANC. CONTRACT NO. D-7477 DRAWING NO. 5 OF 6

Lancaster Print-O-Stat

P.R.A. REG. NO.	STATE	
2	DEL.	

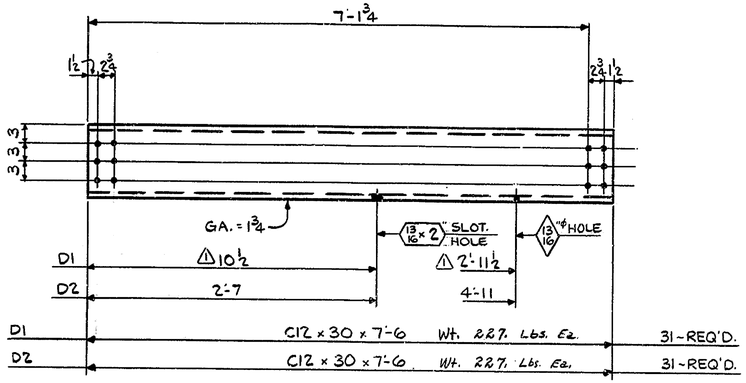

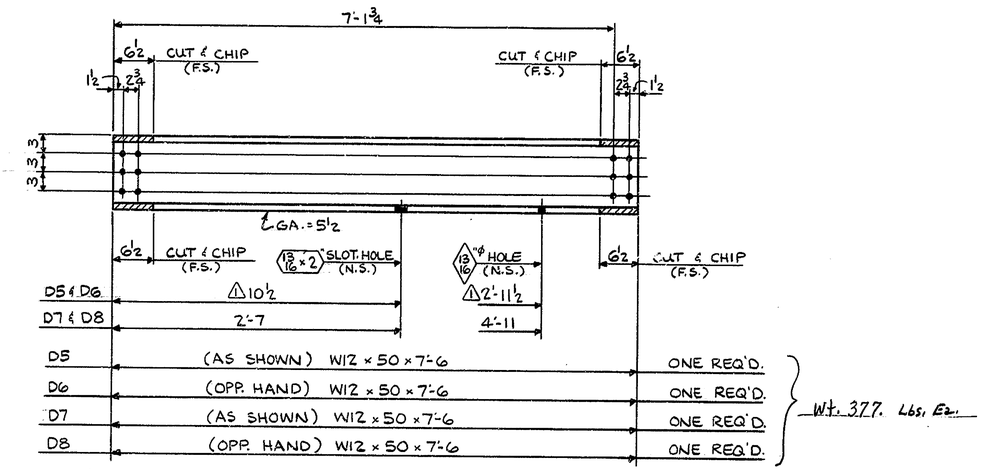

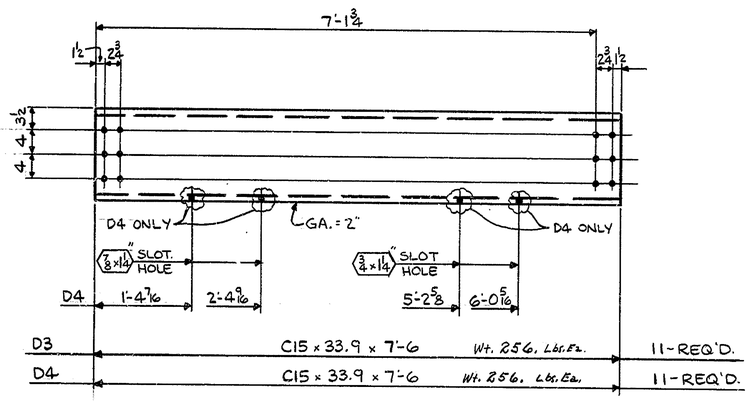

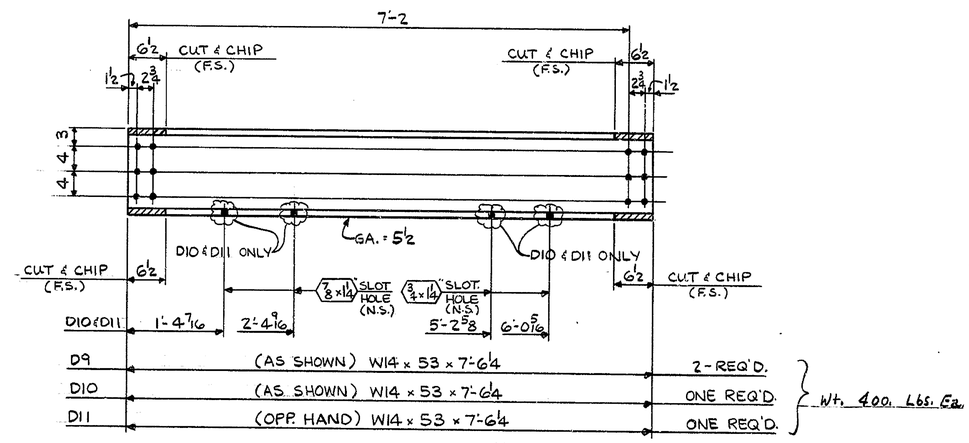

SHOP NOTE

HOLES: 15/16" ϕ (U.N.)
BOLTS: NONE
PAINT: NONE

ALL STEEL TO BE A.S.T.M. A588 WEATHERING

APPROVED
DELAWARE STATE HIGHWAY DEPT.
DATE February 28, 1975

NO.	REVISION	DATE
1	UTILITY SUPPORT HOLES RELOCATED - DI, D5, D6	1-21-76

HIGH STEEL STRUCTURES, INC.
1911 OLD PHILADELPHIA PIKE
LANCASTER, PA.

DIAPHRAGMS
BURNSIDE BLVD. BRIDGE OVER RTE. 141
BURNSIDE BLVD. STA. 19+23.00
DEPT. OF HIGHWAYS & TRANSPORTATION - DIV. OF HIGHWAYS
STATE OF DELAWARE
NEW CASTLE COUNTY, DELAWARE

STATE CONT. OR REF. NO. 71-02-009 CONTRACTOR GREGGO & FERRARA, INC.
MADE BY T.G.T. CHECKED BY DN DATE 2-21-75
LANC. CONTRACT NO. D-7477 DRAWING NO. 6 OF 6

Lancaster Print-O-Stat