DELAWARE STATE HIGHWAY DEPARTMENT
DELAWARE TURNPIKE
JOHN F. KENNEDY MEMORIAL HIGHWAY
CONSTRUCTION CONTRACT NO. 7053
RTE. 896 INTERCHANGE IMPROVEMENTS

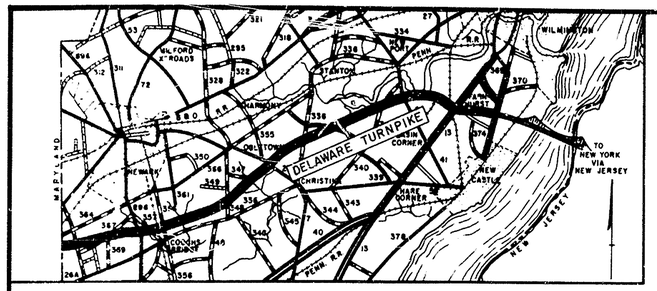

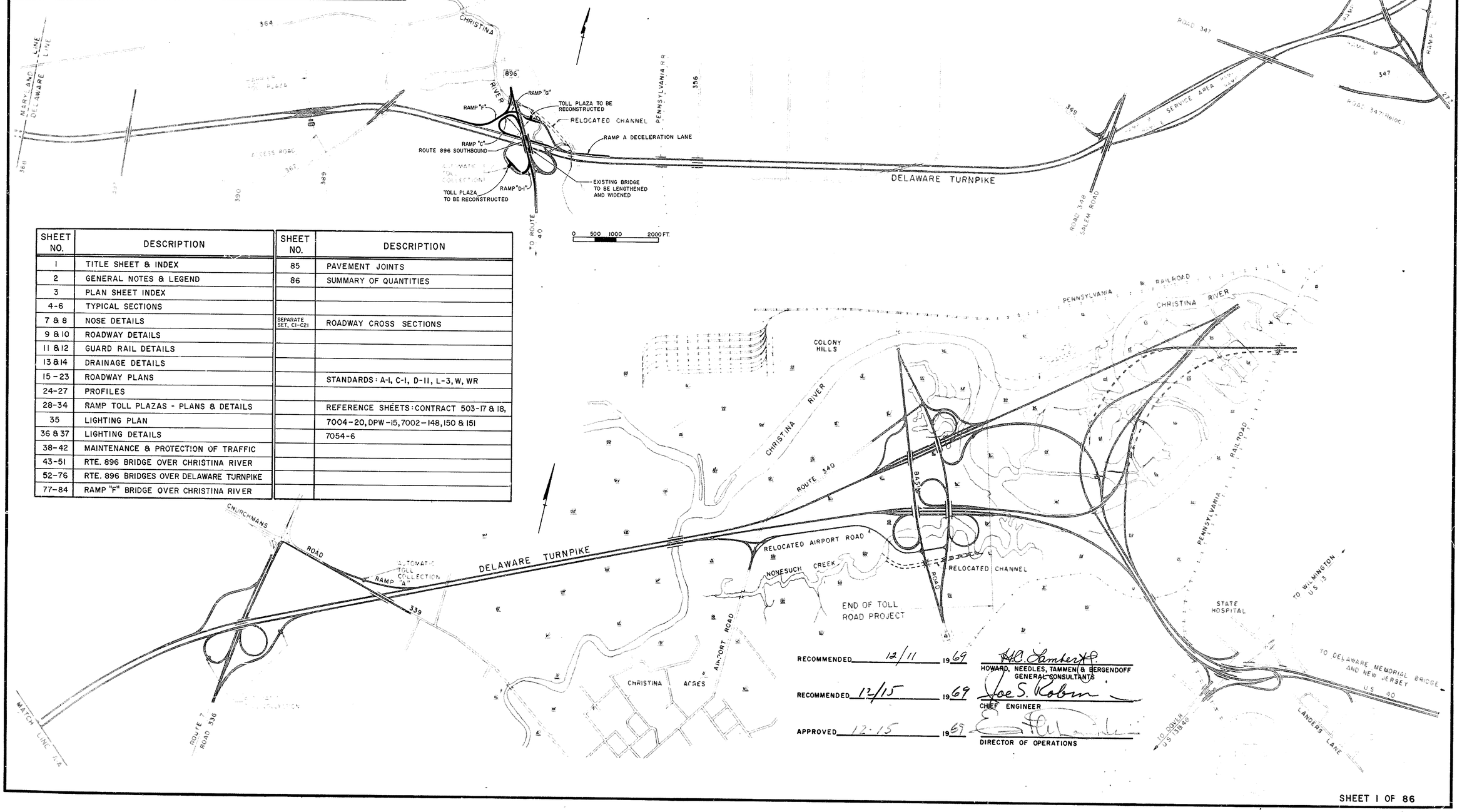

SHEET NO.	DESCRIPTION	SHEET NO.	DESCRIPTION
1	TITLE SHEET & INDEX	85	PAVEMENT JOINTS
2	GENERAL NOTES & LEGEND	86	SUMMARY OF QUANTITIES
3	PLAN SHEET INDEX		
4-6	TYPICAL SECTIONS		
7 & 8	NOSE DETAILS	SEPARATE SET, C1-C21	ROADWAY CROSS SECTIONS
9 & 10	ROADWAY DETAILS		
11 & 12	GUARD RAIL DETAILS		
13 & 14	DRAINAGE DETAILS		
15-23	ROADWAY PLANS		STANDARDS: A-1, C-1, D-11, L-3, W, WR
24-27	PROFILES		
28-34	RAMP TOLL PLAZAS - PLANS & DETAILS		REFERENCE SHEETS: CONTRACT 503-17 & 18,
35	LIGHTING PLAN		7004-20, DPW-15, 7002-148, 150 & 151
36 & 37	LIGHTING DETAILS		7054-6
38-42	MAINTENANCE & PROTECTION OF TRAFFIC		
43-51	RTE. 896 BRIDGE OVER CHRISTINA RIVER		
52-76	RTE. 896 BRIDGES OVER DELAWARE TURNPIKE		
77-84	RAMP "F" BRIDGE OVER CHRISTINA RIVER		

RECOMMENDED 12/11 1969 — H.C. Lambert
HOWARD, NEEDLES, TAMMEN & BERGENDOFF
GENERAL CONSULTANTS

RECOMMENDED 12/15 1969 — Joe S. Robin
CHIEF ENGINEER

APPROVED 12-15 1969 — [illegible]
DIRECTOR OF OPERATIONS

SHEET 1 OF 86

GENERAL NOTES

Horizontal alignment is based on offsets from existing Route 896 and the Delaware Turnpike.

Vertical Control based on U.S.C. & G.S. datum.

Base Sheets providing existing topography, horizontal alignment, and grade were prepared from final plans used for the construction of what is now the existing Delaware Turnpike. Also survey field information was used to incorporate the latest additions or changes in topographical features. A screened image is used to show this existing information. Work to be performed in this Contract is shown in full, non-screened lines and construction notes.

The vertical alignment of the proposed Rte. 896 Southbound Roadway generally follows the existing vertical alignment. See Typical Sections.

Controlled Access Line shown on Sheets is also a fence line.

All existing underdrain systems are to remain in operation if not replaced in this contract or specifically directed to be removed by the Engineer.

All transverse joints in proposed concrete pavement are to be spaced to line up with the transverse joints in the existing pavement.

The boring records of the existing borings shown on the plans and the pile driving records for the existing bridges are available for the contractors inspection at the office of the Engineer.

For General Notes pretaining to Structures see the General Plan Sheets for the individual bridges.

Curb transitions from either Parkway Curb Type 2 or Concrete Curb Type 1 to match the existing bridge safety walk or the new bridge parapets shall be accomplished in a 10 ft. transition section.

Utilities shown on the plans to be either relocated or removed by others will be completed prior to starting or in conjunction with this contract.

For General Notes pertaining to Typical Sections and Maintenance of Traffic see sheets 4 and 37 respectively.

GENERAL LEGEND

- ℄ of Proposed Construction
- Edge of Proposed Pavement
- Edge of Proposed Paved Shoulders
- Proposed 6" Hot-mix, Hot-laid Asphaltic Concrete Pavement
- Existing Underdrain
- Proposed Underdrain & Outlet Pipe
- Proposed Inlet and Pipes
- Proposed Pipe and Flared End Section
- Direction of Flow in Ditch
- Existing Guardrail
- Proposed Guardrail
- Existing Sign (Removal, when necessary, by Others)
- Existing Boring
- Proposed R/W & Controlled Access Line
- Existing Fence to be removed
- Proposed Fence
- Existing Concrete Pavement to be removed
- G — Existing Gas Main
- To — Existing Overhead Telephone Line
- Tu — Existing Underground Telephone Line
- Sanitary Sewer Line (By Others)
- Drainage Manhole and Pipe

ELECTRICAL NOTES

1. Stationing and spacing between lighting standards, and the location of junction boxes and conduit runs shown on the Plans are all approximate, but are to be followed as close as possible, unless otherwise ordered by the Engineer.
2. Existing concrete foundations of lighting standards which are being relocated shall be removed or demolished as directed. The complete lighting standard assemblies shall be reinstalled on new concrete foundations, as prescribed in the Specifications.
3. All required repairs to the existing conduit raceways, where indicated on the Plans, shall be made with same type and size of conduits as the existing raceways.
4. Frames and covers of junction boxes designated to be removed or demolished, shall be salvaged (see Specifications).
5. Drainage tees shall be provided at all low points of all conduit runs. Wherever possible conduits shall be sloped to drain to junction boxes.
6. All electrical work on Proposed Overhead Sign Structure, beyond and including the control cabinet, and the stubbed conduit out of sign foundation shall be provided by others (see Specifications).
7. All cables shall be 600V. insulation and color—coded (see Specifications).
8. All cable ends not connected shall be test capped by means of insulating and sealing them in the same manner as required by the Specifications for cable splice.
9. The following notations are used throughout lighting plans and detail sheets:
   a. Lighting Standard Identifications, such as 10-1-B next to a lighting standard symbol, the first figure indicates the lighting standard number. The second figure indicates the circuit number and the third figure designates the luminaire phase connection.
   b. Notations such as 2"-3#8 when pointing to conduit, the first figure indicates the size of conduit, the second figure indicates the number of cables and the third figure designates the size of cables.
   c. Notations such as 3#6 or $\frac{3\#6}{(1)}$ when pointing to conduit, the first figure indicates the number of cables and the second figure indicates the size of cables. The third figure (in parenthesis) when shown, indicates the circuit number. Circuit numbers are indicated only for those conduits in which more than one circuit is required to be installed or at circuit splitting points.

ELECTRICAL LEGEND

- New or Relocated Type A Lighting Standard on New Concrete Foundation.
- New or Relocated Type B Lighting Standard on New Concrete Foundation.
- New Type C Lighting Standard with Parapet Mounting Brackets
- Relocated Type D Lighting Standard on New Concrete Foundation
- Existing Type A Lighting Standard to be Relocated
- Existing Type B Lighting Standard to be Relocated
- Existing Type D Lighting Standard to be Relocated
- Existing Type A Lighting Standard to remain
- Existing Type B Lighting Standard to remain
- Existing Type C Lighting Standard to remain
- Existing Type D Lighting Standard to remain
- New Underbridge Lighting Luminaire
- New Concrete Junction Box
- New Junction Box and Lighting Standard Anchor Bolts on Structure
- Existing Concrete Junction Box to remain (unless otherwise noted)
- Existing Junction Box and Lighting Standard Anchor Bolts on Structure.
- Existing conduit fitting to be removed
- Existing, Relocated or New Toll Plaza Service Cabinet.
- New 3" Galv. W.I. Conduit
- New 2" Galv. W.I. Conduit
- New 2" Plastic Conduit
- Existing 3" Galv. W.I. Conduit
- Existing 2" Galv. W.I. Conduit
- Existing 3" Plastic Conduit
- Existing 2" Plastic Conduit
- Existing 3#8 Direct Burial Cables

  (Existing 3" Galv. W.I. Conduit, Existing 2" Galv. W.I. Conduit, Existing 3" Plastic Conduit, Existing 2" Plastic Conduit, Existing 3#8 Direct Burial Cables: To remain (unless otherwise noted))
- Existing Conduit or Direct Burial Cable to be removed or abandoned
- Metallic to Non-Metallic Conduit Adapter
- Capped Conduit

DELAWARE TURNPIKE	CONT. NO.	TITLE	SHEET NO.	TOTAL SHEETS
	7053	PLAN SHEET INDEX	3	86

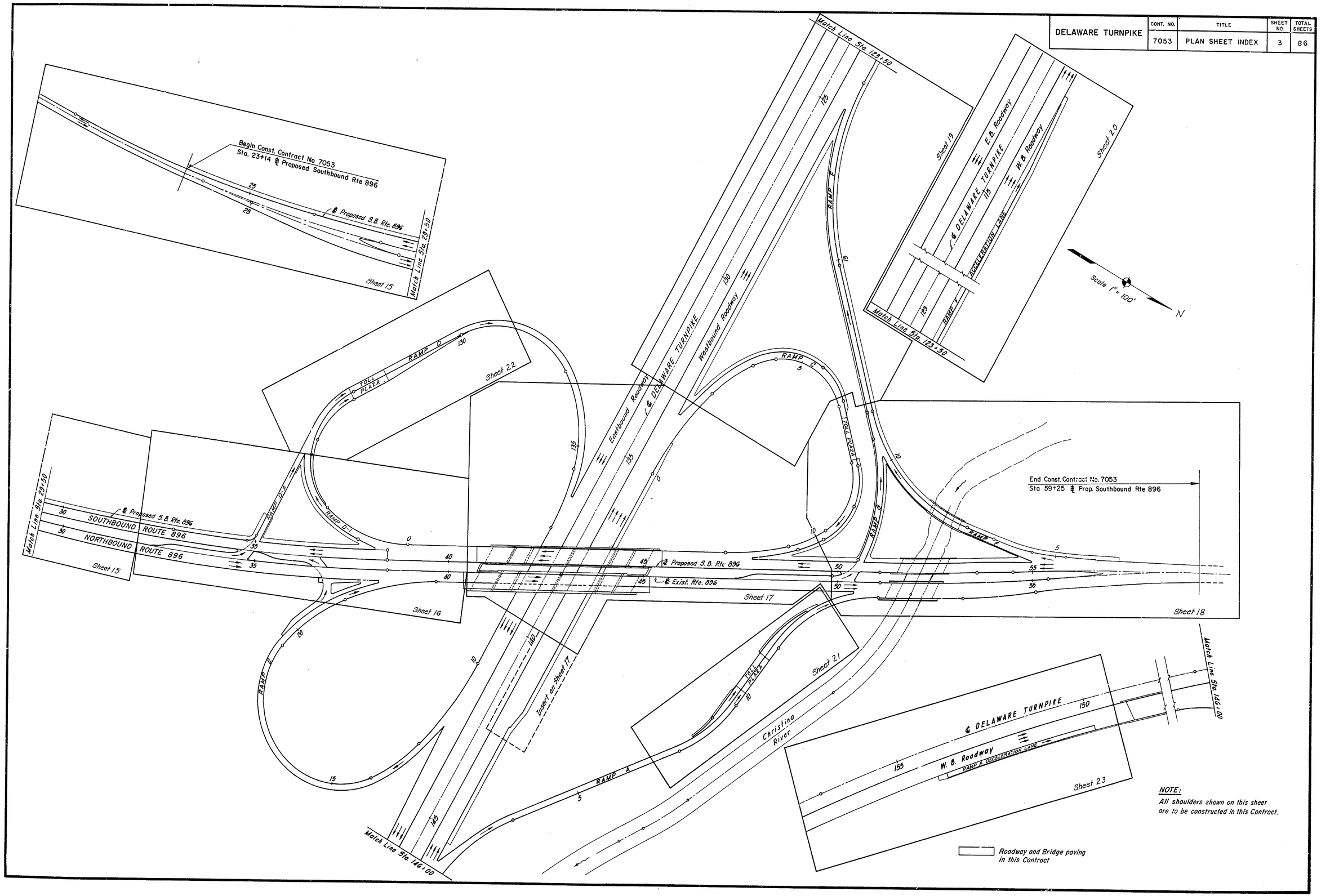

NOTE:
All shoulders shown on this sheet are to be constructed in this Contract.

DELAWARE TURNPIKE	CONT NO.	TITLE	SHEET NO.	TOTAL SHEETS
	7053	TYPICAL SECTIONS	4	86

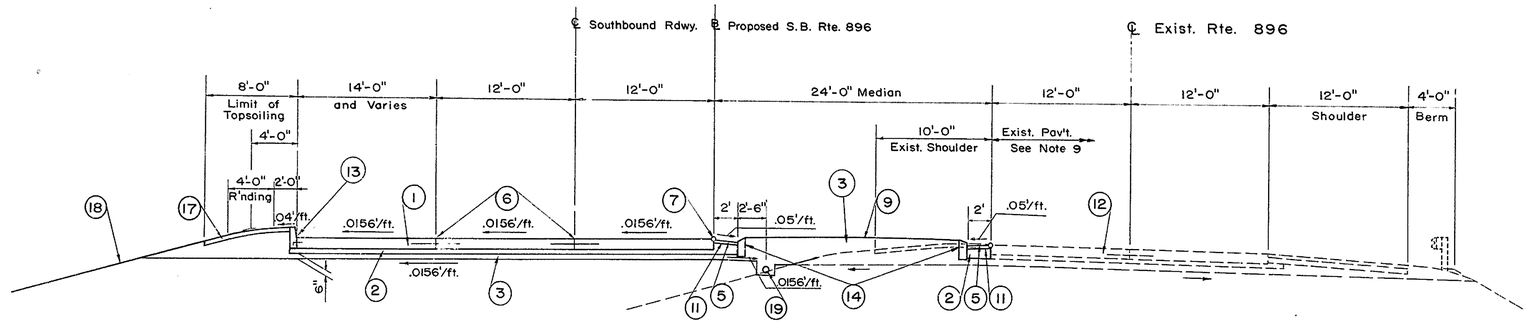

ROUTE 896

FROM STA. 38+50± TO STA. 47+50±

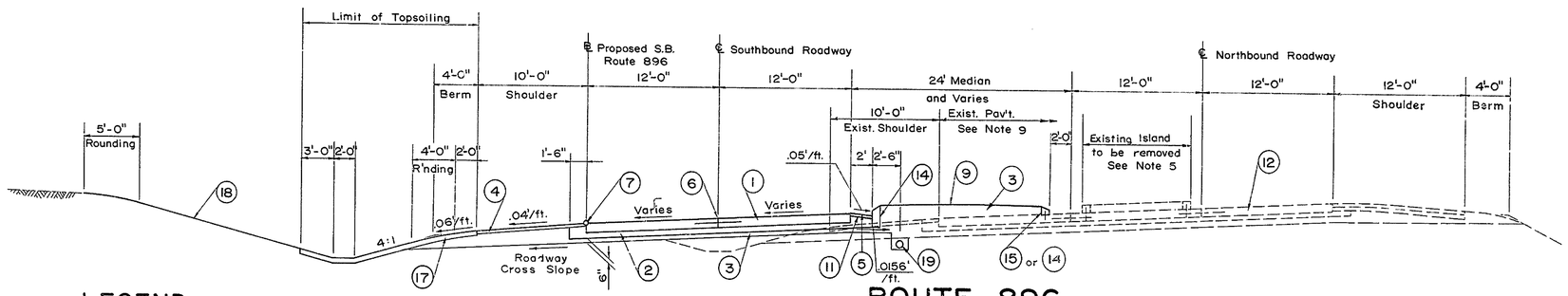

ROUTE 896

FROM STA. 28+00± TO STA. 38+50±

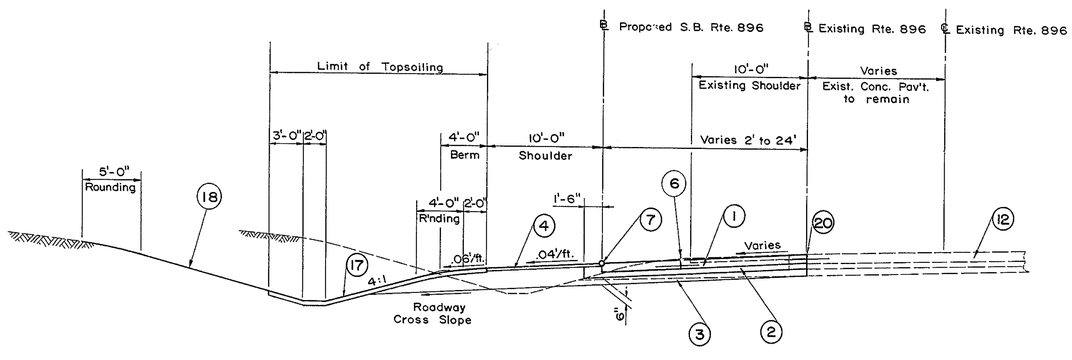

ROUTE 896

FROM STA. 23+14± TO STA. 28+00±

LEGEND

1. 9" Reinforced Concrete Pavement
2. 4" Quarry Waste
3. Select Borrow
4. Bituminous Surface Treatment
5. 3" Hot-Mix, Hot Laid Asphaltic Concrete Shoulder (1-1/2" Wearing Course and 1-1/2" Binder Course)
6. Dowelled Longitudinal Saw-Cut Joint
7. Point of Application of Grade
8. 6" Soil Cement Base Course
9. Median Surface Treatment, (Single Course with Stone Chips and Soil Sterilization, sloped to curbs)
10. 6" Hot-Mix, Hot Laid Asphaltic Concrete Pavement (1-1/2" Wearing Course and 4-1/2" Binder Course)
11. R.C.-1 Asphalt Tack Coat
12. Existing 9" Reinforced Concrete Pavement To Remain Unless Noted on Roadway Plans
13. Portland Cement Concrete Curb, Type 1
14. Portland Cement Concrete Parkway Curb, Type 2
15. Portland Cement Concrete Parkway Curb, Dowelled
16. Hot-Mix, Hot Laid Asphaltic Concrete Curb
17. 4" Topsoil, Seeding and Mulching
18. Seeding and Mulching
19. 6" Perforated Corrugated Metal Pipe Underdrain
20. Longitudinal Construction Joint (Drilled and Grouted Dowels)

TYPICAL SECTION GENERAL NOTES

1. Station limits specified for each typical section are approximate. The typical section may represent items of construction beyond the limits indicated.
2. For Wire Mesh Reinforcement for Portland cement concrete pavement see Standard Sheet A-1.
3. Subgrade cross-slope shall be not less than 0.0156 ft./ft. to provide drainage for the subbase. In curve transitions where the pavement cross-slope becomes less than 0.0156 ft./ft. the minimum cross-slope shall be maintained until abrupt reversal of the subgrade cross-slope can be accomplished.
4. Unsuitable material below the template grade shall be removed to the limits specified by the Engineer and replaced with select borrow. When required by the Engineer, underdrains shall be installed in areas from which unsuitable material has been removed.
5. For detail of Island removal see Roadway Details, sheet 9.
6. Side slopes in cut or fill generally conform to the following criteria: (See cross section plans for exact side slopes)

   0' to 10' height use 4:1
   10' to 20' height use 3:1 } Requires Guard Rail
   Over 20' height use 2:1 }

7. For station limits and location of underdrains see Roadway Plan sheets.
8. For depth of and location of side ditches see Roadway Plan sheets and cross section plans.
9. For limits of existing concrete pavement removal, see Roadway Plan sheets.
10. For existing guard rail to be removed and proposed guard rail to be placed see Roadway Plan sheets.
11. All typical sections are drawn to a scale of 1" = 6'.

DELAWARE TURNPIKE	CONT. NO.	TITLE	SHEET NO.	TOTAL SHEETS
	7053	TYPICAL SECTIONS	5	86

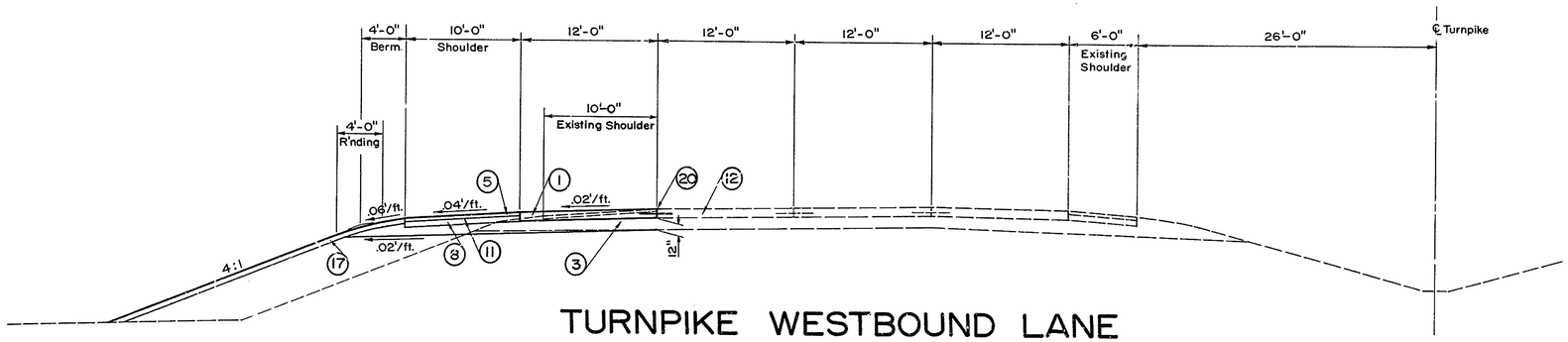

TURNPIKE WESTBOUND LANE
FROM STA. 133+50± TO STA. 142+00±

(RAMP C DECELERATION LANE)

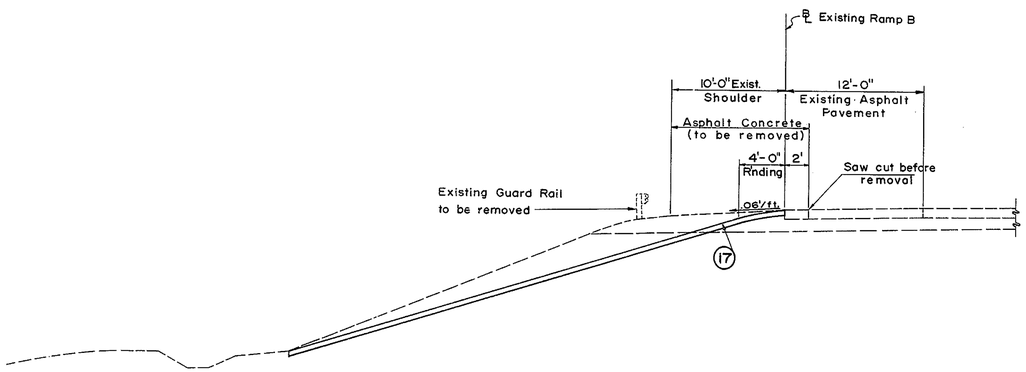

TURNPIKE WESTBOUND LANE
FROM STA. 126+00± TO STA. 132+00±

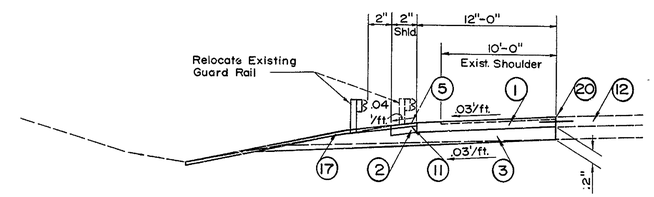

TURNPIKE WESTBOUND LANE
FROM STA. 150+00± TO STA. 154+00±

(RAMP A DECELERATION LANE)

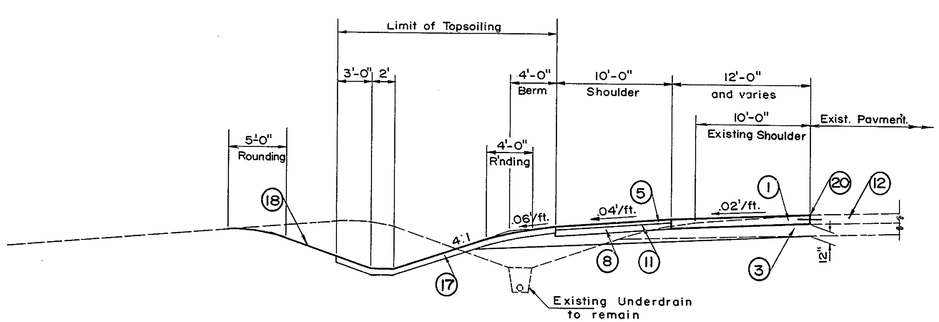

TURNPIKE WESTBOUND LANE
FROM STA. 112+00± TO STA. 125+00±

(RAMP F ACCELERATION LANE)

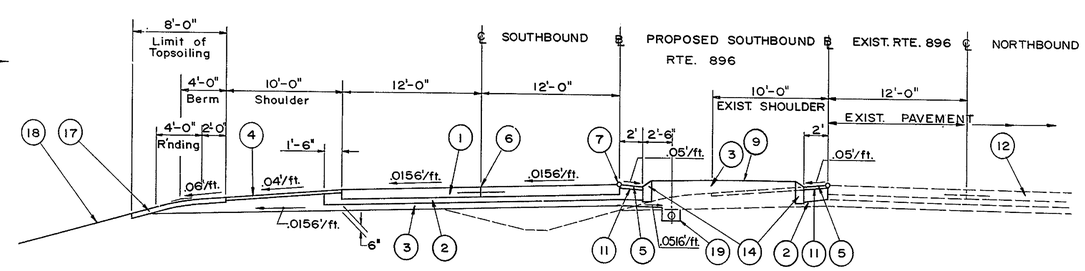

ROUTE 896
FROM STA. 47+50± TO STA. 57+40

NOTE:
For Typical Section General Notes and Legend see Sheet No. 4

DELAWARE TURNPIKE	CONT NO	TITLE	SHEET NO.	TOTAL SHEETS
	7053	TYPICAL SECTIONS	6	86

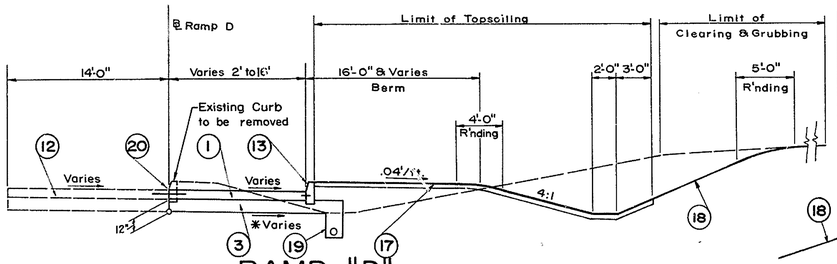

RAMP "D"

ADJACENT TO TOLL PLAZA

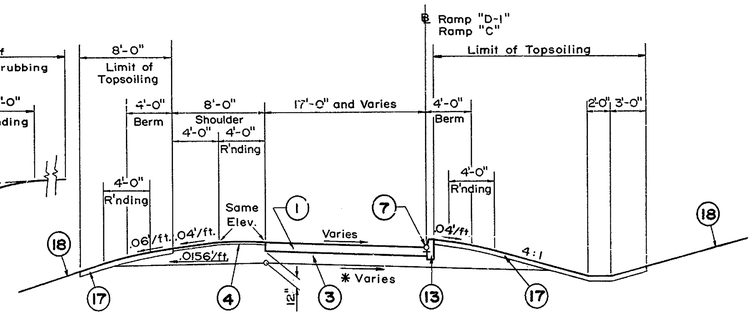

RAMP "D-1"

RAMP "C"

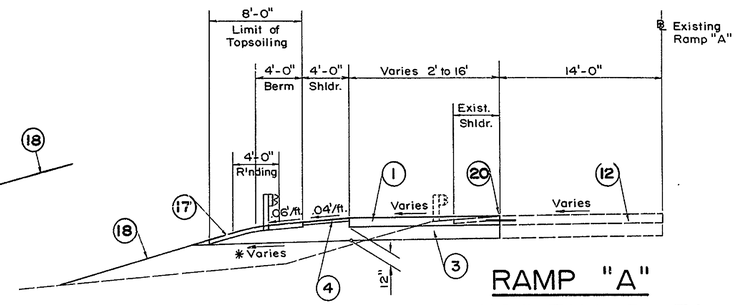

RAMP "A"

BEFORE TOLL PLAZA

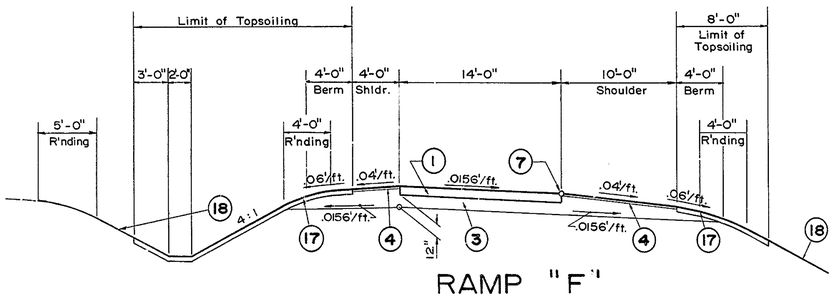

RAMP "F"

TYPICAL NORMAL SECTION

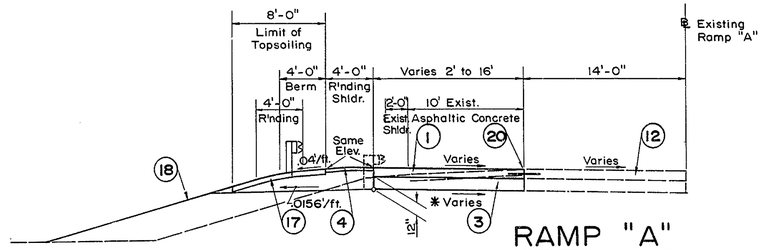

RAMP "A"

AFTER TOLL PLAZA

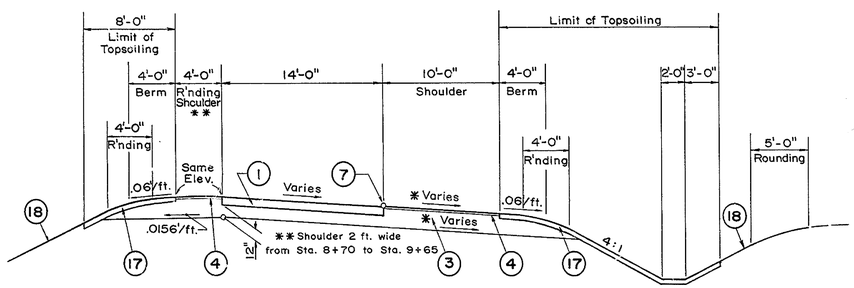

RAMP "F"

SUPERELEVATED SECTION AFTER BRIDGE

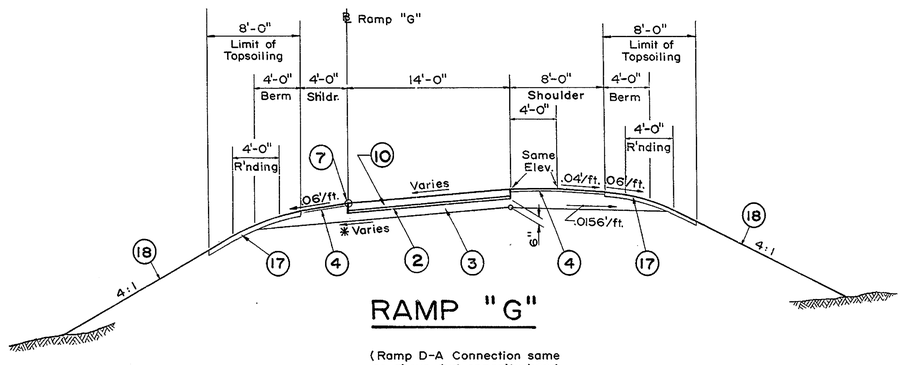

RAMP "G"

(Ramp D-A Connection same as above, but opposite hand. Also Route 896 connection to work by others.)

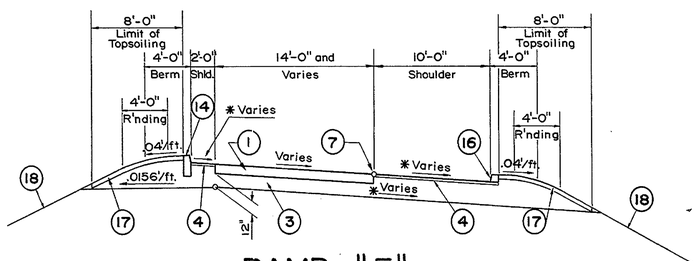

RAMP "F"

SUPERELEVATED SECTION BEFORE BRIDGE

NOTE:
For Typical Section General Notes and Legend see Sheet No. 4

* Cross slope of shoulder and subgrade to be the same as that of the adjacent pavement.

DELAWARE TURNPIKE	CONT. NO.	TITLE	SHEET NO.	TOTAL SHEETS
	7053	NOSE DETAILS	7	86

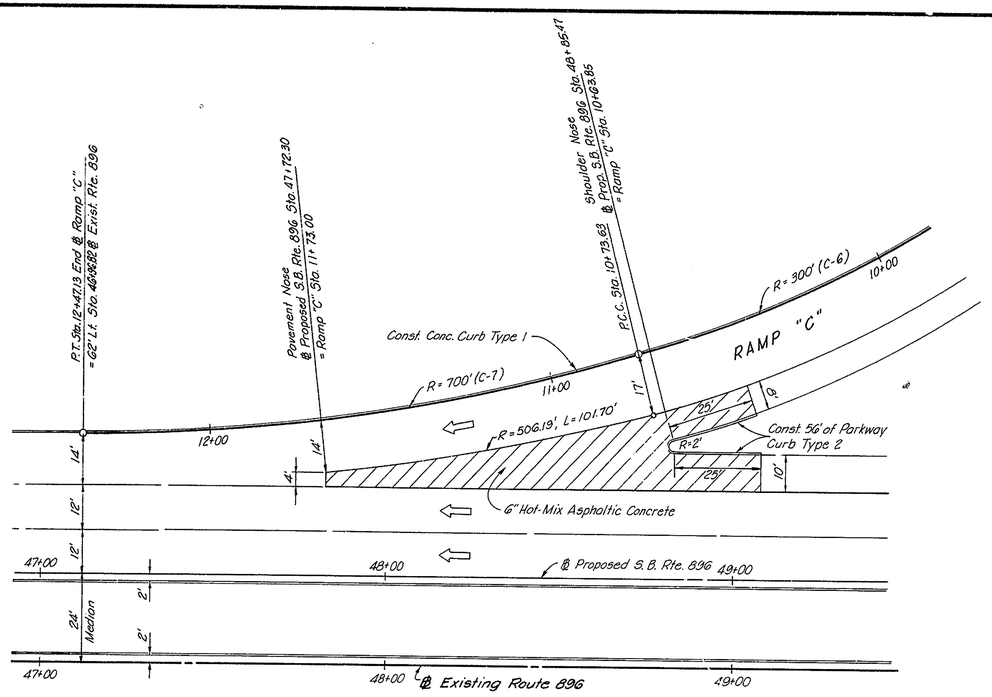

RAMP "C" TO ROUTE 896

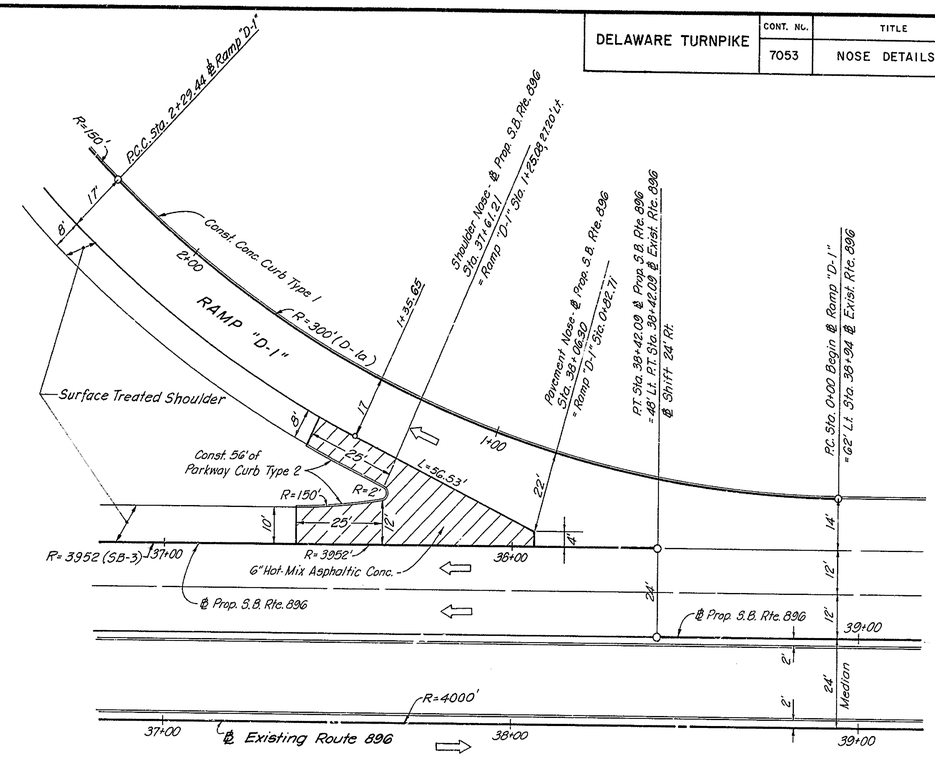

ROUTE 896 TO RAMP "D-1"

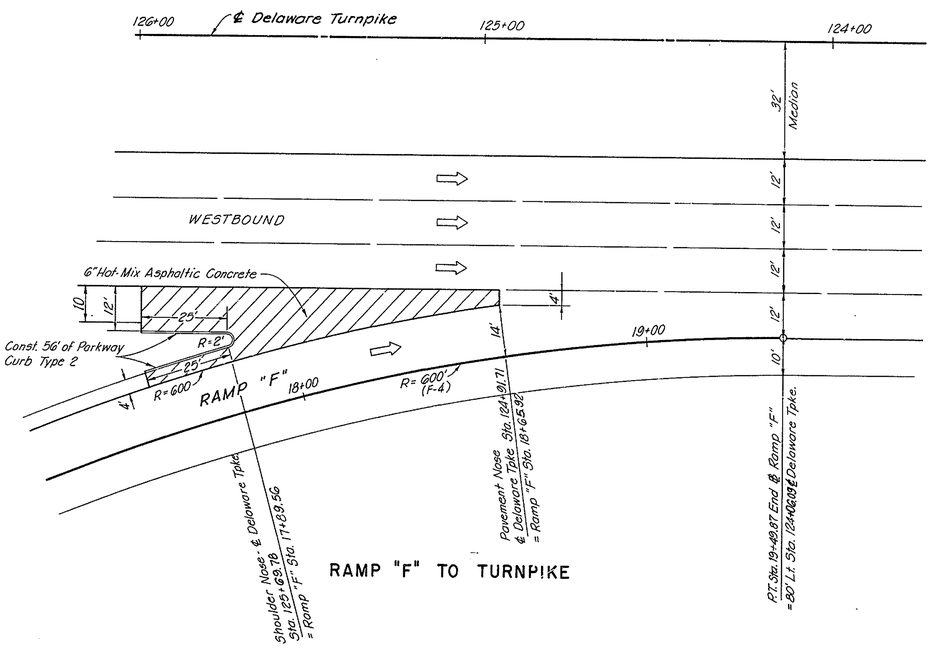

RAMP "F" TO TURNPIKE

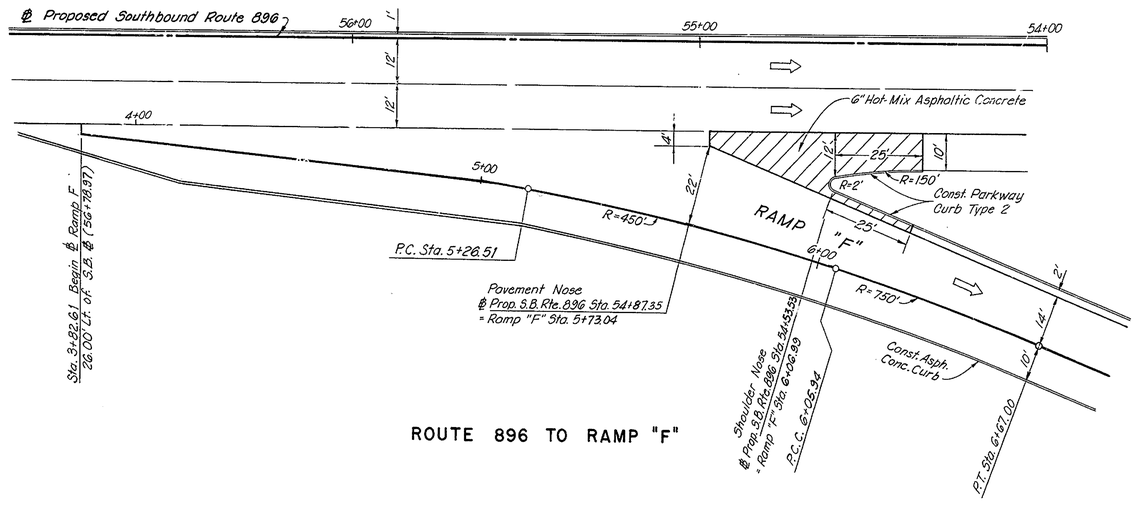

ROUTE 896 TO RAMP "F"

DELAWARE TURNPIKE	CONT. NO.	TITLE	SHEET NO.	TOTAL SHEETS
	7053	NOSE DETAILS	8	86

Rev. 1-8-70

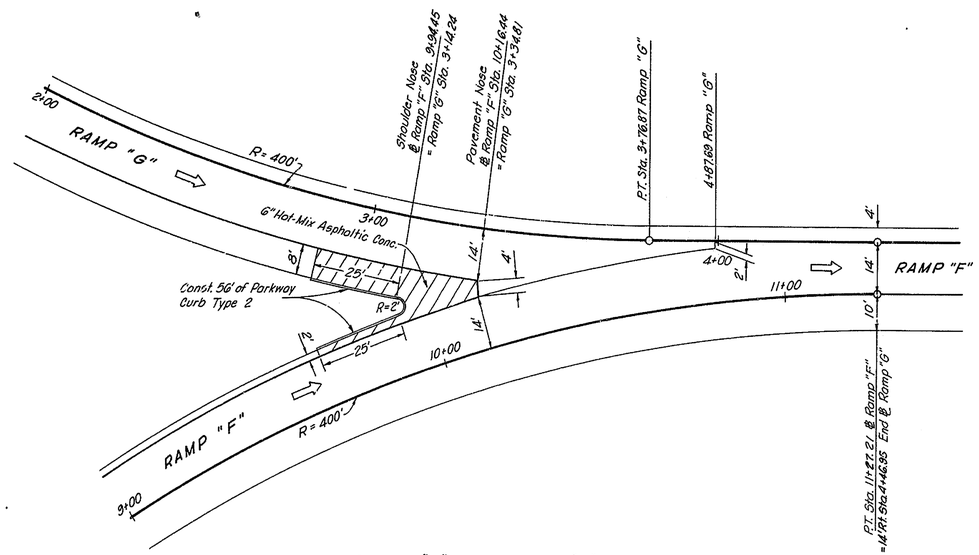

RAMP "G" TO RAMP "F"

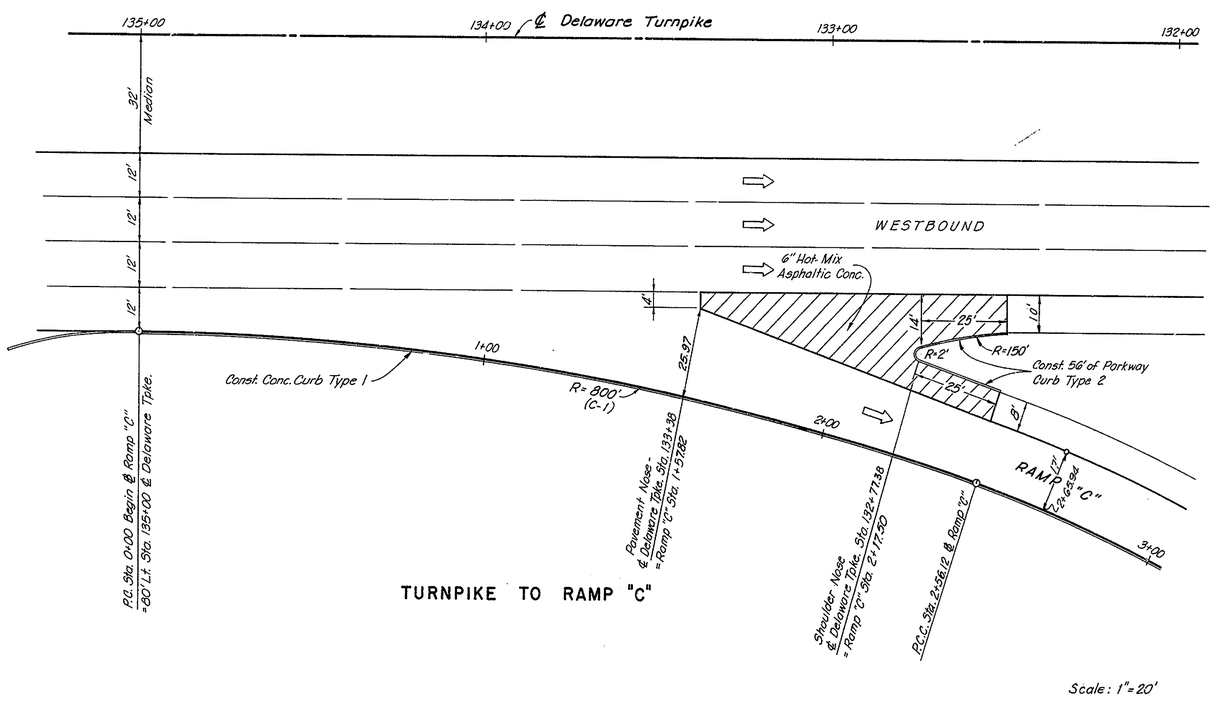

TURNPIKE TO RAMP "C"

Scale: 1" = 20'

DELAWARE TURNPIKE	CONT. NO	TITLE	SHEET NO	TOTAL SHEETS
	7053	ROADWAY DETAILS	9	86

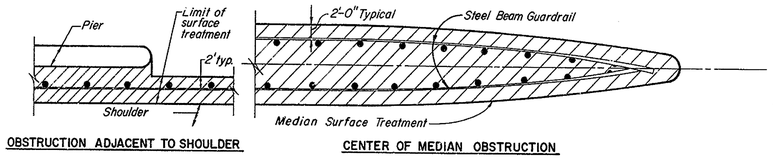

SURFACE TREATMENT WHEN GUARDRAIL RESTRICTS MOWING

No Scale

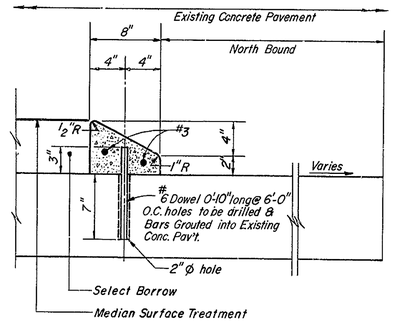

PARKWAY CURB DOWELLED

Scale: $1\frac{1}{2}$" = 1'-0"

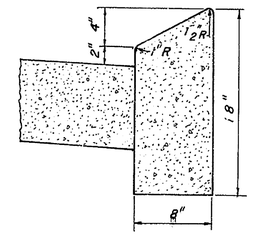

PARKWAY CURB TYPE 2

NO SCALE

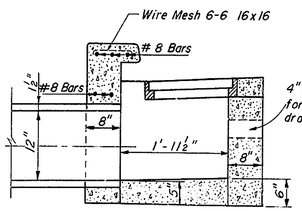

INLET TYPE A-I MODIFIED

Scale: $\frac{3}{4}$" = 1'-0"

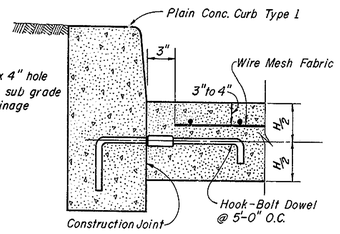

CONCRETE PAVEMENT TO CURB DETAIL

Scale: $\frac{1}{8}$" = 1"

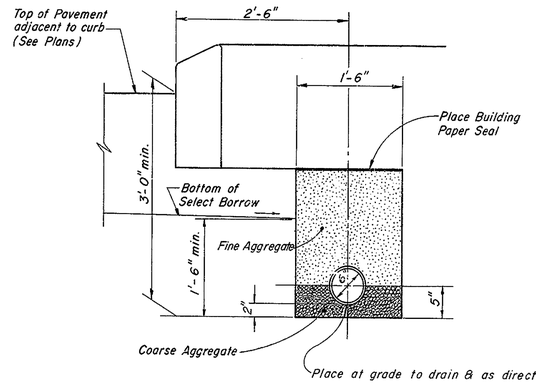

PERFORATED UNDERDRAIN TRENCH DETAIL

No scale

Note:

1. Where laterals are required, they shall be connected at an angle of 45° to the longitudinal drain.
2. For underdrain locations see Plans.

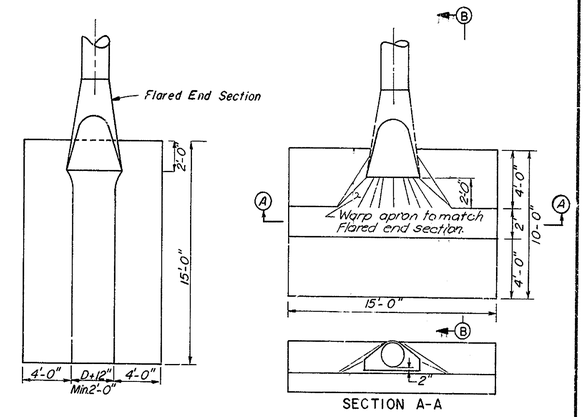

SECTION A-A

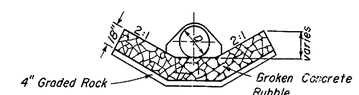

DITCH NORMAL TO ROADWAY

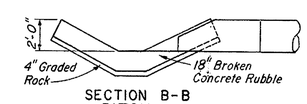

SECTION B-B
DITCH PARALLEL TO ROADWAY

RUBBLE APRON

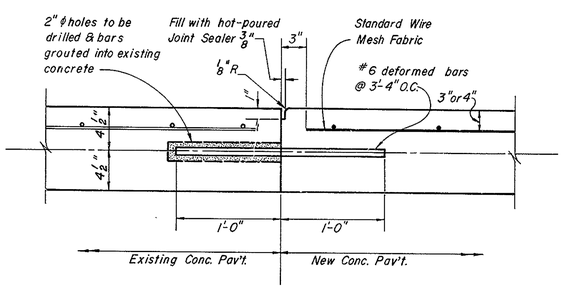

TYPICAL DOWELLED LONGITUDINAL JOINT WITH EXISTING PAVEMENT

Scale: $1\frac{1}{2}$" = 1'-0"

NOTE: To be used at all locations were new and existing concrete abut.

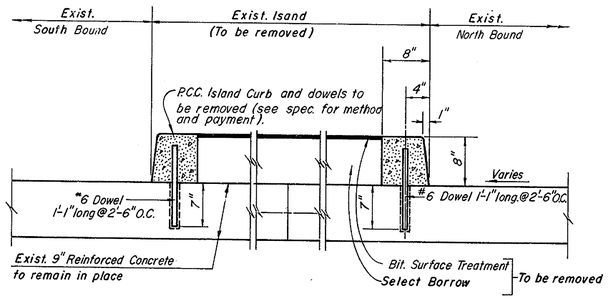

EXISTING CURBED ISLAND TO BE REMOVED

Scale: 1"=1'-0"

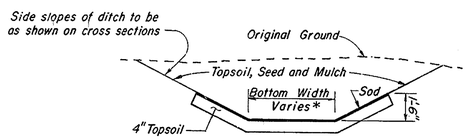

SODDED DITCH

No scale

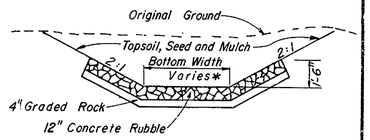

PLAIN RUBBLE GUTTER

No scale

*Bottom width of ditch as indicated on Plan Sheets.

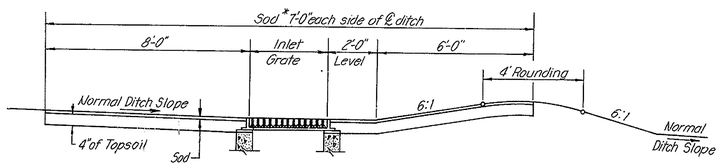

SODDED DITCH DIKE

Scale: 3/8" = 1'-0"

DELAWARE TURNPIKE	CONT. NO.	TITLE	SHEET NO.	TOTAL SHEETS
	7053	ROADWAY DETAILS	10	86

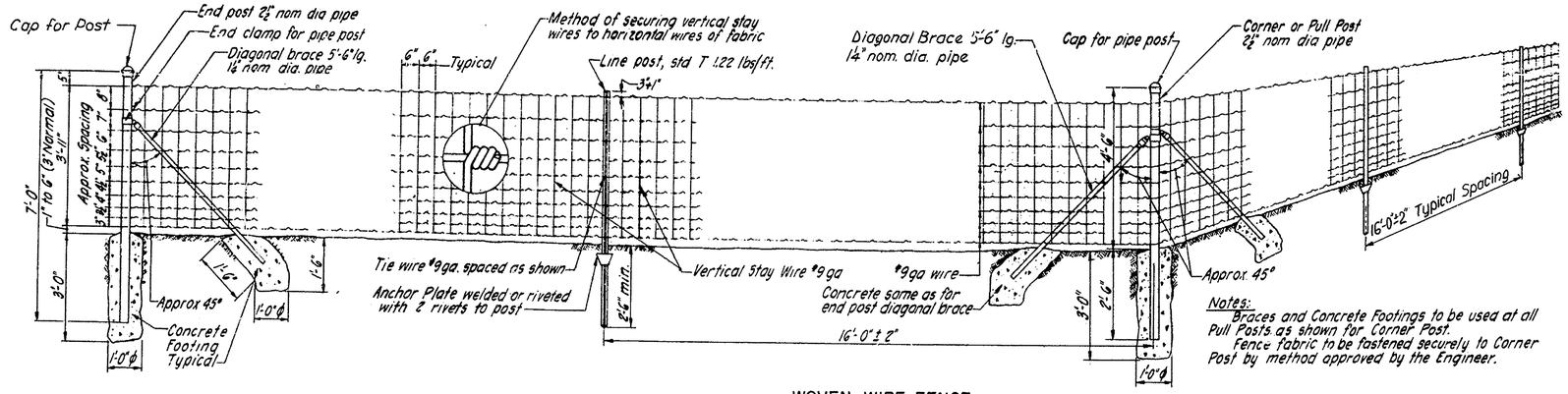

Notes:
Braces and Concrete Footings to be used at all Pull Posts as shown for Corner Post.
Fence fabric to be fastened securely to Corner Post by method approved by the Engineer.

WOVEN WIRE FENCE

½" = 1'-0"

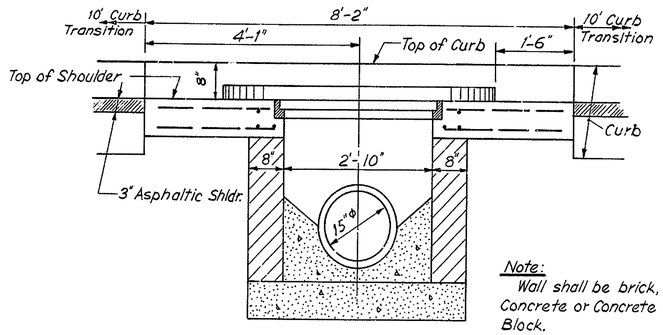

Note:
Wall shall be brick, Concrete or Concrete Block.

SECTION B-B

¾" = 1'-0"

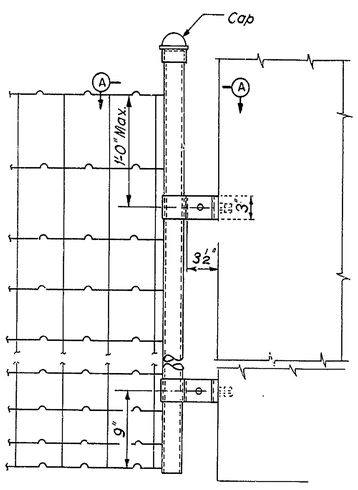

ABUTMENT CONNECTION

1½" = 1'-0"

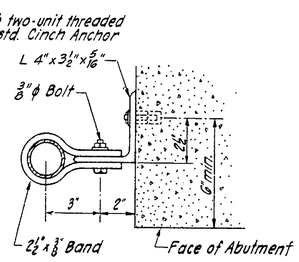

SECTION A-A

3" = 1'-0"

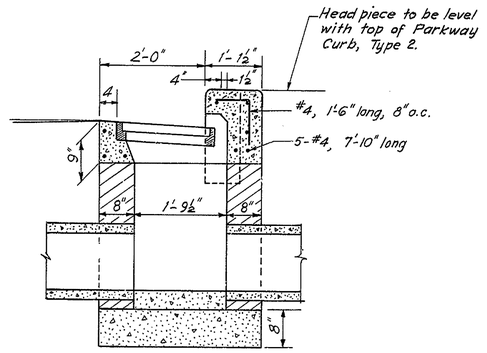

SECTION C-C

¾" = 1'-0"

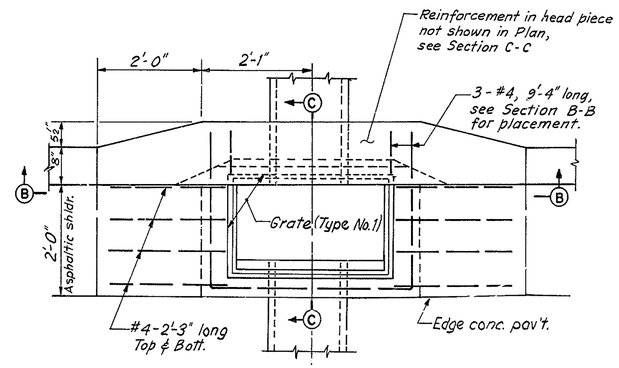

PLAN
TYPE C COMB. INLET

¾" = 1'-0"

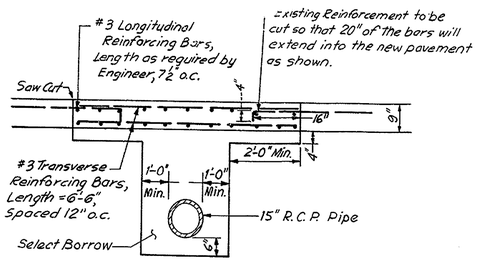

CONCRETE PAVEMENT PATCH

No scale

	Length of Twist	Length of Taper (And Twist)	Minimum Length of Tangent Rail Before Obstruction	Minimum Length of Rail Beyond Obstruction
Shoulder Installation	25'	62'-6"	50'	25'
Median Installation	25'	37'-6"	50'	Symmetrical About Obstruction

	DIST. FROM BEGINNING OF TAPERS	6.25	12.50	18.75	25.00	31.25	37.50	43.75	50.00	56.25	62.50	68.75	75.00	81.25	87.50	93.75	100.00	106.25	112.50	118.75	125.00	131.25	137.50	143.75	150.00			
END OFFSET	C=5'	.18	.59	1.27	2.13	3.32	5.00																					
	C=6'	.22	.71	1.50	2.66	4.15	6.00																					
	C=10'	.13	.42	.90	1.60	2.52	3.66	4.95	6.45	8.19	10.00																	
	C=10'	.02	.07	.16	.28	.43	.63	.85	1.11	1.41	1.74	2.10	2.50	2.93	3.40	3.91	4.44	5.02	5.63	6.27	6.94	7.66	8.40	9.18	10.00			

TABLE OF OFFSETS FROM TANGENT FOR PLACING GUARDRAIL TAPER

DELAWARE TURNPIKE	CONT. NO.	TITLE	SHEET NO.	TOTAL SHEETS
	7053	GUARD RAIL DETAILS	11	86

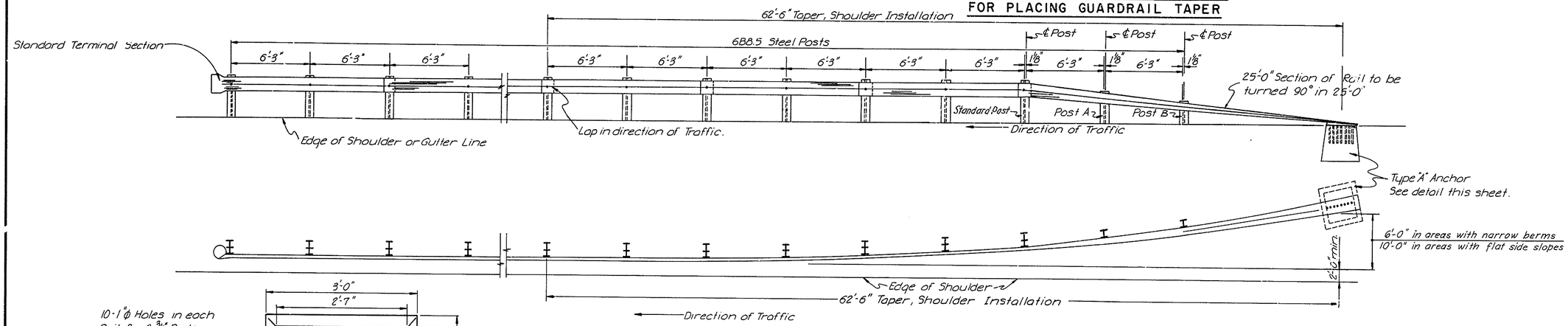

TYPICAL SHOULDER INSTALLATION

Scale: 1"=4'-0"

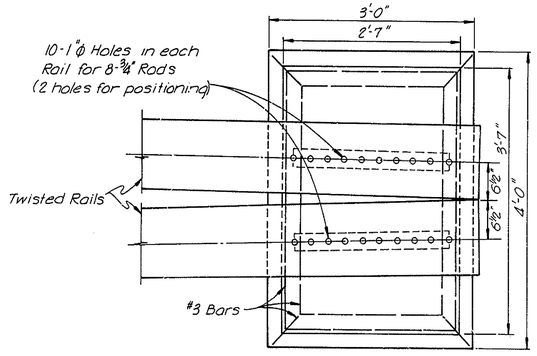

TYPE B ANCHOR BLOCK

Scale 1"=1'-0"

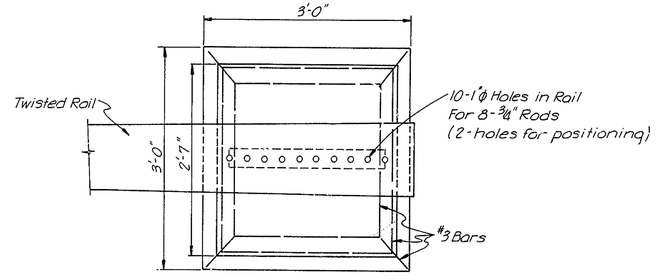

TOP VIEW (SINGLE RAIL)

Scale 1"=1'-0"

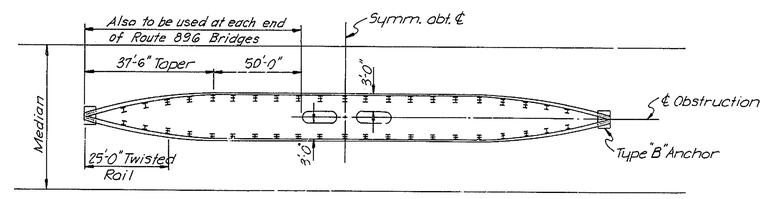

GUARDRAIL TREATMENT AT OBSTRUCTIONS IN CENTER OF MEDIAN

Scale: none

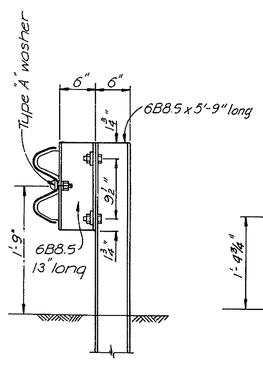

STANDARD POST

Scale ¾"=1'-0"

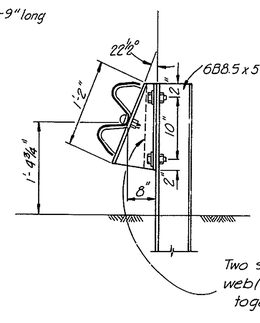

POST A

Scale ¾"=1'-0"

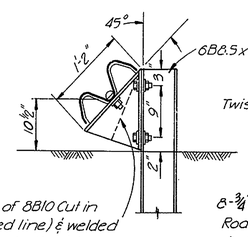

POST B

Scale ¾"=1'-0"

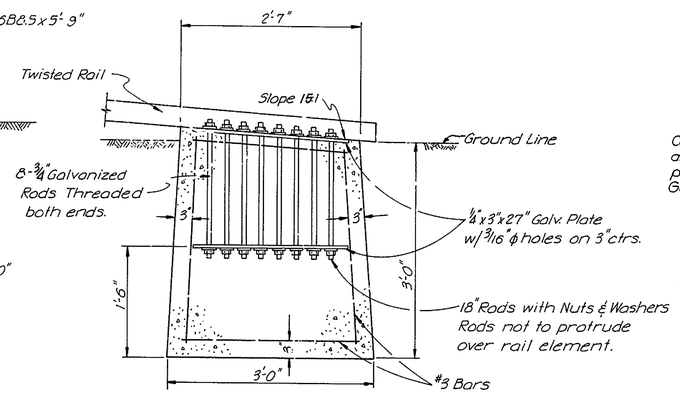

TYPE A ANCHOR BLOCK

Scale 1"=1'-0"

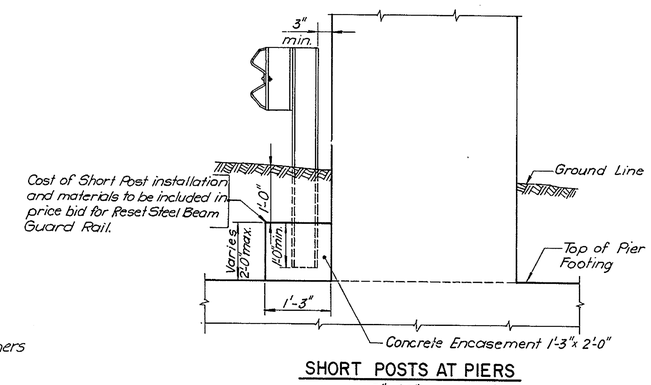

SHORT POSTS AT PIERS

¾"=1'-0"

Note: Concrete block to be 2'-0"x2'-0" except as shown above at pier shaft where short posts are required at pier base or any other sub-surface structure where the fill is not deep enough for a normal length post.

DELAWARE TURNPIKE	CONT NO	TITLE	SHEET NO.	TOTAL SHEETS
	7053	GUARD RAIL DETAILS	12	86

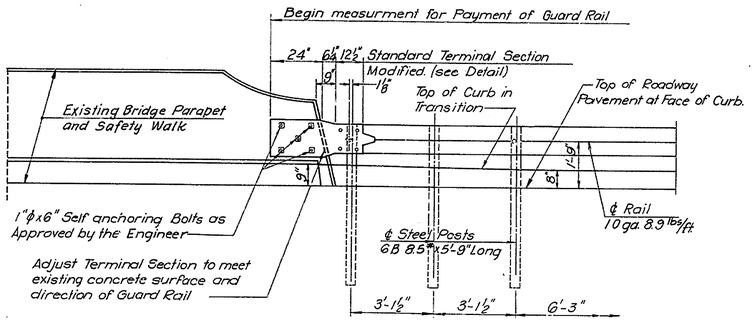

SIDE VIEW (LOOKING FROM ROADWAY)

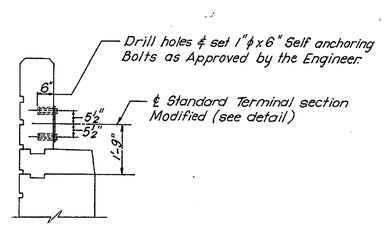

SECTION A-A

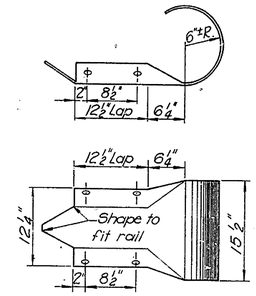

STANDARD TERMINAL SECTION

1" = 1'-0"

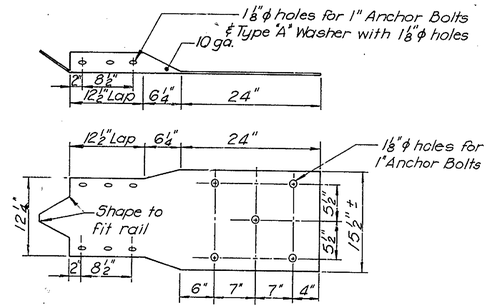

STANDARD TERMINAL SECTION MODIFIED

1" = 1'-0"

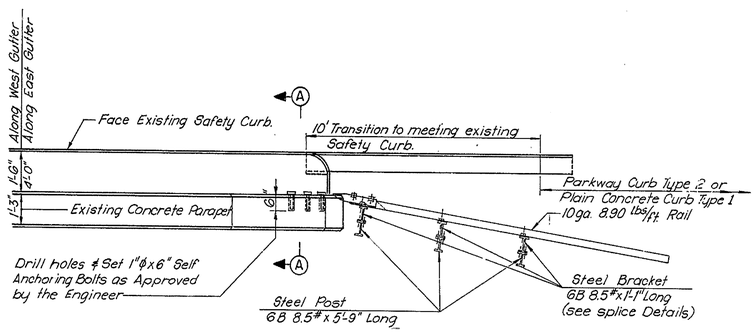

PLAN VIEW

GUARDRAIL JUNCTION AT EXISTING BRIDGE PARAPET

⅜" = 1'-0"

Cost of connection of Guard Rail to Parapet to be included in cost bid per L.F. of Reset Steel Beam Guard Rail.

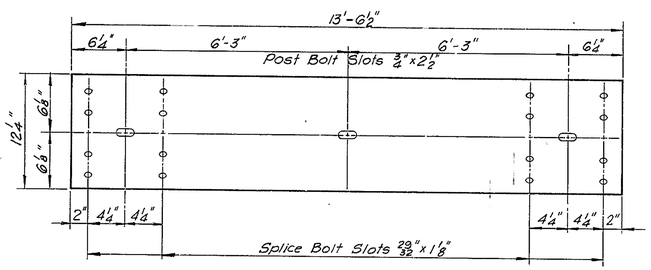

RAIL DETAIL

1½" = 1'-0"

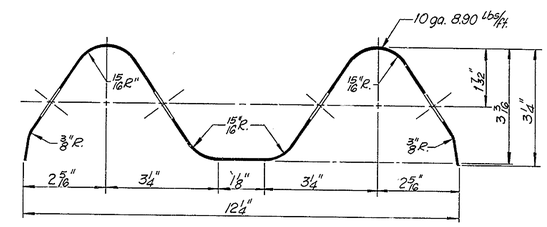

RAIL SECTION

Half Size

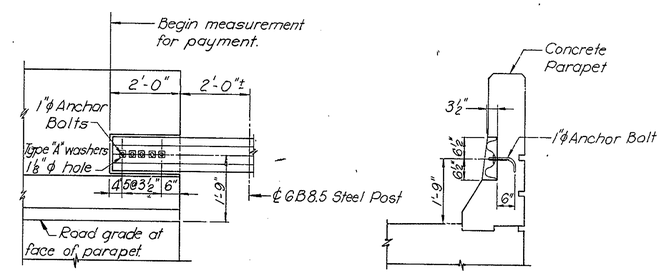

GUARD RAIL JUNCTION AT BRIDGE PARAPET

NEW CONSTRUCTION

½" = 1'-0"

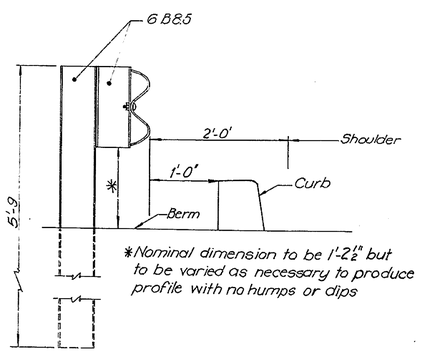

TYPICAL SECTION AT SHOULDER

1" = 1'-0"

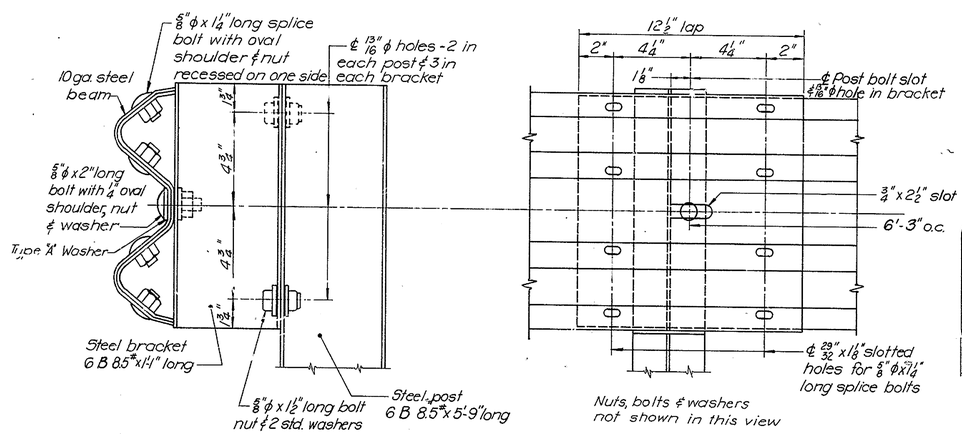

SPLICE DETAILS

3" = 1'-0"

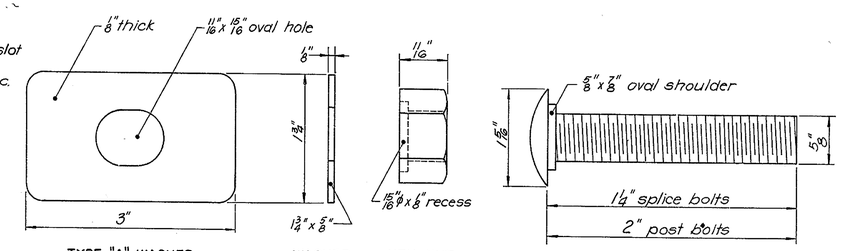

TYPE "A" WASHER | WASHER | HEX NUT

RAIL HARDWARE

Full Size

DELAWARE TURNPIKE	CONT. NO.	TITLE	SHEET NO.	TOTAL SHEETS
	7053	DRAINAGE DETAILS	13	86

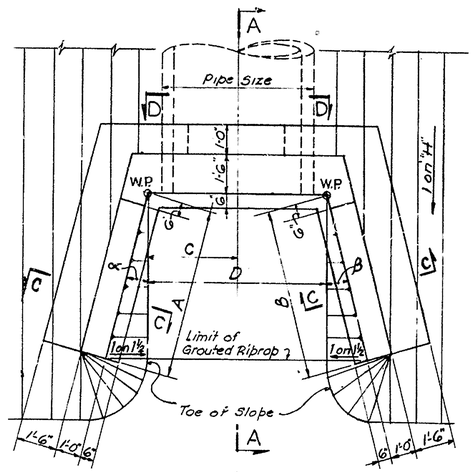

PLAN
(SKEW = 0°)

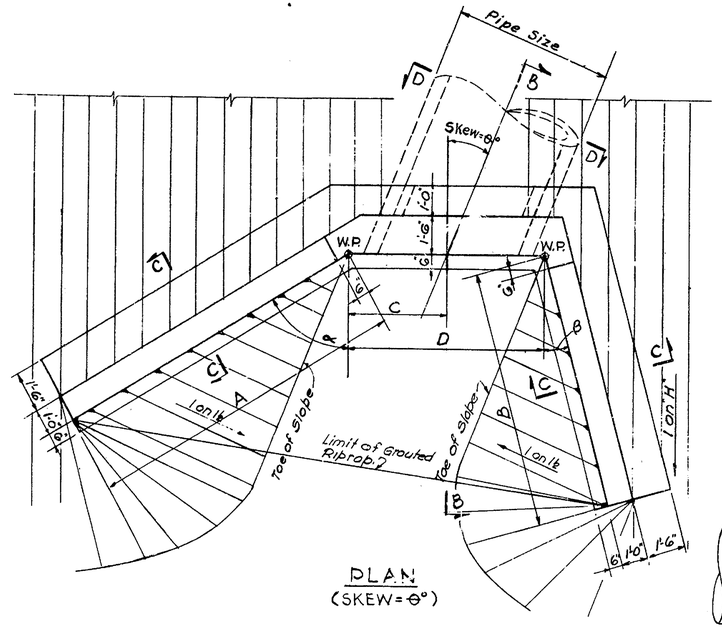

PLAN
(SKEW = θ°)

WING WALLS

SCHEDULE OF DIMENSIONS

TYPE	PIPE SIZE	DIRECTION OF θ	θ	α	β	A	B	C	D	E	F	G	H	QUANTITIES / WALL REINF. (LBS.)	CONC. (CU. YDS)	GROUTED RIP RAP (SQ. YDS)
WW-A	48"φ	—	0°	15°	15°	6'-6"	6'-6"	3'-0"	6'-0"	4'-3"	4'-3"	8'-0"	2	300	7.0	6.0
WW-B	60"φ	—	0°	15°	15°	8'-3"	8'-3"	3'-6"	7'-0"	4'-6"	4'-6"	9'-1"	2	400	9.0	8.5
WW-C	60"×38"	R	30°	60°	15°	8'-8"	5'-6"	4'-0"	8'-0"	6'-3"	5'-11"	7'-2½"	4	400	9.0	7.5
WW-D	60"×38"	R	30°	60°	30°	8'-8"	4'-8"	4'-0"	8'-7"	6'-3"	6'-3"	7'-2½"	4	400	9.0	7.0
WW-E	66"φ	L	41°	15°	60°	6'-0"	12'-9"	6'-0"	12'-0"	5'-10"	5'-6"	9'-8"	2	450	11.0	10.0
WW-F	54"φ	—	0°	15°	15°	7'-6"	7'-6"	3'-3"	6'-6"	4'-5"	4'-5"	8'-7"	2	350	8.0	7.0
WW-G	54"φ	R	26°	60°	30°	12'-6"	7'-4"	5'-10"	8'-8"	5'-3"	5'-3"	8'-7"	3	500	12.0	12.0
WW-H	60"φ	R	23°	60°	15°	10'-4"	8'-5"	3'-9"	7'-7"	7'-7"	6'-9"	9'-1"	4	500	12.0	11.0

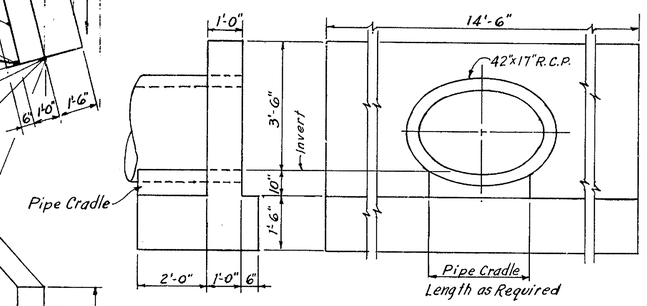

ELEVATION

HEADWALL DETAILS - 42"×27" ELLIPTICAL R.C.P.

QUANTITIES/WALL			
REINF.	CONCRETE (CU. YDS.)		
(LBS.)	WALL	FOOTING	TOTAL
90	1.61	2.82	4.43

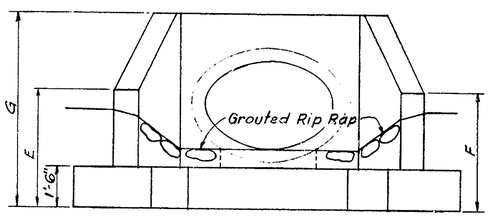

ELEVATION

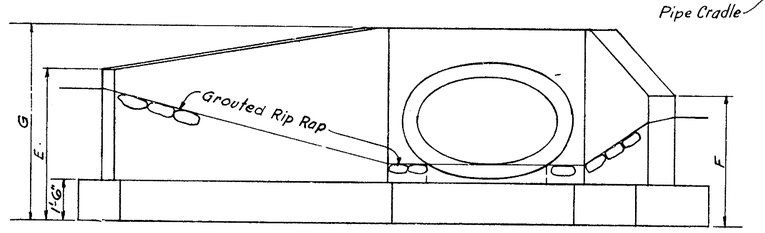

ELEVATION

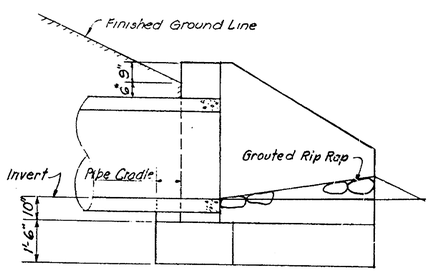

SECTION A-A
SECTION B-B SIMILAR

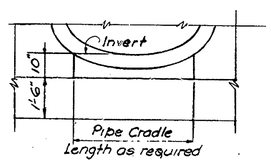

SECTION D-D

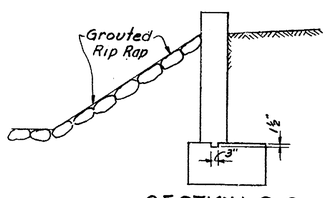

SECTION C-C

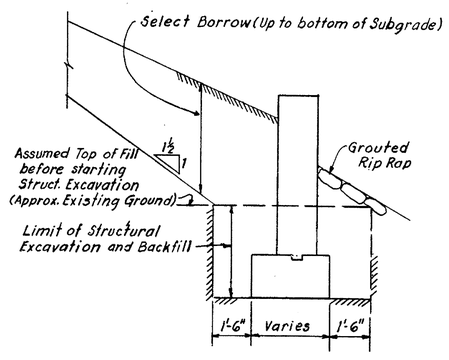

PAYMENT LINES FOR EXCAVATION AND BACKFILL

NOTES:

1. DESIGN SPECIFICATIONS: A.A.S.H.O. 1957.
2. MATERIAL AND FABRICATION SPECIFICATIONS: State of Delaware, State Highway Department. Standard Specifications for Highway Construction, June 1, 1965, and as given in the Special Provisions.
3. DESIGN STRESSES: Reinforcing Steel = 18,000 p.s.i. Concrete; f'_c = 1,200 p.s.i. n = 10
4. Splices for stress bars shall be a minimum of 30 diameters, all other splices a minimum of 20 diameters.
5. All exposed concrete edges shall be bevelled 1"×1" unless otherwise noted.
6. For location of Headwalls see Roadway Plan sheets.
7. For Bar List see Sheet No. 14.
8. Headwalls for Culverts 36" or less shall conform to the State Standard Detail Sheets.
9. The cost for Grouted Rip-Rap is to be included in the price bid for the Wing Wall Concrete.

CULVERT HEAD WALLS - DETAILS

NOT TO SCALE

DELAWARE TURNPIKE	CONT. NO.	TITLE	SHEET NO.	TOTAL SHEETS
	7053	DRAINAGE DETAILS	14	86

WING WALLS - BAR LIST

TYPE	MARK	SIZE	AMT. REQD.	LENGTH	BAR TYPE	A	B	C	Δ
WW-A	F1	5	21	3'-1"	I	2'-6"	7"	5"	
	F2		3	10'-0"	STR.				
	FS1		1 EA. TOT. 7	4'-5" TO 8'-11"	I	3'-10" TO 7'-6"	7"	5"	7"
	FS2		2	8'-2"	I	7'-7"	7"	5"	
	FT1		1 EA. TOT. 7	4'-5" TO 8'-11"	I	3'-10" TO 7'-6"	7"	5"	7"
	FT2		2	8'-2"	I	7'-7"	7"	5"	
	H1		2	7'-0"	STR.				
	H2		1	7'-7"					
	H3		4	1'-6"					
	HS1		3	7'-6"					
	HS2		1 EA. TOT. 2	3'-8" TO 4'-6"	STR.				1'-8"
	HS3		1	8'-5"	II	1'-8"	6'-9"	8 3/16"	
	HT1		3	7'-6"	STR.				
	HT2		1 EA. TOT. 2	3'-8" TO 4'-6"	STR.				1'-8"
	HT3		1	8'-5"	II	1'-8"	6'-9"	8 3/16"	
	FS3		3	7'-6"	STR.				
	FT3	5	3	7'-6"	STR.				
WW-B	F1	5	23	3'-1"	I	2'-6"	7"	5"	
	F2		3	11'-0"	STR.				
	FS1		1 EA. TOT. 8	4'-9" TO 8'-11"	I	4'-2" TO 8'-4"	7"	5"	7"
	FS2		2	9'-1"	I	8'-6"	7"	5"	
	FT1		1 EA. TOT. 8	4'-9" TO 8'-11"	I	4'-2" TO 8'-4"	7"	5"	7"
	FT2		2	9'-1"	I	8'-6"	7"	5"	
	H1		2	8'-0"	STR.				
	H2		1	8'-7"					
	H3		4	1'-6"					
	HS1		3	9'-3"					
	HS2		1 EA. TOT. 3	3'-9" TO 5'-11"	STR.				1'-4"
	HS3		1	10'-3"	II	1'-8"	6'-7"	7 9/16"	
	HT1		3	9'-3"	STR.				
	HT2		1 EA. TOT. 3	3'-3" TO 5'-11"	STR.				1'-4"
	HT3		1	10'-3"	II	1'-8"	6'-7"	7 9/16"	
	FS3		3	9'-3"	STR.				
	FT3	5	3	9'-3"	STR.				
WW-C	F1	5	23	3'-1"	I	2'-6"	7"	5"	
	F2		2	10'-11"	STR.				
	FS1		1 EA. TOT. 9	6'-5" TO 7'-2"	I	5'-10" TO 6'-7"	7"	5"	1 1/4"
	FS2		2	7'-4"	I	6'-9"	7"	5"	
	FT1		1 EA. TOT. 5	6'-1" TO 7'-2"	I	5'-6" TO 6'-7"	7"	5"	8"
	FT2		2	7'-4"	I	6'-9"	7"	5"	
	H1		2	7'-10"	STR.				
	H2		1	10'-1"					
	H3		4	1'-6"					
	HS1		5	9'-8"					
	HS2		1	4'-0"	STR.				
	HS3		1	9'-8"	II	1'-8"	8'-0"	1 7/16"	
	HT1		4	6'-6"	STR.				
	HT2		1	5'-10"	STR.				
	HT3		1	6'-8"	II	1'-8"	5'-0"	3 1/8"	
	FS3		3	9'-8"	STR.				
	FT3	5	3	6'-6"	STR.				
WW-D	F1	5	23	3'-1"	I	2'-6"	7"	5"	
	F2		2	11'-1"	STR.				
	FS1		1 EA. TOT. 9	6'-5" TO 7'-3"	I	5'-10" TO 6'-8"	7"	5"	1 1/4"
	FS2		2	7'-4"	I	6'-9"	7"	5"	
	FT1		1 EA. TOT. 5	6'-5" TO 7'-3"	I	5'-10" TO 6'-8"	7"	5"	2 1/8"
	FT2		2	7'-4"	I	6'-9"	7"	5"	
	H1		2	8'-2"	STR.				
	H2		1	10'-8"					
	H3		4	1'-6"					
	HS1		5	9'-8"					
	HS2		1	4'-0"	STR.				
	HS3		1	9'-8"	II	1'-8"	8'-0"	1 7/16"	
	HT1		5	5'-6"	STR.				
	HT2		1	4'-0"	STR.				
	HT3		1	5'-7"	II	1'-6"	4'-1"	2 3/16"	
	FS3		3	9'-8"	STR.				
	FT3	5	3	5'-8"	STR.				

TYPE	MARK	SIZE	AMT. REQD.	LENGTH	BAR TYPE	A	B	C	Δ
WW-E	F1	5	31	3'-1"	I	2'-6"	7"	5"	
	F2		3	14'-0"	STR.				
	FS1		1 EA. TOT. 6	6'-0" TO 9'-8"	I	5'-5" TO 9'-1"	7"	5"	9"
	FS2		2	9'-9"	I	9'-2"	7"	5"	
	FT1		1 EA. TOT. 13	5'-7" TO 9'-8"	I	5'-0" TO 9'-1"	7"	5"	4"
	FT2		2	9'-9"	I	9'-2"	7"	5"	
	H1		2	11'-6"	STR.				
	H2		1	13'-0"					
	H3		4	1'-6"					
	HS1		4	7'-0"					
	HS2		1 EA. TOT. 3	2'-8" TO 4'-9"	STR.				1'-0 1/2"
	HS3		1	7'-8"	II	1'-8"	6'-0"	8 1/2"	
	HT1		5	13'-9"	STR.				
	HT2		1 EA. TOT. 3	3'-8" TO 9'-8"	STR.				3'-0"
	HT3		1	14'-0"	II	1'-8"	12'-4"	4"	
	FS3		3	7'-0"	STR.				
	FT3	5	3	13'-9"	STR.				
WW-F	F1	5	23	3'-1"	I	2'-6"	7"	5"	
	F2		3	8'-6"	STR.				
	FS1		1 EA. TOT. 7	4'-7" TO 8'-7"	I	4'-0" TO 8'-0"	7"	5"	8"
	FS2		2	8'-9"	I	8'-2"	7"	5"	
	FT1		1 EA. TOT. 7	4'-7" TO 8'-7"	I	4'-0" TO 8'-0"	7"	5"	8"
	FT2		2	8'-9"	I	8'-2"	7"	5"	
	H1		2	8'-0"	STR.				
	H2		1	7'-6"					
	H3		4	1'-6"					
	HS1		4	8'-6"					
	HS2		1	4'-7"	STR.				
	HS3		1	8'-8"	II	1'-8"	7'-0"	7 1/4"	
	HT1		4	8'-6"	STR.				
	HT2		1	4'-7"	STR.				
	HT3		1	8'-8"	II	1'-8"	7'-0"	7 1/4"	
	FS3		3	8'-6"	STR.				
	FT3	5	3	8'-6"	STR.				
WW-G	F1	5	30	3'-1"	I	2'-6"	7"	5"	
	F2		3	10'-3"	STR.				
	FS1		1 EA. TOT. 12	5'-5" TO 8'-7"	I	4'-10" TO 8'-0"	7"	5"	3 1/2"
	FS2		2	8'-9"	I	8'-2"	7"	5"	
	FT1		1 EA. TOT. 7	5'-5" TO 8'-7"	I	4'-10" TO 8'-0"	7"	5"	6 1/2"
	FT2		2	8'-9"	I	6'-7"	7"	5"	
	H1		2	7'-6"	STR.				
	H2		1	9'-3"					
	H3		4	1'-6"					
	HS1		4	13'-6"					
	HS2		1	4'-7"	STR.				
	HS3		1	13'-8"	II	1'-8"	12'-0"	3 1/4"	
	HT1		4	8'-4"	STR.				
	HT2		1	2'-10"	STR.				
	HT3		1	8'-8"	II	1'-8"	7'-0"	5 1/2"	
	FS3		3	13'-6"	STR.				
	FT3	5	3	13'-6"	STR.				
WW-H	F1	5	28	3'-1"	I	2'-6"	7"	5"	
	F2		2	10'-3"	STR.				
	FS1		1 EA. TOT. 10	7'-9" TO 9'-1"	I	7'-2" TO 8'-6"	7"	5"	1 3/4"
	FS2		2	9'-3"	I	8'-8"	7"	5"	
	FT1		1 EA. TOT. 8	6'-11" TO 9'-1"	I	6'-4" TO 8'-6"	7"	5"	3 3/16"
	FT2		2	9'-3"	I	8'-8"	7"	5"	
	H1		2	7'-5"	STR.				
	H2		1	9'-8"					
	H3		4	1'-6"					
	HS1		6	11'-4"					
	HS2		1	6'-7"	STR.				
	HS3		1	11'-4	II	1'-8"	9'-8	1 3/16"	
	HT1		5	9'-5"	STR.				
	HT2		1 EA. TOT. 2	3'-5" TO 6'-9"	STR.				
	HT3		1	9'-9"	II	1'-8"	8'-1"	9 3/16"	
	FS3		3	11'-4"	STR.				
	FT3	5	3	9'-5"	STR.				

All bar dimensions are out to out

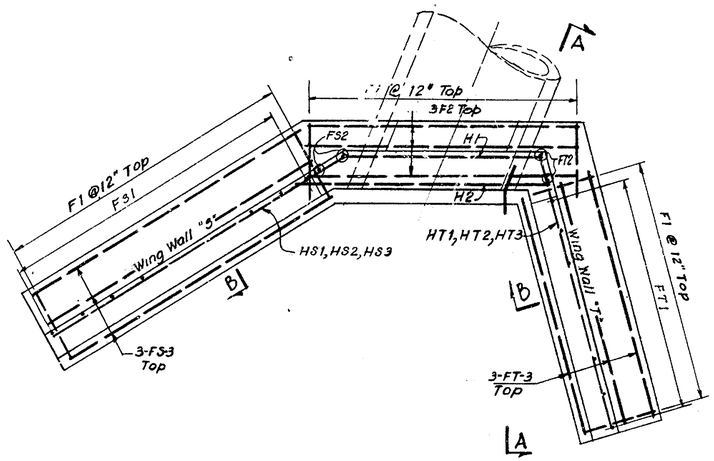

PLAN

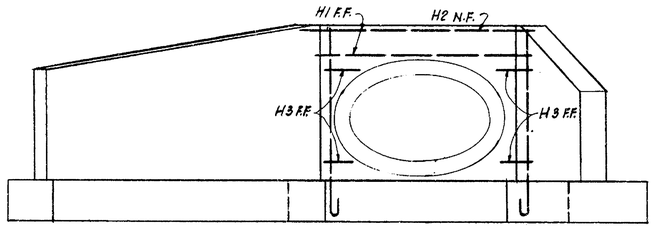

ELEVATION

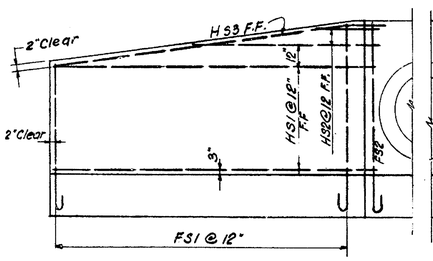

ELEVATION WINGWALL "S"

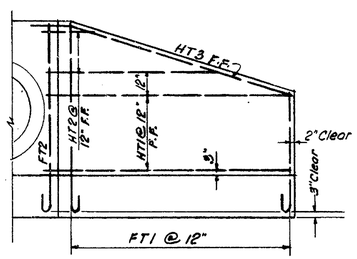

ELEVATION WINGWALL "T"

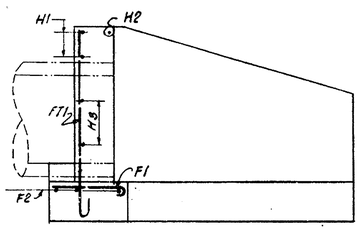

SECTION A-A

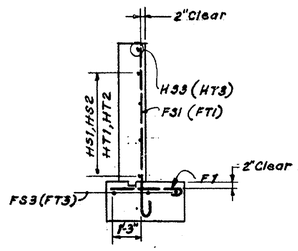

SECTION B-B

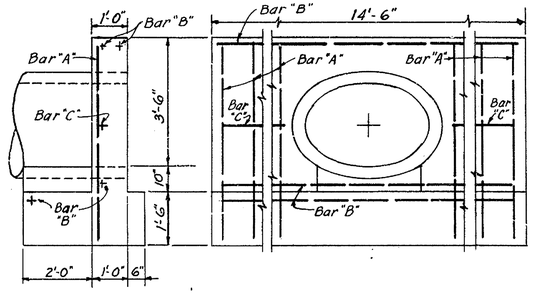

BAR LIST & DETAILS
HEADWALL FOR 42"x27" ELLIP. R.C.P.

Spacing of Vertical Bars	1/2" REINFORCING BARS								
	BARS "A"			BARS "B"			BARS "C"		
	NO.	Length	Total Length	NO.	Length	Total Length	NO.	Length	Total Length
11"	12	5'-6"	66'	4	14'	56'	2	4'-6"	9'

NOTES:

1. For Location of Headwalls see Roadway Plan sheets.
2. For Dimensions of Headwalls see Sheet No. 13.

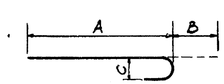

TYPE I

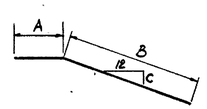

TYPE II

CULVERT HEAD WALLS - BAR LIST

NOT TO SCALE

DELAWARE TURNPIKE	CONT. NO.	TITLE	SHEET NO.	TOTAL SHEETS
	7053	ROADWAY PLANS	15	86

Curve No.	Δ	R	T	L
SB-1	7°-20'-28.8"	3000'	192.460	384.393
SB-2	4°-08'-00.7"	7060'	254.778	509.336

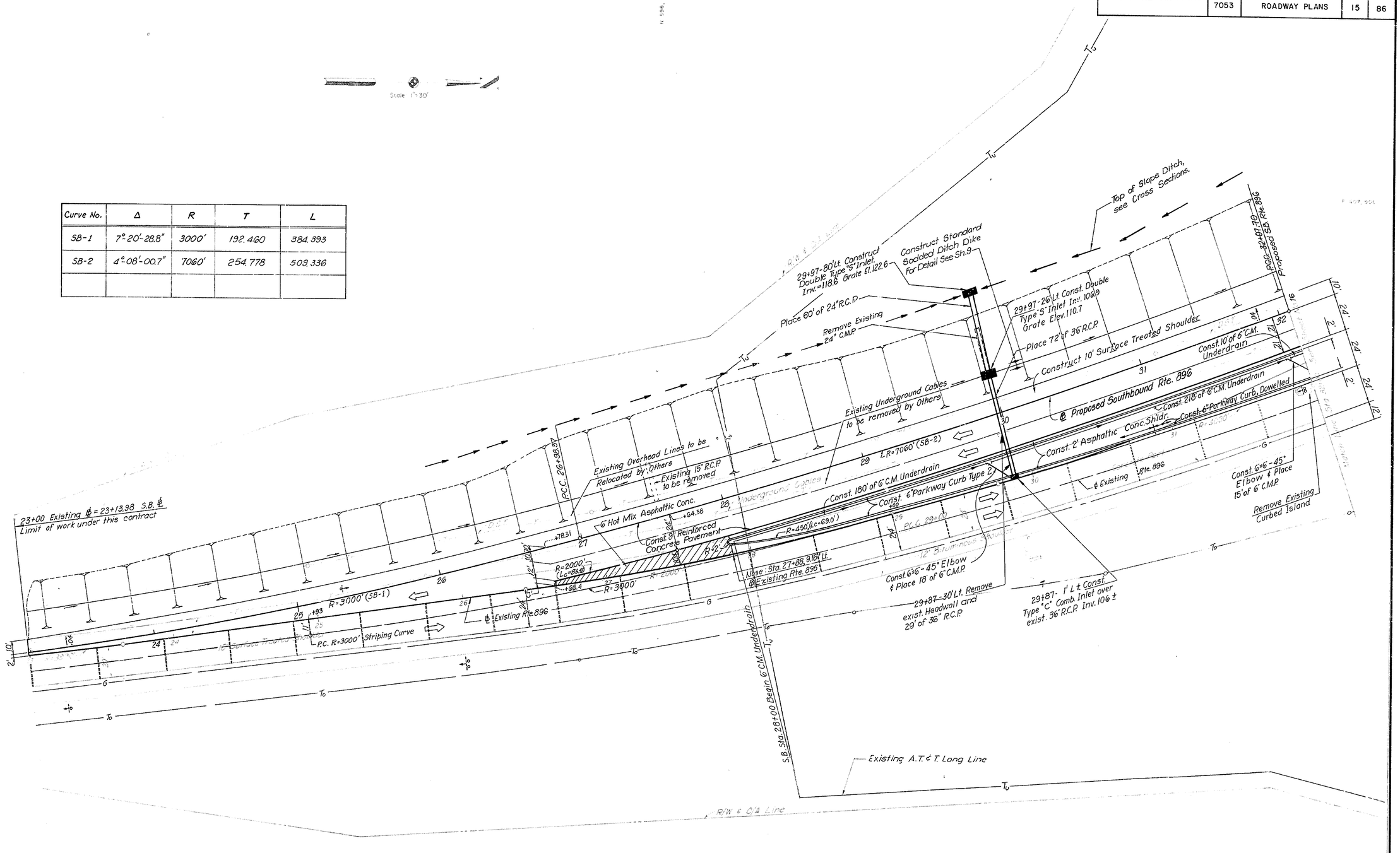

DELAWARE TURNPIKE	CONT. NO.	TITLE	SHEET NO.	TOTAL SHEETS
	7053	ROADWAY PLANS	16	86

Curve No.	Δ	R	T	L
D-1a	43°-49'-08.4"	300'	120.657'	229.436'
D-1b	68°-11'-40.8"	150'	101.547'	178.533'
D-1c	50°-30'-20.7"	150'	70.754'	132.224'
SB-3	9°-11'-50.3"	3952'	317.877'	634.388'

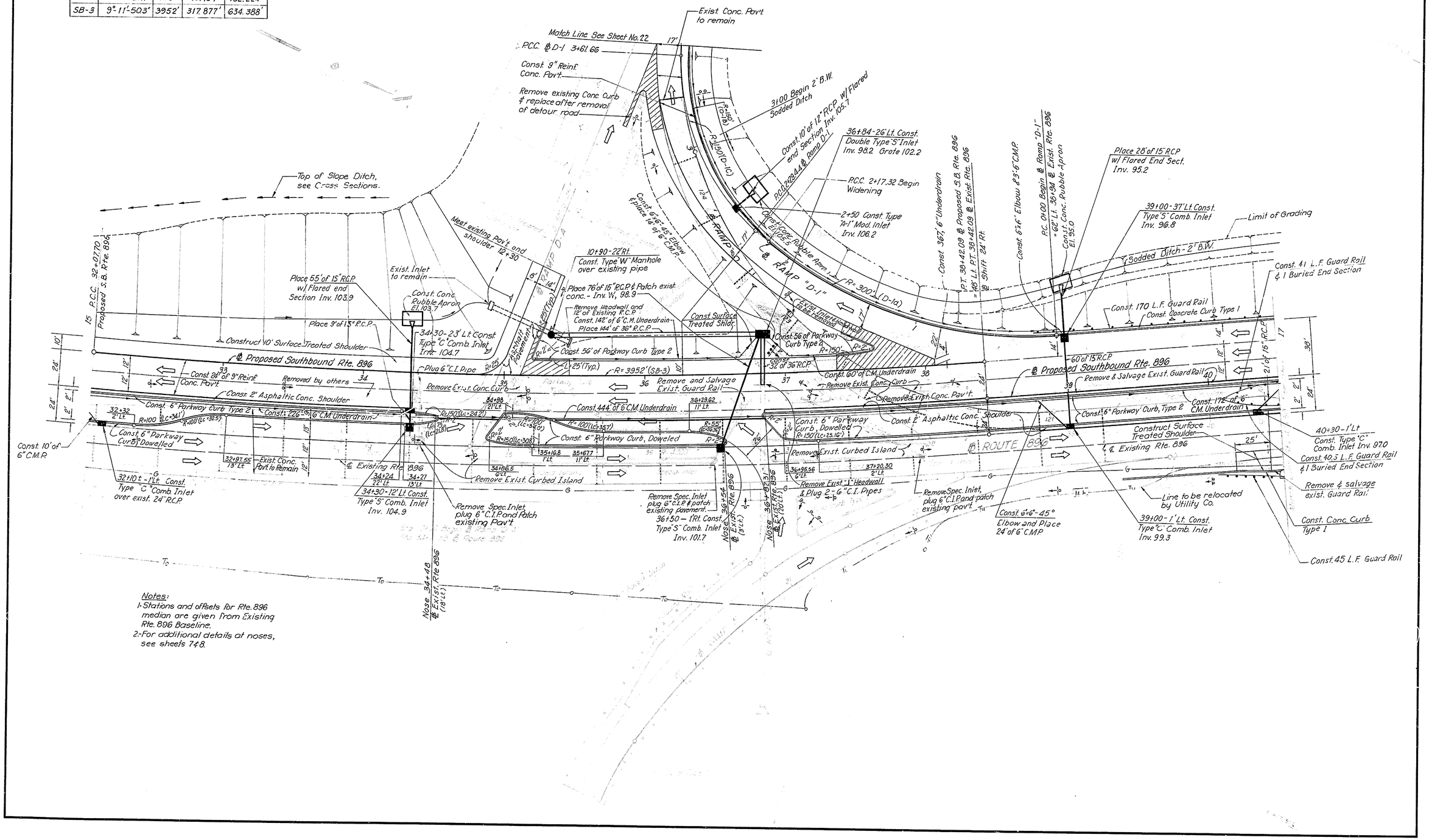

Notes:
1- Stations and offsets for Rte. 896 median are given from Existing Rte. 896 Baseline.
2- For additional details at noses, see sheets 7 & 8.

DELAWARE TURNPIKE	CONT NO	TITLE	SHEET NO.	TOTAL SHEETS
	7053	ROADWAY PLANS	17	86

P.I. NO.	Δ	R	T	L
C-1	18°-20'-34.6"	800'	129.163'	256.116'
C-6	21°-56'-24.3"	300'	58.151'	114.878'
C-7	14°-12'-04.6"	700'	87.198'	173.502'

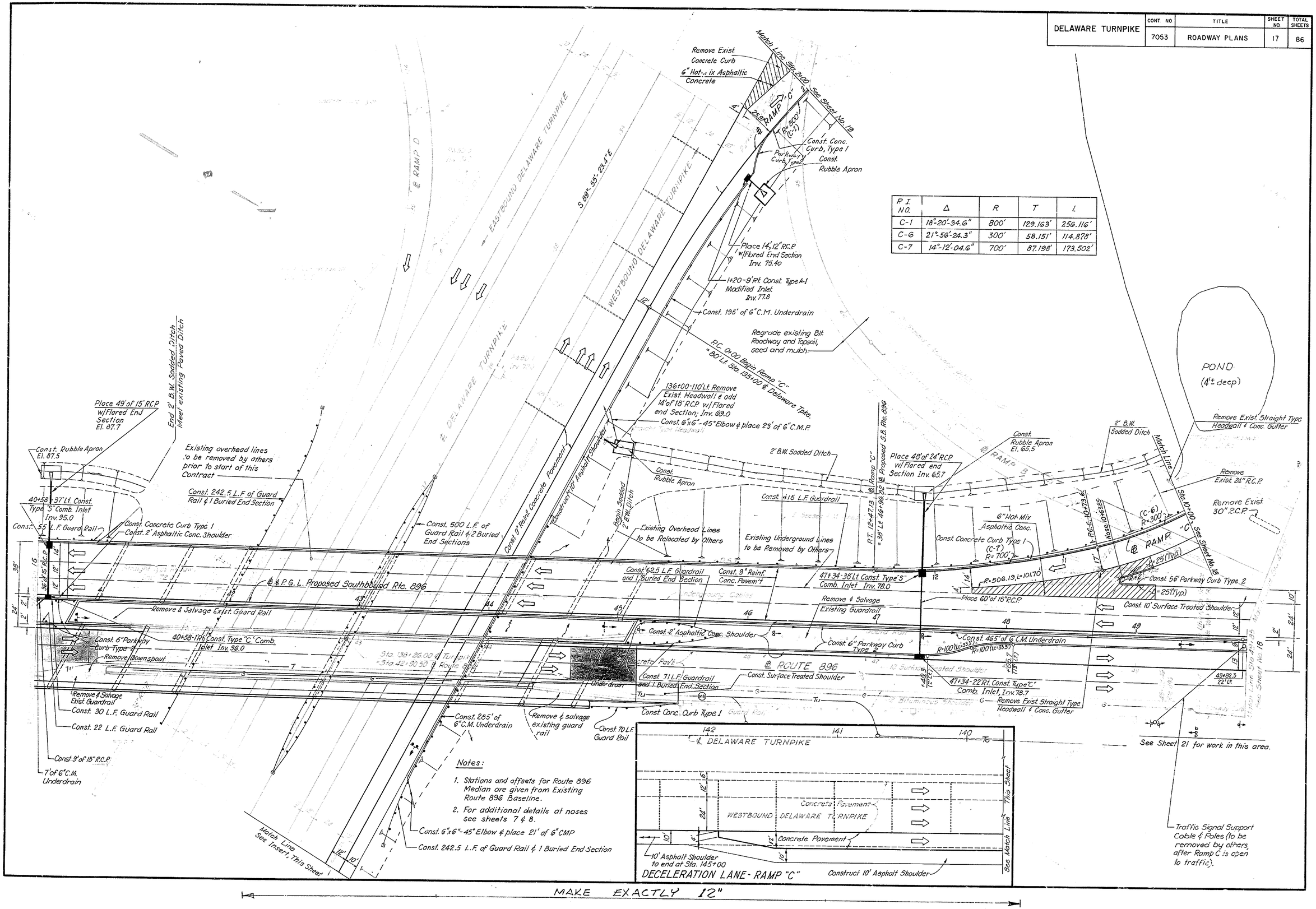

DELAWARE TURNPIKE	CONT. NO.	TITLE	SHEET NO.	TOTAL SHEETS
	7053	ROADWAY PLANS	18	86

Curve No.	Δ	R	T	L
NB-1	4°-17'-37.1"	3000'	112.460'	224.815
SB-4	3°-01'-30.8"	4976	131.397	262.734
SB-5	4°-18'-29.6"	3000	112.842	225.579
SB-6	1°-56'-22.2"	1200	20.312	40.621
F-1	10°-06'-48.7"	450	39.819	79.431
F-2	4°-39'-53.5"	750	30.548	61.063
F-3	55°-27'-48.2"	400	210.287	387.208
G-1	62°-17'-24-0"	75	45.323	81.537
G-2	42°-18'-11.7"	400	154.761	295.332
C-5	69°-00'-02.9"	150	103.094	180.644

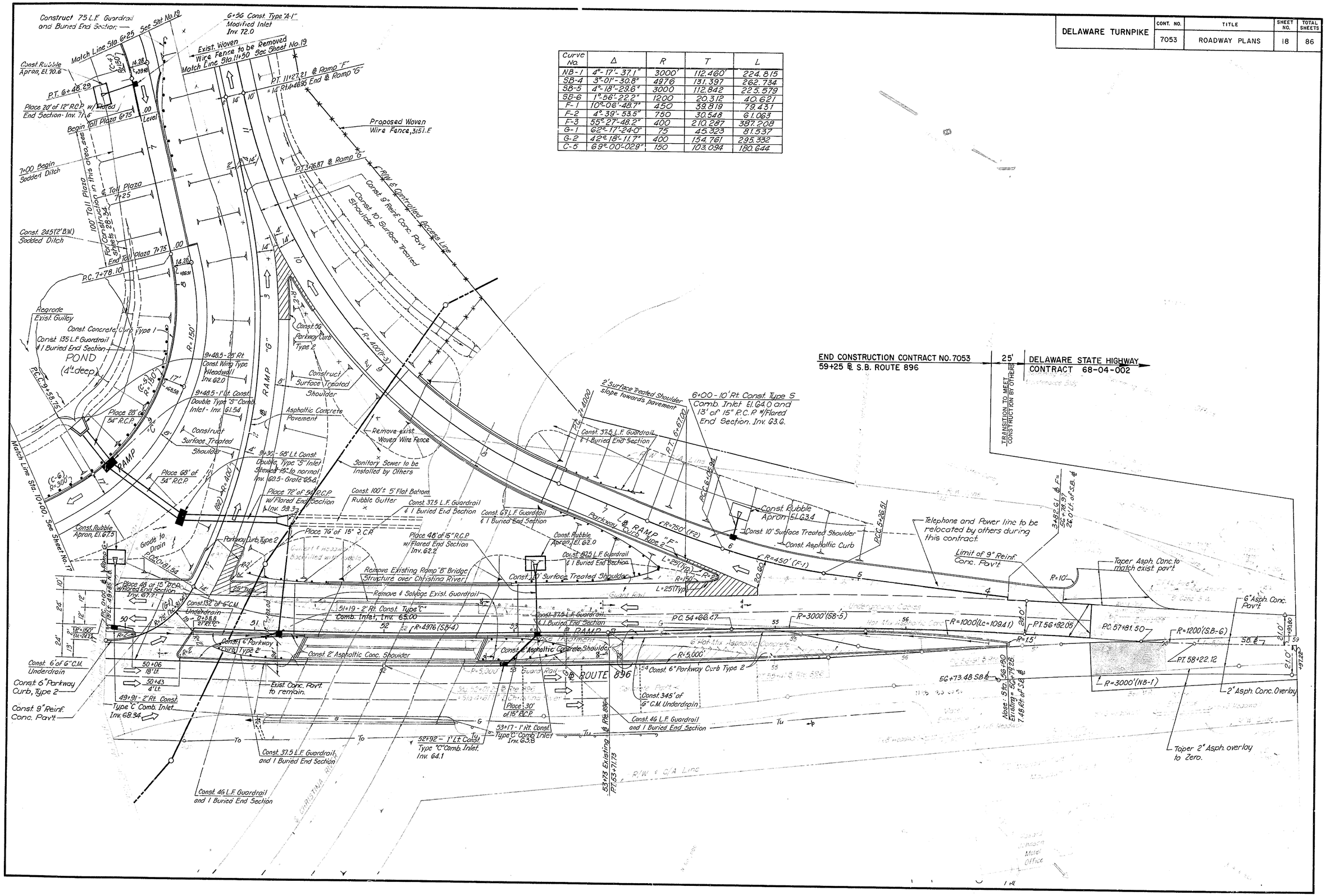

DELAWARE TURNPIKE	CONT. NO.	TITLE	SHEET NO.	TOTAL SHEETS
	7053	ROADWAY PLANS	19	86

Curve No.	Δ	R	T	L
C-2	14°-30'-57.8"	400'	50.943	101.341
C-3	25°-25'-59.5"	200'	45.133	88.779
C-4	77°-10'-41.6"	150'	119.697	202.052
F-4	43°-13'-12.3"	600'	237.679	452.600

NOTE:
For additional details at noses, see sheets 7 & 8.

Scale 1"=30'

Match Line Sta. 11+50 See Sheet No. 18

Match Line Sta. 6+25 See Sht. No. 18

Proposed R/W & Controlled Access Line

Construct 10' Surface Treated Shoulder

℄ RAMP "F"

Construct 4' Surface Treated Shoulder

Const. 9" Reinf. Conc. Pav't.

Const. 540 L.F. Woven Wire Fence

P.C. 14+97.27

Remove Exist. Woven Wire Fence

Place 48' of 12" R.C.P. Inv. 73.0

4+60 Const. Type "A-1" Modified Inlet I.E. Inlet 75.5

Const. Concrete Curb Type 1

P.C.C. 4+46.24

Regrade Existing Ditch

Const. Rubble Apron

R.C.C. 3+57.46

4+17 - 20' Rt. Const. Flared End Section Inv. 72.5

Place 60' of 48" R.C.P.

4+17 - 40' Lt. Const. Wing Type Headwall Inv. 73.0

Const. 105' of 5' B.W. Rubble Gutter

Construct 6' Surface Treated Shoulder

Place 92' of 18" R.C.P. Inv. West 73.5

Straight Type Headwall Inv. 80.8

Remove Existing Headwall & Const. Type "W" Manhole

℄ RAMP "C"

R.C.C. 2+36.12

See Sheet No. 17

R/W & Controlled Access Line

R=600' (F-4)

Match Existing Ditch

P.T. 19+49.97 End ℄ Ramp "F" = 124+06.09 ℄ W.B. Delaware Tpke. 80' Lt.

Exist. 6" Underdrain to Remain

2' Grass & Mulch Ditch

5' Conc. Gutter

Const. 10' Asphaltic Conc. Shoulder

Const. 10' Surface Treated Shoulder

Const. 56' Parkway Curb Type 2

Remove 2' Existing Asphaltic Concrete Pavement & 10' Surface Treated Shoulder

Remove & Salvage Existing Guardrail

Existing Asphalt Pavement to Remain

Saw Cut

Guard Rail

Const. 56' Parkway Curb Type 2

℄ RAMP "B"

Parkway Curb Type 2 to be removed

Concrete Pavement

48" R.C.P.

PWBO-4 Inv. 91.5

PWEO-1 Inv. 81.7

WESTBOUND DELAWARE TURNPIKE

℄ DELAWARE TURNPIKE

EASTBOUND DELAWARE TURNPIKE

DELAWARE TURNPIKE	CONT. NO.	TITLE	SHEET NO.	TOTAL SHEETS
	7053	ROADWAY PLANS	20	86

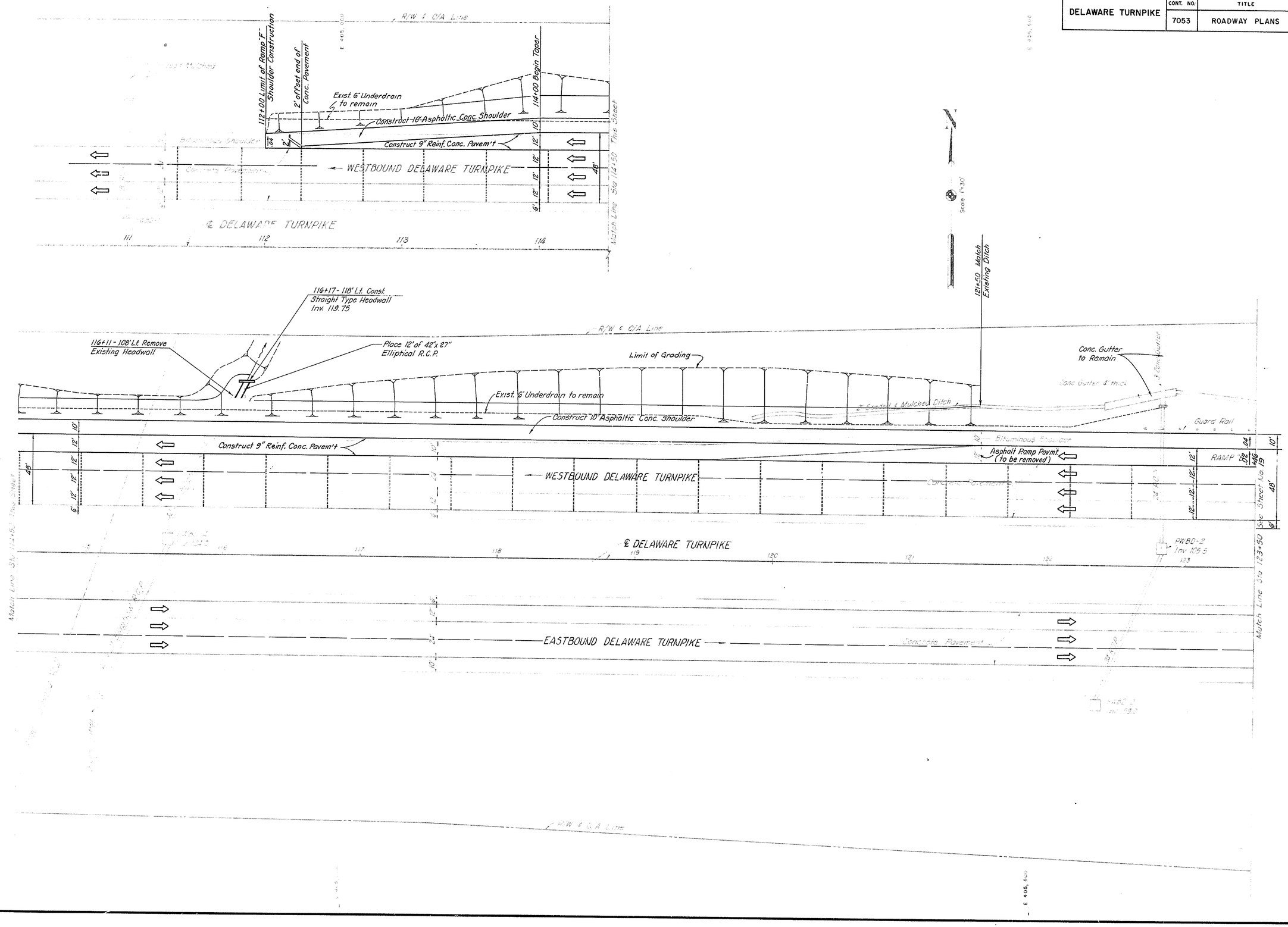

DELAWARE TURNPIKE	CONT. NO.	TITLE	SHEET NO.	TOTAL SHEETS
	7053	ROADWAY PLANS	21	86

Curve No.	Δ	R	T	L
A-4	19°-15'-43.6"	200'	33.939'	67.237'
A-5	24°-42'-05.9"	356'	77.951'	153.481'

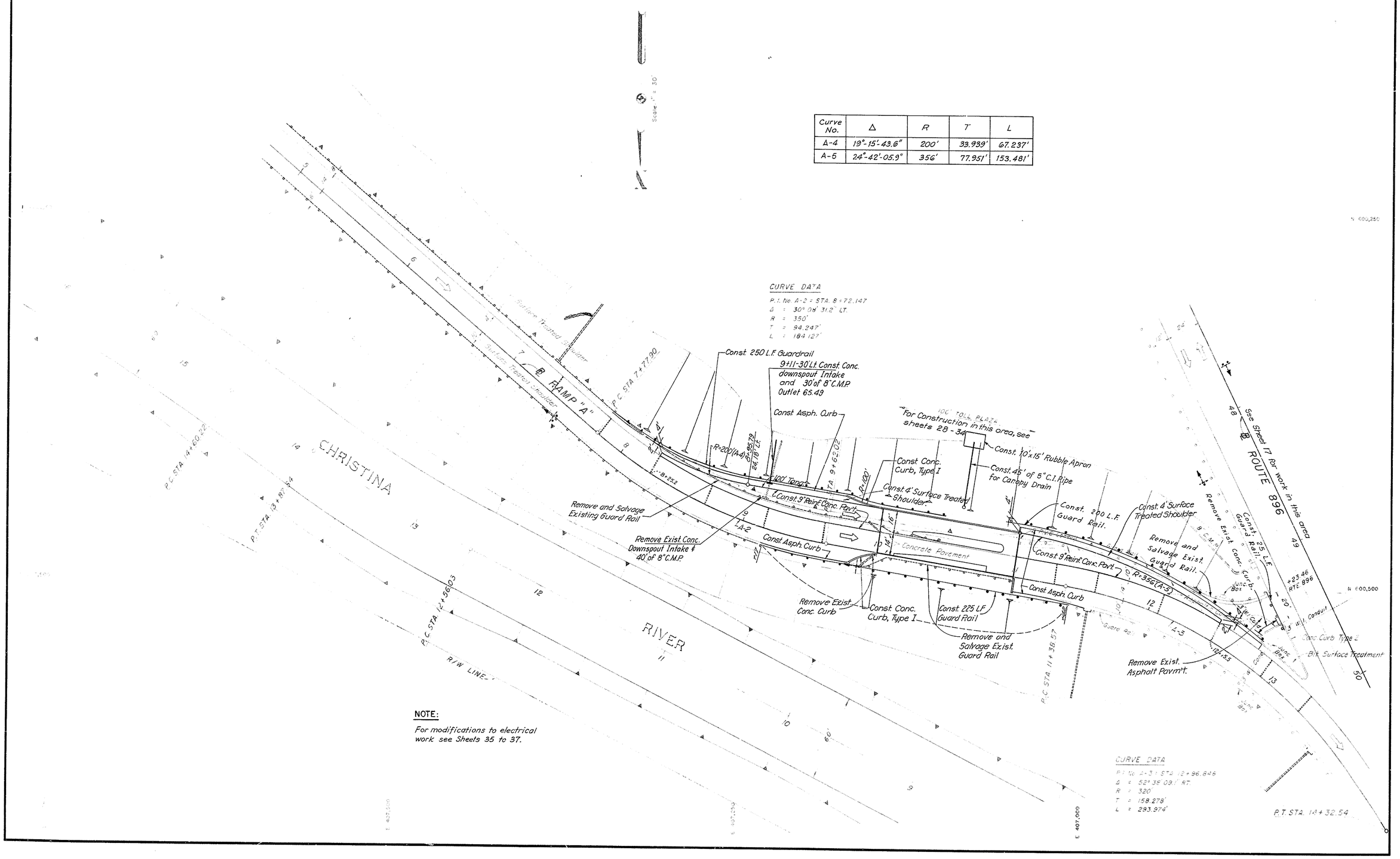

NOTE:

For modifications to electrical work see Sheets 35 to 37.

DELAWARE TURNPIKE	CONT. NO.	TITLE	SHEET NO.	TOTAL SHEETS
	7053	ROADWAY PLANS	22	86

Rev. 1-8-72

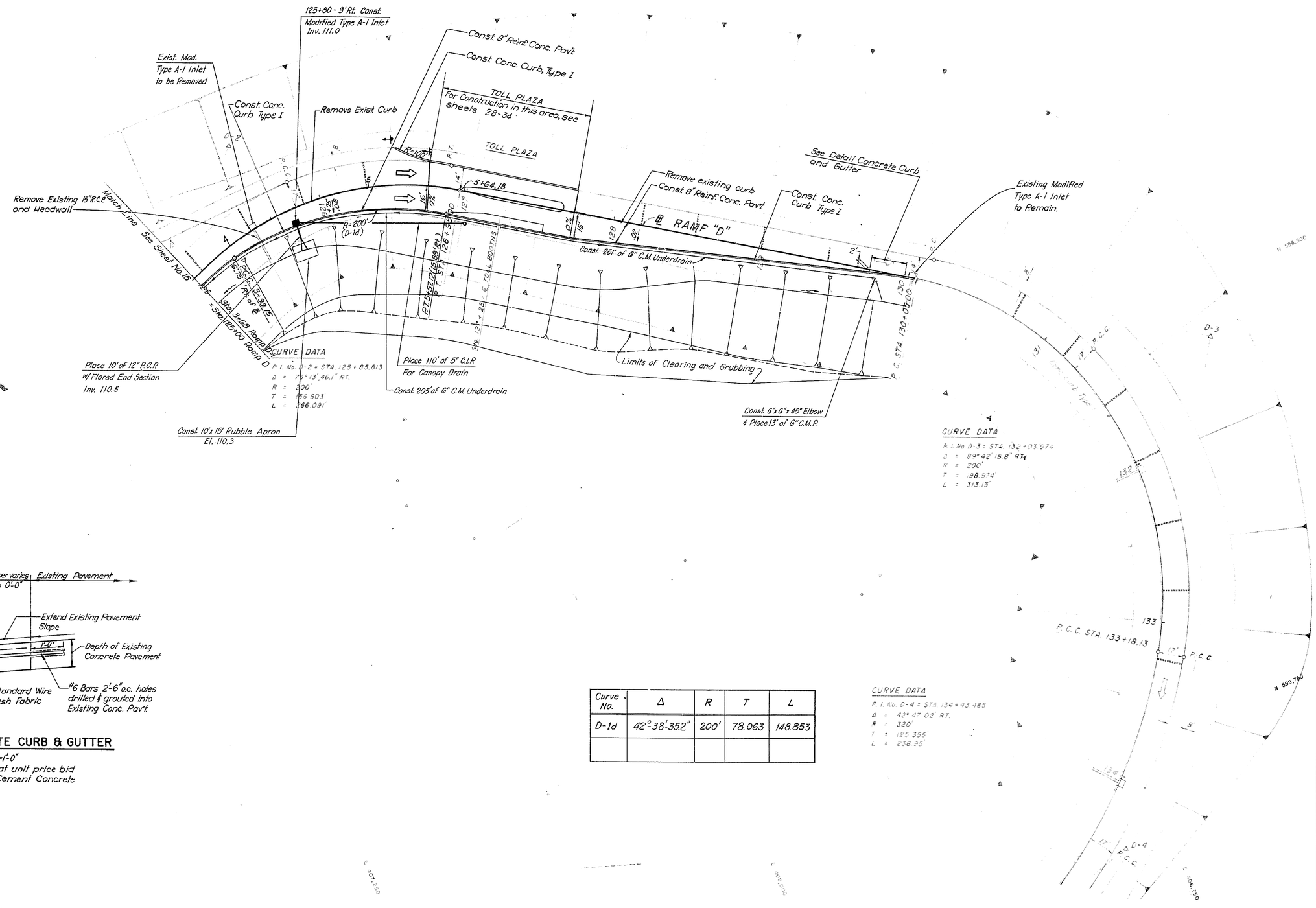

Curve No.	Δ	R	T	L
D-1d	42°-38'-35.2"	200'	78.063	148.853

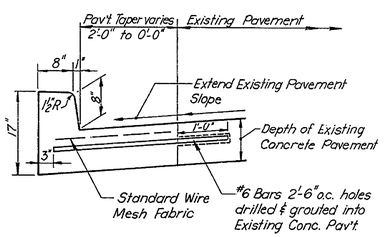

DETAIL – CONCRETE CURB & GUTTER

¾"=1'-0"

To be paid for at unit price bid for Portland Cement Concrete Curb, Type 1.

DELAWARE TURNPIKE	CONT. NO.	TITLE	SHEET NO.	TOTAL SHEETS
	7053	ROADWAY PLANS	23	86

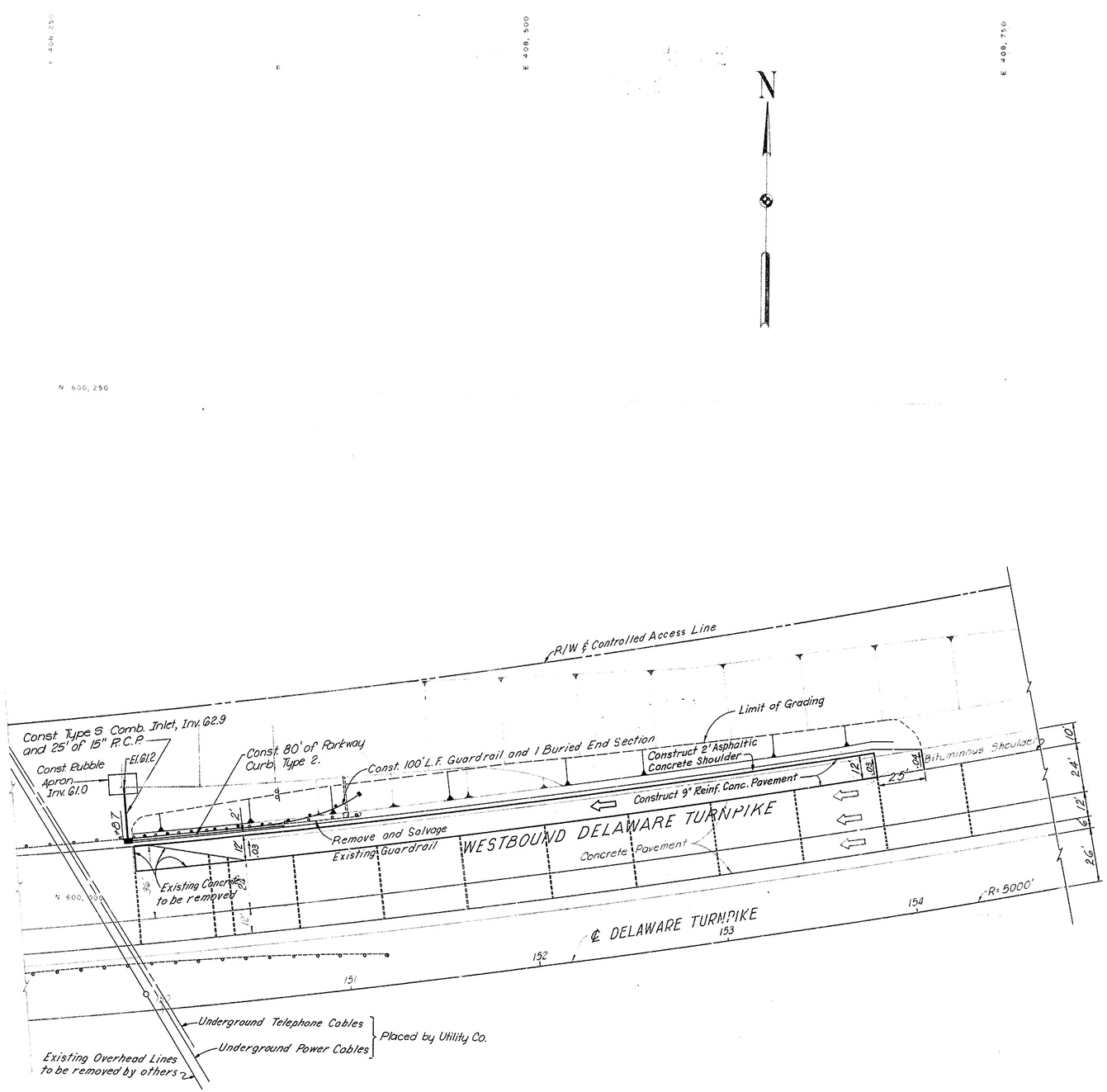

PROFILES

SCALE: HOR. 1" = 50'
VERT. 1" = 5'

DELAWARE TURNPIKE	CONT. NO.	TITLE	SHEET NO.	TOTAL SHEETS
	7053	PROFILES	24	86

Rev. 2/24/70

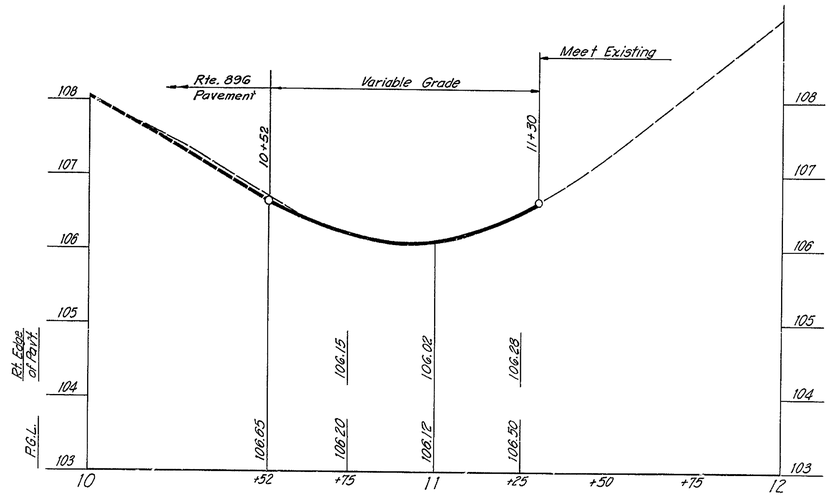

RAMP "D-A"

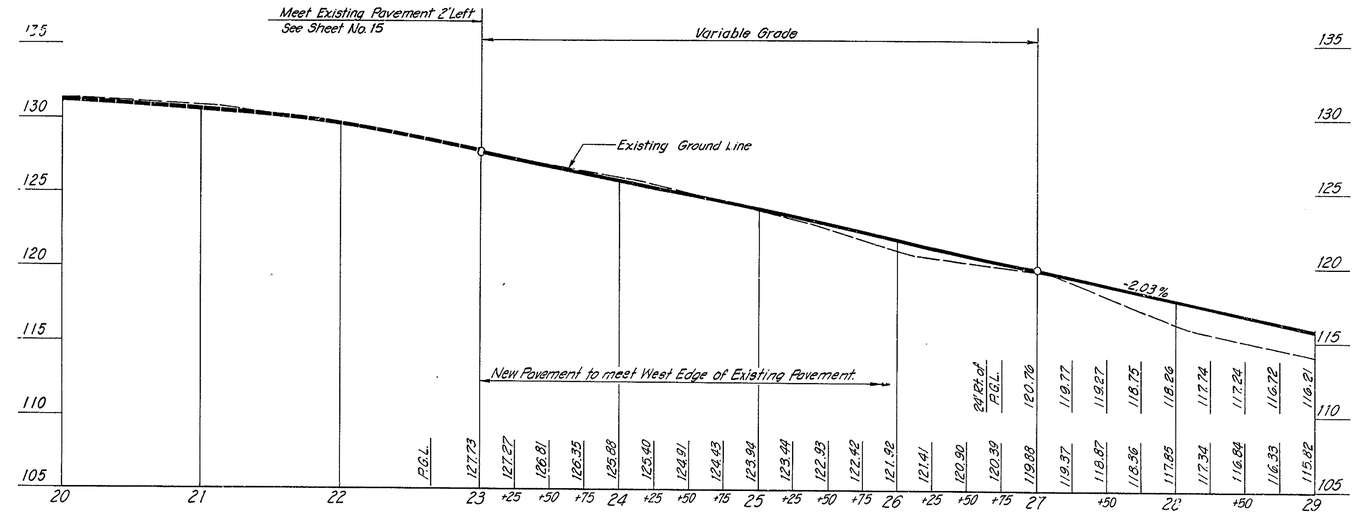

ROUTE 896 SOUTHBOUND

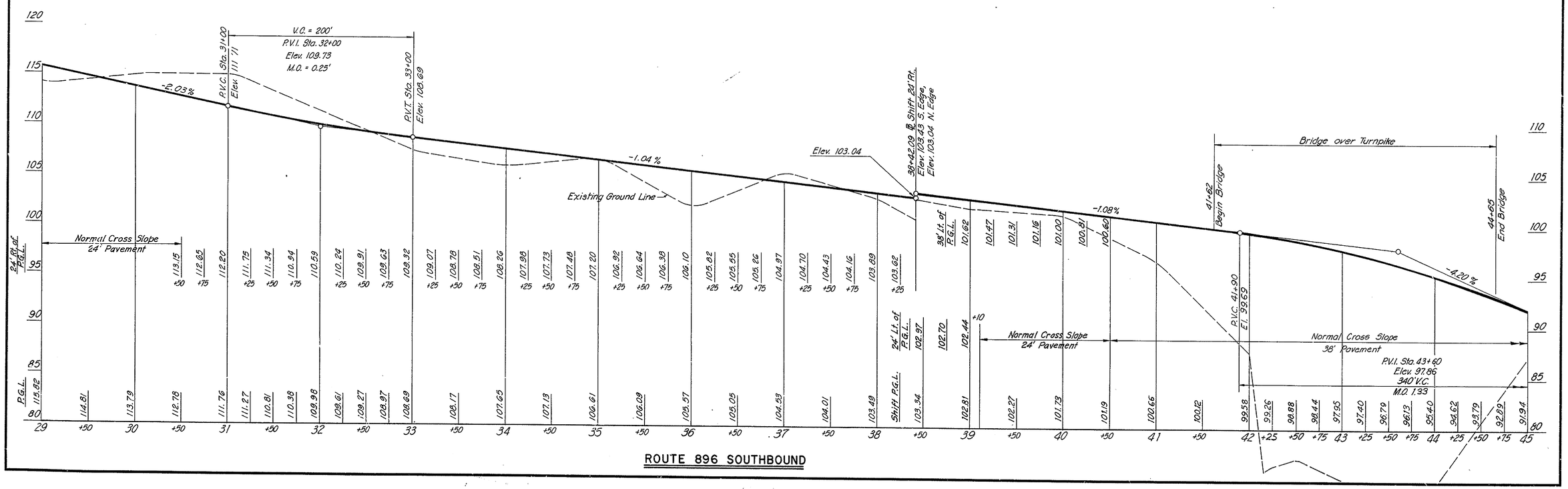

ROUTE 896 SOUTHBOUND

DELAWARE TURNPIKE	CONT. NO.	TITLE	SHEET NO	TOTAL SHEETS
	7053	PROFILES	25	86

PROFILES

SCALE: HOR. 1" = 50'
VERT. 1" = 5'

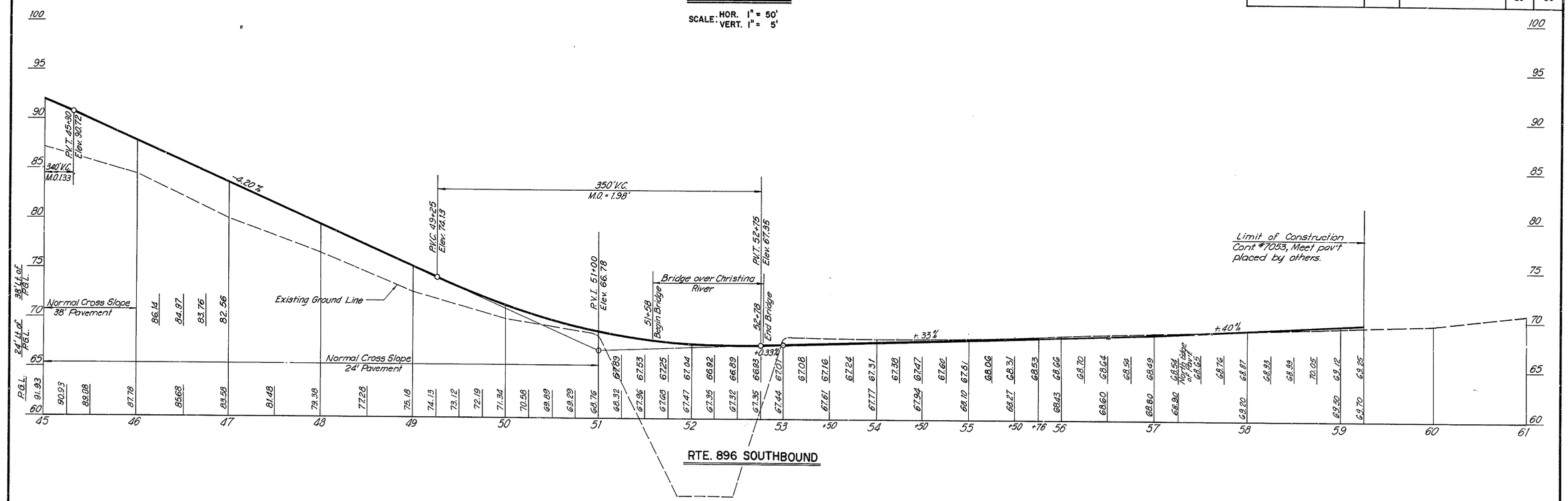

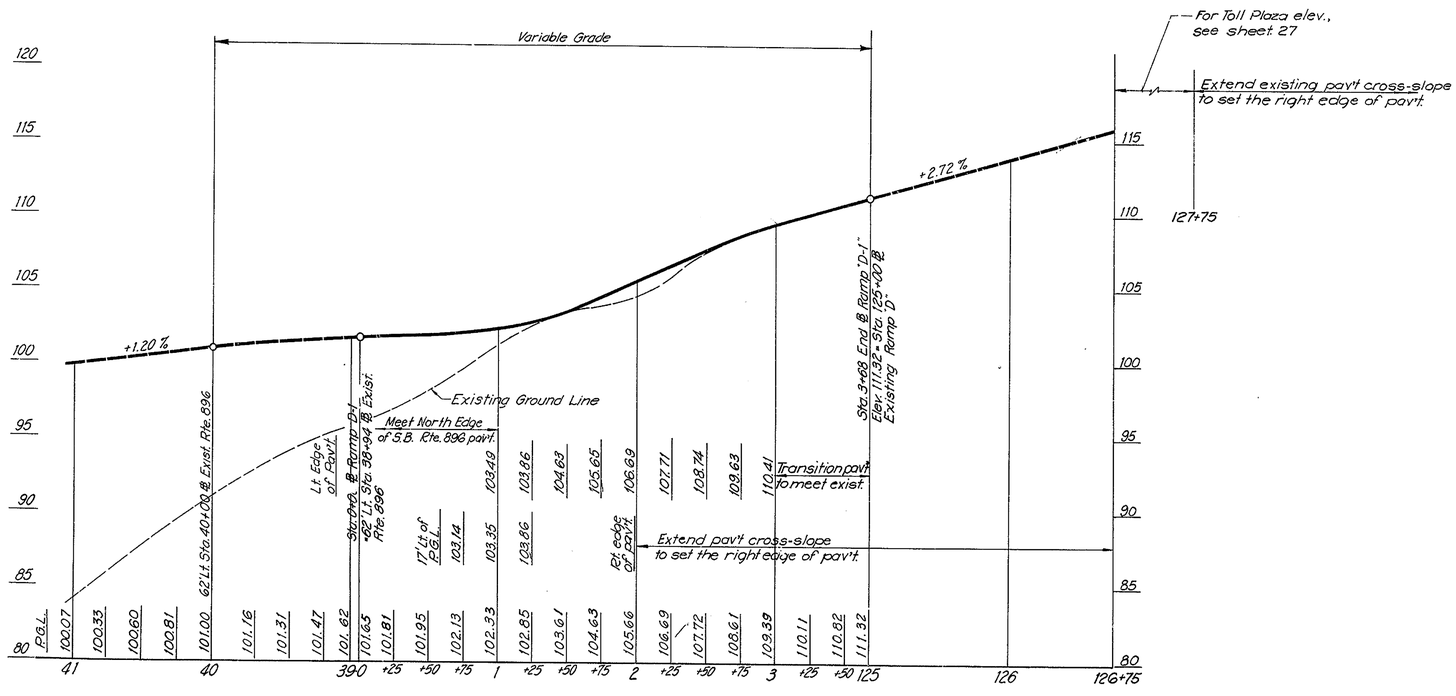

RAMP "D-1"

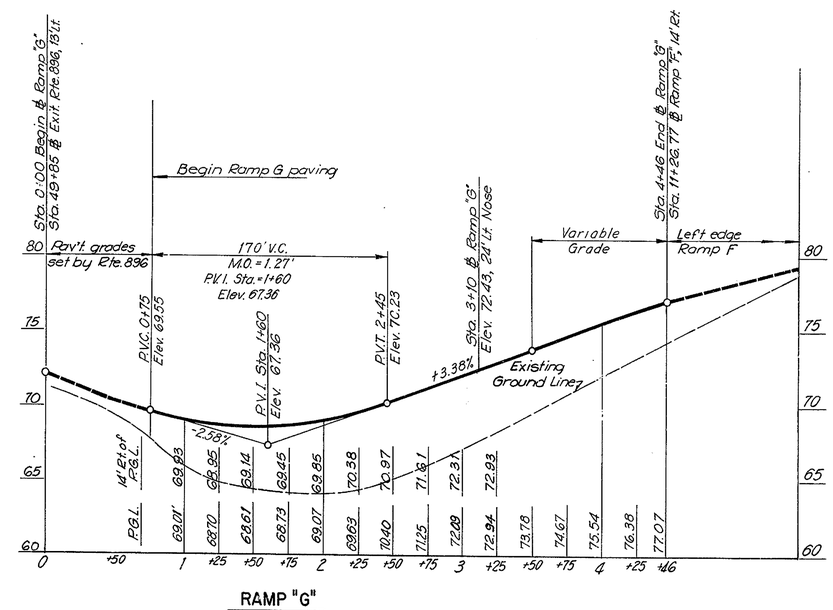

RAMP "G"

PROFILES

Scales: Horiz. 1"=50'
Vert. 1"= 5'

DELAWARE TURNPIKE	CONT. NO.	TITLE	SHEET NO.	TOTAL SHEETS
	7053	PROFILES	26	86

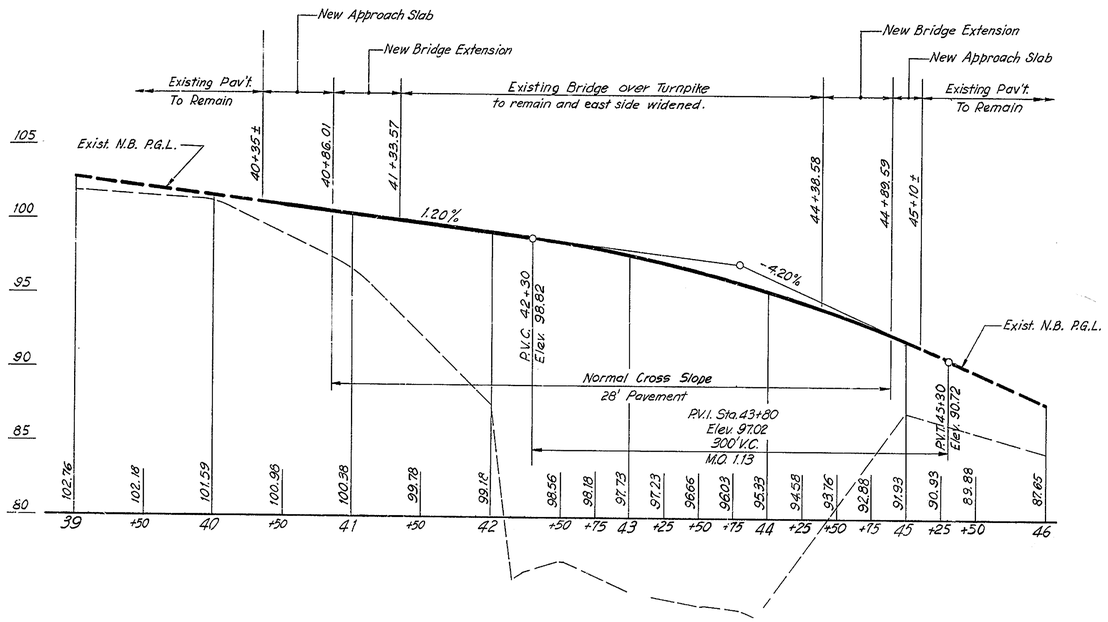

PROFILE ROUTE 896 NORTHBOUND

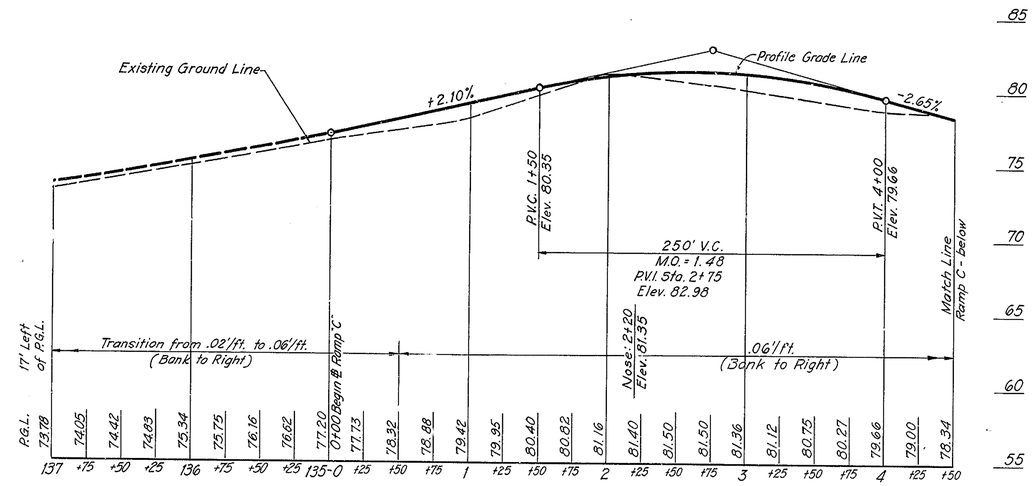

PROFILE RAMP "C"

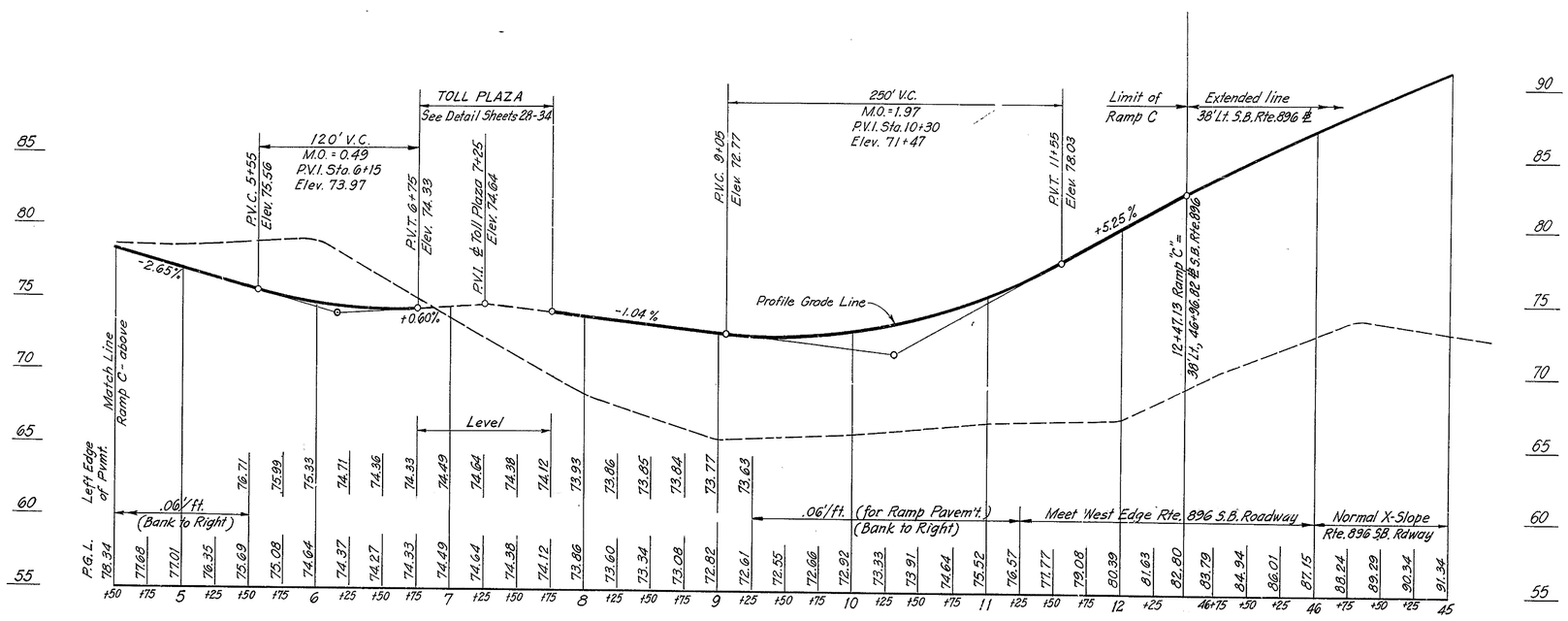

PROFILE RAMP "C"

DELAWARE TURNPIKE	CONT. NO.	TITLE	SHEET NO.	TOTAL SHEETS
	7053	PROFILES	27	86

PROFILES

Scales: Horiz. 1"=50'
Vert. 1"=5'

* Except as noted below the edges of shoulders are set by the cross slopes as shown on the typical sections.

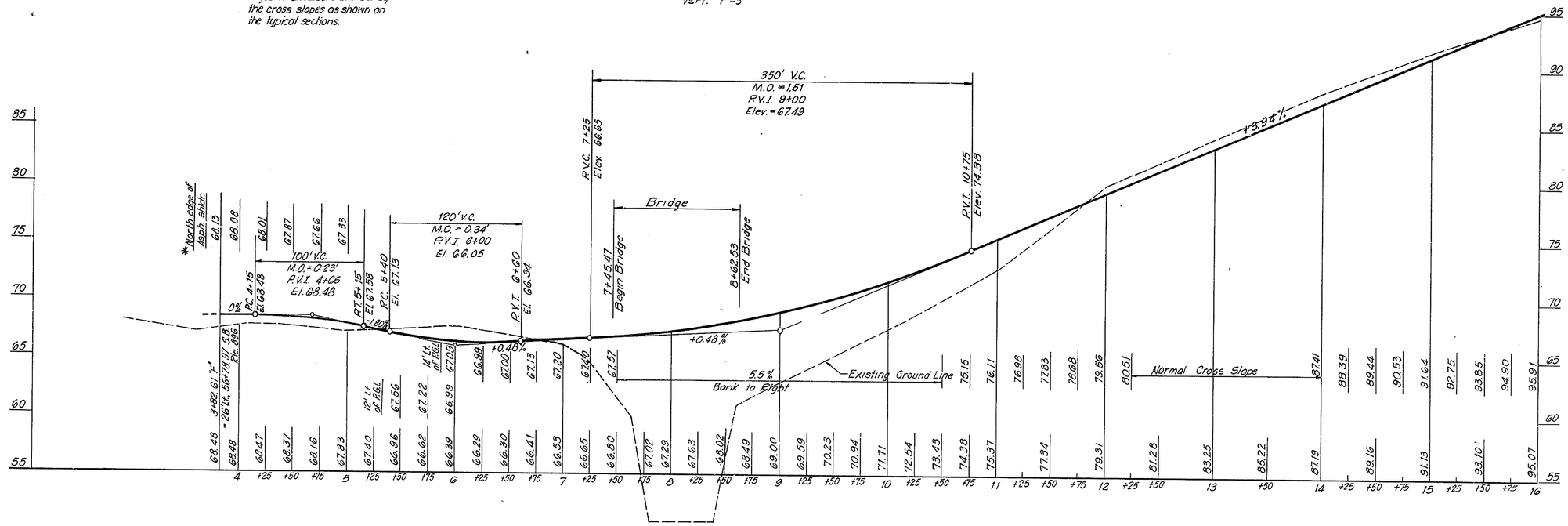

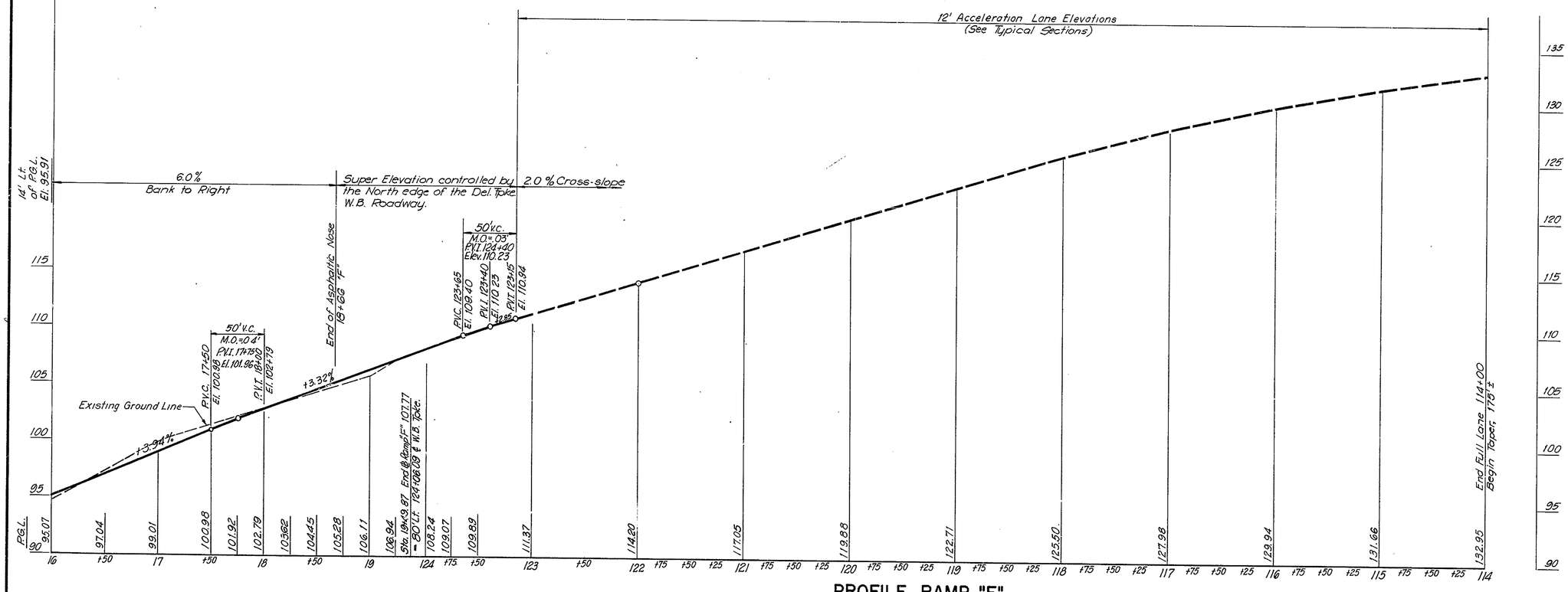

PROFILE RAMP "F"

DELAWARE TURNPIKE	CONT. NO.	TITLE	SHEET NO.	TOTAL SHEETS
	7053	RAMP TOLL PLAZAS CONCRETE DETAILS	28	86

Rev. 2/17/70

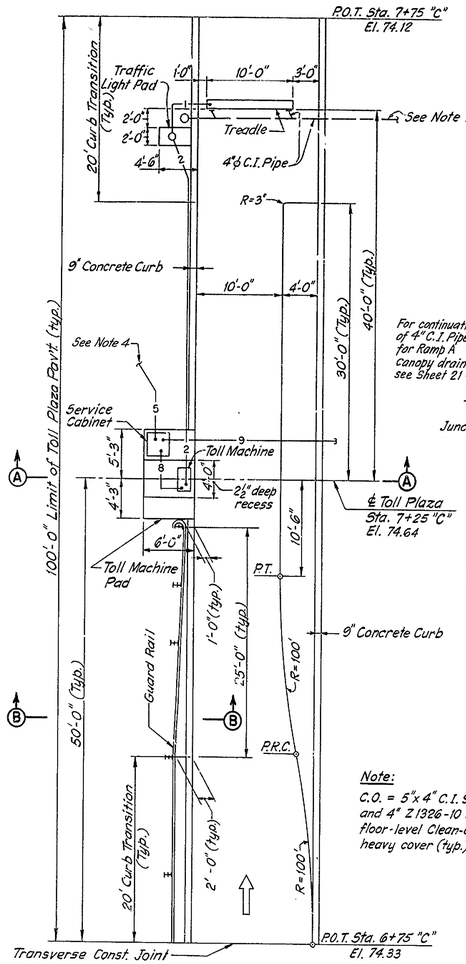

SINGLE LANE PLAZA

RAMP C

Note:
C.O. = 5"x 4" C.I. 90° Elbow and 4" Z1326-10 Surpreme floor-level Clean-out with heavy cover (Typ.)

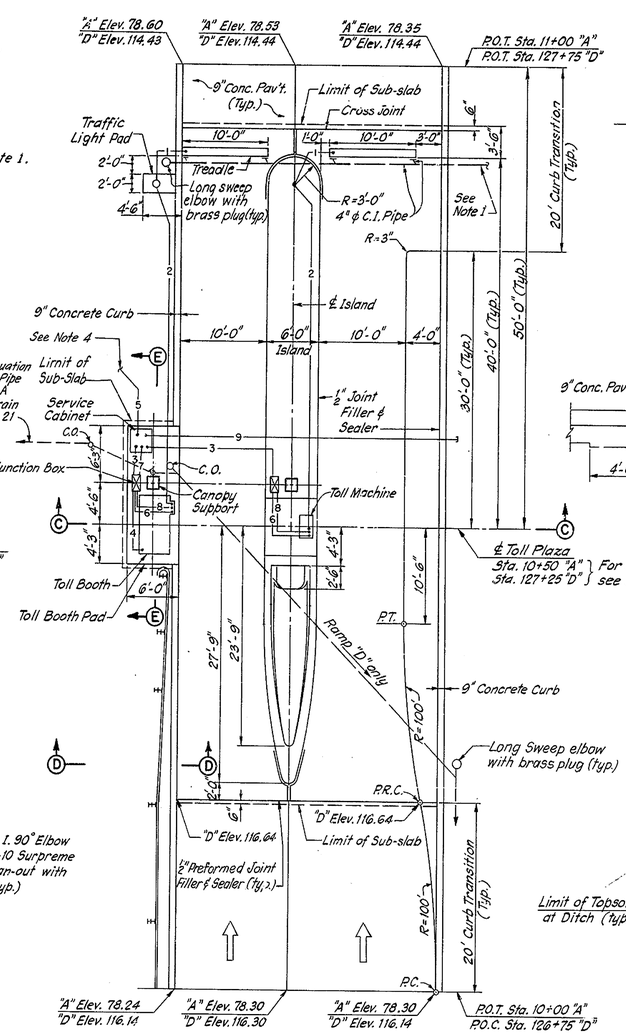

TWO-LANE PLAZA

RAMP A & RAMP D

RAMP PLAZA PLANS

$\frac{1}{8}$"=1'-0"

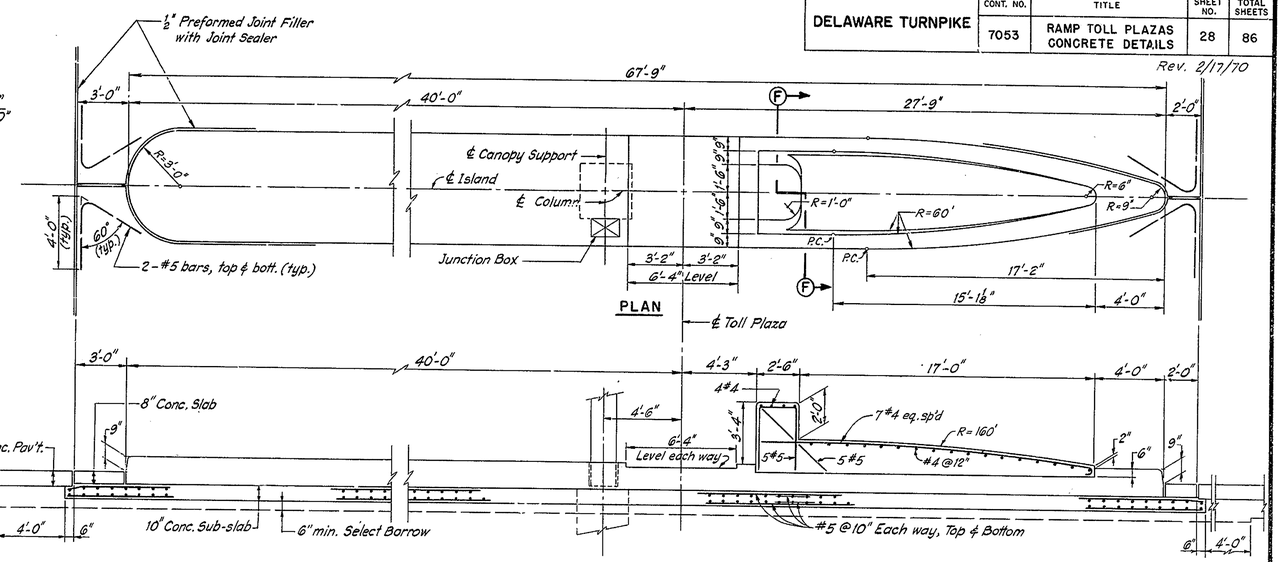

LONGITUDINAL SECTION

ISLAND LAYOUT

¼"=1'-0"

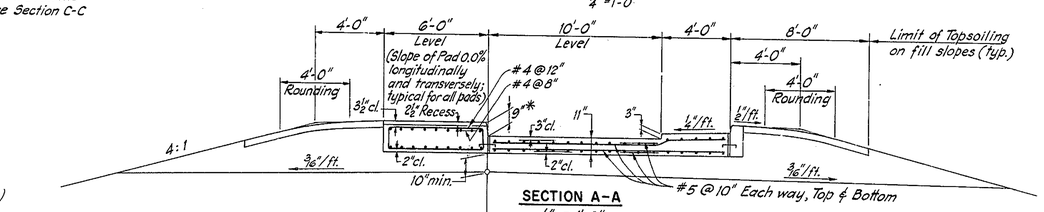

SECTION A-A

¼" = 1'-0"

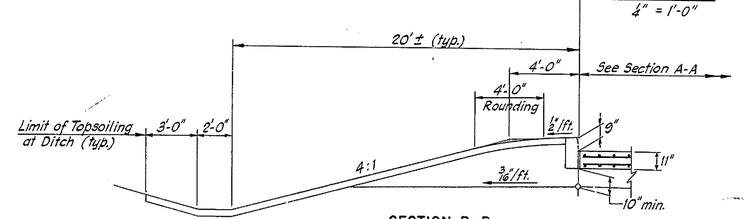

SECTION B-B

¼" = 1'-0"

NOTES:

1. Treadle drain shall be run to daylight at a slope of ⅛"/ft. Direction of drain may be reversed at the Contractor's option.
2. Toll Booths shall be supplied and placed by Others.
3. For Canopy details, Alternates "A" & "B" see Sheets 31 to 34.
4. For Conduit Schedule and Cabinet details see Sheet 30.
5. Conduit shall be terminated in concrete junction box, as part of toll plaza electrical work. (See Sheet 35).
6. For Sections E-E and F-F see Sheet 29.

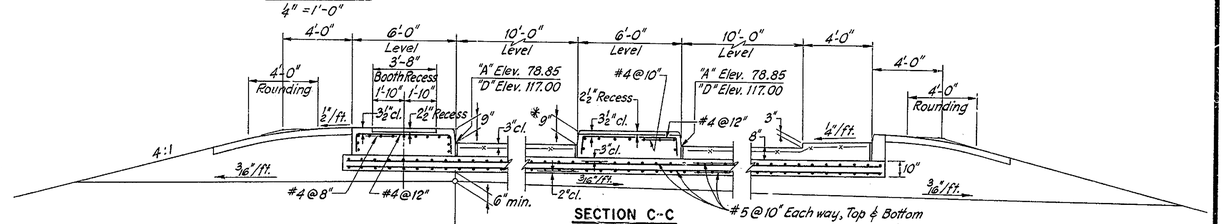

SECTION C-C

¼" = 1'-0"

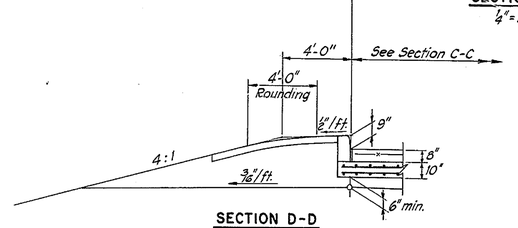

SECTION D-D

¼" = 1'-0"

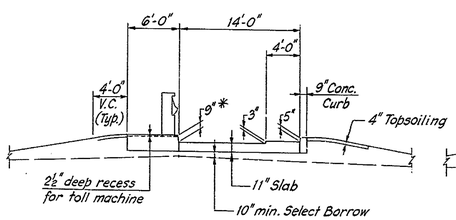

SINGLE LANE ELEVATION

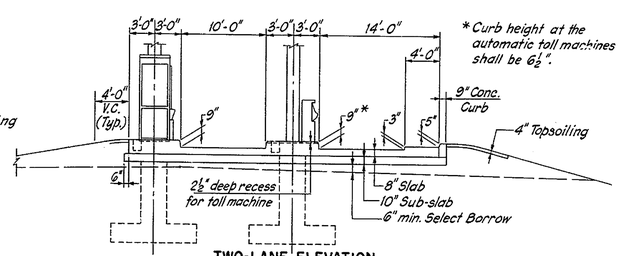

TWO-LANE ELEVATION

* Curb height at the automatic toll machines shall be 6½".

Scales: $\frac{1}{8}$"=1'-0"

DELAWARE TURNPIKE	CONT. NO.	TITLE	SHEET NO.	TOTAL SHEETS
	7053	RAMP TOLL PLAZAS CONCRETE DETAILS	29	86

Rev. 2/17/70

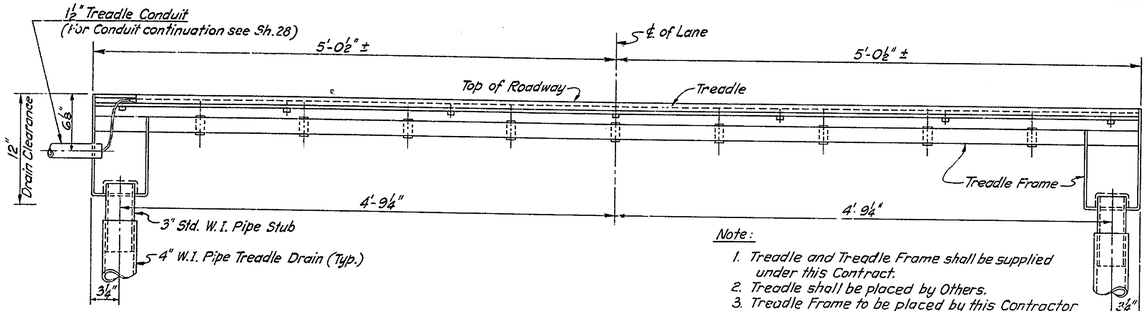

Note:
1. Treadle and Treadle Frame shall be supplied under this Contract.
2. Treadle shall be placed by Others.
3. Treadle Frame to be placed by this Contractor prior to the placing of Ramp Plaza pavement.

TREADLE DRAIN DETAIL

1½" = 1'-0"

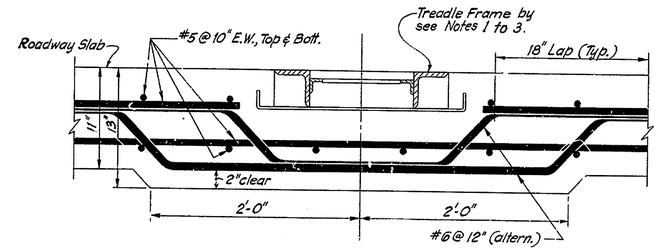

PAVEMENT SECTION AT TREADLE

SINGLE LANE PLAZA

1½" = 1'-0"

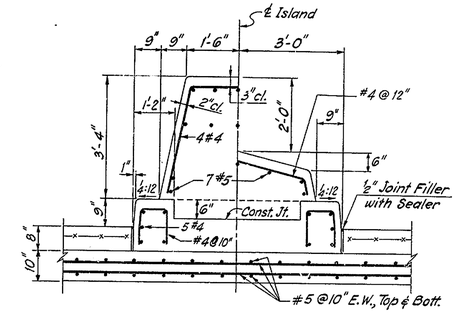

SECTION F-F

½" = 1'-0"

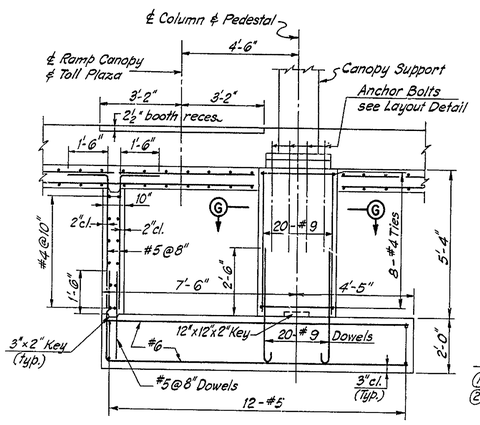

SECTION E-E

⅜" = 1'-0"

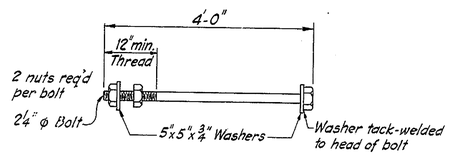

ANCHOR BOLT DETAIL

¾" = 1'-0"

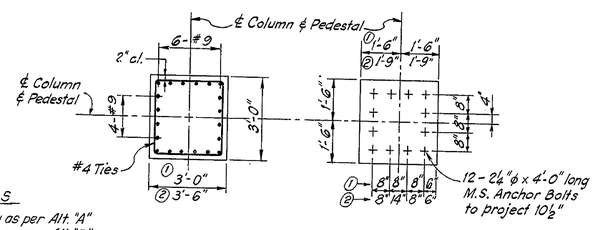

SYMBOLS
① Canopy as per Alt. "A"
② Canopy as per Alt "B"

SECTION G-G **ANCHOR BOLT LAYOUT**

CANOPY PEDESTAL

⅜" = 1'-0"

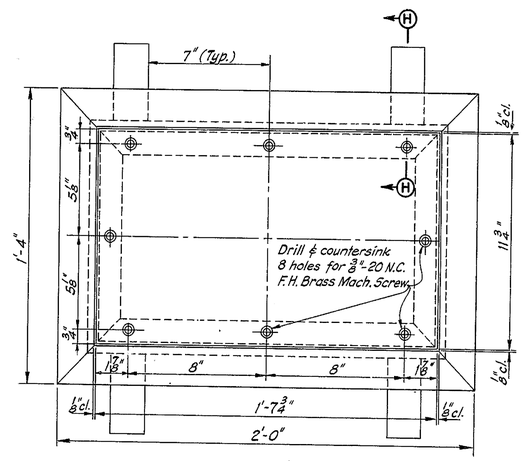

JUNCTION BOX PLAN

3" = 1'-0"

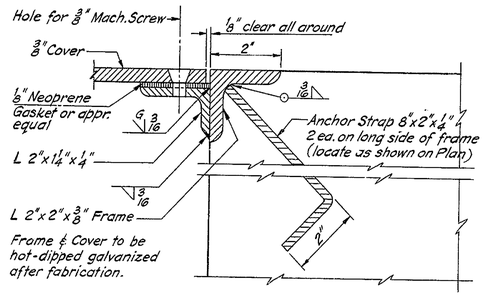

SECTION H-H

Half size

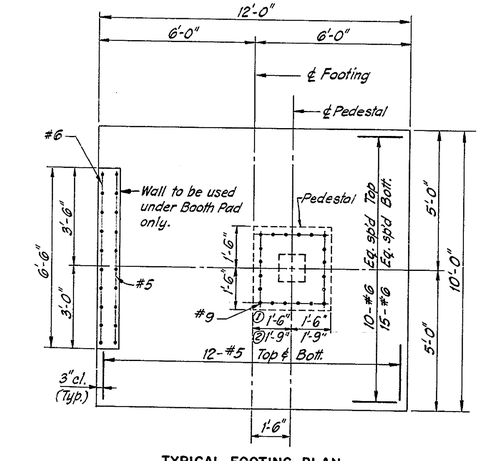

TYPICAL FOOTING PLAN

TWO-LANE PLAZA

⅜" = 1'-0"

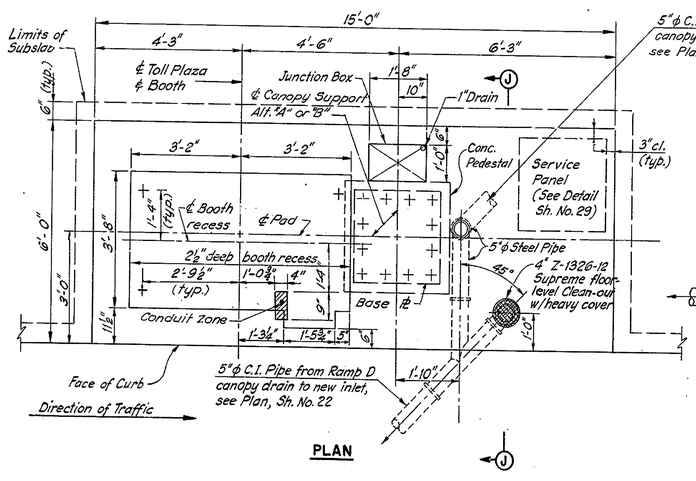

PLAN

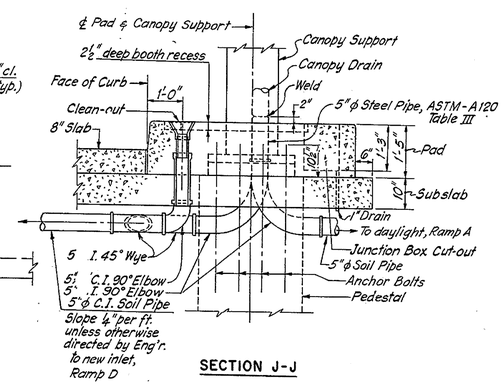

SECTION J-J

BOOTH PAD AND CANOPY DRAINAGE — TWO-LANE PLAZA

½" = 1'-0"

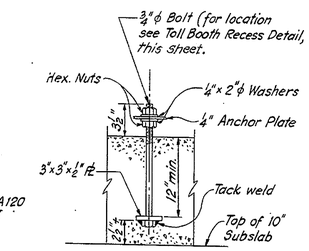

TOLL BOOTH

ANCHOR BOLT DETAIL

1½" = 1'-0"

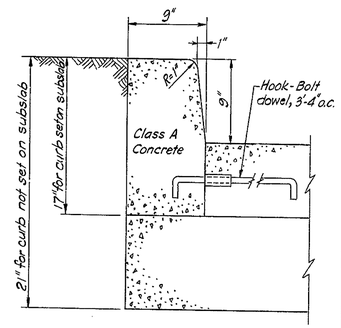

CURB DETAIL

1½" = 1'-0"

Notes:

For Canopy Details
Alternate "A" sheets 31, 32 & 34.
Alternate "B" sheets 33 & 34.

DELAWARE TURNPIKE	CONT. NO	TITLE	SHEET NO.	TOTAL SHEETS
	7053	RAMP TOLL PLAZAS CABINET DETAILS	30	86

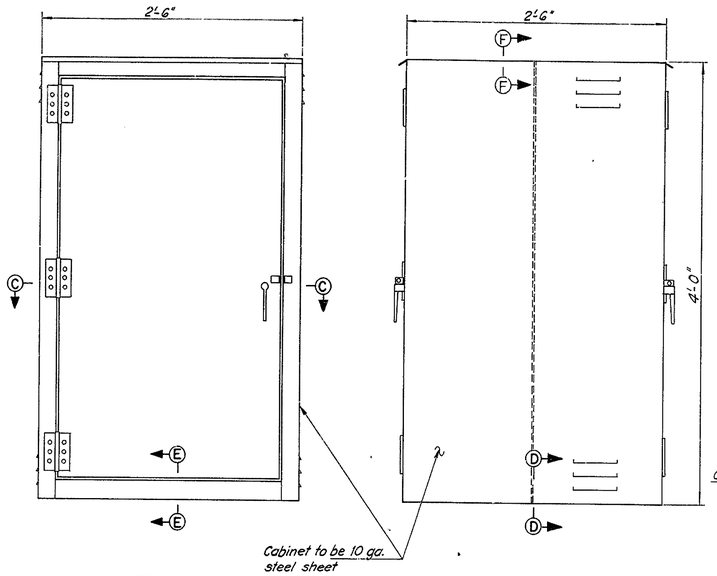

VIEW A-A

VIEW B-B

SERVICE CABINET

1½" = 1'-0"

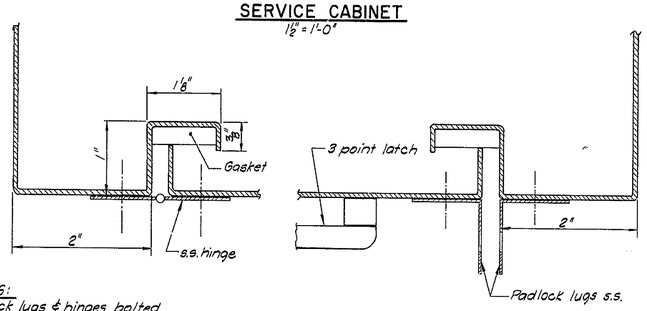

NOTES:
Padlock lugs & hinges bolted w/s.s. Flat head screws. Screws shall be of the nonremovable type.

DETAIL C-C

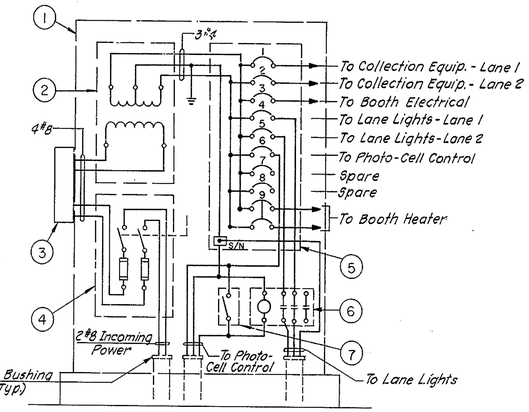

WIRING DIAGRAM

NEW SERVICE CABINET AT RAMP PLAZA A

No Scale

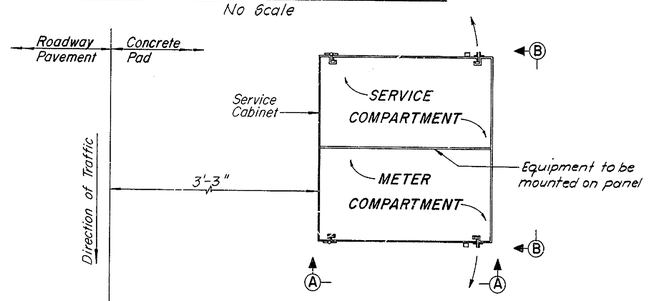

SERVICE CABINET - PLAN LAYOUT

1" = 1'-0"

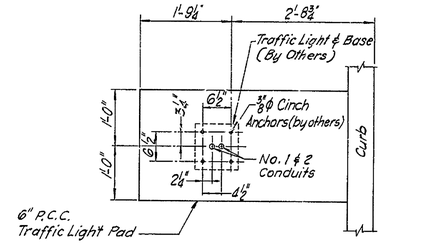

TRAFFIC LIGHT CONDUIT LAYOUT

¾" = 1'-0"

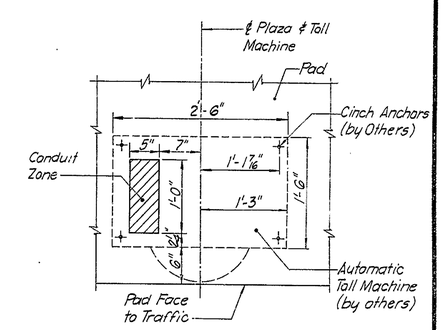

AUTOMATIC TOLL MACHINE CONDUIT LAYOUT

1½" = 1'-0"

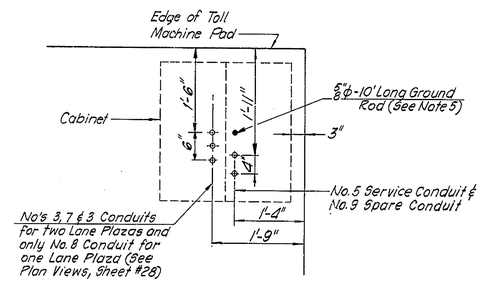

SERVICE CABINET CONDUIT LAYOUT

¾" = 1'-0"

CONDUIT SCHEDULE

NO.	DESIGNATION	SIZE
1	Treadle	¾"
2	Traffic Light on Island	1"
3	Auto. Machine & Booth Power	1"
4	Booth Accessories	1"
5	Incoming Power	2"
6	Canopy Traffic Signal	¾"
7	Canopy Lane Lights & Sign	¾"
8	Auto. Machine Power	1"
9	Spare Conduit	2"

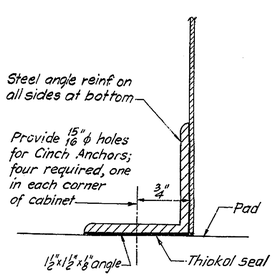

DETAIL D-D

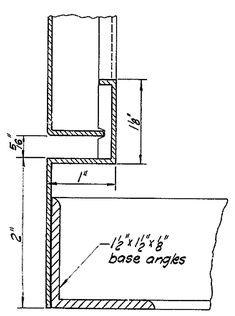

DETAIL E-E

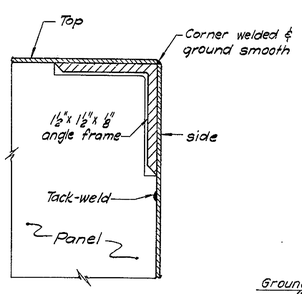

DETAIL F-F

CABINET DETAILS

not to scale

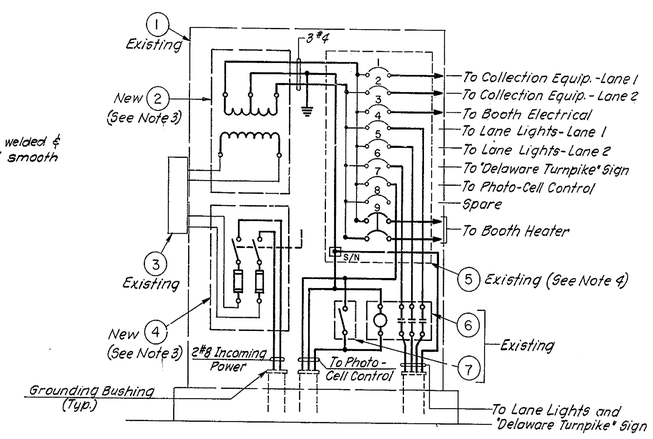

WIRING DIAGRAM

MODIFIED SERVICE CABINET AT RAMP PLAZA D

No Scale

LIST OF EQUIPMENT

1. Service Cabinet: Housing, trims, door and equipment mounting plate all shall be #10 gauge sheet steel. Cabinet shall be of weatherproof construction (see Specifications).
2. Dry-Type Transformer: 10 KVA, 480-120/240 V. with 2½% taps above and below normal, equal to G.E. Co.'s Type QM, Cat. # 9T21B1015.
3. Meter and Meter Pan: Meter pan to be furnished by the utility Company and installed under this Contract. Meter to be furnished and installed by utility Company.
4. Safety Switch: 60 A., 480 V., 2 pole (with two 40 A. fuses) within NEMA 1 enclosure equal to G.E. Co's. Cat. # TH 3362.
5. Distribution Panelboard: 1 φ, 3 wire, 120/240 V., S/N, 100 A. main with lugs, column type complete with 8 (eight) single pole (15 A. trip) and 1 (one) double pole (30 A. trip) branch circuit breakers, equal to G.E. Co's Cat. # NLAB X 310 L.
6. Contactor: 60 A., 480 V., 3 pole, with 120 V. control, within NEMA 1 enclosure, equal to G. E. Co's Cat. # CR 160 L 4802 AA.
7. By Pass Switch: Single pole toggle switch equal to Hubbell Cat. # 3031 in conduit box with switch cover, equal to Crouse-Hinds Cat. # FS 1019 & FS 1020 G.

NOTES

1. All wiring within the new or modified cabinets, unless otherwise noted, shall be No. 12 A.W.G. All wires shall be color-coded (see Specifications).
2. The Modified Service Cabinet, all equipment and the wiring therein shown by thin lines are existing. All other work and all connections within the cabinet shown by heavy lines are under this Contract.
3. Salvage the existing 3 KVA dry-type transformer and 30 amp. Safety Switch in the Modified Service Cabinet (see Specifications).
4. Install new 2 pole, 30 amp. circuit breaker in the space provided.
5. All conduits shall be bonded and connected to the ground rod with a #6 bare tinned copper ground wire.

DELAWARE TURNPIKE	CONT. NO.	TITLE	SHEET NO.	TOTAL SHEETS
	7053	RAMP PLAZA CANOPY ALTERNATE "A"	31	86

Rev. 2/17/70

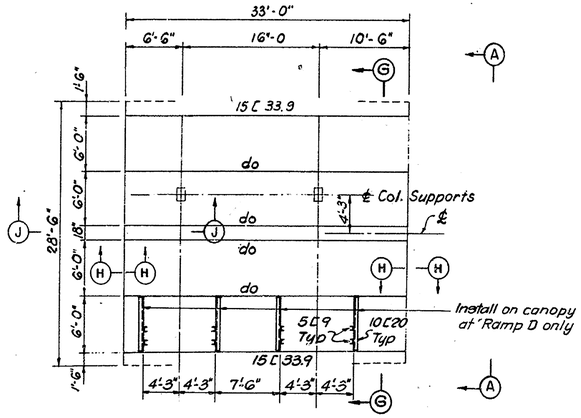

ROOF FRAMING PLAN

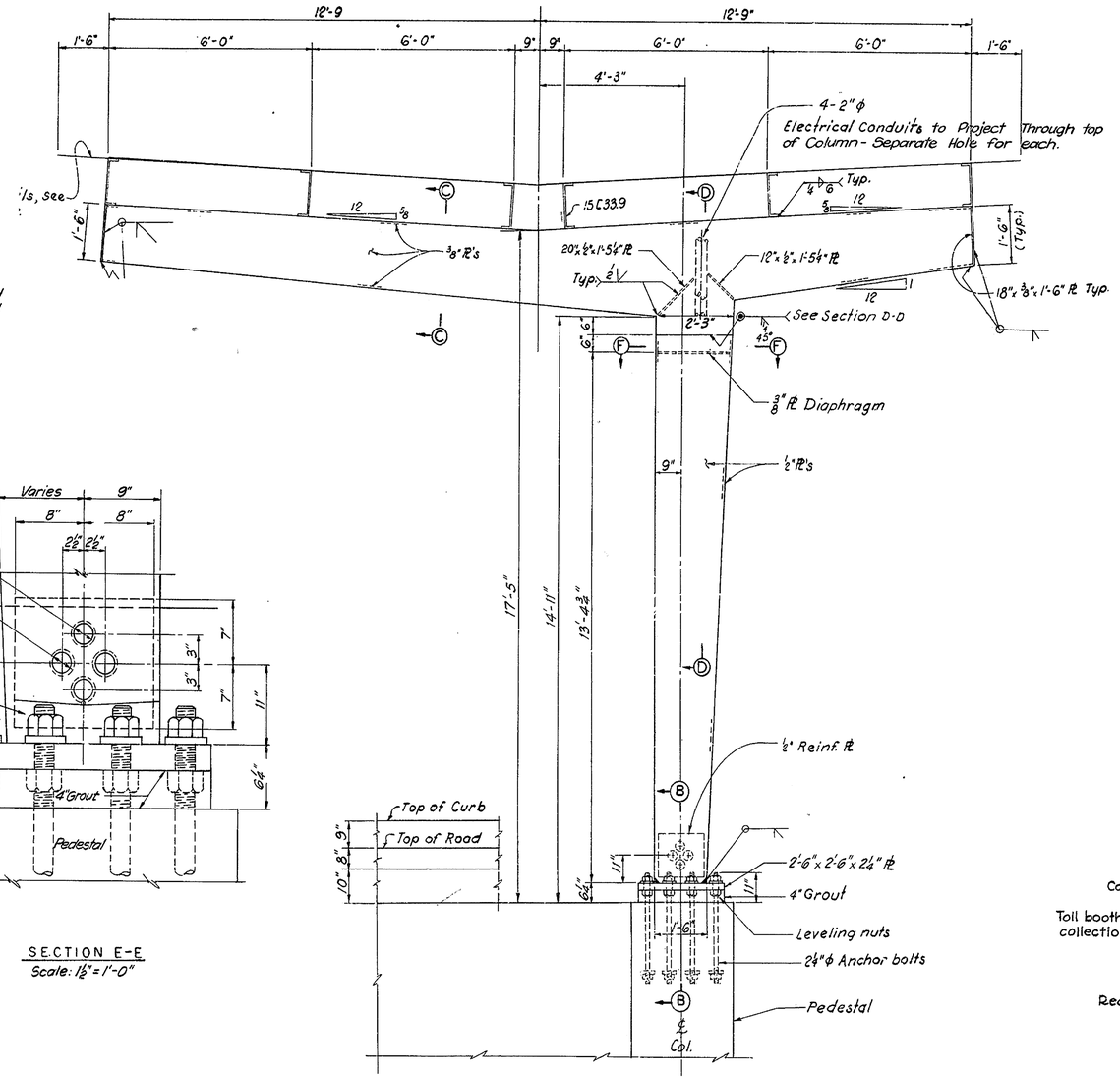

VIEW A-A

Scale: 1/2" = 1'-0"

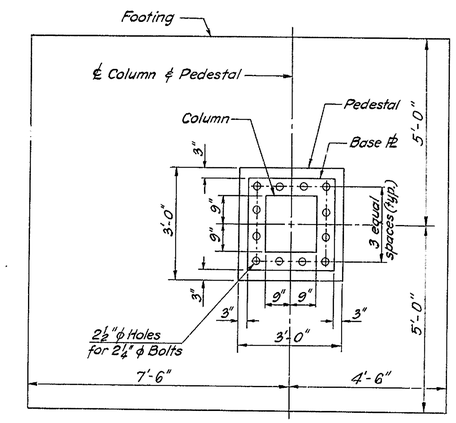

RAMP TOLL PLAZA BASE DETAIL

1/2" = 1'-0"

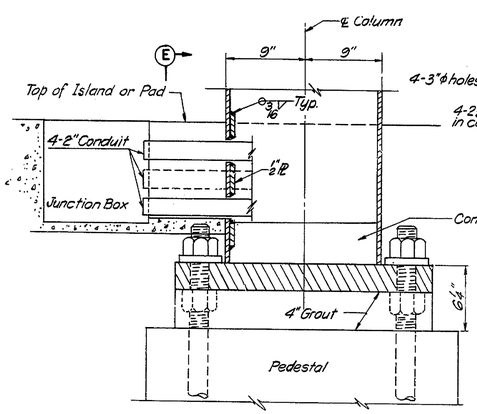

SECTION B-B

Scale: 1 1/2" = 1'-0"

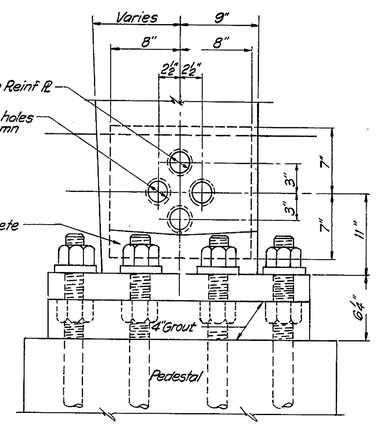

SECTION E-E

Scale: 1 1/2" = 1'-0"

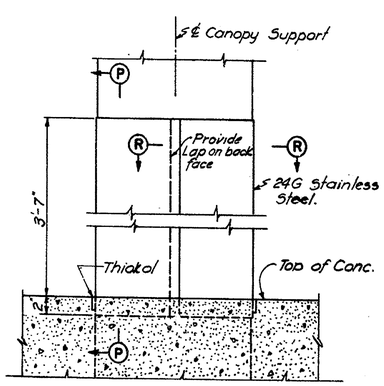

COLUMN COVER

(Back Face of Canopy Support all Columns)

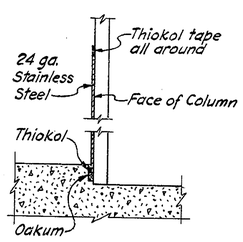

SECTION P-P

1 1/2" = 1'-0"

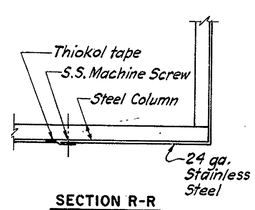

SECTION R-R

1 1/2" = 1'-0"

NOTES:

1) All traffic signals shall be controlled from their respective toll booth or automatic toll collection unit.
2) For Canopy Details, Alternate B, see sheet 33.
3) For electrical details see sheet 34.
4) For sections noted on this sheet, but not shown, see sheet 32.

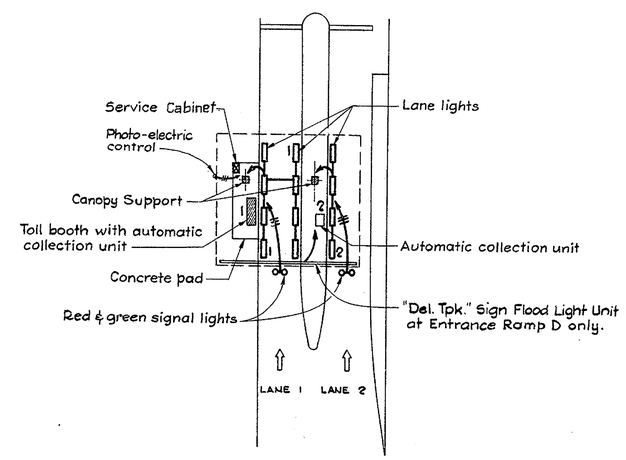

PLAN

(With Lighting Layout)

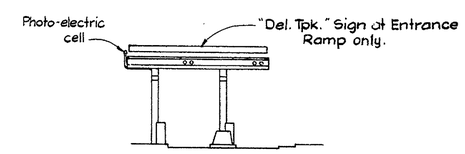

ELEVATION

RAMP TOLL PLAZA LAYOUT

(Alternates "A" & "B")

DELAWARE TURNPIKE	CONT. NO.	TITLE	SHEET NO.	TOTAL SHEETS
	7053	RAMP PLAZA CANOPY ALTERNATE "A"	32	86

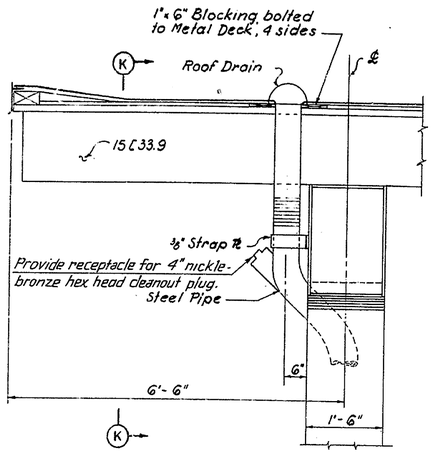

SECTION J-J
Scale: 3/4" = 1'-0"

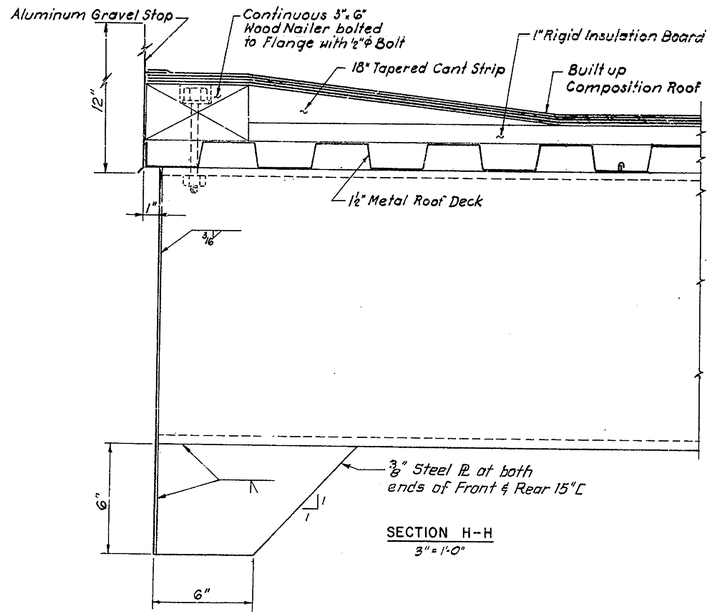

SECTION H-H
3" = 1'-0"

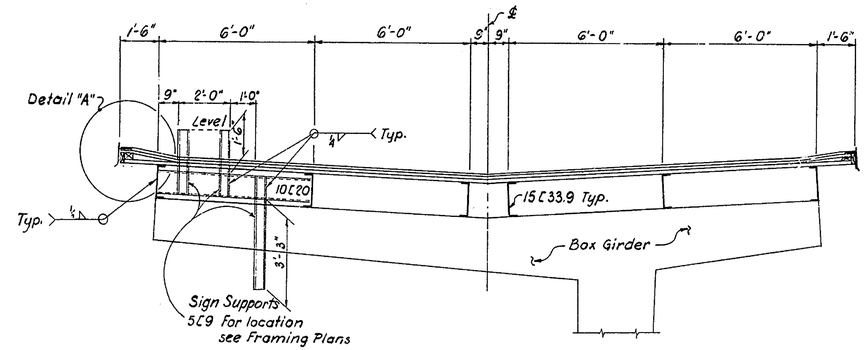

SECTION G-G
Scale: 3/8" = 1'-0"

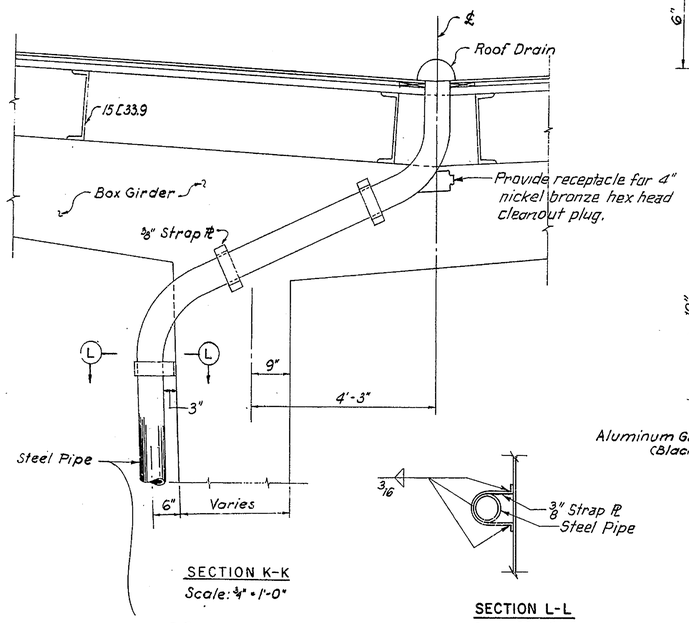

SECTION K-K
Scale: 3/4" = 1'-0"

SECTION L-L
Scale 3/4" = 1'-0"

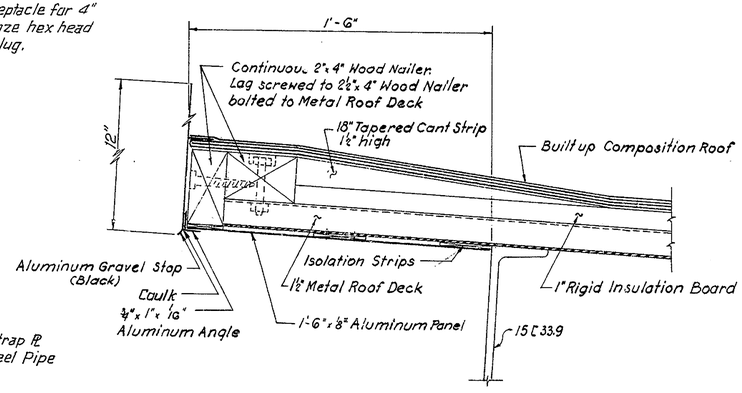

DETAIL "A"
Scale: 3" = 1'-0"

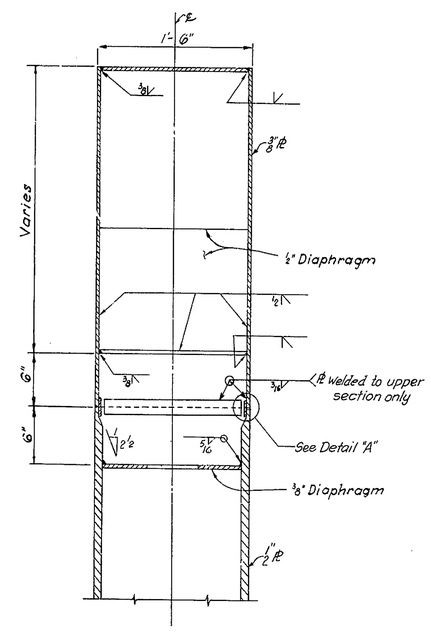

SECTION D-D
1/2" = 1'-0"

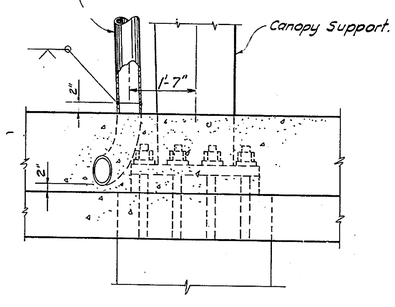

DRAINAGE CONNECTION DETAIL AT RAMPS
3/4" = 1'-0"

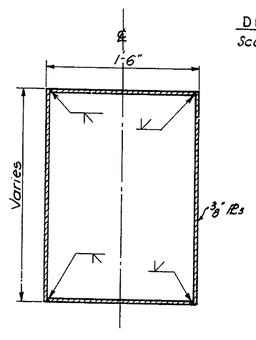

SECTION C-C
Scale: 1 1/2" = 1'-0"

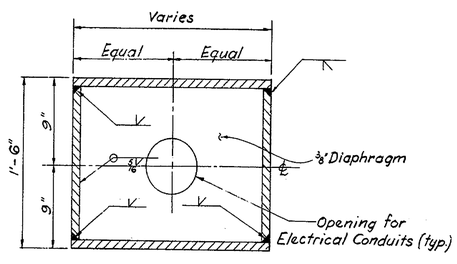

SECTION F-F
Scale: 1 1/2" = 1'-0"

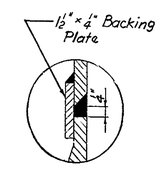

DETAIL "A"
No Scale

DELAWARE TURNPIKE	CONT. NO.	TITLE	SHEET NO.	TOTAL SHEETS
	7053	RAMP PLAZA CANOPY ALTERNATE "B"	33	86

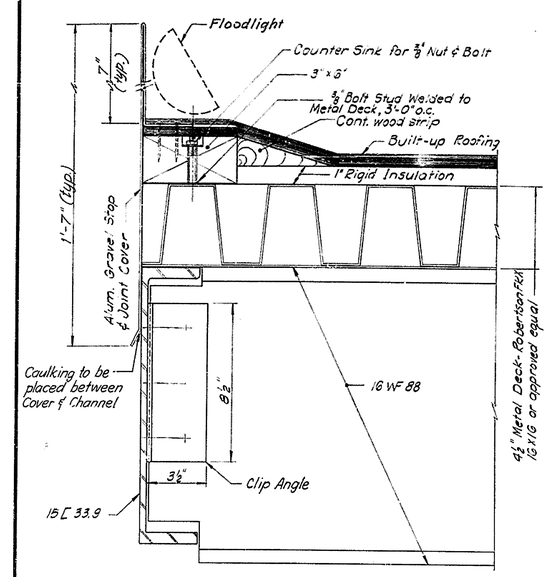

SECTION B-B
3" = 1'-0"

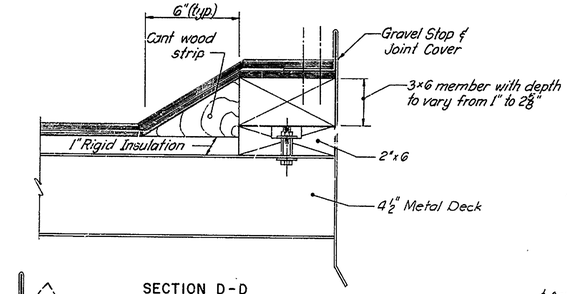

SECTION D-D
3" = 1'-0"

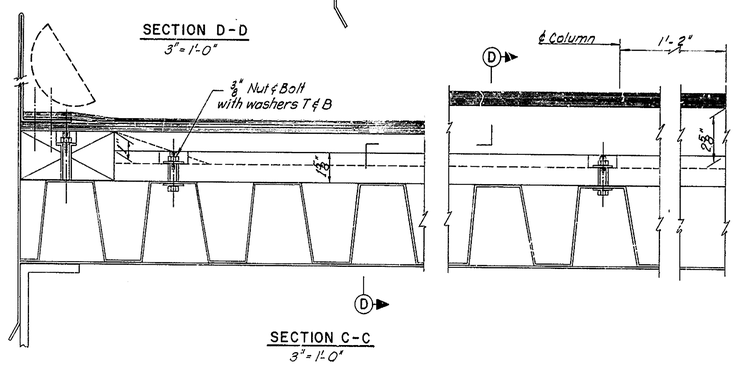

SECTION C-C
3" = 1'-0"

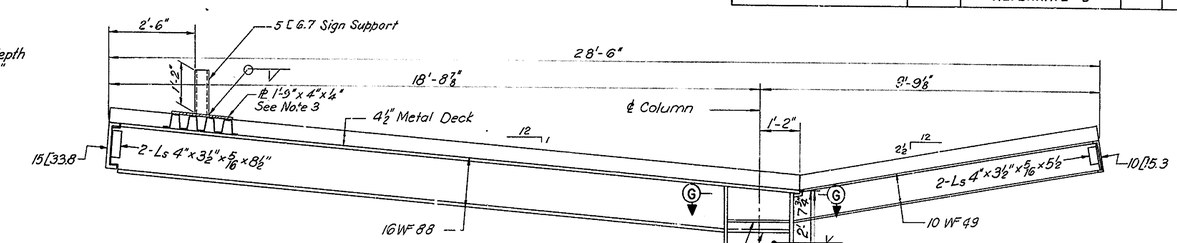

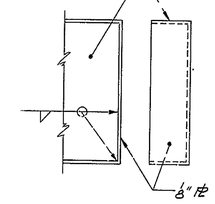

SIDE VIEW END VIEW
DETAIL A
No scale

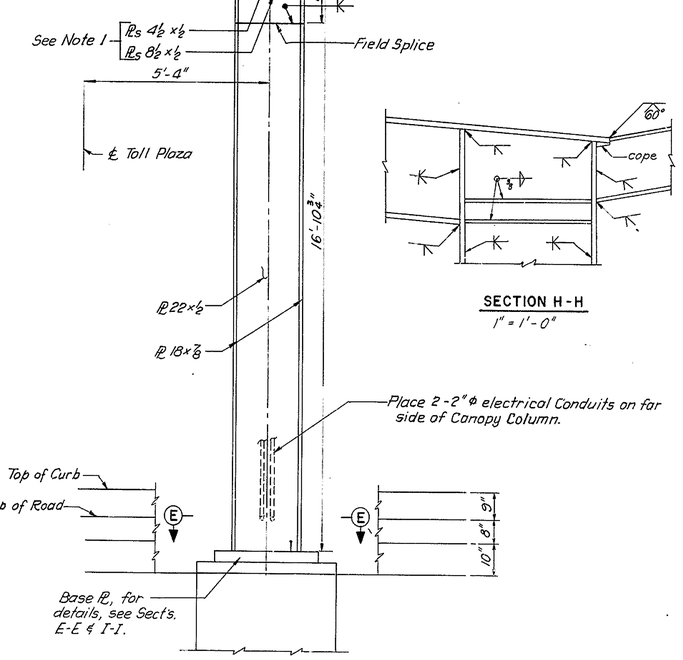

VIEW A-A
½" = 1'-0"

SECTION H-H
1" = 1'-0"

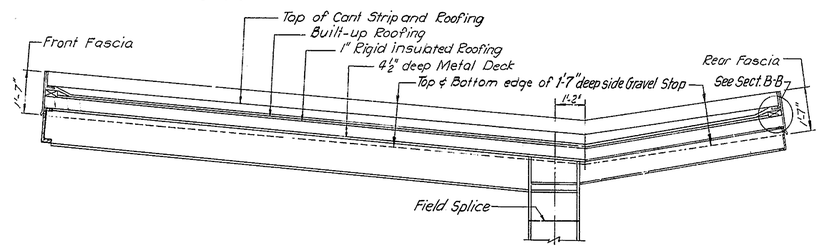

SECTION F-F
⅜" = 1'-0"

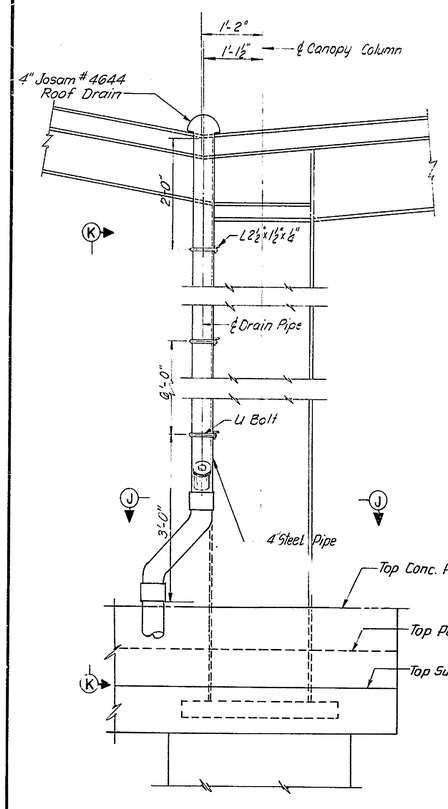

CANOPY DRAIN END VIEW
¾" = 1'-0"

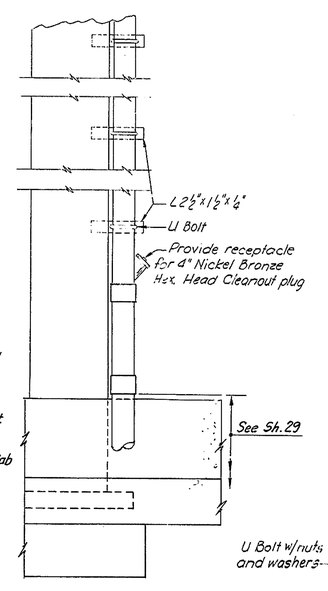

VIEW K-K

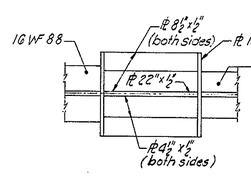

SECTION G-G
½" = 1'-0"

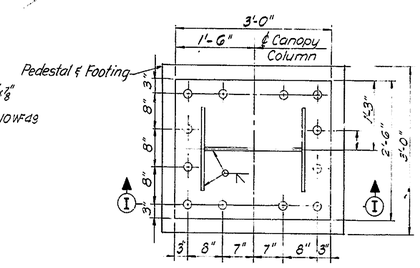

SECTION E-E
¾" = 1'-0"

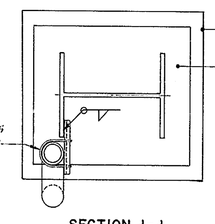

SECTION J-J
¾" = 1'-0"

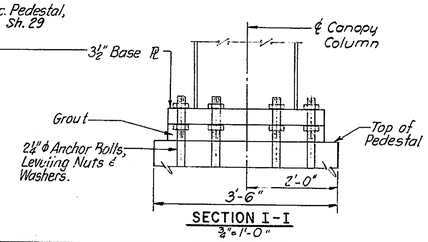

SECTION I-I
¾" = 1'-0"

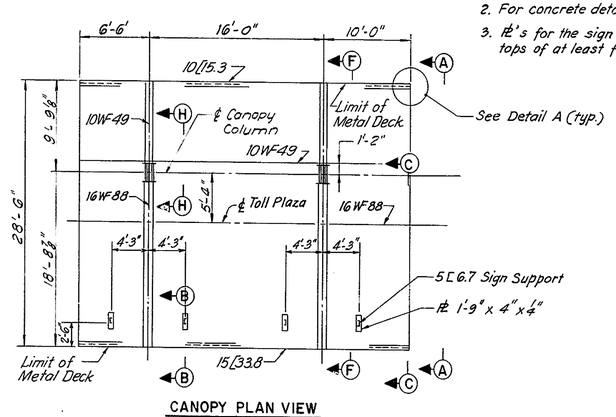

CANOPY PLAN VIEW
⅛" = 1'-0"

Notes:
1. Bottom of PL to be located at the same elevation as the bottom flange of beam.
2. For concrete details see Sheets 28 & 29.
3. PL's for the sign support to be welded to the tops of at least four (4) cells of the metal deck.

DELAWARE TURNPIKE	CONT. NO.	TITLE	SHEET NO.	TOTAL SHEETS
	7053	RAMP PLAZA CANOPY LIGHTING DETAILS	34	86

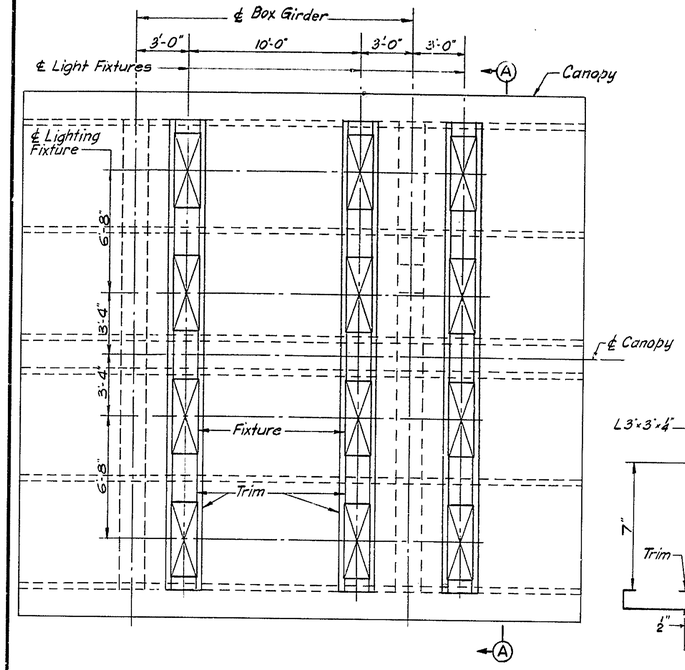

CANOPY LANE LIGHT LAYOUT
1/4"=1'-0"

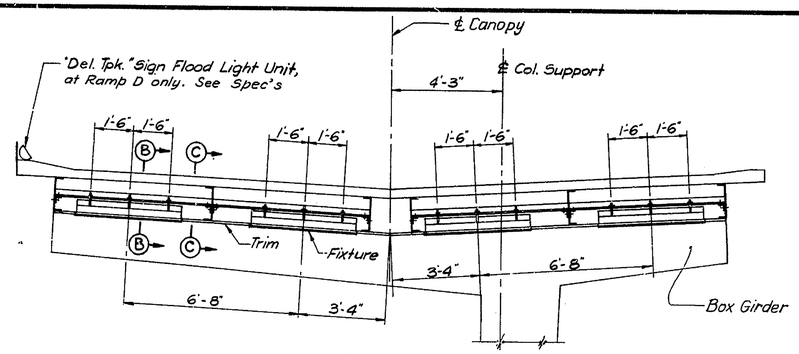

SECTION A-A
3/8"=1'-0"

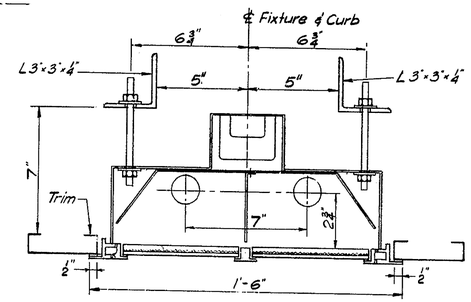

SECTION B-B
3"=1'-0"

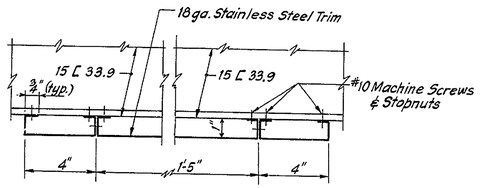

SECTION C-C
3"=1'-0"

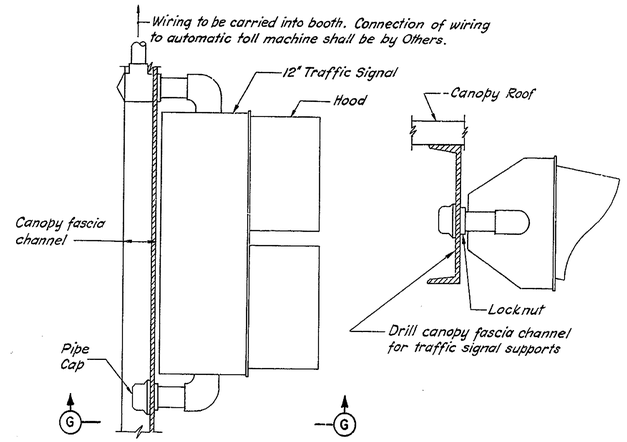

PLAN VIEW

SECTION G-G

CANOPY TRAFFIC SIGNAL
Alternates "A" & "B"
No scale

ALTERNATE "A"

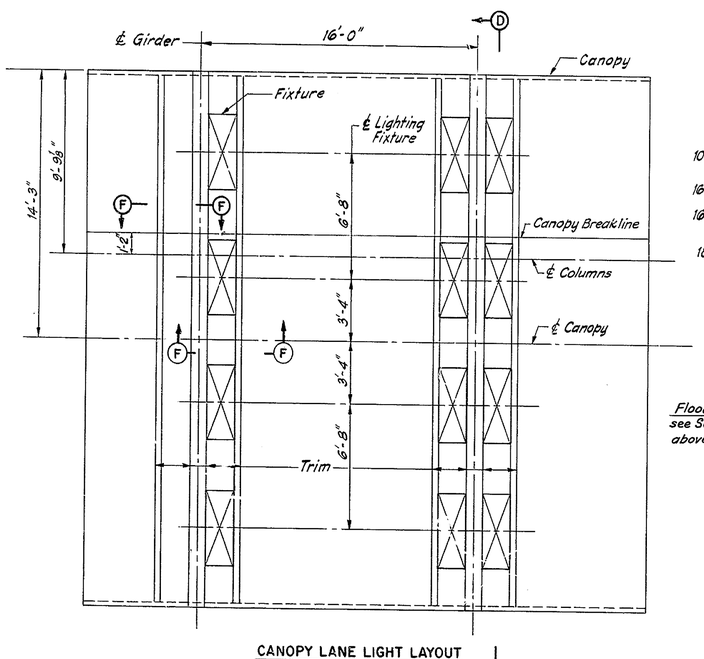

CANOPY LANE LIGHT LAYOUT
1/4"=1'-0"

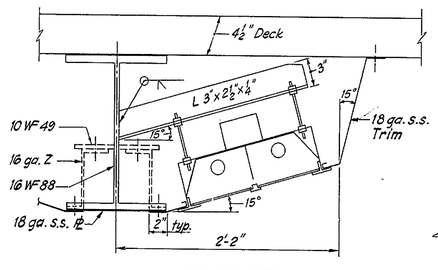

SECTION E-E
1 1/2"=1'-0"

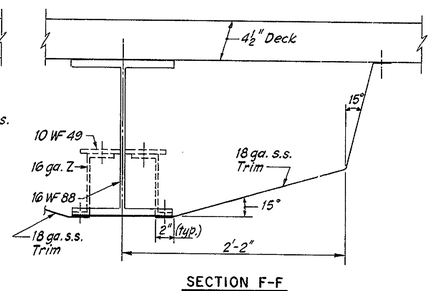

SECTION F-F
1 1/2"=1'-0"

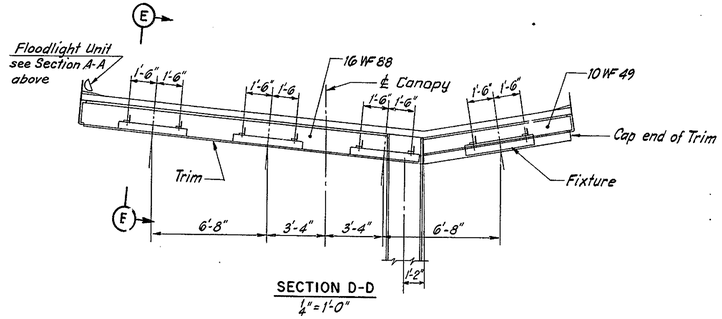

SECTION D-D
1/4"=1'-0"

ALTERNATE "B"

DELAWARE TURNPIKE	CONT. NO.	TITLE	SHEET NO.	TOTAL SHEETS
	7053	LIGHTING PLAN	35	86

No.	Revision	Date
1	General Revisions for Additional Lighting	7-22-70

* All lighting standard numbers have been revised, but only where the work has been changed have the items been circled.

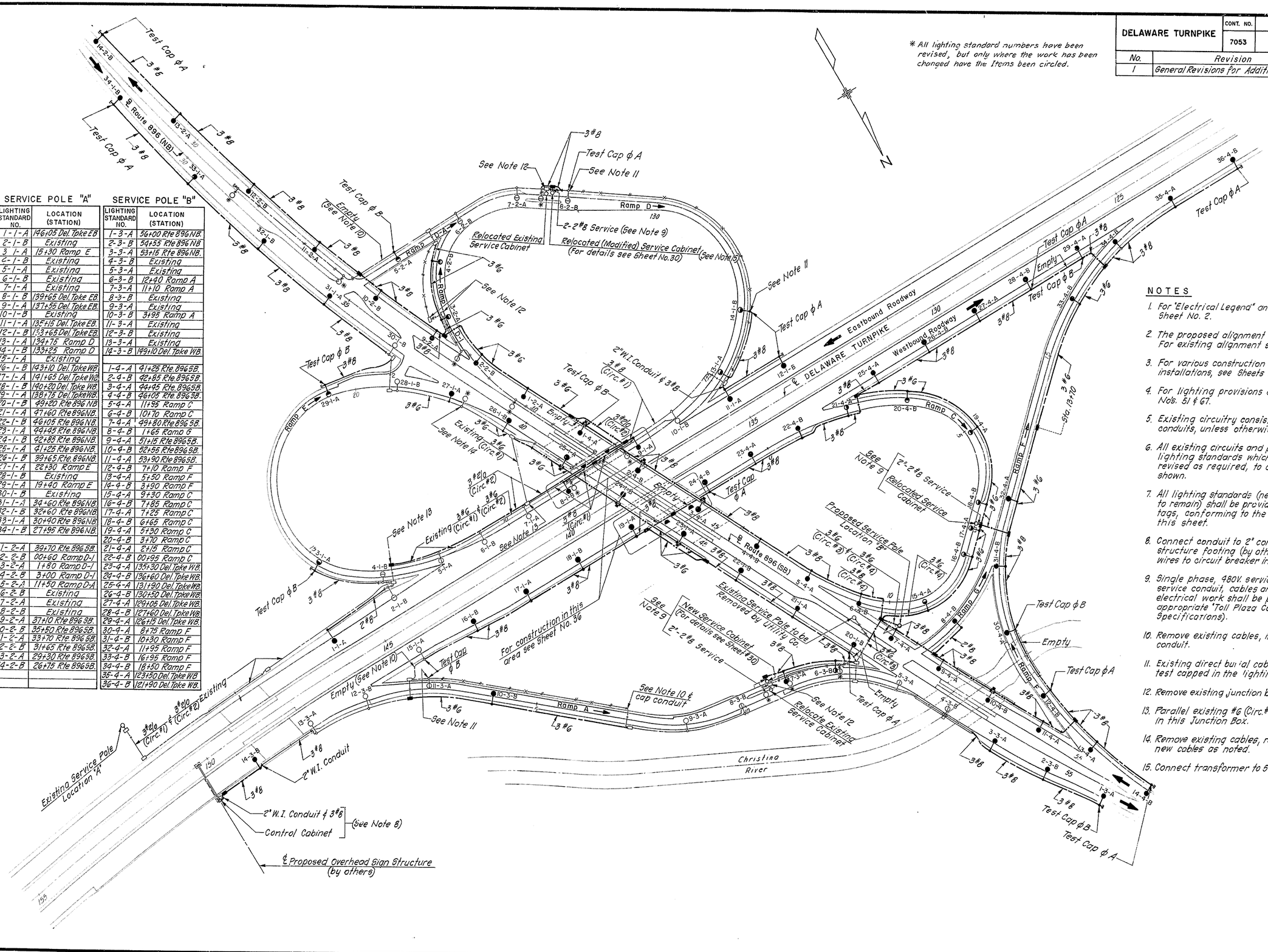

SERVICE POLE "A"

LIGHTING STANDARD NO.	LOCATION (STATION)
1-1-A	146+05 Del. Tpke EB
2-1-B	Existing
3-1-A	15+30 Ramp E
2-1-B	Existing
5-1-A	Existing
6-1-B	Existing
7-1-A	Existing
8-1-B	139+65 Del. Tpke EB
9-1-A	137+55 Del. Tpke EB.
10-1-B	Existing
11-1-A	135+15 Del. Tpke EB.
12-1-B	133+65 Del. Tpke EB.
13-1-A	134+75 Ramp D
14-1-B	133+25 Ramp D
15-1-A	Existing
16-1-B	143+10 Del. Tpke WB.
17-1-A	141+65 Del. Tpke WB
18-1-B	140+20 Del. Tpke WB
19-1-A	138+75 Del. Tpke WB.
20-1-B	49+20 Rte 896 NB
21-1-A	47+60 Rte 896 NB.
22-1-B	46+05 Rte 896 NB.
23-1-A	44+45 Rte 896 NB.
24-1-B	42+85 Rte 896 NB.
25-1-A	41+25 Rte 896 NB.
26-1-B	39+65 Rte 896 NB.
27-1-A	22+30 Ramp E
28-1-B	Existing
29-1-A	19+40 Ramp E
30-1-B	Existing
31-1-A	34+60 Rte 896 NB.
32-1-B	32+60 Rte 896 NB
33-1-A	30+90 Rte 896 NB
34-1-B	27+95 Rte 896 NB.
1-2-A	39+70 Rte 896 SB.
2-2-B	00+60 Ramp D-1
3-2-A	1+80 Ramp D-1
4-2-B	3+00 Ramp D-1
5-2-A	11+50 Ramp D-A
6-2-B	Existing
7-2-A	Existing
8-2-B	Existing
9-2-A	37+10 Rte 896 SB.
10-2-B	35+50 Rte 896 SB.
11-2-A	33+70 Rte 896 SB.
12-2-B	31+65 Rte 896 SB.
13-2-A	29+30 Rte 896 SB.
14-2-B	26+75 Rte 896 SB.

SERVICE POLE "B"

LIGHTING STANDARD NO.	LOCATION (STATION)
1-3-A	56+00 Rte 896 NB.
2-3-B	54+55 Rte 896 NB
3-3-A	53+15 Rte 896 NB.
4-3-B	Existing
5-3-A	Existing
6-3-B	12+40 Ramp A
7-3-A	11+10 Ramp A
8-3-B	Existing
9-3-A	Existing
10-3-B	3+95 Ramp A
11-3-A	Existing
12-3-B	Existing
13-3-A	Existing
14-3-B	149+10 Del. Tpke WB.
1-4-A	91+25 Rte 896 SB.
2-4-B	92+85 Rte 896 SB.
3-4-A	94+45 Rte 896 SB.
4-4-B	96+05 Rte 896 SB.
5-4-A	11+95 Ramp C
6-4-B	10+70 Ramp C
7-4-A	49+80 Rte 896 SB.
8-4-B	1+65 Ramp G
9-4-A	51+15 Rte 896 SB.
10-4-B	52+55 Rte 896 SB.
11-4-A	53+90 Rte 896 SB.
12-4-B	7+10 Ramp F
13-4-A	5+50 Ramp F
14-4-B	3+90 Ramp F
15-4-A	9+30 Ramp C
16-4-B	7+85 Ramp C
17-4-A	7+25 Ramp C
18-4-B	6+65 Ramp C
19-4-A	5+90 Ramp C
20-4-B	3+70 Ramp C
21-4-A	2+15 Ramp C
22-4-B	00+95 Ramp C
23-4-A	135+30 Del. Tpke WB.
24-4-B	136+60 Del. Tpke WB.
25-4-A	131+90 Del. Tpke WB.
26-4-B	130+50 Del. Tpke WB.
27-4-A	129+05 Del. Tpke WB.
28-4-B	127+60 Del. Tpke WB.
29-4-A	126+15 Del. Tpke WB.
30-4-A	8+75 Ramp F
31-4-B	10+30 Ramp F
32-4-A	11+95 Ramp F
33-4-B	16+95 Ramp F
34-4-B	18+50 Ramp F
35-4-A	123+50 Del. Tpke WB
36-4-B	121+90 Del. Tpke WB.

NOTES

1. For "Electrical Legend" and "Electrical Notes" see Sheet No. 2.
2. The proposed alignment is shown on this sheet. For existing alignment see Highway Plans.
3. For various construction details regarding lighting installations, see Sheets No's. 36 & 37.
4. For lighting provisions on structures, see Sheets Nos. 51 & 67.
5. Existing circuitry consists of 3#8 cables in all conduits, unless otherwise noted.
6. All existing circuits and phase connections to the lighting standards which are to remain, shall be revised as required, to conform to the circuitry shown.
7. All lighting standards (new, relocated and existing to remain) shall be provided with identification tags, conforming to the designations shown on this sheet.
8. Connect conduit to 2" conduit stubbed out of sign structure footing (by others) and connect 3#8 wires to circuit breaker in control cabinet (by others).
9. Single phase, 480V service for toll facilities, service conduit, cables and all other associated electrical work shall be paid for under the appropriate "Toll Plaza Construction" items. (See Specifications).
10. Remove existing cables, install drag wire in existing conduit.
11. Existing direct burial cables are disconnected and test capped in the lighting standard base(s).
12. Remove existing junction box (See Note 4 on Sheet #2)
13. Parallel existing #6 (Circ. #2) and new #2/0 (Circ. #2) in this Junction Box.
14. Remove existing cables, repair conduit and install new cables as noted.
15. Connect transformer to 5% below normal Voltage taps.

DELAWARE TURNPIKE	CONT NO	TITLE	SHEET NO	TOTAL SHEETS
	7053	LIGHTING DETAILS-I	36	86

No.	Revision	Date
1	Additional Underbridge Lighting	7-22-70

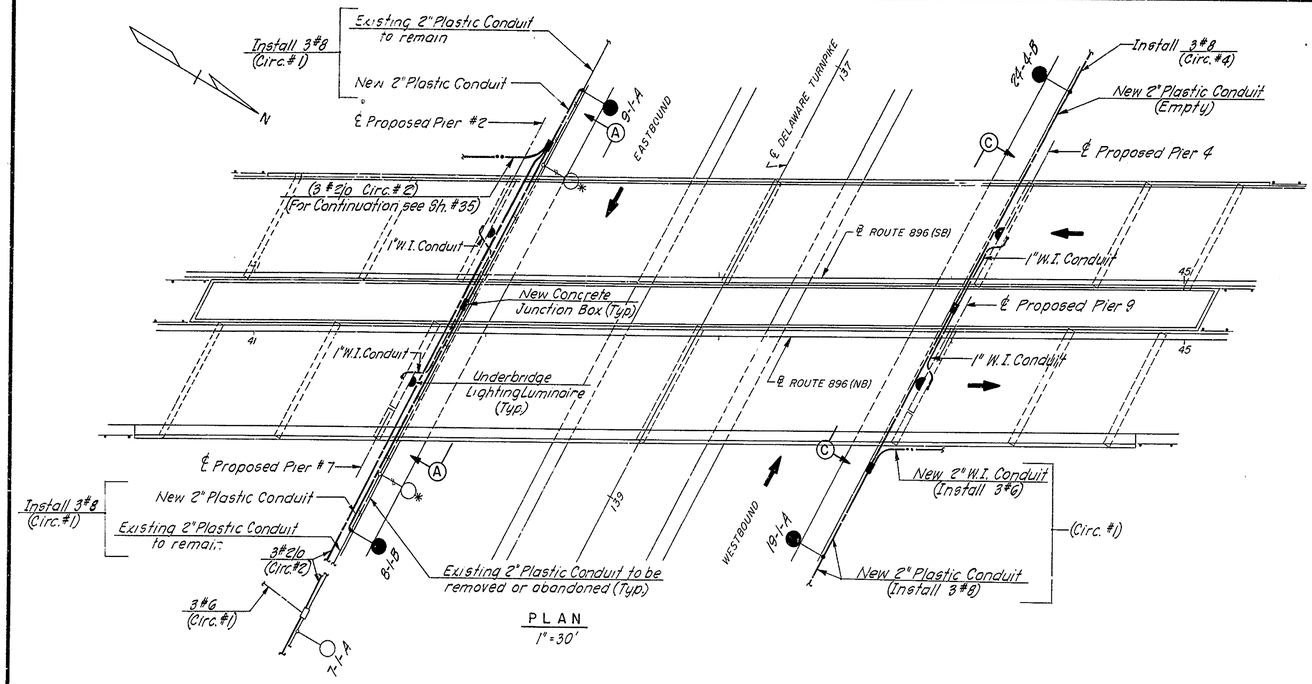

PLAN
1" = 30'

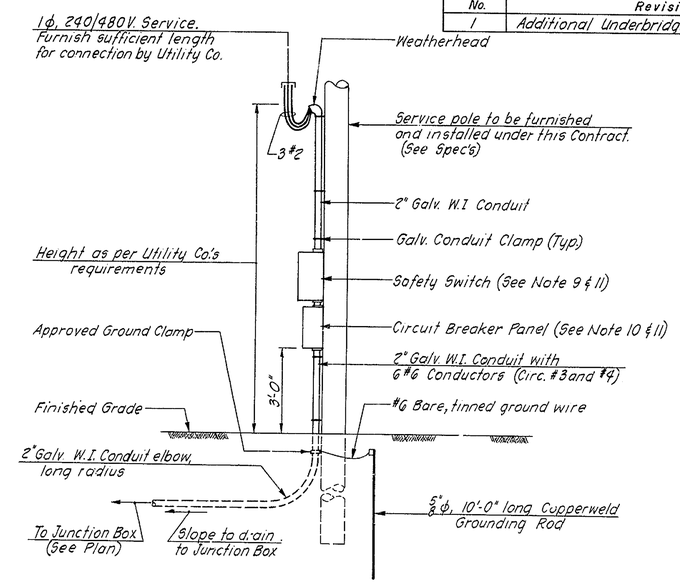

SERVICE POLE DETAIL (LOCATION B)
No Scale

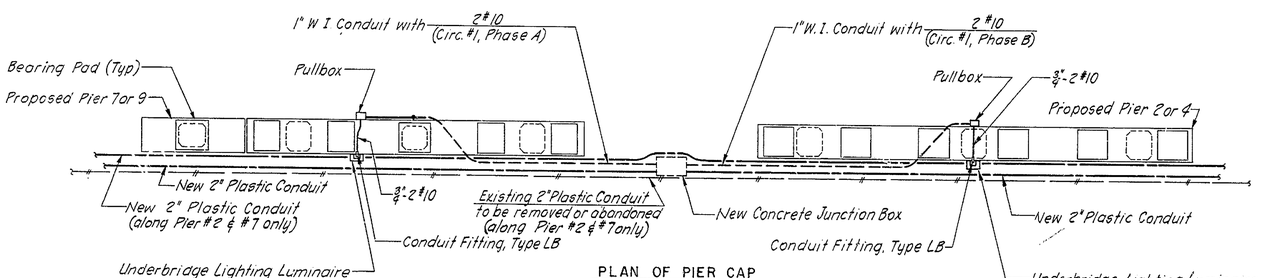

PLAN OF PIER CAP
1/8" = 1'-0"

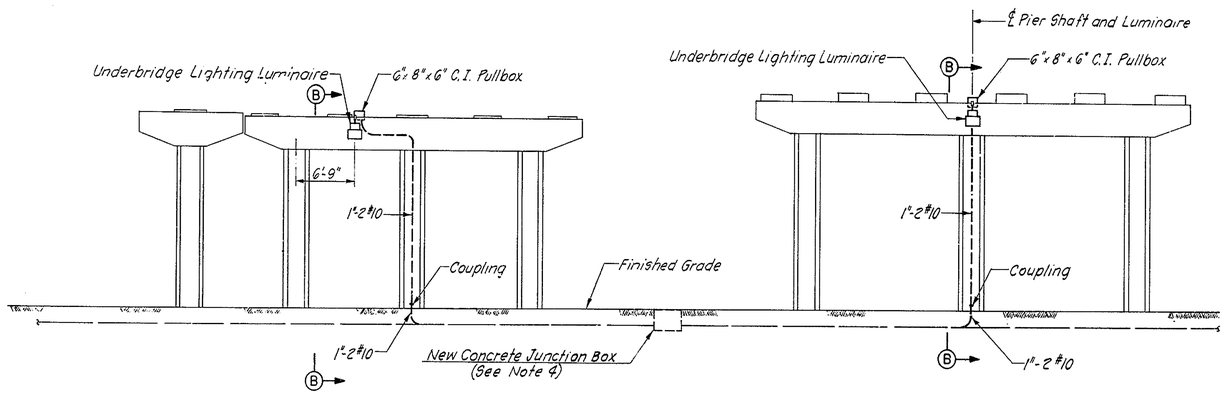

SECTION A-A
1/8" = 1'-0"
(Section C-C is similar)

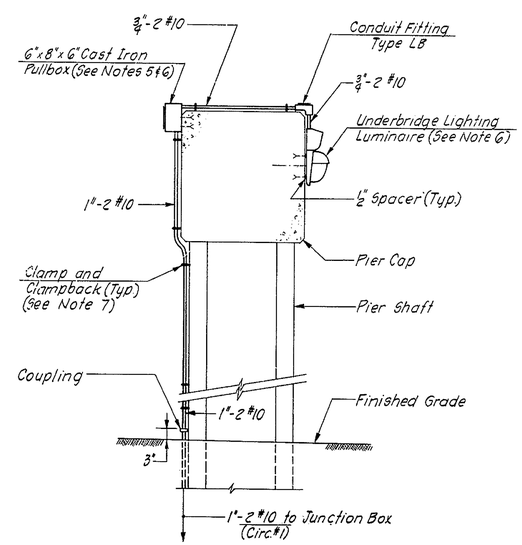

SECTION B-B
1/2" = 1'-0"

NOTES

1. For "Electrical Legend" and "Electrical Notes" see Sheet No. 2.
2. See "Lighting" and "Bridge" plans for other related electrical installations which are shown on this sheet.
3. For concrete junction box construction details, see Sheet No. 37.
4. In this junction box install a cable connector kit, style 82 and 64 as required, with 5A. fuse for phase wire of each underbridge lighting circuit.
5. Cast iron pullbox shall be furnished with mounting lugs and conduit hubs, and shall be gasketed and galvanized, equal to O-Z Cat. # YS080606.
6. Cast iron pullboxes and underbridge lighting luminaires are to be fastened to concrete surfaces with 3/8" φ-2 unit expansion anchor bolts and 1/2" spacers.
7. Conduit to be fastened to concrete with clamps and clampbacks by means of 3/8" φ-2 unit expansion bolts, spaced at 5'-0" maximum.
8. All installations on service pole shall conform to the Utility Company's requirements.
9. Safety switch shall be 3 pole, SW, 480V., 100A. size with two 70A. fuses, in NEMA 3R enclosure, equal to G.E. Cat. # TH3363RH.
10. Circuit Breaker Panel shall be furnished with three 2-pole, 480V, 100A. (TEF) frame (50A. trip) circuit breakers (one spare) and neutral bar, in NEMA 3R enclosure.
11. Safety switch and circuit breaker panel shall be furnished with approved heavy duty padlocks keyed identically. The enclosures shall be fastened to pole with 3/8" φ, 2 1/2" long galvanized lag screws

DELAWARE TURNPIKE	CONT. NO.	TITLE	SHEET NO.	TOTAL SHEETS
	7053	LIGHTING DETAILS-II	37	86

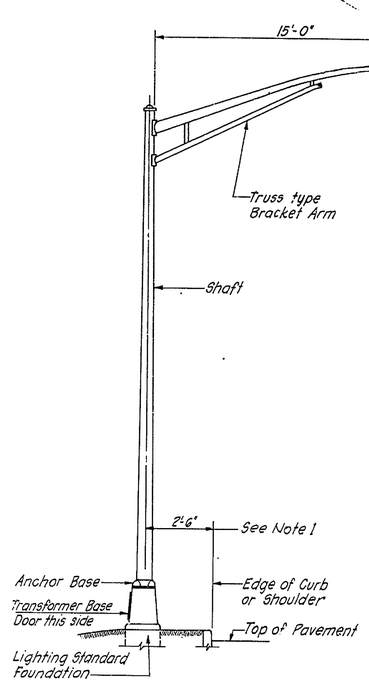

TYPE A

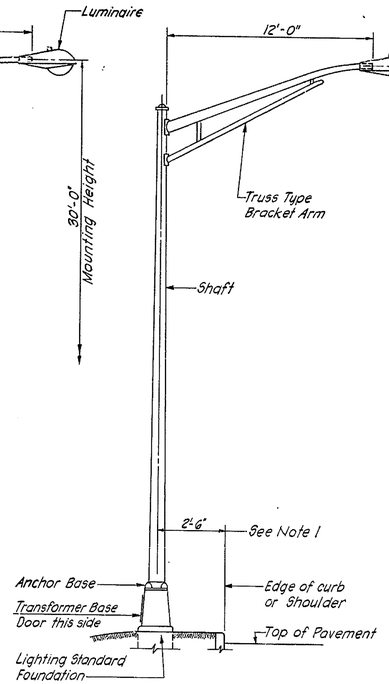

TYPE B

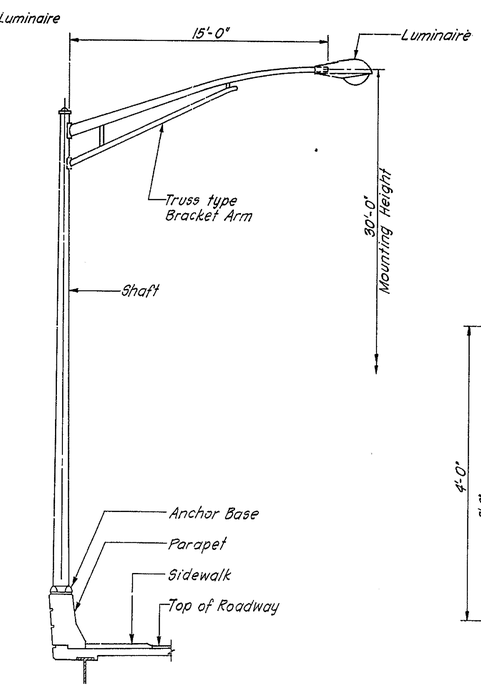

TYPE C
(See Note 2)

LIGHTING STANDARD INSTALLATION

No Scale

(Guard Rail installation where required, shall be coordinated with lighting standard locations.)

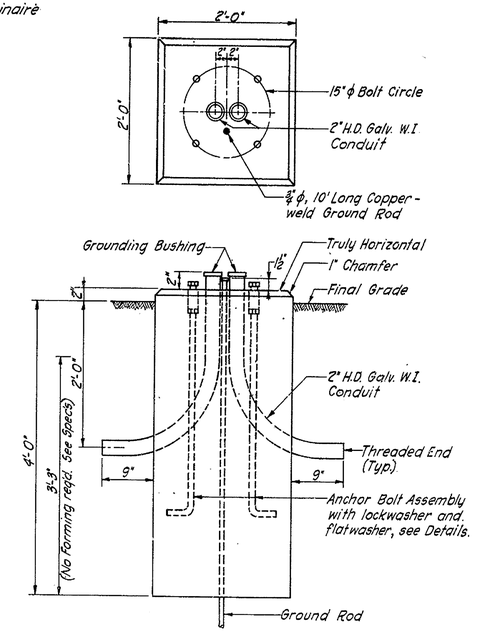

LIGHTING STANDARD FOUNDATION

1" = 1'-0"

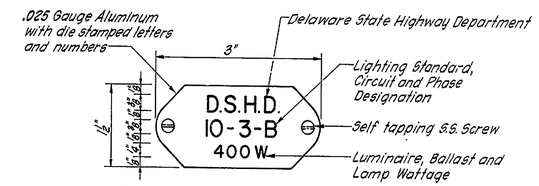

LIGHTING STANDARD IDENTIFICATION PLATE

No Scale

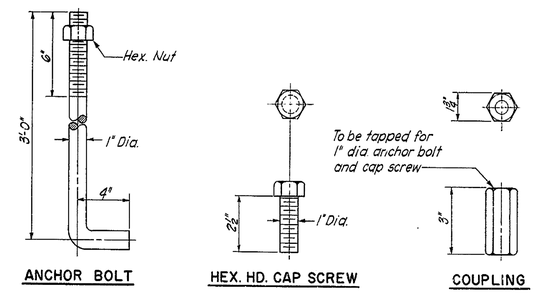

ANCHOR BOLT — HEX. HD. CAP SCREW — COUPLING

ANCHOR BOLT ASSEMBLY

No Scale

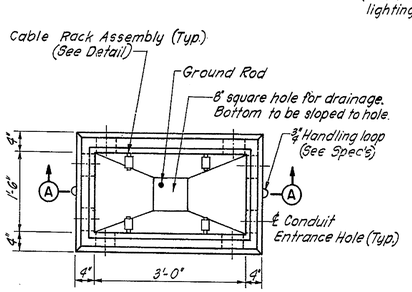

PLAN WITH COVER REMOVED

3/4" = 1'-0"

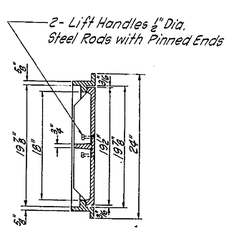

SECTION B-B

1" = 1'-0"

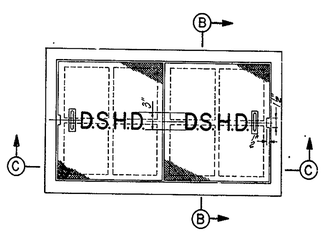

PLAN

1" = 1'-0"

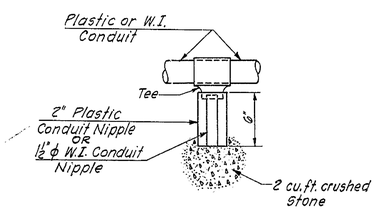

CONDUIT DRAINAGE DETAIL

No Scale

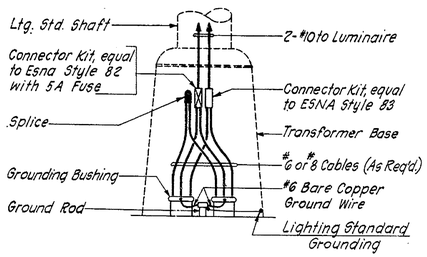

LIGHTING STANDARD WIRING

No Scale

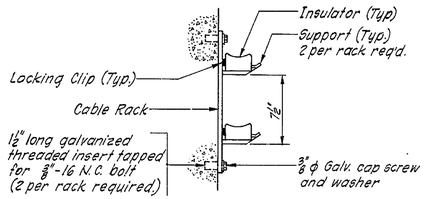

CABLE RACK ASSEMBLY

1 1/2" = 1'-0"
(See Note 6)

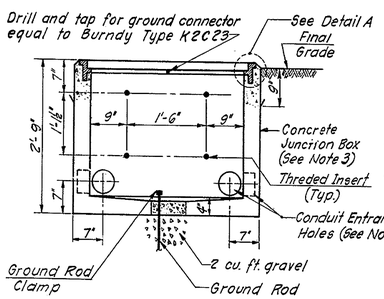

SECTION A-A

3/4" = 1'-0"

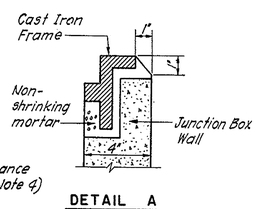

DETAIL A

3" = 1'-0"

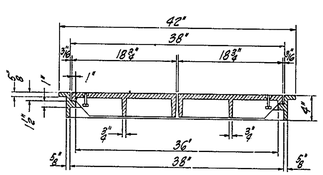

SECTION C-C

1" = 1'-0"

FRAME AND COVER
(See Note 5)

CONCRETE JUNCTION BOX DETAILS

NOTES

1. This dimension may vary, as directed, in order to maintain alignment with existing lighting standards.
2. For details of lighting standard Type C mounting, conduit and junction boxes embedded in structures, see Sheet No. 51.
3. Concrete junction box shall be reinforced with #3 bars 12" o.c. throughout.
4. Conduit entrance holes shall be 5" Dia. with 1" knockout wall.
5. Frame and cover shall be equal to Flockhart Foundry Co.'s Dwg. No. 18664, and completely H.D. Galvanized after fabrication.
6. Cable rack assembly shall be manufactured by the McGraw-Edison Power System Division, or approved equal, and shall consist of the following components:
   - Rack — Cat. No. DU 1782
   - Support — Cat. No. DU 561
   - Insulator — Cat. No. DE 1141
   - Locking Clip — Cat. No. WDU 4M1

   (4 assemblies per junction box are required)

DELAWARE TURNPIKE	CONT. NO.	TITLE	SHEET NO.	TOTAL SHEETS
	7053	MAINTENANCE AND PROTECTION OF TRAFFIC	38	86

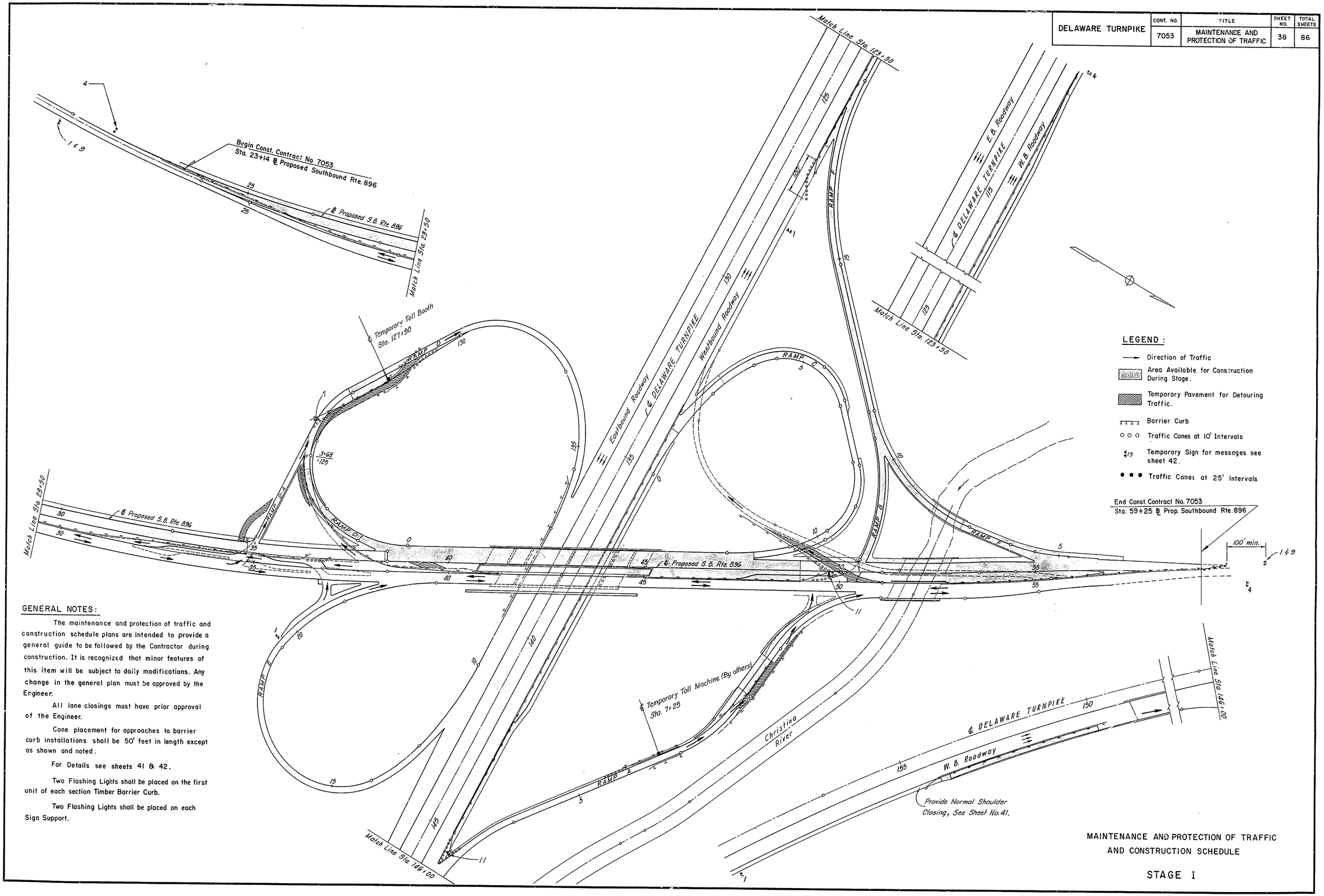

LEGEND :

- Direction of Traffic
- Area Available for Construction During Stage.
- Temporary Pavement for Detouring Traffic.
- Barrier Curb
- Traffic Cones at 10' Intervals
- Temporary Sign for messages see sheet 42.
- Traffic Cones at 25' Intervals

GENERAL NOTES:

The maintenance and protection of traffic and construction schedule plans are intended to provide a general guide to be followed by the Contractor during construction. It is recognized that minor features of this item will be subject to daily modifications. Any change in the general plan must be approved by the Engineer.

All lane closings must have prior approval of the Engineer.

Cone placement for approaches to barrier curb installations shall be 50' feet in length except as shown and noted.

For Details see sheets 41 & 42.

Two Flashing Lights shall be placed on the first unit of each section Timber Barrier Curb.

Two Flashing Lights shall be placed on each Sign Support.

MAINTENANCE AND PROTECTION OF TRAFFIC AND CONSTRUCTION SCHEDULE

STAGE I

DELAWARE TURNPIKE	CONT. NO.	TITLE	SHEET NO.	TOTAL SHEETS
	7053	MAINTENANCE AND PROTECTION OF TRAFFIC	39	86

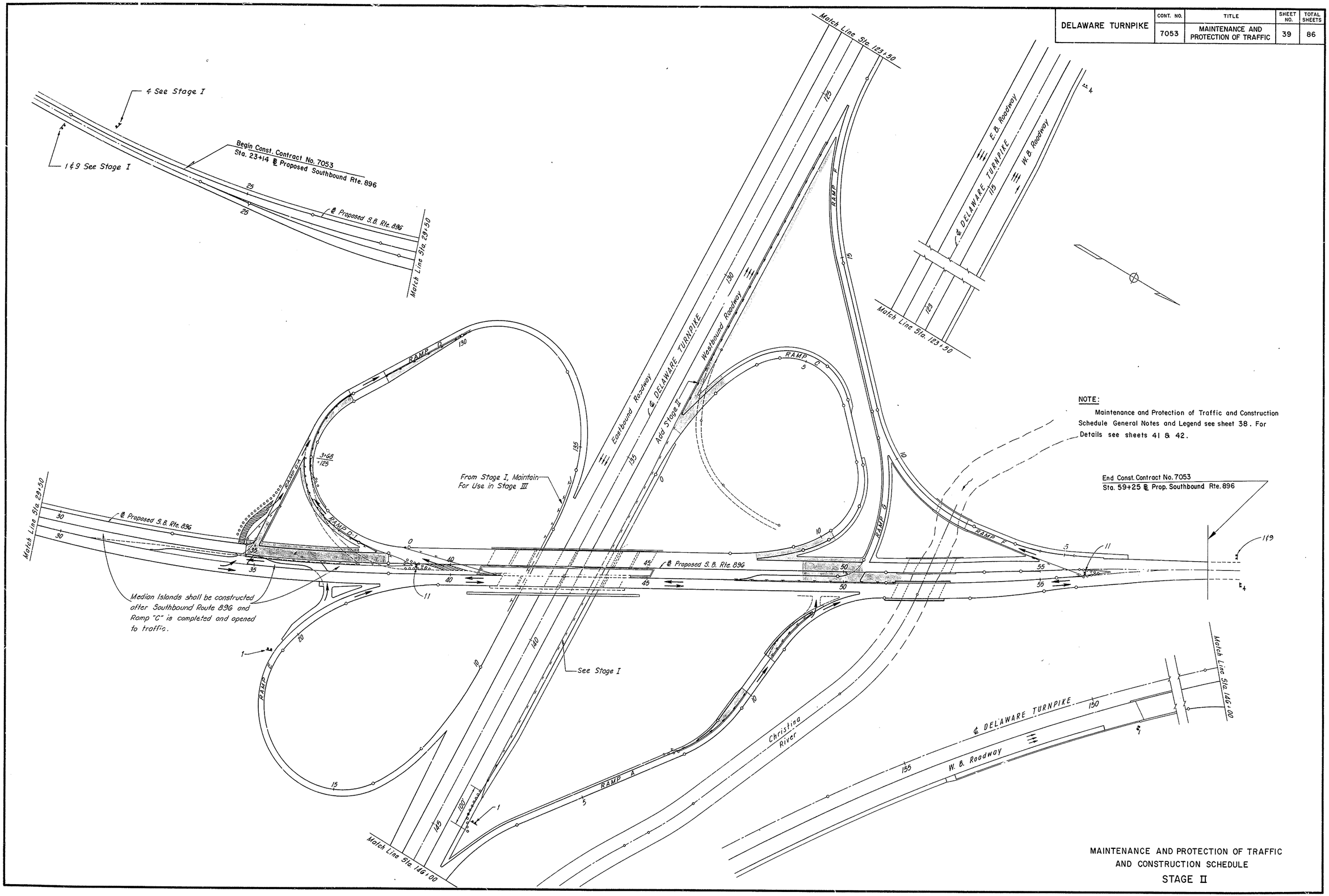

NOTE:

Maintenance and Protection of Traffic and Construction Schedule General Notes and Legend see sheet 38. For Details see sheets 41 & 42.

MAINTENANCE AND PROTECTION OF TRAFFIC AND CONSTRUCTION SCHEDULE

STAGE II

DELAWARE TURNPIKE	CONT. NO.	TITLE	SHEET NO.	TOTAL SHEETS
	7053	MAINTENANCE AND PROTECTION OF TRAFFIC	40	36

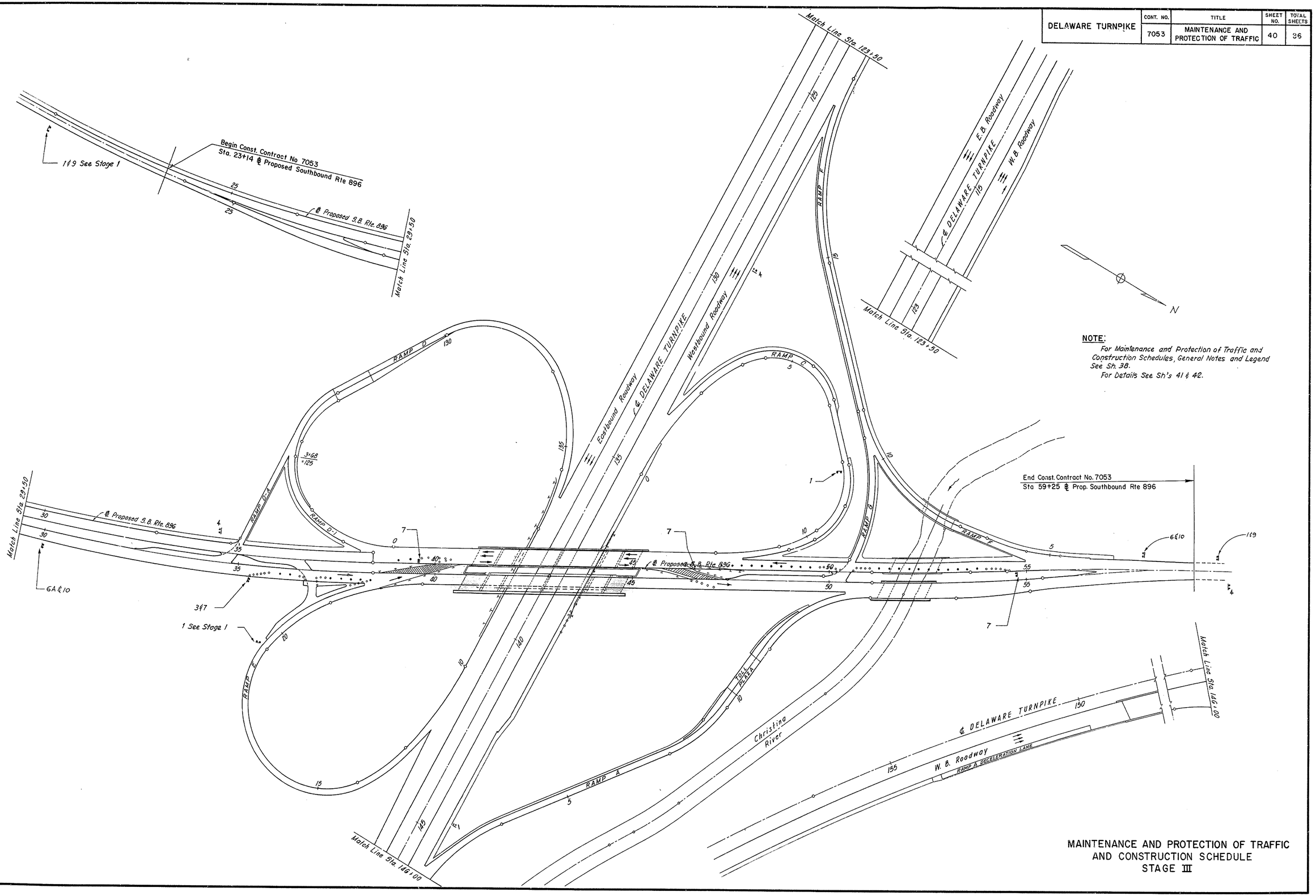

NOTE:

For Maintenance and Protection of Traffic and Construction Schedules, General Notes and Legend See Sh. 38.

For Details See Sh's 41 & 42.

MAINTENANCE AND PROTECTION OF TRAFFIC
AND CONSTRUCTION SCHEDULE
STAGE III

DELAWARE TURNPIKE	CONT. NO	TITLE	SHEET NO.	TOTAL SHEETS
	7053	MAINTENANCE AND PROTECTION OF TRAFFIC	41	86

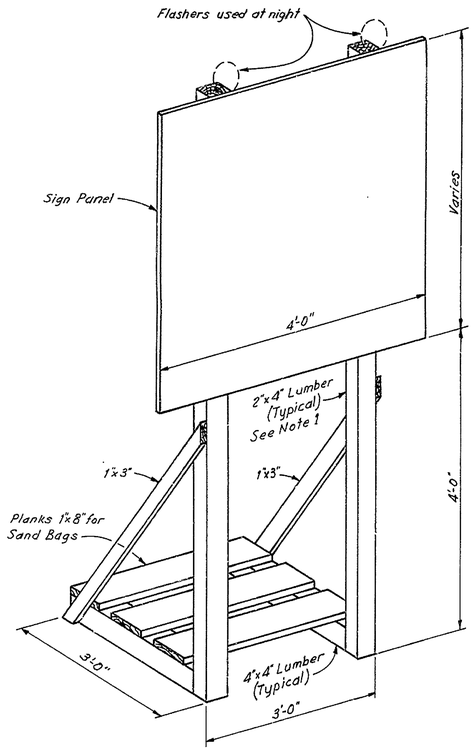

SIGN SUPPORT

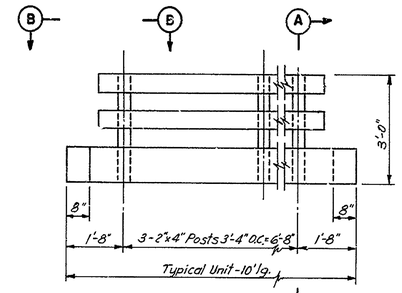

ELEVATION

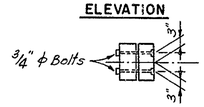

SECTION C-C

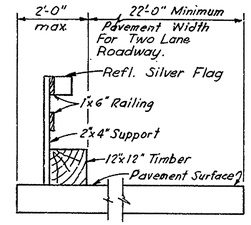

SECTION A-A

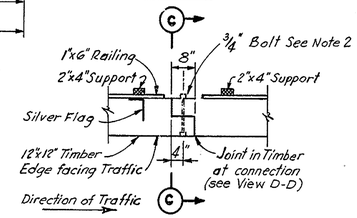

SECTION B-B

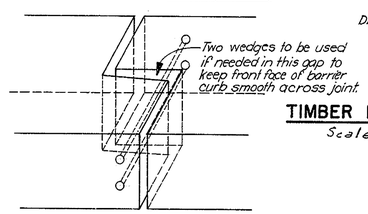

VIEW D-D

TIMBER BARRIER CURB

Scale 1/2" = 1'-0"

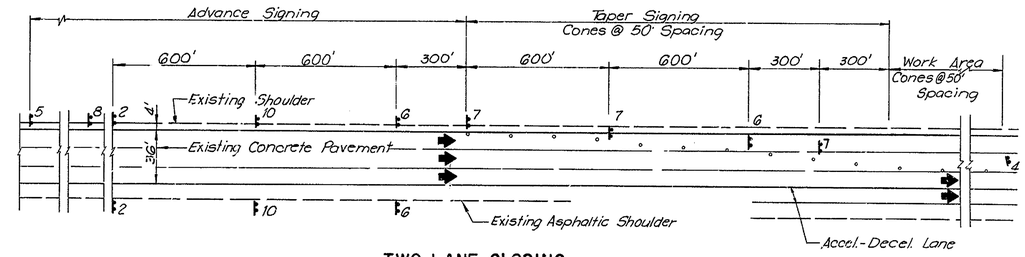

TWO LANE CLOSING

(For bridge painting only)

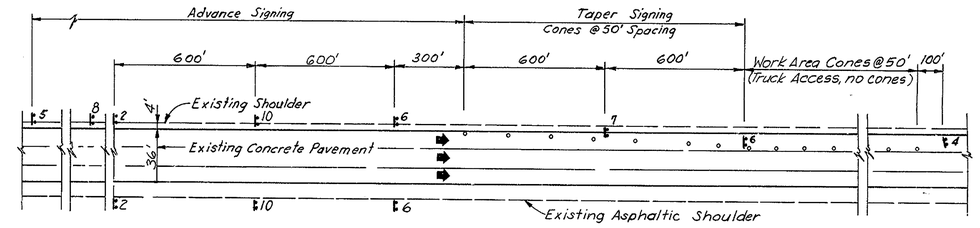

LANE CLOSING

(See note 4 & 7)

NOTES:

1. - Sign Support frame to be painted white.
2. - Barrier Curb sections shall be connected by bolting together 12" x 12" timber sections with 3/4" ϕ bolts, nuts & washers. Countersink Bolt head in front edge of curb.
3. - Full Shoulder Closing layout shows right shoulder closing, left shoulder closing similar.
4. - Only one lane closing to be in place at any given time, and to be allowed to remain in place only during daylight hours.
5. - A shoulder closing on the Turnpike Roadway is to be placed 400' in front of the first section of the continous Timber Barrier Curb.
6. - Full Lane Closing layout shows left lane closing, right lane closing similar.
7. - Lane Closing to be used for contractor access point to median for pier construction.

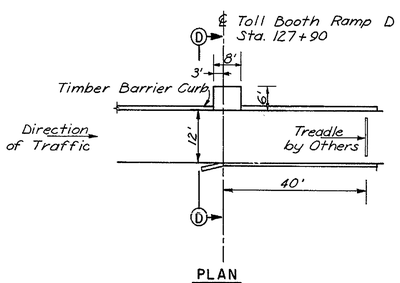

PLAN

Scale 1" = 20'

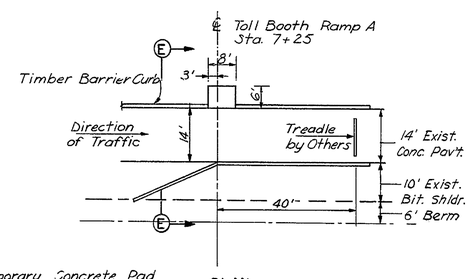

Note: Temporary Concrete Pad reinforcement to be #3 bars @ 10" ctrs. each way. Top and bottom clearance 3 1/2". (To be paid for under Item 18 Masonry - Footings)

PLAN

Scale 1" = 20'

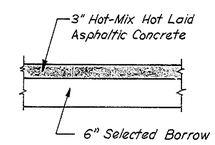

TYPICAL TEMPORARY PAVEMENT SECTION

No Scale

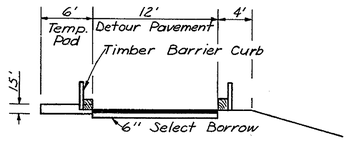

SECTION D-D

Scale 1/8" = 1'-0"

TEMPORARY TOLL PLAZA

RAMP D

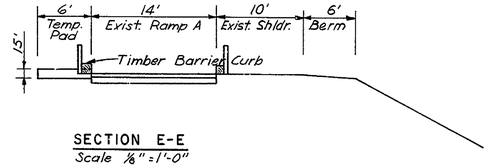

SECTION E-E

Scale 1/8" = 1'-0"

TEMPORARY TOLL PLAZA

RAMP A

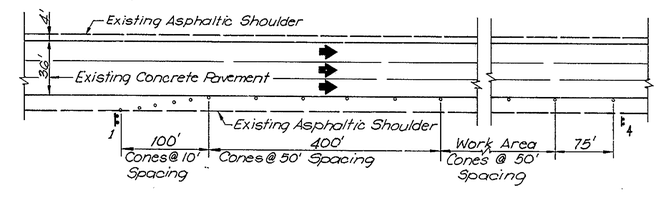

SHOULDER CLOSING

DELAWARE TURNPIKE	CONT. NO.	TITLE	SHEET NO.	TOTAL SHEETS
	7053	MAINTENANCE AND PROTECTION OF TRAFFIC	42	86

SIGN NO. 1

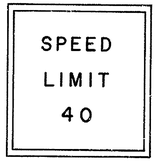

SIGN NO. 2

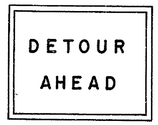

SIGN NO. 3

SIGN NO. 4

SIGN NO. 5 & 5A

* Sign No. 5A shall have the same Text as sign No. 5 except that LEFT shall read RIGHT.
** Add "S" to word LANE for two lane closing for bridge painting.

SIGN NO. 6 & 6A

* Sign No. 6A shall have the same Text as sign No. 6 except that LEFT shall read RIGHT.

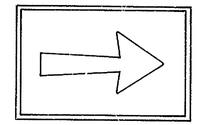

SIGN NO. 7

SIGN NO.	LETTERS		COLORS			SIZE W x H	WIDTH OF BORDER
	SIZE	VERT. SPACING	BORDER	COPY	BACK-GROUND		
1	6 6 6	8 7 7 8	AGA	AGA	YELLOW REFL.	4'-0" x 4'-0"	1 1/2"
2 9	6 6 10	7 6 6 7	AGA	AGA	SILVER REFL.	4'-0" x 4'-0"	1 1/2"
3	6 6	8 8 8	AGA	AGA	YELLOW REFL.	4'-0" x 3'-0"	1 1/2"
4	6 6 6	8 7 7 8	AGA	AGA	YELLOW REFL.	4'-0" x 4'-0"	1 1/2"
5 & 5A 8 & 8A	6 6 8 10 6	8 7 7 7 7 8	AGA	AGA	YELLOW REFL.	4'-0" x 6'-0"	1 1/2"
6 & 6A	6 6 6	8 7 7 8	AGA	AGA	YELLOW REFL.	4'-0" x 4'-0"	1 1/2"
7	INTERSTATE ARROW		AGA	AGA	YELLOW REFL.	5'-0" x 3'-0"	1 1/2"
10	6 6 6	8 7 7 8	AGA	AGA	YELLOW REFL.	4'-0" x 4'-0"	1 1/2"
11	*	7 7	AGA	AGA	YELLOW REFL.	4'-6" x 3'-0"	1 1/2"

* Type A-3 arrows, see this sheet.

SIGN NO. 8 & 8A

* Sign No. 8A shall have the same Text as sign No. 8 except that LEFT shall read RIGHT.
** Add "S" to word LANE for two lane closing for bridge painting.

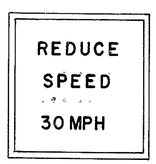

SIGN NO. 9

SIGN NO. 10

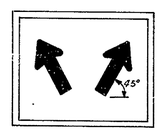

SIGN NO. 11

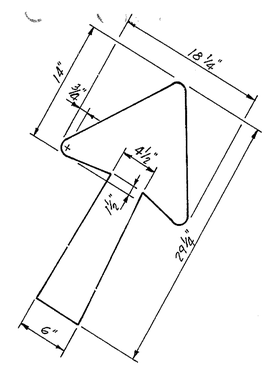

TYPE "A-3" ARROW

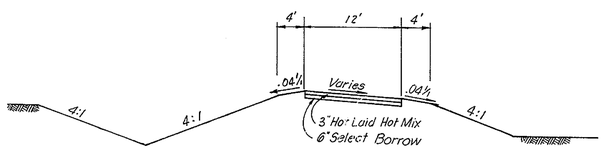

TYPICAL SECTION DETOUR PAVEMENT

DELAWARE TURNPIKE	CONT. NO.	TITLE	SHEET NO.	TOTAL SHEETS
	7053		43	86

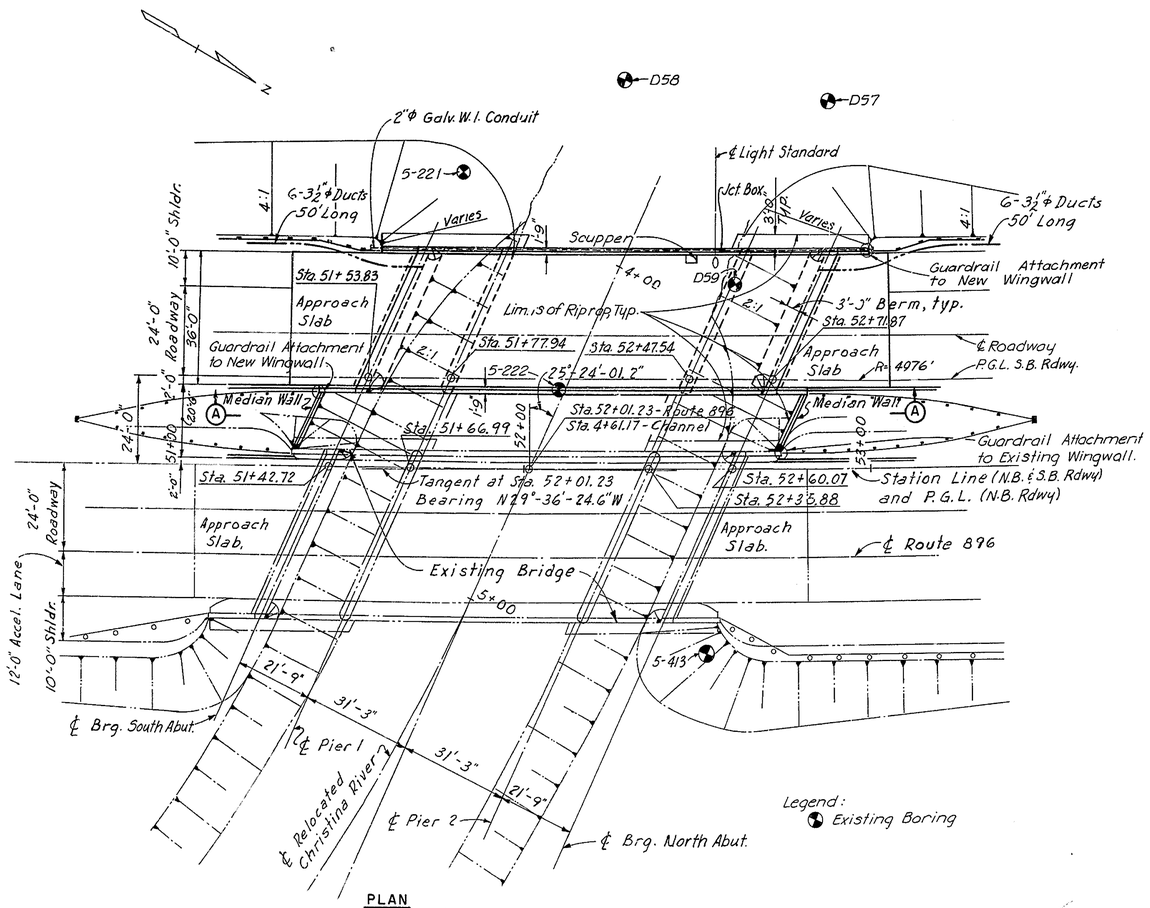

PLAN
Scale 1" = 20'

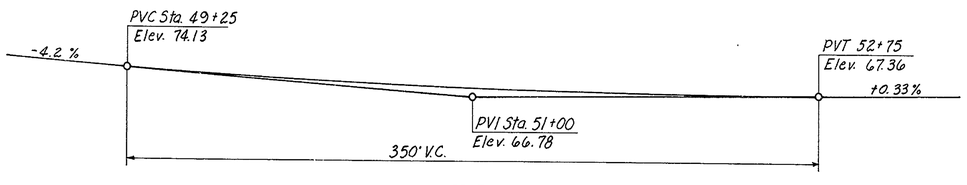

PROFILE
No Scale

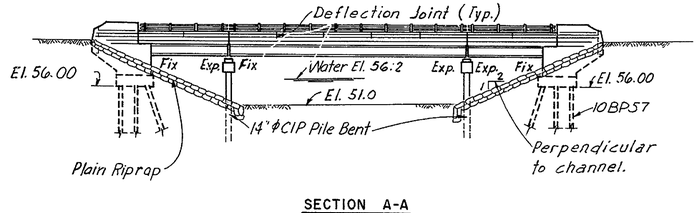

SECTION A-A
Scale 1" = 20'

ESTIMATED QUANTITIES

ITEM NO.	DESCRIPTION	UNIT	QUANTITY
4	Excavation for Structures.	C.Y.	410
11	Hot-mix, Hot-laid Asphaltic Conc. Pavement	Tons	103
18	Portland Cement Concrete Masonry		
	Footings	C.Y.	68
	Substructure above footings	C.Y.	105
	Superstructure	C.Y.	160
	Approach Slabs	C.Y.	100
19	Superficial Waterproofing	S.Y.	75
20	Bar Reinforcement	Lbs.	64,300
22	Structural Steel (Estimated Wt. 116,000 lbs.)	L.S.	1
31	6"φ Perforated Corr. Metal Pipe Underdrain	L.F.	130
	Steel Bearing Piles – 10BP57	L.F.	980
35	Cast-in-Place Concrete Piles 14"φ (bents)	L.F.	510
	Bridge Drainage	L.S.	1
64	Riprap (Plain)	S.Y.	400
	Coal Tar Epoxy Underseal	S.Y.	660
	Protective Coating for Concrete	S.F.	590
22A	Aluminum Railing-Double Rail	L.F.	240
	3½"φ Galvanized W.I. ducts	L.F.	600

GENERAL NOTES:

Construction Specifications: Delaware State Highway Department Standard Specifications dated June 1, 1965 and Special Provisions.

Design Specifications: A.A.S.H.O. Standard Specifications for Highway Bridges dated 1965.

Design Live Load: HS20-44.

Design Stresses: Concrete fc = 1200 p.s.i. Structural and Reinforcing Steel fs = 20,000 p.s.i.

Concrete:
All exposed edges shall be chamfered 1" unless otherwise noted.
Concrete cover on reinforcing shall be 2" min. unless otherwise shown in the plans.

Bar Reinforcement: Bar reinforcement shall be deformed billet-steel bars (A-615) Grade 40.
All bar laps shall be 30 diameters minimum of the smaller bar spliced, unless otherwise noted.
In computing the total length shown for each bent bar, dimensions of legs adjoining each bend (not 135° or 180° hooks) were carried to the point of intersection of both legs and no deductions were made for the shorter distance along the curve. The Contractor shall take this fact into consideration when ordering and fabricating bent bars
The first digit of the bar mark denotes the bar size, i.e. A501 is a No. 5 bar.

Structural Steel: Structural Steel shall conform to the requirements of A.S.T.M. Designation A-36 except as noted.

Piles: All piles in Abutments shall be 10BP57 steel bearing piles driven to a minimum bearing capacity of 50 tons. All piles in Piers shall be 14"φ cast-in-place concrete piles driven to a minimum bearing capacity of 50 tons.

NO.	REVISION	BY	DATE
3			
2			
1			
		BY	DATE
MADE	L.D.F.		11-68
CHECKED	J.B.G.		12-68
IN CHARGE	J.E.H.		

DELAWARE STATE HIGHWAY DEPARTMENT
DELAWARE TURNPIKE
ROUTE 896 INTERCHANGE IMPROVEMENTS
BRIDGE OVER CHRISTINA RIVER
GENERAL PLAN & ELEVATION

HOWARD, NEEDLES, TAMMEN & BERGENDOFF
consulting engineers
NEW YORK KANSAS CITY

SCALE: As Noted
CONTRACT NO. 7053
SHEET NO. 1 OF 9

DELAWARE TURNPIKE	CONT. NO.	TITLE	SHEET NO.	TOTAL SHEETS
	7053		44	86

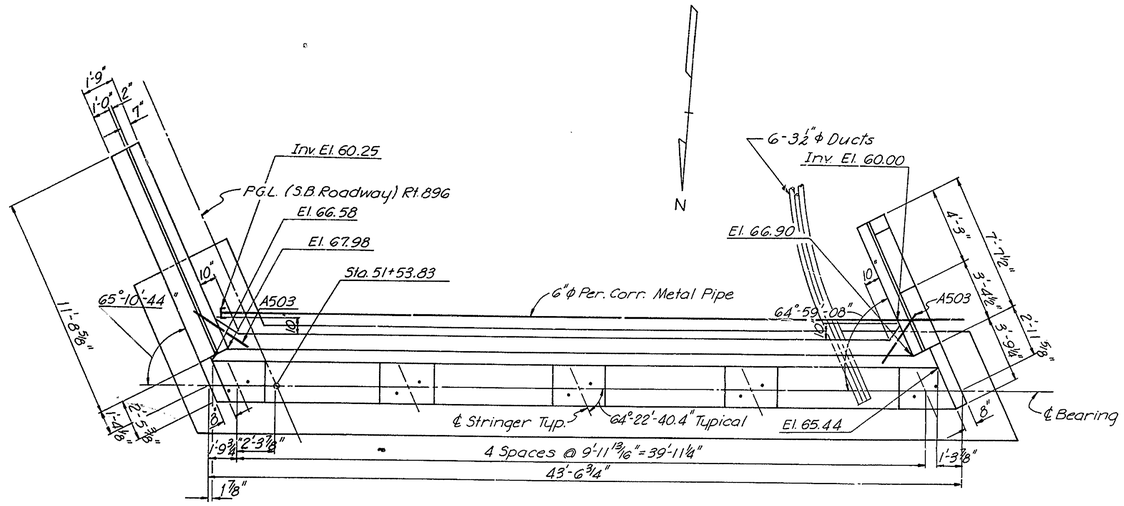

PLAN OF SOUTH ABUTMENT

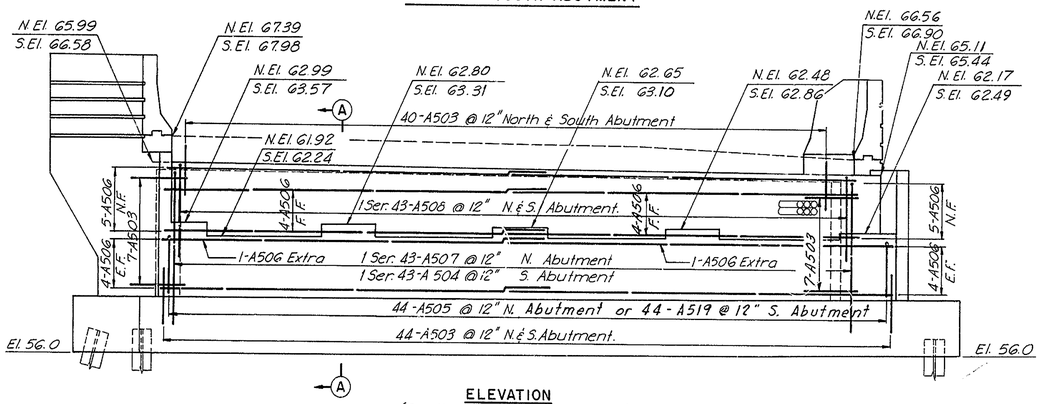

ELEVATION
(South Abutment as shown)
(North Abutment opp. hand)

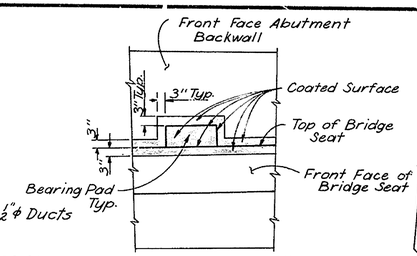

APPLICATION LIMITS OF EPOXY PROTECTIVE COATING FOR CONCRETE

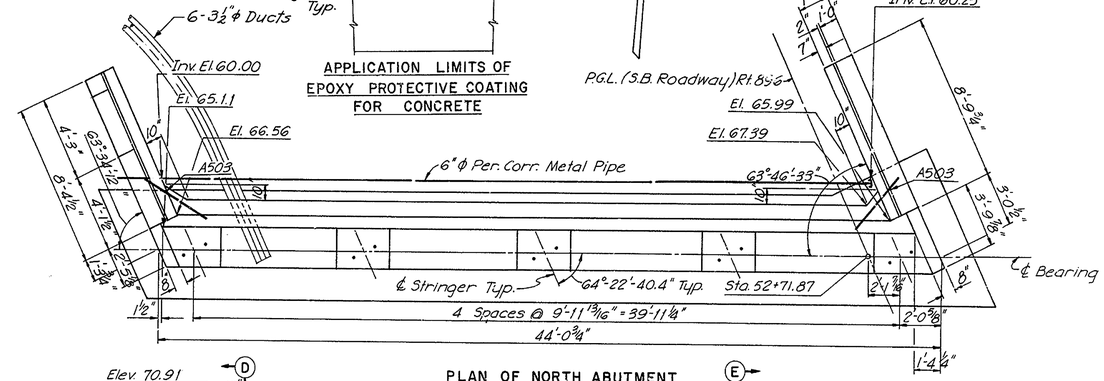

PLAN OF NORTH ABUTMENT

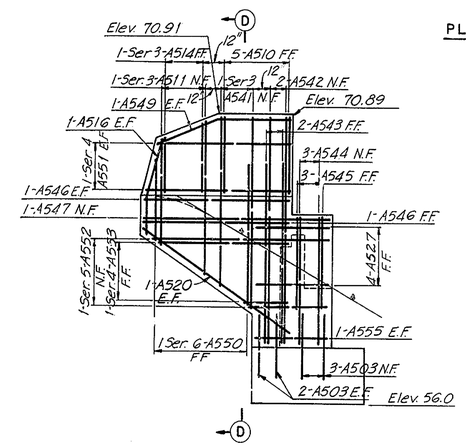

ELEVATION N.W. WINGWALL

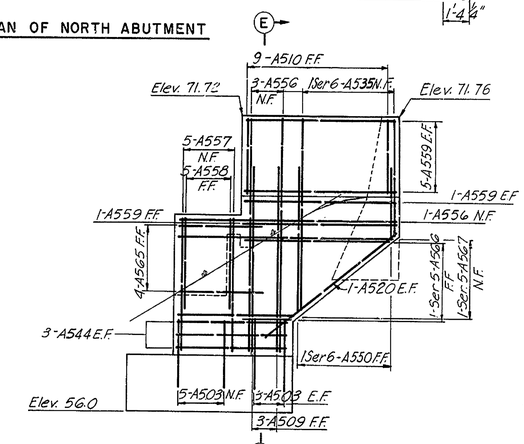

ELEVATION N.E. WINGWALL

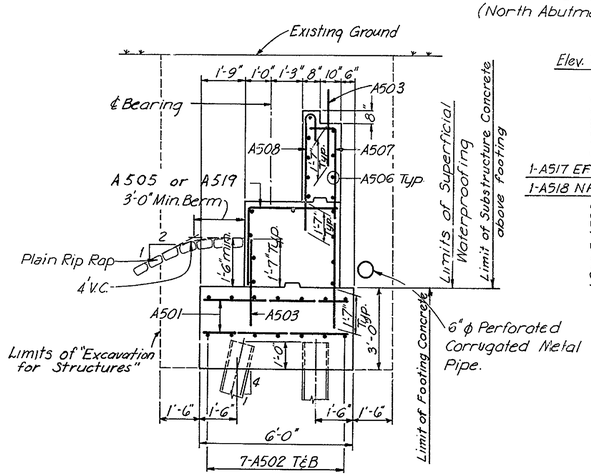

SECTION A-A
Scale 3/8" = 1'-0"

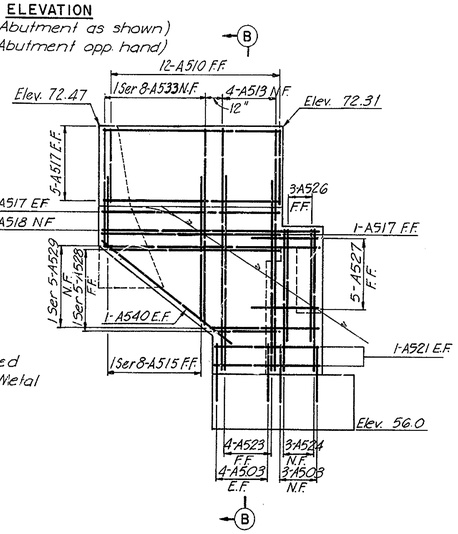

ELEVATION S.E. WINGWALL

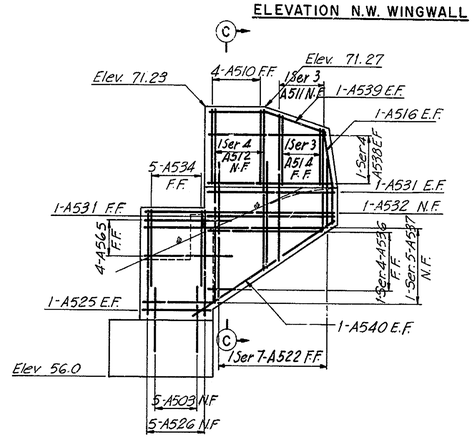

ELEVATION S.W. WINGWALL

NOTES:

For General Notes see sheet No. 1 of 9.
For Sections B-B, C-C, D-D and E-E see sheet No. 3 of 9.
For Footing Plans and Typical Pad Details see sheet No. 3 of 9.
Min. Reinforcing Steel Concrete Cover 3" in footing, 2" above footing.
Backfill behind abutments to be placed only after bridge deck slab has been completed.
All bars spaced at 12" Max. unless noted.
All construction joints to have 2"×6" continous key.

Legend:
N.F. denotes Near Face
E.F. denotes Each Face
F.F. denotes Far Face

NO.	REVISION	BY	DATE
3			
2			
1			

	BY	DATE
MADE	D.L.S.	11-68
CHECKED	J.B.G.	12-68
IN CHARGE	J.E.H.	

DELAWARE STATE HIGHWAY DEPARTMENT

DELAWARE TURNPIKE

ROUTE 896 INTERCHANGE IMPROVEMENTS
BRIDGE OVER CHRISTINA RIVER

ABUTMENTS

HOWARD, NEEDLES, TAMMEN & BERGENDOFF
consulting engineers
NEW YORK KANSAS CITY

SCALE: ¼"=1'-0" unless noted
CONTRACT NO. 7053
SHEET NO. 2 OF 9

DELAWARE TURNPIKE	CONT NO.	TITLE	SHEET NO.	TOTAL SHEETS
	7053		45	86

Note: For details of Guardrail Anchorage See Sheet No. 12.

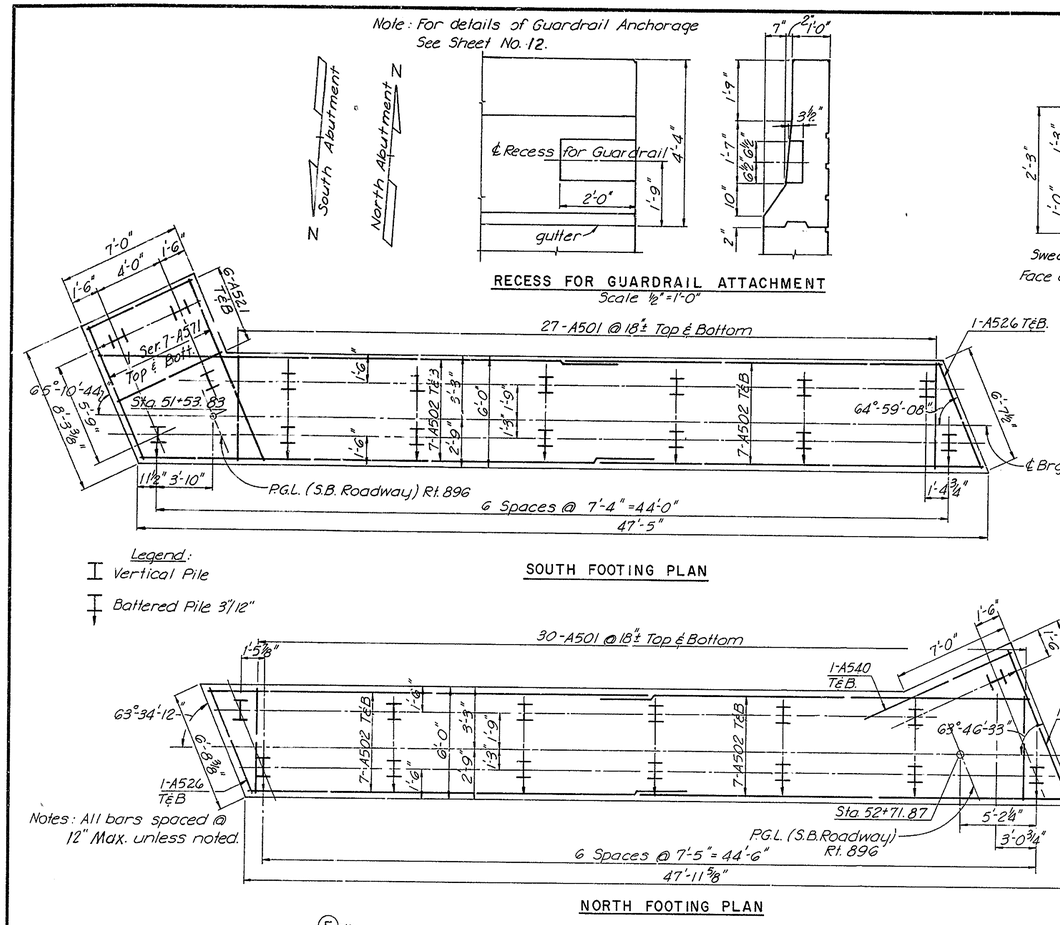

Notes: All bars spaced @ 12" Max. unless noted.

Legend:
Vertical Pile
Battered Pile 3/12

SOUTH FOOTING PLAN

NORTH FOOTING PLAN

RECESS FOR GUARDRAIL ATTACHMENT
Scale ½" = 1'-0"

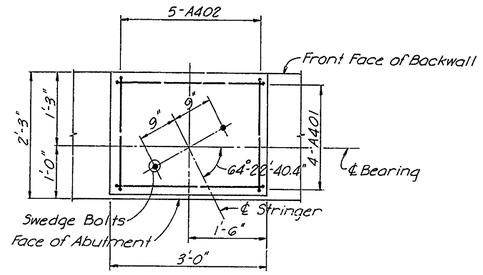

PLAN

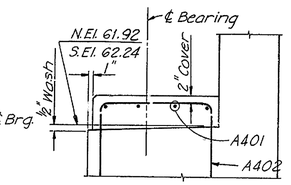

ELEVATION

TYPICAL PAD DETAILS
No Scale

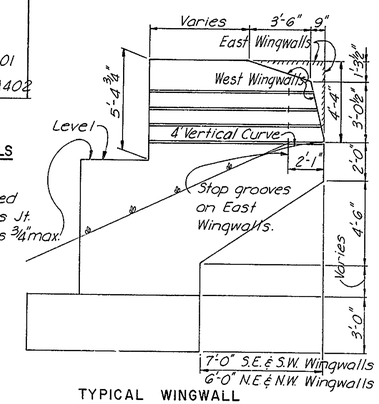

TYPICAL WINGWALL

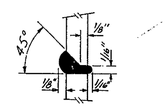

100% BUTT-WELDED SPLICE DETAIL
No Scale

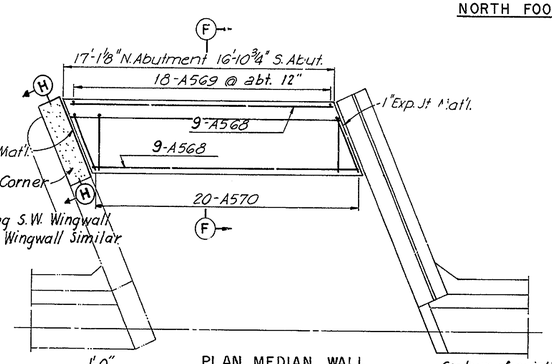

PLAN MEDIAN WALL

APPROX. PILE TIP ELEVATION	
South Abut.	25.0
North Abut.	25.0

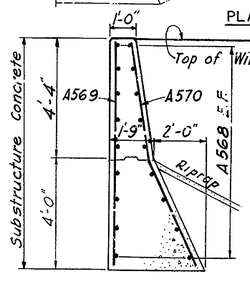

SECTION F-F
Scale 3/8" = 1'-0"

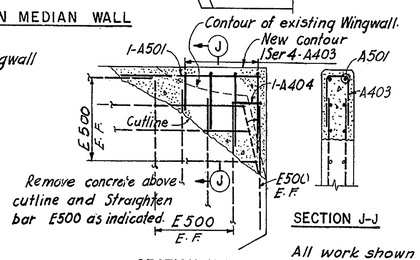

SECTION J-J

SECTION H-H
Scale: 3/8" = 1'-0"

Note: Bars E500 are existing.

All work shown in Sections H-H and J-J is be paid for under Item 18 P.C.C. Masonry - Superstructure.

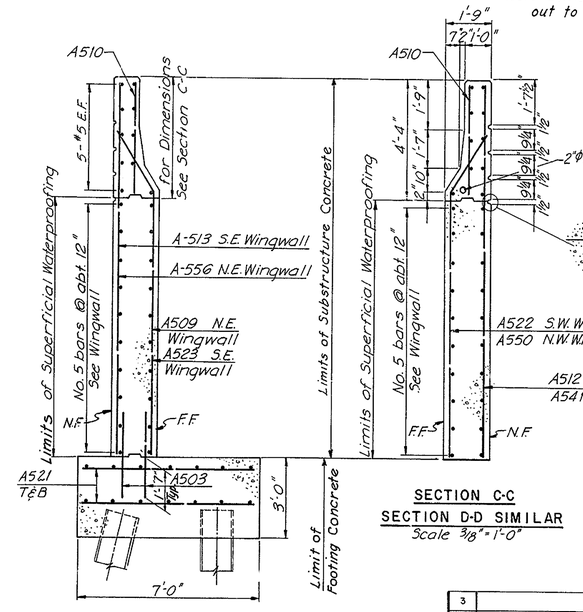

SECTION B-B
SECTION E-E SIMILAR
EXCEPT FOR FOOTING
Scale 3/8" = 1'-0"

SECTION C-C
SECTION D-D SIMILAR
Scale 3/8" = 1'-0"

REINFORCING BAR SCHEDULE

MARK	NO.	TYPE	A	B	C	LENGTH
A401	40	4	1'-9"	2'-8"	1'-9"	6'-2"
A402	50	4	1'-9"	1'-10"	1'-9"	5'-5"
A501	118	Str.				5'-6"
A502	56	"				24'-4"
A503	230	"				3'-2"
A504	1 Ser 43	1	7'-4"-8'-5"	1'-2"		8'-6" - 9'-7"
A505	44	1	2'-7"	3'-5"		6'-0"
A506	72	Str.				22'-0"
A507	1 Ser. 43	1	6'-10"-7'-9"	1'-2"		8'-0"-8'-11"
A508	2 Ser 43	2	4'-7"-5'-7"	7"		5'-2"-6'-2"
A509	3	3	8'-4"	2'-0"	1'-3"	10'-8"
A510	30	Str.				4'-0"
A511	2 Ser. 3	"				5'-3"-7'-3"
A512	1 Ser. 4	"				8'-6"-10'-6"
A513	4	Str.				13'-0"
A514	2 Ser. 3	"				2'-9"-3'-9"
A515	1 Ser 8	3	2'-0"-8'-0"	2'-0"	1'-5"	4'-0"-10'-0"
A516	4	3	1'-9"	2'-11"	9"	4'-9"
A517	13	Str.				11'-4"
A518	1	"				13'-8"
A519	44	1	3'-0"	3'-5"		6'-5"
A520	4	Str.				8'-3"
A521	16	"				6'-7"
A522	1 Ser. 7	3	2'-5"-6'-8"	2'-0"	1'-5"	4'-9"-9'-0"
A523	4	3	8'-11"	2'-0"	1'-3"	11'-3"
A524	3	Str.				7'-8"
A525	2	"				3'-5"
A526	12	"				6'-0"
A527	9	"				3'-10"
A528	1 Ser. 5	"				4'-2"-10'-10"
A529	1 Ser. 5	"				6'-9"-13'-5"
A531	3	"				7'-3"
A532	1	"				11'-0"
A533	1 Ser. 8	"				6'-0"-10'-6
A534	5	Str.				4'-10"
A535	1 Ser. 6	"				6'-0"-10'-0"
A536	1 Ser. 4	"				2'-2"-6'-6"
A537	1 Ser. 5	"				4'-0"-10'-6
A538	2 Ser. 4	"				6'-3"-7'-0"
A539	2	3	3'-2"	3'-4"	1'-3"	6'-9"
A540	4	Str.				8'-9"
A541	1 Ser. 3	"				8'-3"-10'-3"
A542	2	Str.				11'-8"
A543	2	3	7'-4"	2'-0"	1'-3"	9'-8"
A544	9	Str.				6'-2"
A545	3	"				5'-0"
A546	3	"				8'-0"
A547	1	"				10'-6"
A549	2	3	4'-0"	3'-4"	1'-3"	7'-7"
A550	2 Ser. 6	3	2'-8"-7'-3"	2'-0"	1'-5"	5'-0"-9'-7"
A551	2 Ser. 4	Str.				7'-4"-8'-0"
A552	1 Ser. 5	"				4'-9"-10'-0"
A553	1 Ser. 4	"				2'-2"-7'-10
A555	2	"				4'-6"
A556	4	"				12'-4"
A557	5	"				7'-0"
A558	5	"				5'-9"
A559	13	"				8'-6"
A565	8	Str				5'-3"
A566	1 Ser. 5	"				2'-5"-8'-3"
A567	1 Ser. 5	"				6'-3"-12'-0"
A568	36	"				16'-6"
A569	36	"				7'-11"
A570	40	3	4'-4"	4'-3"	1'-3	8'-7"
A571	2 Ser. 7	Str.				7'-9"-10'-9"
A572	2	"				9'-6"
A403	2 Ser 4	4	1'-4"-3'-0"	0'-11"	1'-4"-3'-0"	3'-7"-6'-11"
A404	2	4	1'-2"	0'-11"	1'-2"	3'-3"

BAR BENDING DIAGRAMS

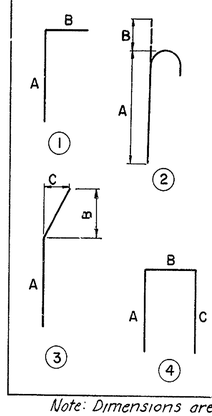

Note: Dimensions are out to out of bars.

NO.	REVISION	BY	DATE
3			
2			
1			

	BY	DATE
MADE	D.L.S.	12/68
CHECKED	J.B.G.	12/68
IN CHARGE	J.E.H.	

DELAWARE STATE HIGHWAY DEPARTMENT

DELAWARE TURNPIKE

ROUTE 896 INTERCHANGE IMPROVEMENTS
BRIDGE OVER CHRISTINA RIVER

ABUTMENT DETAILS

HOWARD, NEEDLES, TAMMEN & BERGENDOFF
consulting engineers
NEW YORK KANSAS CITY

SCALE: ¼" = 1'-0" unless noted
CONTRACT NO. 7053
SHEET NO. 3 OF 9

DELAWARE TURNPIKE	CONT NO.	TITLE	SHEET NO.	TOTAL SHEETS
	7053		46	86

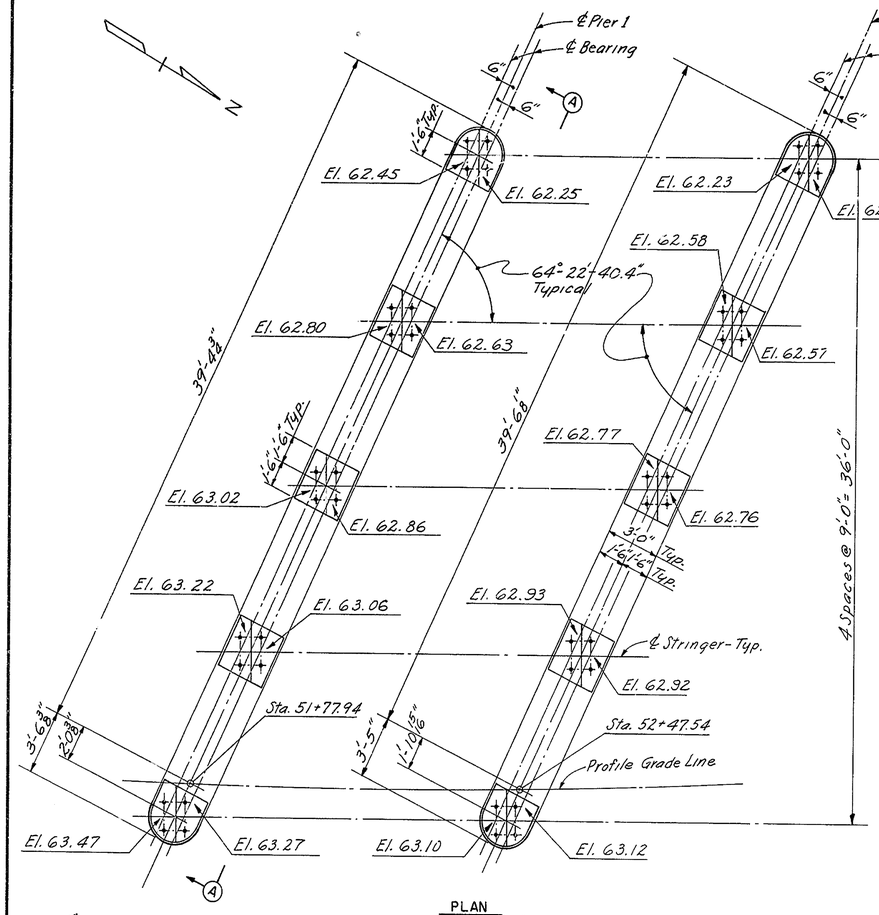

PLAN
Scale 1/4" = 1'-0"

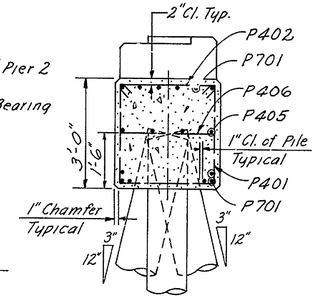

SECTION C-C
Scale 1/2" = 1'-0"

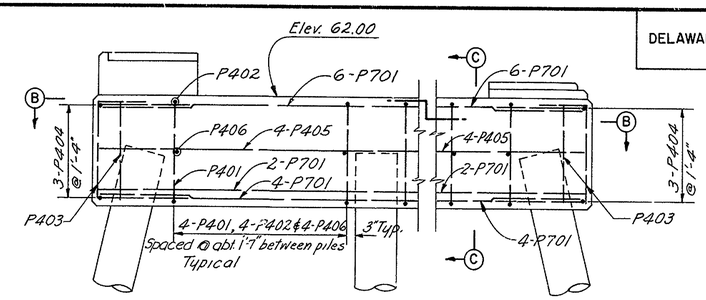

ELEVATION A-A
Scale 1/2" = 1'-0"

REINFORCING SCHEDULE *			
MARK	NUMBER	TYPE	LENGTH
P401	24	1	8'-9"
P402	24	2	3'-5"
P403	6	3	4'-0"
P404	6	4	6'-8"
P405	8	Str.	22'-1"
P406	24	Str.	2'-8"
P407	32	5	7'-0"
P408	6	5	6'-5"
P409	15	5	7'-4"
P701	24	Str.	22'-5"

*Quantities shown are for one Pier only

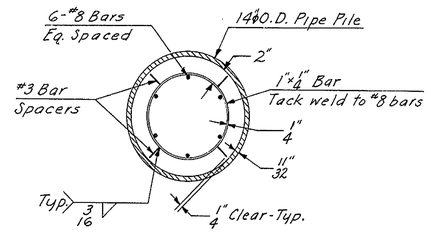

SECTION F-F
Scale 1 1/2" = 1'-0"

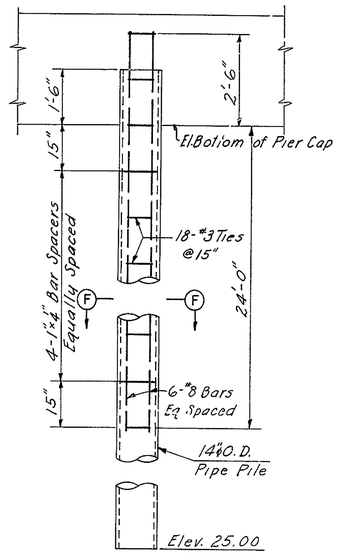

TYPICAL PILE DETAIL
Not to scale

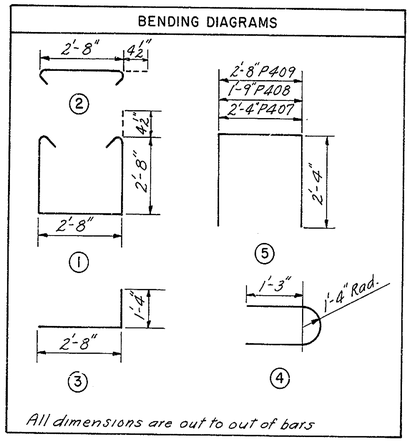

SECTION B-B
Scale 1/2" = 1'-0"

NOTES:

All pier piles shall be 14" ϕ C.I.P. Concrete. Exterior surfaces of 14" ϕ C.I.P. Piles to be coated from 6" above bottom of cap beam to Elev. 46.00 with a coal-tar epoxy material equal to "Tarset" as specified. Two coats of "Tarset+" shall be applied; each coat of not more than 125 ft²/gallon. These coatings shall be applied on blast cleaned surfaces of the pile for the length indicated above.

Pad elevations given denote top of finished concrete pad. For details of anchor bolts for shoes, see Sheet No. 8 of 9. For General Notes, see Sheet No. 1 of 9.

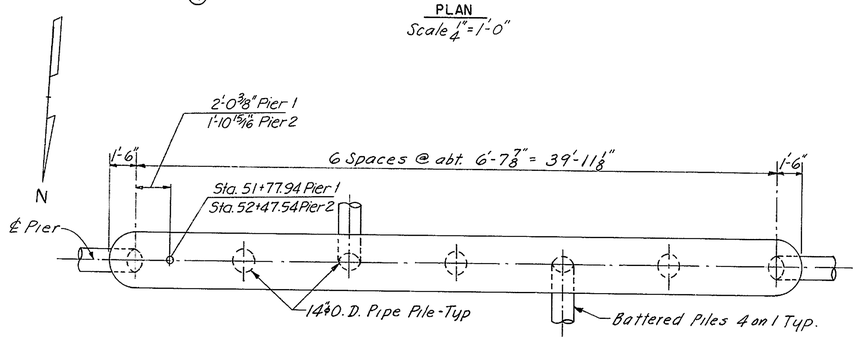

PILE PLAN
Scale 1/4" = 1'-0"

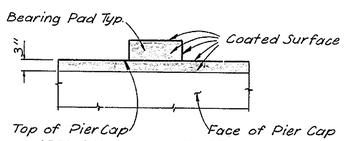

APPLICATION LIMITS OF EPOXY PROTECTIVE COATING FOR CONCRETE
Part Elevation at Pier

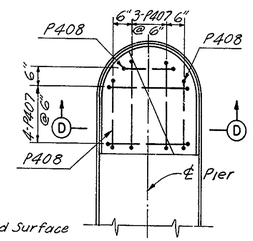

EXTERIOR PAD PLAN

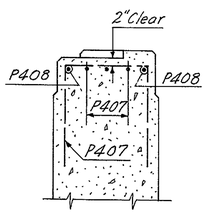

SECTION D-D

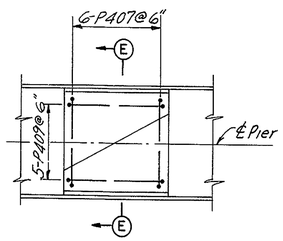

INTERIOR PAD PLAN

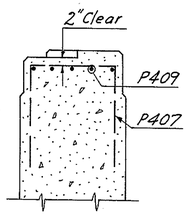

SECTION E-E

PAD DETAILS
Scale 1/2" = 1'-0"

NO.	REVISION	BY	DATE
3			
2			
1			

	BY	DATE
MADE	F.J.C.	12-68
CHECKED	J.B.G.	12-68
IN CHARGE	J.E.H.	

DELAWARE STATE HIGHWAY DEPARTMENT

DELAWARE TURNPIKE

ROUTE 896 INTERCHANGE IMPROVEMENTS
BRIDGE OVER CHRISTINA RIVER
PIERS

HOWARD, NEEDLES, TAMMEN & BERGENDOFF
consulting engineers
NEW YORK KANSAS CITY

SCALE: As Noted
CONTRACT NO. 7053
SHEET NO. 4 OF 9

DELAWARE TURNPIKE	CONT. NO.	TITLE	SHEET NO.	TOTAL SHEETS
	7053		47	86

Rev. 2/70

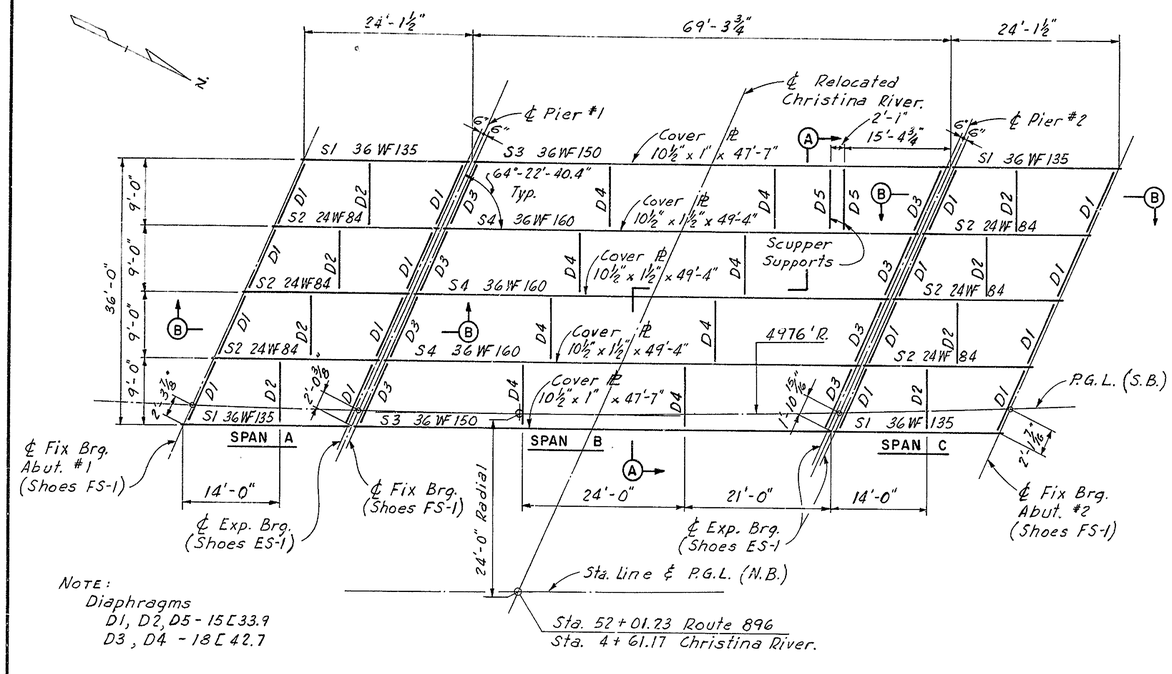

NOTE:
Diaphragms
D1, D2, D5 - 15[33.9
D3, D4 - 18[42.7

PLAN
Scale 1" = 10'

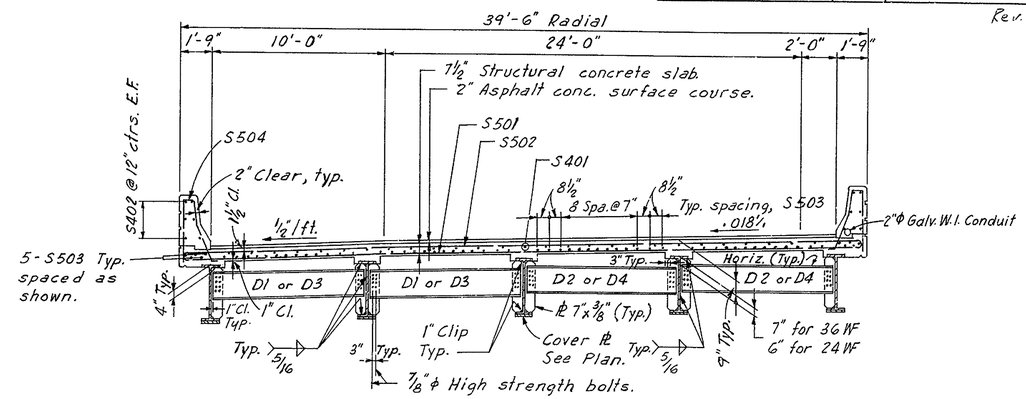

END DIAPHRAGM

INTERMEDIATE DIAPHRAGM

SECTION A-A
Scale ¼" = 1'-0"

NOTES:

For General Notes, see Sheet No. 1 of 9.

For Slab reinforcement see Sheet No. 6 of 9.

For Shoe Details see Sheet No. 8 of 9.

Shear stud spacing shown is maximum spacing.

For details of Diaphragms D5 supporting scupper, see Sheet No. 8 of 9.

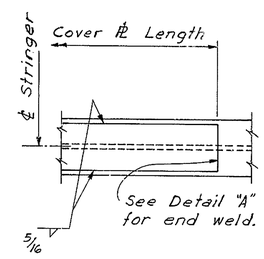

COVER PLATE DETAIL
Not to Scale

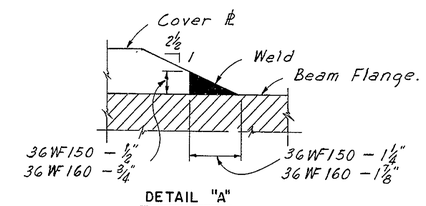

DETAIL "A"
Not to Scale

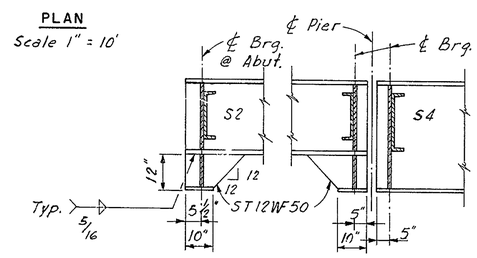

SECTION B-B
Scale ½" = 1'-0"

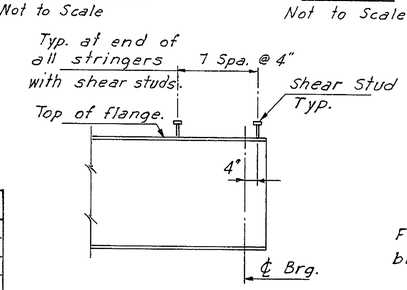

DETAIL "B"
Not to Scale

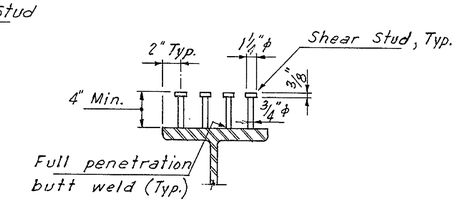

SHEAR STUD DETAIL
Not to Scale

CAMBER INCREMENTS FOR DEAD LOADS

	Stringer S1		Stringer S2		Stringer S3		Stringer S4	
	¼ & ¾L	½L	¼ & ¾L	½L	¼ & ¾L	½L	¼ & ¾L	½L
Structural Steel	—	—	.01	.01	.20	.28	.20	.28
Concrete Deck Slab	.02	.03	.06	.09	.70	.97	.79	1.10
Par. Rail & 2" Wear. Surf.	.01	.01	.03	.04	.13	.18	.14	.19
Full Dead Load	.03	.04	.10	.14	1.03	1.43	1.13	1.57
Vertical Curve	-.11	-.11	-.11	-.11	-.72	-.96	-.72	-.96
Total Camber	-.08	-.07	-.01	-.03	.31	.47	.41	.61

Note: All cambers are in inches.
Camber not required when it is less than 1 inch.

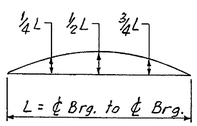

DEFLECTION DIAGRAM

STRINGER SCHEDULE

Stringer	Length ℄ Brg. to ℄ Brg.	Shear Stud Spacing 0.1L	0.2L	0.3L	0.4L	0.5L
S1 & S2	23'-6 13/16"	—	—	—	—	—
S3	68'-2½"	8"	9"	11½"	13"	14½"
S4	68'-2½"	6½"	7½"	10"	11"	12½"

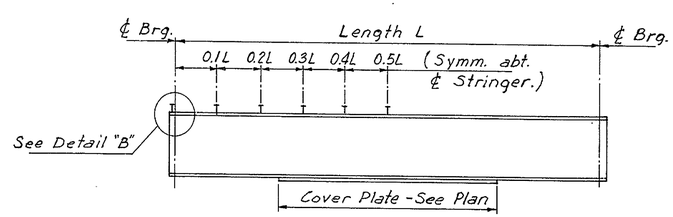

STRINGER ELEVATION
Not to Scale

NO.	REVISION	BY	DATE
3			
2			
1			

	BY	DATE
MADE	L.D.F.	12-68
CHECKED	J.B.G.	12-68
IN CHARGE	J.E.H.	

DELAWARE STATE HIGHWAY DEPARTMENT
DELAWARE TURNPIKE
ROUTE 896 INTERCHANGE IMPROVEMENTS
BRIDGE OVER CHRISTINA RIVER
FRAMING PLAN

HOWARD, NEEDLES, TAMMEN & BERGENDOFF
consulting engineers
NEW YORK KANSAS CITY

SCALE: As Noted
CONTRACT NO. 7053
SHEET NO. 5 OF 9

DELAWARE TURNPIKE	CONT. NO.	TITLE	SHEET NO.	TOTAL SHEETS
	7053		48	86

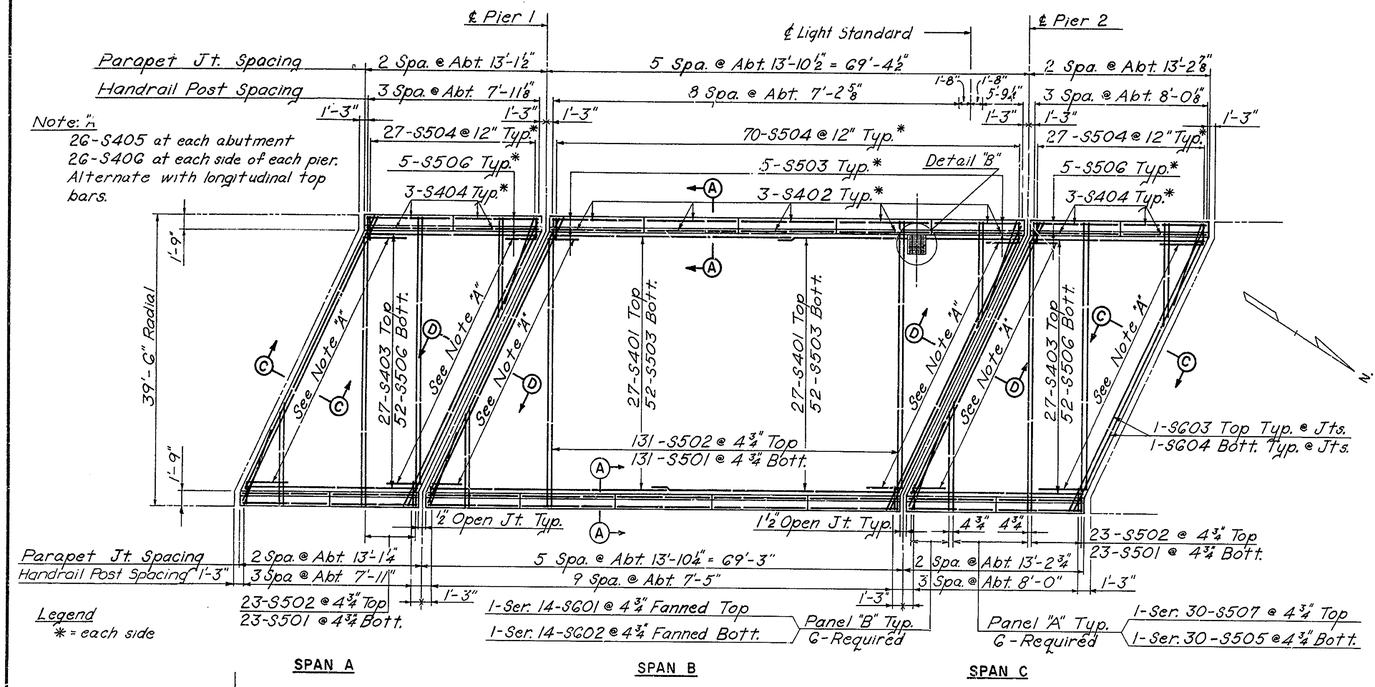

SLAB PLAN
SCALE 1" = 10'

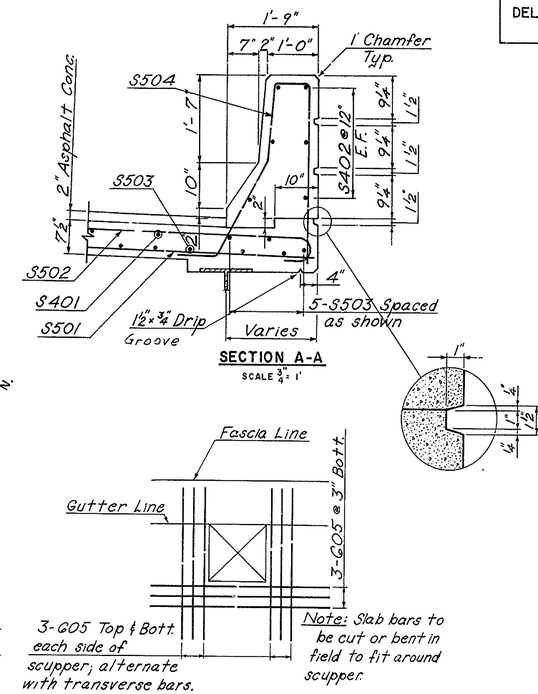

SECTION A-A
SCALE ¾" = 1'

DETAIL "B"
Not to Scale

REINFORCING BAR SCHEDULE

MARK	NO.	TYPE	A	B	LENGTH
DECK - SLAB					
S401	54	Str.			35'-1"
S402	60	Str.			13'-6"
S403	54	Str.			25'-11"
S404	48	Str.			12'-10"
S405	52	1	0'-8"	6'-0"	6'-8"
S406	104	1	0'-8"	4'-0"	4'-8"
S501	177	Str.			39'-2"
S502	177	2	39'-2"	0'-7"	40'-4"
S503	114	Str.			35'-5"
S504	254	3			7'-10"
S505	G-Ser. 30	Str.			12'-5" to 37'-5"
S506	124	Str.			25'-10"
S507	G-Ser. 30	2	12'-5" to 37'-5"	0'-7"	13'-7" to 38'-7"
SG01	G-Ser. 14	4	6'-0" to 11'-9"	0'-8"	6'-8" to 12'-5"
SG02	G-Ser. 14	Str.			6'-0 to 11'-9"
SG03	12	2	41'-9"	0'-8"	43'-1"
SG04	12	Str.			41'-9"
SG05	15	Str.			6'-0"
S508	3	6			4'-10"
S509	7	4	4'-0"	0'-7"	4'-7"
APPROACH - SLABS					
AS401	72	5	1'-9"	1'-4"	5'-9"
AS501	42	Str.			35'-8"
AS502	2-Ser. 12	Str.			9'-2 to 33'-3"
AS503	6	Str.			8'-6"
AS504	6	Str.			3'-8"
AS505	6	Str.			39'-2"
AS601	1-Ser. 72	2	19'-8" to 36'-2"	0'-8"	21'-0" to 37'-6"
AS602	1-Ser. 72	2	19'-8" to 37'-2"	0'-8"	21'-0" & 38'-6"

BENDING DIAGRAMS

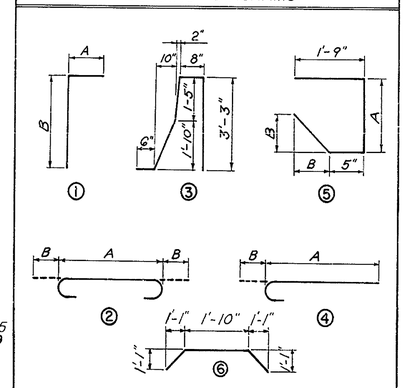

Note: All dimensions are out to out of bars

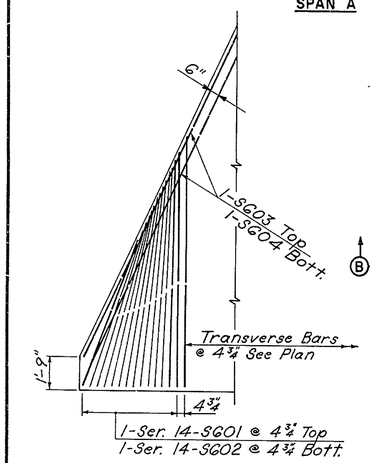

TYPICAL ACUTE CORNER REINFORCING
SCALE ¼" = 1'

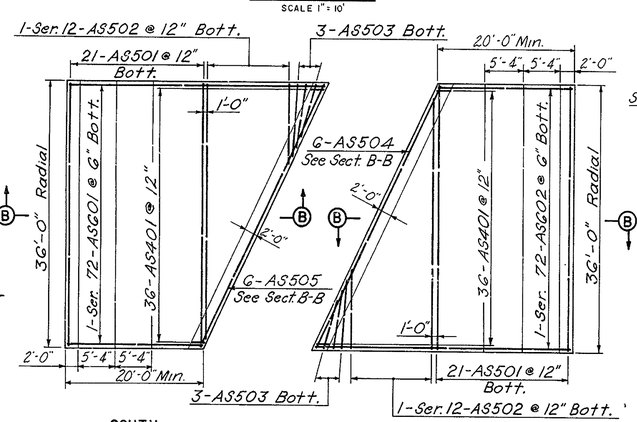

APPROACH SLABS
SCALE 1" = 10'

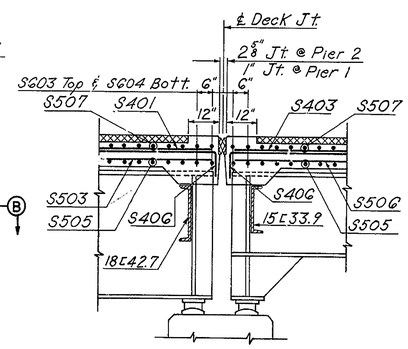

SECTION D-D
SCALE ½" = 1'

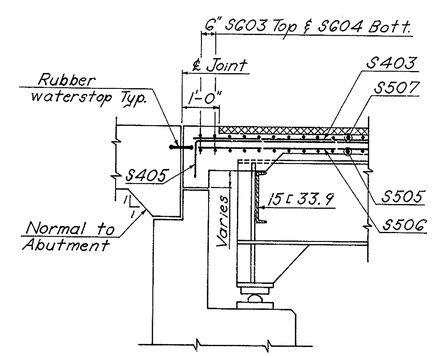

SECTION C-C
SCALE ½" = 1'

NOTES:
For location of longitudinal bars and minimum reinforcing steel concrete cover see typ. section sh. 5 of 9
All parapet joints shall be radial.
For joint details see sheet No. 7 of 9.
For General Notes see sheet No. 1 of 9.

Parapet Joints and Post Spacings are measured along gutter line.
For Light Std Blister details and placing of S506, S509 and extra S504 bars, see sheet No. 9 of 9.

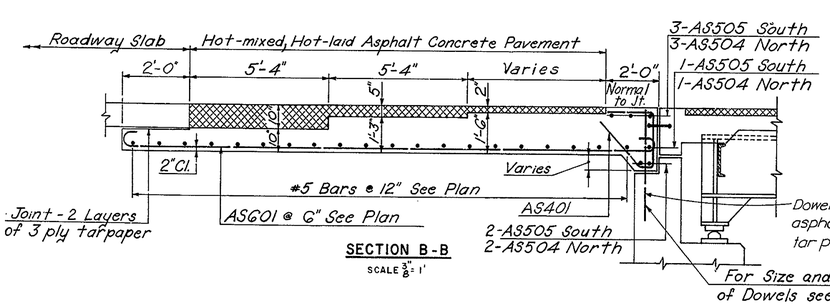

SECTION B-B
SCALE ⅜" = 1'

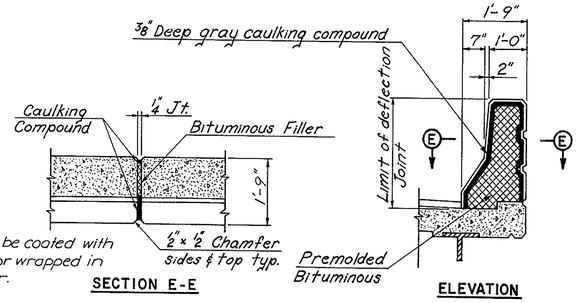

SECTION E-E

ELEVATION

PARAPET DEFLECTION JOINT
SCALE ½" = 1'

Note: No Reinforcement to pass through joint.

NO.	REVISION	BY	DATE
3			
2			
1			

	BY	DATE
MADE	C.E.R.	11-68
CHECKED	J.B.G.	12-68
IN CHARGE	J.E.H.	

DELAWARE STATE HIGHWAY DEPARTMENT

DELAWARE TURNPIKE

ROUTE 896 INTERCHANGE IMPROVEMENTS
BRIDGE OVER CHRISTINA RIVER

CONCRETE-DECK & APPROACH-SLABS

HOWARD, NEEDLES, TAMMEN & BERGENDOFF
consulting engineers
NEW YORK KANSAS CITY

SCALE: As Noted
CONTRACT NO. 7053
SHEET NO. 6 OF 9

DELAWARE TURNPIKE	CONT. NO.	TITLE	SHEET NO.	TOTAL SHEETS
	7053		49	86

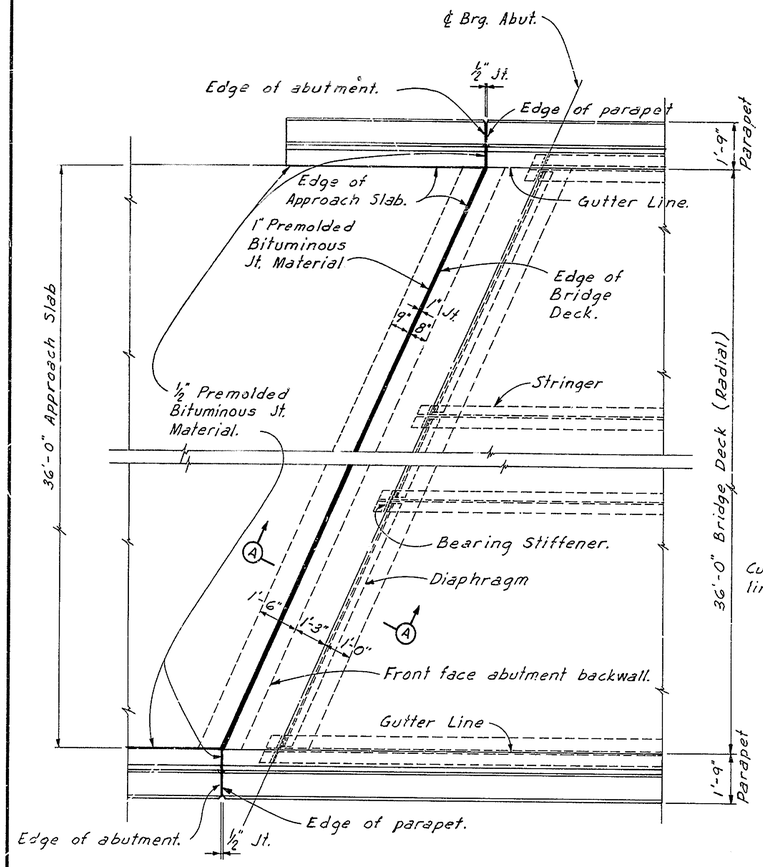

PLAN - JOINT AT SOUTH ABUTMENT (AS SHOWN)
PLAN - JOINT AT NORTH ABUTMENT (SIMILAR)
Scale ⅜" = 1'-0"

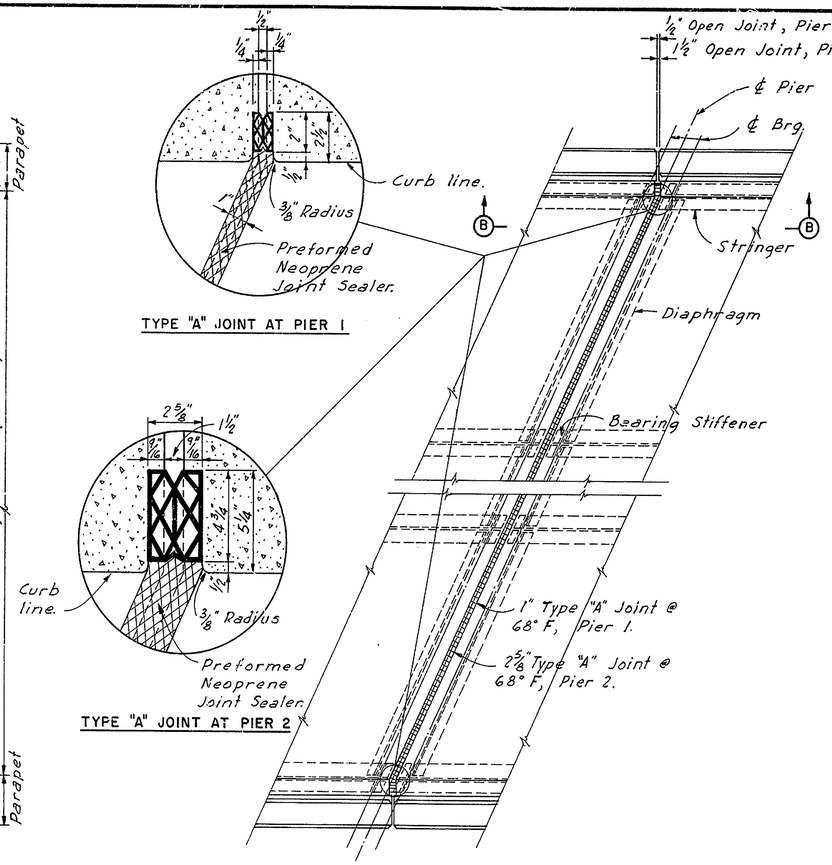

PLAN - JOINT AT PIER NO. 1 AND NO. 2
Scale ⅜" = 1'-0"

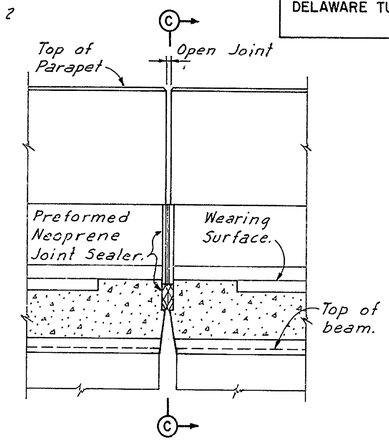

SECTION B-B
Scale 1" = 1'-0"

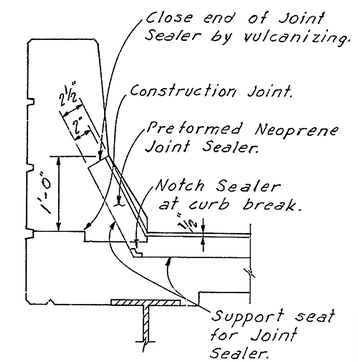

SECTION C-C
TREATMENT OF TYPE "A" JOINT AT CURB
Scale 1" = 1'-0"

NOTES

All roadway joints shall conform to the crown and grade of the roadway surface.

It is absolutely essential that the openings for the preformed neoprene joint sealers be accurately formed and constructed to smooth straight lines. The size of the opening shall be adjusted to allow for the temperature at the time of construction.

Cost of the joints to be included in Portland Cement Concrete Masonry.

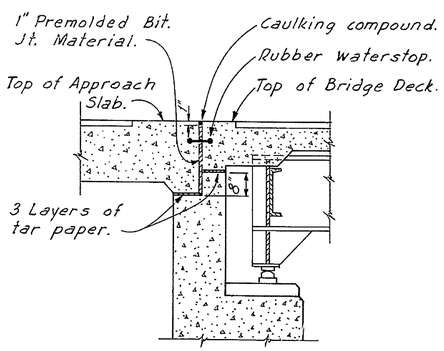

SECTION A-A
Scale ½" = 1'-0"

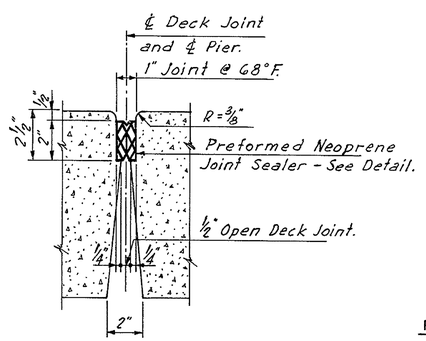

1" TYPE "A" JOINT
Scale 3" = 1'-0"

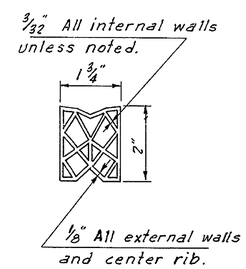

PREFORMED NEOPRENE JOINT SEALER FOR 1" TYPE "A" JOINT
Scale = Half Size

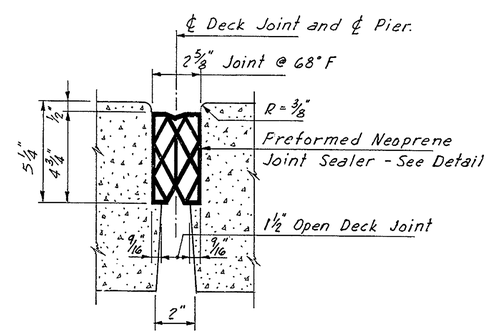

2 5/8" TYPE "A" JOINT
Scale 3" = 1'-0"

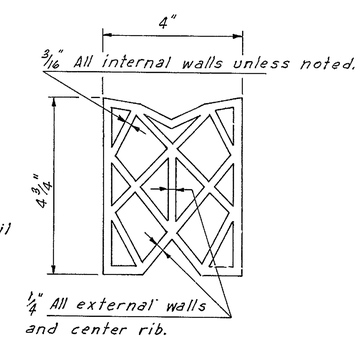

PREFORMED NEOPRENE JOINT SEALER FOR 2 5/8" TYPE "A" JOINT
Scale = Half Size

NO.	REVISION	BY	DATE
3			
2			
1			

	BY	DATE
MADE	L.D.F.	11-68
CHECKED	J.B.G.	12-68
IN CHARGE	J.E.H.	

DELAWARE STATE HIGHWAY DEPARTMENT
DELAWARE TURNPIKE
ROUTE 896 INTERCHANGE IMPROVEMENTS
BRIDGE OVER CHRISTINA RIVER
JOINT DETAILS

HOWARD, NEEDLES, TAMMEN & BERGENDOFF
consulting engineers
NEW YORK KANSAS CITY

SCALE: As Noted
CONTRACT NO. 7053
SHEET NO. 7 OF 9

DELAWARE TURNPIKE	CONT. NO.	TITLE	SHEET NO.	TOTAL SHEETS
	7053		50	86

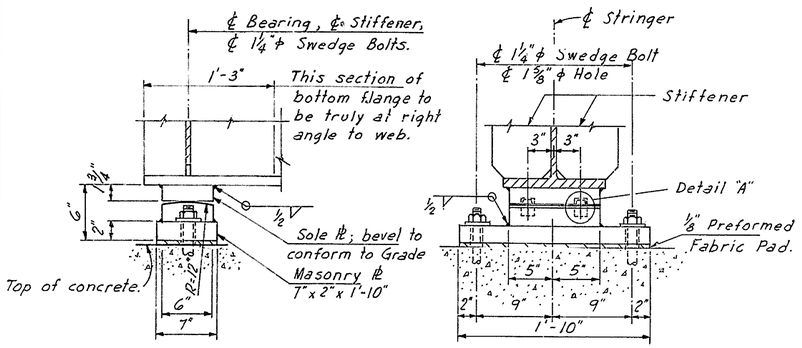

FIXED SHOE FS-1
Scale 1½"=1'-0"

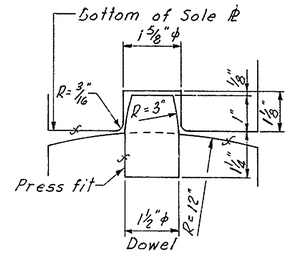

DETAIL "A"
Not to Scale

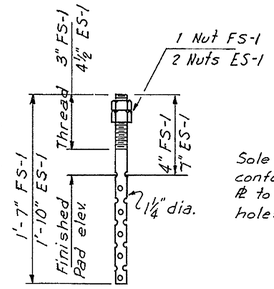

SWEDGE BOLT DETAIL
Not to Scale

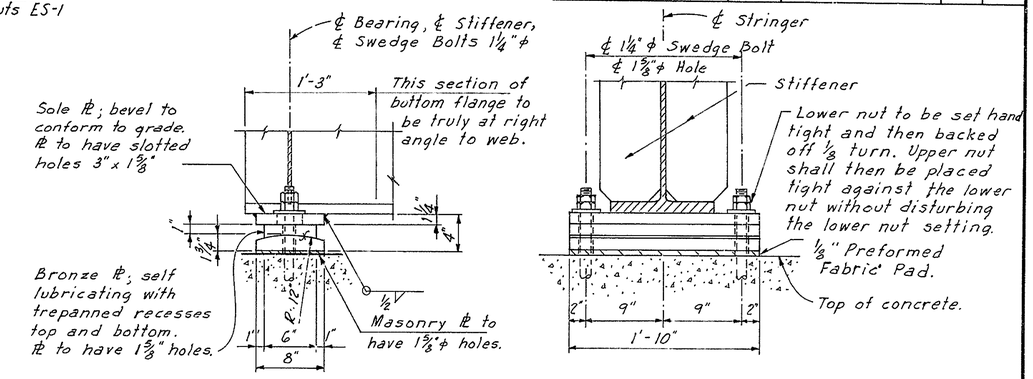

EXPANSION SHOE ES-1
Scale 1½" = 1'-0"

SHOE NOTES

Shoes to have vertical and horizontal center lines mutually perpendicular at 65° F.

For location of Shoes; see Sheet No. 5 of 9.

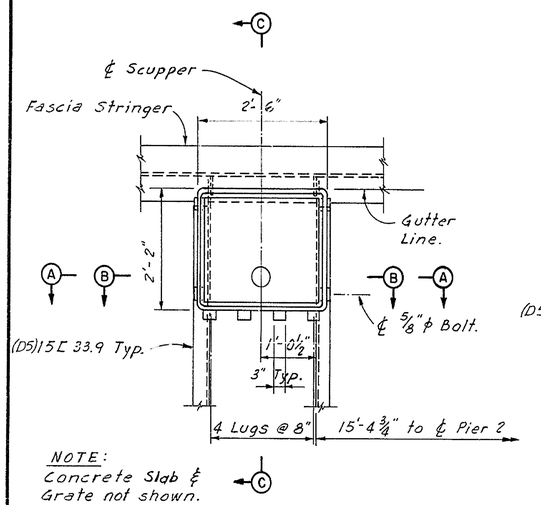

NOTE:
Concrete Slab ℄ Grate not shown.

SCUPPER PLAN
Scale ¾" = 1'-0"

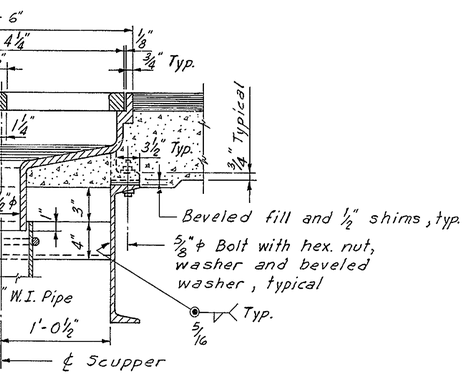

SECTION B-B
Scale 1½" = 1'-0"

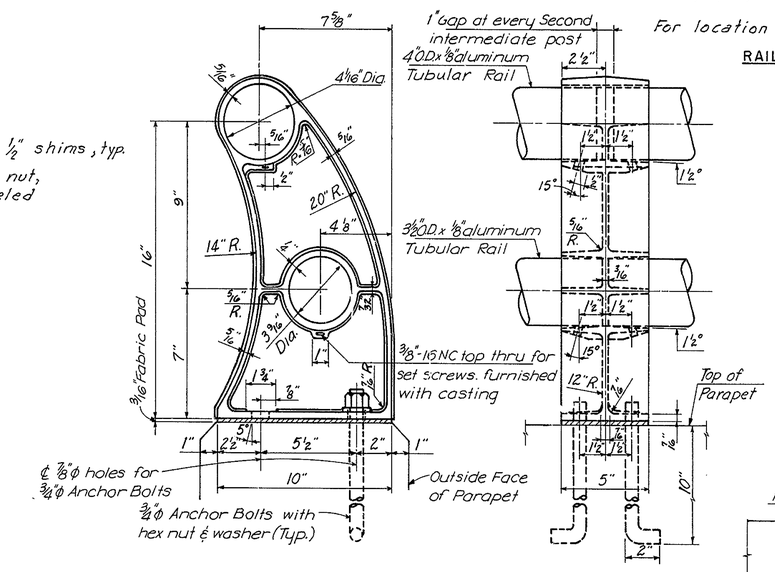

RAILING POST DETAILS
Scale 3"=1'-0"

RAILING NOTES:

1) All Railings are to be fabricated and erected so that the rails are parallel to each other and to the top fascia and so the posts are truly vertical.
2) Anchor bolts for railing posts shall be aluminum alloy meeting the requirements of ASTM-B211 alloy 2024-T4.
3) After nuts have been placed & tightened to the satisfaction of the Engineer, bolts shall be cut off ⅛" above nuts and peened.
4) All rails to be continuous at all end posts adjacent to piers and abutments.
5) Tubular rails shall be closed at all piers and abutments with a welded in aluminum plug.
6) The finished aluminum alloy bolts, nuts, & washers shall be given an anodic coating at least 0.0002 inches thick and a chromate seal.

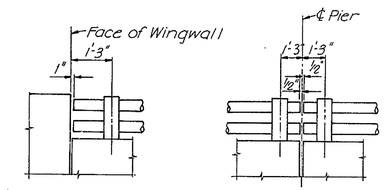

AT ABUTMENTS

AT PIERS

RAILING TERMINAL DETAILS
No Scale

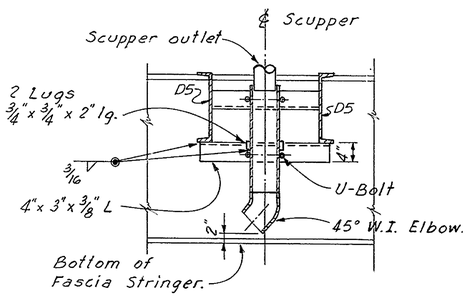

SECTION A-A
Scale ¾" = 1'-0"

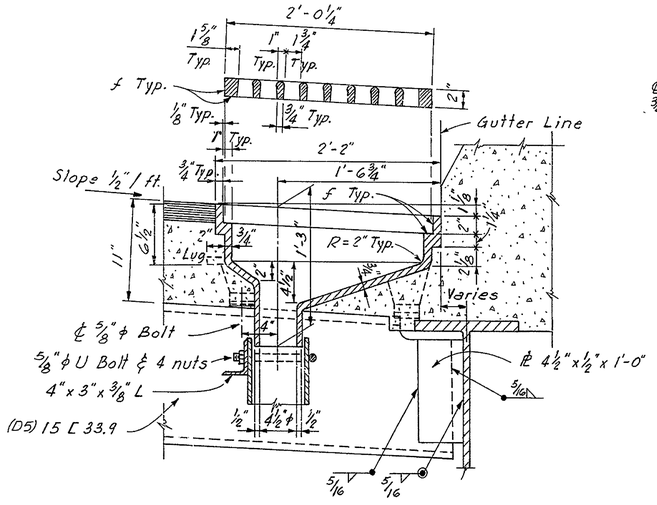

SECTION C-C
Scale 1½" = 1'-0"

DRAINAGE NOTES

All pipe to be black wrought iron, standard weight.

All pipe and fittings to be galvanized.

All fittings to be welded, wrought iron, standard weight.

Brackets, rods, straps, plates, bolts, nuts and washers to be galvanized.

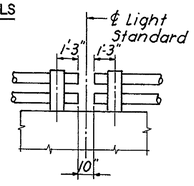

AT LIGHT STANDARD

NO.	REVISION	BY	DATE
3			
2			
1			

	BY	DATE
MADE	L.D.F.	12-68
CHECKED	J.B.G.	12-68
IN CHARGE	J.E.H.	

DELAWARE STATE HIGHWAY DEPARTMENT

DELAWARE TURNPIKE

ROUTE 896 INTERCHANGE IMPROVEMENTS
BRIDGE OVER CHRISTINA RIVER

MISCELLANEOUS DETAILS

HOWARD, NEEDLES, TAMMEN & BERGENDOFF
consulting engineers
NEW YORK KANSAS CITY

SCALE: As Noted
CONTRACT NO. 7053
SHEET NO. 8 OF 9

DELAWARE TURNPIKE	CONT. NO.	TITLE	SHEET NO.	TOTAL SHEETS
	7053		51	86

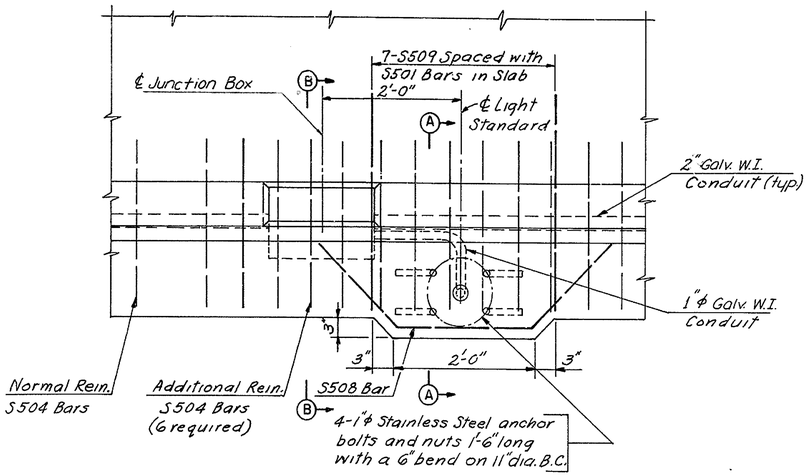

LIGHT BLISTER DETAIL
Scale 1" = 1'-0"

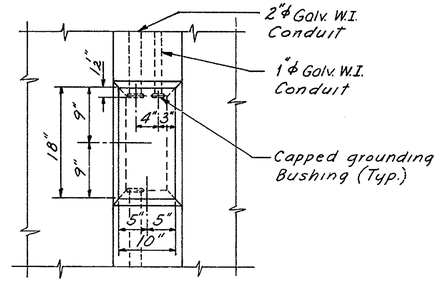

VIEW C-C
Scale 1" = 1'-0"

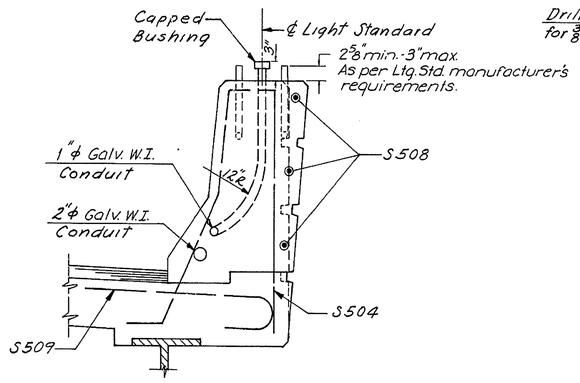

SECTION A-A
Scale 1" = 1'-0"

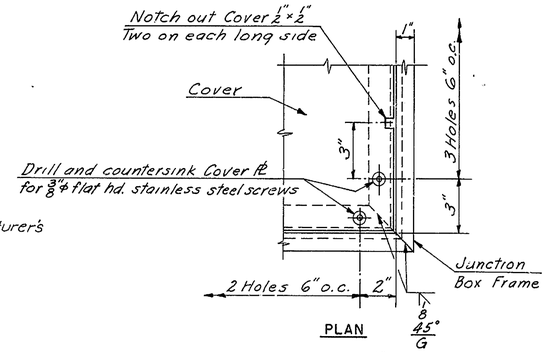

PLAN

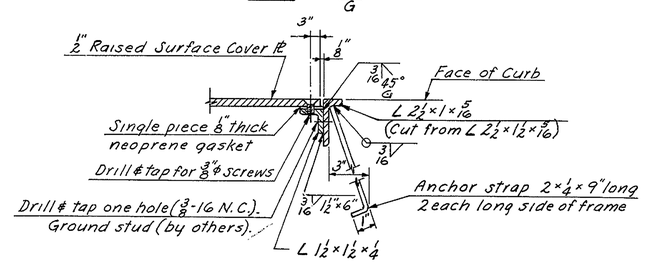

JUNCTION BOX FRAME AND COVER
Scale 3" = 1'-0"

NOTES:

Junction box frame and cover shall be H.D. Galvanized after fabrication.

Anchor bolts, washers and nuts shall be H.D. Galvanized steel.

All metal conduits and fittings shall be H.D. Galvanized. (see Spec's.).

Grounding bushings shall be equal to O-Z Type IGB.

For location of lighting standards see Sheet No. 6 of 9

Location of junction box with respect to light standard will be such that it will clear any parapet joint and at the same time maintain the specified distance.

Cost of 1" ϕ and 2" ϕ W.I. conduits imbedded in concrete and junction box on structure to be included in price bid for Item 18 P.C.C. Masonry – Superstructure.

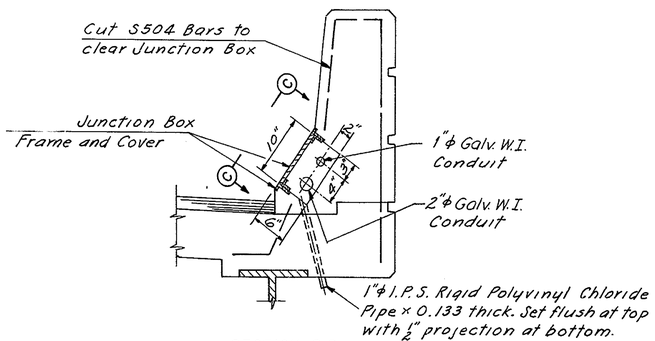

SECTION B-B
Scale 1" = 1'-0"

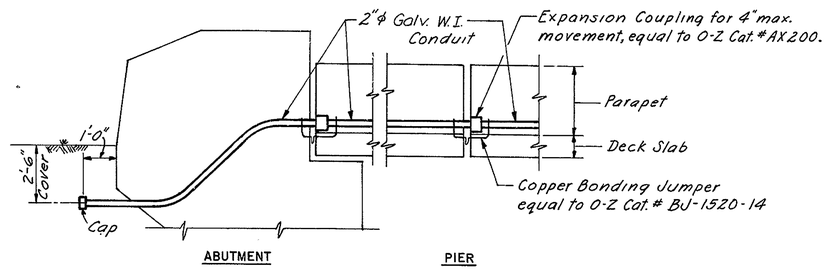

EXPANSION JOINT DETAILS FOR CONDUITS
No Scale

NO.	REVISION	BY	DATE
3			
2			
1			

	BY	DATE
MADE	F.J.C.	7-69
CHECKED	JBG	8-69
IN CHARGE	JEH	

DELAWARE STATE HIGHWAY DEPARTMENT

DELAWARE TURNPIKE

ROUTE 896 INTERCHANGE IMPROVEMENTS
BRIDGE OVER CHRISTINA RIVER

LIGHTING DETAILS

HOWARD, NEEDLES, TAMMEN & BERGENDOFF
consulting engineers
NEW YORK KANSAS CITY

SCALE: As Noted
CONTRACT NO. 7053
SHEET NO. 9 OF 9

DELAWARE TURNPIKE	CONT. NO.	TITLE	SHEET NO.	TOTAL SHEETS
	7053		52	86

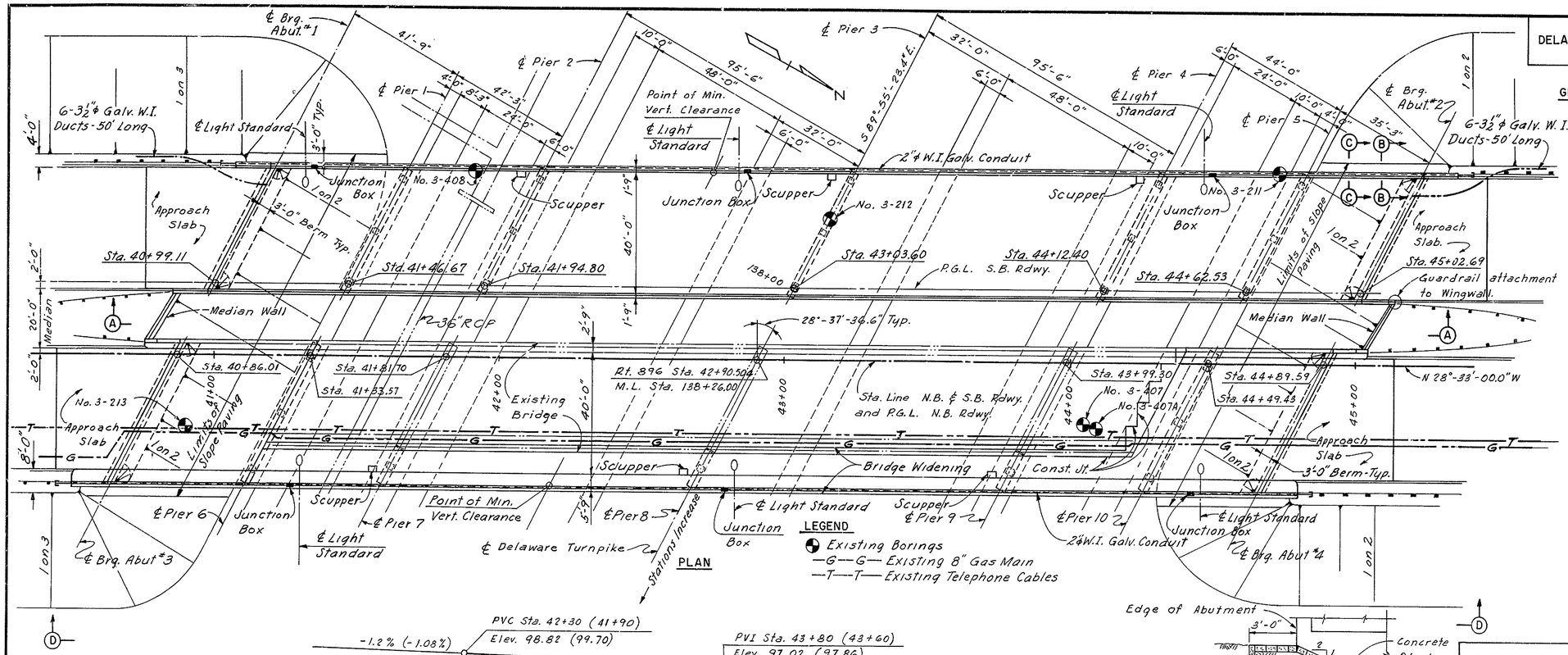

PLAN

LEGEND

- Existing Borings
- —G—G— Existing 8" Gas Main
- —T—T— Existing Telephone Cables

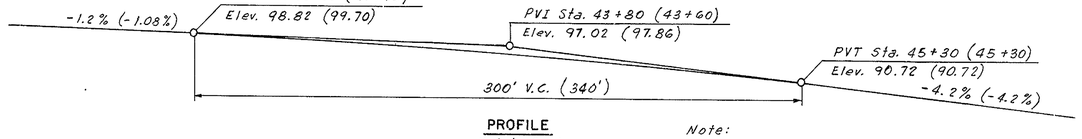

PROFILE
Not to Scale

Note:
Vertical curve data shown thus (43+60) are for S.B. Roadway.

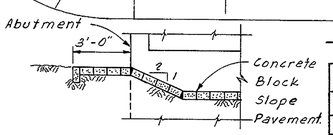

SECTION B-B
Not to Scale

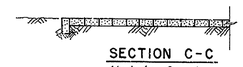

SECTION C-C
Not to Scale

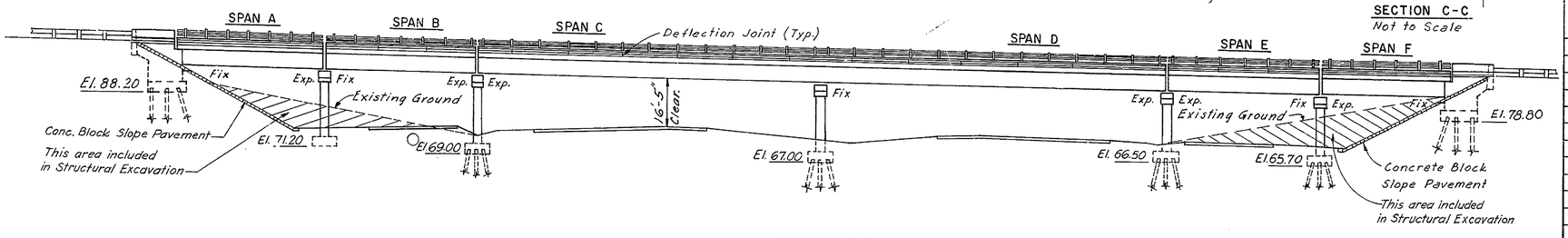

SECTION A-A

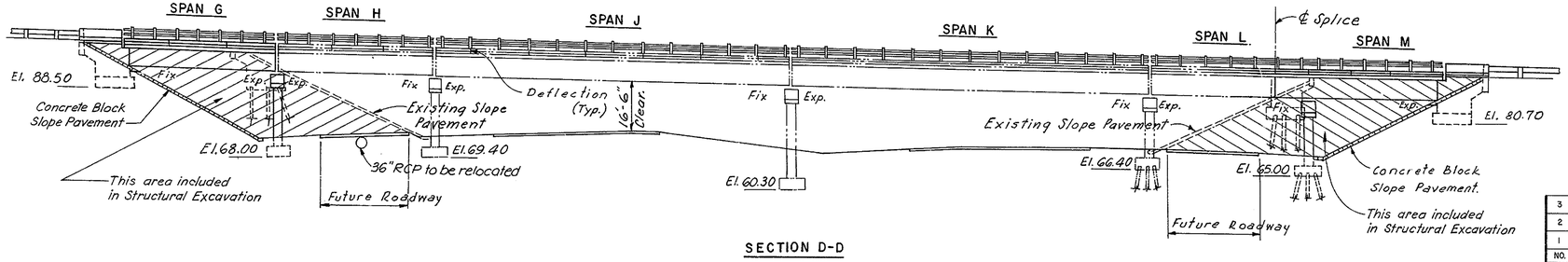

SECTION D-D

GENERAL NOTES

Construction Specifications: Delaware State Highway Department Standard Specifications dated June 1, 1965 and Special Provisions.

Design Specifications: A.A.S.H.O. Standard Specifications for Highway Bridges dated 1965.

Design Live Load: HS20-44.

Design Stresses: Concrete fc = 1,200 psi
Structural and Reinforcing Steel f = 20,000 psi.

Concrete:

All exposed edges shall be chamfered 1" unless otherwise noted.

Concrete cover on reinforcing shall be 2" minimum unless otherwise shown on plans.

Bar Reinforcement: Bar reinforcement shall be deformed billet-steel bars (A-615) grade 40.

All bar laps shall be 30 bar diameters minimum of the smaller bar spliced.

For Additional Notes see Sheet No. 3 of 25.

Structural Steel: Structural steel shall conform to the requirements of A.S.T.M. Designation A-36 except as noted.

Guardrail Attachment:
For Guardrail attachment, see Sheet No. 12

Pile Footings: 14"ϕ Cast-in-place conc. piles shall be driven to a min. bearing capacity of 50 Tons.

10BP57 Steel Bearing Piles shall be driven to a min. bearing capacity of 50 Tons.

Soil Capacity: Abutment #3 and #4 shall have a max. soil pressure of 1.5 Tons per square foot.

Pier No 1, 6, 7 & 8 shall have a maximum soil pressure of 2.0 Tons per square foot.

ESTIMATED QUANTITIES

ITEM NO.	DESCRIPTION	UNIT	QUANTITY
	Partial Removal of Existing Structure	L.S.	1
4	Excavation for Structures	C.Y.	1236d
11	Hot-mix, Hot-laid Asphaltic Concrete Pavement	Tons	384
18	Portland Cement Concrete Masonry		
	Footings	C.Y.	438
	Substructure	C.Y.	568
	Superstructure	C.Y.	924
	Approach Slabs	C.Y.	243
19	Superficial Waterproofing	S.Y.	250
20	Bar Reinforcement	Lbs.	384,735
22	Structural Steel (Estimated Wt. = 748,000#)	L.S.	1
22A	Aluminum Railing - Double Rail	L.F.	1015
	Reset Existing Bridge Railing	L.F.	308
31	6"ϕ Perforated Corr. Metal Pipe Underdrain	L.F.	216
35	14"ϕ C.I.P. Concrete Piles. (Footings)	L.F.	2959
	10BP57 Steel Piles	L.F.	764
	Bridge Drainage	L.S.	1
	Slope Paving (Concrete Block)	S.Y.	1175
	Coal Tar Epoxy Underseal	S.Y.	2819
	Protective Coating for Concrete.	S.F.	3220
	3½"ϕ Galv. W.I. Ducts	L.F.	600

NO.	REVISION	BY	DATE
3			
2			
1			

	BY	DATE
MADE	L.D.F.	8-69
CHECKED	J.R.C.	11-69
IN CHARGE	J.E.H.	

DELAWARE STATE HIGHWAY DEPARTMENT

DELAWARE TURNPIKE

ROUTE 896 INTERCHANGE IMPROVEMENTS
BRIDGE OVER DELAWARE TURNPIKE

GENERAL PLAN & ELEVATION

HOWARD, NEEDLES, TAMMEN & BERGENDOFF
consulting engineers
NEW YORK KANSAS CITY

SCALE: 1" = 20' Unless Noted
CONTRACT NO. 7053
SHEET NO. 1 OF 25

DELAWARE TURNPIKE	CONT NO	TITLE	SHEET NO	TOTAL SHEETS
	7053		53	86

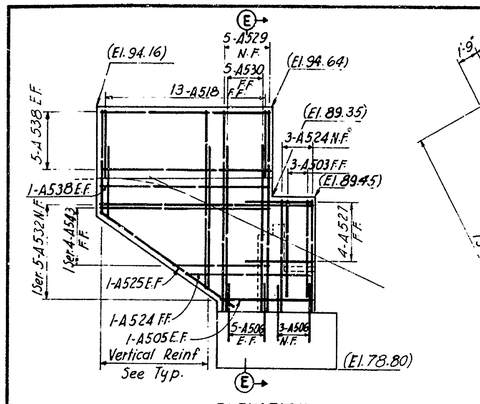

ELEVATION
ABUT 2 W. WINGWALL

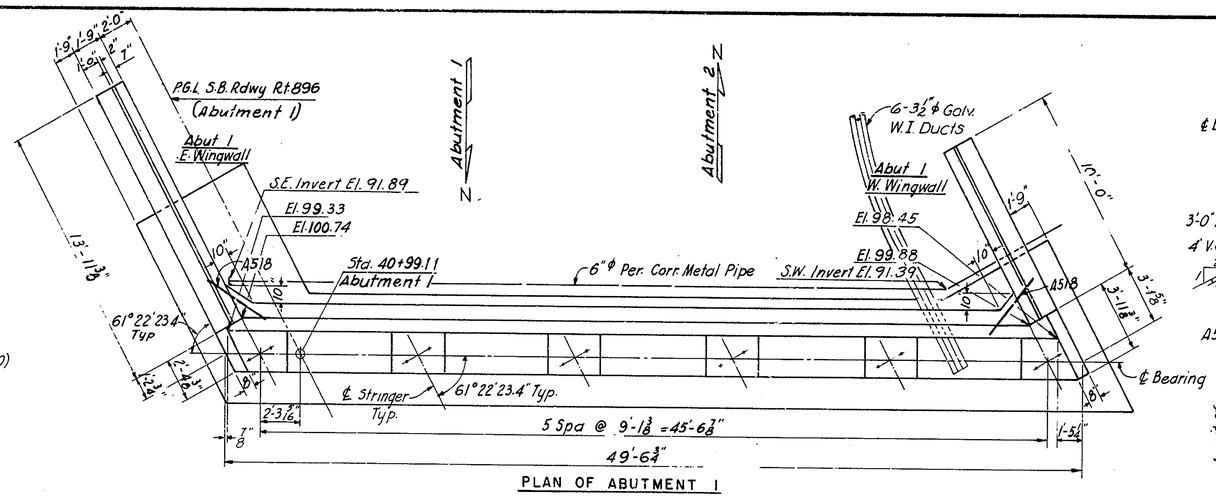

PLAN OF ABUTMENT 1

Abutment 2 Similar except for Wingwalls
See Details this Sheet

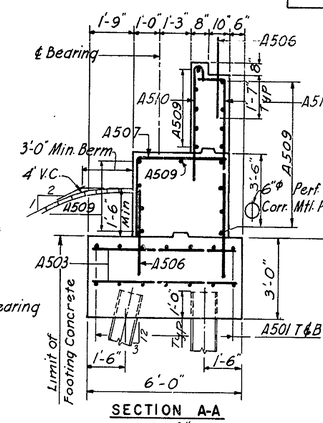

SECTION A-A
Scale: ⅜" = 1'-0"

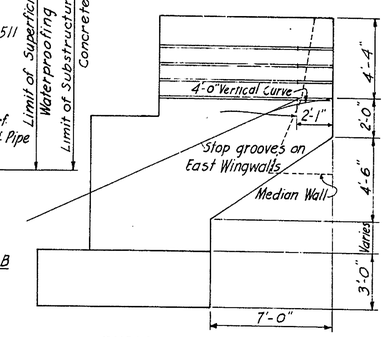

TYPICAL WINGWALL

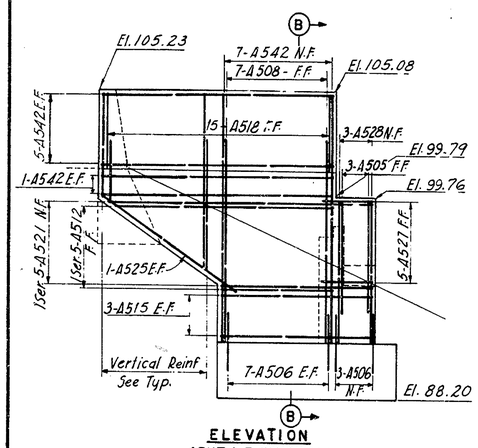

ELEVATION
ABUT 1 E. WINGWALL

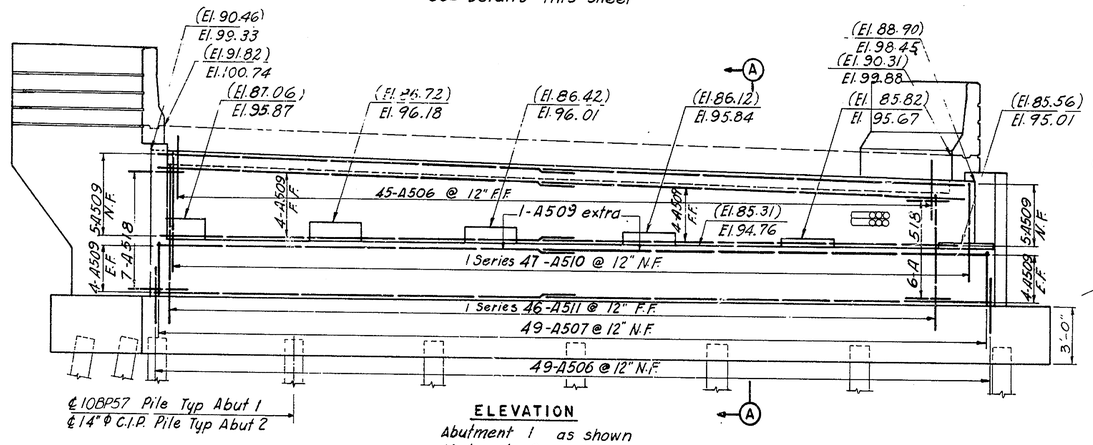

ELEVATION
Abutment 1 as shown
Abutment 2 opp. hand

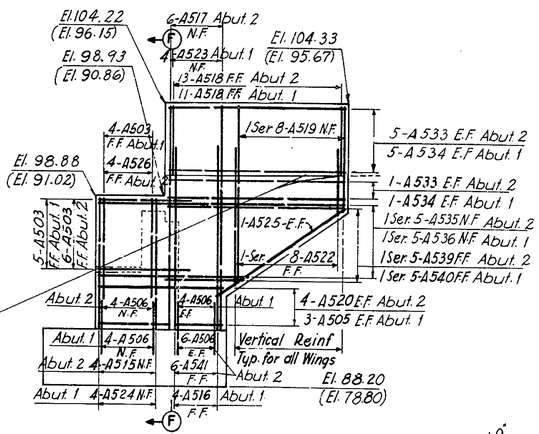

ELEVATION
ABUT 1 W. & ABUT 2 E. WINGWALLS

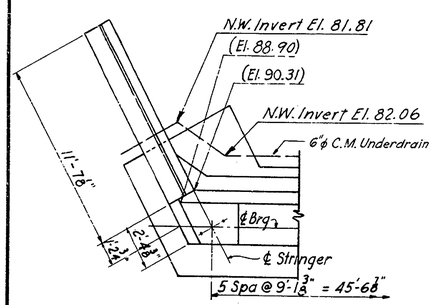

PLAN

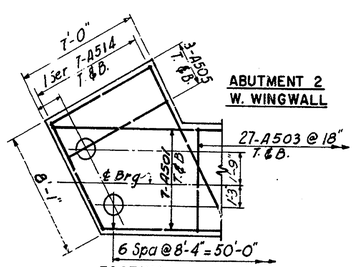

ABUTMENT 2
W. WINGWALL

FOOTING

Note: Elevations shown thus (El. 91.01) refer to Abutment 2.

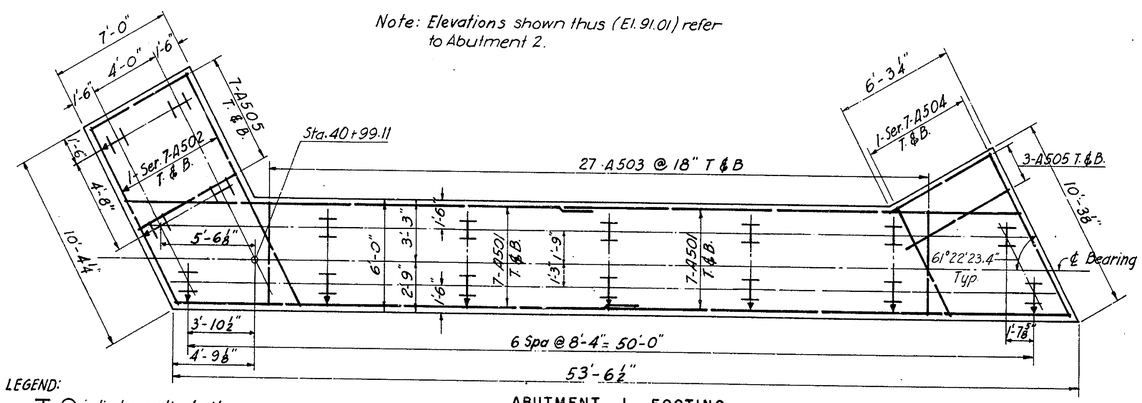

ABUTMENT 1 FOOTING
Abutment 2 Similar except for Wingwalls and Piles - see Details this Sheet

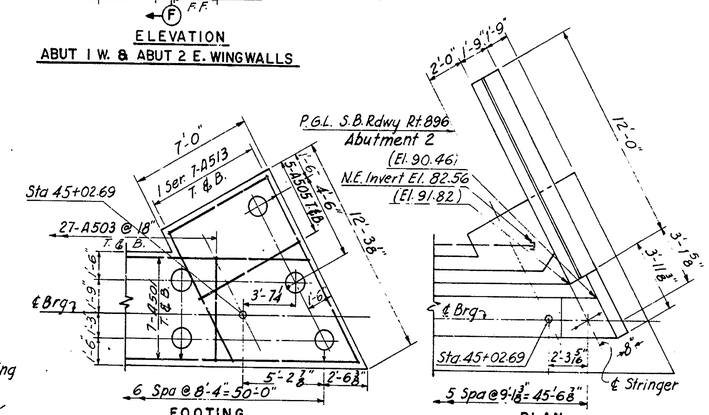

FOOTING

ABUT 2 E. WINGWALL

PLAN

LEGEND:
- indicates vertical pile.
- indicates 3:12 batter pile and direction of batter.

N.F. denotes Near Face
E.F. denotes Each Face
F.F. denotes Far Face
T&B denotes Top & Bottom

NOTES:
For General Notes see sheet No. 1 of 25
For Sections B-B, E-E, F-F see sheet No. 3 of 25
For Typical Pad Details see sheet No. 3 of 25
For additional notes see sheet No. 3 of 25
For Epoxy Protective Coating limits see Sheet No. 4 of 25.

NO	REVISION	BY	DATE
3			
2			
1			

	BY	DATE
MADE	I.R.P.	11-68
CHECKED	F.J.C.	11-69
IN CHARGE	J.E.H.	

DELAWARE STATE HIGHWAY DEPARTMENT

DELAWARE TURNPIKE

ROUTE 896 INTERCHANGE IMPROVEMENTS
BRIDGE OVER DELAWARE TURNPIKE
ABUTMENTS 1 & 2

HOWARD, NEEDLES, TAMMEN & BERGENDOFF
consulting engineers
NEW YORK KANSAS CITY

SCALE: ¼" = 1'-0" unless noted
CONTRACT NO. 7053
SHEET NO. 2 OF 25

DELAWARE TURNPIKE	CONT. NO.	TITLE	SHEET NO.	TOTAL SHEETS
	7053		54	86

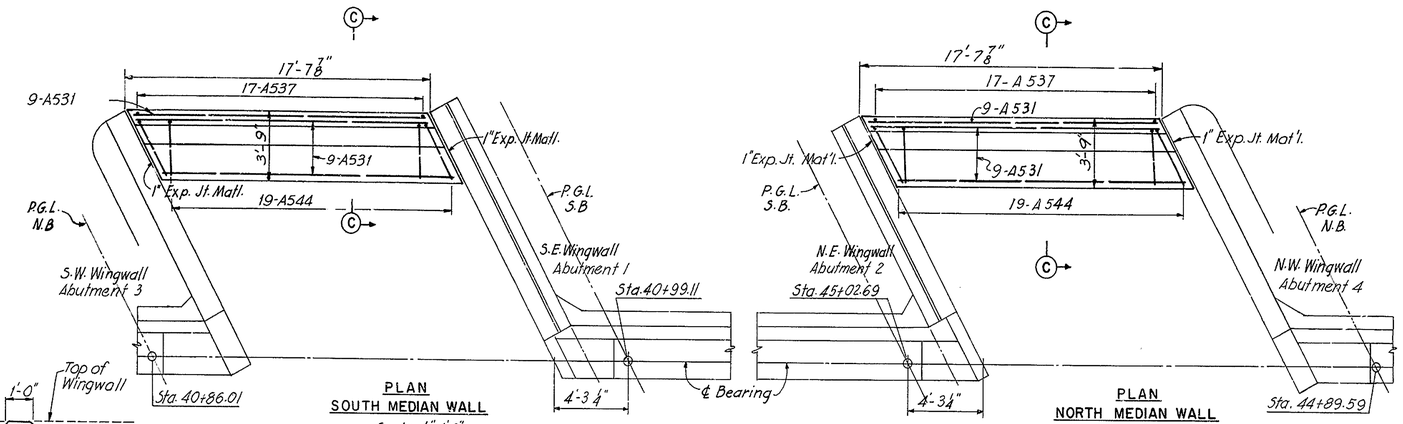

PLAN
SOUTH MEDIAN WALL
Scale: 1/4" = 1'-0"

PLAN
NORTH MEDIAN WALL
Scale: 1/4" = 1'-0"

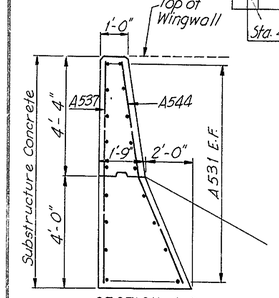

SECTION C-C
Scale 3/8" = 1'-0"

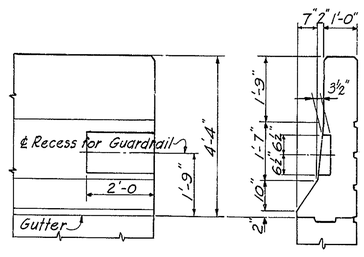

RECESS FOR GUARDRAIL ATTACHMENT
Scale: 1/2" = 1'-0"

Note: For details of Guardrail Anchorage see Sheet No. 12.

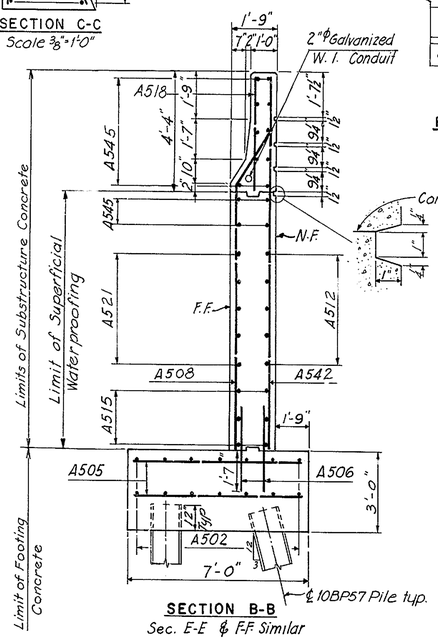

SECTION B-B
Sec. E-E & F-F Similar
Scale: 3/8" = 1'-0"

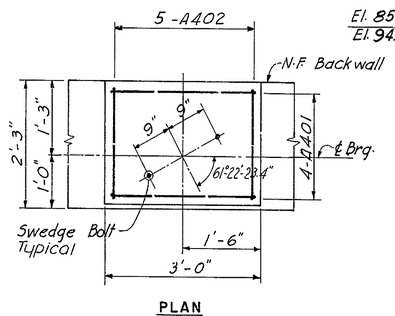

PLAN

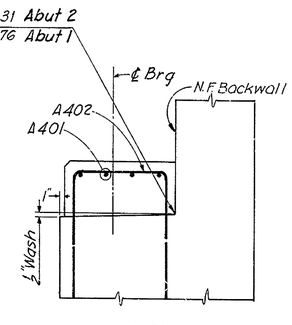

SECTION

TYPICAL PAD DETAIL
Scale: 3/4" = 1'-0"

NOTES

Min. Reinforcing Steel concrete cover 3" in footing, 2" above footing.
Backfill behind abutments to be placed only after bridge deck slab has been completed.
All bars spaced @ 12" Max unless noted.
All construction joints to be 2"x6" continuous key.

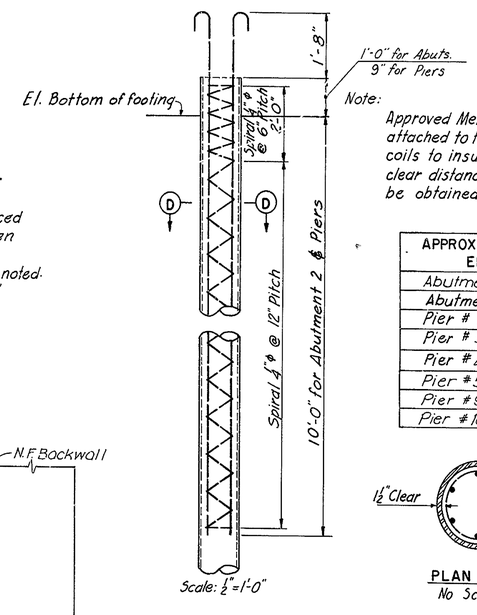

Scale: 1/2" = 1'-0"

PILE DETAIL
for 14" ϕ C.I.P.

Note:
Approved Metal Spacers shall be attached to the top and bottom coils to insure that the minimum clear distance to the shell will be obtained.

APPROX PILE TIP ELEVATION	
Abutment 1	45
Abutment 2	40
Pier # 2	45
Pier # 3	40
Pier # 4	35
Pier # 5	35
Pier # 9	35
Pier # 10	35

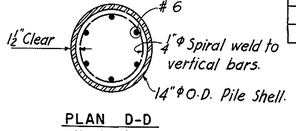

PLAN D-D
No Scale

ADDITIONAL GENERAL NOTES:

In computing the total length shown for each bent bar, dimensions of legs adjoining each bend (not 135° or 180° hooks) were carried to the point of intersection of both legs and no deductions were made for the shorter distance along the curve. The Contractor shall take this fact into consideration when ordering and fabricating bent bars.

The first digit of the bar mark denotes the bar size. A501 is a No.5 bar.

REINFORCING BAR SCHEDULE

MARK	NO	TYPE	A	B	C	LENGTH
A401	48	5	2'-6"	2'-8"		7'-8"
A402	60	5	2'-6"	1'-10"		6'-10"
A501	56	Str				27'-3"
A502	2 Ser Tea.	Str.				9'-10" to 13'-4"
A503	126	Str.				5'-6"
A504	2 Ser Tea.	Str.				6'-4" to 9'-9"
A505	47	Str.				6'-6"
A506	246	Str.				3'-2"
A507	98	7	3'-3"	3'-5"		6'-8"
A508	7	4	9'-7"	2'-6"	1'-3"	12'-1"
A509	72	Str				25'-4"
A510	2 Ser 4 Tea.	2	5'-0" to 6'-5"	0'-7"		5'-7" to 7'-0"
A511	2 Ser 4 Tea.	7	7'-10" to 9'-3"	1'-2"		9'-0" to 10'-5"
A512	1 Ser 5	Str				6'-5" to 13'-5"
A513	2 Ser Tea.	Str				7'-8" to 11'-6"
A514	2 Ser Tea.	Str.				7'-6" to 11'-2"
A515	10	Str.				8'-11"
A516	4	4	8'-10"	2'-6"	1'-3"	11'-4"
A517	6	Str				14'-0"
A518	78	Str.				4'-2"
A519	4 Ser 8 Tea	Str.				6'-0" to 10'-2"
A520	8	Str.				8'-8"
A521	1 Ser 5	Str.				8'-10" to 15'-10"
A522	4 Ser 8 Tea	4	2'-0" to 6'-1"	2'-6"	1'-3"	4'-6" to 8'-7"
A523	4	Str				12'-9"
A524	8	Str.				7'-4"
A525	8	Str.				8'-7"
A526	4	Str.				7'-0"
A527	9	Str.				3'-10"
A528	3	Str.				8'-4"
A529	5	Str.				12'-8"
A530	5	4	8'-8"	2'-6"	1'-3"	11'-2"
A531	36	Str				17'-0"
A532	1 Ser 5	Str.				6'-8" to 13'-8"
A533	14	Str.				11'-8"
A534	14	Str.				9'-8"
A535	1 Ser 5	Str.				9'-4" to 15'-7"
A536	1 Ser 5	Str.				7'-11" to 13'-7"
A537	34	Str.				8'-0"
A538	14	Str				11'-3"
A539	1 Ser. 5	Str.				4'-6" to 11'-6"
A540	1 Ser 5	Str.				4'-0" to 9'-7"
A541	6	4	10'-2"	2'-6"	1'-3"	12'-8"
A542	21	Str.				13'-8"
A543	1 Ser 4	Str.				5'-6" to 11'-3"
A544	38	4	4'-3"	4'-1"	1'-2"	8'-3"

NOTE: All dimensions are out to out of bars

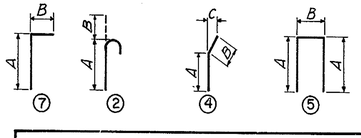

NO	REVISION	BY	DATE
3			
2			
1			

	BY	DATE
MADE	IRP	11-68
CHECKED	F.J.C.	11-69
IN CHARGE	JEH	

DELAWARE STATE HIGHWAY DEPARTMENT

DELAWARE TURNPIKE

ROUTE 896 INTERCHANGE IMPROVEMENTS
BRIDGE OVER DELAWARE TURNPIKE

ABUTMENTS 1 & 2 DETAILS

HOWARD, NEEDLES, TAMMEN & BERGENDOFF
consulting engineers
NEW YORK KANSAS CITY

SCALE: as noted
CONTRACT NO. 7053
SHEET NO. 3 OF 25

DELAWARE TURNPIKE	CONT NO.	TITLE	SHEET NO.	TOTAL SHEETS
	7053		55	86

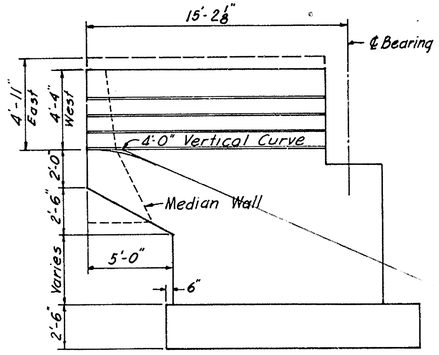

TYPICAL WINGWALL

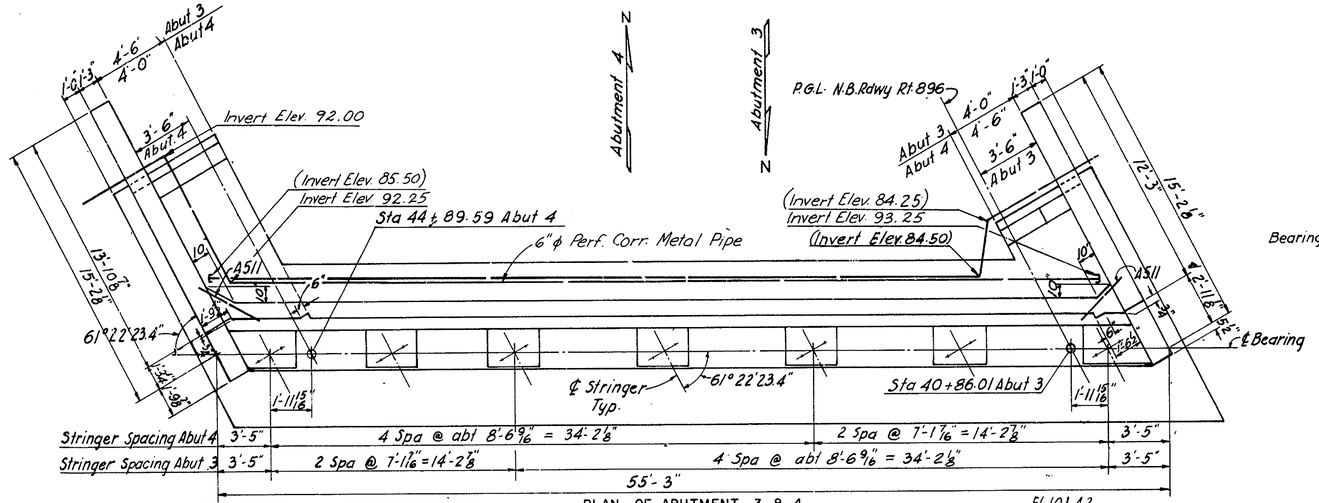

PLAN OF ABUTMENT 3 & 4

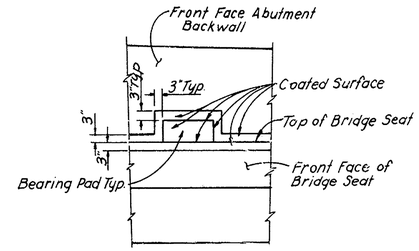

APPLICATION LIMITS OF EPOXY PROTECTIVE COATING FOR CONCRETE
(Part Elevation at Abutment)

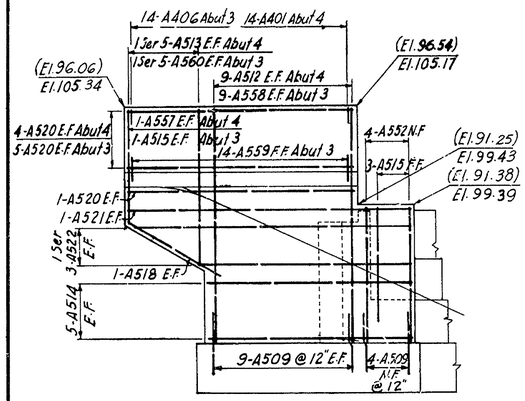

ELEVATION
ABUT 3 EAST & ABUT 4 WEST WINGWALL

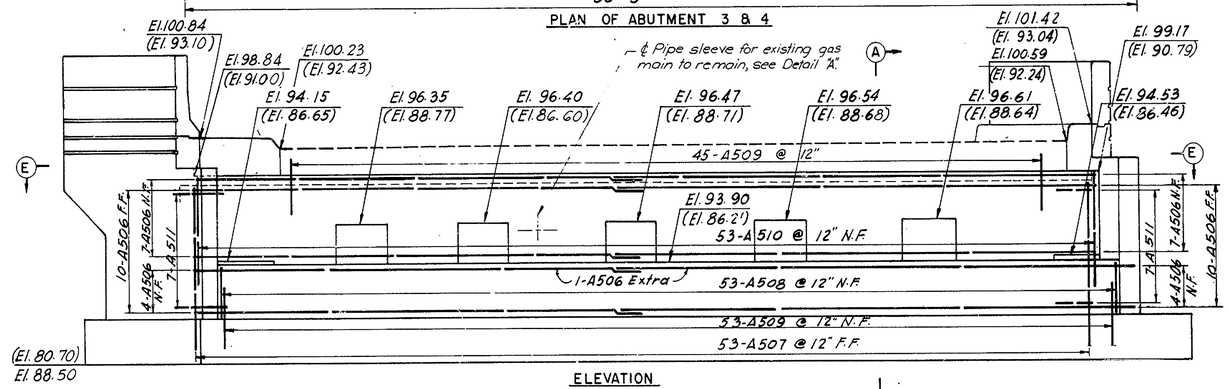

ELEVATION
Abutment 3 as shown
Abutment 4 opp. hand

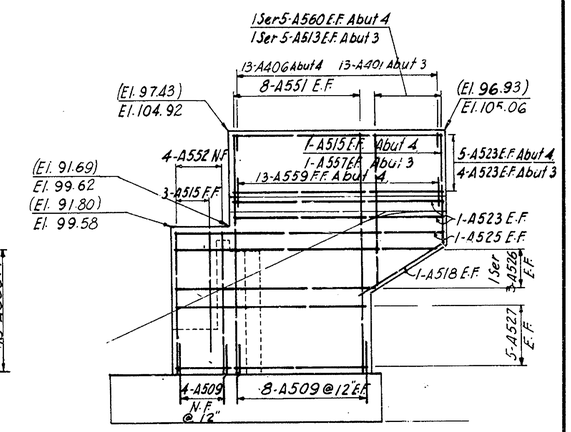

ELEVATION
ABUT 3 WEST & ABUT 4 EAST WINGWALL

Note: Elevations shown thus (93.02) refer to Abutment 4 only.

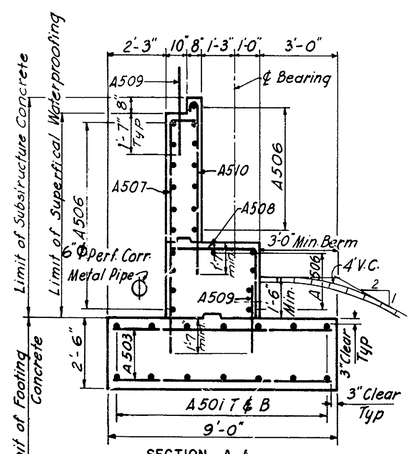

SECTION A-A
Scale: 3/8" = 1'-0"

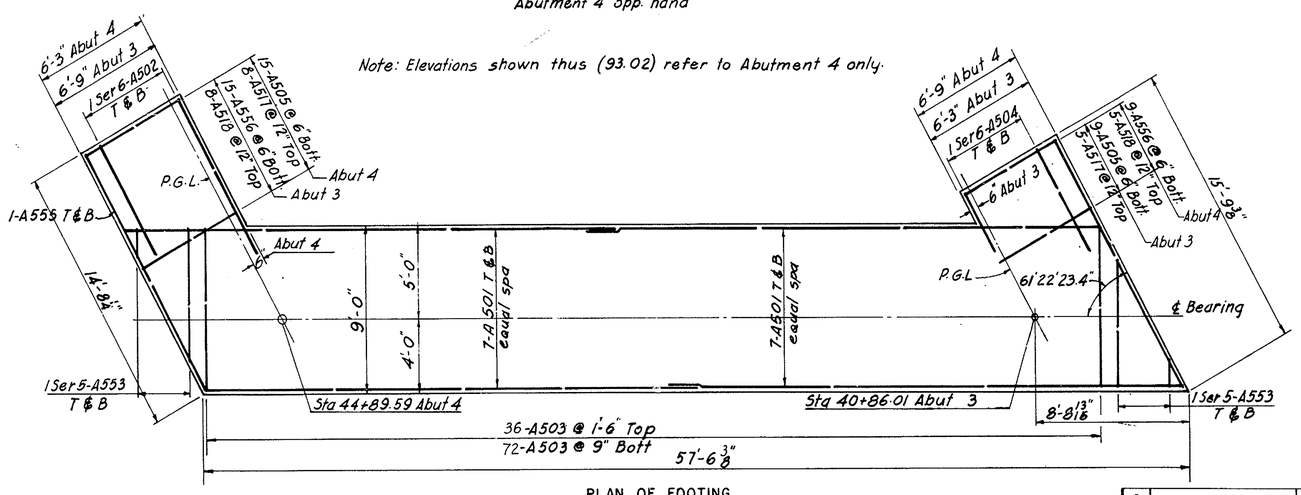

PLAN OF FOOTING

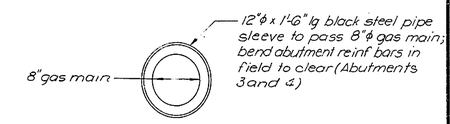

DETAIL "A"
1" = 1'-0"

NOTES:
For General Notes see sheet No. 1 of 25
For Typical Pad Details see sheet No. 5 of 25
For Additional Notes see sheet No. 3 of 25

LEGEND:
N.F. denotes Near Face.
E.F. denotes Each Face.
F.F. denotes Far Face.
T & B denotes Top and Bottom.

NO.	REVISION	BY	DATE
3			
2			
1			

	BY	DATE
MADE	IRP	10-69
CHECKED	F.J.C.	11-69
IN CHARGE	J.E.H.	

DELAWARE STATE HIGHWAY DEPARTMENT
DELAWARE TURNPIKE
ROUTE 896 INTERCHANGE IMPROVEMENTS
BRIDGE OVER DELAWARE TURNPIKE
ABUTMENTS 3 & 4

HOWARD, NEEDLES, TAMMEN & BERGENDOFF
consulting engineers
NEW YORK KANSAS CITY

SCALE: 1/4" = 1'-0" unless noted
CONTRACT NO. 7053
SHEET NO. 4 OF 25

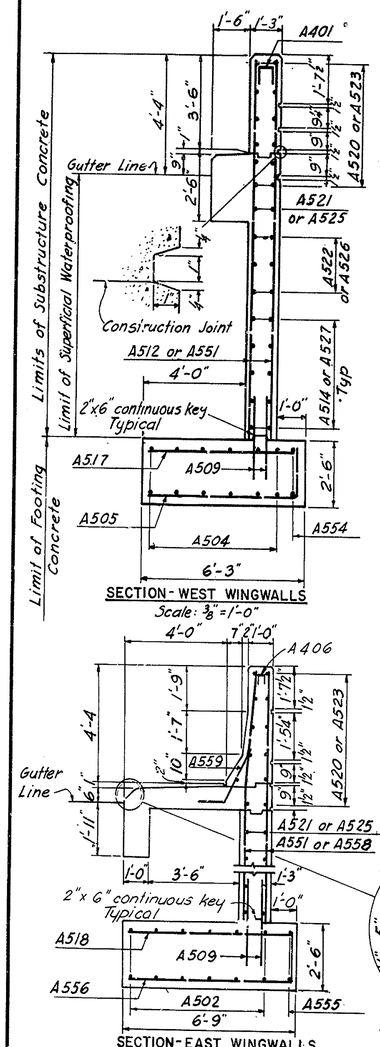

SECTION - WEST WINGWALLS
Scale: 3/8" = 1'-0"

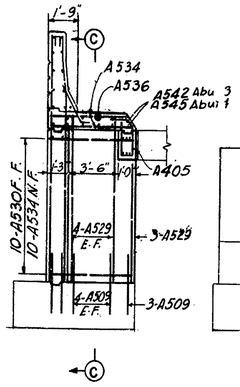

SECTION B-B

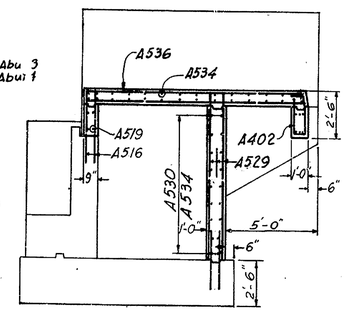

SECTION C-C

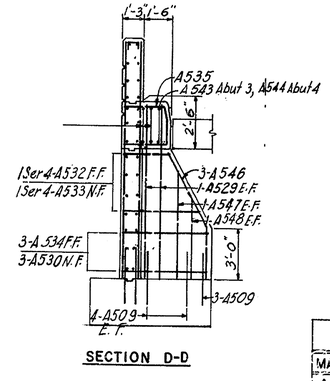

SECTION D-D

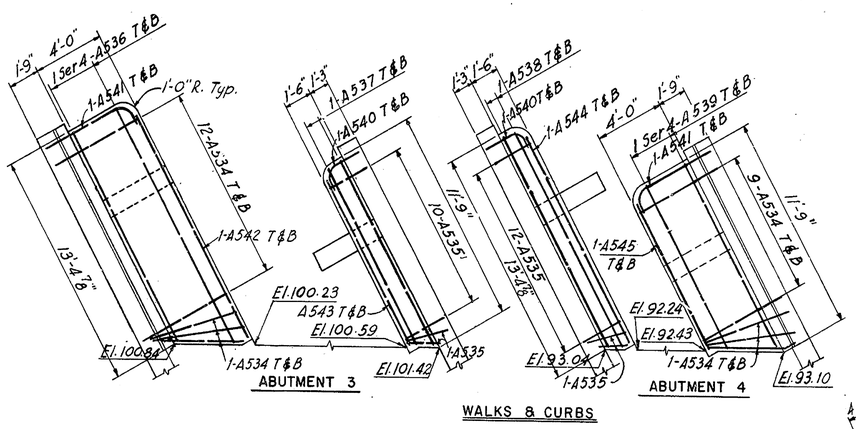

ABUTMENT 3

WALKS & CURBS

ABUTMENT 4

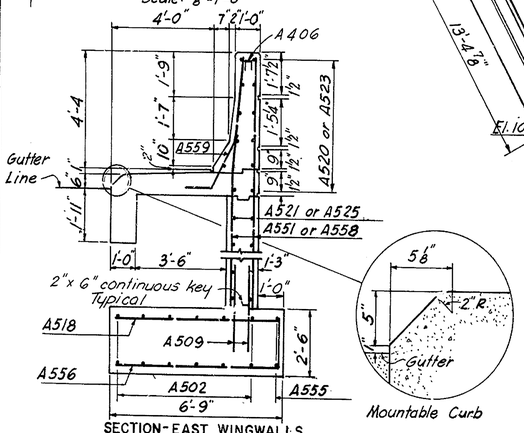

SECTION - EAST WINGWALLS
Scale: 3/8" = 1'-0"

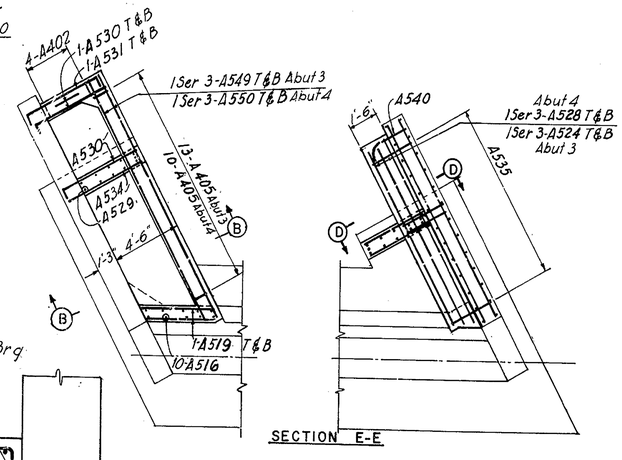

SECTION E-E

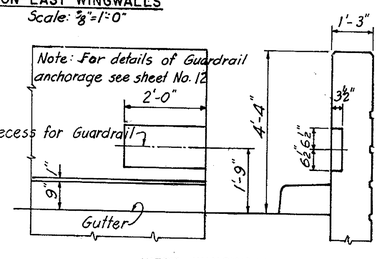

WEST WINGWALL

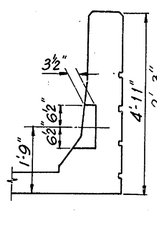

EAST WINGWALL

RECESS FOR GUARDRAIL ATTACHMENT

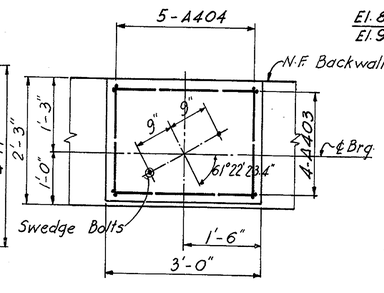

PLAN

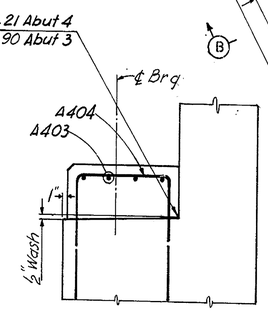

SECTION

TYPICAL PAD DETAIL
Scale: 3/4" = 1'-0"

BENDING DIAGRAMS

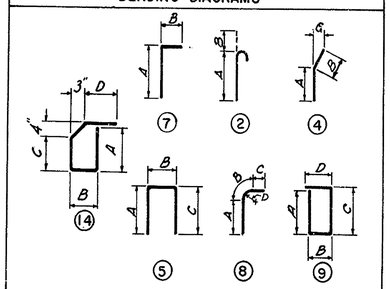

Dimensions are out to out of bars

REINFORCING BAR SCHEDULE							
MARK	NO	TYPE	A	B	C	D	LENGTH
A558	18	Str.					13'-10"
A559	27	4	2'-0"	1'-0"	0'-10"		3'-0"
A560	8 Ser 5 ea	Str.					6'-7" to 9'-0"
A406	27	5	0'-10"	0'-8"	0'-10"		2'-4"
A 405	23	14	2'-1"	0'-8"	1'-9"	1'-3"	6'-2"

Note: Bar Schedule includes reinforcing for both Abutments.

DELAWARE TURNPIKE	CONT. NO.	TITLE	SHEET NO.	TOTAL SHEETS
	7053		56	86

REINFORCING BAR SCHEDULE							
MARK	NO	TYPE	A	B	C	D	LENGTH
A401	27	5	0'-10"	0'-11"	0'-10"		2'-7"
A402	4	9	2'-0"	0'-8"	2'-1"	0'-10"	5'-7"
A501	56	Str					29'-4"
A502	4 Ser 6 ea	Str					6'-4" to 8'-10"
A503	194	Str					8'-6"
A504	4 Ser 6 ea	Str					4'-0" to 6'-6"
A505	18	7	5'-9"	2'-0"			7'-9"
A506	88	Str					28'-4"
A507	106	7	8'-10"	1'-2"			10'-0"
A508	106	7	2'-8"	3'-5"			6'-1"
A509	324	Str					3'-2"
A510	106	2	6'-8"	0'-7"			7'-3"
A511	28	Str					3'-0"
A512	18	Str					13'-0"
A513	8 Ser 5 ea	Str					6'-0" to 8'-5"
A514	20	Str					12'-0"
A515	16	Str					6'-7"
A516	20	Str					4'-4"
A517	10	Str					5'-9"
A518	24	Str					6'-3"
A519	8	Str					4'-10"
A520	22	Str					13'-7"
A521	4	Str					16'-8"
A522	4 Ser 3 ea	Str					12'-4" to 16'-0"
A523	26	Str					11'-11"
A524	2 Ser 3 ea	Str					10'-6" to 11'-9"
A525	4	Str					15'-3"
A526	4 Ser 3 ea	Str					11'-2" to 14'-6"
A527	20	Str					10'-10"
A528	2 Ser 3 ea	Str					12'-11" to 13'-5"
A529	30	Str					9'-3"
A530	30	7	4'-11"	1'-7"			6'-6"
A531	4	5	1'-7"	5'-5"	1'-7"		8'-7"
A532	2 Ser 4 ea	Str					2'-5" to 4'-5"
A533	2 Ser 4 ea	7	2'-5" to 4'-5"	1'-7"			4'-0" to 6'-0"
A534	80	Str					5'-5"
A535	26	5	2'-5"	2'-2"	2'-5"		7'-0"
A536	2 Ser 4 ea	Str					12'-9" to 14'-3"
A537	4	Str					11'-0"
A538	4	Str					12'-9"
A539	2 Ser 4 ea	Str					9'-9" to 11'-3"
A540	4	8	1'-7"	1'-4"	1'-1"	0'-10"	4'-0"
A541	4	8	4'-3"	1'-4"	1'-1"	0'-10"	6'-8"
A542	2	Str					13'-6"
A543	2	Str					9'-9"
A544	2	Str					12'-8"
A545	2	Str					8'-5"
A546	6	4	5'-0"	2'-4"	1'-5"		7'-8"
A547	4	Str					5'-8"
A548	4	Str					4'-2"
A549	2 Ser 3 ea	Str					14'-5" to 14'-9"
A550	2 Ser 3 ea	Str					9'-2" to 9'-6"
A551	32	Str					13'-7"
A552	16	Str					7'-11"
A553	8 Ser 5 ea	Str					1'-9" to 7'-4"
A554	4	Str					15'-3"
A555	4	Str					14'-2"
A556	30	7	6'-3"	2'-0"			8'-3"
A557	4	Str.					6'-0"
A403	40	5	3'-7"	2'-8"	3'-7"		9'-10"
A404	50	5	3'-7"	1'-10"	3'-7"		9'-0"

NO.	REVISION	BY	DATE
3			
2			
1			

	BY	DATE
MADE	I.R.P.	10-69
CHECKED	F.J.C.	11-69
IN CHARGE	J.E.H.	

DELAWARE STATE HIGHWAY DEPARTMENT

DELAWARE TURNPIKE

ROUTE 896 INTERCHANGE IMPROVEMENTS
BRIDGE OVER DELAWARE TURNPIKE

ABUTMENTS 3 & 4 DETAILS

HOWARD, NEEDLES, TAMMEN & BERGENDOFF
consulting engineers
NEW YORK KANSAS CITY

SCALE: 1/2" = 1'-0" unless noted
CONTRACT NO. 7053
SHEET NO. 5 OF 25

DELAWARE TURNPIKE	CONT. NO.	TITLE	SHEET NO.	TOTAL SHEETS
	7053		57	86

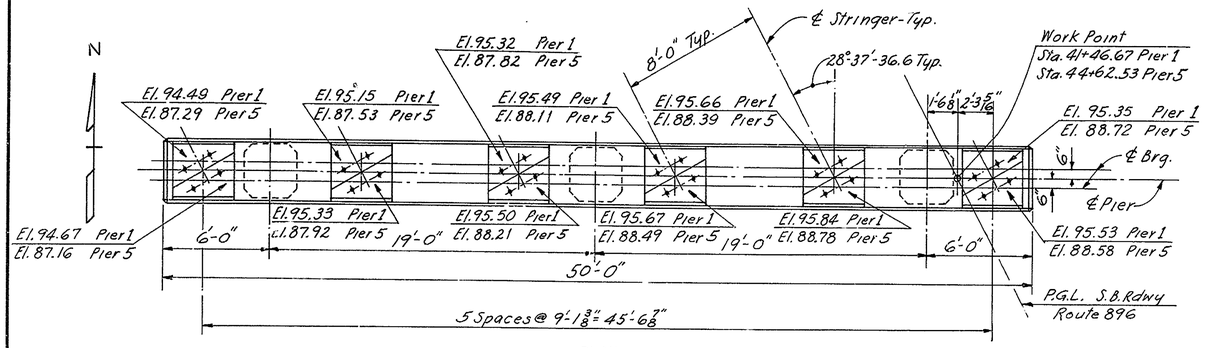

PLAN

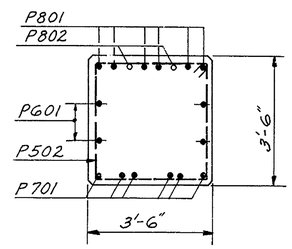

SECTION A-A
Scale ½"=1'-0"

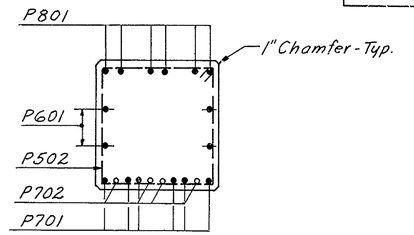

SECTION B-B
Scale ½"=1'-0"

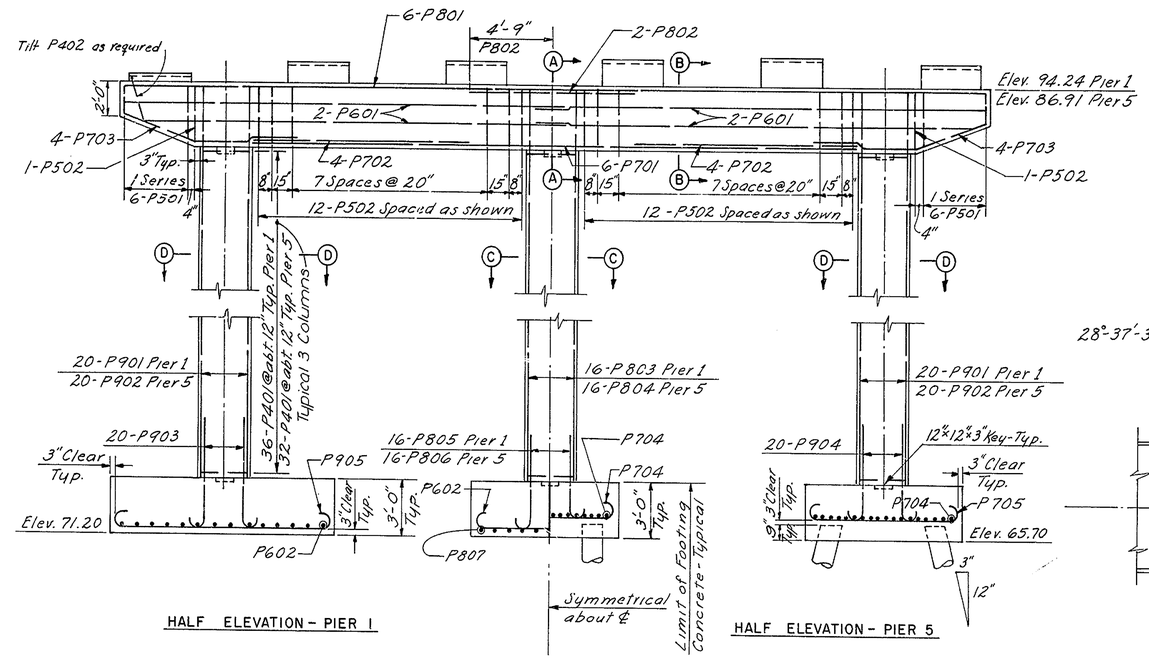

HALF ELEVATION - PIER 1

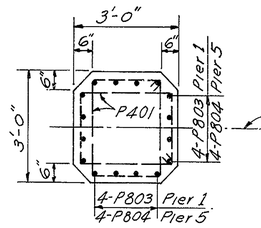

SECTION C-C
Scale ½"=1'-0"

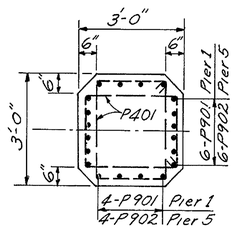

SECTION D-D
Scale ½"=1'-0"

HALF ELEVATION - PIER 5

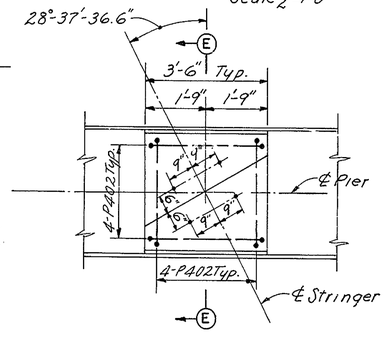

PAD PLAN
Scale ½"=1'-0"

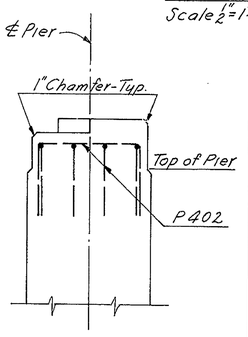

SECTION E-E
Scale ½"=1'-0"

REINFORCING SCHEDULE				
MARK	NO. REQ'D PIER 1	NO. REQ'D PIER 5	TYPE	LENGTH
P401	108	96	3	10'-2"
P402	48	48	5	8'-8"
P501	2 Series 6	2 Series 6	3	10'-6" to 13'-0"
P502	26	26	3	13'-6"
P601	8	8	Str.	25'-9"
P602	41		1	9'-10"
P701	6	6	Str.	35'-0"
P702	8	8	Str.	11'-3"
P703	8	8	6	11'-5"
P704		68	1	9'-2"
P705		32	1	10'-2"
P801	6	6	Str.	49'-8"
P802	2	2	Str.	9'-6"
P803	16		Str.	19'-10"
P804		16	Str.	18'-0"
P805	16		2	6'-4"
P806		16	2	5'-7"
P807	11		1	13'-8"
P901	40		Str.	19'-10"
P902		40	Str.	18'-0"
P903	40		2	6'-10"
P904		40	2	6'-1"
P905	22		1	15'-0"

BENDING DIAGRAMS

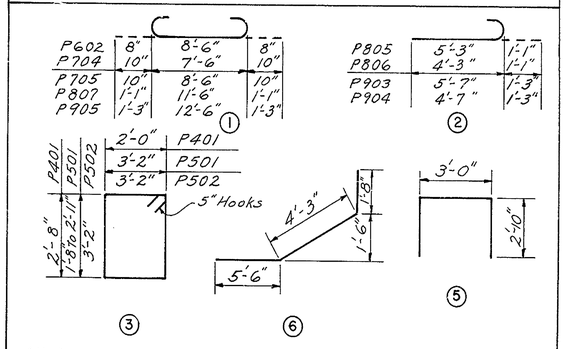

All dimensions are out to out of bars

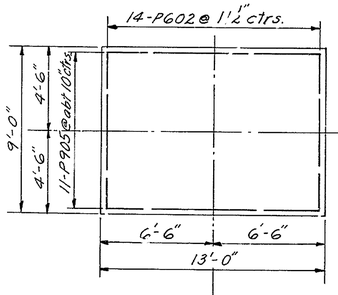

HALF FOOTING PLAN - PIER 1

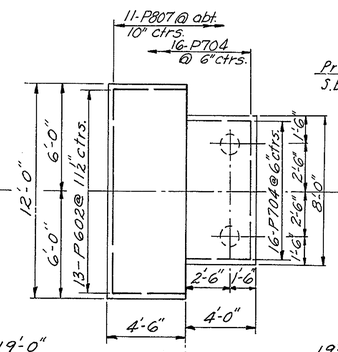

HALF FOOTING PLAN - PIER 5

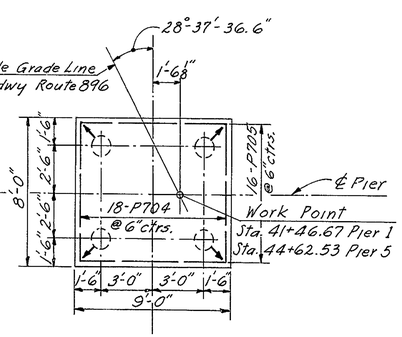

NOTES:

For General Notes, see Sheet No. 1 of 25.
Pad elevations given denote top of finished concrete pad.
For details of anchor bolts for shoes, see Sheet No. 16 of 25
Minimum reinforcing steel concrete cover, 3" in footing, 2" above footing.
For Pile Details and notes, see Sheet No. 3 of 25
For Epoxy Protective Coating limits see detail Sheet 8 of 25.

LEGEND

○ Indicates Vertical Piles

○→ Indicates pile battered 1 on 4 in the direction shown.

NO.	REVISION	BY	DATE
3			
2			
1			

	BY	DATE
MADE	F.J.C.	10-69
CHECKED	J.R.C.	11-69
IN CHARGE	J.E.H.	

DELAWARE STATE HIGHWAY DEPARTMENT

DELAWARE TURNPIKE

ROUTE 896 INTERCHANGE IMPROVEMENTS
BRIDGE OVER DELAWARE TURNPIKE

PIERS 1 & 5

HOWARD, NEEDLES, TAMMEN & BERGENDOFF
consulting engineers
NEW YORK KANSAS CITY

SCALE: 1"=1'-0" unless Noted
CONTRACT NO. 7053
SHEET NO. 6 OF 25

DELAWARE TURNPIKE	CONT. NO.	TITLE	SHEET NO.	TOTAL SHEETS
	7053		58	86

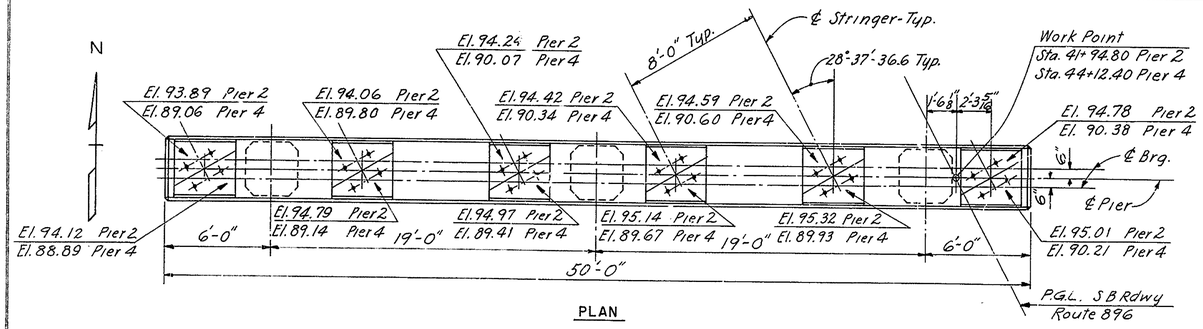

PLAN

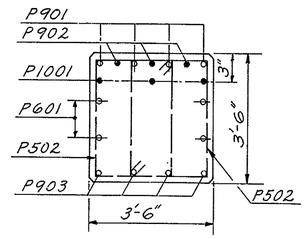

SECTION A-A
Scale 1/2"=1'-0"

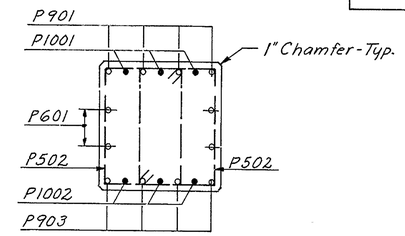

SECTION B-B
Scale 1/2"=1'-0"

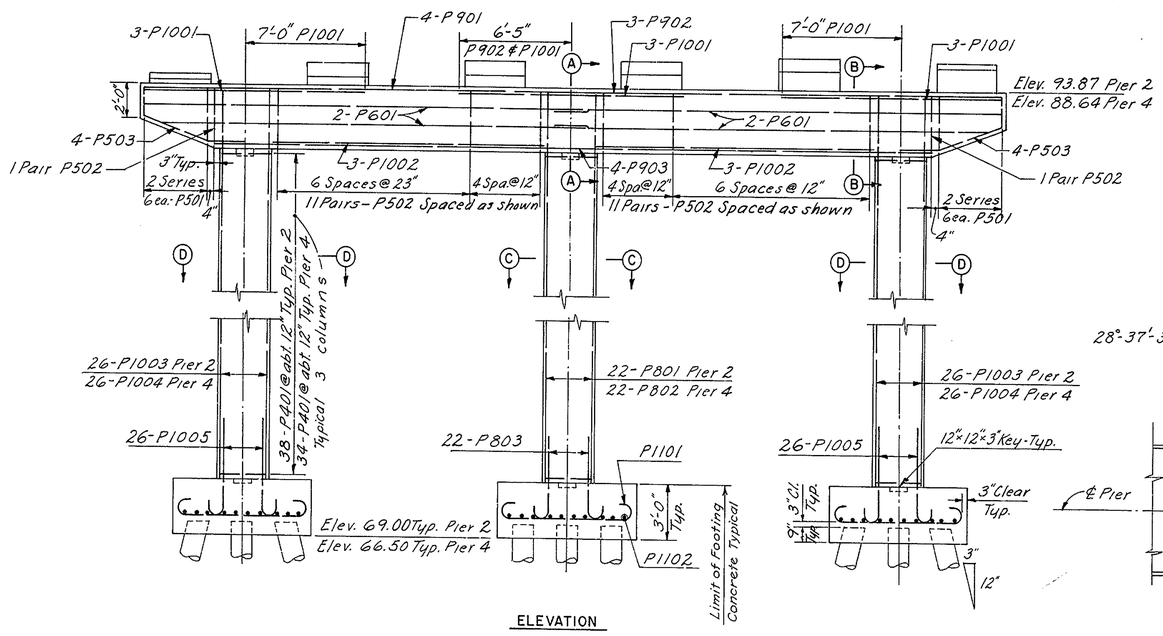

ELEVATION

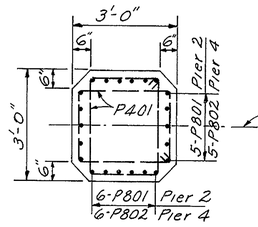

SECTION C-C
Scale 1/2"=1'-0"

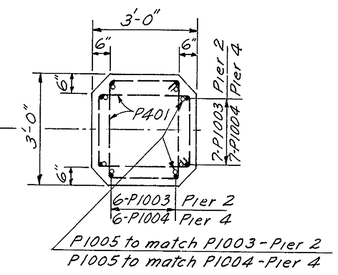

SECTION D-D
Scale 1/2"=1'-0"

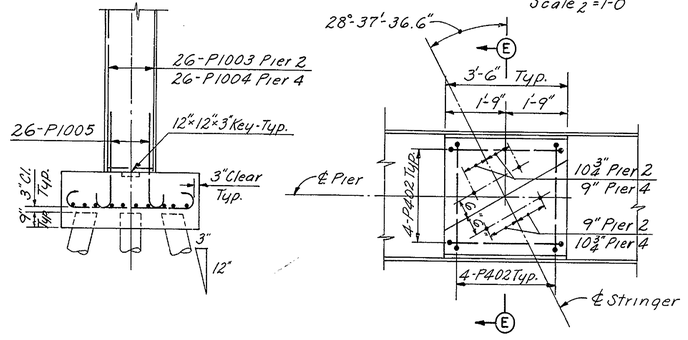

PAD PLAN
Scale 1/2"=1'-0"

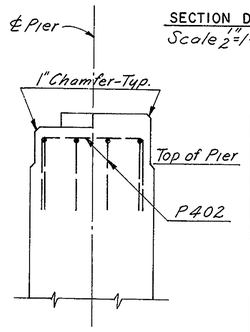

SECTION E-E
Scale 1/2"=1'-0"

REINFORCING SCHEDULE				
MARK	NO. REQ'D PIER 2	NO. REQ'D PIER 4	TYPE	LENGTH
P401	114	102	3	10'-2"
P402	48	48	5	8'-2"
P501	4 Ser. 6 ea.	4 Ser. 6 ea.	3	8'-2" to 10'-8"
P502	48	48	3	11'-2"
P503	8	8	4	6'-0"
P601	8	8	Str.	25'-10"
P801	22		Str.	21'-8"
P802		22	Str.	19'-0"
P803	22	22	2	5'-7"
P901	4	4	Str.	49'-8"
P902	3	3	Str.	12'-10"
P903	4	4	Str.	41'-6"
P1001	9	9	Str.	12'-10"
P1002	6	6	Str.	16'-0"
P1003	52		Str.	21'-8"
P1004		52	Str.	19'-0"
P1005	52	52	2	6'-8"
P1101	30	30	1	10'-8"
P1102	30	30	1	11'-8"

BENDING DIAGRAMS

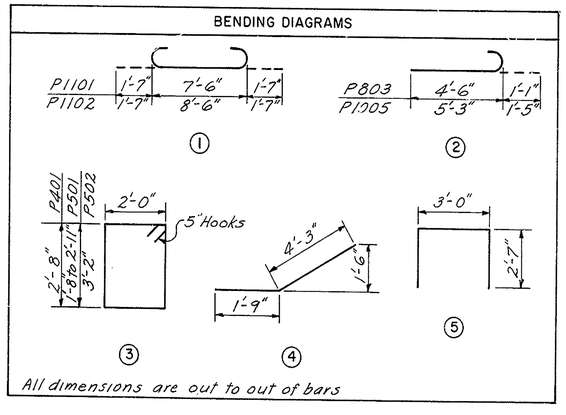

All dimensions are out to out of bars

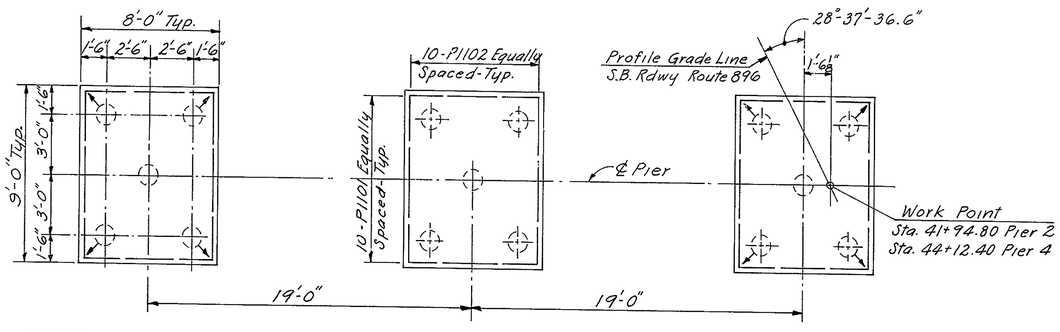

PILE PLAN

LEGEND:

○ Indicates Vertical Piles

○→ Indicates pile battered 1 on 4 in the direction shown.

NOTES:

For General Notes, see Sheet No. 1 of 25.
Pad elevations given denote top of finished concrete pad.
For details of anchor bolts for shoes, see Sheet No. 16 of 25.
Minimum reinforcing steel concrete cover, 3" in footing, 2" above footing.
For Pile Details and notes, see Sheet No. 3 of 25.
For Epoxy Protective Coating limits see Detail on Sheet no. 8 of 25.

NO.	REVISION	BY	DATE
3			
2			
1			

	BY	DATE
MADE	F.J.C.	2-69
CHECKED	J.R.C.	11-69
IN CHARGE	JEH	

DELAWARE STATE HIGHWAY DEPARTMENT

DELAWARE TURNPIKE

ROUTE 896 INTERCHANGE IMPROVEMENTS
BRIDGE OVER DELAWARE TURNPIKE

PIERS 2 & 4

HOWARD, NEEDLES, TAMMEN & BERGENDOFF
consulting engineers
NEW YORK KANSAS CITY

SCALE: 1/4"=1'-0" unless noted
CONTRACT NO. 7053
SHEET NO. 7 OF 25

DELAWARE TURNPIKE	CONT. NO	TITLE	SHEET NO	TOTAL SHEETS
	7053		59	86

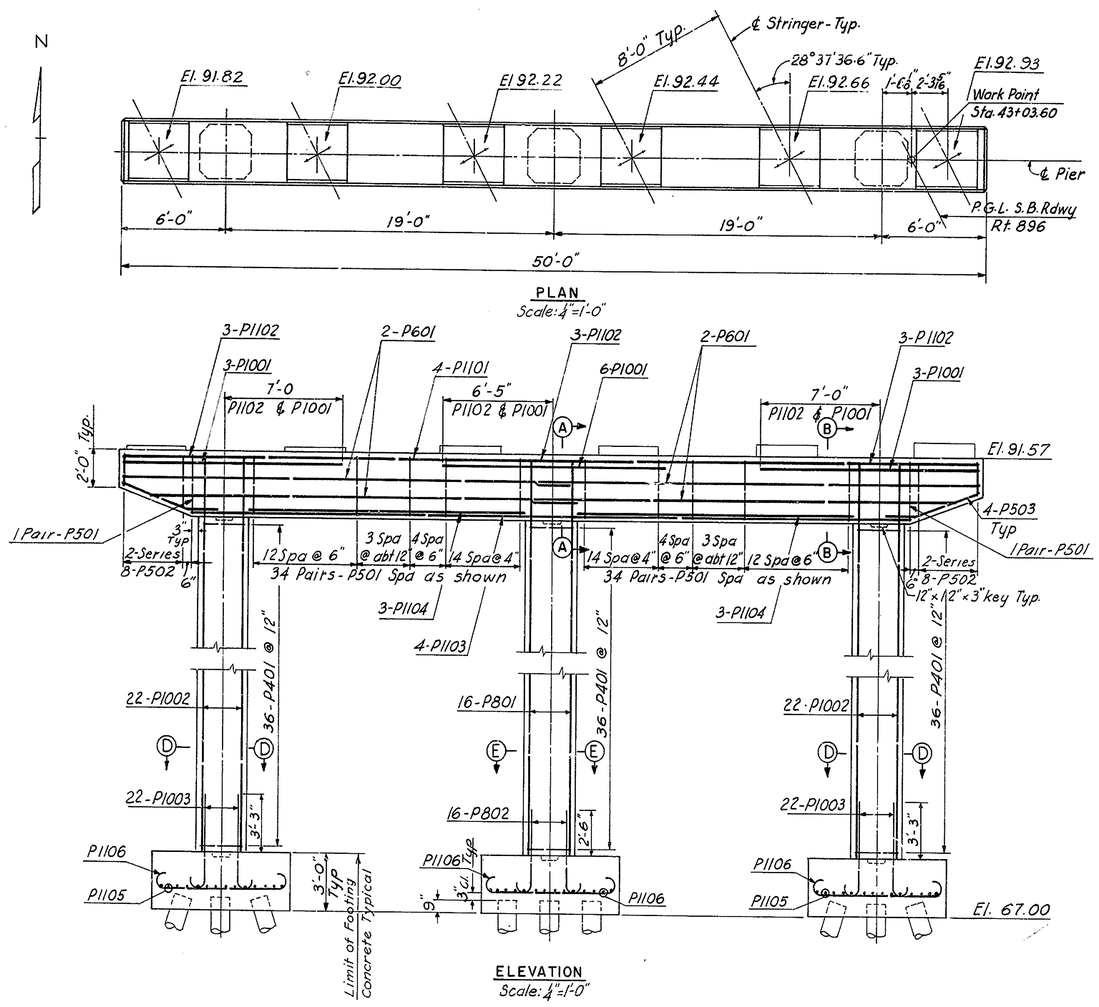

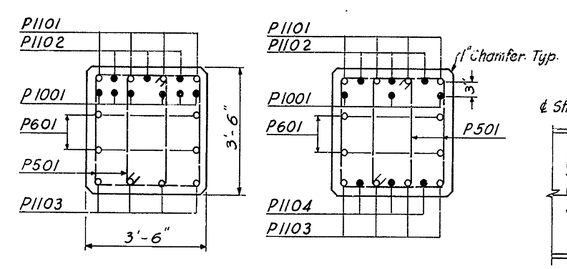

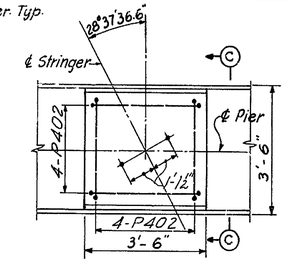

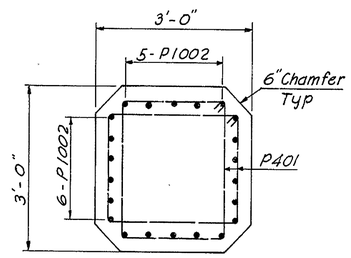

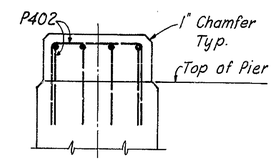

PAD DETAIL
Scale: ½"=1'-0"

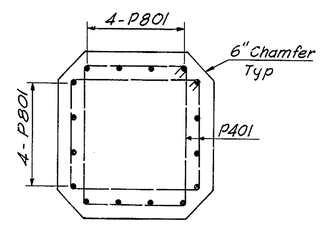

COLUMN DETAIL
Scale: ¾"=1'-0"

NOTES:

For General Notes see Sheet No. 1 of 25.

Pad elevations given denote top of finished concrete pad.

For details of anchor bolts for Shoes, see Sheet No. 16 of 25

Min. reinforcing steel concrete cover 3" ftg., 2" above ftg.

For Pile Details and notes see Sheet No. 3 of 25.

REINFORCING SCHEDULE			
MARK	NO	TYPE	LENGTH
P401	108	3	10'-2"
P402	48	5	7'-4"
P501	140	3	11'-2"
P502	4 Ser 8 ea	3	8'-2" to 10'-10"
P503	8	4	6'-0"
P601	8	Str	25'-10"
P801	16	Str	21'-5"
P802	16	2	5'-5"
P1001	12	Str	12'-10"
P1002	44	"	21'-5"
P1003	44	2	6'-6"
P1101	4	Str	49'-8"
P1102	9	"	12'-10"
P1103	4	"	41'-6"
P1104	6	"	16'-0"
P1105	28	1	9'-8"
P1106	44	1	10'-8"

BENDING DIAGRAMS

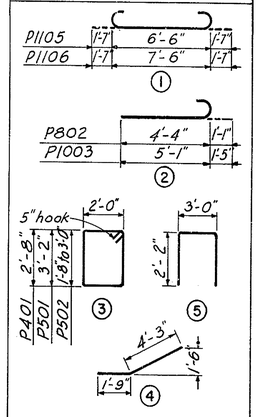

All Dimensions are out to out of bars

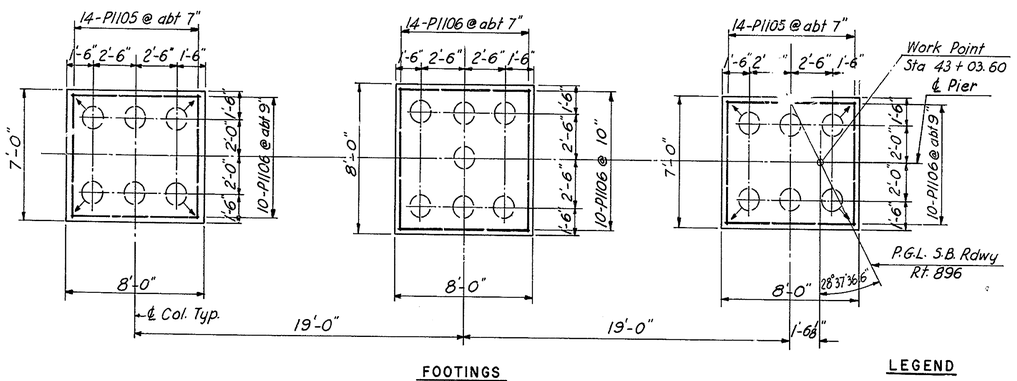

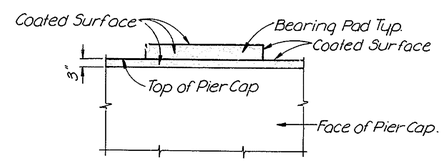

EPOXY PROTECTIVE COATING FOR CONCRETE LIMIT DETAIL
No Scale

LEGEND

○ Indicates Vertical Piles

○→ Indicates pile battered 1 on 4 in the direction shown.

NO.	REVISION	BY	DATE
3			
2			
1			

	BY	DATE
MADE	IRP	2-69
CHECKED	J.R.C.	11-69
IN CHARGE	JEH	

DELAWARE STATE HIGHWAY DEPARTMENT

DELAWARE TURNPIKE

ROUTE 896 INTERCHANGE IMPROVEMENTS
BRIDGE OVER DELAWARE TURNPIKE
PIER 3

HOWARD, NEEDLES, TAMMEN & BERGENDOFF
consulting engineers
NEW YORK KANSAS CITY

SCALE: as noted
CONTRACT NO. 7053
SHEET NO. 8 OF 25

DELAWARE TURNPIKE	CONT. NO	TITLE	SHEET NO	TOTAL SHEETS
	7053		60	86

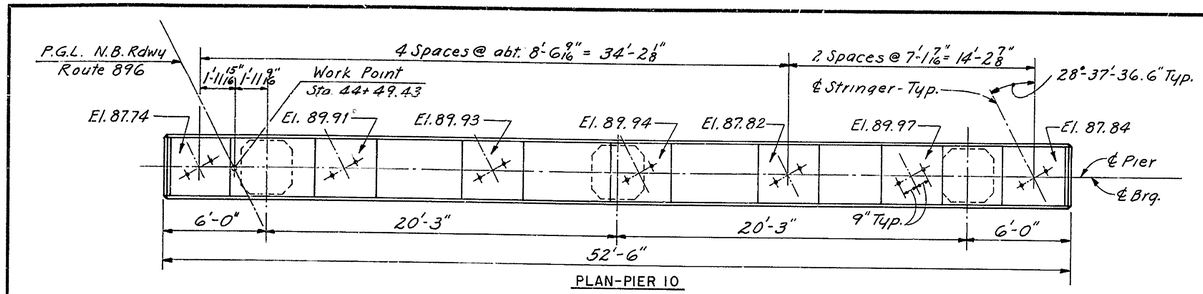

PLAN-PIER 10

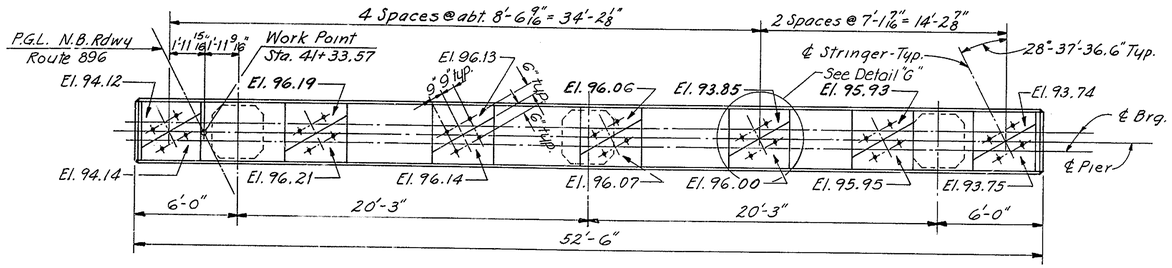

PLAN-PIER 6

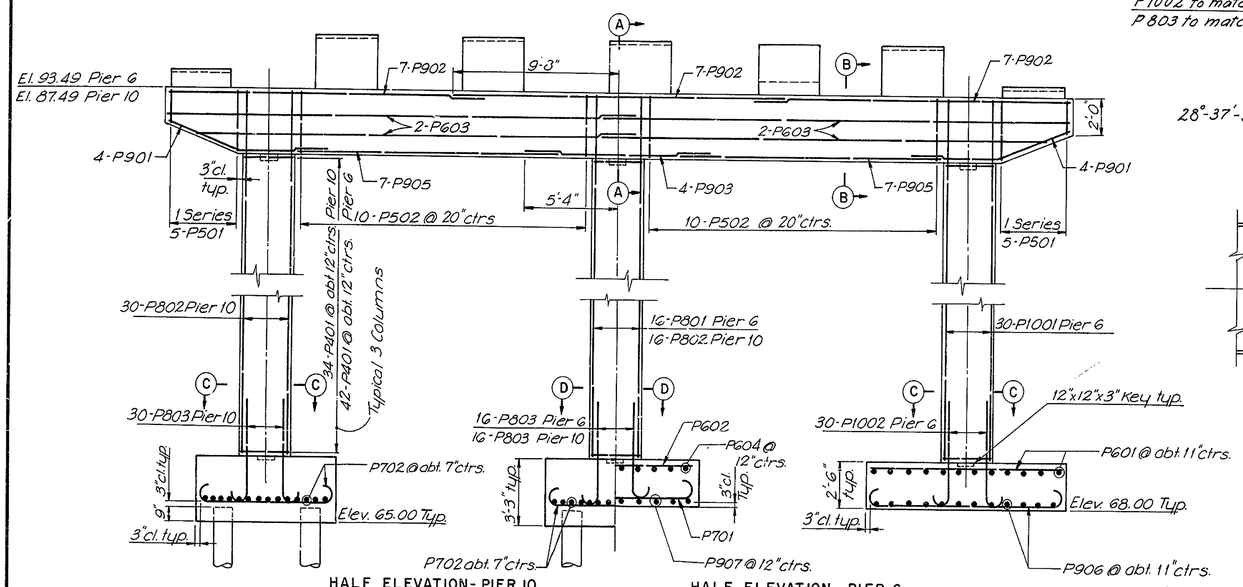

HALF ELEVATION- PIER 10

HALF ELEVATION - PIER 6

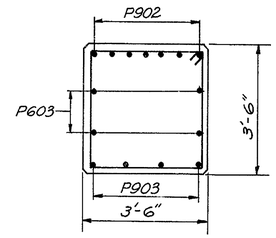

SECTION A-A
Scale 1/2" = 1'-0"

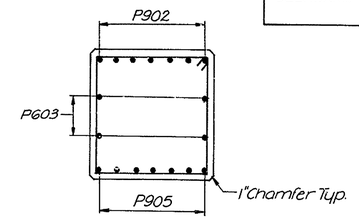

SECTION B-B
Scale 1/2" = 1'-0"

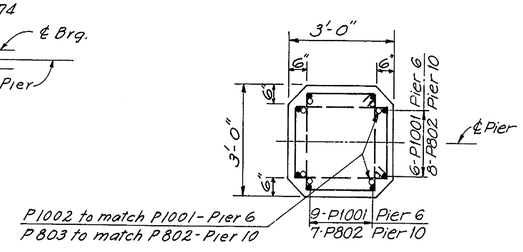

SECTION C-C
Scale 1/2" = 1'-0"

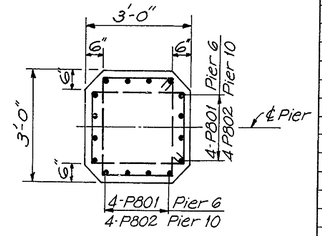

SECTION D-D
Scale 1/2" = 1'-0"

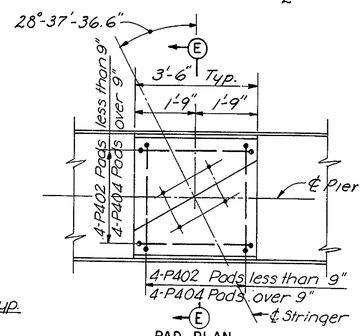

PAD PLAN
Scale 1/2" = 1'-0"

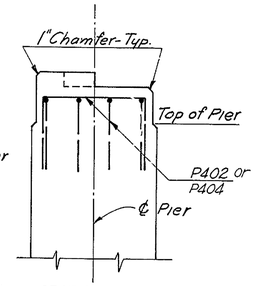

SECTION E-E
Scale 1/2" = 1'-0"

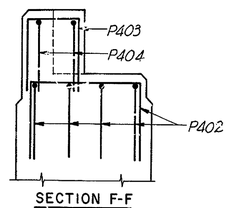

SECTION F-F
Scale 1/2" = 1'-0"

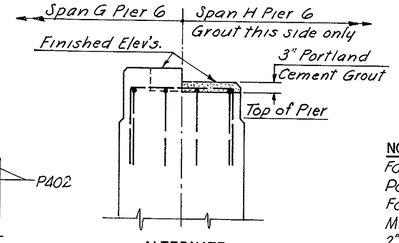

ALTERNATE
SECTION E-E
Scale 1/2" = 1'-0"

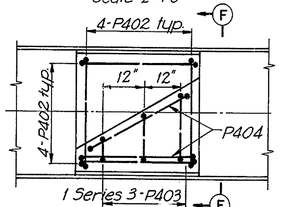

DETAIL "G"
Scale 1/2" = 1'-0"

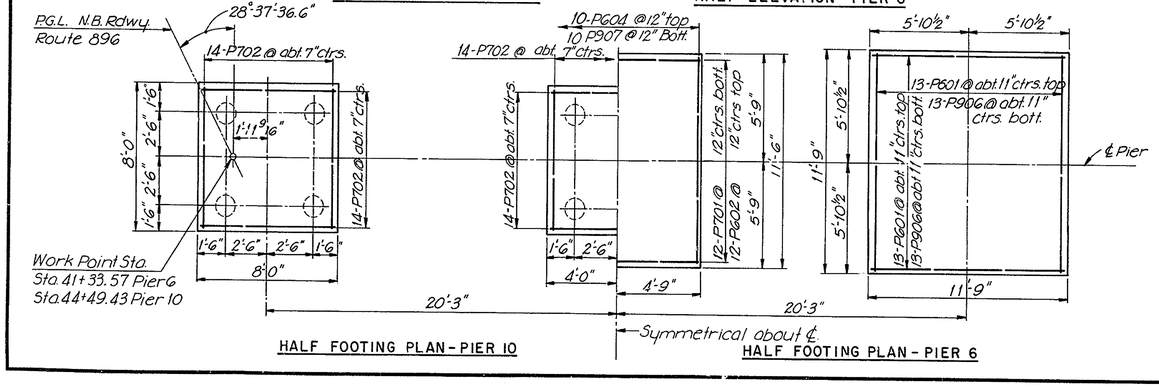

HALF FOOTING PLAN - PIER 10

HALF FOOTING PLAN - PIER 6

REINFORCING SCHEDULE

MARK	NO. REQ'D PIER 6	NO. REQ'D PIER 10	TYPE	LENGTH
P401	126	132	3	10'-2"
P402	24	24	5	6'-6"
P403	1 Series 3		5	7'-8" to 8'-10"
P404	34	32	5	10'-6"
P501	2 Series 5	2 Series 5	3	10'-6" to 13'-0"
P502	20	20	3	13'-6"
P601	52		Str.	11'-3"
P602	12		Str.	9'-0"
P603	8	8	Str.	27'-0"
P604	10		Str.	11'-0"
P701	12		1	10'-8"
P702		84	1	9'-2"
P801	16		Str.	22'-8"
P802		76	Str.	18'-11"
P803	16	76	2	5'-10"
P901	8	8	6"	11'-5"
P902	21	21	Str.	19'-4"
P903	4	4	Str.	10'-8"
P904	10		1	13'-6"
P905	14	14	Str.	14'-6"
P906	26		1	13'-9"
P1001	60		Str.	22'-8"
P1002	60		2	6'-11"

BENDING DIAGRAMS

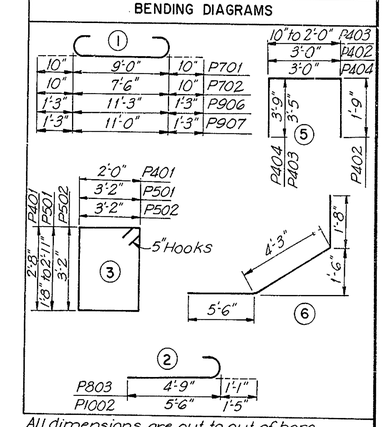

All dimensions are out to out of bars.

NOTES:

For General Notes see sheet No. 1 of 25.
Pad elevations given denotes top of finished concrete pad.
For Details of anchor bolts for shoes, see Sheet No. 16 of 25.
Minimum reinforcing steel concrete cover, 3" in footing, 2" above footing.
For Pile details and notes, see sheet No. 3 of 25
For Epoxy Protective Coating limits see detail Sheet No. 8 of 25

NO.	REVISION	BY	DATE
3			
2			
1			

	BY	DATE
MADE	F.J.C./D.L.S.	11-69
CHECKED	J.R.C.	11-69
IN CHARGE	J.E.H.	

DELAWARE STATE HIGHWAY DEPARTMENT

DELAWARE TURNPIKE

ROUTE 896 INTERCHANGE IMPROVEMENTS
BRIDGE OVER DELAWARE TURNPIKE

PIERS 6 & 10

HOWARD, NEEDLES, TAMMEN & BERGENDOFF
consulting engineers
NEW YORK KANSAS CITY

SCALE: 1/4" = 1'-0" unless Noted
CONTRACT NO. 7053
SHEET NO. 9 OF 25

DELAWARE TURNPIKE	CONT. NO.	TITLE	SHEET NO.	TOTAL SHEETS
	7053		61	86

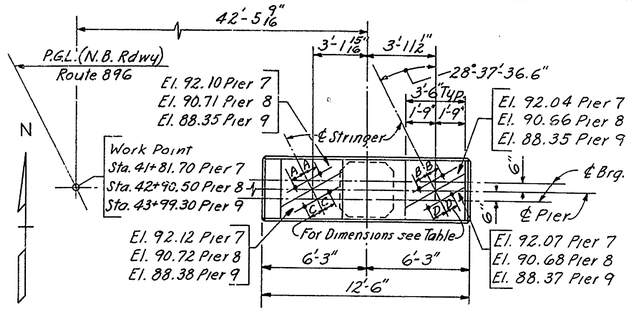

PLAN

ANCHOR BOLT LOCATION TABLE				
PIER	DIM. A	DIM. B	DIM. C	DIM. D
7	11"	11"	9"	7½"
8	11"	11"	10"	10"
9	9"	8¼"	10"	10"

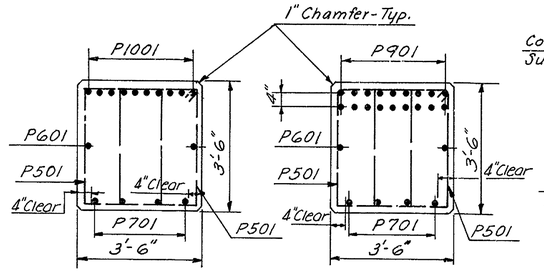

SECTION A-A
Scale 1/2" = 1'-0"

SECTION B-B
Scale 1/2" = 1'-0"

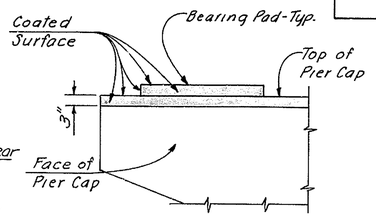

APPLICATION LIMITS OF EPOXY PROTECTIVE COATING FOR CONCRETE
Scale 1/2" = 1'-0"

REINFORCING SCHEDULE					
MARK	NO. REQ'D PIER 7	NO. REQ'D PIER 8	NO. REQ'D PIER 9	TYPE	LENGTH
P401	34	50	32	3	12'-2"
P501	4 Series 6 ea.	4 Series 10 ea.	4 Series 6 ea.	3	8'-6" to 11'-0"
P601	2	2	2	Str.	12'-2"
P602	30			Str.	13'-6"
P603		30		Str.	14'-0"
P701	4	4	4	6	12'-6"
P901		18		Str.	12'-2"
P1001	10		10	Str.	12'-2"
P1002	38			Str.	19'-6"
P1003		34		Str.	27'-3"
P1004	38	34		2	7'-2"
P1101			32	1	16'-2"
P1102			36	Str.	18'-0
P1103			36	2	7'-8"
P1104	32			1	16'-8"
P1105		32		1	17'-2"

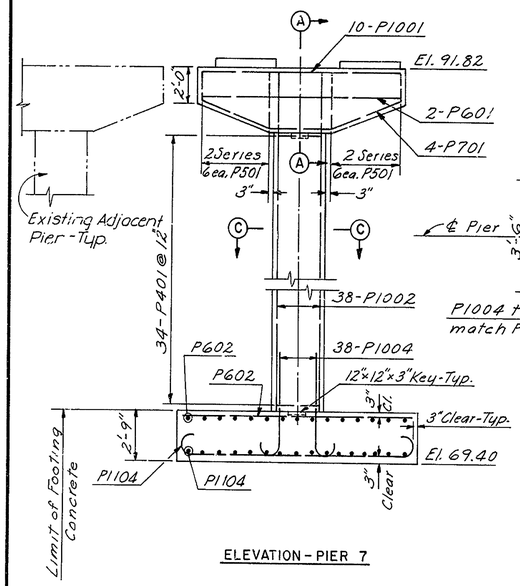

ELEVATION - PIER 7

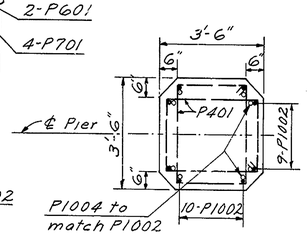

SECTION C-C
Scale 1/2" = 1'-0"

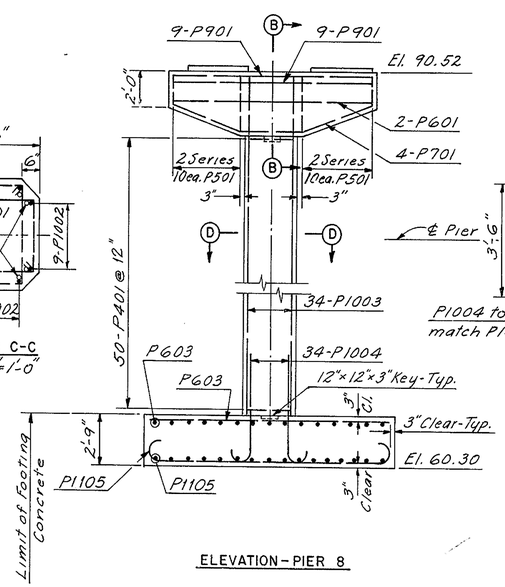

ELEVATION - PIER 8

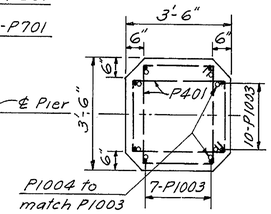

SECTION D-D
Scale 1/2" = 1'-0"

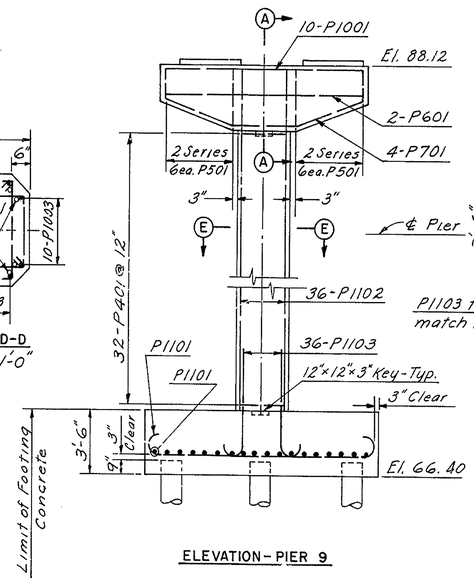

ELEVATION - PIER 9

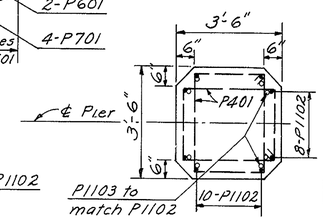

SECTION E-E
Scale 1/2" = 1'-0"

BENDING DIAGRAMS

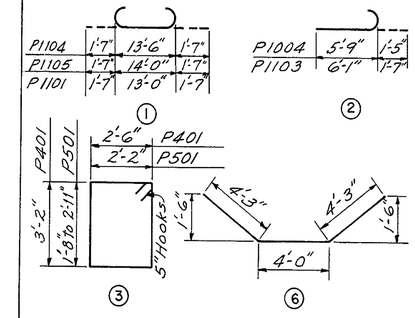

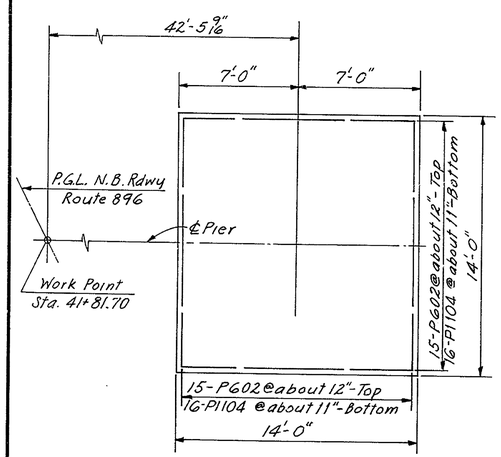

FOOTING PLAN - PIER 7

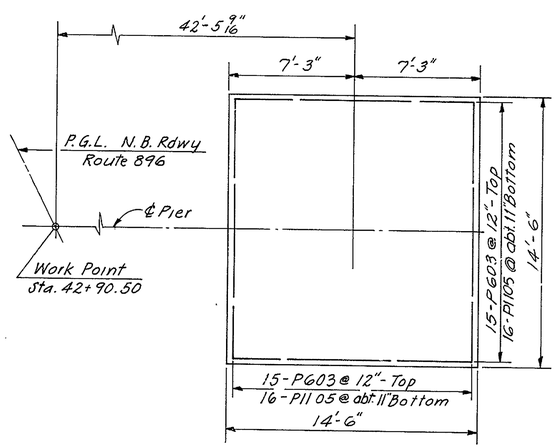

FOOTING PLAN - PIER 8

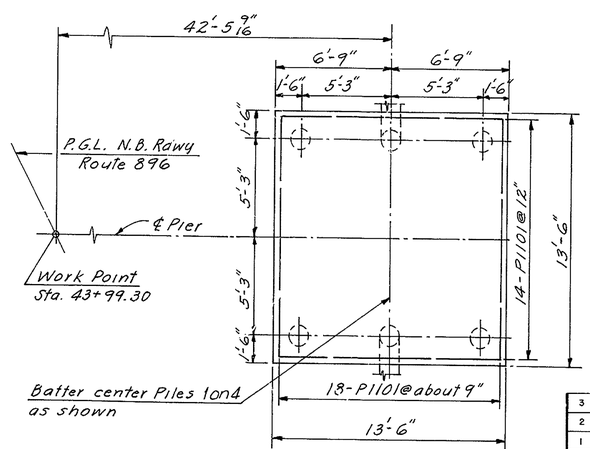

FOOTING PLAN - PIER 9

NOTES:

For General Notes, see Sheet No. 1 of 25
Pad elevations given denote top of finished concrete pad.
For details of anchor bolts for shoes, see Sheet No. 16 of 25
Minimum reinforcing steel concrete cover, 3" in footing, 2" above footing, unless noted.
For Pile Details and notes, see Sheet No. 3 of 25

NO.	REVISION	BY	DATE
3			
2			
1			

	BY	DATE
MADE	F.J.C.	11-69
CHECKED	J.R.C.	11-69
IN CHARGE	J.E.H.	

DELAWARE STATE HIGHWAY DEPARTMENT

DELAWARE TURNPIKE

ROUTE 896 INTERCHANGE IMPROVEMENTS
BRIDGE OVER DELAWARE TURNPIKE

PIERS 7-8-9

HOWARD, NEEDLES, TAMMEN & BERGENDOFF
consulting engineers
NEW YORK KANSAS CITY

SCALE: 1/4" = 1'-0" unless Noted
CONTRACT NO. 7053
SHEET NO. 10 OF 25

DELAWARE TURNPIKE	CONT. NO.	TITLE	SHEET NO.	TOTAL SHEETS
	7053		62	86

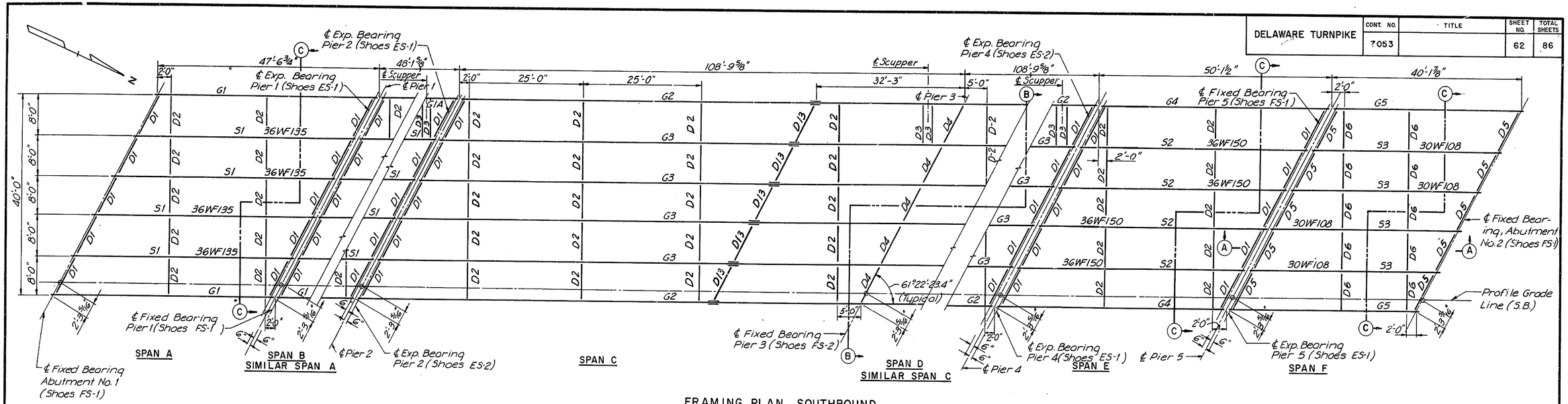

FRAMING PLAN SOUTHBOUND

Scale 1"=10'-0"

DIAPHRAGM. SCHEDULE	
D1	18 [42.7
D2	18 [42.7
D3	15 [33.9
D4	18 [42.7
D5	15 [33.9
D6	15 [33.9
D13	18 [42.7

CAMBER INCREMENTS FOR DEAD LOADS (Inches)

	S1		S2		S3		G1		G4		G5		G1A	
	¼ & ¾L	½L	¼ & ¾L	½L	¼ & ¾L	½L	¼ & ¾L	½L	¼ & ¾L	½L	¼ & ¾L	½L	¼ & ¾L	½L
Structural Steel	.05	.08	.06	.08	.04	.06	.04	.05	.04	.06	.02	.03	.04	.05
Concrete Deck Slab	.29	.39	.29	.41	.25	.34	.23	.33	.28	.38	.13	.18	.23	.33
Par., Rail & 2" Wearing Surface	.05	.06	.05	.07	.04	.05	.03	.05	.04	.06	.02	.03	.03	.05
Full Dead Load	.39	.53	.40	.56	.33	.45	.30	.43	.36	.50	.17	.24	.30	.43
Vertical Curve	.00	.00	.25	.33	.16	.22	.00	.00	.25	.33	.16	.22	.13	.17
Total Camber	.39	.53	.65	.89	.48	.67	.30	.43	.61	.83	.33	.46	.43	.60

Note: For total camber less than 1", S1, S2 & S3 natural mill camber shall be turned upward.

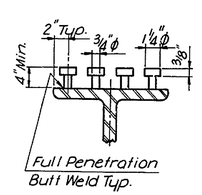

SHEAR STUD DETAIL

No Scale

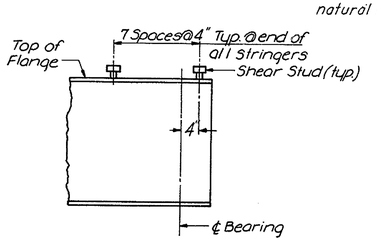

DETAIL A

No Scale

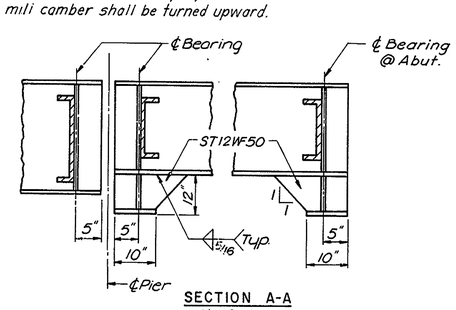

SECTION A-A

No Scale

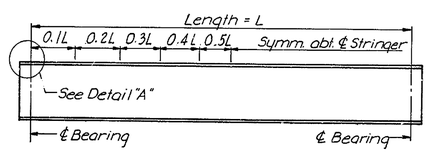

STRINGER ELEVATION

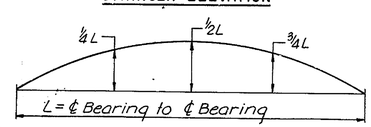

DEFLECTION DIAGRAM

STRINGER SCHEDULE					
STRINGER	LENGTH ℄ BRG. TO ℄ BRG.	SHEAR STUD SPACING 0.1L	0.2L	0.3L	0.4L	0.5L
S1	46'-11 15/16"	8"	9"	10"	12"	14"
S2	48'-11 3/16"	8"	9"	11"	12"	14"
S3	39'-7 1/16"	7"	8"	9"	11"	12"
G1 & G1A	46'-11 15/16"	10"	12"	13"	15"	17"
G4	48'-11 13/16"	10"	11"	13"	15"	17"
G5	39'-7 1/16"	10"	12"	14"	16"	18"

Note: Shear Stud Spacing shown is maximum spacing.

NOTES:

Details for Stringers G1, G1A, G2, G3, G4, & G5 See sheet no. 13 of 25.

For details and location of Diaphragms D3 supporting scupper see sheet No. 24 of 25.

For sections B-B and C-C see sheet No. 17 of 25.

For shoe details see sheet No. 16 of 25.

For General Notes see sheet No. 1 of 25.

NO.	REVISION	BY	DATE
3			
2			
1			

	BY	DATE
MADE	D.L.S.	11-69
CHECKED	J.B.G.	11-69
IN CHARGE	J.E.H.	

DELAWARE STATE HIGHWAY DEPARTMENT

DELAWARE TURNPIKE

ROUTE 896 INTERCHANGE IMPROVEMENTS

BRIDGE OVER DELAWARE TURNPIKE

FRAMING PLAN

HOWARD, NEEDLES, TAMMEN & BERGENDOFF consulting engineers

NEW YORK KANSAS CITY

SCALE: As shown

CONTRACT NO. 7053

SHEET NO. 11 OF 25

DELAWARE TURNPIKE	CONT. NO.	TITLE	SHEET NO.	TOTAL SHEETS
	7053		63	86

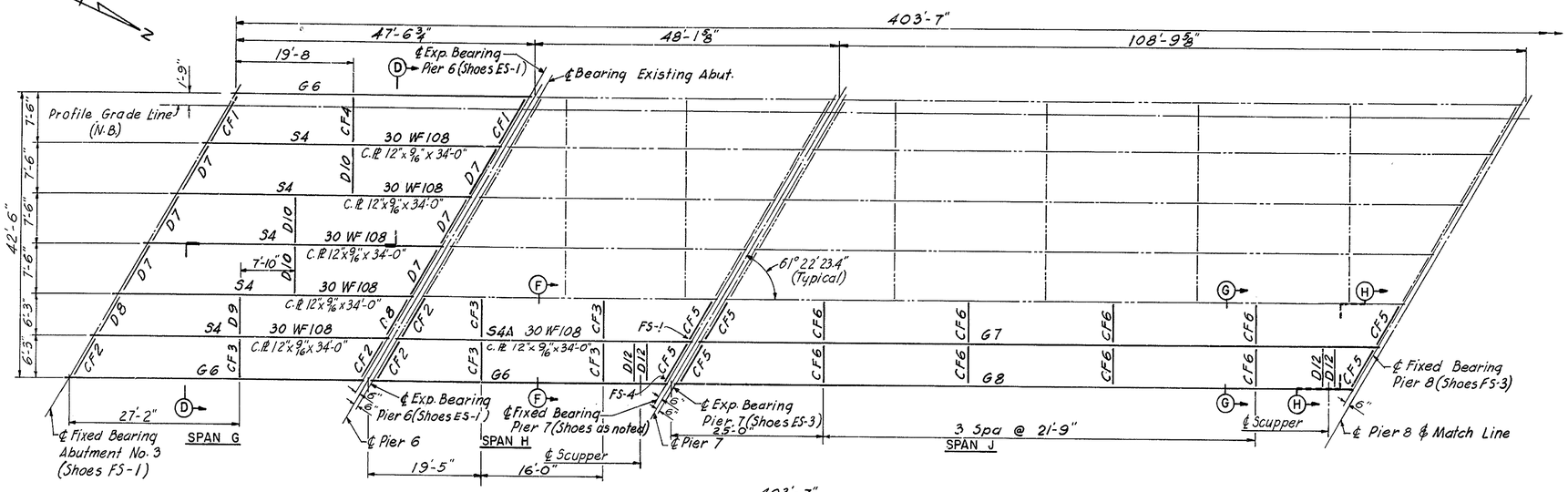

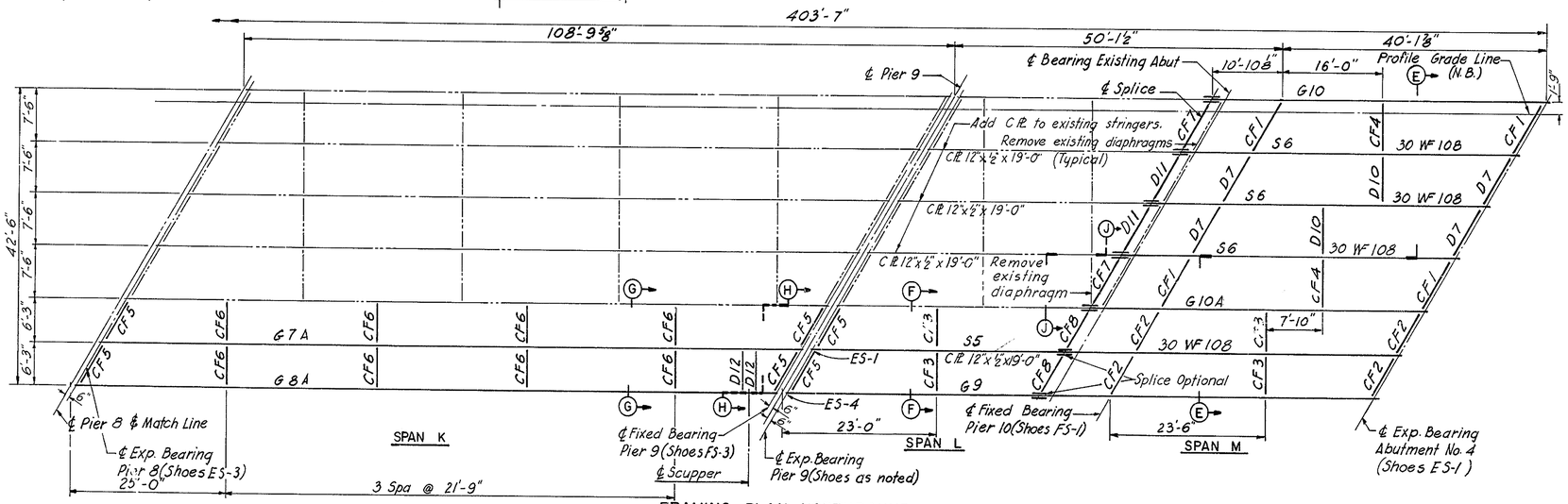

FRAMING PLAN NORTHBOUND

Scale: 1" = 10'-0"

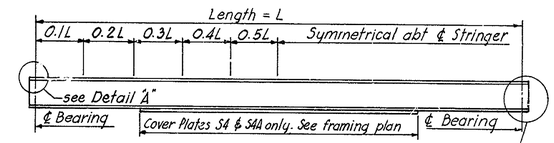

STRINGER ELEVATION

see Detail "D" S4A @ ℄ Brg Pier 7 only

DIAPHRAGM SCHEDULE	
D7	15 [33.9
D8	15 [33.9
D9	15 [33.9
D10	15 [33.9
D11	15 [33.9
D12	15 [33.9

STRINGER SCHEDULE						
STRINGER	LENGTH ℄ BRG TO ℄ BRG	SHEAR STUD SPACING 0.1L	0.2L	0.3L	0.4L	0.5L
S4 & S4A	46'-11⅞"	6"	8"	10"	12"	17"
G6	46'-11⅞"	12"	15"	18"	21"	24"
G7 & G7A	107'-8"	9"	11"	15"	21"	24"
G8 & G8A	107'-8"	9"	11"	15"	21"	24"

Note: Shear Stud spacing shown is maximum spacing.

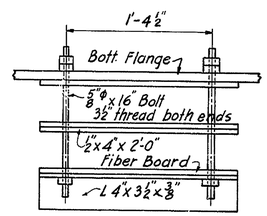

TEL. CONDUIT SUPPORT

Scale: 1½" = 1'-0"

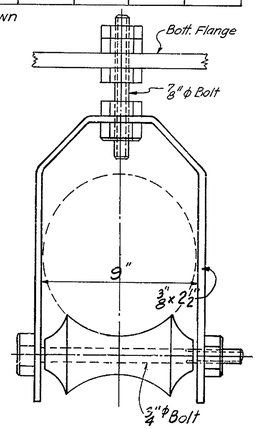

GAS MAIN SUPPORT

Scale: 3" = 1'-0"

SUPPORTS FOR EXISTING UTILITIES

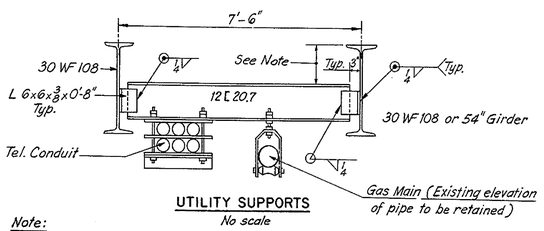

UTILITY SUPPORTS

No scale

Note:

12 [20.7 channels shall be spaced at 5'-0" ctrs. throughout lengthened and new spans. Telephone supports shall be fastened to each 12 [20.7 channel. Gas Main supports shall be fastened to alternate 12 [20.7 channels.

Support channels shall be set to accommodate the existing utility locations as directed.

For additional details of utility supports see this sheet.

NOTES:

For General Notes see sheet No. 1 of 25.

For detail regarding the 3" block-out of existing exterior stringers, adjacent to the widening, for the sliding plate joint see sheet No. 23 of 25

For details of stringers S6, G10 and G10A see sheet No. 14 of 25.

For details of stringers G6 see sheets No. 14 and 15 of 25.

For details of stringers S5 and G9 see sheet No. 15 of 25.

For stringers S4 and S4A camber increments see sheet No. 15 of 25.

For detail "A" and shear stud detail see sheet No. 11 of 25.

For detail "D" see sheet No. 14 of 25.

For sections D-D thru J-J see sheet No. 17 of 25.

For shoe details see sheet No. 16 of 25.

For details and location of Diaphragms D12 supporting scupper see sheet No. 24 of 25.

NO.	REVISION	BY	DATE
3			
2			
1			

	BY	DATE
MADE	I.R.P.	10-69
CHECKED	J.B.G.	11-69
IN CHARGE	J.E.H.	

DELAWARE STATE HIGHWAY DEPARTMENT

DELAWARE TURNPIKE

ROUTE 896 INTERCHANGE IMPROVEMENTS
BRIDGE OVER DELAWARE TURNPIKE

FRAMING PLAN

HOWARD, NEEDLES, TAMMEN & BERGENDOFF
consulting engineers
NEW YORK KANSAS CITY

SCALE: as noted
CONTRACT NO. 7053
SHEET NO. 12 OF 25

DELAWARE TURNPIKE	CONT. NO.	TITLE	SHEET NO.	TOTAL SHEETS
	7053		64	86

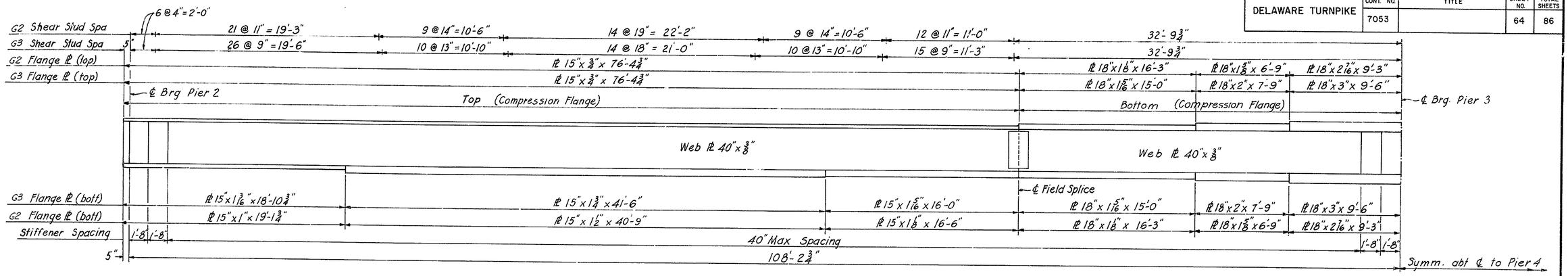

STRINGERS G2 & G3
Scale: 1/4" = 1'-0"

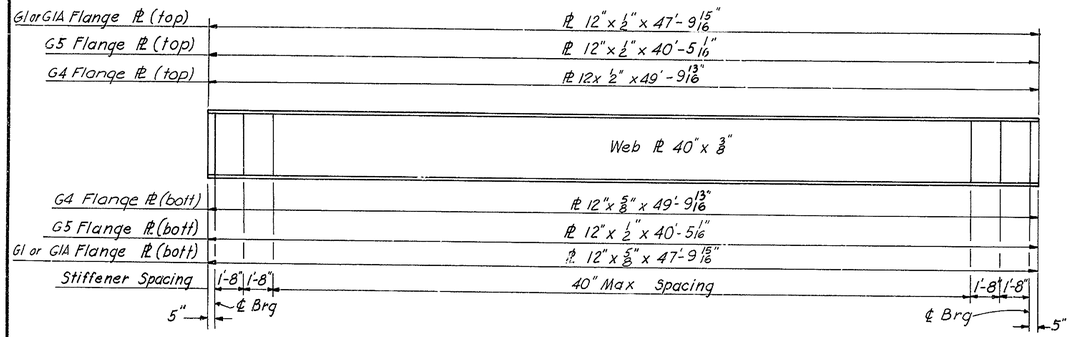

STRINGERS G1, G1A, G4 & G5
Scale: 1/4" = 1'-0"

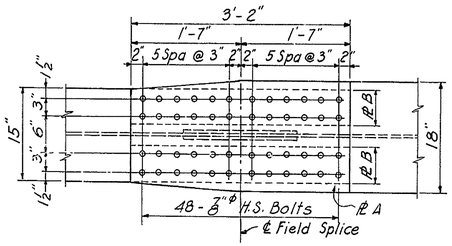

FLANGE SPLICE
Scale: 1" = 1'-0"

		℄ Brg	0.1	0.2	0.3	0.4	0.5	0.6	0.7	0.8	0.9	℄ Brg
CAMBER INCREMENTS FOR DEAD LOAD (inches)												
		SPAN C & SPAN D *										
G2	Structural Steel	0	.14	.24	.31	.33	.29	.23	.18	.08	.01	0
G2	Conc. Deck Slab		.53	.94	1.19	1.26	1.14	.88	.49	.19	.02	
G2	Par. Rail & 2" Wear Surface		.11	.20	.27	.29	.28	.24	.16	.08	.02	
G2	Full Dead Load		.78	1.38	1.77	1.88	1.71	1.35	.83	.35	.05	
G2	Vertical Curve		.58	1.03	1.35	1.55	1.61	1.55	1.35	1.03	.58	
G2	Total Camber	0	1.36	2.41	3.12	3.43	3.32	2.90	2.18	1.38	.63	0
G3	Structural Steel	0	.13	.24	.30	.32	.28	.21	.20	.08	.01	0
G3	Conc. Deck Slab		.59	1.06	1.34	1.40	1.26	.95	.49	.19	.02	
G3	Par. Rail & 2" Wear Surface		.14	.26	.33	.37	.35	.30	.21	.11	.03	
G3	Full Dead Load		.86	1.56	1.97	2.09	1.89	1.46	.90	.38	.06	
G3	Vertical Curve		.58	1.03	1.35	1.55	1.61	1.55	1.35	1.03	.58	
G3	Total Camber	0	1.44	2.59	3.32	3.64	3.50	3.01	2.25	1.41	.64	0

* Span D opposite hand.
Note: Positive sign indicates downward deflection.

Note: Values tabulated above for Span C are based on a chord between ℄ Bearing Pier 2 and ℄ Bearing Pier 3. Values tabulated above for Span D are based on a chord between ℄ Bearing Pier 3 and ℄ Bearing Pier 4.

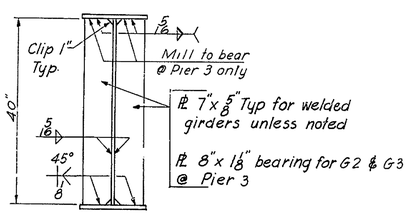

BEARING STIFFENER
Scale: 3/4" = 1'-0"

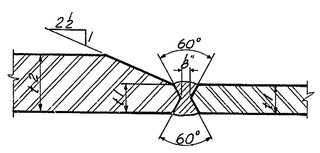

TYPICAL FLANGE SPLICE WELD
No Scale

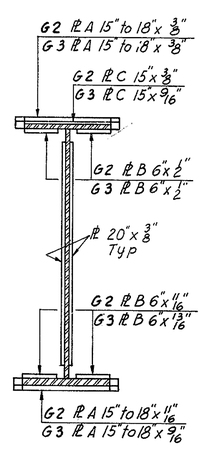

SECTION A-A

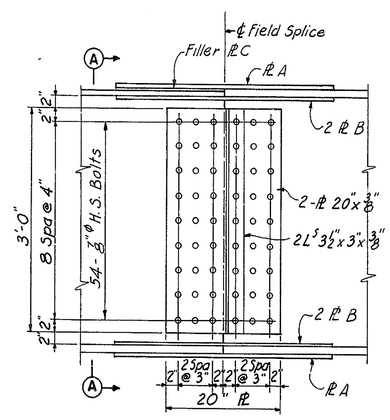

WEB SPLICE
Scale: 1" = 1'-0"

FIELD SPLICE

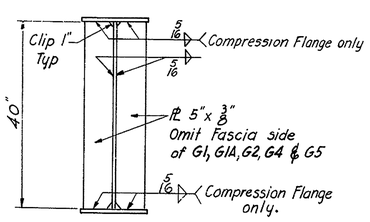

INTERMEDIATE STIFFENER
Scale: 3/4" = 1'-0"

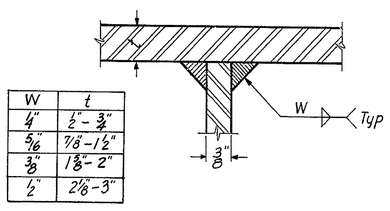

W	t
1/4"	1/2" - 3/4"
5/16"	7/8" - 1 1/2"
3/8"	1 7/8" - 2"
1/2"	2 1/8" - 3"

FLANGE TO WEB WELD
No Scale

NOTES:

Diaphragm connection PL's shall be set, then intermediate web stiffeners shall be equally spaced between them.

Intermediate web stiffeners are to be set alternating sides of interior stringers.

All dimensions are measured along ℄ of stringers.

Shear studs are not required at ℄ of field splices. Shear studs that occur on splice plates may be field welded.

For typical shear stud spacing at the ends of all girders, and for shear stud Detail see Sheet No. 11 of 25.

For location of Diaphragm Connection PL's and additional welding information see Sheet No. 17 of 25.

NO.	REVISION	BY	DATE
3			
2			
1			

	BY	DATE
MADE	IRP	10-69
CHECKED	JBG	11-69
IN CHARGE	JEH	

DELAWARE STATE HIGHWAY DEPARTMENT

DELAWARE TURNPIKE

ROUTE 896 INTERCHANGE IMPROVEMENTS
BRIDGE OVER DELAWARE TURNPIKE
GIRDER DETAILS

HOWARD, NEEDLES, TAMMEN & BERGENDOFF
consulting engineers
NEW YORK KANSAS CITY

SCALE: as noted
CONTRACT NO. 7053
SHEET NO. 13 OF 25

DELAWARE TURNPIKE	CONT. NO.	TITLE	SHEET NO.	TOTAL SHEETS
	7053		65	86

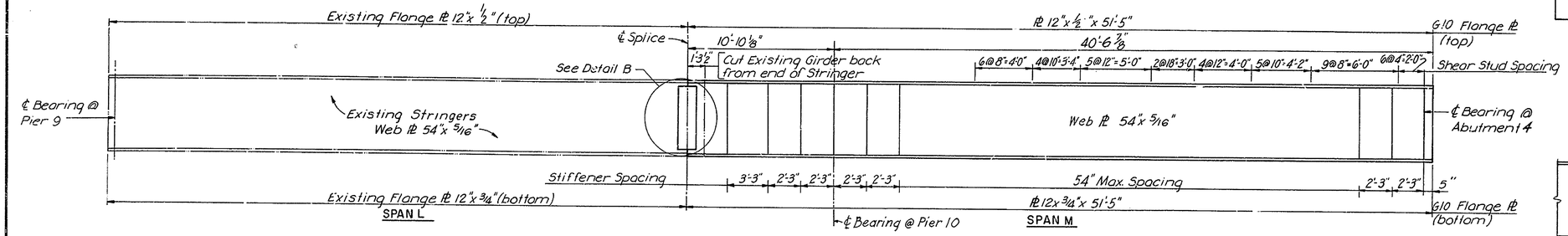

STRINGER G10 & G10A
Scale 1/4"=1'-0"

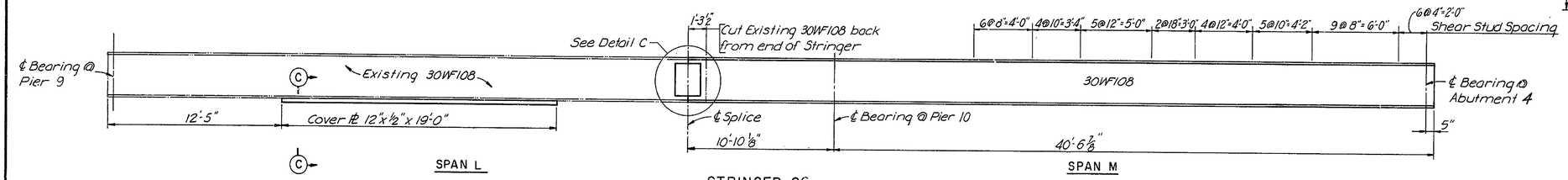

STRINGER S6
Scale 1/4"=1'-0"

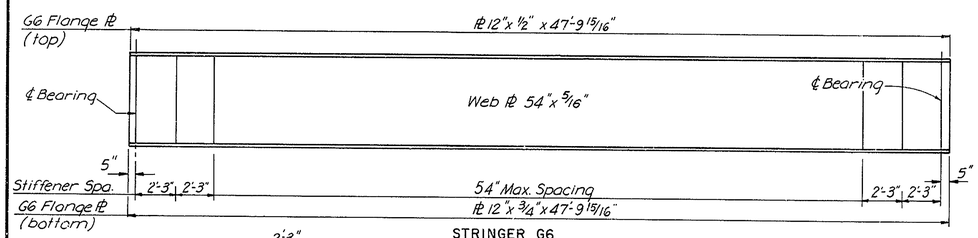

STRINGER G6
Scale 1/4"=1'-0"

		℄ Splice	0.78	0.8	0.9	℄ Brg.	0.1	0.2	0.3	0.4	0.5	0.6	0.7	0.8	0.9	℄ Brg.
	CAMBER INCREMENTS FOR DEAD LOAD (Inches)															
		SPAN L					SPAN M									
G10 & G10A	Structural Steel		.16	.16	.08	0	-.07	-.10	-.12	-.12	-.11	-.10	-.08	-.05	-.03	0
	Conc. Deck Slab		-.06	-.06	-.04	0	.07	.15	.23	.28	.31	.31	.27	.20	.11	0
	Par. Rail & 2" Wear Surface		-.02	-.02	-.01	0	.02	.05	.07	.08	.08	.08	.07	.05	.03	0
	Full Dead Load		.08	.08	.03	0	.02	.10	.18	.24	.28	.29	.26	.20	.11	0
	Vertical Curve		.24	.24	.13	0	.09	.16	.20	.23	.24	.23	.20	.16	.09	0
	Total Camber		.32	.32	.16	0	.11	.26	.38	.47	.52	.52	.46	.36	.20	0
S6	Structural Steel		.13	.13	.07	0	-.05	-.09	-.10	-.10	-.09	-.08	-.06	-.04	-.02	0
	Conc. Deck Slab		-.05	-.05	-.04	0	.07	.15	.23	.29	.32	.31	.27	.20	.11	0
	Par. Rail & 2" Wear Surface		-.02	-.02	-.01	0	.02	.05	.06	.07	.07	.07	.06	.04	.02	0
	Full Dead Load		.06	.06	.02	0	.04	.11	.19	.26	.30	.30	.27	.20	.11	0
	Vertical Curve		.24	.24	.13	0	.09	.16	.20	.23	.24	.23	.20	.16	.09	0
	Total Camber		.30	.30	.15	0	.13	.27	.39	.49	.54	.53	.47	.36	.20	0

NOTE:
Values tabulated above for Span L are based on a chord between ℄ Bearing Pier 9 and ℄ Bearing Pier 10.
Values tabulated above for Span M are based on a chord between ℄ Bearing Pier 10 and ℄ Bearing Abutment 4.
For total camber less than 1", S6 only, natural mill camber shall be turned upward.
Minus sign indicates upward deflection, positive sign indicates downward deflection.

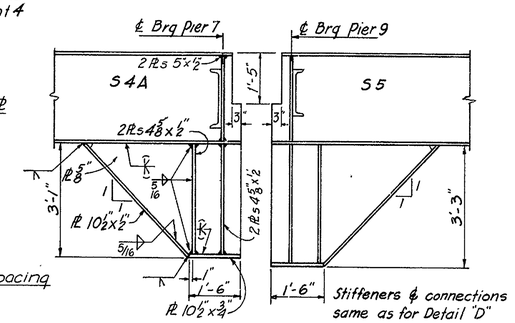

DETAIL "D" DETAIL "E"
Scale: 1/2"=1'-0"

NOTES:

Diaphragm connection PL's shall be set, then intermediate web stiffeners shall be equally spaced between them.

Intermediate web stiffeners are to be set alternating sides of interior stringers.

All dimensions are measured along ℄ of stringers.

For shear stud spacing at ends of all stringers, and for shear stud detail see sheet No. 11 of 25

For location of Diaphragm Connection PL's and additional welding information see sheet No. 17 of 25

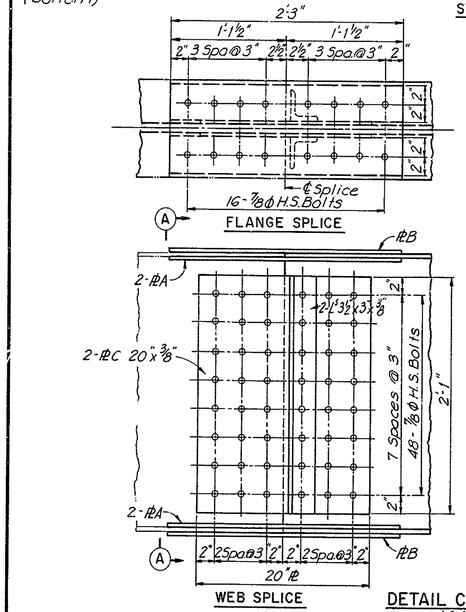

DETAIL C
Scale 1 1/2"=1'-0"

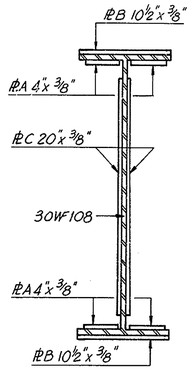

SECTION A-A

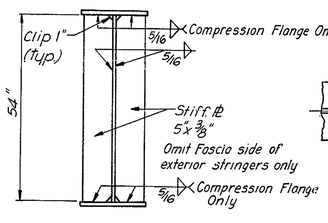

INTERMEDIATE STIFFENER
No Scale

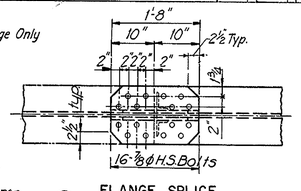

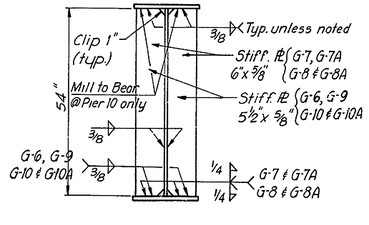

BEARING STIFFENER
No Scale

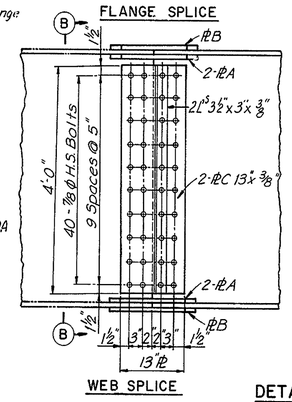

DETAIL B
Scale 3/4"=1'-0"

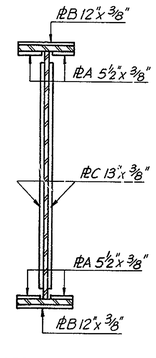

SECTION B-B

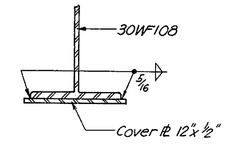

SECTION C-C
No Scale

NO.	REVISION	BY	DATE
3			
2			
1			

	BY	DATE
MADE	D.L.S.	9-69
CHECKED	JBG	11-69
IN CHARGE	JEH	

DELAWARE STATE HIGHWAY DEPARTMENT
DELAWARE TURNPIKE
ROUTE 896 INTERCHANGE IMPROVEMENTS
BRIDGE OVER DELAWARE TURNPIKE
GIRDER DETAILS

HOWARD, NEEDLES, TAMMEN & BERGENDOFF
consulting engineers
NEW YORK KANSAS CITY

SCALE: As shown
CONTRACT NO. 7053
SHEET NO. 14 OF 25

DELAWARE TURNPIKE	CONT. NO	TITLE	SHEET NO.	TOTAL SHEETS
	7053		66	86

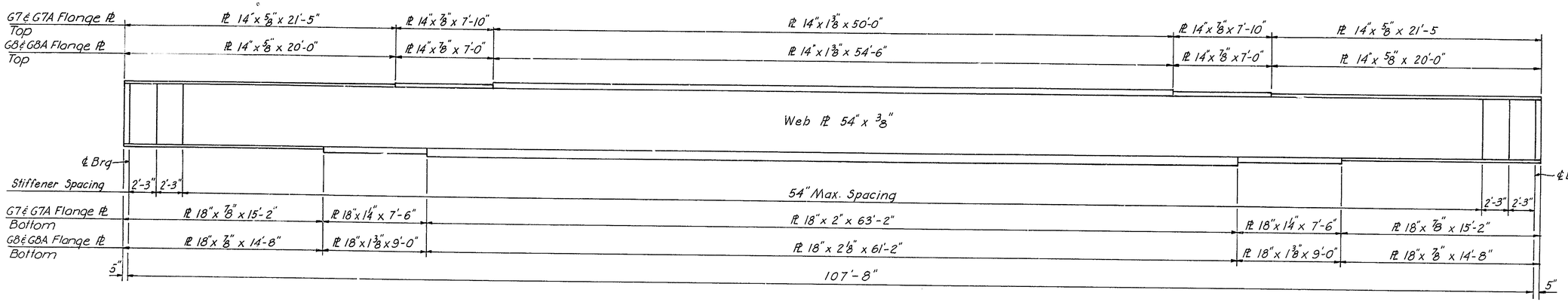

STRINGERS G7, G7A, G8 & G8A
Scale: 1/4" = 1'-0"

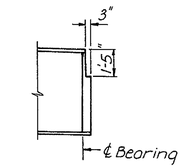

STRINGERS G7 & G7A
(Typical at both ends)

		℄ Brg	0.1	0.2	0.3	0.4	0.5	0.6	0.7	0.8	0.9	℄ Brg	0.1	0.2	0.3	0.4	0.5	0.6	0.7	0.8	0.9	℄ Brg
CAMBER INCREMENTS FOR DEAD LOAD (Inches)																						
		SPAN L											SPAN M									
S5	Structural Steel	0	.02	.04	.05	.06	.06	.05	.04	.03	.01	0	0	0	.01	.01	.01	.02	.02	.01	.01	0
	Conc. Deck Slab	0	.10	.19	.25	.28	.27	.24	.19	.12	.05	0	-.01	0	.03	.05	.07	.08	.07	.06	.03	0
	Par. Rail & 2" Wear Surface	0	.03	.05	.07	.07	.07	.06	.05	.03	.01	0	-.01	-.01	0	.01	.01	.02	.02	.01	.01	0
	Full Dead Load	0	.15	.28	.37	.41	.40	.35	.28	.18	.07	0	-.02	-.01	.04	.07	.09	.12	.11	.08	.05	0
	Vertical Curve	0	.13	.24	.31	.35	.37	.35	.31	.24	.13	0	.09	.16	.20	.23	.24	.23	.20	.16	.09	0
	Total Camber	0	.28	.52	.68	.76	.77	.70	.59	.42	.20	0	.07	.15	.24	.30	.33	.31	.31	.24	.14	0
G9	Structural Steel	0	.01	.01	.02	.02	.02	.02	.01	.01	0	0	0	0	0	0	0	0	0	0	0	0
	Conc. Deck Slab	0	.04	.07	.09	.11	.10	.09	.07	.04	.02	0	0	0	0	.01	.01	.02	.02	.02	.01	0
	Par. Rail & 2" Wear Surface	0	.03	.05	.07	.08	.08	.07	.06	.04	.02	0	0	0	0	0	0	0	0	0	0	0
	Full Dead Load	0	.08	.13	.18	.21	.20	.18	.14	.09	.04	0	0	0	.01	.01	.02	.02	.02	.02	.01	0
	Vertical Curve	0	.13	.24	.31	.35	.37	.35	.31	.24	.13	0	.09	.16	.20	.23	.24	.23	.20	.16	.09	0
	Total Camber	0	.21	.37	.49	.56	.57	.53	.45	.33	.17	0	.09	.16	.21	.24	.26	.25	.22	.18	.10	0

NOTE: Values tabulated above for Span L are based on a chord between ℄ Bearing Pier 9 and ℄ Bearing Pier 10.
Values tabulated above for Span M are based on a chord between ℄ Bearing Pier 10 and ℄ Bearing Abutment 4.
For total camber less than 1", S5 only, natural mill camber shall be turned upward.
Minus sign indicates upward deflection, positive sign indicates downward deflection.

CAMBER INCREMENTS FOR DEAD LOAD (Inches)	S4 & S4A		G6		G7		G7A		G8		G8A	
	1/4 & 3/4 L	1/2 L	1/4 & 3/4 L	1/2 L	1/4 & 3/4 L	1/2 L	1/4 & 3/4 L	1/2 L	1/4 & 3/4 L	1/2 L	1/4 & 3/4 L	1/2 L
Structural Steel	.08	.11	.03	.03	.53	.72	.53	.72	.51	.70	.51	.70
Conc. Deck Slab	.42	.56	.15	.20	1.16	1.56	1.16	1.56	1.21	1.65	1.21	1.65
Par. Rail & 2" Wear Surface	.07	.09	.03	.04	.52	.72	.52	.72	.51	.70	.51	.70
Full Dead Load	.57	.76	.21	.27	2.21	3.00	2.21	3.00	2.23	3.05	2.23	3.05
Vertical Curve	0	0	0	0	.38	.51	1.30	1.74	.32	.43	1.30	1.74
Total Camber	.57*	.76*	.21	.27	2.59	3.51	3.51	4.74	2.55	3.48	3.53	4.79

* Note: For total camber less than 1", natural mill camber shall be turned upward

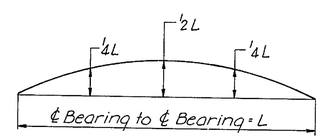

DEFLECTION DIAGRAM
No Scale

NOTES: Diaphragm connection PL's shall be set, then intermediate web stiffeners shall be equally spaced between them.
Intermediate web stiffeners are to be set alternating sides of interior stringers.
For intermediate and bearing stiffener details see sheet No. 14 of 25.
All dimensions are measured along ℄ of Stringers.
For Details B, C and E see sheet No. 14 of 25
For typical shear stud spacing at the ends of all stringers and for shear stud detail see sheet No. 11 of 25.
For location of Diaphragm Connection PL's and additional welding information see sheet No. 17 of 25.
For Section C-C see sheet No. 14 of 25.
For flange to web weld detail and typical flange splice weld detail see sheet No. 13 of 25.

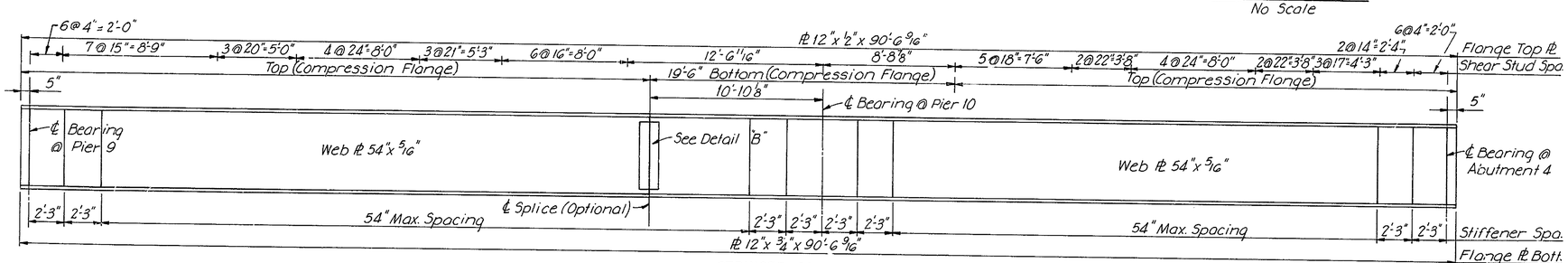

STRINGER G9
Scale 1/4" = 1'-0"

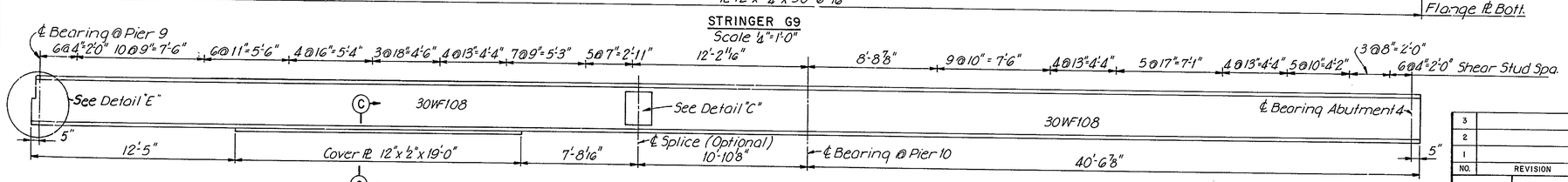

STRINGER S5
Scale 1/4" = 1'-0"

NO.	REVISION	BY	DATE
3			
2			
1			

	BY	DATE
MADE	I.R.P	11-69
CHECKED	J.B.G.	11-69
IN CHARGE	J.E.H	

DELAWARE STATE HIGHWAY DEPARTMENT
DELAWARE TURNPIKE
ROUTE 896 INTERCHANGE IMPROVEMENTS
BRIDGE OVER DELAWARE TURNPIKE
GIRDER DETAILS

HOWARD, NEEDLES, TAMMEN & BERGENDOFF
consulting engineers
NEW YORK KANSAS CITY

SCALE: as shown
CONTRACT NO. 7053
SHEET NO. 15 OF 25

DELAWARE TURNPIKE	CONT. NO.	TITLE	SHEET NO.	TOTAL SHEETS
	7053		67	86

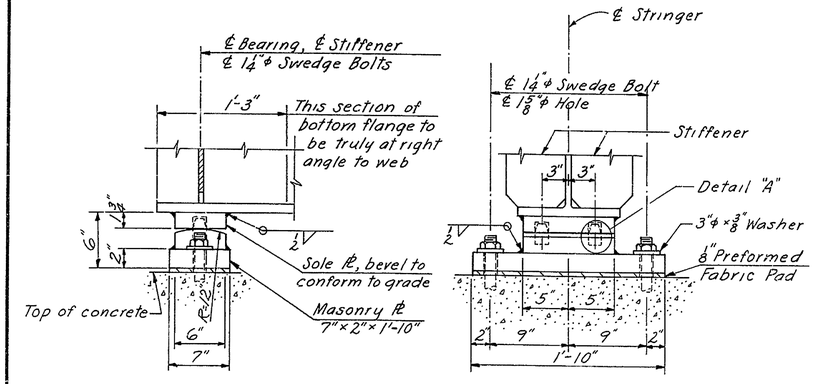

FIXED SHOE FS-1
Scale 1½"=1'-0"

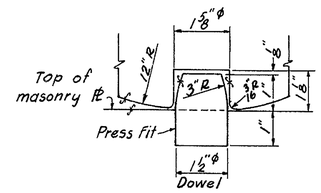

DETAIL "C"
Not to Scale

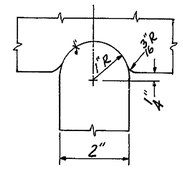

DETAIL "B"
Not to Scale

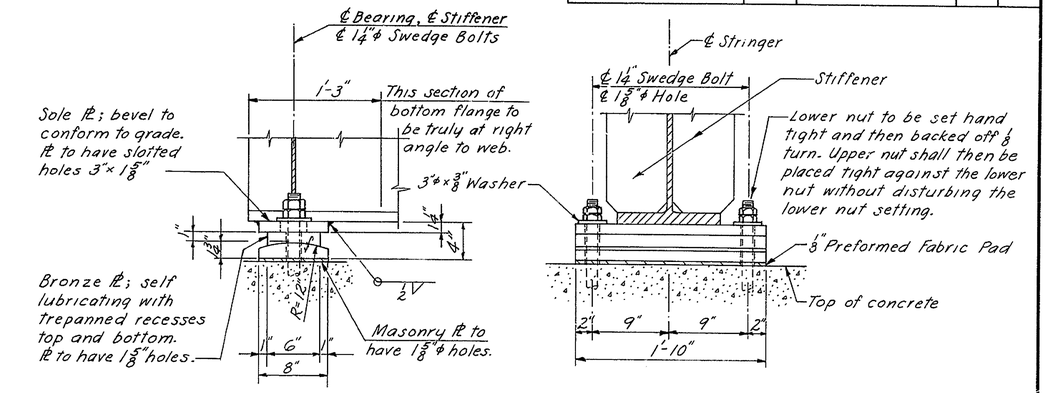

EXPANSION SHOE ES-1
Scale 1½"=1'-0"

NOTES:
Shoes to have vertical and horizontal center lines mutually perpendicular at 65° F.
For location of shoes see sheet No. 11 of 25 and 12 of 25.
For General Notes see sheet No. 1 of 25.

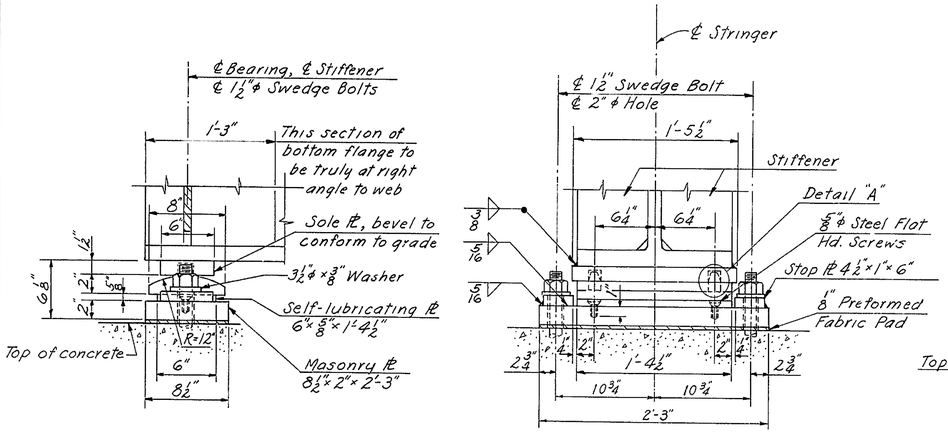

EXPANSION SHOE ES-2
Not to Scale

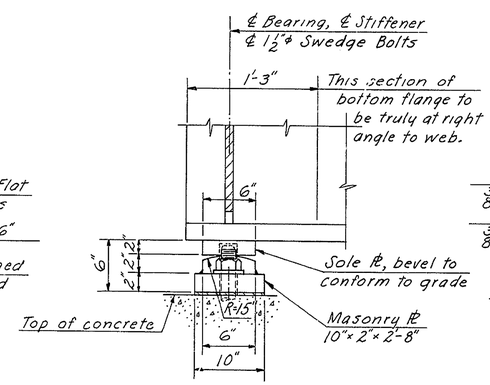

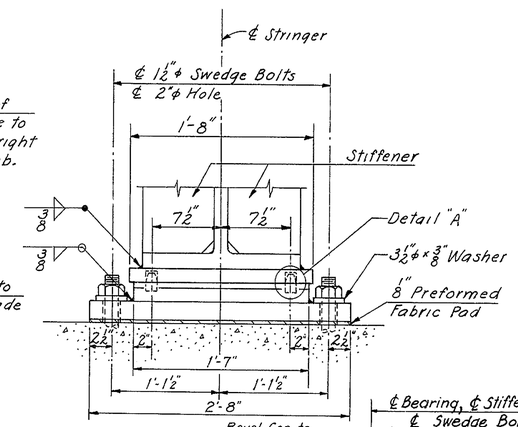

FIXED SHOE FS-2
Not to Scale

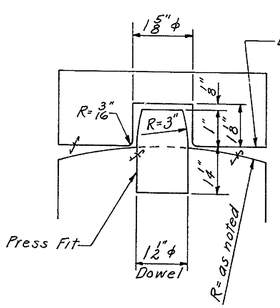

DETAIL "A"
Not to Scale

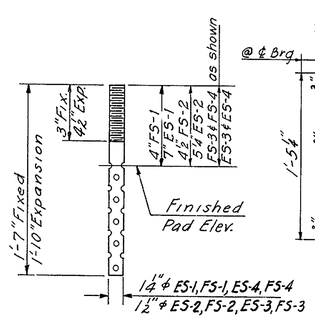

SWEDGE BOLT DETAIL
Not to Scale

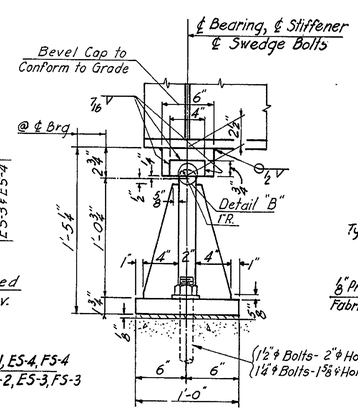

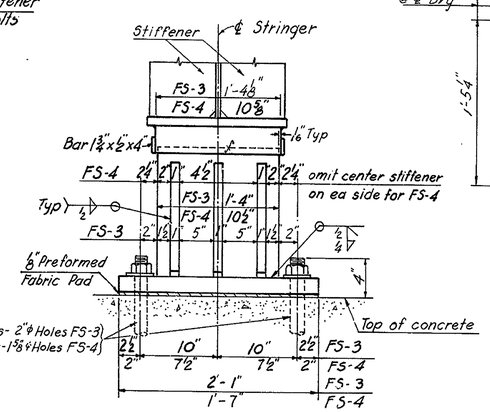

FIXED SHOE FS-3 & FS-4
Scale: 1½"=1'-0"

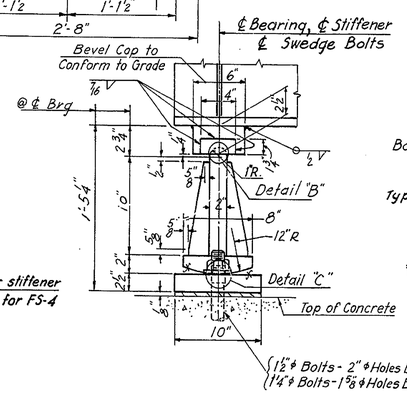

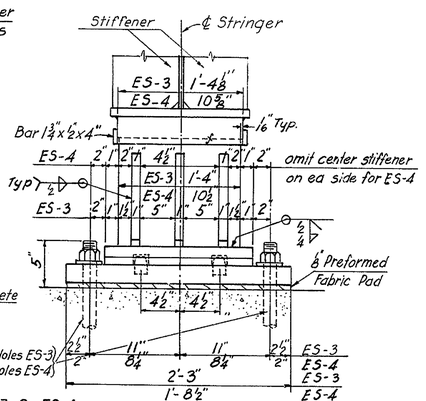

EXPANSION SHOE ES-3 & ES-4
Scale ½"=1'-0"

NO.	REVISION	BY	DATE
3			
2			
1			

	BY	DATE
MADE	F.J.C.	10-69
CHECKED	J.B.G.	11-69
IN CHARGE	JEH	

DELAWARE STATE HIGHWAY DEPARTMENT
DELAWARE TURNPIKE
ROUTE 896 INTERCHANGE IMPROVEMENTS
BRIDGE OVER DELAWARE TURNPIKE
SHOE DETAILS

HOWARD, NEEDLES, TAMMEN & BERGENDOFF
consulting engineers
NEW YORK KANSAS CITY

SCALE: As Noted
CONTRACT NO. 7053
SHEET NO. 16 OF 25

DELAWARE TURNPIKE	CONT. NO.	TITLE	SHEET NO.	TOTAL SHEETS
	7053		68	86

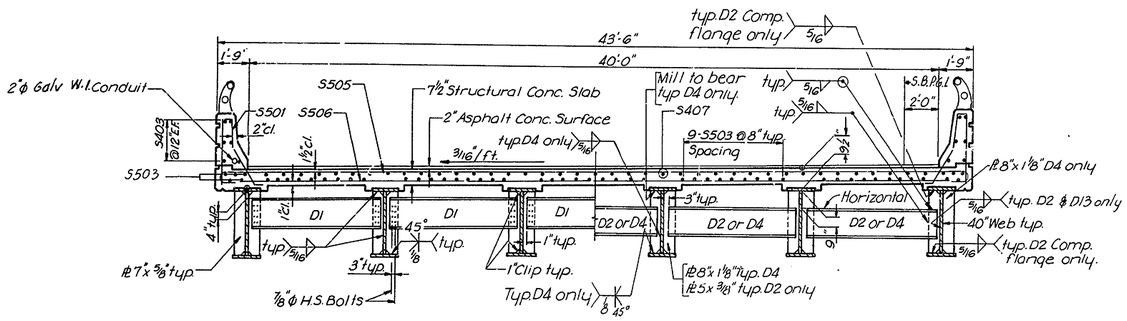

SECTION B-B

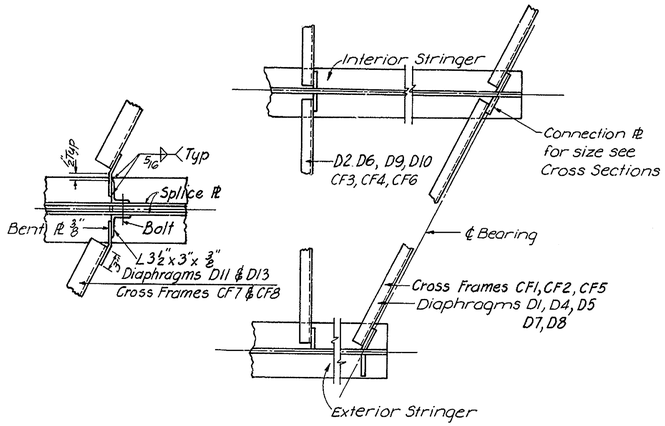

DIAPHRAGM CONNECTIONS
No Scale

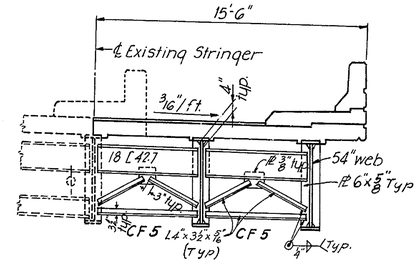

SECTION H-H

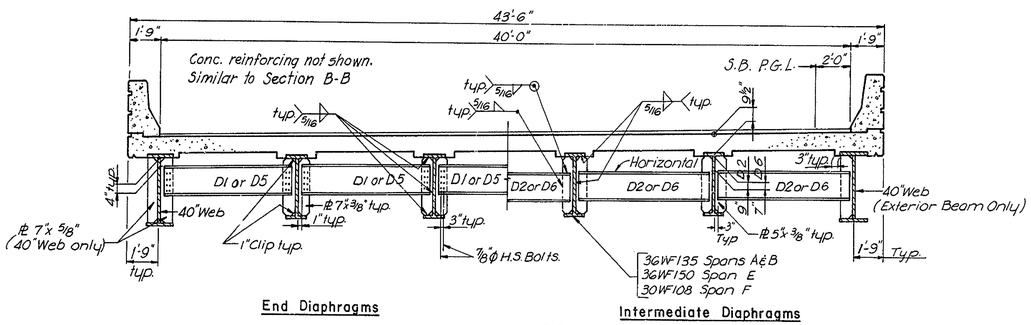

SECTION C-C

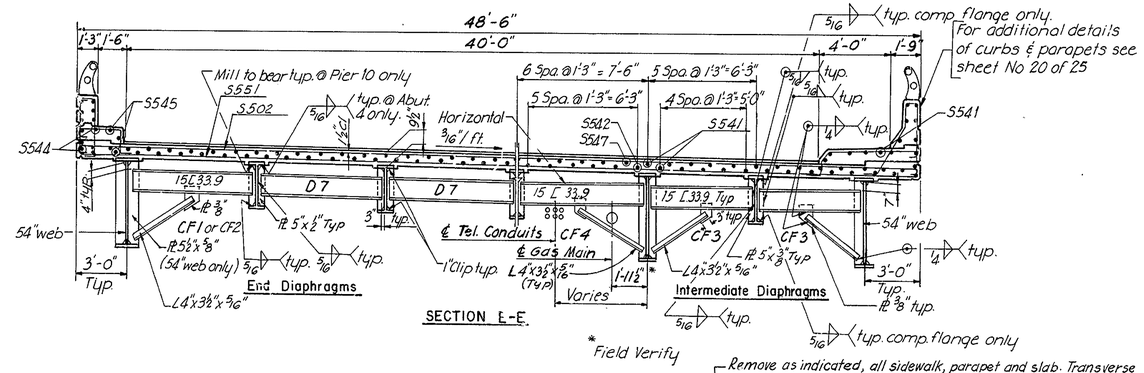

SECTION E-E

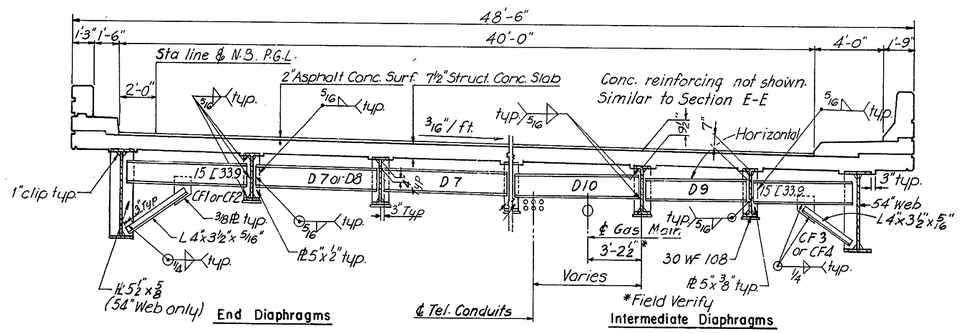

SECTION D-D

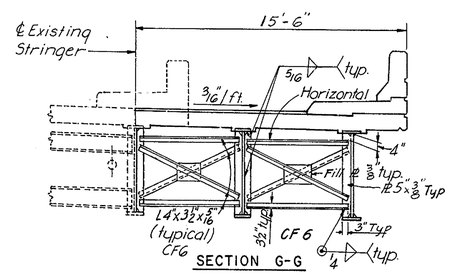

SECTION G-G

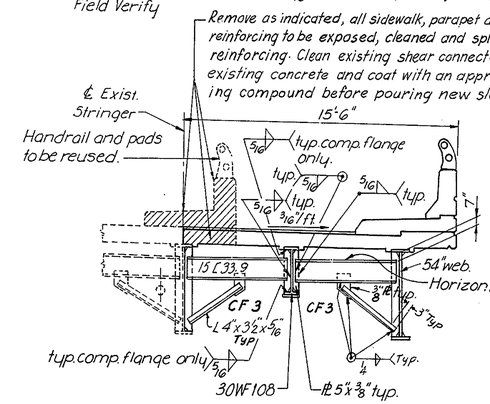

SECTION F-F

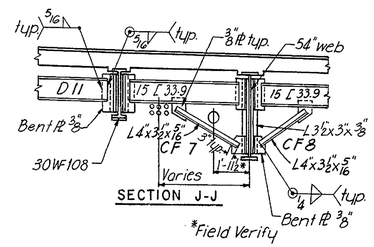

SECTION J-J

NOTES:

For General Notes see sheet No 1 of 25
For Diaphragm Schedules see sheet No 11 and 12 of 25.
For Connector PL's sizes at diaphragms CF5 for stringers G6, G9 & G10A, See Bearing Stiffener Detail Sheet No. 14 of 25.
For Connector PL's sizes at diaphrams CF5 for Stringers S4A and S5 See Details "D" & "E" Sheet No. 14 of 25.

NO.	REVISION	BY	DATE
3			
2			
1			

	BY	DATE
MADE	I.R.P.	10-69
CHECKED	J.B.G.	11-69
IN CHARGE	J.E.H.	

DELAWARE STATE HIGHWAY DEPARTMENT

DELAWARE TURNPIKE

ROUTE 896 INTERCHANGE IMPROVEMENTS
BRIDGE OVER DELAWARE TURNPIKE

TYPICAL SECTIONS

HOWARD, NEEDLES, TAMMEN & BERGENDOFF
consulting engineers
NEW YORK KANSAS CITY

SCALE: 1/4"=1'-0" unless noted
CONTRACT NO. 7053
SHEET NO 17 OF 25

DELAWARE TURNPIKE	CONT. NO.	TITLE	SHEET NO.	TOTAL SHEETS
	7053		69	86

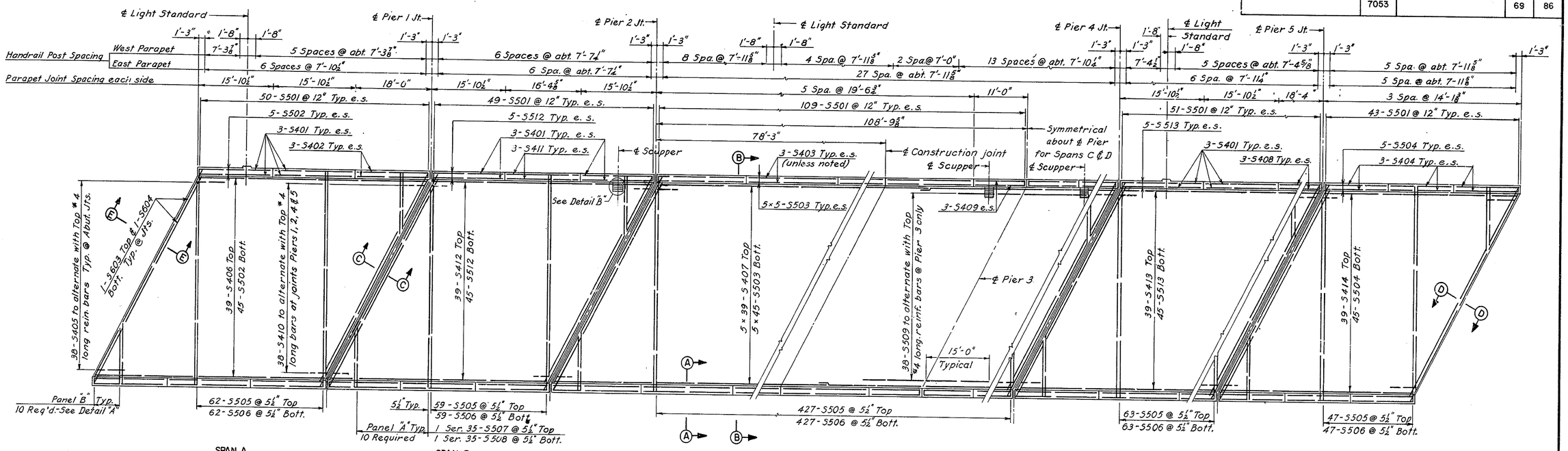

PLAN SOUTH BOUND

Scale: 1" = 10'

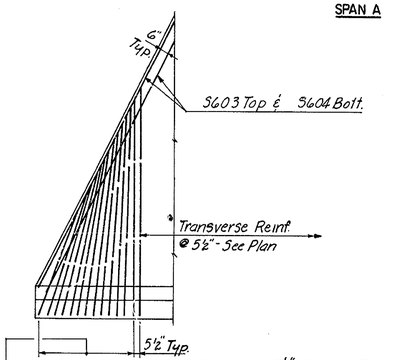

DETAIL A

Scale: 1/4" = 1'-0"

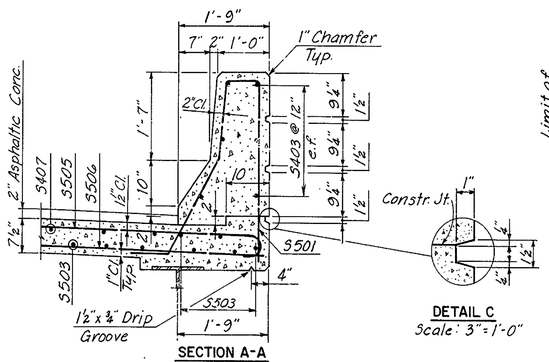

SECTION A-A

Scale: 3/4" = 1'-0"

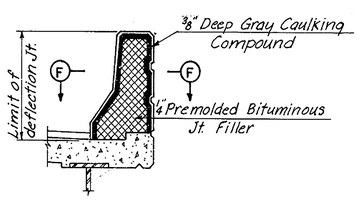

ELEVATION

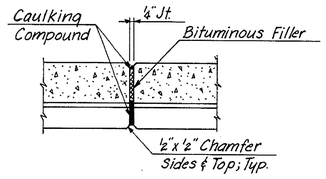

SECTION F-F

PARAPET DEFLECTION JOINT

Scale: 1/2" = 1'-0"

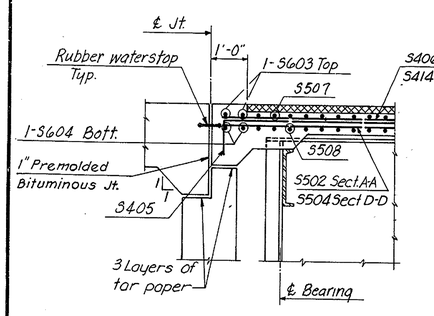

SECTIONS D-D & E-E

Scale: 1/2" = 1'-0"

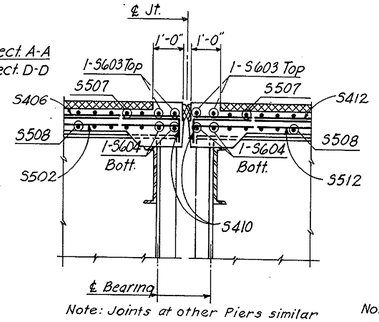

Note: Joints at other Piers similar

SECTION C-C

Scale: 1/2" = 1'-0"

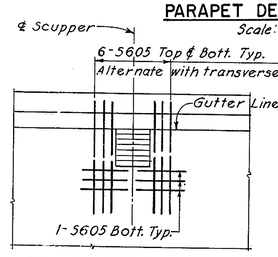

Note: Cut or bend Reinf. to clear Scupper

DETAIL B

Scale 1/2" = 1'-0"

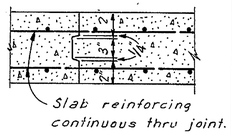

SECTION THRU CONSTRUCTION JOINT

Not to Scale

BENDING DIAGRAMS

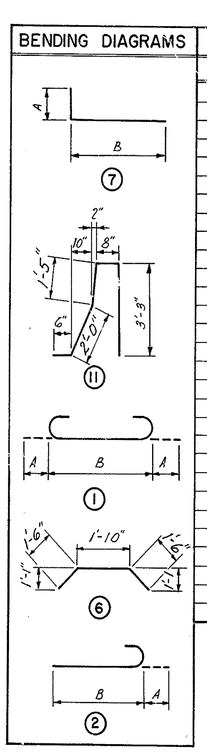

REINFORCING BAR SCHEDULE

MARK	NO.	TYPE	A	B	LENGTH
S401	72	Str.			15'-6"
S402	12	Str.			17'-8"
S403	120	Str.			19'-2"
S404	36	Str.			13'-9"
S405	76	7	0'-8"	6'-0"	6'-8"
S406	39	Str.			49'-4"
S407	195	Str.			44'-5"
S408	12	Str.			18'-0"
S409	24	Str.			10'-8"
S410	304	7	0'-8"	4'-0"	4'-8"
S411	12	Str.			16'-0"
S412	39	Str.			47'-8"
S413	39	Str.			49'-8"
S414	39	Str.			41'-11"
S501	840	11			7'-10"
S502	55	Str.			49'-4"
S503	275	Str.			44'-9"
S504	55	Str.			41'-11"
S505	658	1	0'-7"	43'-2"	44'-4"
S506	658	Str.			43'-2"
S507	10 Ser. 35	1	0'-7"	18'-5" to 40'-5"	13'-7" to 41'-7"
S508	10 Ser. 35	Str.			12'-5" to 40'-5"
S509	38	Str.			30'-0"
S510	9	6			4'-10"
S511	18	2	0'-7"	4'-0"	4'-7"
S512	55	Str.			47'-8"
S513	55	Str.			49'-8"

MARK	NO.	TYPE	A	B	LENGTH
S601	10 Ser. 13	1	0'-8"	6'-0" to 11'-5"	7'-4" to 12'-9"
S602	10 Ser. 13	Str.			6'-0" to 11'-5"
S603	20	1	0'-8"	47'-2"	48'-6"
S604	20	Str.			47'-2"
S605	45	Str.			6'-0"

NOTES

For General Notes: see sheet 1 of 25

For Light Blister and Hand Rail Details: see sheet 25 of 25

For Section B-B; see sheet 17 of 25

For location of Scuppers; see sheet 24 of 25

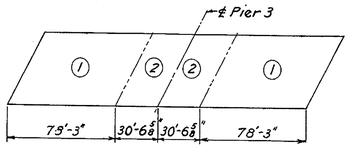

POURING SEQUENCE SPANS C & D

Legend
e.f. = each face
e.s. = each side

NO.	REVISION	BY	DATE
3			
2			
1			

	BY	DATE
MADE	W.F.D.	10-69
CHECKED	F.J.C.	11-69
IN CHARGE	J.E.H.	

DELAWARE STATE HIGHWAY DEPARTMENT

DELAWARE TURNPIKE

ROUTE 896 INTERCHANGE IMPROVEMENTS
BRIDGE OVER DELAWARE TURNPIKE

SLAB PLAN

HOWARD, NEEDLES, TAMMEN & BERGENDOFF
consulting engineers
NEW YORK KANSAS CITY

SCALE: As Shown
CONTRACT NO. 7053
SHEET NO. 18 OF 25

DELAWARE TURNPIKE	CONT. NO.	TITLE	SHEET NO.	TOTAL SHEETS
	7053		70	86

Note A: 1 Ser. 48-S504 @ 6" Top; 1 Ser. 48-S503 @ 6" Bott.
Note B: 14-S511 Top alternate with Top #5 longitudinal reinforcing.
Note C: 40-S511 Top to alternate with S509 bars Span G, and S541 & S547 Span M.

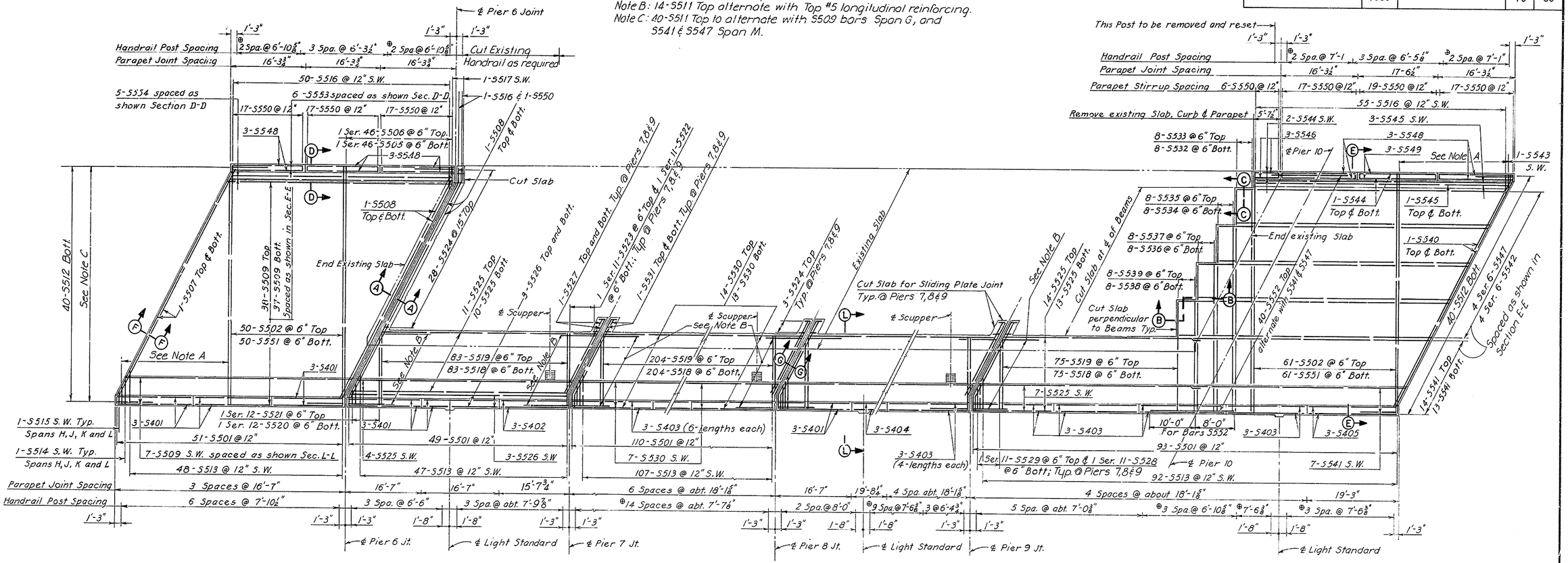

Note: Span K Reinforcing same as Span J (unless noted)

PLAN NORTH BOUND

Scale 1" = 10'

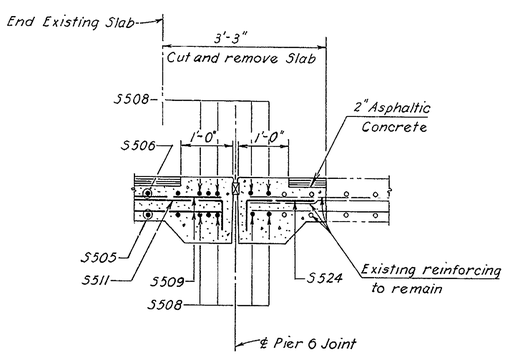

SECTION A-A

Scale ¾" = 1'-0"

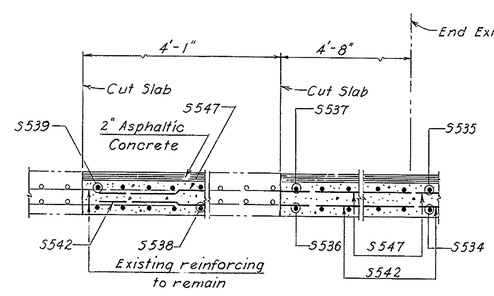

SECTION B-B

Scale ¾" = 1'-0"

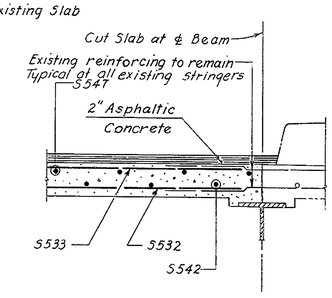

SECTION C-C

Scale ¾" = 1'-0"

Notes:

Remove Existing Slab, Side Walk and Parapet after cutting concrete.

Clean shear connectors and reinforcing to be spliced, see specifications.

Roughen cut in concrete and paint with an approved epoxy bonding compound before placing new Slab.

NOTES

For General Notes; see sheet 1 of 25.

For Reinforcing Schedule, Scupper Detail, Parapet Deflection Joint Detail, Sections D-D, F-F, G-G, H-H and L-L; see sheet 20 of 25.

For Section E-E; see sheet 17 of 25.

For Light Blister Detail and Handrail Detail; see sheet 25 of 25

⊕ Indicates areas where existing Handrail is to be used

For Joint Details at Piers 7, 8 and 9; see Sheet No. 23 of 25.

For Joint Details at Abutments 3 & 4 and Pier 6; see Sheet No. 22 of 25.

Legend
S.W. denotes Side Walk

NO.	REVISION	BY	DATE
3			
2			
1			

	BY	DATE
MADE	W. F. D.	10-69
CHECKED	J. R. C.	11-69
IN CHARGE	J. E. H.	

DELAWARE STATE HIGHWAY DEPARTMENT

DELAWARE TURNPIKE

ROUTE 896 INTERCHANGE IMPROVEMENTS
BRIDGE OVER DELAWARE TURNPIKE

SLAB PLAN

HOWARD, NEEDLES, TAMMEN & BERGENDOFF
consulting engineers
NEW YORK KANSAS CITY

SCALE: As shown
CONTRACT NO. ____
SHEET NO. 19 OF 25

DELAWARE TURNPIKE	CONT. NO.	TITLE	SHEET NO.	TOTAL SHEETS
	7053		71	86

Remove as indicated, all sidewalk, parapet and slab. Transverse reinforcing to be exposed, cleaned and spliced with new slab reinforcing.
Clean existing shear connectors. Roughen cut in existing concrete and coat with an approved epoxy bonding compound before pouring new slab.

For General Notes; see sheet 1 of 25

Reinforcing Schedule includes reinforcing shown on sheet 19; S501, S510, and S511 on sheet 25 of 25

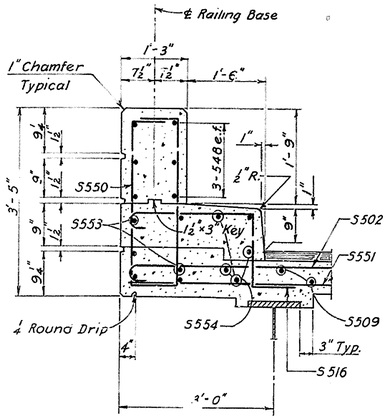

SECTION D-D
Scale ¾" = 1'-0"

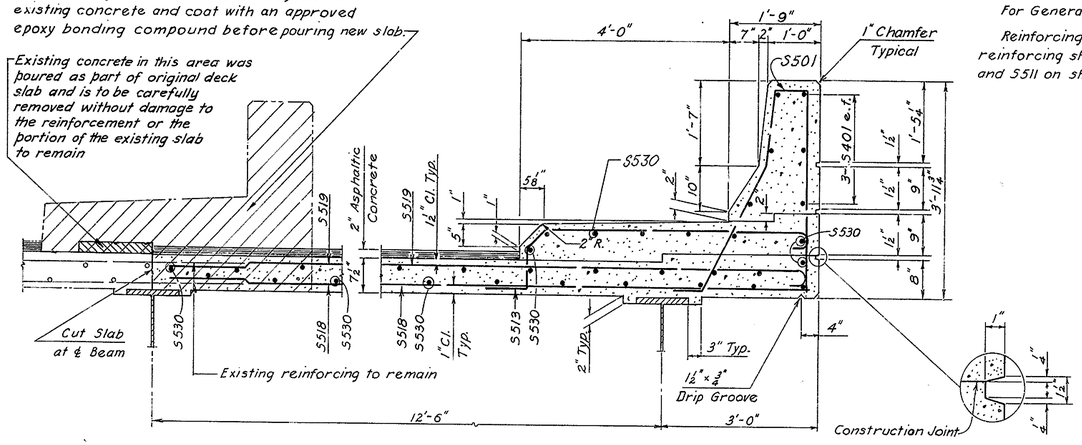

Construction Joint

SECTION L-L
Scale ¾" = 1'-0"

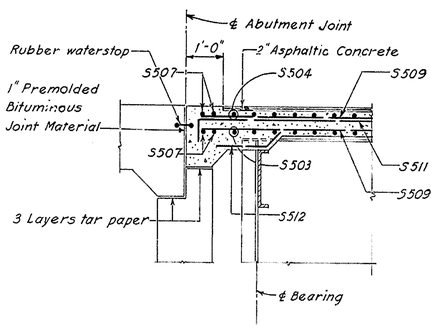

SECTION F-F
Scale ½" = 1'-0"

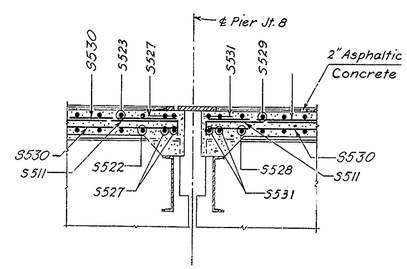

SECTION G-G
Scale ½" = 1'-0"

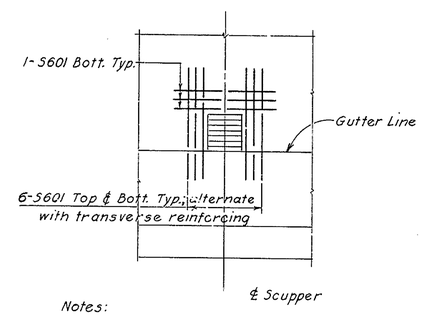

Notes:
For additional Scupper Details; see Sheet No. 24 of 25
Cut or bend reinforcing, as required, to clear Scupper

SCUPPER DETAIL
Scale ¼" = 1'-0"

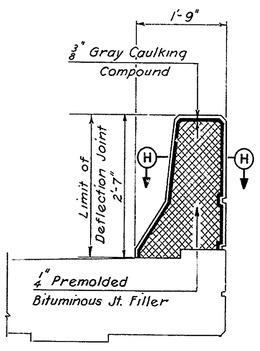

ELEVATION

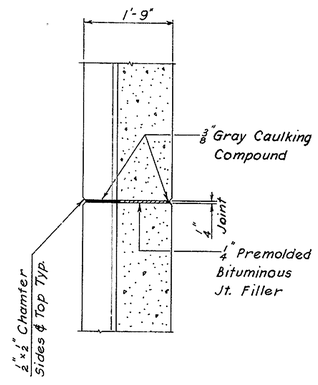

SECTION H-H

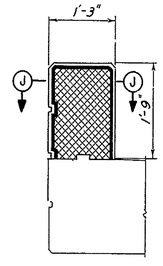

ELEVATION

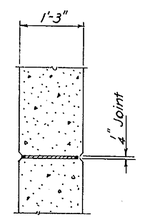

SECTION J-J

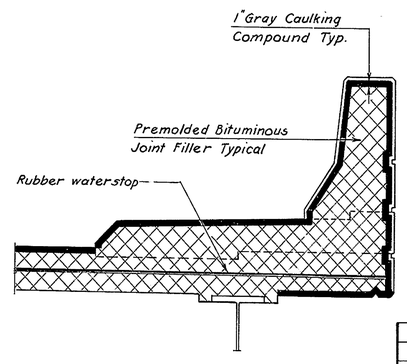

SECTION K-K
Scale ¾" = 1'-0"

For dimensions and specifications not shown; see other Parapet

PARAPET DEFLECTION JOINTS
Scale ¾" = 1'-0"

BENDING DIAGRAMS

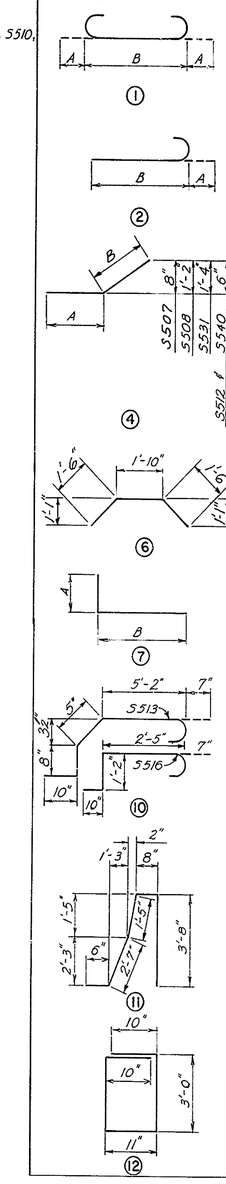

REINFORCING BAR SCHEDULE

MARK	NUMBER	TYPE	A	B	LENGTH
S401	36	Str.			16'-3"
S402	6	Str.			15'-3"
S403	84	Str.			17'-9"
S404	6	Str.			19'-4"
S405	6	Str.			18'-11"
S501	431	11			8'-10"
S502	111	1	0'-7"	48'-2"	49'-4"
S503	1 Ser. 48	Str.			3'-2" to 46'-1"
S504	1 Ser. 48	1	0'-7"	3'-2" to 46'-1"	4'-4" to 47'-3"
S505	1 Ser. 46	Str.			2'-7" to 45'-6"
S506	1 Ser. 46	1	0'-7"	2'-7" to 45'-6"	3'-9" to 46'-8"
S507	4	4	51'-10"	1'-7"	53'-5"
S508	8	4	50'-1"	2'-7"	52'-8"
S509	82	Str.			49'-4
S510	9	6			4'-10"
S511	218	7	0'-7"	8'-0"	8'-7"
S512	80	4	1'-3"	0'-8"	1'-11"
S513	401	10			7'-8"
S514	5	2	0'-7"	4'-5"	5'-0"
S515	5	2	0'-7"	2'-7"	3'-2"
S516	106	10			5'-0"
S517	2	2	0'-7"	2'-4"	2'-11"
S518	566	Str.			15'-3"
S519	566	2	0'-7"	15'-3"	15'-10"
S520	1 Ser. 12	Str.			3'-2" to 14'-1"
S521	1 Ser. 12	1	0'-7"	3'-2" to 14'-1"	4'-4" to 15'-3"
S522	3 Ser. 11	Str.			1'-9" to 11'-5"
S523	3 Ser. 11	1	0'-7"	1'-9" to 11'-5"	2'-11" to 12'-7"
S524	46	7	0'-7"	1'-7"	2'-2"
S525	59	Str.			47'-5"
S526	9	Str.			48'-4"
S527	12	Str.			16'-6"
S528	3 Ser. 11	Str.			4'-9" to 14'-1"
S529	3 Ser. 11	1	0'-7"	4'-9" to 14'-1"	5'-11" to 15'-3"
S530	136	Str.			55'-0"
S531	12	4	16'-0"	2'-10"	18'-10"
S532	8	Str.			45'-3"
S533	8	2	0'-7"	45'-3"	45'-10"
S534	8	Str.			37'-9"
S535	8	2	0'-7"	37'-9"	38'-4"
S536	8	Str.			30'-3"
S537	8	2	0'-7"	30'-3"	30'-10"
S538	8	Str.			22'-9
S539	8	2	0'-7"	22'-9"	23'-4"
S540	4	4	51'-10"	1'-1"	52'-11"
S541	34	Str.			46'-2"
S542	4 Ser. 6	Str.			54'-11" to 58'-4"
S543	1	2	0'-7"	1'-7"	2'-2"
S544	6	Str.			55'-4"
S545	5	Str.			54'-9"
S546	6	Str.			5'-2
S547	4 Ser. 6	Str.			55'-3" to 58'-8"
S548	30	Str.			15'-11"
S549	6	Str.			17'-2"
S550	112	12			8'-7"
S551	111	Str.			48'-2"
S552	40	Str.			18'-0"
S553	6	Str.			48'-8"
S554	5	Str			49'-1"
S601	45	Str.			6'-0"

NO.	REVISION	BY	DATE
3			
2			
1			

	BY	DATE
MADE	W. F. D.	10-69
CHECKED	J. R. C.	11-69
IN CHARGE	J. E. H.	

DELAWARE STATE HIGHWAY DEPARTMENT

DELAWARE TURNPIKE

ROUTE 896 INTERCHANGE IMPROVEMENTS
BRIDGE OVER DELAWARE TURNPIKE

SLAB DETAILS

HOWARD, NEEDLES, TAMMEN & BERGENDOFF
consulting engineers
NEW YORK KANSAS CITY

SCALE: As shown
CONTRACT NO. _____
SHEET NO. 20 OF 25

DELAWARE TURNPIKE	CONT NO	TITLE	SHEET NO	TOTAL SHEETS
	7053		72	86

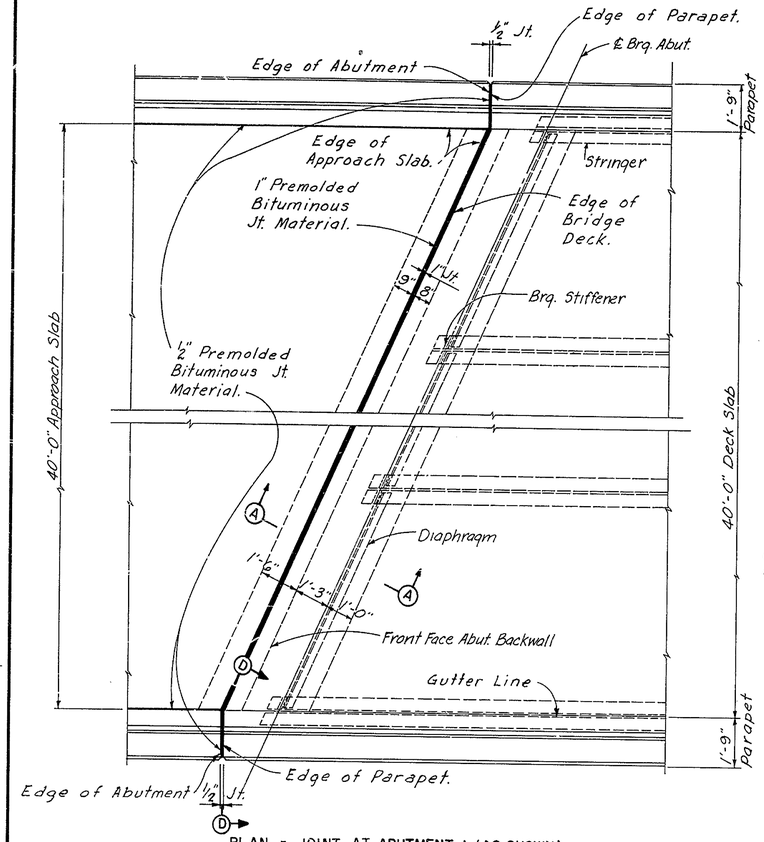

PLAN - JOINT AT ABUTMENT 1 (AS SHOWN)
PLAN - JOINT AT ABUTMENT 2 (SIMILAR)
Scale 3/8" = 1'-0"

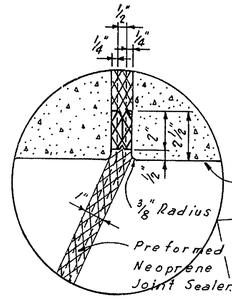

TYPE "A" JOINT AT PIER NO. 1 AND NO. 5
Scale 3" = 1'-0"

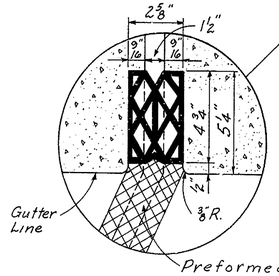

TYPE "A" JOINT AT PIER NO. 2 AND NO. 4
No Scale

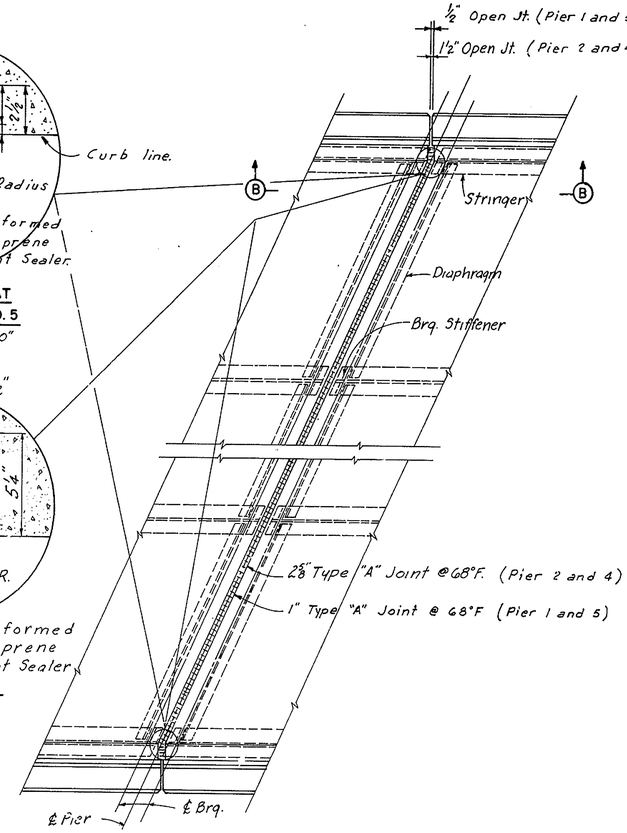

PLAN - JOINT AT PIER NO. 1, 2, 4 AND NO. 5
Scale 3/8" = 1'-0"

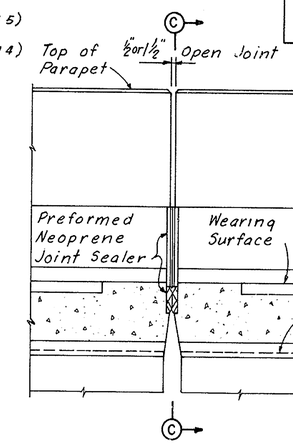

SECTION B-B
Scale 1" = 1'-0"

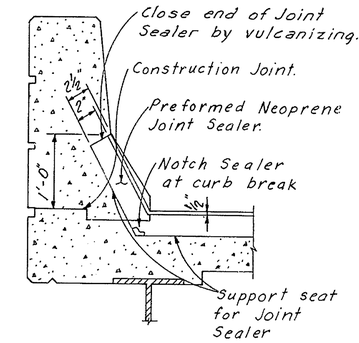

SECTION C-C
TREATMENT OF TYPE "A" JOINT AT CURB
Scale 1" = 1'-0"

NOTES:

All roadway joints shall conform to the crown and grade of the roadway surface.

It is absolutely essential that the openings for the preformed neoprene joint sealers be accurately formed and constructed to smooth straight lines. The size of the opening shall be adjusted to allow for the temperature at the time of construction.

Cost of the joints to be included in Portland Cement concrete masonry.

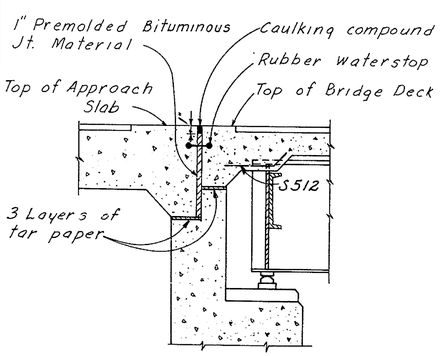

SECTION A-A
Scale 1/2" = 1'-0"

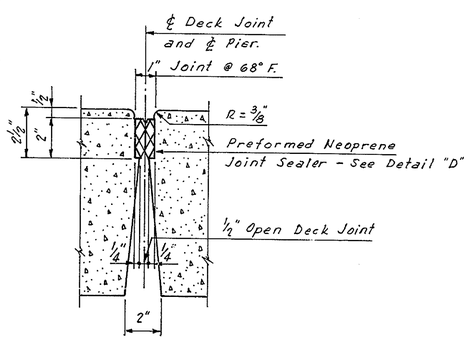

1" TYPE "A" JOINT
Scale 3" = 1'-0"

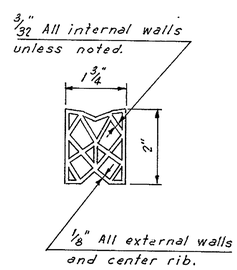

DETAIL "D"
PREFORMED NEOPRENE JOINT SEALER
FOR 1" TYPE "A" JOINT
Scale = Half Size

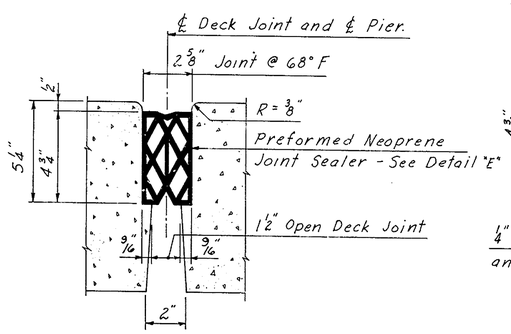

2 5/8" TYPE "A" JOINT
Scale 3" = 1'-0"

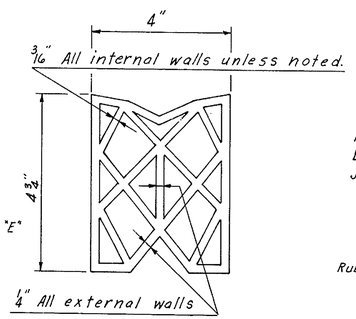

DETAIL "E"
PREFORMED NEOPRENE JOINT SEALER
FOR 2 5/8" TYPE "A" JOINT
Scale = Half Size

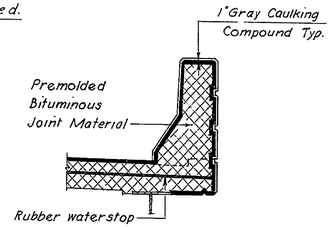

SECTION D-D
Scale 1/2" = 1'-0"

NO.	REVISION	BY	DATE
3			
2			
1			

	BY	DATE
MADE	B.E.B.	11-68
CHECKED	W.F.D.	11-69
IN CHARGE	J.E.H.	

DELAWARE STATE HIGHWAY DEPARTMENT
DELAWARE TURNPIKE
ROUTE 896 INTERCHANGE IMPROVEMENTS
BRIDGE OVER DELAWARE TURNPIKE
JOINT DETAILS

HOWARD, NEEDLES, TAMMEN & BERGENDOFF
consulting engineers
NEW YORK KANSAS CITY

SCALE: As Noted
CONTRACT NO. 7053
SHEET NO. 21 OF 25

DELAWARE TURNPIKE	CONT. NO.	TITLE	SHEET NO.	TOTAL SHEETS
	7053		73	86

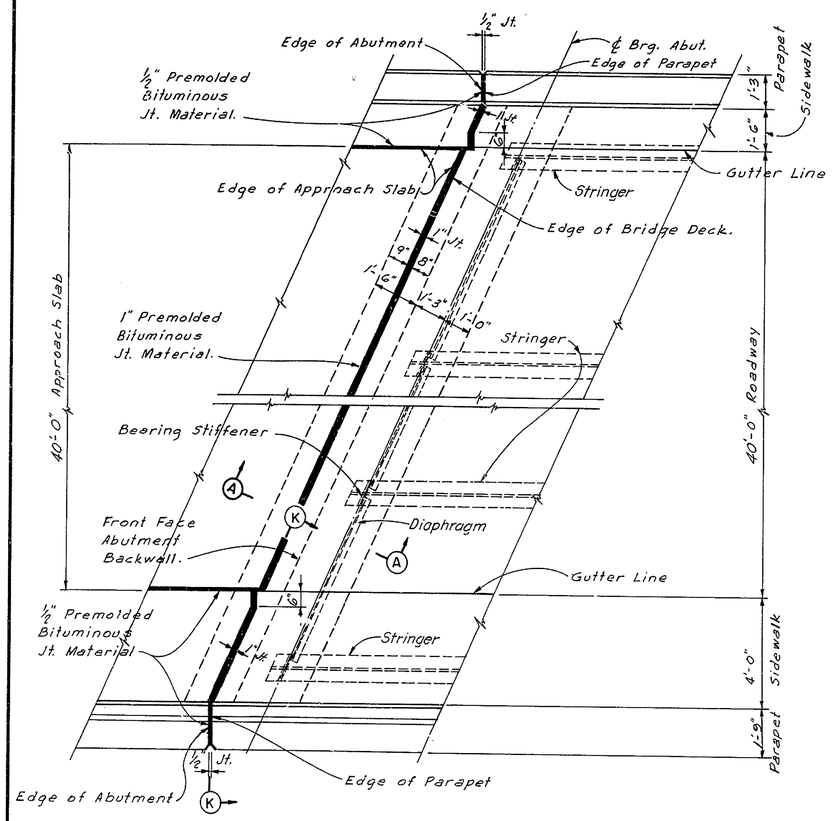

PLAN - JOINT AT ABUTMENT 3 (AS SHOWN)
PLAN - JOINT AT ABUTMENT 4 (SIMILAR)
Scale 3/8" = 1'-0"

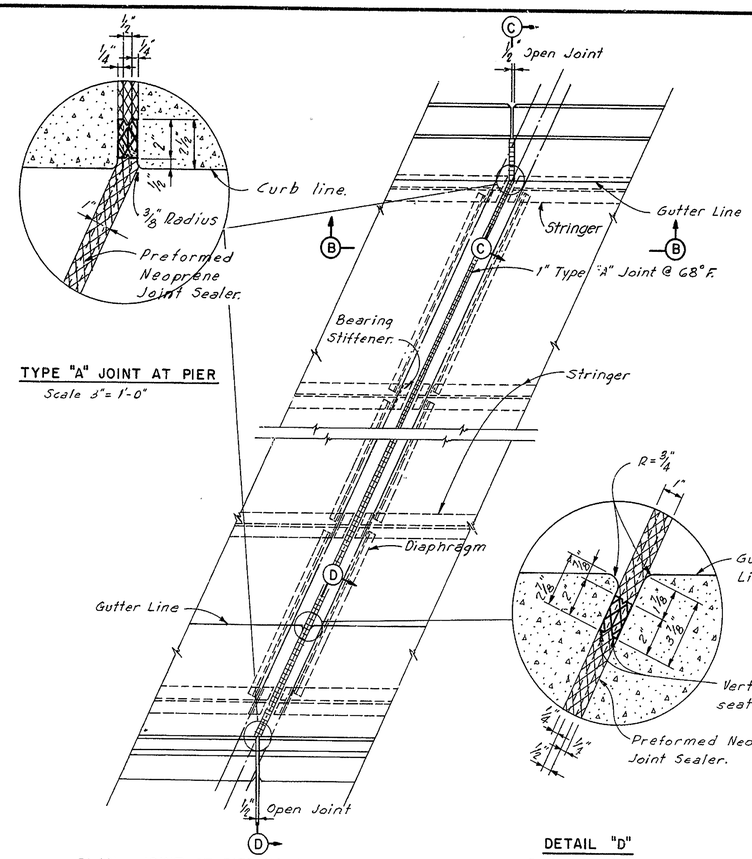

TYPE "A" JOINT AT PIER
Scale 3" = 1'-0"

PLAN - JOINT AT PIER NO. 6
Scale 3/8" = 1'-0"

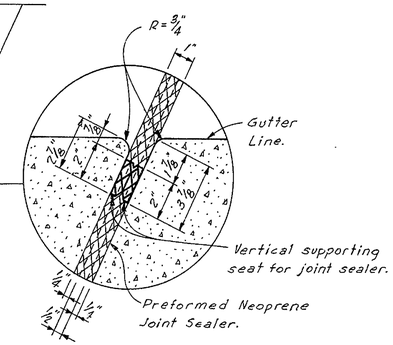

DETAIL "D"
Scale 3" = 1'-0"

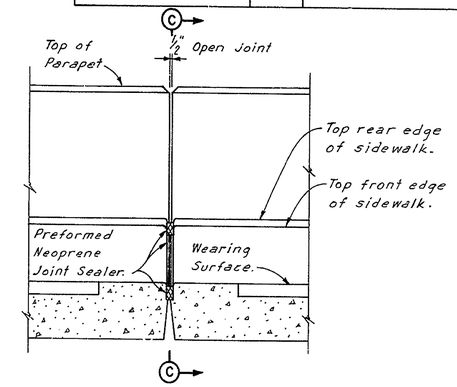

SECTION B-B
Scale 1" = 1'-0"

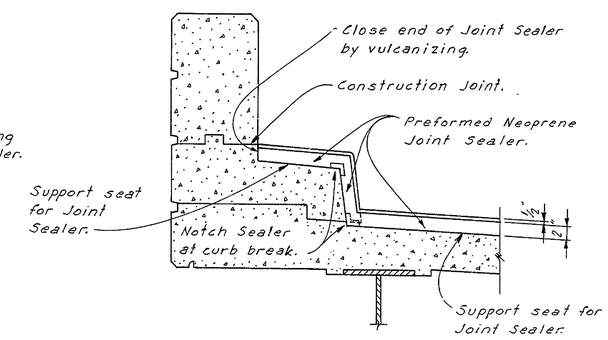

SECTION C-C
TREATMENT OF TYPE "A" JOINT AT CURB
Scale 1" = 1'-0"

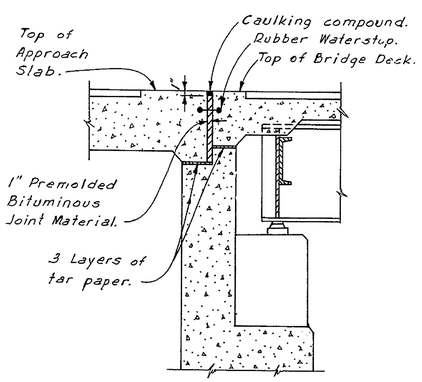

SECTION A-A
Scale 1/2" = 1'-0"

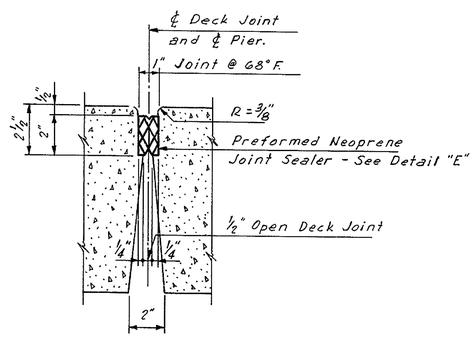

1" TYPE "A" JOINT
Scale 3" = 1'-0"

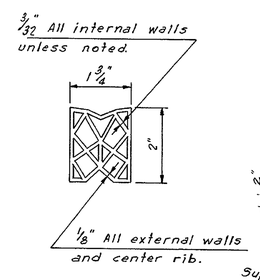

DETAIL "E"
PREFORMED NEOPRENE
JOINT SEALER
FOR 1" TYPE "A" JOINT
Scale = Half Size

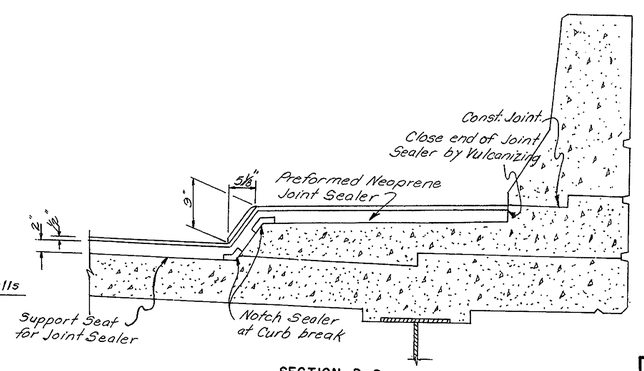

SECTION D-D
TREATMENT OF TYPE "A" JOINT AT CURB
Scale: 1'-0"

NOTES:
For General Notes see sheet No. 1 of 25
All Roadway Joints shall Conform to the Crown and Grade of the Roadway Surface.

It is absolutely essential that the openings for the preformed neoprene joint Sealers be accurately formed and constructed to smooth straight lines.

The size of the opening shall be adjusted to allow for the temperature at the time of construction.

Cost of the Joints to be included in Portland Cement Concrete Masonery.

For Section K-K see sheet no. 20 of 25

NO.	REVISION	BY	DATE
3			
2			
1			

	BY	DATE
MADE	L.D.E	8-69
CHECKED	I.R.P.	11-69
IN CHARGE	J.E.H.	

DELAWARE STATE HIGHWAY DEPARTMENT
DELAWARE TURNPIKE
ROUTE 896 INTERCHANGE IMPROVEMENTS
BRIDGE OVER DELAWARE TURNPIKE
JOINT DETAILS

HOWARD, NEEDLES, TAMMEN & BERGENDOFF
consulting engineers
NEW YORK KANSAS CITY

SCALE: As Noted
CONTRACT NO. 7053
SHEET NO 22 OF 25

DELAWARE TURNPIKE	CONT. NO.	TITLE	SHEET NO.	TOTAL SHEETS
	7053		74	86

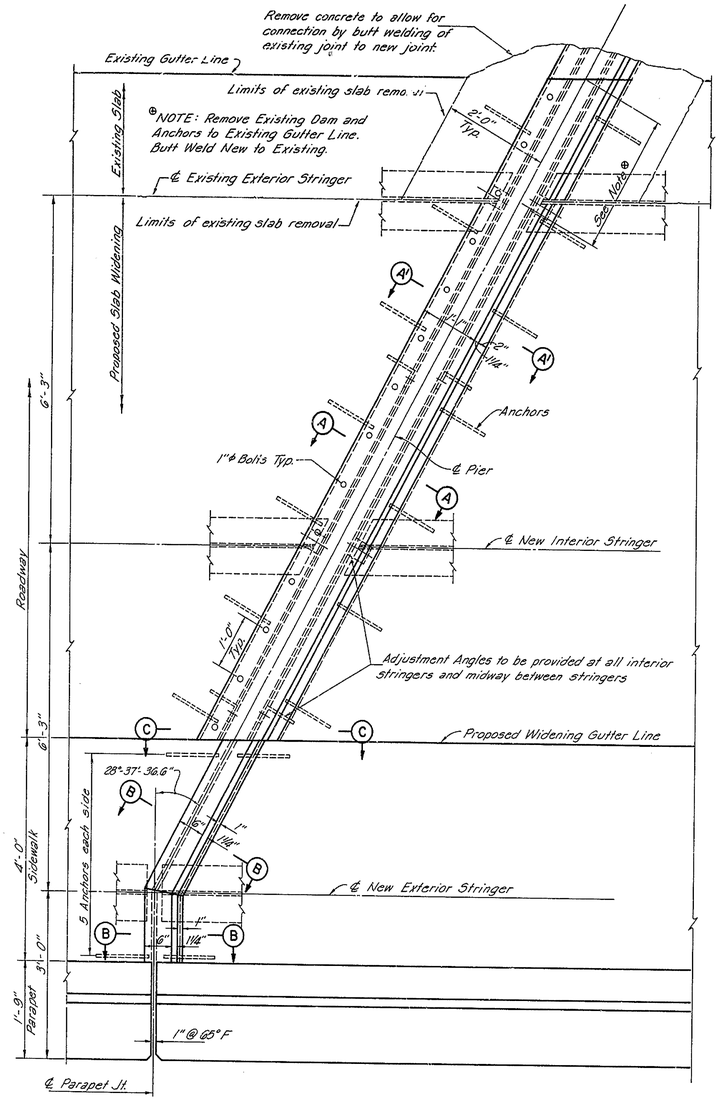

PLAN AT EXPANSION JOINT
SLIDING PLATE DETAIL
PIERS 7, 8 & 9
Scale: 3/4" = 1'-0"

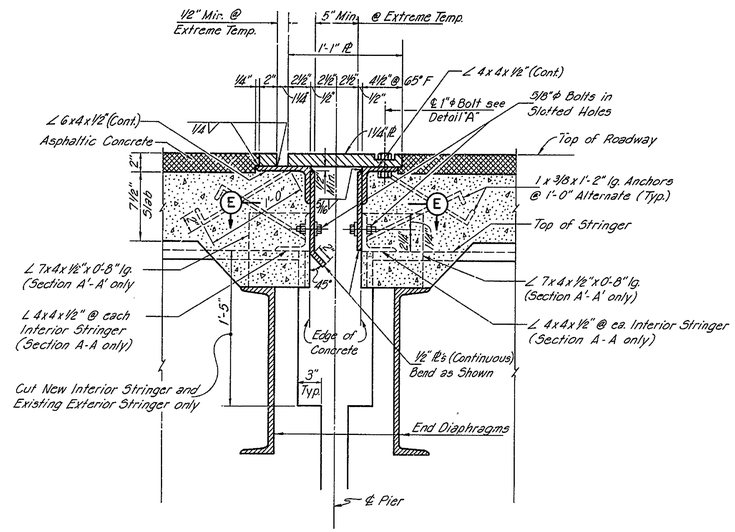

SECTION A-A (As Shown)
SECTION A'-A' (Same unless noted)

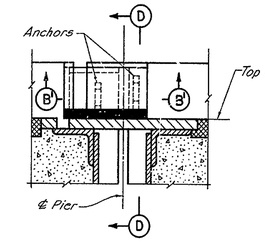

SECTION C-C

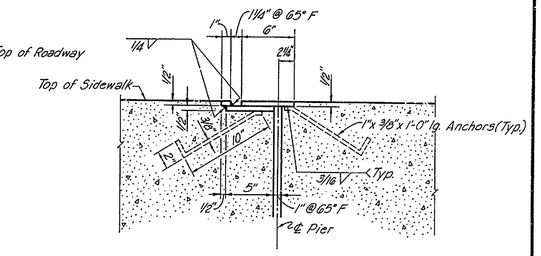

SECTION B-B (Shown)
SECTION B'-B' (Similar)

Note: Parapet not shown

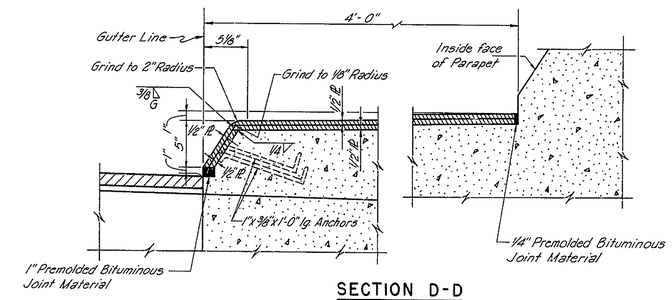

SECTION D-D

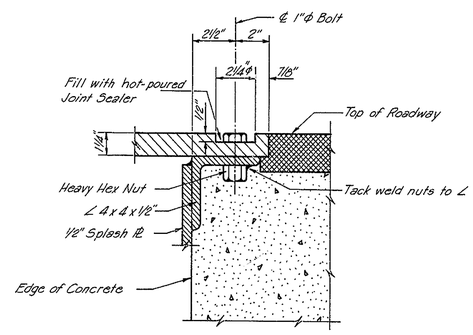

DETAIL "A"
Scale: 3" = 1'-0"

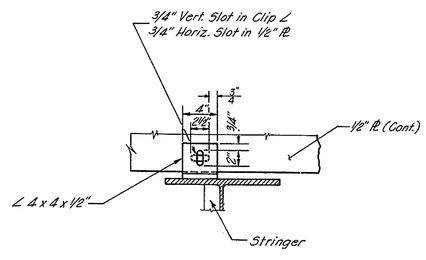

SECTION F-F

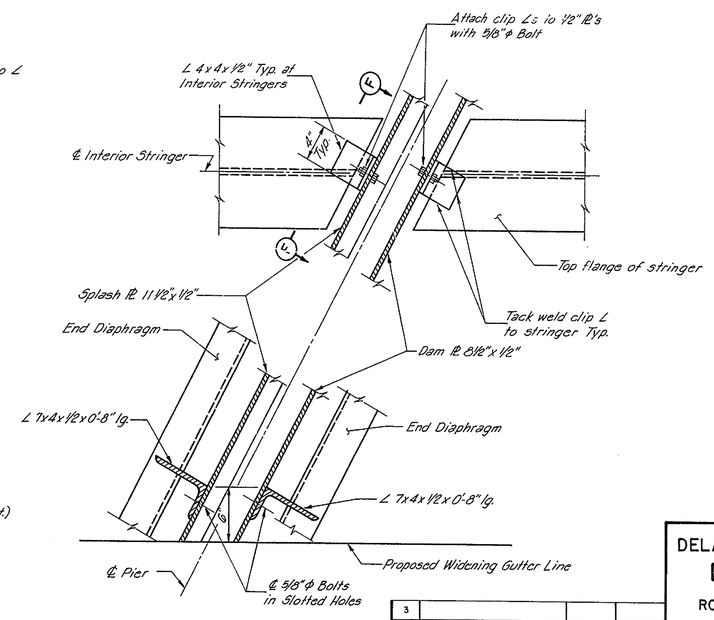

SECTION E-E

NOTES:
For General Notes, See Sheet No. 1 of 25

Top of expansion joint to conform to Roadway Cross-Section & Side Walk

Reinforcing not shown, see sheet 19 of 25

NO.	REVISION	BY	DATE
3			
2			
1			

	BY	DATE
MADE	C.K.C.	11-69
CHECKED	W.F.D.	11-69
IN CHARGE	J.F.H.	

DELAWARE STATE HIGHWAY DEPARTMENT
DELAWARE TURNPIKE
ROUTE 896 INTERCHANGE IMPROVEMENTS
BRIDGE OVER DELAWARE TURNPIKE
JOINT DETAILS

HOWARD, NEEDLES, TAMMEN & BERGENDOFF
consulting engineers
NEW YORK KANSAS CITY

SCALE: 1 1/2" = 1'-0" unless noted
CONTRACT NO. 7053
SHEET NO. 23 OF 25

DELAWARE TURNPIKE	CONT. NO.	TITLE	SHEET NO.	TOTAL SHEETS
	7053		75	86

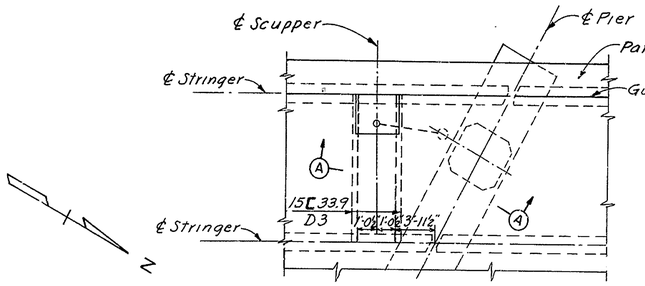

TYPICAL PLAN – PIERS 2-3-4
Scale 4" = 1'-0"

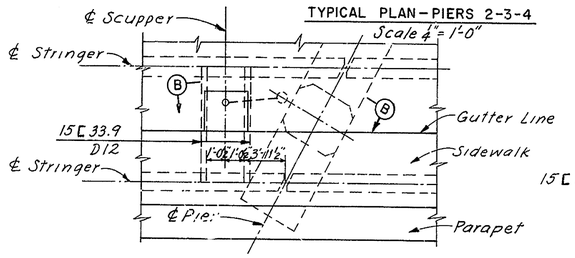

TYPICAL PLAN - PIERS 7-8-9
Scale 1/4" = 1'-0"

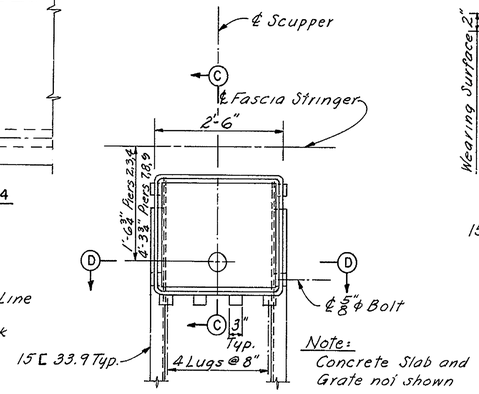

SCUPPER PLAN
Scale 3/4" = 1'-0"

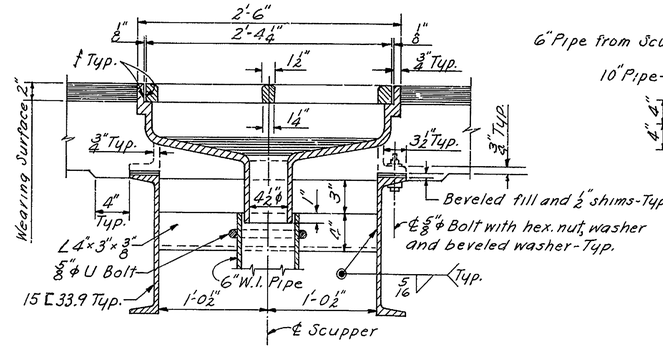

SECTION D-D
Scale 1 1/2" = 1'-0"

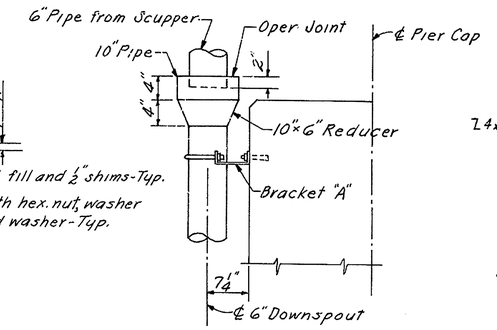

HOPPER DETAIL
Scale 1" = 1'-0"

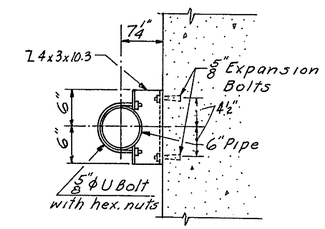

BRACKET "A" DETAIL
Scale 1" = 1'-0"

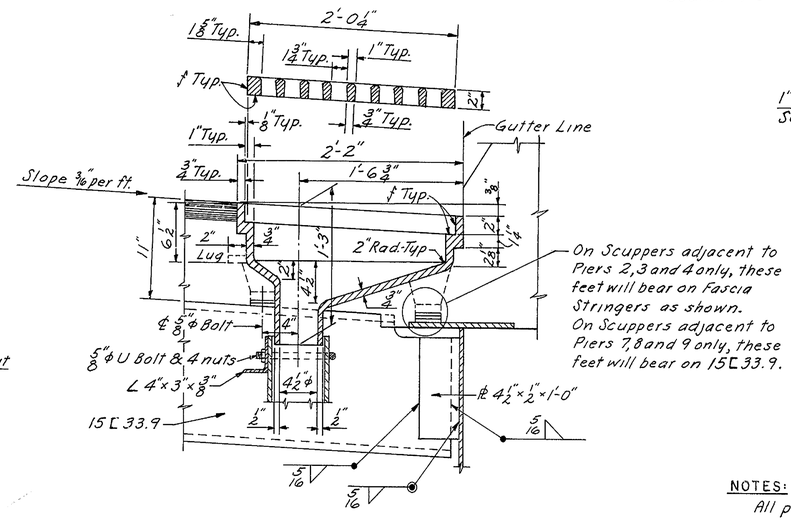

SECTION C-C
Scale 1 1/2" = 1'-0"

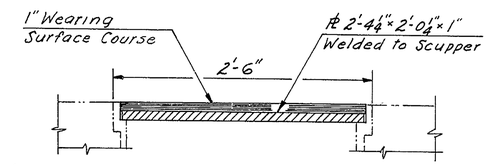

EXISTING SCUPPER MODIFICATION
Scale 1 1/2" = 1'-0"

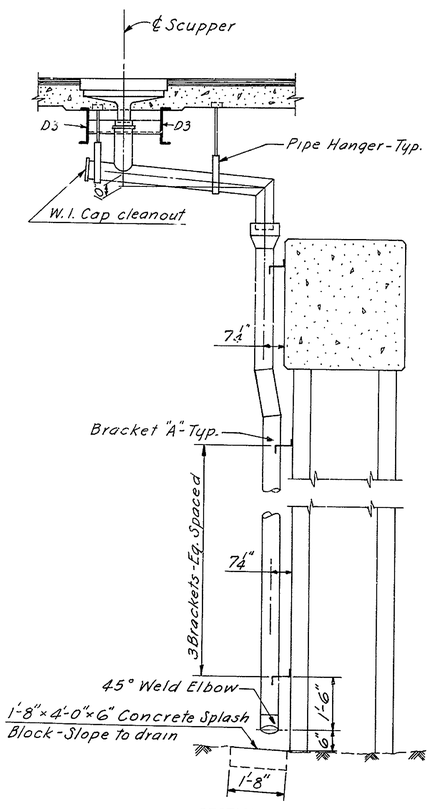

SECTION A-A
Scale 1/2" = 1'-0"

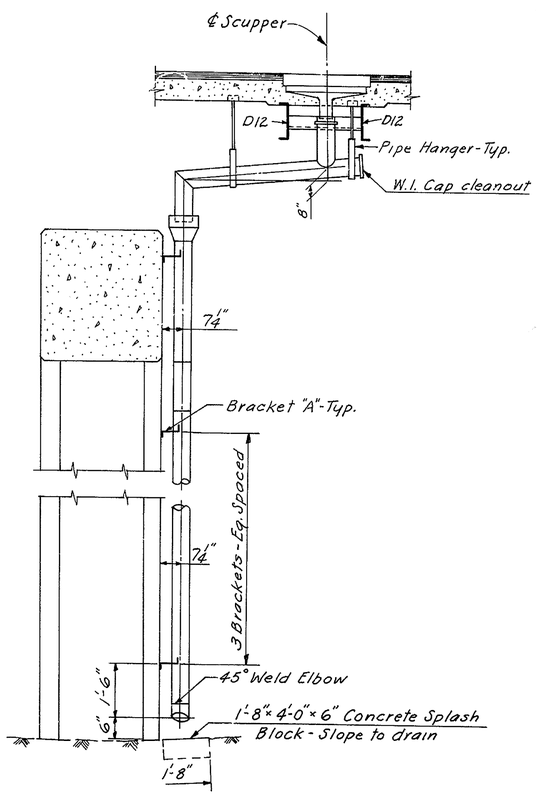

SECTION B-B
Scale 1/2" = 1'-0"

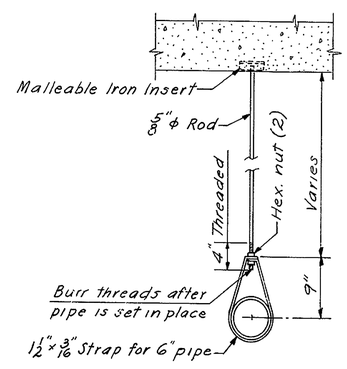

PIPE HANGER DETAIL
Scale 1" = 1'-0"

NOTES:

All pipe to be black wrought iron, standard weight.
All fittings to be welded, wrought iron, standard weight.
All pipe and fittings to be galvanized.
All brackets, rods, straps, plates, bolts, nuts and washers to be galvanized.
All grates and frames shall be cast steel.
All existing down spouts shall be removed. Salvaged down spouts and grates shall be reused at new scuppers.

NO.	REVISION	BY	DATE
3			
2			
1			

	BY	DATE
MADE	F.J.C.	10-69
CHECKED	J.R.C.	11-69
IN CHARGE	J.E.H.	

DELAWARE STATE HIGHWAY DEPARTMENT

DELAWARE TURNPIKE

ROUTE 896 INTERCHANGE IMPROVEMENTS
BRIDGE OVER DELAWARE TURNPIKE

DRAINAGE DETAILS

HOWARD, NEEDLES, TAMMEN & BERGENDOFF
consulting engineers
NEW YORK KANSAS CITY

SCALE: As Noted
CONTRACT NO. 7053
SHEET NO. 24 OF 25

DELAWARE TURNPIKE	CONT NO	TITLE	SHEET NO	TOTAL SHEETS
	7053		76	86

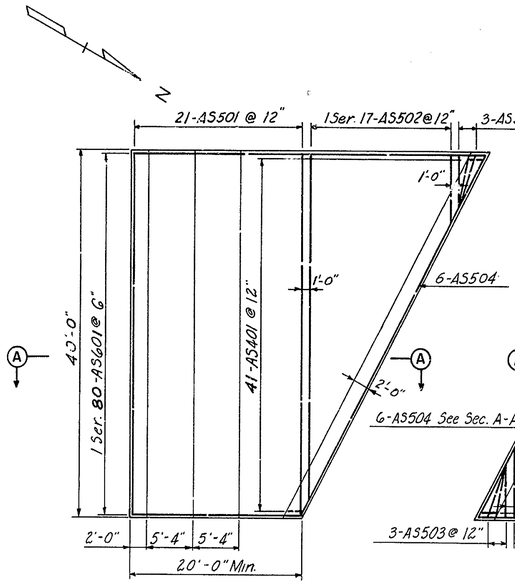

PLAN AT ABUTMENT NO. 1 & NO. 3

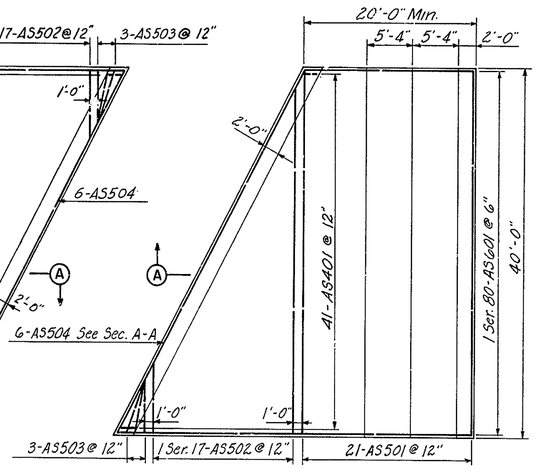

PLAN AT ABUTMENT NO. 2 & NO. 4

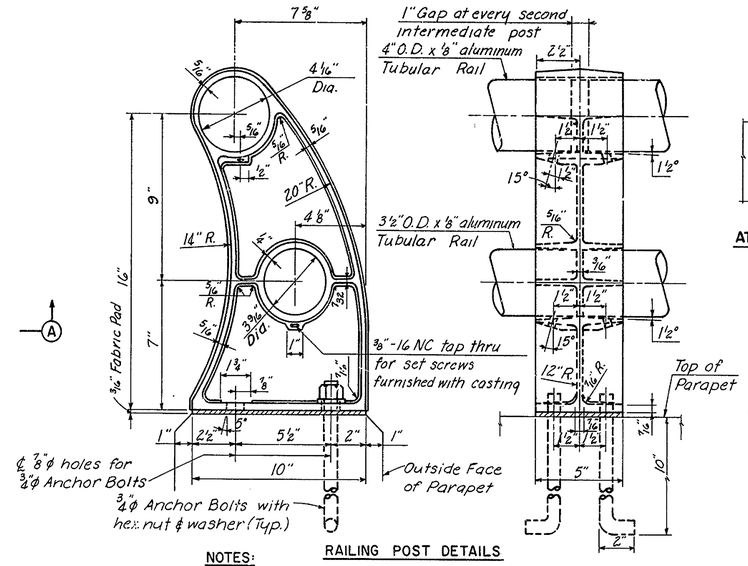

RAILING POST DETAILS

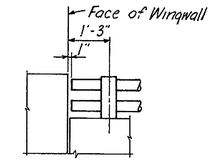

AT ABUTMENTS

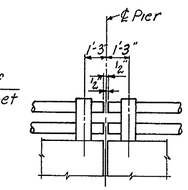

AT PIERS

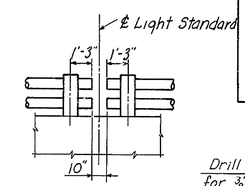

AT LIGHT STANDARDS

REINFORCING BAR SCHEDULE					
MARK	NO.	TYPE	A	B	LENGTH
AS401	164	13	1'-9"	1'-4"	5'-9"
AS501	84	Str.			39'-8"
AS502	4 Ser. 17	Str.			7'-6" to 37'-6"
AS503	12	Str.			6'-0"
AS504	24	Str.			45'-2"
AS601	4 Ser. 80	1	19'-8" to 41'-6"	8"	21'-0" to 42'-10"
No. of Bars shown are for 4 Approach Slabs					

BENDING DIAGRAMS

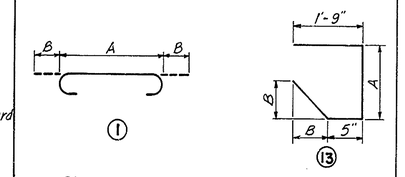

Dimensions are out to out of bars

NOTES:

1.) All Railings are to be fabricated and erected so that the rails are parallel to each other and to the top fascia and so the posts are truly vertical.

2.) Anchor bolts for railing posts shall be aluminum alloy meeting the requirements of ASTM-B211 alloy 2024-T4.

3.) After nuts have been placed & tightened to the satisfaction of the Engineer, bolts shall be cut off 1/8" above nuts and peened.

4.) All rails to be continuous at all end posts adjacent to piers and abutments.

5.) Tubular rails shall be closed at all piers and abutments with a welded in aluminum plug.

6.) The finished aluminum alloy bolts, nuts, & washers shall be given an anodic coating at least 0.0002 inches thick and a chromate seal.

7.) For Railings to be reused see sheet No. 19 of 25.

APPROACH SLABS

Scale 1/8" = 1'-0"

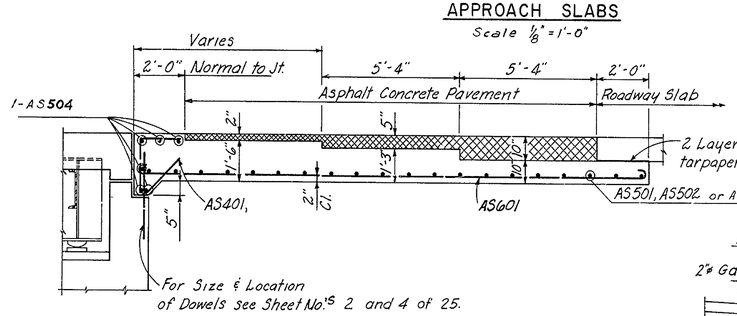

SECTION A-A

Scale: 3/8" = 1'-0"

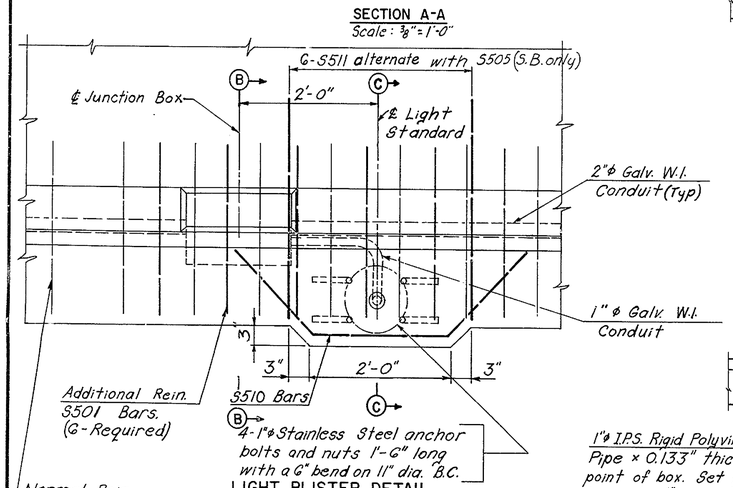

LIGHT BLISTER DETAIL

Scale: 1" = 1'-0"

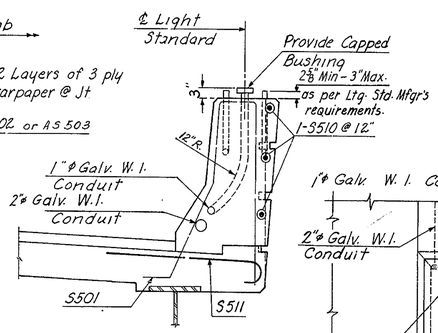

SECTION C-C

Scale: 3/4" = 1'-0"

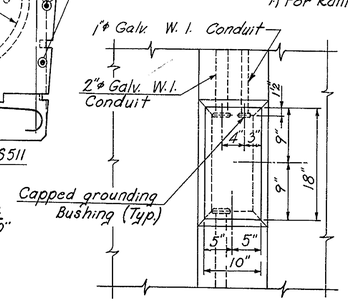

VIEW C-C

Scale 1" = 1'-0"

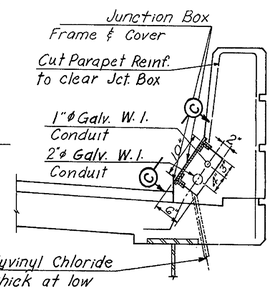

SECTION B-B

Scale: 3/4" = 1'-0"

NOTES:

Junction Box frame and Cover shall be H.D. Galvanized after fabrication.

Anchor bolts, washers and nuts shall be H.D. Galvanized Steel.

All metal conduits and fittings shall be H.D. Galvanized (See Spec's).

Grounding bushings shall be equal to O-Z Type IGB.

For location of lighting standards, See Sheet No. 15

Location of Junction Box with respect to Light Standard will be such that it will clear any parapet joint and at the same time maintain the specified distance.

Cost of 1" ϕ and 2" ϕ W.I. conduits imbedded in concrete and junction box on structure to be included in price bid for Item 18 P.C.C. Masonry - Superstructure.

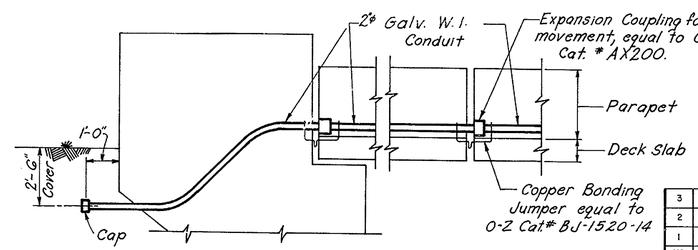

ABUTMENT PIER

EXPANSION JOINT DETAILS FOR CONDUITS

No Scale

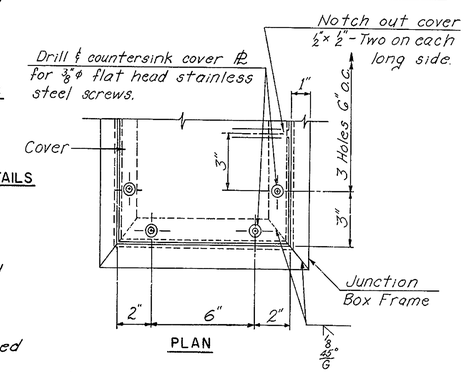

PLAN

HANDRAIL TERMINAL DETAILS

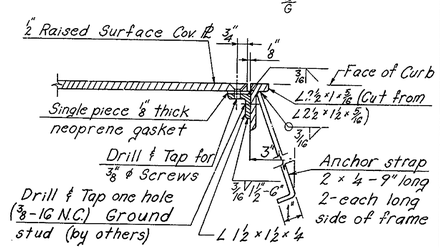

JUNCTION BOX FRAME AND COVER

Scale: 3" = 1'-0"

NO.	REVISION	BY	DATE
3			
2			
1			

	BY	DATE
MADE	BEB	1-69
CHECKED	JBG	8-69
IN CHARGE	JEH	

DELAWARE STATE HIGHWAY DEPARTMENT

DELAWARE TURNPIKE

ROUTE 896 INTERCHANGE IMPROVEMENTS
BRIDGE OVER DELAWARE TURNPIKE

MISCELLANEOUS DETAILS

HOWARD, NEEDLES, TAMMEN & BERGENDOFF
consulting engineers
NEW YORK KANSAS CITY

SCALE: As Noted
CONTRACT NO. 7053
SHEET NO 25 of 25

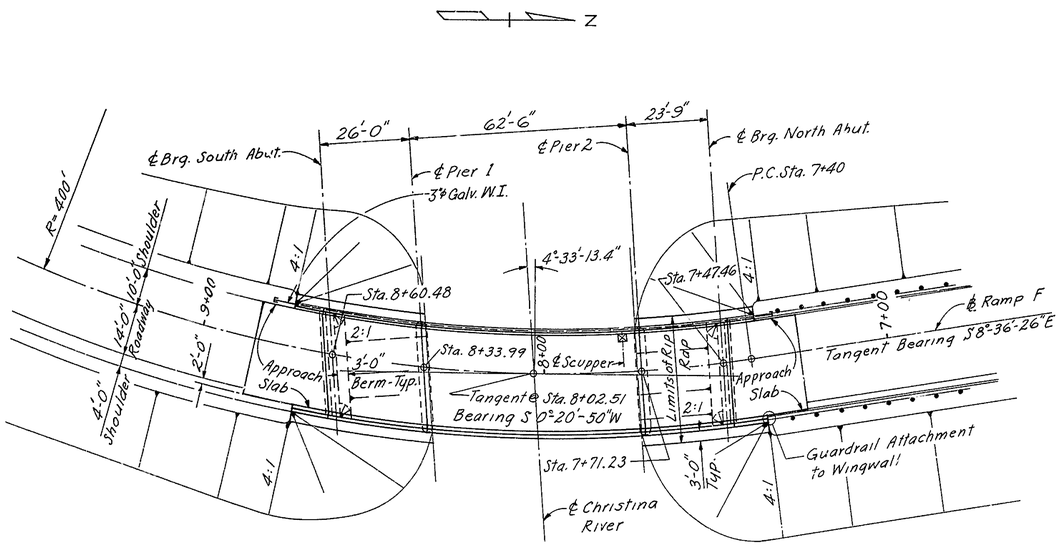

PLAN

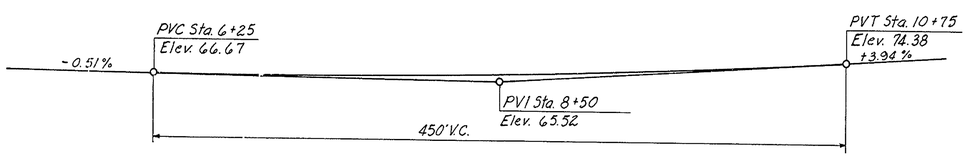

PROFILE
No Scale

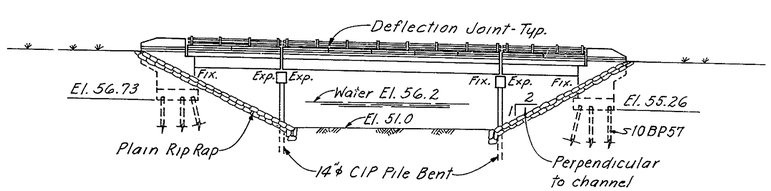

ELEVATION

ESTIMATED QUANTITIES

ITEM NO.	DESCRIPTION	UNIT	QUANTITY
4	Excavation for Structures	C.Y.	135
11	Hot-mix, Hot-laid Asphaltic Conc. Pavement	Tons	70
18	Portland Cement Concrete Masonry		
	Footings	C.Y.	51
	Substructure above footings	C.Y.	88
	Superstructure	C.Y.	122
	Approach Slabs	C.Y.	54
19	Superficial Waterproofing	S.Y.	65
20	Bar Reinforcement	Lbs.	41,900
22	Structural Steel (Estimated Wt. 81,000 lbs.)	L.S.	1
31	6"φ Perforated Corr. Metal Pipe Underdrain	L.F.	120
	Steel Bearing Piles - 10 BP 57	L.F.	940
35	Cast-in-Place Concrete Piles 14"φ (bents)	L.F.	420
	Bridge Drainage	L.S.	1
64	Riprap (Plain)	S.Y.	230
	Coal Tar Epoxy Underseal	S.Y.	440
	Protective Coating for Concrete	S.F.	410
22A	Aluminum Railing - Double Rail	L.F.	235

GENERAL NOTES:

Construction Specifications: Delaware State Highway Department Standard Specifications dated June 1, 1965 and Special Provisions.

Design Specifications: A.A.S.H.O. Standard Specifications for Highway Bridges dated 1965.

Design Live Load: HS20-44

Design Stresses: Concrete fc = 1200 p.s.i. Structural and Reinforcing Steel fs = 20,000 p.s.i.

Concrete:

All exposed edges shall be chamfered 1" unless otherwise noted.

Concrete cover on reinforcing shall be 2" min. unless otherwise shown in the plans.

Bar Reinforcement: Bar reinforcement shall be deformed billet-steel bars (A-615) grade 40.

All bar laps shall be 30 diameters minimum of the smaller bar spliced, unless otherwise noted.

In computing the total length shown for each bent bar, dimensions of legs adjoining each bend (not 135° or 180° hooks) were carried to the point of intersection of both legs and no deductions were made for the shorter distance along the curve. The Contractor shall take this fact into consideration when ordering and fabricating bent bars.

The first digit of the bar mark denotes the bar size, i.e. A501 is a No. 5 bar.

Structural Steel: Structural Steel shall conform to the requirements of A.S.T.M. Designation A36 except as noted.

Piles: All piles in Abutments shall be 10BP57 steel bearing piles driven to a minimum bearing capacity of 50 tons. All piles in Piers shall be 14"φ cast-in-place concrete piles driven to a minimum bearing capacity of 50 tons.

NO.	REVISION	BY	DATE
3			
2			
1			

	BY	DATE
MADE	F.J.C.	12-68
CHECKED	JBG	1-69
IN CHARGE	JEH	

DELAWARE STATE HIGHWAY DEPARTMENT

DELAWARE TURNPIKE

ROUTE 896 INTERCHANGE IMPROVEMENTS
RAMP F BRIDGE OVER CHRISTINA RIVER

GENERAL PLAN & ELEVATION

HOWARD, NEEDLES, TAMMEN & BERGENDOFF
consulting engineers
NEW YORK KANSAS CITY

SCALE: 1" = 20'-0"
CONTRACT NO. 7053
SHEET NO. 1 OF 8

DELAWARE TURNPIKE	CONT. NO.	TITLE	SHEET NO.	TOTAL SHEETS
	7053		78	86

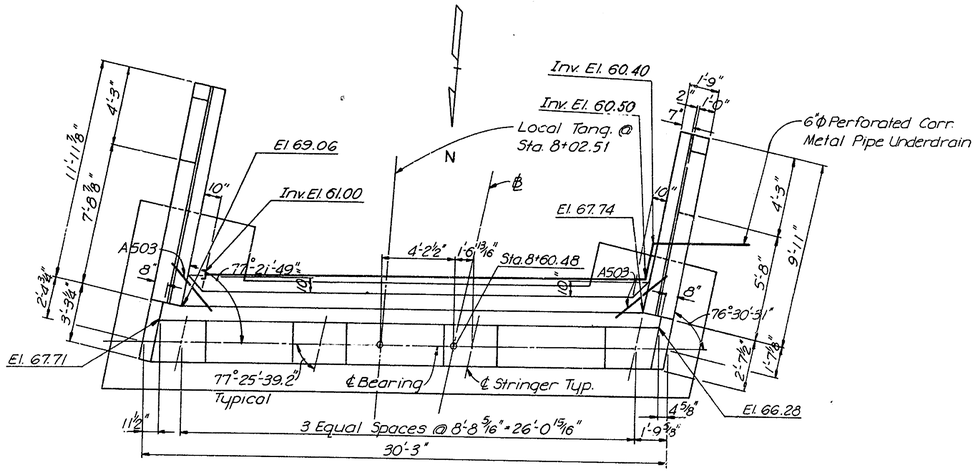

PLAN SOUTH ABUTMENT

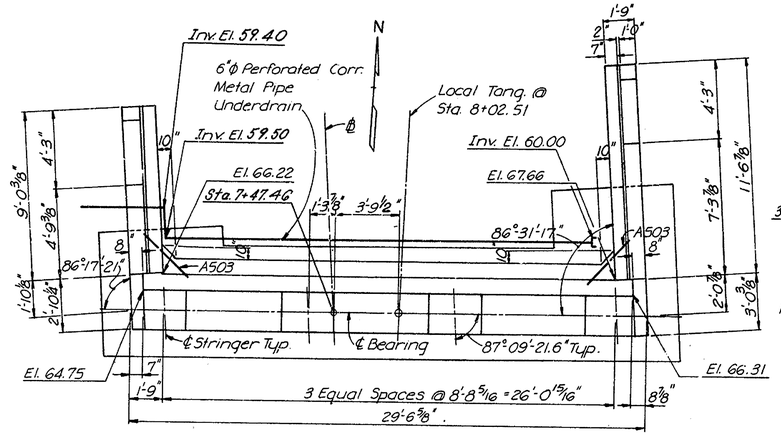

PLAN NORTH ABUTMENT

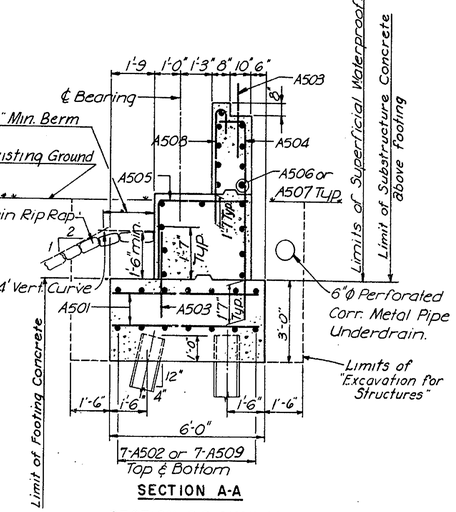

SECTION A-A

SECTION B-B SIMILAR

Scale 3/8" = 1'-0"

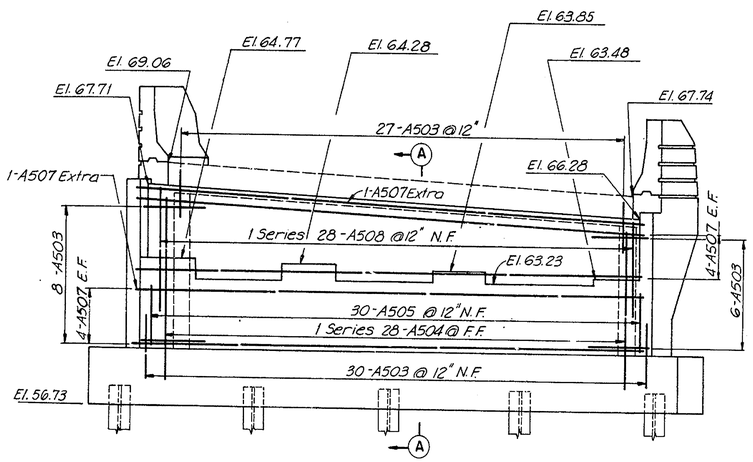

ELEVATION SOUTH ABUTMENT

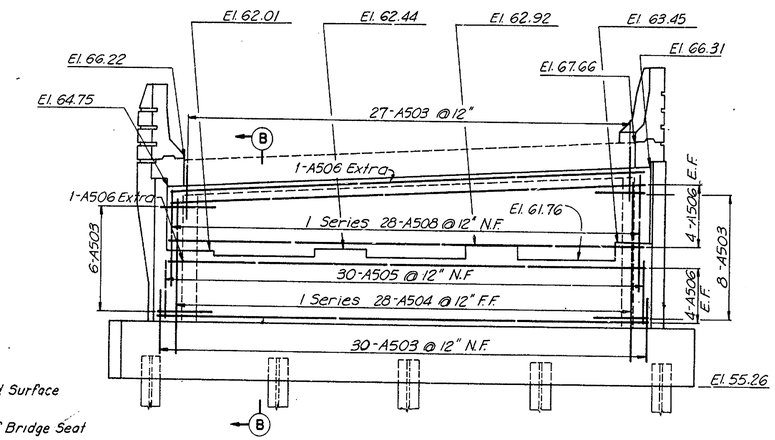

ELEVATION NORTH ABUTMENT

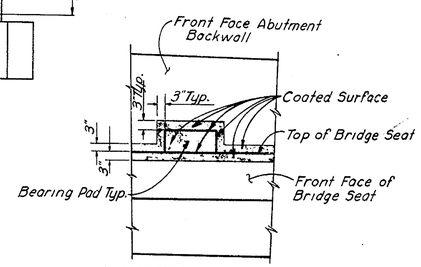

APPLICATION LIMITS OF EPOXY PROTECTIVE COATING FOR CONCRETE

(Part Elevation at Abutment)

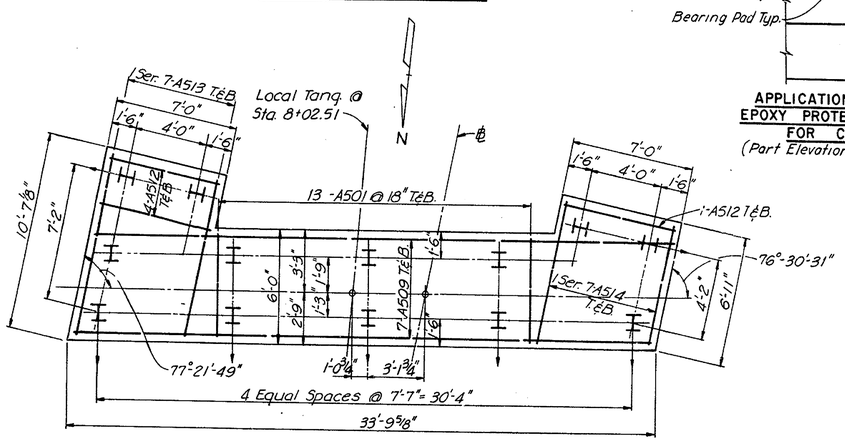

FOOTING SOUTH ABUTMENT

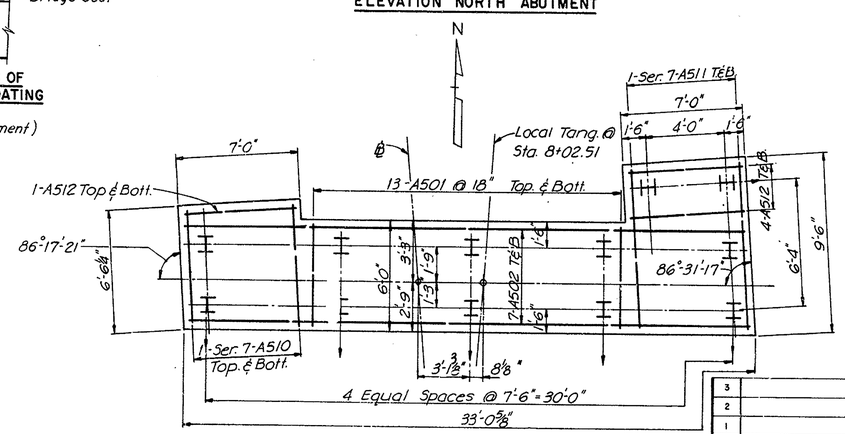

FOOTING NORTH ABUTMENT

NOTES:

For General Notes see sheet No. 1 of 8.

For Wingwall and Typical Pad Details see sheet no. 3 of 8.

Min. Reinforcing steel concrete cover 3" in footing, 2" above footing.

Backfill behind abutments to be placed only after bridge deck slab has been completed.

All bars spaced @ 12" max. ctrs unless noted.

All construction joints to have 2"x6" continous key.

Legend:
N.F. Denotes Near Face
E.F. Denotes Each Face
F.F. Denotes Far Face
I indicates vertical pile
I indicates 3:12 batter pile and direction of batter

NO.	REVISION	BY	DATE
3			
2			
1			

	BY	DATE
MADE	D.L.S.	1-69
CHECKED	JBG	2-69
IN CHARGE	JEH	

DELAWARE STATE HIGHWAY DEPARTMENT

DELAWARE TURNPIKE

ROUTE 896 INTERCHANGE IMPROVEMENTS

RAMP F. BRIDGE OVER CHRISTINA RIVER

ABUTMENTS

HOWARD, NEEDLES, TAMMEN & BERGENDOFF consulting engineers

NEW YORK KANSAS CITY

SCALE 1/4" = 1'-0" unless noted

CONTRACT NO 70.5.3

SHEET NO 2 OF 8

DELAWARE TURNPIKE	CONT. NO.	TITLE	SHEET NO.	TOTAL SHEETS
	7053		79	86

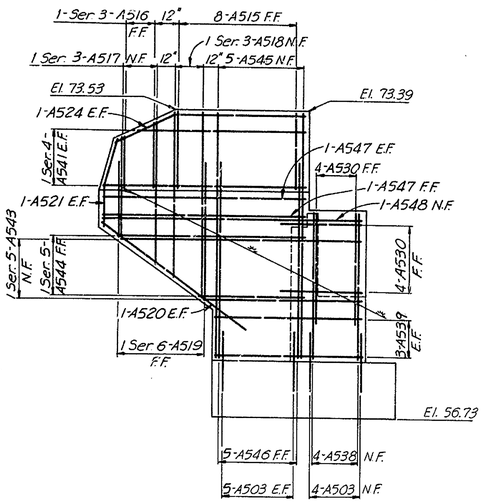

ELEVATION S.E. WINGWALL

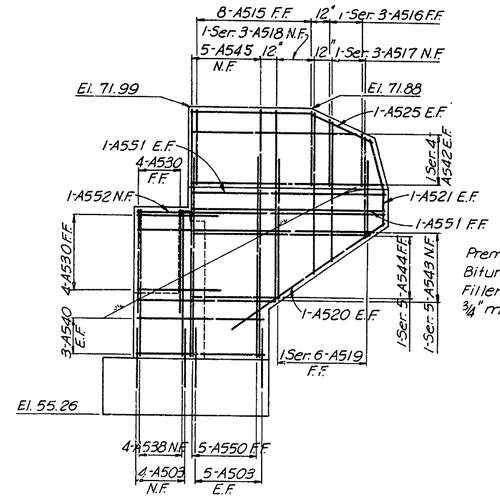

ELEVATION N.E. WINGWALL

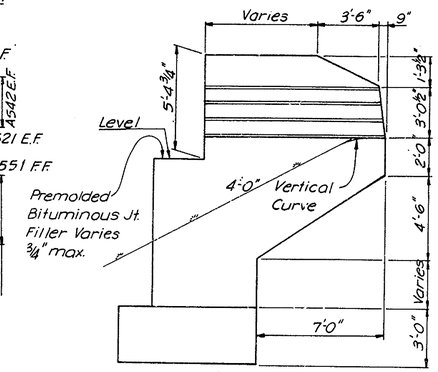

TYPICAL WINGWALL

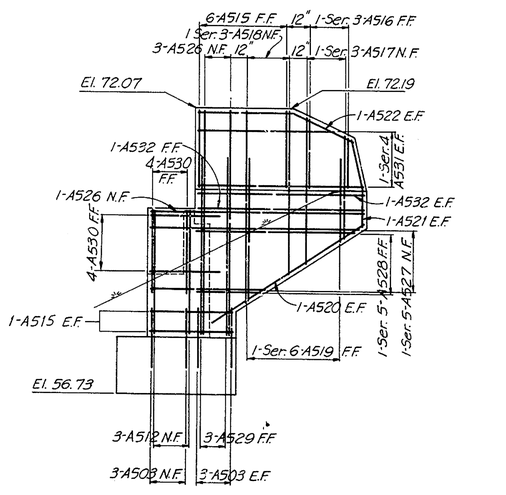

ELEVATION S.W. WINGWALL

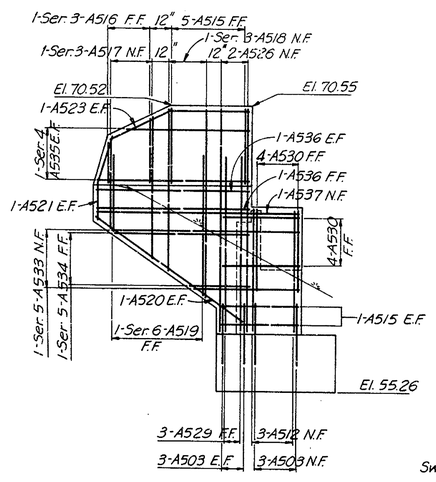

ELEVATION N.W. WINGWALL

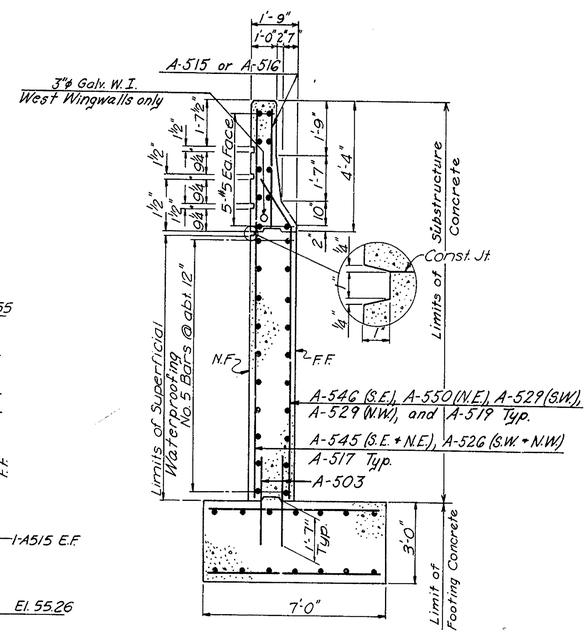

TYPICAL SECTION
Scale 3/8"=1'-0"

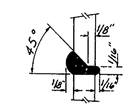

100% BUTT-WELDED SPLICE DETAIL
No Scale

APPROX. PILE TIP ELEVATION	
S. Abutment	20.0
N. Abutment	20.0

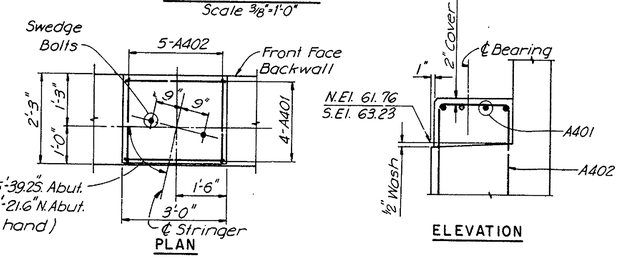

TYPICAL PAD DETAILS
Scale 1/2"=1'-0"

BAR REINFORCING SCHEDULE

MARK	NO.	TYPE	A	B	C	LENGTH
A401	32	4	2'-4"	2'-8"	2'-4"	7'-4"
A402	40	4	2'-4"	1'-10"	2'-4"	6'-6"
A501	52	Str.				5'-6"
A502	14	"				32'-6"
A503	180	"				3'-2"
A504	2 Ser.28	2	7'-2"-8'-9"	1'-0"		8'-2" - 9'-9"
A505	60	2	3'-2"	3'-5"		6'-7"
A506	18	Str.				29'-0"
A507	18	"				29'-9"
A508	2 Ser.28	1	4'-4"-5'-10"	7"		4'-11" - 6'-5"
A509	14	Str.				33'-3"
A510	2 Ser. 7	"				6'-0" - 6'-6"
A511	2 Ser. 7	"				8'-6" - 9'-0"
A512	26	"				6'-6"
A513	2 Ser. 7	"				8'-8" - 10'-0"
A514	2 Ser. 7	"				6'-5" - 7'-10"
A515	35	"				4'-0"
A516	4 Ser. 3	"				2'-10" - 3'-8"
A517	4 Ser. 3	"				5'-3" - 7'-3"
A518	4 Ser. 3	"				8'-3" - 10'-3"
A519	4 Ser. 6	3	2'-8"-6'-3"	2'-0"	1'-3"	5'-0" - 8'-7"
A520	8	Str.				9'-9"
A521	8	3	1'-9"	2'-11"	9"	4'-9"
A522	2	"	5'-5"	3'-4"	1'-3"	9'-0"
A523	2	"	4'-6"	3'-4"	1'-3"	8'-1"
A524	2	"	7'-5"	3'-4"	1'-3"	11'-0"
A525	2	"	7'-0"	3'-4"	1'-3"	11'-7"
A526	6	Str.				12'-0"
A527	1 Ser. 5	"				6'-6" - 11'-10"
A528	1 Ser. 5	"				3'-11" - 9'-3"
A529	6	3	8'-0"	2'-0"	1'-3"	10'-4"
A530	32	Str.				4'-8"
A531	2 Ser. 4	"				8'-0" - 9'-5"
A532	3	"				9'-5"
A533	1 Ser. 5	"				6'-0" - 10'-10"
A534	1 Ser. 5	"				3'-2" - 7'-9"
A535	2 Ser. 4	"				7'-0" - 8'-6"
A536	3	"				8'-6"
A537	1	"				11'-4"
A538	8	"				8'-0"
A539	6	"				7'-9"
A540	6	"				7'-1"
A541	2 Ser. 4	"				9'-9" - 11'-5"
A542	2 Ser. 4	"				9'-6" - 11'-0"
A543	2 Ser. 5	"				8'-4" - 13'-6"
A544	2 Ser. 5	"				5'-0 - 10'-5"
A545	10	"				13'-5"
A546	5	3	9'-4"	2'-0"	1'-3"	11'-8"
A547	3	Str.				11'-5"
A548	1	"				14'-9"
A550	5	3	9'-2"	2'-0"	1'-3"	11'-6"
A551	3	Str.				13'-2"
A552	1	Str.				14'-1"

Dimensions are out to out of bars.

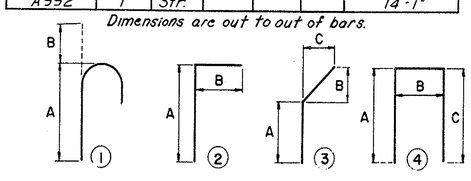

NO.	REVISION	BY	DATE
3			
2			
1			

	BY	DATE
MADE	DLS	2-69
CHECKED	JBG	3-69
IN CHARGE	JEH	

DELAWARE STATE HIGHWAY DEPARTMENT

DELAWARE TURNPIKE

ROUTE 896 INTERCHANGE IMPROVEMENTS
RAMP F BRIDGE OVER CHRISTINA RIVER

ABUTMENT DETAILS

HOWARD, NEEDLES, TAMMEN & BERGENDOFF
consulting engineers
NEW YORK KANSAS CITY

SCALE 1/4"=1'-0" unless noted
CONTRACT NO. 7053
SHEET NO. 3 OF 8

DELAWARE TURNPIKE	CONT NO	TITLE	SHEET NO	TOTAL SHEETS
	7053		80	86

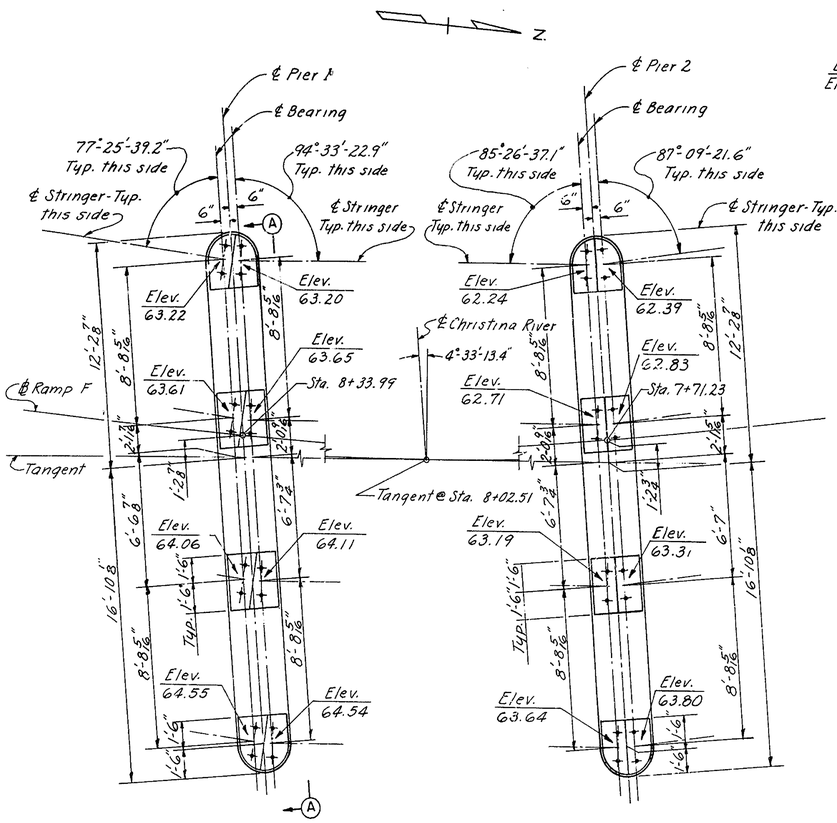

PLAN
Scale 1/4"=1'-0"

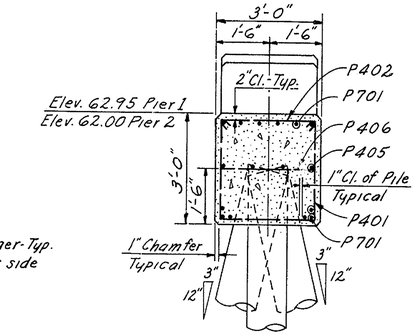

SECTION C-C
Scale 1/2"=1'-0"

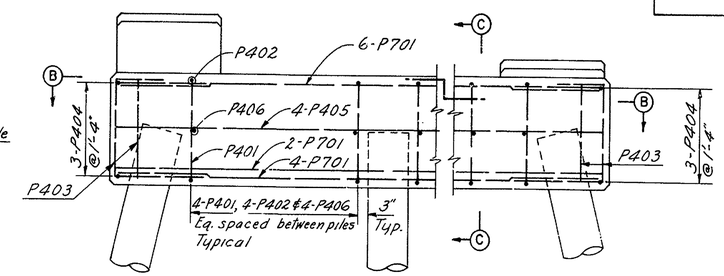

ELEVATION A-A
Scale 1/2"=1'-0"

REINFORCING SCHEDULE *			
MARK	NUMBER	TYPE	LENGTH
P401	16	1	8'-9"
P402	16	2	3'-5"
P403	6	3	4'-0"
P404	6	4	8'-9"
P405	4	Str.	26'-9"
P406	16	Str.	2'-8"
P407	26	5	7'-4"
P408	6	5	6'-9"
P409	10	5	7'-8"
P701	12	Str.	26'-9"

*Quantities shown are for one Pier only

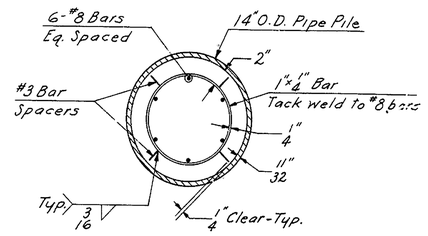

SECTION F-F
Scale 1 1/2"=1'-0"

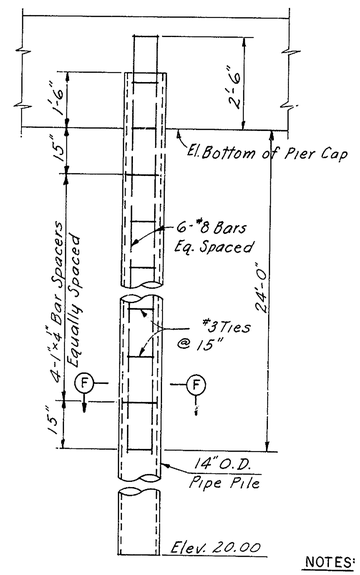

TYPICAL PILE DETAIL
Not to scale

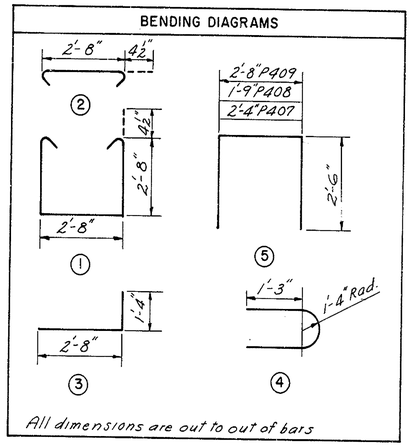

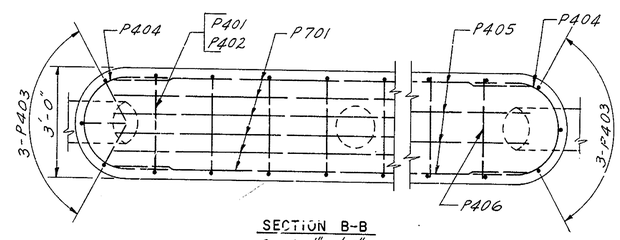

SECTION B-B
Scale 1/2"=1'-0"

NOTES:

All pier piles shall be 14" ϕ C.I.P. Concrete. Exterior surfaces of 14" ϕ C.I.P. Piles to be coated from 6" above bottom of cap beam to Elev. 46.00 with a coal-tar epoxy material equal to "Tarset" as specified. Two coats of "Tarset" shall be applied; each coat of not more than 125 ft²/gallon. These coatings shall be applied on blast cleaned surfaces of the pile for the length indicated above.

Pad elevations given denote top of finished concrete pad. For details of anchor bolts for shoes, see Sheet No. 8 of 8. For General Notes, see Sheet No. 1 of 8.

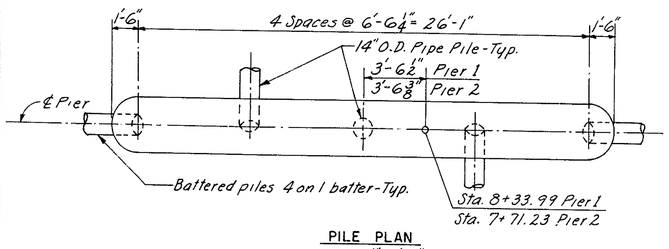

PILE PLAN
Scale 1/4"=1'-0"

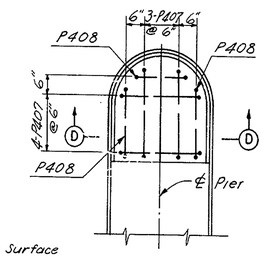

EXTERIOR PAD PLAN

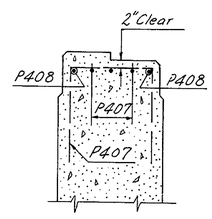

SECTION D-D

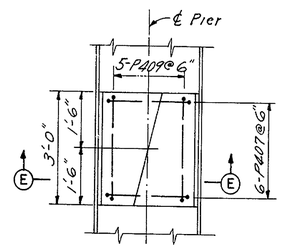

INTERIOR PAD PLAN

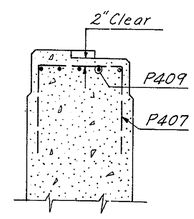

SECTION E-E

PAD DETAILS
Scale 1/2"=1'-0"

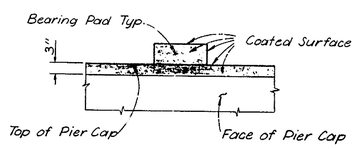

APPLICATION LIMITS OF EPOXY PROTECTIVE COATING FOR CONCRETE
Part Elevation at Pier

NO	REVISION	BY	DATE
3			
2			
1			

	BY	DATE
MADE	F.J.C.	12-68
CHECKED	JBG	1-69
IN CHARGE	JEH	

DELAWARE STATE HIGHWAY DEPARTMENT

DELAWARE TURNPIKE

ROUTE 896 INTERCHANGE IMPROVEMENTS
RAMP F BRIDGE OVER CHRISTINA RIVER

PIERS

HOWARD, NEEDLES, TAMMEN & BERGENDOFF
consulting engineers
NEW YORK KANSAS CITY

SCALE: As Noted
CONTRACT NO 7053
SHEET NO 4 OF 8

DELAWARE TURNPIKE	CONT. NO.	TITLE	SHEET NO.	TOTAL SHEETS
	7053		81	86

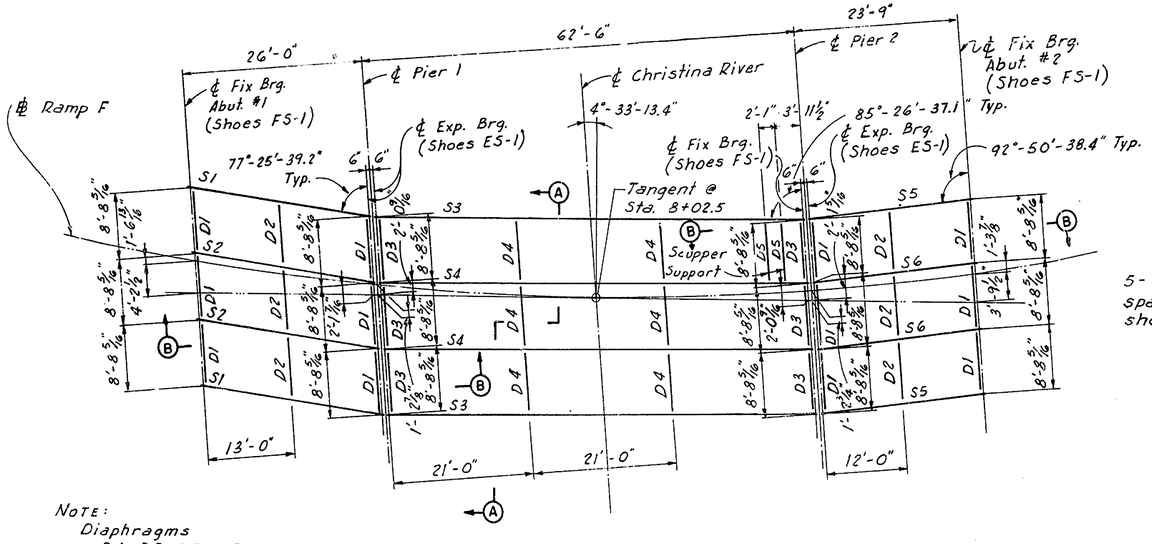

NOTE:
Diaphragms
D1, D2, D5 - 15 [33.9
D3, D4 - 18 [42.7

PLAN
Scale 1" = 10'

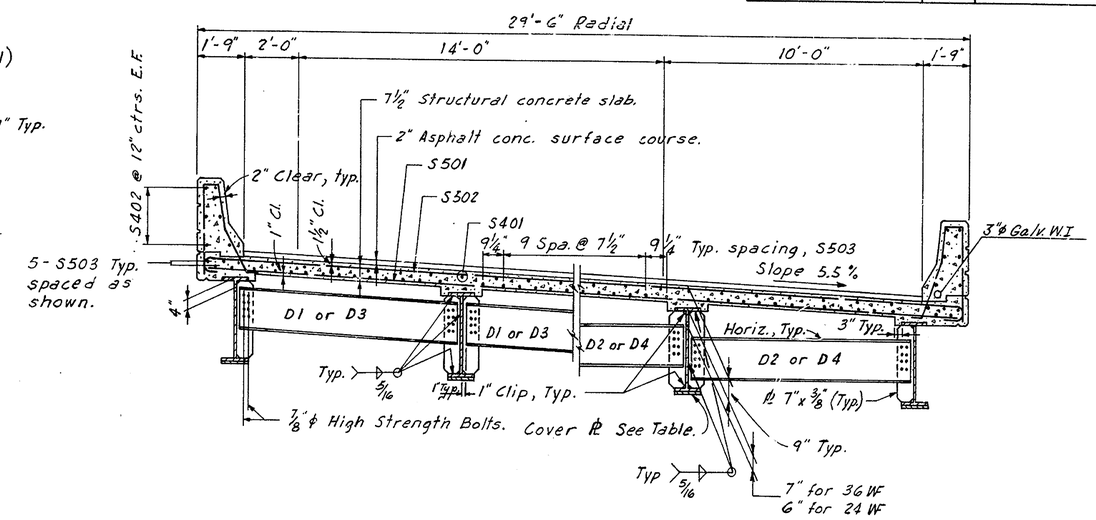

END DIAPHRAGM

INTERMEDIATE DIAPHRAGM

SECTION A-A
Scale 3/8" = 1'-0"

STRINGER		
No.	Size	Cover Plate
S1	36WF135	—
S2	24WF94	—
S3	36WF135	10½" x ¾" x 38'-5"
S4	36WF135	10½" x 1⅛" x 43'-9"
S5	36WF135	—
S6	24WF84	—

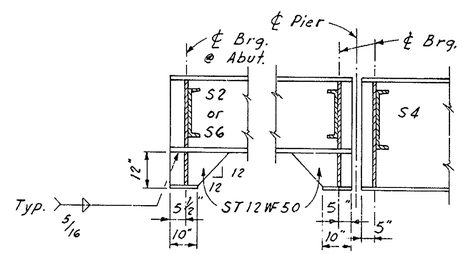

SECTION B-B
Scale ½" = 1'-0"

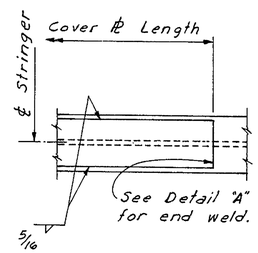

COVER PLATE DETAIL
Not to Scale

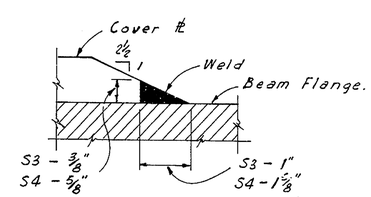

DETAIL "A"
Not to Scale

NOTES:

For General Notes, see Sheet No. 1 of 8.

For Slab reinforcement see Sheet No. 6 of 8.

For Shoe Details see Sheet No. 8 of 8.

Shear Stud spacing shown is maximum spacing.

For details of Diaphragm D5 supporting scupper see Sheet No. 8 of 8.

CAMBER INCREMENTS FOR DEAD LOADS	Stringer S1		Stringer S2		Stringer S3		Stringer S4		Stringer S5		Stringer S6	
	¼ & ¾L	½L	¼ & ¾L	½L	¼ & ¾L	½L	¼ & ¾L	½L	¼ & ¾L	½L	¼ & ¾L	½L
Structural St.	0.00	0.01	0.01	0.02	0.15	0.20	0.15	0.21	0.00	0.00	0.01	0.01
Concrete Deck Slab	0.03	0.03	0.08	0.11	0.55	0.77	0.66	0.91	0.02	0.03	0.06	0.09
Parapet & 2" Wear. Surf.	0.01	0.02	0.05	0.06	0.12	0.16	0.12	0.17	0.01	0.01	0.03	0.04
Full Dead Load	0.04	0.06	0.14	0.19	0.82	1.13	0.93	1.29	0.03	0.04	0.10	0.14
Vertical Curve	-.18	-.25	-.18	-.24	-.80	-.93	-1.00	-1.34	-.12	-.18	-.12	-.18
Total Camber	-.14	-.19	-.04	-.05	-.02	.20	-.07	-.05	-.09	-.14	-.02	-.04

Note: All cambers are in inches.
Camber not required when it is less than 1 inch.

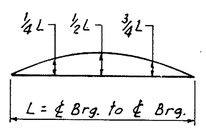

DEFLECTION DIAGRAM

STRINGER SCHEDULE						
Stringer	Length ℄ Brg. to ℄ Brg.	Shear Stud Spacing 0.1L	0.2L	0.3L	0.4L	0.5L
S1 & S2	26'-1½"	—	—	—	—	—
S3	61'-8 5/16"	8"	9"	11"	13"	14½"
S4	61'-8 5/16"	6½"	7½"	10"	11"	13"
S5 & S6	23'-3⅜"	—	—	—	—	—

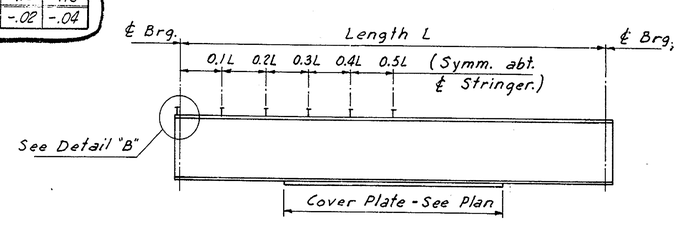

STRINGER ELEVATION
Not to Scale

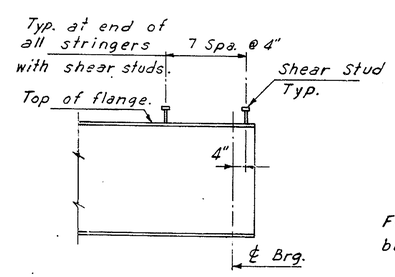

DETAIL "B"
Not to Scale

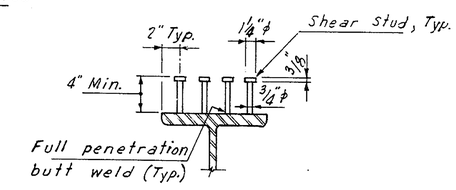

SHEAR STUD DETAIL
Not to Scale

NO.	REVISION	BY	DATE
3			
2			
1			

	BY	DATE
MADE	L.D.F.	11-68
CHECKED	JBG	12-68
IN CHARGE	JEH	

DELAWARE STATE HIGHWAY DEPARTMENT
DELAWARE TURNPIKE
ROUTE 896 INTERCHANGE IMPROVEMENTS
RAMP F BRIDGE OVER CHRISTINA RIVER
FRAMING PLAN

HOWARD, NEEDLES, TAMMEN & BERGENDOFF
consulting engineers
NEW YORK KANSAS CITY

SCALE: As Noted
CONTRACT NO. 7053
SHEET NO. 5 OF 8

DELAWARE TURNPIKE	CONT. NO.	TITLE	SHEET NO.	TOTAL SHEETS
	7053		82	86

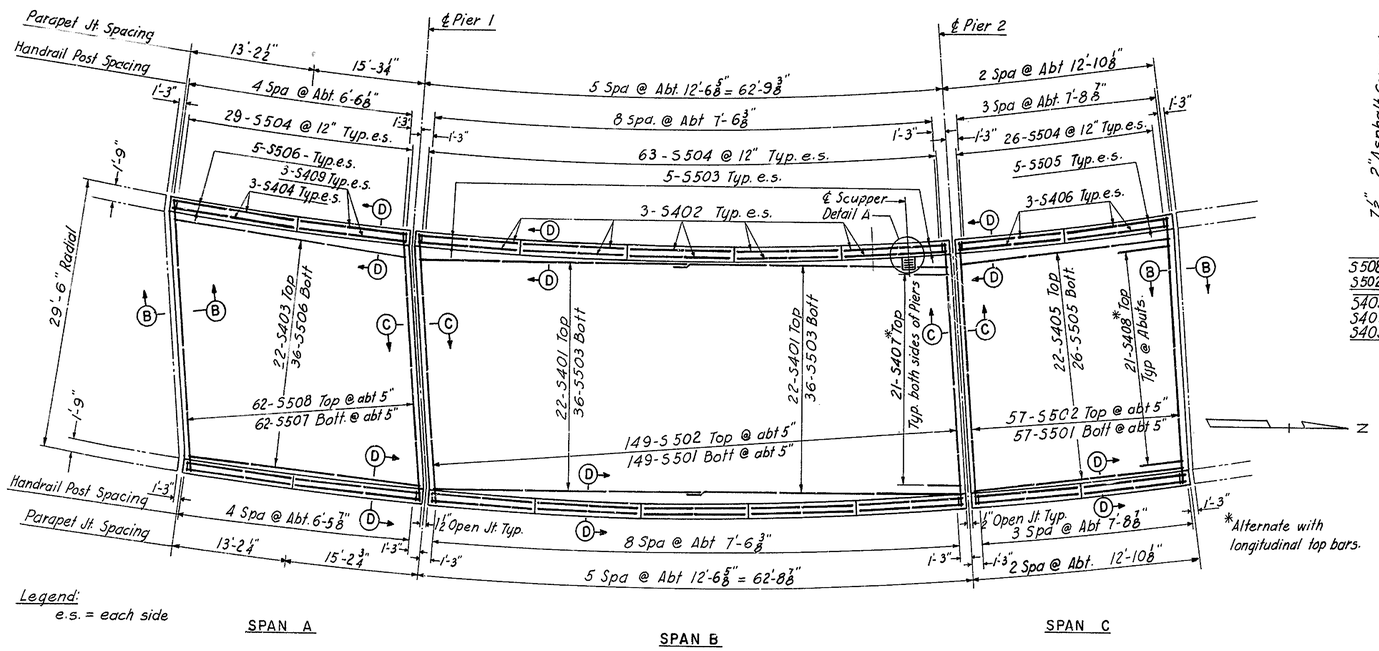

SLAB PLAN
Scale: ⅛" = 1'-0"

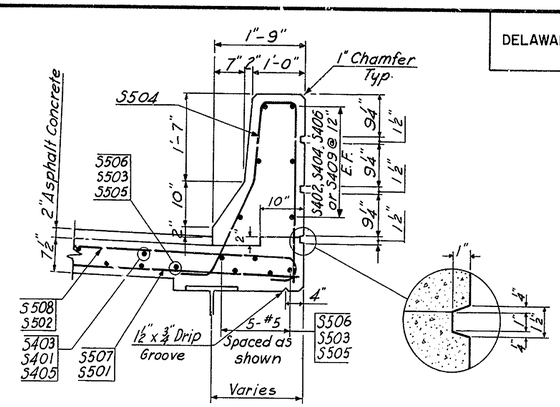

SECTION D-D
Scale: ¾" = 1'-0"

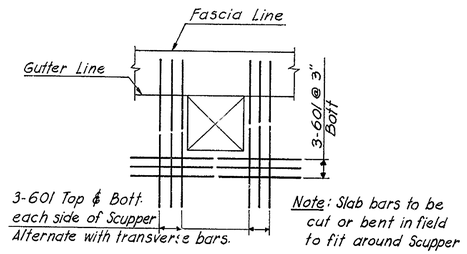

Note: Slab bars to be cut or bent in field to fit around Scupper

DETAIL A
No Scale

REINFORCING BAR SCHEDULE					
MARK	NO	TYPE	A	B	LENGTH
DECK SLAB					
S401	44	Str.			32'-0"
S402	60	"			12'-2"
S403	22	"			28'-0"
S404	12	"			12'-10"
S405	22	"			25'-3"
S406	24	"			12'-4"
S407	84	1	4'-0"	0'-8"	4'-8"
S408	42	1	6'-0"	0'-8"	6'-8"
S409	12	Str.			14'-10"
S501	206	Str.			29'-2"
S502	206	2	29'-2"	0'-7"	30'-4"
S503	82	Str.			32'-0"
S504	236	3			7'-10"
S505	36	Str.			25'-3"
S506	46	"			28'-0"
S507	62	"			29'-6"
S508	62	2	29'-6"	0'-7"	30'-8"
S601	15	Str.			6'-0"
APPROACH SLABS					
AS401	54	4	1'-9"	1'-4"	5'-9"
AS501	42	Str			25'-8"
AS502	1	"			17'-1"
AS503	1Ser-5	"			3'-8" to 22'-0"
AS504	6	"			26'-4"
AS505	6	"			25'-8"
AS506	1	"			8'-6"
AS601	1Ser-51	2	19'-8" to 25'-4"	0'-8"	21'-0" to 26'-8"
AS602	1Ser-51	"	19'-8" to 21'-0"	0'-8"	21'-0" to 22'-4"

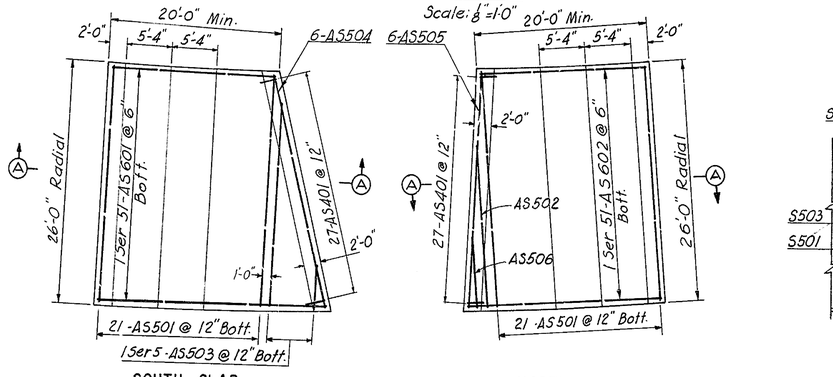

SOUTH SLAB

NORTH SLAB

APPROACH SLABS
Scale: ⅛" = 1'-0"

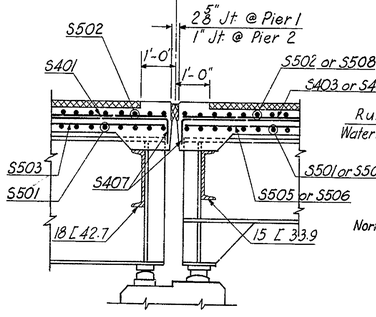

SECTION C-C
Scale: ½" = 1'-0"

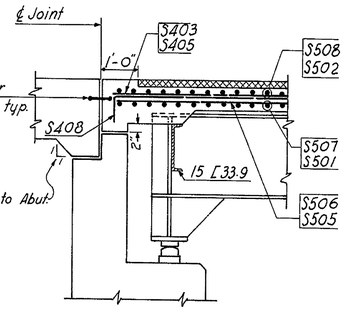

SECTION B-B
Scale: ½" = 1'-0"

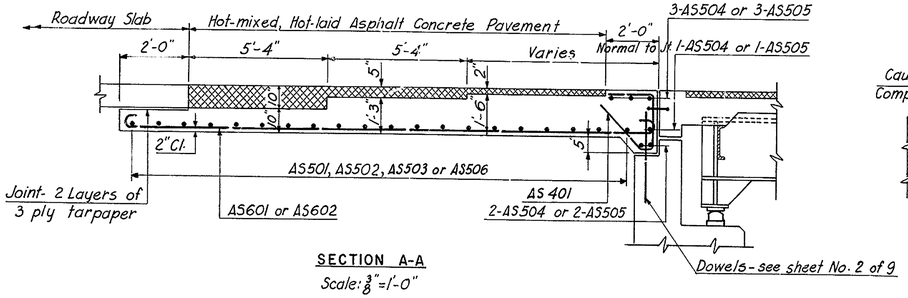

SECTION A-A
Scale: ⅜" = 1'-0"

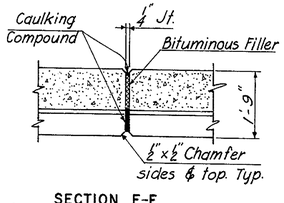

SECTION E-E

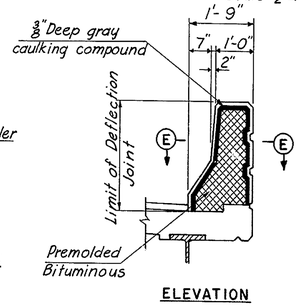

ELEVATION

DETAILS AT PARAPET DEFLECTION JOINT
Scale: ½" = 1'-0"

NOTES:
For spacing of longitudinal reinforcing in deck slabs see typical section-Sheet No. 5 of 8
All parapet joints shall be radial.
For joint details see Sheet No. 6 of 8
For General Notes see Sheet No. 1 of 8
Parapet Joints and Post Spacings are measured along Gutter Line.

BENDING DIAGRAMS

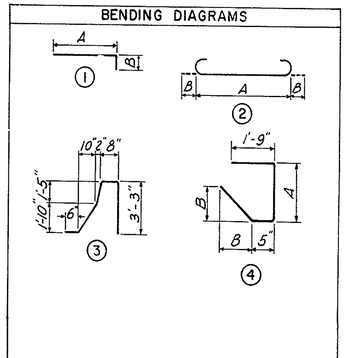

Dimensions are out to out of bars

NO.	REVISION	BY	DATE
3			
2			
1			

	BY	DATE
MADE	I.R.P.	2-69
CHECKED	JBG	3-69
IN CHARGE	J.E.H.	

DELAWARE STATE HIGHWAY DEPARTMENT
DELAWARE TURNPIKE
ROUTE 896 INTERCHANGE IMPROVEMENTS
RAMP F BRIDGE OVER CHRISTINA RIVER
CONCRETE DECK & APPROACH SLABS

HOWARD, NEEDLES, TAMMEN & BERGENDOFF
consulting engineers
NEW YORK KANSAS CITY

SCALE: as Shown
CONTRACT NO. 7053
SHEET NO. 6 OF 8

DELAWARE TURNPIKE	CONT. NO.	TITLE	SHEET NO.	TOTAL SHEETS
	7053		83	86

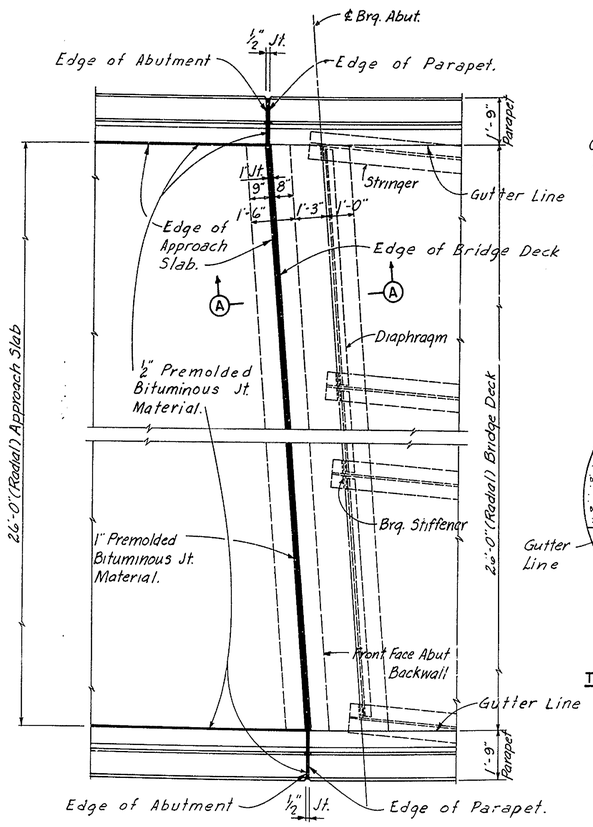

PLAN - JOINT AT SOUTH ABUTMENT (AS SHOWN)
PLAN - JOINT AT NORTH ABUTMENT (SIMILAR)
Scale ⅜" = 1'-0"

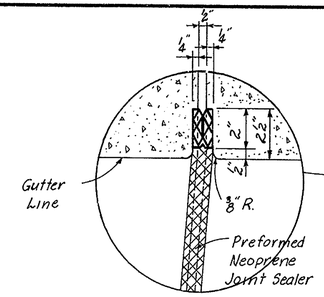

TYPE "A" JOINT AT PIER 2

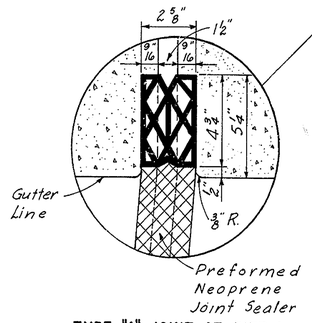

TYPE "A" JOINT AT PIER 1

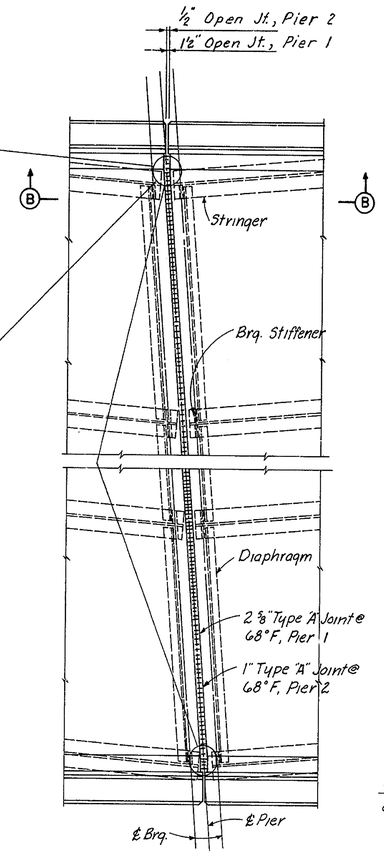

PLAN - JOINT AT PIER NO. 1 AND NO. 2
Scale ⅜" = 1'-0"

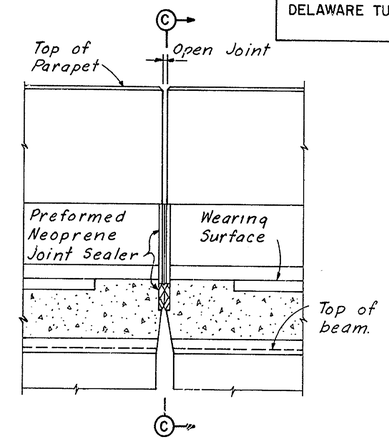

SECTION B-B
Scale 1" = 1'-0"

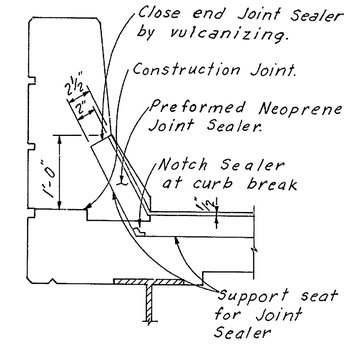

SECTION C-C
TREATMENT OF TYPE "A" JOINT AT CURB
Scale 1" = 1'-0"

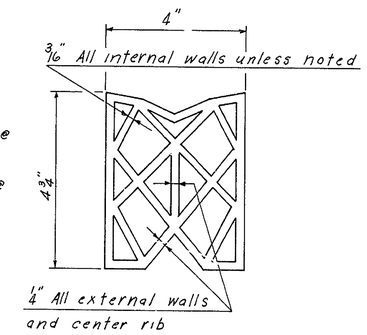

PREFORMED NEOPRENE JOINT SEALER
FOR 2⅝" TYPE "A" JOINT
Scale = Half Size

NOTES

All roadway joints shall conform to the crown and grade of the roadway surface.

It is absolutely essential that the openings for the preformed neoprene joint sealers be accurately formed and constructed to smooth straight lines. The size of the opening shall be adjusted to allow for the temperature at the time of construction.

Cost of the joints to be included in Portland Cement Concrete Masonry.

Cost of 1"ϕ and 2"ϕ W.I. conduits imbedded in concrete and junction box on structure to be included in price bid for Item 18 P.C.C. Masonry-Superstructure.

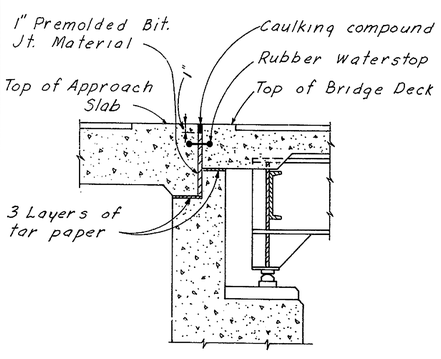

SECTION A-A
Scale ½" = 1'-0"

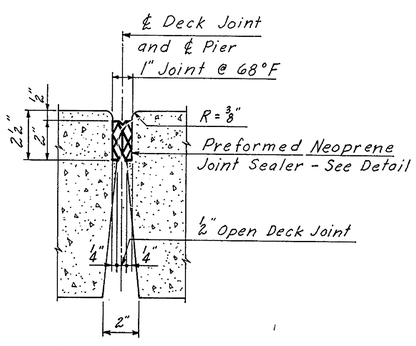

1" TYPE "A" JOINT
Scale 3" = 1'-0"

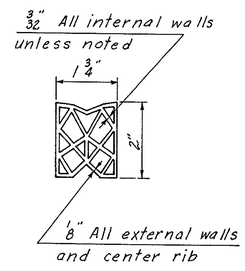

PREFORMED NEOPRENE JOINT SEALER
FOR 1" TYPE "A" JOINT
Scale = Half Size

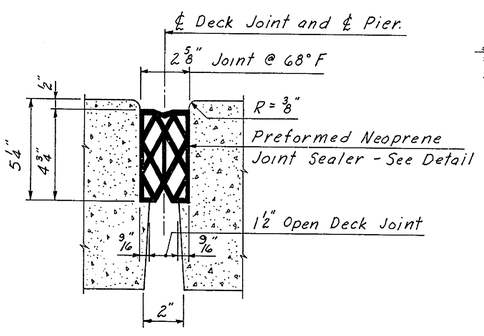

2⅝" TYPE "A" JOINT
Scale 3" = 1'-0"

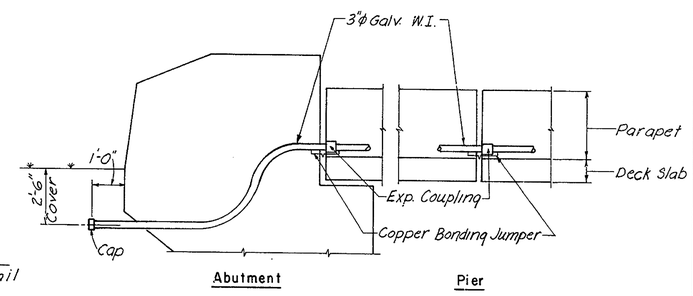

EXPANSION JOINT DETAILS FOR CONDUITS
No Scale

Note: Expansion Coupling, for 4" max. movement, equal to O-Z Cat.#Ax300. Copper Bonding Jumper equal to O-Z Cat.# BJ-2530-14

NO.	REVISION	BY	DATE
3			
2			
1			

	BY	DATE
MADE	B.E.B.	11-68
CHECKED	JBG	12-68
IN CHARGE	J.E.H.	

DELAWARE STATE HIGHWAY DEPARTMENT
DELAWARE TURNPIKE
ROUTE 896 INTERCHANGE IMPROVEMENTS
RAMP F BRIDGE OVER CHRISTINA RIVER
JOINT DETAILS

HOWARD, NEEDLES, TAMMEN & BERGENDOFF
consulting engineers
NEW YORK KANSAS CITY

SCALE: As Noted
CONTRACT NO. 7053
SHEET NO. 7 OF 8

DELAWARE TURNPIKE	CONT NO.	TITLE	SHEET NO.	TOTAL SHEETS
	7053		84	86

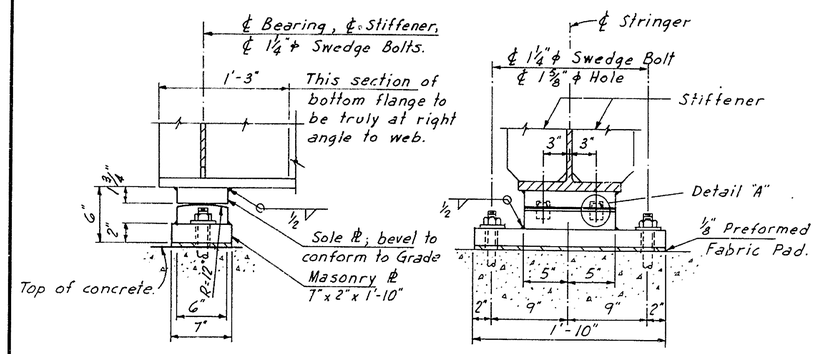

FIXED SHOE FS-1
Scale 1½"=1'-0"

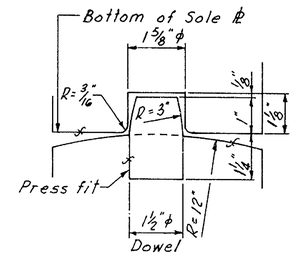

DETAIL "A"
Not to Scale

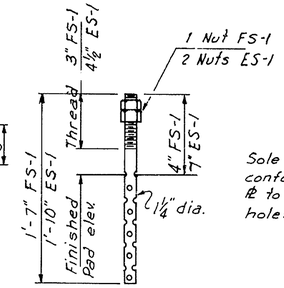

SWEDGE BOLT DETAIL
Not to Scale

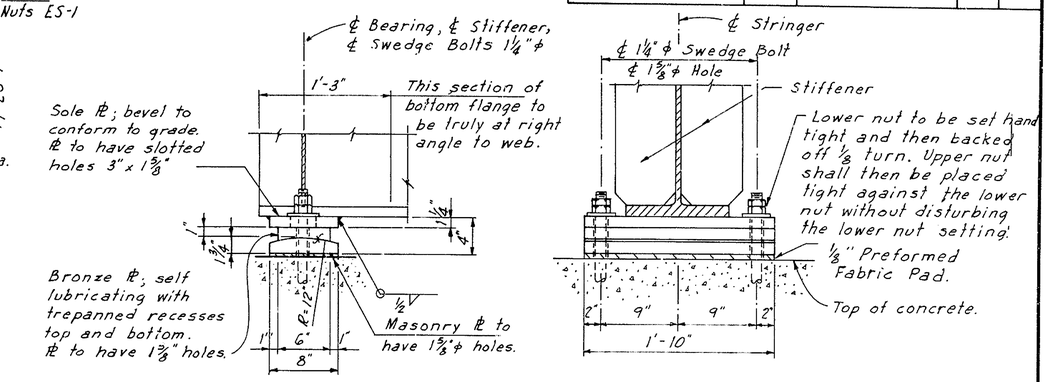

EXPANSION SHOE ES-1
Scale 1½"=1'-0"

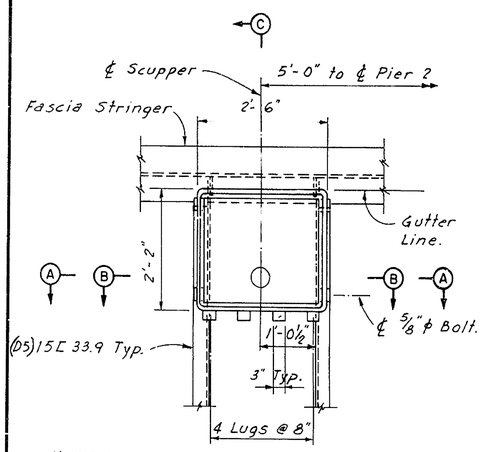

NOTE:
Concrete Slab ℄ Grate not shown.

SCUPPER PLAN
Scale ¾"=1'-0"

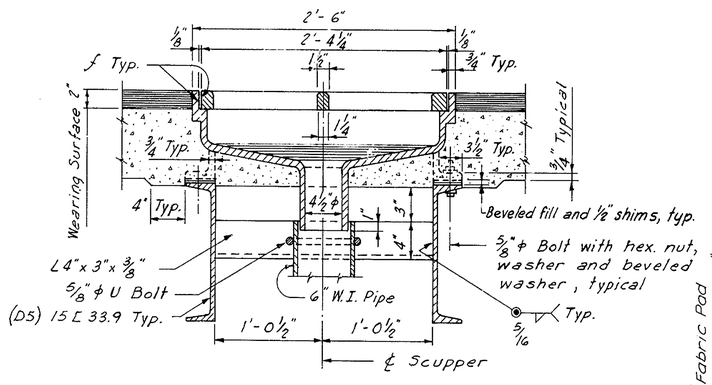

SECTION B-B
Scale 1½"=1'-0"

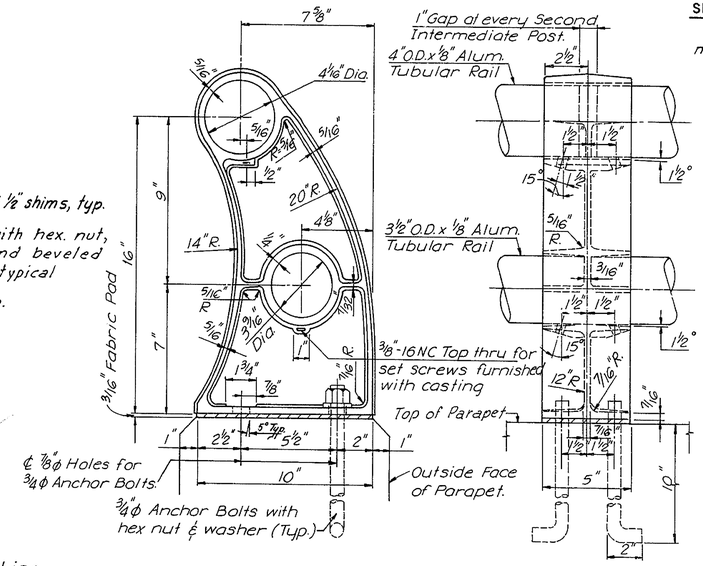

HANDRAIL POST DETAILS
Scale 3"=1'-0"

SHOE NOTES

Shoes to have vertical and horizontal center lines mutually perpendicular at 65°F.

For location of Shoes; see Sheet No. 5 of 8.

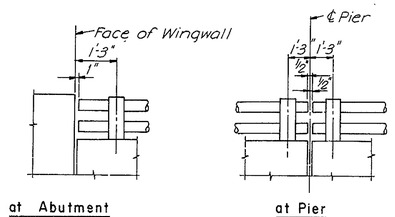

HANDRAIL TERMINAL DETAILS

HANDRAIL NOTES

1.) All Railings are to be fabricated and erected so that the rails are parallel to each other and to the top fascia and so the posts are truly vertical.

2.) Anchor bolts for railing posts shall be aluminum alloy meeting the requirements of A.S.T.M. B211 alloy 2024-T4.

3.) After nuts have been placed & tightened to the satisfaction of the Engineer, bolts shall be cut off ⅛" above nuts and peened.

4.) All rails to be continuous at all end posts adjacent to piers and abutments.

5.) Tubular rails shall be closed at all piers and abutments with a welded in aluminum plug.

6.) The finished aluminum alloy bolts, nuts & washers shall be given an anodic coating at least 0.0002 inches thick and a chromate seal.

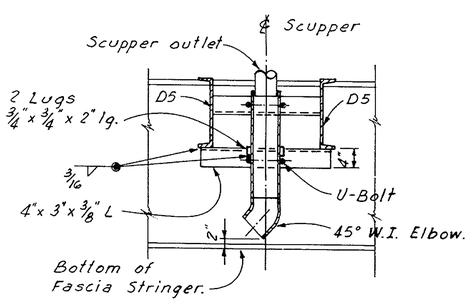

SECTION A-A
Scale ¾"=1'-0"

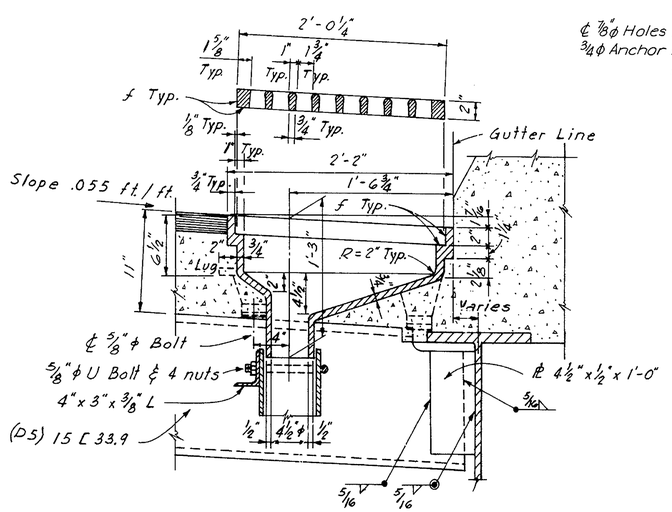

SECTION C-C
Scale 1½"=1'-0"

DRAINAGE NOTES

All pipe to be black wrought iron, standard weight.

All pipe and fittings to be galvanized.

All fittings to be welded, wrought iron, standard weight.

Brackets, rods, straps, plates, bolts, nuts and washers to be galvanized.

NO.	REVISION	BY	DATE
3			
2			
1			

	BY	DATE
MADE	L.D.F	12-68
CHECKED	JBG	1-69
IN CHARGE	JEH	

DELAWARE STATE HIGHWAY DEPARTMENT

DELAWARE TURNPIKE

ROUTE 896 INTERCHANGE IMPROVEMENTS
RAMP F BRIDGE OVER CHRISTINA RIVER

MISCELLANEOUS DETAILS

HOWARD, NEEDLES, TAMMEN & BERGENDOFF
consulting engineers
NEW YORK KANSAS CITY

SCALE: As Noted
CONTRACT NO. 7053
SHEET NO. 8 OF 8

DELAWARE TURNPIKE	CONT. NO.	TITLE	SHEET NO.	TOTAL SHEETS
	7053	PAVEMENT JOINTS	85	86

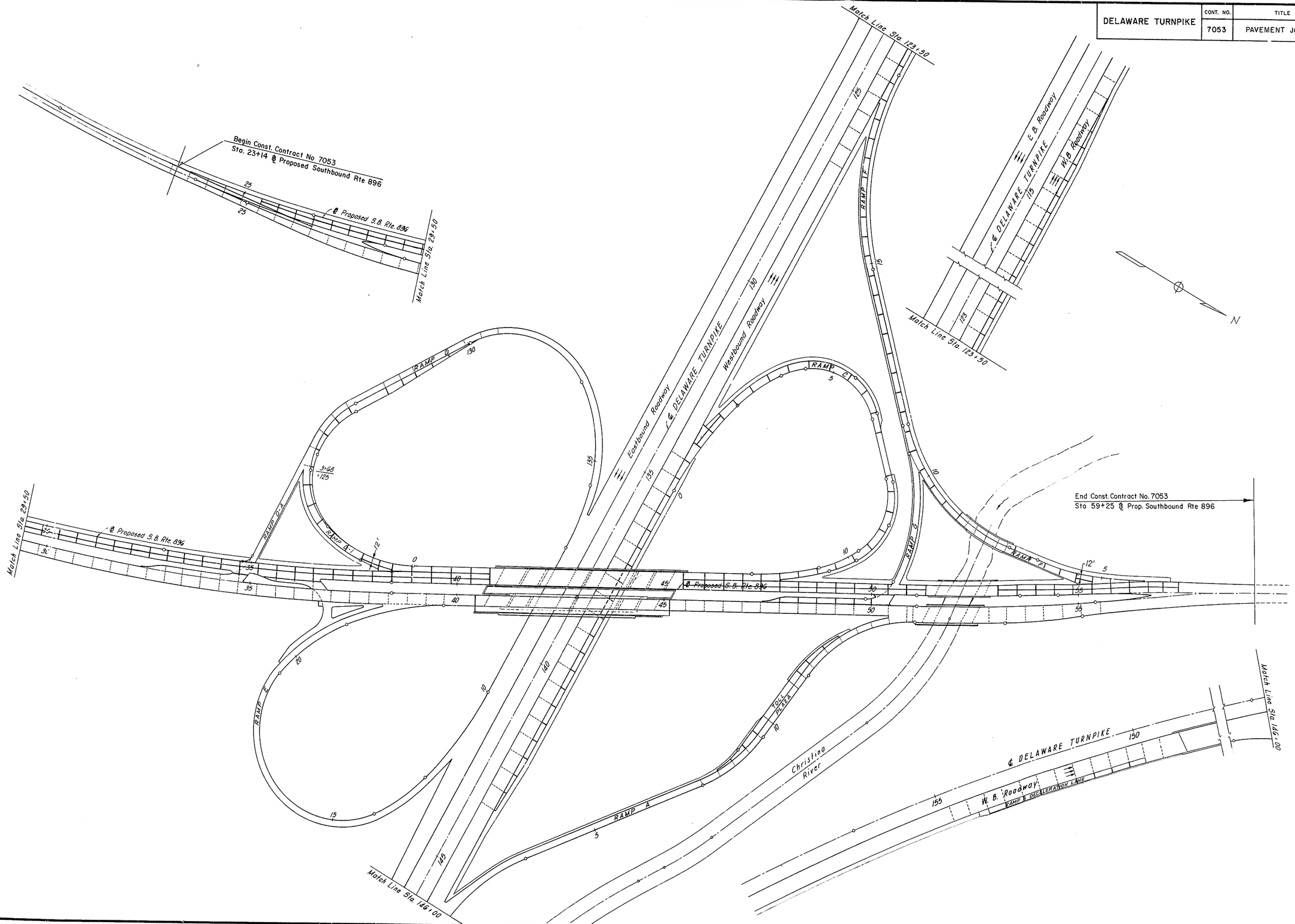

DELAWARE TURNPIKE	CONT NO.	TITLE	SHEET NO.	TOTAL SHEETS
	7053	SUMMARY OF QUANTITIES	86	86

ITEM	DESCRIPTION	UNIT	NEAT	PROPOSAL
—	Maintenance and Protection of Traffic	L.S.	—	—
—	Flagmen	M.H.	3,500	3,500
—	Traffic Cones	Ea.	100	125
—	Temporary Traffic Signs	Sq. Ft.	515	550
1	Clearing and Grubbing	L.S.	—	—
2	Excavation and Embankment	Cu.Yds.	45,000	50,000
2	Undercut Excavation	Cu. Yds.	1,000	1,250
2A	Removal of Existing Masonry	Cu.Yds.	45	55
3	Rock Excavation – Roadway	Cu.Yds.	1,500	2,000
4	Excavation for Structures	Cu.Yds.	12,909	13,000
4A	Excavation for Pipe Trenches	Cu.Yds.	1,320	1,400
5	Common Borrow	Cu.Yds.	15,000	20,000
6	Removal of Structures and Obstructions (Ramp B over Christina River)	L.S.	—	—
7	Select Borrow	Cu.Yds.	16,000	18,000
8C	Quarry Waste Base Course	Sq.Yds.	14,580	15,000
8D	Soil Cement Base Course	Sq.Yds.	2,400	2,500
8D	Portland Cement	Bbl.	270	280
11	Hot-Mix, Hot Laid Asphaltic Concrete Pavement	Tons	2,060	2,100
14	R.C.-70 Asphalt for Bituminous Surface Treatment	Gals.	2,600	2,700
14	R.C.-250 Asphalt for Bituminous Surface Treatment	Gals.	3,120	3,250
14	Coarse Aggregate for Bituminous Surface Treatment	Tons	210	215
15	Portland Cement Concrete Pavement, 9" Thick	Sq.Yds.	17,500	18,000
15	Drilling Holes and Grouting Dowels into Existing Pavement	Ea.	1,650	1,700
16	Patching Portland Cement Concrete Pavement	Sq.Yds.	35	40
18	Portland Cement Concrete Masonry – Footings	Cu.Yds.	580	600
18	Portland Cement Concrete Masonry – Substructure	Cu.Yds.	761	761
18	Portland Cement Concrete Masonry – Superstructures	Cu.Yds.	1,206	1,206
18	Portland Cement Concrete Masonry – Approach Slabs	Cu.Yds.	397	397
19	Superficial Waterproofing	Sq.Yds.	390	400
20	Bar Reinforcement	Lbs.	491,700	495,000
22	Structural Steel (Approx. Wt. 945,000 lbs.)	L.S.	—	—
22A	Aluminum Bridge Railing	Lin. Ft.	1,490	1,500
26	12" Reinforced Concrete Pipe	Lin.Ft.	90	95
26	15" Reinforced Concrete Pipe	Lin.Ft.	605	625
26	18" Reinforced Concrete Pipe	Lin.Ft.	110	120
26	24" Reinforced Concrete Pipe	Lin.Ft.	110	120
26	36" Reinforced Concrete Pipe	Lin.Ft.	250	260
26	48" Reinforced Concrete Pipe	Lin.Ft.	60	65
26	54" Reinforced Concrete Pipe	Lin.Ft.	170	180
26	42"x27" Reinforced Concrete Elliptical Pipe	Lin.Ft.	12	15
26	Reinforced Concrete Flared End Sections for 12" Pipe	Ea.	4	4
26	Reinforced Concrete Flared End Sections for 15" Pipe	Ea.	5	5
26	Reinforced Concrete Flared End Sections for 18" Pipe	Ea.	1	1
26	Reinforced Concrete Flared End Sections for 24" Pipe	Ea.	1	1
26	Reinforced Concrete Flared End Sections for 48" Pipe	Ea.	1	1
26	Reinforced Concrete Flared End Sections for 54" Pipe	Ea.	1	1
28	5" Cast Iron Pipe	Lin.Ft.	110	120
29	6" Corrugated Metal Pipe	Lin.Ft.	45	100
31	6" Perforated Corrugated Metal Pipe Underdrains	Lin.Ft.	4,275	5,000
35	Cast-in-place Concrete Piles, 14" Diameter (Bents)	Lin.Ft.	930	950
35	Cast-in-place Concrete Piles, 14" Diameter (Footings)	Lin.Ft.	2,959	3,000
36	Plain Rubble Gutter	Sq.Yds.	250	300
38	Portland Cement Concrete Curb, Type 1	Lin.Ft.	2,450	2,600
38A	Hot-Mix, Hot Laid Asphaltic Concrete Curb	Lin.Ft.	415	450
40	Portland Cement Concrete Parkway Curb, Type 2	Lin.Ft.	4,100	4,200
43	Corrugated Metal Downspouts	Lin.Ft.	70	80
44	Type C Combination Inlet	Ea.	11	11
44	Drop Inlet, Type A-1 Modified	Ea.	4	4
44	Drop Inlet, Double Type S	Ea.	3	3
44	Type S Combination Inlet	Ea.	7	7
44	Double Type S Combination Inlet	Ea.	2	2
45	Manholes, Type W	Ea.	2	2
50	Woven Wire Fence	Lin.Ft.	855	875
50	Abutment Connection	Ea.	1	1
51	Topsoil, 4" Thick	Sq.Yds.	12,000	13,000

ITEM	DESCRIPTION	UNIT	NEAT	PROPOSAL
52	Topsoiling, 4" Thick	Sq.Yds.	2,000	2,000
53	Seeding	Acres	8.1	8.3
54	Mulching	Sq.Yds.	39,130	40,000
55	Sodding	Sq. Yds.	1,400	1,500
61	Calcium Chloride for Dust Control	Tons	5	5
64	Riprap, Plain	Sq.Yds.	630	650
65	Removal of Existing Portland Cement Concrete Curb	Lin. Ft.	1,020	1,100
65	Removal of Existing Portland Cement Concrete Pavement	Sq. Yds.	1,400	1,500
—	Removal of Existing Curbed Island	Lin.Ft.	1,140	1,150
—	Special Fill	Tons	1,000	1,000
—	Median Surface Treatment	Sq.Yds.	4,030	4,200
—	Portland Cement Concrete Parkway Curb, Doweled	Lin.Ft.	930	950
—	Rubble Apron, 18" Thick	Sq. Yds.	250	280
—	Slope Paving (Concrete Block)	Sq.Yds.	1,175	1,200
—	Remove and Salvage Steel Beam Guard Rail (Steel Posts)	Lin.Ft.	2,810	2,900
—	Reset Steel Beam Guard Rail (Steel Posts)	Lin.Ft.	3,220	3,300
—	Steel Beam Guard Rail Buried End Sections (25 Lin.Ft.)	Ea.	19	20
—	Bridge Drainage (Bridge Route 896 over Christina River)	L.S.	—	—
—	Bridge Drainage (Route 896 Bridges over Delaware Turnpike)	L.S.	—	—
—	Bridge Drainage (Bridge Ramp "F" over Christina River)	L.S.	—	—
—	Protective Coating for Concrete	Sq. Ft.	4,220	4,300
—	Coal Tar Epoxy Underseal	Sq.Yds.	3,919	3,930
—	Painting Existing Structural Steel on Bridge (Route 896 over Delaware Turnpike)	L.S.	—	—
—	Constructing Toll Plaza at Ramp "A"	L.S.	—	—
—	Constructing Toll Plaza at Ramp "C"	L.S.	—	—
—	Constructing Toll Plaza at Ramp "D"	L.S.	—	-
—	3½" Galvanized Wrought Iron Conduit	Lin.Ft.	1,200	1,200
—	3" Galvanized Wrought Iron Conduit	Lin.Ft.	425	450
—	2" Galvanized Wrought Iron Conduit	Lin.Ft.	255	280
—	2" Polyvinyl Chloride Conduit	Lin.Ft.	6,500	6,600
—	#6 Single Conductor Cable	Lin.Ft.	8,700	8,800
—	#8 Single Conductor Cable	Lin.Ft.	17,700	17,800
—	Concrete Junction Box	Ea.	14	14
—	Lighting Standard Foundation	Ea.	48	48
—	Lighting Standard Type A	Ea.	30	30
—	Lighting Standard Type B	Ea.	8	8
—	Lighting Standard Type C	Ea.	2	2
—	Relocating Existing Lighting Standard	Ea.	10	10
—	Underbridge Lighting Installation	L.S.	—	—
—	Service Pole Installation	L.S.	—	—
—	Revisions to Existing Electrical Installations	L.S.	—	—
—	Maintenance of Director's Existing Field Office	Month	18	18
—	Reset Existing Bridge Railing	Lin. Ft.	308	310
—	Steel Bearing Piles, 10 BP 57	Lin.Ft.	2,684	2,700
—	Partial Removal of Exist. Structure (Rte. 896 Bridge over T'pike)	L.S.	—	—
—	Temporary Support for Existing Superstructure and Utilities (Bridge Rte. 896 over Turnpike)	L.S.	—	—
	Canopy, Alternate "A"	Ea.	2	2
	Canopy, Alternate "B"	Ea.	2	2