BR. 1-687	CONTRACT	COUNTY	M.R. NO.	F.H.W.A. REG. NO.	FEDERAL AID PROJECT NUMBER	SHEET NUMBER	TOTAL SHEETS
	89-074-05	NEW CASTLE		3	BHM-1179(3)	1	52

STATE OF DELAWARE

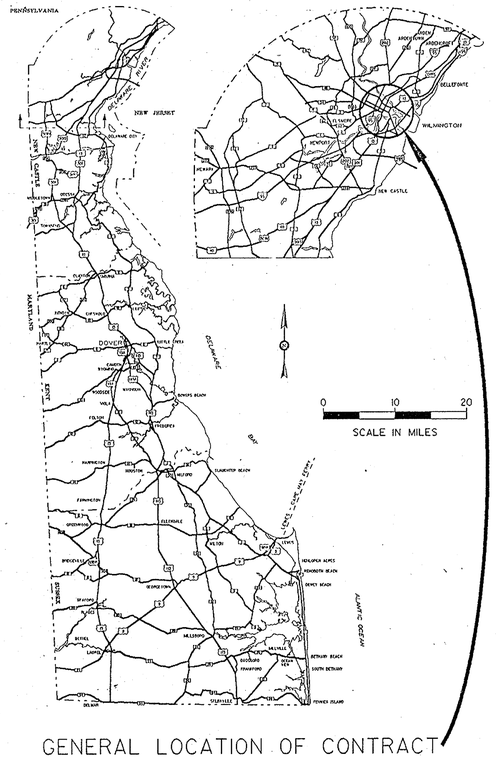

GENERAL LOCATION OF CONTRACT

THE STATE OF DELAWARE

DEPARTMENT OF TRANSPORTATION
DIVISION OF HIGHWAYS
SPECIFICATION AND CONSTRUCTION PLANS FOR:

BR. 687, WALNUT STREET OVER CHRISTINA RIVER

CONTRACT NUMBER 89-074-05

FEDERAL AID PROJECT NUMBER BHM-1179(3)

ROADWAY LENGTH 420.00 FEET= 0.08 MILES
STRUCTURE LENGTH 638.76 FEET= 0.12 MILES
TOTAL LENGTH 1058.76 FEET= 0.20 MILES

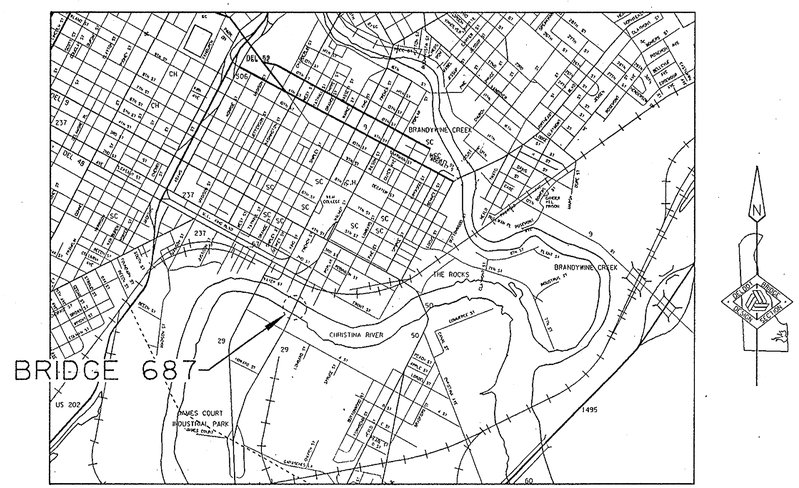

LOCATION MAP

DESIGN DESIGNATION

FUNCTIONAL CLASS PRINCIPAL ARTERIAL
TYPE OF CONSTRUCTION BRIDGE REHABILITATION
A.D.T. CURRENT 15871 (1990)
A.D.T. PROJECTED 20514 (2010)
D.H.V. PROJECTED 1846 (2010)
DESIGN SPEED
% TRUCKS 10
DIRECTION OF DISTRIBUTION % 65
CLEAR ZONE (S)

SCALES

PLAN SHEET: 1" = * Feet
PROFILE SHEET:
Horizontal: 1" = * Feet
Vertical: 1" = * Feet
DETAIL SHEET: 1" = * Feet

* As Noted

INDEX OF SHEETS

SHEET Nº	TABLE OF CONTENTS
1	TITLE SHEET
2	ESTIMATED QUANTITY SUMMARY
3	TYPICAL CROSS SECTIONS AND GENERAL NOTES
4	GENERAL PLAN AND ELEVATION
5	BASCULE SPAN AND BASCULE PIER FRAMING PLAN
6	BASCULE PIER AND BASCULE SPAN DETAILS
7	STEEL REPAIR AND CRASH CUSHION DETAILS
8	BEARING REPLACEMENT DETAILS
9	APPROACH SLAB, BACKWALL AND DECK DEMOLITION
10	SO. & NO. ABUT., BACKWALL & SLAB REPLACEMENT DETS.
11	DECK SLAB DETAILS AT NORTH & SOUTH ABUTMENTS
12	PIER IS EXPANSION DAM DECK DETAILS
13	PIER IN EXPANSION DAM DECK DETAILS
14	PIERS 3S,2S & 2N JOINT SYSTEM W/ELASTOMERIC CONCRETE
15	BASCULE PIER DECK DETAILS
16	PREFABRICATED EXPANSION JOINT SYSTEM DETAILS
17	MISCELLANEOUS DETAILS - 1
18	MISCELLANEOUS DETAILS - 2
19	REINFORCEMENT SCHEDULE
20	TRAFFIC STAGING
21	TRAFFIC CONTROL PLAN
22	TRAFFIC CONTROL DETAILS
23	TRAFFIC STRIPING AND SIGNING PLAN
24	TRAFFIC SIGNAL AND GATE SUPPORTS
24A	RIGHT-OF-WAY PLAN
25	ELECTRICAL/MECHANICAL PLAN & ELEVATION
26,27	THREE LINE DIAGRAM
28-33	CONTROL LOGIC
34,35	CONTROL CONSOLE
36	ELEC. EQUIPMENT REMOVAL - CONTROL HOUSE
37-39	CONTROL HOUSE DETAILS
40	ELEC. EQUIPMENT REMOVAL - STORAGE HOUSE
41-43	STORAGE HOUSE DETAILS
44	CONDUIT REPAIRS
45	TRAFFIC SIGNAL & GATES
46,47	ELECTRICAL EQUIPMENT SCHEDULE
48-50	MACHINERY REHABILITATION
51,52	SPAN LOCK REPAIRS
MILEPOST	
UTILITIES	
CITY OF WILMINGTON WATER DEPARTMENT	—— W ——

PICKERING, CORTS & SUMMERSON, INC.
CONSULTING ENGINEERS
WEST TRENTON, NJ NEWTOWN, PA

GLEN DANTE VASQUEZ REGISTERED No. 6562 DELAWARE PROFESSIONAL ENGINEER

SIGNATURE 11-25-92 DATE

DEPARTMENT OF TRANSPORTATION
FEDERAL HIGHWAY ADMINISTRATION

APPROVED _____ 19 ____

DIVISION ADMINISTRATOR

DIVISION OF HIGHWAYS

RECOMMENDED	RECOMMENDED	RECOMMENDED	RECOMMENDED	RECOMMENDED	APPROVED
PROJECT ENGINEER	STORMWATER ENGINEER	BRIDGE ENGINEER	ROAD DESIGN ENGINEER	DESIGN ENGINEER	CHIEF ENGINEER
RECOMMENDED ____ 19 ____	RECOMMENDED 12/1 19 92	RECOMMENDED 12.1. 19 92	RECOMMENDED ____ 19 ____	RECOMMENDED 12/1 19 92	APPROVED 12/2 19 92
SEAL	SEAL: JOHN F. SISTER REGISTERED No. 4032 DELAWARE PROFESSIONAL ENGINEER	SEAL: Mohammed T. Chaudhri REGISTERED No. 5693 DELAWARE PROFESSIONAL ENGINEER	SEAL	SEAL	SEAL: No. 4572 DELAWARE PROFESSIONAL ENGINEER

BR. 1-687	CONTRACT	COUNTY	FEDERAL AID PROJECT No	SHEET No	TOTAL SHEETS
	89-074-05	NEW CASTLE	BHM-1179(3)	2	52

ESTIMATED QUANTITY SUMMARY

ITEM	302003	306001	401002	501501	503502	602011	602013	602014	602514	602543	602544	602547	602572	602579	602580*	604000*	605001	605511	605522	605533	605557
ITEM TITLE	GRADED AGGREGATE BASE COURSE, TYPE B, ~~PATCHING~~	BITUMINOUS CONCRETE BASE COURSE, PATCHING	HOT MIX, HOT LAID BITUMINOUS CONCRETE PAVEMENT, TYPE B	SCARIFYING CONCRETE	CRACK & JOINT SEALING 3/4" TO 1-3/4" WIDE	PCC MASONRY, SUBSTRUCTURE, CLASS A	PCC MASONRY, SUPERSTRUCTURE, CLASS D	PCC MASONRY APPROACH SLAB, CLASS D	REPAIR OF CONCRETE STRUCTURE BY EPOXY INJECTION	FURNISHING LATEX CONCRETE	CONSTRUCTING LATEX CONCRETE OVERLAY	WATERPROOFING BRIDGE DECKS, SIDEWALKS, ETC.	REPAIRING EXISTING PCC STRUCTURES	DRILLING ~~HOLES~~ AND INSTALLING ~~DOWELS~~	PARTIAL REMOVAL OF PCC MASONRY	BAR REINFORCING-EPOXY COATED	STEEL STRUCTURES	PREFABRICATED EXPANSION JOINT SYSTEM 3"	URETHANE PAINTING SYSTEM(LS)	CLEANING EXISTING STEEL STRUCTURES	DECK JOINT REPAIR, 1"
UNIT	SY/IN.	TON	TON	S.Y.	L.F.	C.Y.	C.Y.	C.Y.	GAL.	C.Y.	S.Y.	S.F.	LB.	EA.	C.Y.	LB.	LB.	L.F.	L.S.	L.S.	L.F.
SHEET NO. FROM STA. TO STA.	42	25	231	2495	449	30	71	172	2	104	2495	5300	1875	875	220	48000	79000	249	L.S.	L.S.	220
TOTAL	42	25	231	2495	449	30	71	172	2	104	2495	5300	1875	875	220	48000	79000	249	L.S.	L.S.	220
PROPOSAL	42	25	231	2495	449	30	71	172	2	104	2495	5300	1875	875	220	48000	79000	249	L.S.	L.S.	220

Note:
A: Federal Participation Road Construction
C: Federal Participation Bridge Construction
*: Fixed Quantity, See Section 109.06
**: Fixed Price

ITEM	605569	605578	605591	605603	605604	606501	720504	720506	720516	720527	720540	720560	720561	743003	743500	743501	~~743502~~	742503**	743504	743506	743512	748023	748501	748506	748509	759002	763000	763500
ITEM TITLE	BRIDGE SCUPPERS	REPLACING STEEL RIVETS	STEEL OPEN GRID BRIDGE DECK	REPLACING BRIDGE BEARINGS	JOINT SYSTEM WITH ELASTOMERIC CONCRETE, 2"	METAL BRIDGE RAILING	PORTABLE PCC SAFETY BARRIER	RELOCATING PORTABLE PCC SAFETY BARRIER	CRASH CUSHIONS (SAND BARRELS), PERMANENT	PLASTIC DRUMS	DELINEATORS	REPAIRING BRIDGE RAILING	REPAIRING BRIDGE RAILING POST	ARROWPANELS, TYPE C	[redacted] WARNING LIGHTS, TYPE A	[redacted] WARNING LIGHTS, TYPE B	~~BARRICADE WARNING LIGHTS, TYPE C~~	FLAGGER, FEDERAL	WARNING SIGNS	TEMPORARY BARRICADES, TYPE III	FURNISH AND MAINTAIN TRUCK MOUNTED ATTENUATOR	INTERMEDIATE MARKINGS, PAINT, 4"	REMOVAL OF PAVEMENT STRIPING	PERMANENT PAVEMENT STRIPING, EPOXY RESIN PAINT, 4"	PERMANENT PAVEMENT STRIPING, EPOXY RESIN PAINT, 12"	FIELD OFFICE, TYPE II	INITIAL EXPENSE	MAINTENANCE OF TRAFFIC
UNIT	EA.	EA.	S.F.	L.S.	L.F.	L.F.	L.F.	L.F.	EA.	EA.-DY.	EA.	L.F.	EA.	EA.-DY.	EA.-DY.	EA.-DY.	EA.-DY.	HRS.	EA.	EA.-DY.	EA.-DY.	L.F.	L.F.	L.F.	L.F.	L.S.	L.S.	L.S.
SHEET NO. FROM STA. TO STA.	4	600	2440	L.S.	186	910	72	144	11	~~12285~~ 22680	19	70	36	~~790~~ 720	~~390~~ 720	~~3510~~ 6480	~~6630~~	~~1040~~ 1360	59	~~790~~ 1440	40	2200	1200	3345	225	L.S.	L.S.	L.S.
TOTAL	4	600	2440	L.S.	186	910	72	144	11	~~12285~~ 22680	19	70	36	~~790~~ 720	~~390~~ 720	~~3510~~ 6480	~~6630~~	~~1040~~ 1360	59	~~790~~ 1440	40	2200	1200	3345	225	L.S.	L.S.	L.S.
PROPOSAL	4	600	2440	L.S.	186	910	72	144	11	~~12285~~ 22680	19	70	36	~~790~~ 720	~~390~~ 720	~~3510~~ 6480	~~6630~~	~~1040~~ 1360	59	~~790~~ 1440	40	2200	1200	3345	225	L.S.	L.S.	L.S.

A

ITEM	763501	763512	763515	763522	763539	763540	401003	760000	763508
ITEM TITLE	CONSTRUCTION ENGINEERING	ELECTRICAL SERVICE SYSTEM	OPERATOR'S HOUSE AND OTHER FACILITIES	COAST GUARD SPECIFIC CONDITIONS	MECHANICAL REPAIRS OF BASCULE BRIDGE	BALANCING BASCULE BRIDGE	HOT-MIX, HOT LAID BIT. CONC. PAV'T., TYPE C	PAVEMENT MILLING, HOT-MIX	PROTECT CONTROL SYSTEM DEVELOPMENT PLAN
UNIT	L.S.	L.S.	L.S.	L.S.	L.S.	L.S.	TON	S.Y.-IN.	L.S.
SHEET NO. FROM STA. TO STA.	L.S.	L.S.	L.S.	L.S.	L.S.	L.S.	158	7000	L.S.
TOTAL	L.S.	L.S.	L.S.	L.S.	L.S.	L.S.	158	7000	L.S.
PROPOSAL	L.S.	L.S.	L.S.	L.S.	L.S.	L.S.	158	7000	L.S.

REVISIONS
A ADDENDUM - REVISED TRAFFIC QUANTITIES TO REFLECT INCREASE IN CALENDAR DAYS. 6/2/93 T.E.G.

PREL. TRACING K. R. Cronlund DESIGN J. A. Prybella CHKD. J. A. Prybella

BR. 1-687	CONTRACT	COUNTY	FEDERAL AID PROJECT No	SHEET No	TOTAL SHEETS
	89-074-05	NEW CASTLE	BHM-1179(3)	3	52

TYPICAL CROSS SECTIONS AND GENERAL NOTES

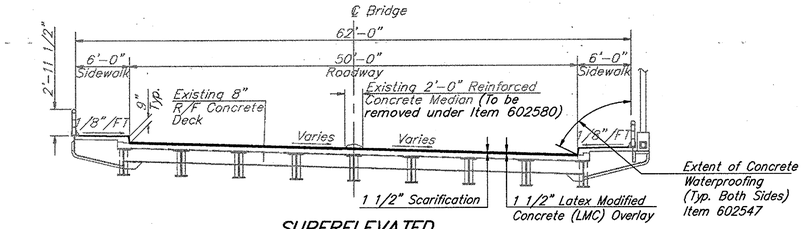

SUPERELEVATED SPANS 4S, 3S, 2S AND 1S

Scale: 1/8" = 1'-0"

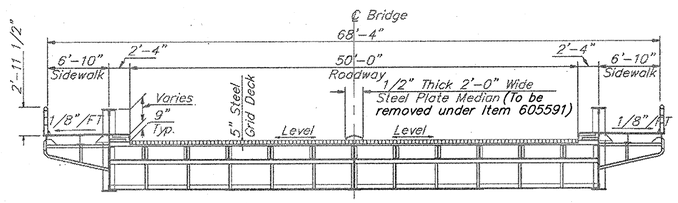

BASCULE SPAN

Scale: 1/8" = 1'-0"

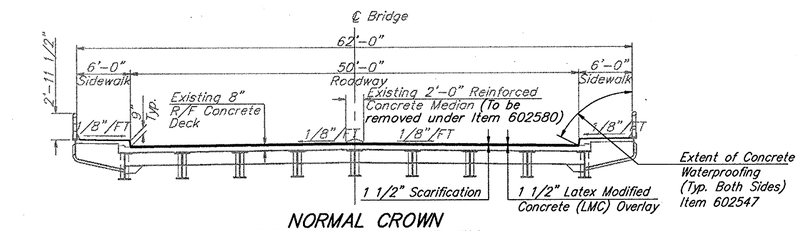

NORMAL CROWN SPANS 1N, 2N AND 3N

Scale: 1/8" = 1'-0"

Section Notes:
- Sections are taken looking Station Ahead.
- Typical limits of Concrete Waterproofing are shown. The Additional Sidewalk width adjacent to the operator's house shall also be Waterproofed.

GENERAL NOTES

1. MATERIAL AND WORKMANSHIP SHALL BE IN ACCORDANCE WITH DELAWARE STANDARD SPECIFICATIONS, JULY, 1985, INCLUDING ALL REVISIONS AND CORRECTIONS AND THE CONTRACT SPECIAL PROVISIONS.
2. DESIGN SPECIFICATIONS IN ACCORDANCE WITH THE DESIGN DIVISION OF AASHTO "STANDARD SPECIFICATIONS FOR HIGHWAY BRIDGES", 1989, INCLUDING ALL INTERIMS.
3. PERFORM WELDING IN ACCORDANCE WITH 1988 AASHTO/AWS D1.5 AND THE SPECIAL PROVISIONS.
4. CONSTRUCTION SHALL CONFORM WITH THE TRAFFIC CONTROL PLAN AND IS TO BE DONE IN ACCORDANCE WITH THE MAINTENANCE OF TRAFFIC SPECIFICATIONS. ALL WORK SHALL BE PERFORMED IN A MANNER THAT WILL INSURE THE LEAST PRACTICAL OBSTRUCTION TO TRAFFIC CONSISTENT WITH SAFETY AND SHALL COMPLY WITH THE MANUAL TITLED, "DELAWARE TRAFFIC CONTROLS FOR STREET AND HIGHWAY CONSTRUCTION, MAINTENANCE, UTILITY AND EMERGENCY OPERATIONS" (REVISED JUNE, 1992 WITH ALL REVISIONS MADE UP TO THE ADVERTISEMENT DATE OF THIS PROJECT.)
5. CONTRACTOR SHALL VERIFY ALL DIMENSIONS AND ELEVATIONS IN THE FIELD PRIOR TO BEGINNING SHOP DRAWINGS. NOTIFY THE ENGINEER OF ANY DISCREPANCIES OR CONFLICTS WITH THE DETAILS.
6. ANY DAMAGE TO THE STRUCTURE, DUE TO THE CONTRACTORS' OPERATIONS, BEYOND THE LIMITS OF THIS WORK WILL BE REPAIRED BY THE CONTRACTOR, TO THE SATISFACTION OF THE ENGINEER, AT NO ADDITIONAL COST TO THE DEPARTMENT.

PROJECT NOTES

GENERAL

1. AS BUILT PLANS OF THE EXISTING STRUCTURE DATED APRIL, 1954 ARE AVAILABLE AND SHALL BE OBTAINED THROUGH THE DEPARTMENT AND USED IN CONJUNCTION WITH THESE DRAWINGS WHEN DETERMINING EXISTING DIMENSIONS. THE STATIONING AND ELEVATIONS SHOWN ON THE DRAWINGS WERE TAKEN FROM THOSE PLANS AND SHOULD BE VERIFIED IN THE FIELD.
2. THE PLACEMENT OF ALL RIGGING, WORK PLATFORMS, NETTING, ETC. SHALL BE COORDINATED WITH THE U.S. COAST GUARD AND BE IN ACCORDANCE WITH THE SPECIFIC CONDITIONS OUTLINED IN ITEM 763522. WHEN IT IS NECESSARY TO PREVENT OPERATION OF A BASCULE LEAF BECAUSE OF CONSTRUCTION ACTIVITIES, PRE-APPROVAL FROM THE U.S. COAST GUARD MUST BE OBTAINED.
3. BOLTS USED TO REPLACE EXISTING 7/8" DIAMETER RIVETS TO BE 1" DIAMETER HIGH STRENGTH CARBON STEEL CONFORMING TO ASTM A-325, TYPE 1, MECHANICALLY GALVANIZED, UNLESS NOTED OTHERWISE. ALL OTHER BOLTS SHALL BE 7/8" DIAMETER HIGH STRENGTH CARBON STEEL CONFORMING TO ASTM A-325, TYPE 1, MECHANICALLY GALVANIZED, UNLESS NOTED OTHERWISE.
4. THE PAVEMENT ELEVATIONS OF THE NEW LATEX MODIFIED CONCRETE (LMC) OVERLAY SHALL MATCH THE EXISTING DECK ELEVATIONS. BEFORE BEGINNING CONSTRUCTION, THE CONTRACTOR SHALL TAKE EXISTING DECK ELEVATIONS FOR USE DURING THE PLACEMENT OF THE NEW LMC OVERLAY. PAYMENT SHALL BE MADE UNDER ITEM 763501.
5. THE PAVEMENT ELEVATIONS OF THE NEW APPROACH SLAB SHALL BE CONSISTENT WITH THE CROSS SLOPE AND PROFILE OF THE ADJACENT ROADWAY/BRIDGE DECK SURFACE.

DEMOLITION:

1. VERIFY AND LOCATE ALL EXISTING UTILITIES PRIOR TO STARTING ANY DEMOLITION.
2. DURING DEMOLITION OF CONCRETE, DO NOT SAWCUT OR OTHERWISE REMOVE OR DAMAGE REINFORCEMENT BARS INTENDED FOR RE-USE. BARS CUT OR DAMAGED SHALL BE REPLACED OR REPAIRED TO THE SATISFACTION OF THE ENGINEER AT THE CONTRACTOR'S SOLE EXPENSE.
3. ALL EXISTING REINFORCING EXPOSED DURING CONSTRUCTION OPERATIONS AND INTENDED FOR RE-USE SHALL BE SANDBLASTED CLEAN OF DIRT, RUST AND DEBRIS BEFORE PLACEMENT OF NEW CONCRETE. PAYMENT IS INCIDENTAL TO ITEM 604000.
4. PROVIDE SATISFACTORY SHIELDING TO PREVENT DEBRIS FROM FALLING BELOW THE DECK. THE CONTRACTOR SHALL SUBMIT A TEMPORARY SHIELDING PLAN TO THE ENGINEER FOR APPROVAL. PAYMENT FOR TEMPORARY SHIELDING SHALL BE INCIDENTAL TO ITEM 602580.
5. REMOVAL OF PORTIONS OF THE APPROACH SLABS, DECK, SIDEWALKS, CURBS, CONCRETE MEDIAN AND BACKWALLS, AS INDICATED ON THE PLANS, IS PAID UNDER ITEM 602580.

STRUCTURAL STEEL:

1. ALL EXISTING STEEL SURFACES NOT INTENDED TO BE REPLACED SHALL BE CLEANED AND PAINTED IN ACCORDANCE WITH ITEMS 605533 AND 605522. THE METHODS OF REMOVING, CONTAINING AND DISPOSING THE LEAD BASED PAINT AS DETAILED IN THESE SPECIAL PROVISIONS SHALL BE STRICTLY ADHERED TO.
2. ALL NEW STRUCTURAL STEEL SHALL BE PAINTED AND SHALL CONFORM TO AASHTO M183 (ASTM A-36), UNLESS OTHERWISE SPECIFIED AS M223 (ASTM A-572). PAYMENT IS INCLUDED UNDER ITEM 805001.
3. ALL DETERIORATED RIVETS SHALL BE IDENTIFIED BY THE ENGINEER AND SHALL BE REPLACED WITH HIGH STRENGTH BOLTS IN ACCORDANCE WITH ITEM 605578.
4. THE METAL BRIDGE RAILING (ITEM 606501) SHALL BE PAINTED STRUCTURAL STEEL CONFORMING TO AASHTO M183 (ASTM A-36), UNLESS NOTED OTHERWISE. PAINTING OF THE METAL BRIDGE RAILING SHALL BE IN ACCORDANCE WITH SECTION 605 OF THE STANDARD SPECIFICATIONS AND IS INCIDENTAL TO ITEM 606501.
5. THE FURNISHING AND INSTALLATION OF THE WELDED STEEL SHEAR CONNECTORS ARE INCIDENTAL TO ITEM 605001.

REINFORCEMENT STEEL:

1. ALL NEW REINFORCEMENT BARS TO BE EPOXY COATED.
2. REINFORCING STEEL SHALL CONFORM TO AASHTO M31, GRADE 60.
3. PROVIDE 2" CONCRETE COVER ON REINFORCEMENT BARS EXCEPT AS NOTED.
4. MECHANICAL SPLICERS AS SHOWN ON THE DRAWINGS SHALL BE SPLICING DEVICES AS MANUFACTURED BY 1) LENTON REBAR SPLICING, 34600 SOLON ROAD, SOLON, OHIO 44139, (216) 248-0100, 2) DAYTON SUPERIOR CORPORATION, 721 RICHARD STREET, MIAMISBURG, OHIO 45342, (513) 866-0711, 3) WILLIAMS FORM ENGINEERING, P.O. BOX 324A, BLUE BELL, PA 19422, (215) 584-0701, OR AN APPROVED EQUAL. FURNISHING AND PLACING THE MECHANICAL SPLICERS IS INCIDENTAL TO ITEM 604000.
5. DRILLING AND GROUTING OF DOWEL HOLES FOR ANCHOR BOLTS OR DOWEL BARS IS PAID UNDER ITEM 602579.

PORTLAND CEMENT CONCRETE:

1. STRUCTURAL ELEMENTS OF PORTLAND CEMENT CONCRETE SHALL BE AS NOTED:
   CLASS A - BACKWALLS (f'c = 4500 PSI)
   CLASS D - DECK SLAB, APPROACH SLABS, SIDEWALKS, HAUNCHES AND CURBS (f'c = 4500 PSI)
   (f'c = 28 DAY COMPRESSIVE STRENGTH)
2. ALL CONCRETE SURFACES OF THE DECK, SIDEWALKS AND CURBS SHALL BE WATERPROOFED IN ACCORDANCE WITH ITEM 602547 TO THE LIMITS SPECIFIED. THE USE OF A MEMBRANE FORMING CURING COMPOUND ON ANY CONCRETE SURFACE TO BE WATERPROOFED IS PROHIBITED. CONCRETE AT THESE LOCATIONS SHALL BE WATER CURED PER SECTION 602 OF THE STANDARD SPECIFICATIONS. LMC SURFACES AND THE APPROACH SLAB SHALL NOT BE WATERPROOFED.
3. USE AN APPROVED EPOXY BONDING COMPOUND BETWEEN THE OLD AND NEW CONCRETE. PAYMENT IS INCIDENTAL TO THE PCC MASONRY CLASS BEING PLACED AND BONDED.
4. THE EXISTING CONCRETE DECK SURFACE SHALL BE SCARIFIED 1 1/2" IN ACCORDANCE WITH ITEM 501501. UNSOUND CONCRETE BELOW THE SCARIFIED DEPTH OF 1 1/2" SHALL BE REMOVED AS DIRECTED BY THE ENGINEER. PAYMENT FOR REMOVING ADDITIONAL UNSOUND CONCRETE WILL BE MADE UNDER ITEM 602580. ANY ADDITIONAL PATCHING OF THE DECK BELOW THE SCARIFIED 1 1/2" WILL BE PAID UNDER ITEMS 602543 AND 602544 (FOR THINNER PATCHES) AND ITEM 602013 (FOR THICKER PATCHES) AS DIRECTED BY THE ENGINEER.

DECK JOINTS:

1. A PREFABRICATED EXPANSION JOINT SYSTEM SHALL BE INSTALLED IN THE DECK ABOVE EACH ABUTMENT AND ABOVE PIERS 1S AND 1N. THE JOINT SYSTEMS SHALL BE INSTALLED WITH AN OPENING SET AT 2" AT 68 DEGREES F AND THE STRIP SEALS SHALL BE CAPABLE OF EXPANDING TO 3". ALL MATERIALS AND LABOR ASSOCIATED WITH THE INSTALLATION OF THIS JOINT SYSTEM ARE INCLUDED UNDER ITEM 605511.
2. A JOINT SYSTEM WITH ELASTOMERIC CONCRETE SHALL BE INSTALLED IN THE DECK ABOVE PIERS 2S, 3S AND 2N. THE JOINT SYSTEMS SHALL BE INSTALLED WITH AN OPENING SET AT 1.75" AT 68 DEGREES F AND THE STRIP SEALS SHALL BE CAPABLE OF EXPANDING TO 2". ALL MATERIALS AND LABOR ASSOCIATED WITH THE INSTALLATION OF THIS JOINT SYSTEM ARE INCLUDED UNDER ITEM 605604.
3. THE JOINT SYSTEMS SHALL BE MANUFACTURED BY WATSON BOWMAN AND ACME CORPORATION, 95 PINEVIEW DRIVE, AMHERST, NY 14120, (716) 691-7566; THE D.S. BROWN COMPANY, 300 E. CHERRY STREET, NORTH BALTIMORE, OHIO 45872-0158, (419) 257-3561; E-POXY INDUSTRIES, INC., 14 WEST SHORE STREET, RAVENA, NY 12143, (518) 756-6193; OR AN APPROVED EQUAL.
4. CONTRACTOR SHALL VERIFY ALL DIMENSIONS AND ELEVATIONS IN THE FIELD PRIOR TO BEGINNING SHOP DRAWINGS AND FABRICATION OF THE JOINT SYSTEMS. FINISH LINES AND GRADES SHALL FOLLOW THE CROSS SLOPES OF THE NEW LMC OVERLAY, EXCEPT AS NOTED.
5. INSTALLATION PROCEDURES FOR THE DECK JOINT SYSTEMS SHALL BE PER MANUFACTURER'S RECOMMENDATIONS.
6. THE STRIP SEAL SHALL BE FURNISHED AND PLACED IN ONE CONTINUOUS PIECE FOR THE FULL WIDTH OF THE JOINT. SPLICING THE STRIP SEAL WILL NOT BE PERMITTED.
7. THE FURNISHING AND INSTALLATION OF THE SIDEWALK COVER PLATES OVER THE JOINT SYSTEMS ARE INCLUDED UNDER ITEM 605001. THE PLATES SHALL BE PAINTED IN ACCORDANCE WITH SECTION 605 OF THE STANDARD SPECIFICATIONS.

BEARINGS:

1. BEARING REPLACEMENTS SHALL BE DONE PRIOR TO LMC PLACEMENT.
2. JACKING OF THE SUPERSTRUCTURE SHALL BE PERFORMED IN 1/8" LIFTS, AND THE SUPERSTRUCTURE SHALL ONLY BE JACKED TO FACILITATE BEARING REMOVAL AND REPLACEMENT. PAYMENT FOR JACKING WILL BE INCLUDED IN THE LUMP SUM PRICE BID FOR ITEM 605603.

STEEL OPEN GRID BRIDGE DECK:

1. NEW STEEL OPEN GRID BRIDGE DECK SHALL HAVE A NOMINAL HEIGHT OF 5 INCHES.
2. THE NEW STEEL OPEN GRID BRIDGE DECK SHALL BE INSTALLED AT THE LOCATIONS SHOWN ON THE DRAWINGS. REMOVAL OF THE EXISTING GRID DECK AND INSTALLATION OF THE NEW PORTION OF THE GRID DECK IS PAID UNDER ITEM 605591.
3. WHERE EXISTING GRID DECK IS TO BE REMOVED, FLAME CUTTING OF EXISTING WELDS IS NOT PERMITTED. THE METHOD OF REMOVING WELDS WHICH IS CHOSEN BY THE CONTRACTOR SHALL ASSURE THAT THE BEAMS ARE NOT DAMAGED AND BE PRE-APPROVED BY THE DEPARTMENT.
4. THE STRINGER FLANGE AT LOCATIONS OF ORIGINAL WELDS SHALL BE GROUND SMOOTH PRIOR TO INSTALLING NEW STEEL GRID DECK.
5. WELDS FOR THE NEW STEEL GRID DECK SHALL BE OFFSET FROM ORIGINAL WELD LOCATIONS.
6. THE EXISTING GRID DECK WHICH IS NOT BEING REPLACED SHALL BE CLEANED AND PAINTED UNDER ITEMS 605533 AND 605522.
7. THE NEW SECTIONS OF GRID DECKING SHALL BE GALVANIZED AND PAINTED WITH A SYSTEM APPROVED BY THE DEPARTMENT. THE COST FOR PAINTING THE NEW GRID DECK IS INCLUDED UNDER ITEM 605591.
8. REMOVAL OF THE STEEL MEDIAN ACROSS THE ENTIRE GRID DECK IS INCIDENTAL TO ITEM 605591.

UTILITIES:

1. ALL UTILITIES PLOTTED ON THE PLAN SHEET ARE FROM THE BEST AVAILABLE INFORMATION. VERIFY AND LOCATE ALL EXISTING UTILITIES PRIOR TO STARTING WORK.
2. BEFORE BEGINNING WORK, THE CONTRACTOR SHALL GIVE NOTIFICATION BY TELEPHONE BY CALLING "MISS UTILITY" AT 1-800-282-8555.
3. COORDINATE THE REQUIREMENTS FOR PROTECTION AND/OR RELOCATION OF ANY UTILITY WITH THE UTILITY OWNER PRIOR TO STARTING WORK.
4. CONDUCT OPERATIONS IN A MANNER WHICH ENSURES THAT THE UTILITIES WILL NOT BE DISTURBED OR ENDANGERED, AND ASSUME FULL RESPONSIBILITY FOR ANY DAMAGE TO UTILITIES DURING CONSTRUCTION. THE DEPARTMENT DOES NOT ASSUME RESPONSIBILITY FOR REIMBURSEMENT, PARTICIPATION IN DESIGN AND/OR REVISIONS, OR LIABILITY FOR ACCURACY OR TYPE, SIZE AND LOCATION OF ANY UTILITY.
5. ANY RELOCATION OR DISTURBANCE OF ELECTRIC, WATER OR TELEPHONE SERVICE LINES LOCATED BENEATH THE STRUCTURE (MAINLY BELOW THE SIDEWALKS) MUST BE COORDINATED WITH THE DEPARTMENT BEFORE ANY ACTIVITIES TAKE PLACE.

MAINTENANCE OF TRAFFIC:

1. THE EXTENT OF WORK OUTLINED ON THE GENERAL PLAN AND ELEVATION SHEET SHALL BE PERFORMED DURING TWO DISTINCT STAGES OF CONSTRUCTION. FOUR LANES OF ONE DIRECTIONAL TRAFFIC WILL BE REDUCED TO TWO LANES DURING EACH STAGE OF CONSTRUCTION. THE STAGING LIMITS ARE DEFINED ON THE TRAFFIC CONTROL PLAN (SHEETS 20, 21 AND 22). DURING STAGE 1, TWO LANES OF TRAFFIC WILL BE MAINTAINED ON THE WEST SIDE OF THE BRIDGE. STAGE 1 CONSTRUCTION INCLUDES CONCRETE SCARIFICATION, LMC OVERLAY, STEEL GRID REPLACEMENT AND DECK JOINT REHABILITATION ON THE EAST SIDE OF THE BRIDGE, BRIDGE RAILING INSTALLATION ALONG THE EAST CURB, STRENGTHENING AND REPLACEMENT OF SPECIFIED STRINGERS ON THE EAST SIDE OF THE BRIDGE, AND REPAIRS TO THE EXISTING EAST BRIDGE RAILING. THE MEDIAN WILL BE REMOVED DURING STAGE 1. PEDESTRIAN TRAFFIC WILL BE MAINTAINED ON THE WEST SIDEWALK DURING STAGE 1. FOR STAGE 2 CONSTRUCTION THE TWO LANES OF TRAFFIC WILL BE SHIFTED TO THE EAST SIDE OF THE BRIDGE AND SIMILAR WORK WILL BE PERFORMED ON THE WEST SIDE OF THE BRIDGE. PEDESTRIAN TRAFFIC WILL BE CHANNELED TO THE EAST SIDEWALK DURING STAGE 2.

MISCELLANEOUS:

1. SPALLS IN THE SUBSTRUCTURE AND UNDERSIDE OF DECK SHALL BE IDENTIFIED BY THE ENGINEER AND REPAIRED AND PAID UNDER ITEM 602572.
2. CRACKS IN THE SUBSTRUCTURE REQUIRING REPAIRS SHALL BE IDENTIFIED BY THE ENGINEER AND PRESSURE INJECTED WITH EPOXY. PAYMENT SHALL BE MADE UNDER ITEM 602514.
3. THE FURNISHING AND INSTALLATION OF THE NEW BRIDGE SCUPPERS AS INDICATED ON THE PLANS ARE PAID UNDER ITEM 605569.
4. SEALING OF THE LONGITUDINAL JOINT IN THE LMC OVERLAY ALONG THE CENTERLINE OF THE ROADWAY SHALL BE PAID UNDER ITEM 503502.
5. REPAIRING THE DECK JOINT ABOVE THE REAR WALL OF EACH BASCULE PIER ABOVE FLOORBEAM FB11 IS PAID UNDER ITEM 605557. THE REPAIR OF THE ARMORED JOINTS AROUND THE TWO ROADWAY ACCESS HATCHES AND THE TWO SIDEWALK ACCESS HATCHES IS ALSO PAID UNDER ITEM 605557.
6. TEMPORARY CONSTRUCTION EASEMENTS (T.C.E.) ARE REQUIRED ADJACENT TO THE BRIDGE ABUTMENTS AT THE SOUTHEAST, NORTHEAST AND NORTHWEST CORNERS. THESE T.C.E. ARE DESIGNATED ON THE PLANS.
7. ACCESS TO THE BUSINESS (MCI) AT THE NORTHEAST CORNER OF THE STRUCTURE MUST BE MAINTAINED AT ALL TIMES. APPROPRIATE SAFETY MEASURES MUST BE APPROVED, PROVIDED AND MAINTAINED TO KEEP ACCESS, WHICH EXTENDS BENEATH SPAN 1N, OPERATIONAL. PAYMENT IS INCIDENTAL TO ITEM 763500.
8. ACCESS TO THE RENAL CARE CENTER (DIALYSIS UNIT) AT THE SOUTHEAST CORNER MUST BE PROVIDED AT ALL TIMES DURING CONSTRUCTION. THE COORDINATION WITH THE CENTER'S ACTIVITIES CAN BE MADE WITH PRISCILLA SMITH AT (302)658-7469.
9. ANY DAMAGE OR REMOVAL OF LANDSCAPING ADJACENT TO THE BRIDGE AT THE SOUTHEAST CORNER SHALL BE REPLACED, AS REQUIRED, TO THE SATISFACTION OF THE ENGINEER. PAYMENT IS INCIDENTAL TO ITEM 763000.

MECHANICAL/ELECTRICAL:

1. THE REHABILITATION OF THE MECHANICAL AND ELECTRICAL PORTIONS OF THE BRIDGE ARE SHOWN ON SHEETS 25 THRU 52. REFER TO THESE SHEETS FOR ADDITIONAL NOTES.

REVISIONS

PREL. TRACING R. J. Ashley DESIGN J. A. Prybella CHKD. J. A. Prybella

BR. 1-687	CONTRACT	COUNTY	FEDERAL AID PROJECT No	SHEET No	TOTAL SHEETS
	89-074-05	NEW CASTLE	BHM-1179(3)	4	52

GENERAL PLAN & ELEVATION

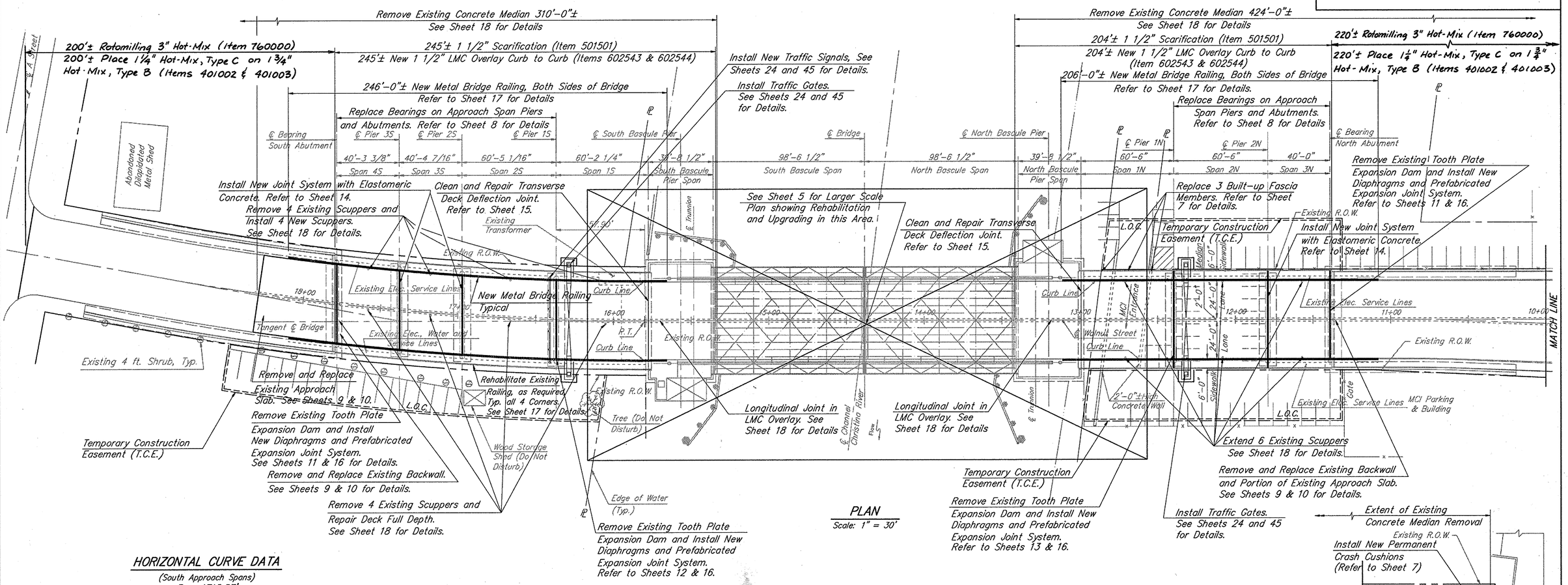

PLAN

Scale: 1" = 30'

HORIZONTAL CURVE DATA

(South Approach Spans)
R = 1718.87'
3'-20' Curve
Δ = 10°-26'-35.5"
L = 313.30'
T = 157.08'

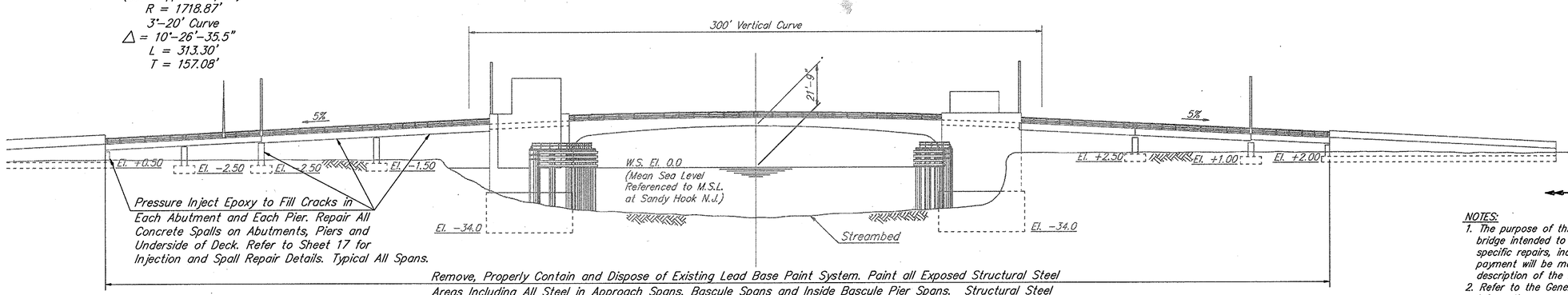

Remove, Properly Contain and Dispose of Existing Lead Base Paint System. Paint all Exposed Structural Steel Areas Including All Steel in Approach Spans, Bascule Spans and Inside Bascule Pier Spans. Structural Steel Inside the Bascule Pier Spans Include Deck Stringers, Trunnion Girders, Counterweight Frames and All Platform, Stair and Railing Steel. Electrical and Mechanical Components shall be Cleaned and Painted as specified on Sheets 25 thru 52. This Work is paid under Items 605533 & 605522.

ELEVATION

Scale: 1" = 30'

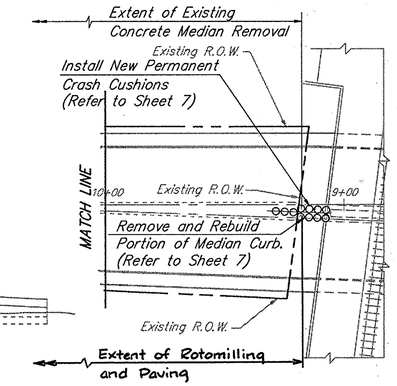

NOTES:

1. The purpose of this sheet is to highlight specific areas of the bridge intended to be rehabilitated. For details about the specific repairs, including the indicated items under which payment will be made, refer to the sheet indicated in the description of the repair.
2. Refer to the General Notes and Project Notes for additional information.
3. All concrete surfaces of the bridge shall be waterproofed in accordance with item 602547. See Sheet 3 for Limits.

REVISIONS

PREL. TRACING R. J. Ashley DESIGN J. A. Prybella CHKD. J. A. Prybella

BR. 1-687	CONTRACT	COUNTY	FEDERAL AID PROJECT No	SHEET No	TOTAL SHEETS
	89-074-05	NEW CASTLE	BHM-1179(3)	5	52

BASCULE SPAN AND BASCULE PIER FRAMING PLAN

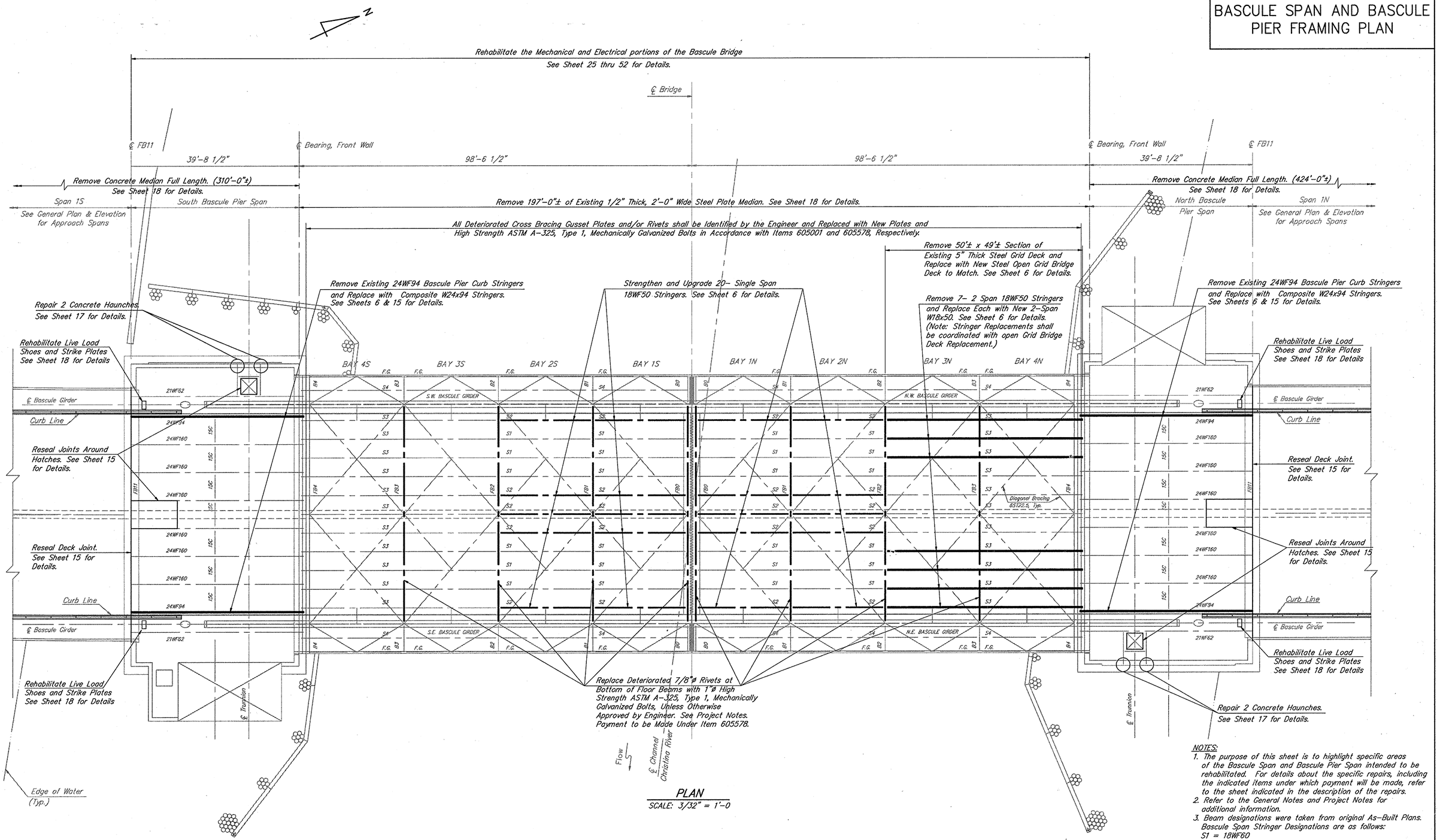

PLAN
SCALE: 3/32" = 1'-0

NOTES:
1. The purpose of this sheet is to highlight specific areas of the Bascule Span and Bascule Pier Span intended to be rehabilitated. For details about the specific repairs, including the indicated items under which payment will be made, refer to the sheet indicated in the description of the repairs.
2. Refer to the General Notes and Project Notes for additional information.
3. Beam designations were taken from original As-Built Plans. Bascule Span Stringer Designations are as follows:
S1 = 18WF60
S2 = 18WF50
S3 = 18WF50
S4 = 12WF45

REVISIONS

PREL. TRACING J.P. Bartholomay DESIGN J. A. Prybella CHKD. W. M. Ahola

BR. 1-687	CONTRACT	COUNTY	FEDERAL AID PROJECT No	SHEET No	TOTAL SHEETS
	89-074-05	NEW CASTLE	BHM-1179(3)	6	52

BASCULE PIER & BASCULE SPAN DETAILS

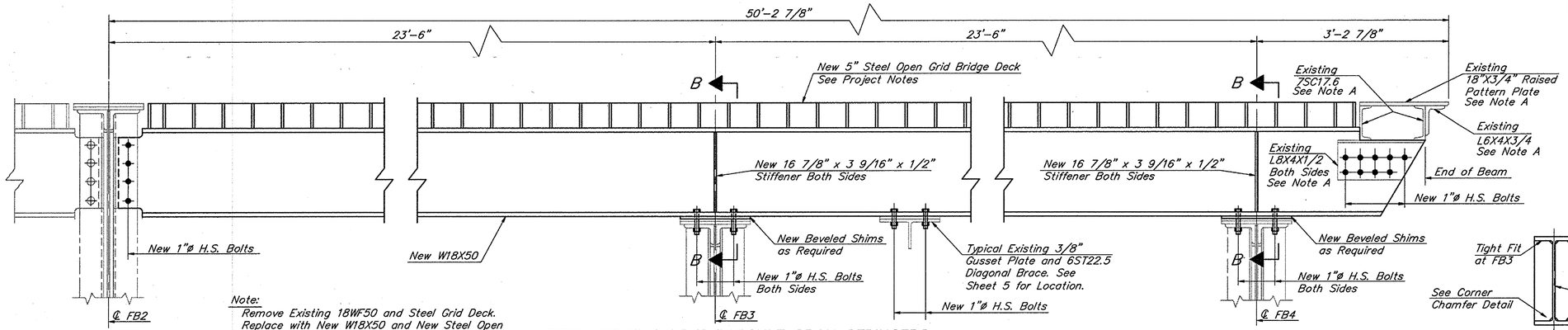

Note:
Remove Existing 18WF50 and Steel Grid Deck.
Replace with New W18X50 and New Steel Open Grid Bridge Deck.
Locations Shown on Sheet 5.
Replace Existing 7/8"ø Rivets with 1"ø H.S. Bolts at Connections.

REPLACEMENT OF 7 BASCULE SPAN STRINGERS AND STEEL OPEN BRIDGE DECK

Scale: 1"=1'-0"
See Sheet 5 for Locations

Note A:
Remove from Existing 18WF50 and Reinstall on New W18x50.

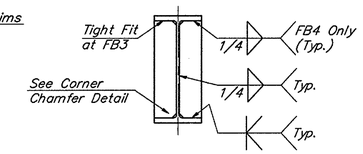

SECTION B-B

Scale: 1"=1'-0"

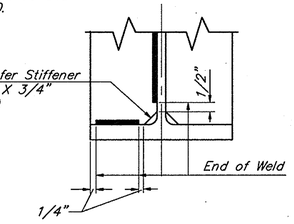

CORNER CHAMFER DETAIL

Scale: 3"=1'-0"

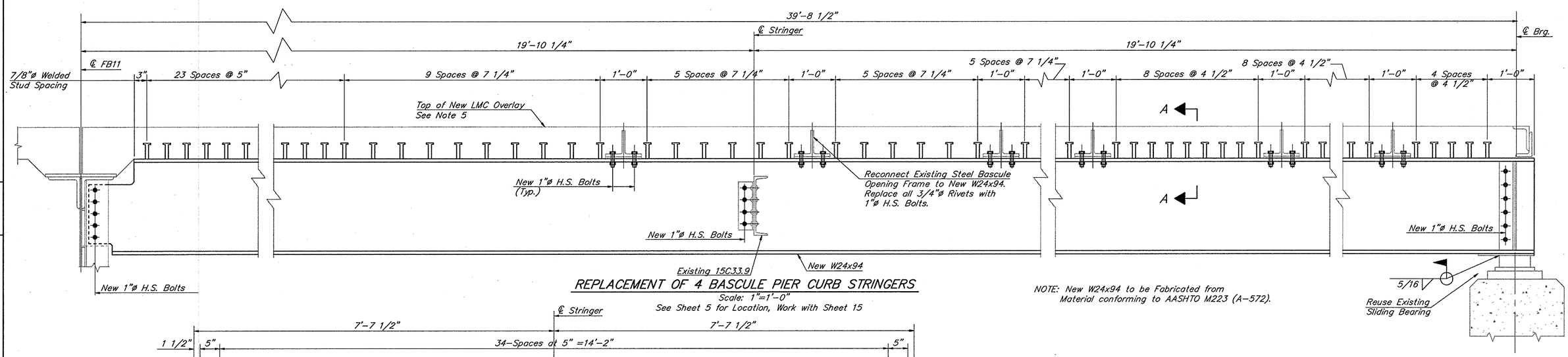

REPLACEMENT OF 4 BASCULE PIER CURB STRINGERS

Scale: 1"=1'-0"
See Sheet 5 for Location, Work with Sheet 15

NOTE: New W24x94 to be Fabricated from Material conforming to AASHTO M223 (A-572).

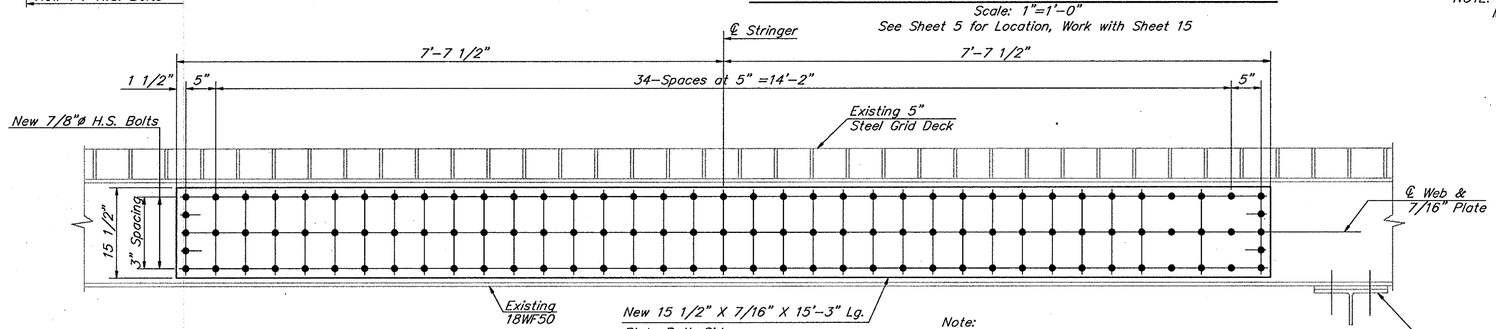

Note:
Strengthening shall Consist of Reinforcing Existing 24WF94 with a 7/16" Plate on Each Side of Web.

STRENGTHENING OF 20 BASCULE SPAN STRINGERS

Scale: 1"=1'-0"
See Sheet 5 for Locations

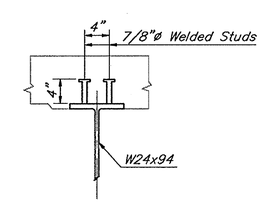

SECTION A-A

Scale: 1"=1'-0"

NOTES:

1. All Replacement Steel shall be A-36 except as noted.
2. The Furnishing and Installation of all New Structural Steel, including H.S. Bolts and welded steel shear connectors, are paid under item 605001. Removal of all existing Structural Steel is incidental to item 605001. All new steel shall be shop painted in accordance with Section 605 of the Standard Specifications.
3. Removal of the existing Grid Deck and the replacement with a new steel Open Grid Bridge Deck is paid under item 605591. See sheet 5 for designated areas of replacement.
4. Replacement of the steel Open Grid Bridge Deck shall be coordinated with the stringer replacement and be in conformance with the traffic control plan.
5. For Details of the Concrete Deck and LMC Overlay over the Bascule Pier Curb Stringers, see sheet 15.

REVISIONS

PREL. TRACING T. A. Marks DESIGN W. M. Ahola CHKD. W. M. Ahola

BR. 1-687	CONTRACT	COUNTY	FEDERAL AID PROJECT No	SHEET No	TOTAL SHEETS
	89-074-05	NEW CASTLE	BHM-1179(3)	7	52

STEEL REPAIR AND CRASH CUSHION DETAILS

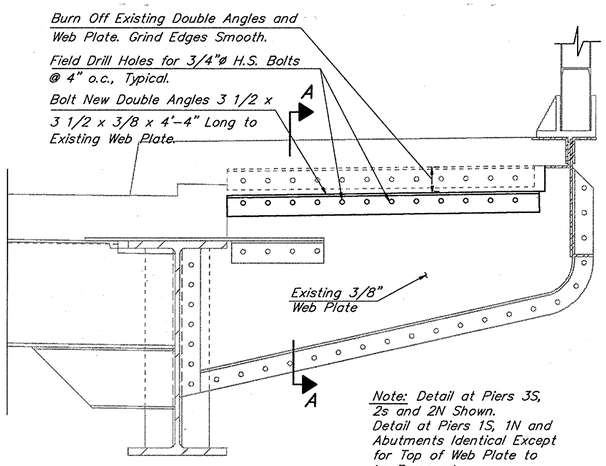

Note: Detail at Piers 3S, 2s and 2N Shown. Detail at Piers 1S, 1N and Abutments Identical Except for Top of Web Plate to be Removed.

BRACKET ADJUSTMENT DETAIL 14 LOCATIONS

Scale 1"=1'-0"

(All Work in this Detail is Paid Under Item 605001)

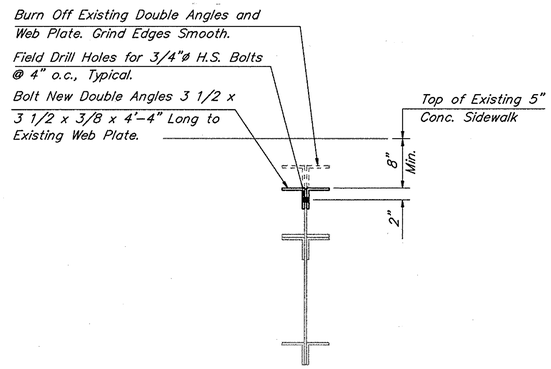

SECTION A-A

Scale 1"=1'-0"

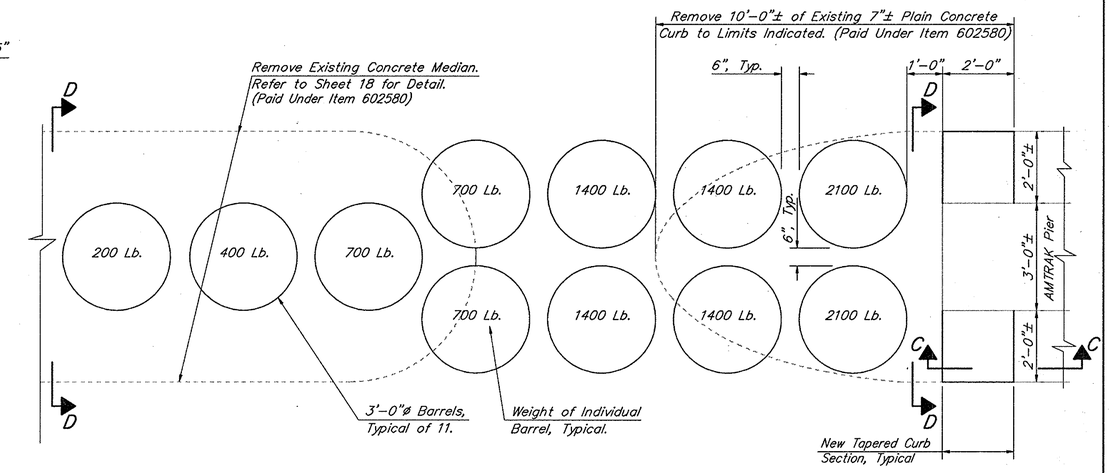

CRASH CUSHION PLACEMENT PLAN (PAID UNDER ITEM 720516)

Scale 1/2"=1'-0"

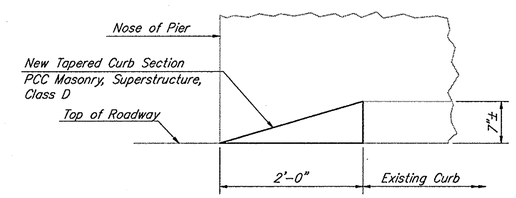

SECTION C-C

Scale 1"=1'-0"

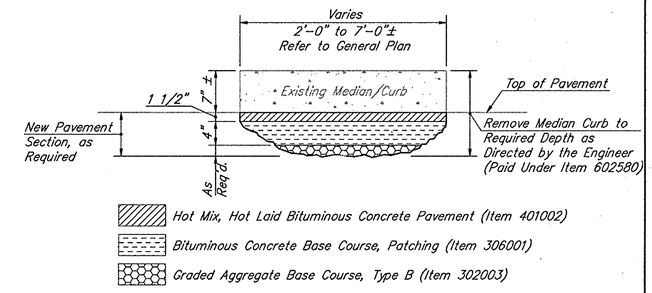

NOTE: Actual Thickness of Base Courses to be Based on Field Conditions and as Directed by the Engineer.

SECTION D-D

Scale 1"=1'-0"

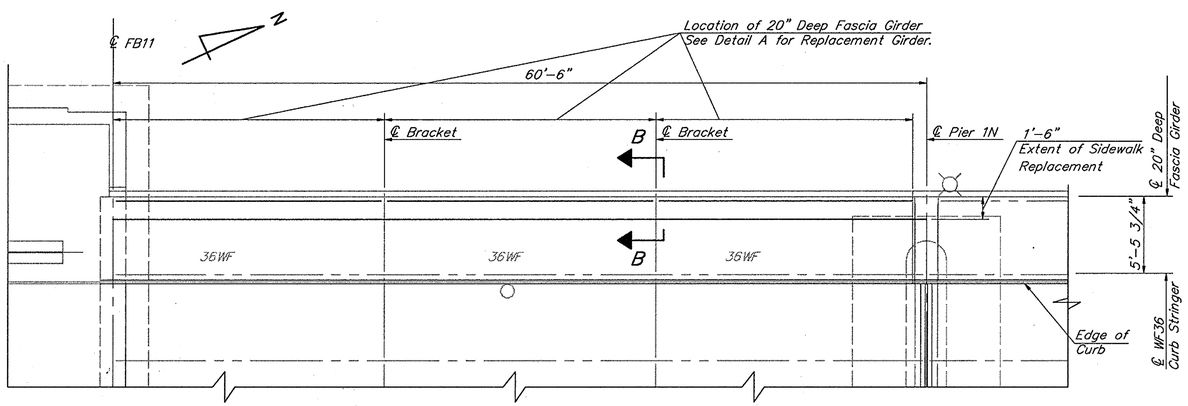

FASCIA GIRDER REPLACEMENT- SPAN 1N, WEST SIDE ONLY
EXISTING PLAN SHOWN - SEE NOTE FOR NEW WORK

Scale 3/16"=1'-0"

NOTE:
Provide the Following Work Between Pier 1N and FB11: Remove Existing Railing and Post, Remove 1'-6" Strip of Concrete Sidewalk, Remove 3 Existing 20" Deep Fascia Girders, Install 3 New 20" Deep Fascia Girders, Replace 1'-6" Strip of Concrete Sidewalk and Reinstall Existing Railing and Post. Removal and Reinstallation of Existing Railing and Posts are Incidental to Item 605001.

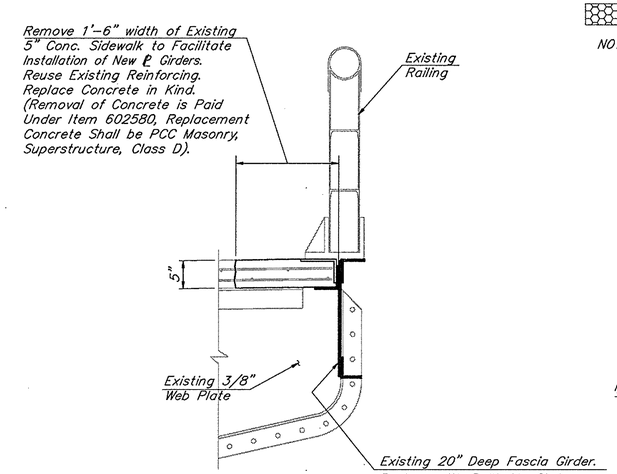

SECTION B-B

Scale 1"=1'-0"

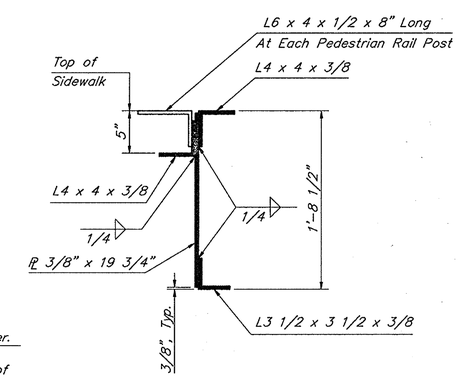

DETAIL A
NEW FASCIA GIRDER

Scale 1 1/2"=1'-0"

REVISIONS

PREL. TRACING J.P. Bartholomay DESIGN W. M. Ahola CHKD. W. M. Ahola

BR. 1-687	CONTRACT	COUNTY	FEDERAL AID PROJECT No	SHEET No	TOTAL SHEETS
	89-074-05	NEW CASTLE	BHM-1179(3)	8	52

BEARING REPLACEMENT DETAILS

NOTE: All Work on this Sheet is Paid Under Item 605603.

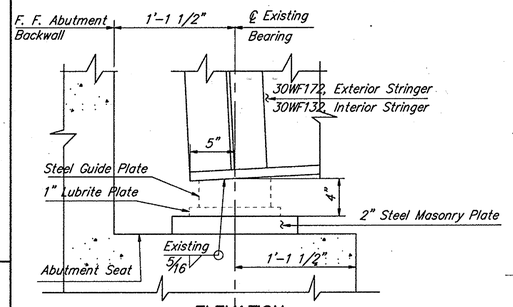

ELEVATION

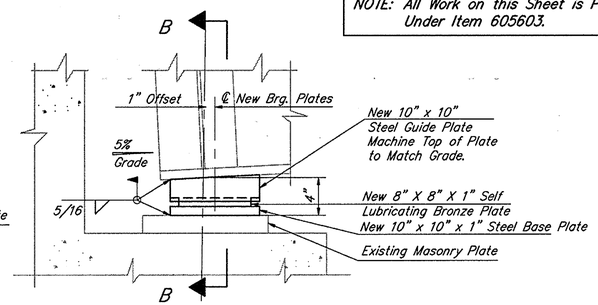

ELEVATION

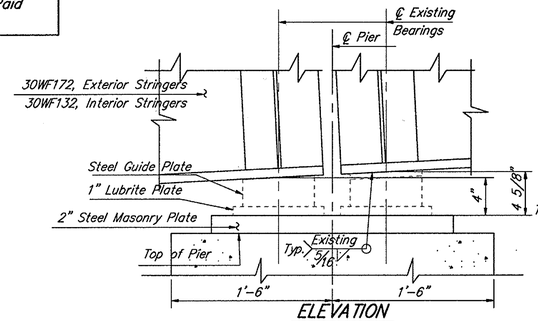

ELEVATION

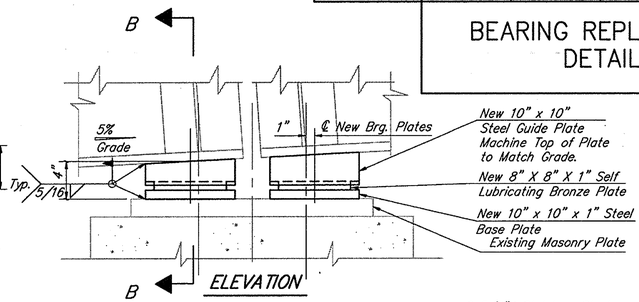

ELEVATION

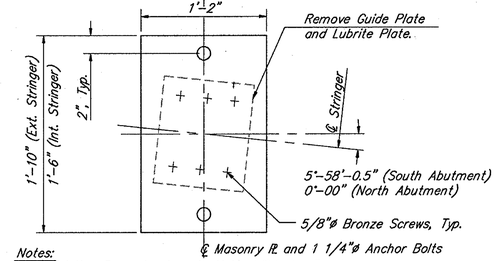

Notes:
- Jack Existing Superstructure to Unload Existing Bearings.
- Grind off Existing Welds and Remove Steel Guide Plate.
- Remove 6- countersunk Screws Securing Lubrite Plate to the Masonry Plate.
- Remove the Lubrite Plate.
- Grind Bottom Flange of Beam and Top of Masonry Plate Smooth to Receive New Bearing and Install New Bearing as Indicated.

PLAN
EXISTING BEARING REMOVAL

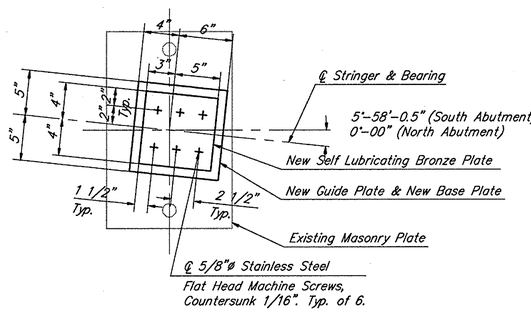

PLAN
REPLACEMENT BEARING
Design Load = 74 Kips

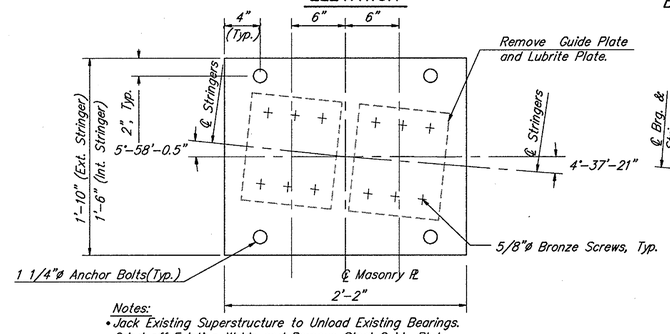

Notes:
- Jack Existing Superstructure to Unload Existing Bearings.
- Grind off Existing Welds and Remove Steel Guide Plate.
- Remove 6- countersunk Screws Securing Lubrite Plate to the Masonry Plate.
- Remove the Lubrite Plate.
- Grind Bottom Flange of Beam and Top of Masonry Plate Smooth to Receive New Bearing and Install New Bearing as Indicated.

PLAN
EXISTING BEARING REMOVAL

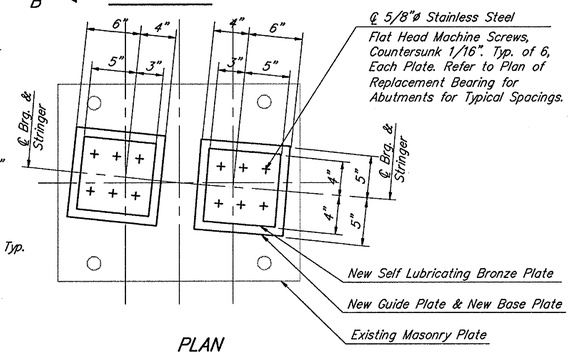

PLAN
REPLACEMENT BEARING
(9 Double Bearings Required)
Design Load per Bearing = 74 Kips

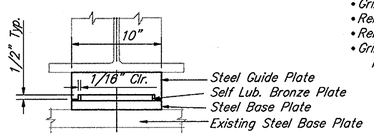

SECTION B-B

NORTH & SOUTH ABUTMENTS (18 REQUIRED)

Scale: 1 1/2"=1'-0"

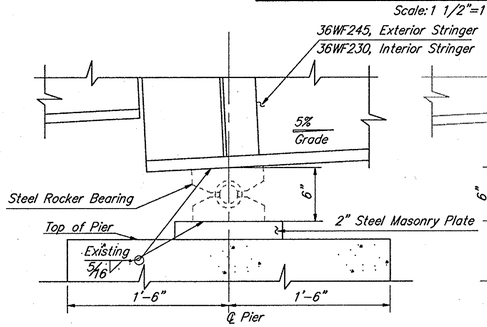

ELEVATION

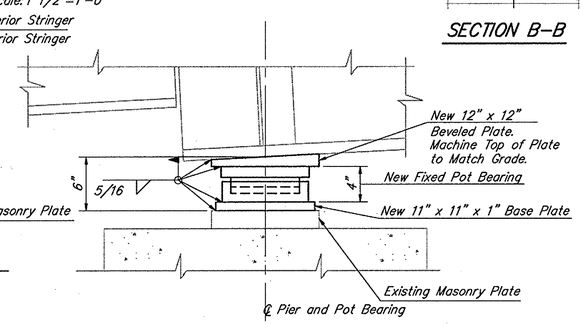

ELEVATION

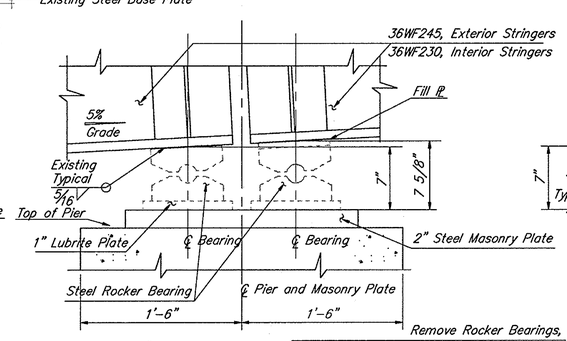

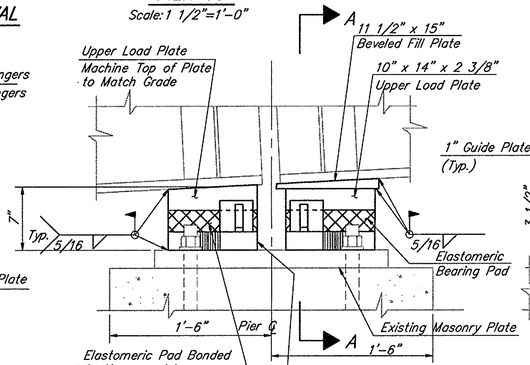

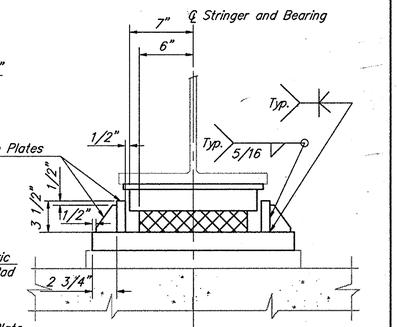

SECTION A-A

PIER 3S

Scale: 1 1/2"=1'-0"

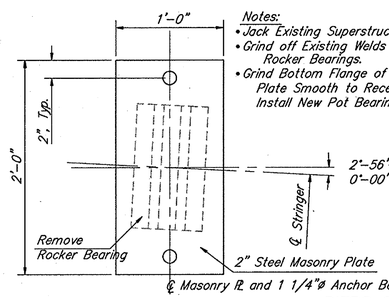

PLAN
EXISTING BEARING REMOVAL

PIERS 2S & 2N
(18 REQUIRED)
Scale: 1 1/2"=1'-0"

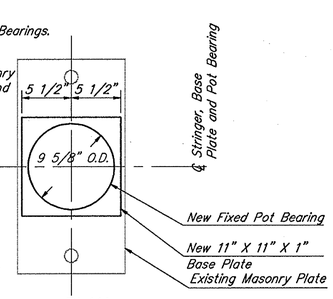

PLAN
REPLACEMENT BEARING
Design Load = 150 Kips

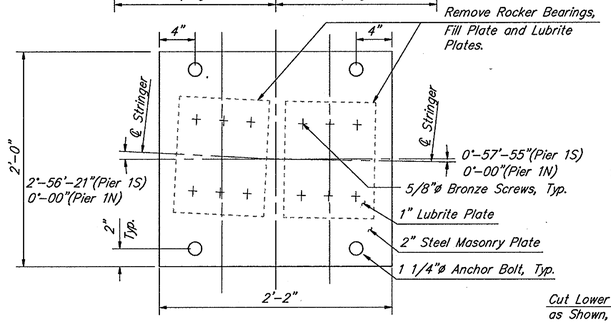

PLAN
EXISTING BEARING REMOVAL

PIERS 1S & 1N
(18 DOUBLE BEARINGS REQUIRED)
Scale: 1 1/2"=1'-0"

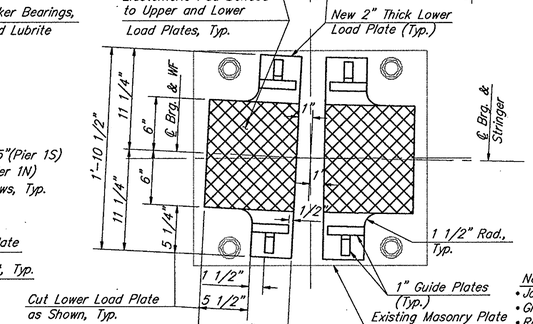

PLAN
REPLACEMENT BEARING
Design Load per Bearing = 80 Kips

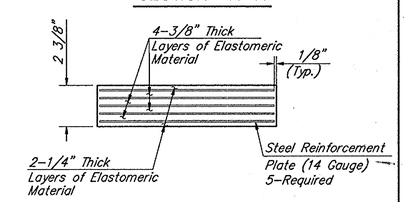

TYPICAL SECTION THROUGH 12"x 10"
ELASTOMERIC BEARING PAD
Scale: 1 1/2"=1'-0"

Notes:
- Jack Existing Superstructure to Unload Existing Bearings.
- Grind off Existing Welds and Remove Steel Rocker Bearing.
- Remove 6- countersunk Screws Securing Lubrite Plate to the Masonry Plate and Remove the Lubrite Plate.
- Grind Bottom Flange of Beam and Top of Masonry Plate Smooth to Receive New Bearing and Install New Bearing as Indicated.

REVISIONS

PREL. TRACING T. A. Marks DESIGN W. M. Ahola CHKD. W. M. Ahola

BR. 1-687	CONTRACT	COUNTY	FEDERAL AID PROJECT No	SHEET No.	TOTAL SHEETS
	89-074-05	NEW CASTLE	BHM-1179(3)	9	52

APPROACH SLAB, BACKWALL AND DECK DEMOLITION

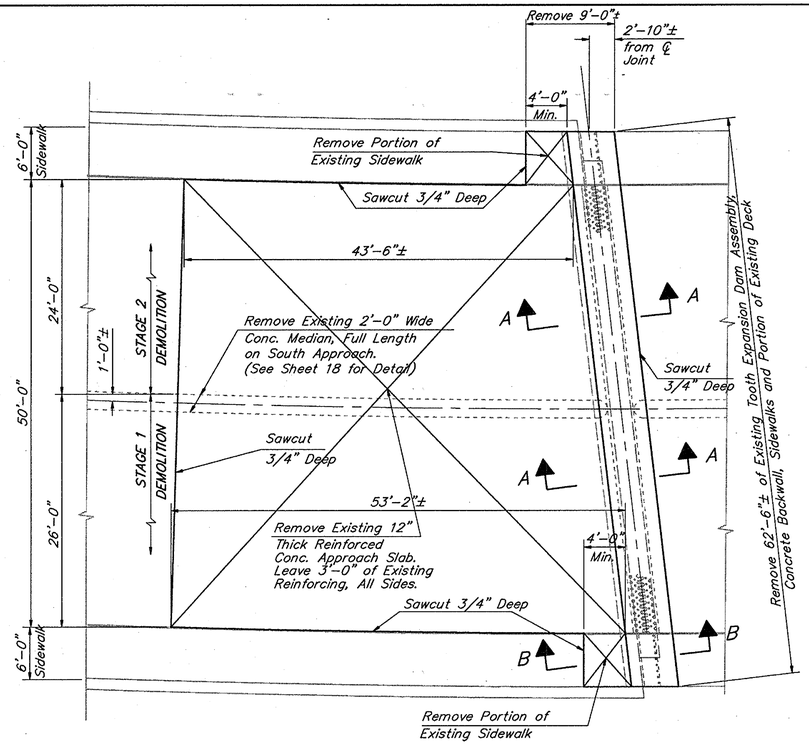

DEMOLITION PLAN
SOUTH ABUTMENT AND APPROACH SLAB

Scale: 1/8"=1'-0"

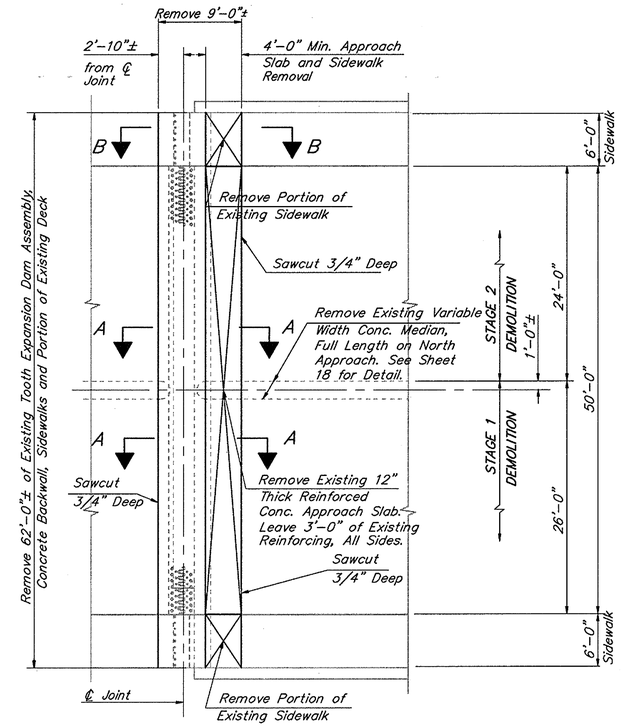

DEMOLITION PLAN
NORTH ABUTMENT AND APPROACH SLAB

Scale: 1/8"=1'-0"

NOTES:

1. Work this Sheet with Sheets 10 and 11.
2. Demolition is Paid Under Item 602580. Refer to Sheet 3 for Demolition Notes.
3. Regrade the Base Material in Preparation for Placement of the New Sections of the Approach Slabs, to the Satisfaction of the Engineer. Regrading Work is Incidental to Item 602014.
4. Removal of the Expansion Dam, Including All Miscellaneous Plates, Anchor Bolts and Hardware is Incidental to Item 602580.

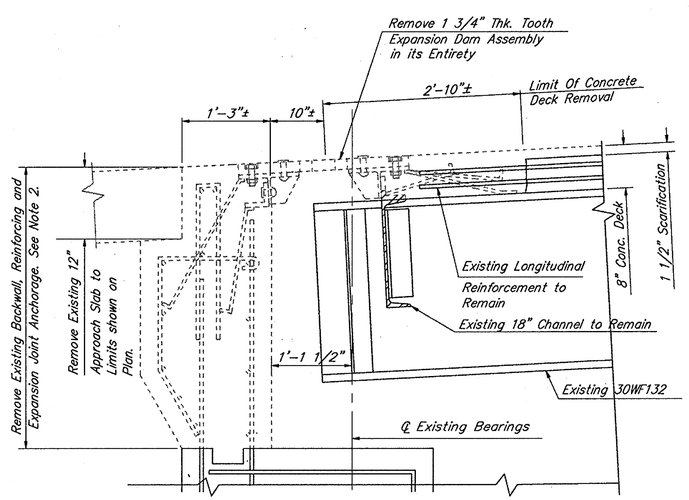

SECTION A-A

Scale: 1"=1'-0"

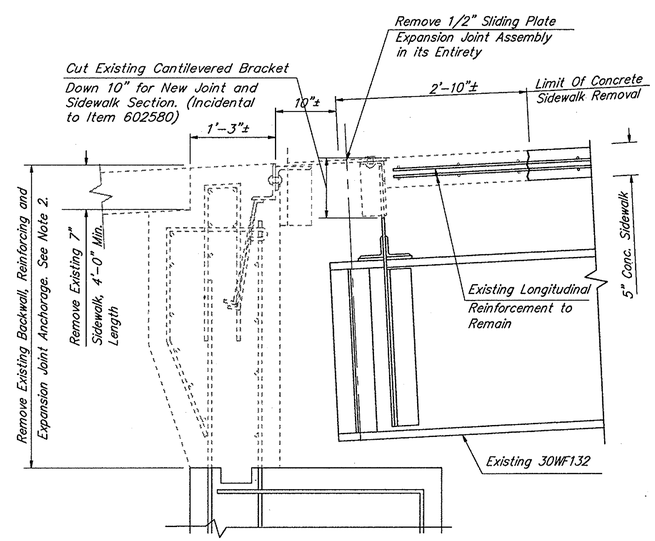

SECTION B-B

Scale: 1"=1'-0"

REVISIONS

PREL. TRACING J.P. Bartholomay DESIGN J. A. Prybella CHKD. J. A. Prybella

BR. 1-687	CONTRACT	COUNTY	FEDERAL AID PROJECT No	SHEET No	TOTAL SHEETS
	89-074-05	NEW CASTLE	BHM-1179(3)	10	52

SOUTH & NORTH ABUTMENT BACKWALL AND SLAB REPLACEMENT DETAILS

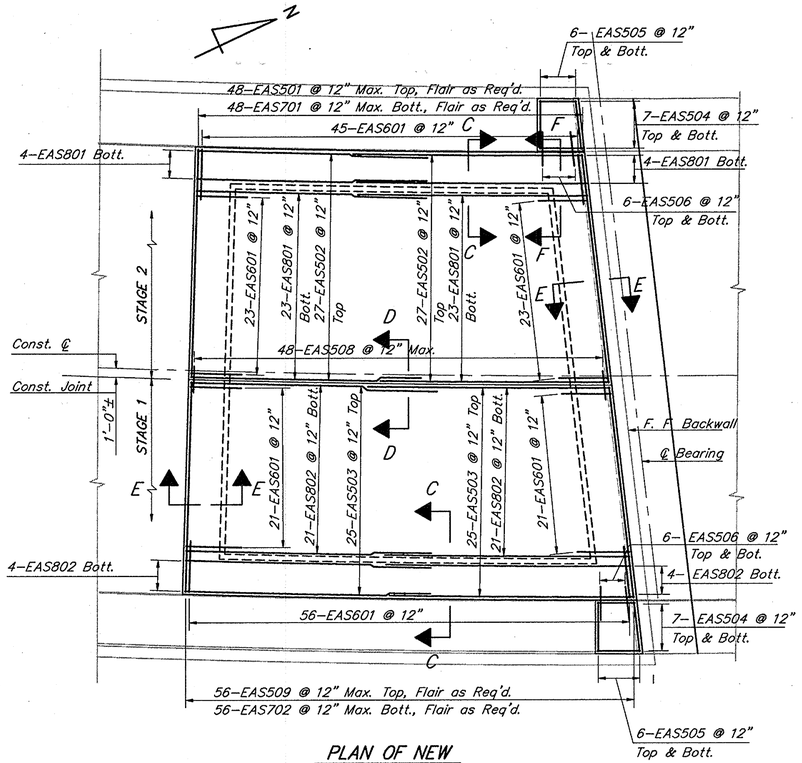

PLAN OF NEW SOUTH ABUTMENT BACKWALL AND APPROACH SLAB

Scale: 1/8"=1'-0"

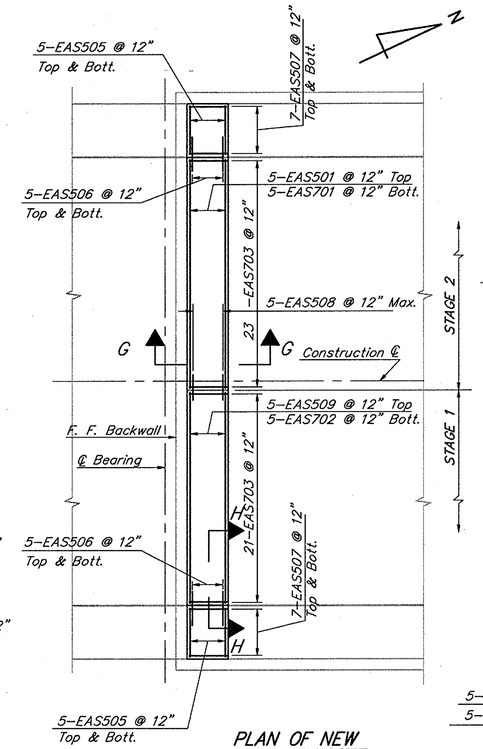

PLAN OF NEW NORTH ABUTMENT BACKWALL AND APPROACH SLAB

Scale: 1/8"=1'-0"

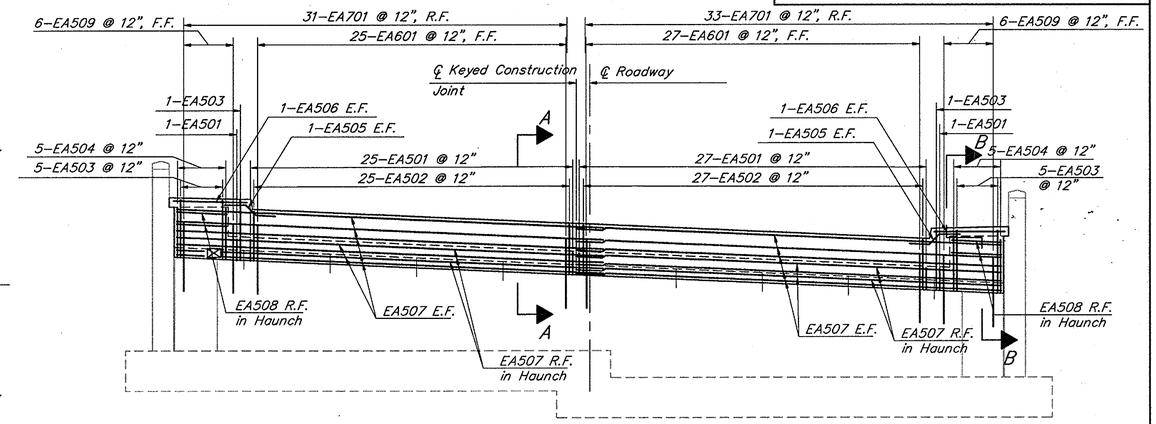

SOUTH ABUTMENT ELEVATION

Scale: 3/16"=1'-0"

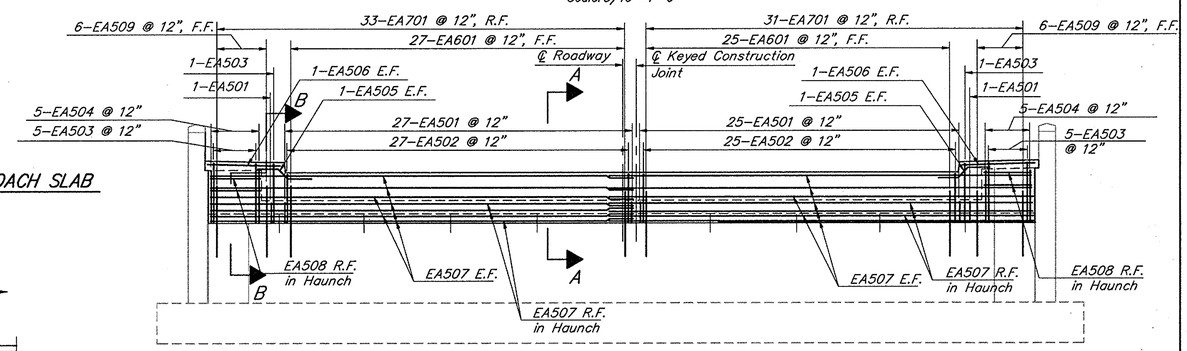

NORTH ABUTMENT ELEVATION

Scale: 3/16"=1'-0"

NOTES:

- Refer to Portland Concrete General Note No. 1 Concrete Class Designation.
- Care should be taken not to damage Existing Utilities thru Backwall.
- Work this Sheet with Sheets 9, 11 and 19.
- See Sheet 19 for Reinforcing Bar Schedule.
- Apply Epoxy Bonding Compound to All Existing/ New Concrete Interfaces.
- Concrete Cover For Reinforcing Bars:
  - Abutments Rear Face 3"
  - Abutments Front Face, Top and Ends 2"
  - Approach Slabs/Sidewalks Top 2"
  - Approach Slabs/Sidewalks Bottom 3"
  - Approach Slabs/Sidewalks Edges 2"
- See Sheet 17 for Bridge Rail Attachment Detail to Sidewalks.
- See Sheet 18 for Joint Sealing Detail.

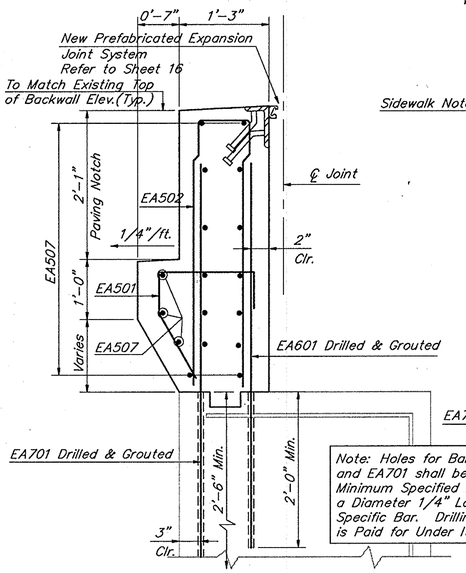

Note: Holes for Bars EA509, EA601 and EA701 shall be Drilled to the Minimum Specified Depths and to a Diameter 1/4" Larger than the Specific Bar. Drilling and Grouting is Paid for Under Item 602579.

SECTION A-A TYPICAL SECTION THRU BACKWALL

Scale: 1"=1'-0"

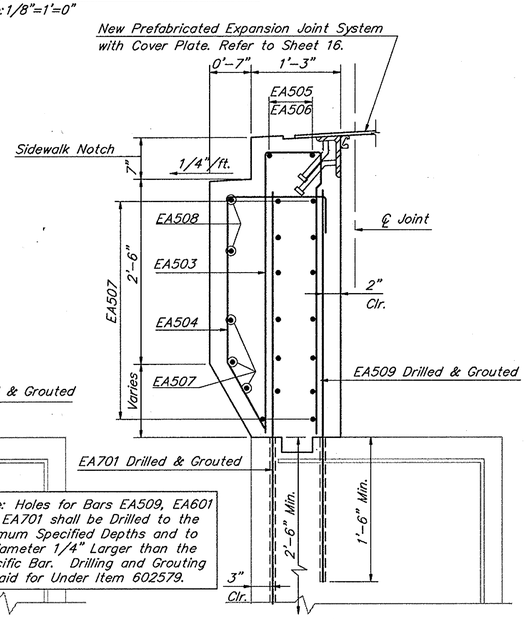

SECTION B-B SECTION THRU BACKWALL AT SIDEWALKS

Scale: 1"=1'-0"

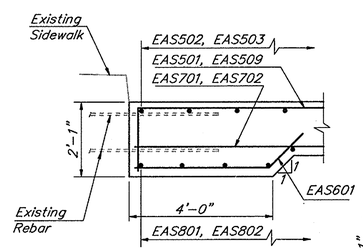

SECTION C-C

Scale: 1/2"=1'-0"

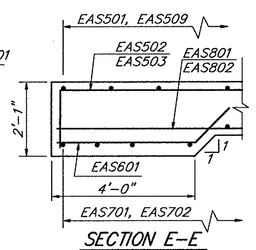

SECTION E-E

Scale: 1/2"=1'-0"

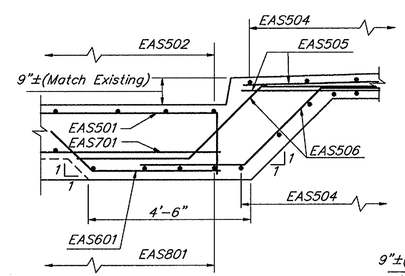

SECTION F-F

Scale: 1/2"=1'-0"

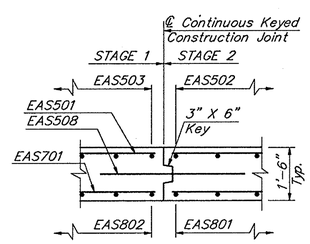

SECTION D-D LONGITUDINAL JOINT

Scale: 1/2"=1'-0"

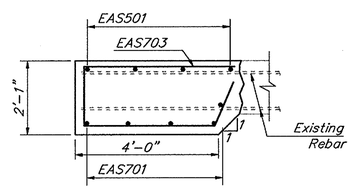

SECTION G-G

Scale: 1/2"=1'-0"

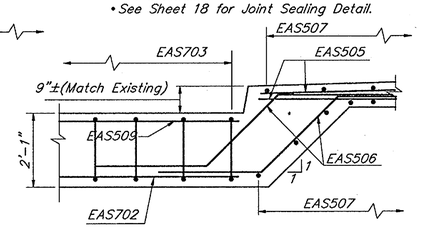

SECTION H-H

Scale: 1/2"=1'-0"

REVISIONS

PREL. TRACING J.P. Bartholomay DESIGN J.A. Prybella CHKD. J.A. Prybella

BR. 1-687	CONTRACT	COUNTY	FEDERAL AID PROJECT No	SHEET No	TOTAL SHEETS
	89-074-05	NEW CASTLE	BHM-1179(3)	11	52

DECK SLAB DETAILS AT NORTH & SOUTH ABUTMENTS

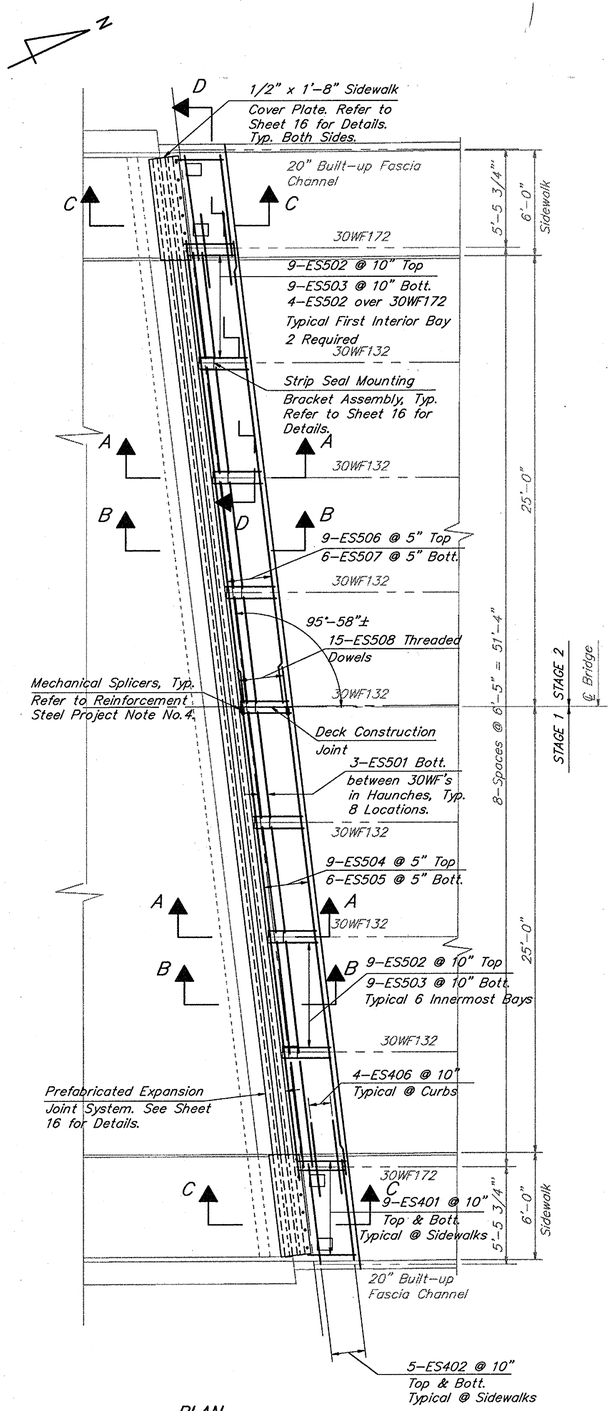

PLAN
SOUTH ABUTMENT
Scale: 1/4"=1'-0"

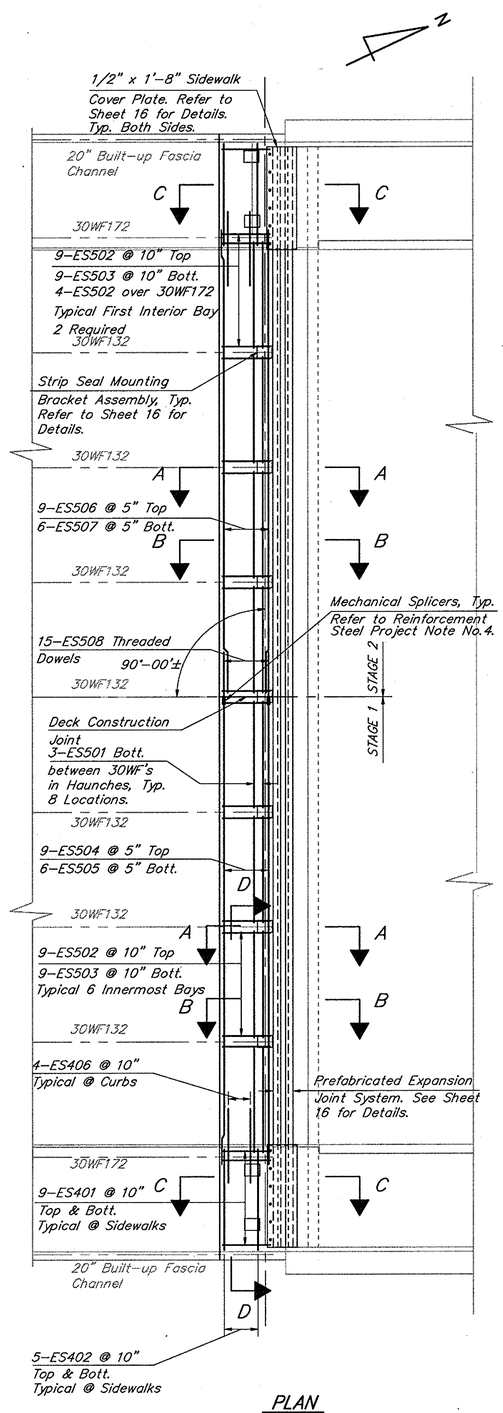

PLAN
NORTH ABUTMENT
Scale: 1/4"=1'-0"

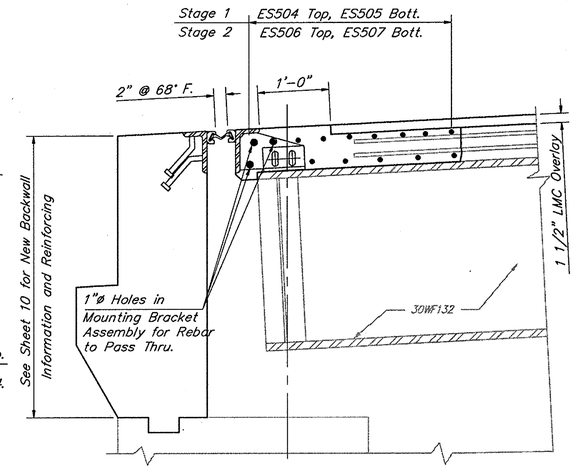

SECTION A-A (ALONG ℄ OF STRINGERS)
Scale: 1"=1'-0"

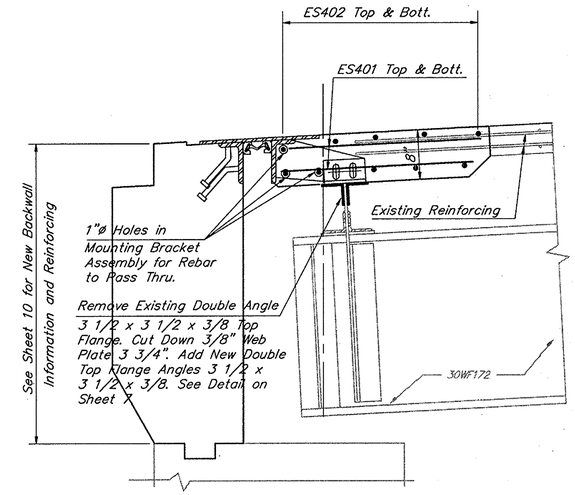

SECTION C-C (THRU SIDEWALKS)
Scale: 1"=1'-0"

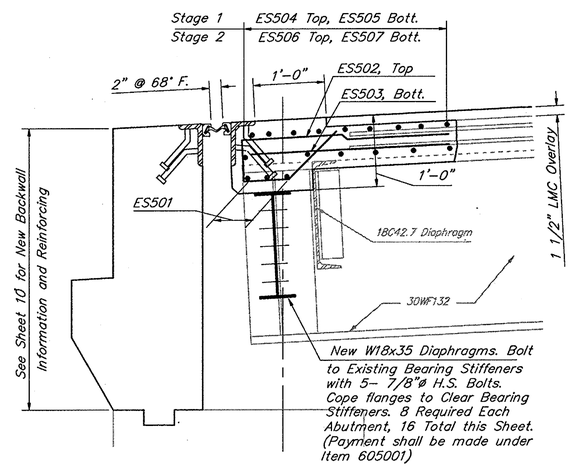

SECTION B-B (BETWEEN STRINGERS)
Scale: 1"=1'-0"

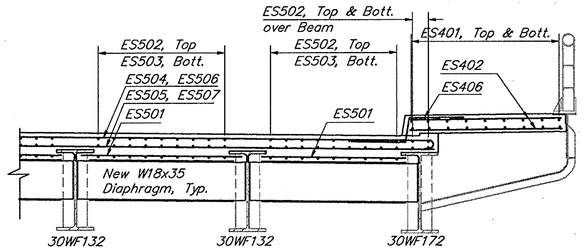

SECTION D-D (TYP. DECK CROSS SECTION)
Scale: 3/8"=1'-0"

NOTES:

- Refer to Portland Cement Concrete Project Note No. 1 for designation of Concrete Class.
- Work this Sheet with Sheets 9, 10, 16 and 19.
- Apply Epoxy Bonding compound to All Existing/New Concrete Interfaces.
- Concrete Cover for Reinforcing Bars:
  Deck/Sidewalk Top Bars 2"
  Deck/Sidewalk Bottom Bars 1 1/2"
  End and Side Cover 2"
- All Existing Longitudinal Reinforcing Bars to Remain Intact. Do not Cut or otherwise Damage Remaining Bars.

REVISIONS

PREL. TRACING J.P. Bartholomay DESIGN J. A. Prybella CHKD. J. A. Prybella

BR. 1-687	CONTRACT	COUNTY	FEDERAL AID PROJECT No	SHEET No	TOTAL SHEETS
	89-074-05	NEW CASTLE	BHM-1179(3)	12	52

PIER 1S EXPANSION DAM DECK DETAILS

NOTES:

- All New PCC Masonry to be Class D.
- Work this Sheet with Sheets 16 and 19.
- Apply Epoxy Bonding Compound to All Existing/New Concrete Interfaces.
- Concrete Cover for Reinforcing Bars:
  Deck/Sidewalk Top Bars 2"
  Deck/Sidewalk Bottom Bars 1 1/2"
  End and Side Cover 2"
- All Existing Longitudinal Reinforcing Bars to Remain Intact. Do not Cut or Otherwise Damage Remaining Bars.

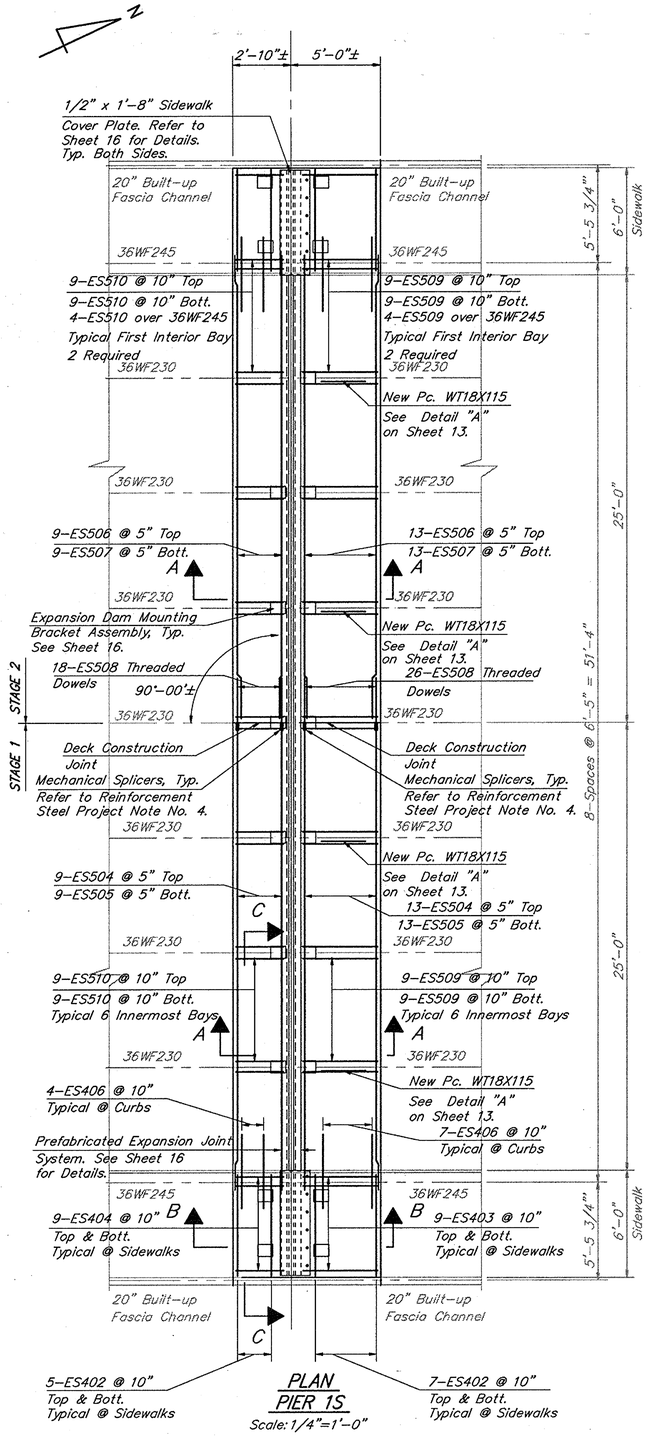

PLAN
PIER 1S
Scale: 1/4"=1'-0"

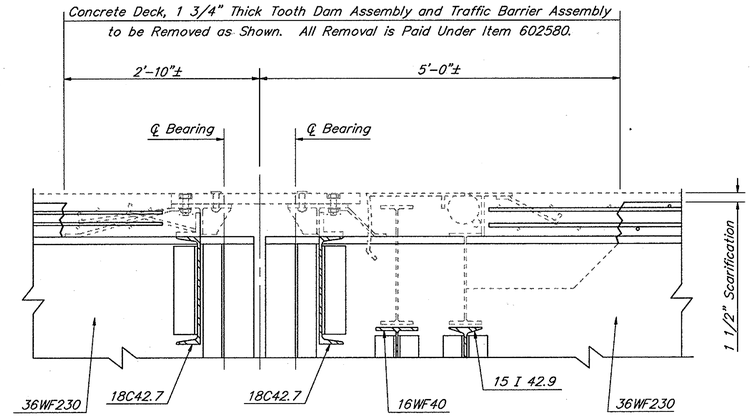

SECTION A-A (EXISTING ROADWAY DEMOLITION)
Scale: 1"=1'-0"

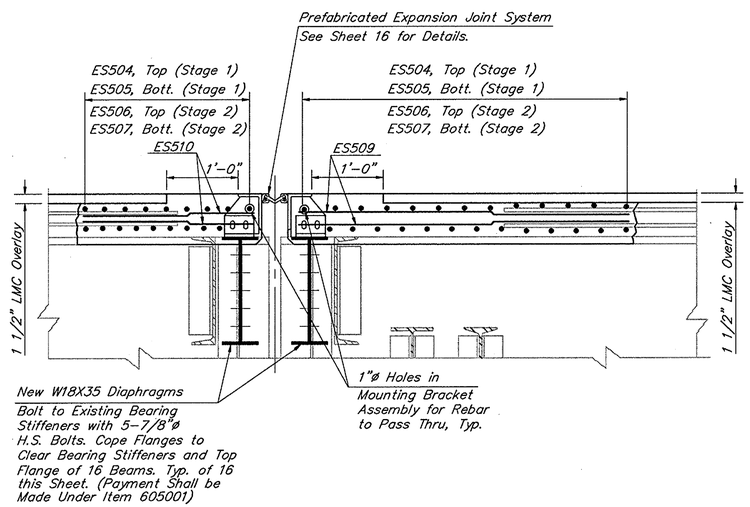

SECTION A-A (NEW PREFABRICATED EXPANSION JOINT SYSTEM)
ROADWAY
Scale: 1"=1'-0"

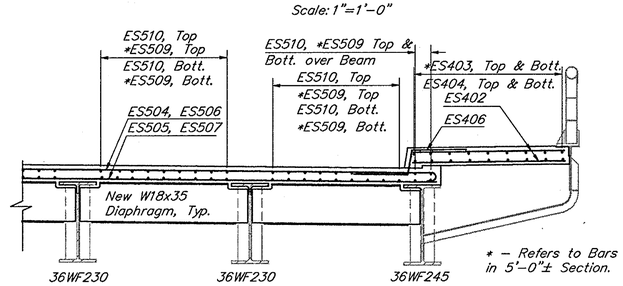

SECTION C-C (TYP. DECK CROSS SECTION)
Scale: 3/8"=1'-0"

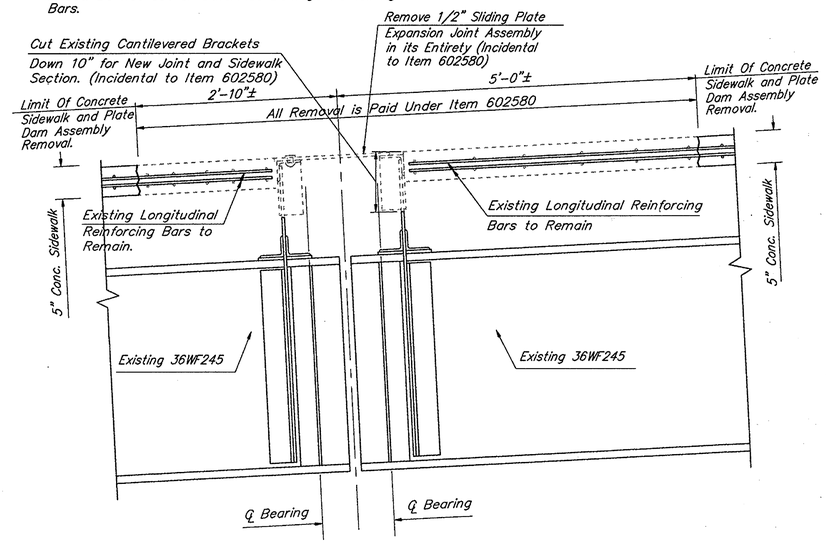

SECTION B-B (EXISTING SIDEWALK DEMOLITION)
Scale: 1"=1'-0"

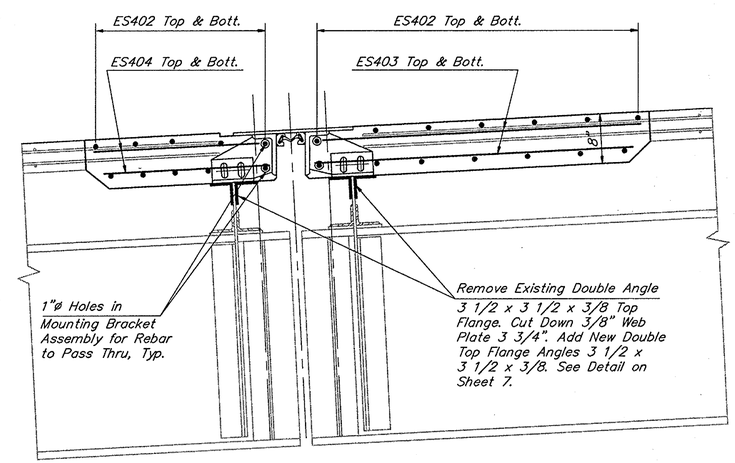

SECTION B-B (NEW PREFABRICATED EXPANSION JOINT SYSTEM)
SIDEWALK
Scale: 1"=1'-0"

REVISIONS

PREL. TRACING T.A. Marks DESIGN J. A. Prybella CHKD. J. A. Prybella

BR. 1-687	CONTRACT	COUNTY	FEDERAL AID PROJECT No	SHEET No	TOTAL SHEETS
	89-074--05	NEW CASTLE	BHM-1179(3)	13	52

PIER 1N EXPANSION DAM DECK DETAILS

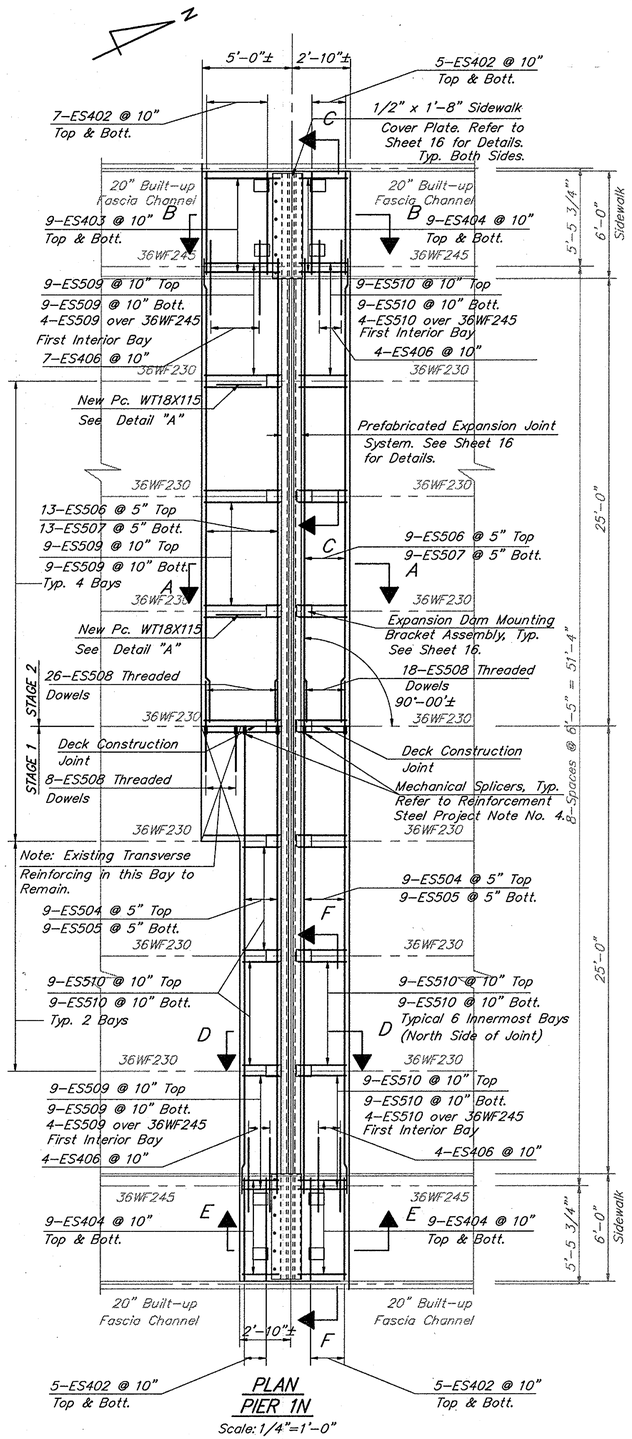

PLAN PIER 1N

Scale: 1/4"=1'-0"

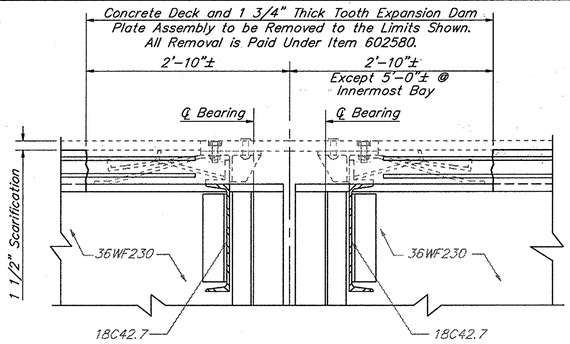

SECTION D-D (EXISTING ROADWAY DEMOLITION- STAGE 1)

Scale: 1"=1'-0"

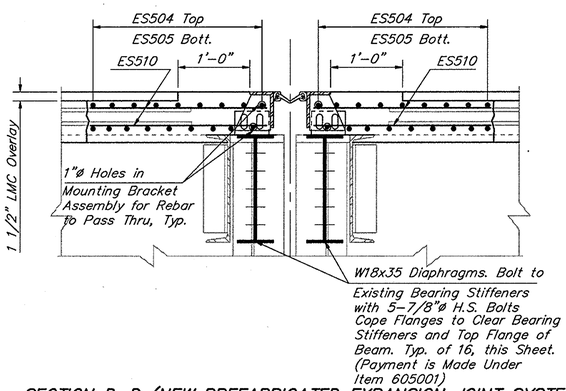

SECTION D-D (NEW PREFABRICATED EXPANSION JOINT SYSTEM)

ROADWAY - STAGE 1

Scale: 1"=1'-0"

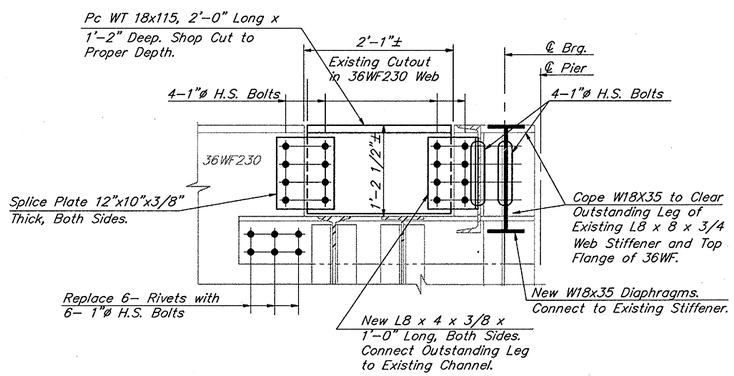

DETAIL "A" STEEL REPAIRS AT TRAFFIC BARRIER ASSEMBLY

Scale: 1"=1'-0"

Notes:

- Detail Applies at Pier 1N, West Side and at Pier 1S, Both Sides. Total 10 Places.
- The Structural Steel Repairs in Detail "A" are Paid Under Item 605001.

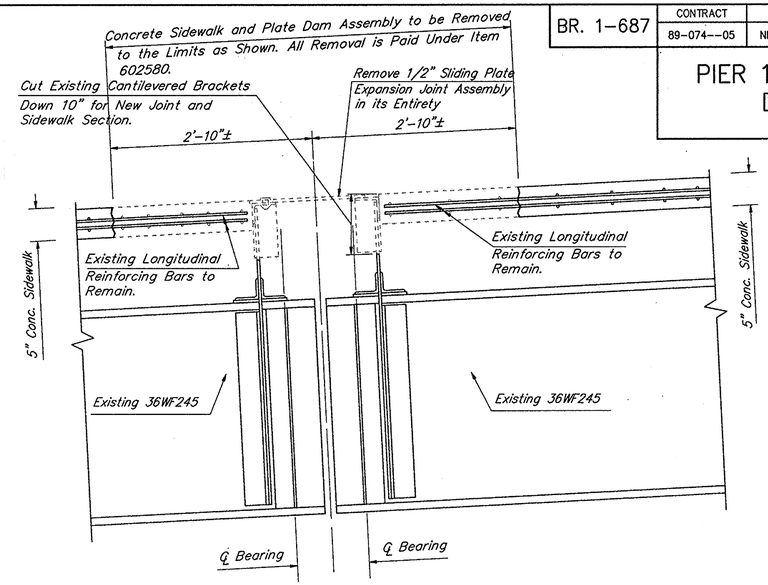

SECTION E-E (EXISTING SIDEWALK DEMOLITION)

Scale: 1"=1'-0"

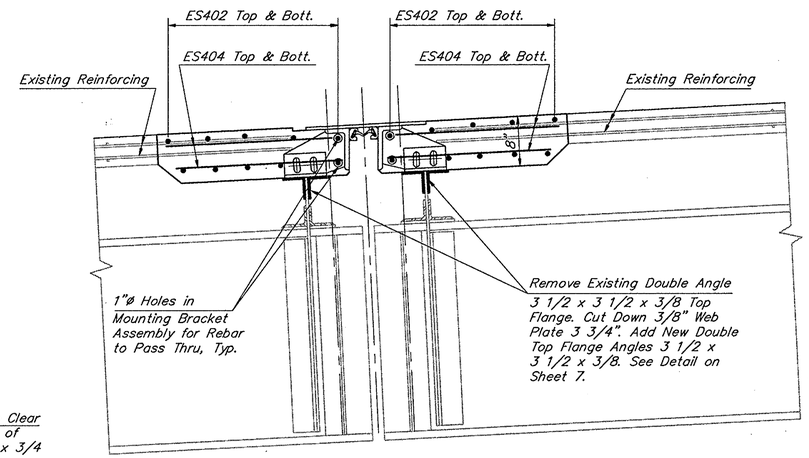

SECTION E-E (NEW PREFABRICATED EXPANSION JOINT SYSTEM)

SIDEWALK

Scale: 1"=1'-0"

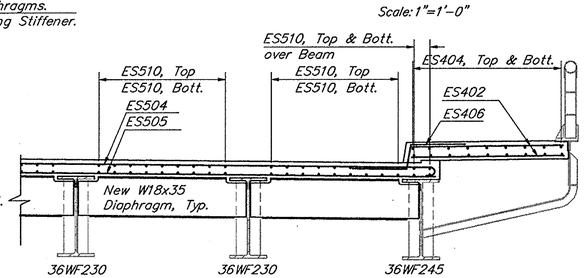

SECTION F-F (TYP. DECK CROSS SECTION)

Scale: 3/8"=1'-0"

NOTES:

- All New PCC Masonry shall be Class D.
- Work this Sheet with Sheets 12, 16 and 19.
- Apply Epoxy Bonding Compound to All Existing/New Concrete Interfaces.
- Concrete Cover for Reinforcing Bars:
  - Deck/Sidewalk Top Bars 2"
  - Deck/Sidewalk Bottom Bars 1 1/2"
  - End and Side Cover 2"
- All Existing Longitudinal Reinforcing Bars to Remain Intact. Do not Cut or Otherwise Damage Remaining Bars. Transverse Bars to Remain are Noted on Plan.
- For Sections A-A, B-B and C-C See Sheet 12.

REVISIONS

PREL. TRACING J.P. Bartholomay DESIGN J. A. Prybella CHKD. J. A. Prybella

BR. 1-687	CONTRACT	COUNTY	FEDERAL AID PROJECT No	SHEET No	TOTAL SHEETS
	89-074-05	NEW CASTLE	BHM-1179(3)	14	52

PIERS 3S, 2S, & 2N JOINT SYSTEM WITH ELASTOMERIC CONCRETE

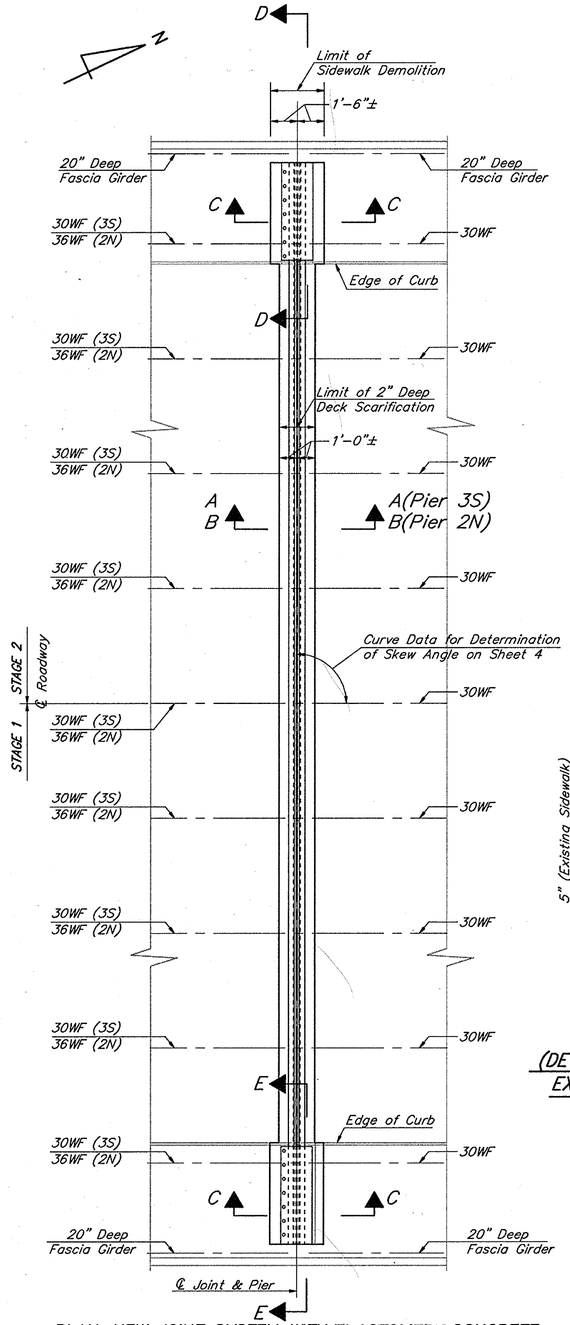

PLAN-NEW JOINT SYSTEM WITH ELASTOMERIC CONCRETE
PIERS 3S & 2N AS SHOWN
PIER 2S OPPOSITE HAND OF PIER 2N EXCEPT SKEW ANGLE

Scale: 1/4"=1'-0"
(See Sheet 3 for Roadway Cross-Section)

Note:
Existing Joint at Same Location as New Joint.
For Details of Existing Joint and Demolition
See Detail A, Detail B and Detail C.

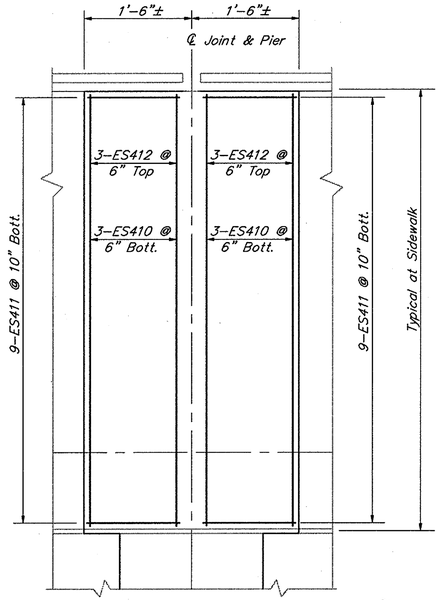

NEW SIDEWALK SLAB REINFORCEMENT

Scale: 1"=1'-0"

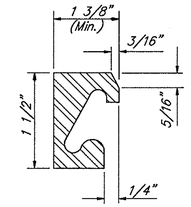

STEEL EXTRUSION DETAIL F

Scale: N.T.S.

Note: This Extrusion Applies at Joint System with Elastomeric Concrete Only.

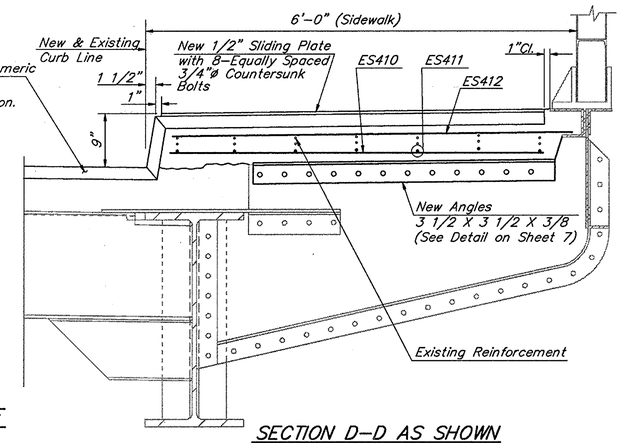

SECTION D-D AS SHOWN
SECTION E-E OPPOSITE HAND
SIDEWALK ELEVATION (NEW JOINT)

Scale: 1"=1'-0"

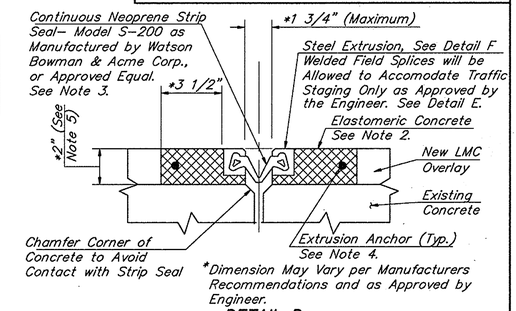

*Dimension May Vary per Manufacturers Recommendations and as Approved by Engineer.

DETAIL D
NEW JOINT SYSTEM WITH ELASTOMERIC CONCRETE
(ITEM 605604) Scale: 3"=1'-0"

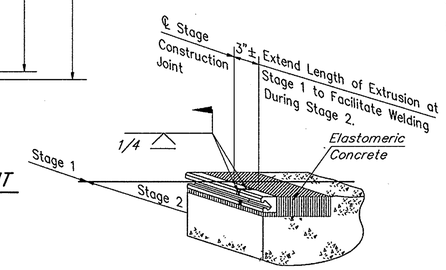

Note: All Welds shall be Ground Smooth and Field Painted in Accordance with Section 605 of the Standard Specifications. Payment is Incidental to Item 605604.

EXTRUSION SPLICE DETAIL E

N.T.S.

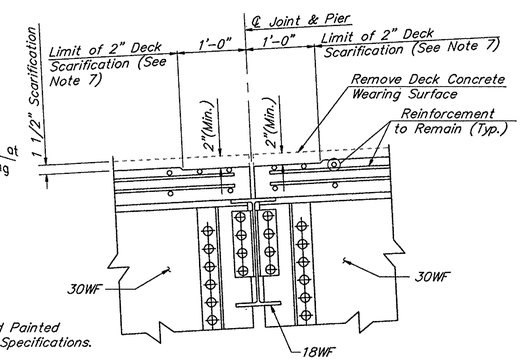

DETAIL B
(DETAIL SHOWS SAME LOCATION AS SECTION A-A)
PIER 3S
EXISTING DECK JOINT AND DEMOLITION DETAIL

Scale: 1"=1'-0"

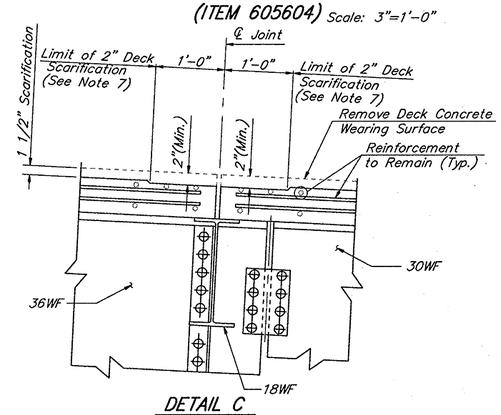

DETAIL C
(DETAIL SHOWS SAME LOCATION AS SECTION B-B)
PIER 2N AS SHOWN & PIER 2S OPPOSITE HAND
EXISTING DECK JOINT AND DEMOLITION DETAIL

Scale: 1"=1'-0"

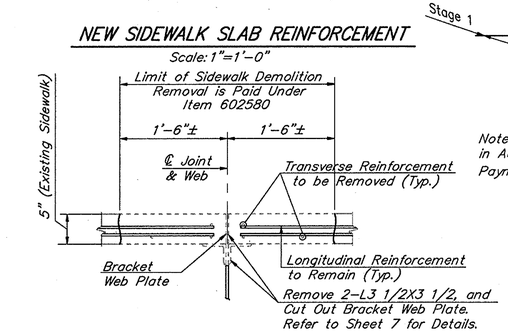

DETAIL A
(DETAIL SHOWS SAME LOCATION AS SECTION C-C)
EXISTING SIDEWALK JOINT AND DEMOLITION DETAIL

Scale: 1"=1'-0"

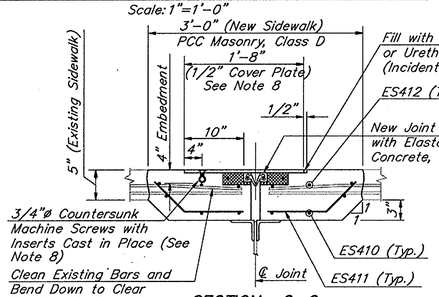

SECTION C-C
JOINT SYSTEM AT SIDEWALK

Scale: 1"=1'-0"

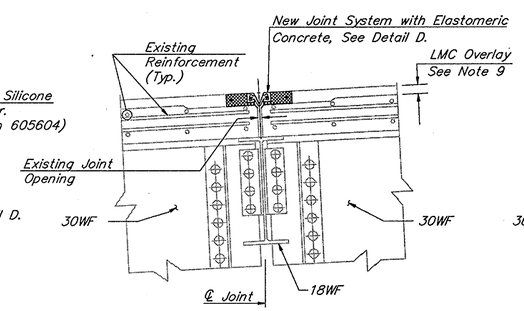

SECTION A-A
PIER 3S
JOINT SYSTEM AT ROADWAY

Scale: 1"=1'-0"

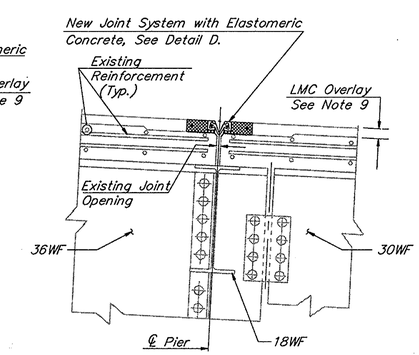

SECTION B-B
PIER 2N AS SHOWN & PIER 2S OPPOSITE HAND
JOINT SYSTEM AT ROADWAY

Scale: 1"=1'-0"

NOTES:

1. All New PCC Masonry shall be Class D (Item 602013).
2. The Elastomeric Concrete shall be Provided as Recommended by the Manufacturer of the Joint System and as Approved by the Department. Furnishing and Placement is Incidental to Item 605604.
3. The Continuous Neoprene Strip Seal of the Joint System with Elastomeric Concrete shall be Capable of Expanding to 2" and Shall be Installed per the Manufacturer's Recommendations. Splicing the Strip Seal is not Permitted.
4. The Extrusion Anchors shall be Provided as per the Manufacturer's Recommendations. Furnishing and Placement is Incidental to Item 605604.
5. At the Sidewalks, the Bottom of the Elastomeric Concrete will be 2 1/2" below the Finished Sidewalk Surface to Allow for the 1/2" Thick Sidewalk Cover Plate.
6. Apply an Approved Epoxy Bonding Compound to All Existing/New Concrete Interfaces. Payment is Incidental to Item 602013.
7. The Additional Scarification Depth Specified Locally Along the Joint System is Incidental to Item 501501.
8. The Countersunk Machine Screws used for Mounting the Sidewalk Cover Plate shall be Placed on the Higher Side of the Dam. The Installation of the 1/2" Cover Plate, Including the Furnishing of All Materials, is Paid Under Item 605001.
9. Payment for the Additional 1/2" Thickness of LMC at the Deck Joint is Incidental to Items 602543 & 602544.

REVISIONS

PREL. TRACING T. A. Marks DESIGN W. M. Ahola CHKD. W. M. Ahola

BR. 1-687	CONTRACT	COUNTY	FEDERAL AID PROJECT No	SHEET No	TOTAL SHEETS
	89-074-05	NEW CASTLE	BHM-1179(3)	15	52

BASCULE PIER DECK DETAILS

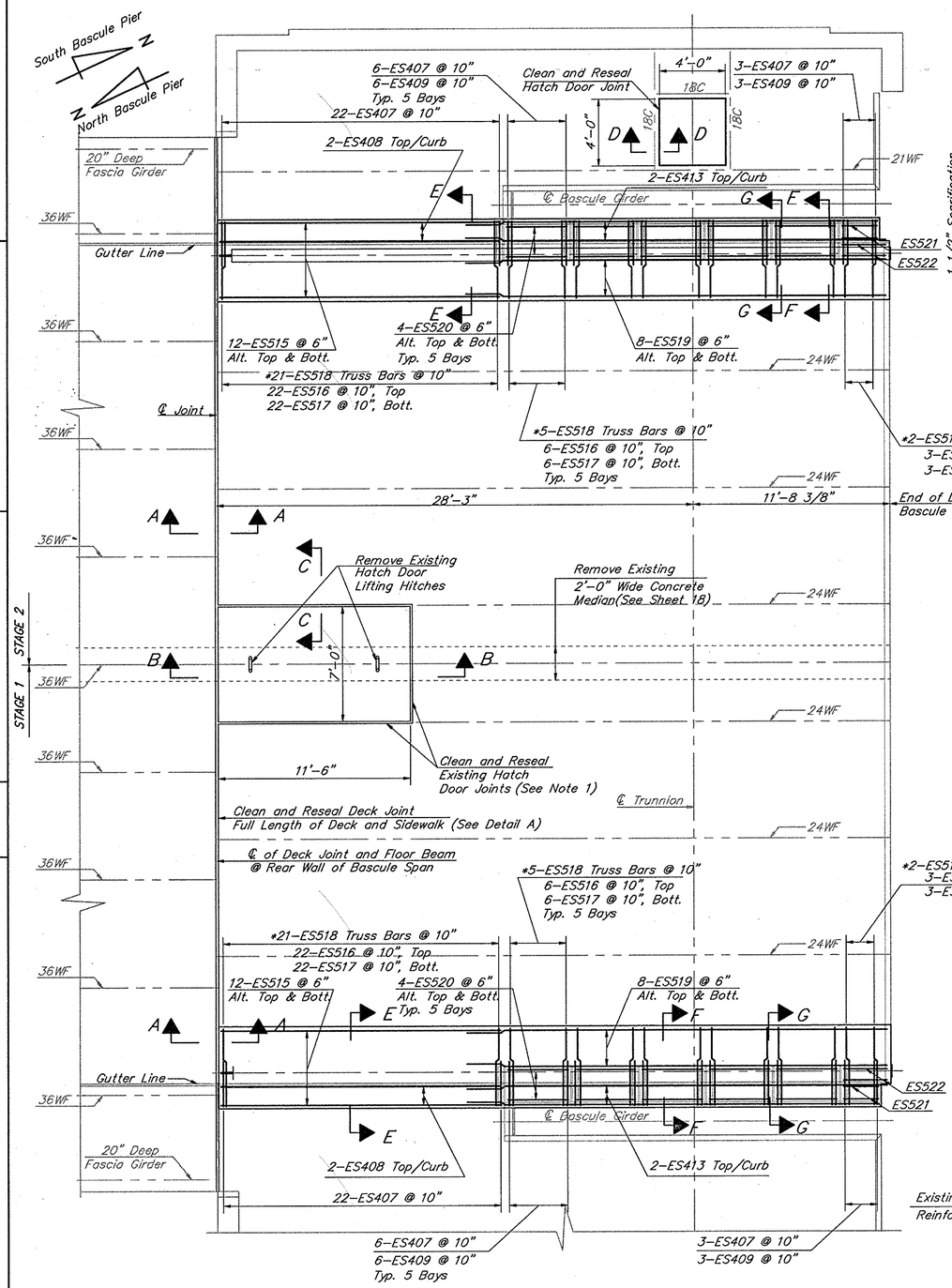

BASCULE PIER SPANS – PARTIAL PLAN

Scale: 1/4"=1'-0"

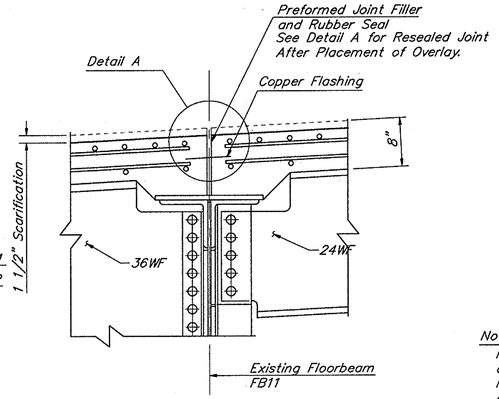

SECTION A-A
EXISTING JOINT SEAL

Scale: 1"=1'-0"

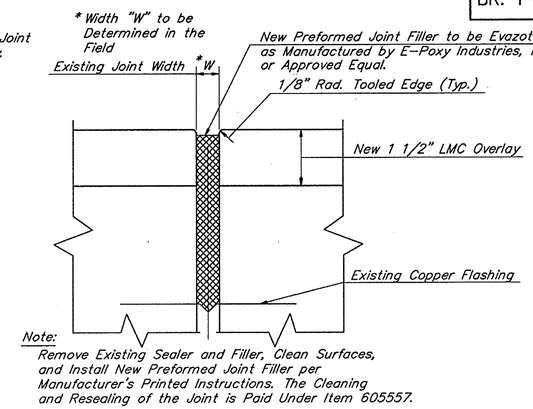

Note:
Remove Existing Sealer and Filler, Clean Surfaces, and Install New Preformed Joint Filler per Manufacturer's Printed Instructions. The Cleaning and Resealing of the Joint is Paid Under Item 605557.

DETAIL A

N.T.S.

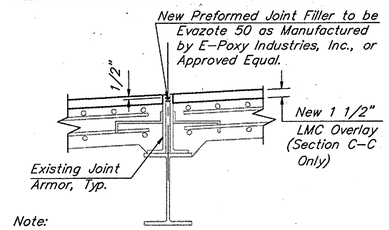

Note:
Remove Existing Sealer and Filler, Clean Surfaces, and Install New Preformed Joint Filler as Shown. Cleaning and Resealing the Joint is Paid Under Item 605557.

SECTION C-C (AS SHOWN)
TYP. AROUND 11'-6 x 7' HATCH
SECTION D-D (SIMILAR)
TYP. AROUND 4' x 4' HATCH

Scale: 1"=1'-0"

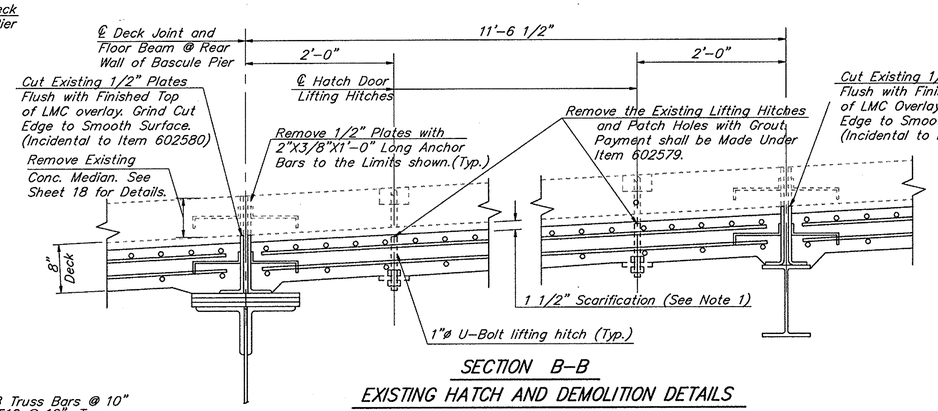

SECTION B-B
EXISTING HATCH AND DEMOLITION DETAILS

Scale: 1"=1'-0"

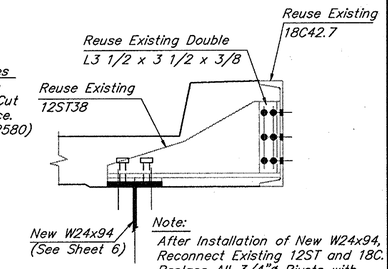

Note:
After Installation of New W24x94, Reconnect Existing 12ST and 18C. Replace All 3/4"ø Rivets with 1"ø H.S. Bolts.

SECTION G-G

Scale: 1"=1'-0"

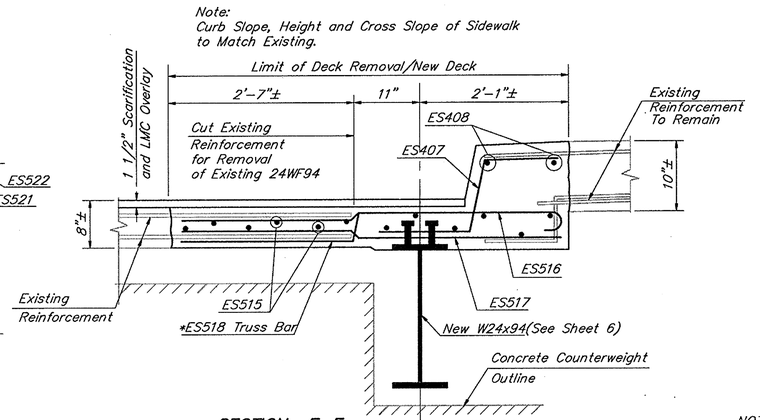

SECTION E-E
NEW DECK REINFORCEMENT

Scale: 1"=1'-0"

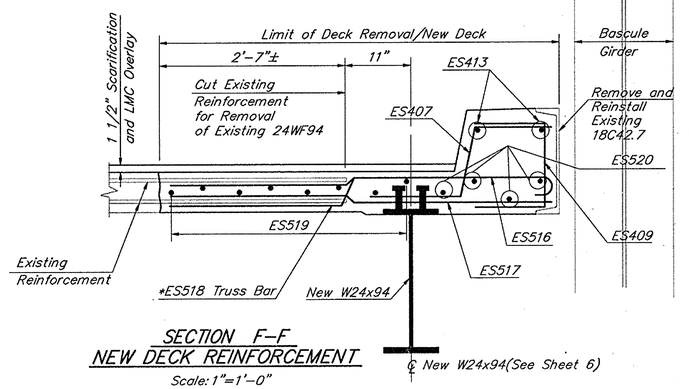

SECTION F-F
NEW DECK REINFORCEMENT

Scale: 1"=1'-0"

NOTES:
1. During Scarification care should be taken not to Damage Hatch Armoring.
2. "*" ES518 Bars spaced between ES516 & ES517.
3. Removal, other than Scarification, is Paid Under Item 602580.

REVISIONS

PREL. TRACING T. A. Marks DESIGN W. M. Ahola CHKD. W. M. Ahola

BR. 1-687	CONTRACT	COUNTY	FEDERAL AID PROJECT No	SHEET No.	TOTAL SHEETS
	89-074-05	NEW CASTLE	BHM-1179(3)	16	52

PREFABRICATED EXPANSION JOINT SYSTEM DETAILS

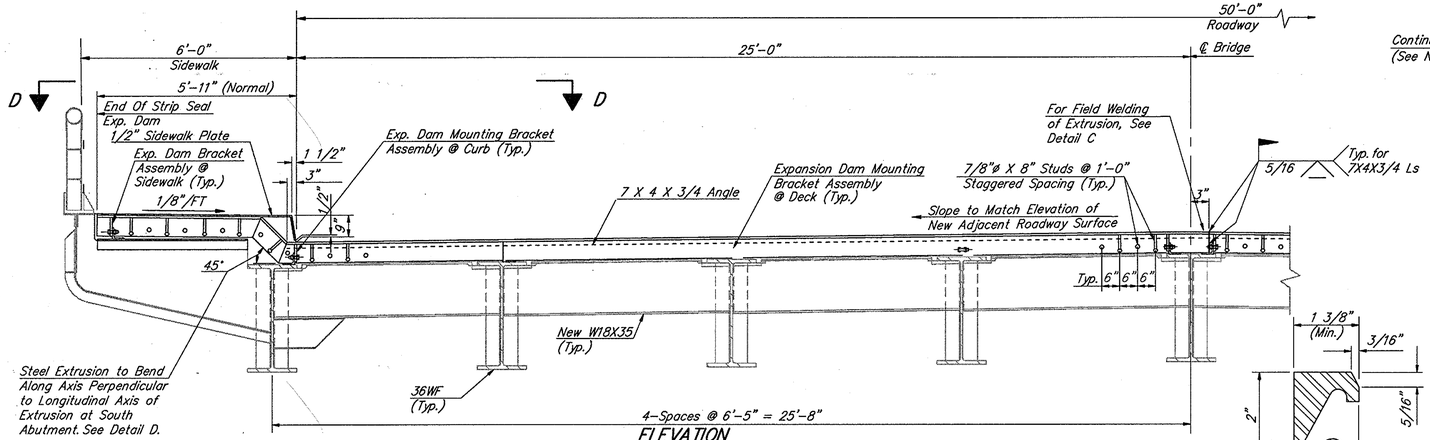

ELEVATION
TYPICAL PREFABRICATED EXPANSION JOINT SYSTEM EAST HALF SHOWN; WEST HALF OPPOSITE
Scale: 1/2" = 1'-0"

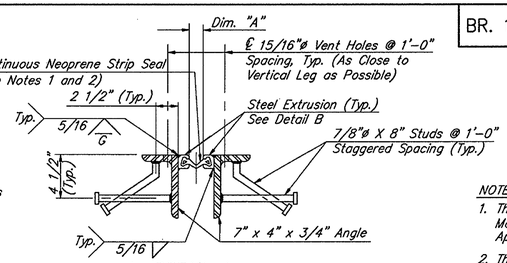

DETAIL A
PREFABRICATED EXPANSION JOINT SYSTEM, 3" (Item 605511)
Scale: 1 1/2"=1'-0"

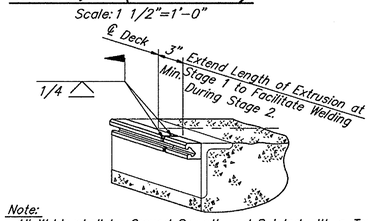

NOTES:
1. The Continuous Neoprene Strip Seal shall be Type S-300 as Manufactured by Watson-Bowman and Acme Corporation or Approved Equal.
2. The Continuous Neoprene Strip Seal of the Expansion Joint System shall be Capable of Expanding to 3" and shall be Installed Per the Manufacturer's Recommendations. Splicing the Strip Seal is not Permitted.
3. Furnishing the Materials and Installing the Mounting Bracket Assemblies is Included in the Cost for Item 605511.
4. Demolition Associated with the Installation of the Prefabricated Expansion Joint System is Paid Under Item 602580. Replacement Concrete shall be PCC Masonry, Class D.
5. The Countersunk Machine Screws Used for Mounting the Sidewalk Cover Plate shall be Placed on the Higher Side of the Dam.
6. The Installation of the 1/2" Sidewalk Cover Plate, Including the Furnishing of all Materials, is Paid Under Item 605001.
7. Refer to the Deck Joint Section of the Project Notes for Additional Information.

Note:
This Extrusion Applies to Prefabricated Expansion Joint System Only.

STEEL EXTRUSION DETAIL B
Scale: N.T.S.

Note:
All Welds shall be Ground Smooth and Painted with a Touch-up Paint Supplied by the Fusion Bonded Epoxy Coating Manufacturer. Payment is Incidental to Item 605511.

EXTRUSION SPLICE DETAIL C
N.T.S.

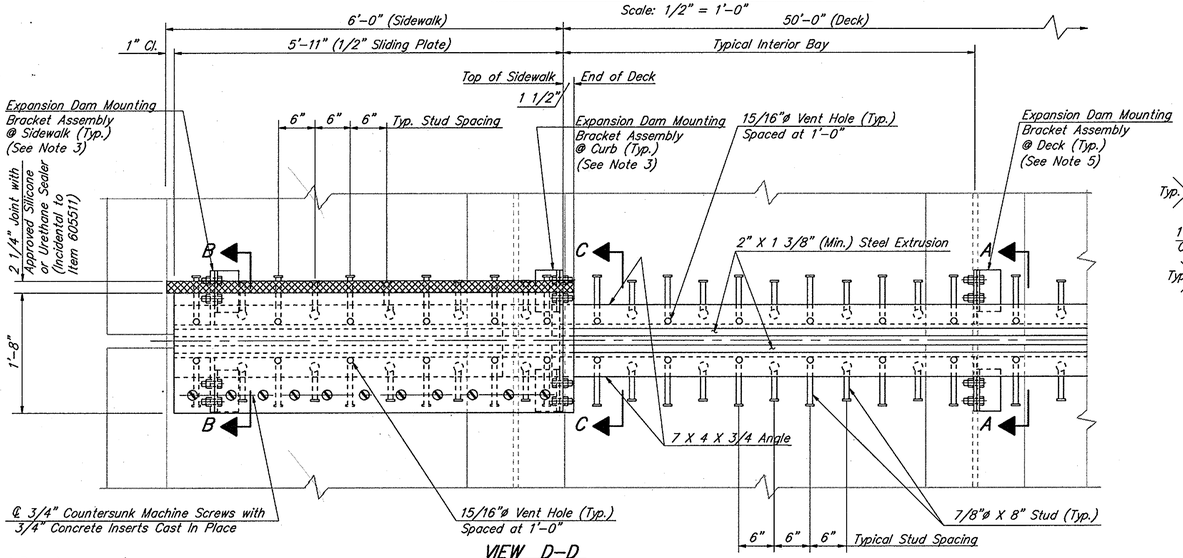

VIEW D-D
PARTIAL PLAN AT PIERS SHOWN ABUTMENTS SIMILAR
Scale: 1"=1'-0"

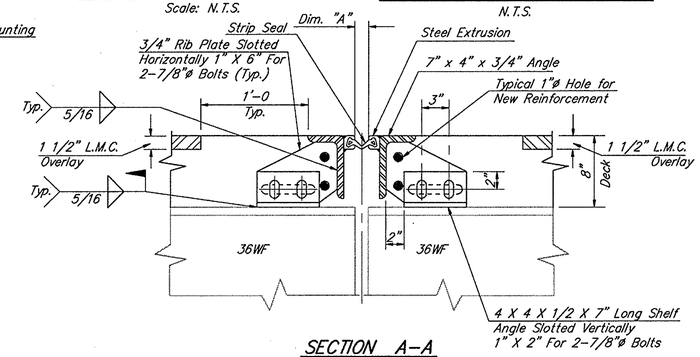

SECTION A-A
PIER SECTION THRU DECK JOINT @ MOUNTING BRACKET ASSEMBLY
Scale: 1 1/2"=1'-0"

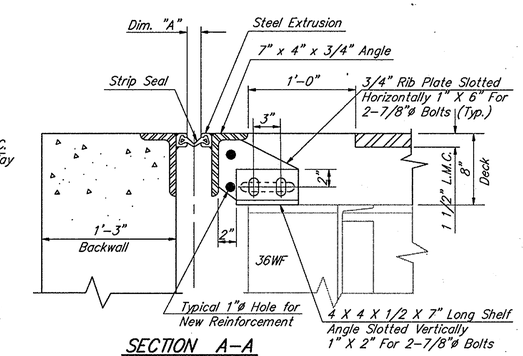

SECTION A-A
ABUTMENT SECTION THRU DECK JOINT @ MOUNTING BRACKET ASSEMBLY
Scale: 1 1/2"=1'-0"

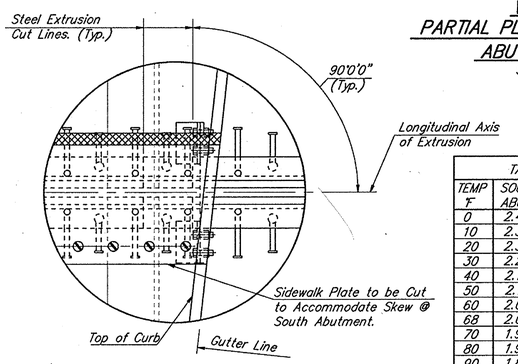

DETAIL D
PLAN VIEW @ SOUTH ABUTMENT
Scale: 1"=1'-0"

TABLE OF DIM. "A"			
TEMP °F	SOUTH ABUT	PIER 1S	PIER 1N	NORTH ABUT
0	2.43"	2.64"	2.64"	2.21"
10	2.37"	2.55"	2.55"	2.18"
20	2.30"	2.45"	2.45"	2.15"
30	2.24"	2.36"	2.36"	2.12"
40	2.18"	2.26"	2.26"	2.09"
50	2.11"	2.17"	2.17"	2.06"
60	2.05"	2.08"	2.08"	2.02"
68	2.00"	2.00"	2.00"	2.00"
70	1.99"	1.98"	1.98"	1.99"
80	1.92"	1.89"	1.89"	1.96"
90	1.86"	1.79"	1.79"	1.93"
100	1.80"	1.70"	1.70"	1.90"
110	1.73"	1.60"	1.60"	1.87"
120	1.67"	1.51"	1.51"	1.84"

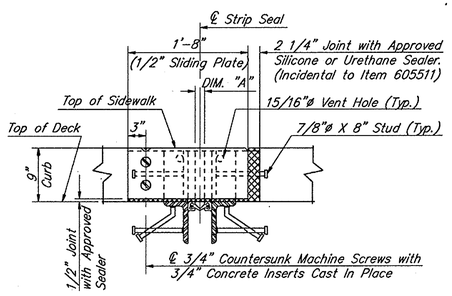

SECTION C-C
SECTION @ CURB
Scale: 1"=1'-0"

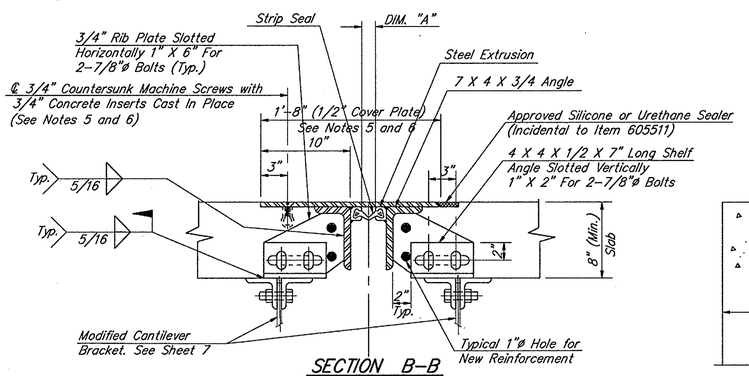

SECTION B-B
PIER SECTION THRU SIDEWALK JOINT @ BRACKET
Scale: 1 1/2"=1'-0"

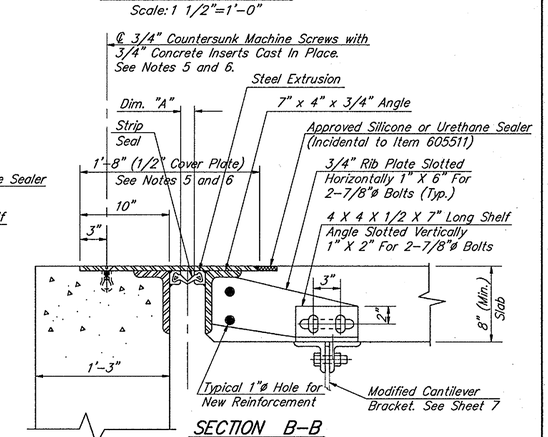

SECTION B-B
ABUTMENT SECTION THRU SIDEWALK JOINT @ BRACKET
Scale: 1 1/2"=1'-0"

REVISIONS

PREL. TRACING T. A. Marks DESIGN J. A. Prybella CHKD. J. A. Prybella

BR. 1-687	CONTRACT	COUNTY	FEDERAL AID PROJECT No	SHEET No	TOTAL SHEETS
	89-074-05	NEW CASTLE	BHM-1179(3)	17	52

MISCELLANEOUS DETAILS-1

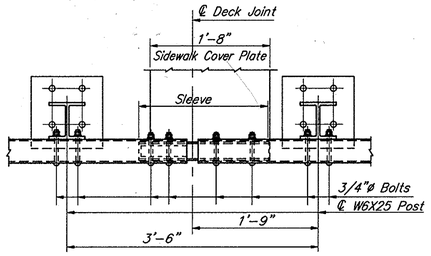

PLAN AT EXPANSION JOINTS

Scale: 1"=1'-0"

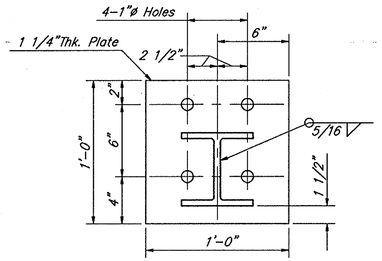

BASE PLATE

Scale: 2"=1'-0"

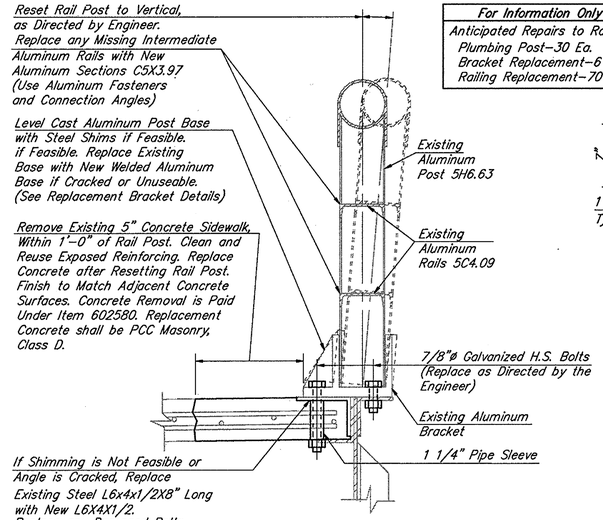

PEDESTRIAN RAILING REPAIR DETAIL

Scale: 1 1/2"=1'-0"

For Information Only

Anticipated Repairs to Railing:
Plumbing Post-30 Ea.
Bracket Replacement-6 Ea.
Railing Replacement-70 L.F.

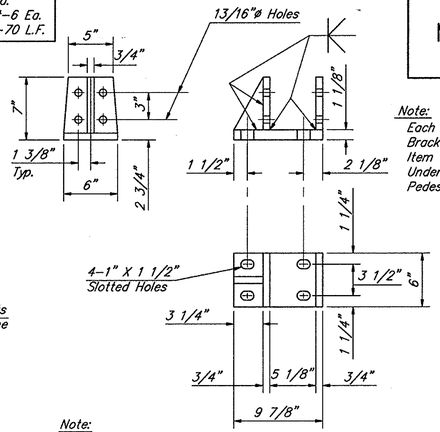

Note:
All New Bracket Material to be Aluminum Plates

Note:
Each Post that is Repaired as Indicated (Either with a New Bracket of by Resetting to Plumb) shall be Paid for Under Item 720561. Each Rail that is Repaired shall be Paid Under Item 720560. All Work Performed to the Existing Pedestrian Railing shall be Pre-Approved by the Engineer.

REPLACEMENT BRACKET DETAILS

Scale: 2"=1'-0"

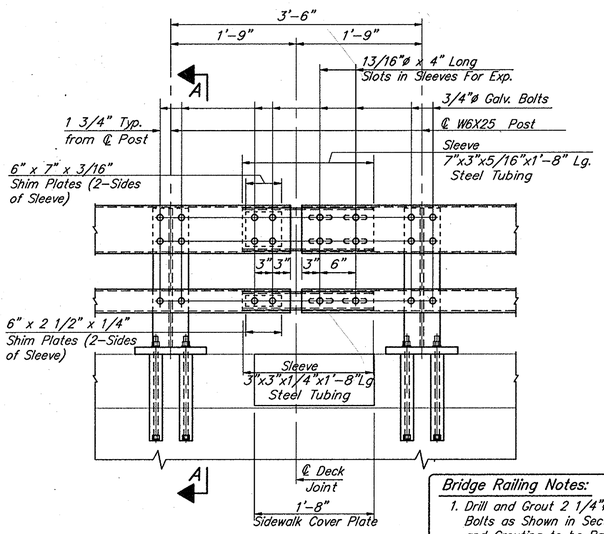

DETAIL "B"
EXPANSION PROVISIONS IN BRIDGE RAILING

Scale: 1"=1'-0"

Bridge Railing Notes:

1. Drill and Grout 2 1/4"ø Holes for Anchor Bolts as Shown in Section A-A. Drilling and Grouting to be Paid Under Item 602579.
2. All Components of the Bridge/Approach Railing Shall be Painted.
3. Post Spacing Shall not Exceed 6'-3".
4. All Materials, Labor and Equipment Necessary for the Installation of the Bridge Railing Shall be Paid Under Item 606501.
5. Steel Tubing to Conform to ASTM A500.

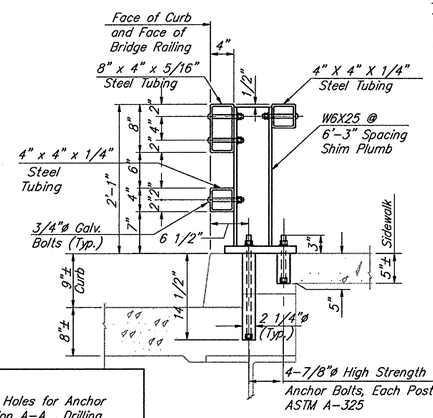

SECTION A-A

Scale: 1"=1'-0"

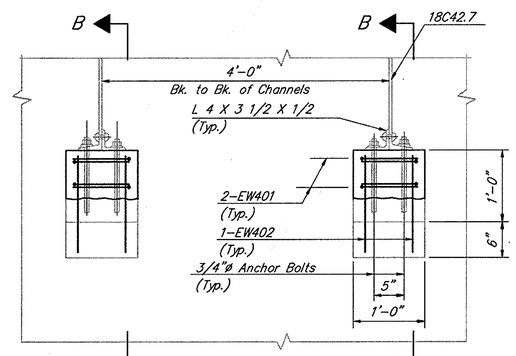

HAUNCH REPAIR FOR HATCH DOOR FRAMES UNDER SIDEWALKS OF BASCULE PIER SPAN

Scale: 1"=1'-0"

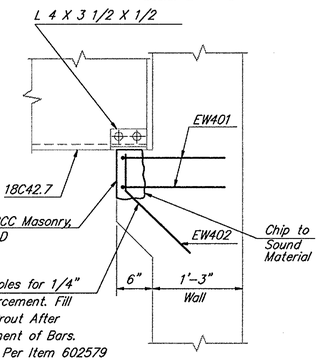

SECTION B-B
TOTAL-4 LOCATIONS

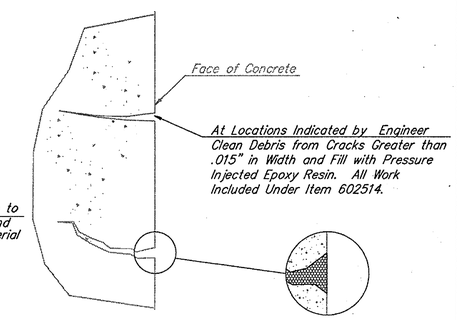

CONCRETE CRACK REPAIR

Scale: N.T.S.

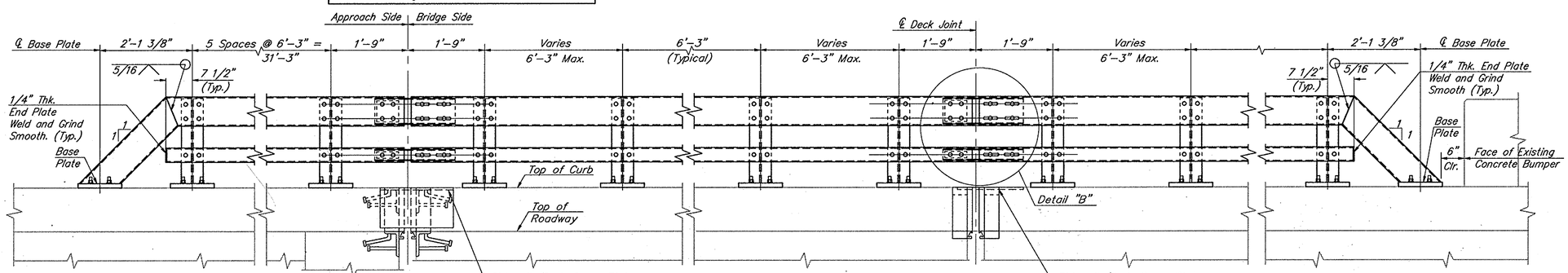

AT APPROACHES

AT ABUTMENTS AND PIERS 1S & 1N

AT PIERS 3S, 2S & 2N

AT BASCULE PIER

Note:
See Sheet 4 for Length and Location of New Bridge Railing

TYPICAL ELEVATION METAL BRIDGE RAILING

Scale: 3/4"=1'-0"

Note:
Deck Joint at Bascule Pier to be Filled with Approved Silicone or Urethane Sealer.

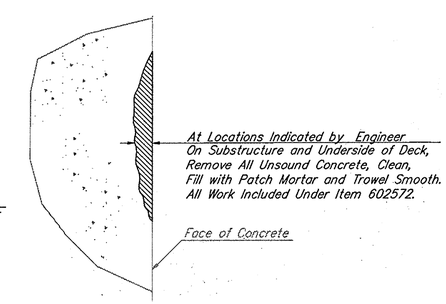

CONCRETE SPALL REPAIR

Scale: N.T.S.

REVISIONS

PREL TRACING T. A. Marks DESIGN W. M. Ahola CHKD. W. M. Ahola

BR. 1-687	CONTRACT	COUNTY	FEDERAL AID PROJECT No	SHEET No	TOTAL SHEETS
	89-074-05	NEW CASTLE	BHM-1179(3)	18	52

MISCELLANEOUS DETAILS-2

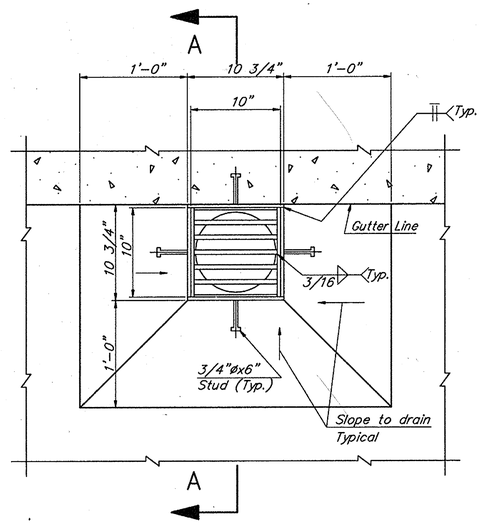

NEW SCUPPER DETAIL 4-REQUIRED

SCALE: 1 1/2" = 1'-0"

At Locations shown on Sheet 4, Remove Existing Scupper and Install New Scupper. Scupper to be Installed After Scarification and Before Placement of 1 1/2" LMC Overlay. Demolish Deck for Scupper Installation as shown on New Scupper Reinforcing Detail. Payment for New Scupper shall be Paid Under Item 605569.

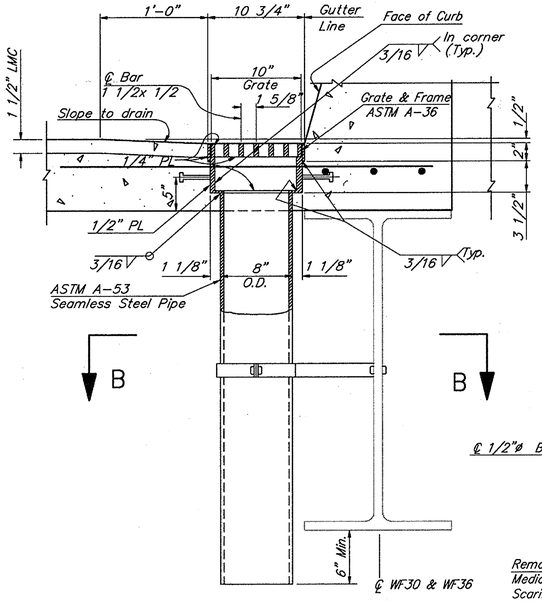

Note: Welded Frame, Removable Grate and Steel Pipe to be Hot Dip Galvanized per AASHTO M-111.

SECTION A-A

SCALE: 1 1/2" = 1'-0"

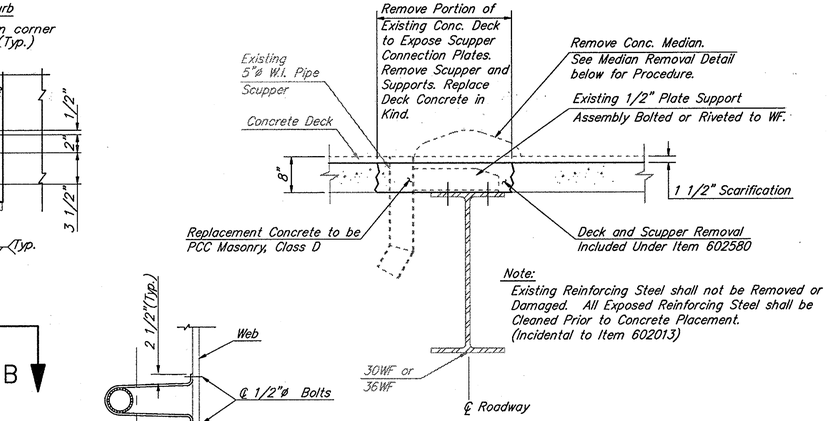

Note:
Existing Reinforcing Steel shall not be Removed or Damaged. All Exposed Reinforcing Steel shall be Cleaned Prior to Concrete Placement. (Incidental to Item 602013)

SCUPPER INFILL DETAIL 4-REQUIRED

SCALE: 3/4" = 1'-0"

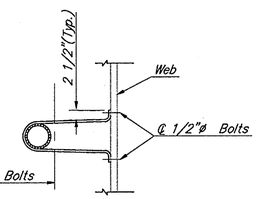

SECTION B-B

NTS

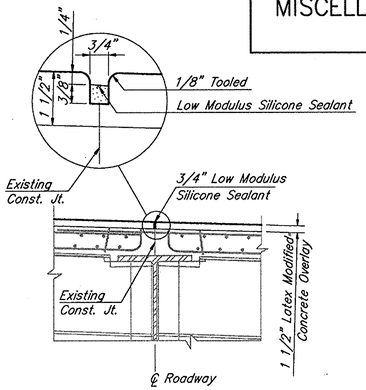

LONGITUDINAL DECK JOINT DETAIL

SCALE: 3/4" = 1'-0"

Typical along ℄ of Concrete Roadway between North and South Abutment. Installation of Joint Sealant shall be Paid Under Item 503502.

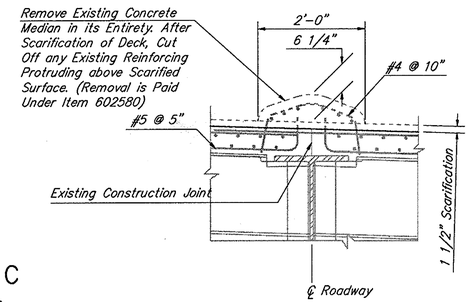

MEDIAN REMOVAL DETAIL

APPROACH SPANS SHOWN

APPROACH PAVEMENT AND BASCULE PIER SIMILAR

SCALE: 3/4" = 1'-0"

NOTES:

- Typical Along ℄ of Concrete Roadway Approach Pavement, Approach Spans and Bascule Piers. All Work on this Detail is Included in Item 602580.
- In Bituminous Concrete Approach Roadways Where the Median is Removed, Repave to Match Existing Adjacent Pavement Elevations. Use Only an Approved, Compacted, Graded Aggregate Base Course , a Bituminous Concrete Base Course and a Hot Mix, Hot Laid Bituminous Concrete Pavement, Type B, as Directed By the Engineer and in Accordance with Items 302003, 306001 and 401002, Respectively. See Section D-D on Sheet 7 for Details.

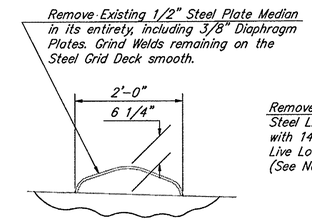

STEEL MEDIAN REMOVAL DETAIL

SCALE: 3/4" = 1'-0"

All Work shown on this Detail Incidental to Item 605591.

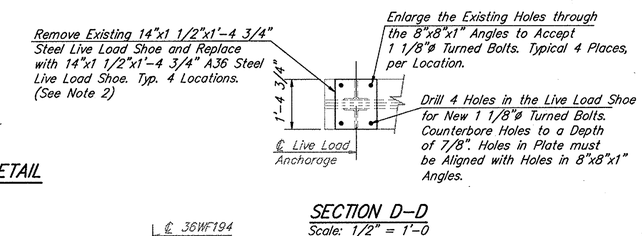

SECTION D-D

Scale: 1/2" = 1'-0

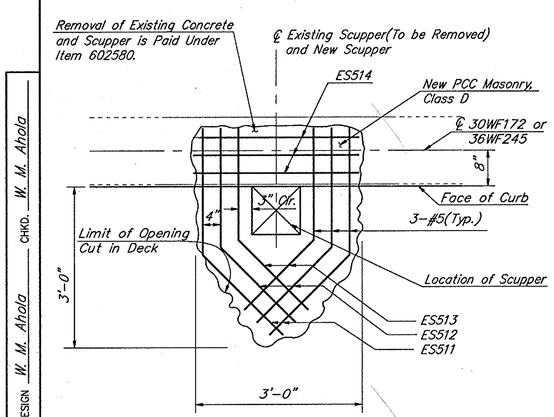

Note: All New Reinforcing must be Placed between the Existing Top and Bottom Reinforcing Mats. Only the Existing Reinforcing in the Area of the New 10 3/4" Square Scupper Box may be Cut.

NEW SCUPPER REINFORCING DETAIL 4-REQUIRED

SCALE: 3/4" = 1'-0"

See Sheet 4 for Locations

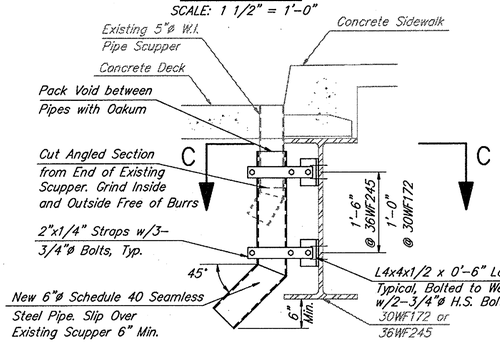

SCUPPER EXTENSION- 6 REQUIRED

SCALE: 3/4" = 1'-0"

See Sheet 4 for Locations
(This Repair shall be Paid Under Item 605001)

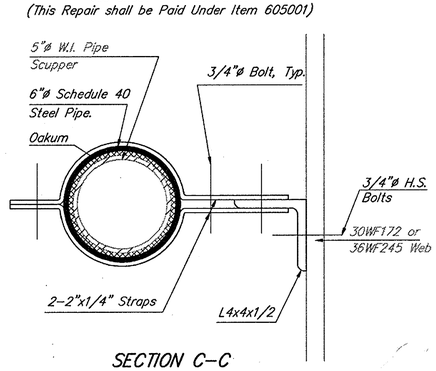

SECTION C-C

SCALE: 3" = 1'-0"

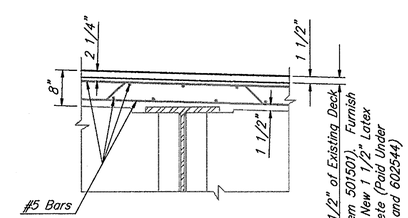

LMC OVERLAY AND DECK SCARIFICATION DETAIL

SCALE: 3/4" = 1'-0"

Typical on All Concrete Roadway Surfaces between North and South Abutments. Refer to Project Note No. 4 Under Portland Cement Concrete when Unsound Concrete is Found below the Depth of Scarification.

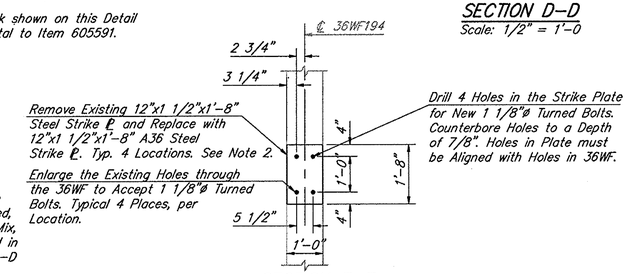

SECTION E-E

Scale: 1/2" = 1'-0

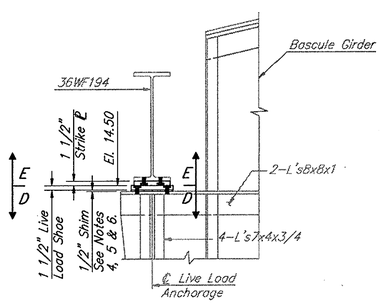

LIVE LOAD SHOE REHABILITATION 4-REQUIRED

Scale: 1/2" = 1'-0

LIVE LOAD SHOE REHABILITATION NOTES:

1. The Rehabilitation of the Live Load Shoes and Strike Plates must be Performed Before the Span Locks are Rehabilitated.
2. Refer to Sheet 5 for the Locations of the Live Load Shoe Rehabilitations.
3. All Materials and Labor Associated with the Rehabilitation of the Live Load Shoes and Strike Plates are Paid Under Item 605001.
4. The Contractor shall Provide a Total of 6 Shim Packs (Includes 2 Spares) for a 1/2" Nominal Shim. All Shims shall be Brass or Stainless Steel and Each Shim Pack shall Contain One (1) Solid 1/2" Shim and Four (4) Laminated 1/8" Shims with 0.003" Laminations. Furnishing and Installation of All Shims is Incidental to Item 605001.
5. Brass Shims, if used, shall Conform to MIL-S-22499B and Stainless Steel Shims shall be Fabricated from Type 302 Stainless Steel Conforming to MIL-S-5059 and MIL-S-22499, Comp 3, Type 1 or 2, Class 1 or 2.
6. The Contractor must Provide Full Contact between the Live Load Shoe and the Strike Plate and All Shims must be Full Bearing Shims.

REVISIONS

PREL. TRACING J.P. Bartholomay DESIGN W. M. Ahola CHKD. W. M. Ahola

BR. 1-687	CONTRACT	COUNTY	FEDERAL AID PROJECT No	SHEET No	TOTAL SHEETS
	89-074-05	NEW CASTLE	BHM-1179(3)	19	52

REINFORCEMENT SCHEDULE

MARK	SIZE	NO.	LENGTH	TYPE	A	B	C	D	E	R	REMARKS
APPROACH SLABS											
E AS501	5	53	27 '-4	10	25 '-8	1 '-8					
E AS502	5	54	27 '-8	10	26 '-0	1 '-8					
E AS503	5	50	30 '-2	10	28 '-6	1 '-8					
E AS504	5	28	4 '-4	Str.							
E AS505	5	44	5 '-4	Str.							
E AS506	5	44	8 '-10	12	3 '-0	2 '-10	3 '-0	2 '-0	2 '-0		
E AS507	5	28	3 '-8	Str.							
E AS508	5	53	4 '-0	Str.							
E AS509	5	61	25 '-4	10	23 '-8	1 '-8					
E AS601	6	189	4 '-10	11	3 '-6	1 '-4	1 '-0				
E AS701	7	53	25 '-8	Str.							
E AS702	7	61	23 '-8	Str.							
E AS703	7	44	10 '-9	8	1 '-4	3 '-8	1 '-7	4 '-2	0 '-6		
E AS801	8	54	26 '-0	Str.							
E AS802	8	50	28 '-6	Str.							
ABUTMENT BACKWALLS											
E A501	5	108	3 '-7	8	0 '-11	0 '-9	1 '-5	0 '-6	0 '-9		
E A502	5	104	7 '-10	4	3 '-6	0 '-10	3 '-6				
E A503	5	24	8 '-10	4	4 '-0	0 '-10	4 '-0				
E A504	5	20	5 '-1	8	0 '-11	2 '-3	1 '-5	0 '-6	0 '-9		
E A505	5	8	4 '-0	12	1 '-6	1 '-0	1 '-6	0 '-9	0 '-9		
E A506	5	8	5 '-6	Str.							
E A507	5	68	31 '-6	Str.							
E A508	5	8	5 '-0	Str.							
E A509	5	24	4 '-6	Str.							
E A601	6	104	5 '-0	Str.							
E A701	7	128	5 '-6	Str.							
DECK											
E S401	4	72	3 '-8	Str.							
E S402	4	132	5 '-6	Str.							
E S403	4	54	4 '-6	Str.							
E S404	4	90	2 '-6	Str.							
E S405			NOT USED								
E S406	4	57	5 '-2	12	2 '-0	0 '-9	2 '-0	0 '-2	0 '-9		
E S407	4	220	3 '-4	12	1 '-3	1 '-1	1 '-0	0 '-2	1 '-1		
E S408	4	8	16 '-6	Str.							
E S409	4	132	3 '-1	4	1 '-0	1 '-1	1 '-0				
E S410	4	42	5 '-2	Str.							
E S411	4	36	1 '-6	11	0 '-11	0 '-7	0 '-5				
E S412	4	108	5 '-6	Str.							
E S413	4	8	25 '-2	Str.							

MARK	SIZE	NO.	LENGTH	TYPE	A	B	C	D	E	R	REMARKS
E S501	5	48	6 '-0	Str.							
E S502	5	160	5 '-3	8	0 '-8	0 '-6	0 '-7	2 '-9	0 '-7		
E S503	5	144	3 '-6	Str.							
E S504	5	58	26 '-10	14	0 '-7	26 '-3	Include Mechanical Splicers on Threaded End				Thread 1 end 2"
E S505	5	52	26 '-3	Str.			Include Mechanical Splicers on Threaded End				Thread 1 end 2"
E S506	5	62	26 '-10	14	0 '-7	26 '-3					
E S507	5	56	26 '-3	Str.							
E S508	5	110	2 '-6	Str.							Thread 1 end 2"
E S509	5	246	4 '-6	Str.							
E S510	5	326	2 '-6	Str.							
E S511	5	8	3 '-9	11	2 '-0	1 '-9	1 '-3				
E S512	5	8	3 '-3	11	1 '-9	1 '-6	1 '-1				
E S513	5	8	3 '-0	11	1 '-7	1 '-5	1 '-0				
E S514	5	12	2 '-10	Str.							
E S515	5	48	16 '-6	Str.							
E S516	5	220	5 '-10	14	0 '-7	5 '-3					
E S517	5	220	5 '-3	Str.							
E S518	5	192	6 '-0	16	0 '-7	3 '-0	0 '-5		1 '-10		
E S519	5	32	25 '-5	Str.							
E S520	5	80	3 '-8	Str.							
E S521	5	8	2 '-1	Str.							
E S522	5	8	2 '-6	Str.							
HAUNCH REPAIR											
EW401	4	10	2 '-0	10	0 '-8	1 '4					
EW402	4	8	1 '-9	11	1 '-3	0 '-6	0 '-4				

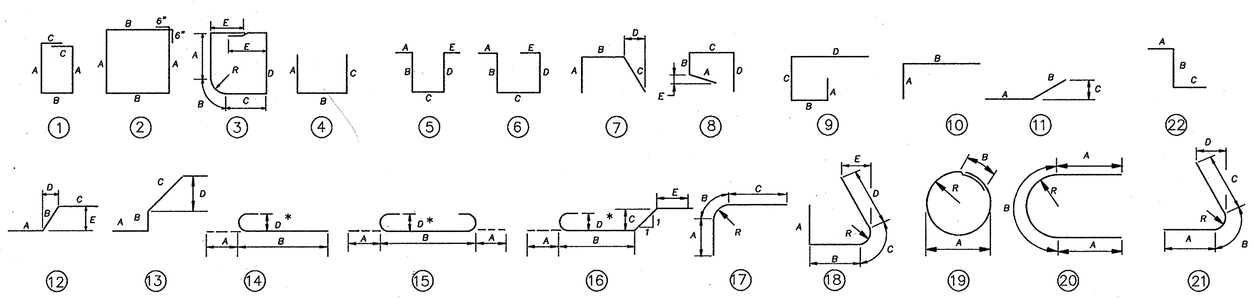

- FIGURES IN CIRCLES SHOW TYPES.
- "*" DIMENSION ON 180 HOOKS ARE SHOWN ONLY WHERE NECESSARY TO RESTRICT HOOK SIZE, OTHERWISE STANDARD HOOKS ARE TO BE USED.
- 'E' PREFIX INDICATES EPOXY COATED REINFORCEMENT BARS.
- Fy = 60 KSI

REVISIONS

PREL. TRACING J.P. Bartholomay DESIGN J. A. Prybella CHKD. J. A. Prybella

BR. 1–687	CONTRACT	COUNTY	FEDERAL AID PROJECT No	SHEET No	TOTAL SHEETS
	89–074–05	NEW CASTLE	BHM–1179(3)	20	52

TRAFFIC STAGING

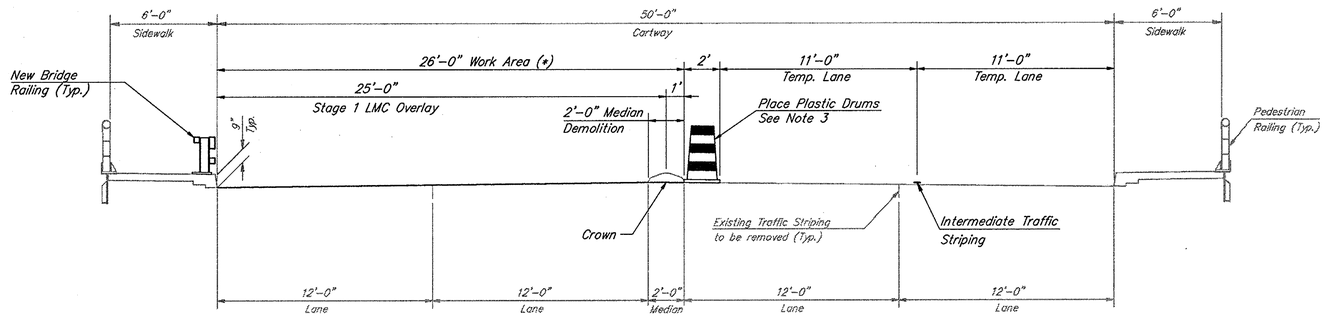

STAGE 1

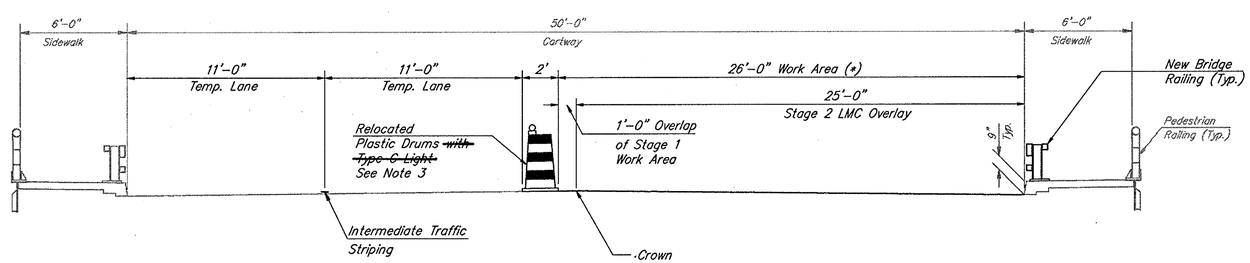

STAGE 2

(*) Limits of Work Area to include portions of the sidewalk as required to install the Strip Seal Dams, Bridge Railing and repair of the Pedestrian Railing.

NOTES:

1. All Sections are looking station ahead.
2. For Maintenance and Protection of Traffic Details see the Traffic Control Plan.
3. Flexible Guide Markers are to replace the Plastic Drums in the area of the movable bridge deck. The Markers are to be glued to the deck surface @ 10' o.c.
4. Removal of Intermediate and Existing Traffic Striping shall be paid for under Pay Item 748501.
5. Existing and Intermediate Traffic Striping will be destroyed by the Proposed Construction on the Bridge. The Contractor is directed to remove the remaining portions of this striping on the approaches where it is in conflict with other Traffic Striping.
6. Pay Item 748023 – INTERMEDIATE MARKINGS, PAINT, 4" includes supplying, placing, and maintaining the Intermediate Traffic Striping during the various Construction Stages as shown on the plans.

TRAFFIC CONTROL GENERAL NOTES:

1. Extreme caution must be used for work adjacent to an open lane. All responsibility for construction operations in these areas devolves on the Contractor.
2. Pay Item 720504 – PORTABLE PCC SAFETY BARRIER includes supplying, placing, maintaining, and removing the Precast Concrete Curb Safety Barrier. Openings to the Work Area must be sealed to prevent all vehicular and pedestrian access during non–working hours.
3. Type "C" lights or Reflective Panels shall be supplied on P.C.C. Safety Barrier at 50' intervals, six minimum, and are considered incidental to Pay Item 720504.
4. Pay Item 720506 – RELOCATE PORTABLE PCC SAFETY BARRIER includes moving, maintaining, and removing the previously placed Portable PCC Safety Barrier to a new location.
5. Pay Item 720540 – DELINEATORS includes supplying, placing, relocating, and removal of the Flexible Guide Markers.
6. Pay Item 720527 – PLASTIC DRUMS includes supplying, placing, relocating, and maintaining the Plastic Drums supporting the various Warning Lights as indicated on the plans.
7. Pay Item 743003 – ARROW PANELS, TYPE C includes supplying, placing, relocating, and maintaining the Arrow Panels at the locations indicated on the plans.
8. Pay Item 743504 – WARNING SIGNS includes supplying the sign and support system and maintaining, relocating, and removing the signs and supports as indicated on the plans. The Sign support systems shall be approved by the Engineer prior to construction.
9. The Contractor shall cover with a suitable material or remove all existing or temporary traffic signs which are in conflict with the current Construction Site conditions. This will be considered incidental to the Pay Item 743504.
10. Pay Item 743512 – FURNISH AND MAINTAIN TRUCK MOUNTED ATTENUATOR includes furnishing, erecting, operating and maintaining the Truck Mounted Attenuators.
11. Pay Items 743500, 743501, and ~~743502~~ – BARRICADE WARNING LIGHTS, TYPES A, B ~~& C~~ include supplying, installing, relocating, maintaining, and removing the Plastic Drum mounted Type "A", "B", and ~~"C"~~ Lights, respectively, as indicated on the plans.
12. Conflicting Existing or Intermediate Traffic Striping must be completely removed by approved methods prior to the placement of new traffic striping pattern. These measures are considered incidental to Pay Item 748501.
13. All Traffic Control materials and procedures shall be in accordance with the State of Delaware, Department of Transportation, "Traffic Controls for Streets and Highway Construction, Maintenance, Utility and Emergency Operations", June 1992 as ammended, hereafter referred to as the Traffic Control Manual.
14. One sidewalk on the bridge must remain operational at all times during construction.

REVISIONS

PREL. TRACING R.J. Ashley DESIGN J.A. Prybella CHKD. D.A. Nolan

BR. 1-687	CONTRACT	COUNTY	FEDERAL AID PROJECT No	SHEET No	TOTAL SHEETS
	89-074-05	NEW CASTLE	BHM-1179(3)	21	52

TRAFFIC CONTROL PLAN

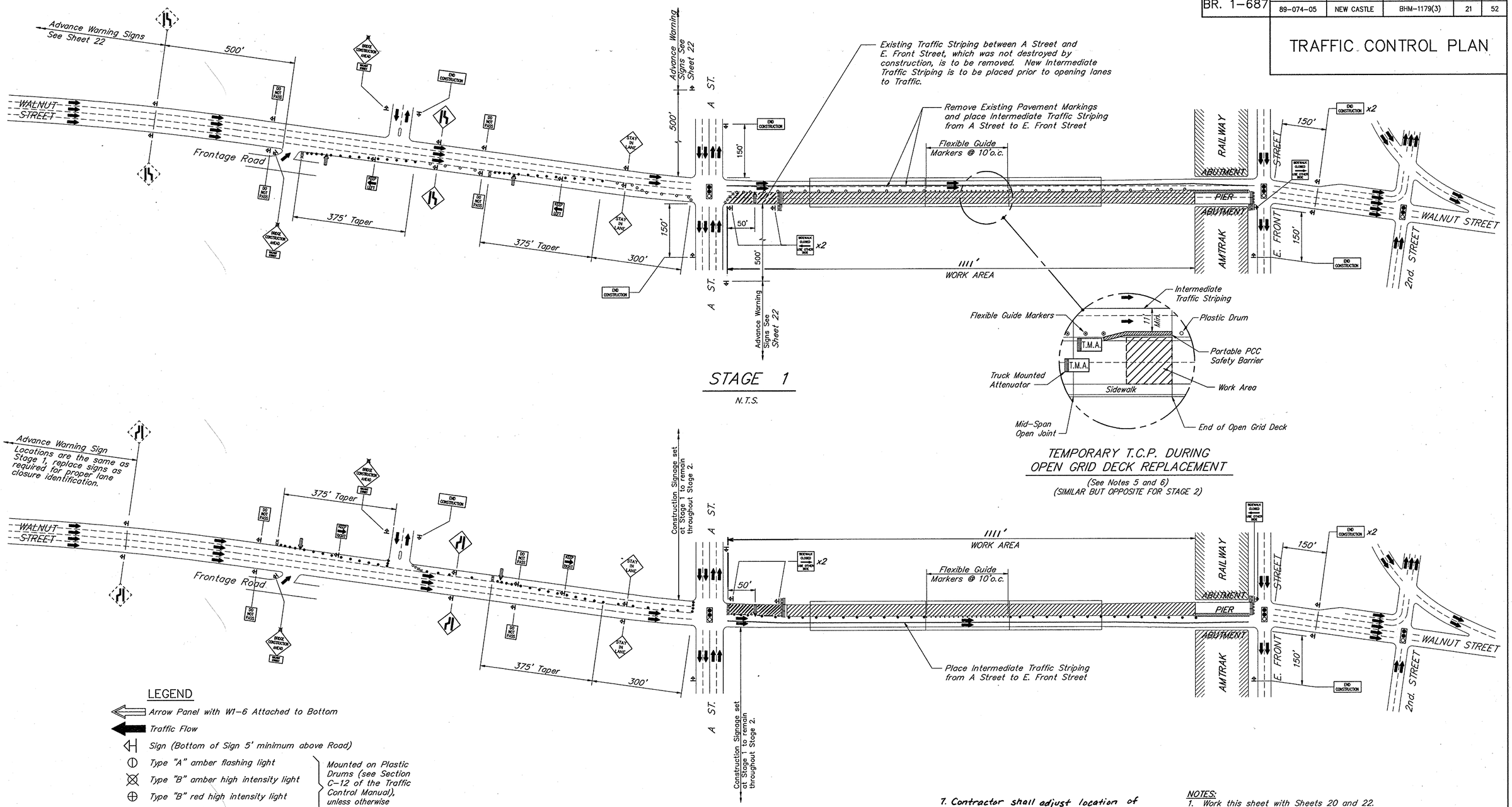

STAGE 1

N.T.S.

TEMPORARY T.C.P. DURING OPEN GRID DECK REPLACEMENT

(See Notes 5 and 6)
(SIMILAR BUT OPPOSITE FOR STAGE 2)

STAGE 2

N.T.S.

Advance Warning Sign Locations are the same as Stage 1, replace signs as required for proper lane closure identification.

LEGEND

- Arrow Panel with W1-6 Attached to Bottom
- Traffic Flow
- Sign (Bottom of Sign 5' minimum above Road)
- Type "A" amber flashing light
- Type "B" amber high intensity light
- Type "B" red high intensity light
- PLASTIC DRUM
- Plastic Drum
- Type III Barricade
- Portable Precast Concrete Curb Safety Barrier
- Work Area

Mounted on Plastic Drums (see Section C-12 of the Traffic Control Manual), unless otherwise indicated.

7. Contractor shall adjust location of Traffic Control Devices shown on these plans, as directed by the Engineer, to facilitate the rotomilling and paving shown on Sheet # 4. This work shall be considered incidental to Pay Item - 763500 - Maintenance of Traffic.

NOTES:

1. Work this sheet with Sheets 20 and 22.
2. For the Traffic Control GENERAL NOTES, see Sheet 20.
3. Overhead traffic signs must be modified by the Contractor to reflect changes in traffic patterns as directed by the Engineer. This work shall be considered incidental to Pay Item 763500 - MAINTENANCE OF TRAFFIC.
4. Advance Warning Signs placed in Stage 1 shall be maintained throughout construction.
5. Portable PCC Safety Barrier shall be relocated to an off site location after Stage 1 Open Grid Deck Replacement is completed. Prior to Stage 2 Open Grid Deck Replacement, relocate the Portable PCC Safety Barrier to the specified on site location.
6. The Truck Mounted Attenuators and Portable PCC Safety Barriers shall only be used during the Open Grid Deck Replacement.

REVISIONS

PREL. TRACING R.L. Ashley DESIGN D.A. Nolan CHKD. D.A. Nolan

BR. 1-687	CONTRACT	COUNTY	FEDERAL AID PROJECT No	SHEET No.	TOTAL SHEETS
	89-074-05	NEW CASTLE	BHM-1179(3)	22	52

TRAFFIC CONTROL DETAILS

STANDARD CONSTRUCTION SIGNS

SIGN DESIGN	① ② SIGN TYPE	① SIGN SIZE	NO. OF SIGNS NEEDED DURING EACH STAGE OF ROAD CONSTRUCTION 1	2	① SIGN DESIGN DETAILS
③ LANE CLOSED ③ ④	W20-5	48"x48"	③ 2-h,b 2-h,c	③ 2-g,b 2-g,c	PAGE 27
BRIDGE CONSTRUCTION ③ ④	W20-1	48"x48"	③ 2-a 2-b 4-d	③ 2-a 2-b 4-d	PAGE 23
	W1-6	48"x24"	3	3	PAGE 21
DO NOT PASS	R4-1	36"x48"	4	4	PAGE 16
KEEP RIGHT	R4-7a	36"x48"	–	2	PAGE 17
KEEP LEFT	R4-8a	36"x48"	2	–	PAGE 18
END CONSTRUCTION	G20-2	60"x24"	6	6	PAGE 45

SPECIAL SIGNS

	W4-2	48"x48"	–	4	–
	W4-2	48"x48"	4	–	–
SIDEWALK CLOSED USE OTHER SIDE SERIES C, Black on White	–	24"x36"	2	1	–
SIDEWALK CLOSED USE OTHER SIDE SERIES C, Black on White	–	24"x36"	1	2	–
4" STAY IN LANE 4" 7" 7" 7" SERIES D, Black on Orange	–	48"x48"	2	2	–
3 ½" WALNUT STREET 3" 3 ½" 7" 7" SERIES C, Black on Orange	–	36"x24"	8	8	–

TRAFFIC CONTROL DEVICES

DESCRIPTION	ITEM	UNIT	ESTIMATE OF QUANTITIES STAGE 1	STAGE 2	PROJECT TOTALS
Portable PCC Safety Barrier	720504	L.F.	72	–	72
Reloc. Port. PCC Safety Barrier	720506	L.F.	72	72	144
Delineators	720540	Each	19	19	19
Plastic Drums	720527	EA-DY	~~5015~~ 10920	~~6370~~ 11760	~~12385~~ 22680
Arrow Panel, Type C	743003	EA-DY	~~380~~ 360	~~380~~ 360	~~780~~ 720
Warning Signs, Stationary	743504	Each	44	44	59 (*)
Furnish & Maintain T.M.A.	743512	EA-DY	20	20	40
Temporary Barricade, Type III	743506	EA-DY	~~380~~ 720	~~380~~ 720	~~780~~ 1440
Bar. Warning Lights, Type A	743500	EA-DY	~~130~~ 240	~~260~~ 480	~~380~~ 720
Bar. Warning Lights, Type B	743501	EA-DY	~~1690~~ 3120	~~1820~~ 3360	~~3510~~ 6480 ⚠
~~Bar. Warning Lights, Type C~~	~~743502~~	~~EA-DY~~	~~1820~~	~~1810~~	~~3630~~
Intermediate Markings, Paint, 4"	748023	L.F.	1100	1100	2200
Removal of Pavement Striping	748501	L.F.	1200	–	1200

(*) Quantity reflects the total number of different signs from the Tables on this sheet.

PERMANENT SIGNS

SIGN DESIGN	⑤ ② SIGN TYPE	⑤ SIGN SIZE	QUANTITY	⑤ SIGN DESIGN DETAILS
Black on Yellow	Similar to W6-1	48"x48"	2	2-28
3" 500 FEET 2" 5" 5" 3" Black on Yellow	–	24"x18"	2	–

GENERAL NOTES:

1. Work this sheet with Sheets 20, 21 and 23.
2. Prior to beginning construction, Traffic Control Devices shall be placed where shown on the Plans or as directed by the Engineer.
3. When Construction Signs conflict with existing Signs, the existing Signs shall be covered. When Construction Signs are no longer required, they shall be removed. If they are temporarily not required, such as overnight, they shall either be temporarily removed or covered. Signs covered from view of the traveling public shall be completely covered with opaque material securely fastened so that it does not blow in the wind. Burlap shall not be used. This work shall be considered incidental to the Pay Item 743504 – WARNING SIGNS,
4. All Signs shall be erected in a manner to be approved by the Engineer, and shall be maintained so as to provide maximum visibility and legibility at all times. This work shall be paid for under Pay Item 743504 – WARNING SIGNS
5. Pay Item 743504 – WARNING SIGNS includes the Permanent Signs shown on Sheet 23.

NOTES FOR STANDARD CONSTRUCTION SIGNS:

① Reference is made to the Publication "Traffic Controls for Streets and Highway Construction, Maintenance, Utility and Emergency Operations" by the Delaware Department of Transportation, revised June 1992.
② All Signs will have a Reflective Quality Background and be fabricated from the material specified in section A-7 of the Publication "Traffic Controls for Streets and Highway Construction, Maintenance, Utility and Emergency Operations" by the Delaware Department of Transportation, revised June 1992.
③ Insert: a. 1500 FT b. 1000 FT c. 500 FT d. AHEAD e. ½ MILE f. 1 MILE g. LEFT h. RIGHT
④ One Type "B" Amber Light Must be Mounted on the first two Advance Warning Signs.
⑤ Reference is made to the Publication "Standard Highway Signs as Specified in the Manual on Uniform Traffic Control Devices" 1979 Revision 2, by the U.S. Department of Transportation, Federal Highway Administration.

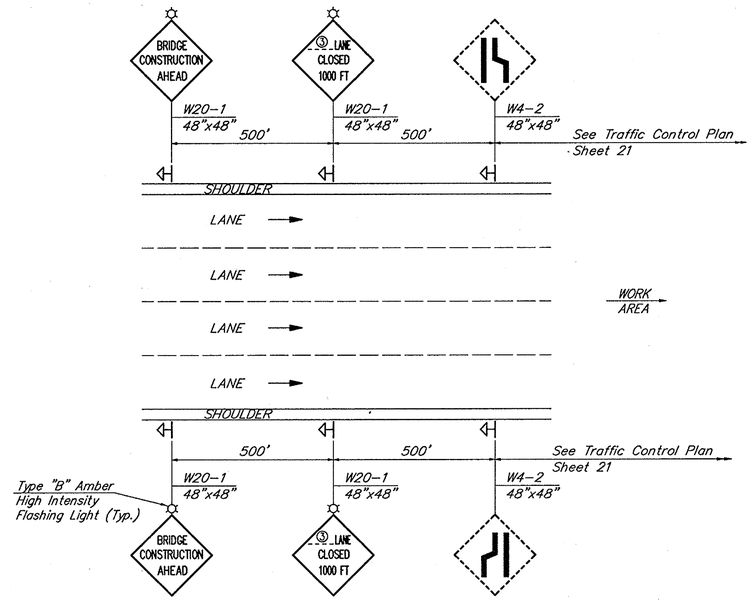

FOUR LANES – ONE WAY
(WALNUT STREET)

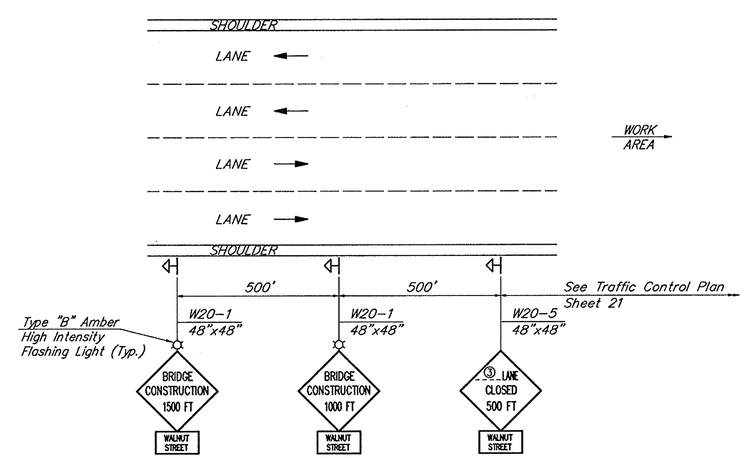

FOUR LANES – TWO WAY
(A STREET)

ADVANCE WARNING SIGNS
N.T.S.

REVISIONS
⚠ ADDENDUM - REVISED TRAFFIC QUANTITIES TO REFLECT INCREASE IN CALENDAR DAYS. 6/12/98 T.E.S.

PREL. R.J. Ashley TRACING DESIGN D.A. Nolan CHKD. D.A. Nolan

BR. 1-687	CONTRACT	COUNTY	FEDERAL AID PROJECT No	SHEET No	TOTAL SHEETS
	89-074-05	NEW CASTLE	BHM-1179(3)	23	52

TRAFFIC STRIPING AND SIGNING PLAN

3,345 L.F. 748506 PERMANENT PAVEMENT STRIPING, EPOXY RESIN PAINT, 4"
225 L.F. 748509 PERMANENT PAVEMENT STRIPING, EPOXY RESIN PAINT, 12"

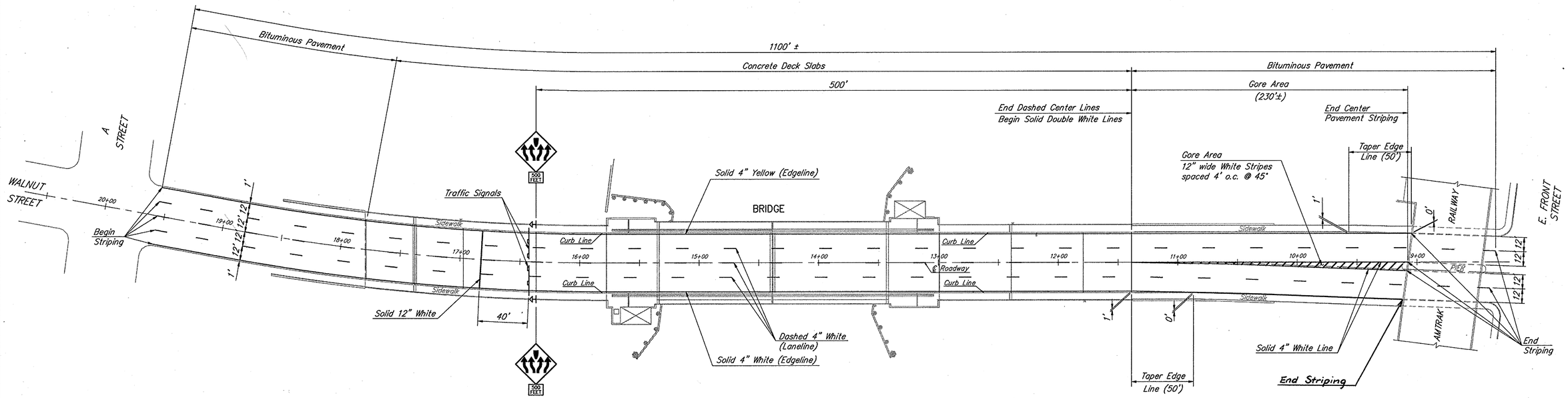

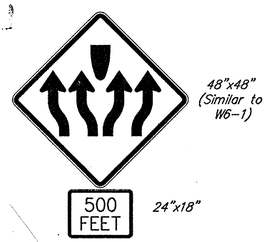

SERIES D, Black on Yellow

WARNING SIGN

N.T.S.

NOTES:

1. Traffic Striping in accordance with the publication "Manual on Uniform Traffic Control Devices for Streets and Highways" by the U.S. Department of Transportation, Federal Highway Administration, Washington, D.C., 1988, Part III – Markings.
2. For details of the traffic signing refer to the above referenced publication "Manual on Uniform Traffic Control Devices for Streets and Highways".
3. The traffic sign shown is similar to Standard Warning Signs W6-1.
4. All traffic stripes to be Permanent Pavement Striping, Epoxy Resin Paint.

REVISIONS

PREL. TRACING R.J. Ashley DESIGN D.A. Nolan CHKD. D.A. Nolan

BR. 1-687	CONTRACT	COUNTY	FEDERAL AID PROJECT No	SHEET No	TOTAL SHEETS
	89-074-05	NEW CASTLE	BHM-1179(3)	24	52

TRAFFIC SIGNAL AND GATE SUPPORTS

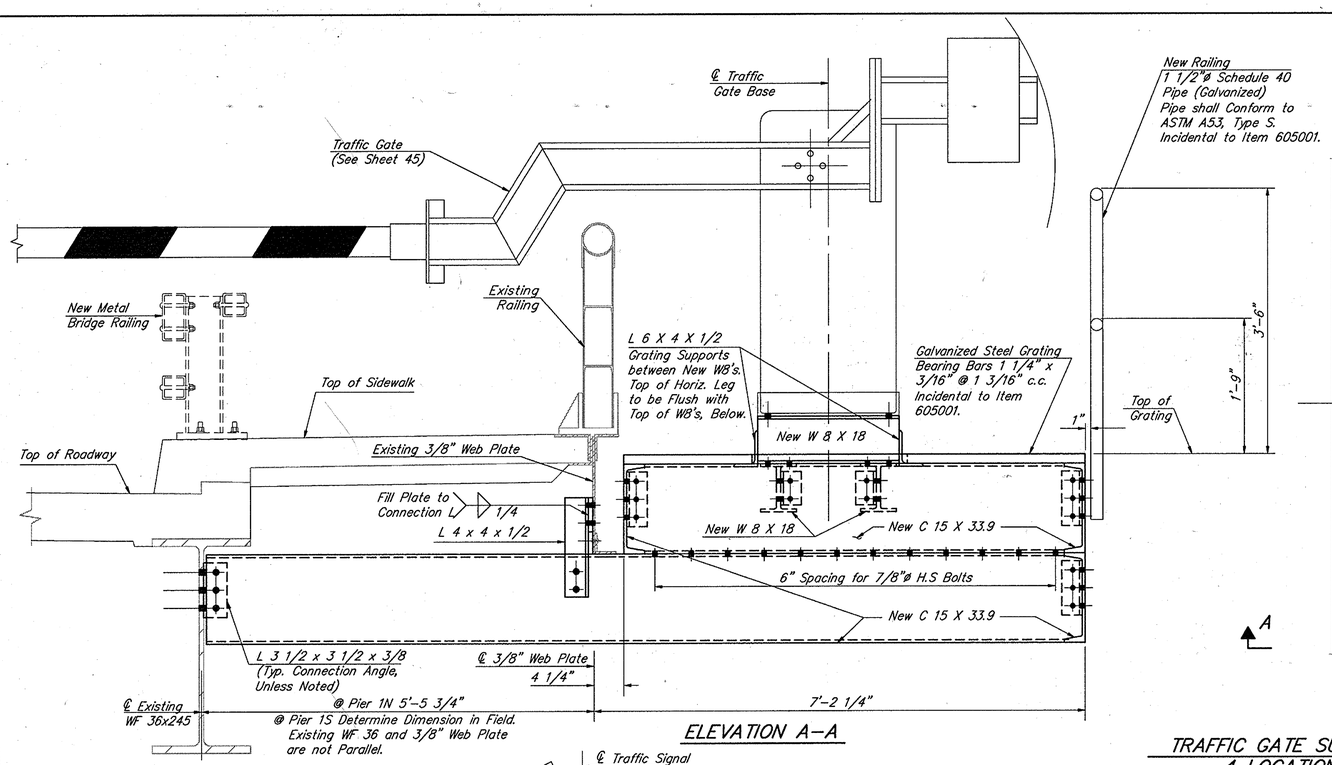

ELEVATION A-A

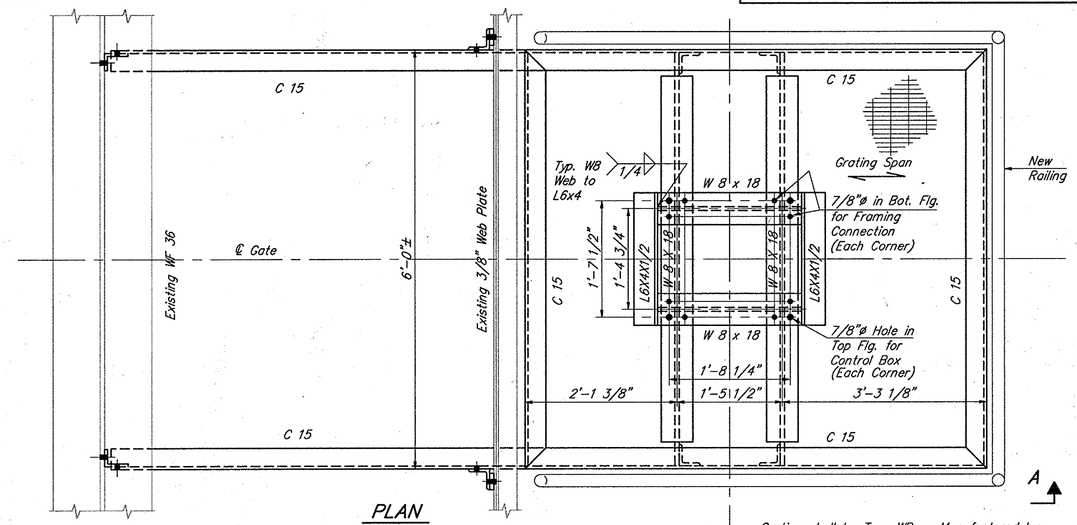

PLAN

Grating shall be Type WB as Manufactured by IKG Industries, 50-09 27th Street, Long Island City, New York, or Type GW-125, as Manufactured by McNichols Co., P.O. Box 30300, Tampa, Florida, or Approved Equal.

TRAFFIC GATE SUPPORT
4 LOCATIONS
1" = 1'-0"

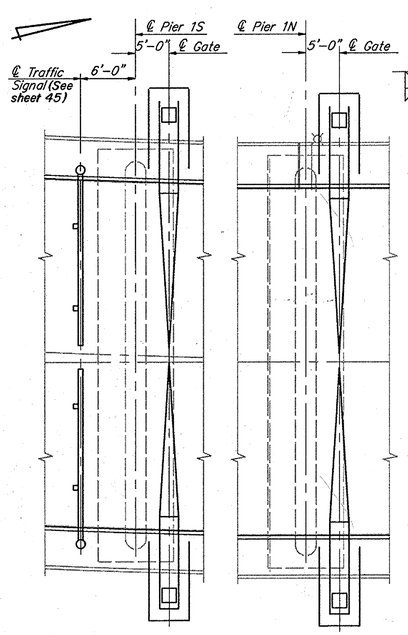

TRAFFIC GATES & TRAFFIC SIGNALS LOCATION PLAN
3/32" = 1'-0"

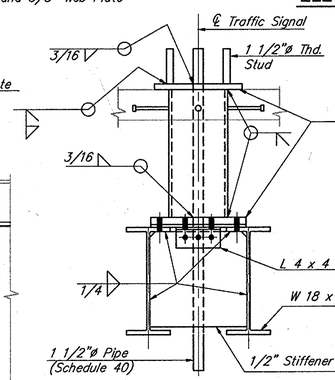

SECTION D-D

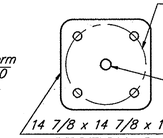

SECTION C-C

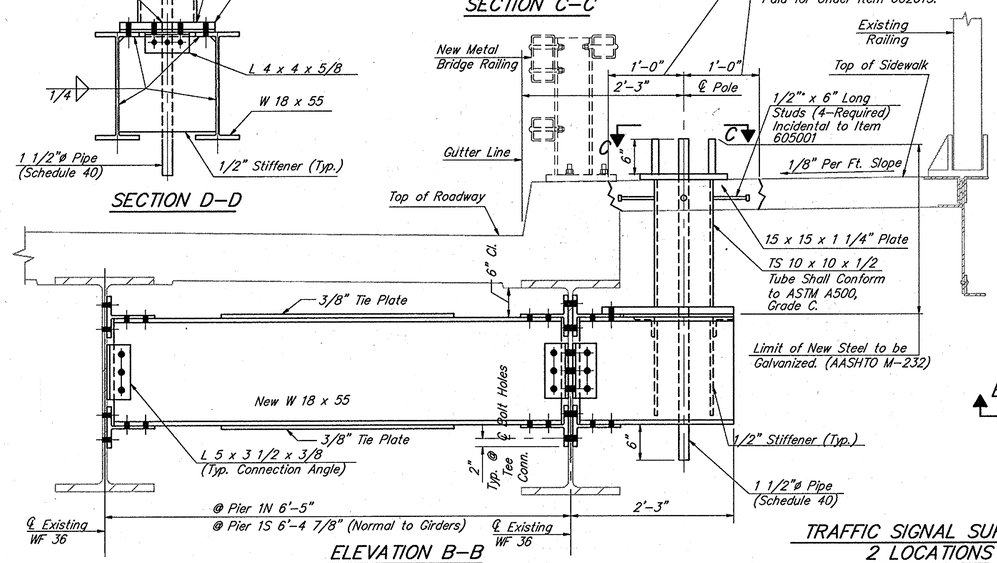

ELEVATION B-B

TRAFFIC SIGNAL SUPPORT
2 LOCATIONS
1" = 1'-0"

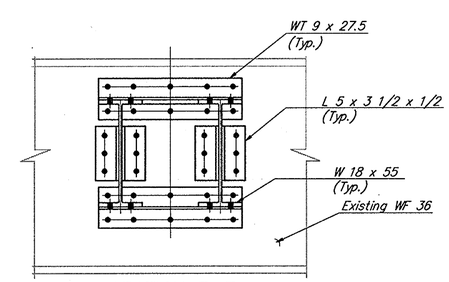

SECTION E-E

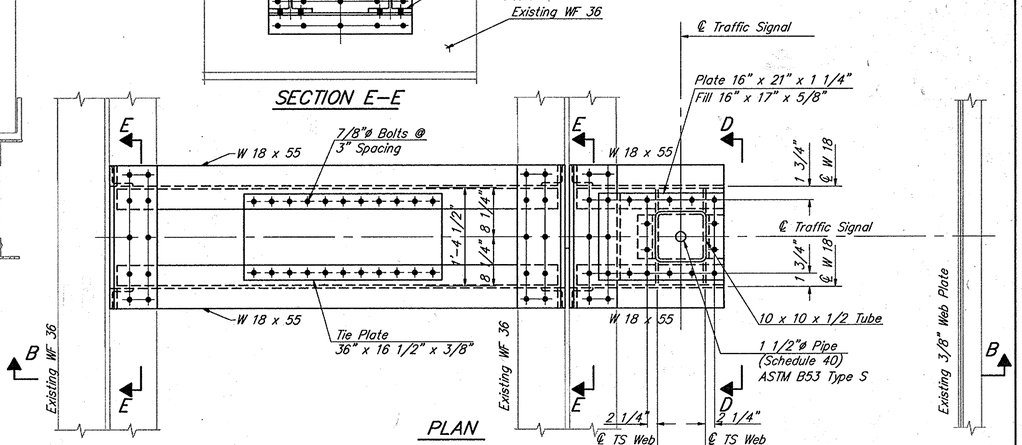

PLAN

NOTES:
Use 7/8"ø A-325 H.S. Bolts for Framing Connections.
All Work on this sheet, except for Class D Concrete and Concrete Removal, shall be paid for under Item 605001.

REVISIONS

PREL. TRACING T. A. Marks DESIGN W. M. Ahola CHKD. W. M. Ahola

RIGHT-OF-WAY SECTION
RECOMMENDED FOR APPROVAL
CHIEF, RIGHT-OF-WAY — DATE 18 Nov 1992
REVIEWED: TECHNICAL SERVICES ENGINEER — DATE Nov. 17, 1992

I Certify that all proposed Right-of-Way has been acquired in the name of THE STATE OF DELAWARE, and that these plans accurately depict the nature and extent of RIGHT-OF-WAY acquisition under this project.
"AS-ACQUIRED" PLANS — CHIEF, R/W — DATE 16 Aug 1996

Note: Any damage done to pavements, parking lots, curbs, gutters, etc. by Contractors operations in access areas shall be repaired or replaced at his sole expense.

BR. 1-687	CONTRACT	COUNTY	FEDERAL AID PROJECT No	SHEET No	TOTAL SHEETS
	89-074-05	NEW CASTLE	N/A	24A	52

RIGHT-OF-WAY PLAN

Revisions
1 - 4/6/93 T.E.G - MOVED T.C.E. AND CONST. ACCESS RT. FROM PARCEL 2-L TO PARCEL 3-R.

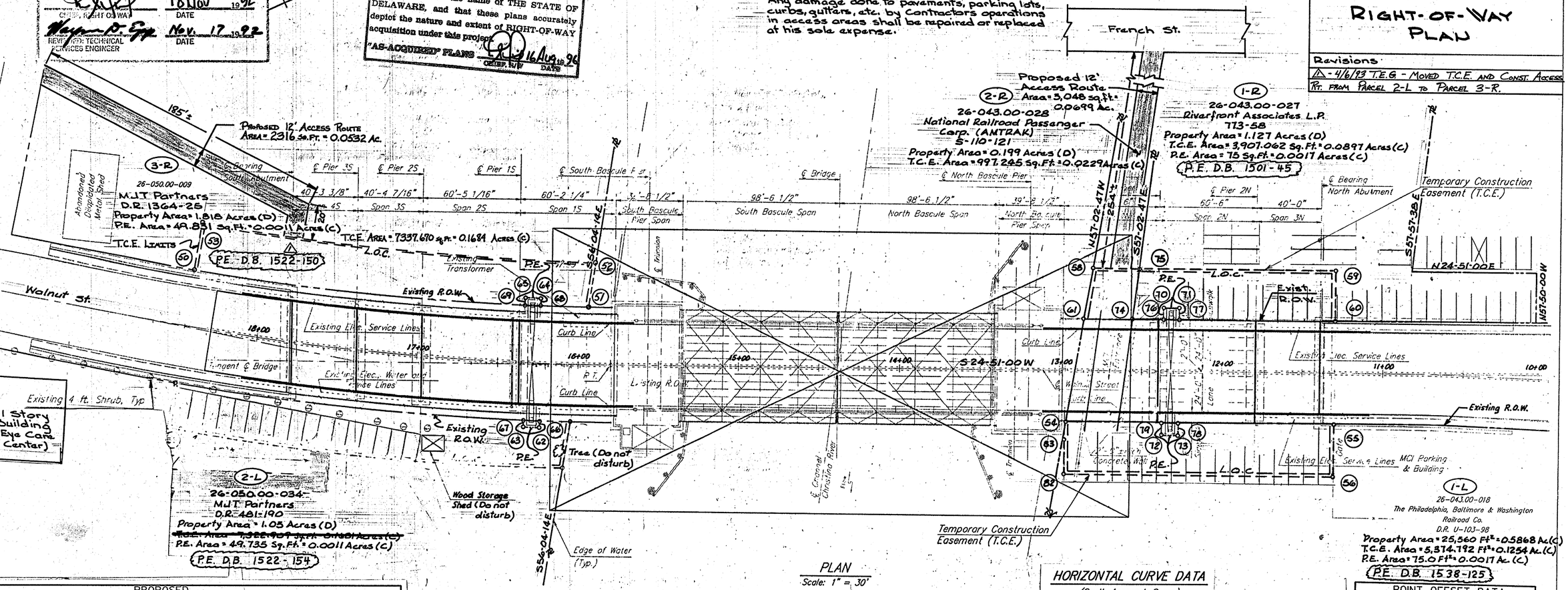

PLAN
Scale: 1" = 30'

HORIZONTAL CURVE DATA

(South Approach Spans)
R = 1718.87'
3°-20' Curve
Δ = 10°-26'-35.5"
L = 313.30'
T = 157.08'

PROPOSED

RIGHT-OF-WAY DATA / RIGHT-OF-WAY CURVE DATA

* PE AREA 1-L

PT. TO PT.		BEARING	DISTANCE	CHORD BEARING	CHORD LENGTH	RADIUS	ARC LENGTH
79	78	N 24-51- 0.0 E	10.0000				
78	73	S 65- 9- 0.0 E	7.5000				
73	72	S 24-51- 0.0 W	10.0000				
72	79	N 65- 9- 0.0 W	7.5000				

AREA= 75.000 SQ.FT. = 0.00172176 ACRES

* TCE AREA 1-L

PT. TO PT.		BEARING	DISTANCE	CHORD BEARING	CHORD LENGTH	RADIUS	ARC LENGTH
54	79	N 24-51- 0.0 E	56.1937				
79	72	S 65- 9- 0.0 E	7.5000				
72	73	N 24-51- 0.0 E	10.0000				
73	78	N 65- 9- 0.0 W	7.5000				
78	55	N 24-51- 0.0 E	100.0000				
55	56	S 65- 9- 0.0 E	32.5000				
56	82	S 24-51- 0.0 W	168.0000				
82	83	N 65- 9- 0.0 W	21.1969				
83	54	N 56- 4-14.0 W	11.4465				

AREA= 5374.792 SQ.FT. = 0.12338824 ACRES

* PE AREA 2-L

PT. TO PT.		BEARING	DISTANCE	CHORD BEARING	CHORD LENGTH	RADIUS	ARC LENGTH
67	66			N 26-34-32.6 E	9.9942	1753.8700	9.9942
66	62	S 65- 9- 0.4 E	4.9866				
62	63	S 26-36-43.5 W	9.9944				
63	67	N 65- 9- 1.3 W	4.9803				

AREA= 49.735 SQ.FT. = 0.00114177 ACRES

* PE AREA 1-R

PT. TO PT.		BEARING	DISTANCE	CHORD BEARING	CHORD LENGTH	RADIUS	ARC LENGTH
76	70	N 65- 9- 0.0 W	7.5000				
70	71	N 24-51- 0.0 E	10.0000				
71	77	S 65- 9- 0.0 E	7.5000				
77	76	S 24-51- 0.0 W	10.0000				

AREA= 75.000 SQ.FT. = 0.00172176 ACRES

* TCE AREA 1-R

PT. TO PT.		BEARING	DISTANCE	CHORD BEARING	CHORD LENGTH	RADIUS	ARC LENGTH
75	59	N 24-51- 0.0 E	119.9281				
59	60	S 65- 9- 0.0 E	32.5000				
60	77	S 24-51- 0.0 W	100.0000				
77	71	N 65- 9- 0.0 W	7.5000				
71	70	S 24-51- 0.0 W	10.0000				
70	76	S 65- 9- 0.0 E	7.5000				
76	74	S 24-51- 0.0 W	15.1218				
74	75	N 56- 4-14.0 W	32.9124				

AREA= 3907.062 SQ.FT. = 0.08969381 ACRES

* TCE AREA 2-R

PT. TO PT.		BEARING	DISTANCE	CHORD BEARING	CHORD LENGTH	RADIUS	ARC LENGTH
58	75	N 24-51- 0.0 E	30.6845				
75	74	S 56- 4-14.0 E	32.9124				
74	61	S 24-51- 0.0 W	30.6845				
61	58	N 56- 4-14.0 W	32.9124				

AREA= 997.245 SQ.FT. = 0.02289359 ACRES

* PE AREA 3-R

PT. TO PT.		BEARING	DISTANCE	CHORD BEARING	CHORD LENGTH	RADIUS	ARC LENGTH
65	64	N 26-36-43.2 E	9.9948				
64	68	S 65- 9- 0.4 E	4.9863				
68	69			S 26-38-51.0 W	9.9949	1683.8700	9.9949
69	65	N 65- 9- 1.3 W	4.9801				

AREA= 49.831 SQ.FT. = 0.00114397 ACRES

* TCE AREA 3-R

PT. TO PT.		BEARING	DISTANCE	CHORD BEARING	CHORD LENGTH	RADIUS	ARC LENGTH
50	69			N 30-15-51.6 E	202.4736	1683.8700	202.5957
69	65	N 65- 9- 1.3 W	4.9801				
65	64	N 26-36-43.2 E	9.9948				
64	68	S 65- 9- 0.4 E	4.9863				
68	51			N 25-54-21.9 E	33.5832	1683.8700	33.5838
51	52	N 56- 3-59.2 W	30.3473				
52	53			S 29-26-39.5 W	246.0984	1653.8700	246.3260
53	50	S 56-17-20.0 E	30.0000				

AREA= 7337.670 SQ.FT. = 0.16844973 ACRES

NOTE: A NEGATIVE OFFSET DENOTES LEFT OF CENTERLINE.

POINT OFFSET DATA

POINT	STATION	OFFSET
50	1845.0000	35.0000
51	1593.7087	35.0000
52	1588.9930	65.0000
53	1845.0000	65.0000
54	1296.1937	-32.5000
55	1130.0000	-32.5000
56	1130.0000	-65.0000
58	1280.6126	65.0000
59	1130.0000	65.0000
60	1130.0000	32.5000
61	1285.8063	32.5000
62	1625.9084	-39.9848
63	1635.6756	-39.9776
64	1628.1355	39.9843
65	1638.3683	39.9771
66	1626.0413	-35.0000
67	1635.8361	-35.0000
68	1627.9905	35.0000
69	1638.1932	35.0000
70	1240.0000	40.0000
71	1230.0000	40.0000
72	1240.0000	-40.0000
73	1230.0000	-40.0000
74	1255.1218	32.5000
75	1249.9281	65.0000
76	1240.0000	32.5000
77	1230.0000	32.5000
78	1230.0000	-32.5000
79	1240.0000	-32.5000
82	1298.0000	-65.0000
83	1298.0000	-43.8031

REVISIONS

PREL. TRACING R. J. Ashley — DESIGN J. A. Prybella — CHKD. J. A. Prybella

BR. 1-687	CONTRACT	COUNTY	FEDERAL AID PROJECT No	SHEET No	TOTAL SHEETS
	89-074-05	NEW CASTLE	BHM-1179(3)	25	52

ELECTRICAL/MECHANICAL PLAN AND ELEVATION

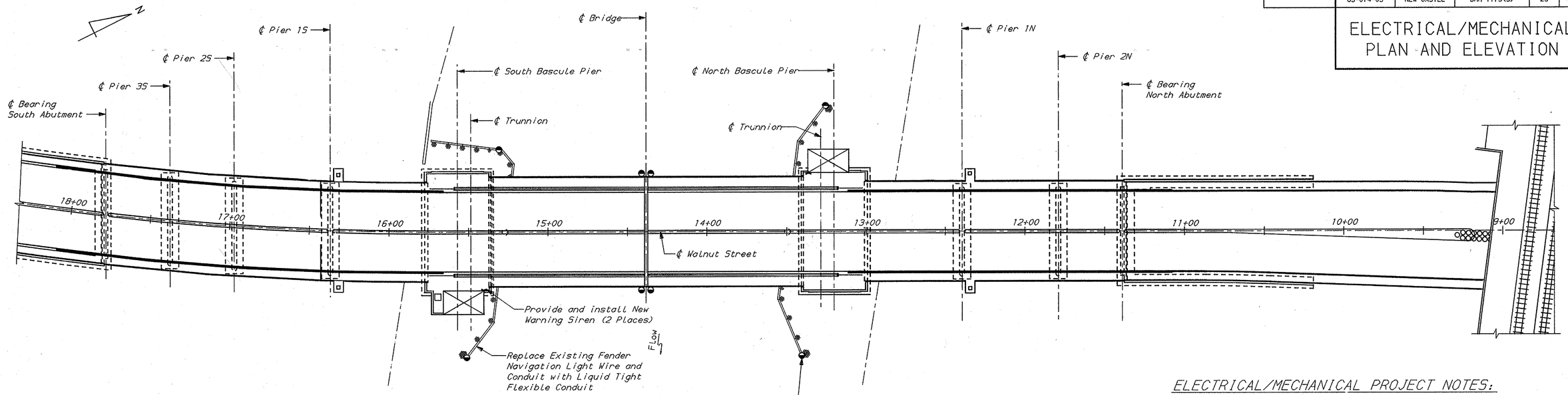

PLAN

Scale: 1" = 30'-0"

South Bascule Pier

- Replace Bridge Control System
- Remove Engine Generator
- Replace Sump Pump and Controls
- Replace Windows and Doors as Shown
- Replace Deteriorated Conduits, Install Cable Tray
- Recondition Drive Motors and Brakes
- Provide Grounded Electrical System
- Replace Electrical Switchgear
- Replace Lights and Receptacles
- Flush and Fill Operating Machinery Reducers, Replace shaft Seals
- Refurbish Operating Machinery Couplings
- Trunnion Bearings - Clean out all Grease Grooves and Relubricate
- Clean and Paint all Rack Mounting Bolts
- Provide New Collar Assembly for Locating Longitudinal Shaft
- Clean and Relubricate Open Gearing

North Bascule Pier

- Replace Motor Control Equipment
- Replace all Windows and Doors
- Replace Deteriorated Conduits, Install Cable Tray
- Recondition Drive Motors and Brakes
- Replace Sump Pump and Controls
- Replace Lights and Receptacles
- Operating Machinery Reducer - Remove Corrosion from Gears and Shafting, Flush and Fill, Replace Shaft Seals
- Refurbish Operating Machinery Couplings
- Trunnion Bearings - Clean out all Grease Grooves and Relubricate
- Clean and Paint all Rack Mounting Bolts
- Provide New Collar Assembly for Locating Longitudinal Shaft
- Clean and Relubricate Open Gearing

ELECTRICAL/MECHANICAL PROJECT NOTES:

1. Repairs to the Mechanical Components of the Bridge, as Specified, Shall be Paid Under item 763539.
2. Repairs to the Electrical Components of the Bridge, as Specified, Shall be Paid Under item 763512.
3. The Replacement of Doors and/or Windows in the Control House and Storage House Shall be Paid Under Item 763515.
4. All Work Associated with the Final Balancing of the Bascule Leaves Shall be Paid Under item 763540.
5. The Cleaning and Painting of any Existing Machinery Components, as Specified, Including Machinery Supports or Brackets Shall be Paid Under Items 605533 and 605522, Respectively.
6. The Rehabilitation of the Span Locks Shall Take Place after the Live Load Shoes and Strike Plates are Rehabilitated.
7. See Sheet No. 24 for the Structural Supports and Details for the installation of the Traffic Gates and Traffic Signals.
8. Spalled Concrete over any Machinery Shall be Paid Under item 602572.
9. Existing Navigation Lights Shall Remain Property of the Department. Contractor Shall Deliver Lights to a Location Designated by the Department.

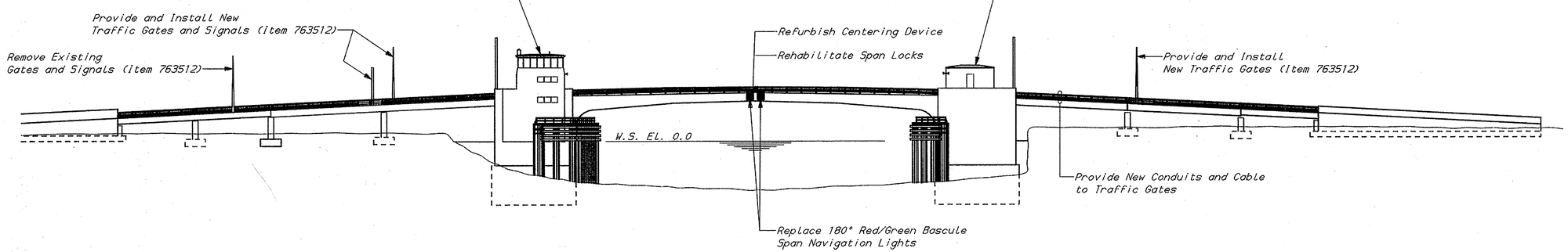

ELEVATION

Scale: 1" = 30'-0"

All Work on this Sheet Shall be Paid Under item 763512 and 763539

REVISIONS

PREL. TRACING R.L. Reed DESIGN G.L. Fosick CHKD. L.V. Borden

MAY 29 1992

empe

BR. 1-687	CONTRACT	COUNTY	FEDERAL AID PROJECT No	SHEET No	TOTAL SHEETS
	89-074-05	NEW CASTLE	BHM-1179(3)	26	52

THREE LINE DIAGRAM - 1

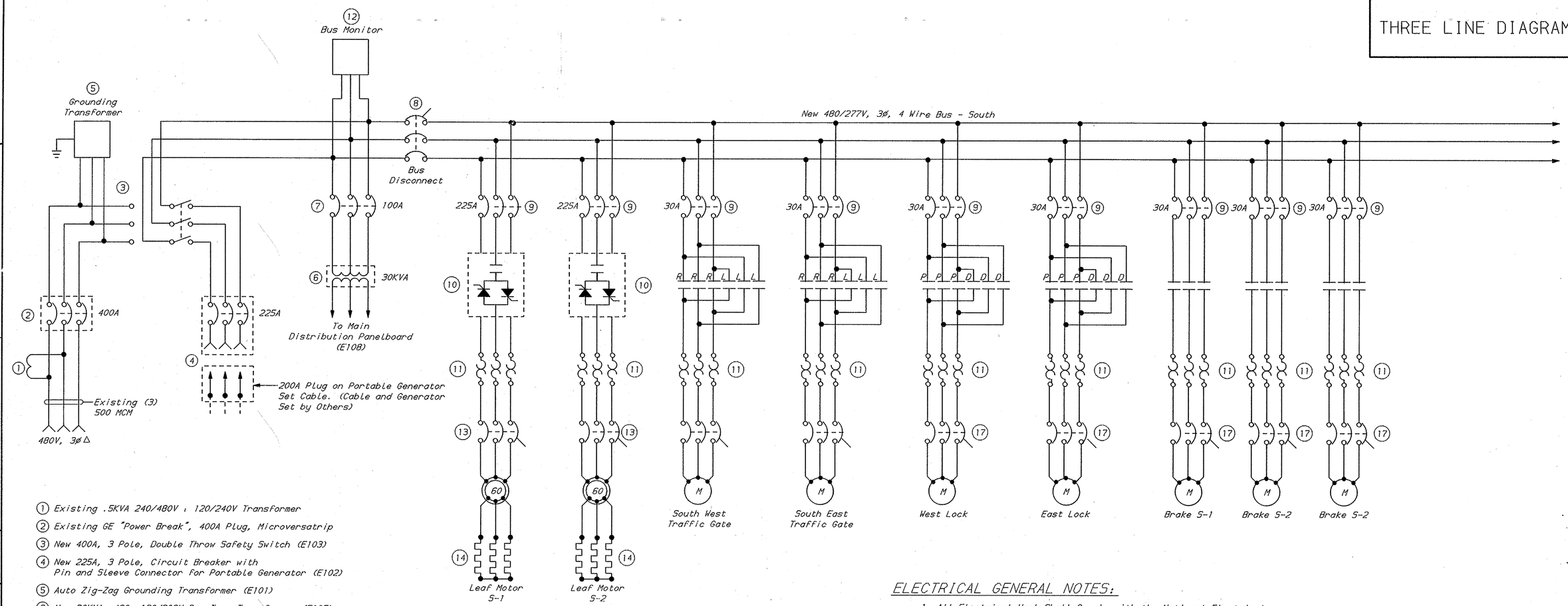

1. Existing .5KVA 240/480V : 120/240V Transformer
2. Existing GE "Power Break", 400A Plug, Microversatrip
3. New 400A, 3 Pole, Double Throw Safety Switch (E103)
4. New 225A, 3 Pole, Circuit Breaker with Pin and Sleeve Connector for Portable Generator (E102)
5. Auto Zig-Zag Grounding Transformer (E101)
6. New 30KVA, 480: 120/208V Dry Type Transformer (E105)
7. New 480V, Circuit Breaker (E104)
8. New 400A, 3 Pole, Molded Case Switch (E106)
9. New 480V, 3 Pole, Motor Circuit Protector
10. SCR Variable Speed Drive
11. Motor Overloads
12. Bus Monitor (Low Voltage, Phase Sequence and Unbalance)
13. Molded Case Switch, 225A, 600V, 3 Pole (E106)
14. New Secondary Resistors
15. New Cable Terminal Blocks
16. Existing Submarine Cable
17. Molded Case Switch, 100A, 600V, 3 Pole (E106)
18. New 480V, 3 Pole Circuit Breaker

Items 1, 2 and 16 to Remain

ELECTRICAL GENERAL NOTES:

1. All Electrical Work Shall Comply with the National Electrical Code, Latest Edition.
2. Contractor Shall Provide Identification Labels on all Conductors at all Junction Boxes, Panelboards, Fixtures or Other Electrical Equipment. Labels Shall be Prelettered, Sleeve Type. Equipment Terminals and Terminal Blocks Shall Likewise be Labeled.
3. In Addition to Equipment Shown on Plans, the Contractor Shall Provide all Junction Boxes, Wire, Connectors, Fittings and Appurtenant Hardware as may be Necessary to Complete the Electrical Work.
4. Contractor Shall Provide Complete Wiring Diagrams Identifying all Wires Consistant with Labeling in Note 2, Prior to Commencement of Work.
5. Conduit Connections to Limit Switches, Motors, Brakes, Selsyns or Other Equipment as may be Specified Shall include a Minimum of 18" Liquid Tight Flexible Steel Conduit. Flexible Conduit Shall be Listed with Underwriters Laboratories.
6. Isolate Cast Aluminum Boxes or Devices from Structural Steel or Concrete with Neoprene Shims.
7. All Wall Mounted Electrical Equipment Shall be Supported on Galvanized Mounting Channel with Exception of Counterweight Pit Areas. Channel in Pit Area Shall be Stainless Steel.
8. This Layout is Diagramatic and is not Intended to Show Controls, Wiring and Equipment in Their Exact Physical Relationship.
9. Voltmeter, Ammeter, and Potential Transformers not Shown. See Console Drawing and Specifications.

All Work on this Sheet Shall be Paid Under Item 763512

REVISIONS

PREL. TRACING R.L. Reed DESIGN G.L. Fosick CHKD. L.V. Borden

NOV 23 1992

BR. 1-687	CONTRACT	COUNTY	FEDERAL AID PROJECT No	SHEET No	TOTAL SHEETS
	89-074-05	NEW CASTLE	BHM-1179(3)	27	52

THREE LINE DIAGRAM - 2

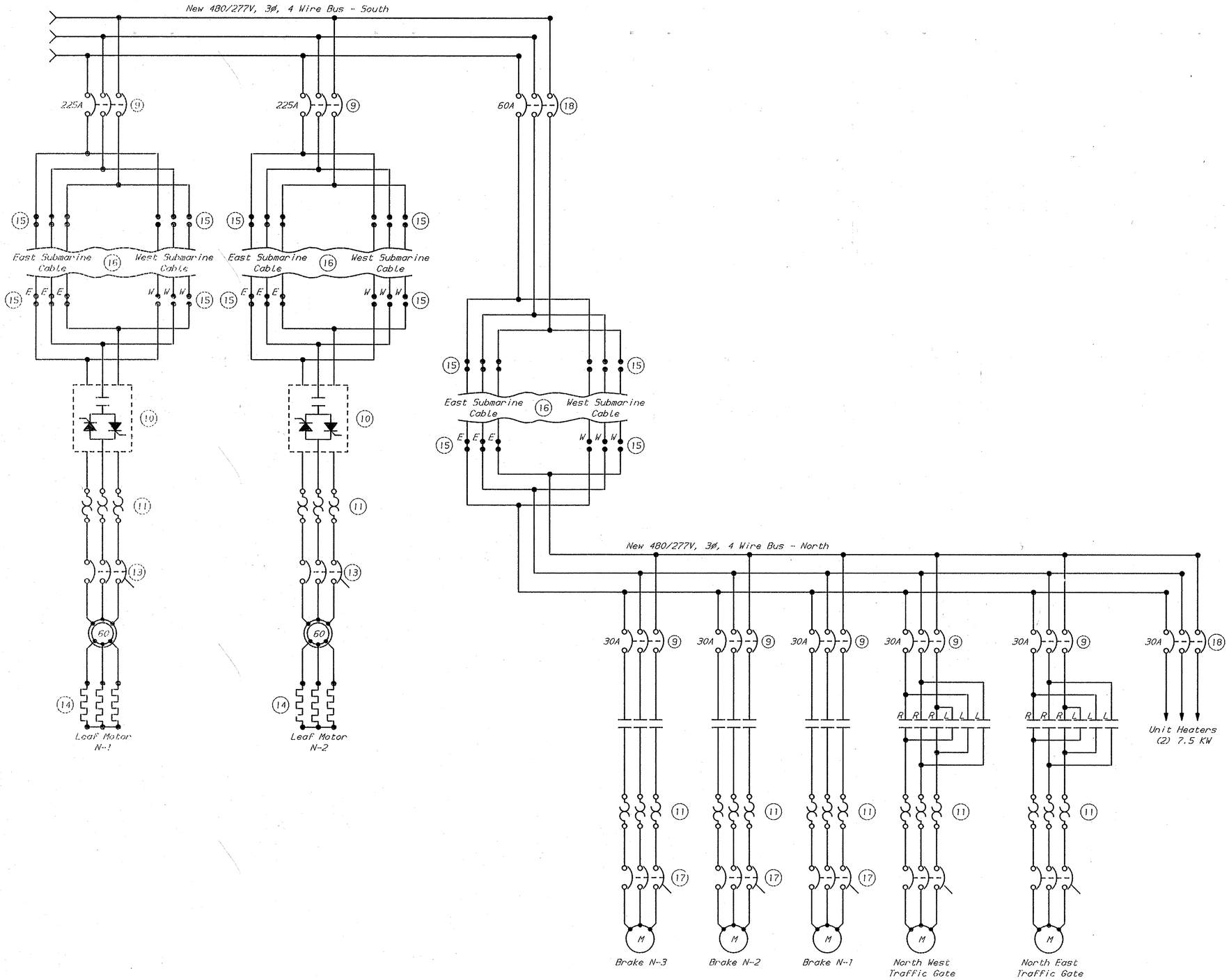

All Work on this Sheet Shall be Paid Under Item 763512

REVISIONS

PREL. TRACING R. L. Reed DESIGN G. L. Fosick CHKD. L. V. Borden

MAY 26 1992

tLd2

BR. 1-687	CONTRACT	COUNTY	FEDERAL AID PROJECT No	SHEET No	TOTAL SHEETS
	89-074-05	NEW CASTLE	BHM-1179(3)	28	52

CONTROL LOGIC - 1

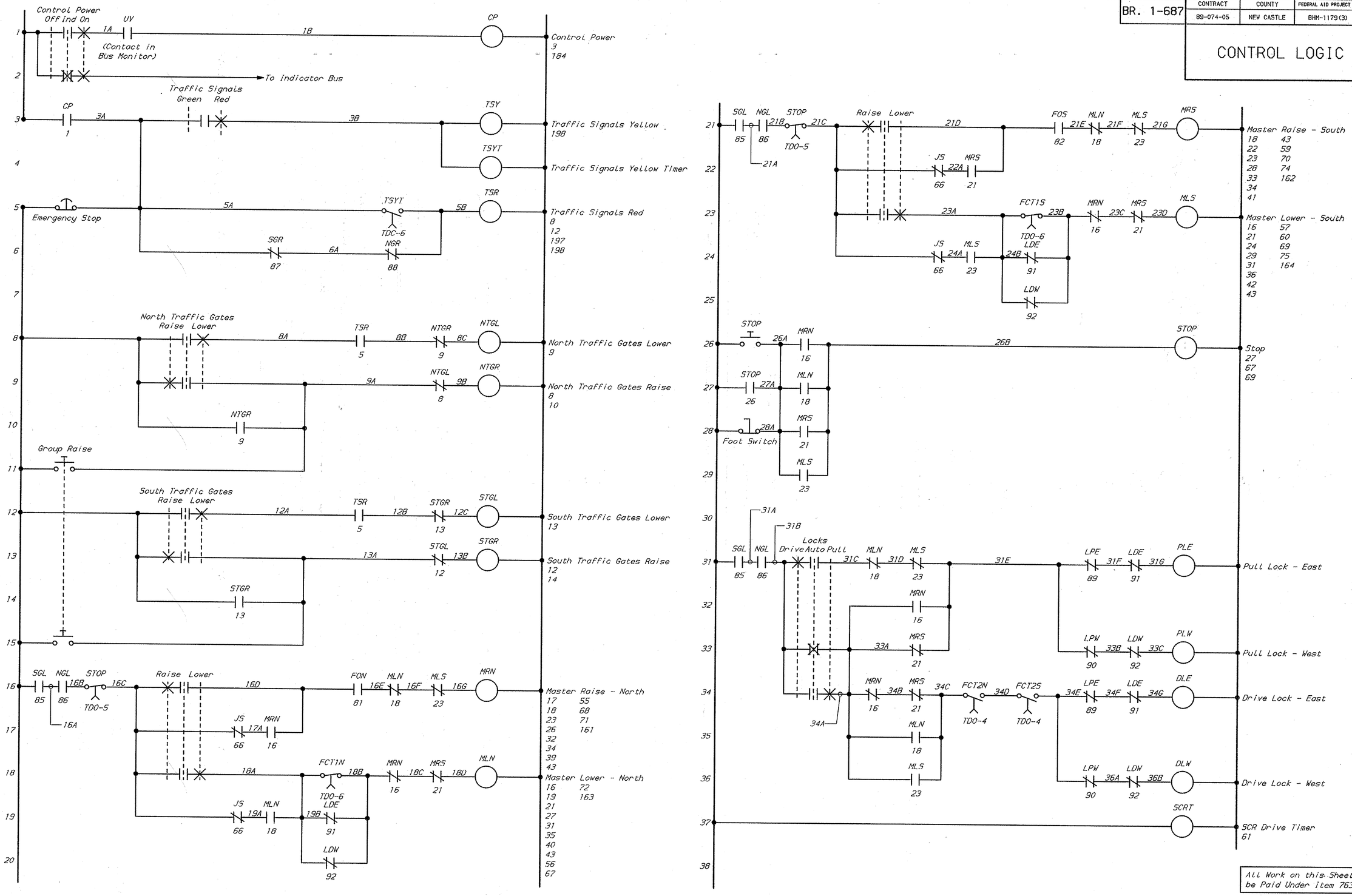

All Work on this Sheet Shall be Paid Under item 763512

REVISIONS

PREL. TRACING R.L. Reed DESIGN L.V. Borden CHKD. L.V. Borden

NOV 23 1992

BR. 1-687	CONTRACT	COUNTY	FEDERAL AID PROJECT No	SHEET No	TOTAL SHEETS
	89-074-05	NEW CASTLE	BHM-1179(3)	29	52

CONTROL LOGIC - 2

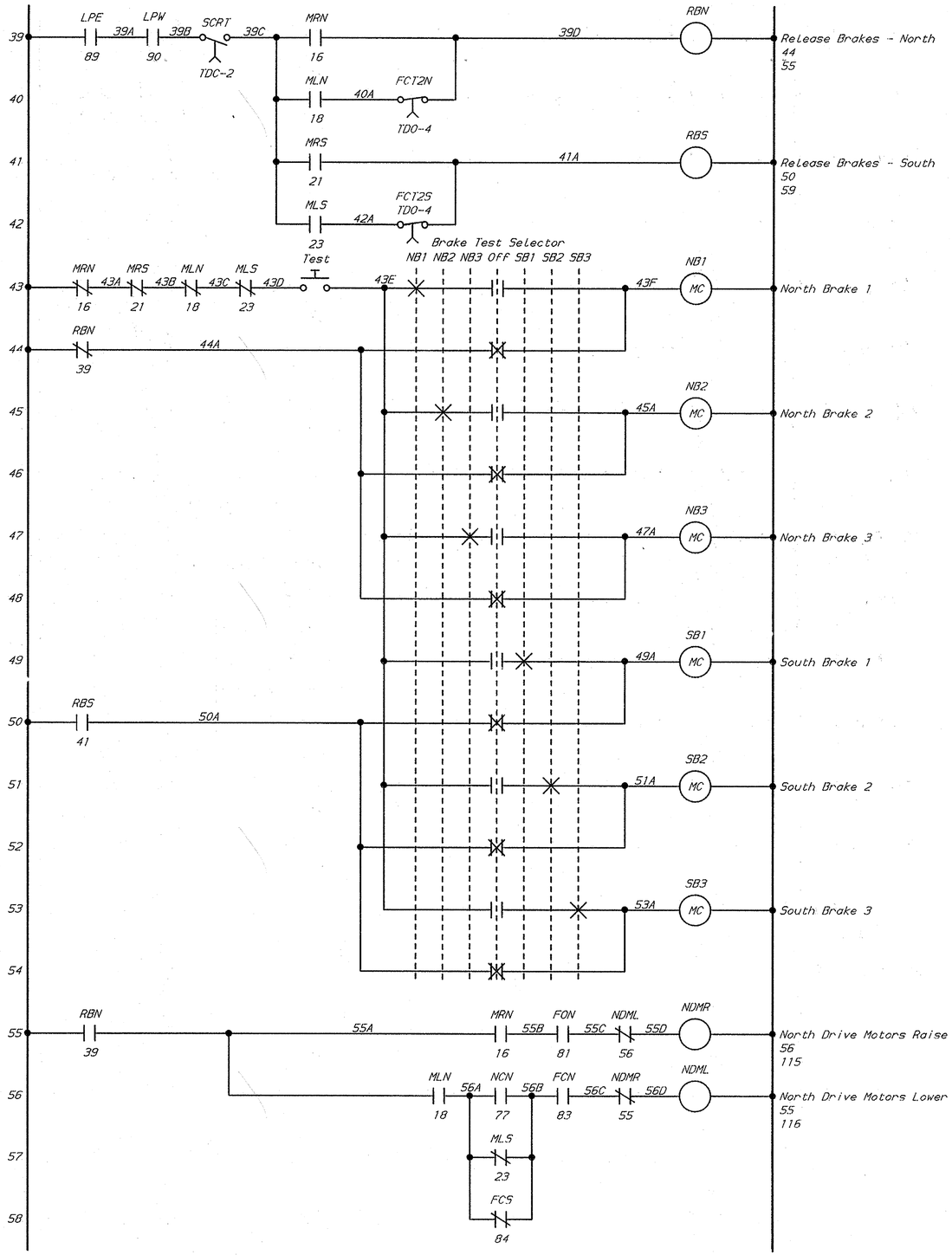

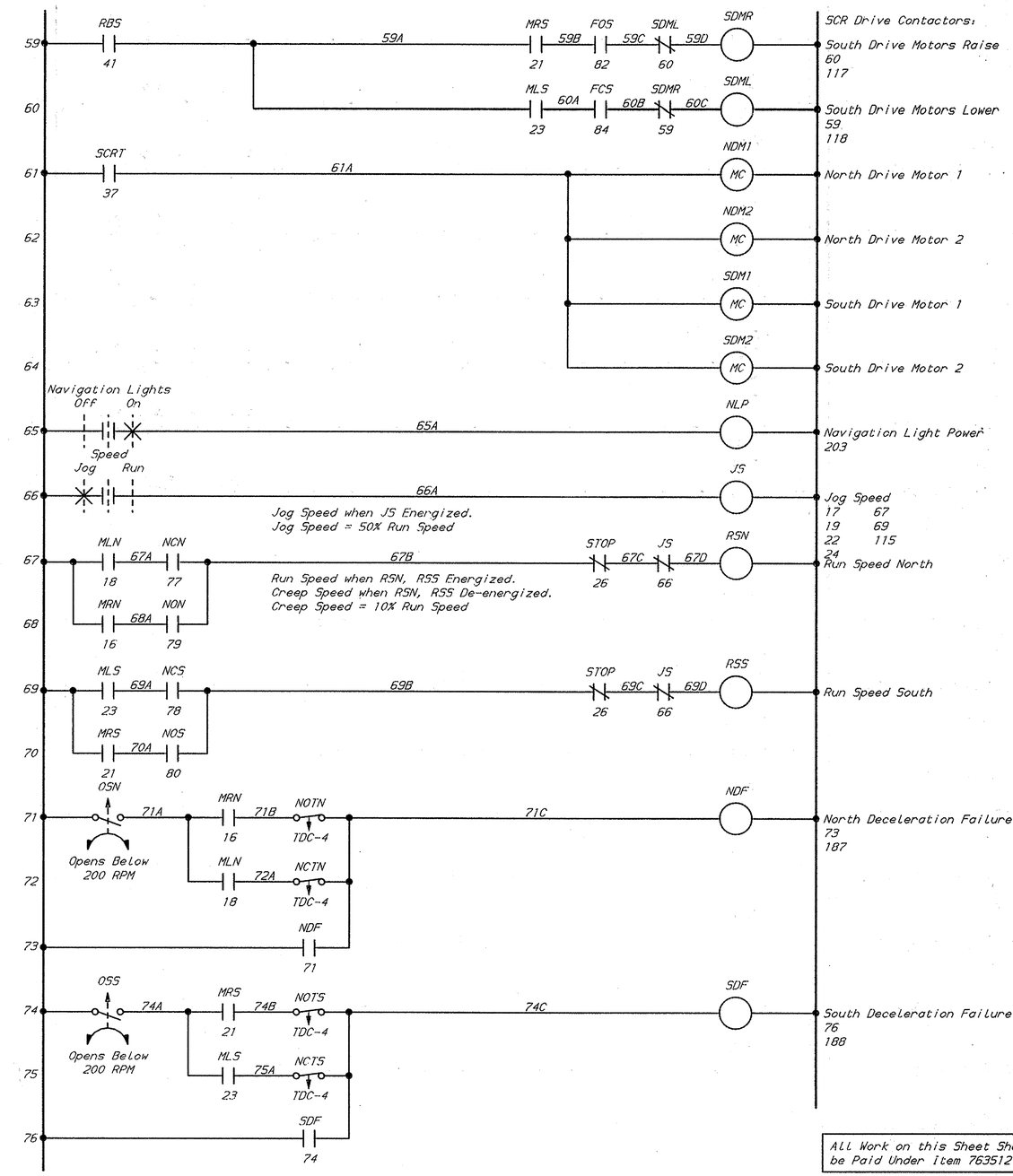

All Work on this Sheet Shall be Paid Under Item 763512

REVISIONS

PREL. TRACING R.L. Reed DESIGN L.V. Borden CHKD. L.V. Borden

NOV 25 1992

ct2

BR. 1-687	CONTRACT	COUNTY	FEDERAL AID PROJECT No	SHEET No	TOTAL SHEETS
	89-074-05	NEW CASTLE	BHM-1179(3)	30	52

CONTROL LOGIC - 3

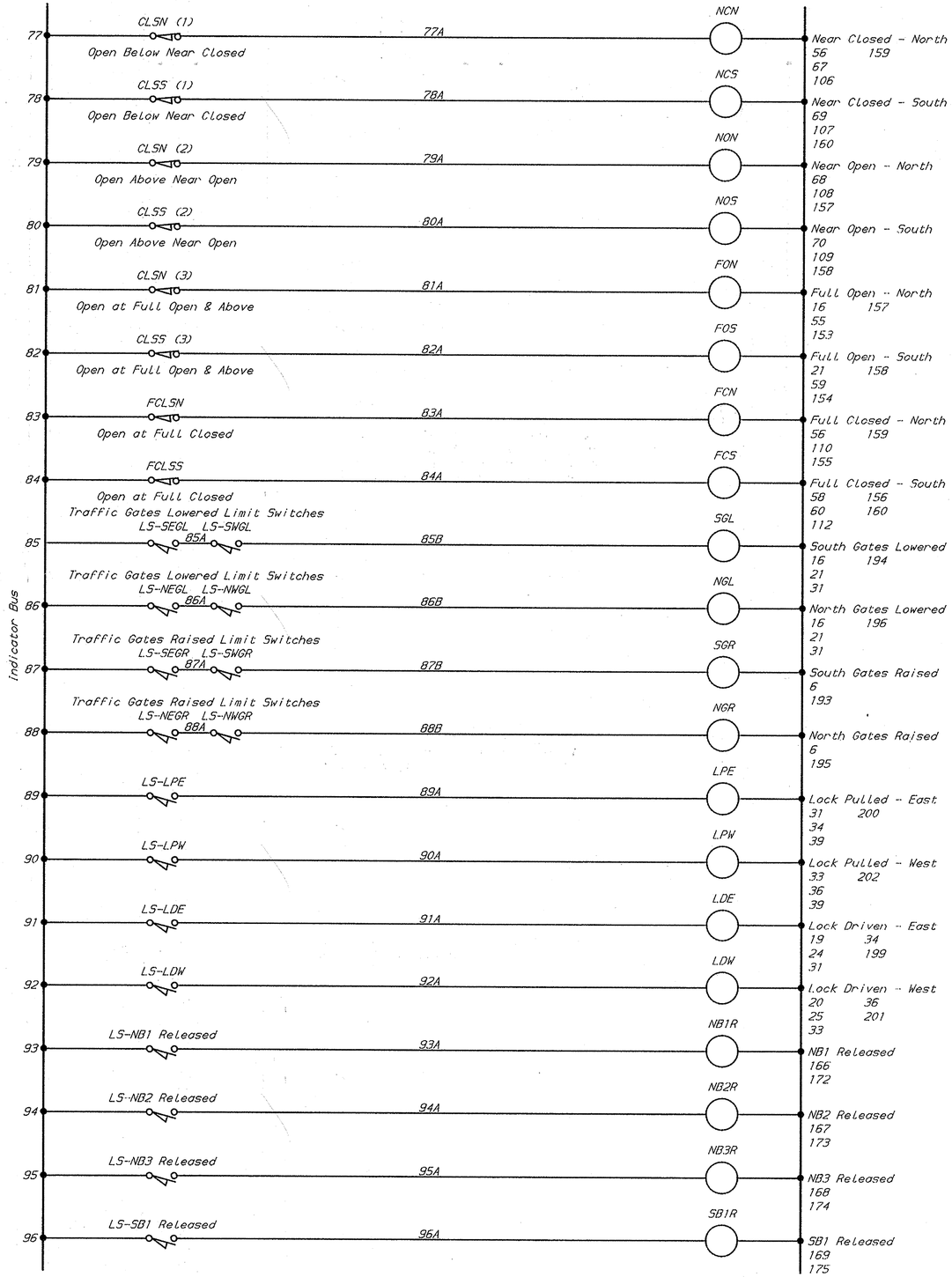

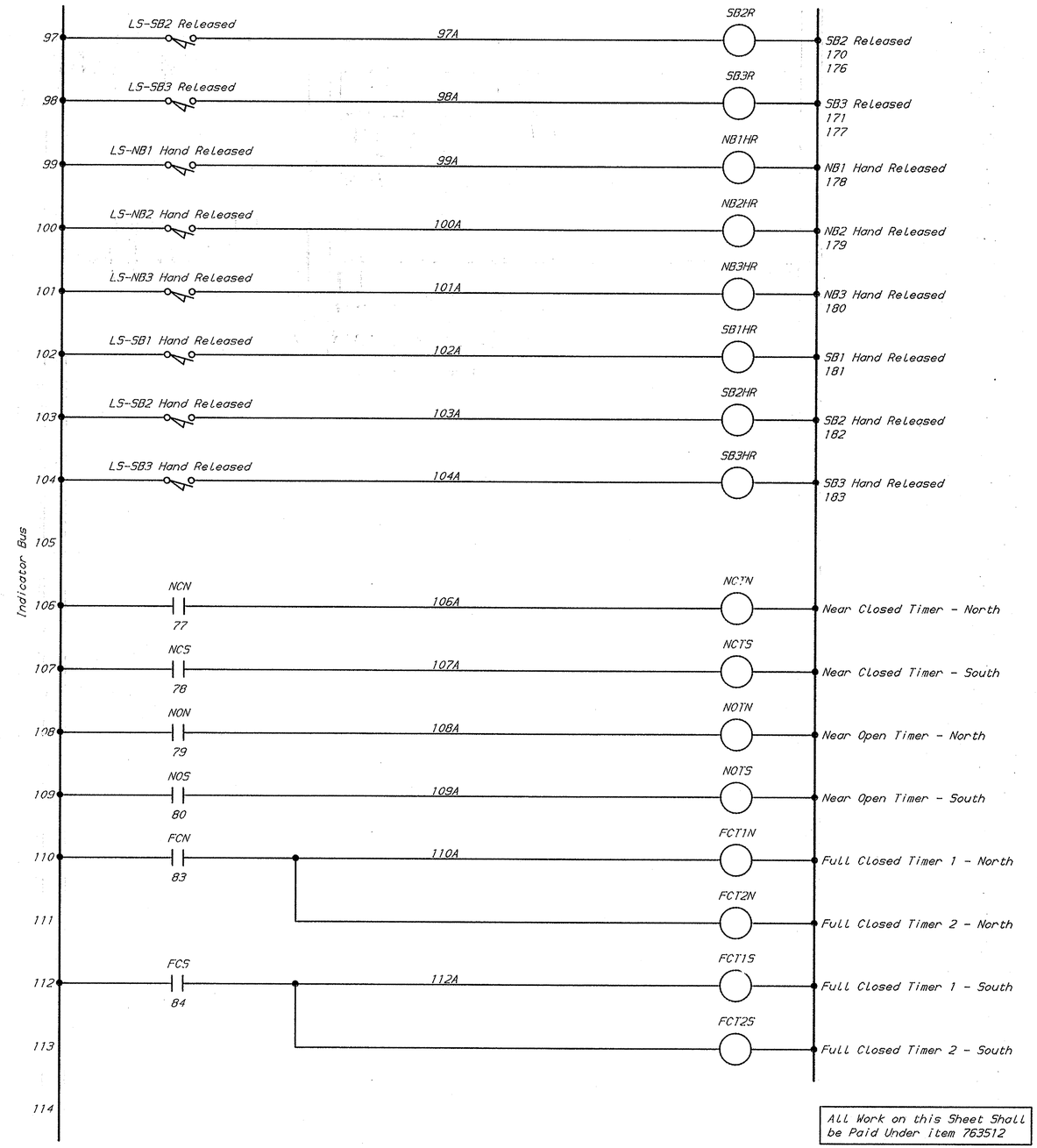

All Work on this Sheet Shall be Paid Under item 763512

REVISIONS

PREL. TRACING R.L. Reed DESIGN L.V. Borden CHKD. L.V. Borden

NOV 28 1992

ot3

BR. 1-687	CONTRACT	COUNTY	FEDERAL AID PROJECT No	SHEET No	TOTAL SHEETS
	89-074-05	NEW CASTLE	BHM-1179(3)	31	52

CONTROL LOGIC - 4

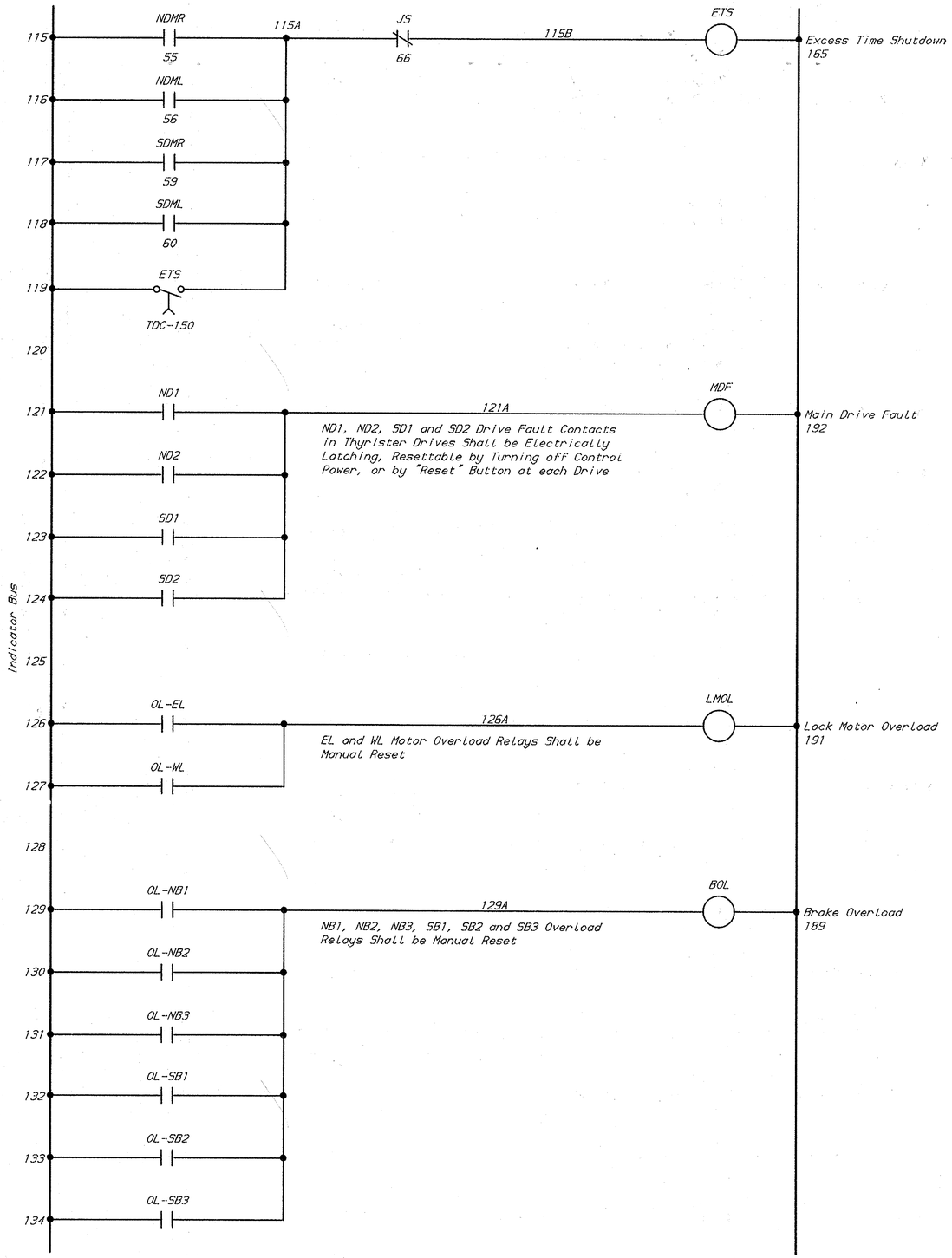

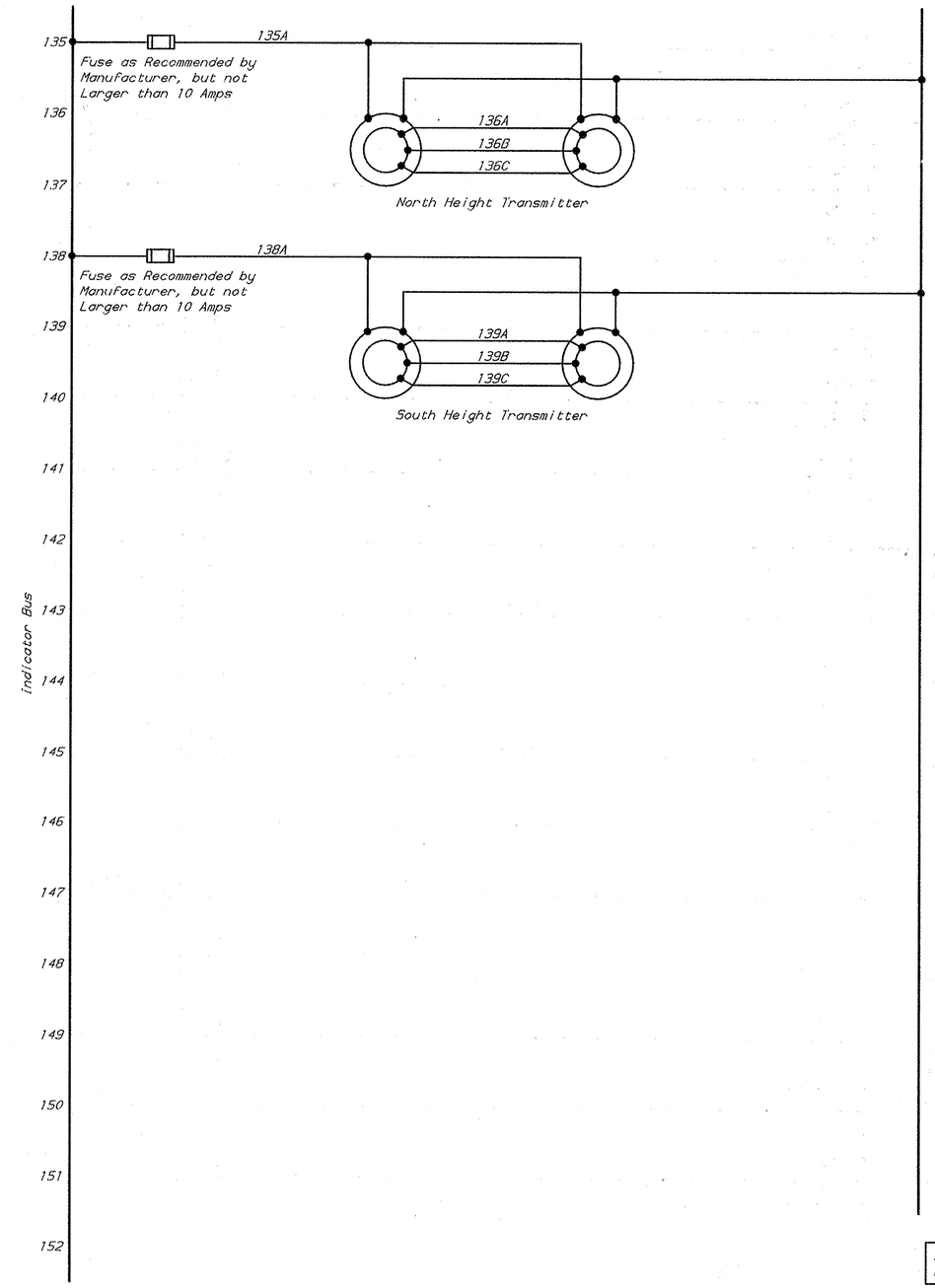

All Work on this Sheet Shall be Paid Under item 763512

REVISIONS

PREL. TRACING R.L. Reed DESIGN L.V. Borden CHKD. L.V. Borden

NOV 25 1992

BR. 1-687	CONTRACT	COUNTY	FEDERAL AID PROJECT No	SHEET No	TOTAL SHEETS
	89-074-05	NEW CASTLE	BHM-1179(3)	32	52

CONTROL LOGIC - 5

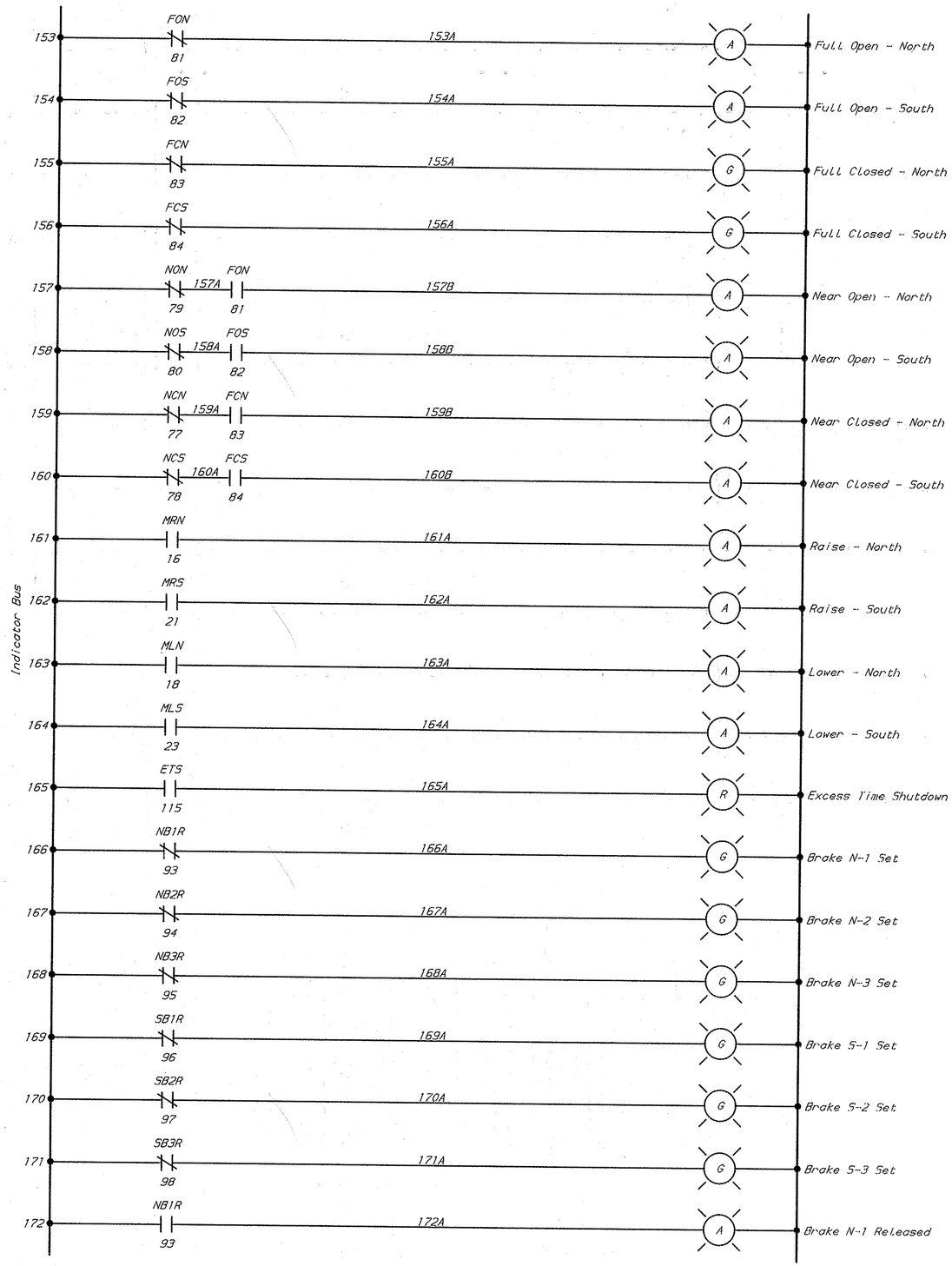

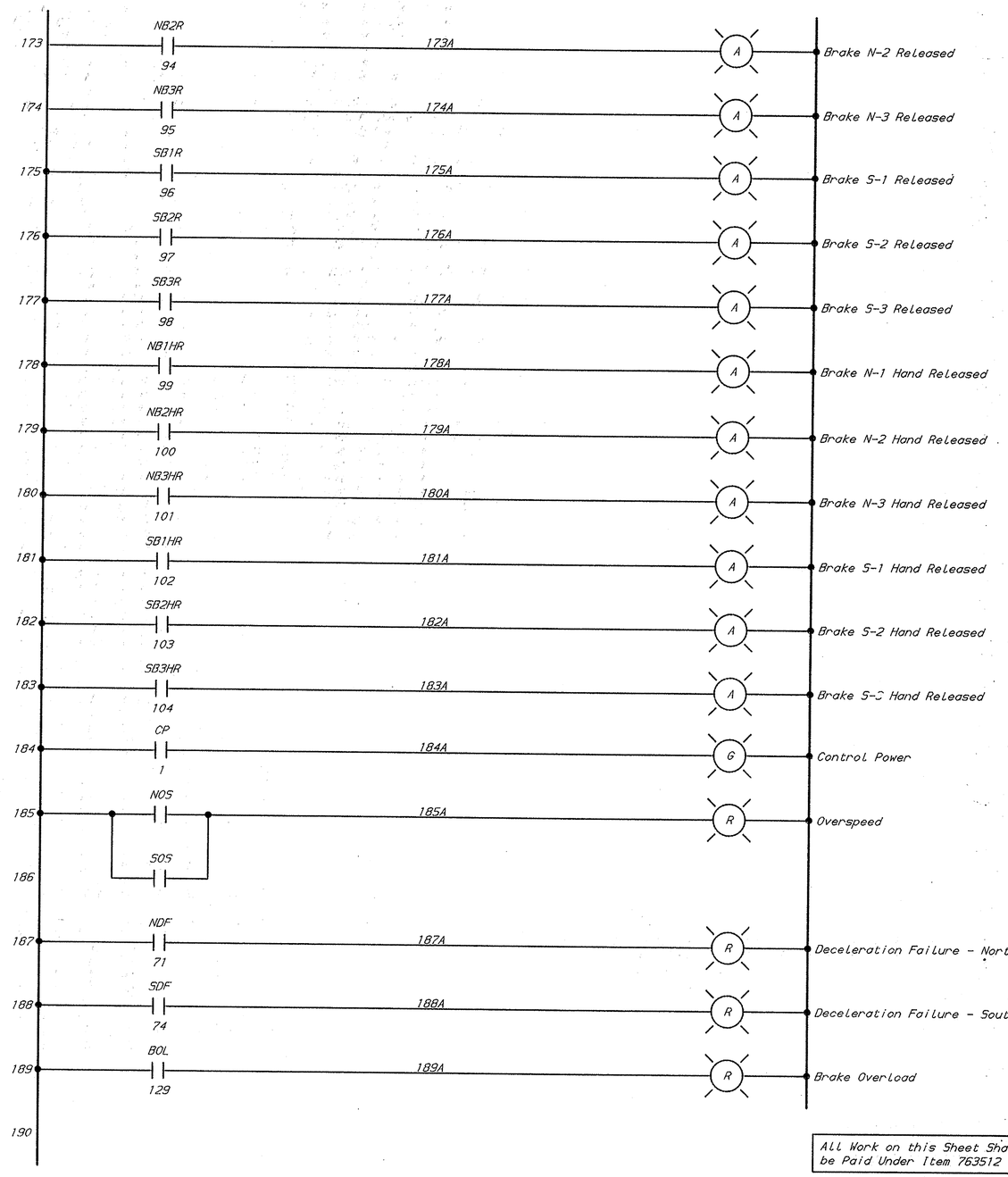

All Work on this Sheet Shall be Paid Under Item 763512

REVISIONS

PREL. TRACING R.L. Reed DESIGN L.V. Borden CHKD. L.V. Borden

NOV 23 1992

ct5

BR. 1-687	CONTRACT	COUNTY	FEDERAL AID PROJECT No	SHEET No	TOTAL SHEETS
	89-074-05	NEW CASTLE	BHM-1179(3)	33	52

CONTROL LOGIC - 6

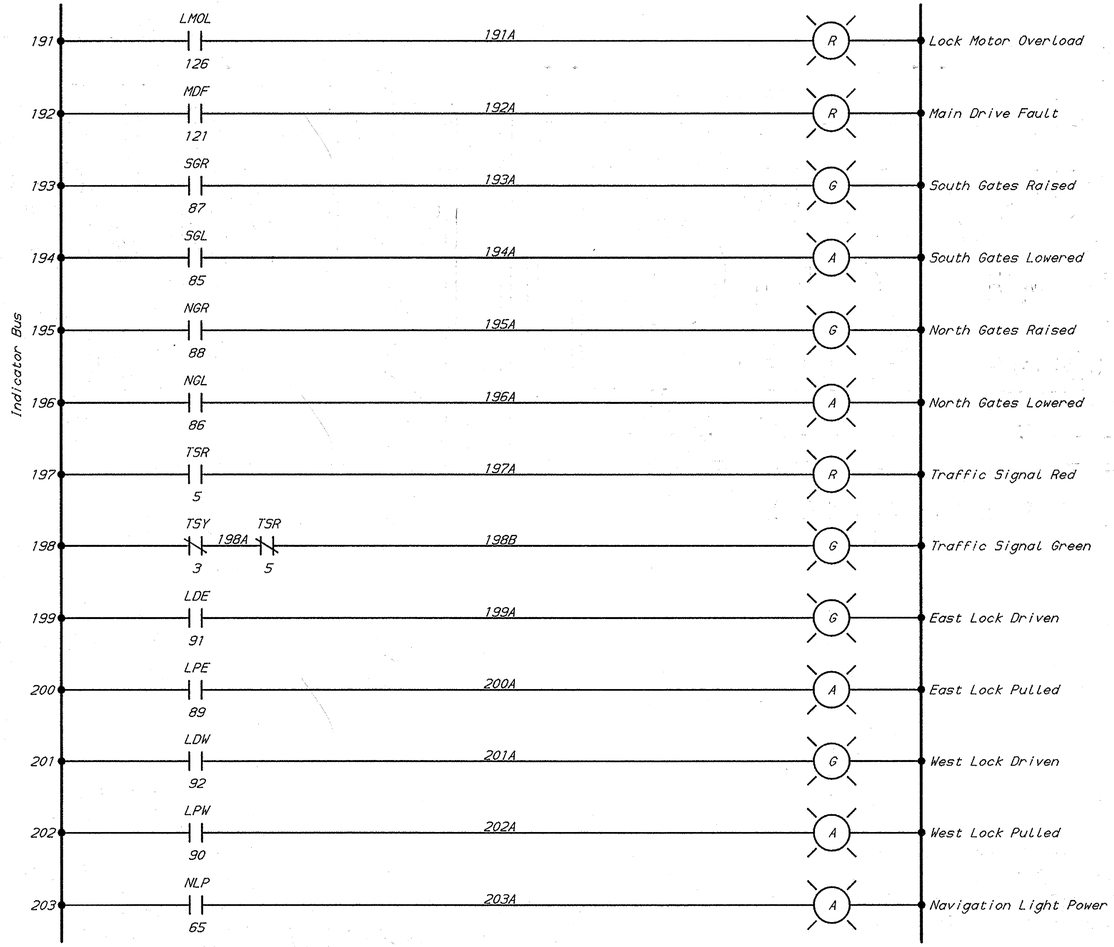

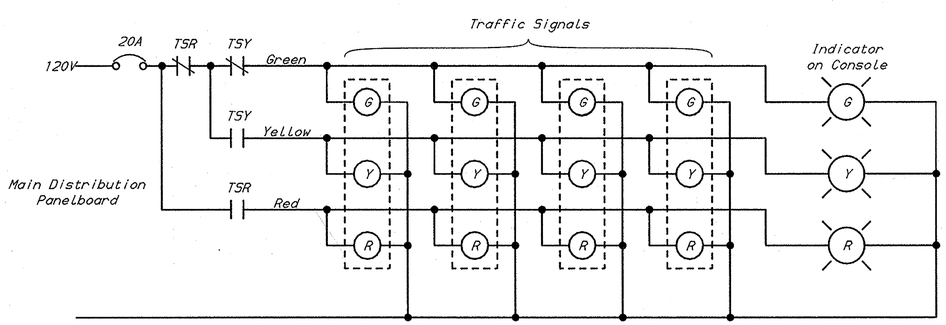

TRAFFIC SIGNAL CIRCUIT

See Control Logic - 1 for Traffic Control Relays

LEGEND:

BOL: Brake Overload
CLSN (1): Rotary Cam Limit Switch North - Cam 1
CLSS (1): Rotary Cam Limit Switch South - Cam 1
CP: Control Power
DLE: Drive Lock - East
DLW: Drive Lock - West
EL: East Lock
ETS: Excess Time Shutdown
FCLSN: Full Closed Limit Switch - North
FCLSS: Full Closed Limit Switch - South
FCN: Full Closed - North
FCT1N: Full Closed Timer 1 - North
FCT1S: Full Closed Timer 1 - South
FCT2N: Full Closed Timer 2 - North
FCT2S: Full Closed Timer 2 - South
FON: Full Open - North
FOS: Full Open - South
JS: Jog Speed
LDE: Lock Driven - East
LDW: Lock Driven - West
LMOL: Lock Motor Overload
LPE: Lock Pulled - East
LPW: Lock Pulled - West
LS: Limit Switch
LS-NEGL: North East Gate Lowered
LS-NEGR: North East Gate Raised
LS-NWGL: North West Gate Lowered
LS-NWGR: North West Gate Raised
LS-SEGL: South East Gate Lowered
LS-SEGR: South East Gate Raised
LS-SWGL: South East Gate Lowered
LS-SWGR: South East Gate Raised
MC: Magnetic Contactor
MDF: Main Drive Fault
MLN: Master Lower - North
MLS: Master Lower - South
MRN: Master Raise - North
MRS: Master Raise - South
NB1: North Brake 1
NB1HR: North Brake 1 Hand Released
NB1R: North Brake 1 Released
NB2: North Brake 2
NB2HR: North Brake 2 Hand Released
NB2R: North Brake 2 Released
NB3: North Brake 3
NB3HR: North Brake 3 Hand Released
NB3R: North Brake 2 Released
NCN: Near Closed - North
NCS: Near Closed - South
NCTN: Near Closed Timer - North
NCTS: Near Closed Timer - South
ND1: Contact in North Thyristor Drive 1
ND2: Contact in North Thyristor Drive 2
NDF: North Deceleration Failure
NDM1: North Drive Motor 1, SCR Contactor
NDM2: North Drive Motor 2, SCR Contactor
NDML: North Drive Motors Lower
NGL: North Gates Lowered
NGR: North Gates Raised
NLP: Navigation Light Power
NON: Near Open - North
NOS: Near Open - South
NOTN: Near Open Timer - North
NOTS: Near Open Timer - South
NTGL: North Traffic Gates Lowered
NTGR: North Traffic Gates Raised
OL: Motor Overload Relay
OSN: Overspeed Switch - North
OSS: Overspeed Switch - South
PLE: Pull Lock - East
PLW: Pull Lock - West
RBN: Release Brakes - North
RBS: Release Brakes - South
RSN: Run Speed - North
RSS: Run Speed - South
SB1: South Brake 1
SB1HR: South Brake 1 Hand Released
SB1R: South Brake 1 Released
SB2: South Brake 2
SB2HR: South Brake 2 Hand Released
SB2R: South Brake 2 Released
SB3: South Brake 3
SB3HR: South Brake 3 Hand Released
SB3R: South Brake 3 Released
SCRT: SCR Drive Timer
SD1: Contact in South Thyristor Drive 1
SD2: Contact in South Thyristor Drive 2
SDF: South Deceleration Failure
SDM1: South Drive Motor 1, SCR Contactor
SDM2: South Drive Motor 2, SCR Contactor
SDML: South Drive Motor Lower
SDMR: South Drive Motor Raise
SGL: South Gates Lowered
SGR: South Gates Raised
STGL: South Traffic Gates Lowered
STGR: South Traffic Gates Raised
TDC: Time Delay Close
TDO: Time Delay Open
TSR: Traffic Signals Red
TSY: Traffic Signals Yellow
TSYT: Traffic signals Yellow Timer
UV: Under Voltage
WL: West Lock

NOTES:

1. Push-to-Test Bus not Shown. Push-to-Test Bus Shall be Provided for Console Indicator Lights.

All Work on this Sheet Shall be Paid Under Item 769512

REVISIONS

PREL. TRACING R.L. Reed DESIGN L.V. Borden CHKD. L.V. Borden

NOV 19 1992

ot6

BR. 1-687	CONTRACT	COUNTY	FEDERAL AID PROJECT No	SHEET No	TOTAL SHEETS
	89-074-05	NEW CASTLE	BHM-1179(3)	34	52

CONTROL CONSOLE - 1

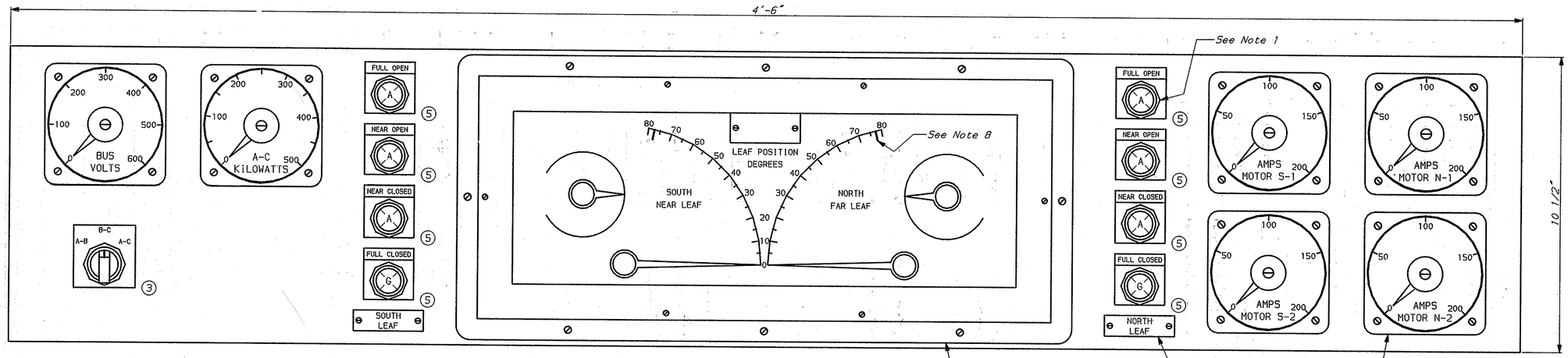

BRIDGE INDICATOR PANEL

Scale: 6" = 1'-0"

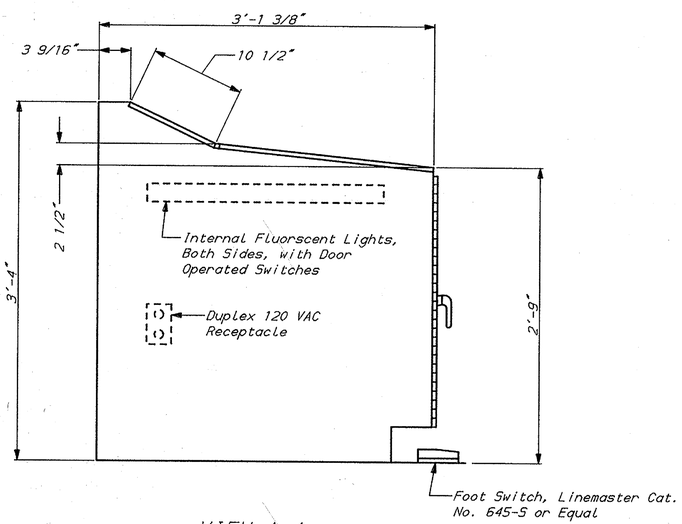

VIEW A-A

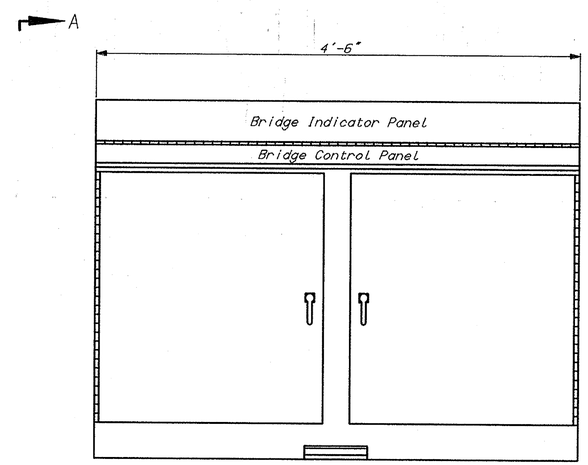

FRONT VIEW

CONTROL CONSOLE

Scale: 1 1/2" = 1'-0"

NOTES:

1. All Lighted Indicators Shall be Push-to-Test, Nema 4 Rated, High Brightness L.E.D. Type, Allen - Bradley Cat. No. 800T-PTL16R, Lamp and Lens Color as Shown.
2. Selector Switches and Push Buttons Shall be Nema 4 Rated Allen - Bradley Type 800T.
3. Engraved Plastic Legend Plates Shall be Black with White Letters, Attached with Stainless Steel Screws.
4. Legends May be Abbreviated only with Approval of the Engineer.
5. Device Legend Plates Shall be Black with White Engraved Legends as Shown.
6. Meter Values, when Shown, Indicates Full Scale Calibration.
7. Console may be Assembly of Bolt Together Pieces such that Largest Section can be Transported into Operators Room without Modifying Door Openings.
8. Span Height Indicator Shall be Calibrated in Five Degree Increments Starting at 0 for Full Closed and Ending at 80°. Labels Shall be Provided at "Full Closed" and "Full Open". Full Open Shall be Indicated by a 1/8" Wide Red Line at the 77°-42' Degree Calibration Point. Calibration Lines for even 10 Degree Increments (i.e., 10, 20, 30, ETC.) Shall be Longer and Heavier than the Individual Degree Lines. See Specifications.

All Work on this Sheet Shall be Paid Under item 763512

REVISIONS

PREL. TRACING R.L. Reed DESIGN G.L. Fasick CHKD. L.V. Borden

NOV 26 1992

oono1

BR. 1-687	CONTRACT	COUNTY	FEDERAL AID PROJECT No	SHEET No	TOTAL SHEETS
	89-074-05	NEW CASTLE	BHM-1179(3)	35	52

CONTROL CONSOLE - 2

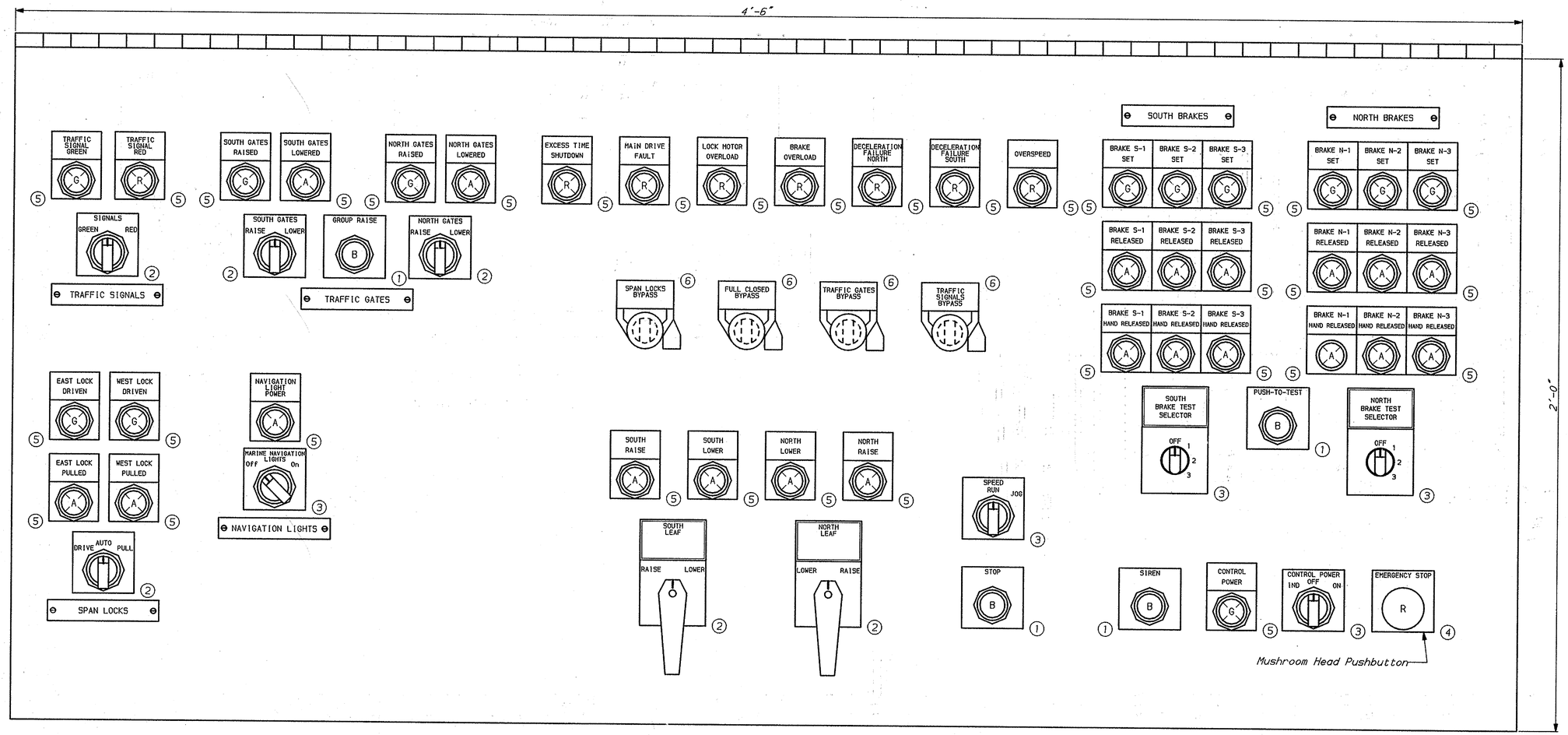

BRIDGE CONTROL PANEL

Scale: 6" = 1'-0"

LEGEND

Device Color Code

A - Amber
G - Green
R - Red
B - Black

Selector Switch Levers - Black

Device Function Code

1. Momentary Contact Pushbutton
2. Momentary Contact Selector, Spring Return to Center
3. Maintained Contact Selector
4. Maintained Contact, Pull-On Push-Off Mushroom Head Pushbutton (Illuminated when Pushed)
5. Indicator Light
6. Maintained Contact Selector Control with Lockable Cover

All Work on this Sheet Shall be Paid Under item 763512

REVISIONS

PREL. TRACING R.L. Reed DESIGN G.L. Fasick CHKD. L.V. Borden

NOV 28 1992

cono2

BR. 1-687	CONTRACT	COUNTY	FEDERAL AID PROJECT No	SHEET No	TOTAL SHEETS
	89-074-05	NEW CASTLE	BHM-1179(3)	36	52

ELECTRICAL EQUIPMENT REMOVAL CONTROL HOUSE

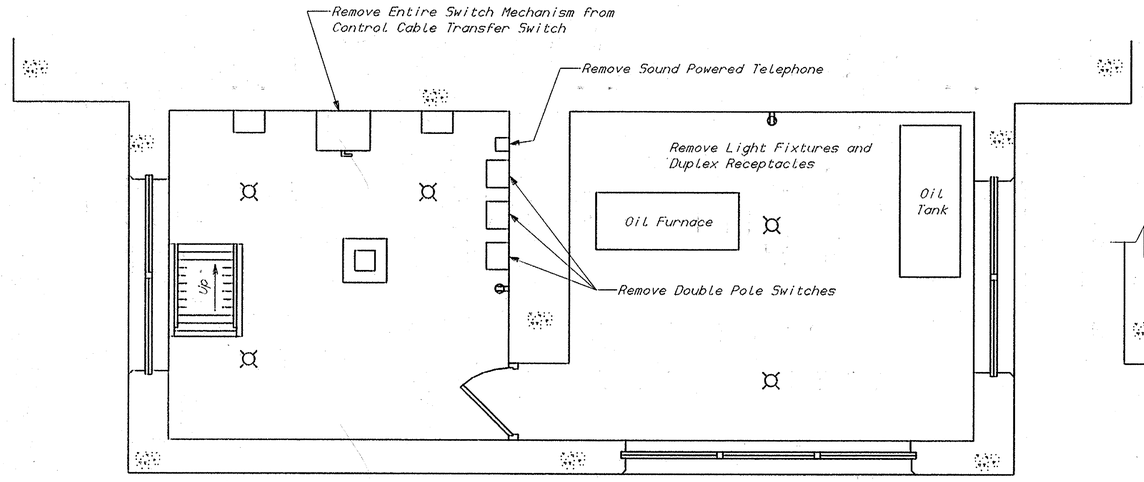

PLAN AT EL. 3.00'

Scale: 3/8" = 1'-0"

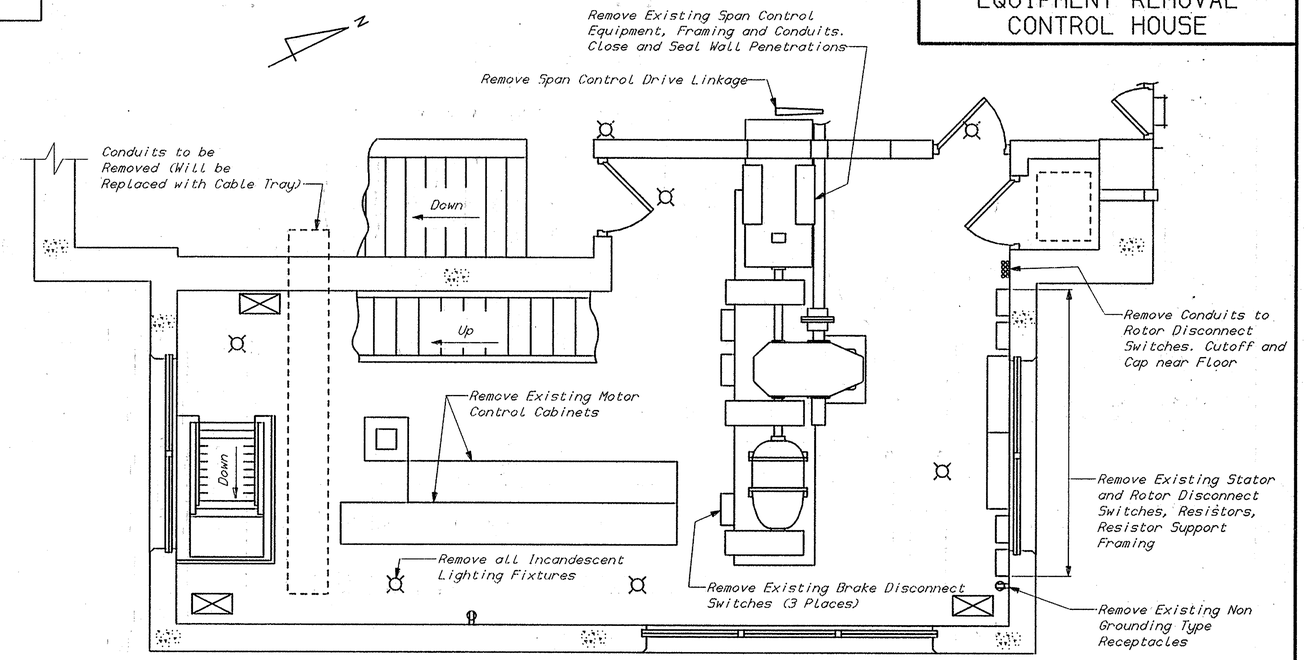

PLAN AT EL. 13.75'

Scale: 3/8" = 1'-0"

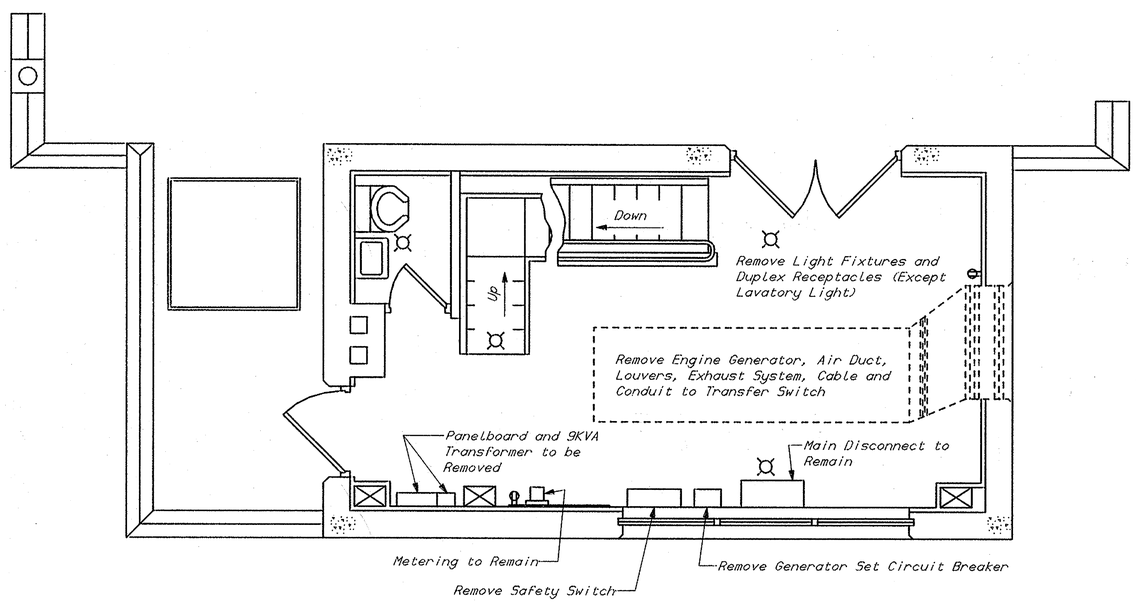

PLAN AT EL. 25.50'

Scale: 3/8" = 1'-0"

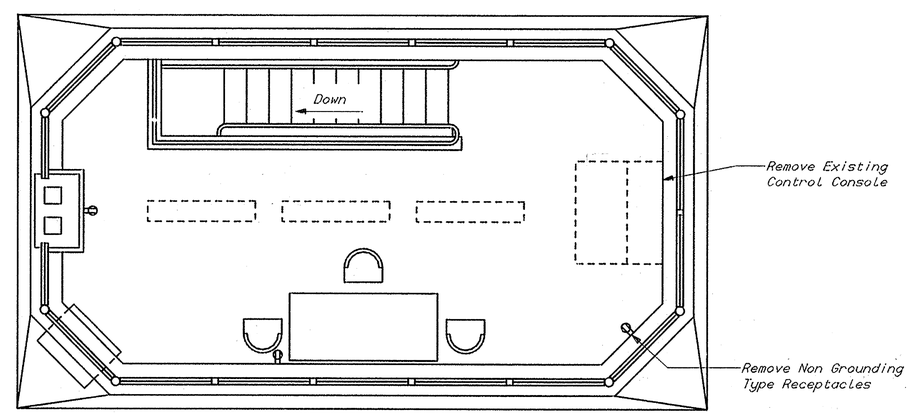

PLAN AT EL. 36.50'

Scale: 3/8" = 1'-0"

All Work on this Sheet Shall be Paid Under Item 763512

REVISIONS

PREL. TRACING R.L. Reed DESIGN G.L. Fasick CHKD. L.V. Borden

NOV 23 1982

eench

BR. 1-687	CONTRACT	COUNTY	FEDERAL AID PROJECT No	SHEET No	TOTAL SHEETS
	89-074-05	NEW CASTLE	BHM-1179(3)	37	52

CONTROL HOUSE DETAILS - 1

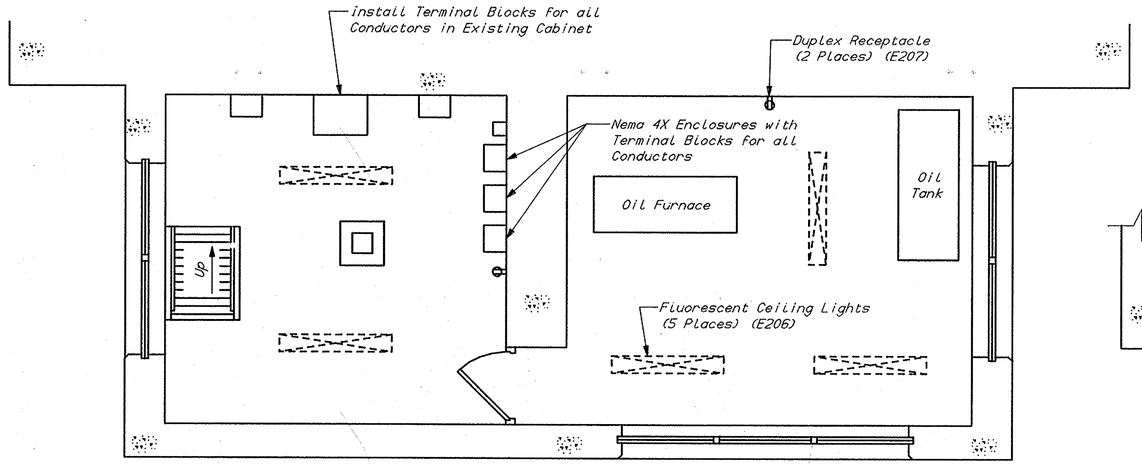

PLAN AT EL. 3.00'

Scale: 3/8" = 1'-0"

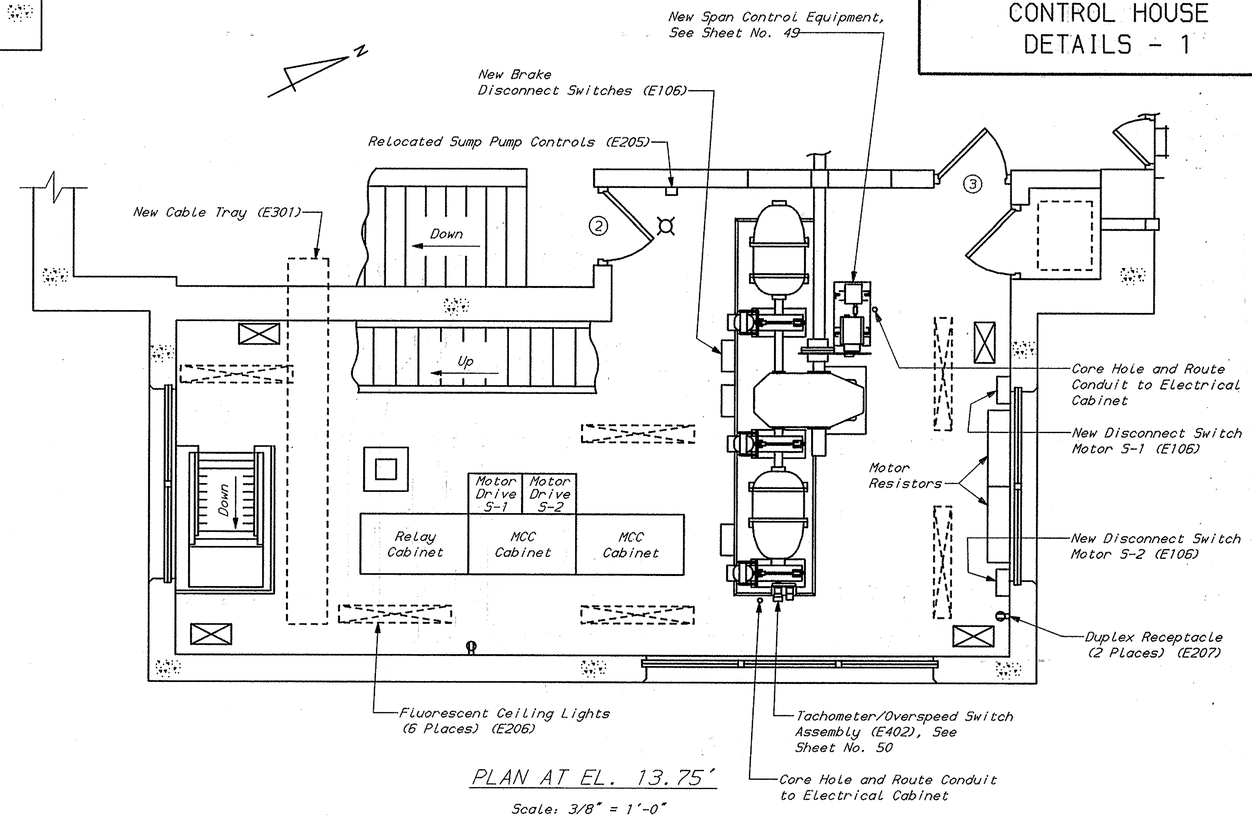

PLAN AT EL. 13.75'

Scale: 3/8" = 1'-0"

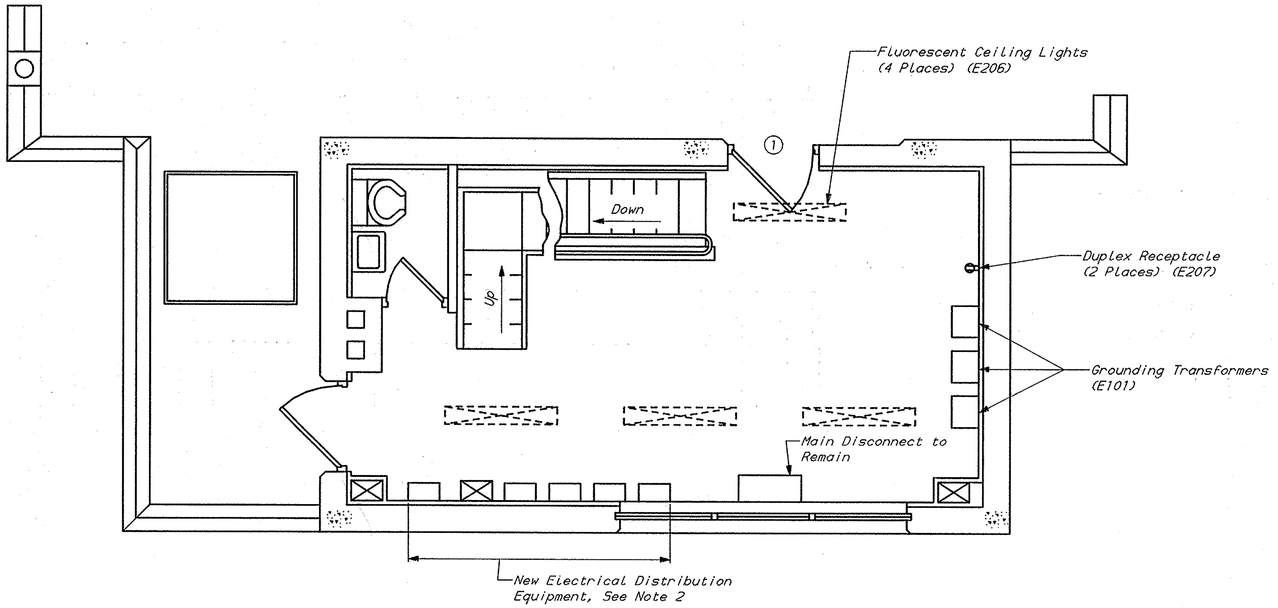

PLAN AT EL. 25.50'

Scale: 3/8" = 1'-0"

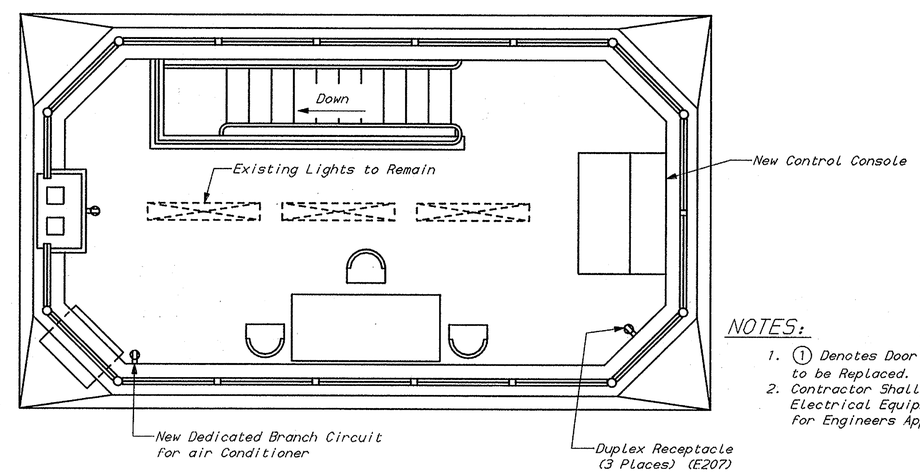

PLAN AT EL. 36.50'

Scale: 3/8" = 1'-0"

NOTES:

1. (1) Denotes Door Marks for Doors to be Replaced.
2. Contractor Shall Submit Proposed Electrical Equipment Layout for Engineers Approval.

All Work on this Sheet Shall be Paid Under Item 763512

REVISIONS

PREL. TRACING R.L. Reed DESIGN G.L. Fasick CHKD. L.V. Borden

NOV 23 1992

ohd1

BR. 1-687	CONTRACT	COUNTY	FEDERAL AID PROJECT No	SHEET No	TOTAL SHEETS
	89-074-05	NEW CASTLE	BHM-1179(3)	38	52

CONTROL HOUSE DETAILS - 2

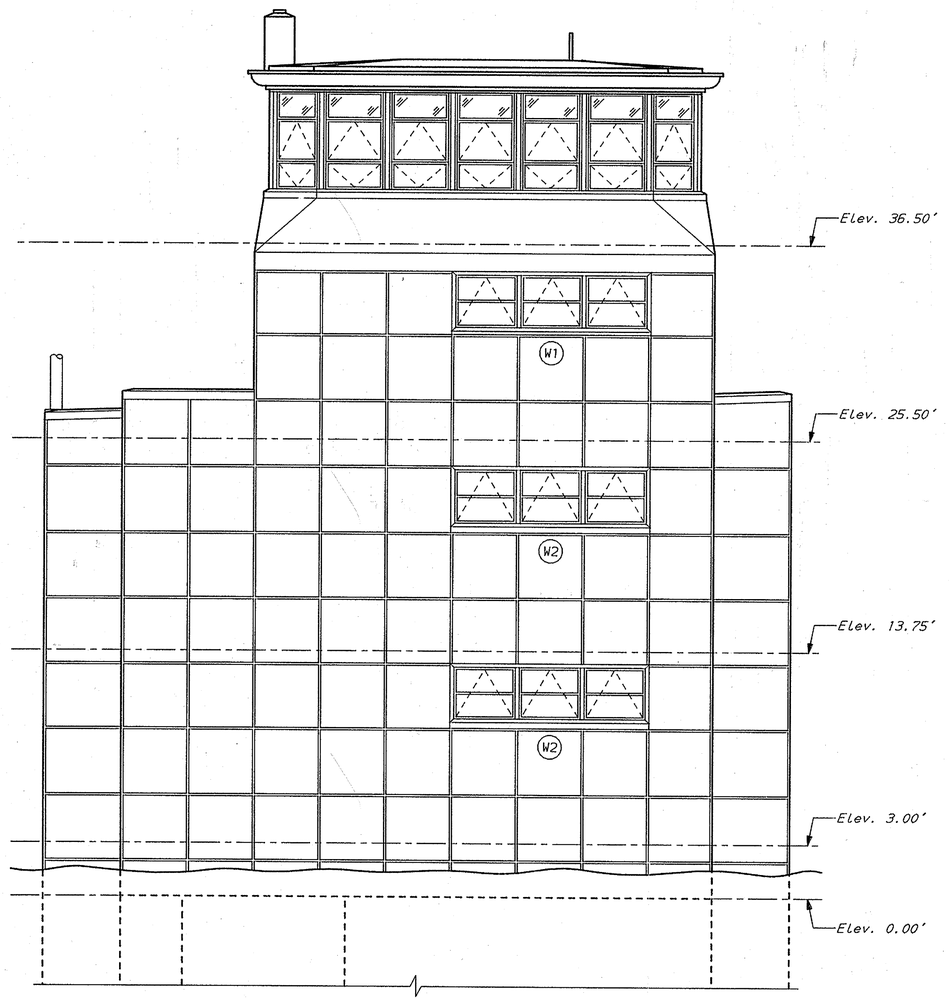

EAST ELEVATION

Scale: 1/4" = 1'-0"

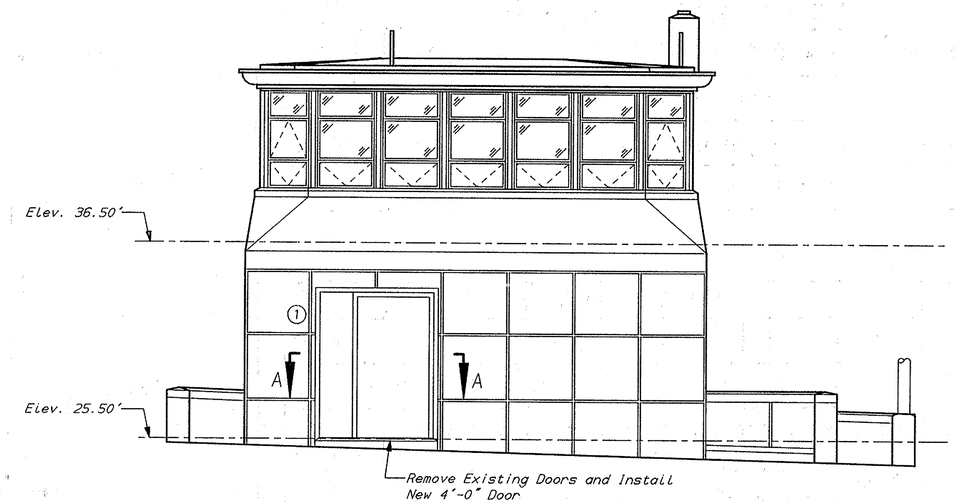

WEST ELEVATION

Scale: 1/4" = 1'-0"

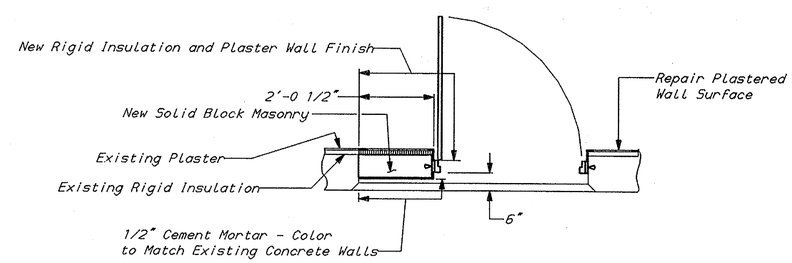

SECTION A-A

Scale: 1/2" = 1'-0"

NOTES:

1. Designated Windows to be Replaced, For Window and Door Schedule See Sheet No. 39.
2. (W?) Denotes Window Marks for Windows to be Replaced.
3. (1) Denotes Door Marks for Doors to be Replaced.

All Work on this Sheet Shall be Paid Under Item 763515

REVISIONS

PREL. TRACING R.L. Reed DESIGN C.W. Hersh CHKD. L.V. Borden

NOV 23 1992

ohd2

BR. 1-687	CONTRACT	COUNTY	FEDERAL AID PROJECT No	SHEET No	TOTAL SHEETS
	89-074-05	NEW CASTLE	BHM-1179(3)	39	52

CONTROL HOUSE DETAILS - 3

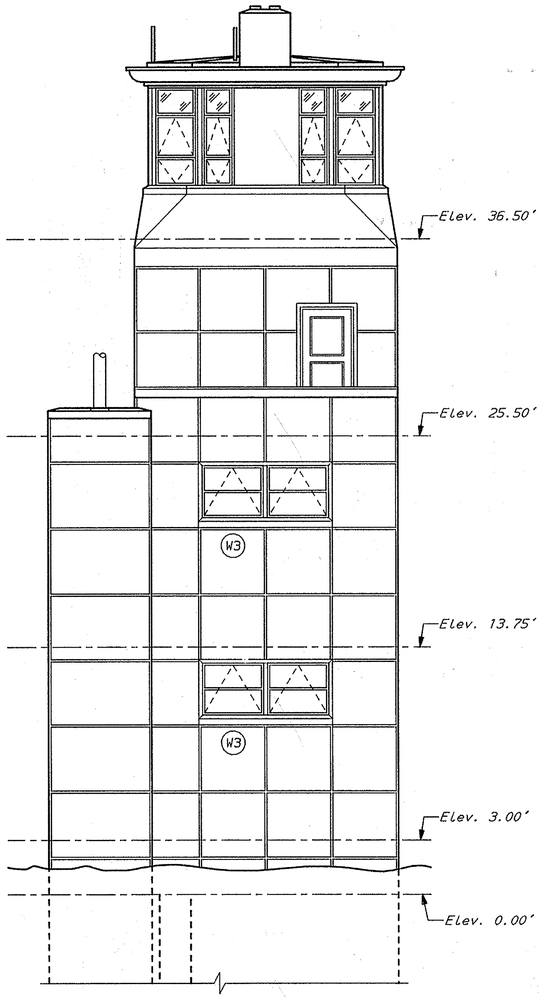

SOUTH ELEVATION

Scale: 1/4" = 1'-0"

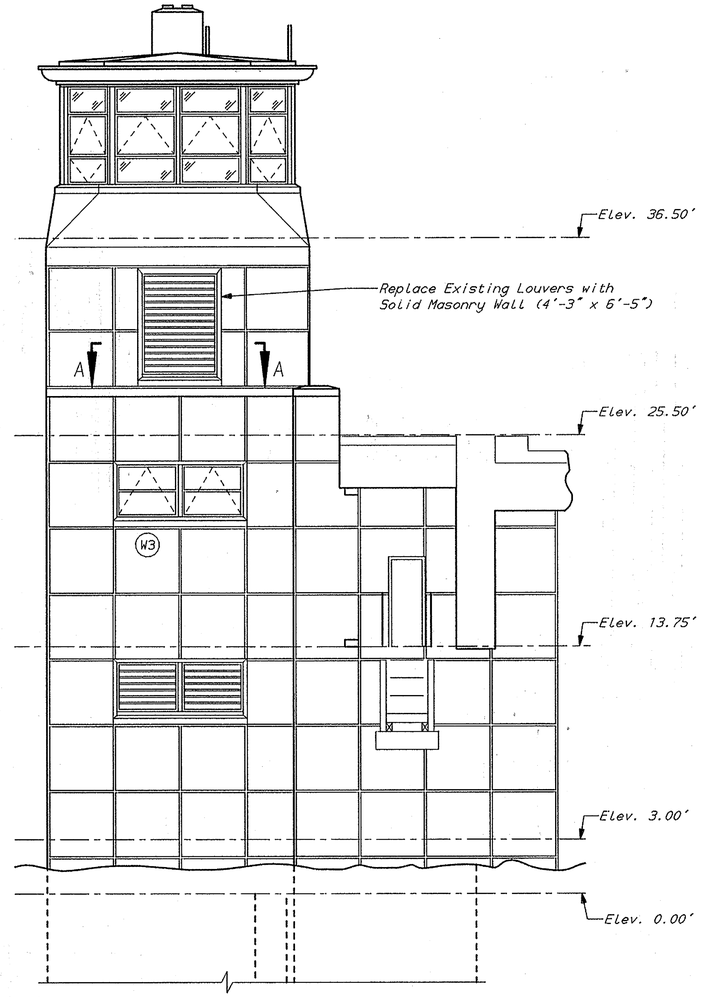

NORTH ELEVATION

Scale: 1/4" = 1'-0"

REPLACEMENT WINDOW SCHEDULE						
Designation	* Unit Size	* Masonry Opening	Top Sash	Middle Sash	Bottom Sash	Number of Units
W1	3'-4 7/8" x 2'-9"	10'-8" x 2'-9"	Project Out	N/A	N/A	1
W2	3'-4 7/8" x 2'-9"	10'-8" x 2'-9"	Project Out	N/A	N/A	5
W3	3'-4 7/8" x 2'-9"	7'-0 1/2" x 2'-9"	Project Out	N/A	N/A	9

REPLACEMENT DOOR SCHEDULE			
Designation	* Unit Size	* Masonry Opening	Remarks
1	4'-0" x 8'-0" x 1/3/4"	4'-4 1/2" x 8'-2 1/4"	Flush Steel Door
2	2'-6" x 7'-0" x 1/3/4"	2'-10 1/2" x 7'-2 1/4"	Flush Steel Door
3	2'-6" x 6'-0" x 1/3/4"	2'-10 1/2" x 7'-2 1/4"	Flush Steel Door
4	2'-6" x 6'-0" x 1/3/4"	2'-10 1/2" x 7'-2 1/4"	Flush Steel Door
5	2'-6" x 6'-0" x 1/3/4"	2'-10 1/2" x 7'-2 1/4"	Flush Steel Door

* All Dimensions are Taken from the Original Contract Plans, for Information Only. For Actual Size of the Replacement Windows, Details of and Method of Mounting, and Details of Perimeter Sealing will be Strictly in Accordance with the Manufacturers Details of and Method of Mounting, and Details of Perimeter Requirements and His Field Measurements.

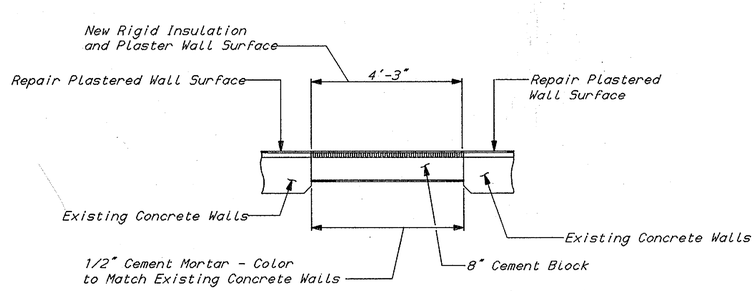

SECTION A-A

Scale: 1/2" = 1'-0"

NOTES:

1. (W?) Denotes Window Marks for Windows to be Replaced.
2. Prefabricated Receptors and Subsills will be Permitted.
3. All Necessary Trim and Repairs to interior Wall Finish to Bring it Back to the Original Profile is Include in this Work.

All Work on this Sheet Shall be Paid Under Item 763515

REVISIONS

PREL. TRACING R. L. Reed DESIGN C. W. Hersh CHKD. L. V. Borden

NOV 25 1992

chd3

BR. 1-687	CONTRACT	COUNTY	FEDERAL AID PROJECT No	SHEET No	TOTAL SHEETS
	89-074-05	NEW CASTLE	BHM-1179(3)	40	52

ELECTRICAL EQUIPMENT REMOVAL STORAGE HOUSE

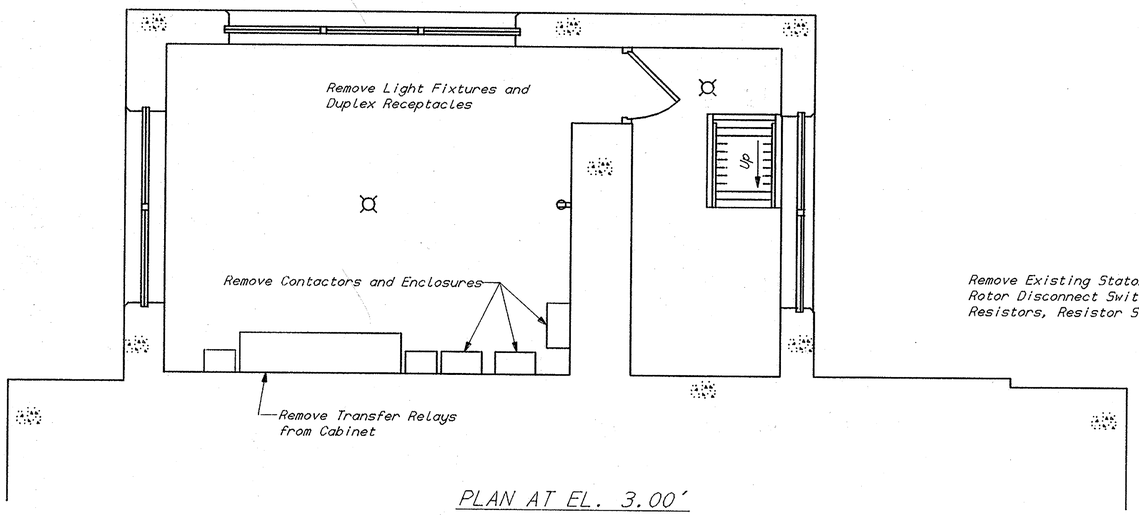

PLAN AT EL. 3.00'

Scale: 3/8" = 1'-0"

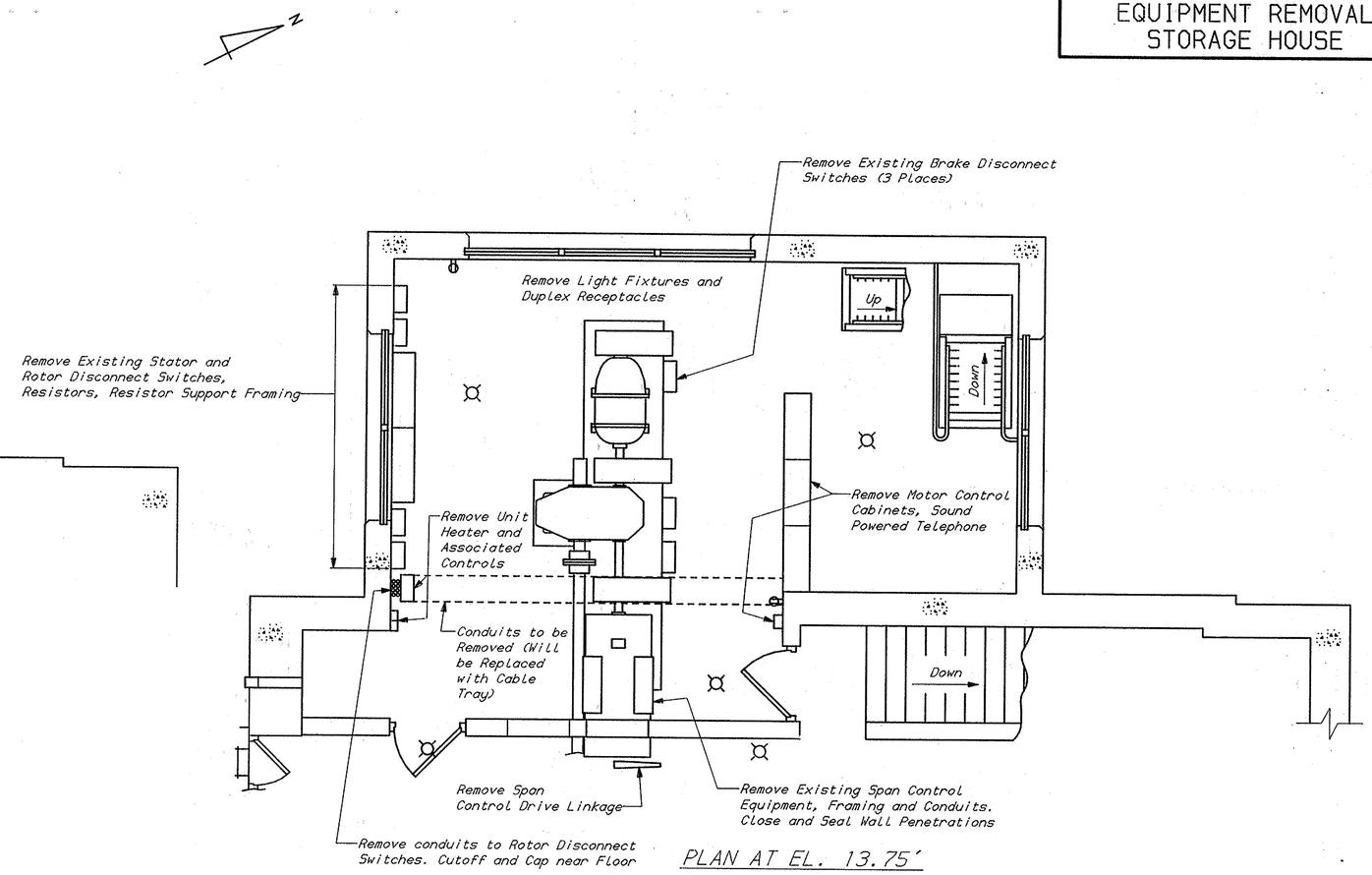

PLAN AT EL. 13.75'

Scale: 3/8" = 1'-0"

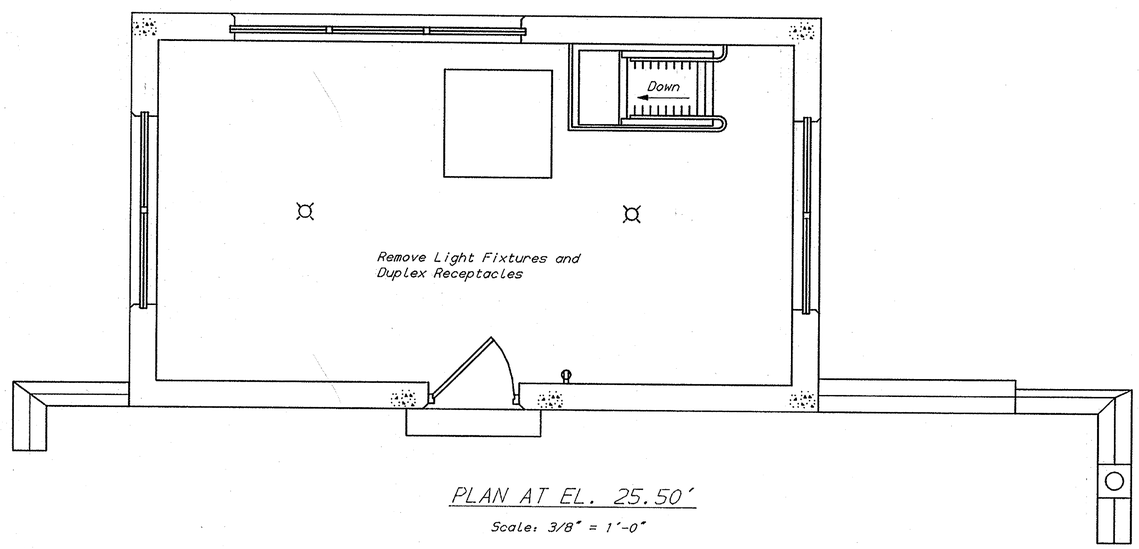

PLAN AT EL. 25.50'

Scale: 3/8" = 1'-0"

All Work on this Sheet Shall be Paid Under Item 763512

REVISIONS

PREL. TRACING R.L. Reed DESIGN G.L. Fasick CHKD. L.V. Borden

NOV 23 1992

eersh

BR. 1-687	CONTRACT	COUNTY	FEDERAL AID PROJECT No	SHEET No	TOTAL SHEETS
	89-074-05	NEW CASTLE	BHM-1179(3)	41	52

STORAGE HOUSE DETAILS - 1

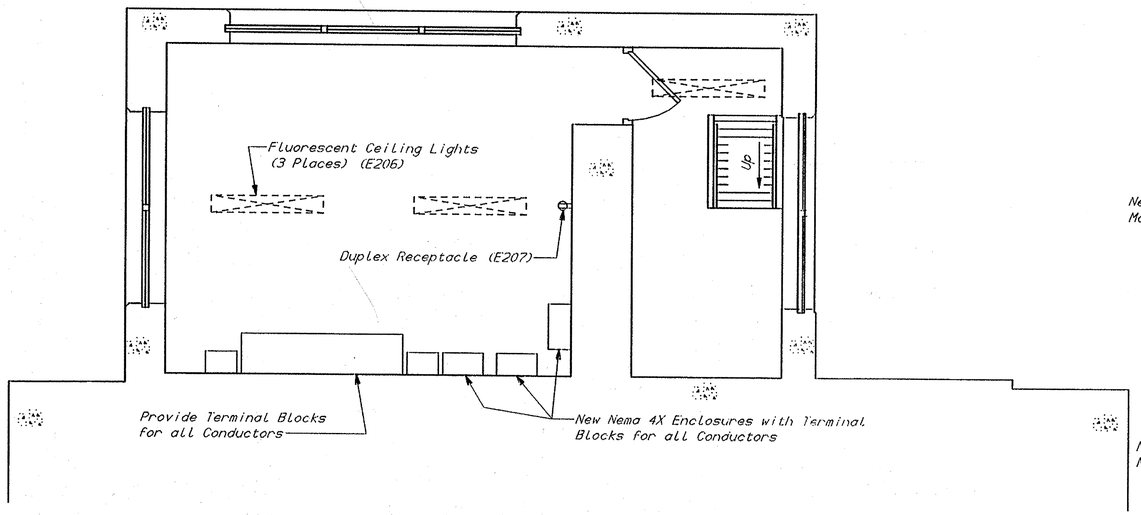

PLAN AT EL. 3.00'

Scale: 3/8" = 1'-0"

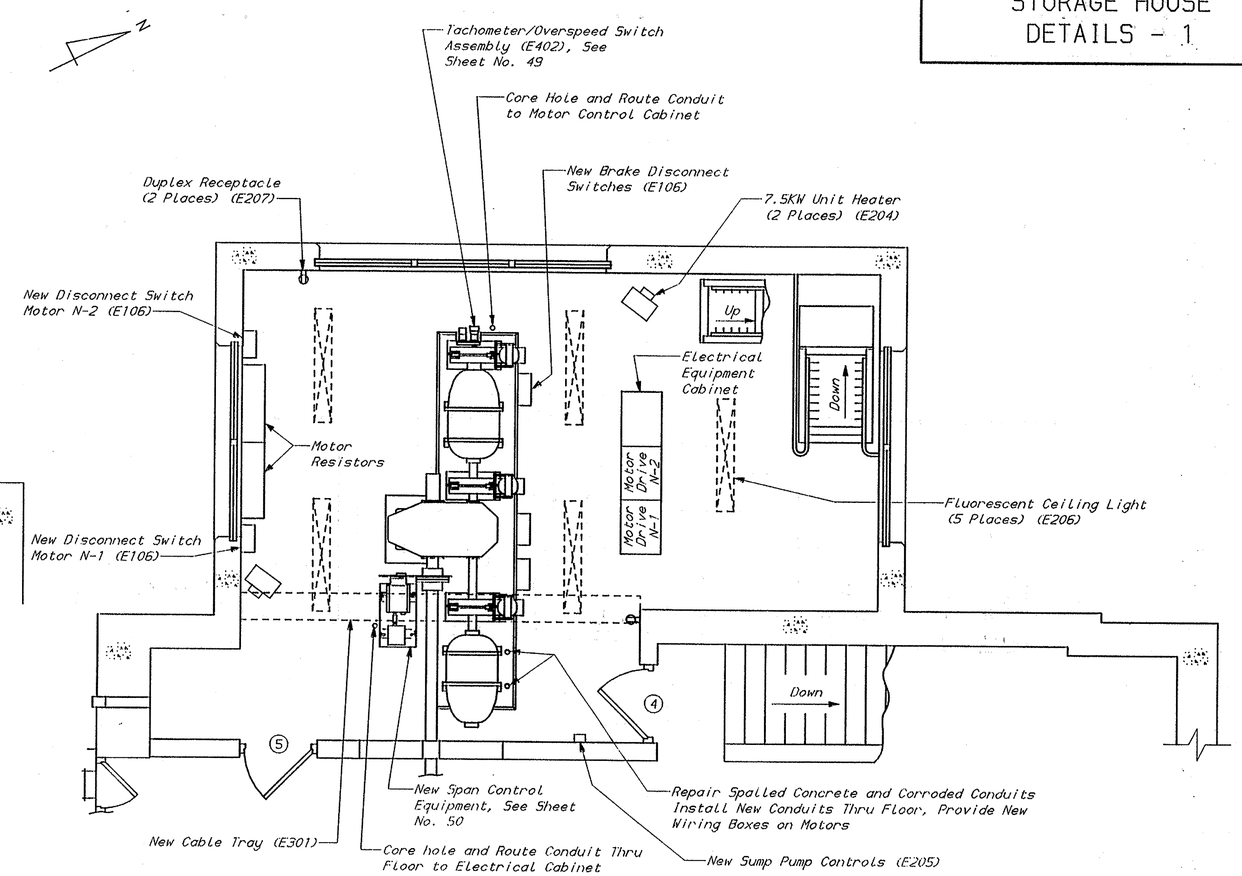

PLAN AT EL. 13.75'

Scale: 3/8" = 1'-0"

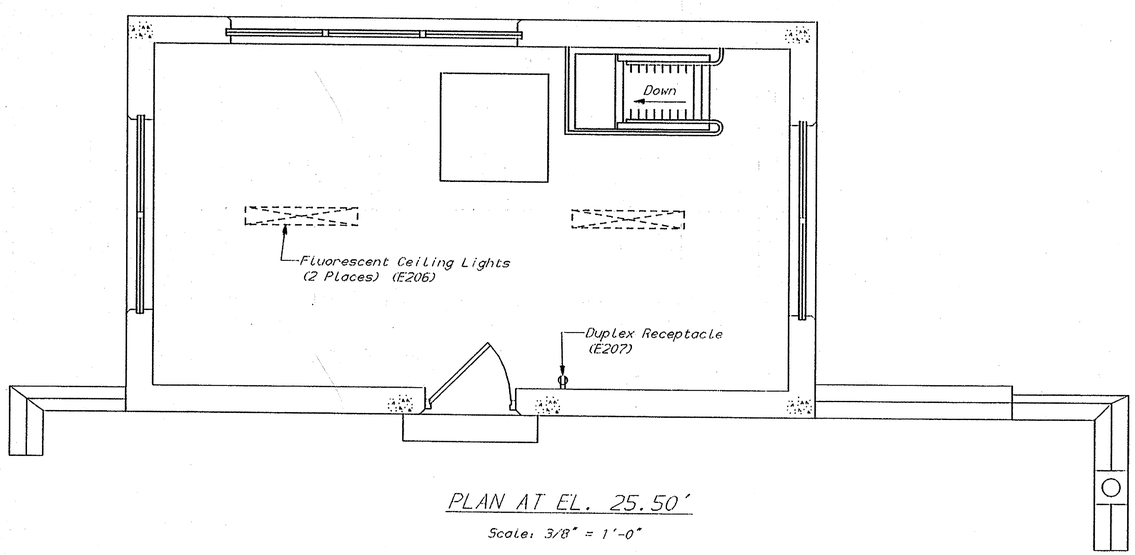

PLAN AT EL. 25.50'

Scale: 3/8" = 1'-0"

NOTES:

1. (1) Denotes Door Marks for Doors to be Replaced.

All Work on this Sheet Shall be Paid Under Item 763512

REVISIONS

PREL. TRACING R.L. Reed DESIGN G.L. Fosick CHKD. L.V. Borden

NOV 17 1992

ahd1

BR. 1-687	CONTRACT	COUNTY	FEDERAL AID PROJECT No	SHEET No	TOTAL SHEETS
	89-074-05	NEW CASTLE	BHM-1179(3)	42	52

STORAGE HOUSE DETAILS - 2

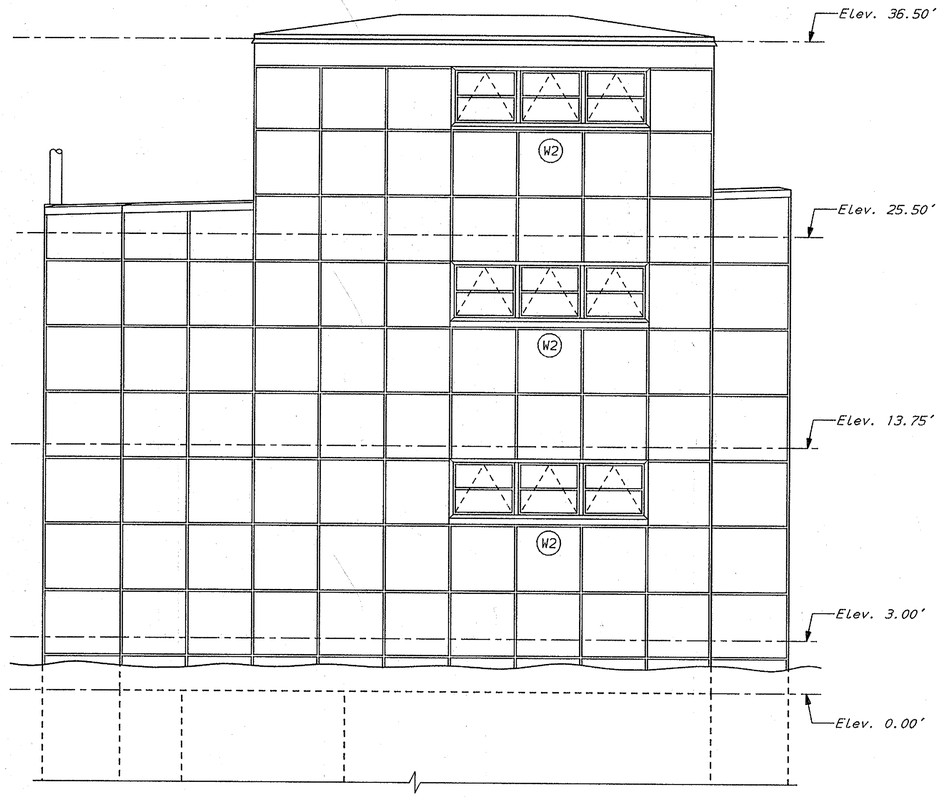

WEST ELEVATION

Scale: 1/4" = 1'-0"

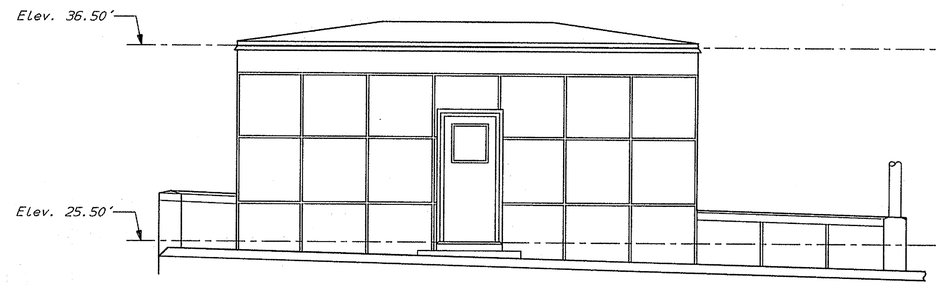

EAST ELEVATION

Scale: 1/4" = 1'-0"

NOTES:

1. All Windows to be Replaced, for Window Schedule See Sheet No. 39.
2. (W?) Denotes Window Marks for Windows to be Replaced.

All Work on this Sheet Shall be Paid Under Item 763515

REVISIONS

PREL. TRACING R.L. Reed DESIGN C.W. Hersh CHKD. L.V. Borden

NOV 28 1992

shd2

BR. 1-687	CONTRACT	COUNTY	FEDERAL AID PROJECT No	SHEET No	TOTAL SHEETS
	89-074-05	NEW CASTLE	BHM-1179(3)	43	52

STORAGE HOUSE DETAILS - 3

REVISIONS

PREL. TRACING R.L. Reed DESIGN C.W. Hersh CHKD. L.V. Borden

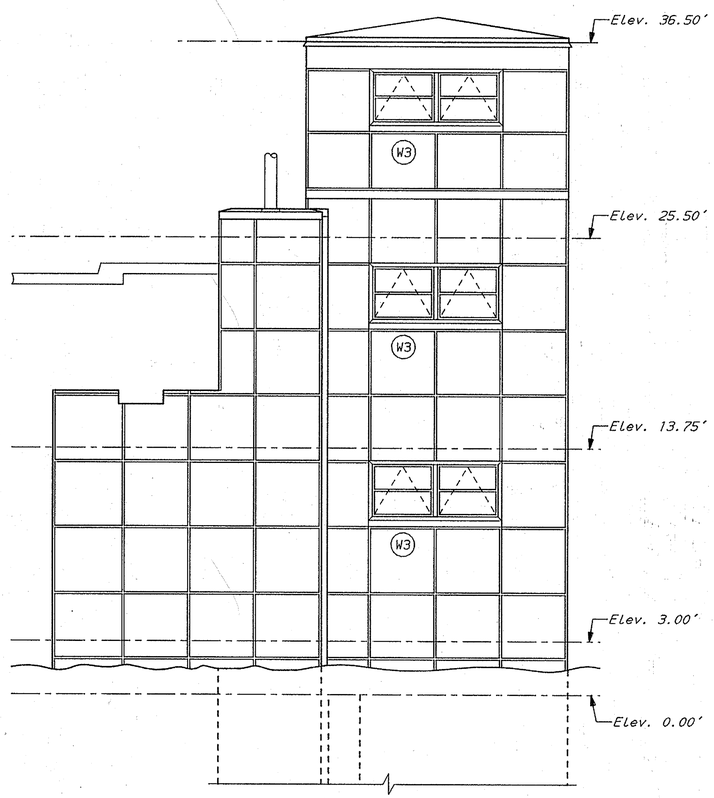

NORTH ELEVATION

Scale: 1/4" = 1'-0"

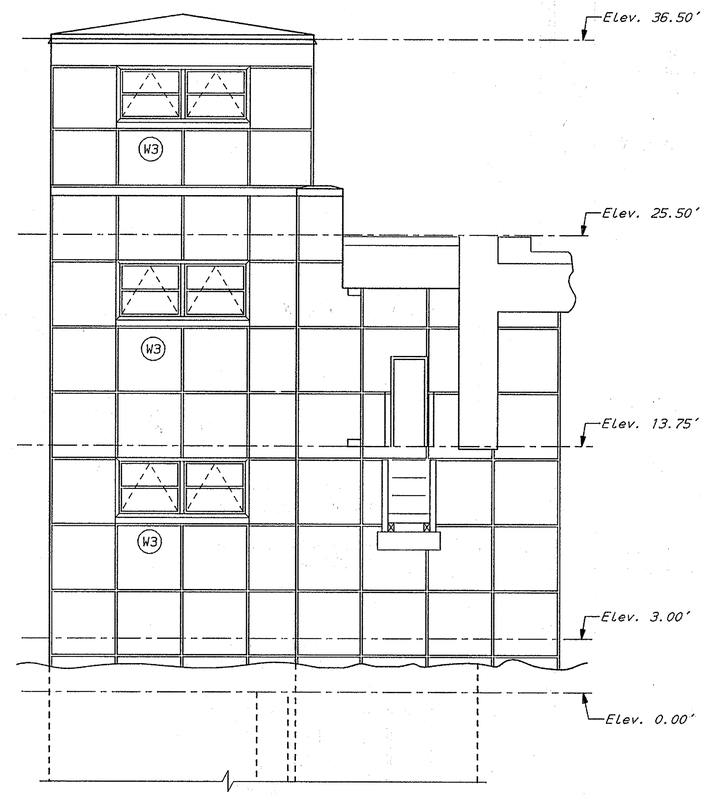

SOUTH ELEVATION

Scale: 1/4" = 1'-0"

NOTES:

1. All Windows to be Replaced, For Window Schedule See Sheet No. 39.
2. (W3) Denotes Window Marks For Windows to be Replaced.

All Work on this Sheet Shall be Paid Under item 763515

NOV 23 1992

ahd9

BR. 1-687	CONTRACT	COUNTY	FEDERAL AID PROJECT No	SHEET No	TOTAL SHEETS
	89-074-05	NEW CASTLE	BHM-1179(3)	44	52

CONDUIT REPAIRS

REVISIONS

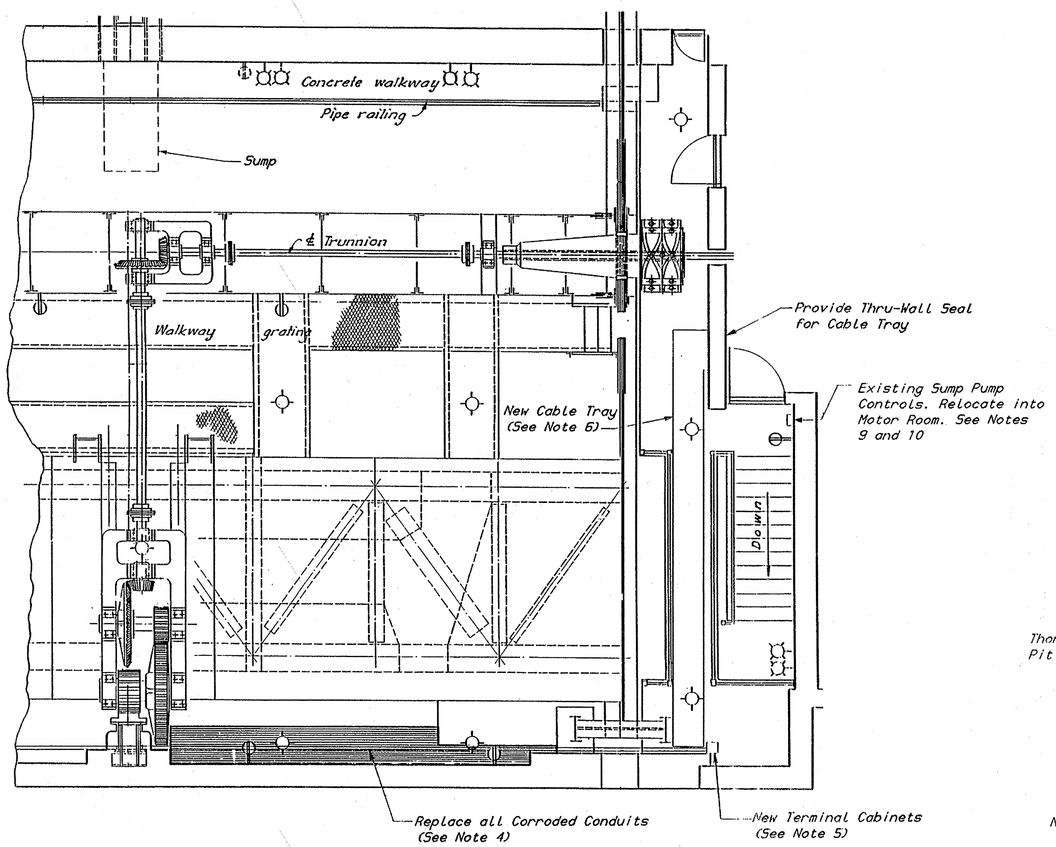

PLAN OF ELECTRICAL WORK IN COUNTERWEIGHT AREA

Scale: 3/8" = 1'-0"

Plan of Electrical Removals and Rplacements in Counterweight and Platform Areas. South East Area Shown. Work Shown is Also Required in the South West and North West Pier Areas.

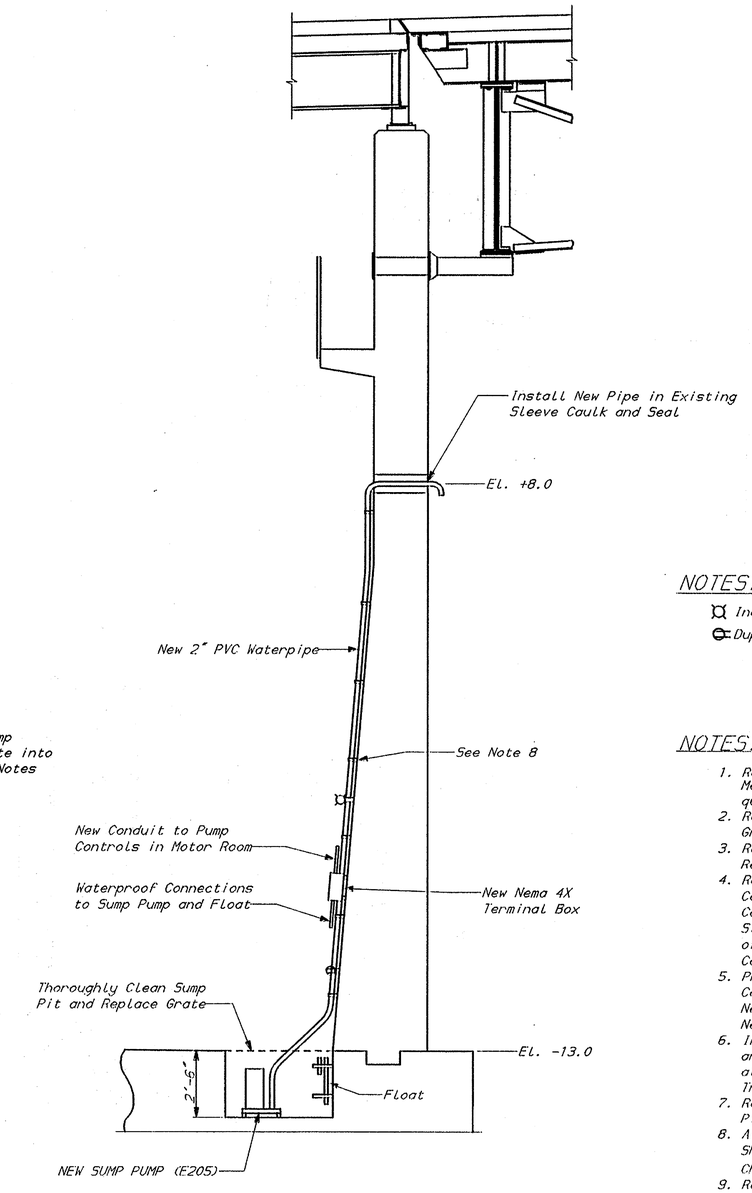

SUMP PUMP INSTALLATION

Scale: 3/8" = 1'-0"

NOTES:

Incandescent Lights (See Note 1)

Duplex Receptacles (See Note 2)

NOTES:

1. Remove and Replace all Incanddescent Lights with New Non-Metallic Fixtures (E208), Ceiling or Bracket Mount as Required to Match Existing.
2. Remove and Replace all Duplex Receptacles with Weatherproof Ground Fault Receptacles (E209).
3. Remove all Raceway Associated with Lights and Receptacles and Replace with Non-Metallic Conduit (E302).
4. Remove all Abandoned Conduits and Wiring. Replace all Active Conduits in the Area Behind the Counterweight with Non-Metallic Conduit (E302). Attach Conduits to Stiffeners Using Stainless Steel Mounting Channel (E305) Clamped to Stiffeners. Drilling of Structural Members is not Permitted. All Hardware Shall be Corrosion Proof. Install New Wiring (E306), Sized as Required.
5. Provide and install Non-Metallic, Nema 4X Rated Terminal Cabinets with 600V Terminal Blocks for Interconnection Between New Conduits and Existing Conduits. Install New Conduit to New Cable Tray.
6. In the South Pier only, Remove Conduit Bank over Platform and Replace with Cable Tray (E301). Tray Shall be Covered and all Supports and Other Accessories Shall be Corrosion Proof. Tray Shall be Sized as Required by the National Electrical Code.
7. Remove Abandoned Air Controls, Associated Cabinets, Disconnects, Pipe and Conduit. (South West and North East Pier Areas).
8. All PVC Conduit and Waterpipe Associated with Sump Pump Installation Shall be Mounted to the Pier Wall with Satinless Steel Mounting Channel (E305).
9. Relocate South Pier Pump Control Panel into Motor Room. Install New Control Circuit as may be Requred, New Running Pilot Light on Panel Door.
10. Install New Pump Control Panel in North Motor Room (See Equipment List, Piece No. E205).

All Work on this Sheet Shall be Paid Under Item 763512

PREL. TRACING R.L. Reed DESIGN G.L. Fasick CHKD. L.V. Borden

NOV 23 1992

BR. 1-687	CONTRACT	COUNTY	FEDERAL AID PROJECT No	SHEET No	TOTAL SHEETS
	89-074-05	NEW CASTLE	BHM-1179(3)	45	52

TRAFFIC SIGNALS AND GATES

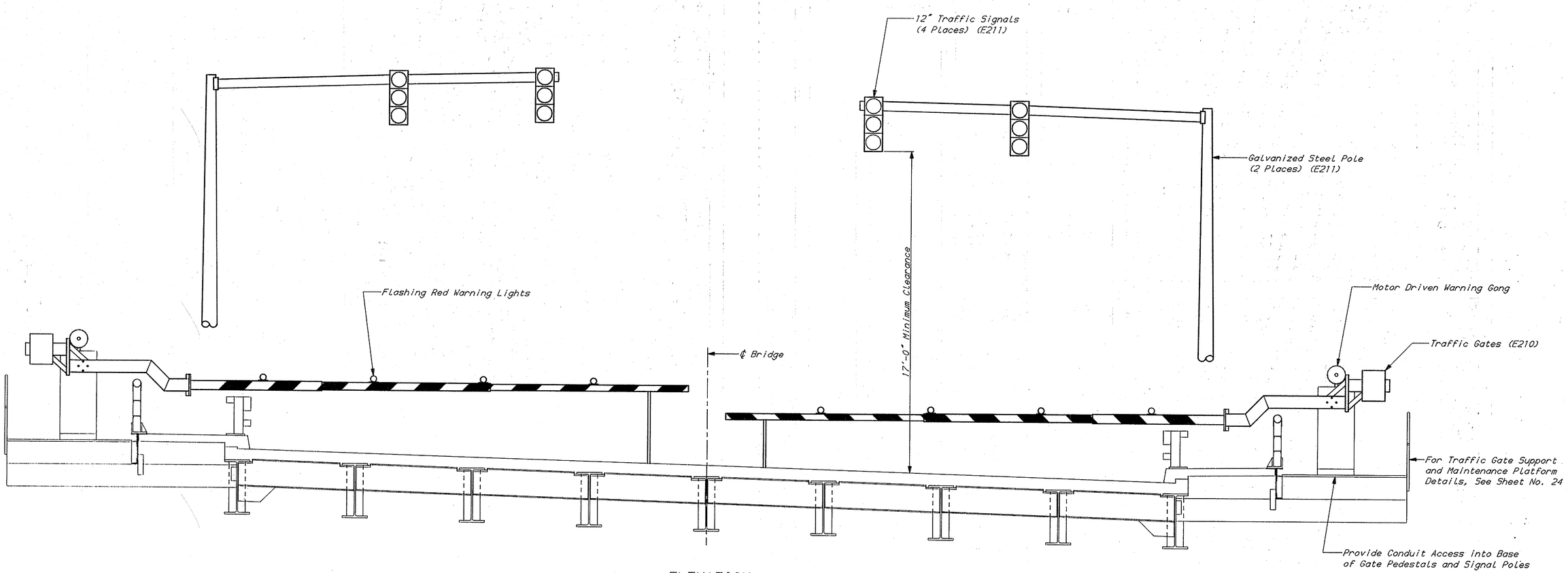

ELEVATION
SOUTH TRAFFIC GATES

Scale: 3/8" = 1'-0"

Note: North Traffic Gates Similar Except Roadway has Normal Crown

NOTES:

1. Traffic Signals to be Installed on South Side Only.

All Work on this Sheet Shall be Paid Under Item 763512

REVISIONS

PREL. TRACING R.L. Reed DESIGN G.L. Fosick CHKD. L.V. Borden

MAR 26 1992

tag

ELECTRICAL EQUIPMENT SCHEDULE - 1

GROUP 100 EQUIPMENT

PIECE NO.	QUANTITY	NAME	MANUFACTURER	TYPE - MODEL	RATING AND DESCRIPTION
E101	3	Grounding Transformer	Acme Electric Company	Catalog No. T-2-53517-3S	Zig-Zag Grounding Transformer System Shall Provide 480/277V, 4 Wire with Neutral from Incoming 480VΔ Supply. Includes 3 - 15KVA Dry-Type Transformers Providing 3 Phase KVA Rating of 156KVA.
E102	1	Gen/Set Receptacle, Circuit Breaker	Crouse-Hinds	DVR75-2042-WTS225-3	Enclosed 225A Circuit Breaker with Interlocked 200A, 600V, 3 Wire 4 Pole Receptacle, Shunt Trip Prevents Removal of Plug Under Load Operating Handle Padlockable in "ON" or "OFF" Positions. Enclosure Shall be Aluminum Rated Minimum Nema 12.
E103	1	Transfer Switch	Square D	Catalog No. 92345	Double Throw Safety Switch. 3 Pole, 600V, 400A with Nema 1 Enclosure. Front of Enclosure Shall be Clearly Labeled Indicating Handle Position for "Utility" and "Generator Set".
E104	1	Circuit Breaker	Square D	Catalog No. FA100AWK	Enclosed 100A, 480V, 3 Pole Circuit Breaker in Nema 12 Enclosure.
E105	1	Transformer 30KVA	Square D	Catalog No. T-1A-53312-3S	Dry-Type Transformer, 30KVA Rated with 480/277V, 4 Wire Primary, 208Y/120V Secondary. U.L. Listed Class 220°C Insulation, 150°C Rise. Taps: (2) 2 1/2% ANFC, (4) 2 1/2% BNFC. Shall Include Electrostatic Shielding.
E106	8 4 1	Disconnect Switches	Square D	100A Frame 225A Frame 400A Frame	Enclosed Molded Case Switch. Number of Poles and Frame Size as Shown on Plans. Factory Preset Non-Adjustable Magnetic Trip for High Fault Currents with no Overload Protection. Indoor Units Nema 12, Outdoor Units Nema 4X Stainless Steel. Shall have 600V Rating and U.L. Listing.
E107	1	Bus Monitor	Timemark Corporation	Model C269	Shall Monitor 3 Phases of power Bus, Dropping Out Normally Energized Output Relay upon loss of Phase, Phase Reversal, Phase Unbalance, High or Low Bus Voltage, Adjustable Set Points 380V to 540V. Trip Time Delay Adjustable 1 to 10 Seconds, Auto Reset, L.E.D. Indicators for Over/Under Voltage, Built-in Surge Protection Rated 1500 VRMS for 10 MS.
E108	1	Main Distribution Panelboard	Square D	Type NQOD	Circuit Breaker Panelboard. 120/208V, 3 Phase, 4 Wire with 225A Copper Mains, Space for 42 Poles. Main and Branch Breakers as Required. Breakers Shall be Bolt-on Type. Nema 12 Enclosure, all Necessary Trim and Hardware. Typewritten Branch Circuit Legend Permanently Mounted Inside Door.

GROUP 200 EQUIPMENT

PIECE NO.	QUANTITY	NAME	MANUFACTURER	TYPE - MODEL	RATING AND DESCRIPTION
E201	4	Span Navigation Lights	Federal APD Chicago, IL.	Type 2 5901-252 BX	Pivot Type Span Mounted Navigation Lights. Shall have 180° Green over 180° Red Fresnel Lenses. Pivot Assembly Shall be Galvanized Steel. Lamp Housing Shall be Cast Bronze with Stainless Steel Hanger Stem and Bronze Retreiver Chain. Hanger Stem Length Shall Position Lights at same Elevation as Existing Navigation Lights. Lamps Shall be Clear, 20,000 Hour, 120 Volts and Supplied by Navigation Light Manufacturer. Span Navigation Lights Shall be Circuited to Rotary Cam Limit Switch Contacts such that Navigation Lights Switch from Red to Green at or above Fully Open Position of the Bascule Span.
E202	6	Fender Navigation Lights	Federal APD Chicago, IL.	Type 1 5901-250-BX	Pedestal Mounted Navigation Light. 180° Red Fresnel Lens. Lamp Housing Shall be Cast Bronze. Support Flange Shall be Galvanized Steel. Support Pipe Shall be Stainless Steel and Position Light at same Elevation as Existing. Lamp Shall be Clear, 20,000 Hour 120V and Supplied by Navigation Light Manufacturer.
E203	2	Warning Siren	Federal Signal Corporation	Model L	Siren Shall have Corrosion Resistant Housing, Adjustable Mounting Brackets, Ball Bearing 120 VAC Motor with Lifetime Lubrication. Siren Shall be U.L. Listed. Shall have Fundamental Frequency of 700 Hz and Produce Sound Output Level of 112 DBA at 10 Feet.
E204	2	Unit Heater	Cadet Manufacturing Company Vancouver, WA.	CEH-007-S CEK-TB-1	Electric Unit Heater, 7500W, 480V, 3 Phase. Shall be U.L. Listed with Intergral Adjustable Thermostat, Built-in Automatic Reset Thermal Cutout. Automatic Shut-off Fan Shall Cool Elements after Heater Shut-off. Heater Elements Shall be Aluminum Finned. Totally Enclosed Motor with Aluminum Fan. All Enclosure Surfaces, external and Internal, Shall be Finished with Baked on Powder Coat Paint.
E205	2	Sump Pump	Aurora Pump Ashland, OH.	SPD-50H	Heavy Duty Submersible Sump Pump with Non-Clogging Type Impeller. Pump Motor 1/2 HP, 208V, 3 Phase. Shall Include Plastic Discharge Pipe, all Wiring, Nema 4X Terminal box and Level Sensors. Pump Shall Turn on 3" to 6" from full sump and off with Level 6" to 9" from Bottom. Pump Shall have Capacity of 50 G.P.M. at 25 Ft. Head.
	1	——	——	——	Relocate Existing Pump Control Panel in South Pier Area to Motor Room. Install New Pump Control Circuit and Running Light.
	1	Pump Control Panel (North Pier)	Square D	Class 8539 Catalog No. SCA-43	Combination Motor Starter in Nema 12 Enclosure. 208V, 3 Phase, Nema 1 Size Starter. Install Running Light in Door, all Necssary Pump Control Circuits Inside Enclosure.
E206	25	Fluorescent Ceiling Lights	Lithonia Lighting Corporation	DM-2-40-120-CW	Fluorescent Ceiling Lights, U.L. Listed for Damp Locations. Shall have Reinforced Polyester Housing with Acrylic Diffuser, (2) 40 Watt T12 Lamps, Cold Weather Ballast (120Vac). Shall Include all Necessary Fittings and Mounting Hardware.
E207		Duplex Receptacle Outlet	Hubbell	5262/5263	Heavy-Duty, Specification Grade 120Vac Duplex Receptacle. Shall be Side Wired with Grey Nylon Face and Grey Nylon Wall Plate. 15A 20A Rating as Required to Coordinate with Branch Circuit Rating.
E208	20	GFCI REceptacle	Hubbell Wiring Devices	GF5252GY/ GF5253GY	Ground Fault Interrupting Receptacle, Specification Grade, 15A or 20A, 120V as Required to Coordinate with Existing Branch Circuits Shall be U.L. Listed with Grey Faceplate, Test and Reset Buttons. This Item Shall Include Corrosion Resistant, Weatherproof EnClosure.
E209	54	Vaportight Incandescent Fixtures	Killark Electric Manufacturing Company	NV Series	Corrosion Resistant, Non-Metallic Vaportight Light Fixtures. Shall be Constructed of Thermo Plastic Polyester and Include Heat Resistant Glass Globe, Globe Guard, and 150W, 120V Rough Service Lamp. Mounting Provisions Shall be Supplied for Pendent, Ceiling, or Bracket Mounting as Required to Replace Existing Lights in the Pier Pits and Platform Areas Under the Roadway.
E210	4	Traffic Gates	B & B Electromatic Norwood, LA.	VT-40	Vertical to Horizontal Type Traffic Gate with Weatherproof Housing, Motor Driven Mechanical Operating System, Solenoid Type Brake, Provisions for Handcranking. Includes Manual Disconnect Switch in Housing, Fiberglass Gate Arm with Flashing Warning Lights, Weatherproof 12" Gong, 8 Circuit Limit Switch.
E211	4	Traffic Signal	Crouse-Hinds	Standard 12" Signal	Traffic Signal Pole and Arm to Provide Horizontal Mounting of Overhead Signals. Signals Shall be 12" Die-Cast Aluminum with Visors. Pole and Arm Shall be Hot Dip Galvanized Steel, A.A.S.H.T.O. Rated 90 MPH.
	2	Pole Assembly	Union Metal	Design 50990-Y3	

All Work on this Sheet Shall be Paid Under Item 763512

NOTES:

1. All Quantities Outlined on this Drawing are Approximate and Included as Reference Only. The Contractor Shall Prepare his Own Detailed Materials List Including Spares as may be Specified in the Specifications.

REVISIONS

PREL. TRACING R.L. Reed DESIGN G.L. Fasick CHKD. L.V. Borden

NOV 23 1992

ELECTRICAL EQUIPMENT SCHEDULE - 2

GROUP 300 EQUIPMENT

PIECE NO.	QUANTITY	NAME	MANUFACTURER	TYPE - MODEL	RATING AND DESCRIPTION
E301	50 Ft.	Cable Tray	B Line Systems, INC.	35A6-18	Aluminum Cable Tray System, 4" loading Depth, 18" width, 6" Rung Spacing. Provide Cover for Tray in Counterweight Area. Shall include all Necessary Hangers, Supports, Dividers and Other Accessories as Required for Complete Cable Tray System. All components of Trays in Wet Locations Shall be Corrosion Proof.
E302	As Required	Rigid Non-Metallic Conduit	Carlon	Plus 80 Dia. as Required	Extra Heavy Wall (Schedule 80) Non-Metallic Conduit. shall be U.L. Listed and Shall Include all Necessary Fittings, Junction Boxes, Supports and Accessories. All Components Shall be Corrosion Proof.
E303	As Required	Liquid Tight Flexible Steel Conduit	Liquatite Electra-Flex Company	Type LA Dia. as Required	Liquid Tight Flexible Steel Conduit. Spiral Hot-Dip Galvanized Steel strip Covered with Extruded PVC Jacket. Shall be Water-tight, Vaportight, U.L. Listed and in Conformance with Article 351 of the National Electrical Code. Shall Include Liquid Tight Fittings and Couplings.
E304	As Required	Rigid Steel Conduit	Allied Tube and Conduit Corporation	Diameter as Required	Rigid Steel Conduit Shall be Hot-Dip Galvanized. Threads Galvanized after Cutting. Conduit Shall be U.L. Listed and Conform to A.N.S.I. Specification C80.1. Field Threads and Cuts Shall be Touched up with Cold Galvanizing Compound. Shall include all Nec- Conduit Bodies, Clamps and Hardware.
E305	As Required	Mounting Channel	B - Line Systems, INC.	1 5/8" x 1 5/8" Stainless Steel	Type 304 Stainless Steel Mounting Channel. Shall Include Stainless Steel Clamps, Fittings and Hardware.
E306	As Required	Single Conductor Cable	Okonite	As Required	Single Conductor Cable with Stranded Copper Conductors. Insulation Rated 600V. Shall be U.L. Listed for Wet Locations to 75°c, Type RHW.

GROUP 400 EQUIPMENT

PIECE NO.	QUANTITY	NAME	MANUFACTURER	TYPE - MODEL	RATING AND DESCRIPTION
E401	1	Span Height Indicator System	Henschel Newburyport, MA55.	Catalog No. 37-123, 10-1051-100	Syncro (Selsyn) Type Bridge Position Indicator. Shall include 2 Watertight Cast Brass Position Transmitters. Indicator Shall be Double Leaf Bascule Bridge Type with Two Seperate Synchro Receivers. See Dial Calibration Requirements on Control Console - 1 Sheet No. 34.
E402	2	Tachometer/ Overspeed Switch Assembly	Hubbell	Catalog No. 5410-48B78	Assembly Shall include DC Tacometer Generator with Output of 100 Volts DC at 1,000 RPM. Overspeed Switch Shall be Centrifugally Operated with Adjustable Setting for High and Low Overspeed. Minimum Speed Setting Shall be 130 RPM. Speed Switch Shall be Nema 3R Rated, Tachometer Shall be Totally Enclosed. Shall include Adapter to Replace Existing Shaft Nut on Brake Wheel Providing 5/8" Dia. stub Shaft for Coupling to Tachometer/Overspeed Switch. Utilize Morflex "Junior" Flexible Coupling Catalog No. 200HR.
E403	3	Sound Powered Telephone System	Hose-McCann Englewood, NJ	A-560/H39A	Contractor Shall Remove Old Sound Powered Telephone Units, Test the Circuit Conductors, Repairing as Necessary. Each Existing Station Shall be Replaced with a Weatherproof Jack Box (G-15A). Provide 3 Weatherproof, Sound Powered Handsets with Push-to-Operate Switch. Handsets Shall Have Minimum 4' Rubber Covered Cord and Factory installed H-39A Plug.
E404	2	Rotary Cam Limit Switch	Gemco Electric	Type 1980	Rotating Cam, 8 Circuit Limit Switch. Shall Include 10A Single Pole, Double Throw Snap Switches, Rear Shaft Extension, 200:1 Gear Reducer, Gemco Catalog No. 3001-101 Adjustable Coupling, 96 Tooth Sprocket Catalog No. M-877-A. Shall Include all Mounting Plates, Supports and Hardware.
E405	——	Motor Control Centers (MCC)	Contractor	——	Custom Cabinets Shall Include Space for all Motor Starters, Dis-Connects, Control Components as may be Required. Cabinets Shall Break Down as may be Required for Transport into Electrical Equipment Rooms. See Details in Specifications.
E406	——	Control Circuit	Contractor	——	Relay Based Automatic Bridge Control Circuit including all Control Devices and Control Cabinets as Shown on Plans and Described in Specifications.
E407	——	Control Console	Contractor	——	Free Standing Operators Console. Shall Include all Panel Devices, Terminal Blocks, Mounting Panels and Other Equipment as Shown on Plans. Console Top Shall be No. 10 Gage Stainless Steel with Non-Reflecting (Brushed) Satin Finish. Console Frame Shall be Minimum No. 11 Gage Steel. Console Shall be Constructed as Shown on Plans and in Accordance with A.A.S.H.T.O. Standard Specifications for Movable Highway Bridges.
E408	4	Span Lock Limit Switch	Namco Controls	EA780-20100	Heavy-Duty Lever Arm Limit Switch. Bronze Housing, Stainless Steel Shaft. Switch Assembly Shall be Rated Nema 4X and Shall be Highly Vibration and Shock Resistant. 2 N.C. and 2 N.O. Contacts Shall be Silver Alloy, Sliding (Self Wiping), Rated 10A, 120VAC. Switch Shall Provide for Operating in CW or CCW Directions. Lever Arm and Roller Shall be Corrosion Proof. Shall Include all Necessary Mounting Brackets, Trip Plates, and Stainless Steel Hardware.

NOTES:

1. All Quantities Outlined on this Drawing are Approximate and Included as Reference Only. The Contractor Shall Prepare his Own Detailed Materials List including Spares as may be Specified in the Specifications.

All Work on this Sheet Shall be Paid Under Item 763512

REVISIONS

PREL. TRACING R.L. Reed DESIGN G.L. Fasick CHKD. L.V. Borden

NOV 25 1992

eee2

BR. 1-687	CONTRACT	COUNTY	FEDERAL AID PROJECT No	SHEET No	TOTAL SHEETS
	89-074-05	NEW CASTLE	BHM-1179(3)	48	52

MACHINERY REHABILITATION - 1

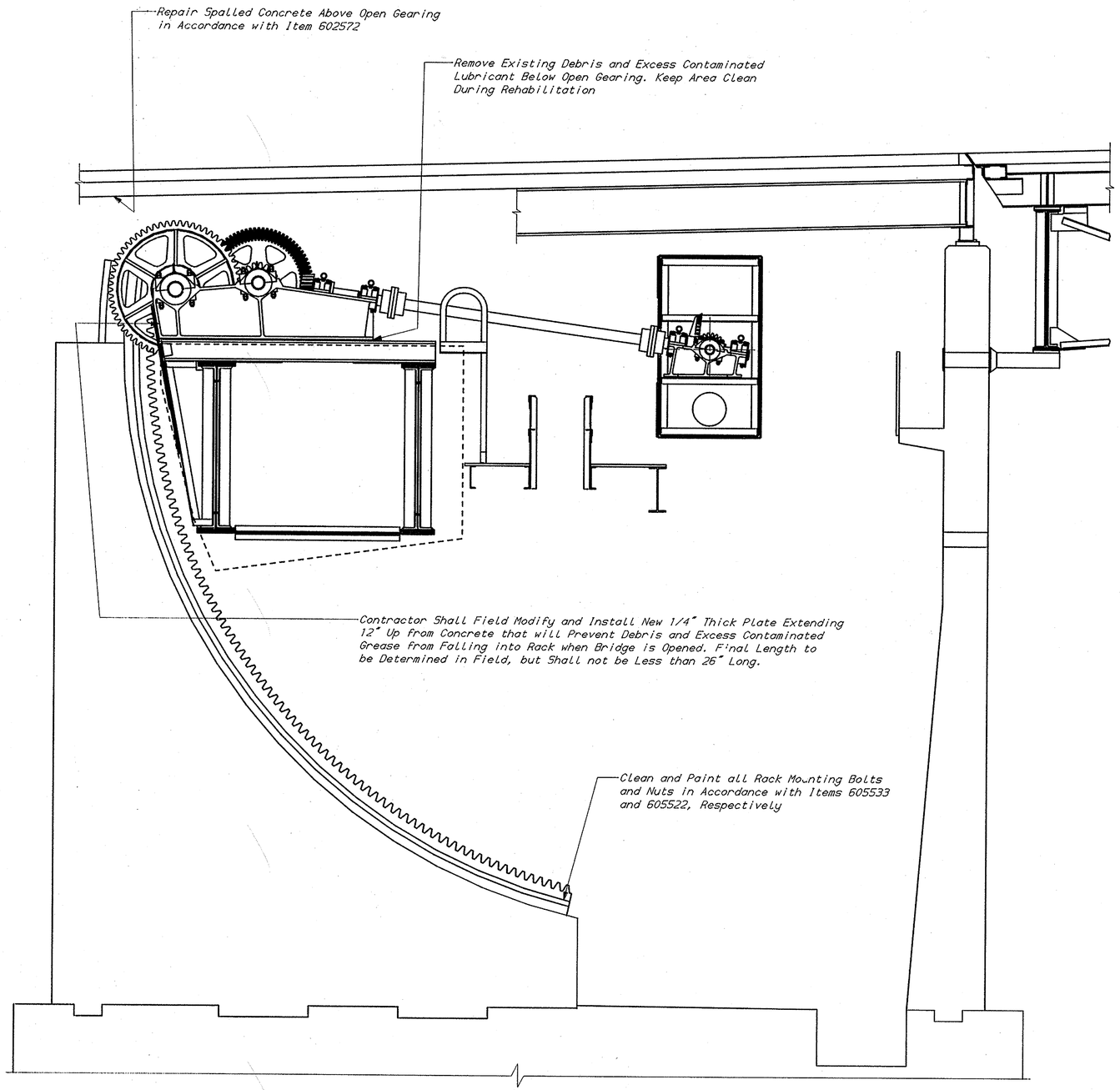

ELEVATION
OPERATING MACHINERY

Scale: 3/8" = 1'-0"

MACHINERY GENERAL NOTES:

1. See Specifications for Additional Information.
2. Where Products of Specific Manufacturers are Called for, Equal or Superior Products of Other Manufacturers may be Substituted for Approval by the Engineer.
3. The Manufacture, Rehabilitation, Workmanship, Lubrication, Handling and Installation of all Mechanical Items Called for in this Contract Shall Comply with the Requirements of the Current A.A.S.H.T.O. Standard Specifications for Movable Highway Bridges Unless Otherwise Called for By These Plans and Specifications.
4. All fits and Finishes Shall be in Accordance with A.A.S.H.T.O. Article 2.5.17 Unless Otherwise Specified.
5. In no Case Shall the Machinery be Operated if any of the Gears have Contaminated Lubricant or no Lubricant. Lubricant Contamination must be Closely Monitored Throughout the Entire Rehabilitation, Including Structural Concrete Repair and Cleaning and Painting of steel.
6. All shims Called for Shall be Supplied with One Shim Equal to the Nominal Thickness Plus a Shim Pack with Total Thickness Equal to the Nominal Thickness that will Allow Alignment within .003 inch. Material to be Brass or Stainless Steel.
7. Weldments and Miscellaneous Components Shall be Fabricated from ASTM A36 Steel Unless Otherwise Noted.
8. Contractor must Field Verify all Dimensions.
9. Solvent Clean all open Gearing, Including Racks, to Bare Metal. Apply New Gear Lubricant Mobilgrease CM-P or Approved Equal Prior to Operating Machinery. This Work may have to be Performed Several Times During the Rehabilitation. (See Note 5).
10. All work Items Shall Apply to Both North and South Leaves Unless Otherwise Noted.
11. Open all Couplings and Thoroughly Clean. Replace all Grids in Brake Wheel Couplings. Seal all Keyways with a Plastic Oil Sealing Compound. Replace all Seals and Gaskets and Fill Couplings with New Coupling Grease. After Assembly Check for Leakage and Perform any Necessary Corrective Action to Stop Leakage.

All Work on this Sheet Shall be Paid Under Item 763539

REVISIONS

PREL. TRACING R.L. Reed DESIGN J.W. Newman CHKD. L.V. Borden

mr-1

BR. 1-687	CONTRACT	COUNTY	FEDERAL AID PROJECT No	SHEET No	TOTAL SHEETS
	89-074-05	NEW CASTLE	BHM-1179(3)	49	52

MACHINERY REHABILITATION - 2

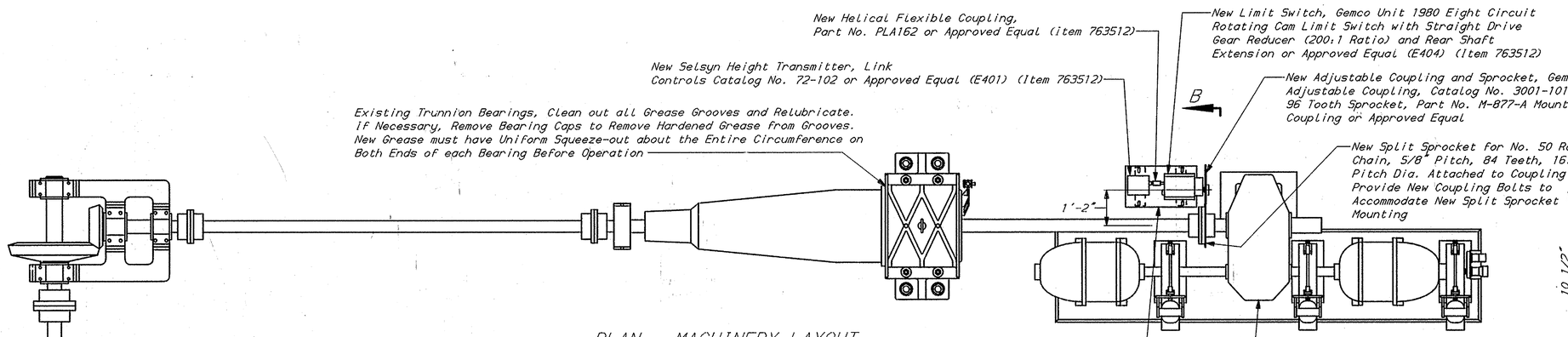

PLAN - MACHINERY LAYOUT

Scale: 1/2" = 1'-0"
South Leaf Shown, North Leaf Similar

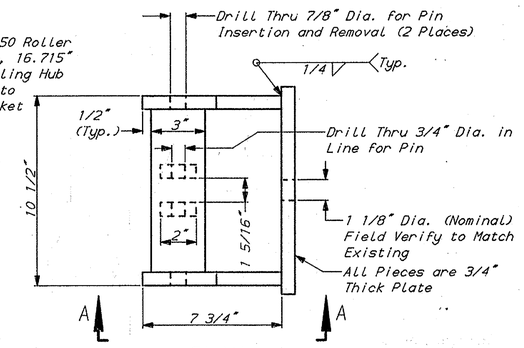

PLAN NEW BRAKE YOKE

Scale: 3" = 1'-0"
Stress Relieve by Heat Prior to Machining
Material: ASTM A36
Required: (1) Per Brake, (6) Total for Project

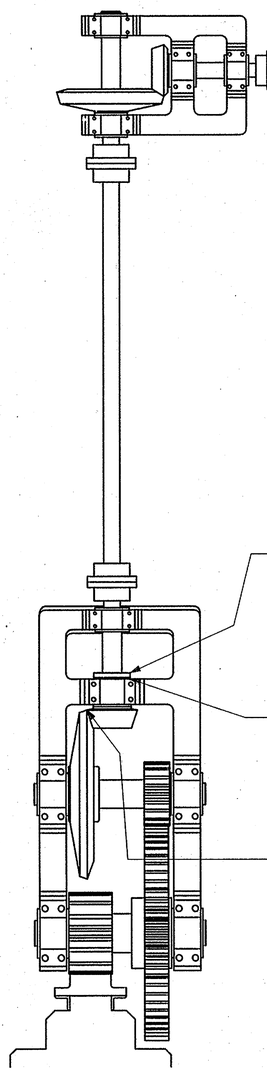

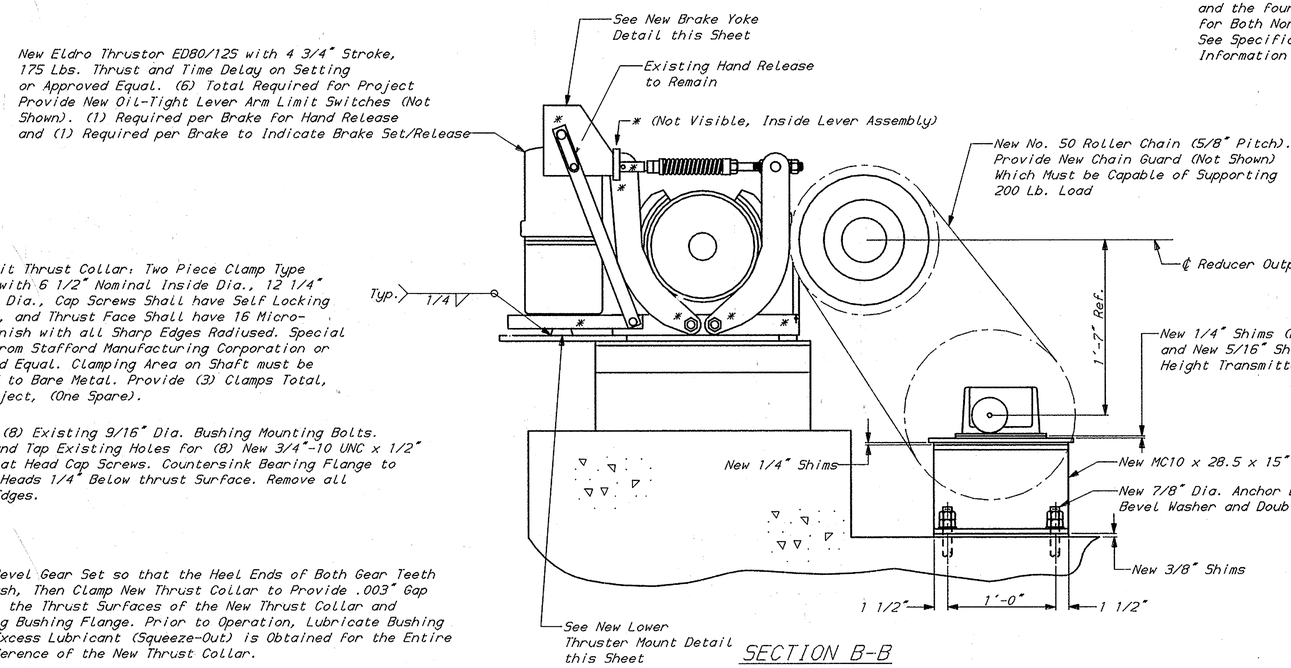

SECTION B-B

Scale: 1 1/2" = 1'-0"
* Provide New Stainless Steel Pins for New Thrustor Mounting and Replacement of all Existing Brakes (9 Pins per Brake) (For Pin Details, See Sheet No. 50)

New Split Thrust Collar: Two Piece Clamp Type Collar with 6 1/2" Nominal Inside Dia., 12 1/4" Outside Dia., Cap Screws Shall have Self Locking Threads, and Thrust Face Shall have 16 Micro-Inch Finish with all Sharp Edges Radiused. Special Order from Stafford Manufacturing Corporation or Approved Equal. Clamping Area on Shaft must be Cleaned to Bare Metal. Provide (3) Clamps Total, for Project, (One Spare).

Remove (8) Existing 9/16" Dia. Bushing Mounting Bolts. Drill and Tap Existing Holes for (8) New 3/4"-10 UNC x 1/2" Long Flat Head Cap Screws. Countersink Bearing Flange to Recess Heads 1/4" Below thrust Surface. Remove all Sharp Edges.

Align Bevel Gear Set so that the Heel Ends of Both Gear Teeth are Flush, Then Clamp New Thrust Collar to Provide .003" Gap Between the Thrust Surfaces of the New Thrust Collar and Existing Bushing Flange. Prior to Operation, Lubricate Bushing Until Excess Lubricant (Squeeze-Out) is Obtained for the Entire Circumference of the New Thrust Collar.

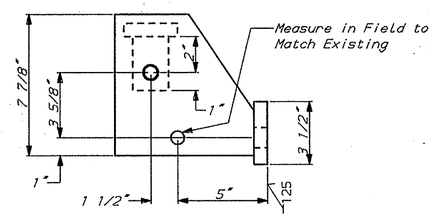

VIEW A-A

Scale: 3" = 1'-0"

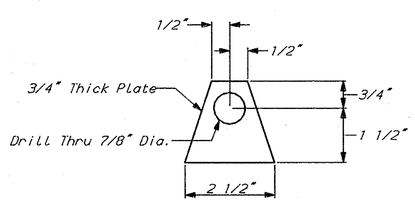

NEW LOWER THRUSTER MOUNT

Scale: 6" = 1'-0"
Material: ASTM A36
Required: (2) per Brake, (12) Total for Project

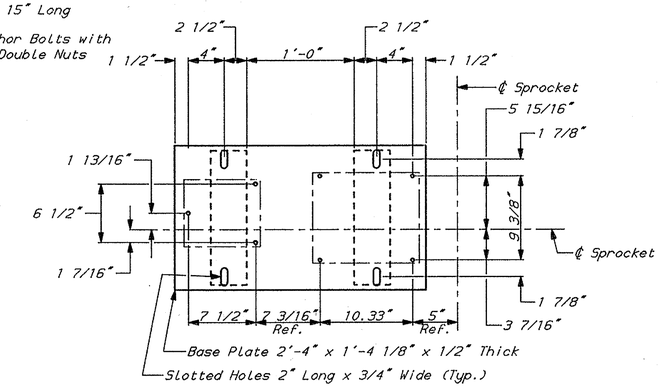

DETAIL B

Scale: 1 1/2" = 1'-0"
New Mounting Plate for Cam Limit Switch and Selsyn
Material: ASTM A36
Required: (2) Total for Project
Final Dimensions may Vary Depending Upon Equipment Selected by Contractor
(Item 763512)

All Work on this Sheet Shall be Paid Under item 763539

NOTES:

1. See Sheet 48 for General Machinery Notes.
2. See Specifications for Additional Information.

REVISIONS

PREL. TRACING R.L. Reed DESIGN J.W. Newman CHKD. L.V. Borden

NOV 26 1992

BR. 1-687	CONTRACT	COUNTY	FEDERAL AID PROJECT No	SHEET No	TOTAL SHEETS
	89-074-05	NEW CASTLE	BHM-1179(3)	50	52

MACHINERY REHABILITATION - 3

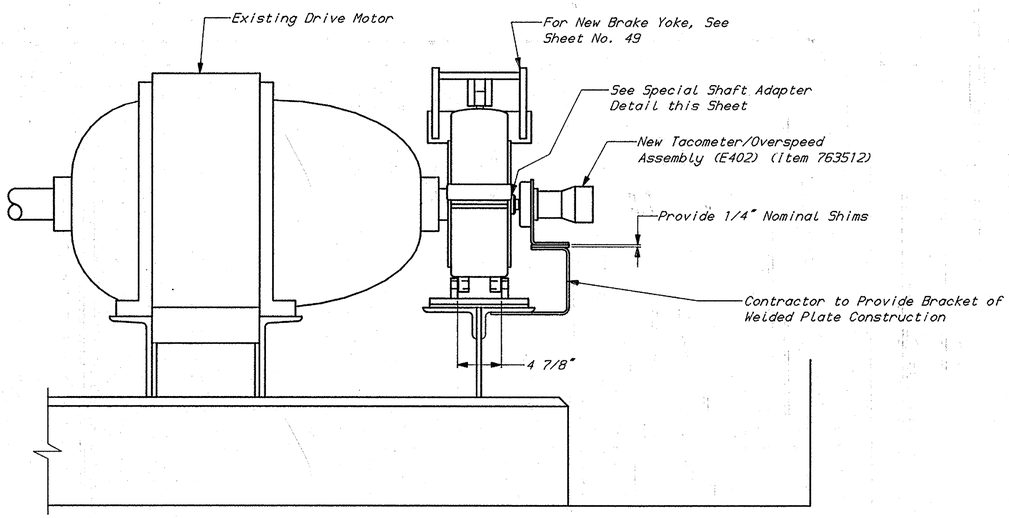

TACHOMETER MOUNTING DETAIL

Scale: 1 1/2" = 1'-0"

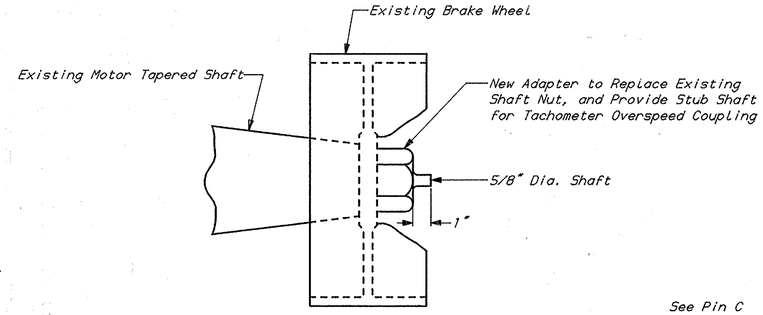

SPECIAL SHAFT ADAPTER DETAIL

Scale: 3" = 1'-0"

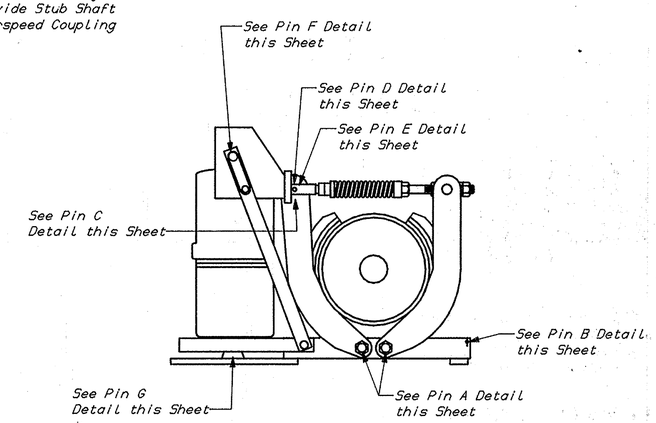

NEW PIN LOCATIONS FOR BRAKES

Scale: 1 1/2" = 1'-0"

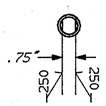

END VIEW

Scale: 3" = 1'-0"

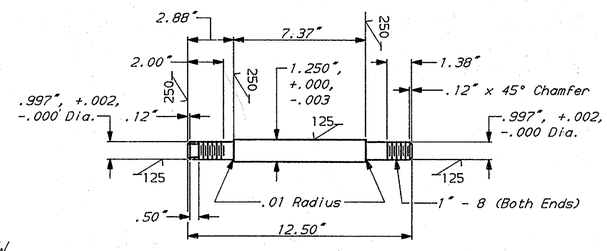

PIN A DETAIL

Scale: 3" = 1'-0"

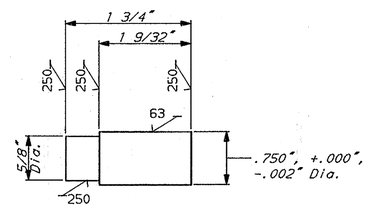

PIN D DETAIL

Full Size

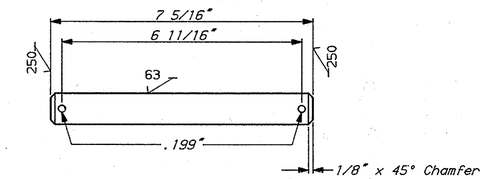

PIN G DETAIL

Scale: 6" = 1'-0"

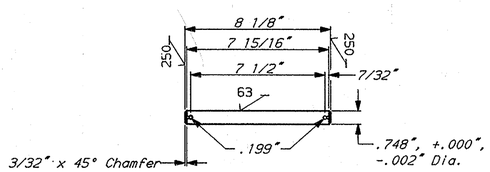

PIN B DETAIL

Scale: 3" = 1'-0"

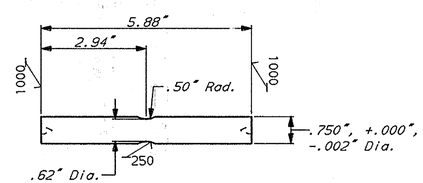

PIN E DETAIL

Scale: 6" = 1'-0"

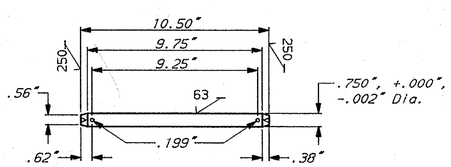

PIN C DETAIL

Scale: 3" = 1'-0"

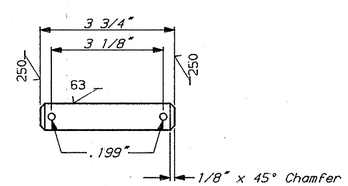

PIN F DETAIL

Scale: 6" = 1'-0"

NOTES:

1. All Pin Material Shall be Hardened Brass or Type 440 Stainless Steel.

All Work on this Sheet Shall be Paid Under Item 763539

REVISIONS

PREL. TRACING R.L. Reed DESIGN G.L. Fosick CHKD. L.V. Borden

NOV 29 1992

mr-9

BR. 1-687	CONTRACT	COUNTY	FEDERAL AID PROJECT No	SHEET No	TOTAL SHEETS
	89-074-05	NEW CASTLE	BHM-1179(3)	51	52

SPAN LOCK REPAIRS - 1

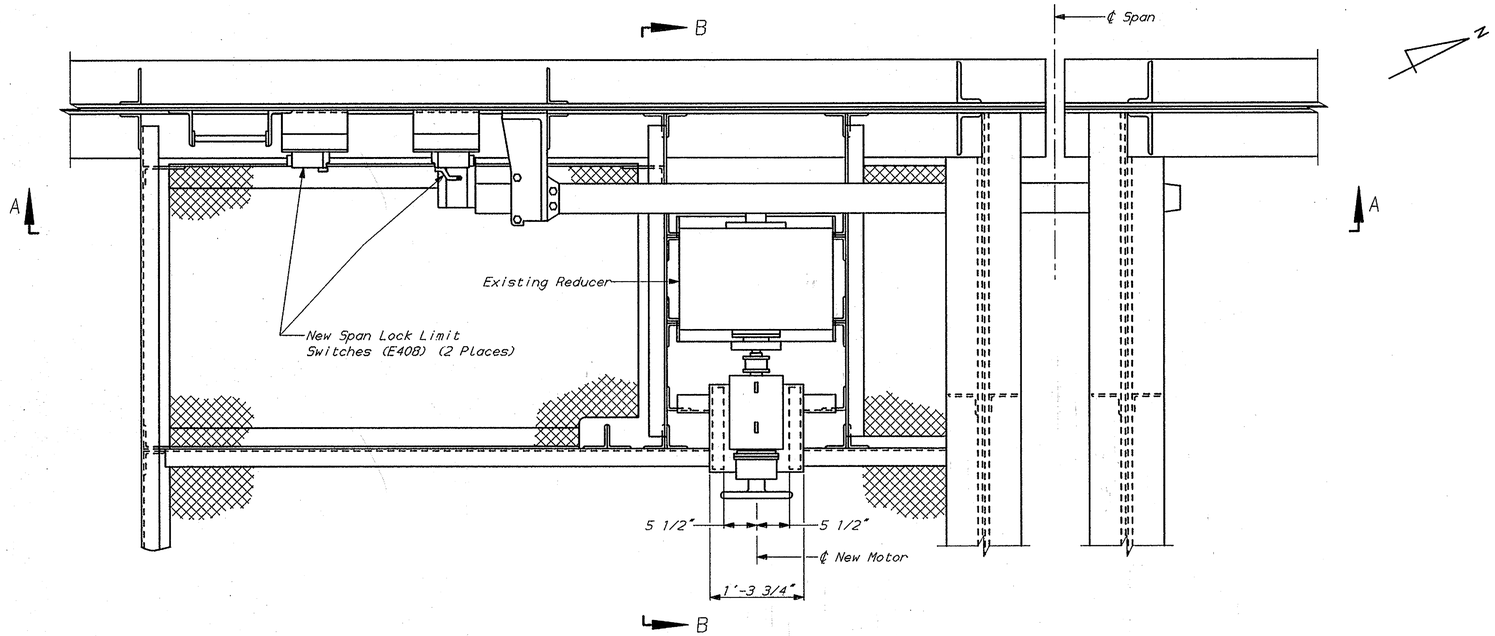

PLAN
LOCKBAR AND LOCK MACHINERY

Scale: 1" = 1'-0"
West Assembly Shown, East Assembly Opposite Hand

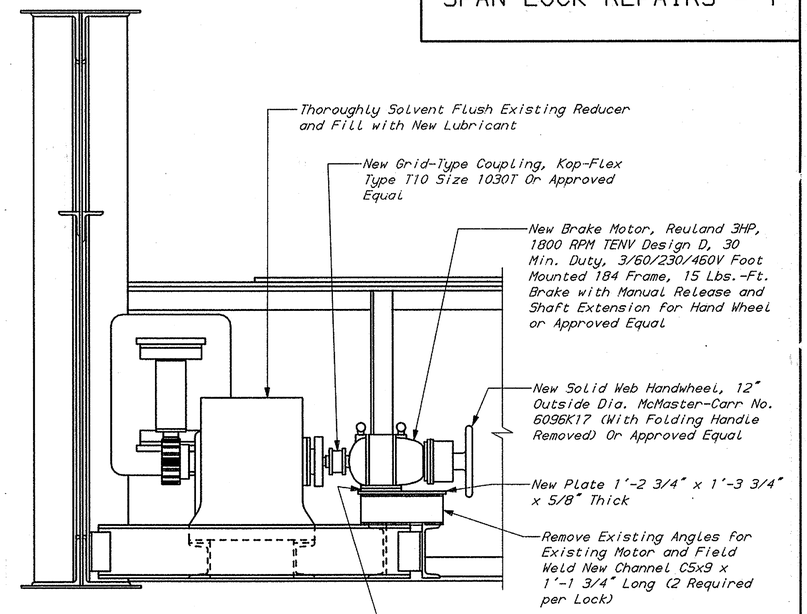

SECTION B-B

Scale: 1" = 1'-0"

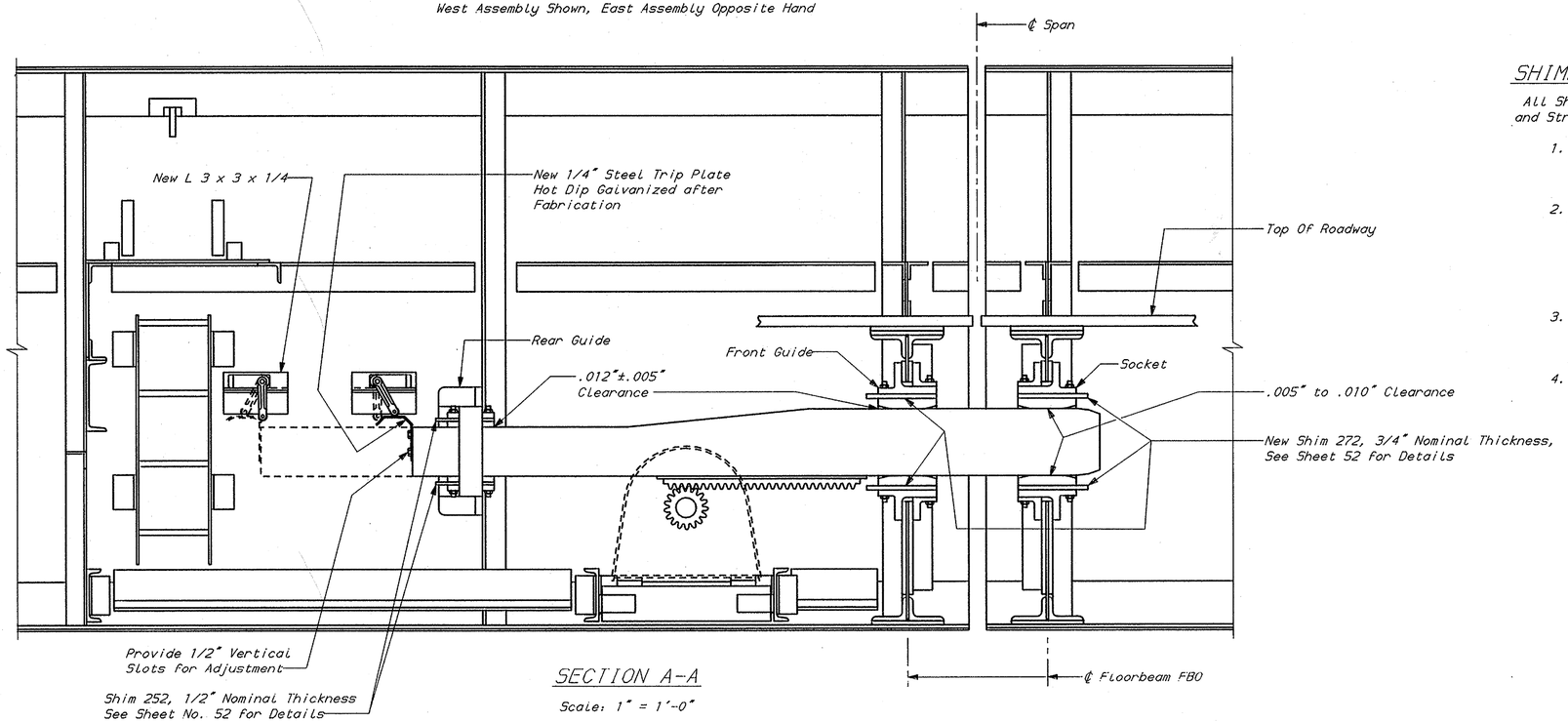

SECTION A-A

Scale: 1" = 1'-0"

SHIMMING PROCEDURE FOR LOCK BAR GUIDES AND SOCKET

All Shimming for Span Locks is to be Performed only after all Live Load Shoes and Strike Plates have been Rehabilitated and Properly Shimmed.

1. Open North Leaf Enough so that the Lock Bar can be Freely Operated without Interfering with any Part of the South Leaf (including the Socket) While the South Leaf is in the Fully Closed Position and Firmly Seated on the Live Load Anchorage.
2. With Conditions in Step 1 Remaining in Effect, Adjust Bottom Shims in the Front and Rear Guides to Both Keep the Lock Bar Horizontal and Provide .099" ± .010" Clearance Between the Tips of the Pinion Teeth and Root of the Rack Teeth. Contractor must also Verify that the Pinion Teeth are Inserted .796" (Nominal) into the Rack Teeth. These Provisions must be Met Throughout the Entire Stroke of the Lock Bar Under No-Load Conditions.
3. With Conditions in Step 1 Remaining in Effect, Adjust Top Shims in the Front and Rear Guides to Provide .012" ± .005" Clearance Between the Top of the Lock Bar and Top Guide Throughout the Entire Stroke of the Lock Bar Under No-Load conditions.
4. With Both the north and South Leaves in the Fully Closed Position and Firmly Seated on the Live Load Anchorages, Adjust top and Bottom Shims of the Socket to Provide .005" to .010" Clearance Between Lock Bar and Top and Bottom Wearing Surfaces of the Socket with the Lock Bar Fully Driven.

NOTES:

1. See Sheet 48 for General Machinery Notes.
2. See Specifications for Additional information.

All Work on this Sheet Shall be Paid Under Item 763539

REVISIONS

PREL. TRACING R.L. Reed DESIGN J.W. Newman CHKD. L.V. Borden

NOV 2 6 1997

BR. 1-687	CONTRACT	COUNTY	FEDERAL AID PROJECT No	SHEET No	TOTAL SHEETS
	89-074-05	NEW CASTLE	BHM-1179(3)	52	52

SPAN LOCK REPAIRS - 2

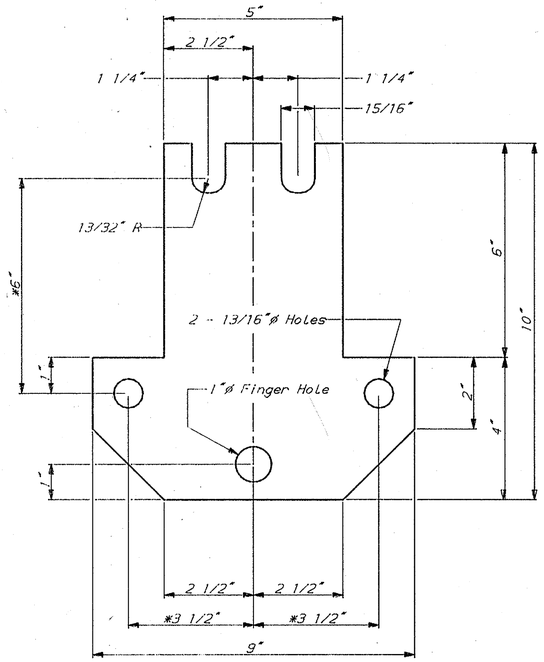

NEW SHIM 252

Scale: 6" = 1'-0"

Material: Brass or Stainless Steel
Required: (6) Sets Required
Total for Project
(2 Spare Sets)
Each Set Shall have:
(1) Solid 1/2" shim
(4) Laminated 1/8" shims
with .003" Laminations

* Use Existing Shim as Template to Accurately Locate Holes

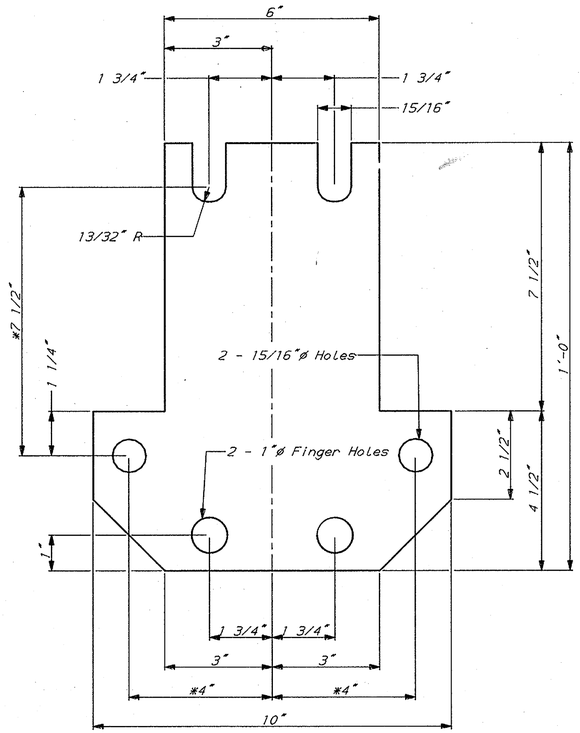

NEW SHIM 272

Scale: 6" = 1'-0"

Material: Brass or Stainless Steel
Required: (12) Sets Required
Total for Project
(4 Spare Sets)
Each Set Shall have:
(1) Solid 3/4" shim
(1) Solid 1/4" Shim
(4) Laminated 1/8" Shims
with .003" Laminations

* Use Existing Shim as Template to Accurately Locate Holes

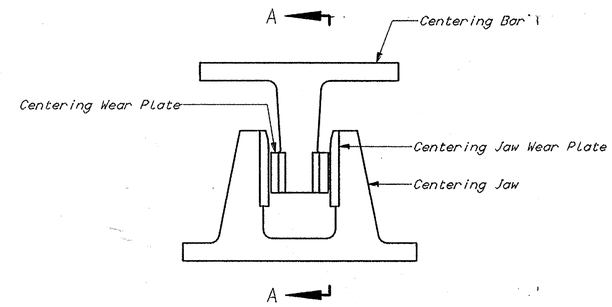

CENTERING DEVICE DETAIL

Scale: 1 1/2" = 1'-0"

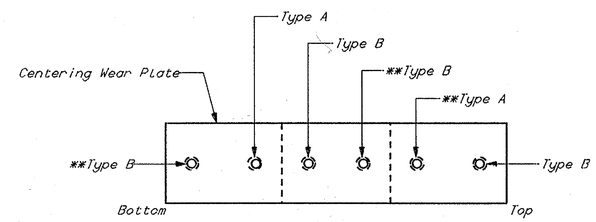

SECTION A-A

Scale: 3" = 1'-0"

* Type A = 1 3/4" Long Slotted Fillister Head Screw 1/2"-13 UNC
* Type B = 1 1/4" Long Slotted Fillister Head Screw 1/2"-13 UNC

* = Contractor must Field Verify and Match Existing Thread Series.

** = These Locations Require Replacement Fasteners. The Contractor Shall Verify Adequacy of all Other Fasteners on Both sides of the Centering Bar. All Fastener Heads must be Recessed Below the Wear Surface 1/16" Minimum.

NOTES:

1. See Sheet 48 for General Machinery Notes.
2. See Specifications for Additional Information.

All Work on this Sheet Shall be Paid Under Item 763539

REVISIONS

PREL. TRACING R.L. Reed DESIGN J.W. Newman CHKD. L.V. Borden

NOV 25 1992

ltr2