BR. 1-668	CONTRACT	COUNTY	FEDERAL AID PROJECT NO.	SHEET NO.	TOTAL SHTS.
	21-074-07	NEW CASTLE	EBHN-N029 (2)	45	169

BR 688
SOUTH MARKET STREET BRIDGE REHABILITATION

REVISIONS

AS BUILT

CONTROL CIRCUIT - 4

NOTES:

1. RELAYS OSN AND OSS SHALL BE MECHANICALLY LATCHING, RESETABLE BY MEANS OF A PUSHBUTTON LOCATED INSIDE THE RELAY CABINET.

AB

NOTE: AB
SEE LINK CONTROL SYSTEM DRAWINGS FOR ADDITIONAL DETAILS.

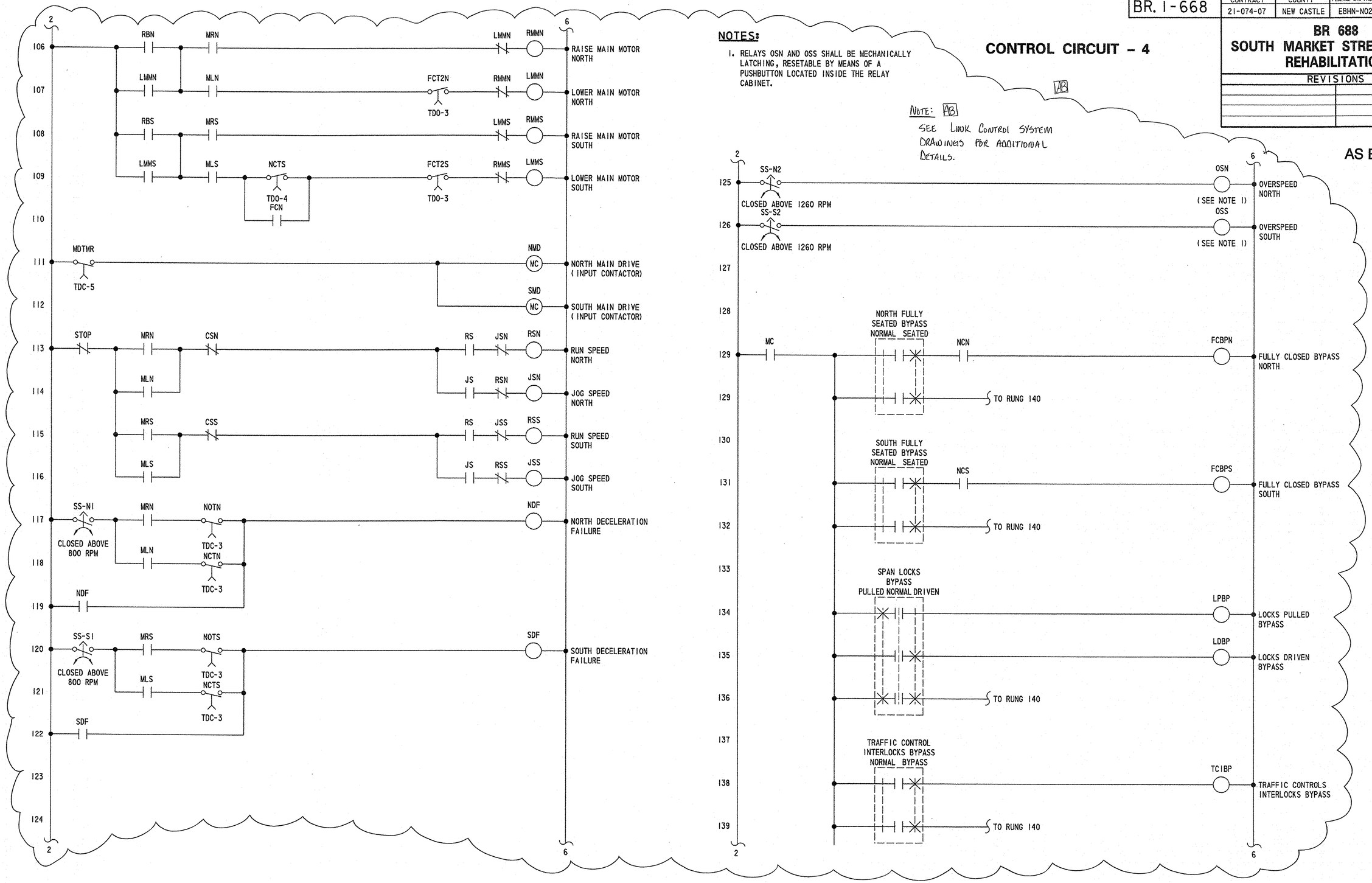

CADD DESIGN RLR DESIGN NEA CHKD. OCT

CC4

9/21/2006 21-074-07

E12

BR. 1-668	CONTRACT	COUNTY	FEDERAL AID PROJECT NO.	SHEET NO.	TOTAL SHTS.
	21-074-07	NEW CASTLE	EBHN-N029 (2)	46	169

BR 688
SOUTH MARKET STREET BRIDGE REHABILITATION

REVISIONS

CONTROL CIRCUIT – 5

AS BUILT

NOTES:

1. RELAY BYPF SHALL BE PROGRAMMABLE AND CONFIGURED TO "DE-ENERGIZE" WHEN MORE THAN ONE BYPASS IS ENABLED.
2. ALL CONTROL CIRCUIT CONDUCTORS TO LIMIT SWITCHES AND OTHER SUCH DEVICES, SHALL BE INDIVIDUALLY FUSED. SEE SPECIFICATIONS FOR DETAILS.

AB

NOTE: AB
SEE LINK CONTROL SYSTEMS DRAWINGS FOR ADDITIONAL DETAILS.

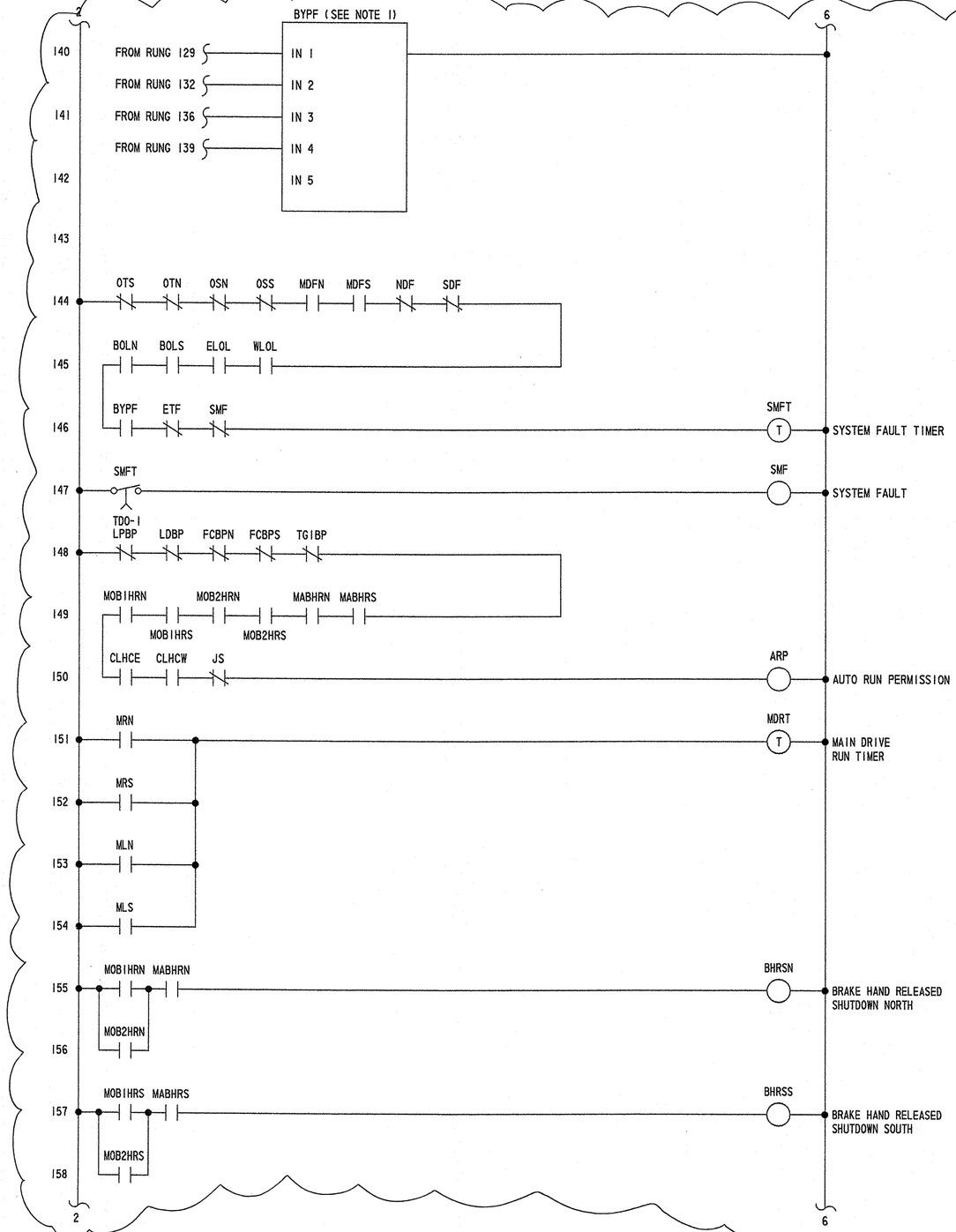

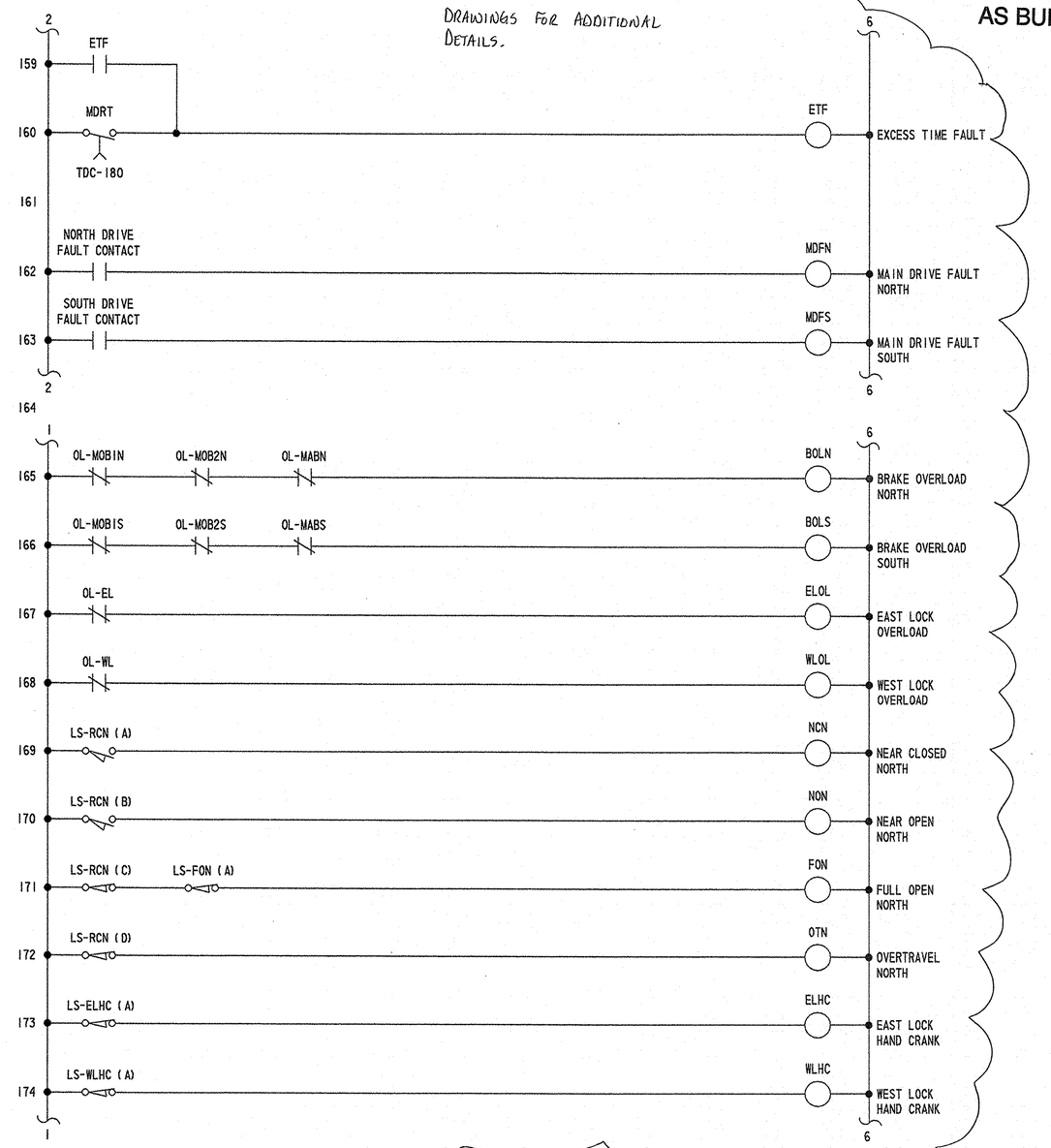

CADD DESIGN RLR DESIGN MEA CHKD. OCT

CC5

9/21/2006 21-074-07

BR. 1-668	CONTRACT	COUNTY	FEDERAL AID PROJECT NO.	SHEET NO.	TOTAL SHTS.
	21-074-07	NEW CASTLE	EBHN-N029 (2)	47	169

BR 688
SOUTH MARKET STREET BRIDGE REHABILITATION

REVISIONS

CONTROL CIRCUIT - 6

AS BUILT

NOTES:

1. ALL CONTROL CIRCUIT CONDUCTORS TO LIMIT SWITCHES AND OTHER SUCH DEVICES, SHALL BE INDIVIDUALLY FUSED. SEE SPECIFICATIONS FOR DETAILS.

NOTE: AB
SEE LINK CONTROL SYSTEMS DRAWINGS FOR ADDITIONAL DETAILS

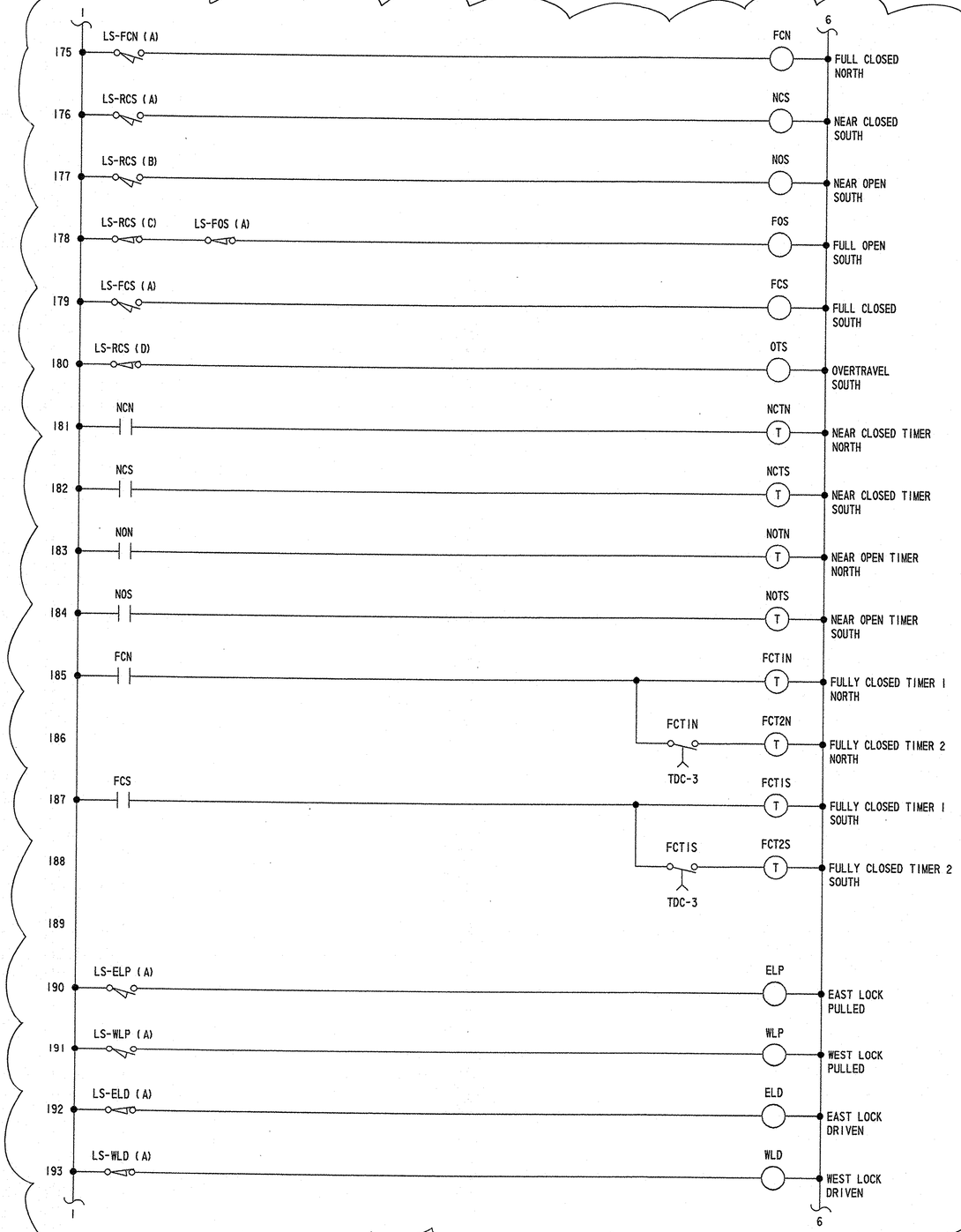

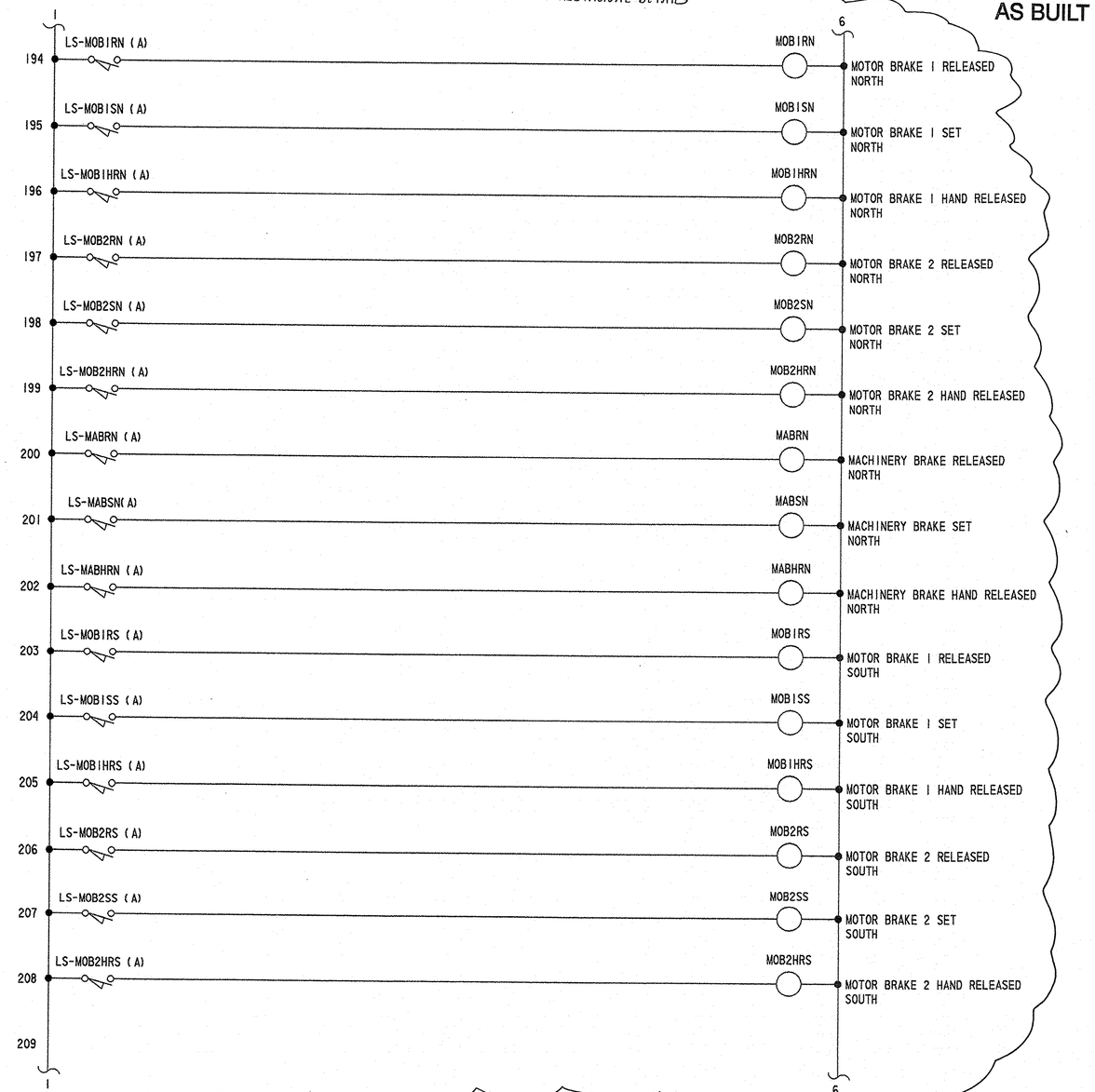

CADD DESIGN RLR DESIGN MEA CHKD. OCT

CC6

9/21/2006 21-074-07

BR. 1-668	CONTRACT	COUNTY	FEDERAL AID PROJECT NO.	SHEET NO.	TOTAL SHTS.
	21-074-07	NEW CASTLE	EBHN-N029 (2)	48	169

BR 688
SOUTH MARKET STREET BRIDGE REHABILITATION

REVISIONS

CONTROL CIRCUIT - 7

AS BUILT

NOTES:

1. ALL CONTROL CIRCUIT CONDUCTORS TO LIMIT SWITCHES AND OTHER SUCH DEVICES, SHALL BE INDIVIDUALLY FUSED. SEE SPECIFICATIONS FOR DETAILS.

NOTE: [AB]
SEE LINK CONTROL SYSTEM DRAWINGS FOR ADDITIONAL DETAILS.

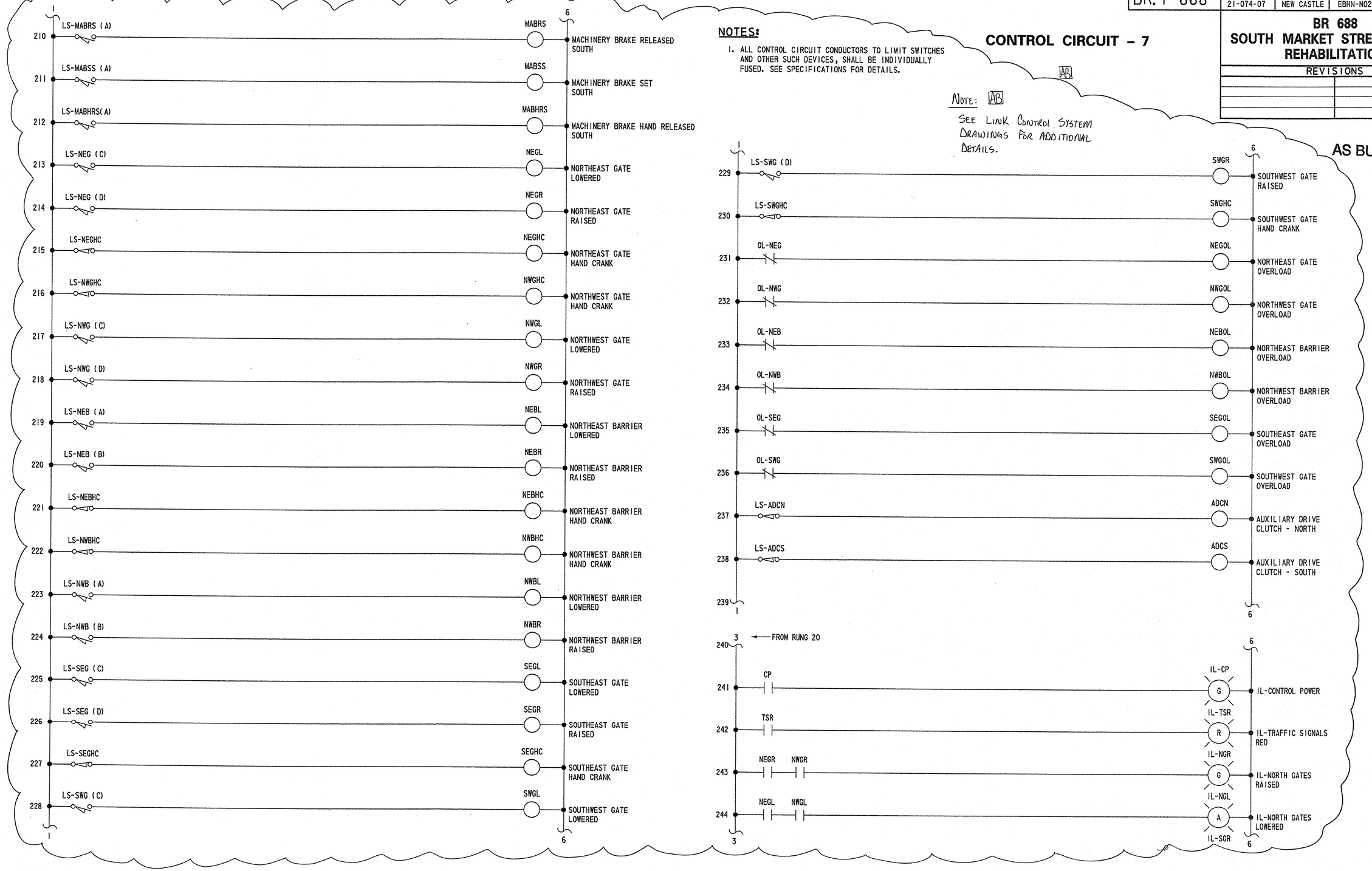

CADD DESIGN RLR DESIGN MEA CHKD. OCT

9/21/2006 21-074-07

CC7

E15

BR. 1-668	CONTRACT	COUNTY	FEDERAL AID PROJECT NO.	SHEET NO.	TOTAL SHTS.
	21-074-07	NEW CASTLE	EBHN-N029 (2)	49	169

BR 688
SOUTH MARKET STREET BRIDGE REHABILITATION

REVISIONS

AS BUILT

CONTROL CIRCUIT - 8

AB

NOTE: AB
SEE LINK CONTROL SYSTEMS DRAWINGS FOR ADDITIONAL DETAILS

NOTES:

1. ALL CONTROL CIRCUIT CONDUCTORS TO LIMIT SWITCHES AND OTHER SUCH DEVICES, SHALL BE INDIVIDUALLY FUSED. SEE SPECIFICATIONS FOR DETAILS.

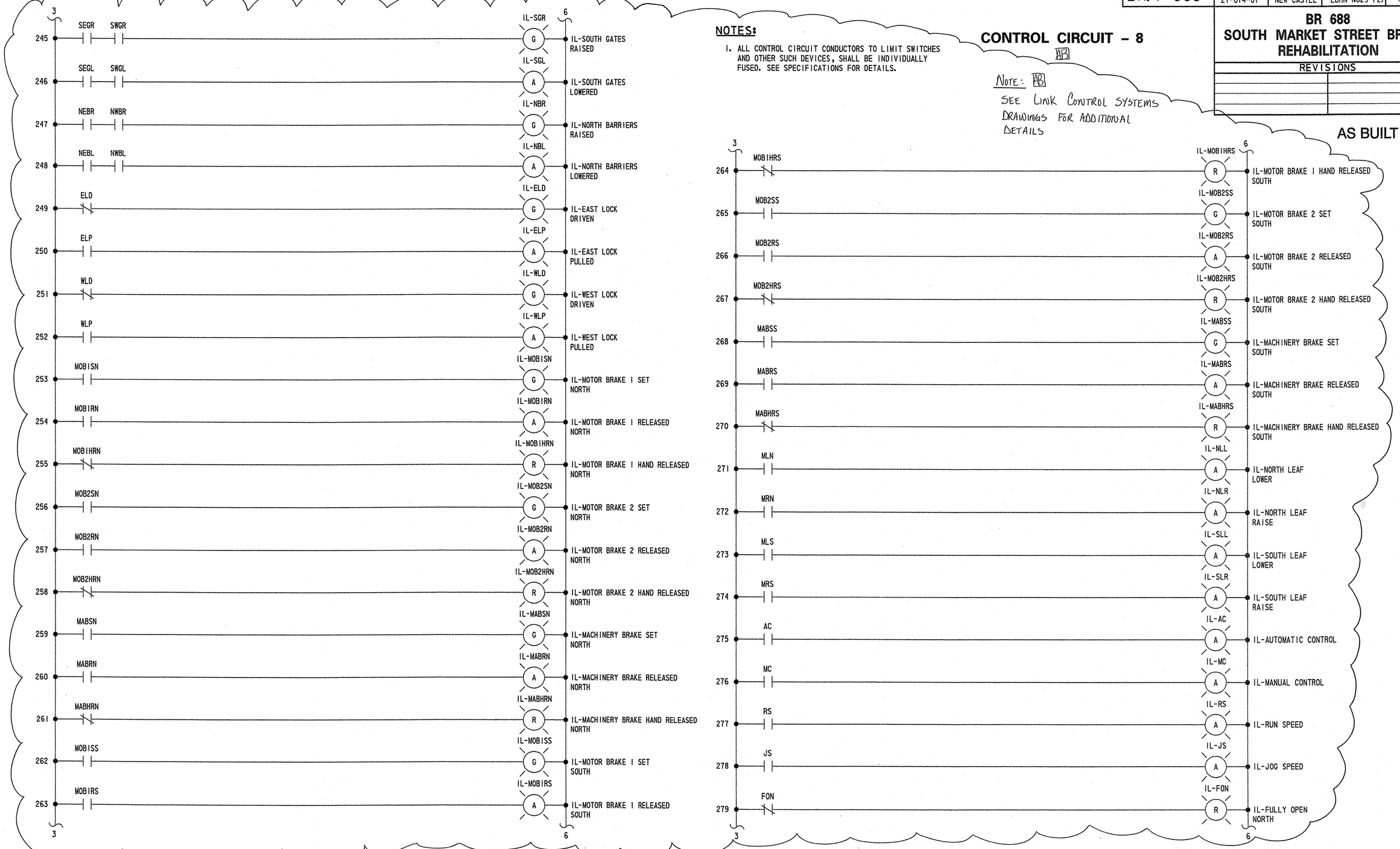

9/21/2006 21-074-07

CADD DESIGN RLR DESIGN MEA CHKD. OCT

CC8

E16

BR. I-668	CONTRACT	COUNTY	FEDERAL AID PROJECT NO.	SHEET NO.	TOTAL SHTS.
	21-074-07	NEW CASTLE	EBHN-N029 (2)	50	169

BR 688
SOUTH MARKET STREET BRIDGE REHABILITATION

REVISIONS

AS BUILT

CONTROL CIRCUIT - 9

AB

NOTES:

1. ALL CONTROL CIRCUIT CONDUCTORS TO LIMIT SWITCHES AND OTHER SUCH DEVICES, SHALL BE INDIVIDUALLY FUSED. SEE SPECIFICATIONS FOR DETAILS.

NOTE: AB
SEE LINK CONTROL SYSTEMS DRAWINGS FOR ADDITIONAL DETAILS.

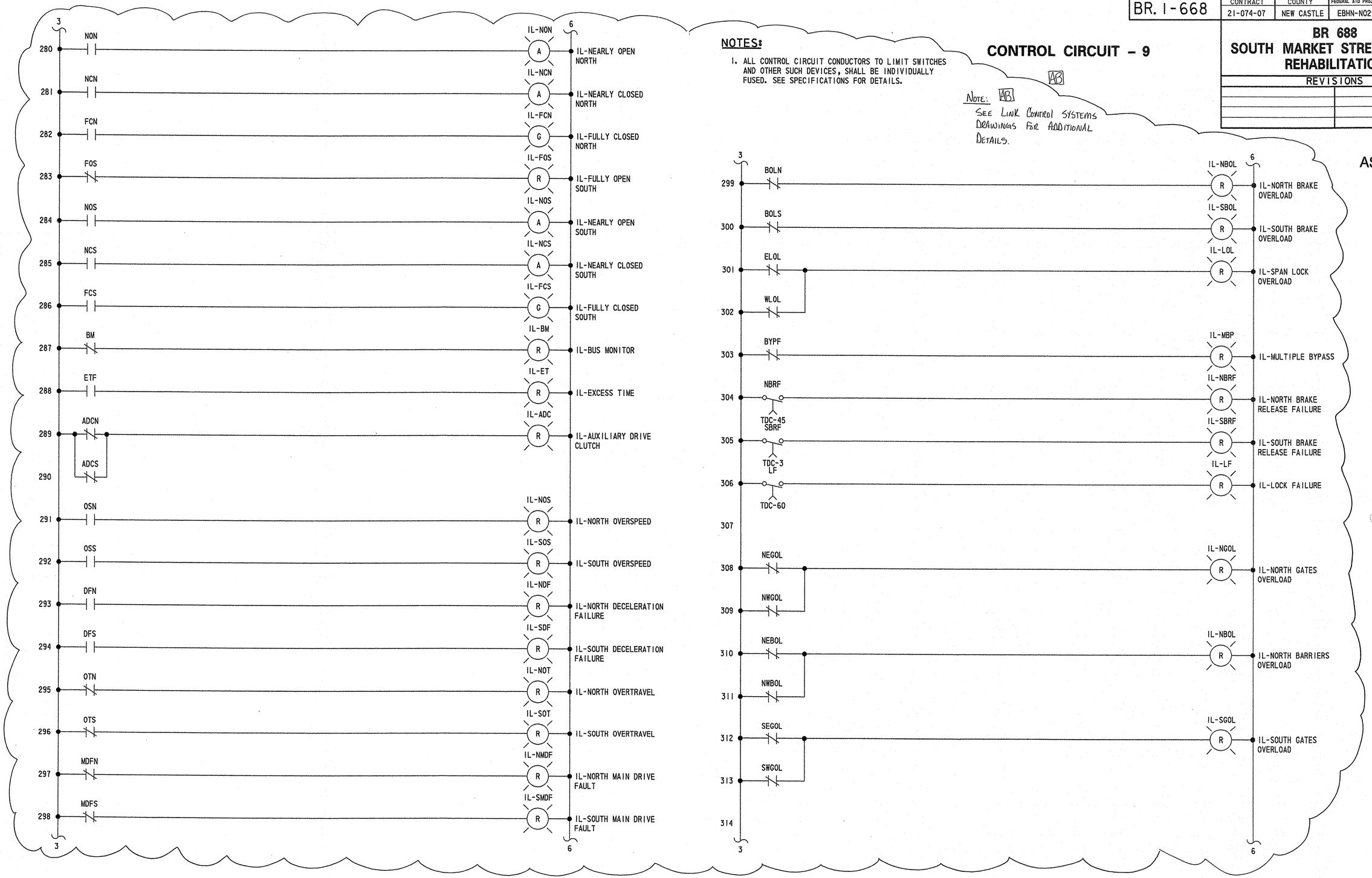

CADD DESIGN RLR DESIGN NEA CHKD. QCT

9/21/2006 21-074-07

CC9

E17

BR. 1-668	CONTRACT	COUNTY	FEDERAL AID PROJECT NO.	SHEET NO.	TOTAL SHTS.
	21-074-07	NEW CASTLE	EBHN-N029 (2)	51	169

BR 688
SOUTH MARKET STREET BRIDGE REHABILITATION

REVISIONS

CONTROL CIRCUIT - 10

AS BUILT

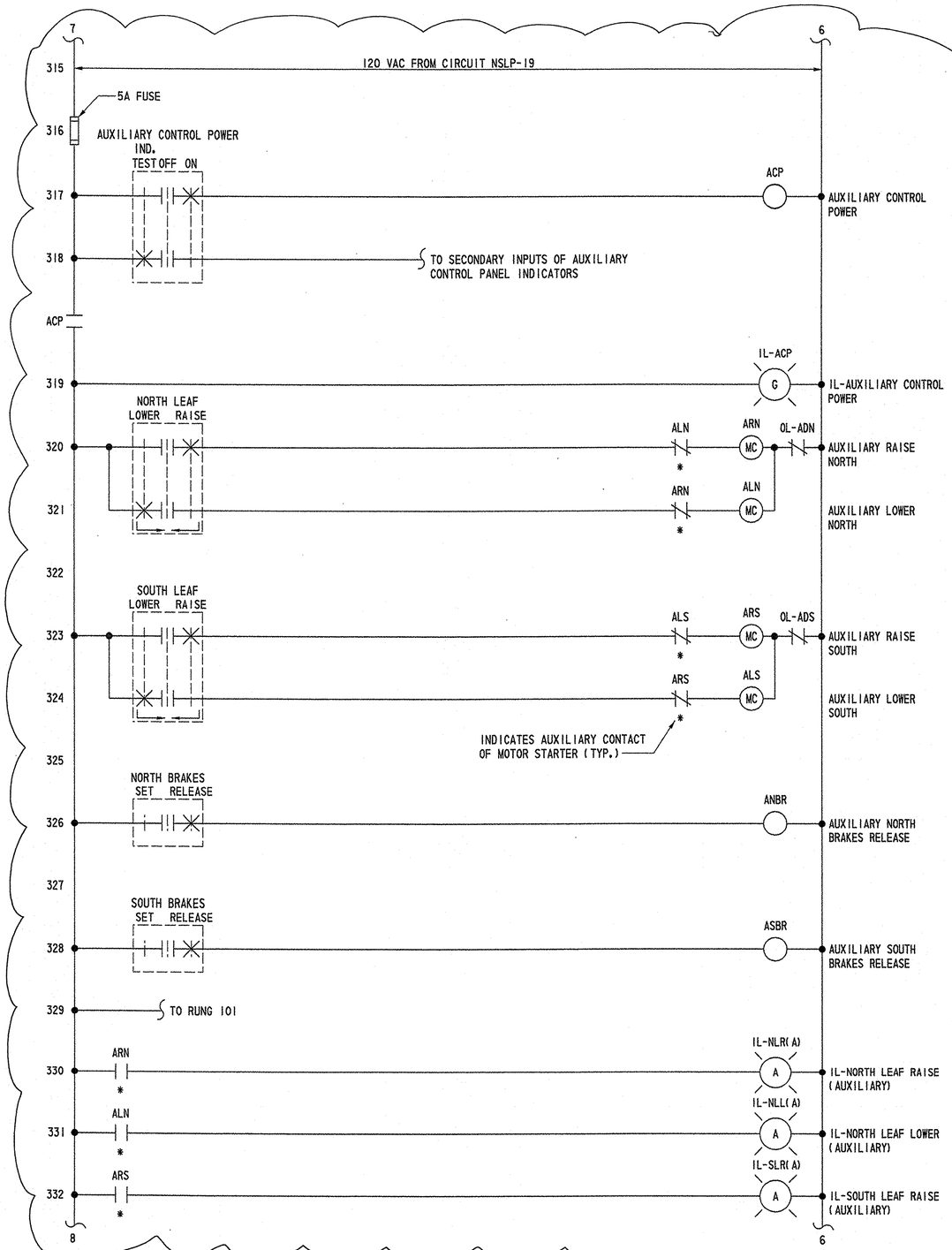

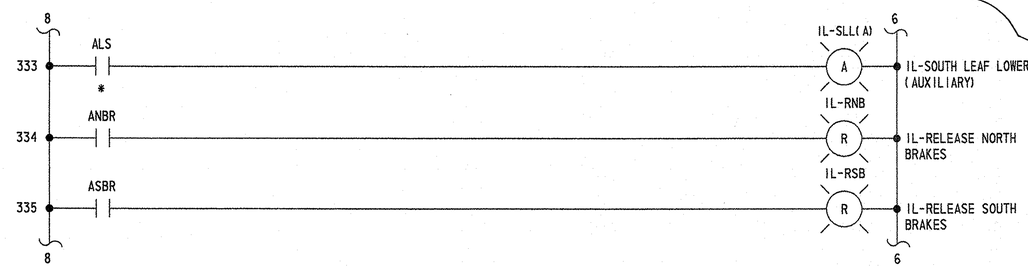

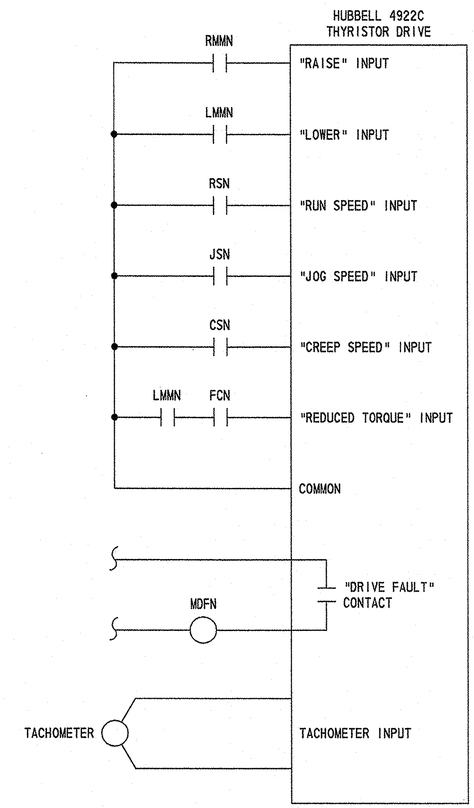

NOTE: AB
FOR ADDITIONAL DETAILS SEE LINK CONTROL SYSTEMS DRAWINGS.

THYRISTOR DRIVE CONTROL WIRING DIAGRAM
NORTH DRIVE SHOWN, SOUTH SIMILAR

CADD DESIGN RLR DESIGN MEA CHKD. OCT

CC10

9/21/2006 21-074-07

BR. 1-668	CONTRACT	COUNTY	FEDERAL AID PROJECT NO.	SHEET NO.	TOTAL SHTS.
	21-074-07	NEW CASTLE	EBHN-N029 (2)	52	169

BR 688
SOUTH MARKET STREET BRIDGE REHABILITATION

REVISIONS

SUBMARINE CABLES CONTROL WIRING - 1

AS BUILT

NOTES:

1. ARRANGEMENT SHOWN IS FOR REFERENCE ONLY. IT SHALL BE THE RESPONSIBILITY OF THE CONTRACTOR AND THE CONTROL SYSTEM VENDOR TO COORDINATE ACTUAL SYSTEM DIVISION, PREPARE SCHEDULE OF SUBMARINE CABLE CONTROL WIRING, AND ASSIGN CONDUCTOR LABELS.
2. CONTROL DEVICES SHOWN ON THESE SHEETS ARE INCLUDED IN THE CONTROL CIRCUIT DIAGRAMS ARE SHOWN HERE FOR REFERENCE PURPOSES ONLY.

NOTE: AB
FOR ADDITIONAL DETAILS SEE LINK CONTROL SYSTEMS DRAWINGS.

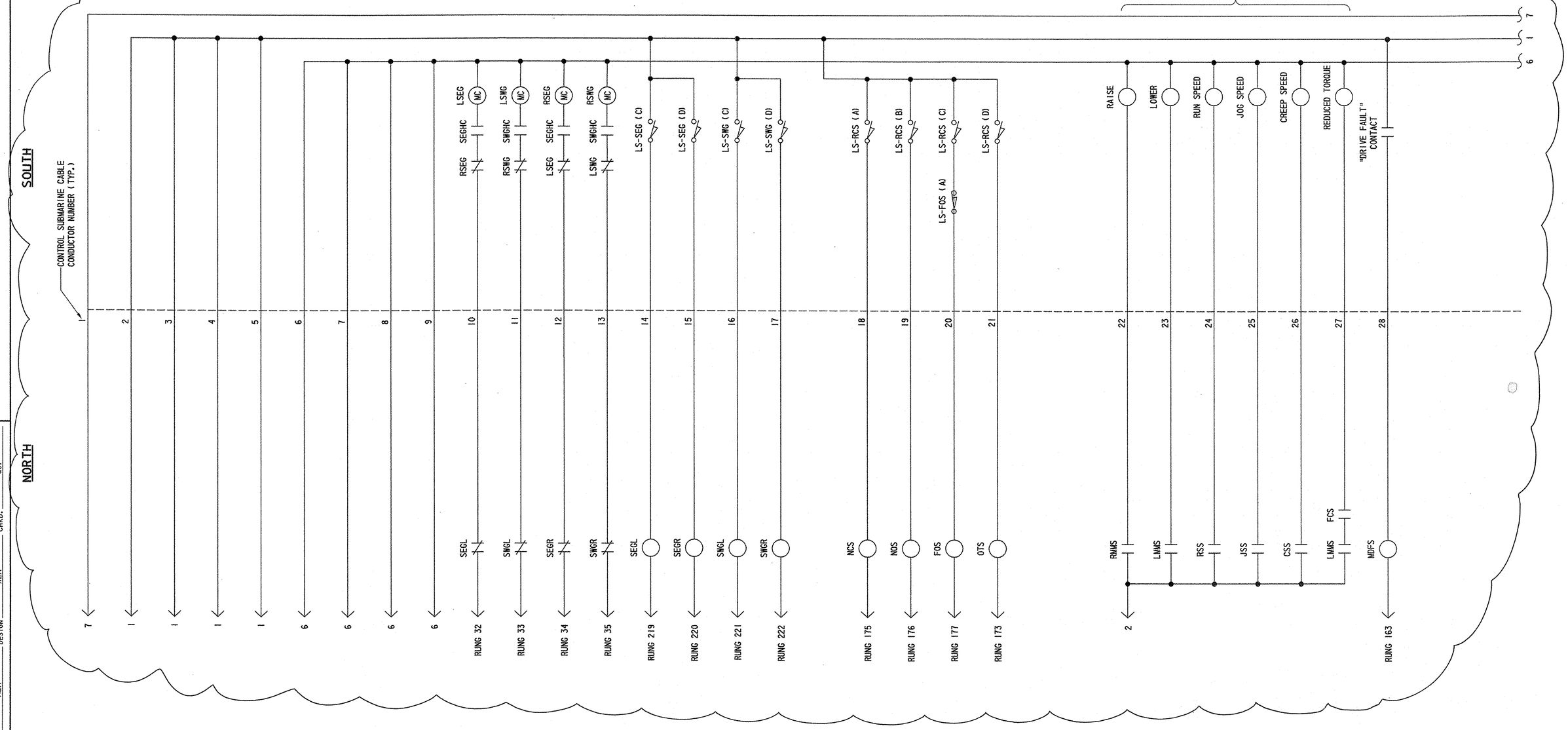

CADD DESIGN	RLR	DESIGN	MEA	CHKD.	OCT

SCCW1

E19

9/21/2006 21-074-07

BR. I-668	CONTRACT	COUNTY	FEDERAL AID PROJECT NO.	SHEET NO.	TOTAL SHTS.
	21-074-07	NEW CASTLE	EBHN-N029 (2)	53	169

BR 688
SOUTH MARKET STREET BRIDGE REHABILITATION

REVISIONS

AS BUILT

SUBMARINE CABLES CONTROL WIRING - 2

NOTES:

1. ARRANGEMENT SHOWN IS FOR REFERENCE ONLY. IT SHALL BE THE RESPONSIBILITY OF THE CONTRACTOR AND THE CONTROL SYSTEM VENDOR TO COORDINATE ACTUAL SYSTEM DIVISION, PREPARE SCHEDULE OF SUBMARINE CABLE CONTROL WIRING, AND ASSIGN CONDUCTOR LABELS.
2. CONTROL DEVICES SHOWN ON THESE SHEETS ARE INCLUDED IN THE CONTROL CIRCUIT DIAGRAMS ARE SHOWN HERE FOR REFERENCE PURPOSES ONLY.

NOTE: AB
SEE LINK CONTROL SYSTEMS DRAWINGS FOR ADDITIONAL DETAILS.

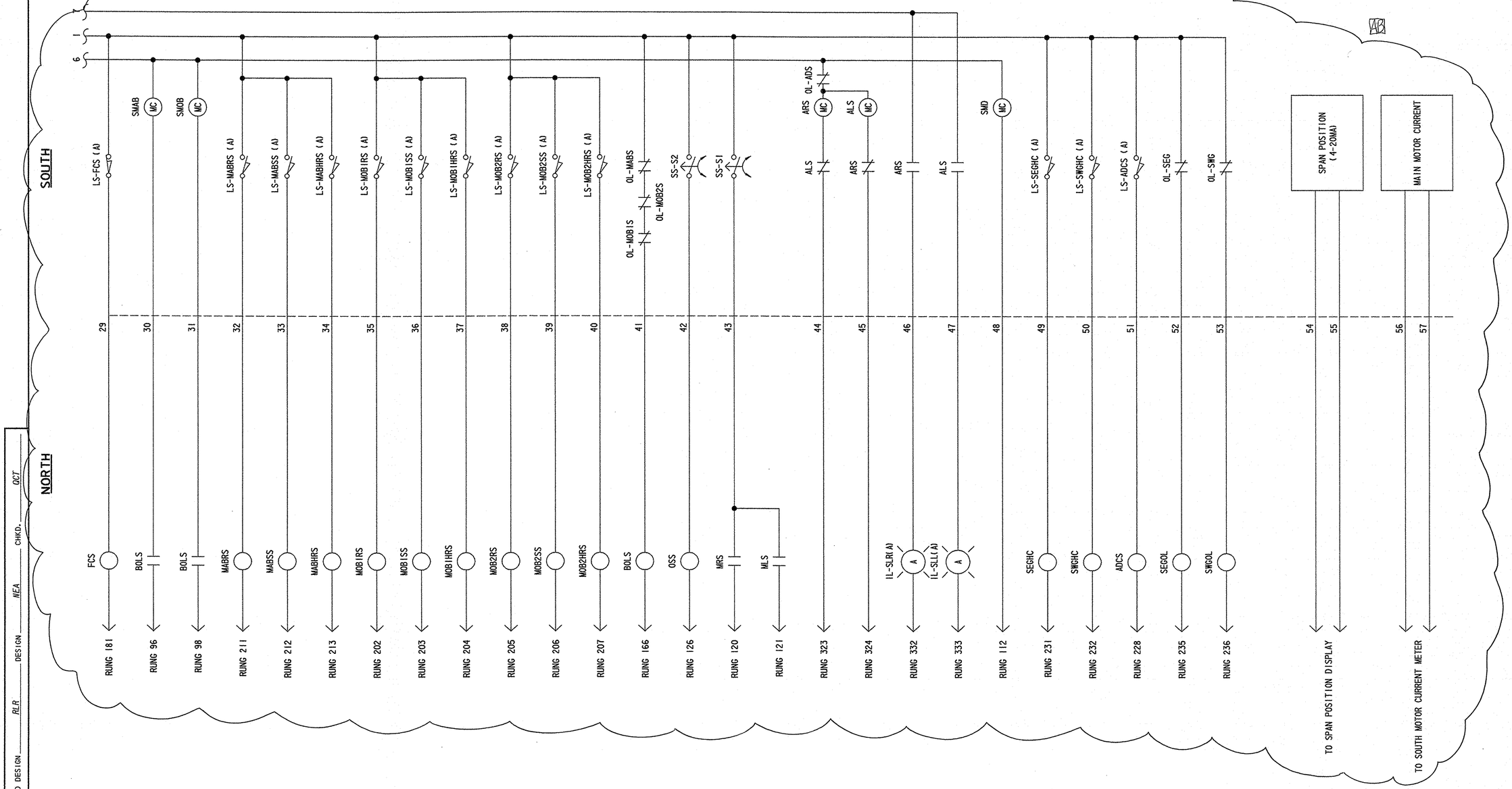

AB

CADD DESIGN	RLR	DESIGN	MEA	CHKD.	OCT

SCCW2

9/21/2006 21-074-07

E20

BR 688
SOUTH MARKET STREET BRIDGE REHABILITATION

REVISIONS	
1 ADDED PEDESTRIAN LIGHTING 2-20-04	LRB

BRIDGE WIRING AND CONDUIT SCHEDULE -1

AS BUILT

LRB

WIRING AND CONDUIT SCHEDULE

RUN NO.	CONDUIT SIZE OR CABLE TYPE	SERVING	CONDUCTORS, QUANTITY AND TYPE	GROUND CONDUCTOR
NP1	1	NORTHEAST BARRIER GATE MOTOR	(3) 10 AWG	10 AWG
		NORTHEAST WARNING GATE MOTOR	(3) 10 AWG	
		NORTHWEST BARRIER GATE MOTOR	(3) 10 AWG	
		NORTHWEST WARNING GATE MOTOR	(3) 10 AWG	
NP2	1 1/4	NORTHWEST BARRIER GATE MOTOR	(3) 10 AWG	10 AWG
		NORTHWEST WARNING GATE MOTOR	(3) 10 AWG	
		WEST TRAFFIC SIGNALS	(2) 10 AWG	
		NORTHWEST WARNING GATE LIGHTS / GONGS	(2) 10 AWG	
		NORTHWEST WARNING GATE HEAT / RECEPTACLES	(2) 10 AWG	
		NORTHWEST BARRIER GATE LIGHTS	(2) 10 AWG	
		NORTHWEST BARRIER GATE HEAT / RECEPTACLES	(2) 10 AWG	
NP3	1 1/4	NORTHEAST BARRIER GATE MOTOR	(3) 10 AWG	10 AWG
		NORTHEAST WARNING GATE MOTOR	(3) 10 AWG	
		EAST TRAFFIC SIGNALS	(2) 10 AWG	
		NORTHEAST WARNING GATE LIGHTS / GONGS	(2) 10 AWG	
		NORTHEAST WARNING GATE HEAT / RECEPTACLES	(2) 10 AWG	
		NORTHEAST BARRIER GATE LIGHTS	(2) 10 AWG	
		NORTHEAST BARRIER GATE HEAT / RECEPTACLES	(2) 10 AWG	
NP4	1 1/4	NORTH MOTOR BRAKE 1	(3) 10 AWG	10 AWG
		NORTH MOTOR BRAKE 2	(3) 10 AWG	
		NORTH MACHINERY BRAKE	(3) 10 AWG	
		NORTH AUXILIARY DRIVE MOTOR	(3) 6 AWG	
NP5	SEE NOTE 1	NORTH MAIN DRIVE MOTOR	SEE NOTE 1	SEE NOTE 1
NP6	SEE NOTE 1 1/2"	NORTH SECONDARY RESISTORS	(R1), (R2), (R3) SEE NOTE 1 (5) 2/0	SEE NOTE 1
NP7	3/4	EAST CENTER LOCK	(3) 10 AWG	10 AWG
		WEST CENTER LOCK	(3) 10 AWG	
NP8	FLEXIBLE CABLE	EAST CENTER LOCK	(3) 10 AWG	10 AWG
	FLEXIBLE CABLE	WEST CENTER LOCK	(3) 10 AWG	
	FLEXIBLE CABLE	NORTHWEST SPAN NAVIGATION LIGHT	(2) 10 AWG	
	FLEXIBLE CABLE	NORTHEAST SPAN NAVIGATION LIGHT	(2) 10 AWG	
	FLEXIBLE CABLE	LS-ELD, LS-ELP, LS-ELHC	(10) 12 AWG	
	FLEXIBLE CABLE	LS-WLD, LS-WLP, LS-WLHC	(10) 12 AWG	
	FLEXIBLE CABLE	NORTHWEST PEDESTRIAN LIGHTS	(2) 10 AWG	
	FLEXIBLE CABLE	NORTHWEST FLOODLIGHTS	(2) 10 AWG	
	FLEXIBLE CABLE	NORTHEAST PEDESTRIAN LIGHTS	(2) 10 AWG	
	FLEXIBLE CABLE	NORTHEAST FLOODLIGHTS	(2) 10 AWG	
NP9	2	EAST CENTER LOCK	(3) 10 AWG	10 AWG
		WEST CENTER LOCK	(3) 10 AWG	
		NORTHWEST SPAN NAVIGATION LIGHT	(2) 10 AWG	
		NORTHEAST SPAN NAVIGATION LIGHT	(2) 10 AWG	
		LS-ELD, LS-ELP, LS-ELHC	(10) 12 AWG	
		LS-WLD, LS-WLP, LS-WLHC	(10) 12 AWG	
		NORTHWEST PEDESTRIAN LIGHTS	(2) 10 AWG	
		NORTHWEST FLOODLIGHTS	(2) 10 AWG	
		NORTHEAST PEDESTRIAN LIGHTS	(2) 10 AWG	
		NORTHEAST FLOODLIGHTS	(2) 10 AWG	
NP10	3/4	WEST CENTER LOCK	(3) 10 AWG	10 AWG
		NORTHWEST SPAN NAVIGATION LIGHT	(2) 10 AWG	
NP11	3/4	EAST CENTER LOCK	(3) 10 AWG	10 AWG
		NORTHEAST SPAN NAVIGATION LIGHT	(2) 10 AWG	
NP12	3/4	CABINET LIGHTS AND HEATERS	(2) 12 AWG	12 AWG
		MACHINERY ROOM RECEPTACLES	(2) 12 AWG	
		CONTROL CIRCUIT (RELAY CABINET)	(2) 12 AWG	
NP13	3/4	COUNTERWEIGHT PIT LIGHTS	(4) 12 AWG	12 AWG
		PUMP PLATFORM LIGHTS	(2) 12 AWG	
NP14	3/4	MACHINERY ROOM LIGHTS	(2) 12 AWG	12 AWG
NP15	3/4	UPPER LEVEL LIGHTS	(2) 12 AWG	12 AWG
		CEILING FAN	(2) 12 AWG	
		CANOPY LIGHTING	(2) 12 AWG	
NP16	1 1/2	NORTH LIGHTING PANEL	(4) 1 AWG	8 AWG
NP17	3/4	NORTH ROTARY CAM LIMIT SWITCH / SPAN NAVIGATION LIGHTS	(2) 10 AWG	10 AWG
NP18	3/4	BATHROOM BASEBOARD HEAT	(2) 12 AWG	12 AWG
		HOT WATER HEATER	(2) 12 AWG	
NP19		UNASSIGNED		
NP20	3/4	UPPER LEVEL RECEPTACLES	(2) 12 AWG	10 AWG
		AIR CONDITIONER	(2) 10 AWG	
		REFRIGERATOR	(2) 10 AWG	
		MICROWAVE	(2) 12 AWG	

WIRING AND CONDUIT SCHEDULE (CONTINUED)

RUN NO.	CONDUIT SIZE OR CABLE TYPE	SERVING	CONDUCTORS, QUANTITY AND TYPE	GROUND CONDUCTOR
NP21	1	NORTHWEST WARNING GATE LIGHTS / GONGS	(2) 10 AWG	10 AWG
		NORTHWEST BARRIER GATE LIGHTS	(2) 10 AWG	
		NORTHEAST WARNING GATE LIGHTS / GONGS	(2) 10 AWG	
		NORTHEAST BARRIER GATE LIGHTS	(2) 10 AWG	
		EAST TRAFFIC SIGNALS	(2) 10 AWG	
		WEST TRAFFIC SIGNALS	(2) 10 AWG	
NP22	3/4	AUXILIARY CONTROL PANEL	(2) 12 AWG	12 AWG
NP23	3/4	NORTH DUPLEX SUMP PUMPS	(2) 10 AWG	10 AWG
NP24	3/4	UPPER LEVEL HEATER	(2) 12 AWG	12 AWG
		MACHINERY ROOM HEATER	(2) 12 AWG	
		MACHINERY ROOM HEATER	(2) 12 AWG	
NP25	3/4	NORTH FENDER NAVIGATION LIGHTS	(2) 10 AWG	10 AWG
NP26	1	NSDT	(3) 6 AWG	10 AWG
NP27	1	NORTHWEST WARNING GATE HEAT / RECEPTACLES	(2) 10 AWG	10 AWG
		NORTHWEST BARRIER GATE HEAT / RECEPTACLES	(2) 10 AWG	
		NORTHEAST WARNING GATE HEAT / RECEPTACLES	(2) 10 AWG	
		NORTHEAST BARRIER GATE HEAT / RECEPTACLES	(2) 10 AWG	
NP28	LRB 4" ~~3~~	MAIN CIRCUIT BREAKER	(3) 600 MCM	2 AWG
~~NP29~~	LRB 4" ~~3~~	CIRCUIT BREAKER ~~MANUAL TRANSFER SWITCH~~ CB-DG1 LRB	(3) 600 MCM	2 AWG
~~NP30~~	~~3~~ LRB	LRB ~~MANUAL TRANSFER SWITCH~~	(3) 600 AWG	2 AWG
NP31	3	NORTH STARTER CABINET	(3) 600 MCM	2 AWG
NP32	1	NORTHWEST PEDESTRIAN LIGHTS	(2) 10 AWG	10 AWG
		NORTHWEST FLOODLIGHTS	(2) 10 AWG	
		NORTHEAST PEDESTRIAN LIGHTS	(2) 10 AWG	
		NORTHEAST FLOODLIGHTS	(2) 10 AWG	
NP33	3/4	NORTHWEST PEDESTRIAN LIGHTS	(2) 10 AWG	10 AWG
NP34	3/4	NORTHWEST FLOODLIGHTS	(2) 10 AWG	10 AWG
NP35	3/4	NORTHEAST PEDESTRIAN LIGHTS	(2) 10 AWG	10 AWG
NP36	3/4	NORTHEAST FLOODLIGHTS	(2) 10 AWG	10 AWG
NC1	1 1/4	LS-WLD, LS-WLP, LS-WLHC	(10) 12 AWG	12 AWG
		LS-ELD, LS-ELP, LS-ELHC	(10) 12 AWG	
NC2	2	NORTHEAST BARRIER GATE LIMIT SWITCH	(14) 12 AWG	12 AWG
		NORTHWEST BARRIER GATE LIMIT SWITCH	(14) 12 AWG	
		NORTHEAST WARNING GATE LIMIT SWITCH	(14) 12 AWG	
		NORTHWEST WARNING GATE LIMIT SWITCH	(14) 12 AWG	
NC3	1 1/4	NORTHEAST BARRIER GATE LIMIT SWITCH	(14) 12 AWG	12 AWG
		NORTHEAST WARNING GATE LIMIT SWITCH	(14) 12 AWG	
NC4	1 1/4	NORTHWEST BARRIER GATE LIMIT SWITCH	(14) 12 AWG	12 AWG
		NORTHWEST WARNING GATE LIMIT SWITCH	(14) 12 AWG	
NC5	3/4	LS-FON	(4) 12 AWG	12 AWG
		LS-FCN	(4) 12 AWG	
NC6	1	LS-ADCN	(2) 12 AWG	12 AWG
		LS-MABHRN, LS-MABRN, LS-MABSN	(6) 12 AWG	
		LS-MOB1HRN, LS-MOB1RN, LS-MOB1SN	(6) 12 AWG	
NC7	1 1/4	LS-MOB2HRN, LS-MOB2RN, LS-MOB2SN	(6) 12 AWG	12 AWG
		SS-N1, SS-N2	(6) 12 AWG	
		LS-RCN	(16) 12 AWG	
NC8	SEE NOTE 1	NORTH SUBMARINE TERMINAL CABINET	SEE NOTE 1	SEE NOTE 1
NC9	SEE NOTE 1	CONTROL CONSOLE	SEE NOTE 1	SEE NOTE 1
NC10	SEE NOTE 1	NORTH MAIN DRIVE CABINET	SEE NOTE 1	SEE NOTE 1
SUB 1	EXISTING	SUBMARINE POWER CABLE	EXISTING	EXISTING
SUB 2	EXISTING	SUBMARINE CONTROL CABLE	EXISTING	EXISTING

NOTE: LRB
SEE LINK CONTROL SYSTEM AND CIANBRO DRAWINGS FOR ADDITIONAL DETAILS.

NOTES:

1. THE SIZE AND NUMBER OF CONDUCTORS SERVICING THE MAIN DRIVES, SUBMARINE CONTROL CABLES AND THE CONTROL SYSTEM SHALL BE DETERMINED BY THE CONTROL SYSTEM VENDOR AND DRIVE MANUFACTURER.

9/21/2006 21-074-07

BWCS1 CADD DESIGN RLR DESIGN BBB CHKD. LRB

BR 688 SOUTH MARKET STREET BRIDGE REHABILITATION

REVISIONS	
1 ADDED PEDESTRIAN LIGHTING 2-20-04	LRB

AS BUILT

BRIDGE WIRING AND CONDUIT SCHEDULE -2

WIRING AND CONDUIT SCHEDULE

RUN NO.	CONDUIT SIZE OR CABLE TYPE	SERVING	CONDUCTORS, QUANTITY AND TYPE	GROUND CONDUCTOR
SP1	1¼" ~~¾~~ AB	SOUTHEAST WARNING GATE MOTOR	(3) 10 AWG	10 AWG
		SOUTHWEST WARNING GATE MOTOR	(3) 10 AWG	
SP2	~~¾~~ 1" AB	SOUTHWEST WARNING GATE MOTOR	(3) 10 AWG	10 AWG
		SOUTHWEST WARNING GATE LIGHTS / GONGS	(2) 10 AWG	
		SOUTHWEST WARNING GATE HEAT / RECEPTACLES	(2) 10 AWG	
SP3	~~¾~~ 1" AB	SOUTHEAST WARNING GATE MOTOR	(3) 10 AWG	10 AWG
		SOUTHEAST WARNING GATE LIGHTS / GONGS	(2) 10 AWG	
		SOUTHEAST WARNING GATE HEAT / RECEPTACLES	(2) 10 AWG	
SP4	AB ~~¾~~ 1"	SOUTH MOTOR BRAKE 1	(3) 10 AWG	10 AWG
		SOUTH MOTOR BRAKE 2	(3) 10 AWG	
		SOUTH MACHINERY BRAKE	(3) 10 AWG	
		SOUTH AUXILIARY DRIVE MOTOR	(3) 6 AWG	
SP5	AB ~~SEE NOTE 1~~ 2"	SOUTH MAIN DRIVE MOTOR	SEE NOTE 1	SEE NOTE 1
SP6	AB ~~SEE NOTE 1~~ 1½"	SOUTH SECONDARY RESISTORS	SEE NOTE 1	SEE NOTE 1
SP7	¾	SOUTH ROTARY CAM LIMIT SWITCH / ~~WEST SPAN NAVIGATION LIGHTS~~	(2) 10 AWG	10 AWG
SP8	FLEXIBLE CABLE	SOUTHWEST SPAN NAVIGATION LIGHT	(2) 10 AWG	10 AWG
	FLEXIBLE CABLE	SOUTHEAST SPAN NAVIGATION LIGHT	(2) 10 AWG	
	FLEXIBLE CABLE	SOUTHWEST PEDESTRAIN LIGHTS	(2) 10 AWG	
	FLEXIBLE CABLE	SOUTHWEST FLOODLIGHTS	(2) 10 AWG	
	FLEXIBLE CABLE	SOUTHEAST PEDESTRAIN LIGHTS	(2) 10 AWG	
	FLEXIBLE CABLE	SOUTHEAST FLOODLIGHTS	(2) 10 AWG	
SP9	1¼" AB	SOUTHWEST SPAN NAVIGATION LIGHT	(2) 10 AWG	10 AWG
		SOUTHEAST SPAN NAVIGATION LIGHT	(2) 10 AWG	
		SOUTHWEST PEDESTRAIN LIGHTS	(2) 10 AWG	
		SOUTHWEST FLOODLIGHTS	(2) 10 AWG	
		SOUTHEAST PEDESTRAIN LIGHTS	(2) 10 AWG	
		SOUTHEAST FLOODLIGHTS	(2) 10 AWG	
SP10	1¼ AB	CABINET LIGHTS AND HEATERS	(2) 12 AWG	10 AWG
		MACHINERY ROOM RECEPTACLES	(2) 12 AWG	
		MACHINERY ROOM LIGHTS	(2) 12 AWG	
		MACHINERY ROOM HEATER	(2) 10 AWG	
		MACHINERY ROOM HEATER	(2) 10 AWG	
SP11	~~¾~~ 1 AB	COUNTERWEIGHT PIT LIGHTS	(4) 12 AWG	12 AWG
		PUMP PLATFORM LIGHTS	(2) 12 AWG	
SP12	AB ~~¾~~ 1¼"	UPPER LEVEL LIGHTS	(2) 12 AWG	12 AWG
		UPPER LEVEL HEATER	(2) 12 AWG	
		UPPER LEVEL HEATER	(2) 12 AWG	
		UPPER LEVEL RECEPTACLES	(2) 12 AWG	
		CANOPY LIGHTING	(2) 12 AWG	
SP13	1½	SOUTH LIGHTING PANEL	(4) 1 AWG	8 AWG
SP14	¾ AB	~~UNASSIGNED~~ SUB. TERM. CABINET AB	(4) 10 AWG AB	
SP15	¾	SOUTHWEST WARNING GATE LIGHTS / GONGS	(2) 10 AWG	10 AWG
		SOUTHEAST WARNING GATE LIGHTS / GONGS	(2) 10 AWG	
SP16	¾	DUPLEX SUMP PUMPS	(2) 10 AWG	10 AWG
SP17	¾	FENDER NAVIGATION LIGHTS	(2) 10 AWG	10 AWG
SP18	1	FSDT	(3) 6 AWG	10 AWG
SP19	¾	~~SOUTHEAST WARNING GATE HEAT / RECEPTACLES~~ TO SCR DRIVE	(4) ~~(2)~~ 10 AWG	10 AWG
		~~SOUTHEAST WARNING GATE HEAT / RECEPTACLES~~ ~~DELETE~~	AB (2) 10 AWG	
SP20	1	SOUTHWEST PEDESTRIAN LIGHTS	(2) 10 AWG	10 AWG
		SOUTHWEST FLOODLIGHTS	(2) 10 AWG	
		SOUTHEAST PEDESTRIAN LIGHTS	(2) 10 AWG	
		SOUTHEAST FLOODLIGHTS	(2) 10 AWG	
SP21	¾	SOUTHWEST PEDESTRIAN LIGHTS	(2) 10 AWG	10 AWG
SP22	¾	SOUTHWEST FLOODLIGHTS	(2) 10 AWG	10 AWG
SP23	¾	SOUTHEAST PEDESTRIAN LIGHTS	(2) 10 AWG	10 AWG
SP24	¾	SOUTHEAST FLOODLIGTHS	(2) 10 AWG	10 AWG
SP25	3"	PRIMARY RESISTOR	(3) 1 ø	1 ø
SP26	¾	SECONDARY RESISTOR	(4) 10 AWG	10 AWG

1

1

1

AB

WIRING AND CONDUIT SCHEDULE

RUN NO.	CONDUIT SIZE OR CABLE TYPE	SERVING	CONDUCTORS, QUANTITY AND TYPE	GROUND CONDUCTOR
SC1	AB ~~¾~~ 1"	SOUTHEAST WARNING GATE LIMIT SWITCH	(14) 12 AWG	12 AWG
		SOUTHWEST WARNING GATE LIMIT SWITCH	(14) 12 AWG	
SC2	1	SOUTHEAST WARNING GATE LIMIT SWITCH	(14) 12 AWG	12 AWG
SC3	1	SOUTHWEST WARNING GATE LIMIT SWITCH	(14) 12 AWG	12 AWG
SC4	AB ~~¾~~ ¾"	LS-FOS	(4) 12 AWG	12 AWG
		LS-FCS	(4) 12 AWG	
SC5	AB * ¾	LS-ADCS	(2) 12 AWG	12 AWG
		LS-MABHRS, LS-MABRS, LS-MABSS	(6) 12 AWG	
		LS-MOB1HRS, LS-MOB1RS, LS-MOB1SS	(6) 12 AWG	
SC6	AB ~~¾~~ ¾	LS-MOB2HRS, LS-MOB2RS, LS-MOB2SS	(6) 12 AWG	12 AWG
		SS-S1, SS-S2	(6) 12 AWG	
		LS-RCS	(16) 12 AWG	
SC7	~~SEE NOTE 1~~ 1"	SOUTH MAIN DRIVE CABINET	SEE NOTE 1	SEE NOTE 1
AB SC8	¾	OVERSPEED LIMIT SWITCH		

NOTE: AB

SEE LINK CONTROL SYSTEMS AND CLANBRO DRAWINGS FOR ADDITIONAL DETAILS.

NOTES:

1. THE SIZE AND NUMBER OF CONDUCTORS SERVICING THE MAIN DRIVES, SUBMARINE CONTROL CABLES AND THE CONTROL CONSOLE SHALL BE DETERMINED BY THE CONTROL SYSTEM VENDOR AND DRIVE MANUFACTURER.

CADD DESIGN RLR DESIGN BBB CHKD. LRB

BWCS2

9/21/2006 21-074-07

BR. I-668	CONTRACT	COUNTY	FEDERAL AID PROJECT NO.	SHEET NO.	TOTAL SHTS.
	21-074-07	NEW CASTLE	EBHN-N029 (2)	56	169

BR 688
SOUTH MARKET STREET BRIDGE REHABILITATION

REVISIONS	
1 ADDED PEDESTRIAN LIGHTING 2-20-04	LRB

AS BUILT

NOTE: AB
SEE ATTACHED DRAWINGS FROM LINK CONTROL SYSTEMS AND CIANBRO FOR DETAILS.

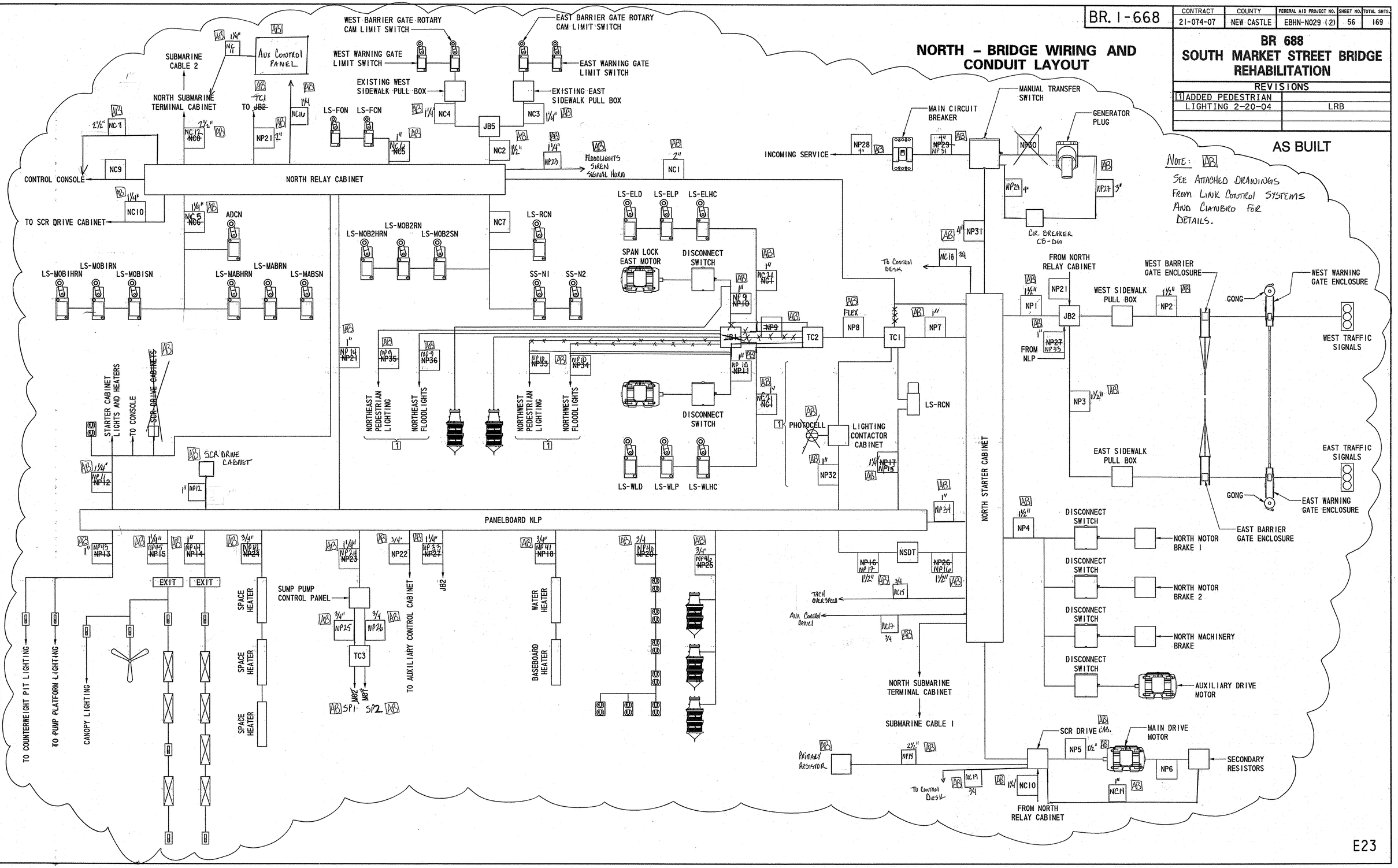

9/21/2006 21-074-07

E23

CADD DESIGN ALR DESIGN BBB CHKD. LRB

NBWCL

BR. I-668	CONTRACT	COUNTY	FEDERAL AID PROJECT NO.	SHEET NO.	TOTAL SHTS.
	21-074-07	NEW CASTLE	EBHN-N029 (2)	57	169

SOUTH – BRIDGE WIRING AND CONDUIT LAYOUT

BR 688
SOUTH MARKET STREET BRIDGE REHABILITATION

REVISIONS	
1 ADDED PEDESTRIAN LIGHTING 2-20-04	LRB

AS BUILT

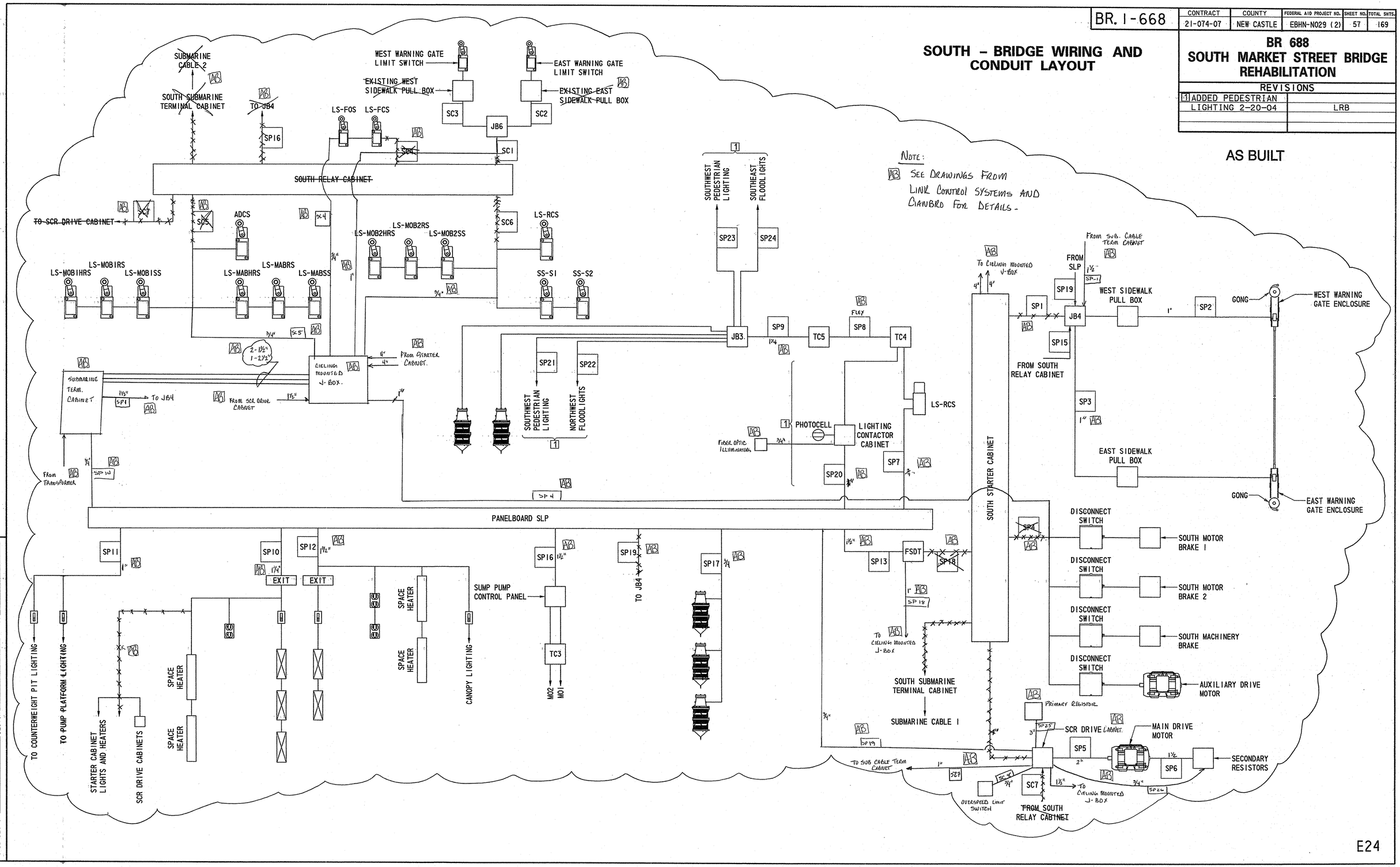

E24

9/21/2006 21-074-07

SBWCL

CADD DESIGN	RLR	DESIGN	BBB	CHKD.	LRB

FEET/12/1000

TEXT SIZE REFERENCE
.125
.1875
.25

BR. I-688	CONTRACT	COUNTY	FEDERAL AID PROJECT NO.	SHEET NO.	TOTAL SHTS.
	21-074-07	NEW CASTLE	EBHN-N029 (2)	58	169

BR 688
SOUTH MARKET STREET BRIDGE REHABILITATION

REVISIONS	
1 ADDED PEDESTRIAN LIGHTING 2-20-04	LRB
3 DELETED SHEET 6-4-04	BBB

OPERATORS HOUSE DETAILS

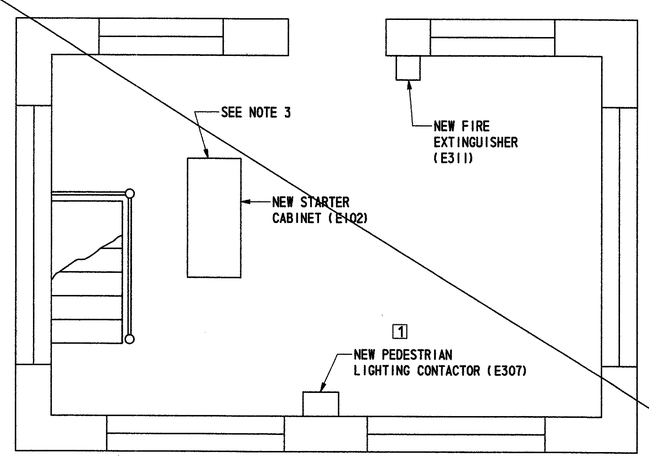

SOUTH HOUSE - STREET LEVEL
SCALE: 1/2" = 1'-0"

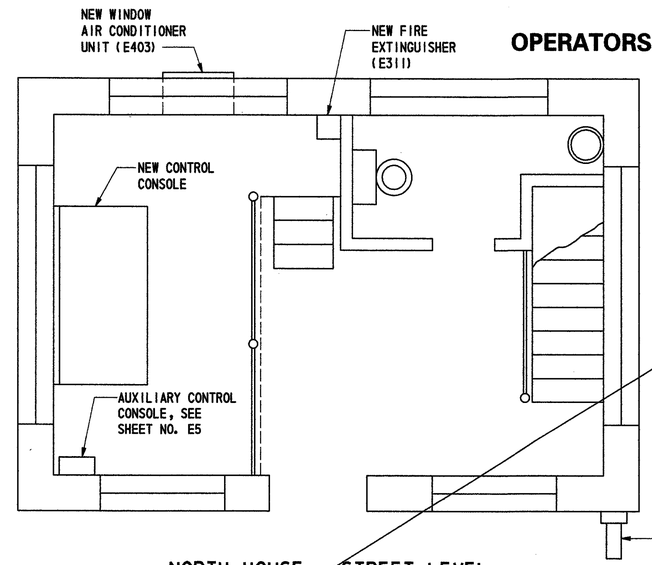

NORTH HOUSE - STREET LEVEL
SCALE: 1/2" = 1'-0"

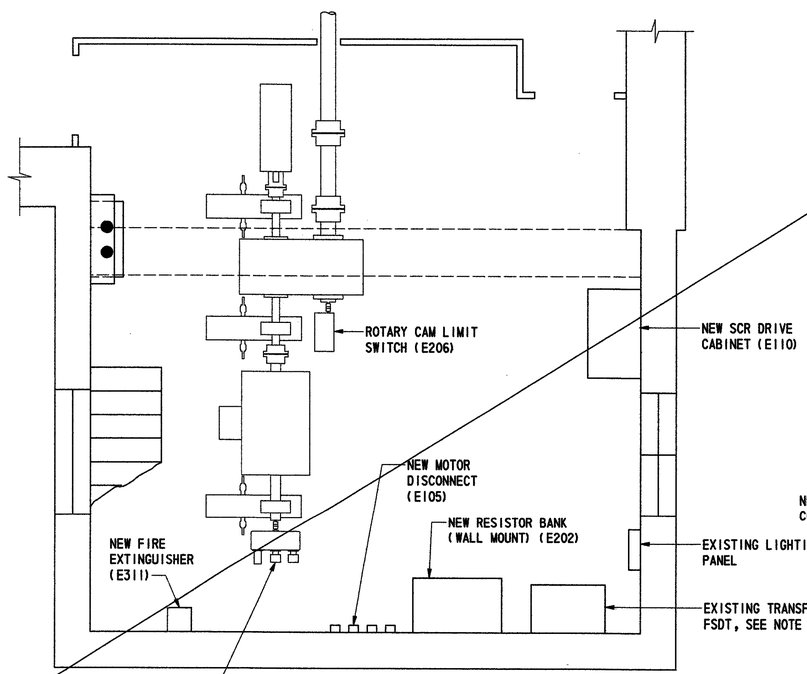

SOUTH HOUSE - LOWER LEVEL
SCALE: 1/2" = 1'-0"

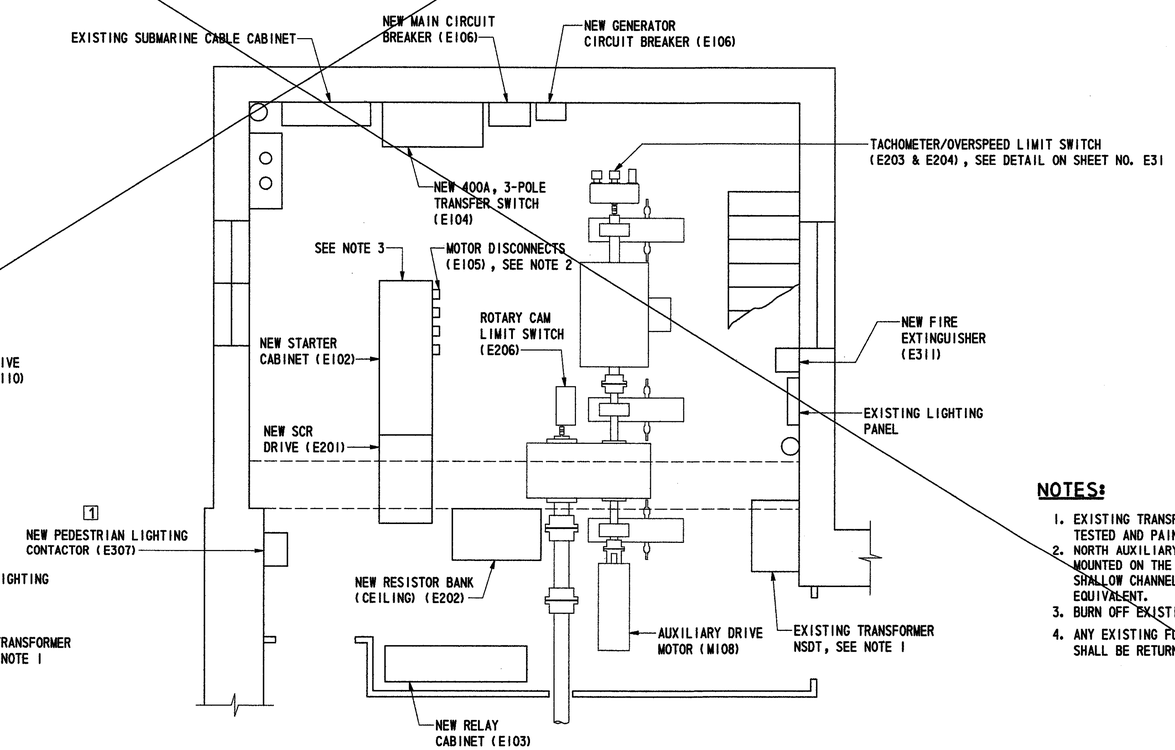

NORTH HOUSE - LOWER LEVEL
SCALE: 1/2" = 1'-0"

NOTES:

1. EXISTING TRANSFORMERS NSDT AND FSDT SHALL BE CLEANED, TESTED AND PAINTED. SEE SPECIFICATIONS FOR DETAILS.
2. NORTH AUXILIARY DRIVE AND BRAKE DISCONNECTS SHALL BE MOUNTED ON THE BACK OF THE STARTER CABINET USING SHALLOW CHANNEL AS MANUFACTURED BY UNISTRUT OR EQUIVALENT.
3. BURN OFF EXISTING GRILLAGE LEVEL WITH TOP OF SLAB.
4. ANY EXISTING FURNISHINGS IN THE SOUTH OR NORTH HOUSES, SHALL BE RETURNED TO DELDOT PRIOR TO WORK COMMENCING.

CADD DESIGN RLR DESIGN MEA CHKD. OCT

OHDOLD

FEET/12/1000

TEXT SIZE REFERENCE
.125
.1875
.25

BR. 1-688	CONTRACT	COUNTY	FEDERAL AID PROJECT NO.	SHEET NO.	TOTAL SHTS.
	21-074-07	NEW CASTLE	EBHN-N029 (2)	58A	169

BR 688
SOUTH MARKET STREET BRIDGE REHABILITATION

REVISIONS	
3 NEW SHEET. ELECTRICAL	LRB 11/18/04
FURNISHINGS MOVED DUE TO	
SHOP DRAWING REVISIONS.	
NEW SPLIT A.C. SYSTEM.	

OPERATORS HOUSE DETAILS

AS BUILT

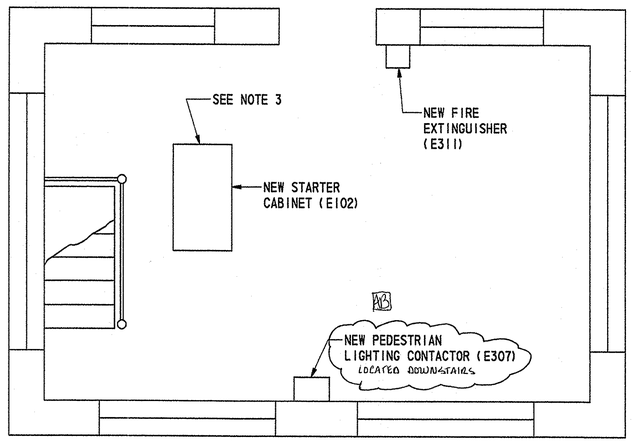

SOUTH HOUSE - STREET LEVEL
SCALE: 1/2" = 1'-0"

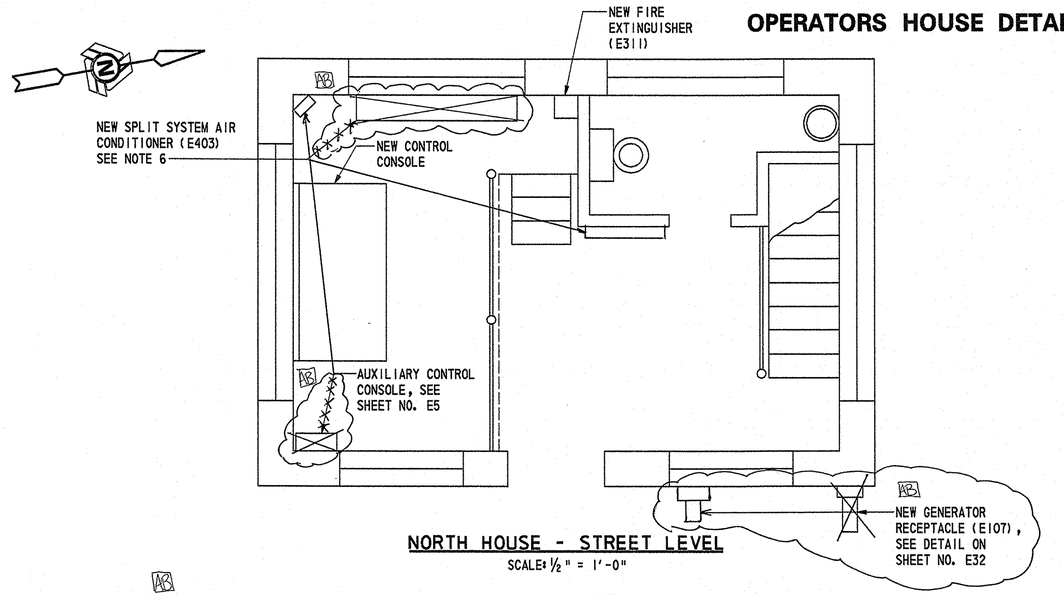

NORTH HOUSE - STREET LEVEL
SCALE: 1/2" = 1'-0"

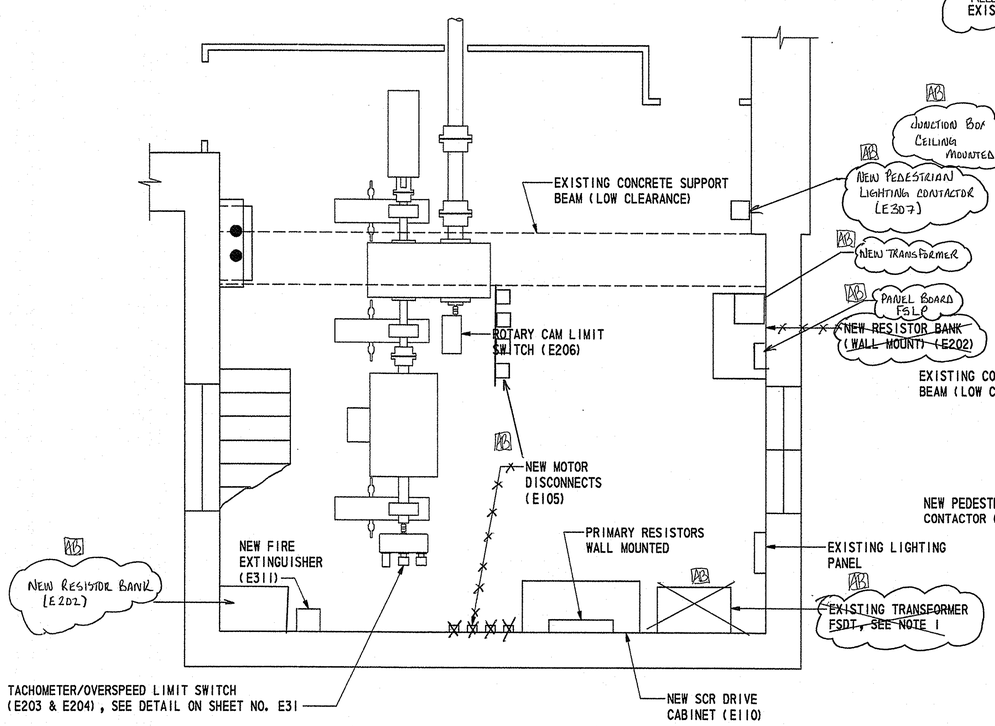

SOUTH HOUSE - LOWER LEVEL
SCALE: 1/2" = 1'-0"

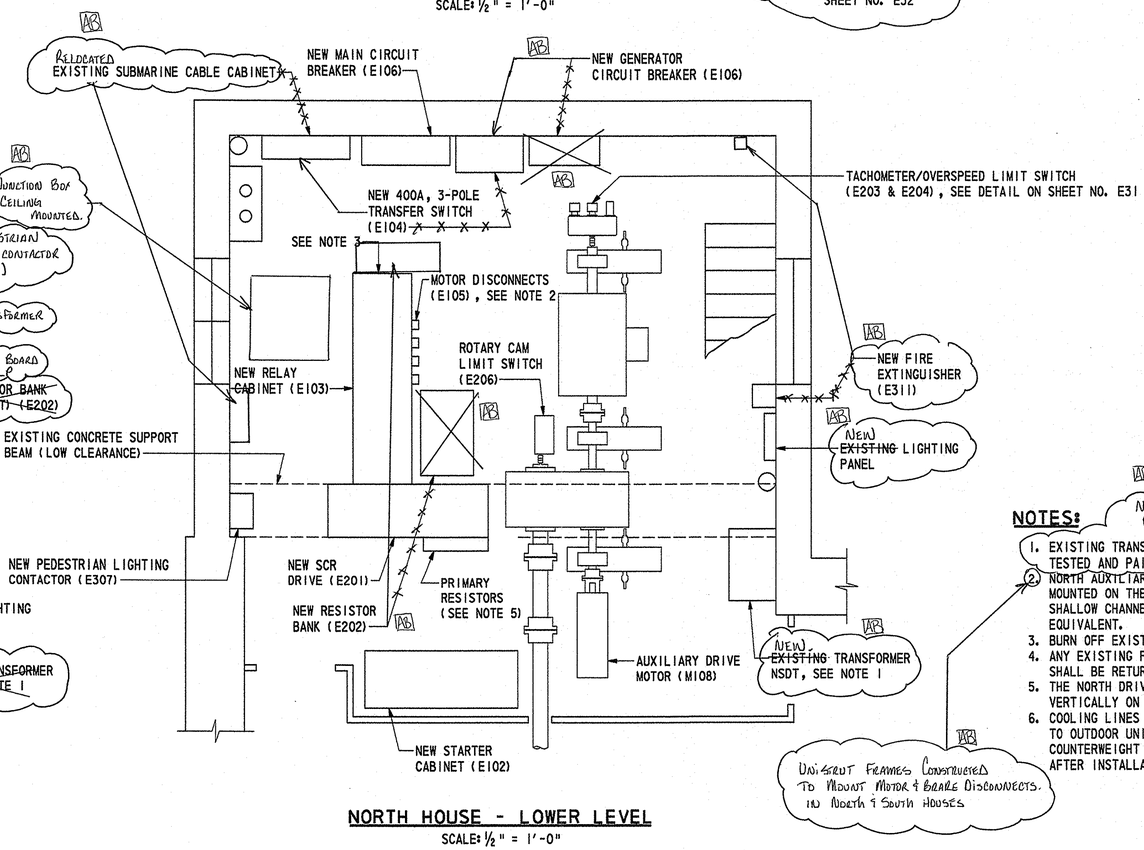

NORTH HOUSE - LOWER LEVEL
SCALE: 1/2" = 1'-0"

NOTES:

1. EXISTING TRANSFORMERS NSDT AND FSDT SHALL BE CLEANED, TESTED AND PAINTED. SEE SPECIFICATIONS FOR DETAILS.
2. NORTH AUXILIARY DRIVE AND BRAKE DISCONNECTS SHALL BE MOUNTED ON THE BACK OF THE STARTER CABINET USING SHALLOW CHANNEL AS MANUFACTURED BY UNISTRUT OR EQUIVALENT.
3. BURN OFF EXISTING GRILLAGE LEVEL WITH TOP OF SLAB.
4. ANY EXISTING FURNISHINGS IN THE SOUTH OR NORTH HOUSES, SHALL BE RETURNED TO DELDOT PRIOR TO WORK COMMENCING.
5. THE NORTH DRIVE PRIMARY RESISTORS TO BE MOUNTED VERTICALLY ON THE CONCRETE SUPPORT BEAM.
6. COOLING LINES SHALL BE ROUTED THRU EQUIPMENT ROOM TO OUTDOOR UNIT LOCATED ON PUMP PLATFORM IN COUNTERWEIGHT PIT. COOLING LINES SHALL BE INSULATED AFTER INSTALLATION.

E25A

9/21/2006 21-074-07

CADD DESIGN RLR DESIGN NEA CHKD. OCT

OHDNEW

FEET/12/1000

TEXT SIZE REFERENCE
.125
.1875
.25

BR. 1-688	CONTRACT	COUNTY	FEDERAL AID PROJECT NO.	SHEET NO.	TOTAL SHTS.
	21-074-07	NEW CASTLE	EBHN-N029 (2)	59	69

BR 688
SOUTH MARKET STREET BRIDGE REHABILITATION

REVISIONS

13 DELETED SHEET 6-7-04	BBB

OPERATORS HOUSE LIGHTING AND RECEPTACLES

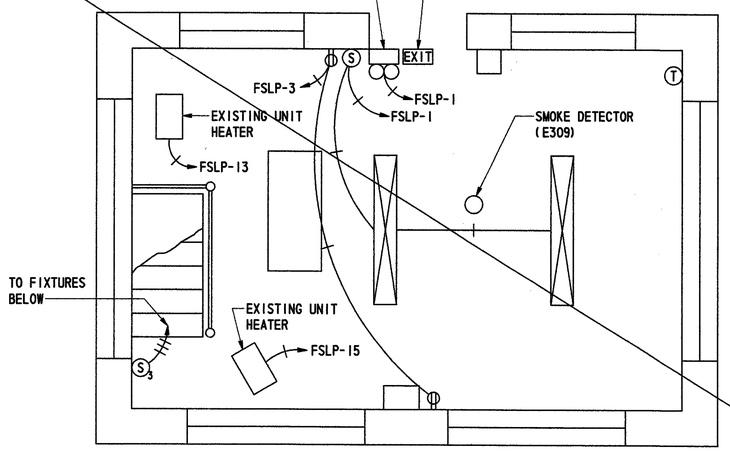

SOUTH HOUSE - STREET LEVEL
SCALE: 1/2" = 1'-0"

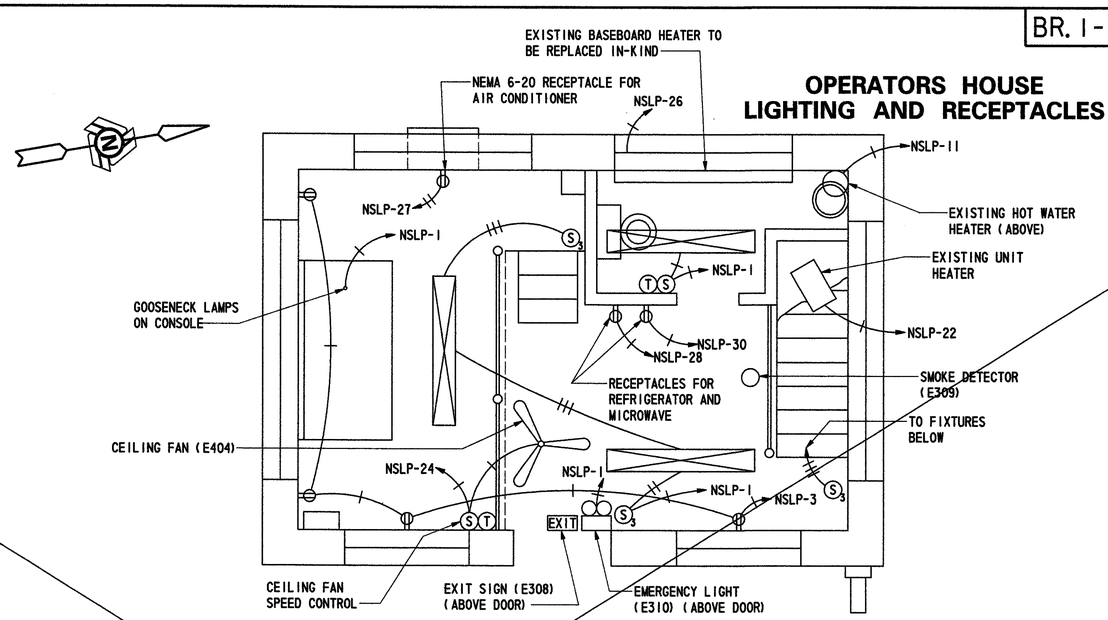

NORTH HOUSE - STREET LEVEL
SCALE: 1/2" = 1'-0"

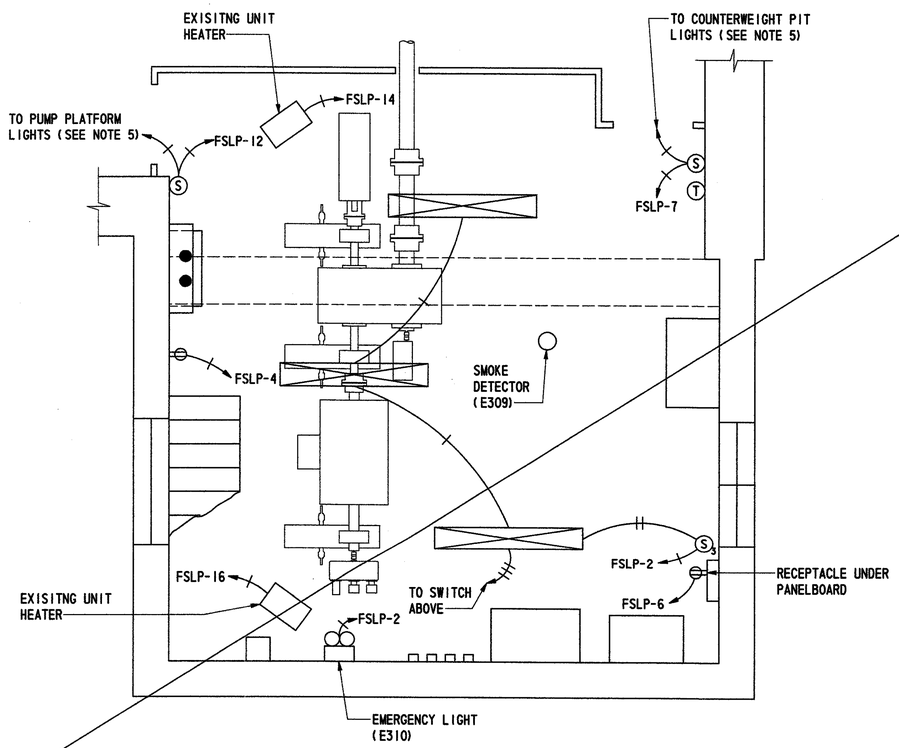

SOUTH HOUSE - LOWER LEVEL
SCALE: 1/2" = 1'-0"
(SEE NOTE 6)

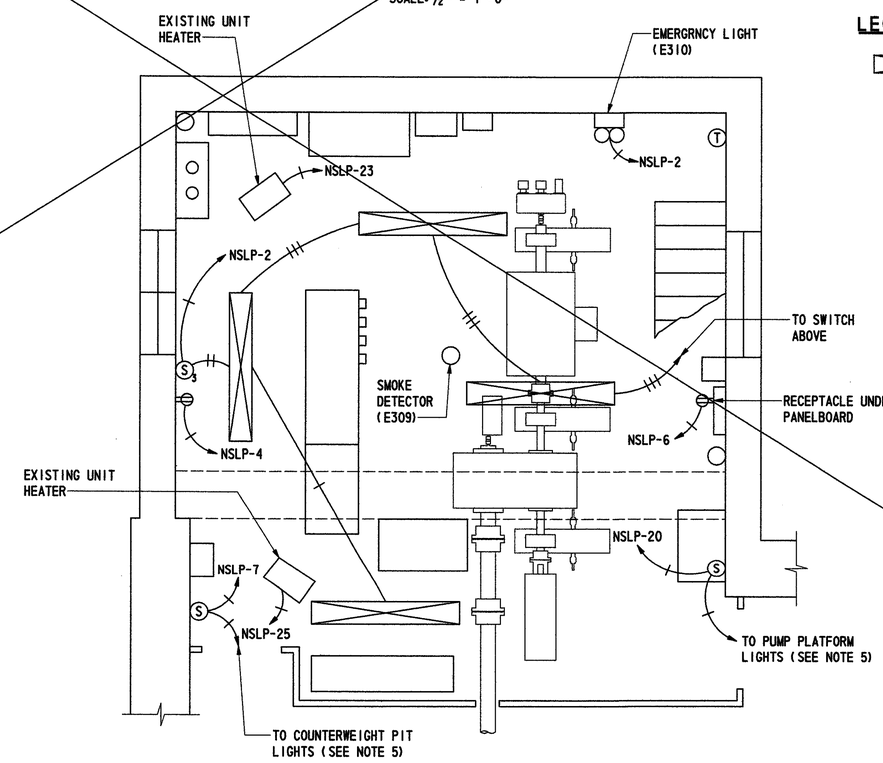

NORTH HOUSE - LOWER LEVEL
SCALE: 1/2" = 1'-0"
(SEE NOTE 6)

LEGEND

- 4' DAMP LOCATION ENCLOSED INDUSTRIAL FLUORESCENT FIXTURE (2) 32 WATT LAMPS
- DUPLEX RECEPTACLE (E111 OR E112)
- (T) THERMOSTAT
- (S) SINGLE POLE LIGHT SWITCH (E312)
- (S3) THREE-WAY LIGHT SWITCH (E313)
- CIRCUITING
  SLASHES INDICATE NUMBER OF UNGROUNDED CONDUCTORS
  ARROW INDICATES HOME RUN (CIRCUIT NUMBER AS INDICATED)

NOTES:

1. UNLESS OTHERWISE NOTED, ALL FIXTURES, DEVICES, ETC. SHALL BE NEW.
2. EXISTING HEATERS SHALL BE RECIRCUITED WITH NEW CONDUITS AND CONDUCTORS.
3. ALL RECEPTACLES IN MACHINERY AREAS SHALL BE GFCI TYPE.
4. THERMOSTATS SHALL BE CONFIGURED TO CONTROL ALL HEATERS WITHIN THEIR AREA. (HEATERS AND AIR CONDITIONER IN CONTROL ROOM).
5. ALL PUMP PLATFORM AND COUNTERWEIGHT PIT LIGHTS AND RECEPTACLES SHALL BE REPLACED WITH NEW (E302 AND E111). RECEPTACLES SHALL BE MOUNTED IN PVC COATED GALVANIZED CAST IRON DEVICE BOXES AND PROVIDED WITH CAST ALUMINUM "NEMA 3R WHILE-IN-USE" COVERS (HUBBELL WP26M OR APPROVED EQUAL).
6. ALL RECEPTACLES AND SWITCHES IN THE MACHINERY AREAS OF BOTH HOUSES SHALL BE MOUNTED IN GALVANIZED CAST IRON DEVICE BOXES AND PROVIDED WITH CAST ALUMINUM WEATHERPROOF CAST IRON DEVICE BOXES AND PROVIDED WITH CAST ALUMINUM COVERS (HUBBELL WPFS26 AND CROUSE-HINDS DS185, OR APPROVED EQUALS).

CADD DESIGN OHLROLD | DESIGN RLR | CHKD. NEA | LRB

FEET/12/1000

TEXT SIZE REFERENCE
.125
.1875
.25

BR. 1-688	CONTRACT	COUNTY	FEDERAL AID PROJECT NO.	SHEET NO.	TOTAL SHTS.
	21-074-07	NEW CASTLE	EBHN-N029 (2)	59A	169

BR 688
SOUTH MARKET STREET BRIDGE REHABILITATION

REVISIONS	
3 SHEET ADDED.	BBB 6/7/04
DUE TO SHOP DWG.	
COORDINATION	

AS BUILT

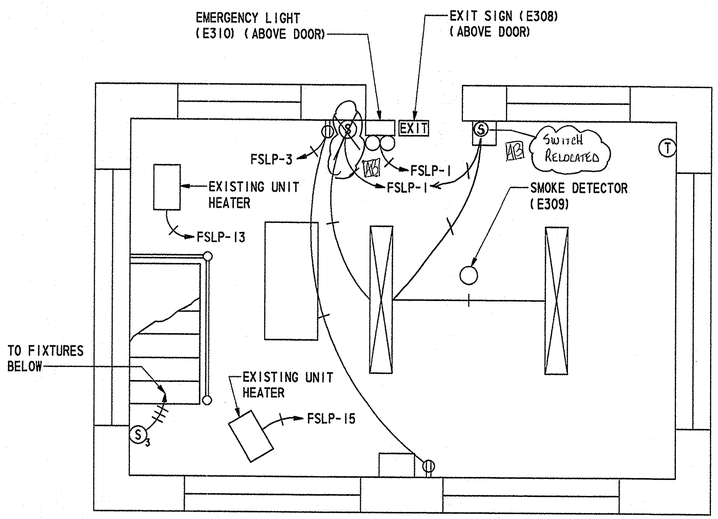

SOUTH HOUSE - STREET LEVEL
SCALE: 1/2" = 1'-0"

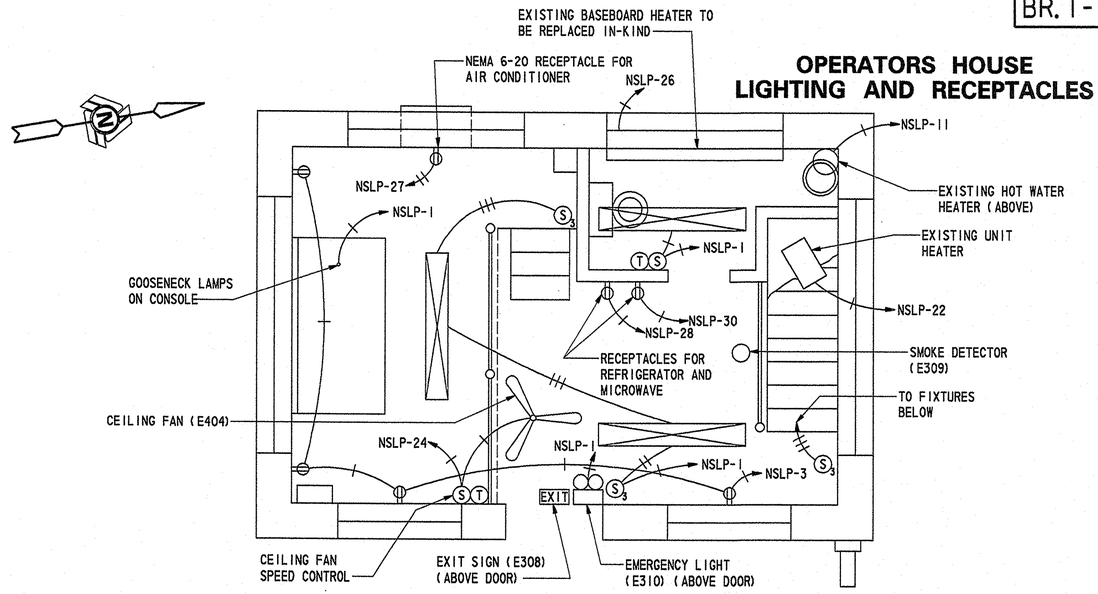

OPERATORS HOUSE LIGHTING AND RECEPTACLES

NORTH HOUSE - STREET LEVEL
SCALE: 1/2" = 1'-0"

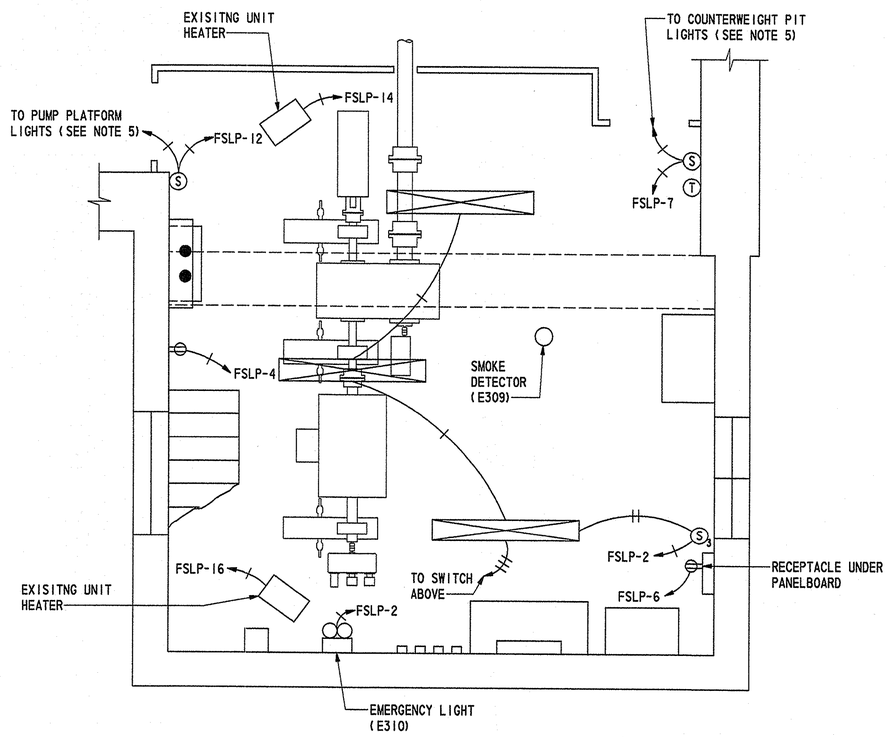

SOUTH HOUSE - LOWER LEVEL
SCALE: 1/2" = 1'-0"
(SEE NOTE 6)

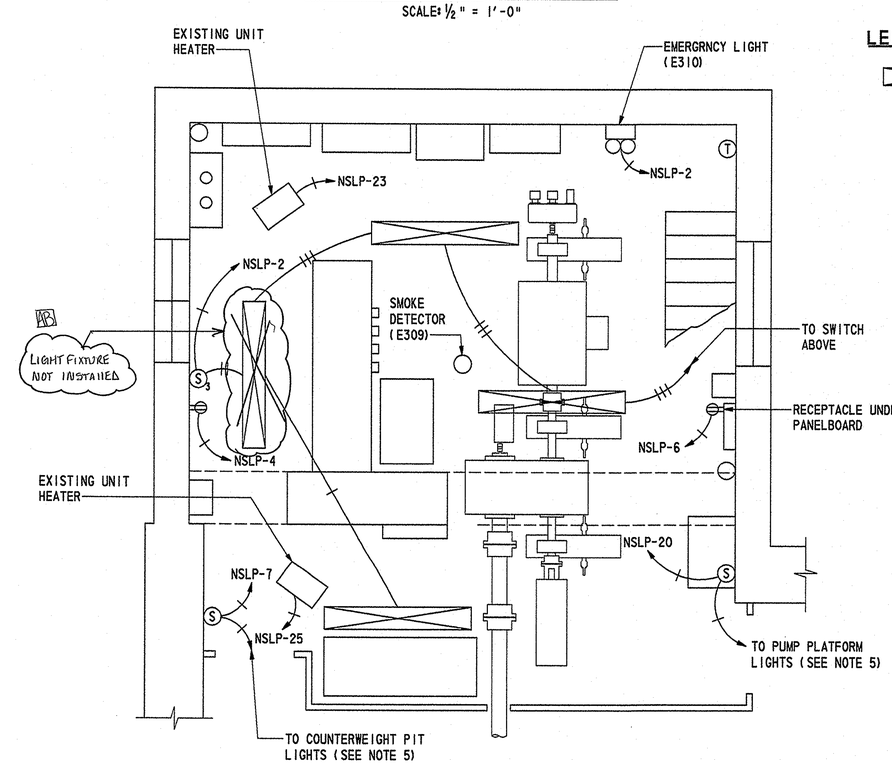

NORTH HOUSE - LOWER LEVEL
SCALE: 1/2" = 1'-0"
(SEE NOTE 6)

LEGEND

- 4' DAMP LOCATION ENCLOSED INDUSTRIAL FLUORESCENT FIXTURE (2) 32 WATT LAMPS
- DUPLEX RECEPTACLE (E111 OR E112)
- (T) THERMOSTAT
- (S) SINGLE POLE LIGHT SWITCH (E312)
- (S3) THREE-WAY LIGHT SWITCH (E313)
- CIRCUITING
  SLASHES INDICATE NUMBER OF UNGROUNDED CONDUCTORS
  ARROW INDICATES HOME RUN (CIRCUIT NUMBER AS INDICATED)

NOTE: FOR EQUIP LAYOUT SEE SHEET 25A

NOTES:

1. UNLESS OTHERWISE NOTED, ALL FIXTURES, DEVICES, ETC. SHALL BE NEW.
2. EXISTING HEATERS SHALL BE RECIRCUITED WITH NEW CONDUITS AND CONDUCTORS.
3. ALL RECEPTACLES IN MACHINERY AREAS SHALL BE GFCI TYPE.
4. THERMOSTATS SHALL BE CONFIGURED TO CONTROL ALL HEATERS WITHIN THEIR AREA. (HEATERS AND AIR CONDITIONER IN CONTROL ROOM).
5. ALL PUMP PLATFORM AND COUNTERWEIGHT PIT LIGHTS AND RECEPTACLES SHALL BE REPLACED WITH NEW (E302 AND E111). RECEPTACLES SHALL BE MOUNTED IN PVC COATED GALVANIZED CAST IRON DEVICE BOXES AND PROVIDED WITH CAST ALUMINUM "NEMA 3R WHILE-IN-USE" COVERS (HUBBELL WP26M OR APPROVED EQUAL).
6. ALL RECEPTACLES AND SWITCHES IN THE MACHINERY AREAS OF BOTH HOUSES SHALL BE MOUNTED IN GALVANIZED CAST IRON DEVICE BOXES AND PROVIDED WITH CAST ALUMINUM WEATHERPROOF CAST IRON DEVICE BOXES AND PROVIDED WITH CAST ALUMINUM COVERS (HUBBELL WPFS26 AND CROUSE-HINDS DS185, OR APPROVED EQUALS).

E26A

9/21/2006 21-074-07

CADD DESIGN OHLRNEW | DESIGN RLR | CHKD. NEA | LRB

BR. 1-668	CONTRACT	COUNTY	FEDERAL AID PROJECT NO.	SHEET NO.	TOTAL SHTS.
	21-074-07	NEW CASTLE	EBHN-N029 (2)	60	169

BR 688
SOUTH MARKET STREET BRIDGE REHABILITATION

REVISIONS

LIMIT SWITCH TRIPPING SCHEDULE

AS BUILT

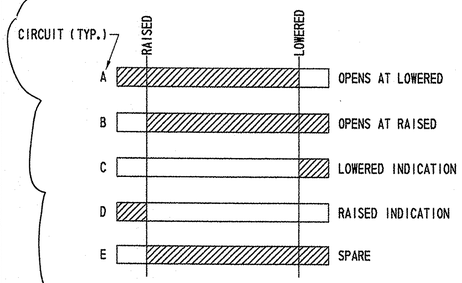

TRAFFIC WARNING GATE LIMIT SWITCHES
LS-NEG, LS-NWG, LS-SEG, LS-SWG
(EXISTING)

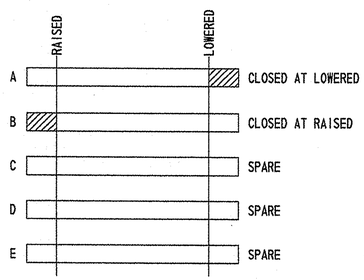

TRAFFIC BARRIERS LIMIT SWITCHES
LS-NEB, LS-NWB
(INCLUDED WITH BARRIER)

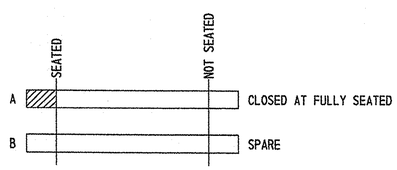

FULLY CLOSED LIMIT SWITCHES
LS-FCN, LS-FCS
(E207)

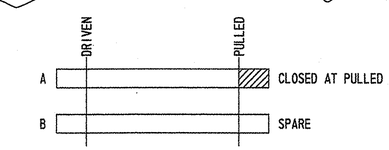

CENTER LOCKS PULLED LIMIT SWITCHES
LS-ELP, LS-WLP
(SEE NOTE 1)

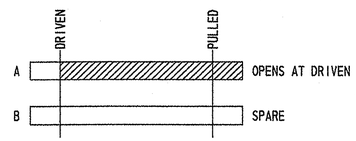

CENTER LOCKS DRIVEN LIMIT SWITCHES
LS-ELD, LS-WLD
(SEE NOTE 1)

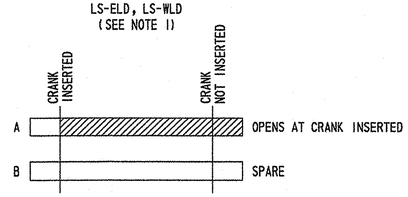

CENTER LOCKS HAND CRANK LIMIT SWITCHES
LS-CLHCE, LS-CLHCW
(SEE NOTE 1)

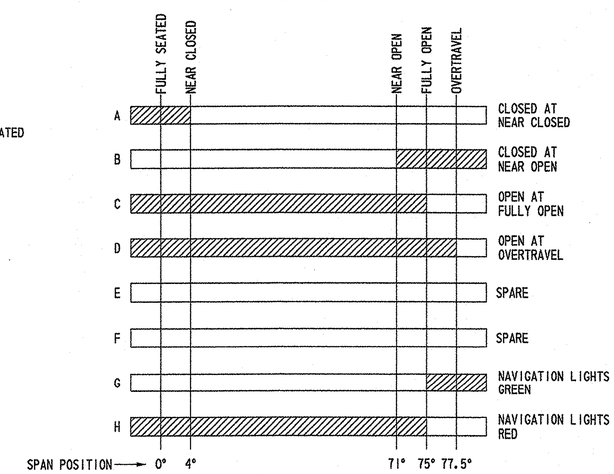

ROTARY CAM LIMIT SWITCH
LS-RCN, LS-RCS
(E206)

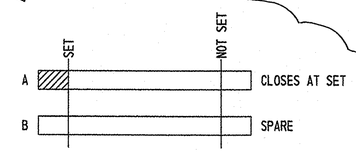

BRAKES SET LIMIT SWITCHES
LS-MOBISN, LS-MOB2SN, LS-MABSN,
LS-MOBISS, LS-MOB2SS, LS-MABSS
(INCLUDED WITH BRAKE)

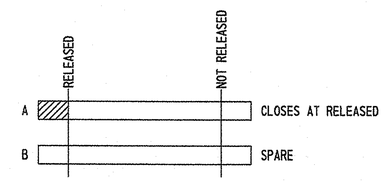

BRAKES RELEASED LIMIT SWITCHES
LS-MOBIRN, LS-MOB2RN, LS-MABRN,
LS-MOBIRS, LS-MOB2RS, LS-MABRS
(INCLUDED WITH BRAKE)

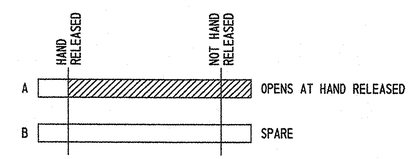

BRAKES HAND RELEASED LIMIT SWITCHES
LS-MOBIHRN, LS-MOB2HRN, LS-MABHRN,
LS-MOBIHRS, LS-MOB2HRS, LS-MABHRS
(INCLUDED WITH BRAKE)

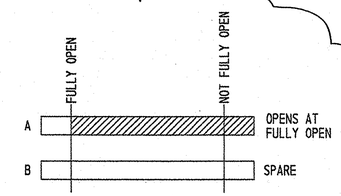

FULLY OPEN LIMIT SWITCHES
LS-FON, LS-FOS
(E207)

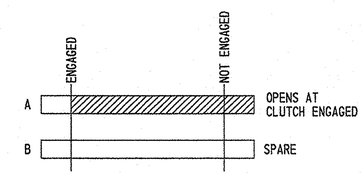

AUXILIARY DRIVE CLUTCH LIMIT SWITCHES
LS-ADCN, LS-ADCS
SEE DETAIL ON SHEET NO. E32

AB

NOTE:
SEE LINK CONTROL SYSTEMS DRAWINGS FOR ADDITIONAL DETAILS.

CONTACT LEGEND
- CONTACT CLOSED
- CONTACT OPEN

NOTES:
1. CENTER LOCK LIMIT SWITCHES TO BE REPLACED IN-KIND AS PART OF LOCK REFURBISHING. SEE MECHANICAL SHEETS.

CADD DESIGN RLR DESIGN MEA CHKD. OCT

LSTS

9/21/2006 21-074-07

BR. 1-668	CONTRACT	COUNTY	FEDERAL AID PROJECT NO.	SHEET NO.	TOTAL SHTS.
	21-074-07	NEW CASTLE	EBHN-N029 (2)	61	169

BR 688
SOUTH MARKET STREET BRIDGE REHABILITATION

REVISIONS

AS BUILT

NAVIGATION LIGHT DETAILS

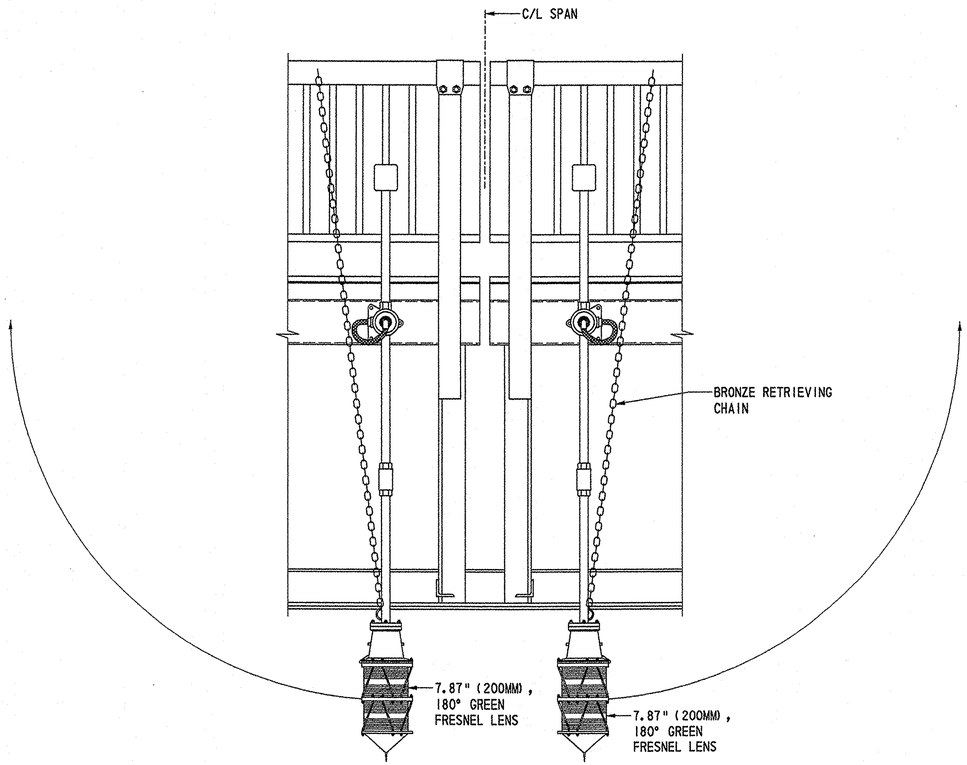

VIEW A-A
SCALE: 3/4" = 1'-0"

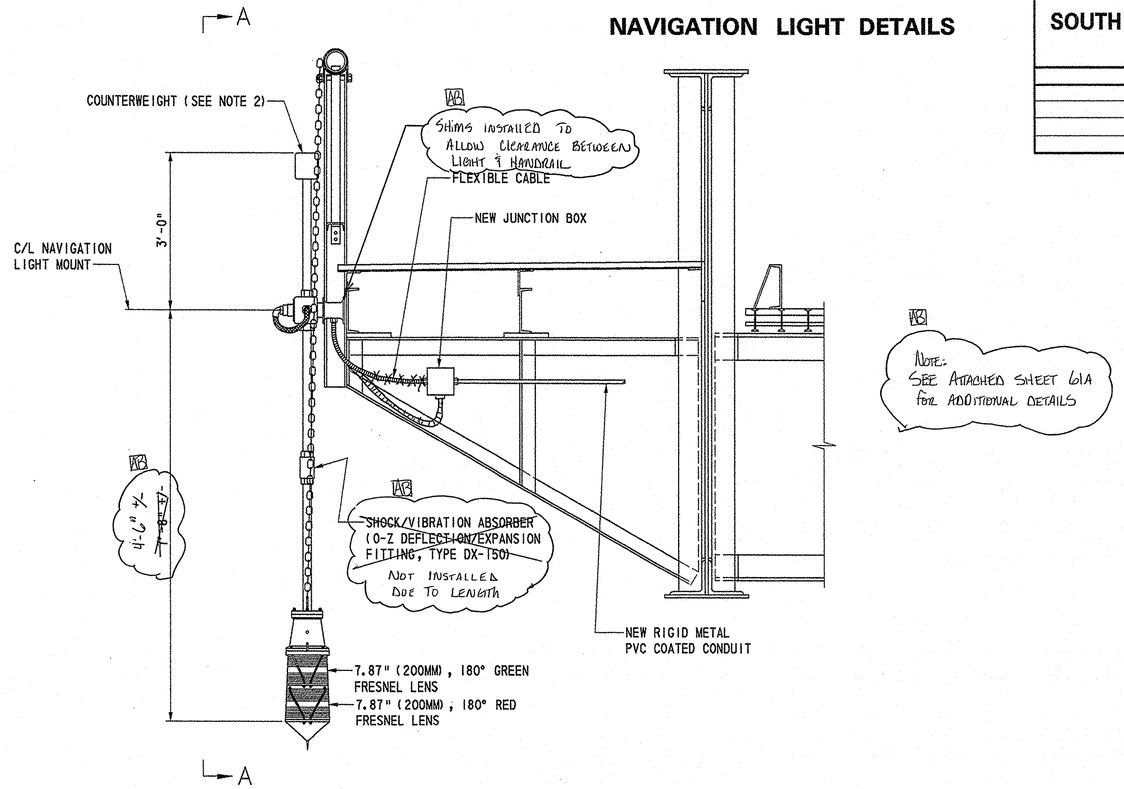

SPAN NAVIGATION LIGHT MOUNTING DETAIL
SCALE: 3/4" = 1'-0"

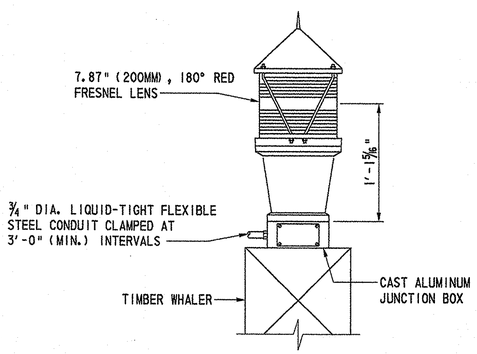

ELEVATION
FENDER MOUNTED NAVIGATION LIGHT
SCALE: 1 1/2" = 1'-0"
LS-ELP, LS-WLP

NOTES:

1. SEE ELECTRICAL PLAN AND ELEVATION FOR NAVIGATION LIGHT MOUNTING LOCATIONS.
2. COUNTERWEIGHT AND LIGHT SHALL BE MOUNTED SUCH THAT IT ALLOWS 180° ROTATION OF THE SPAN LIGHT WITH NO CONTACT TO THE STRUCTURE OR RAILING.

NLD CADD DESIGN RLR DESIGN BBB CHKD. OCT.

9/21/2006 21-074-07

FEET/12/1000

TEXT SIZE REFERENCE
.125
.1875
.25

BR. 1-688	CONTRACT	COUNTY	FEDERAL AID PROJECT NO.	SHEET NO.	TOTAL SHTS.
	21-074-07	NEW CASTLE	EBHN-N029 (2)	61A	169

BR 688
SOUTH MARKET STREET BRIDGE REHABILITATION

REVISIONS

4 NEW SHEET. REVISED NAVIGATION LIGHTS	BBB 1-14-05

NAVIGATION LIGHT DETAILS

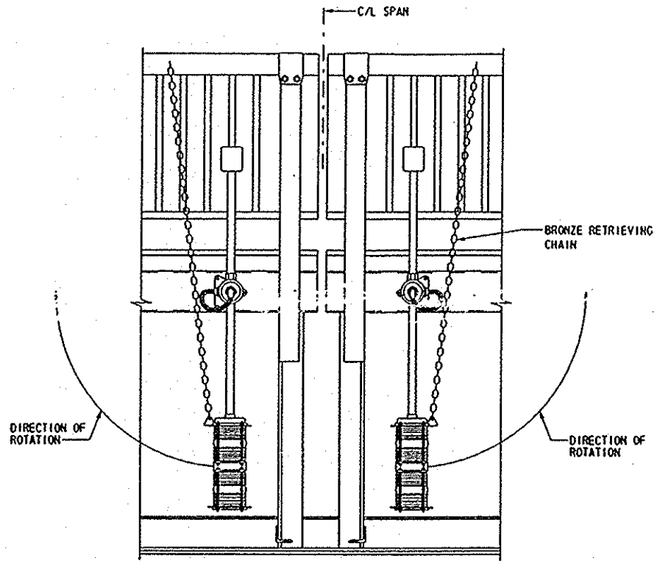

VIEW A-A
SCALE: 3/4" = 1'-0"

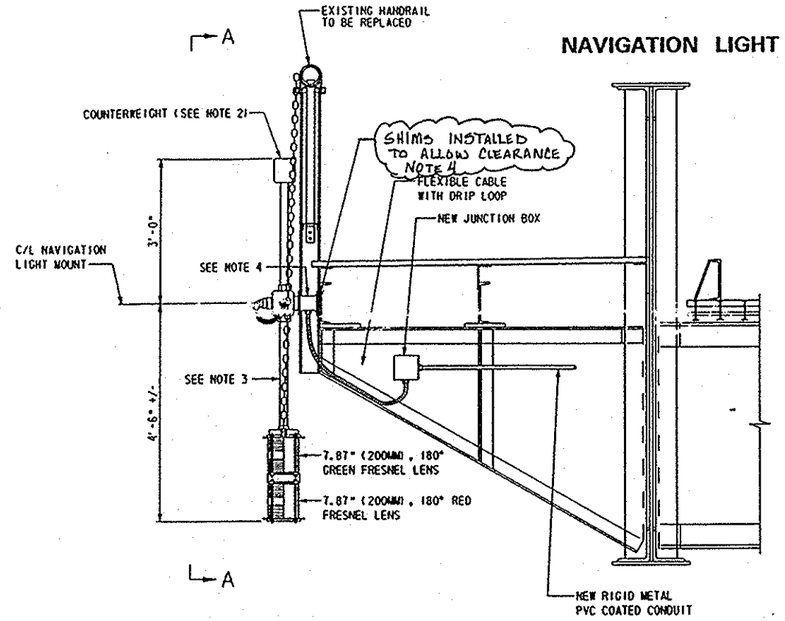

SPAN NAVIGATION LIGHT MOUNTING DETAIL
SCALE: 3/4" = 1'-0"

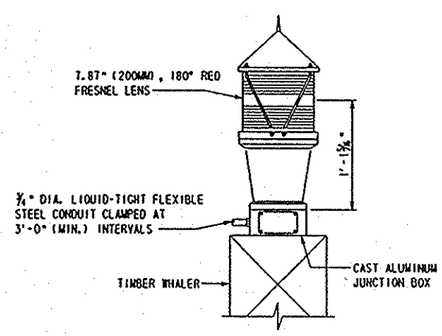

ELEVATION
FENDER MOUNTED NAVIGATION LIGHT
SCALE: 1 1/2" = 1'-0"
LS-ELP, LS-NLP

NOTES:

1. SEE ELECTRICAL PLAN AND ELEVATION FOR NAVIGATION LIGHT MOUNTING LOCATIONS.
2. COUNTERWEIGHT AND LIGHT SHALL BE MOUNTED SUCH THAT IT ALLOWS 180° ROTATION OF THE SPAN LIGHT WITH NO CONTACT TO THE STRUCTURE ADJACENT FIXTURE OR RAILING.
3. NAVIGATION LIGHT FIXTURE STEM SHALL HAVE A LENGTH SUCH THAT MAINTENANCE ACCESS SHALL BE AVAILABLE THROUGH THE NEW HANDRAIL. (REFER TO SHEET NO. 24A)
4. FIXTURE SHALL BE MOUNTED SUCH THAT THE FIXTURE VERTICAL MAINTENANCE COVER CAN BE OPENED 180° FOR ACCESS WITHOUT STRIKING BRIDGE RAILING. SHIM PIVOT POINT WITH STEEL SHIMS AS NECESSARY.

CADD DESIGN ALR DESIGN BBB CHKD. OCT

As Built.

E28A

FEET/12/1000

TEXT SIZE REFERENCE
.125
.1875
.25

BR. I-688	CONTRACT	COUNTY	FEDERAL AID PROJECT NO.	SHEET NO.	TOTAL SHTS.
	21-074-07	NEW CASTLE	EBHN-N029 (2)	62	169

BARRIER AND WARNING GATES PLAN AND ELEVATION

BR 688
SOUTH MARKET STREET BRIDGE REHABILITATION

REVISIONS

AS BUILT

NOTES:

1. PAYMENT FOR RELOCATING EXISTING WARNING GATES SHALL BE INCLUDED IN ITEM 763599 BARRIER GATE.
2. FOUNDATIONS FOR RELOCATED WARNING GATES SHALL BE PAID UNDER ITEM 602002, PORTLAND CEMENT CONCRETE MASONRY, CLASS B AND SHALL INCLUDE THE COST OF ALL ANCHOR BOLTS AND CONDUIT WITHIN THE FOUNDATION.

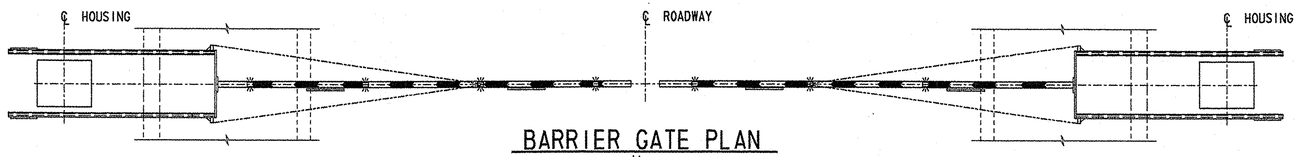

BARRIER GATE PLAN

SCALE: 1/4"=1'-0"

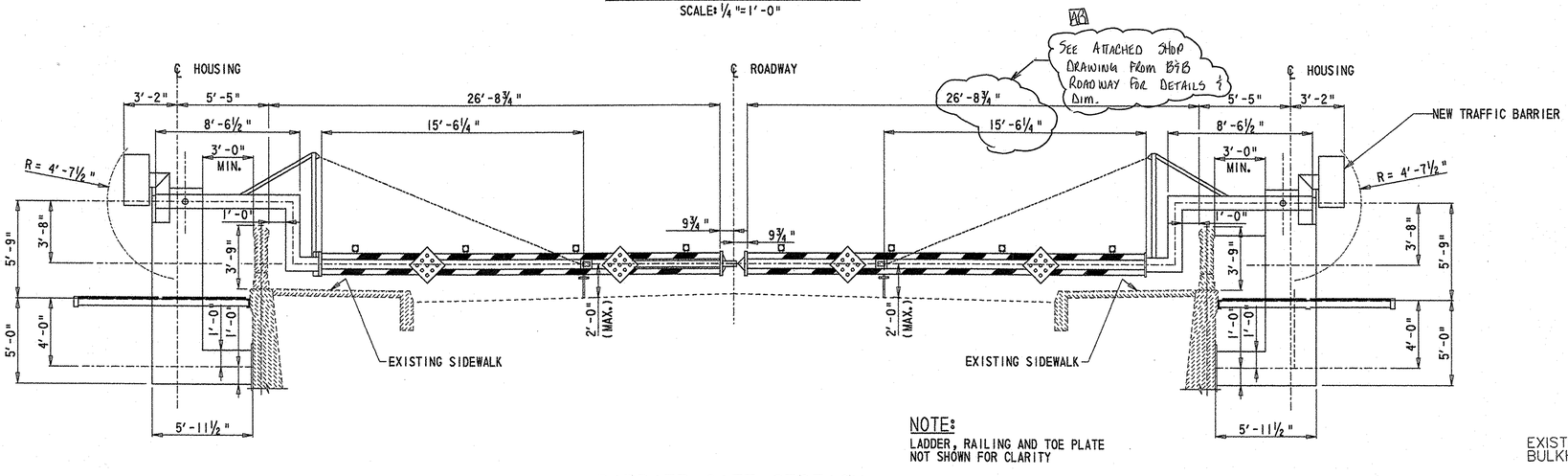

NOTE:
LADDER, RAILING AND TOE PLATE NOT SHOWN FOR CLARITY

BARRIER GATE SECTION

SCALE: 1/4"=1'-0"

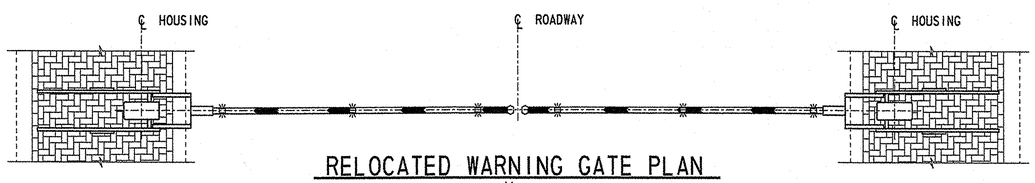

RELOCATED WARNING GATE PLAN

SCALE: 1/4"=1'-0"

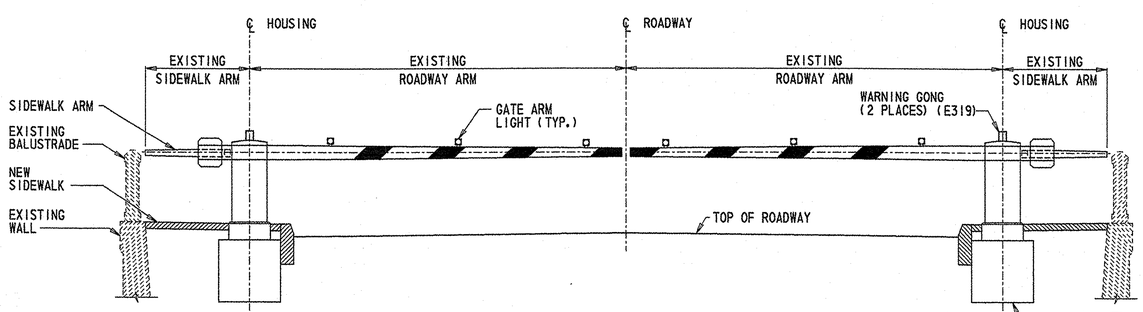

NEW WARNING GATE SECTION

SCALE: 1/4"=1'-0"

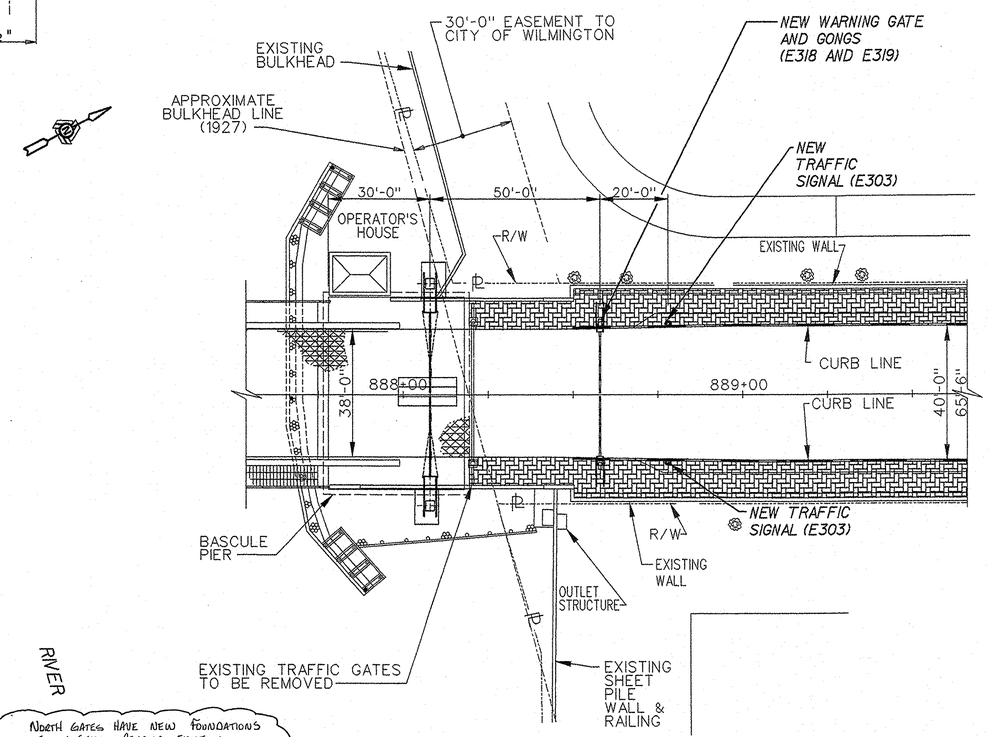

PARTIAL PLAN NORTH APPROACH

NOT TO SCALE

E29

9/21/2006 21-074-07

CADD DESIGN DM DESIGN REJ CHKD. BBB

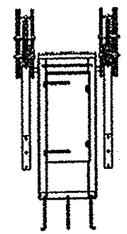

REAR VIEW

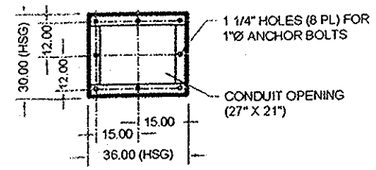

SECTION A-A
(MTG DIM)
NO SCALE

NOTES:
1. CONTRACTOR TO VERIFY ALL DIMENSIONS. FACTORY CANNOT ASSUME ALTERATION COSTS AFTER FINAL SUBMITTAL DRAWINGS HAVE BEEN APPROVED.
2. HOUSING, SIDE ARM CHANNELS / TUBES AND COUNTER WEIGHTS (18" X 30") TO BE HOT DIPPED GALVANIZED.
3. PADLOCKABLE DOORS FURNISHED. PADLOCK BY OTHERS.
4. (2) UNITS REQUIRED
5. REFER TO DRAWING BE6915C1 FOR ELECTRICAL
6. GALVANIZED ANCHOR BOLTS & TEMPLATE SUPPLIED BY B&B (1-8 UNC X 18" LONG)
7. SERVICE FROM FRONT DOOR (ROADWAY SIDE) OF OPERATOR.
8. EACH ARM TUBE TO HAVE .875" ANNEALED CABLE.
9. OPERATION TIME OF 15 SECONDS
10. THERMON HEAT TRACE CABLES CONTROLLED BY A THERMOSTAT WILL BE PROVIDED BY B&B TO PREVENT ANY ICE BUILD-UP ON ARMS.
* 11. THESE DIMENSIONS FIELD VERIFIED 12/09/04
** 12. THIS DRAWING REPLACES BE6915D1

SPARE PARTS:
1. COMPLETE BM122 LIGHT KIT (4 LIGHTS PER KIT)
2. COMPLETE ARM ASSEMBLY WITH (4) FOUR BM-122, 120V LIGHTS WIRED IN PLACE, (2) TWO DELINATORS, BUMPER ROD, AND REFLECTIVE SHEETING

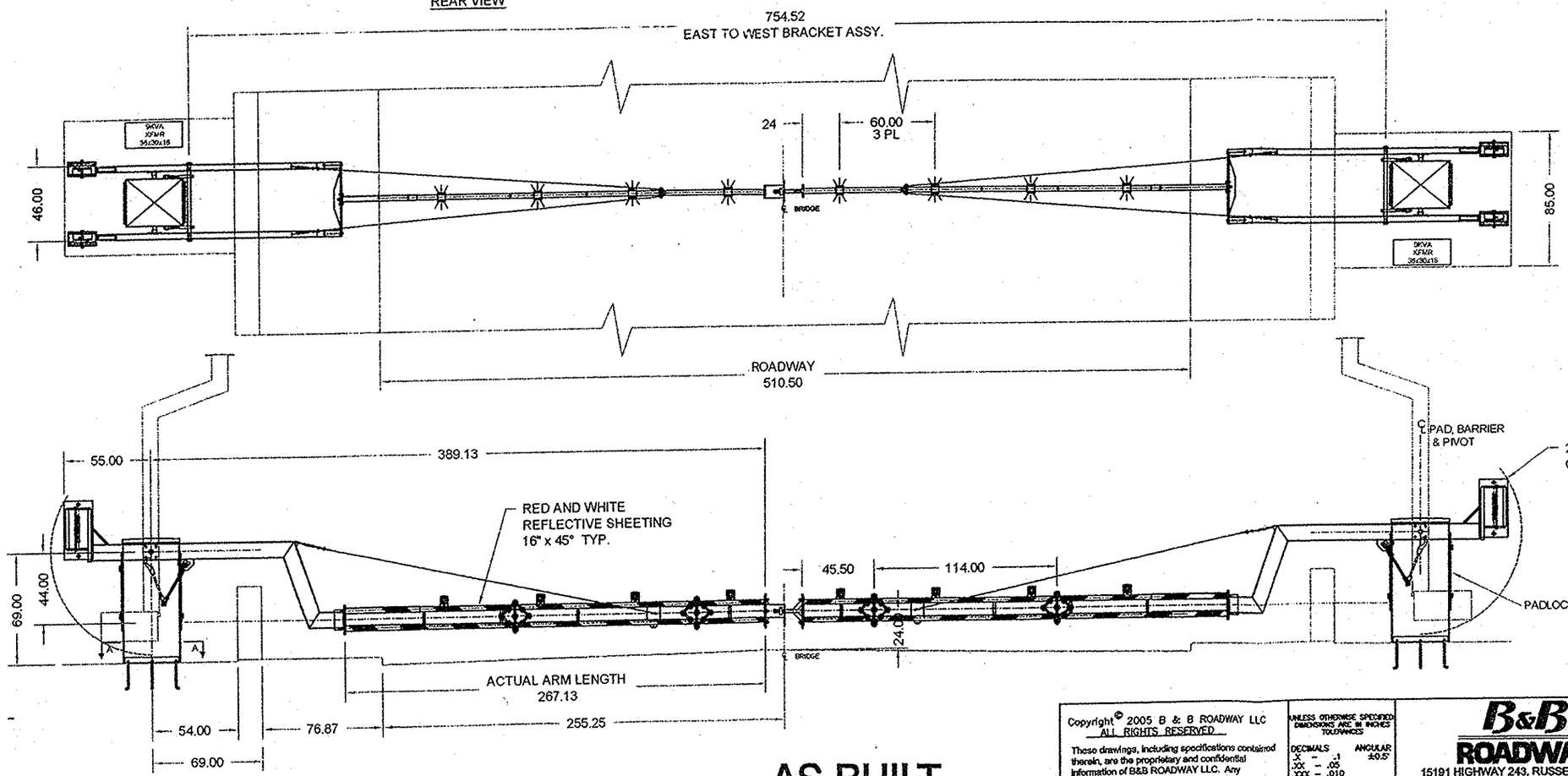

AS BUILT

REV	DESCRIPTION	BY	DATE
C	INCREASE MALE END LATCH LENGTH TO 19.875	DCL	5-06
B	REWORK ARMS DUE TO FIELD MEASUREMENT ERROR	??	?-06
A	ORIGINAL ISSUE - REPLACES B&B ARMR DRAWING	DWE	5-06

REVISIONS

Copyright© 2005 B & B ROADWAY LLC
ALL RIGHTS RESERVED
These drawings, including specifications contained therein, are the proprietary and confidential information of B&B ROADWAY LLC. Any reproduction, adaptation or distribution of this information for any purpose other than specifically authorized in advance by B&B ROADWAY LLC is strictly prohibited.

UNLESS OTHERWISE SPECIFIED DIMENSIONS ARE IN INCHES
TOLERANCES
DECIMALS .X ± .1, .XX ± .05, .XXX ± .010
ANGULAR ±0.5°

SHEET 1 OF 1
SCALE 1:75
DATE 06/08/2005
PART NUMBER
JOB NUMBER DE111
DRAWN DWE
CHECKED
DATE

B&B ROADWAY
15191 HIGHWAY 243, RUSSELLVILLE, AL 35654
TOLL FREE (888) 560-2060 FAX (256) 332-4036

DRAWING TITLE
VR-6 BARRIER GATE
SOUTH MARKET STREET

SIZE B | FILE | DWG NO BR6I031** | REV C

FEET/12/1000

TEXT SIZE REFERENCE
.125
.1875
.25

BR. 1-688	CONTRACT	COUNTY	FEDERAL AID PROJECT NO.	SHEET NO.	TOTAL SHTS.
	21-074-07	NEW CASTLE	EBHN-N029 (2)	63	169

MISCELLANEOUS ELECTRICAL DETAILS - 1

BR 688
SOUTH MARKET STREET BRIDGE REHABILITATION

REVISIONS	
1 ADDED SHEET	LRB 2/20/04
3 ADDED DETAILS	LRB/RLR 9/29/04

AS BUILT

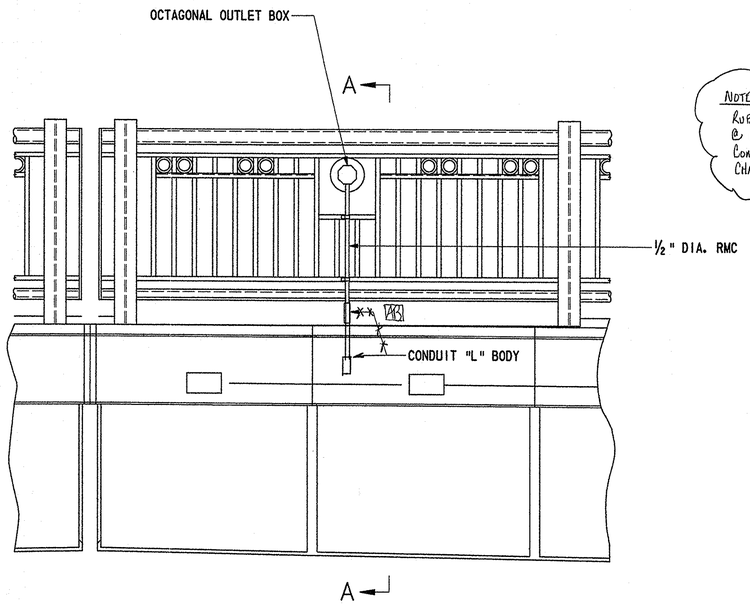

PEDESTRIAN AND FLOOLIGHT MOUNTING DETAIL 1
SCALE: 3/4" = 1'-0"

NOTE: RUBBER GROMET @ LOCATIONS WHERE CONDUITS PASS THRU CHANNELS.

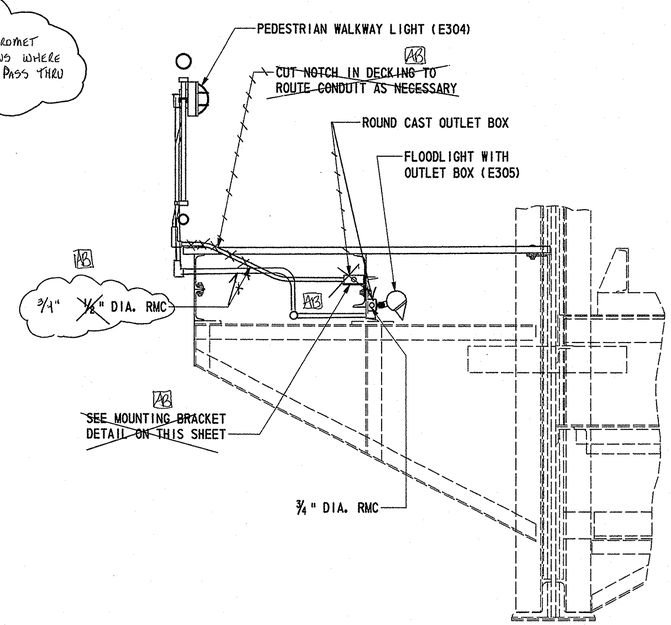

SECTION A-A 1
SCALE: 3/4" = 1'-0"

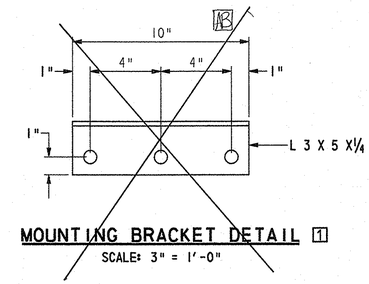

MOUNTING BRACKET DETAIL 1
SCALE: 3" = 1'-0"

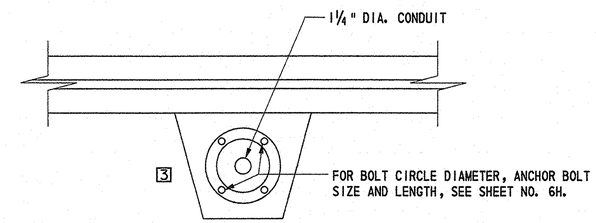

SECTION C-C
SCALE: 3/4" = 1'-0"

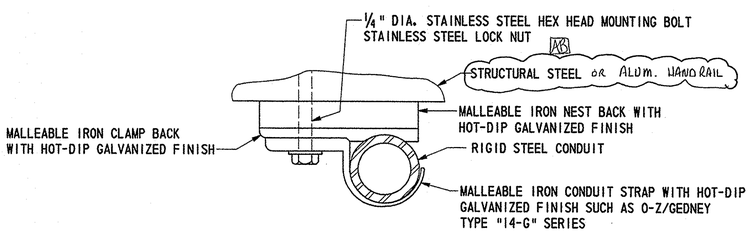

CONDUIT CLAMP 1
NO SCALE
(SEE NOTE 2)

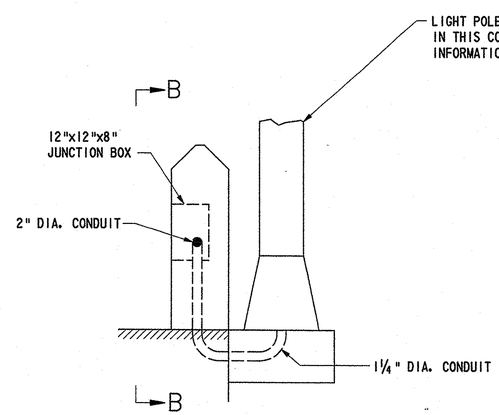

PARAPET SECTION AT LIGHT FIXTURE (TYP.) 3
SCALE: 3/4" = 1'-0"

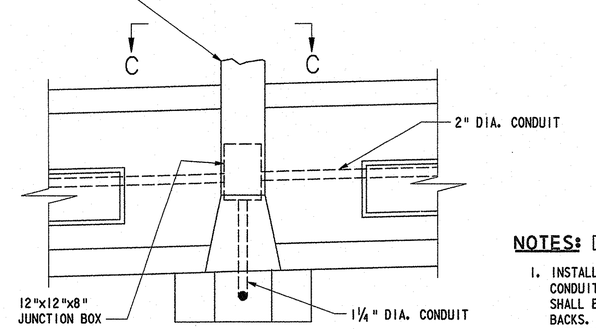

SECTION B-B 3
SCALE: 3/4" = 1'-0"

NOTES: 1

1. INSTALL NEW 3/4" DIA. RIGID CONDUITS AT LOCATIONS INDICATED. CONDUIT ATTACHMENT TO STRUCTURAL STEEL AND MOUNTING BRACKETS SHALL BE MADE USING CONDUIT CLAMPS WITH CLAMP BACKS AND NEST BACKS. CONDUIT ATTACHMENT SHALL BE MADE AT MAXIMUM 6'-0" INTERVALS AND WITHIN 18 INCHES OF ALL CONDUIT BODIES.
2. MOUNTING BRACKETS SHALL BE HOT-DIP GALVANIZED AFTER FABRICATION.

CADD DESIGN RLR DESIGN NEA CHKD. LRB

MEDI

9/21/2006 21-074-07

BR. 1-668	CONTRACT	COUNTY	FEDERAL AID PROJECT NO.	SHEET NO.	TOTAL SHTS.
	21-074-07	NEW CASTLE	EBHN-N029 (2)	64	169

BR 688
SOUTH MARKET STREET BRIDGE REHABILITATION

REVISIONS

AS BUILT

MISCELLANEOUS ELECTRICAL DETAILS - 2

GENERAL NOTES:

1. ALL GEARS RUSH, DELRIN, 20 DEGREE x 8" DP x 32 TEETH.
2. ALL COMPONENTS MOUNT WITH 1/4" DIA. FASTENERS.
3. PROVIDE .3125" SQUARE FLATS, 120 DEGREE APART ON SHAFTS TO ALLOW USE OF SETSCREWS PROVIDED IN FLANGE BEARINGS FOR SHAFT RETENTION.
4. SETSCREWS IN GEARS TO BE 1/4" DIA.

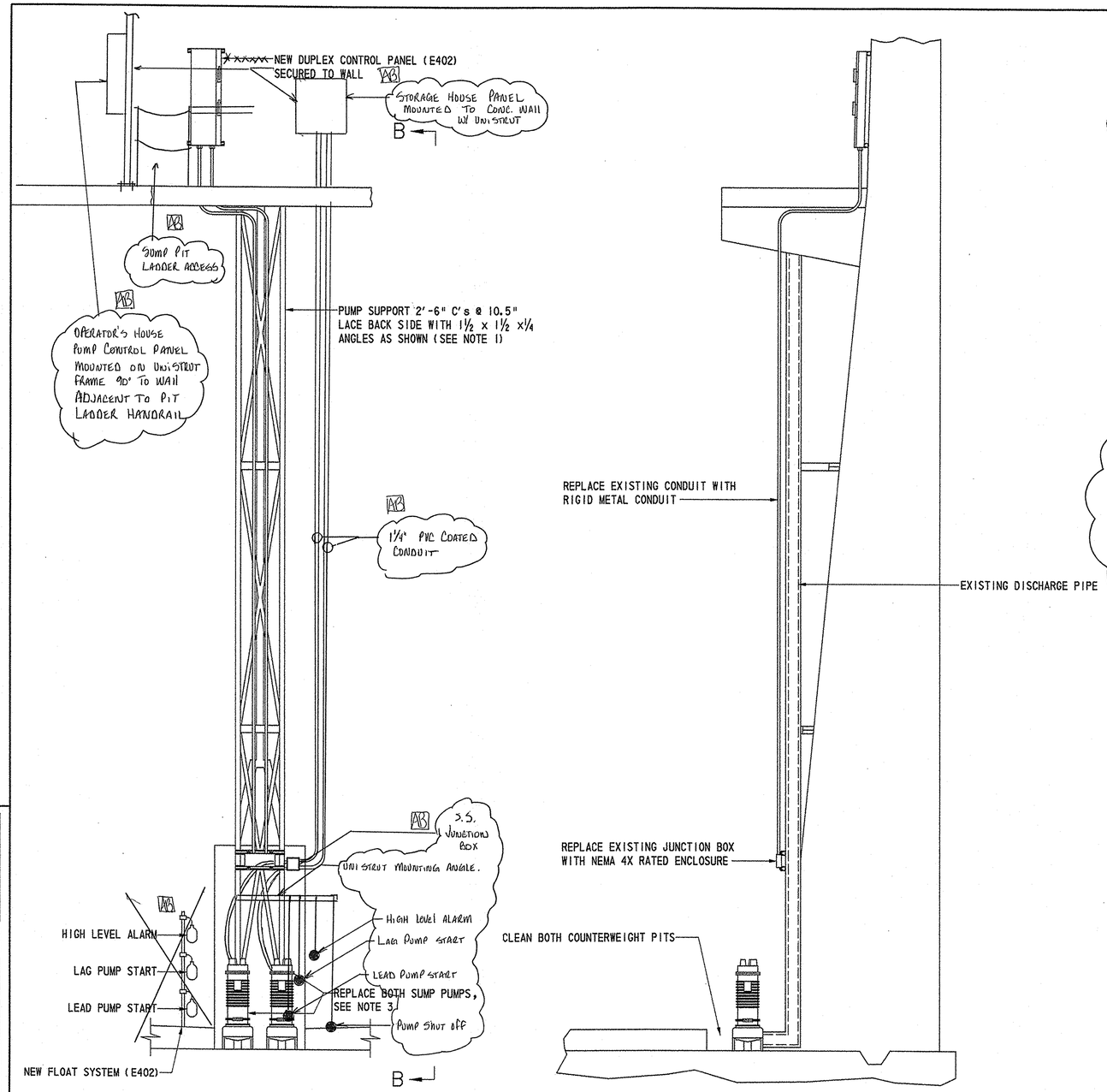

ELEVATION
SUMP PUMP AND COUNTERWEIGHT PIT
SCALE: 1/2" = 1'-0"

SECTION B-B
SCALE: 1/2" = 1'-0"

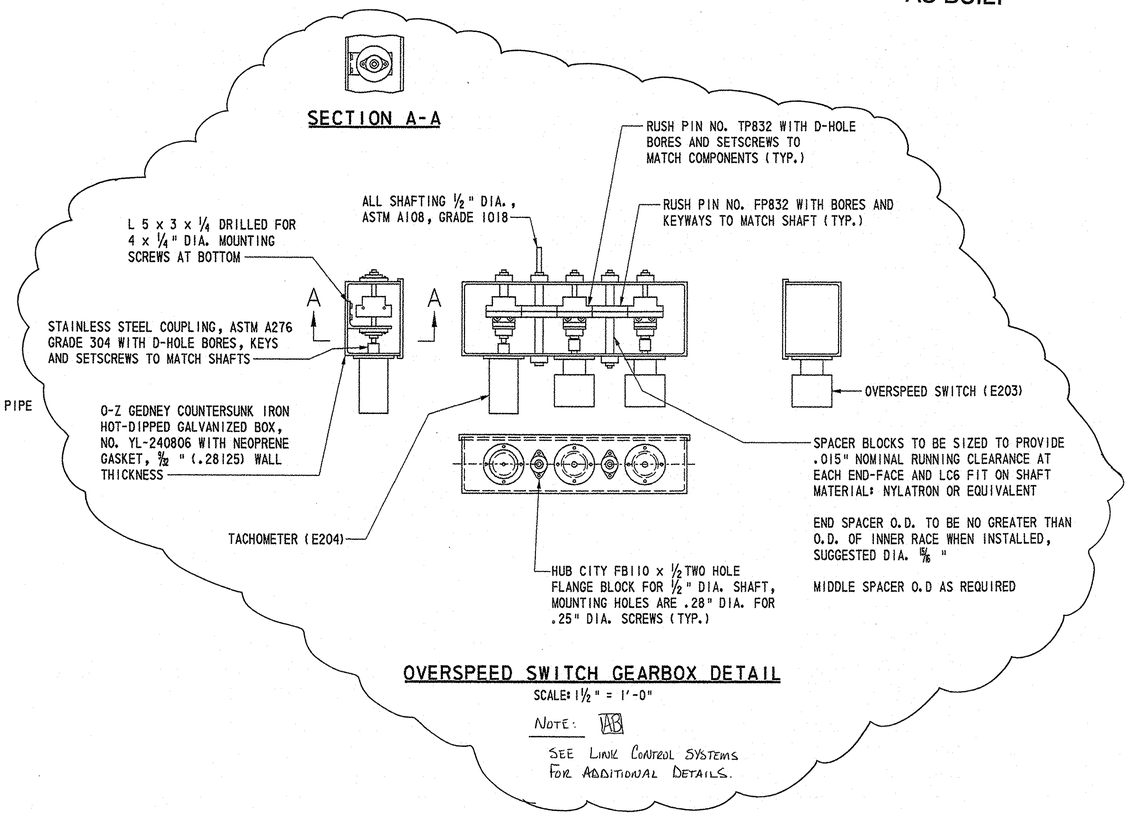

OVERSPEED SWITCH GEARBOX DETAIL
SCALE: 1 1/2" = 1'-0"

NOTE: AB
SEE LINK CONTROL SYSTEMS FOR ADDITIONAL DETAILS.

NOTES:

1. PUMP SUPPORT FRAME AND ACCESS LADDER SHALL BE PREPARED AND REPAINTED IN ACCORDANCE WITH CONTRACT SPECIFICATIONS REPAINTING STRUCTURAL STEEL.
2. SEE SPECIFICATIONS FOR ADDITIONAL NOTES AND REQUIREMENTS.
3. REFER ALSO TO MECHANICAL PLANS.

CADD DESIGN RLR DESIGN BBB CHKD. LRB

MED2

9/21/2006 21-074-07

BR. I-668	CONTRACT	COUNTY	FEDERAL AID PROJECT NO.	SHEET NO.	TOTAL SHTS.
	21-074-07	NEW CASTLE	EBHN-N029 (2)	65	169

MISCELLANEOUS ELECTRICAL DETAILS - 3

BR 688
SOUTH MARKET STREET BRIDGE REHABILITATION

REVISIONS

AS BUILT

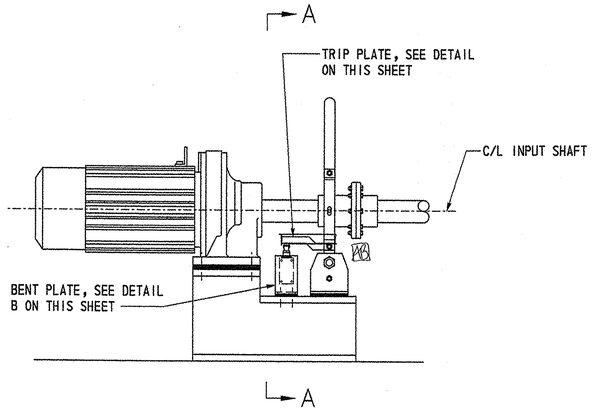

DISCONNECT COUPLING
LIMIT SWITCH MOUNTING DETAIL
SCALE: 1½" = 1'-0"

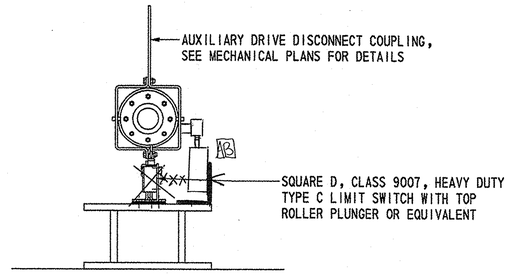

SECTION A-A
SCALE: 1½" = 1'-0"

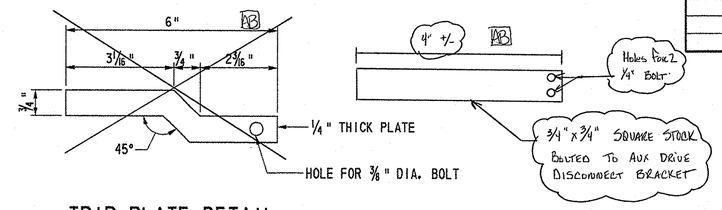

TRIP PLATE DETAIL
SCALE: 6" = 1'-0"

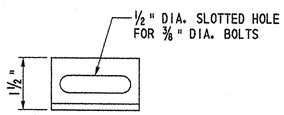

VIEW D-D
SCALE: 6" = 1'-0"

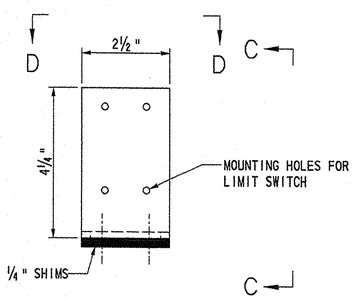

DETAIL B
SCALE: 6" = 1'-0"

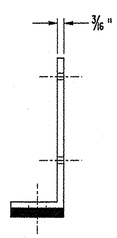

VIEW C-C
SCALE: 6" = 1'-0"

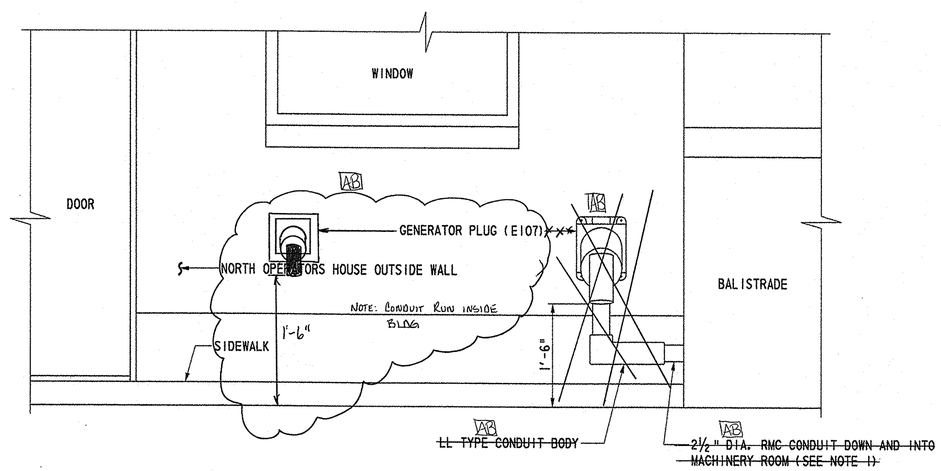

GENERATOR PLUG DETAIL
SCALE: 1" = 1'-0"

NOTES:

1. CUT METAL RAILING AT GAP BETWEEN BALISTRADE AND HOUSE AS NECESSARY TO ROUTE CONDUIT THRU.

9/21/2006 21-074-07

CADD DESIGN RLR DESIGN BBB CHKD. LRB

MED3

FEET/12/1000

TEXT SIZE REFERENCE
.125
.1875
.25

BR. 1-688	CONTRACT	COUNTY	FEDERAL AID PROJECT NO.	SHEET NO.	TOTAL SHTS.
	21-074-07	NEW CASTLE	EBHN-N029 (2)	66	169

BR 688
SOUTH MARKET STREET BRIDGE REHABILITATION

REVISIONS	
1 REMOVE CORNICE & CANOPY LIGHTING AND NOTES 4 - 7	
3 DELETED SHEET	JFB 10/22/04

MISCELLANEOUS ELECTRICAL DETAILS - 4

DELETED SHEET

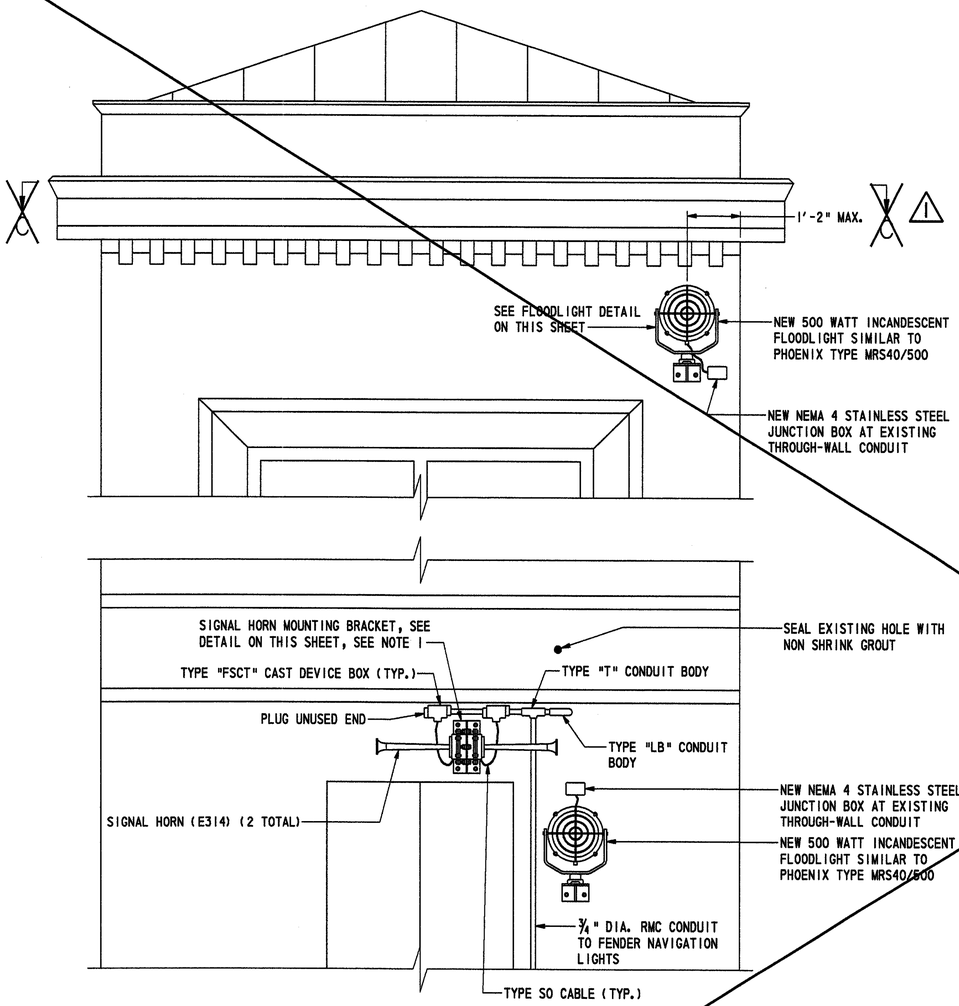

ELEVATION
OPERATOR'S HOUSE - SOUTH WALL
SIGNAL HORN AND FLOODLIGHT MOUNTING
SCALE: 3/4" = 1'-0"

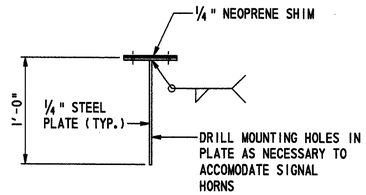

VIEW A-A
SCALE: 1 1/2" = 1'-0"

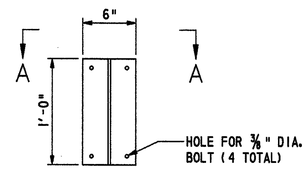

SIGNAL HORN MOUNTING BRACKET
SCALE: 1 1/2" = 1'-0"
(SEE NOTES 2 AND 3)

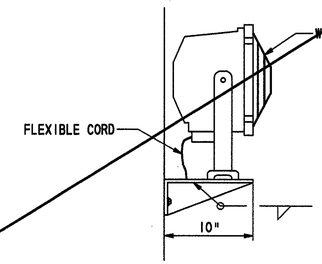

VIEW B-B
SCALE: 1 1/2" = 1'-0"

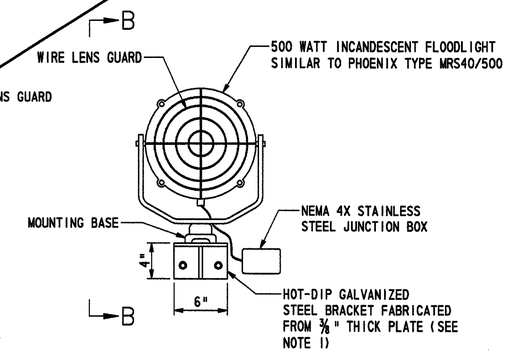

FLOODLIGHT DETAIL
SCALE: 1 1/2" = 1'-0"

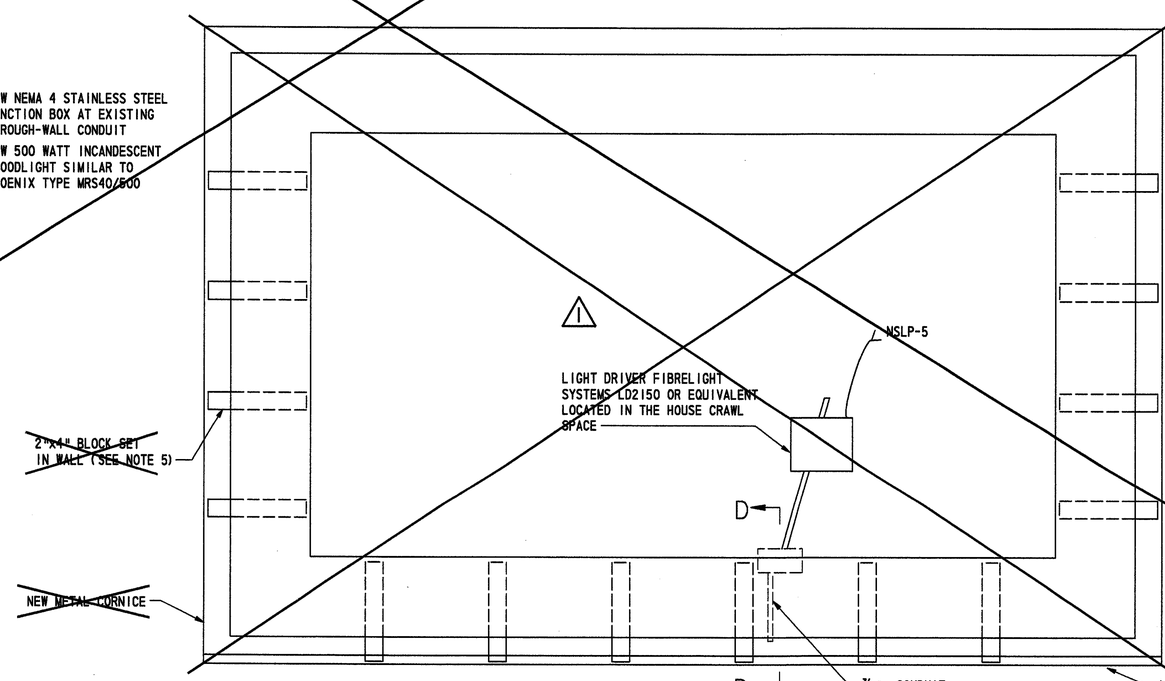

SECTION C-C
SCALE: 3/4" = 1'-0"

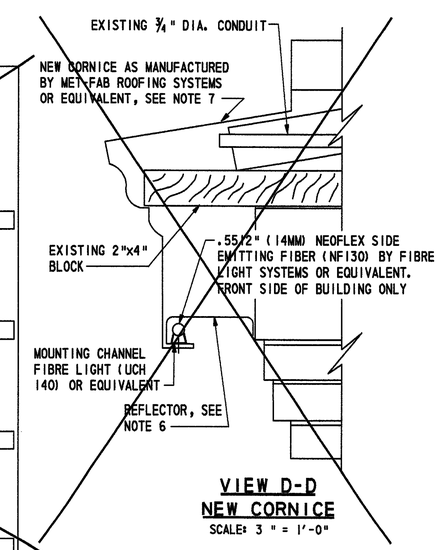

VIEW D-D
NEW CORNICE
SCALE: 3" = 1'-0"

NOTES:

1. SECURE BRACKET TO WALL WITH 3/8" DIA. STAINLESS STEEL ANCHORS, EPOXIED-IN-PLACE, AND STAINLESS STEEL BOLTS.
2. BRACKET SHALL BE HOT-DIP GALVANIZED AFTER FABRICATION.
3. CONTRACTOR SHALL VERIFY ACTUAL BRACKET DIMENSIONS NECESSARY TO ACCOMMODATE SIGNAL HORNS AND GEOMETRY OF INSTALLATION LOCATION.
4. ~~REMOVE EXISTING INCOMING CONDUITS TO OPERATORS HOUSE AND REPLACE WITH NEW CONDUITS AS SHOWN.~~
5. ~~ALL EXISTING 2"x4" BLOCKS SHALL BE LEFT IN PLACE UNLESS DETERIORATION HAS OCCURED IN WHICH CASE THE MATERIAL SHOULD BE REMOVED.~~
6. ~~REFLECTOR SHALL BE FINISHED WITH BRIGHT WHITE COLOR.~~
7. ~~CORNICE SHALL BE MANUFACTURED TO EXISTING DIMENSIONS AS FOUND IN REFERENCE DRAWINGS.~~

CADD DESIGN ____ RLR ____ DESIGN ____ OCT ____ CHKD. ____ LRB ____

MED4

FEET/12/1000

TEXT SIZE REFERENCE
.125
.1875
.25

BR. 1-688	CONTRACT	COUNTY	FEDERAL AID PROJECT NO.	SHEET NO.	TOTAL SHTS.
	21-074-07	NEW CASTLE	EBHN-N029 (2)	66A	169

BR 688 SOUTH MARKET STREET BRIDGE REHABILITATION

MISCELLANEOUS ELECTRICAL DETAILS - 4

REVISIONS

3 ADDED SHEET. NEW CORNICE AND LIGHTING.	LRB 5/20/04

AS BUILT

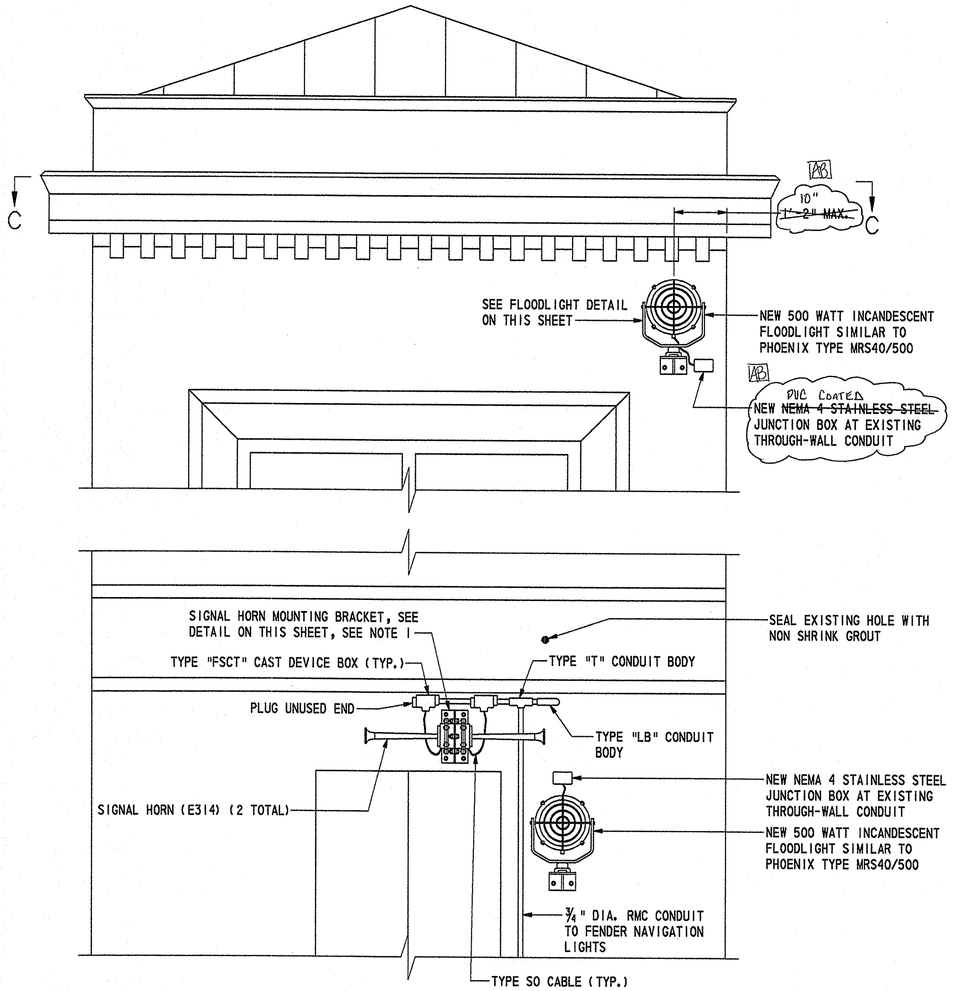

ELEVATION
OPERATOR'S HOUSE - SOUTH WALL
SIGNAL HORN AND FLOODLIGHT MOUNTING
SCALE: 3/4" = 1'-0"

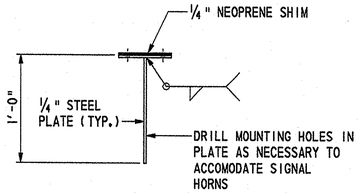

VIEW A-A
SCALE: 1 1/2" = 1'-0"

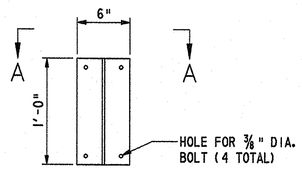

SIGNAL HORN MOUNTING BRACKET
SCALE: 1 1/2" = 1'-0"
(SEE NOTES 2 AND 3)

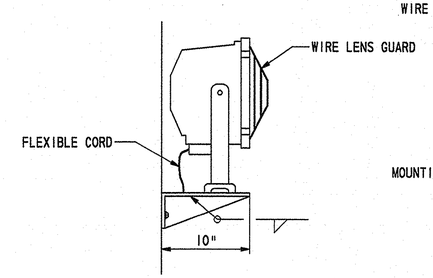

VIEW B-B
SCALE: 1 1/2" = 1'-0"

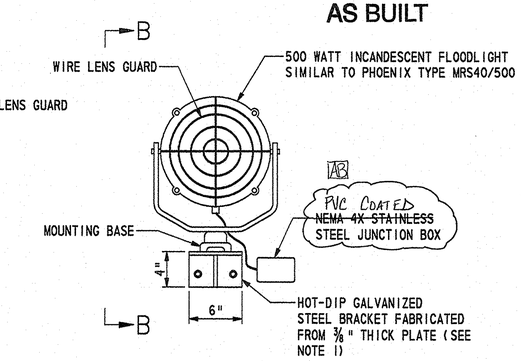

FLOODLIGHT DETAIL
SCALE: 1 1/2" = 1'-0"

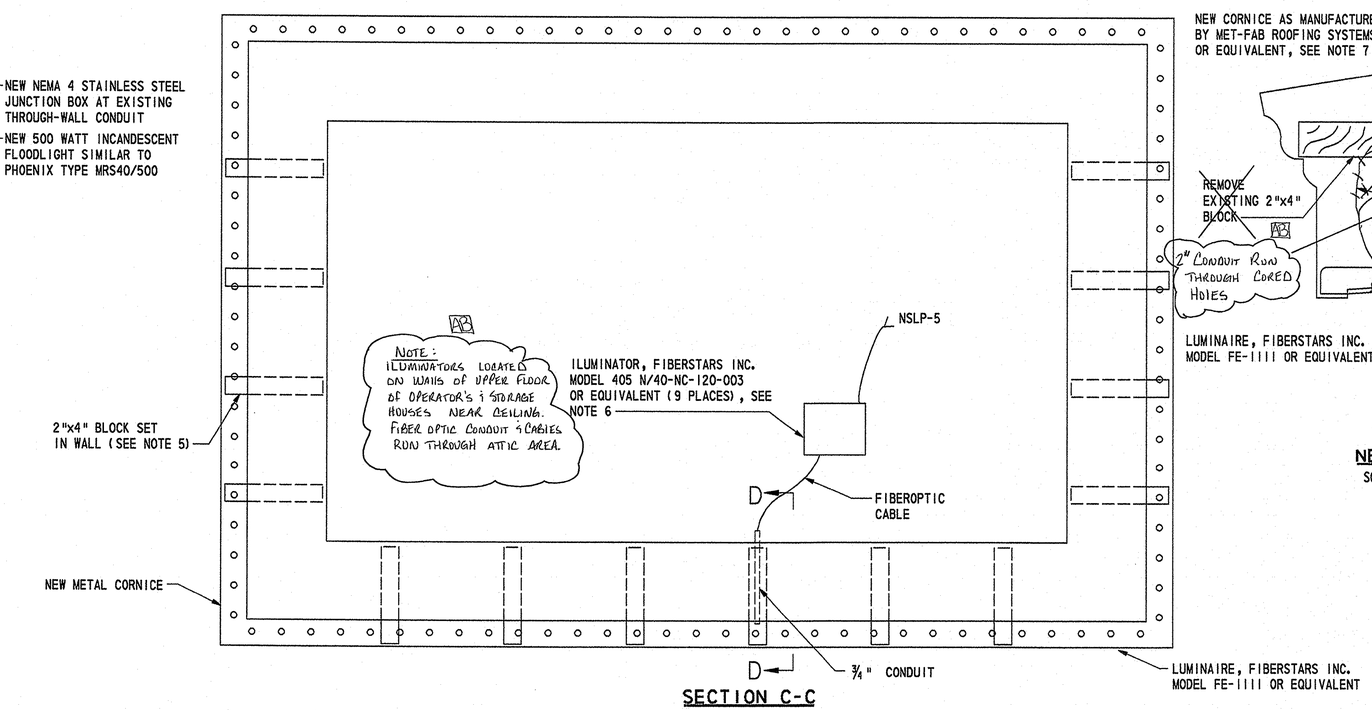

SECTION C-C
SCALE: 3/4" = 1'-0"

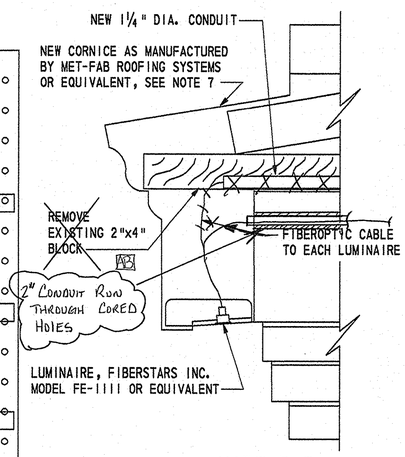

VIEW D-D
NEW CORNICE
SCALE: 3" = 1'-0"

NOTES:

1. SECURE BRACKET TO WALL WITH 3/8" DIA. STAINLESS STEEL ANCHORS, EPOXIED-IN-PLACE, AND STAINLESS STEEL BOLTS.
2. BRACKET SHALL BE HOT-DIP GALVANIZED AFTER FABRICATION.
3. CONTRACTOR SHALL VERIFY ACTUAL BRACKET DIMENSIONS NECESSARY TO ACCOMMODATE SIGNAL HORNS AND GEOMETRY OF INSTALLATION LOCATION.
4. REMOVE EXISTING INCOMING CONDUITS TO OPERATORS HOUSE AND REPLACE WITH NEW CONDUITS AS SHOWN.
5. ALL EXISTING 2"x4" BLOCKS SHALL BE REMOVED. NEW 1 1/4" DIA. CONDUITS SHALL BE PLACED IN THE RESULTANT SPACE AT 9 LOCATIONS.
6. EACH ILLUMINATOR SHALL BE CONNECTED TO A MAXIMUM OF 12 LUMINAIRES. ILLUMINATORS SHALL BE LOCATED SUCH THAT MAXIMUM DISTANCE TO LUMINAIRE IS 15 FEET.
7. CORNICE SHALL BE MANUFACTURED TO EXISTING DIMENSIONS AS FOUND IN REFERENCE DRAWINGS.

CADD DESIGN RLR DESIGN OCT CHKD. LRB

MED4

9/21/2006 21-074-07

BR. 1-668	CONTRACT	COUNTY	FEDERAL AID PROJECT NO.	SHEET NO.	TOTAL SHTS.
	21-074-07	NEW CASTLE	EBHN-N029 (2)	67	169

MISCELLANEOUS ELECTRICAL DETAILS - 5

BR 688 SOUTH MARKET STREET BRIDGE REHABILITATION

REVISIONS

AS BUILT

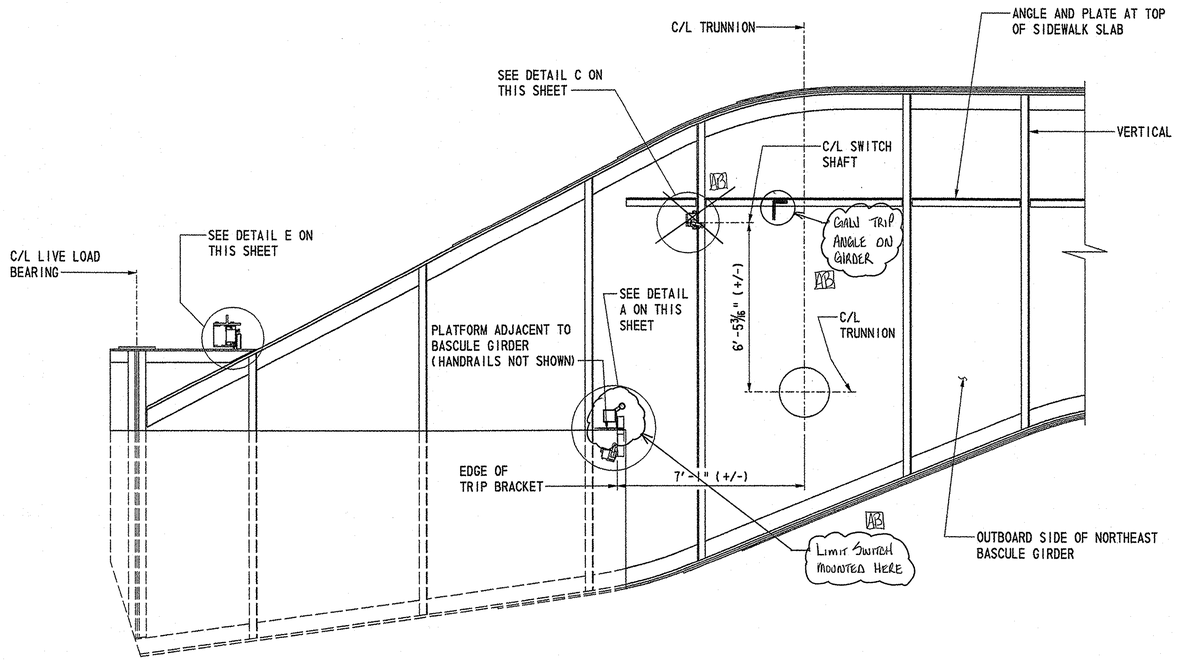

SPAN POSITION LIMIT SWITCHES MOUNTING

SCALE: 3/8" = 1'-0"
NORTH SWITCHES SHOWN, SOUTH SIMILAR
(SEE NOTES 1 AND 2)

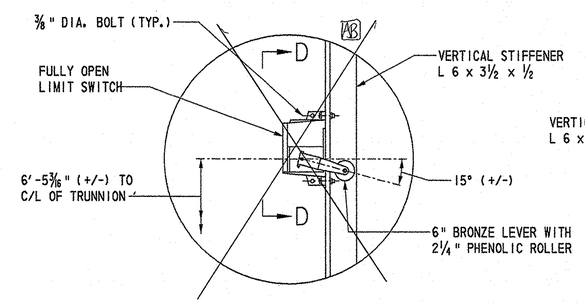

DETAIL C

SCALE: 1 1/2" = 1'-0"

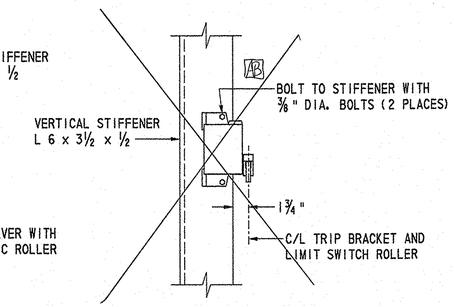

VIEW D-D

SCALE: 1 1/2" = 1'-0"

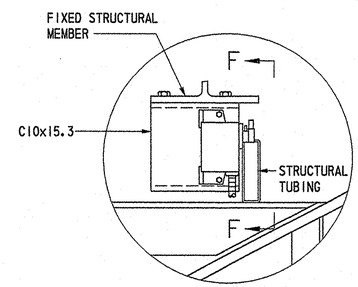

DETAIL E

SCALE: 1 1/2" = 1'-0"

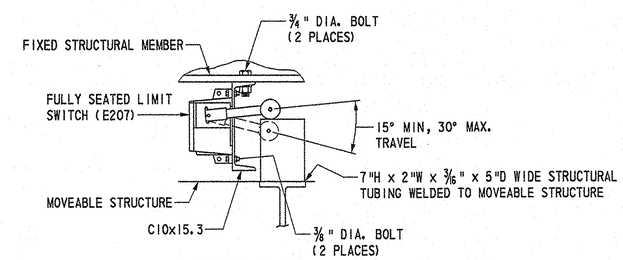

VIEW F-F

SCALE: 1 1/2" = 1'-0"

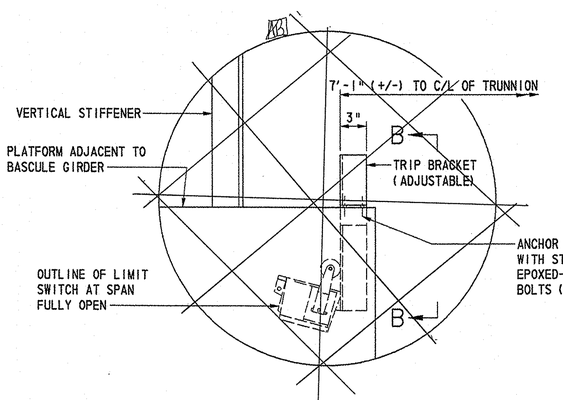

DETAIL A

SCALE: 1 1/2" = 1'-0"

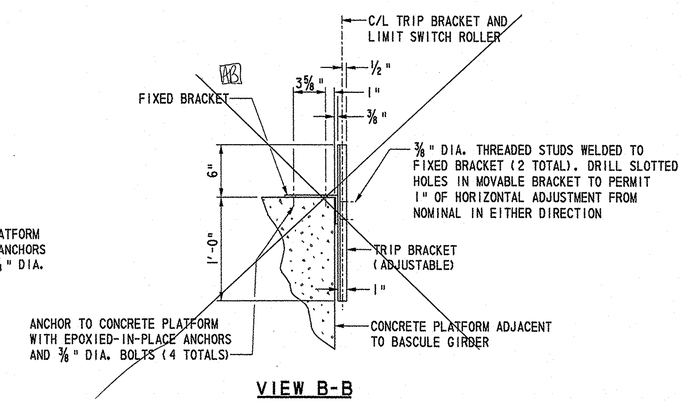

VIEW B-B

SCALE: 1 1/2" = 1'-0"
(SEE NOTE 3)

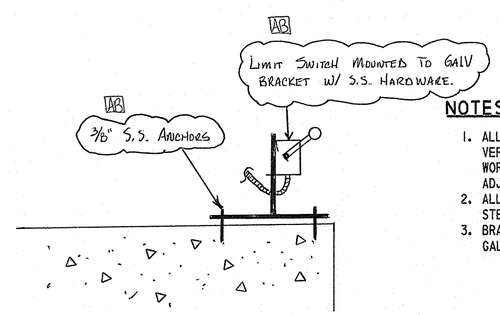

NOTES:

1. ALL DIMENSIONS ARE FOR REFERENCE ONLY. CONTRACTOR SHALL VERIFY ALL CRITICAL DIMENSIONS AT THE SITE PRIOR TO STARTING WORK ON THESE ITEMS. ALL DIMENSIONS, AS SHOWN, ARE WITH THE ADJUSTABLE TRIP BRACKET AT THE CENTER OF ITS ADJUSTABLE RANGE.
2. ALL BOLTS, NUTS, WASHERS, ANCHORS, ETC. SHALL BE STAINLESS STEEL. ALL CONNECTIONS SHALL UTILIZE LOCK WASHERS.
3. BRACKETS SHALL BE CONSTRUCTED OF 1/4" BENT PLATE AND HOT-DIP GALVANIZED AFTER FABRICATION.

CADD DESIGN RLR DESIGN MEA CHKD. LRB

MED5

9/21/2006 21-074-07

BR. I-668	CONTRACT	COUNTY	FEDERAL AID PROJECT NO.	SHEET NO.	TOTAL SHTS.
	21-074-07	NEW CASTLE	EBHN-N029 (2)	68	169

MISCELLANEOUS ELECTRICAL DETAILS - 6

BR 688
SOUTH MARKET STREET BRIDGE REHABILITATION

REVISIONS

AS BUILT

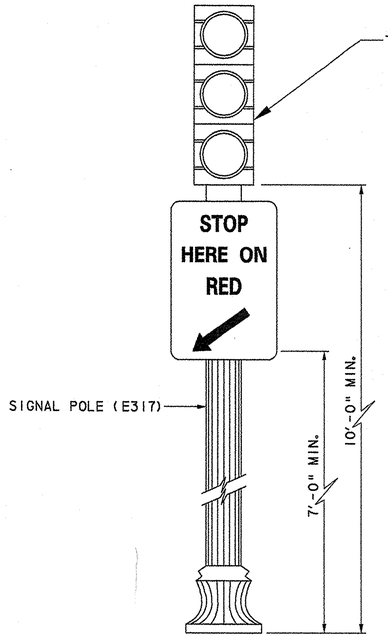

TYPICAL TRAFFIC SIGNAL ELEVATION
SCALE: 3/4" = 1'-0"
(FOR MOUNTING LOCATION, SEE SHEET E1)

NOTES:

1. LENGTH OF FLEXIBLE LOOP SHALL BE SUCH THAT FULL MOTION IS ALLOWED WITHOUT EXCEEDING BEND RADIUS REQUIREMENTS WHILE ENSURING NO CONTACT WITH BRIDGE COMPONENTS OR STRUCTURE.
2. TERMINAL CABINETS SHALL BE LOCATED IN CLOSE PROXIMITY TO CURRENT LOCATIONS BUT MAY BE RELOCATED TO MEET THE PROVISIONS OF NOTE 1.
3. STROBE ENHANCEMENT ON MIDDLE SIGNAL ONLY. SEE CIRCUIT DETAIL ON SHEET E37.

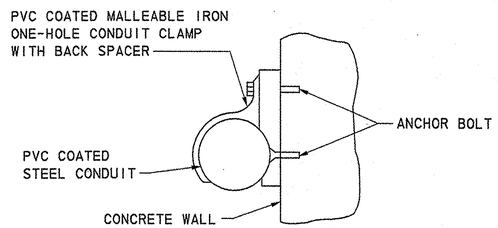

VIEW A-A
SCALE: 3" = 1'-0"
CONDUIT MOUNTING DETAIL

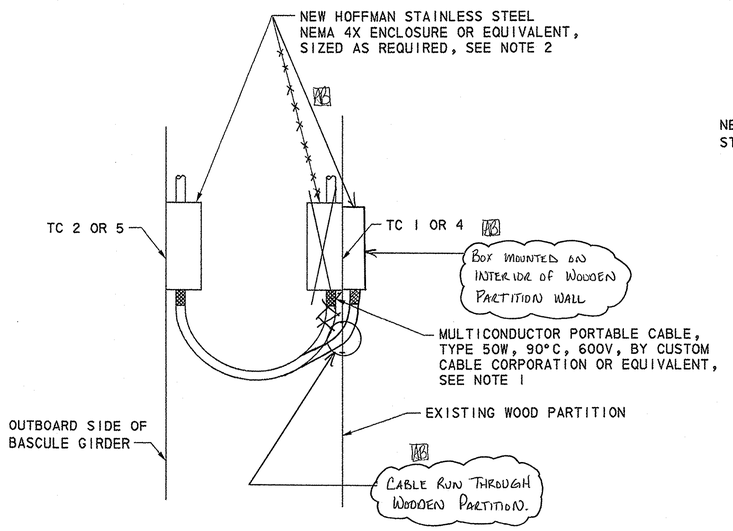

FLEXIBLE LOOP TERMINAL CABINET MOUNTING
SCALE: 3/4" = 1'-0"

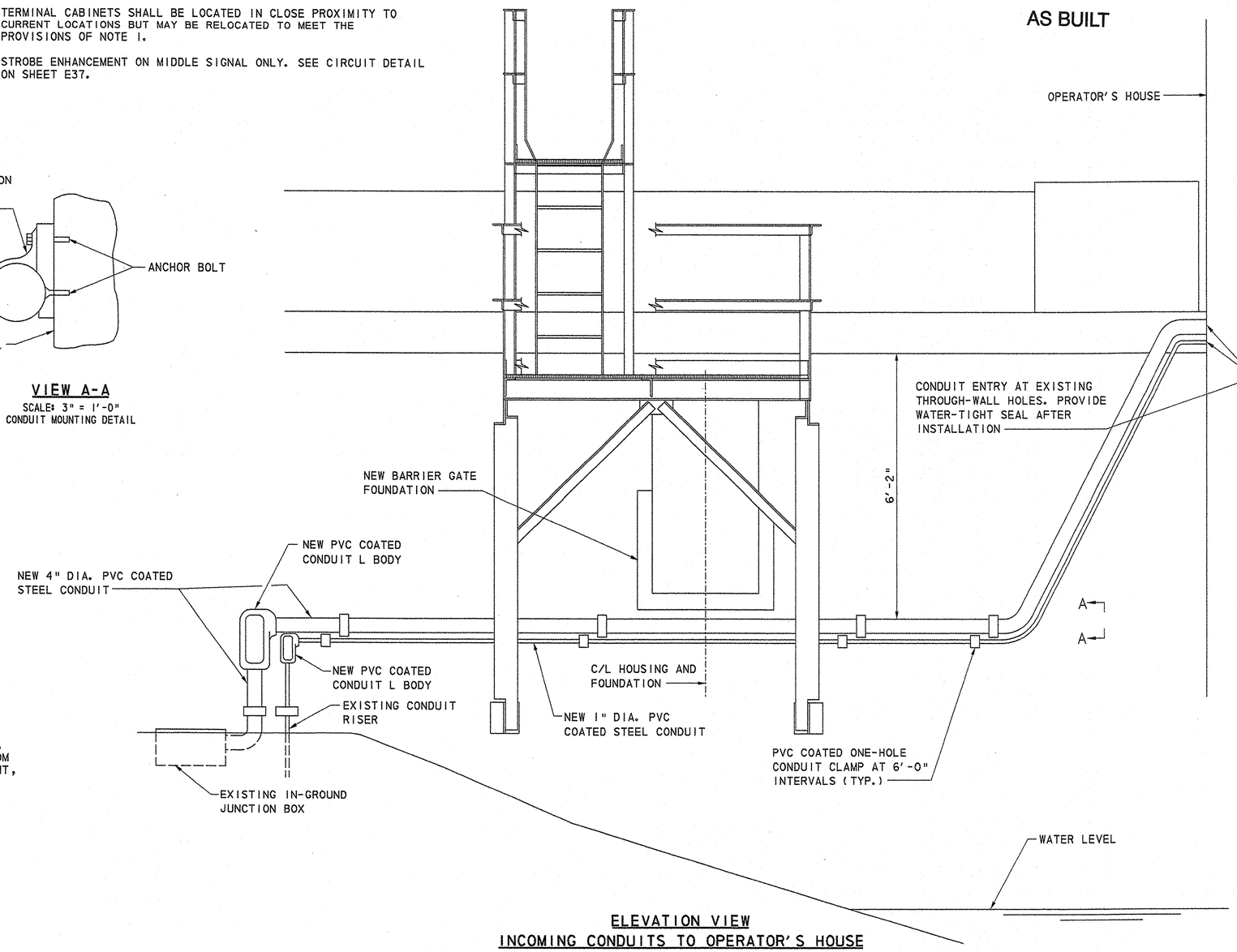

ELEVATION VIEW
INCOMING CONDUITS TO OPERATOR'S HOUSE
SCALE: 3/4" = 1'-0"
(OPERATOR'S HOUSE LOOKING WEST)

9/21/2006 21-074-07

CADD DESIGN TBD DESIGN BBB CHKD. LRB

MED5

FEET/12/1000

TEXT SIZE REFERENCE
.125
.1875
.25

BR. 1-688	CONTRACT	COUNTY	FEDERAL AID PROJECT NO.	SHEET NO.	TOTAL SHTS.
	21-074-07	NEW CASTLE	EBHN-N029 (2)	68A	169

BR 688
SOUTH MARKET STREET BRIDGE REHABILITATION

REVISIONS

3 NEW SHEET	LRB 11/18/04

MISCELLANEOUS ELECTRICAL DETAILS - 7

AS BUILT

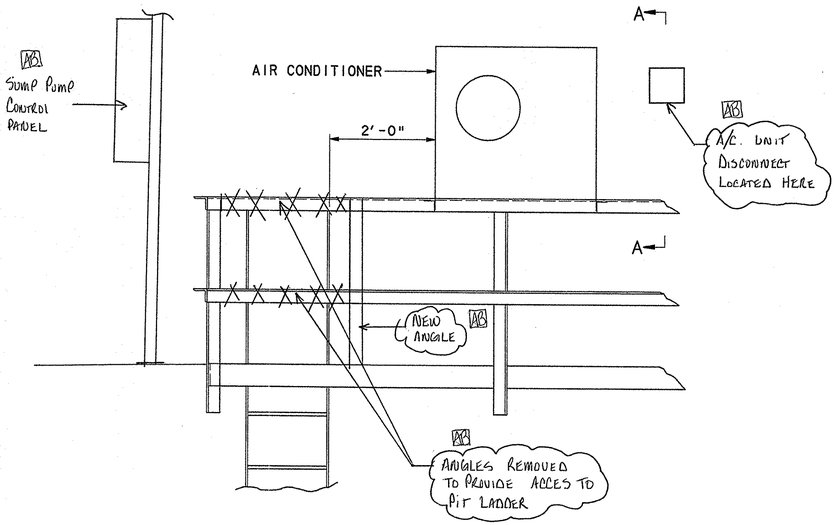

AIR CONDITIONER MOUNTING AT SUMP PUMP PLATFORM ELEV. 11.27'
SCALE: 3/4" = 1'-0"

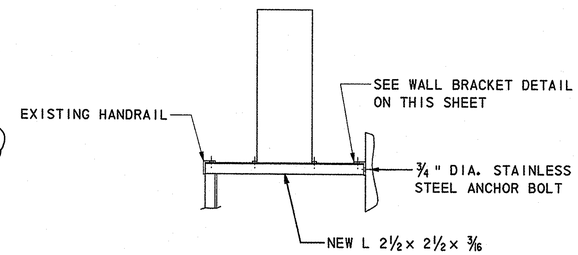

VIEW A-A
SCALE: 3/4" = 1'-0"

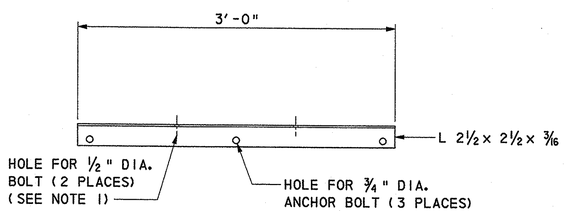

WALL BRACKET DETAIL
SCALE: 1 1/2" = 1'-0"

NOTES:

1. HOLES IN WALL BRACKET AND SUPPORTS SHALL BE LOCATED IN THE FIELD AND SHALL BE DETERMINED BY THE MOUNTING FEET ON THE AIR CONDITIONER.
2. ALL MOUNTING BRACKETS AND HARDWARE SHALL BE STAINLESS STEEL.
3. ANCHOR BOLTS SHALL BE EPOXY ENCAPSULATED AND SHALL HAVE A MINIMUM EMBEDMENT OF 4 INCHES.

CADD DESIGN TBD DESIGN BBB CHKD. LRB

MED7

9/21/2006 21-074-07

TEXT SIZE REFERENCE
.125
.1875
.25

BR. I-688	CONTRACT	COUNTY	FEDERAL AID PROJECT NO.	SHEET NO.	TOTAL SHTS.
	21-074-07	NEW CASTLE	EBHN-N029 (2)	69	169

BR 688 SOUTH MARKET STREET BRIDGE REHABILITATION

REVISIONS	
1 ADDED PEDESTRIAN LIGHTING 2-20-04	LRB
2 LIGHTING QUANTITY CHANGE 8-3-04	BBB

AS BUILT

MISCELLANEOUS ELECTRICAL CIRCUITS - 1

NOTES:

1. ALL MATERIAL IS NEW, UNLESS OTHERWISE NOTED. BE THE RESPONSIBILITY OF THE CONTRACTOR AND THE
2. FOR CONTROL CIRCUIT AND LIMIT SWITCH LEGENDS, SEE SHEET NO. E8.

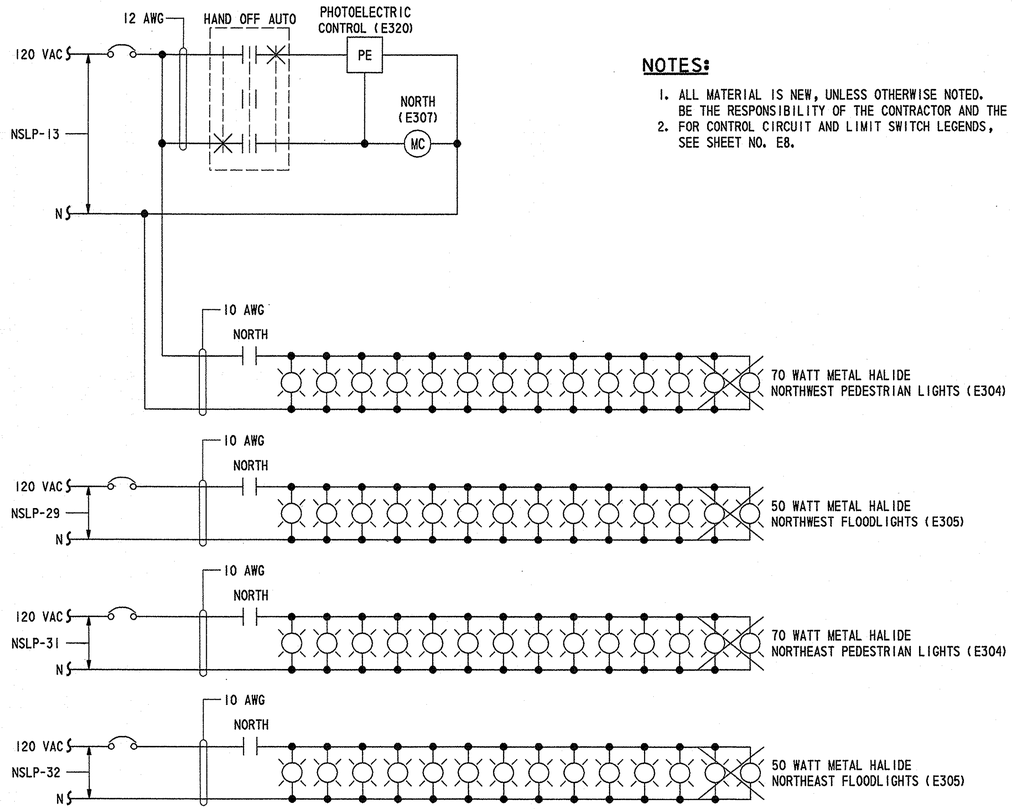

NORTH PEDESTRIAN LIGHTING 1 2

NO SCALE

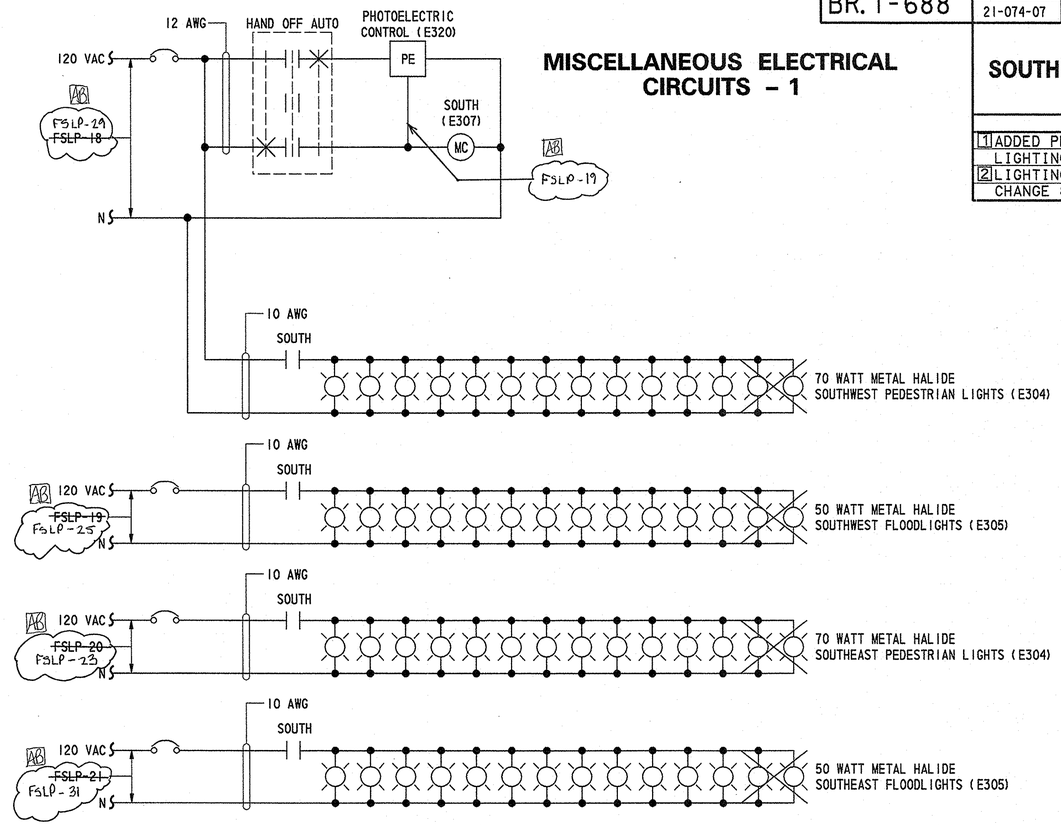

SOUTH PEDESTRIAN LIGHTING 1 2

NO SCALE

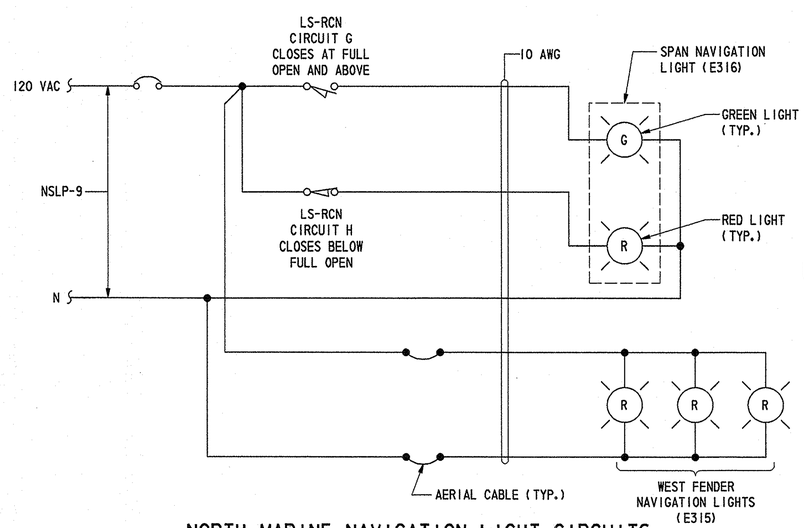

NORTH MARINE NAVIGATION LIGHT CIRCUITS

NO SCALE

BRANCH CIRCUIT LEGEND:

NSLP-13
- BRANCH CIRCUIT NUMBER
- EXISTING PANELBOARD DESIGNATION

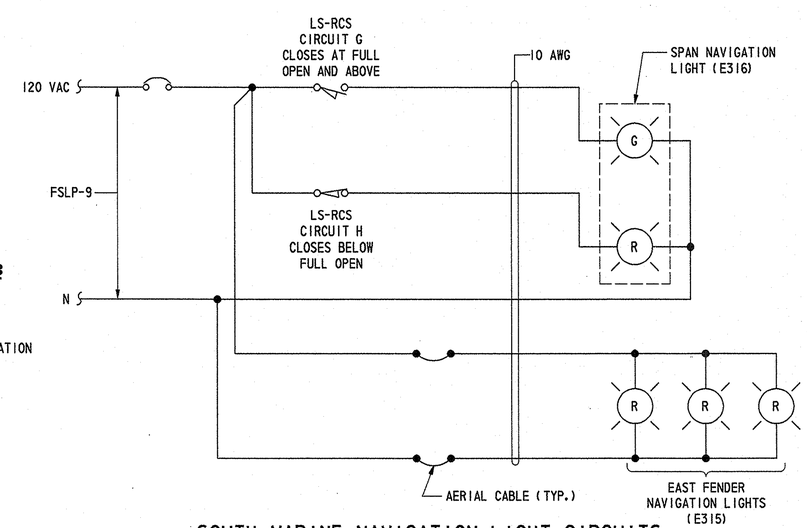

SOUTH MARINE NAVIGATION LIGHT CIRCUITS

NO SCALE

CADD DESIGN ALR DESIGN HEA CHKD. OCT

MECI

9/21/2006 21-074-07

BR. 1-668	CONTRACT	COUNTY	FEDERAL AID PROJECT NO.	SHEET NO.	TOTAL SHTS.
	21-074-07	NEW CASTLE	EBHN-N029 (2)	70	169

BR 688
SOUTH MARKET STREET BRIDGE REHABILITATION

REVISIONS

MISCELLANEOUS ELECTRICAL CIRCUITS - 2

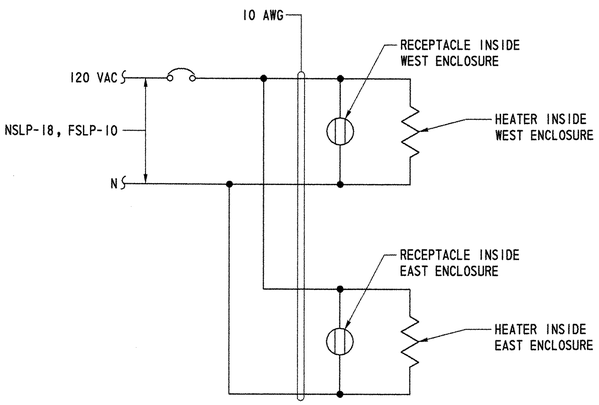

GATE AND BARRIER HEAT AND RECEPTACLES

NO SCALE
TYPICAL CIRCUIT SHOWN, ALL GATES AND BARRIERS SIMILAR
HEATERS AND RECEPTACLES SHALL BE PROVIDED BY THE GATE AND BARRIER MANUFACTURER.
RECEPTACLES SHALL BE HUBBELL 5362 OR SIMILAR.

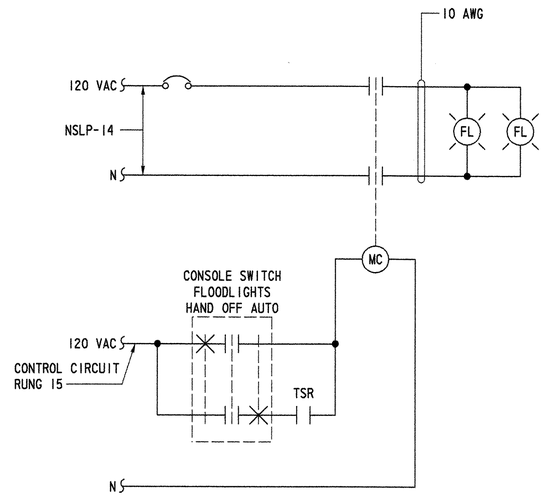

FLOODLIGHT CIRCUIT

NO SCALE

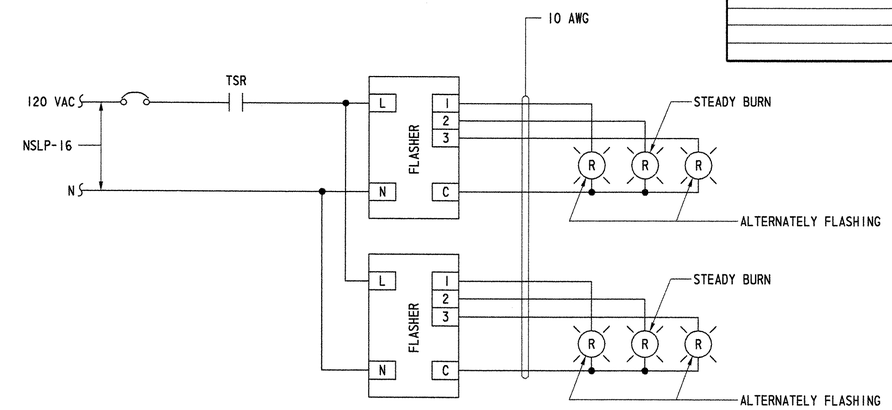

NORTH TRAFFIC SIGNALS CIRCUIT

NO SCALE

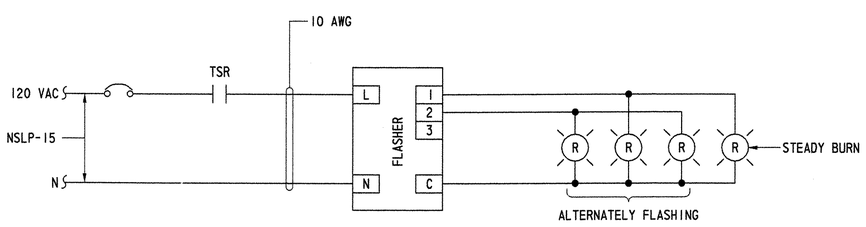

BARRIER GATES LIGHTS

NO SCALE
(TYPICAL OF 2 BARRIER GATES)

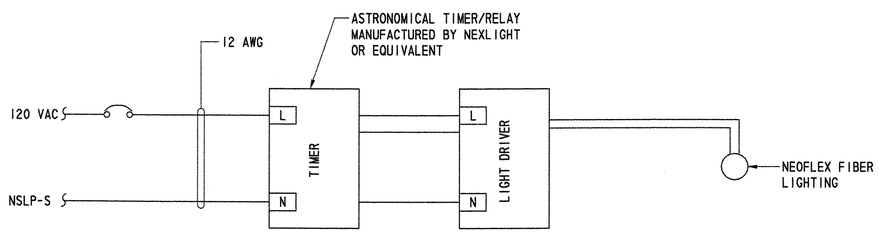

NORTH CANOPY LIGHTING

NO SCALE
(TYPICAL CIRCUIT SHOWN, SOUTH LIGHTING SIMILAR,
SEE SHEET NO. E33 FOR DETAIL)

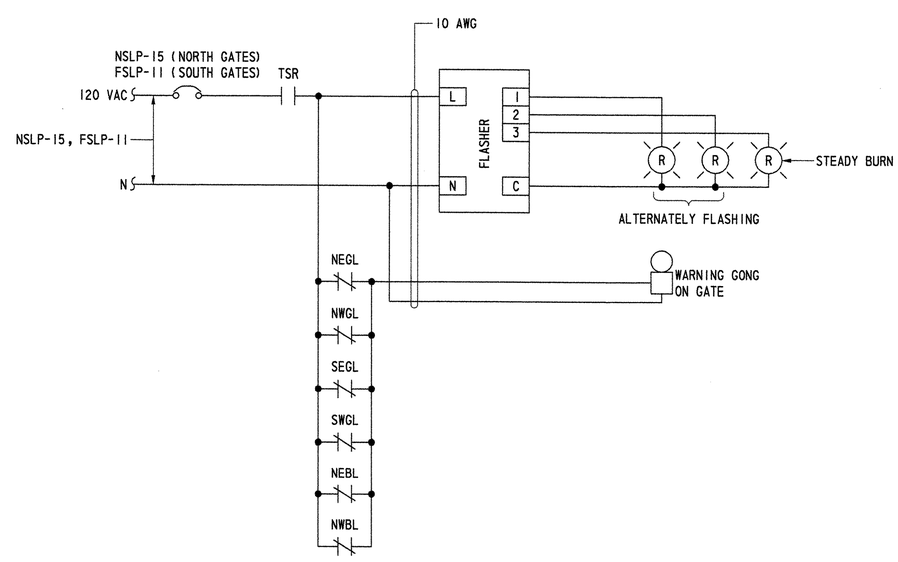

WARNING GATES LIGHTS AND GONG CIRCUIT

NO SCALE
(TYPICAL OF 4 WARNING GATES)

BRANCH CIRCUIT LEGEND:

NSLP-13
- BRANCH CIRCUIT NUMBER
- EXISTING PANELBOARD DESIGNATION

NOTES:

1. ALL MATERIAL IS NEW, UNLESS OTHERWISE NOTED.
   BE THE RESPONSIBILITY OF THE CONTRACTOR AND THE
2. FOR CONTROL CIRCUIT AND LIMIT SWITCH LEGENDS,
   SEE SHEET NO. E8.

CADD DESIGN RLR DESIGN MEA CHKD. OCT

MEC2

BR 688
SOUTH MARKET STREET BRIDGE REHABILITATION

REVISIONS

AS BUILT

ELECTRICAL EQUIPMENT SCHEDULE - 1

GROUP 100 DISTRIBUTION EQUIPMENT

PIECE NO.	QUANTITY	NAME	MANUFACTURER	TYPE - MODEL	RATING AND DESCRIPTION
E101	2	AC DRIVE MOTORS	REULAND ELECTRIC	———	AC WOUND ROTOR MOTORS RATED 100 HP, 1200 RPM, TENV, 460 VOLT, 3-PHASE, 60 HZ, 130 AMP, 30 MIN, 1.0 SF, SEVERE DUTY CONSTRUCTION, DOUBLE SHAFTS, CAST IRON CONSTRUCTION, FOOT MOUNTED, CLASS F INSULATION, 444TX FRAME. FOR USE WITH THYRISTOR CONTROL DRIVE SYSTEM.
E102	1	MOTOR STARTER CABINET	HOFFMAN	CENTER ONE MOTOR CONTROL CENTER	MOTOR STARTER CABINETS SHALL BE TYPE 12 ENCLOSURES CONSTRUCTED OF 12 GAUGE STEEL MINIMUM. SEAMS SHALL BE CONTINUOUSLY WELDED AND GROUND SMOOTH. DOORS SHALL HAVE CONTINUOUS HEAVY GAUGE HINGES WITH LATCHING HARDWARE. MINIMUM DIMENSIONS 90"H x 52"W x 18"D. MOTOR STARTER CABINET IS LOCATED IN THE NORTH CONTROL HOUSE EQUIPMENT ROOM.
E103	1	RELAY CONTROL CABINET	HOFFMAN	CATALOG NO. A-60481 2SSP	RELAY CONTROL CABINET SHALL BE CONSTRUCTED OF 12 GAUGE STAINLESS STEEL, FLOOR MOUNTED, AND HAVE DOUBLE DOORS. SEAMS SHALL BE CONTINUOUSLY WELDED AND GROUND SMOOTH. DOORS SHALL HAVE CONTINUOUS HEAVY GAUGE HINGES AND BE FULLY GASKETED. MINIMUM DIMENSIONS 60"H x 48"W x 12"D.
E104	1	MANUAL TRANSFER SWITCH	CUTLER-HAMMER	DT 365UDK	MANUAL TRANSFER SWITCH SHALL BE A DOUBLE THROW SWITCH DESIGNED FOR MANUAL TRANSFER OF LOADS FROM ONE SUPPLY TO ANOTHER. SAFETY SWITCH SHALL BE U.L. LISTED 3-POLE, RATED 600 VAC, 400 AMP. ENCLOSURE SHALL BE NEMA TYPE 12, GASKETED FOR INDOOR USE. ENCLOSURE SHALL BE CLEARLY LABELED INDICATING HANDLE POSITION IN "UTILITY" OR "GENERATOR" POSITION.
E105	6	MOTOR DISCONNECT SWITCH	HUBBELL/BRYANT	CATALOG NO. 30103	U.L. LISTED, 3-POLE, HORSEPOWER RATED DISCONNECT SWITCH, SWITCH SHALL BE RATED 600 VOLTS AC, 3-POLE, 30 AMPS FOR USE AS MOTOR DISCONNECT AND SHALL BE LOCKABLE IN THE "OFF" POSITION. ENCLOSURE SHALL BE NEMA 3R.
	2			CATALOG NO. 664X30	U.L. LISTED, 3-POLE, HORSEPOWER RATED DISCONNECT SWITCH, SWITCH SHALL BE RATED 600 VOLTS AC, 3-POLE, 30 AMPS FOR USE AS MOTOR DISCONNECT AND SHALL BE LOCKABLE IN THE "OFF" POSITION. ENCLOSURE SHALL BE NEMA 4X FOR USE AS THE SPAN LOCK DISCONNECT SWITCH.
E106	2	CIRCUIT BREAKER CB-1, CB-2	SQUARE D	LAL	U.L. LISTED, 3-POLE, 600V AC, THERMAL MAGNETIC CIRCUIT BREAKER, CURRENT RATING AS INDICATED ON THE PLANS. CIRCUIT BREAKERS CB-1 AND CB-DG-1 SHALL INCLUDE NEMA 12 RATED ENCLOSURES AND METERING AS DESCRIBED UNDER E116. ENCLOSURE SHALL BE PADLOCKABLE IN THE ON OR OFF POSITION.
	3	CIRCUIT BREAKER CB-DG-1, CB-3, CB-4		KAL	
E107	1	GENERATOR RECEPTACLE	CROUSE HINDS	AREA 20427	RECEPTACLE RATED 200 AMP, 600 VAC, 4-WIRE, 3-POLE. SHALL FEATURE SELF CLOSING SPRING DOOR, WATERTIGHT ENCLOSURE AND FITTINGS.
E108	1	BUS MONITOR	SQUARE D	843MPD	U.L. LISTED 480V AC, 3-PHASE, PHASE FAILURE RELAY. SHALL MONITOR THE POWER BUS AT THE NORTH STARTER CABINET FOR PHASE FAILURE, PHASE REVERSAL, VOLTAGE UNBALANCE, AND UNDERVOLTAGE.
E109	2	PANELBOARDS	SQUARE D	NQOD	U.L. LISTED, WALL MOUNTED, PANELBOARD RATED FOR 3-PHASE, 4-WIRE, 120/208 VOLT SERVICE WITH NEMA 12 ENCLOSURES. PANELBOARDS SHALL INCLUDE MAIN CIRCUIT BREAKER, BOLT ON BRANCH CIRCUIT BREAKERS AND SPARES WITH RATINGS AS SHOWN ON PLANS. TYPEWRITTEN CIRCUIT DIRECTORY SHALL BE PROVIDED ON THE INSIDE OF THE PANEL DOOR, PANELBOARDS SHALL HAVE THE CAPACITY OF SUPPORTING A MAXIMUM OF 42 SINGLE POLE BREAKERS.
E110	2	SCR DRIVE ENCLOSURES	HOFFMAN	A-72XM2818FTC	SCR DRIVE CABINETS INSTALLED INDOORS SHALL BE TYPE 12 ENCLOSURES CONSTRUCTED OF 12 GAUGE STEEL MINIMUM WITH PROVISIONS FOR A FLANGE MOUNTED DISCONNECT. SEAMS SHALL BE CONTINUOUSLY WELDED AND GROUND SMOOTH. DOORS SHALL BE HAVE CONTINUOUS HEAVY GAUGE HINGES WITH LATCHING HARDWARE. MINIMUM DIMENSIONS 72"H x 30"W x 18"D. SCR DRIVE CABINETS ARE LOCATED IN THE NORTH AND SOUTH MACHINERY ROOMS.
E111	AS REQUIRED	GFCI RECEPTACLE	HUBBELL	GF5362	HEAVY DUTY, SPECIFICATION GRADE, GROUND FAULT CIRCUIT INTERRUPT DUPLEX RECEPTACLE. NEMA 5-20R CONFIGURATION.
E112	AS REQUIRED	DUPLEX RECEPTACLE	HUBBELL	HBL5362	HEAVY DUTY, SPECIFICATION GRADE DUPLEX RECEPTACLE. NEMA 5-20R CONFIGURATION.
E113	AS REQUIRED	INDOOR TERMINAL CABINETS	HOFFMAN	FS CHNF	TERMINAL CABINETS INSTALLED INDOORS SHALL BE FREE STANDING TYPE 12 ENCLOSURES CONSTRUCTED OF 14 GAUGE STEEL MINIMUM. SEAMS SHALL BE CONTINUOUSLY WELDED AND GROUND SMOOTH. DOORS SHALL HAVE CONTINUOUS HEAVY GAUGE HINGES.
E114	———	———	———	———	UNASSIGNED
E115	1	POWER MONITOR	ELECTRO INDUSTRIES	FUTURA+	3-PHASE, MULTI-FUNCTION POWER MONITOR WITH CENTRAL TRANSDUCER MODULE AND REMOTE DISPLAYS. MONITOR SHALL INCLUDE TWO DISPLAYS AS INDICATED ON THE PLANS, AND INCLUDE ALL CIRCUITS AND OTHER HARDWARE NECESSARY TO ALLOW MONITORING OF THE MCC INCOMING POWER FEEDERS.
E116	2	CIRCUIT BREAKER CB-1 AND CB-DG-1 METERING	ELECTRO INDUSTRIES	DMVA100F	3-PHASE, AC DIGITAL SWITCHBOARD MONITOR CAPABLE OF DISPLAYING PHASE CURRENT, PHASE-TO-PHASE AND PHASE-TO-GROUND VOLTAGE, AND FREQUENCY. SHALL INCLUDE ALL NECESSARY HARDWARE AND TRANSDUCERS. SHALL BE PROVDED FOR BOTH CB-1 AND CB-DG-1, MOUNTED IN HOUSING DOOR.
	1		CROMPTON	077-12PA	AC PHASE SEQUENCE AND PHASE FAILURE INDICATOR. SHALL HAVE ANSI SWITCHBOARD STYLE CASE WITH NEON BULB INDICATORS. SHALL BE PROVIDED FOR CB-DG-1 ONLY, MOUNTED IN HOUSING DOOR.

GROUP 200 CONTROL EQUIPMENT

PIECE NO.	QUANTITY	NAME	MANUFACTURER	TYPE - MODEL	RATING AND DESCRIPTION
E201	2	SCR DRIVES	HUBBELL	TYPE 4922C	COMPACT THYRISTER STATIC REVERSING CONTROLLER TO PROVIDE SPEED REGULATION OF THE LIFT BRIDGE. DRIVE SHALL BE 100 HP, 460 V, 3-PHASE, 60 HZ. SEE SPECIFICATION FOR DETAILED DESCRIPTION.
E202	2	RESISTOR COILS	HUBBELL/ EUCLID	TYPE K/3004	PRIMARY POWER RESISTORS SHALL MEET NEMA RESISTOR STANDARDS. SHALL BE CONTINUOUS STAINLESS STEEL ELEMENTS, MILL-TYPE CONSTRUCTION, ELEMENT JOINT SHALL NOT BE WELDED. RATED FOR 139 AMPS CONTINUOUS CURRENT.
E203	4	OVERSPEED SWITCH	TORQ	ESS	SHAFT MOUNTED SPEED SWITCH SHALL BE INCLUDED IN THE MOTOR DRIVE PACKAGE. SWITCHES SHALL BE USED TO DETECT OVERSPEED AND DECELERATION CONDITION. SWITCH SHALL BE CAPABLE OF OPERATING IN EACH DIRECTION. SHALL MEET OR EXCEED NEMA 4 REQUIREMENTS.
E204	2	DC TACHOMETER	FINCOR	74011	TACHOMETER GENERATOR SHALL BE RUGGED, CONTINUOUS DUTY, AND INDUSTRIAL RATED. TACHOMETER WILL PROVIDE A LINEAR OUTPUT SIGNAL IN DIRECT PROPORTION TO DRIVEN SPEED. TACHOMETER SHALL BE FLANGE MOUNTED AND BE CAPABLE OF 100 VOLTS/1000 RPM.
E205	2	ENCODER MODULE	GEMCO	SERIES 2120	ENCODER MODULE TO PROVIDE ABSOLUTE LEAF POSITION SENSING CAPABILITY. UTILIZING INPUT FROM A RESOLVER INCLUDED WITH THE ROTARY CAM LIMIT SWITCH THE MODULE WILL DRIVE POSITION INDICATION ON THE CONTROL CONSOLE.
E206	2	ROTATING CAM LIMIT SWITCH	GEMCO	TYPE 1980R	8 CIRCUIT ROTATING CAM LIMIT SWITCH WITH NEMA 4 ENCLOSURE AND STRAIGHT DRIVE GEAR REDUCER. GEAR REDUCER SHALL BE 400:1. SWITCHES SHALL BE SINGLE POLE, DOUBLE THROW SNAP ACTION SWITCHES. LIMIT SWITCH SHALL INCLUDE BUILT IN RESOLVER FOR USE BY THE POSITION INDICATION ENCODER MODULE.
E207	4	SPAN POSITION LIMIT SWITCH	GENREAL ELECTRIC	IC9445	HEAVY DUTY, 2 CIRCUIT, SPRING RETURN LEVER ARM LIMIT SWITCH. ENCLOSURE SHALL BE WATERTIGHT (NEMA 4) BRONZE. SHALL INCLUDE A 6 INCH BRONZE LEVER ARM WITH 2¼ INCH PHENOLIC ROLLER.
E208	———	CONTROL CONSOLE DEVICES	———	———	SEE CONTROL CONSOLE DETAIL SHEETS AND SPECIFICATIONS.

NOTE: AB

SEE LINK CONTROL SYSTEMS DRAWINGS FOR DETAILS

NOTES:

1. ALL QUANTITIES OUTLINED ON THIS DRAWING ARE APPROXIMATE AND INCLUDED AS REFERENCE ONLY. THE CONTRACTOR SHALL PREPARE HIS OWN DETAILED MATERIALS LIST.
2. THE ACTUAL MANUFACTURER PART NUMBERS OF EQUIPMENT LISTED THIS DRAWING SHALL BE DETERMINED BY THE CONTRACTOR BASED ON THE INFORMATION PROVIDED HEREIN AND IN THE SPECIFICATIONS.
3. WHERE SPECIFIC BRAND NAMES ARE GIVEN ALTERNATIVE BRANDS MAY BE SUBMITTED FOR CONSIDERATION. THE BRANDS AND MODELS AS SPECIFIED PRESENT THE MINIMUM REQUIREMENTS AND PERFORMANCE ACCEPTABLE. ANY PROPOSED SUBSTITUTIONS MUST MEET OR EXCEED THE FEATURES AND PERFORMANCE OF THE COMPONENTS SPECIFIED.
4. SEE SPECIFICATIONS FOR FURTHER EQUIPMENT AND MATERIALS DESCRIPTIONS.

9/21/2006 21-074-07

CADD DESIGN ALR DESIGN BBB CHKD. LRB
EES1

FEET/12/1000
TEXT SIZE
REFERENCE
.125
.1875
.25

BR. I-688	CONTRACT	COUNTY	FEDERAL AID PROJECT NO.	SHEET NO.	TOTAL SHTS.
	21-074-07	NEW CASTLE	EBHN-N029 (2)	72	169

BR 688
SOUTH MARKET STREET BRIDGE REHABILITATION

REVISIONS	
1 ADDED PEDESTRIAN LIGHTING 2-20-04	LRB
2 LIGHTING QUANTITY CHANGE 8-3-04	BBB
3 AIR CONDITIONER CHANGE 11-18-04	LRB

ELECTRICAL EQUIPMENT SCHEDULE - 2

AS BUILT

GROUP 300 LIGHTING, NAVIGATION, SAFETY AND TRAFFIC CONTROL EQUIPMENT

PIECE NO.	QUANTITY	NAME	MANUFACTURER	TYPE - MODEL	RATING AND DESCRIPTION	
E301	2	TRAFFIC BARRIER GATE	~~B & B ELECTROMATIC~~ B&B ARMR	~~VL 9900~~ VT-6801 BARRIER GATE	HORIZONTAL ARM TYPE SAFETY GATE OPERATOR. SHALL HAVE A WEATHERPROOF HOUSING, MOTOR DRIVEN MECHANICAL OPERATING SYSTEM, AND AUTOMATIC BRAKING. GATE ARM SHALL BE DURABLE, LIGHTWEIGHT, AND ALUMINUM CONSTRUCTION. THE HOUSING SHALL BE FABRICATED FROM HOT DIP GALVANIZED STEEL AND SHALL CONTAIN AUTOMATIC AND MANUAL DISCONNECT SWITCHES AS WELL AS REQUIRED BARRIER LIMIT SWITCH. THE BARRIER SHALL HAVE TEN 360 DEGREE RED WARNING LIGHTS CONTROLLED BY A HEAVY DUTY FLASHER AND OPERATE AT 120 VOLTS AC.	AB SUB #21
E302	AS REQUIRED	OUTDOOR LIGHTING	~~CROUSE HINDS~~ VAPORGARD	~~V SERIES~~ VDA-SERIES	VAPORTIGHT INCANDESCENT LIGHTING FIXTURE WITH 120 VOLT, 150W ROUGH SERVICE LAMP, GLASS GLOBE, WITH GUARD IRON ALLOY FIXTURE BODY.	AB SUB #56
E303	2	TRAFFIC SIGNALS	EAGLE TRAFFIC CONTROL SYSTEMS	ALUMINUM VEHICLE TRAFFIC SIGNAL	THREE SECTION RED, RED, RED 12" TRAFFIC SIGNAL WITH CUT-AWAY VISORS. BLACK FINISH. SHALL INCLUDE HEAVY DUTY, VIBRATION RESISTANT 100 WATT, 120V AC INCANDESCENT LAMPS AND ALL HARDWARE NECESSARY FOR MOUNTING AS INDICATED ON THE PLANS.	
			ELLIOTT EQUIPMENT CORPORATION	BARLO STROBE	12" CUT-AWAY TRAFFIC SIGNAL VISOR WITH BUILT IN 60 FLASH PER MINUTE STROBE. BLACK FINISH. SHALL INCLUDE STROBE POWER SUPPLY, DISCHARGE-DISCONNECT OPTION, AND ALL NECESSARY MOUNTING HARDWARE.	
~~E304~~					~~UNASSIGNED~~	
2 E304	~~56~~ 48	PEDESTRIAN LIGHTING	BEGA	2813 MH	U.L. LISTED TYPE A RAIL MOUNTED MEDALLION LIGHT WITH 70 WATT METAL HALIDE LAMP. HOUSING SHALL BE ONE PIECE DIE CAST ALUMINUM WITH ALUMINUM GUARD. THE LENS SHALL BE MOLDED GLASS WITH A DIFFUSED STRIPPED INTERIOR SURFACE. FIXTURE SHALL INCLUDE AN INTEGRAL MAGNETIC BALLAST. FIXTURE SHALL BE FULLY GASKETED FOR WEATHER TIGHT OPERATION AND ALL HARDWARE SHALL BE MADE OF ELECTROLYTICALLY COMPATIBLE MATERIALS WHICH ARE INHERENTLY CORROSION PROOF OR PROTECTED BY FINISHES APPROVED FOR CORROSION RESISTANCE.	
~~E305~~					~~UNASSIGNED~~	
2 E305	~~56~~ 48	FLOODLIGHTING	KIM LIGHTING	CFLI 50 MH120	U.L. LISTED FLOODLIGHT WITH STANDARD SWIVEL MOUNTING, INTEGRAL BALLAST, SEALED OPTICAL SYSTEM AND WIDE FLOOD DISTRIBUTION. SHALL BE PROVIDED WITH A 50 WATT METAL HALIDE LAMP. HOUSING SHALL BE DIE-CAST LOW COPPER ALUMINUM. LENS SHALL BE CLEAR TEMPERED FLAT GLASS SEALED WITH A ONE PIECE SILICONE GASKET. REFLECTOR SHALL BE A SINGLE PIECE ASSEMBLY CONSTRUCTED OF ALUMINUM. THE STANDARD SWIVEL SHALL BE DIE CAST ALUMINUM WITH A 1/2 INCH NPSM PLUS BRASS LOCKNUT. FIXTURE SHALL BE PROVIDED WITH A COPPER FREE ALUMINUM JUNCTION BOX FOR MOUNTING. ALL HARDWARE SHALL BE MADE OF ELECTROLYTICALLY COMPATIBLE MATERIALS WHICH ARE INHERENTLY CORROSION PROOF OR ARE PROTECTED BY FINISHES APPROVED FOR CORROSION RESISTANCE. A FABREEKA PAD SHALL BE PROVIDED WITH EACH FIXTURE AND SHALL BE INSTALLED BETWEEN THE FIXTURE AND THE BRIDGE.	1
E306	12	FLUORESCENT LIGHTING FIXTURE	LITHONIA	DMS	2 LAMP FLUORESCENT FIXTURE 4 FT. LENGTH. HEAVY DUTY, ONE PIECE ALUMINUM HOUSING FOR CEILING MOUNTED APPLICATIONS. ACRYLIC DIFFUSER SECURED TO HOUSING WITH STAINLESS STEEL HARDWARE. DIFFUSER SHALL BE GASKETED. ALL METAL SURFACES COATED WITH BAKED ENAMEL. EQUIPPED WITH INTERNAL COLD WEATHER BALLAST AND 2 - 32 WATT LAMPS. 120 VOLTS AC.	
E307	2	LIGHTING CONTACTOR	SQUARE D	TYPE L	U.L LISTED, 30A, 4-POLE, ELECTRICALLY HELD LIGHTING CONTACTOR. COIL VOLTAGE SHALL BE 120V AC. CONTROL SHALL BE CONFIGURED AS INDICATED ON THE PLANS. SHALL BE PROVIDED WITH A NEMA 12 ENCLOSURE.	1
E308	2	EXIT SIGN	LITHONIA	D	U.L. LISTED SELF LUMINOUS EXIT SIGN. SHALL HAVE WHITE HOUSING WITH RED FACEPLATE. RATED LUMINOUS LIFE SHALL BE 20 YEARS.	
E309	4	IONIZATION SMOKE DETECTOR	BRK ELECTRONICS	SERIES 1800	2-WIRE, U.L. LISTED SMOKE DETECTOR SHALL HAVE A DUAL CHAMBER IONIZATION SENSOR OF THE UNIPOLAR TYPE WITH A NORMAL SENSITIVITY OF 1.5% FT. AS MEASURED IN A U.L. SMOKE BOX. THE DETECTOR SHALL HAVE A MOUNTING BRACKET OR MOUNTING TO A 4" OCTAGON BOX. THE DETECTOR SHALL BE PROVIDED WITH A LATCHING L.E.D. FOR VISUAL INDICATION. THE DETECTOR SHALL NOT ALARM WHEN EXPOSED TO WIND VELOCITIES UP TO 2500 FEET PER MINUTE.	
E310	4	EMERGENCY LIGHTING	LITHONIA	ELUX	U.L. LISTED WET LOCATION EMERGENCY LIGHT. SHALL HAVE FIBERGLASS REINFORCED POLYESTER HOUSING AND TWO ADJUSTABLE 8W SEALED-BEAM LAMPS. SHALL INCLUDE SEALED, MAINTRENANCE FREE BATTERY PROVIDING AT LEAST 90 MINUTES OF OPERATION.	
E311	4	FIRE EXTINGUISHER	FIRE TECHNOLOGIES INC.	B20M	20 LB. ABC TYPE DRY CHEMICAL FIRE EXTINGUISHER. U.S.C.G. APPROVED WITH STEEL SHELL AND BRASS FITTINGS.	
E312	7	SINGLE POLE LIGHT SWITCH	HUBBELL	HBL1221	HEAVY DUTY SPECIFICATION GRADE, 120V, 20A, SINGLE POLE TOGGLE SWITCH SUITABLE FOR USE IN INDUSTRIAL ENVIRONMENTS.	
E313	6	THREE WAY LIGHT SWITCH	HUBBELL	HBL1223	HEAVY DUTY SPECIFICATION GRADE, 120V, 20A, THREE WAY TOGGLE SWITCH SUITABLE FOR USE IN INDUSTRIAL ENVIRONMENTS.	
E314	2	SIGNAL HORN	FEDERAL SIGNAL	MODEL 55-50 RESONERATING HORN	ELECTRIC HORN UTILIZING 120 VAC. WEATHERPROOF, CORROSION RESISTANT CAST ALUMINUM HOUSING WITH BRASS PROJECTOR. U.L. LISTED FOR OUTDOOR USE. OPERATING TEMPERATURE -35°F TO 150°F. SHALL PRODUCE 105DB AT 10 FEET PER UNIT. 2 SIGNALS WILL FACE EACH DIRECTION NORTH AND SOUTH.	

GROUP 300 LIGHTING, NAVIGATION, SAFETY AND TRAFFIC CONTROL EQUIPMENT (CONTINUED)

PIECE NO.	QUANTITY	NAME	MANUFACTURER	TYPE - MODEL	RATING AND DESCRIPTION	
E315	6	PIER NAVIGATION LIGHT	~~AUTOMATIC POWER~~ B&B ARMR CORP.	~~FA-143078~~ MS-53 PIER LIGHT	FIXTURES SHALL BE HEAVY DUTY 120 VAC MARINE SIGNAL LANTERNS FOR THE INTENDED PURPOSE. LANTERN SHALL HAVE CAST ALUMINUM BASE AND TOP SECTION WITH INTEGRAL BIRD SPIKE. LENS SHALL BE A ONE PIECE, MOLDED 7.87" (200MM) GLASS FRESNEL TYPE AND SHOW OVER 180 DEGREES RED. LANTERN SHALL BE HINGED FOR INTERNAL ACCESS AND SEALED BY TOGGLE BOLTS AND NEOPRENE GASKETS. SEE SPECIFICATIONS FOR MORE IN DEPTH INFORMATION.	AB SUB #22
E316	4	SPAN NAVIGATION LIGHT	~~AUTOMATIC POWER~~ B&B ARMR CORP	~~FA-143082~~ BS-BASCULE SPAN LIGHT	FIXTURES SHALL BE HEAVY DUTY 120 VAC MARINE SIGNAL LANTERNS FOR THE INTENDED PURPOSE. LANTERN SHALL HAVE CAST ALUMINUM BASE AND TOP SECTION WITH INTEGRAL BIRD SPIKE. LENS SHALL BE A ONE PIECE, MOLDED 7.87" (200MM) GLASS FRESNEL TYPE AND SHOW ON PLAN VIEW 360 DEGREE GREEN AND 180 DEGREE RED SECTIONS. LANTERN SHALL BE HINGED FOR INTERNAL ACCESS AND SEALED BY TOGGLE BOLTS AND NEOPRENE GASKETS. SEE SPECIFICATIONS FOR MORE IN DEPTH INFORMATION.	SUB #23
E317	2	TRAFFIC SIGNAL POLE	HADCO	P-2065-10-A	10'-0" ALUMINUM DECORATIVE POLE SHALL INCLUDE DURABLE POLY-URETHANE BLACK ENAMEL FINISH, 5" DIAMETER FLAT FLUTE SHAFT, 16" DIAMETER BASE, AND HARDWARE REQUIRED FOR MOUNTING TRAFFIC CONTROL DEVICES.	AB
E318	4	TRAFFIC WARNING GATE	~~AUTOMATIC POWER~~ B&B ARMR CORP.	~~2000V~~ VT-4D A WARNING GATE	VERTICAL "OPEN" TO HORIZONTAL "CLOSED" MOTOR DRIVEN WARNING GATE WITH DIMENSIONS AS INDICATED ON THE PLANS. SHALL INCLUDE FIBERGLASS AND/OR ALUMINUM TRAFFIC END PEDESTRIAN ARM AND ARM MOUNTED WARNING LIGHTS.	SUB #20
E319	4	WARNING GONG	~~SAFETRAN~~ B&B ARMR CORP.	~~040200-9X~~ Z-555	HEAVY DUTY MOTOR DRIVEN 12" WARNING GONG MOUNTED ON INDICATED TRAFFIC WARNING GATES BY GATE MANUFACTURER.	SUB #20
E320	2	PHOTOELECTRIC CONTROL	TORK	MODEL 2001	PHOTOELECTRIC CONTROL WITH 180 DEGREE SWIVEL FOR AUTOMATIC SWITCHING OF PEDESTRIAN LIGHTING AND FLOODLIGHTING. CONTROL SHALL BE ABLE TO MOUNT TO OUTDOOR 1/2" DIA. CONDUIT FITTING. PHOTOELECTRIC CONTROL UNIT SHALL HAVE AN ALL LEXAN ENCLOSURE WHICH IS NOT AFFECTED BY WEATHER, MOISTURE OR TEMPERATURE. THE UNIT SHALL OPERATE AT 120 VOLTS AND SHALL HAVE A SINGLE POLE, SINGLE THROW (SPST) NORMALLY CLOSED SNAP ACTION CONTACT TO PREVENT CHATTER AND TO ILLUMINATE ALL LIGHTING IN CASE OF FAILURE. A DELAY OF UP TO TWO MINUTES SHALL PREVENT FALSE SWITCHING DUE TO LIGHT FROM VEHICLES, LIGHTING, ETC.	1

GROUP 400 MISCELLANEOUS EQUIPMENT

PIECE NO.	QUANTITY	NAME	MANUFACTURER	TYPE - MODEL	RATING AND DESCRIPTION	
E401	—	—	—	—	UNASSIGNED	AB
E402	2	SUBMERSIBLE PUMP CONTROLS	~~WEIL PUMP COMPANY INC.~~ KA ENGINEERED SYSTEMS CONTROL PANEL	~~8100/8200 SERIES~~	DUPLEX CONTROL PANEL WILL CONTROL SUBMERSIBLE PUMPS VIA NEW FLOAT SWITCH CONTROL SYSTEM. ENCLOSURE SHALL BE NEMA 4X STAINLESS. SUBMERSIBLE PUMPS, CONTROL PANEL AND FLOAT CONTROLS SHALL BE COORDINATED AND PROVIDED BY A SINGLE VENDOR.	SUB #7
~~E403~~	~~1~~	~~AIR CONDITIONER~~	~~NORDIC AIR INC.~~	~~2K SERIES~~	~~18,000 BTUH INDUSTRIAL WINDOW AIR CONDITIONER. SHALL HAVE HEAVY DUTY OVER-SIZE COILS, CORROSION RESISTANT COATING ON CONDENSER COILS. SLIDE OUT CHASSIS, TOTALLY ENCLOSED FAN MOTOR, CORROSION RESISTANT BAKED PHENILOC COATING ON EVAPORATOR COIL. SHALL OPERATE ON 208/230V, 1 PHASE. SHALL INCLUDE ALL NECESSARY MOUNTING BRACKETS, FRAMING AND HARDWARE.~~	3 AB
E403	1	AIR CONDITIONER	~~HITACHI~~ SOLEUS AIR	~~RAS-30CP1R~~ KFR-18G/W	27,000 BTU SPLIT SYSTEM AIR CONDITIONER. SHALL OPERATE ON 1 PHASE, 230 VOLTS AC. SHALL BE SUPPLIED WITH TUBING AND ALL NECESSARY MOUNTING BRACKETS.	SUB #142
E404	1	CEILING FAN	DAYTON	36" COMMERCIAL	U.L. LISTED 36", COMMERCIAL DUTY, SINGLE SPEED CEILING FAN WITH BALANCED, CONTOURED, ROLLED EDGE BLADES. WHITE EPOXY ENAMEL FINISH. 120V AC.	

NOTES:

1. ALL QUANTITIES OUTLINED ON THIS DRAWING ARE APPROXIMATE AND INCLUDED AS REFERENCE ONLY. THE CONTRACTOR SHALL PREPARE HIS OWN DETAILED MATERIALS LIST.
2. THE ACTUAL MANUFACTURER PART NUMBERS OF EQUIPMENT LISTED THIS DRAWING SHALL BE DETERMINED BY THE CONTRACTOR BASED ON THE INFORMATION PROVIDED HEREIN AND IN THE SPECIFICATIONS.
3. WHERE SPECIFIC BRAND NAMES ARE GIVEN ALTERNATIVE BRANDS MAY BE SUBMITTED FOR CONSIDERATION. THE BRANDS AND MODELS AS SPECIFIED PRESENT THE MINIMUM REQUIREMENTS AND PERFORMANCE ACCEPTABLE. ANY PROPOSED SUBSTITUTIONS MUST MEET OR EXCEED THE FEATURES AND PERFORMANCE OF THE COMPONENTS SPECIFIED.
4. SEE SPECIFICATIONS FOR FURTHER EQUIPMENT AND MATERIALS DESCRIPTIONS.

CADD DESIGN EES2 | DESIGN RLR | CHKD. BBB | LRB

9/21/2006 21-074-07

FEET/12/1000

TEXT SIZE REFERENCE
.125
.1875
.25

BR. 1-688	CONTRACT	COUNTY	FEDERAL AID PROJECT NO.	SHEET NO.	TOTAL SHTS.
	21-074-07	NEW CASTLE	EBHN-N029 (2)	73	169

MECHANICAL PLAN AND ELEVATION

0 10' 20' 30' 40'
SCALE: 1"=20'

BR 688
SOUTH MARKET STREET BRIDGE REHABILITATION

REVISIONS

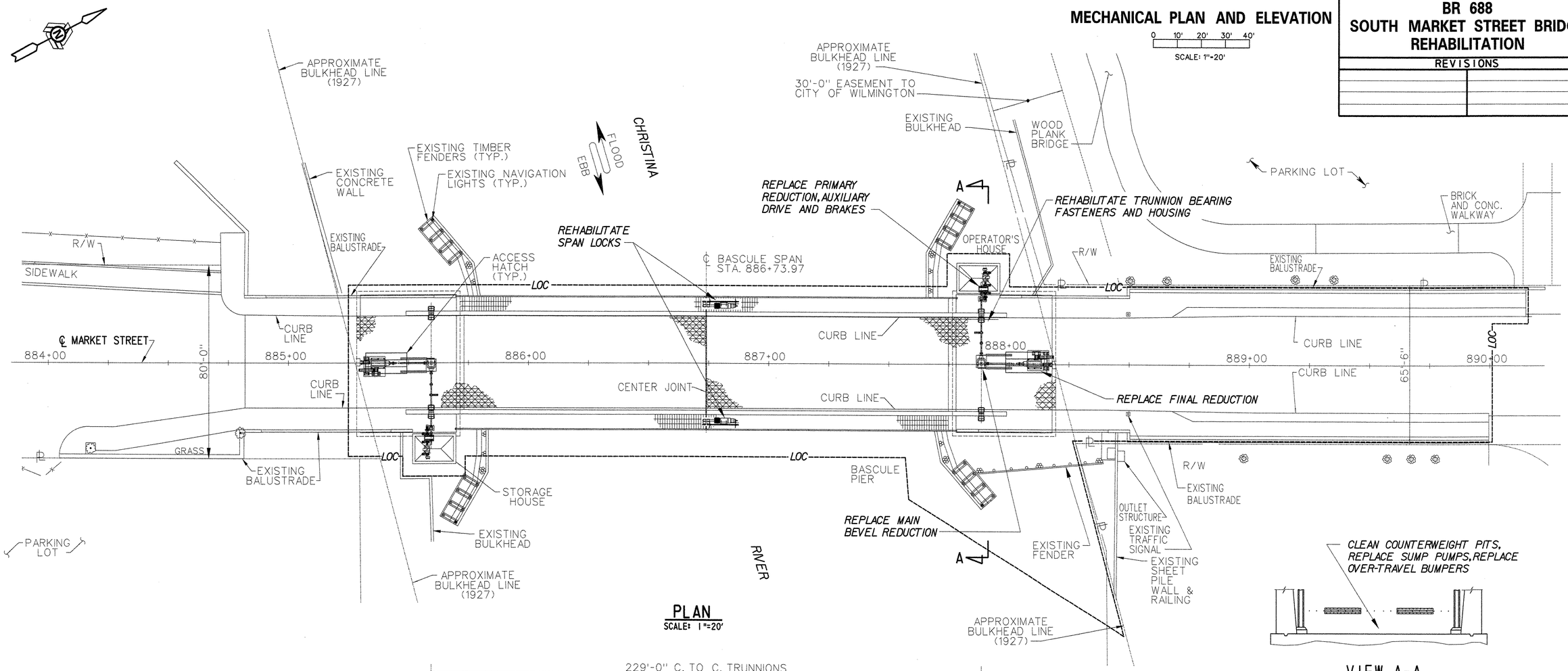

PLAN
SCALE: 1"=20'

VIEW A-A
NO SCALE

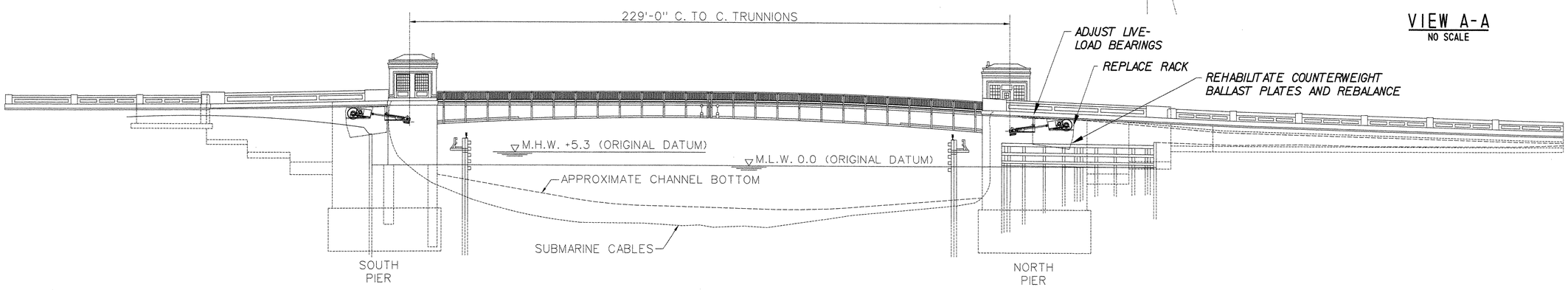

ELEVATION
SCALE: 1"=20'

CADD DESIGN TBD DESIGN JEM CHKD. DMB

BR. 1-668	CONTRACT	COUNTY	FEDERAL AID PROJECT NO.	SHEET NO.	TOTAL SHTS.
	21-074-07	NEW CASTLE	EBHN-N029 (2)	74	169

BR 688
SOUTH MARKET STREET BRIDGE REHABILITATION

REVISIONS

GENERAL MACHINERY ARRANGEMENT

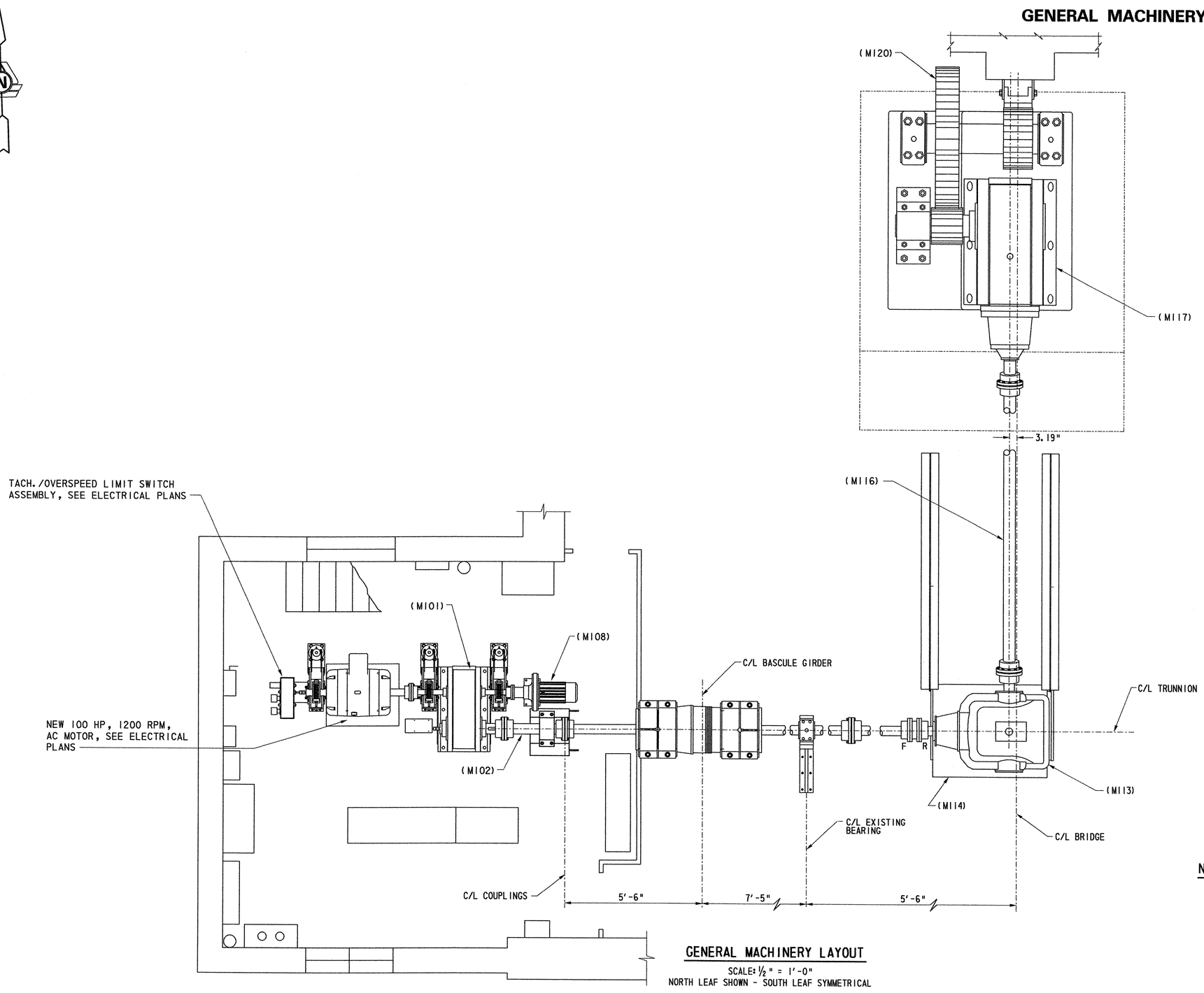

GENERAL MACHINERY LAYOUT

SCALE: ½" = 1'-0"
NORTH LEAF SHOWN - SOUTH LEAF SYMMETRICAL

NOTES:

1. ITEM CALL-OUTS ARE TYPICAL FOR ALL SIMILAR LOCATIONS, UNLESS NOTED OTHERWISE.
2. SEE DRAWING M3 FOR GENERAL MACHINERY NOTES.

CADD DESIGN TBD DESIGN JEM CHKD. DMB

FEET/12/1000

TEXT SIZE REFERENCE
.125
.1875
.25

BR. 1-688	CONTRACT	COUNTY	FEDERAL AID PROJECT NO.	SHEET NO.	TOTAL SHTS.
	21-074-07	NEW CASTLE	EBHN-N029 (2)	75	169

BR 688
SOUTH MARKET STREET BRIDGE REHABILITATION

REVISIONS

REVISION	REVISED RATIO, MODEL NUMBER
2 04/30/04 DLM	

GENERAL MACHINERY NOTES

AS BUILT

MACHINERY EQUIPMENT SCHEDULE

ITEM NO.	REFERENCE DRAWING	QUANTITY	MANUFACTURER	DESCRIPTION
M101	M6	2	FALK	PRIMARY ENCLOSED REDUCER, PARALLEL-SHAFT, DOUBLE REDUCTION. 5.591 EXACT RATIO, TYPE 405A2.
M102	M6	2	-	SHAFT, PRIMARY REDUCER OUTPUT.
M103	M6	2	FALK	GEAR COUPLING, DOUBLE ENGAGEMENT, MOTOR SHAFT, 1025G20.
M104	M6	2	MONDEL	MACHINERY BRAKE, 10" MILL DUTY SHOE BRAKE, 280 FT-LB SETTING, MBTJF-ED50/6.
M105	M6	4	MONDEL	MOTOR BRAKE, 10" MILL DUTY SHOE BRAKE, 225 FT-LB SETTING, MBTJF-ED50/6.
M106	M6	6	MONDEL	BRAKE WHEEL, 10", TYPE ABW.
M107	M6	4	HELICAL PRODUCTS CO.	FLEXIBLE COUPLING, MC7C 150 - 16 -16, O/S SWITCH-TACH GENERATOR ASSEMBLY AND ROTARY CAM LIMIT SWITCH.
M108	M6	2	SUMITOMO	AUXILIARY DRIVE MOTOR, 15HP x 1800 RPM, ~~15:1 RATIO, C HH M 11-4155 YA-B 15.~~ 11:1 RATIO, CHHM-15-614-HY-B-11
M109	M6	2	FALK	DISCONNECT COUPLING, 1020G72. FURNISH WITH HAND OPERATED SHIFTER MECHANISM.
M110	M6	2	FALK	GEAR COUPLING, SINGLE ENGAGEMENT, 1035G52.
M111	M6	2	FALK	COUPLING HALF, RIGID HUB, 1035G52, LINE SHAFTING.
M112	M7	2	FALK	SPACER COUPLING, 1035G32 SPECIAL x 9.06 LG, SINGLE ENGAGEMENT.
M113	M7	2	FALK	ENCLOSED BEVEL REDUCER, SINGLE REDUCTION, 1.481 EXACT RATIO, TYPE GHB1-2110.
M114	M7, M8	2	-	SUPPORT WELDMENT, ENCLOSED BEVEL REDUCER.
M115	M7	4	FALK	GEAR COUPLING, SINGLE ENGAGEMENT WITH, CENTERING PLATE, LINE SHAFTING, 1040GV52
M116	M7	2	-	SHAFT, FINAL REDUCER INPUT.
M117	M7, M10	2	FALK	FINAL ENCLOSED REDUCER, RIGHT ANGLE, DOUBLE REDUCTION, 17.040 EXACT RATIO, TYPE 505AB2. FURNISH COMPLETE WITH SUPPORT (M119) AND ROLLER BEARING (M118).
M118	M7	2	SKF	ROLLER BEARING, FINAL REDUCER SHAFT SUPPORT, SDAF 23152 KA/9-1/4. FURNISH WITH ENCLOSED REDUCER (M117) AND SUPPORT WELDMENT (M119).
M119	M7, M11, M12	2	-	SUPPORT WELDMENT, FINAL REDUCTION. FURNISH WITH ENCLOSED REDUCER (M117) AND ROLLER BEARING (M118).
M120	M10	2	-	SHAFT ASSEMBLY, INCLUDES MAIN PINION PR AND GEAR G1.
M121	M7, M9	4	STEWARD MACHINE CORP.	BEARING, EPB-100, 10" BORE.
M122	M18	4	~~WEIL~~ GOULDS	SUBMERSIBLE SUMP PUMP, ~~MODEL 1606.~~ 3888 D3 SERIES WS 2038D3 SUB# 7
M123	M17	4	LONGWOOD	10W TRAPEZOID BUMPER.
M124	M7, M9	2	FALK	FINAL REDUCER ASSEMBLY. COMPLETE ASSEMBLY CONSISTING OF ITEMS M117, M118 AND M119.
M125	M19	16	-	RACK SEGMENT.

GENERAL MACHINERY NOTES

SPAN ROTATION TO "FULL OPEN" POSITION - 77.5 DEGREE.
NORMAL TIME TO ROTATE SPAN TO "FULL OPEN" POSITION - 1.9 MINUTES ± (NOT INCLUDING TIME FOR BARRIER AND WARNING GATES, AND SPAN LOCKS TO OPERATE).
TIME FOR EMERGENCY GEARMOTOR TO ROTATE SPAN TO "FULL OPEN" POSITION - 10 MINUTES ±.

ALL QUANTITIES SHOWN HERE ARE INCLUDED FOR REFERENCE ONLY. THE CONTRACTOR SHALL GENERATE HIS OWN DETAILED LIST OF QUANTITIES AND MATERIALS AS THE BASIS FOR BIDDING AND PURCHASING.
WHERE PRODUCTS OF SPECIFIC MANUFACTURERS ARE CALLED FOR IN THE CONTRACT DOCUMENTS THE CONTRACTOR MAY SUBSTITUTE EQUAL OR SUPERIOR PRODUCTS BY OTHER MANUFACTURERS, AS APPROVED BY THE ENGINEER.
SHOULD EQUIPMENT CALLED FOR IN THE CONTRACT DOCUMENTS BE UNAVAILABLE FROM THE MANUFACTURER, THE CONTRACTOR SHALL PROVIDE AN EQUAL PRODUCT FROM ANOTHER SOURCE, AS APPROVED BY THE ENGINEER.
THE MANUFACTURE, WORKMANSHIP, HANDLING, INSTALLATION, AND LUBRICATION OF ALL MECHANICAL COMPONENTS CALLED FOR IN THIS CONTRACT SHALL COMPLY WITH THE REQUIREMENTS OF AASHTO 1988 MOVABLE BRIDGE SPECIFICATIONS, UNLESS OTHERWISE CALLED FOR BY THESE PLANS AND SPECIFICATIONS.
FITS AND SURFACE FINISHES, WHEN NOT INCLUDED ON THE PLANS, SHALL BE AS SHOWN BELOW, OR VENDOR'S RECOMMENDED SPECIFICATIONS, WHICHEVER IS MORE RIGOROUS.
SURFACE FINISHES ARE GIVEN AS THE ROUGHNESS HEIGHT IN MICROINCHES.

PART	FIT	FINISH
MACHINERY BASE ON STEEL	-	250
MACHINERY BASE ON MASONRY	-	500
SHAFT JOURNALS	RC6	8
JOURNAL BUSHINGS	RC6	16
SPLIT BUSHING IN BASE	LC1	125
SOLID BUSHING IN BASE (TO 1/4 INCH WALL)	FN1	63
SOLID BUSHING IN BASE (OVER 1/4 INCH WALL)	FN2	63
HUBS ON SHAFT (TO 2 INCH BORE)	FN2	32
HUBS ON SHAFT (OVER 2 INCH BORE)	FN2	63
TURNED BOLTS IN FINISHED HOLES	LC6	63
SLIDING BEARINGS	RC6	32
KEYS AND KEYWAYS (TOP AND BOTTOM)	LC4	63
KEYS AND KEYWAYS (SIDES)	FN2	63
MACHINERY PARTS IN FIXED CONTACT	-	125
TEETH OF OPEN SPUR GEARS:		
UNDER 1 INCH CIRCULAR PITCH	-	32
1 INCH TO 1 3/4 INCH CIRCULAR PITCH	-	63
OVER 1 3/4 INCH CIRCULAR PITCH	-	125

THE ABOVE FITS FOR CYLINDRICAL PARTS SHALL ALSO APPLY TO THE MAJOR DIMESIONS OF NONCYLINDRICAL PARTS.

ALL EDGES AND CORNERS OF MACHINERY PARTS, SHEET METAL WORK, BEDPLATES AND OTHER FABRICATED MACHINERY SUPPORTS THAT ARE EXPOSED IN THE FINISHED WORK SHALL BE ROUNDED OR CHAMFERED. ALL BURRS OR OTHER SURFACE DEFECTS THAT COULD BE INJURIOUS TO WORKERS ERECTING OR MAINTAINING THE BRIDGE MACHINERY SHALL BE REMOVED.
CUT SHAFT KEYWAY CORNER FILLETS TO A RADIUS AS SPECIFIED BY ANSI STANDARD B17.1.
ALL GEARS AND GEAR REDUCERS SHALL BE MANUFACTURED AND RATED TO FURNISH REQUIREMENTS CALLED FOR IN THE CONTRACT DOCUMENTS AND IN ACCORDANCE WITH APPLICABLE SPECIFICATIONS AND RECOMMENDATIONS OF THE AMERICAN GEAR MANUFACTURER'S ASSOCIATION (AGMA).
ALL ENCLOSED GEAR REDUCERS SHALL BEAR THE AGMA NAMEPLATE FULLY COMPLETED AND DESCRIBING THE PROPERTIES OF THE UNIT WHICH IT IS ATTACHED. ALL ENCLOSED GEAR REDUCERS SHALL CONSIST OF HELICAL, SPIRAL BEVEL OR HERRINGBONE GEARING OF AGMA GEAR QUALITY 9 OR BETTER, AND SHALL RUN ON ANTI-FRICTION ROLLER BEARINGS WITH A MINIMUM B-10 LIFE OF 40,000 HOURS.
ALL MOTORS, GEAR REDUCERS, BEARING SHAFTS, AND OPEN GEARING SHALL BE SHIMMED TO PROVIDE ACCEPTABLE ALIGNMENT AS REQUIRED BY MANUFACTURERS AND/OR THE CONTRACT DOCUMENTS. ALL SHIMS SHALL BE STAINLESS STEEL AND PROVIDE TWICE THE THICKNESS FOR ALIGNMENT AS THAT SPECIFIED ON THE PLANS. SHIMS SHALL PROVIDE A MINIMUM OF 0.003" ADJUSTMENT, UNLESS OTHERWISE STATED.
TURNED BOLTS ARE DESIGNATED BY THEIR NOMINAL THREAD DIAMETER. THE TURNED BODY OF THE BOLT SHALL BE 1/16" LARGER IN DIAMETER THAN THE SIZE CALLED FOR, AND SHALL HAVE LC6 FIT TO THE REAMED HOLE INTO WHICH IT IS INSERTED. ALL TURNED BOLTS SHALL BE EQUIVALENT TO ASTM A325, TYPE 3, OR ASTM A449, TYPE 1.
SIZE TURNED BOLTS FOR MOUNTED MANUFACTURED UNITS FOR MINIMAL REAMING OF UNIT'S STANDARD HOLES, OR ORDER UNITS WITH SOLID BASES AND DRILL AND REAM FOR RECOMMENDED BOLT SIZE.
ALL BOLTS USED TO FASTEN MACHINERY TO SUPPORTS OR SUPPORT STRUCTURE SHALL BE 7/8" DIA. ASTM A325, TYPE 3 OR EQUAL GRADE, UNLESS OTHERWISE NOTED.
ALL FASTENERS AND PINS SPECIFIED AS STAINLESS STEEL SHALL BE TYPE 304 OR 316 STAINLESS STEEL, WITH A MINIMUM TENSILE STRENGTH OF 80,000 PSI AND SHALL EQUAL OR EXCEED ASTM F593, ALLOY GROUP 1 OR 2, CONDITION CW, UNLESS OTHERWISE NOTED.
MACHINERY SHALL HAVE LIFTING EYES OR EYE BOLTS, PROPERLY SIZED FOR SAFE WORKING LOADS, AND LOCATED FOR BALANCED LIFT.
WELDMENTS AND MISCELLANEOUS MACHINERY COMPONENTS SHALL BE FABRICATED FROM ASTM A572, GRADE 50, OR ASTM A709, GRADE 50 STEEL UNLESS OTHERWISE NOTED.
PROVIDE WELDING RODS COMFORMING TO AWS D1.5-95.

ALL WELDING SHALL BE BY CERTIFIED WELDERS, MINIMUM FILLET WELDS SIZES, UNLESS OTHERWISE NOTED.

MATERIAL THICKNESS OF THICKER PART JOINED (INCHES)	MINIMUM SIZE OF FILLET WELD (INCHES)**
TO 1/2" INCLUSIVE	3/16"*
OVER 1/2" to 3/4"	1/4"*
OVER 3/4" to 1 1/2"	5/16"*
OVER 1 1/2" to 2 1/4"	3/8"

* SINGLE PASS WELDING MUST BE USED. THE MINIMUM WELD SHALL BE A 3/16 INCH FILLET WELD.
** WELD SIZE IS DETERMINED BY THE THICKNESS OF THE PARTS JOINED, UNLESS A LARGER SIZE IS SPECIFIED BY THE ENGINEER. THE WELD SIZE NEED NOT EXCEED THAT REQUIRED BY THE THICKNESS OF THE THINNER PART JOINED.

FOR FABRICATION, INSTALLATION, ALIGNING, TESTING AND ALL RELATED WORK REQUIRED BY THE BRIDGE MACHINERY, THE CONTRACTOR SHALL USE ONLY SKILLED, TRAINED AND EXPERIENCED MACHINISTS, MECHANICS AND MILLWRIGHTS WHO ARE THOROUGHLY FAMILIAR WITH SPECIFIED REQUIREMENTS AND METHODS NECESSARY FOR THE PROPER EXECUTION OF THE SPECIFIED WORK.
ALL DIMENSIONS SHOWN HEREIN ARE FOR THE SPECIFIED PRODUCTS OF THE PARTICULAR MANUFACTURER LISTED. THESE DIMENSIONS SHALL BE VERIFIED BY THE CONTRACTOR, USING MANUFACTURER'S CERTIFIED SHOP DRAWINGS.
ANY CHANGE IN DESIGN, BY THE USE OF A DIFFERENT MANUFACTURER OR OTHERWISE, SHALL BE AT THE EXPENSE OF THE CONTRACTOR, WITHOUT ANY ADDITIONAL COST TO THE CLIENT, AND WITH THE APPROVAL OF THE ENGINEER.
UNLESS DIRECTED OTHERWISE BY THE ENGINEER, ALL MATERIAL REMOVED FROM THE STRUCTURE, AS SPECIFIED BY THIS CONTRACT, SHALL BECOME THE PROPERTY OF THE CONTRACTOR AND DISPOSED OF PROPERLY.

DIMENSIONAL TOLERANCES: WHOLE AND FRACTIONAL DIMENSIONS SHALL BE HELD TO WITHIN THE FOLLOWING TOLERANCES UNLESS OTHERWISE NOTED ON THE CONTRACT DRAWINGS.
A. BETWEEN MACHINED SURFACES - +/- 0.010 INCH
B. LOCATION OF BOLT HOLES - +/- 1/64 INCH
C. OTHER DIMENSIONS - +/- 1/16 INCH

CADD DESIGN ____ DESIGN ____ CHKD. ____

9/21/2006 21-074-07

FEET/12/1000

TEXT SIZE REFERENCE
.125
.1875
.25

BR. I-688	CONTRACT	COUNTY	FEDERAL AID PROJECT NO.	SHEET NO.	TOTAL SHTS.
	21-074-07	NEW CASTLE	EBHN-N029 (2)	76	1169

EXISTING MACHINERY REMOVAL

BR 688
SOUTH MARKET STREET BRIDGE REHABILITATION

REVISIONS	
ADDENDUM 2 10/16/03 DMB	CHANGE DESCRIPTION

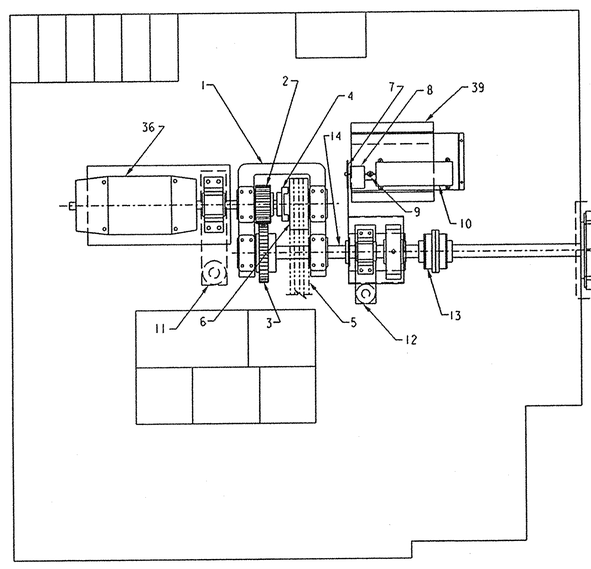

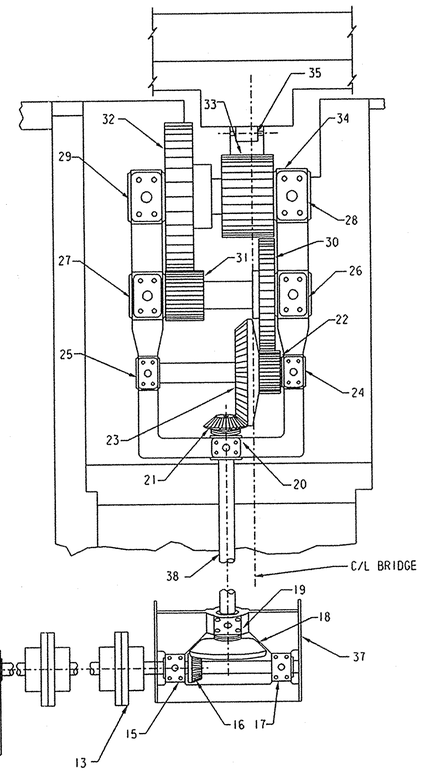

EXISTING MACHINERY REMOVAL

SCALE: ½" = 1'-0"

TABULATION OF REMOVAL ITEMS	
NO.	DESCRIPTION
1	BEARING FRAME (INCLUDING BEARINGS B16, B15, B14 AND B13)
2	PINION GEAR P5
3	GEAR G5
4	JAW COUPLING
5	GEAR DRIVE COVER
6	GEAR G6
7	CHAIN DRIVE
8	DOUBLE WORM GEAR REDUCER
9	FLEXIBLE COUPLING
10	ROTARY CAM LIMIT SWITCH
11	MOTOR BRAKE
12	MACHINERY BRAKE
13	COUPLING HALF
14	SHAFT
15	BEARING B10
16	PINION P4
17	BEARING B9
18	GEAR G4
19	BEARING B8
20	BEARING B7
21	PINION P3
22	PINION P2
23	GEAR G3
24	BEARING B5
25	BEARING B6
26	BEARING B4
27	BEARING B3
2 28	BEARING B1
2 29	BEARING B2
30	GEAR G2
31	PINION P1
32	GEAR G1
33	PINION PR
34	BEARING FRAME
35	RACK
36	SPAN DRIVE MOTOR
37	BEVEL GEAR AND BEARING FRAME
38	FINAL SHAFT
39	LIMIT SWITCH MOUNTING BRACKET

NOTES:

1. ALL ITEMS ON THIS DRAWING ARE EXISTING.
2. SEE DRAWING M3 FOR GENERAL MACHINERY NOTES.
3. NORTH LEAF SHOWN, ITEM CALLOUTS ARE IDENTICAL FOR THE SOUTH LEAF.

CADD DESIGN _____ DESIGN _____ CHKD. _____

...\m4_addendum2.dgn Oct. 16, 2003 13:06:33

FEET/12/1000

TEXT SIZE REFERENCE
.125
.1875
.25

BR. I-688	CONTRACT	COUNTY	FEDERAL AID PROJECT NO.	SHEET NO.	TOTAL SHTS.
	21-074-07	NEW CASTLE	EBHN-N029 (2)	77	169

GRILLAGE MODIFICATIONS

BR 688
SOUTH MARKET STREET BRIDGE REHABILITATION

REVISIONS	
ADDENDUM 2 10/16/03 DLM	ADDED NOTE- DELETED DETAIL

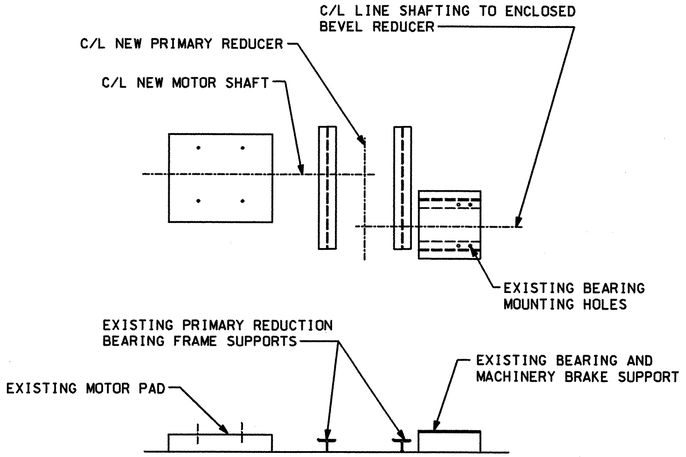

EXISTING MACHINERY HOUSE GRILLAGE

NO SCALE

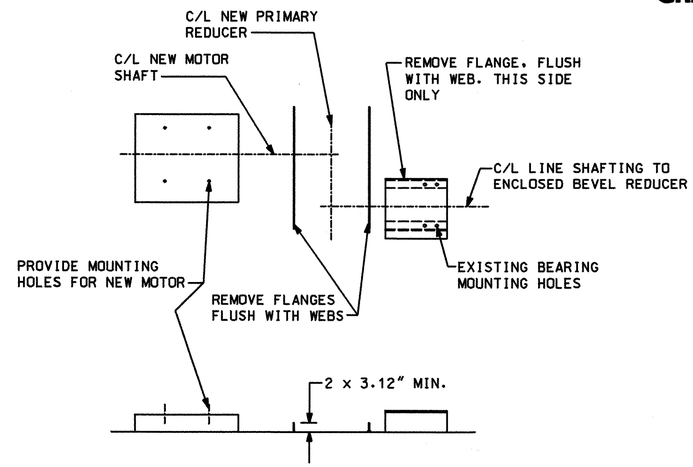

MODIFIED MACHINERY HOUSE GRILLAGE

NO SCALE

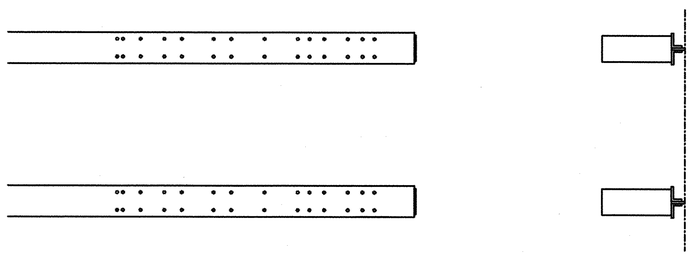

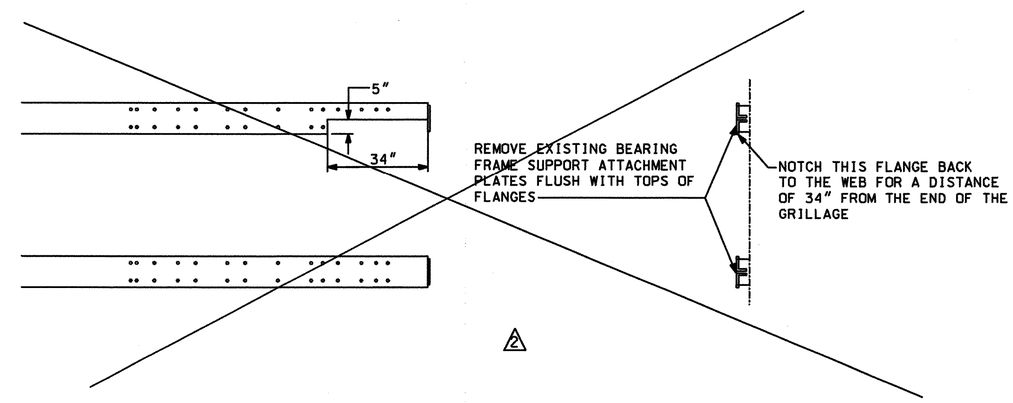

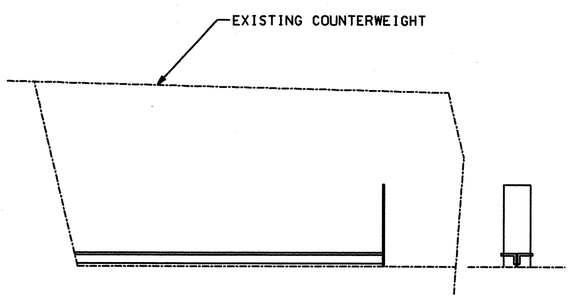

EXISTING COUNTERWEIGHT GRILLAGE

NO SCALE

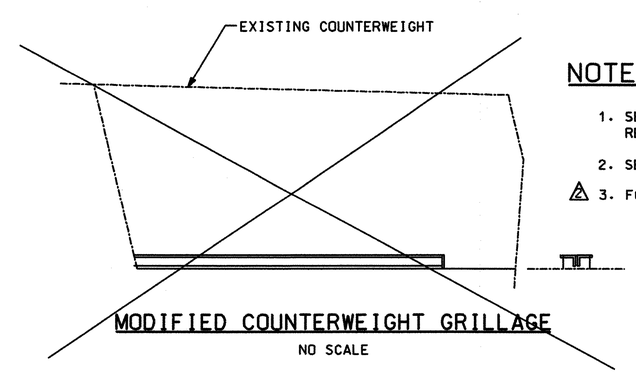

MODIFIED COUNTERWEIGHT GRILLAGE

NO SCALE

NOTES:

1. SEE SPECIFICATIONS FOR ADDITIONAL NOTES AND REQUIREMENTS.
2. SEE DRAWING M3 FOR GENERAL MACHINERY NOTES.
3. (2) FOR MODIFIED COUNTERWEIGHT GRILLAGE, SEE SHEET M7A.

CADD DESIGN _____ DESIGN _____ CHKD. _____

scale.pdf Tuesday, October 21, 2003

BR. I-668	CONTRACT	COUNTY	FEDERAL AID PROJECT NO.	SHEET NO.	TOTAL SHTS.
	21-074-07	NEW CASTLE	EBHN-N029 (2)	78	169

NEW MACHINERY LAYOUT - 1

BR 688
SOUTH MARKET STREET BRIDGE REHABILITATION

REVISIONS

AS BUILT

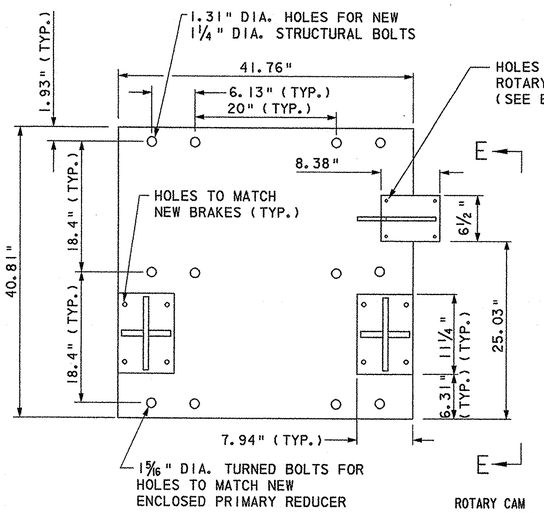

DETAIL C
NEW PRIMARY REDUCER BEDPLATE WELDMENT
SCALE: 1" = 1'-0"

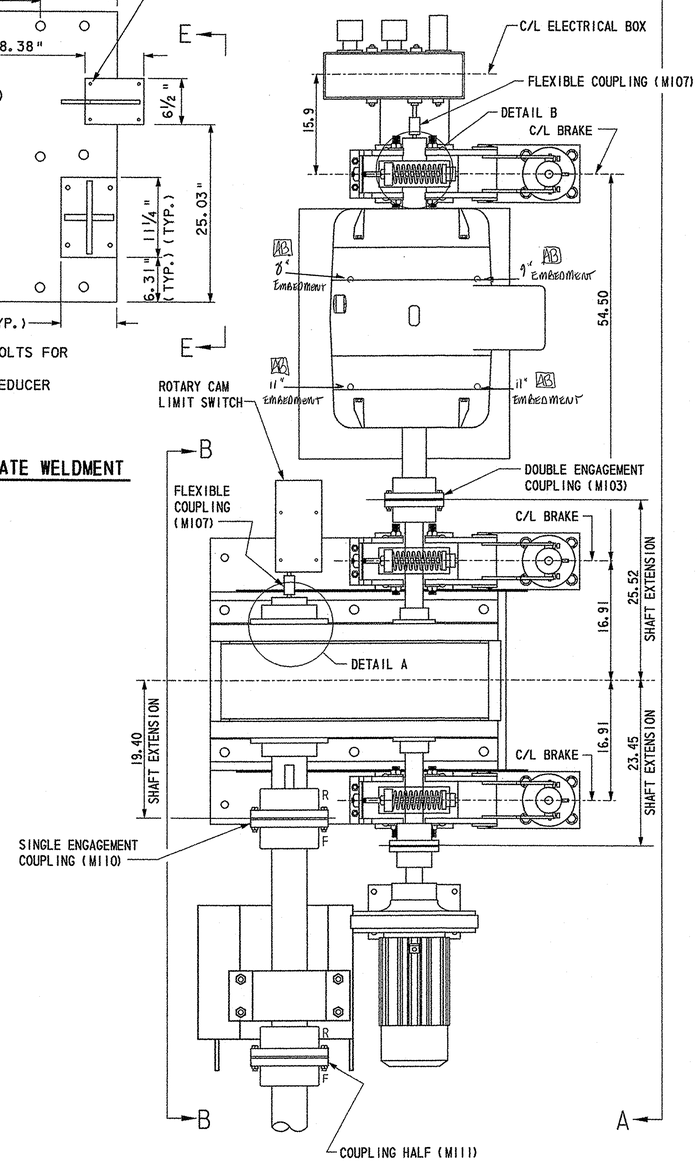

GRILLAGE OMITTED FOR CLARITY

NEW MACHINERY LAYOUT - PLAN
SCALE: 1" = 1'-0"

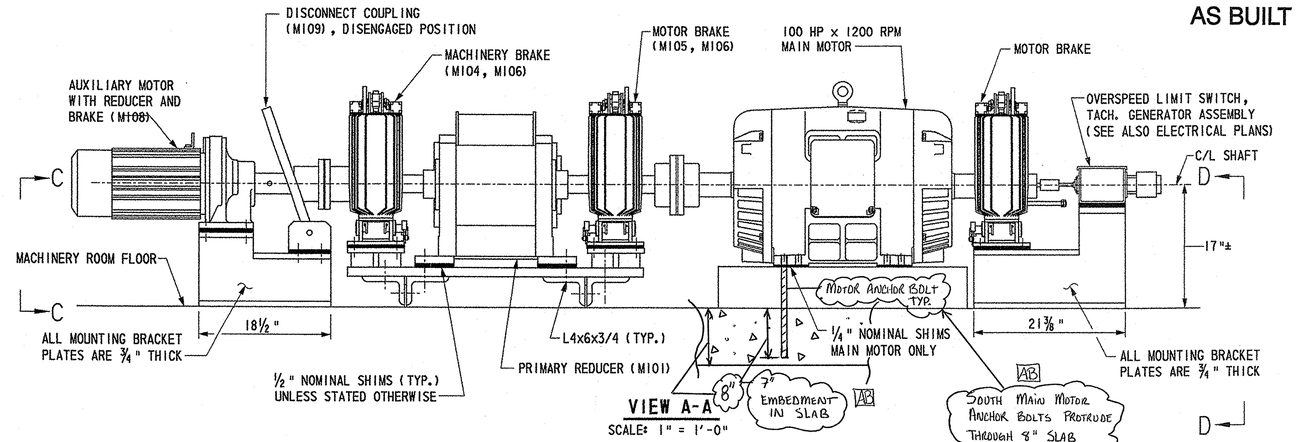

VIEW A-A
SCALE: 1" = 1'-0"

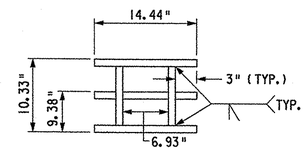

VIEW C-C
SCALE: 1" = 1'-0"

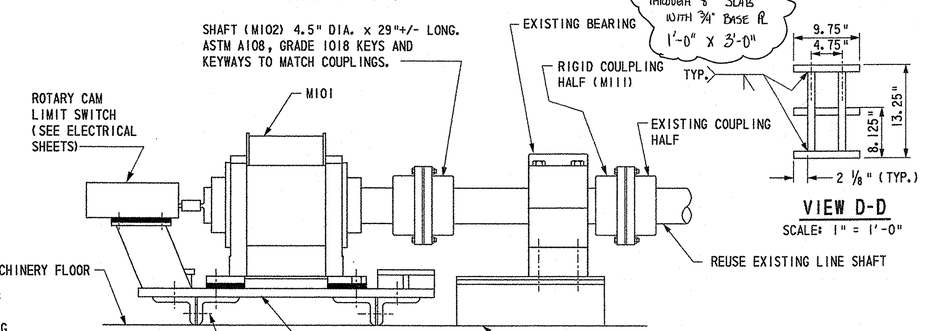

VIEW D-D
SCALE: 1" = 1'-0"

VIEW B-B
SCALE: 1" = 1'-0"

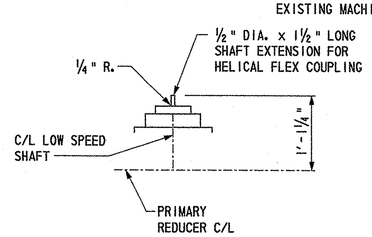

DETAIL A
SCALE: 1" = 1'-0"

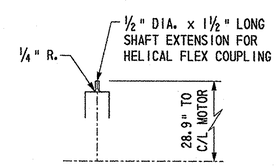

DETAIL B
SCALE: 1" = 1'-0"

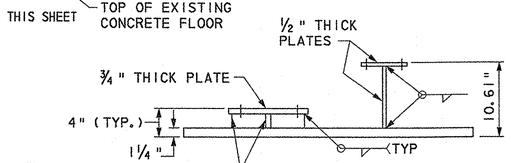

VIEW E-E
SCALE: 1" = 1'-0"

NOTES:

1. ALL ITEMS ON THIS SHEET ARE NEW, UNLESS NOTED OTHERWISE.
2. FOR NEW MAIN MOTOR, ROTARY CAM LIMIT SWITCH, AND OVERSPEED LIMIT SWITCH/ TACH. GENERATOR ASSEMBLY, REFER TO ELECTRICAL SYSTEM PLANS AND SPECIFICATIONS.
3. FOR MXXX NUMBER REFERENCING AND GENERAL MACHINERY NOTES, SEE DRAWING M3.
4. SEE SPECIFICATIONS FOR ADDITIONAL NOTES AND REQUIREMENTS.
5. ALL KEYS AND KEYWAYS ON THE MAIN MOTOR SHAFT CENTERLINE SHALL BE SINGLE ⅝" SQUARE WITH LENGTHS TO MATCH MATING COMPONENTS.
6. ALL KEYS AND KEYWAYS BETWEEN THE PRIMARY REDUCER (M101) AND ENCLOSED BEVEL REDUCER (M113, DRAWING M6) SHALL BE ¾" MINIMUM SQUARE WITH LENGTHS TO MATCH EXISTING COMPONENTS.
7. LOCATIONS WITH FLEXIBLE COUPLINGS (M107) SHALL HAVE KEYS AND KEYWAYS TO MATCH MATING COMPONENTS.
8. ALL DIMENSIONS ARE REFERENCE. CONTRACTOR SHALL SPECIFY ACTUAL DIMENSIONS BASED UPON FIELD MEASUREMENTS, COMPONENTS AND GEOMETRY.

M6

9/21/2006 21-074-07

CADD DESIGN TBD DESIGN JEM CHKD. DMB

FEET/12/1000

TEXT SIZE REFERENCE
.125
.1875
.25

BR. I-688	CONTRACT	COUNTY	FEDERAL AID PROJECT NO.	SHEET NO.	TOTAL SHTS.
	21-074-07	NEW CASTLE	EBHN-N029 (2)	79	169

NEW MACHINERY LAYOUT - 2

BR 688
SOUTH MARKET STREET BRIDGE REHABILITATION

REVISIONS	
ADDENDUM 2 10/16/03 DMB	CHANGE CALLOUTS
ADDENDUM 3 10/17/03 DLM	REPLACE SHEET

2 FOR NEW DETAILS, SEE SHEET M7A.

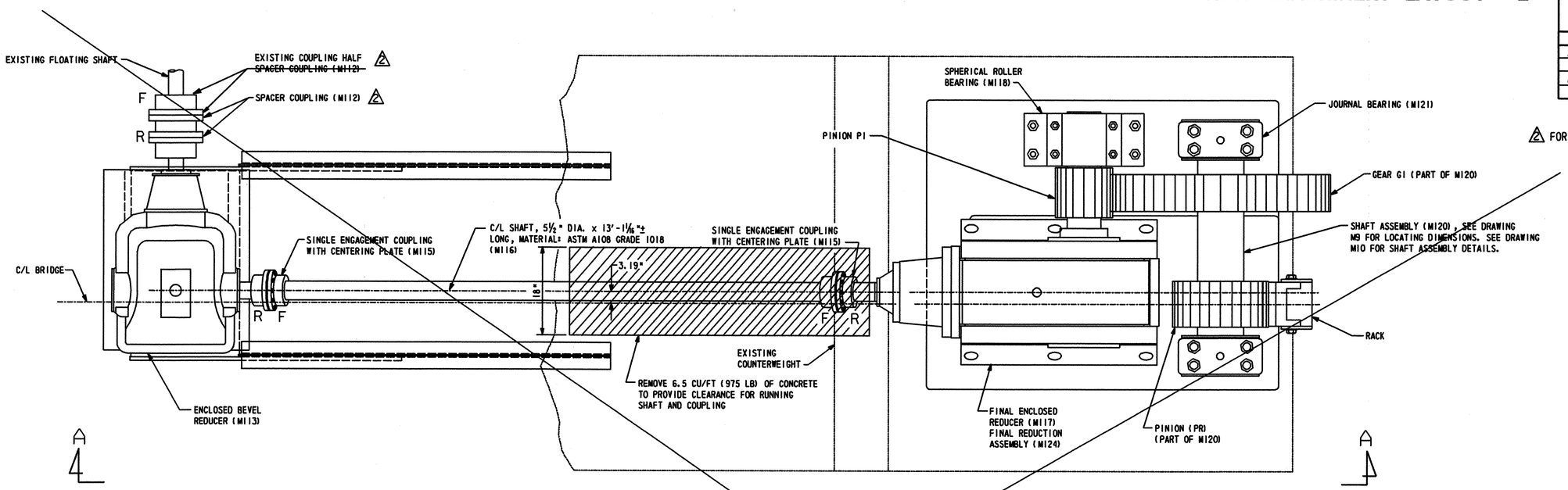

NEW LINE SHAFT AND FINAL GEARING LAYOUT

SCALE: ¾" = 1'-0"

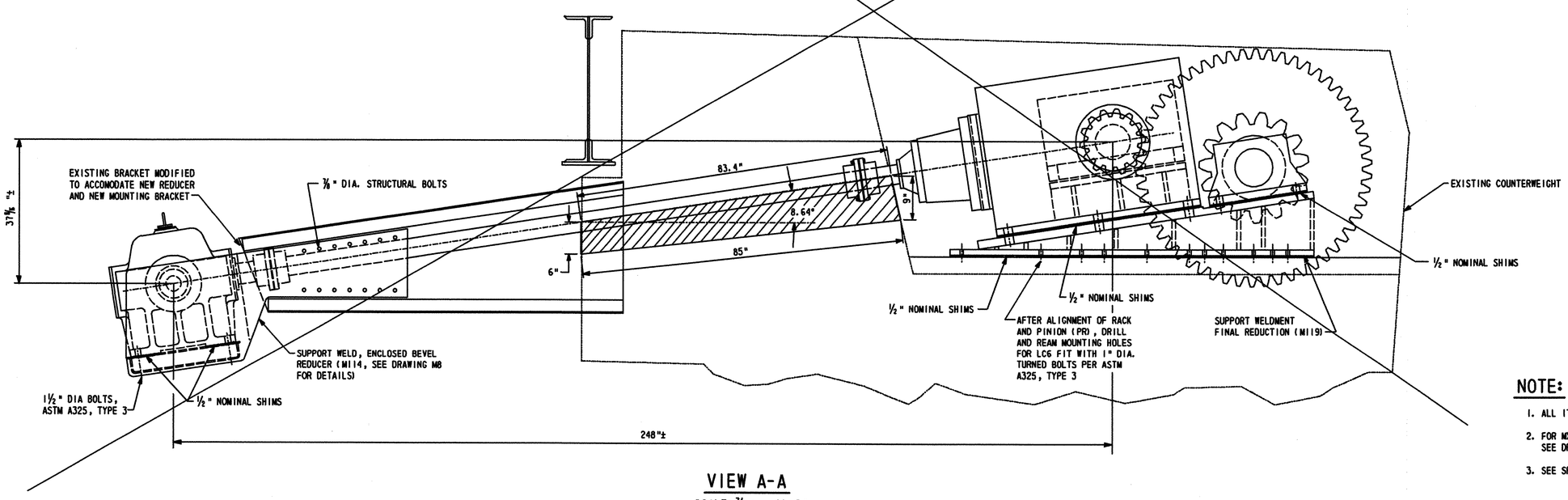

VIEW A-A

SCALE: ¾" = 1'-0"

NOTE:

1. ALL ITEMS ON THIS SHEET ARE NEW, UNLESS OTHERWISE NOTED.
2. FOR MXX NUMBER REFERENCING AND GENERAL MACHINERY NOTES, SEE DRAWING M3.
3. SEE SPECIFICATIONS FOR ADDITIONAL NOTES AND REQUIREMENTS.

CADD DESIGN _____ DESIGN _____ CHKD. _____

M7

scale pdf Tuesday, October 21, 2003

FEET/12/1000

TEXT SIZE REFERENCE
.125
.1875
.25

BR. I-688	CONTRACT	COUNTY	FEDERAL AID PROJECT NO.	SHEET NO.	TOTAL SHTS.
	21-074-07	NEW CASTLE	EBHN-N029 (2)	79A	169

NEW MACHINERY LAYOUT - 2

BR 688
SOUTH MARKET STREET BRIDGE REHABILITATION

REVISIONS

ADDENDUM	SHEET REPLACED
10/16/03 DLM/DMB	

AS BUILT

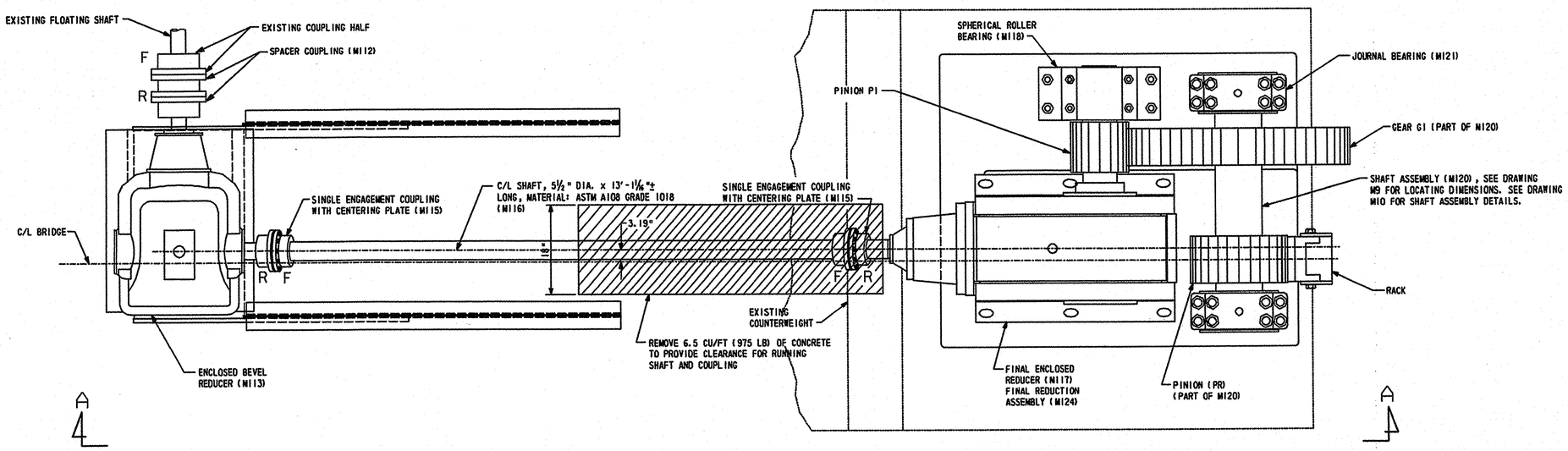

NEW LINE SHAFT AND FINAL GEARING LAYOUT

SCALE: ¾" = 1'-0"

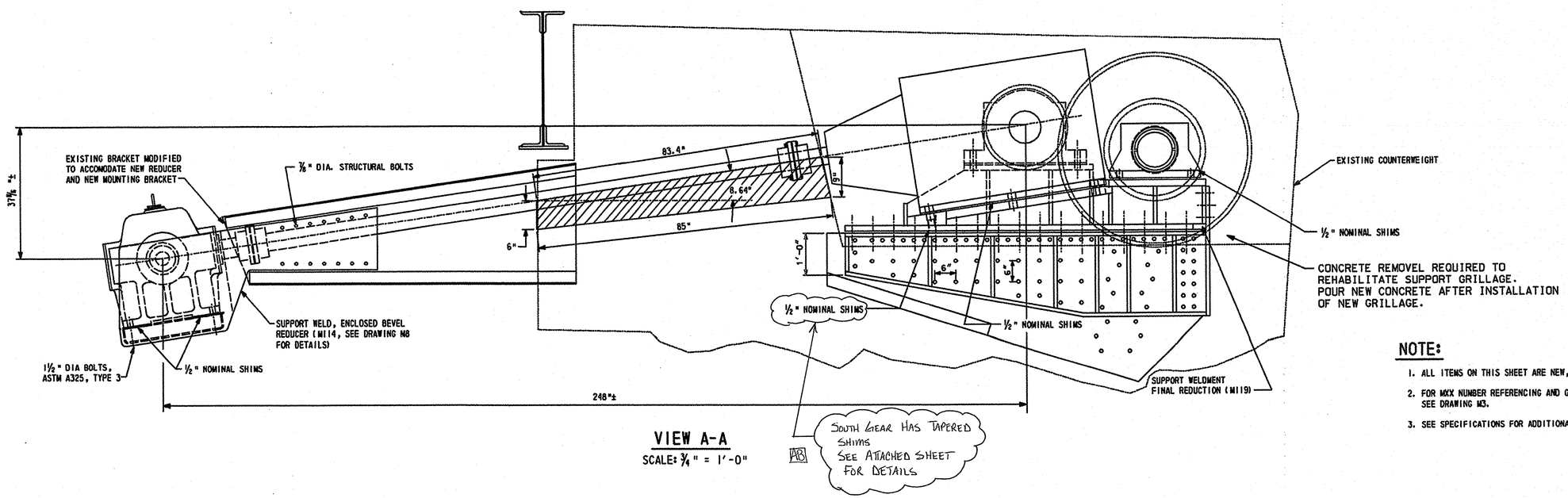

VIEW A-A

SCALE: ¾" = 1'-0"

NOTE:

1. ALL ITEMS ON THIS SHEET ARE NEW, UNLESS OTHERWISE NOTED.
2. FOR MXX NUMBER REFERENCING AND GENERAL MACHINERY NOTES, SEE DRAWING M3.
3. SEE SPECIFICATIONS FOR ADDITIONAL NOTES AND REQUIREMENTS.

M7A

CADD DESIGN _____ DESIGN _____ CHKD. _____

scale pdf 9/21/2006 Tuesday, October 21, 2003

ADDITIONAL SHEET TO M7A
SOUTH SIDE FINAL GEARING
TAPERED SHIM DIMENSIONS.
MATERIAL: GRADE 50
NOT TO SCALE

WEST SHIM

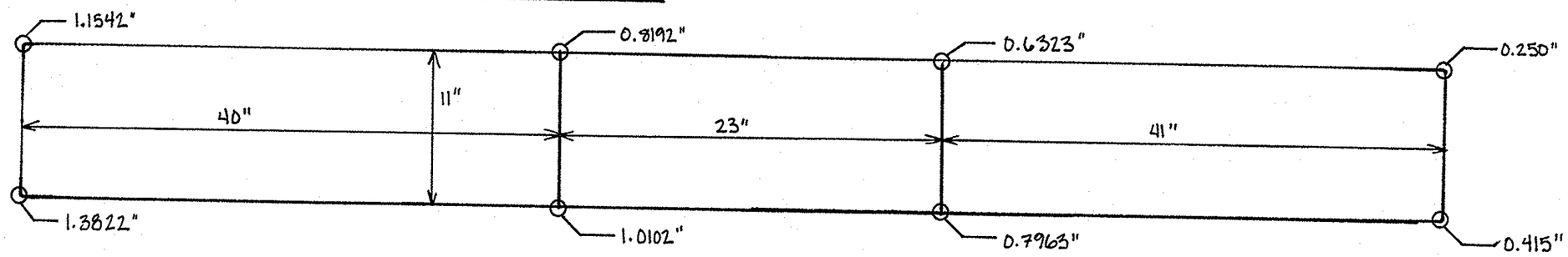

NORTH.

EAST SHIM

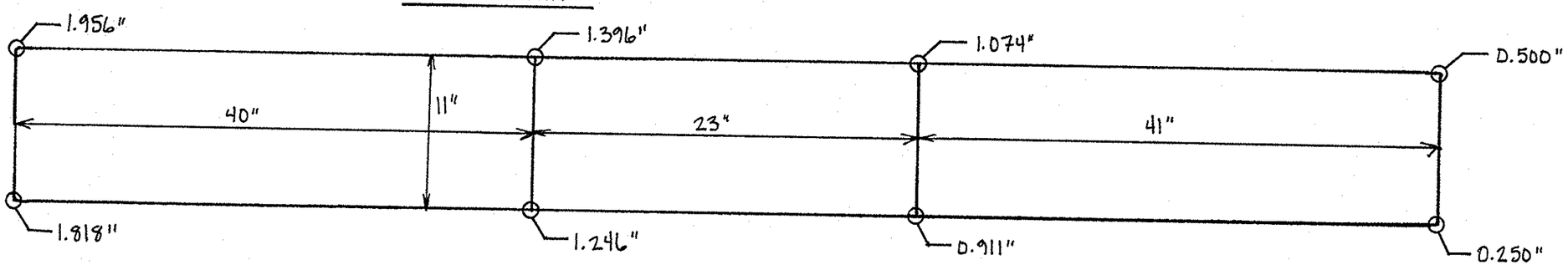

BR. 1-668	CONTRACT	COUNTY	FEDERAL AID PROJECT NO.	SHEET NO.	TOTAL SHTS.
	21-074-07	NEW CASTLE	EBHN-N029 (2)	80	169

BR 688
SOUTH MARKET STREET BRIDGE REHABILITATION

REVISIONS

AS BUILT

SUPPORT WELDMENT - ENCLOSED BEVEL REDUCER

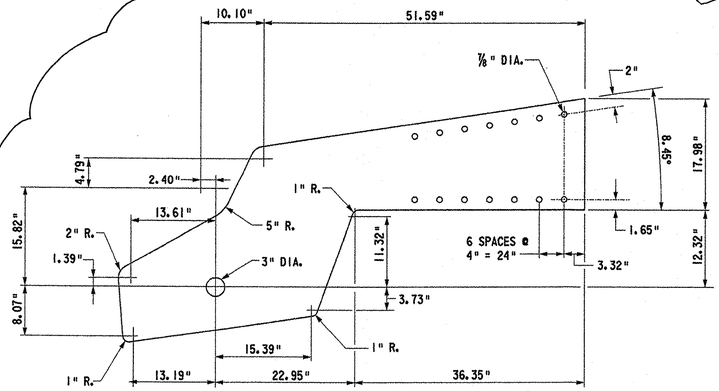

SIDE PLATE DETAIL, 1.5" THICK

SCALE: 3/4" = 1'-0"
(4 REQUIRED)

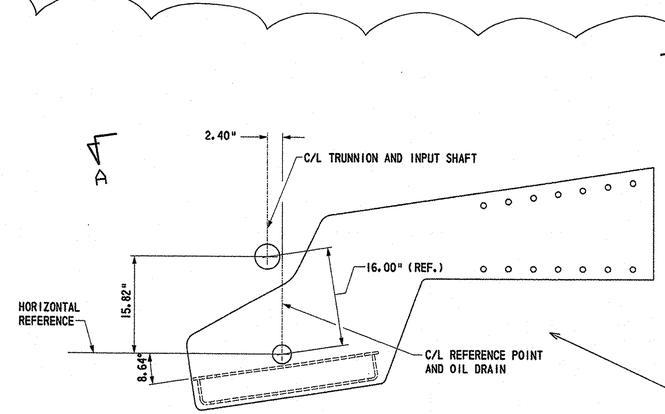

SUPPORT WELDMENT, ENCLOSED BEVEL REDUCER (M114)

SCALE: 3/4" = 1'-0"
(2 REQUIRED)

[AB] SUPPORT WELDMENT MODIFICATIONS SEE SHEET 8DA

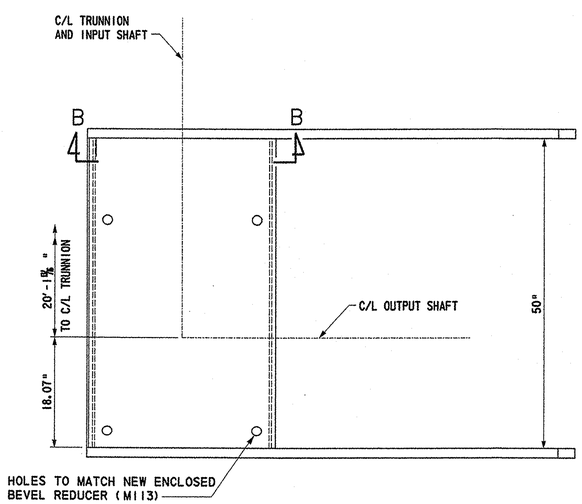

VIEW A-A

SCALE: 3/4" = 1'-0"

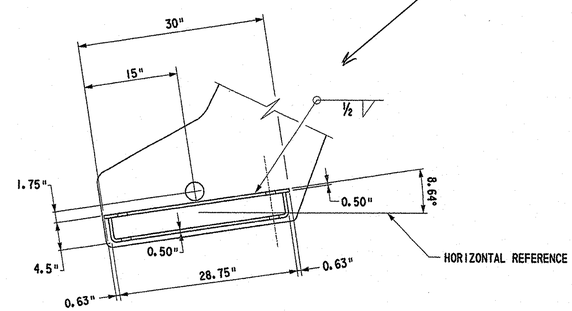

SECTION B-B

SCALE: 3/4" = 1'-0"

NOTE:

1. SEE SPECIFICATIONS FOR ADDITIONAL NOTES AND REQUIREMENTS.
2. SEE DRAWING M3 FOR GENERAL MACHINERY NOTES.
3. ALL STEEL SHALL CONFORM TO ASTM A572, GRADE 50.

CADD DESIGN TBD DESIGN JEM CHKD. DMB

9/21/2006 21-074-07

BR. 1-668	CONTRACT	COUNTY	FEDERAL AID PROJECT NO.	SHEET NO.	TOTAL SHTS.
	21-074-07	NEW CASTLE	EBHN-N029 (2)	81	169

FINAL REDUCTION ASSEMBLY

BR 688
SOUTH MARKET STREET BRIDGE REHABILITATION

REVISIONS

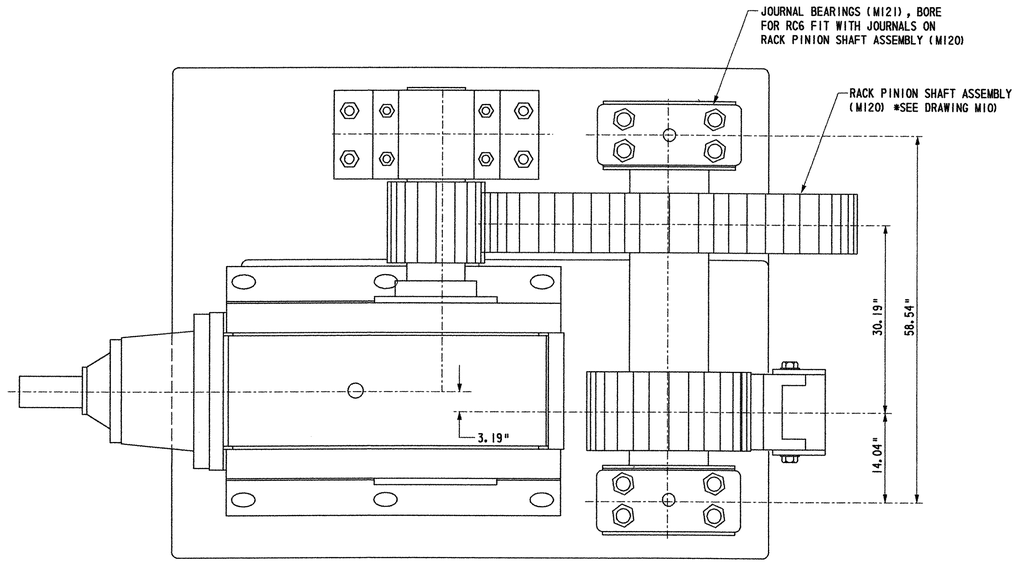

VIEW A-A

SCALE: 3/4" = 1'-0"

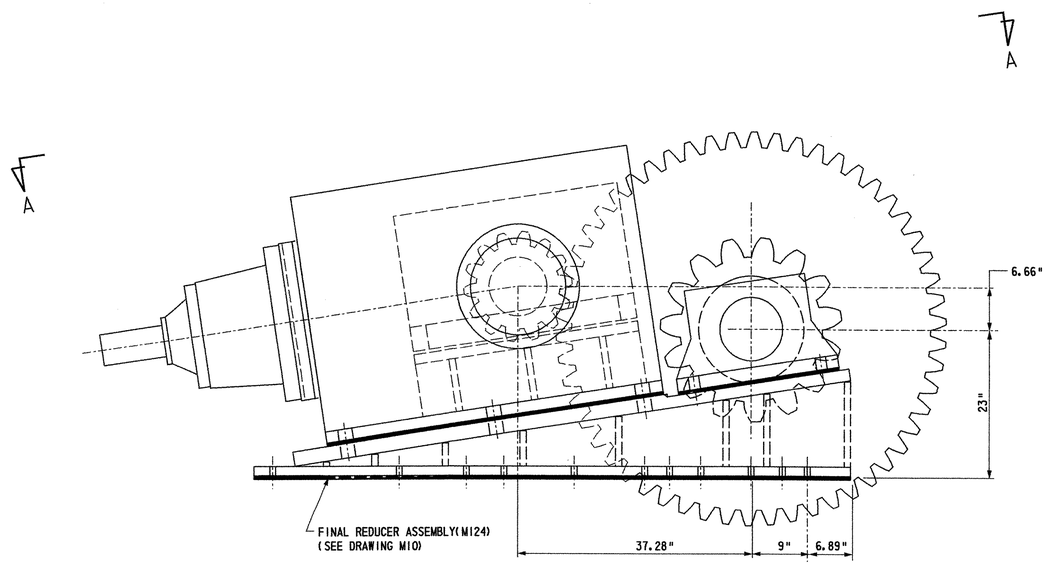

FINAL REDUCER ASSEMBLY

SCALE: 3/4" = 1'-0"

NOTE:

1. SEE SPECIFICATIONS FOR ADDITIONAL NOTES AND REQUIREMENTS.
2. SEE DRAWING M3 FOR GENERAL MACHINERY NOTES.

CADD DESIGN TBD DESIGN JEM CHKD. DMB

FEET/12/1000

TEXT SIZE REFERENCE
.125
.1875
.25

BR. I-688	CONTRACT	COUNTY	FEDERAL AID PROJECT NO.	SHEET NO.	TOTAL SHTS.
	21-074-07	NEW CASTLE	EBHN-N029 (2)	82	169

BR 688
SOUTH MARKET STREET BRIDGE REHABILITATION

REVISIONS

ADDENDUM 2 10/16/03	NOTE ADDED
DLM	

FINAL REDUCTION ASSEMBLY DETAILS

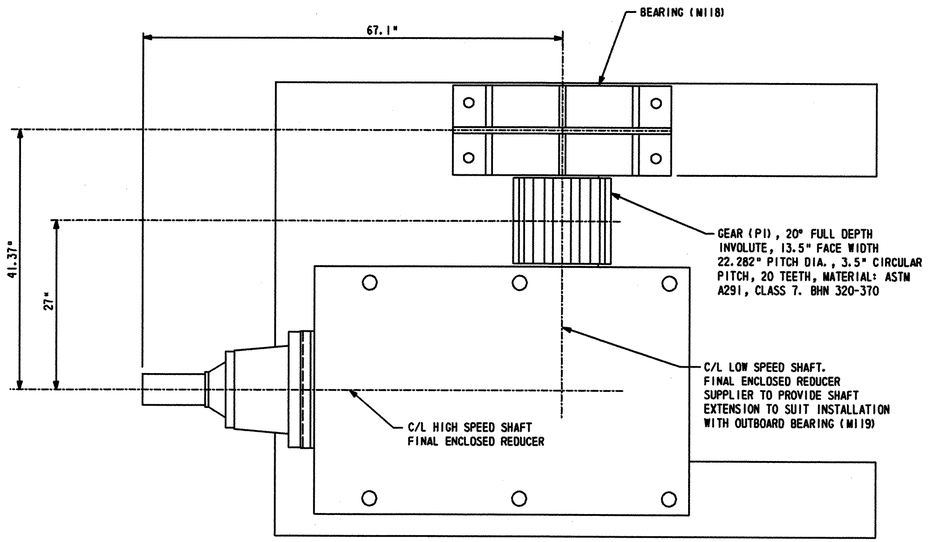

VIEW A-A
SCALE: 3/4" = 1'-0"

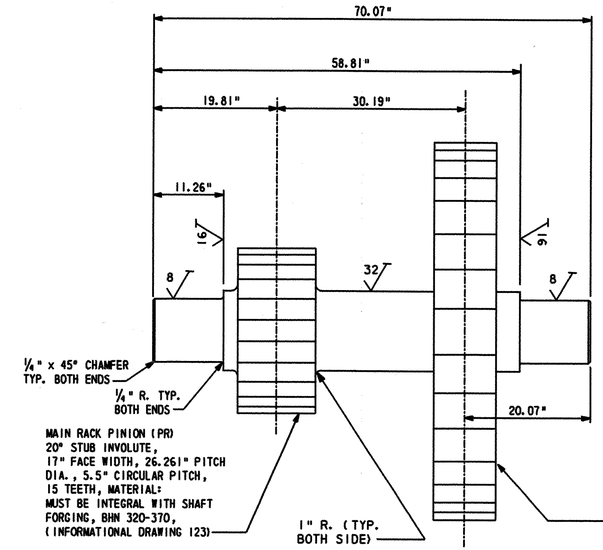

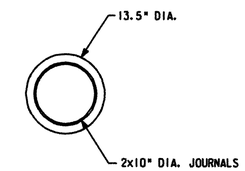

SHAFT - END VIEW
SCALE: 3/4" = 1'-0"
GEAR NOT SHOWN FOR CLARITY

RACK PINION SHAFT ASSEMBLY (M120)
SHAFT MAT'L: ASTM A291, CLASS 7
GEARS AS NOTED
SCALE: 3/4" = 1'-0"

A

A

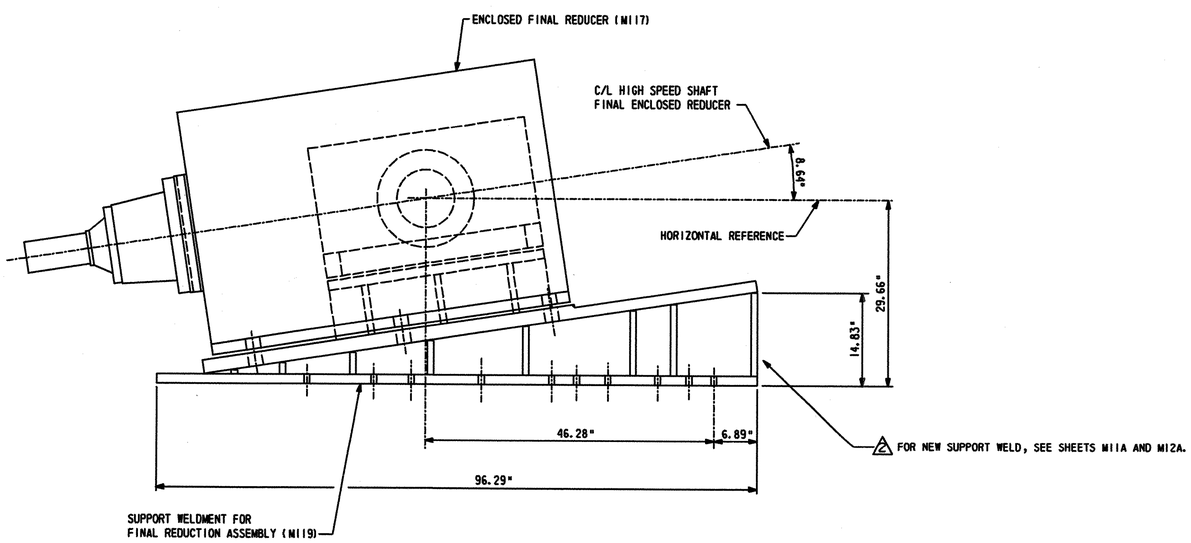

FINAL ENCLOSED REDUCER ASSEMBLY (M124)
(PURCHASE FROM FINAL ENCLOSED REDUCER SUPPLIER)
SCALE: 3/4" = 1'-0"

NOTE:
1. SEE SPECIFICATIONS FOR ADDITIONAL NOTES AND REQUIREMENTS.
2. SEE DRAWING M3 FOR GENERAL MACHINERY NOTES.

CADD DESIGN ____ DESIGN ____ CHKD. ____

scale.pdf Tuesday, October 21, 2003

FEET/12/1000

TEXT SIZE REFERENCE
.125
.1875
.25

BR. I-688	CONTRACT	COUNTY	FEDERAL AID PROJECT NO.	SHEET NO.	TOTAL SHTS.
	21-074-07	NEW CASTLE	EBHN-N029 (2)	83	169

BR 688
SOUTH MARKET STREET BRIDGE REHABILITATION

REVISIONS	
ADDENDUM 2 10/16/03 DLM	SHEET REPLACED

SUPPORT WELDMENT - FINAL REDUCTION (M119)

2 FOR NEW DETAILS, SEE SHEET M11A.

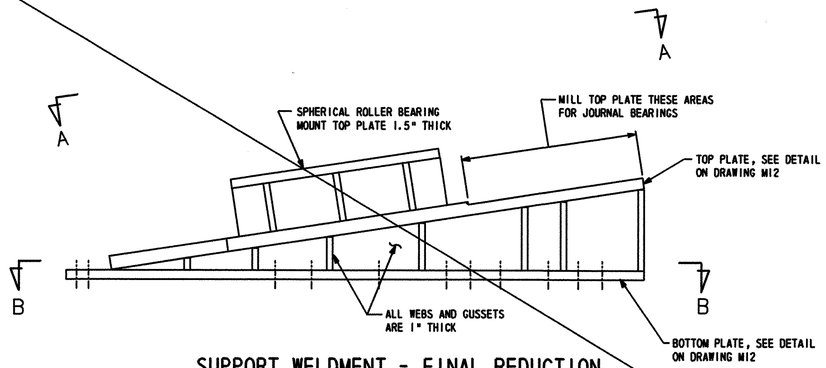

SUPPORT WELDMENT - FINAL REDUCTION
SCALE: 3/4" = 1'-0"

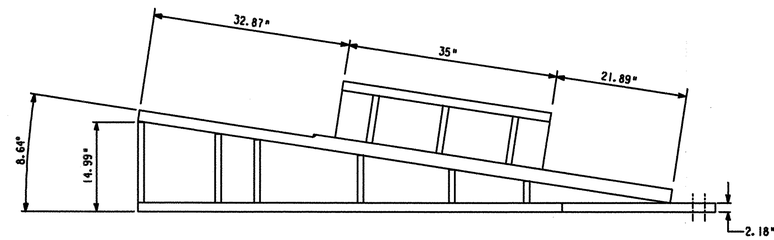

VIEW C-C
SCALE: 3/4" = 1'-0"

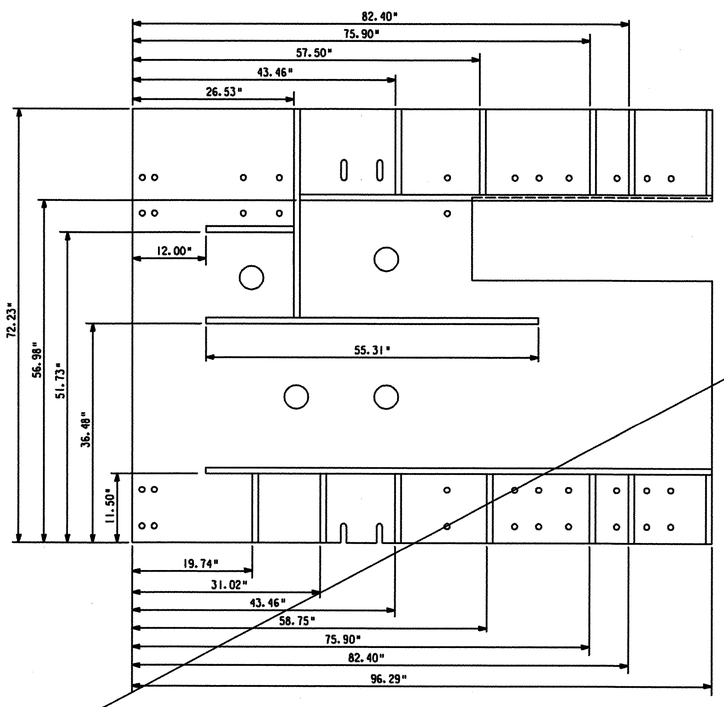

VIEW B-B
SCALE: 3/4" = 1'-0"

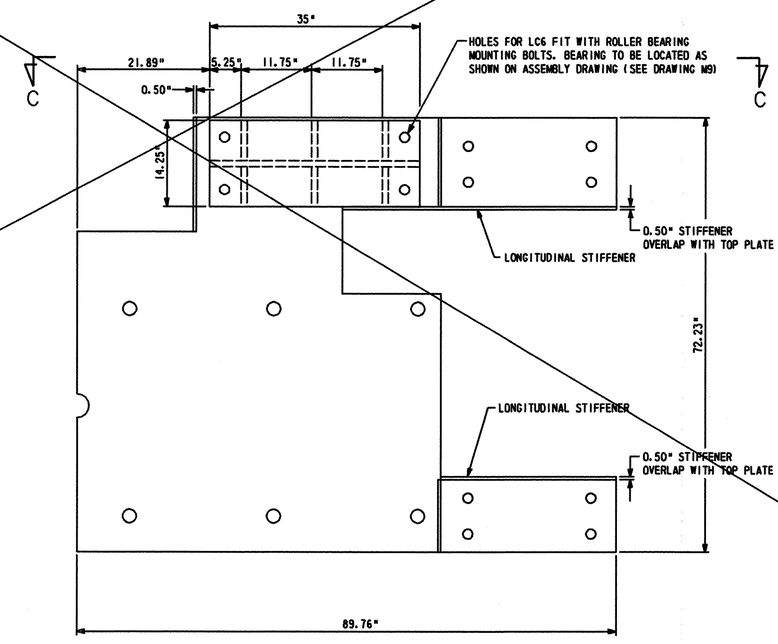

VIEW A-A
SCALE: 3/4" = 1'-0"

NOTE:

1. SEE SPECIFICATIONS FOR ADDITIONAL NOTES AND REQUIREMENTS.
2. SEE DRAWING M3 FOR GENERAL MACHINERY NOTES.
3. ALL PLATES ASTM A572, GRADE 50.

CADD DESIGN _____ DESIGN _____ CHKD. _____

M11

scale_pdf Tuesday, October 21, 2003

FEET/12/1000

TEXT SIZE REFERENCE
.125
.1875
.25

BR. I-688	CONTRACT	COUNTY	FEDERAL AID PROJECT NO.	SHEET NO.	TOTAL SHTS.
	21-074-07	NEW CASTLE	EBHN-N029 (2)	83A	169

BR 688
SOUTH MARKET STREET BRIDGE REHABILITATION

REVISIONS	
ADDENDUM △ 10/16/03 DLM	REPLACEMENT SHEET

SUPPORT WELDMENT - FINAL REDUCTION (M119)

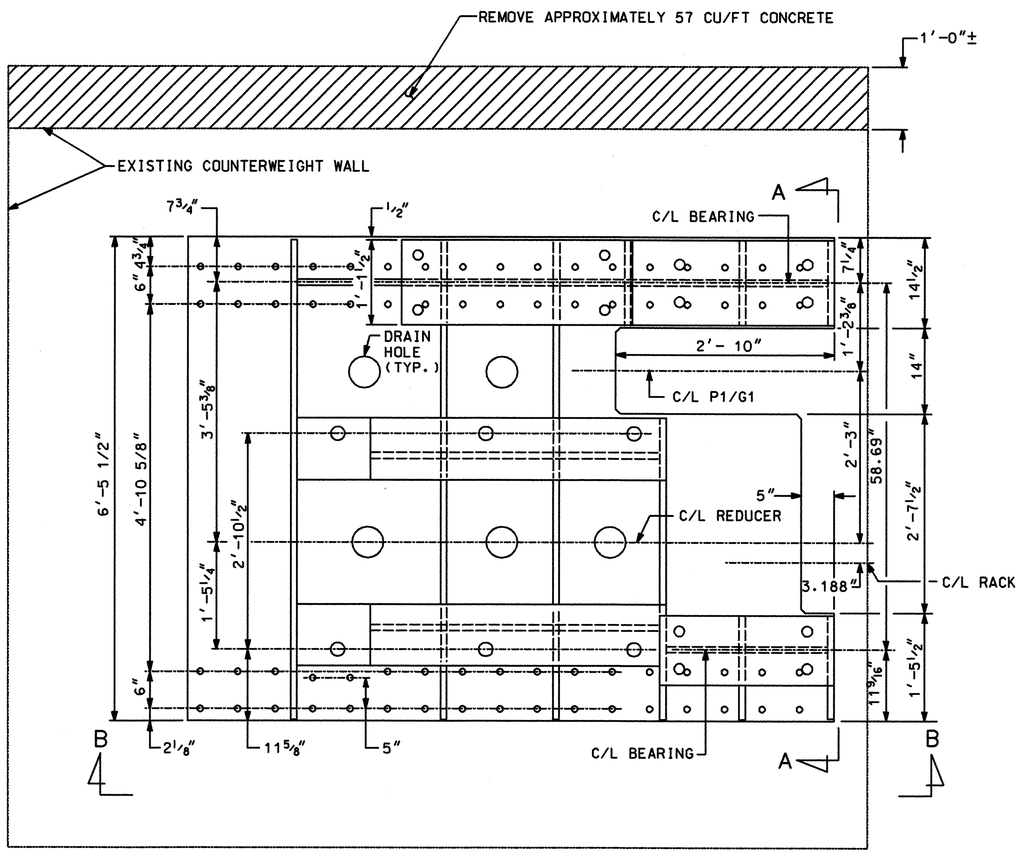

SUPPORT WELDMENT - FINAL REDUCTION

SCALE: 3/4 " = 1'-0"

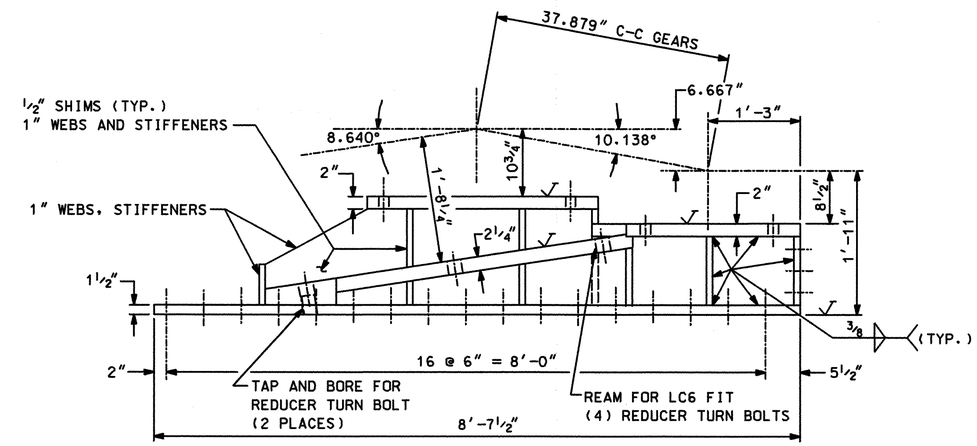

VIEW B-B

SCALE: 3/4 " = 1'-0"

NOTES:

1. FOR VIEW A-A, SEE SHEET M12A.

CADD DESIGN ____ DESIGN ____ CHKD. ____

M11A

scale.pdf Tuesday, October 21, 2003

FEET/12/1000

TEXT SIZE REFERENCE
.125
.1875
.25

BR. I-688	CONTRACT	COUNTY	FEDERAL AID PROJECT NO.	SHEET NO.	TOTAL SHTS.
	21-074-07	NEW CASTLE	EBHN-N029 (2)	84	169

FINAL REDUCER SUPPORT - DETAILS

BR 688
SOUTH MARKET STREET BRIDGE REHABILITATION

REVISIONS	
ADDENDUM 2 10/16/03 DLM	SHEET REPLACED

2 FOR NEW DETAILS, SEE SHEET M12A.

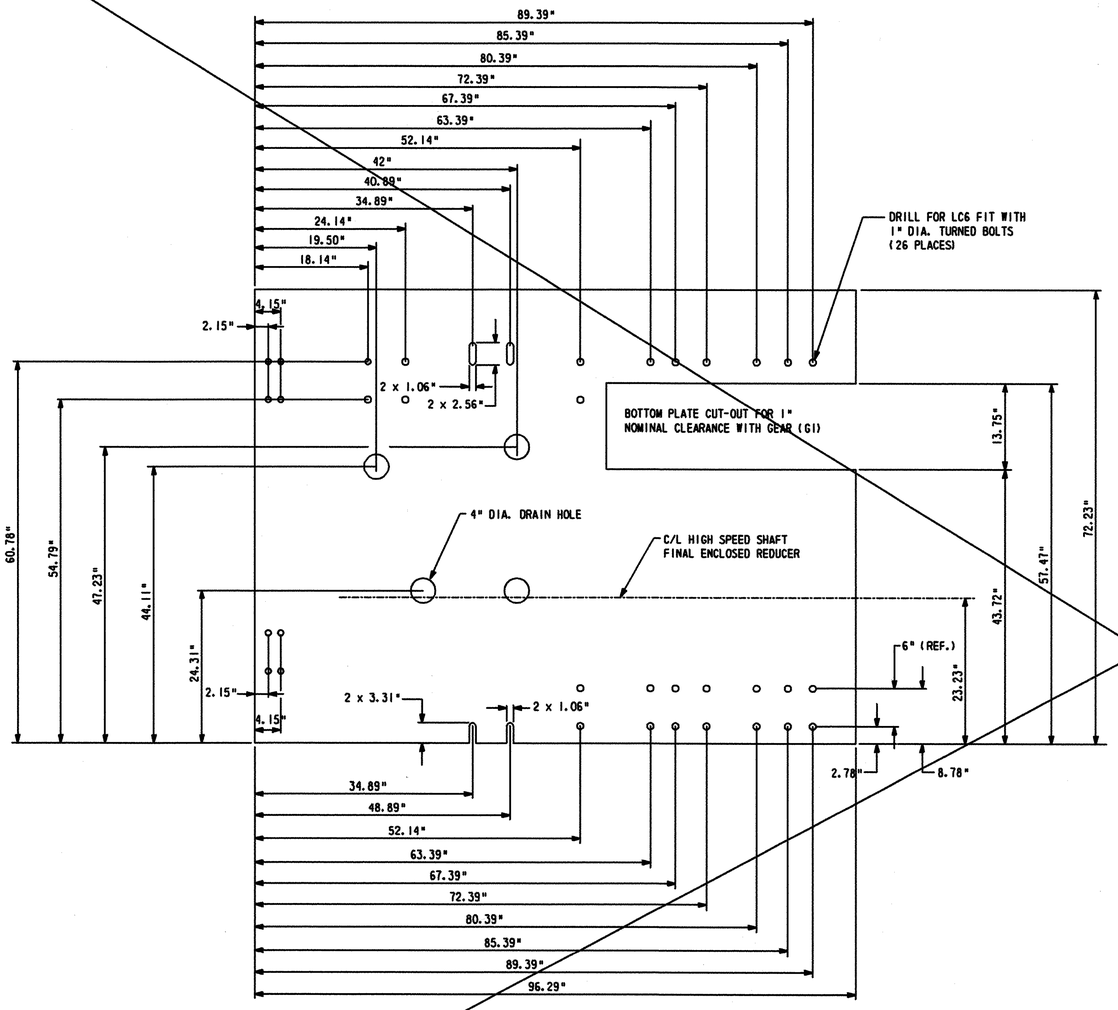

BOTTOM PLATE

MAT'L: ASTM A572 GRADE 50, 1.5" THICK
(2 REQUIRED)
SCALE: 3/4" = 1'-0"

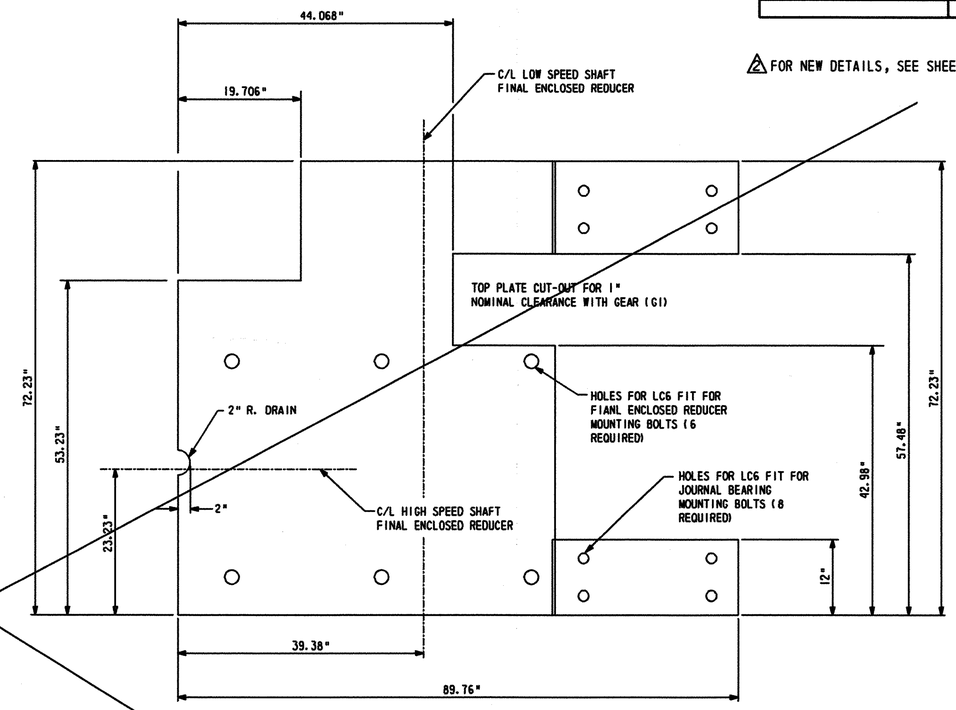

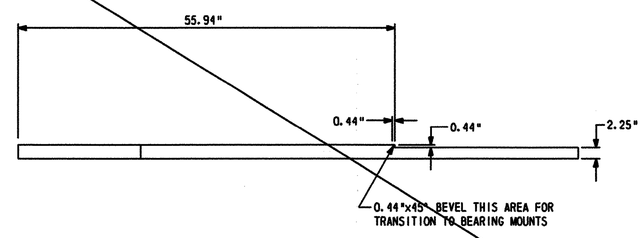

TOP PLATE

MAT'L: ASTM A572 GRADE 50, 2.25" THICK
(2 REQUIRED)
SCALE: 3/4" = 1'-0"

1. SEE SPECIFICATIONS FOR ADDITIONAL NOTES AND REQUIREMENTS.
2. SEE DRAWING M3 FOR GENERAL MACHINERY NOTES.

M12

CADD DESIGN _____ DESIGN _____ CHKD. _____

scale.pdf Tuesday, October 21, 2003

BR. I-688	CONTRACT	COUNTY	FEDERAL AID PROJECT NO.	SHEET NO.	TOTAL SHTS.
	21-074-07	NEW CASTLE	EBHN-N029 (2)	84A	169

FINAL REDUCER SUPPORT - DETAILS

BR 688
SOUTH MARKET STREET BRIDGE REHABILITATION

REVISIONS	
ADDENDUM A 10/16/03 DLM	REPLACEMENT SHEET

AS BUILT

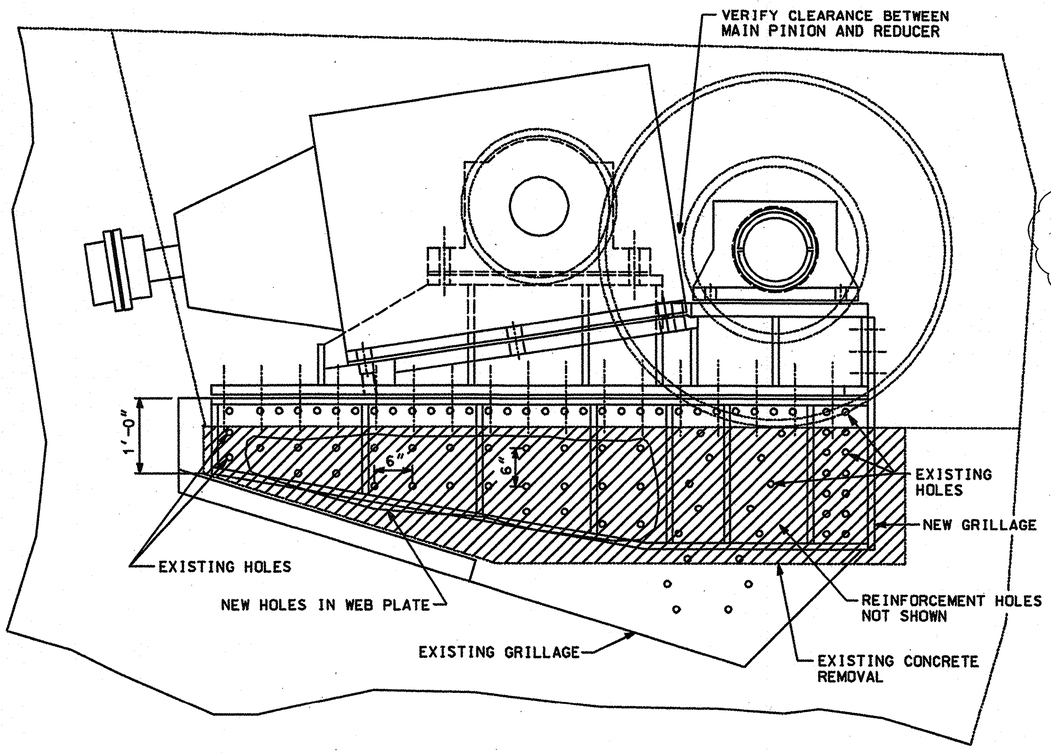

MODIFIED COUNTERWEIGHT GRILLAGE WITH NEW REDUCER SUPPORT

SCALE: 1½" = 1'-0"

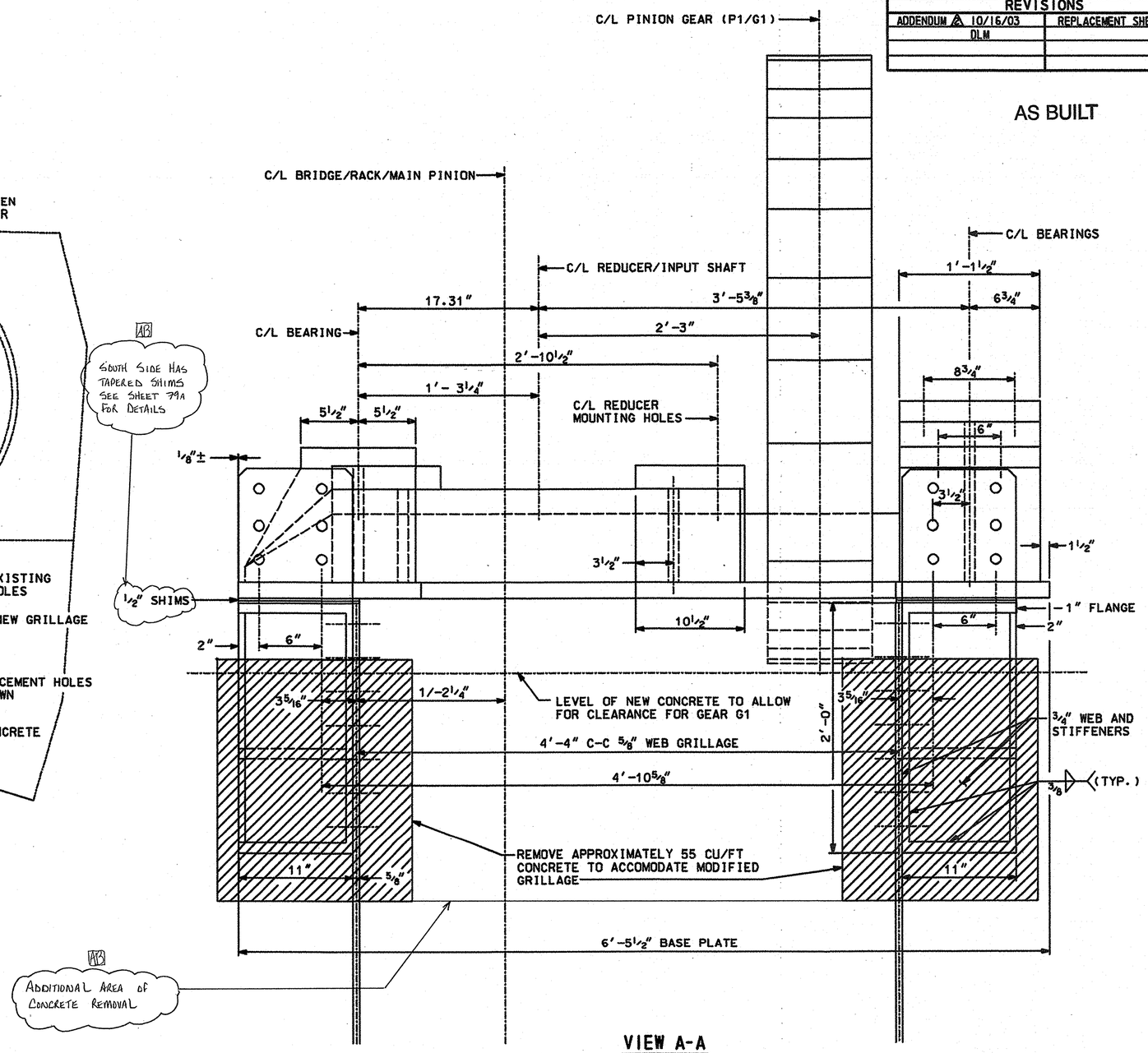

VIEW A-A

SCALE: 1½" = 1'-0"

M12A

9/21/2006 21-074-07

CADD DESIGN ____ DESIGN ____ CHKD. ____

FEET/12/1000

TEXT SIZE REFERENCE
.125
.1875
.25

BR. 1-688	CONTRACT	COUNTY	FEDERAL AID PROJECT NO.	SHEET NO.	TOTAL SHTS.
	21-074-07	NEW CASTLE	EBHN-N029 (2)	84B	169

BR 688
SOUTH MARKET STREET BRIDGE REHABILITATION

REVISIONS

4 NEW SHEET	JFB 4/5/05

MODIFICATIONS TO EXISTING MACHINERY GRILLAGE

AS BUILT

NOTES:

1. FOR NEW FINAL REDUCER SUPPORT DETAILS AND COUNTERWEIGHT CONCRETE REMOVAL LIMITS THAT ARE NOT SHOWN, SEE SHEET "FINAL REDUCER SUPPORT DETAILS".
2. CONCRETE REMOVED FROM COUNTERWEIGHT SHALL BE REPLACED WITH CLASS C CONCRETE. RESTORE EXISTING COUNTERWEIGHT DIMENSIONS.
3. MECHANICAL SPLICE SHALL BE IN ACCORDANCE WITH AASHTO STANDARD SPECIFICATIONS, 17th EDITION.
4. REINFORCEMENT WELDING SHALL BE IN ACCORDANCE AWS D1.4 STRUCTURAL WELDING CODE - REINFORCING STEEL.

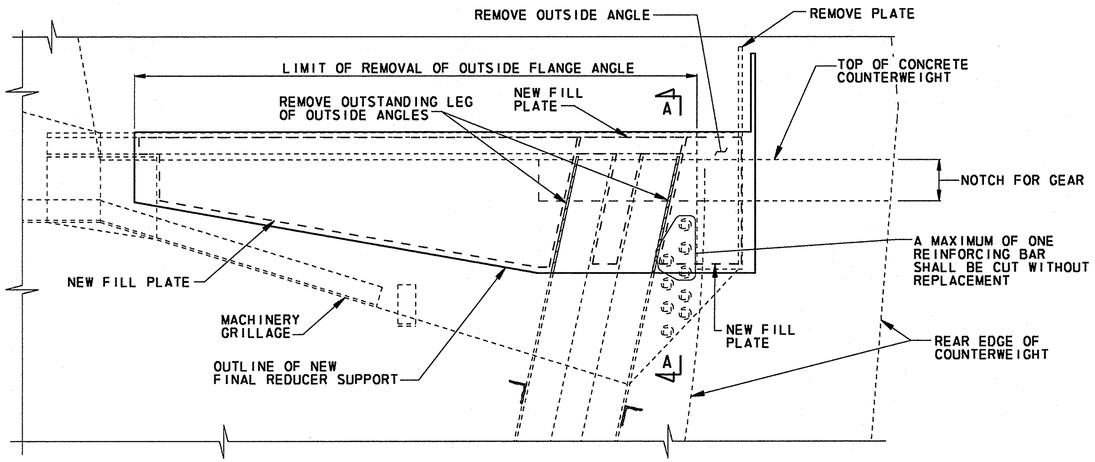

SECTION THROUGH COUNTERWEIGHT AT EXISTING MACHINERY GRILLAGE

SCALE: 1/2" = 1'-0"

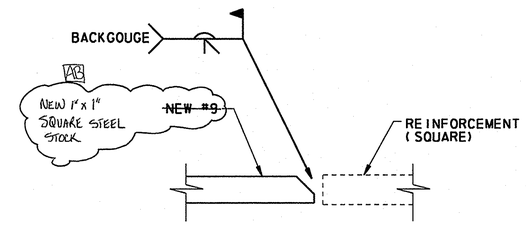

DETAIL A

SCALE: 2" = 1'-0"

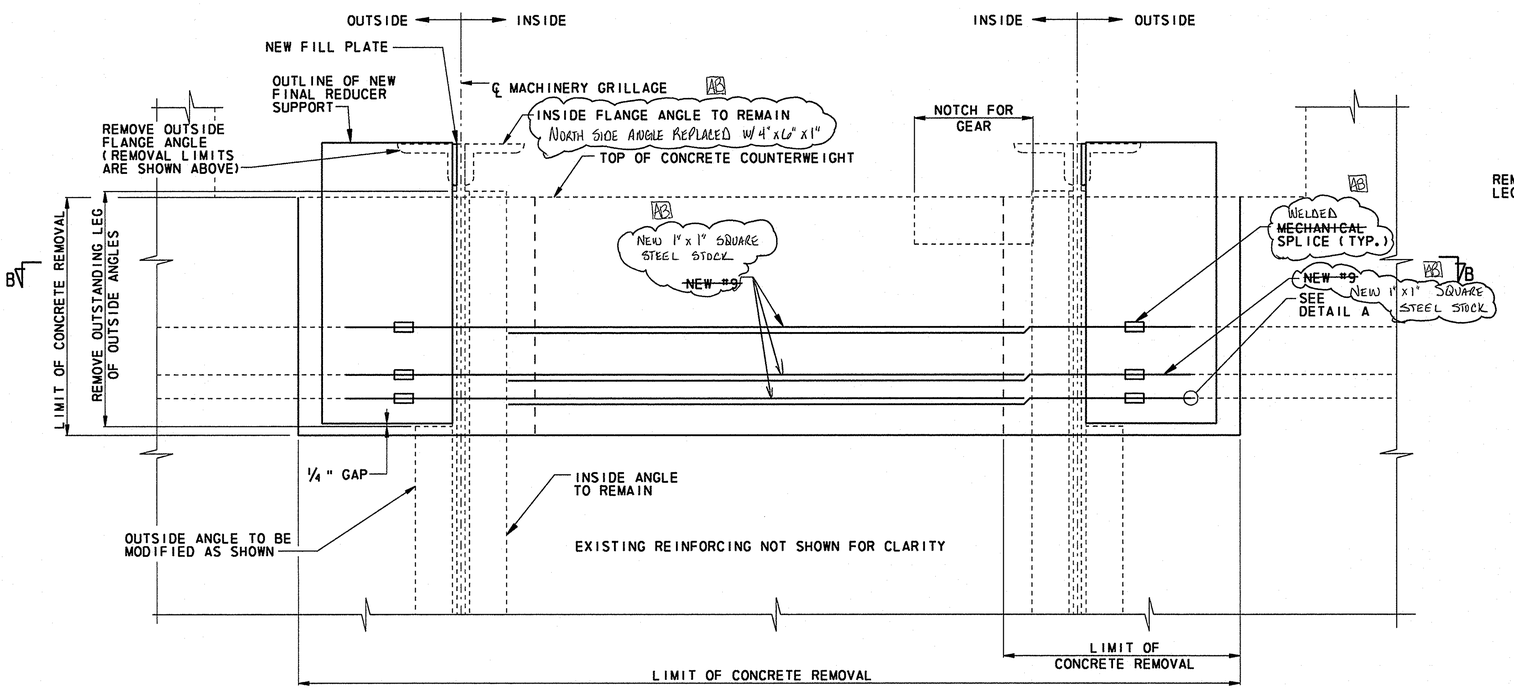

SECTION A-A

SCALE: 1" = 1'-0"

REPAIR INFORMATION IS TYPICAL FOR EACH MACHINERY GRILLAGE SHOWN

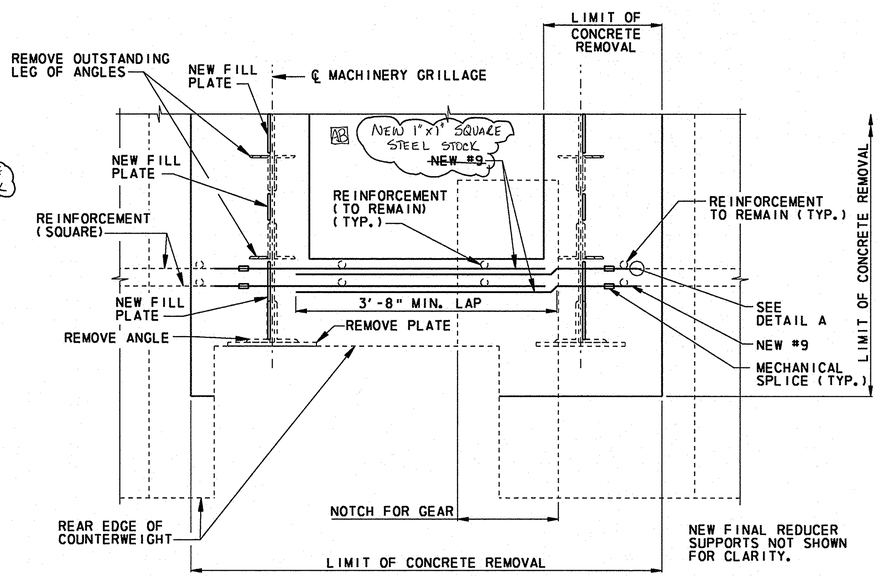

SECTION B-B

SCALE: 1/2" = 1'-0"

REPAIR INFORMATION IS TYPICAL FOR EACH MACHINERY GRILLAGE SHOWN

CADD DESIGN MLA DESIGN REJ CHKD. JFB

BR. I-668	CONTRACT	COUNTY	FEDERAL AID PROJECT NO.	SHEET NO.	TOTAL SHTS.
	21-074-07	NEW CASTLE	EBHN-N029 (2)	85	169

NORTH COUNTERWEIGHT DETAILS

BR 688
SOUTH MARKET STREET BRIDGE REHABILITATION

REVISIONS

AS BUILT

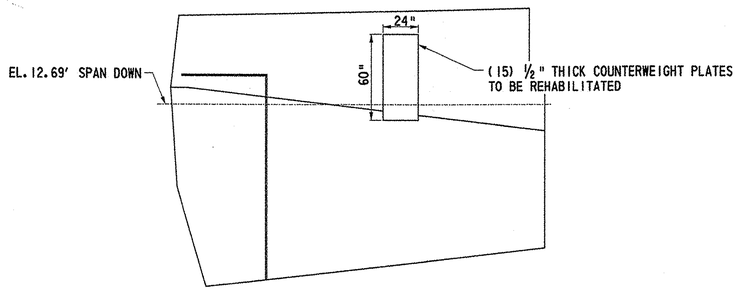

EXISTING NORTH COUNTERWEIGHT - WEST FACE

SCALE: ¼" = 1'-0"

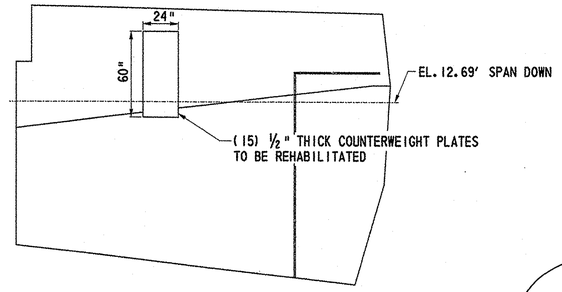

EXISTING NORTH COUNTERWEIGHT - EAST FACE

SCALE: ¼" = 1'-0"

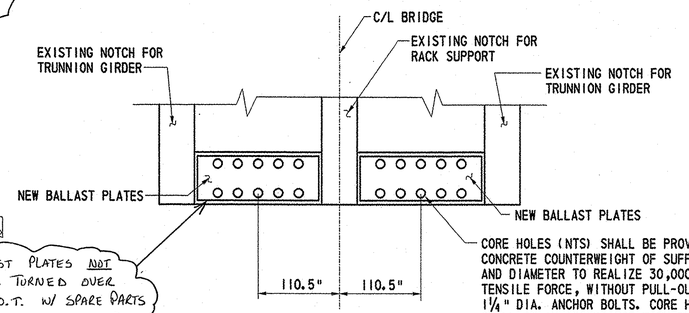

CORE HOLES (NTS) SHALL BE PROVIDED IN THE EXISTING CONCRETE COUNTERWEIGHT OF SUFFICIENT DEPTH AND DIAMETER TO REALIZE 30,000 LBS MINIMUM TENSILE FORCE, WITHOUT PULL-OUT, OF THE NEW 1¼" DIA. ANCHOR BOLTS. CORE HOLE DIMENSIONS SHALL BE IN ACCORDANCE WITH THE SELECTED GROUT MANUFACTURERS RECOMMENDATIONS.

VIEW A-A

SCALE: ½" = 1'-0"

AB

NEW BALLAST PLATES NOT INSTALLED. TURNED OVER TO DEL D.O.T. W/ SPARE PARTS

AB

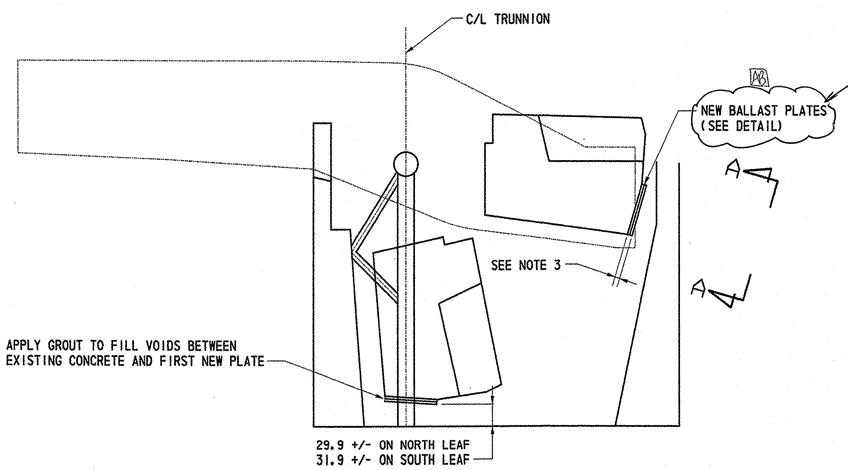

NEW BALLAST PLATE - ELEVATION

SCALE: ⅛" = 1'-0"

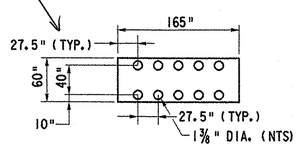

NEW PLATE DETAIL

SCALE: ½" = 1'-0"

NOTES:

1. REMOVE EXISTING COUNTERWEIGHT PLATES, CLEAN, FLATTEN TO WITHIN 1/32", IF REQUIRED, PAINT AND REINSTALL.
2. MATERIALS: STEEL PLATES SHALL CONFORM TO ASTM A36 AND SHALL BE PROVIDED IN THICKNESSES AND SIZES DEFINED BY THE CONTRACTOR BASED UPON MATERIAL AVAILABILITY AND HANDLING CONSIDERATIONS, TO REALIZE THE TOTAL THICKNESSES AND AREAS (AND WEIGHTS) CITED BELOW. THE PLATES SHALL BE GALVANIZED IN ACCORDANCE WITH ASTM A153. ANCHOR BOLTS SHALL BE 1¼" DIA. AND CONFORM TO ASTM A354 AND GALVANIZED IN ACCORDANCE WITH ASTM A153.
3. NORTH LEAF REQUIRES 6.5 IN TOTAL THICKNESS (36,486 LBS). SOUTH LEAF REQUIRES 5.5 IN TOTAL THICKNESS (30,873 LBS). TWO SETS OF PLATES TO BE INSTALLED ON EACH LEAF, SYMMETRICALLY ABOUT THE RACK SUPPORT NOTCH.
4. SECURE THE 1¼" DIA. ANCHOR BOLTS WITH A PRE-MIXED PACKAGED, NON-SHRINK, NON-METALLIC GROUT WITH A MINIMUM ALLOWABLE TENSILE LOAD OF 30,000 LB PER ANCHOR.
5. DO NOT USE LESS THAN 4 ANCHORS TO SUPPORT THE PLATES DURING CONSTRUCTION.
6. SECURE THE NEW PLATES ONTO THE ANCHOR BOLTS WITH HARDENED FLATWASHERS, DOUBLE HEAVY HEX NUTS AND HEAVY JAM NUTS.
7. SEE SPECIFICATIONS FOR ADDITIONAL NOTES AND REQUIREMENTS.
8. SEE DRAWING M3 FOR GENERAL MACHINERY NOTES.

CADD DESIGN TBD DESIGN JEM CHKD. DMB

9/21/2006 21-074-07

BR. 1-668	CONTRACT	COUNTY	FEDERAL AID PROJECT NO.	SHEET NO.	TOTAL SHTS.
	21-074-07	NEW CASTLE	EBHN-N029 (2)	86	169

SOUTH COUNTERWEIGHT DETAILS

BR 688
SOUTH MARKET STREET BRIDGE REHABILITATION

REVISIONS

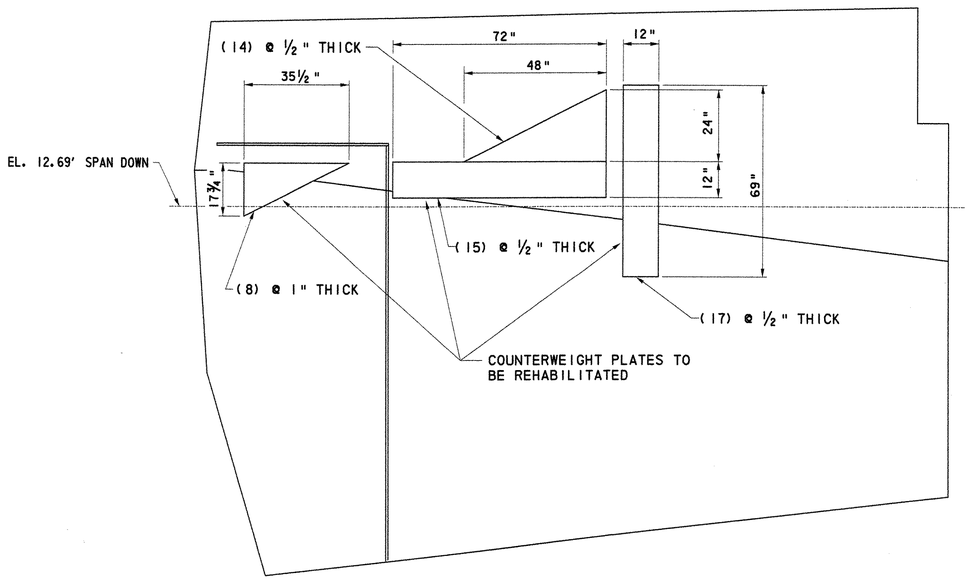

EXISTING SOUTH COUNTERWEIGHT - WEST FACE

SCALE: 1/2" = 1'-0"

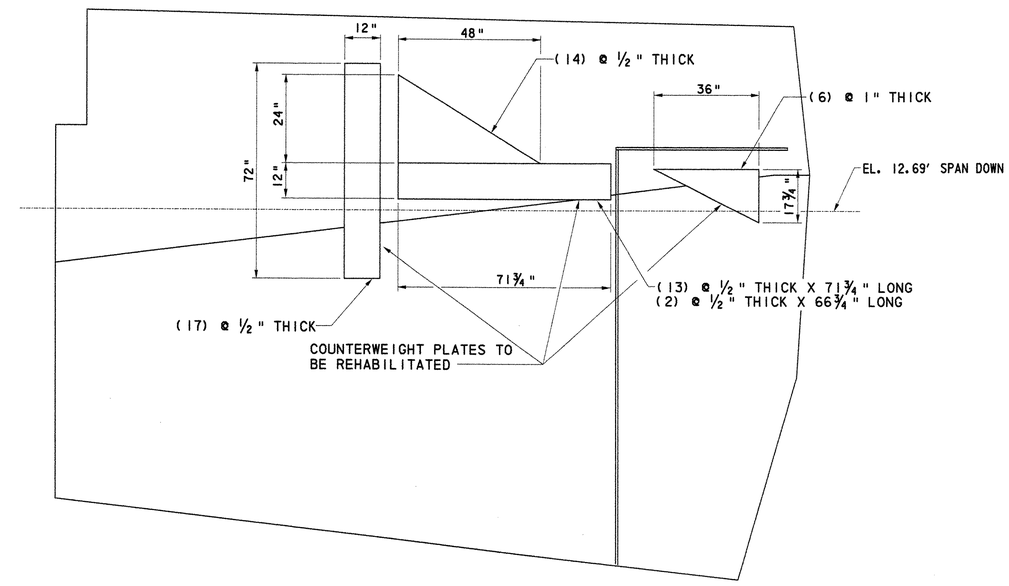

EXISTING SOUTH COUNTERWEIGHT - EAST FACE

SCALE: 1/2" = 1'-0"

NOTES:

1. REMOVE EXISTING COUNTERWEIGHT PLATES, CLEAN, FLATTEN TO WITHIN 1/32", IF REQUIRED, PAINT AND REINSTALL.
2. SEE SHEET M13 (85 OF 169) FOR INSTALLATION OF REQUIRED NEW BALLAST PLATES.
3. SEE SPECIFICATIONS FOR ADDITIONAL NOTES AND REQUIREMENTS.
4. SEE DRAWING M3 FOR GENERAL MACHINERY NOTES.

CADD DESIGN TBD DESIGN JEM CHKD. DMB

BR. I-668

CONTRACT	COUNTY	FEDERAL AID PROJECT NO.	SHEET NO.	TOTAL SHTS.
21-074-07	NEW CASTLE	EBHN-N029 (2)	87	169

BR 688
SOUTH MARKET STREET BRIDGE REHABILITATION

REVISIONS

ADDENDUM 2 10/16/03 DMB	ADDED NOTES

SPAN LOCK REHABILITATION

AS BUILT

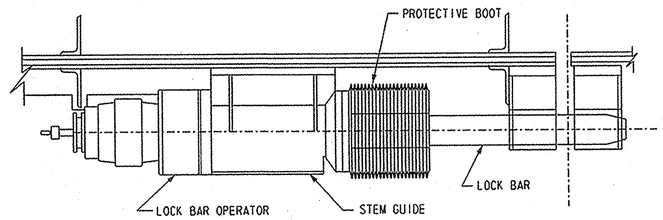

VIEW B-B
SCALE: 1" = 1'-0"

NOTES:

1. DISASSEMBLE AND THOROUGHLY CLEAN.
2. REPLACE ALL LIMIT SWITCHES IN KIND.
3. REPLACE PROTECTIVE BOOT IN KIND.
4. REPLACE ALL ACCESS COVER GASKETS IN KIND.
5. REASSEMBLE WITH FRESH MANUFACTURER APPROVED LUBRICANT.
6. SHIM/ADJUST LOCK-BAR GUIDES AND SOCKETS TO OBTAIN TOTAL VERTICAL AND HORIZONTAL CLEARANCES OF 0.010" TO 0.020". THIS WORK IS TO BE PERFORMED IN CONJUNCTION WITH THE LIVE LOAD SHOE REHABILITATION INCLUDED IN THIS SCOPE OF WORK.
7. SEE SPECIFICATIONS FOR ADDITIONAL NOTES AND REQUIREMENTS.
8. SEE DRAWING M3 FOR GENERAL MACHINERY NOTES.
9. ALL ITEMS ARE EXISTING.
10. 2 EXISTING SPAN LOCK ACTUATORS TO BE BY EARLE GEAR, MODEL EG-2B.
11. 2 IF A SPAN LOCK ACTUATOR IS REMOVED, A METHOD FOR SECURING THE END OF THE LOCK BAR AND ACTUATING AS REQUIRED FOR BRIDGE OPENINGS MUST BE SUBMITTED BY THE CONTRACTOR FOR REVIEW AND APPROVAL BY THE ENGINEER.

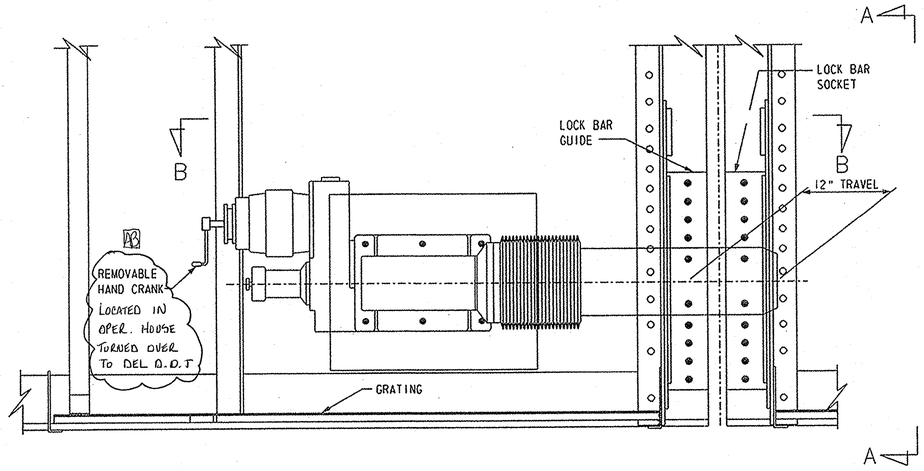

SPAN LOCK - ELEVATION
SCALE: 1" = 1'-0"

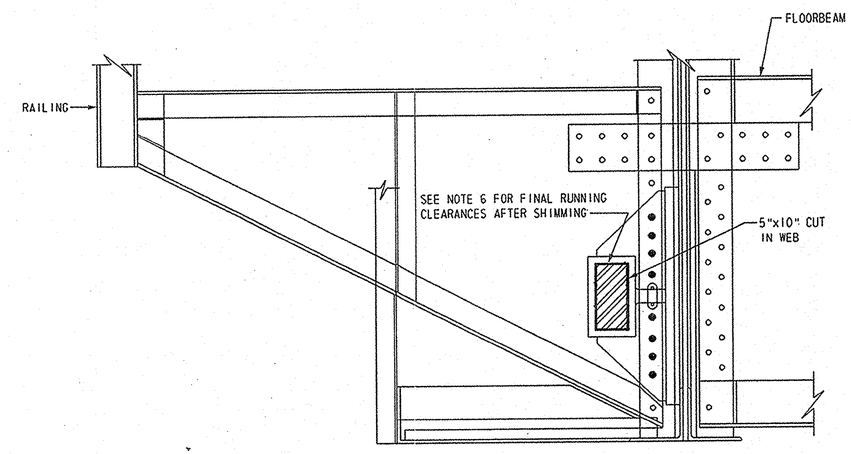

VIEW A-A
SCALE: 1" = 1'-0"

CADD DESIGN _____ DESIGN _____ CHKD. _____

M15

9/21/2006 21-074-07

...\m15 addendum2.dgn Oct. 16, 2003 13:16:52

BR. 1-668	CONTRACT	COUNTY	FEDERAL AID PROJECT NO.	SHEET NO.	TOTAL SHTS.
	21-074-07	NEW CASTLE	EBHN-N029 (2)	88	169

LIVE LOAD BEARINGS REHABILITATION

BR 688
SOUTH MARKET STREET BRIDGE REHABILITATION

REVISIONS

AS BUILT

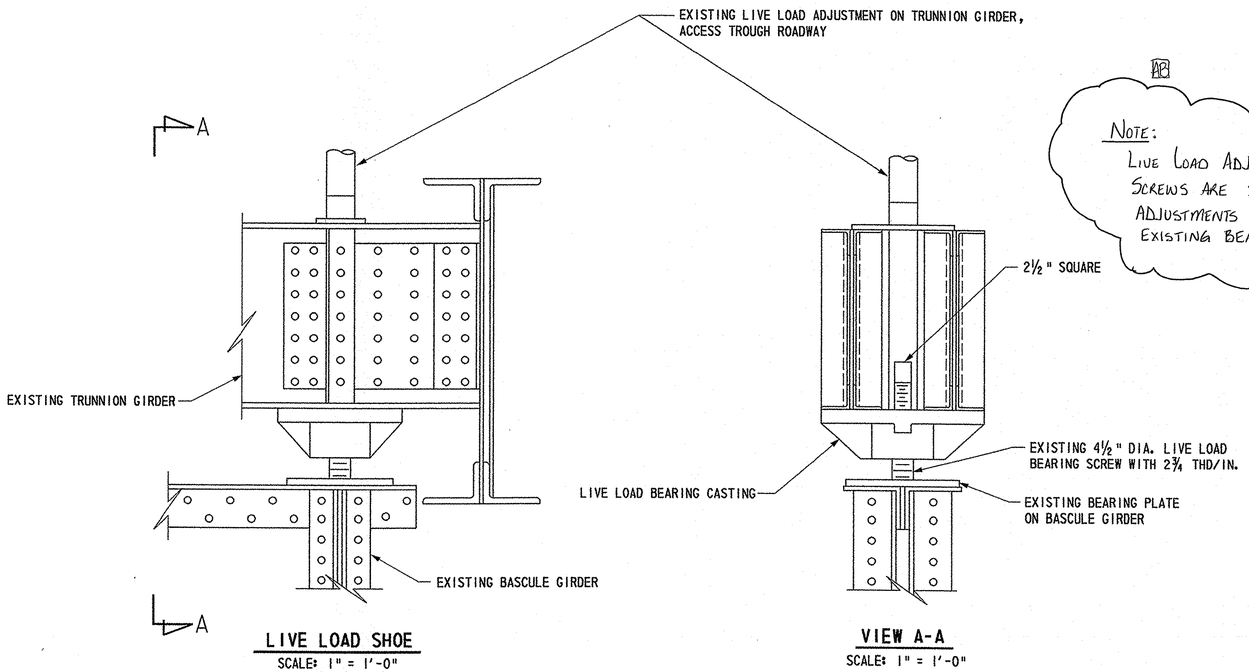

NOTE:
LIVE LOAD ADJUSTMENT SCREWS ARE SEIZED All ADJUSTMENTS MADE BY SHIMMING EXISTING BEARING PLATES.

NOTES:

1. CLEAN ALL DEBRIS FROM LIVE LOAD SHOE AREA.
2. CLEAN AND REPAINT ALL BEARING PLATES.
3. ADJUST LIVE LOAD SHOES FOR PROPER ENGAGEMENT AND EQUAL ELEVATION AT THE TIPS OF BOTH LEAVES.
4. THIS WORK IS TO BE PERFORMED IN CONJUNCTION WITH THE SPAN LOCK REHABILITATION INCLUDED IN THIS SCOPE OF WORK.
5. SEE SPECIFICATIONS FOR ADDITIONAL NOTES AND REQUIREMENTS.
6. SEE DRAWING M3 FOR GENERAL MACHINERY NOTES.

CADD DESIGN TBD DESIGN JEM CHKD. DMB

9/21/2006 21-074-07

BR. 1-668	CONTRACT	COUNTY	FEDERAL AID PROJECT NO.	SHEET NO.	TOTAL SHTS.
	21-074-07	NEW CASTLE	EBHN-N029 (2)	89	169

OVER TRAVEL BUMPER REPLACEMENT

BR 688
SOUTH MARKET STREET BRIDGE REHABILITATION

REVISIONS	

NOTES:

1. FOR MXX NUMBER REFERENCING AND GENERAL MACHINERY NOTES, SEE DRAWING M3.
2. SEE SPECIFICATIONS FOR ADDITIONAL NOTES AND REQUIREMENTS.

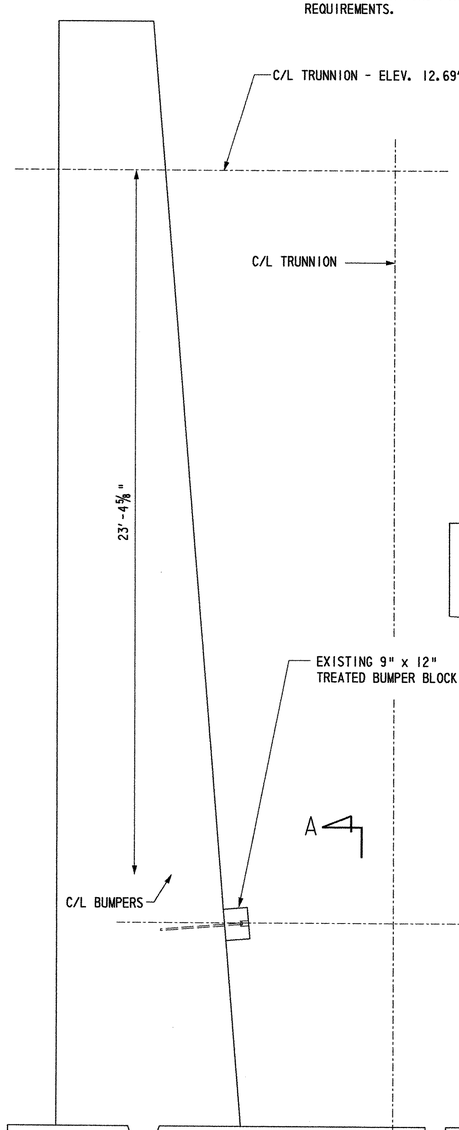

EXISTING OVER-TRAVEL BUMPER
SCALE: 3/8" = 1'-0"

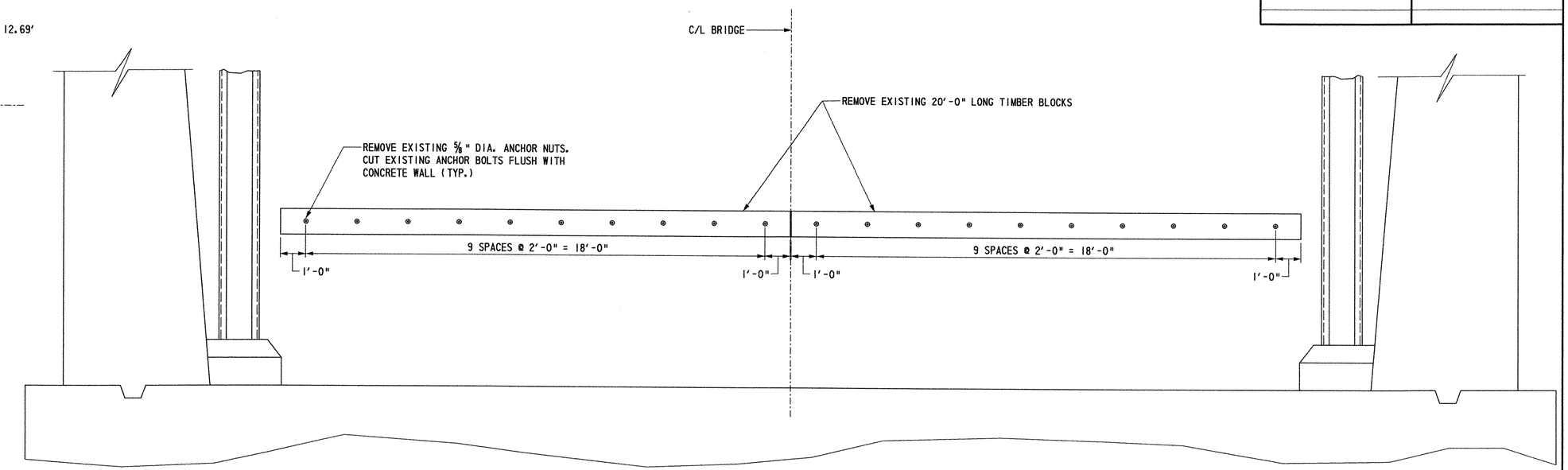

VIEW A-A - EXISTING OVER-TRAVEL BUMPER REMOVAL
SCALE: 3/8" = 1'-0"

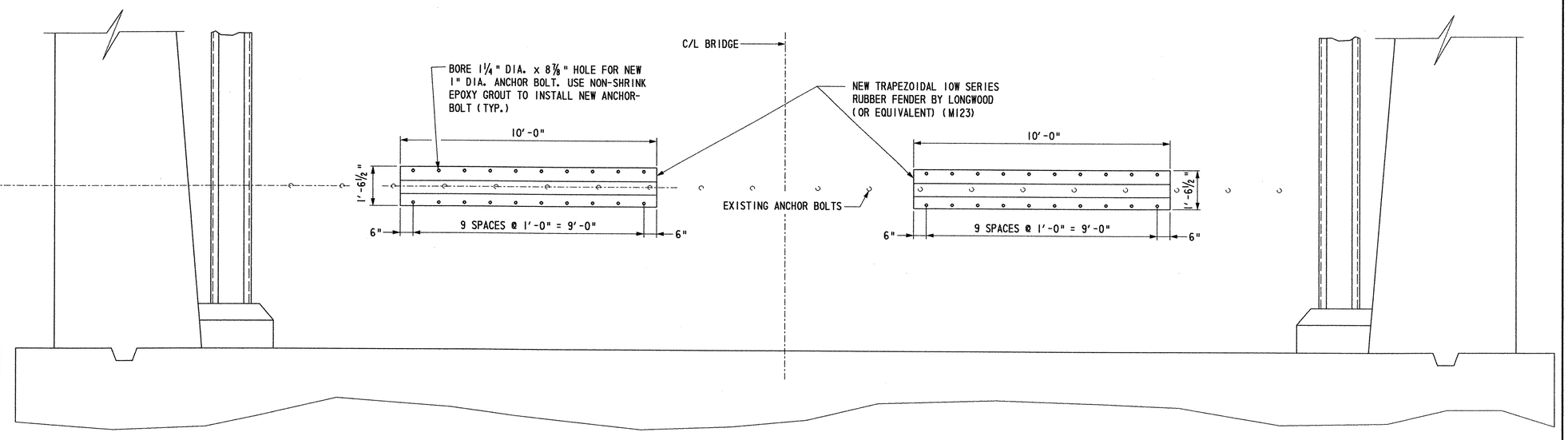

VIEW A-A - NEW OVER-TRAVEL BUMPER INSTALLATION
SCALE: 3/8" = 1'-0"

CADD DESIGN TBD DESIGN JEM CHKD. DMB

M17

BR. 1-668	CONTRACT	COUNTY	FEDERAL AID PROJECT NO.	SHEET NO.	TOTAL SHTS.
	21-074-07	NEW CASTLE	EBHN-N029 (2)	90	169

SUMP PUMP AND COUNTERWEIGHT PIT REHABILITATION

BR 688
SOUTH MARKET STREET BRIDGE REHABILITATION

REVISIONS	

AS BUILT

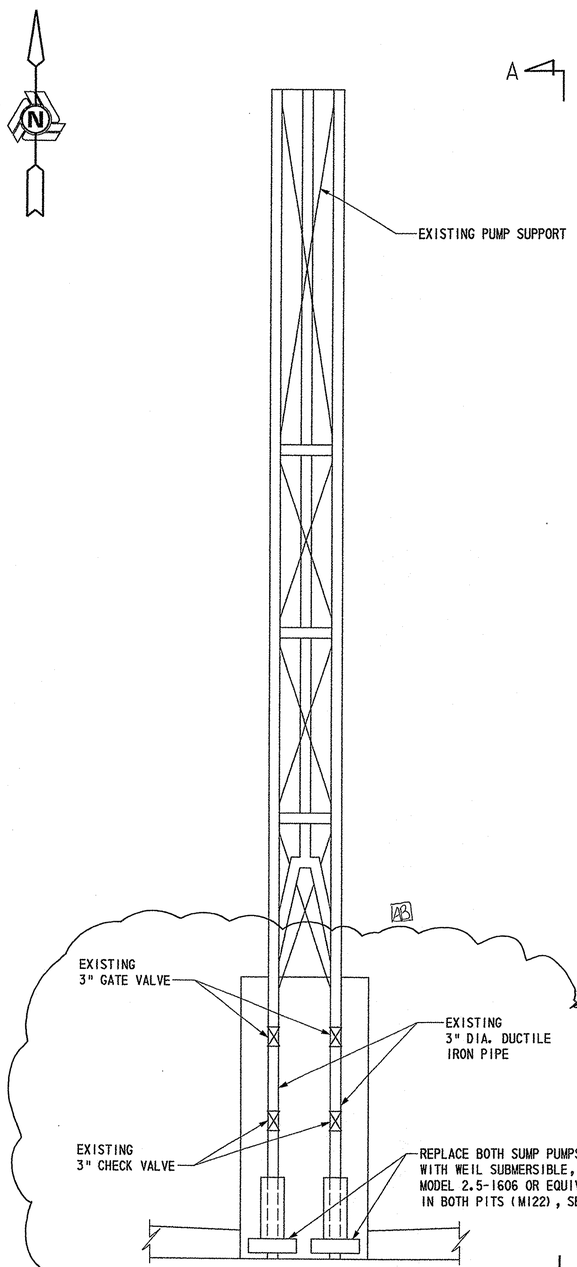

SUMP PUMP AND SUMP PUMP SUPPORT
SCALE: 1/2" = 1'-0"

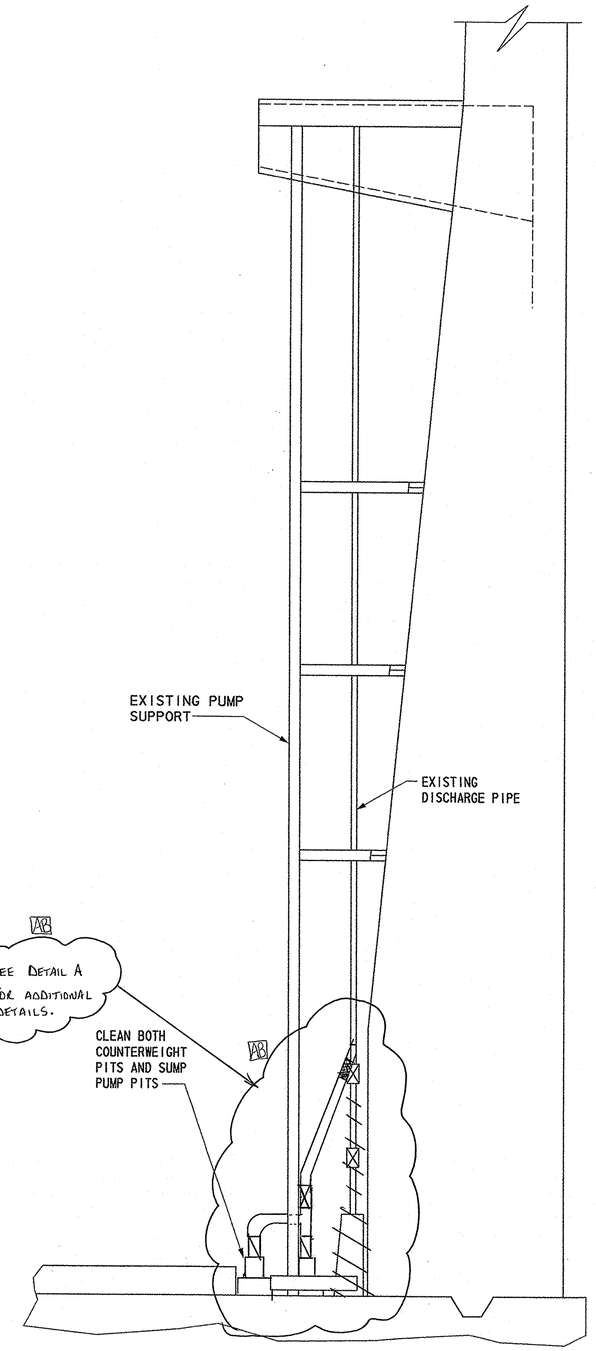

VIEW A-A
SCALE: 1/2" = 1'-0"

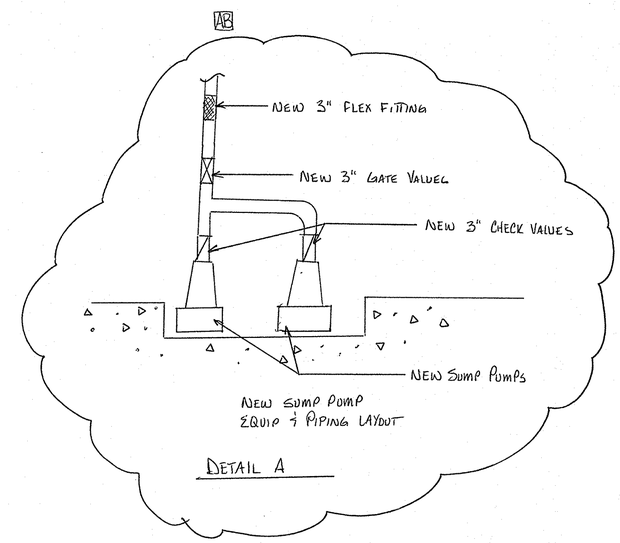

NOTES:

1. SEE DRAWING M3 FOR GENERAL MACHINERY NOTES.
2. SEE SPECIFICATIONS FOR ADDITIONAL NOTES AND REQUIREMENTS.
3. REFER ALSO TO ELECTRICAL PLANS AND SPECIFICATIONS.
4. REFER TO INFORMATIONAL DRAWING 19.

CADD DESIGN TBD DESIGN JEM CHKD. DMB

9/21/2006 21-074-07

BR. I-668	CONTRACT	COUNTY	FEDERAL AID PROJECT NO.	SHEET NO.	TOTAL SHTS.
	21-074-07	NEW CASTLE	EBHN-N029 (2)	91	169

RACK DETAILS

BR 688
SOUTH MARKET STREET BRIDGE REHABILITATION

REVISIONS

AS BUILT

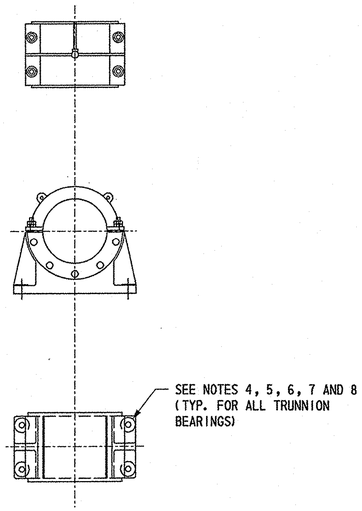

TRUNNION BEARING
SCALE: 1/2" = 1'-0"

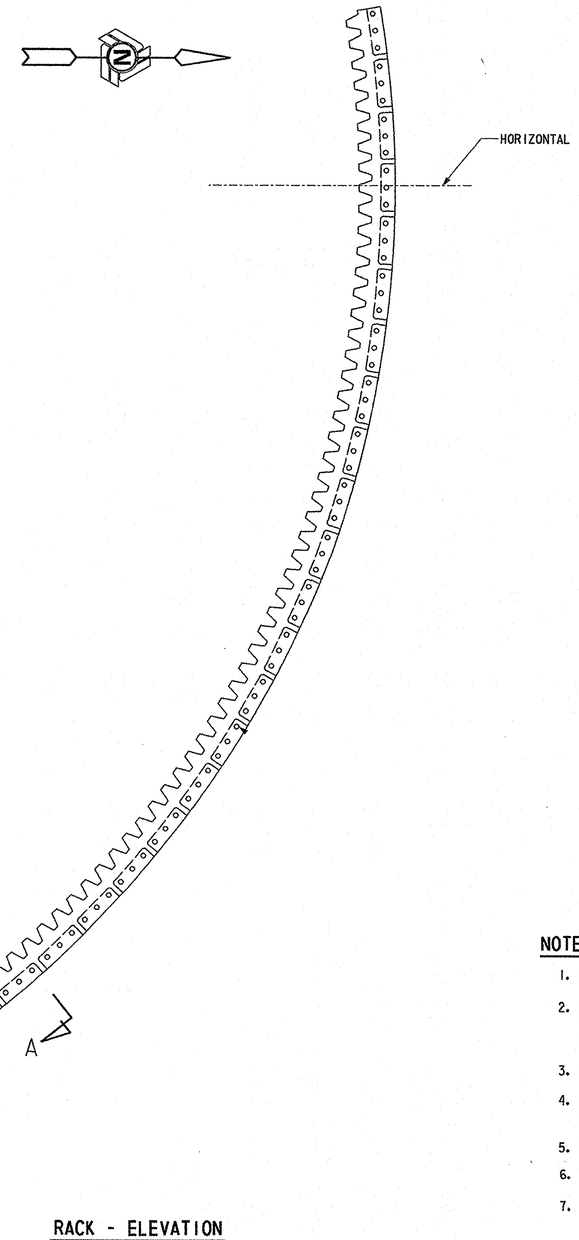

RACK - ELEVATION
SCALE: 1 1/2" = 1'-0"

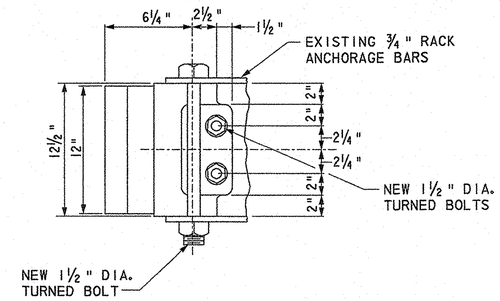

SECTION A-A
SCALE: 1 1/2" = 1'-0"

AS

NOTE:
- NORTH RACK - 5 LOWER SEGMENTS HAVE UNDERSIZED STRUCTURAL BOLTS & 4 DOWELS ON EACH SIDE OF SEGMENT. SEE ATTACHED SHEET FOR ADDITIONAL DETAILS.
- NORTH & SOUTH RACKS WERE MACHINED FOR CONTACT DURING CONSTRUCTION

NOTES:

1. REPLACE ALL RACK SEGMENTS (M125) FOR EACH LEAF IN KIND. (16 TOTAL)
2. REFER TO INFORMATIONAL DRAWING 123 FOR RACK DETAILS AND SEGMENT INSTALLATION, 125 AND 133 TRUNNION BEARING AND BEARING HARDWARE DETAILS.
3. RACK MAT'L: ASTM A148, CLASS 160-145, BHN 260-310.
4. SEE DRAWING M3 FOR MXX NUMBER REFERENCING AND GENERAL MACHINERY NOTES.
5. SEE SPECIFICATIONS FOR ADDITIONAL NOTES AND REQUIREMENTS.
6. REPLACE ALL TRUNNION BEARING MOUNTING HARDWARE.
7. THOROUGHLY CLEAN AND PAINT ALL BEARING HOUSINGS AND COLLARS.
8. ALL TRUNNION BEARINGS ARE SECURED WITH NEW 1 1/2" DIA. TURNED BOLTS.

M19

CADD DESIGN TBD DESIGN JEM CHKD. DMB

9/21/2006 21-074-07

BILL OF MATERIAL				
MK. NO.	QTY.	DESCRIPTION	MATERIAL	WEIGHT (EACH) LBS.
04021-8-1	12	RACK SEGMENT (M125) (SEE DRAWING 04021-C1 FOR GENERAL NOTES) HIGH STRENGTH STEEL CASTING TO THREAT PER DRAWING (SEE NOTES 7 & 8)	ASTM A148 GRADE 115-95 SAE 320-352	1,125

AS BUILT

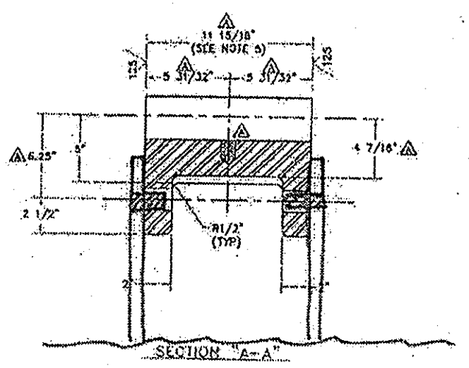

GEAR DATA - INVOLUTE STUB TEETH SPUR GEAR TOOTH FORM IN ACCORDANCE WITH THE PROPORTIONS OF THE AGMA 2000-A88.

DIAMETRICAL PITCH..... = 0.5712
NUMBER OF TEETH..... = 10 (342.7192 FOR 360° RACK)
PRESSURE ANGLE..... = 20°
FILLET RADIUS..... = 0.5252"
BACKLASH..... = 0.040"/0.055"
PITCH DIAMETER..... = 600.000"
BASE CIRCLE DIAMETER..... = 563.8158"
INSIDE DIAMETER..... = 597.1968"
WK WHOLE DEPTH..... = 3.1313"
ADDENDUM..... = 1.4006"
WK DEDENDUM..... = 1.7307"
CIRCULAR PITCH..... = 5.500"
CIRCULAR THICKNESS..... = 2.7025" (BACKLASH INCLUDED)

OPEN GEARS SHALL BE CUT AND MOUNTED (SEE NOTE 5) TO MEET REQUIREMENTS FOR ACCURACY OF THE ANSI/AGMA STANDARD 2000-A88 AND AGMA GEAR QUALITY NUMBER 7. CUTTER BURRS SHALL BE REMOVED FROM ALL EDGES OF THE TEETH, AND THE TOP EDGES OF ALL TEETH SHALL BE ROUNDED TO 1/32" RADIUS. (GEAR MANUFACTURER TO VERIFY ABOVE GEAR DATA) GEAR TEETH SHALL BE MACHINED TO 125 RMS FINISH.

NOTES:

1. SEE DRAWING 04021-C1 FOR GENERAL NOTES.
2. CASTING SHALL MEET ABOVE MATERIAL SPECIFICATIONS WITH THE FOLLOWING SUPPLEMENTAL REQUIREMENTS AS PER ASTM A781: S1 (100%), S5, S6, S10, S12 AND ULTRASONIC EXAMINE ONE RACK SECTION EACH HEAT PER ASTM A609 LEVEL 3.
3. CLEANLINESS OF THE CASTING SHALL CONFORM TO AGMA 2001, GRADE 2.
4. SCRIBE PITCH CIRCLE ON BOTH SIDES OF RACK TEETH NOT LESS THAN 0.02" DEEP, WITH A "V" POINTED TOOL.
5. CONTRACTOR TO FIELD VERIFY FIT BETWEEN EXISTING RACK SUPPORT MOUNTING PLATES PRIOR TO MACHINING RACK SEGMENTS.
6. FINAL RACK ASSEMBLIES TO BE MOUNTED TO PROVIDE A MINIMUM OF 60% FACE CONTACT, FOR EACH TOOTH, UNDER LOAD. FACE CONTACT SHALL BE CENTRALLY DISPOSED; END LOADING SHALL NOT BE ACCEPTED.

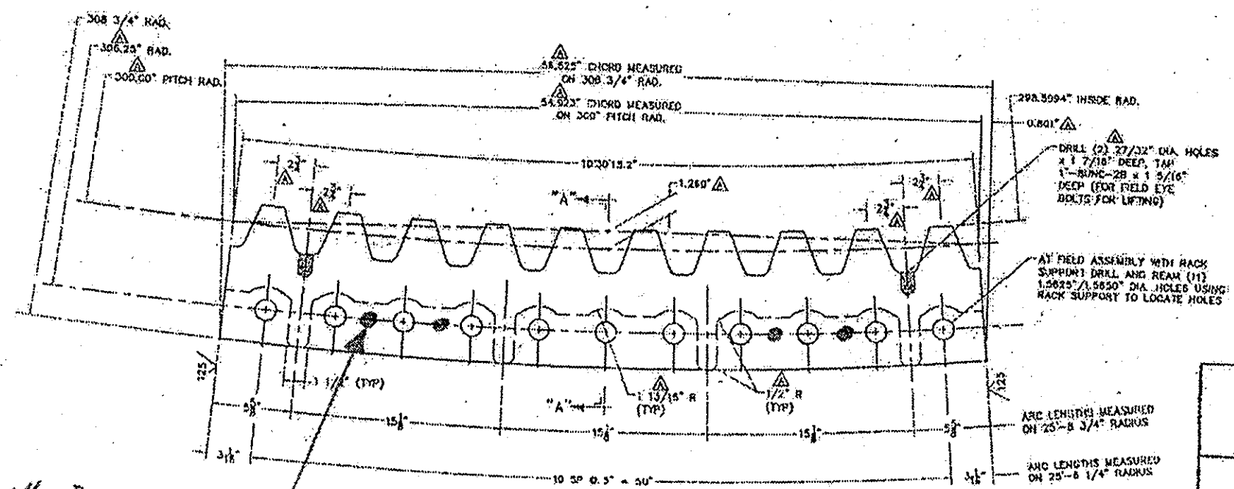

(8) x 1" Ø
UNBRAKO PULL-OUT
DOWEL PINS, 2 1/2" LONG MINIMUM
FN2 FIT WITH 3/4" TH. PLATE
AND RACK CASTING

RACK SEGMENT (M125) - MK. 04021-8-1

REVIEWED FOR GENERAL CONFORMITY WITH THE PLANS AND SPECIFICATIONS

Sverdrup and Mastore, Inc. — Date 4-2-04

As Built

REV.	DATE	DESCRIPTION	BY
A	3/25/04	REVISED FOR APPROVAL DRAWING	JRC

REVISIONS

REF. DWG. NO. 103
DIVISION
STATE OF DELAWARE
DEPARTMENT OF HIGHWAYS
EDIN-N025 (2)
CONTRACT NO. 21-074-07

UNSPECIFIED TOLERANCES
.XX = ±(.010")
.XXX = ±(.002")
ANGLES = ±0.5°
FRACTION = ±1/64" (FINISH SURFACES)
FRACTION = ±1/8" (ALL OTHER DIMS)

DATE / DRAWN / CHECKED / SUPERVISED / APPROVED BY / DATE

H.T. JOB No. 45-21
HARDIE-TYNES CO., INC.
BIRMINGHAM, ALABAMA
AND MEMBER CONFORMED MAKE BIDDER
DELAWARE STATE HIGHWAY DEPARTMENT
SANDI MARKET STREET BRIDGE REHABILITATION
OVER C[illegible] RIVER - WILMINGTON, DELAWARE
RACK SEGMENT DETAIL
SHEET 1 OF 1
04021-8
REV. A

FEET/12/1000

TEXT SIZE REFERENCE
.125
.1875
.25

BR. 1-688	CONTRACT	COUNTY	FEDERAL AID PROJECT NO.	SHEET NO.	TOTAL SHTS.
	21-074-07	NEW CASTLE	EBHN-N029 (2)	92	169

BR 688
SOUTH MARKET STREET BRIDGE REHABILITATION

REVISIONS

SIGNING & STRIPING PLAN

0 10 20 30 40 50 60
SCALE: 1" = 30'

AS BUILT

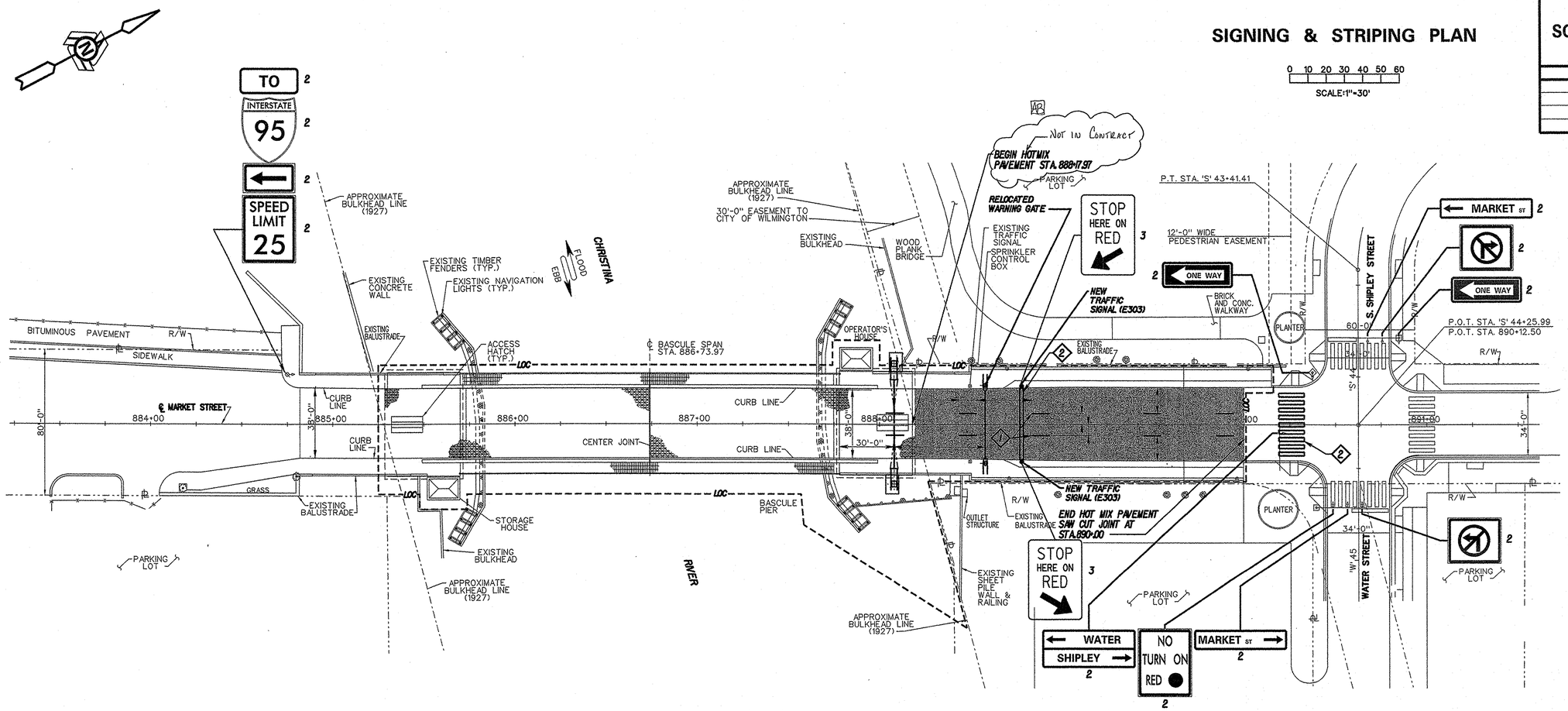

NOTES

1. FOR LOCATION AND DETAILS OF BRIDGE WARNING SYSTEM SEE BARRIER AND WARNING GATES PLAN AND ELEVATION.

PROPOSED PAVEMENT LEGEND

- STEEL GRID DECK
- CONCRETE FILLED STEEL GRID DECK
- 2" SUPERPAVE, TYPE C HOT-MIX 160 GYRATIONS, PG 64-22

SIGN LEGEND (BY STATE FORCES)

1. REMOVE EXISTING SIGN
2. EXISTING SIGN TO REMAIN
3. PLACE NEW SIGN
4. RENEW EXISTING SIGN
5. REPOSITION EXISTING SIGN

1. 120 L.F. PERMANENT PAVEMENT STRIPING, EPOXY RESIN, 4" (ITEM 748506)
2. 260 L.F. PERMANENT PAVEMENT STRIPING, ALKYD-THERMOPLASTIC, 12", (ITEM NO. 748027)

HOT MIX PAVEMENT NOT PERFORMED UNDER THIS CONTRACT

CADD DESIGN ____ DM ____ DESIGN ____ JFB ____ CHKD. ____ JAK ____

9/21/2006 21-074-07

FEET/12/1000

TEXT SIZE REFERENCE
.125
.1875
.25

BR. 1-688	CONTRACT	COUNTY	FEDERAL AID PROJECT NO.	SHEET NO.	TOTAL SHTS.
	21-074-07	NEW CASTLE	EBHN-N029 (2)	93	169

BR 688
SOUTH MARKET STREET BRIDGE REHABILITATION

REVISIONS

AS BUILT

UTILITY PLAN

0 10 20 30 40 50 60
SCALE:1"=30'

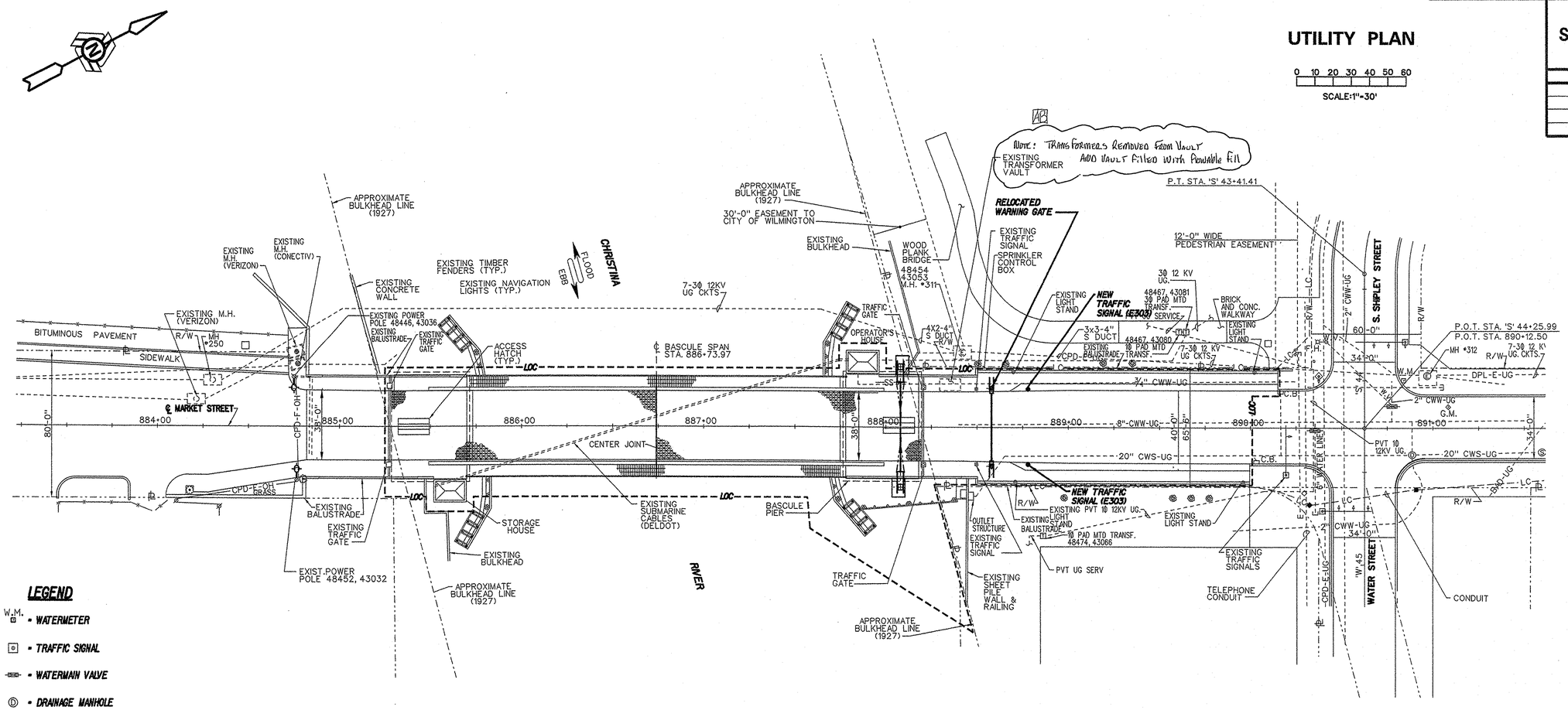

LEGEND

- W.M. ▪ WATERMETER
- ▪ TRAFFIC SIGNAL
- ▪ WATERMAIN VALVE
- Ⓓ ▪ DRAINAGE MANHOLE
- C.B. ▪ CATCH BASIN
- Ⓔ ▪ ELECTRIC MANHOLE
- F.H. ▪ FIRE HYDRANT
- ◎ ▪ LAMP POST
- ▪ STREET LIGHT
- —SS— ▪ SANITARY SEWER (OBSERVED IN FIELD)

UTILITIES & REPLY STATUS

1. CONECTIV POWER DELIVERY/ELECTRIC - NO CONFLICT
2. CONECTIV POWER DELIVERY/GAS - NO CONFLICT
3. VERIZON - NO CONFLICT
4. NEW CASTLE COUNTY DEPARTMENT OF SPECIAL SERVICES - NO CONFLICT
5. CITY OF WILMINGTON DEPARTMENT OF PUBLIC WORKS - NO REPLY AS OF NOVEMBER 20, 2002
6. UNITED WATER OF DELAWARE (FORMERLY WILMINGTON SUBURBAN WATER CORP.) - NO CONFLICT
7. COMCAST CABLE COMUNICATION, INC. - NO CONFLICT
8. THE BOC COMPANY - NO CONFLICT
9. AT&T CORPORATION - NO CONFLICT
10. QUEST COMMUNICATIONS CORP. - NO CONFLICT
11. EQUILON PIPELINE CO. - NO CONFLICT
12. LEVEL 3 COMMUNICATIONS - NO CONFLICT

NOTES:

1. THE LOCATION OF THESE EXISTING UTILITIES ARE BASED ON UTILITY COMPANY REVIEWS. ACTUAL LOCATIONS SHALL BE VERIFIED IN THE AREAS OF POTENTIAL CONFLICT PRIOR TO CONSTRUCTION.
2. "NO CONFLICT" REPRESENTS THE REPLY THE DESIGNER HAS RECEIVED FROM EACH UTILITY COMPANY AND MEANS THERE ARE NO UTILITY FACILITIES IN THE IMMEDIATE PROJECT AREA.
3. IF UTILITY HAS NOT REPLIED, RECORD DRAWINGS FOR PRIOR PROJECTS WITHIN THE AREA WERE REVIEWED TO APPROXIMATE UTILITY LOCATIONS.

CADD DESIGN DM DESIGN JFB CHKD. JFB

9/21/2006 21-074-07

TEXT SIZE REFERENCE
.125
.1875
.25

BR. 1-688	CONTRACT	COUNTY	FEDERAL AID PROJECT NO.	SHEET NO.	TOTAL SHTS.
SHEET 1 OF 1	21-074-07	NEW CASTLE	EBHN-N029 (2)	94	169

BR 688 SOUTH MARKET STREET BRIDGE REHABILITATION

REVISIONS	
2 DELETED SHEET	JFB 9/23/04

RIGHT OF WAY PLAN

0 10 20 30 40 50 60
SCALE:1"=30'

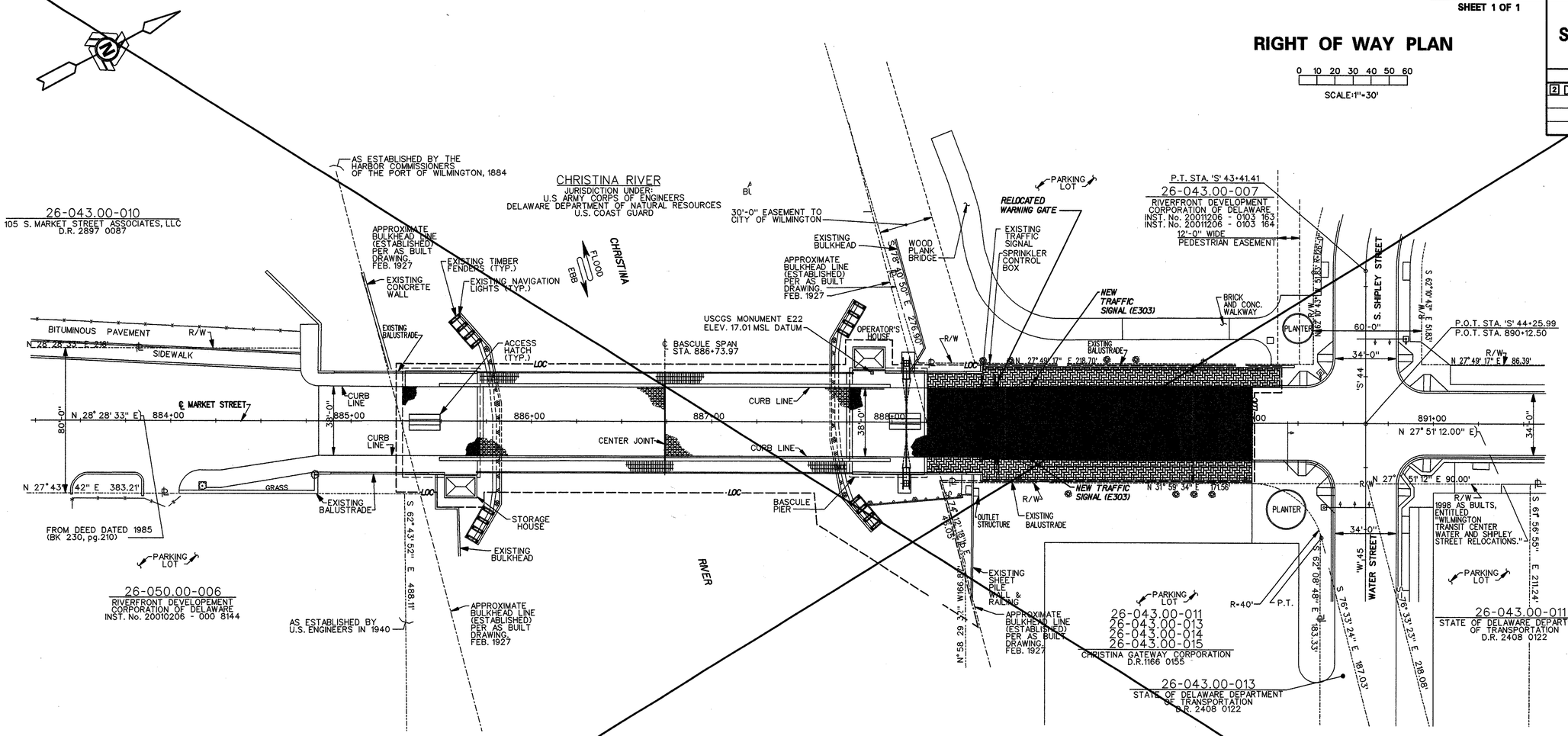

R.O.W. LEGEND

- EXISTING RIGHT OF WAY LINE
- EXISTING BULKHEAD LINE
- EXISTING PROPERTY LINE

PROPOSED PAVEMENT LEGEND

	STEEL GRID DECK
	CONCRETE FILLED STEEL GRID DECK
	2" SUPERPAVE, TYPE C HOT-MIX 160 GYRATIONS, PG 64-22

DELETED SHEET

CADD DESIGN DM DESIGN JFB CHKD. JAK

FEET/12/1000

TEXT SIZE REFERENCE
.125
.1875
.25

BR. I-688	CONTRACT	COUNTY	FEDERAL AID PROJECT NO.	SHEET NO.	TOTAL SHTS.
	21-074-07	NEW CASTLE	EBHN-N029 (2)	94A	169

BR 688
SOUTH MARKET STREET BRIDGE REHABILITATION

REVISIONS	
2 NEW SHEET	JFB 11/30/04

RIGHT OF WAY PLAN
SHEET 1 OF 1

0 10 20 30 40 50 60
SCALE:1"=30'

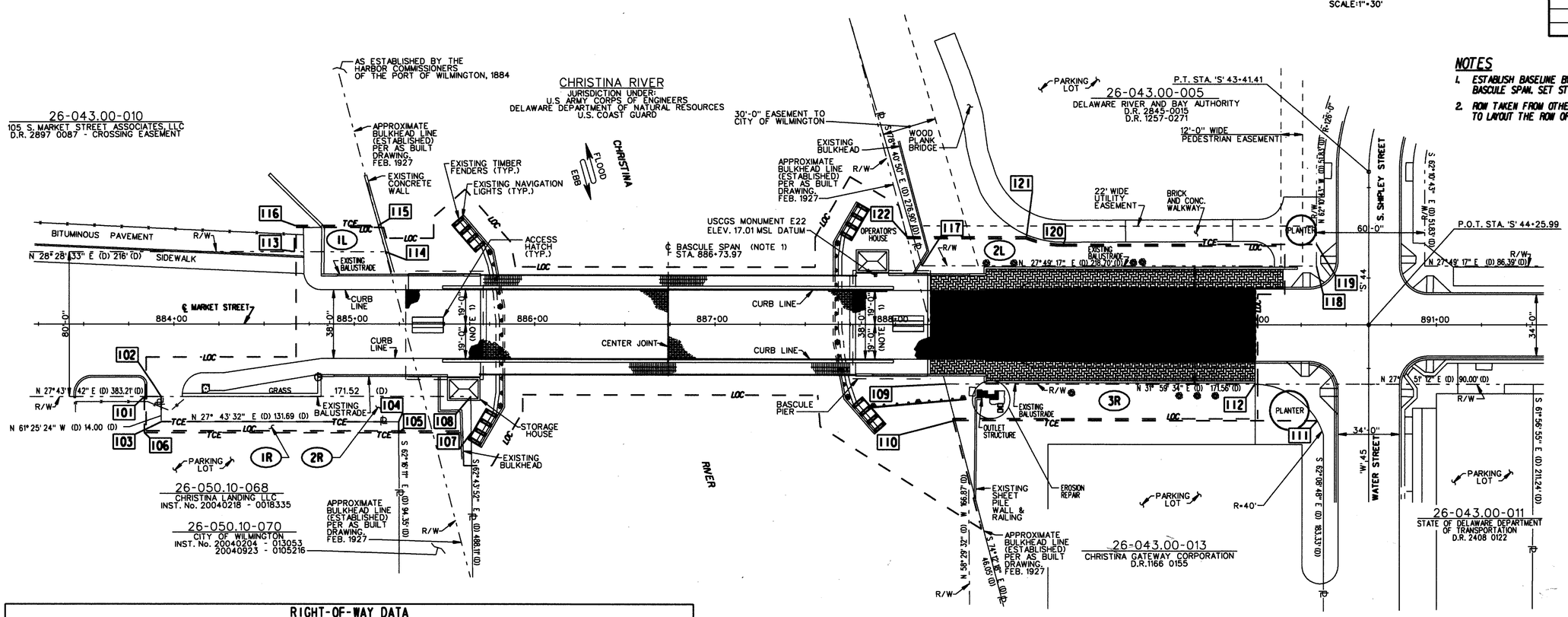

NOTES

1. ESTABLISH BASELINE BY CONNECTING MIDPOINTS OF CURBLINES AT ENDS OF BASCULE SPAN. SET STATION 886+73.97 @ CENTER OF JOINT.
2. ROW TAKEN FROM OTHER PROJECT PLAN SHEETS AND DEEDS. NO SURVEY DONE TO LAYOUT THE ROW OR ESTABLISH THE TEMPORARY CONSTRUCTION EASEMENTS.

PROPOSED PAVEMENT LEGEND

- STEEL GRID DECK
- CONCRETE FILLED STEEL GRID DECK
- BRICK PAVER SIDEWALK
- 2" SUPERPAVE, TYPE C HOT-MIX 160 GYRATIONS, PG 64-22

R.O.W. LEGEND

(BK) - DEEDBOOK
(D) - DEED
EXISTING RIGHT OF WAY LINE
EXISTING PROPERTY LINE
LOC — LIMIT OF CONSTRUCTION
TCE — TEMPORARY CONSTRUCTION EASEMENT

TYPE OF ACQUISITION

FEE AREA OF ACQUISITION
R/W AREA OCCUPIED BY EXISTING R/W
P/E PERMANENT EASEMENT
TCE TEMPORARY CONSTRUCTION EASEMENT
U/E PERMANENT UTILITY EASEMENT
0.00 DISTANCE IN FEET
\- OFFSET IS LEFT OF BASELINE

RIGHT-OF-WAY DATA

ASSESSMENT NUMBER		OWNERSHIP OF RECORD			TYPE OF ACQUISITION		TITLE SOURCE	PARCEL AREA (US)
26-050.10-068		1R CHRISTINA LANDING, LLC			TCE		INST. No. 20040218-0018335	0.81 AC (DEED)
ALIGNMENT NUMBER								
PT. NO.	STATION	OFFSET	BEARING	DISTANCE	CHORD BEARING	CHORD LENGTH	ARC LENGTH	RADIUS
101	883+83.63	39.96						
102	883+92.93	39.96						
103	883+92.93	53.96						
104	885+24.62	53.96						
105	885+24.65	60.00						
106	883+83.67	60.00						

ASSESSMENT NUMBER		OWNERSHIP OF RECORD			TYPE OF ACQUISITION		TITLE SOURCE	PARCEL AREA (US)
26-050.10-070		2R CITY OF WILMINGTON			TCE		INST. No. 20040204-013053 20040923-0105216	1.04 AC (DEED)
ALIGNMENT NUMBER								
PT. NO.	STATION	OFFSET	BEARING	DISTANCE	CHORD BEARING	CHORD LENGTH	ARC LENGTH	RADIUS
102	883+92.93	39.96						
103	883+92.93	53.96						
104	885+24.62	53.96						
105	885+24.65	60.00						
107	885+64.84	60.00						
108	885+64.63	39.96						

ASSESSMENT NUMBER		OWNERSHIP OF RECORD			TYPE OF ACQUISITION		TITLE SOURCE	PARCEL AREA (US)
26-043.00-013		3R CHRISTINA GATEWAY CORP.			TCE		BK 1166-0155	0.98 AC (DEED)
ALIGNMENT NUMBER								
PT. NO.	STATION	OFFSET	BEARING	DISTANCE	CHORD BEARING	CHORD LENGTH	ARC LENGTH	RADIUS
109	888+27.83	32.88						
110	888+33.09	52.88						
111	890+33.93	52.88						
112	889+99.31	32.88						

RIGHT-OF-WAY DATA

ASSESSMENT NUMBER		OWNERSHIP OF RECORD			TYPE OF ACQUISITION		TITLE SOURCE	PARCEL AREA (US)
26-043.00-010		1L 105 S. MARKET STREET CORP.			TCE		BK 2897-0087	1.29 AC (ASSESMENT)
ALIGNMENT NUMBER								
PT. NO.	STATION	OFFSET	BEARING	DISTANCE	CHORD BEARING	CHORD LENGTH	ARC LENGTH	RADIUS
113	884+66.79	-40.04						
114	885+17.16	-40.04						
115	885+13.36	-54.52						
116	884+66.76	-54.52						

ASSESSMENT NUMBER		OWNERSHIP OF RECORD			TYPE OF ACQUISITION		TITLE SOURCE	PARCEL AREA (US)
26-043.00-005		2L DEL. RIVER & BAY AUTH.			TCE		BK 2845-0015	2.11 (DEED)
ALIGNMENT NUMBER								
PT. NO.	STATION	OFFSET	BEARING	DISTANCE	CHORD BEARING	CHORD LENGTH	ARC LENGTH	RADIUS
117	888+14.69	-32.63						
118	890+33.48	-32.63						
119	890+33.48	-44.63						
120	888+93.21	-44.63						
121	888+72.65	-48.63						
122	888+06.41	-48.63						

RIGHT-OF-WAY TABULATION

COUNTY ASSESSMENT PARCEL NO.	OWNERSHIP OF RECORD	TITLE SOURCE	PROPERTY BEFORE AQUISITION	ACQUISITION (SF)	EASEMENT TEMPORARY (SF)	EASEMENT PERMANENT (SF)	PROPERTY AREA REMAINING (SF)	REMARKS
26-050.10-068	1R CHRISTINA LANDING, LLC	INST No. 20040218-0018335	0.81 AC (DEED)		999.1		34310.2	TCE =1
26-050.10-070	2R CITY OF WILMINGTON	INST No. 20040218-0018353	1.04 AC (DEED)		2622.8		42681.3	TCE =1
26-043.00-013	3R CHRISTINA GATEWAY CORP.	BK 1166-0155	0.98 AC (DEED)		3865.8		37516.2	TCE =1
26-043.00-010	1L 105 S. MARKET STREET CORP.	BK 2897-0087	1.29 AC (ASSESMENT)		702.7		UNKNOWN	TCE =1
26-043.00-005	2L DEL. RIVER & BAY AUTH.	BK 2845-0015	2.11 AC (DEED)		2922.0		120813.9	TCE =1

RIGHT OF WAY PREPARED UNDER SUPERVISION OF:

MODJESKI AND MASTERS, INC.
FIRM

Barney T. Martin Jr.
NAME

Barney T. Martin Jr.
CONSULTANT PROJECT ENGINEER

DATE January 3 20 05

BARNEY THEODORE MARTIN JR. REGISTERED No. 13377 DELAWARE PROFESSIONAL ENGINEER
SEAL

RECOMMENDED

Jeffrey A. Crouch / Stephen C. Kunath — TEAM SUPPORT SQUAD MANAGER — DATE 1/10/05

TEAM SUPPORT ENGINEER — DATE 1/10/05

ASSISTANT DIRECTOR, DESIGN — DATE 1/10/05

JAK
CHKD.
JFB
DESIGN
DW
CADD DESIGN

TEXT SIZE REFERENCE
.125
.1875
.25

BR. 1-688	CONTRACT	COUNTY	FEDERAL AID PROJECT NO.	SHEET NO.	TOTAL SHTS.
	21-074-07	NEW CASTLE	EBHN-N029 (2)	95	169

QUANTITY SUMMARY

BR 688
SOUTH MARKET STREET BRIDGE REHABILITATION

REVISIONS	
1 REVISED QUANTITIES	JFB 2/26/04
2 ADDED ITEMS	JFB 10/14/04
3 ADDED ITEMS	JFB 11/22/04

SECTION 1, NON-SPECIALTY ITEMS

ITEM NO.	*202000	202530	202531	202532	202541	202542	209001	209003	211000	212001	251000	252000	269000	302008	302503	401509	401645	401667	602002	602013	602551
ITEM TITLE	EXCAVATION AND EMBANKMENT	REMOVAL OF CONTAMINATED WATER	CONTAMINATED MATERIAL AND WATER REMOVAL WORK PLAN	REMOVAL OF CONTAMINATED MATERIAL	CONTAMINATED MATERIAL AND WATER REMOVAL WORK PLAN (NON-PETROLEUM)	REMOVAL OF CONTAMINATED MATERIAL (NON-PETROLEUM)	BORROW, TYPE A	BORROW, TYPE C	REMOVAL OF STRUCTURES AND OBSTRUCTIONS (FENDER)	UNDERCUT EXCAVATION, PATCHING	SILT FENCE	INLET SEDIMENT CONTROL, DRAINAGE INLET	TURBIDITY CURTAIN, FLOATING	GRADED AGGREGATE BASE COURSE, TYPE B, PATCHING	DELAWARE NO. 57 STONE	ASPHALTIC REINFORCED MEMBRANE	SUPERPAVE, TYPE C HOT-MIX, 160 GYRATION, PG 64-22	SUPERPAVE, BITUMINOUS CONCRETE BASE COURSE, 160 GYRATIONS, PG 64-22 PATCHING	PORTLAND CEMENT CONCRETE MASONRY, CLASS B	PORTLAND CEMENT CONCRETE MASONRY, CLASS D	REHABILITATION OF EXISTING CONCRETE STRUCTURES
UNIT	C.Y.	GAL	L.S.	TON	L.S.	TON	C.Y.	C.Y.	L.S.	C.Y.	L.F.	EACH	L.F.	C.Y.	TON	S.F.	TON	TON	C.Y.	C.Y.	S.F.
SHEET 6 STA. 885+25 TO 890+14.98	100	20000	L.S.	32	L.S.	32	7	7	L.S.	24	30	1	470	16	30	100	90	30	9	1	25
TOTAL	100	20000	L.S.	32	L.S.	32	7	7	L.S.	24	30	1	470	16	30	100	90	30	9	1	25
PROPOSED	100	20000	L.S.	32	L.S.	32	7	7	L.S.	24	30	1	470	16	30	100	90	30	9	1	25
											2	2							2		

SECTION 1, NON-SPECIALTY ITEMS

ITEM NO.	~~602572~~	605578	605585	605591	605617	605655	605679	620511	701502	705504	712005	713003	720501	720558	~~720561~~	733008	737002	**742500	743001	743500	743501	743504	743506	743514	743525	743537	744001	748019	748027	748506	748530	758000	759004	760006
ITEM TITLE	~~REPAIRING CHIPPING P.C.C. STRUCTURES~~	REPLACING STEEL RIVETS/BOLTS	STEEL STRUCTURE REPAIR	STEEL OPEN GRID BRIDGE DECK	CLEANING OF PATHOGENICALLY CONTAMINATED STRUCTURE	BEARING ANCHOR BOLT REPLACEMENT	SEISMIC RETROFIT	RESTORATION OF CONCRETE PILES	STONE CURB	BRICK AND/OR BLOCK SIDEWALK	RIPRAP, R-4	GEOTEXTILES, RIPRAP	CRASH CUSHION (SAND BARRELS)	PLASTIC DRUMS	~~REPAIRING BRIDGE RAILING POST~~	TOPSOILING, 18" DEPTH	MULCHING, PLANTS	FLAGGER, NEW CASTLE COUNTY, STATE	ARROWPANELS, TYPE A	WARNING LIGHTS, TYPE A	WARNING LIGHTS, TYPE B	WARNING SIGNS	TEMPORARY BARRICADES, TYPE III	FURNISH AND MAINTAIN MESSAGE BOARD	TEMPORARY WARNING SIGNS	FURNISH AND MAINTAIN TRUCK-MOUNTED ATTENUATOR, TYPE II	CONDUIT JUNCTION WELLS	TEMPORARY MARKINGS, PAINT, 4"	PERMANENT PAVEMENT STRIPING, ALKYD-THERMOPLASTIC, 12"	PERMANENT PAVEMENT STRIPING, EPOXY RESIN PAINT, 4"	REMOVAL OF PAVEMENT STRIPING	REMOVAL OF EXISTING PORTLAND CEMENT CONCRETE PAVEMENT, CURB, SIDEWALK, ETC.	FIELD OFFICE, TYPE I	PAVEMENT - MILLING, HOT-MIX, 2" DEPTH
UNIT	~~LB~~	EACH	L.S.	S.F.	L.S.	EACH	L.S.	L.F.	L.F.	S.F.	S.Y.	S.Y.	EACH	EA-DY	~~EACH~~	S.Y.	S.Y.	HOUR	EA-DY	EA-DY	EA-DY	EACH	EA-DY	EA-DY	EA-DY	EACH	L.F.	L.F.	L.F.	S.F.	S.Y.	EA-MO	S.Y.
SHEET 6 STA. 885+25 TO 890+14.98	~~500~~	300	L.S.	230	L.S.	24	L.S.	45	315	3870	3	4	64	17760	~~10~~	7	14	120	890	480	960	80	2880	550	4150	155	4	110	252	120	50	460	14	800
TOTAL	~~500~~	300	L.S.	230	L.S.	24	L.S.	45	315	3870	3	4	64	17760	~~10~~	7	14	120	890	480	960	80	2880	550	4150	155	4	110	252	120	50	460	14	800
PROPOSED	~~500~~	300	L.S.	230	L.S.	24	L.S.	45	315	3870	3	4	64	17760	~~10~~	7	14	120	890	480	960	80	2880	550	4150	155	4	110	252	120	50	460	14	800
	3										2	2			1	2	2										3							

SECTION 1, NON-SPECIALTY ITEMS

ITEM NO.	762001	763000	763500	763505	763508	763509	763522	763602	606002	ADDITIONAL WORK-001	ADDITIONAL WORK-002	ADDITIONAL WORK-003	ADDITIONAL WORK-004
ITEM TITLE	SAW CUTTING, HOT-MIX	INITIAL EXPENSE	MAINTENANCE OF TRAFFIC	TRAFFIC OFFICERS	PROJECT CONTROL SYSTEM DEVELOPMENT PLAN	CPM SCHEDULE UPDATES AND/OR REVISIONS	COAST GUARD SPECIFIC CONDITIONS	BIRD CONTROL	METAL BRIDGE RAILING - ALUMINUM	TIMBER SIDEWALK	BASCULE PIER SIDEWALK REPLACEMENT	OPERATOR AND STORAGE HOUSE ENHANCEMENTS	REMOVE AND REPLACE EXISTING PEDESTRIAN PARAPET
UNIT	L.F.	L.S.	L.S.	HOUR	L.S.	EA-MO	L.S.	L.S.	L.F.	L.F.	L.S.	L.S.	L.S.
SHEET 6 STA. 885+25 TO 890+14.98	325	L.S.	L.S.	200	L.S.	14	L.S.	L.S.	420	416	L.S.	L.S.	L.S.
TOTAL	325	L.S.	L.S.	200	L.S.	14	L.S.	L.S.	420	416	L.S.	L.S.	L.S.
PROPOSED	325	L.S.	L.S.	200	L.S.	14	L.S.	L.S.	420	416	L.S.	L.S.	L.S.
									1	1	2	3	3

SECTION 2, SPECIALTY ITEMS

ITEM NO.	605005	605533	605590	746574	763599
ITEM TITLE	PAINTING, MOISTURE-CURED URETHANE SYSTEM	CLEANING EXISTING STEEL STRUCTURES, HAZARDOUS BASE, (L.S.)	BASCULE MACHINERY REPLACEMENT	BRIDGE ELECTRICAL AND CONTROL SYSTEM	BARRIER GATES
UNIT	L.S.	L.S.	L.S.	L.S.	L.S.
SHEET 6 STA. 885+25 TO 890+14.98	L.S.	L.S.	L.S.	L.S.	L.S.
TOTAL	L.S.	L.S.	L.S.	L.S.	L.S.
PROPOSED	L.S.	L.S.	L.S.	L.S.	L.S.

LEGEND

ALL ITEMS ARE UNDER FUND C-FEDERAL AID FUNDED BRIDGE CONSTRUCTION.

LEGEND

* FIXED QUANTITY
** FIXED PRICE

CADD DESIGN ____ EVS ____ DESIGN ____ EVS ____ CHKD. ____ JFB

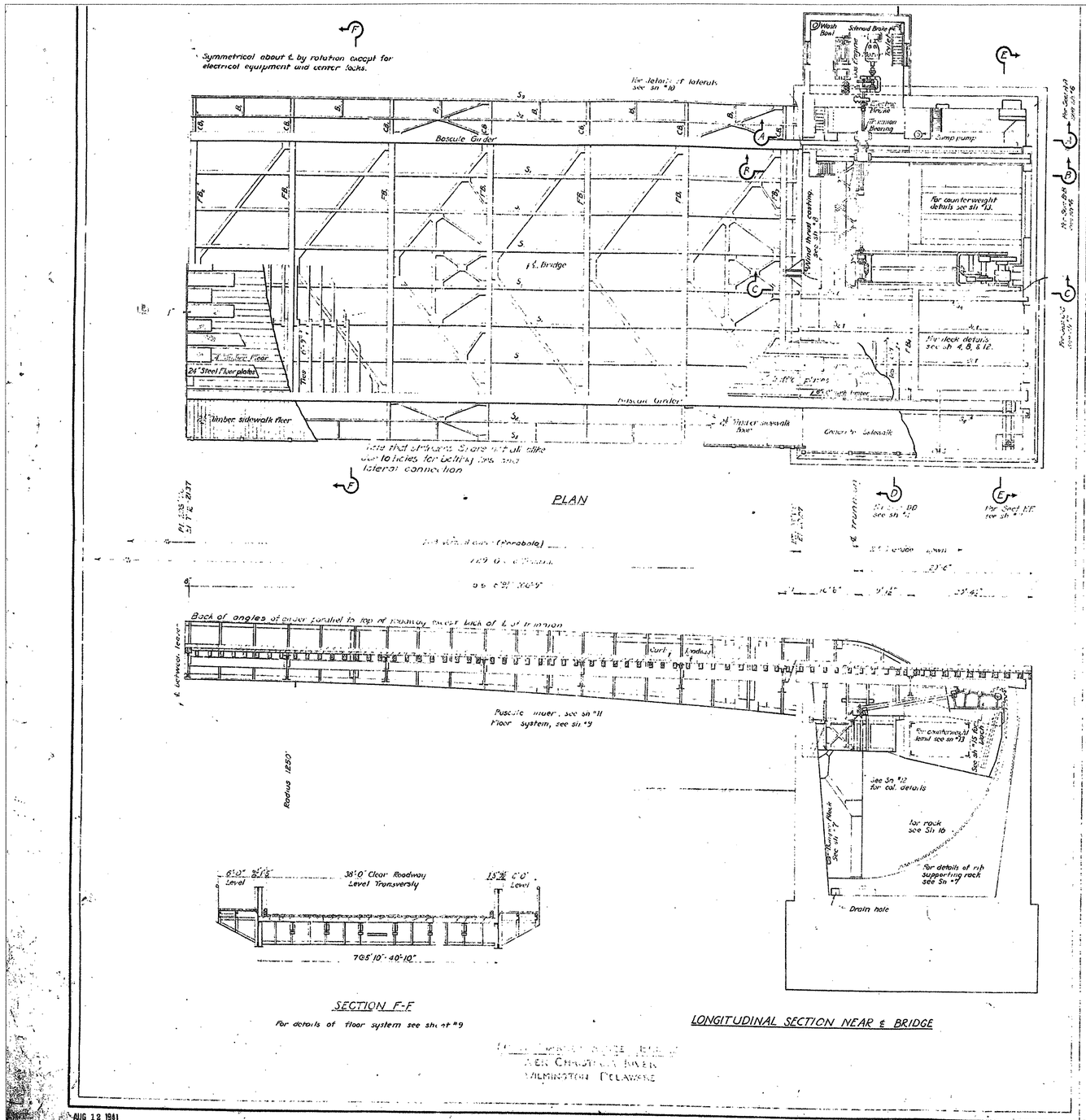

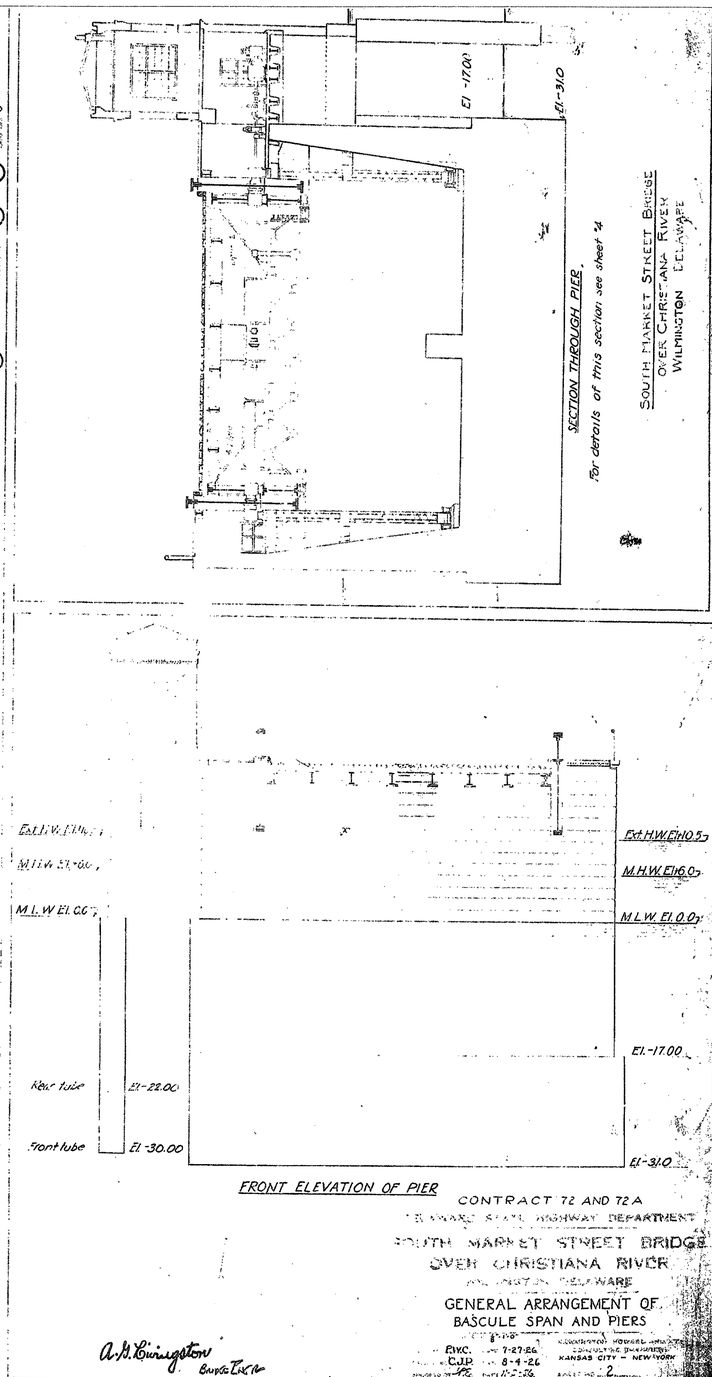

SOUTH MARKET STREET BRIDGE
OVER CHRISTIANA RIVER
WILMINGTON DELAWARE

CONTRACT 72 AND 72 A
DELAWARE STATE HIGHWAY DEPARTMENT
SOUTH MARKET STREET BRIDGE
OVER CHRISTIANA RIVER
WILMINGTON, DELAWARE
GENERAL ARRANGEMENT OF
BASCULE SPAN AND PIERS

BWC. 7-27-26
CJP 8-4-26
SHEET 2

A. M. Livingston
Burns & Ewing

CONSULTING ENGINEERS
KANSAS CITY — NEW YORK

CONTRACT No. 21-074-07
REPRODUCED
ORIGINAL CONTRACT DRAWING
INCLUDED FOR INFORMATIONAL PURPOSES
MOUNTS + MASTERS
DRAWING No.
93 of 169

AUG 12 1941

Name: cd_013a.cal
Dimensions: 7200 x 4800 pixels

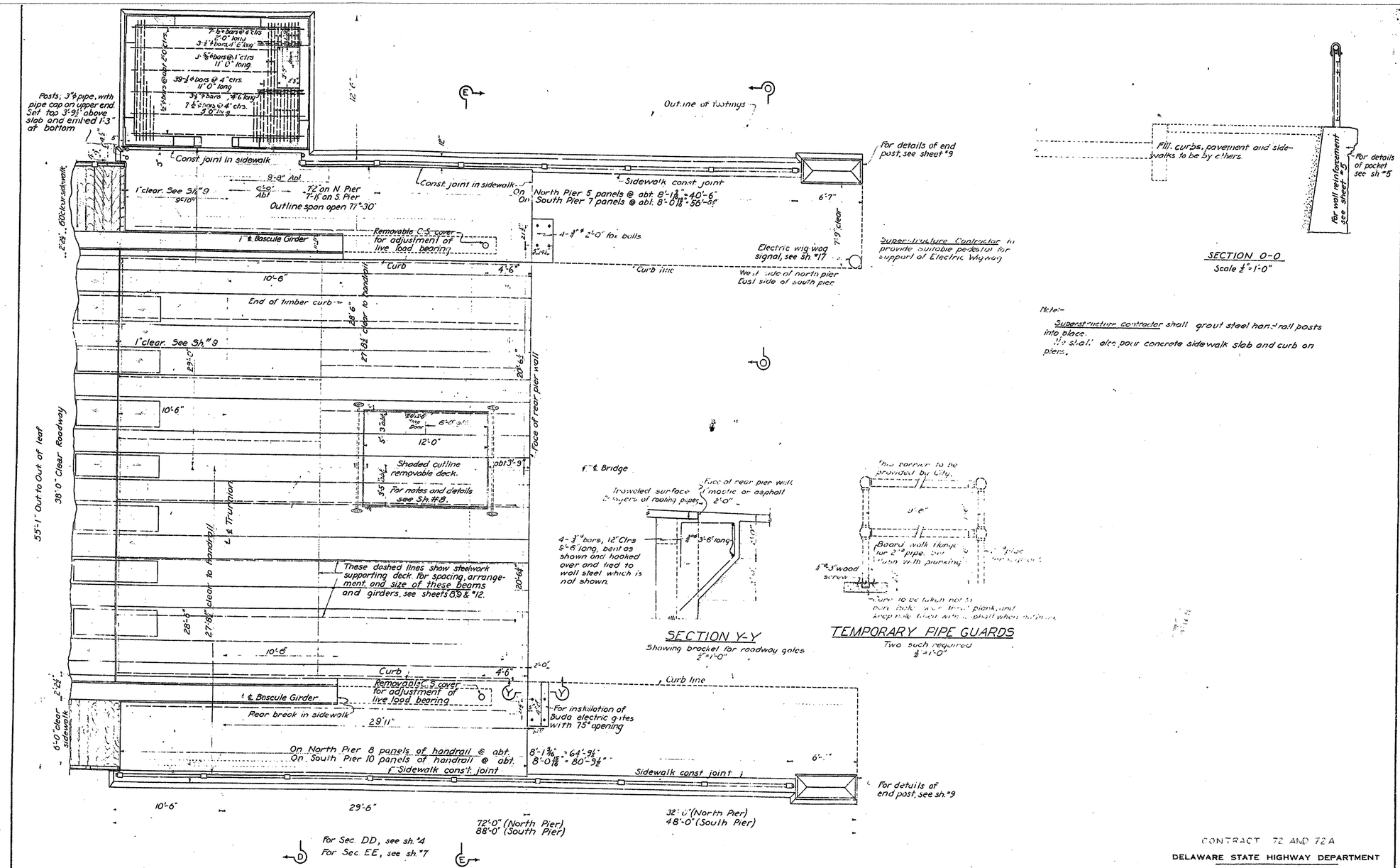

CONTRACT 72 AND 72A

DELAWARE STATE HIGHWAY DEPARTMENT

SOUTH MARKET STREET BRIDGE
OVER CHRISTIANA RIVER
WILMINGTON DELAWARE

BASCULE PIERS AND APPROACH WALLS
PLAN AT ROADWAY

SCALE AS NOTED
DRAWN BY F.W.H. DATE 7 27 26
TRACED BY C.J.P. DATE 7 30 26
CHECKED BY DATE

HARRINGTON, HOWARD AND ASH
CONSULTING ENGINEERS
KANSAS CITY NEW YORK

SHEET NO. 3

CONTRACT No. 21-074-07

REPRODUCED
ORIGINAL CONTRACT DRAWING
INCLUDED FOR INFORMATIONAL PURPOSES

MOUNTSTEP MASTERS
SERVICE BUREAU
WILMINGTON DELAWARE

DRAWING No. 77 of 149

AUG 12 1941

F-29

Name: Cd_014.CAL
Dimensions: 7200 x 4800 pixels

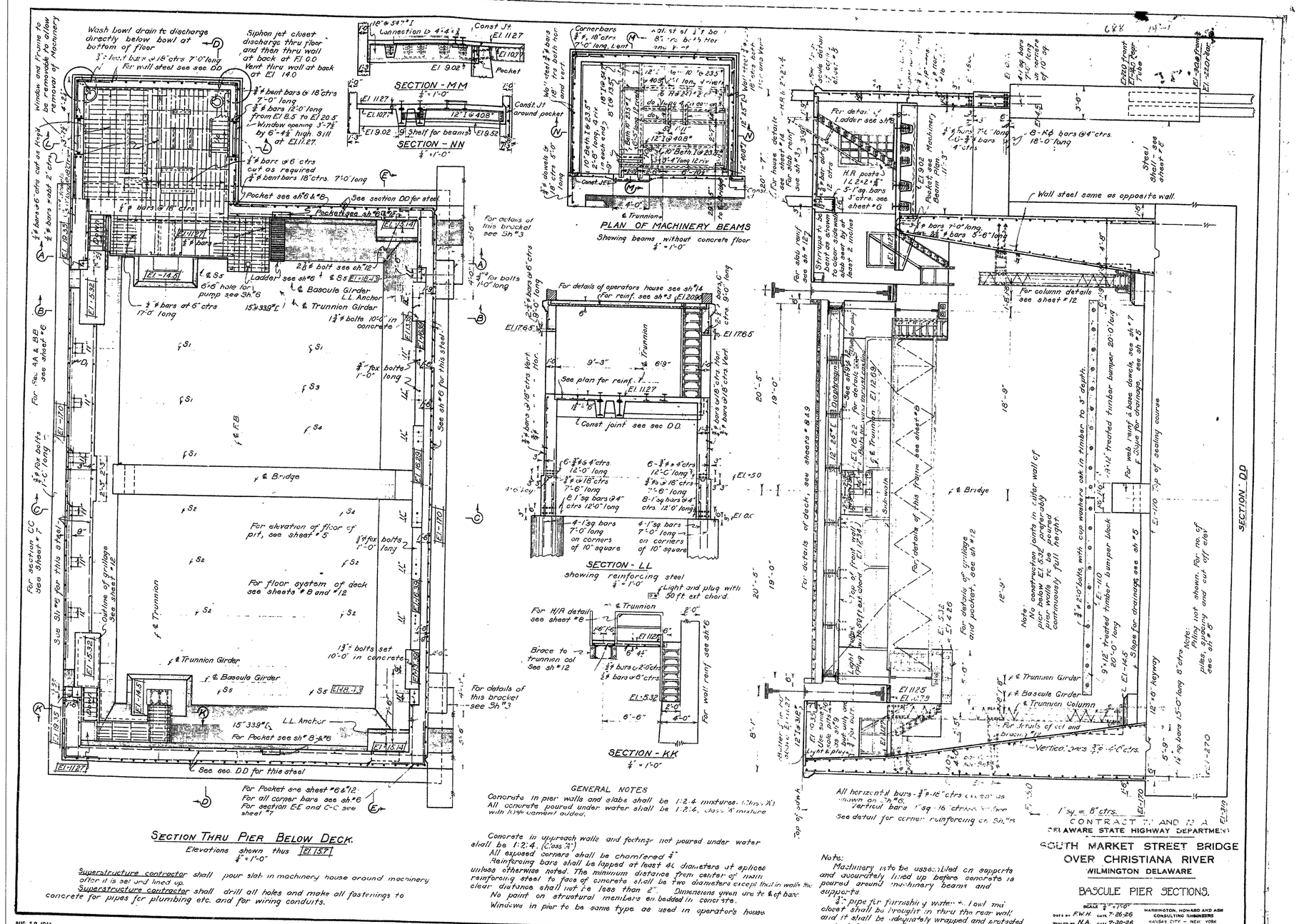

REPRODUCED
ORIGINAL CONTRACT DRAWING
INCLUDED FOR INFORMATIONAL PURPOSES
MODJESKI and MASTERS
CONSULTING ENGINEERS
CONTRACT No. 21-074-07
DRAWING No. 98 of 169

Name: Cd_015.CAL
Dimensions: 8800 x 6784 pixels

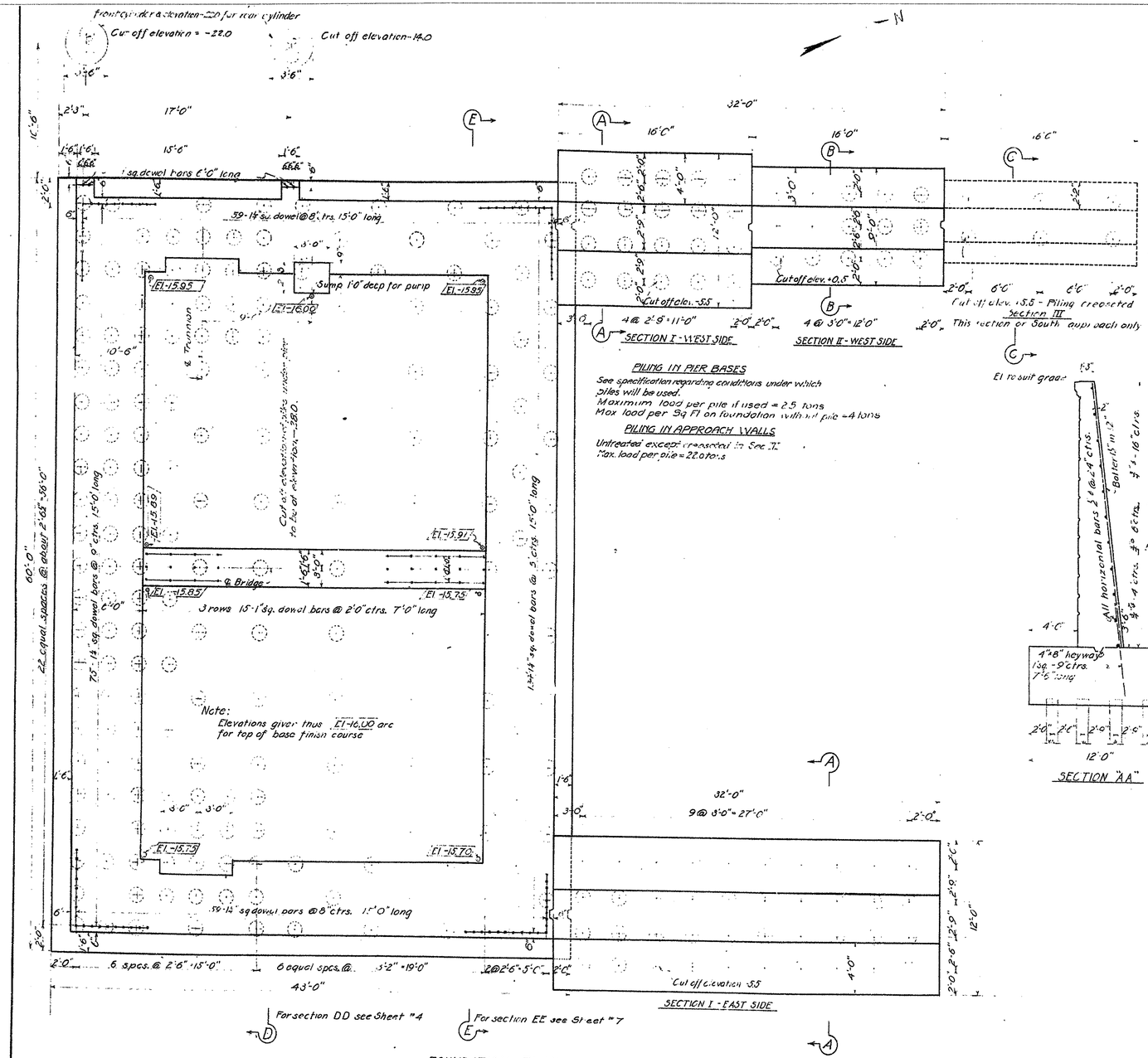

PILING IN PIER BASES

See specification regarding conditions under which piles will be used.
Maximum load per pile if used = 2.5 tons
Max load per Sq Ft on foundation without pile = 4 tons

PILING IN APPROACH WALLS

Untreated except recessed in Sec. III
Max. load per pile = 22.0 tons

FOUNDATION PLAN

This plan shows size of base, spacing of piling, outline and dowel reinforcing for all walls at top of base. Footings for retaining walls are shown for North approach. Footings and walls for both sides of South approach are same as shown for West side of North approach with Section III added.

AUG 12 1941

CONTRACT No. 21-074-07

REPRODUCED
ORIGINAL CONTRACT DRAWING
INCLUDED FOR INFORMATIONAL PURPOSES

DRAWING No. 22 of 189

MOUSLEY-MASTERS CONSULTING-ENGINEERS WILMINGTON, DELAWARE

CONTRACT 72 AND 72 A
DELAWARE STATE HIGHWAY DEPARTMENT

SOUTH MARKET STREET BRIDGE OVER CHRISTIANA RIVER

WILMINGTON DELAWARE

BASCULE PIERS AND APPROACH WALLS
FOUNDATION PLAN - APPROACH WALL SECTIONS

SCALE 1/10 except as noted
DRAWN BY FWH DATE 7-12-26
TRACED BY RK DATE 7-23-26
CHECKED BY [illegible] DATE [illegible]
HARRINGTON, HOWARD AND ASH CONSULTING ENGINEERS KANSAS CITY-NEW YORK
SHEET NO. 5

F-28

Name: Cd_016.CAL
Dimensions: 7200 x 4800 pixels