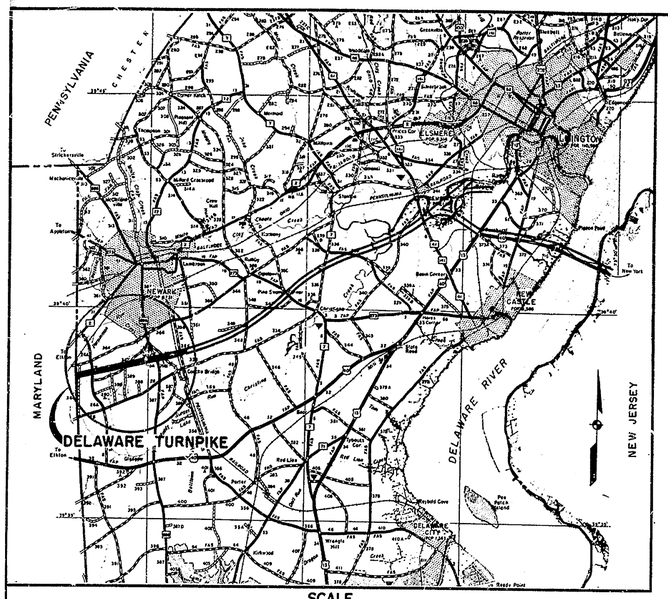

THE STATE OF DELAWARE

State of Delaware

STATE HIGHWAY DEPARTMENT

DELAWARE TURNPIKE
CONSTRUCTION CONTRACT Nº 7002

STA. 15+64.17 ℄ TO STA. 190+00.00 ℄

17435.83 FEET: 3.302 MILES

SCALE: PLAN: 1 IN. = 80 FT.
PROFILE: HOR. 1 IN. = 80 FT.
VERT. 1 IN. = 8 FT.

LIMITS OF WORK FOR RECONSTRUCTED AND RELOCATED ROADS

ROAD 397
Sta. 8+25 – 27+00 = 1,875'

ROAD 367
Sta. 4+85 – 20+35 = 1,550'

ROUTE 896
Sta. 23+00 – 61+80 = 3,880'

COUNTY	CONTRACT	F.P.A. DIV. NO.	STATE	FED. AID PROJ. NO.	FISCAL YEAR	SHEET NO.	TOTAL SHEETS
NEW CASTLE	7002		DEL.			1	224

DELAWARE TURNPIKE

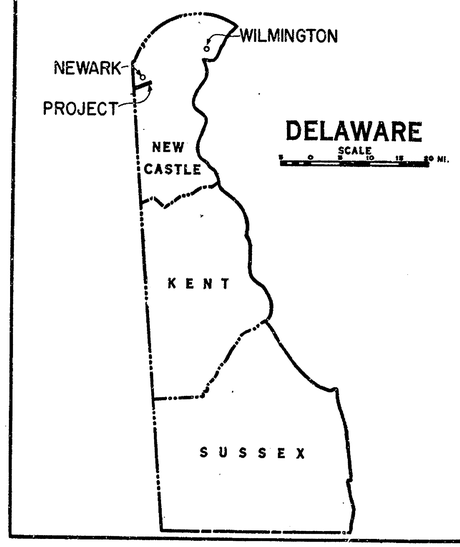

BOOK NUMBER

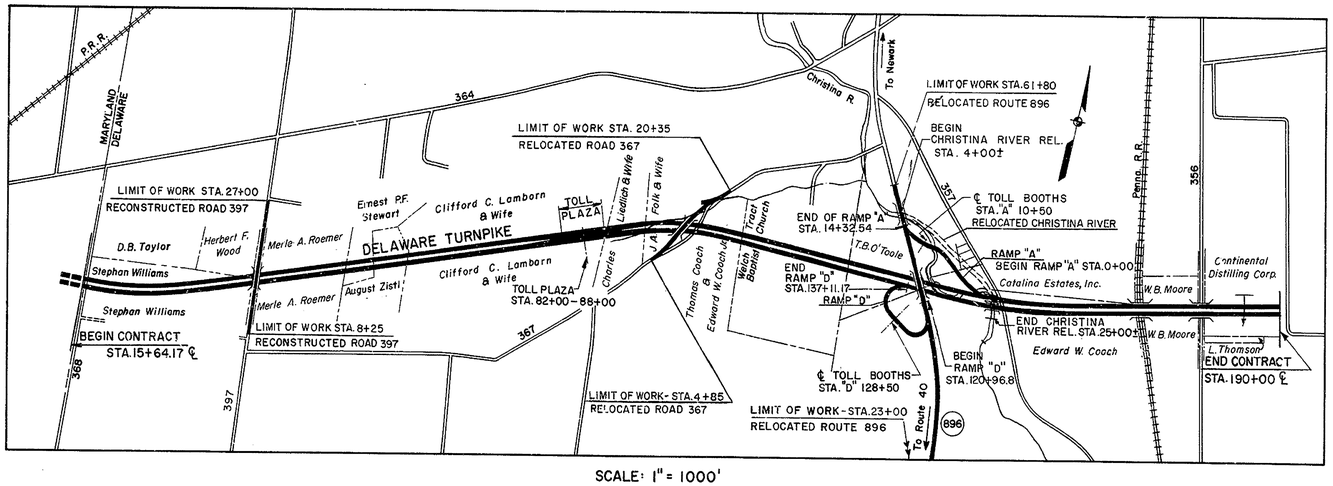

SCALE: 1" = 1000'

INDEX OF DRAWINGS

	SH. NO.
TITLE AND INDEX SHEET	1
TYPICAL SECTIONS	2 THRU 5
BENCHMARKS, SECTIONS & DETAILS	6
GENERAL NOTES	7
PLANS AND PROFILES	8 THRU 22
RAMP TERMINAL DETAILS	23
BORING LOGS	24 THRU 26
CULVERT HEAD WALL DETAILS	27 AND 28
CROSS SECTIONS	29 THRU 124
ROAD 397 BRIDGE OVER TURNPIKE	125 THRU 134
ROAD 367 BRIDGE OVER TURNPIKE	135 THRU 147
ROUTE 896 BRIDGE OVER TURNPIKE	148 THRU 160
TURNPIKE BRIDGE OVER CHRISTINA RIVER	161 THRU 173
ROUTE 896 BRIDGE OVER CHRISTINA RIVER	174 THRU 185
TURNPIKE BRIDGE OVER PENNSYLVANIA R.R.	186 THRU 192
TURNPIKE BRIDGE OVER ROAD 356	193 THRU 203
BOX CULVERT AT STA 27+00	204 AND 205
BOX CULVERT AT STA 171+84	206 AND 207
BORING LOGS FOR STRUCTURES	208 THRU 212
GUARD RAIL DETAILS	213
SUMMARY OF QUANTITIES	214
STANDARD SHEETS B, DT, G, H, I, M, M-M-M, P, Q, W	215 THRU 224

For Conventional Signs, See Sheet 7

RECOMMENDED 6/30 1962 — HOWARD, NEEDLES, TAMMEN & BERGENDOFF, GENERAL CONSULTANTS

RECOMMENDED 7-3 1962 — CHIEF ENGINEER

APPROVED 7-3 1962 — DIRECTOR OF OPERATIONS

THOMAS J. STRATTON REGISTERED 874 DELAWARE PROFESSIONAL ENGINEER

PREPARED & RECOMMENDED
TIPPETTS-ABBETT-McCARTHY-STRATTON
ENGINEERS NEW YORK

Thomas J. Stratton APRIL 23 1962
DELAWARE P.E. LIC. NO. 874 DATE

"Imperial" 156 W. B. & E.

COUNTY	CONTRACT	P.R.A. REG. NO	STATE	FED. AID PROJECT NO.	FISCAL YEAR	SHEET NO.	TOTAL SHEETS
NEW CASTLE	7002		DEL.			2	224

DELAWARE TURNPIKE

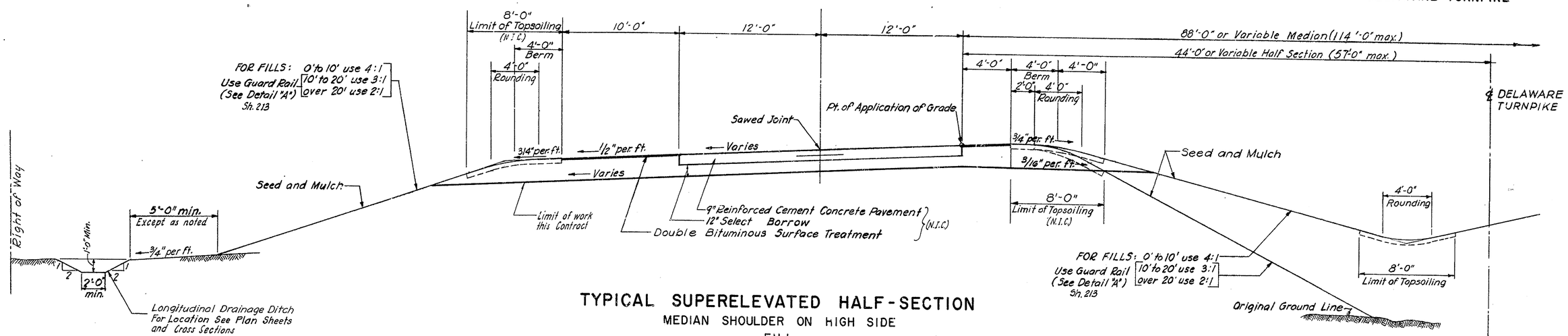

TYPICAL SUPERELEVATED HALF-SECTION

MEDIAN SHOULDER ON HIGH SIDE

FILL

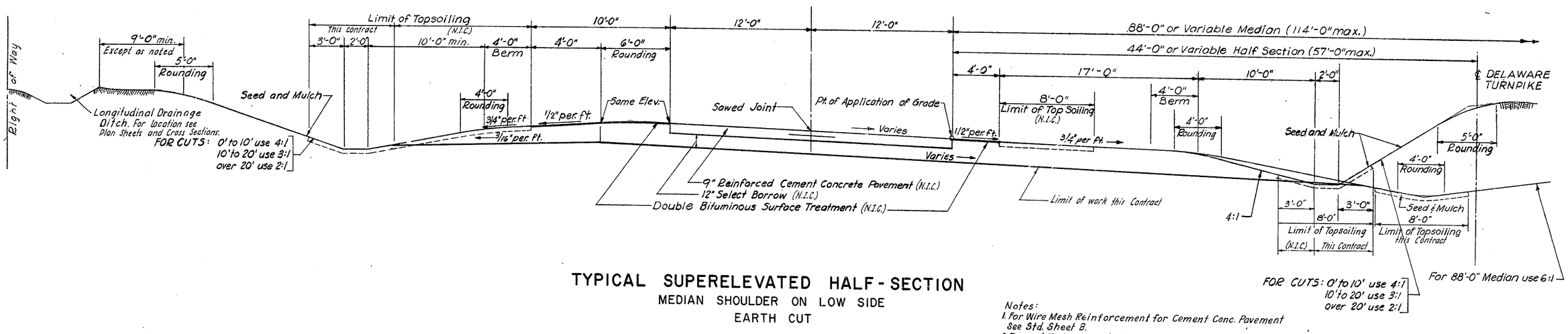

TYPICAL SUPERELEVATED HALF-SECTION

MEDIAN SHOULDER ON LOW SIDE

EARTH CUT

Notes:

1. For Wire Mesh Reinforcement for Cement Conc. Pavement See Std. Sheet B.
2. Topsoil To be Placed 4" thick unless otherwise noted.
3. All areas disturbed during construction are to be graded and seeded as directed by the Engineer.

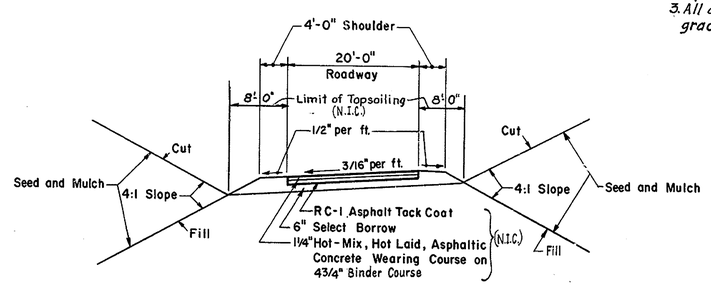

TYPICAL SECTION - CROSSOVER

(NOT TO SCALE)

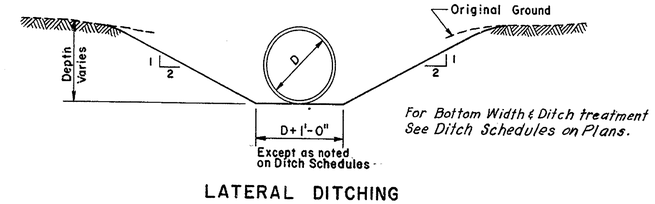

For Bottom Width & Ditch treatment See Ditch Schedules on Plans.

LATERAL DITCHING

TYPICAL SECTIONS

SCALE 1/4 IN = 1 FT.

COUNTY	CONTRACT	P.R.A. REG. NO.	STATE	FED. AID PROJECT NO.	FISCAL YEAR	SHEET NO.	TOTAL SHEETS
NEW CASTLE	7002		DEL.			3	224

DELAWARE TURNPIKE

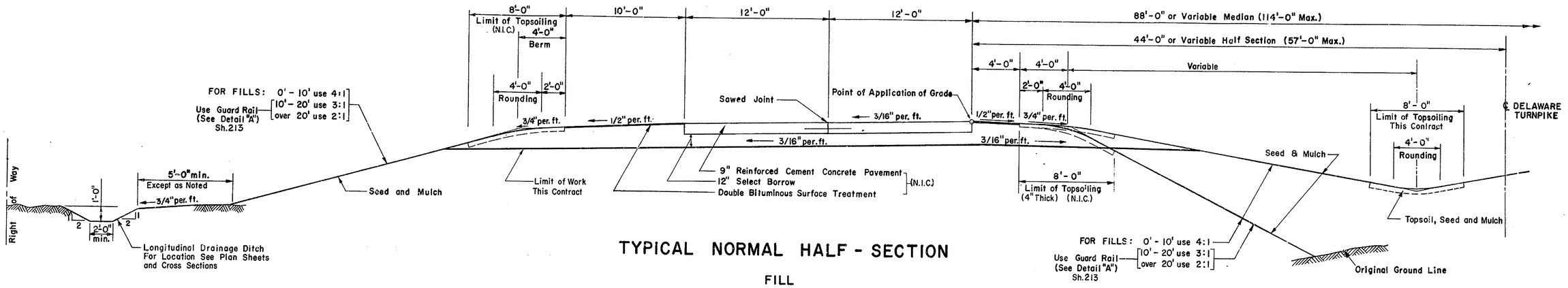

TYPICAL NORMAL HALF - SECTION

FILL

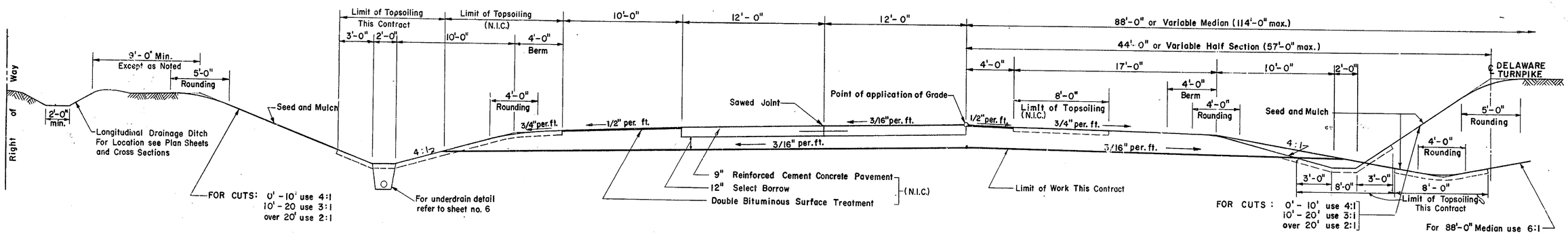

TYPICAL NORMAL HALF - SECTION

EARTH CUT

Notes:

1. For Wire Mesh Reinforcement for Cement Conc Pavement See Std. Sheet B.
2. Topsoil to be Placed 4" thick unless otherwise Noted.
3. All areas disturbed during construction are to be graded and seeded as directed by the Engineer.

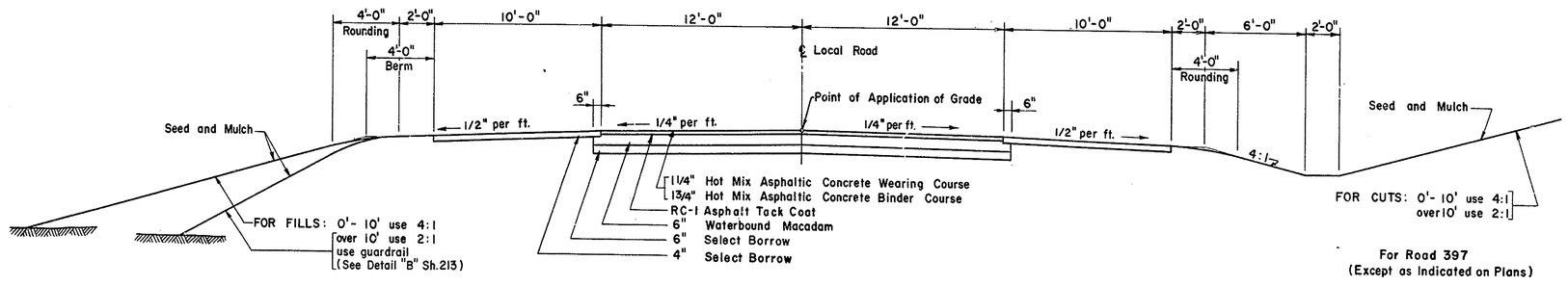

TYPICAL SECTION - RECONSTRUCTED LOCAL ROADS

ROAD 397
ROAD 367

TYPICAL SECTIONS

SCALE 1/4 IN = 1 FT.

COUNTY	CONTRACT	P.R.A. REG. NO.	STATE	FED. AID PROJECT NO.	FISCAL YEAR	SHEET NO.	TOTAL SHEETS
NEW CASTLE	7002		DEL.			4	224

DELAWARE TURNPIKE

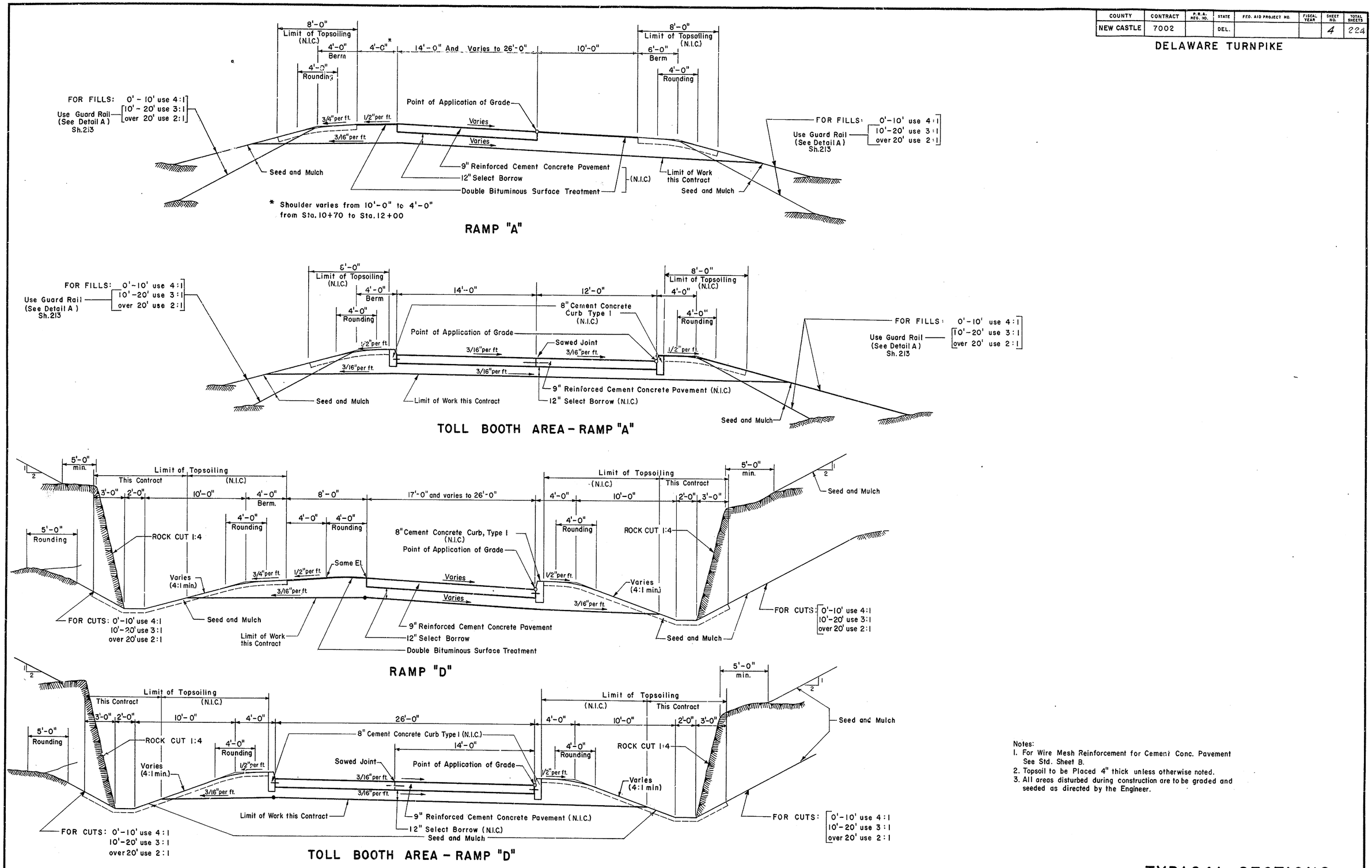

Notes:
1. For Wire Mesh Reinforcement for Cement Conc. Pavement See Std. Sheet B.
2. Topsoil to be Placed 4" thick unless otherwise noted.
3. All areas disturbed during construction are to be graded and seeded as directed by the Engineer.

TYPICAL SECTIONS

SCALE 1/4 IN=1 FT.

COUNTY	CONTRACT	P.R.S. REG. NO.	STATE	FED. AID PROJECT NO.	FISCAL YEAR	SHEET NO.	TOTAL SHEETS
NEW CASTLE	7002		DEL.			5	224

DELAWARE TURNPIKE

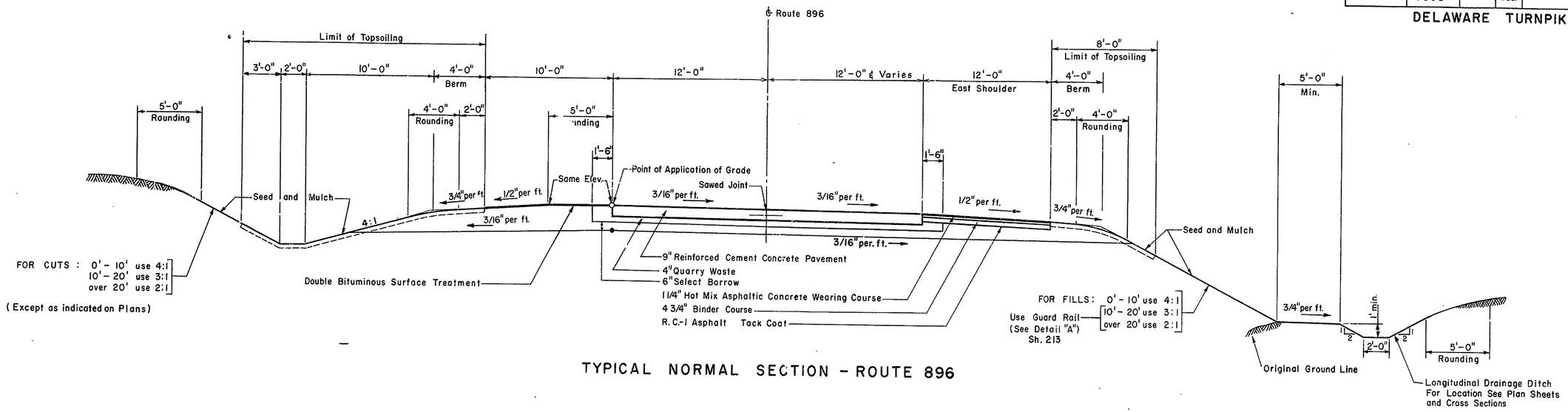

TYPICAL NORMAL SECTION - ROUTE 896

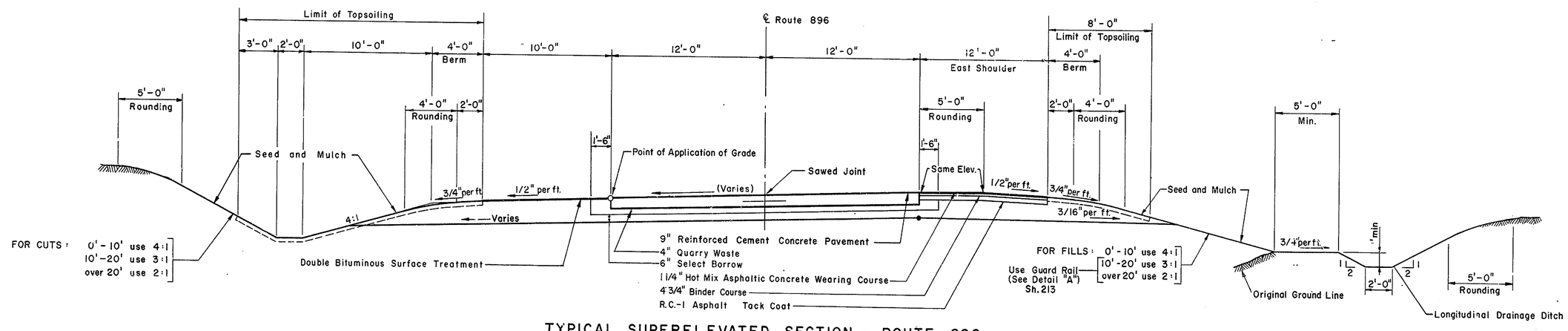

TYPICAL SUPERELEVATED SECTION - ROUTE 896

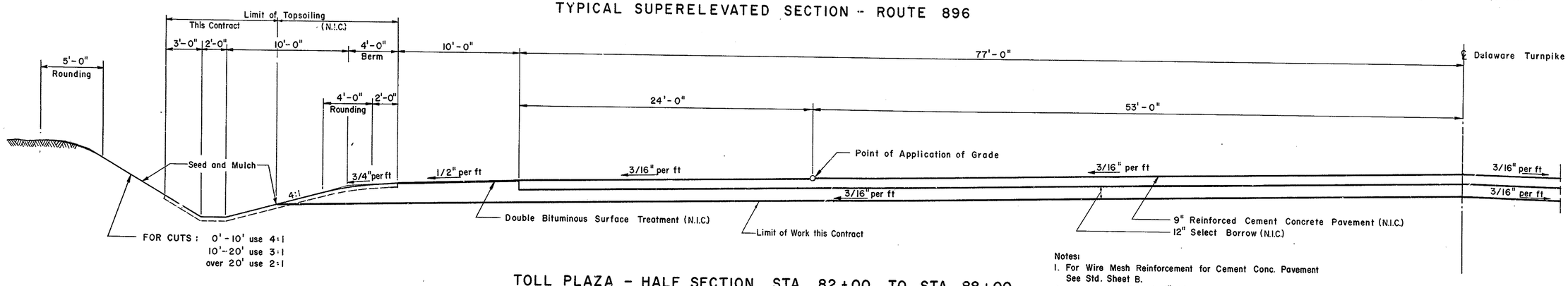

TOLL PLAZA - HALF SECTION STA. 82+00 TO STA. 88+00

Notes:
1. For Wire Mesh Reinforcement for Cement Conc. Pavement See Std. Sheet B.
2. Topsoil to be Placed 4" thick unless otherwise noted.
3. All areas disturbed during construction are to be graded and seeded as directed by the Engineer.

TYPICAL SECTIONS

SCALE 1/4 IN=1 FT.

COUNTY	CONTRACT	F.A.P. REG NO	STATE	FED AID PROJECT NO	F SCAL YEAR	SHEET NO	TOTAL SHEETS
NEW CASTLE	7002		DEL			6	224

DELAWARE TURNPIKE

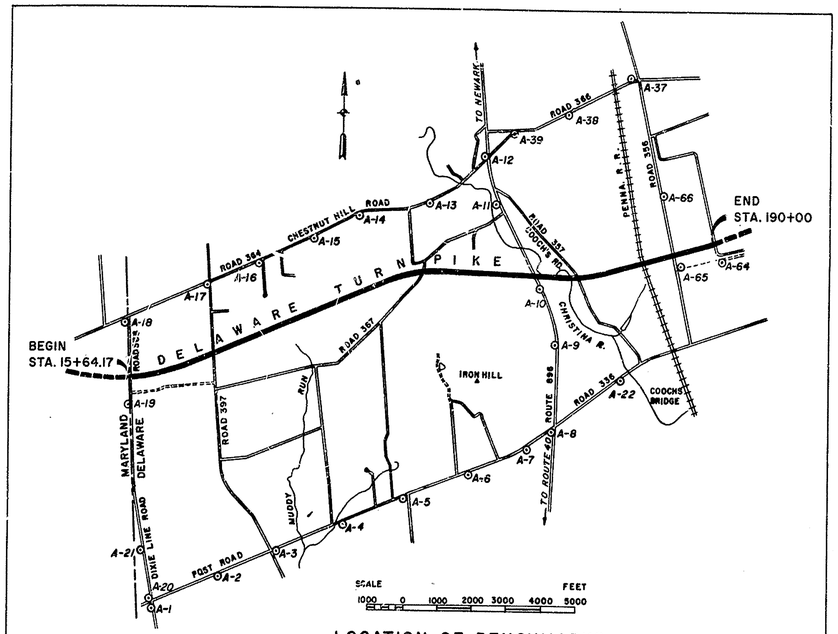

LOCATION OF BENCHMARKS

TABLE OF BENCHMARKS

POST ROAD - BMs are RR spikes in poles on south side of Post Road

B.M. NO.	DESCRIPTION	ELEVATION
A-1	Pole #733 DST 23 - 40'± south of intersection with Dixie Line Road (Rd. 368)	102.752
A-2	Pole #733 DST 11 - 2000'± northeast of intersection with Dixie Line Road (Rd. 368)	102.126
A-3	Pole #729 DST 59 - southeast corner of intersection with Road 397	97.604
A-4	Pole DST 45 - in front of new Church of God	96.204
A-5	Pole DST 32 - 400'± southwest of Iron Hill School	134.835
A-6	Pole DST 19 - opposite old Texaco Gas Station garage	150.859
A-7	Pole DST 7 - 1000'± southwest of intersection with Route 896	138.292
A-8	Pole #742 DST 108 - southwest corner of intersection with Route 896	113.074
A-22	Pole DST 16 - 300'± west of Cooch's Bridge	60.648

ROUTE 896 - BMs are RR spikes in poles on west side of Route 896

A-9	Pole DST 94 - 2300'± north of intersection with Post Road	123.891
A-10	Pole DST 86 - 300'± south of intersection with ℄ Delaware Turnpike	90.351
A-11	Pole #73 DPL 2 - 300'± south of intersection with Cooch's Road (Rd. 357)	75.773
A-12	Pole #712 DST ½ - northwest corner of intersection with Chestnut Hill Road	84.496

CHESTNUT HILL ROAD - BMs are RR spikes in poles on south side of Chestnut Hill Road except A-37 & A-38

A-13	Pole DST 14 - in front of 1 Sty. frame house (C.S. Brown)	126.984
A-14	Pole #712 DST 28 - opposite 2 Sty. frame house (R. Smith)	244.068
A-15	Pole DST 37 - 140'± west of Perkins' driveway	274.645
A-16	Pole #739 DST 11 - 16'± east of Bertine's driveway	194.071
A-17	Pole K352 DPL 70 - southwest corner of intersection with Road 397	132.729
A-18	Pole NMP Co.5065 - southwest corner of intersection with Dixie Line Road (Rd. 368)	119.942
A-37	Top of southerly bolt in base of light standard, Mobil Gas Station	85.364
A-38	R.R. spike in 20" red oak, south side of road - 1500'± west of Penna. R.R. intersec.	82.184
A-39	Pole #781 DST 8 - 800'± east of intersection with Route 896	98.809

DIXIE LINE ROAD - BMs are RR spikes in poles on west side of Dixie Line Road except A-19

A-19	R.R. spike in 15" gum tree, west side of road - 800' south of intersection with ℄ Delaware Turnpike	154.680
A-20	Pole K 129 - 165'± north of intersection with Post Road	126.027
A-21	Pole #31 DPL 8 - 1400'± north of intersection with Post Road	103.640

ROAD 356 - BMs are RR spikes in poles on east side of Road 356 except A-64

A-65	Pole DPL 20 - 400'± south of ℄ Delaware Turnpike	65.295
A-66	Pole DPL 23 - 1600'± north of ℄ Delaware Turnpike	70.202
A-64	R.R. spike in 6" gum tree 400'± south of Sta. 190+50± ℄ Delaware Turnpike	70.880

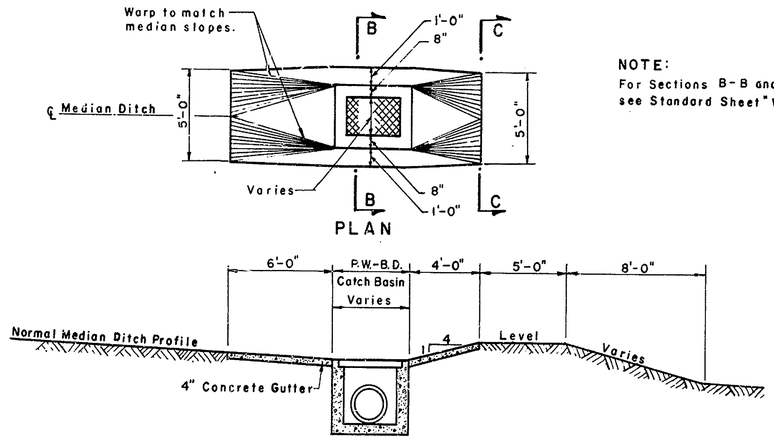

ELEVATION

MEDIAN CONSTRUCTION AT CATCH BASIN

SCALE: 1/4 IN. = 1 FT.

NOTE:
For Sections B-B and C-C see Standard Sheet "W"

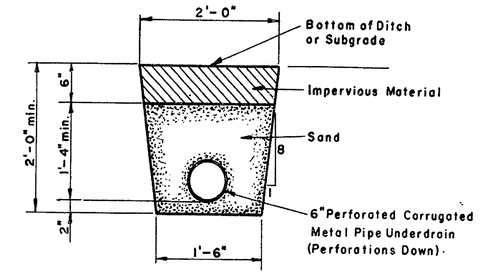

ELEVATION

UNDERDRAIN DETAIL (ITEM 31...)

SCALE: 1" IN. = 1 FT.

Where practical underdrains shall be connected to discharge into transverse culvert pipes.
Where laterals are required they shall be connected at an angle of 60 degrees to the longitudinal drain.

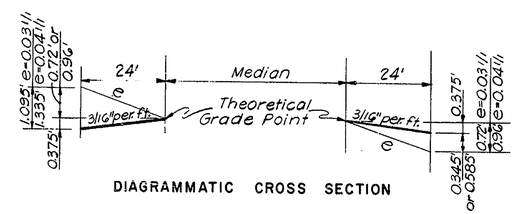

DIAGRAMMATIC CROSS SECTION

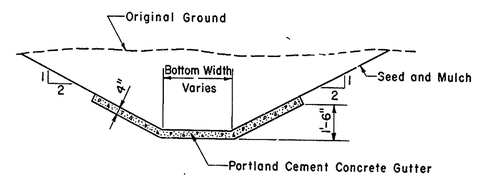

LONGITUDINAL DRAINAGE DITCH

NOT TO SCALE

NOTE:
See Drainage Ditch Schedule for Bottom Width, Rip Rap, Portland Cement Concrete Gutter, Seed and Mulch and Sodding where Required

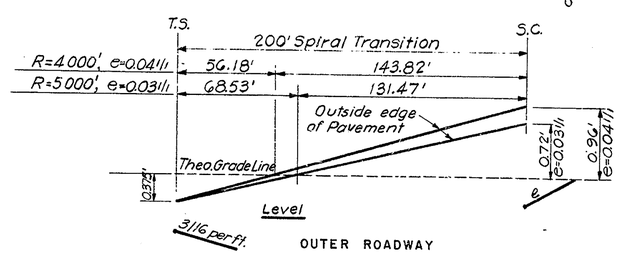

OUTER ROADWAY

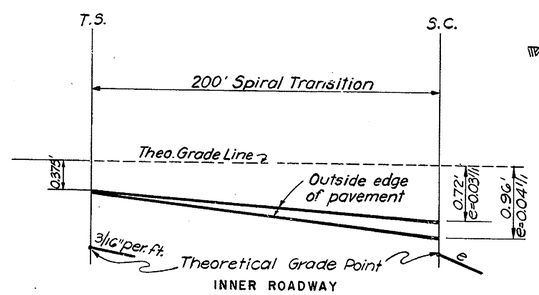

INNER ROADWAY

SUPERELEVATION TRANSITION DETAIL

NOT TO SCALE

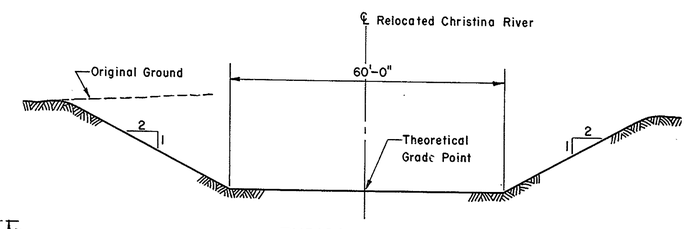

TYPICAL SECTION

RELOCATED CHRISTINA RIVER

NOT TO SCALE

For Profile of Christina River See Sheet No. 16

BENCHMARKS, SECTIONS & DETAILS

COUNTY	CONTRACT	P.R.A. REG. NO.	STATE	FED. AID PROJECT NO.	FISCAL YEAR	SHEET NO.	TOTAL SHEETS
NEW CASTLE	7002	2	DEL.			7	224

DELAWARE TURNPIKE

ABBREVIATIONS

℄	Base Line
℄	Center Line
℘	Property Line
B.M.	Bench Mark
H.W.	Head Wall
W.W.	Wing Wall
M.H.	Manhole
C.B. (PWBD)	Catch Basin (Parkway Type)
R.C.P.	Reinforced Concrete Pipe
E.S.R.C.P.	Extra Strength Reinforced Concrete Pipe
C.M.P.	Corrugated Metal Pipe
Inv.	Invert
Mac.	Macadam
E.B.	Eastbound
W.B.	Westbound
P.O.T.	Point on Tangent
P.V.C.	Point of Vertical Curvature
P.V.T.	Point of Vertical Tangency
P.V.I.	Point of Vertical Intersection
El. or Elev.	Elevation
T.S.	Point of Tangency, Tangent to Spiral
S.C.	Point of Common Tangency, Spiral to Curve
C.S.	Point of Common Tangency, Curve to Spiral
S.T.	Point of Tangency, Spiral to Tangent
P.I.	Point of Intersection of Tangents
R.O.W.	Right-of-Way
Δ	Angle of Deflection between Tangents
Δc	Central Angle of Curve with Constant Radius
Lc	Length of Curve with Constant Radius
Es	External of Spiraled Curve at Vertex
Rc	Radius of Curvature
Ls	Length of Spiral
Ts	External Tangent, T.S. or S.T. to Vertex
Øs	Angle Between Tangents of Spiral
M.O.	Middle Ordinate
Gr.	Proposed Grade
S.E. or e	Rate of Superelevation
D.P.&L.	Delaware Power & Light Co.
D.S.T.	Diamond State Telephone Co.
C.W.	Copperweld (Copper jacketed steel pin)
C.&P.T.	Chesapeake & Potomac Telephone Co.
C.P.	Conowingo Power Co.
E.S.N.G.	Eastern Shore Natural Gas Co.

CONVENTIONAL SIGNS

County Line

City or Town Line

Right-of-Way Line

Center Line, Proposed Road (240)

Macadam, Travelled Road

Trolley or Railroad

Wooded Area

Existing Stream or Ditch

Downspout

Wire Fence

Present Culvert

Proposed Culvert

Power or Telephone Pole

Power and Telephone Wires (P.T.)

Tree

PROFILE

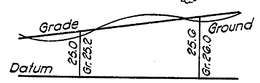

Fill Slope

Cut Slope

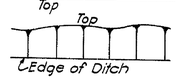

GENERAL NOTES

1. Horizontal Control based on 1927 North American datum Delaware Coordinate System.

2. Vertical Control based on U.S.C.&G.S. datum.

3. For General Notes pertaining to Structures see General Plan Sheets for the individual bridges or box culverts.

4. Topsoil is to be stripped and stockpiled first from cut areas under Item 2 Excavation, for later placing on slopes under Item 52 Topsoiling. Generally, topsoil is available throughout the length of the Project.

5. Driveway Adjustments are to be made as indicated on the Plans or as directed by the Engineer.

6. Maintenance of Traffic:
   (a) Road 368 (Dixie Line Road) is to be kept open to traffic until reconstruction work on Road 397 has been completed.
   (b) Existing Road 367 is to be kept open to traffic during construction of the bridge and embankment approaches for the Relocated Road. Temporary by-passes are to be provided during construction of the ends of the Roadway Relocation.
   (c) For Notes pertaining to Detour Road on Route 896 see Plans.
   (d) Road 357 to be kept open to traffic until 5/1/63
   Road 356 to be kept open to traffic at all times.

7. Existing Ground Lines on Cross Section Sheets are shown as follows:
   (1) Dashed Line indicates ground line as determined from photogrammetry
   (2) Solid line indicates adjusted ground line developed on the basis of elevations taken along ℄ Turnpike by field survey methods. All earthwork measurements and computations were made using the adjusted solid line.

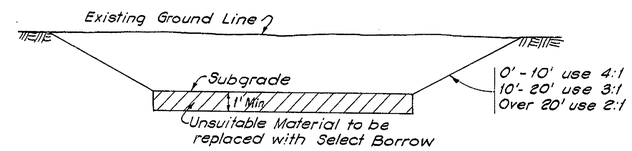

UNSUITABLE MATERIAL IN CUT

NOT TO SCALE

In Cut Areas where unsuitable material is encountered the excavation shall be carried to an additional depth below subgrade as directed by the Engineer.

Approximate Locations Sta. 100+00 to Sta. 128+00 (See Cross Sections)

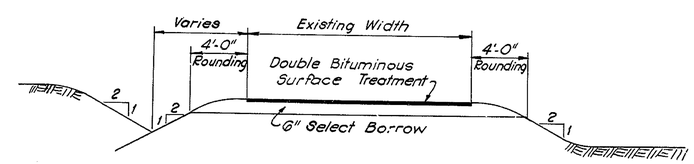

DRIVEWAY ADJUSTMENT

NOT TO SCALE

(For Locations, see Plans)

GENERAL NOTES

COUNTY	CONTRACT	P.R.A. REG. NO	STATE	FED. AID PROJECT NO.	FISCAL YEAR	SHEET NO.	TOTAL SHEETS
NEW CASTLE	7002		DEL.			8	224

DELAWARE TURNPIKE

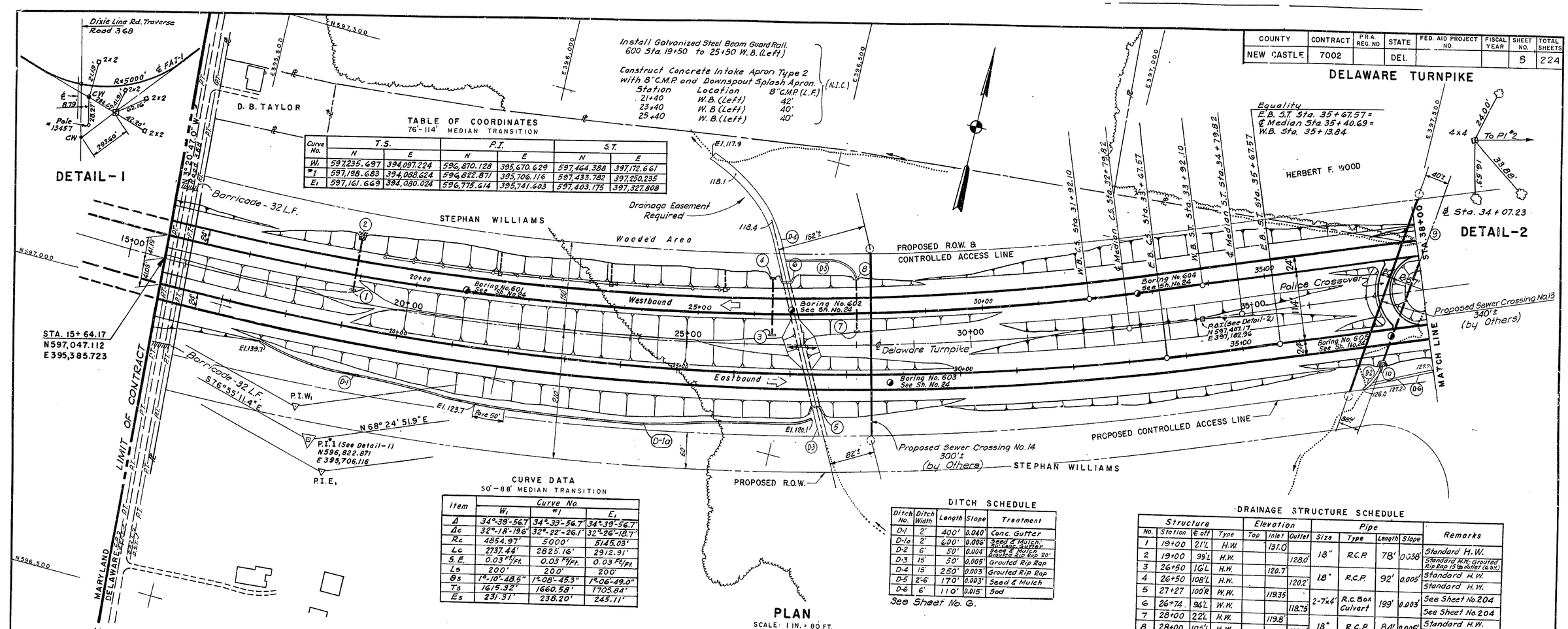

TABLE OF COORDINATES
76'-114' MEDIAN TRANSITION

Curve No.	T.S. N	T.S. E	P.I. N	P.I. E	S.T. N	S.T. E
W1	597,235.697	394,097.224	596,870.128	395,670.629	597,464.388	397,172.661
#1	597,198.683	394,088.624	596,822.871	395,706.116	597,433.782	397,250.235
E1	597,161.669	394,080.024	596,775.614	395,741.603	597,403.175	397,327.808

CURVE DATA
50'-88' MEDIAN TRANSITION

Item	Curve No. W1	Curve No. #1	Curve No. E1
Δ	34°-39'-56.7"	34°-39'-56.7"	34°-39'-56.7"
Δc	32°-18'-19.6"	32°-22'-26.1"	32°-26'-18.7"
Rc	4854.97'	5000'	5145.03'
Lc	2737.44'	2825.16'	2912.91'
S.E.	0.03 ft/ft.	0.03 ft/ft.	0.03 ft/ft.
Ls	200'	200'	200'
θs	1°-10'-48.5"	1°-08'-45.3"	1°-06'-49.0"
Ts	1615.32'	1660.58'	1705.84'
Es	231.31'	238.20'	245.11'

DITCH SCHEDULE

Ditch No.	Ditch Width	Length	Slope	Treatment
D-1	2'	400'	0.040'	Conc. Gutter
D-1a	2'	600'	0.006'	Seed & Mulch; 20' Rip Rap Outlet
D-2	6'	50'	0.004'	Seed & Mulch
D-3	15'	50'	0.005'	Grouted Rip Rap
D-4	15'	250'	0.003'	Grouted Rip Rap
D-5	2'-6'	170'	0.003'	Seed & Mulch
D-6	6'	110'	0.015'	Sod

See Sheet No. 6.

DRAINAGE STRUCTURE SCHEDULE

Structure No.	Station	℄ off	Type	Elevation Top	Elevation Inlet	Elevation Outlet	Pipe Size	Pipe Type	Pipe Length	Pipe Slope	Remarks
1	19+00	21'L	H.W.		131.0		18"	R.C.P.	78'	0.038'	Standard H.W.
2	19+00	99'L	H.W.			128.0'					Standard H.W. Grouted Rip Rap (5 yd outlet (6.32))
3	26+50	16'L	H.W.		120.7						
4	26+50	108'L	H.W.			120.2'	18"	R.C.P.	92'	0.005'	Standard H.W.
5	27+27	100'R	W.W.		119.35						Standard H.W.
6	26+74	94'L	W.W.			118.75	2-7'x4'	R.C. Box Culvert	199'	0.003'	See Sheet No. 204
7	28+00	22'L	H.W.		119.8'						See Sheet No. 204
8	28+00	105'L	H.W.			119.3'	18"	R.C.P.	84'	0.006'	Standard H.W.
9*	38+36	105'L			128.0'						Standard H.W.
10	37+15	109'R	W.W.-C			126.2'	60"x38"	Elliptical R.C.P.	246'	0.007'	See Sheet No. 276-28
											See Sheet No. 276-28

* See Sheet No. 9

UNDERDRAIN SCHEDULE

Eastbound	Westbound
15+75 to 19+00 (R)	15+53 to 18+00 (L)
29+50 to 36+50 (R)	29+50 to 38+00 (L)
36+50 to 38+00 (L)	
Outlet at 36+50	70' Long

For Underdrain Detail See Sh. No. 6.

PLAN
SCALE: 1 IN. = 80 FT.

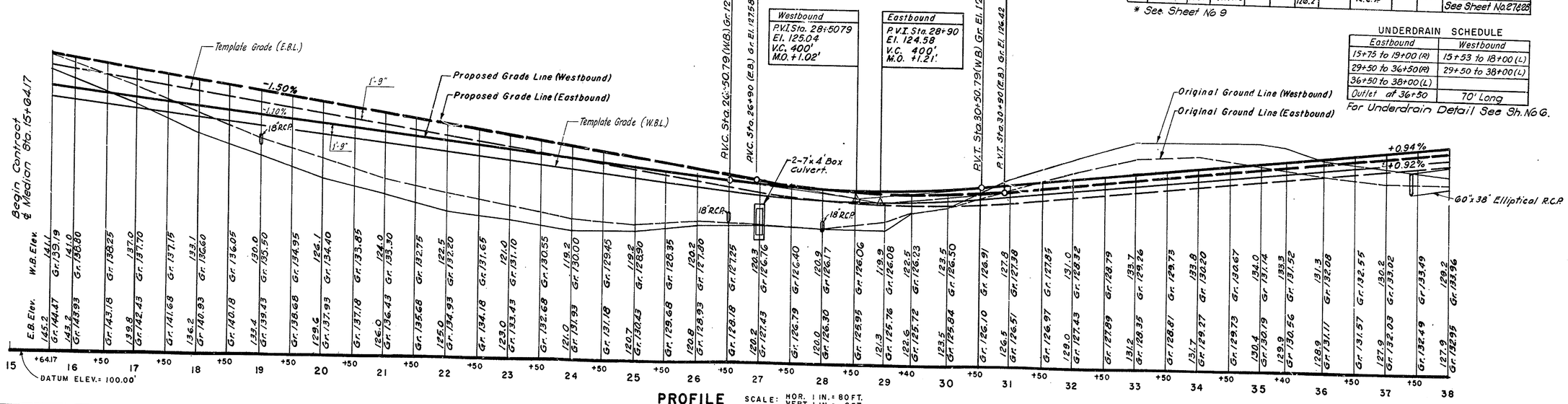

PROFILE
SCALE: HOR. 1 IN. = 80 FT. VERT. 1 IN. = 8 FT.

COUNTY	CONTRACT	P.R.A. REG. NO.	STATE	FED. AID PROJECT NO.	FISCAL YEAR	SHEET NO.	TOTAL SHEETS
NEW CASTLE	7002		DEL.			9	224

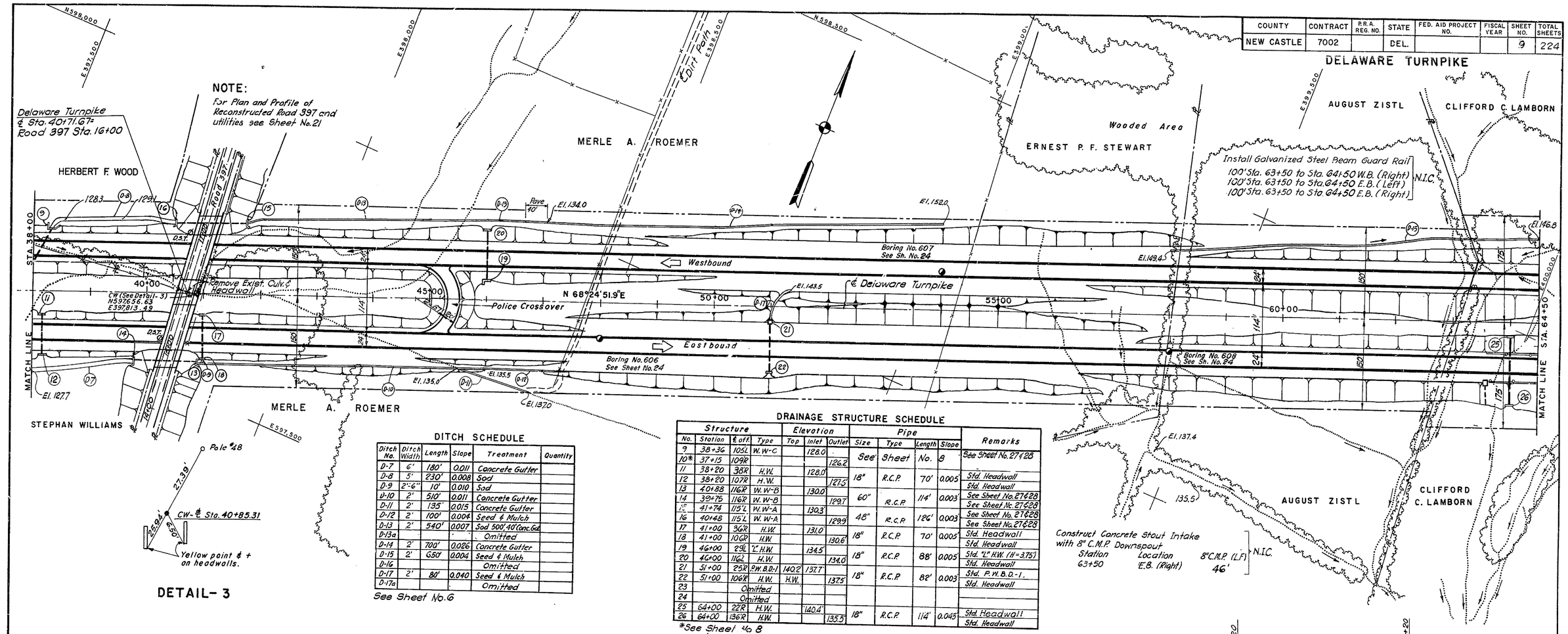

DETAIL-3

DITCH SCHEDULE

Ditch No.	Ditch Width	Length	Slope	Treatment	Quantity
D-7	6'	180'	0.011	Concrete Gutter	
D-8	5'	230'	0.008	Sod	
D-9	2'-6"	10'	0.010	Sod	
D-10	2'	510'	0.011	Concrete Gutter	
D-11	2'	135'	0.015	Concrete Gutter	
D-12	2'	100'	0.004	Seed & Mulch	
D-13	2'	540'	0.007	Sod 500', 40' Conc. Gut.	
D-13a				Omitted	
D-14	2'	700'	0.026	Concrete Gutter	
D-15	2'	650'	0.004	Seed & Mulch	
D-16				Omitted	
D-17	2'	80'	0.040	Seed & Mulch	
D-17a				Omitted	

See Sheet No. 6

DRAINAGE STRUCTURE SCHEDULE

Structure No.	Station	℄ off.	Type	Elevation Top	Elevation Inlet	Elevation Outlet	Pipe Size	Pipe Type	Pipe Length	Pipe Slope	Remarks
9	38+36	105L	W.W-C		128.0		See	Sheet	No.	8	See Sheet No. 27 & 28
10*	37+15	109R				126.2					
11	38+20	38R	H.W.		128.0		18"	R.C.P.	70'	0.005	Std. Headwall
12	38+20	107R	H.W.			127.6					Std. Headwall
13	40+88	116R	W.W-B		130.0						See Sheet No. 27 & 28
14	39+75	116R	W.W-B			129.7	60"	R.C.P.	114'	0.003	See Sheet No. 27 & 28
15	41+74	115L	W.W-A		130.3						See Sheet No. 27 & 28
16	40+48	115L	W.W-A			129.9	48"	R.C.P.	126'	0.003	See Sheet No. 27 & 28
17	41+00	36R	H.W.		131.0		18"	R.C.P.	70'	0.005	Std. Headwall
18	41+00	100R	H.W.			130.6					Std. Headwall
19	46+00	29L	"L" H.W.		134.5		18"	R.C.P.	88'	0.005	Std. "L" H.W. (H=3.75')
20	46+00	116L	H.W.			134.0					Std. Headwall
21	51+00	25R	P.W.B.D-1	140.2	137.7		18"	R.C.P.	82'	0.003	Std. P.W.B.D.-1
22	51+00	106R	H.W.	H.W.		137.5					Std. Headwall
23		Omitted									
24		Omitted									
25	64+00	22R	H.W.		140.4		18"	R.C.P.	114'	0.045	Std. Headwall
26	64+00	136R	H.W.			135.5					Std. Headwall

*See Sheet No. 8

UNDERDRAIN SCHEDULE

Eastbound	Westbound
38+00 to 49+00 (L)	48+50 to 60+00 (L)
38+00 to 57+00 (R)	

For Underdrain Detail See Sh. No. 6.

PLAN

SCALE: 1 IN. = 80 FT.

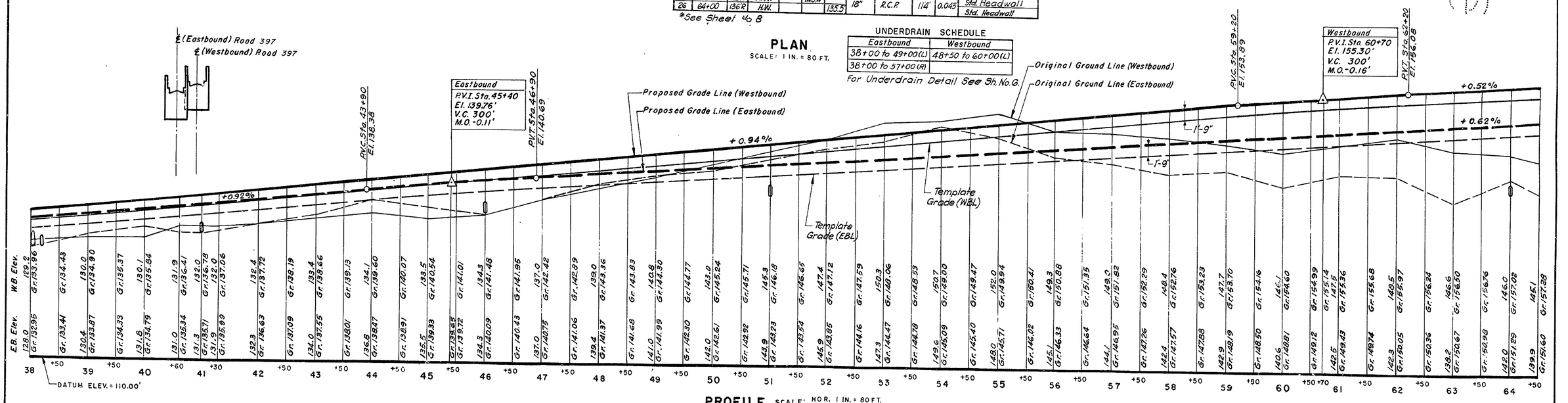

PROFILE

SCALE: HOR. 1 IN. = 80 FT. VERT. 1 IN. = 8 FT.

COUNTY	CONTRACT	P.R.A. REG. NO.	STATE	FED. AID PROJECT NO.	FISCAL YEAR	SHEET NO.	TOTAL SHEETS
NEW CASTLE	7002		DEL.			10	224

DELAWARE TURNPIKE

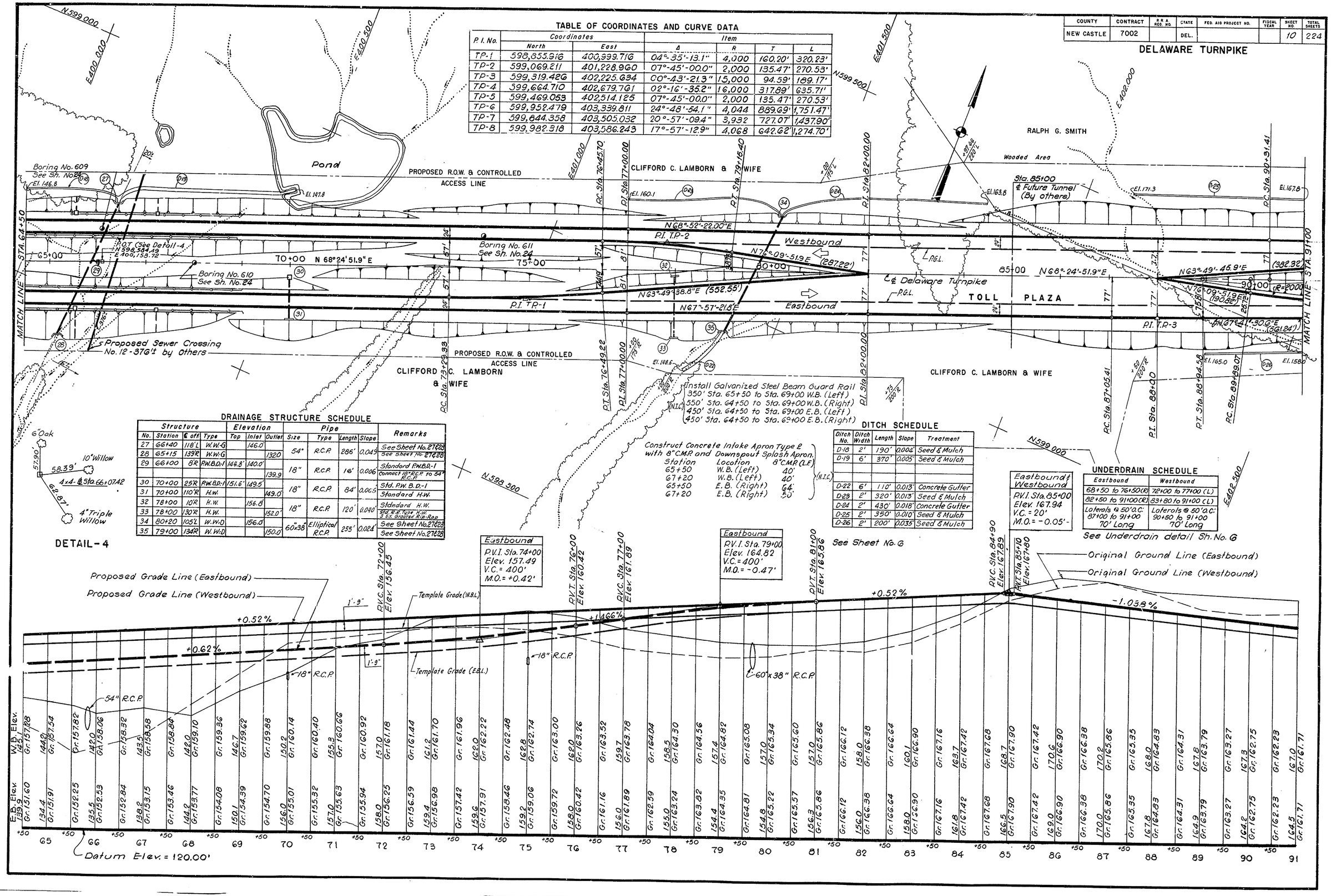

TABLE OF COORDINATES AND CURVE DATA

P.I. No.	Coordinates North	Coordinates East	Item Δ	Item R	Item T	Item L
TP-1	598,855.916	400,999.716	04°-35'-13.1"	4,000	160.20'	320.23'
TP-2	599,069.211	401,228.960	07°-45'-00.0"	2,000	135.47'	270.53'
TP-3	599,319.426	402,225.634	00°-43'-21.3"	15,000	94.59'	189.17'
TP-4	599,664.710	402,679.761	02°-16'-35.2"	16,000	317.89'	635.71'
TP-5	599,469.053	402,514.125	07°-45'-00.0"	2,000	135.47'	270.53'
TP-6	599,952.479	403,339.811	24°-48'-54.1"	4,044	889.69'	1,751.47'
TP-7	599,844.358	403,505.032	20°-57'-09.4"	3,932	727.07'	1,437.90'
TP-8	599,982.318	403,586.243	17°-57'-12.9"	4,068	642.62'	1,274.70'

DRAINAGE STRUCTURE SCHEDULE

Structure No.	Station	℄ off	Type	Elevation Top	Elevation Inlet	Elevation Outlet	Pipe Size	Pipe Type	Pipe Length	Pipe Slope	Remarks
27	66+40	118'L	W.W.-G		146.0'		54"	R.C.P.	286'	0.045	See Sheet No. 27&28
28	65+15	139'R	W.W.-G			132.0					See Sheet No. 27&28
29	66+00	8'R	P.W.B.D.-1	144.8'	140.0'		18"	R.C.P.	16'	0.006	Standard P.W.B.D.-1
						139.9					Connect 18" R.C.P. to 54" R.C.P.
30	70+00	25'R	P.W.B.D.-1	151.6'	149.5'		18"	R.C.P.	84'	0.005	Std. P.W.B.D.-1
31	70+00	110'R	H.W.			149.0'					Standard H.W.
32	78+00	10'R	H.W.		156.8'		18"	R.C.P.	120'	0.040	Standard H.W.
33	78+00	130'R	H.W.			152.0'					Std. W.S. Type H.W. 3 s.s. Grouted Rip-Rap
34	80+20	105'L	W.W.-D		156.0		60"x38"	Elliptical R.C.P.	255'	0.024	See Sheet No. 27&28
35	79+00	134'R	W.W.-D			150.0'					See Sheet No. 27&28

DITCH SCHEDULE

Ditch No.	Ditch Width	Length	Slope	Treatment
D-18	2'	190'	0.002'	Seed & Mulch
D-19	6'	370'	0.005'	Seed & Mulch
D-22	6'	110'	0.013'	Concrete Gutter
D-23	2'	320'	0.013'	Seed & Mulch
D-24	2'	430'	0.018'	Concrete Gutter
D-25	2'	350'	0.010'	Seed & Mulch
D-26	2'	200'	0.035'	Seed & Mulch

UNDERDRAIN SCHEDULE

Eastbound	Westbound
68+50 to 76+50 (R)	72+00 to 77+00 (L)
82+50 to 91+00 (R)	83+80 to 91+00 (L)
Laterals @ 50' O.C.: 87+00 to 91+00 70' Long	Laterals @ 50' O.C.: 90+50 to 91+00 70' Long

See Underdrain detail Sh. No. 6

COUNTY	CONTRACT	P.R.A. REG. NO.	STATE	FED. AID PROJECT NO.	FISCAL YEAR	SHEET NO.	TOTAL SHEETS
NEW CASTLE	7002		DEL.			11	224

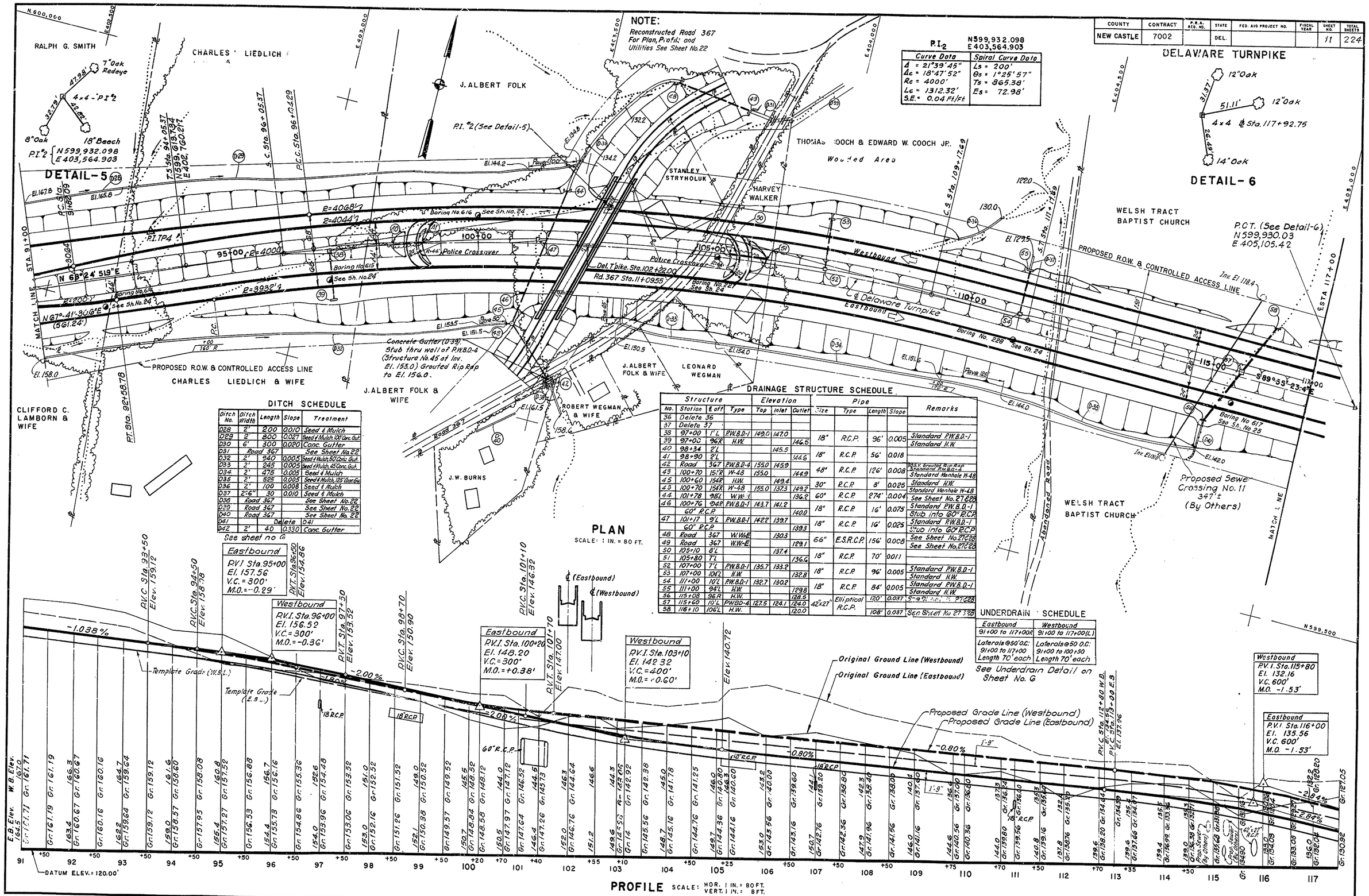

DITCH SCHEDULE

Ditch No.	Ditch Width	Length	Slope	Treatment
D28	2'	200	0.010	Seed & Mulch
D29	2'	800	0.027	Seed & Mulch, 100' Conc. Gut.
D30	6'	300	0.020	Conc. Gutter
D31	Road 367			See Sheet No. 22
D32	2'	940	0.005	Seed & Mulch, 50' Conc. Gut.
D33	2'	245	0.005	Seed & Mulch, 45' Conc. Gut.
D34	2'	475	0.005	Seed & Mulch
D35	2'	585	0.005	Seed & Mulch, 125' Conc. Gut.
D36	2'	100	0.008	Seed & Mulch
D37	2'-6"	30	0.010	Seed & Mulch
D38	Road 367			See Sheet No. 22
D39	Road 367			See Sheet No. 22
D40	Road 367			See Sheet No. 22
D41	Delete D41			
D42	2'	40	0.330	Conc. Gutter

See sheet no. 6

DRAINAGE STRUCTURE SCHEDULE

Structure No.	Station	E off	Type	Elevation Top	Elevation Inlet	Elevation Outlet	Pipe Size	Pipe Type	Pipe Length	Pipe Slope	Remarks
36	Delete 36										
37	Delete 37										
38	97+00	11'L	P.W.B.D.-1	149.0	147.0						
39	97+00	96'R	H.W.			146.5	18"	R.C.P.	96'	0.005	Standard P.W.B.D.-1
40	98+34	2'L			145.5						Standard H.W.
41	98+90	2'L				144.6	18"	R.C.P.	56'	0.018	
42	Road 367		P.W.B.D.-4	155.0	145.9						90 S.Y. Grouted Rip Rap Standard P.W.B.D.-4
43	100+70	15'R	W-48	155.0		144.9	48"	R.C.P.	126'	0.008	Standard Manhole W-48
45	100+60	154'R	H.W.		149.4						Standard H.W.
49	100+70	154'R	W-48	155.0	137.3	149.2	30"	R.C.P.	8'	0.025	Standard Manhole W-48
44	101+78	98'L	W.W.-1			136.2	60"	R.C.P.	274'	0.004	See Sheet No. 27 & 28
46	100+76	94'R	P.W.B.D.-1	143.7	141.2						Standard P.W.B.D.-1
	60" R.C.P.					140.0	18"	R.C.P.	16'	0.075	Stub into 60" R.C.P.
47	101+17	9'L	P.W.B.D.-1	142.2	139.7						Standard P.W.B.D.-1
	60" R.C.P.					139.3	18"	R.C.P.	16'	0.025	Stub into 60" R.C.P.
48	Road 367		W.W.-E.		130.3						See Sheet No. 27 & 28
49	Road 367		W.W.-E.			129.1	66"	E.S.R.C.P.	156'	0.008	See Sheet No. 27 & 28
50	105+10	8'L			137.4						
51	105+80	7'L				136.6	18"	R.C.P.	70'	0.011	
52	107+00	7'L	P.W.B.D.-1	135.7	133.2						Standard P.W.B.D.-1
53	107+00	104'L	H.W.			132.8	18"	R.C.P.	96'	0.005	Standard H.W.
54	111+00	10'L	P.W.B.D.-1	132.7	130.2						Standard P.W.B.D.-1
55	111+00	94'L	H.W.			129.8	18"	R.C.P.	84'	0.005	Standard H.W.
56	115+08	96'R	H.W.			128.5					Standard P.W.B.D.-1
57	115+60	10'L	P.W.B.D.-4	127.5	124.1	124.0	42"x27"	Elliptical R.C.P.	120'	0.037	See Sheet No. 27 & 28
58	116+10	106'L	H.W.			120.0			108'	0.037	See Sheet No. 27 & 28

UNDERDRAIN SCHEDULE

Eastbound	Westbound
91+00 to 117+00(R)	91+00 to 117+00(L)
Laterals @ 50' O.C.: 91+00 to 117+00 Length 70' each	Laterals @ 50' O.C.: 91+00 to 100+50 Length 70' each

See Underdrain Detail on Sheet No. 6

COUNTY	CONTRACT	P R A RES. NO.	STATE	FED. AID PROJECT NO.	FISCAL YEAR	SHEET NO.	TOTAL SHEETS
NEW CASTLE	7002		DEL.			12	224

DELAWARE TURNPIKE

Revised: 12-27-62
7-15-63, Ramp "B"
Revised 7-23-63

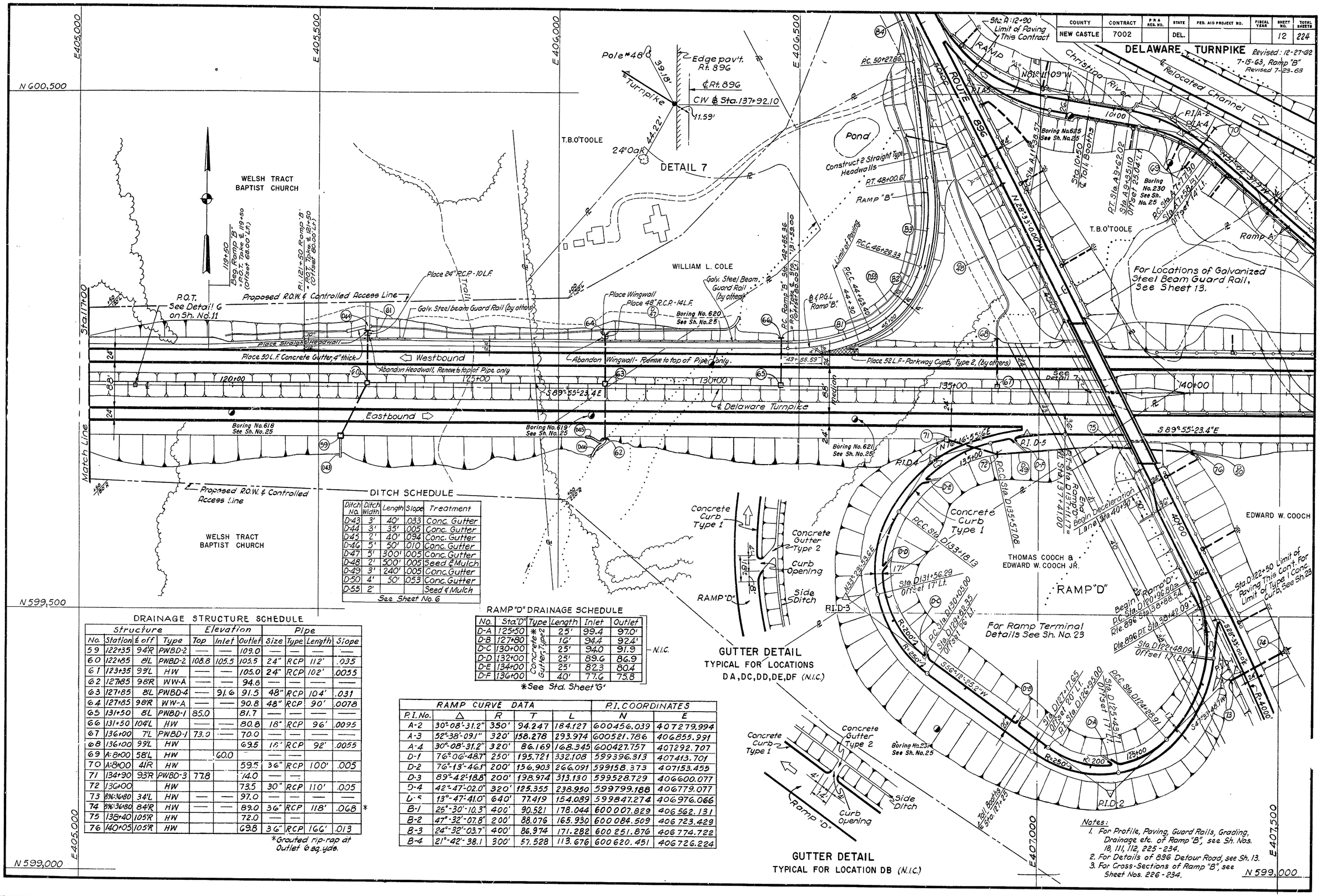

DITCH SCHEDULE

Ditch No.	Ditch Width	Length	Slope	Treatment
D-43	3'	40'	.033	Conc. Gutter
D-44	3'	35'	.005	Conc. Gutter
D-45	2'	40'	.094	Conc. Gutter
D-46	5'	50'	.010	Conc. Gutter
D-47	5'	300'	.005	Conc. Gutter
D-48	2'	500'	.005	Seed & Mulch
D-49	3'	240'	.005	Conc. Gutter
D-50	4'	50'	.053	Conc. Gutter
D-55	2'			Seed & Mulch

See Sheet No. 6

DRAINAGE STRUCTURE SCHEDULE

Structure				Elevation			Pipe			
No.	Station	℄ off	Type	Top	Inlet	Outlet	Size	Type	Length	Slope
59	122+35	94'R	PWBD-2	—	—	109.0	—	—	—	—
60	122+85	8'L	PWBD-2	108.8	105.5	105.5	24"	RCP	112'	.035
61	123+35	99'L	HW	—	—	105.0	24"	RCP	102'	.0055
62	127+85	98'R	WW-A	—	—	94.6	—	—	—	—
63	127+85	8'L	PWBD-4	—	91.6	91.5	48"	RCP	104'	.031
64	127+85	98'R	WW-A	—	—	90.8	48"	RCP	90'	.0078
65	131+50	8'L	PWBD-1	85.0		81.7	—	—	—	—
66	131+50	104'L	HW	—	—	80.8	18"	RCP	96'	.0095
67	136+00	7'L	PWBD-1	73.0	—	70.0	—	—	—	—
68	136+00	99'L	HW			69.5	18'	RCP	92'	.0055
69	A:8+00	58'L	HW		60.0	—	—	—		
70	A:8+00	41'R	HW			59.5	36"	RCP	100'	.005
71	134+90	93'R	PWBD-3	77.8		74.0	—	—		
72	136+00		HW			73.5	30"	RCP	110'	.005
73	B9:36+80	34'L	HW	—	—	97.0	—	—	—	—
74	B9:36+80	84'R	HW	—	—	89.0	36"	RCP	118'	.068 *
75	138+40	105'R	HW			72.0	—	—		
76	140+05	105'R	HW			69.8	36"	RCP	166'	.013

*Grouted rip-rap at Outlet 6 sq. yds.

RAMP "D" DRAINAGE SCHEDULE

No.	Sta. "D"	Type	Length	Inlet	Outlet
D-A	125+50	Concrete Gutter Type 2*	25'	99.4	97.0'
D-B	127+80		16'	94.4	92.4'
D-C	130+00		25'	94.0	91.9
D-D	132+00		25'	89.6	86.9
D-E	134+00		25'	82.3	80.4
D-F	136+00		40'	77.6	75.8

*See Std. Sheet "G"

N.I.C.

RAMP CURVE DATA

P.I. No.	Δ	R	T	L	P.I. COORDINATES N	E
A-2	30° 08' 31.2"	350'	94.247	184.127	600456.039	407279.994
A-3	52° 38' 09.1"	320'	158.278	293.974	600521.786	406855.991
A-4	30° 08' 31.2"	320'	86.169	168.345	600427.757	407292.707
D-1	76° 06' 48.7"	250'	195.721	332.108	599396.313	407413.701
D-2	76° 13' 46.1"	200'	156.903	266.091	599158.373	407153.455
D-3	89° 42' 18.8"	200'	198.974	313.130	599528.729	406600.077
D-4	42° 47' 02.0"	320'	125.355	238.950	599799.188	406779.077
D-5	13° 47' 41.0"	640'	77.419	154.089	599847.274	406976.066
B-1	25° 30' 10.3"	400'	90.521	178.044	600007.829	406562.131
B-2	47° 32' 07.8"	200'	88.076	165.930	600084.509	406723.429
B-3	24° 32' 03.7"	400'	86.974	171.282	600251.876	406774.722
B-4	21° 42' 38.1	300'	57.528	113.676	600620.451	406726.224

GUTTER DETAIL

TYPICAL FOR LOCATIONS DA, DC, DD, DE, DF (N.I.C.)

GUTTER DETAIL

TYPICAL FOR LOCATION DB (N.I.C.)

Notes:

1. For Profile, Paving, Guard Rails, Grading, Drainage etc. of Ramp "B", see Sh. Nos. 18, 111, 112, 225 - 234.
2. For Details of 896 Detour Road, see Sh. 13.
3. For Cross-Sections of Ramp "B", see Sheet Nos. 226 - 234.

COUNTY	CONTRACT	F.R.A. RE. NO.	STATE	FED. AID PROJECT NO.	FISCAL YEAR	SHEET NO.	TOTAL SHEETS
NEW CASTLE	7002		DEL.			13	224

DELAWARE TURNPIKE

Revised July 15, 1963 - Ramp "B"

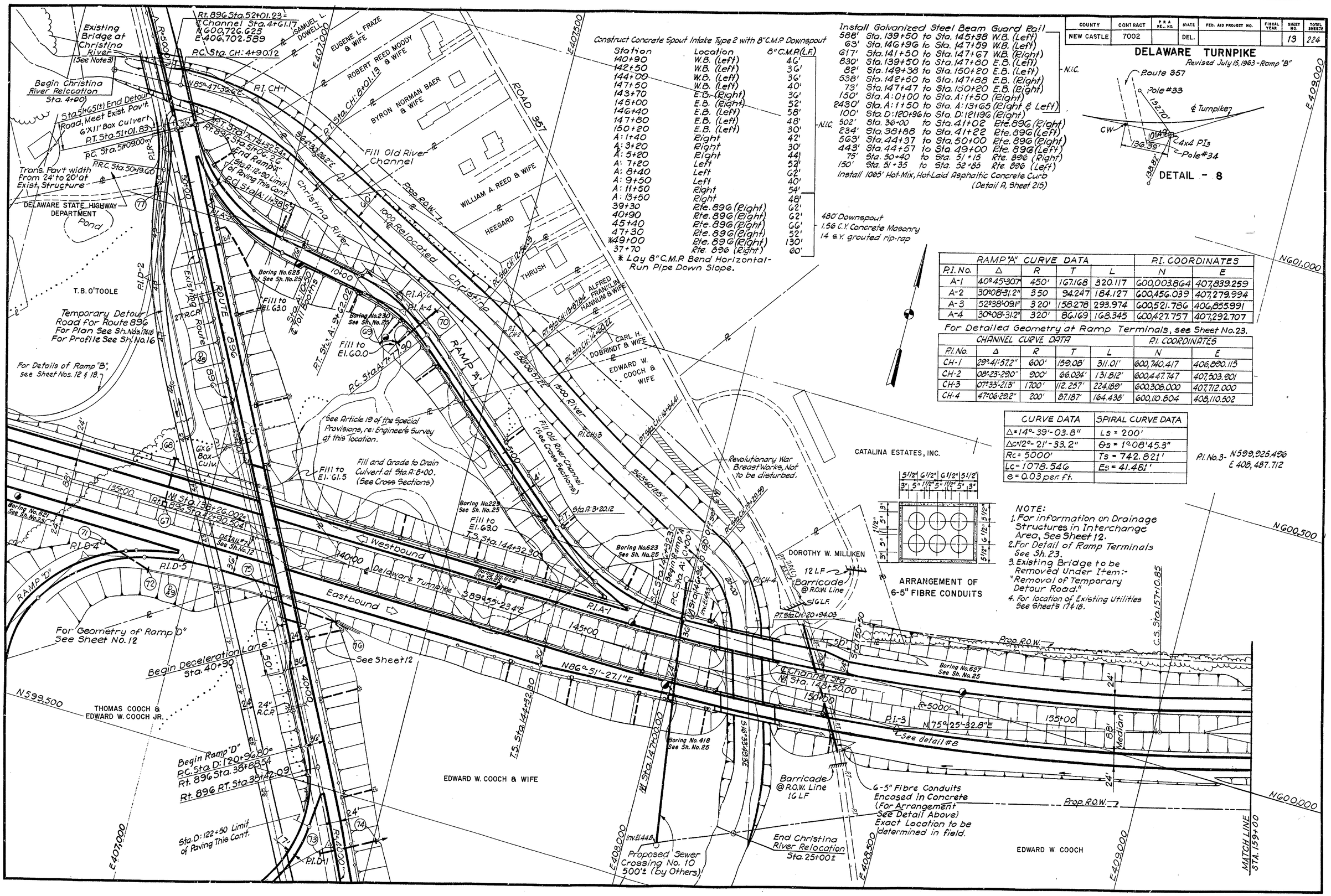

Construct Concrete Spout Intake Type 2 with 8" C.M.P. Downspout

Station	Location	8" C.M.P. (L.F.)
140+90	W.B. (Left)	46'
142+50	W.B. (Left)	36'
144+00	W.B. (Left)	36'
147+50	W.B. (Left)	40'
143+70	E.B. (Right)	36'
145+00	E.B. (Right)	52'
146+40	E.B. (Left)	58'
147+80	E.B. (Left)	48'
150+20	E.B. (Left)	30'
A: 1+40	Right	42'
A: 3+20	Right	30'
A: 5+20	Right	44'
A: 7+20	Left	52'
A: 8+40	Left	62'
A: 9+50	Left	40'
A: 11+50	Right	54'
A: 13+50	Right	48'
39+30	Rte. 896 (Right)	62'
40+90	Rte. 896 (Right)	62'
45+40	Rte. 896 (Right)	66'
47+30	Rte. 896 (Right)	52'
*49+00	Rte. 896 (Right)	130'
37+70	Rte. 896 (Right)	60'

* Lay 8" C.M.P. Bend Horizontal - Run Pipe Down Slope.

N.I.C.

480' Downspout
1.56 C.Y. Concrete Masonry
14 S.Y. grouted rip-rap

Install Galvanized Steel Beam Guard Rail

588'	Sta. 139+50	to	Sta. 145+38	W.B. (Left)
63'	Sta. 146+96	to	Sta. 147+59	W.B. (Left)
617'	Sta. 141+50	to	Sta. 147+67	W.B. (Right)
830'	Sta. 139+50	to	Sta. 147+80	E.B. (Left)
82'	Sta. 149+38	to	Sta. 150+20	E.B. (Left)
538'	Sta. 142+50	to	Sta. 147+88	E.B. (Right)
73'	Sta. 147+47	to	Sta. 150+20	E.B. (Right)
150'	Sta. A: 0+00	to	Sta. A: 1+50	(Right)
2430'	Sta. A: 1+50	to	Sta. A: 13+65	(Right & Left)
100'	Sta. D: 120+96	to	Sta. D: 121+96	(Right)
502'	Sta. 36+00	to	Sta. 41+02	Rte. 896 (Right)
234'	Sta. 38+88	to	Sta. 41+22	Rte. 896 (Left)
563'	Sta. 44+37	to	Sta. 50+00	Rte. 896 (Right)
443'	Sta. 44+57	to	Sta. 49+00	Rte. 896 (Left)
75'	Sta. 50+40	to	Sta. 51+15	Rte. 896 (Right)
150'	Sta. 51+35	to	Sta. 52+85	Rte. 896 (Left)

Install 1065' Hot-Mix, Hot-Laid Asphaltic Concrete Curb (Detail A, Sheet 215)

N.I.C.

DETAIL - 8

RAMP "A" CURVE DATA					P.I. COORDINATES	
P.I. No.	Δ	R	T	L	N	E
A-1	40°45'30.7"	450'	167.168	320.117	600,003.864	407,839.259
A-2	30°08'31.2"	350	94.247	184.127	600,456.039	407,279.994
A-3	52°38'09.1"	320'	158.278	293.974	600,521.786	406,855.991
A-4	30°08'31.2"	320'	86.169	168.345	600,427.757	407,292.707

For Detailed Geometry at Ramp Terminals, see Sheet No. 23.

CHANNEL CURVE DATA					P.I. COORDINATES	
P.I. No.	Δ	R	T	L	N	E
CH-1	29°41'57.2"	600'	159.08'	311.01'	600,740.417	406,890.115
CH-2	08°23'29.0"	900'	66.024'	131.812'	600,447.747	407,503.901
CH-3	07°33'21.3"	1700'	112.257'	224.189'	600,308.000	407,712.000
CH-4	47°06'29.2"	200'	87.187'	164.438'	600,110.804	408,110.502

CURVE DATA	SPIRAL CURVE DATA
Δ = 14°-39'-03.8"	Ls = 200'
Δc = 12°-21'-33.2"	θs = 1°08'45.3"
Rc = 5000'	Ts = 742.821'
Lc = 1078.546	Es = 41.481'
e = 0.03 per ft.	

P.I. No. 3 - N 599,925.496
E 408,487.712

NOTE:
1. For information on Drainage Structures in Interchange Area, See Sheet 12.
2. For Detail of Ramp Terminals See Sh. 23.
3. Existing Bridge to be Removed Under Item:- "Removal of Temporary Detour Road."
4. For location of Existing Utilities See Sheets 17 & 18.

COUNTY	CONTRACT	P.R.A. REG. NO.	STATE	FED. AID PROJECT NO.	FISCAL YEAR	SHEET NO.	TOTAL SHEETS
NEW CASTLE	7002		DEL.			14	224

DELAWARE TURNPIKE

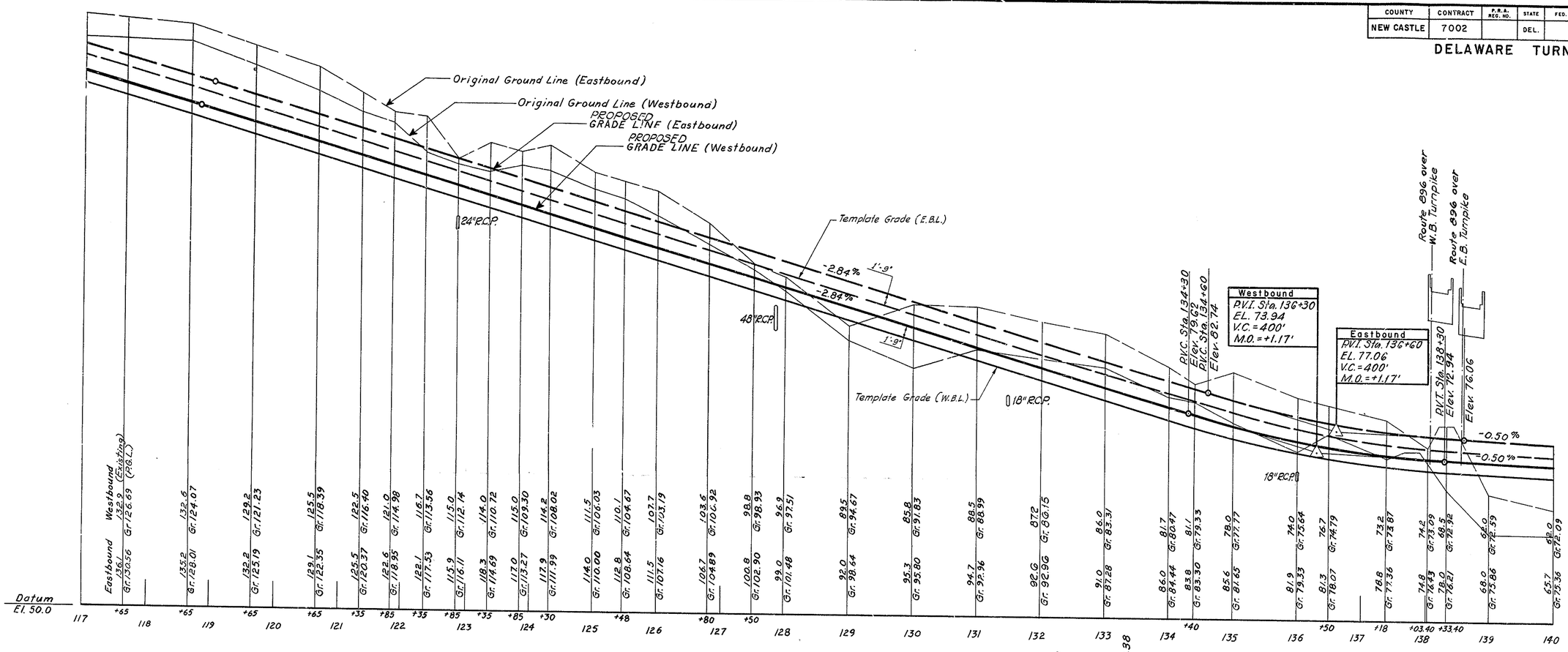

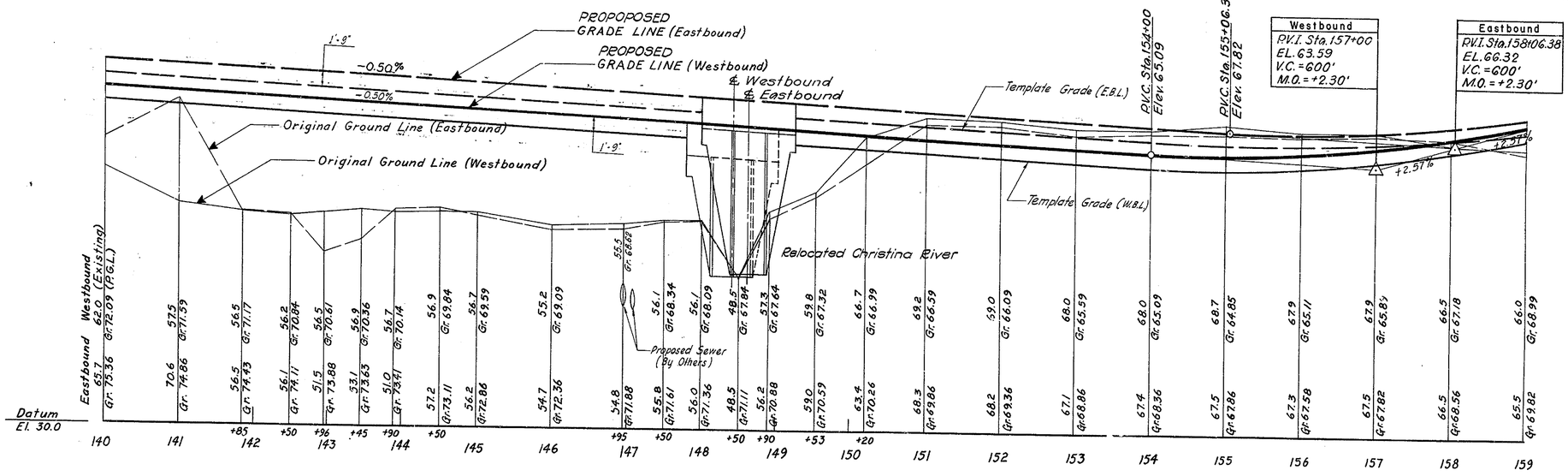

PROFILES SCALES HOR. 1" = 80' VERT. 1" = 8'

COUNTY	CONTRACT	P.R.A. REG. NO.	STATE	FED. AID PROJECT NO.	FISCAL YEAR	SHEET NO.	TOTAL SHEETS
NEW CASTLE	7002		DEL.			15	224

DELAWARE TURNPIKE

Revised 12-27-62

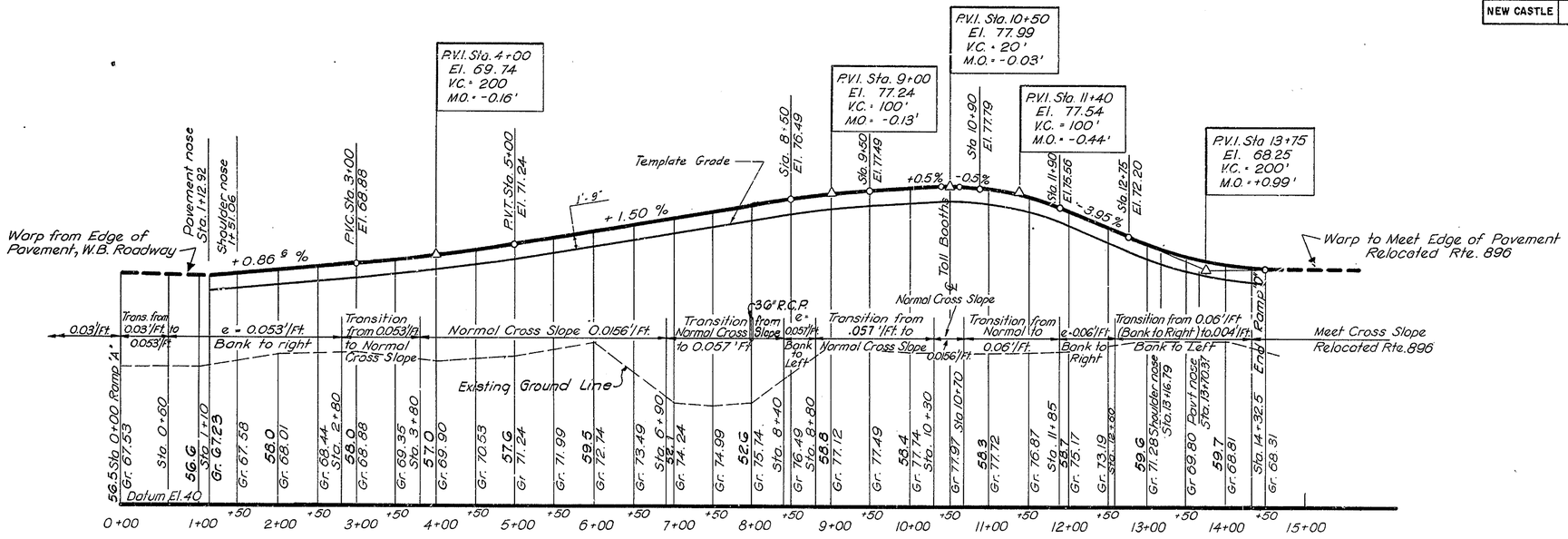

RAMP "A"

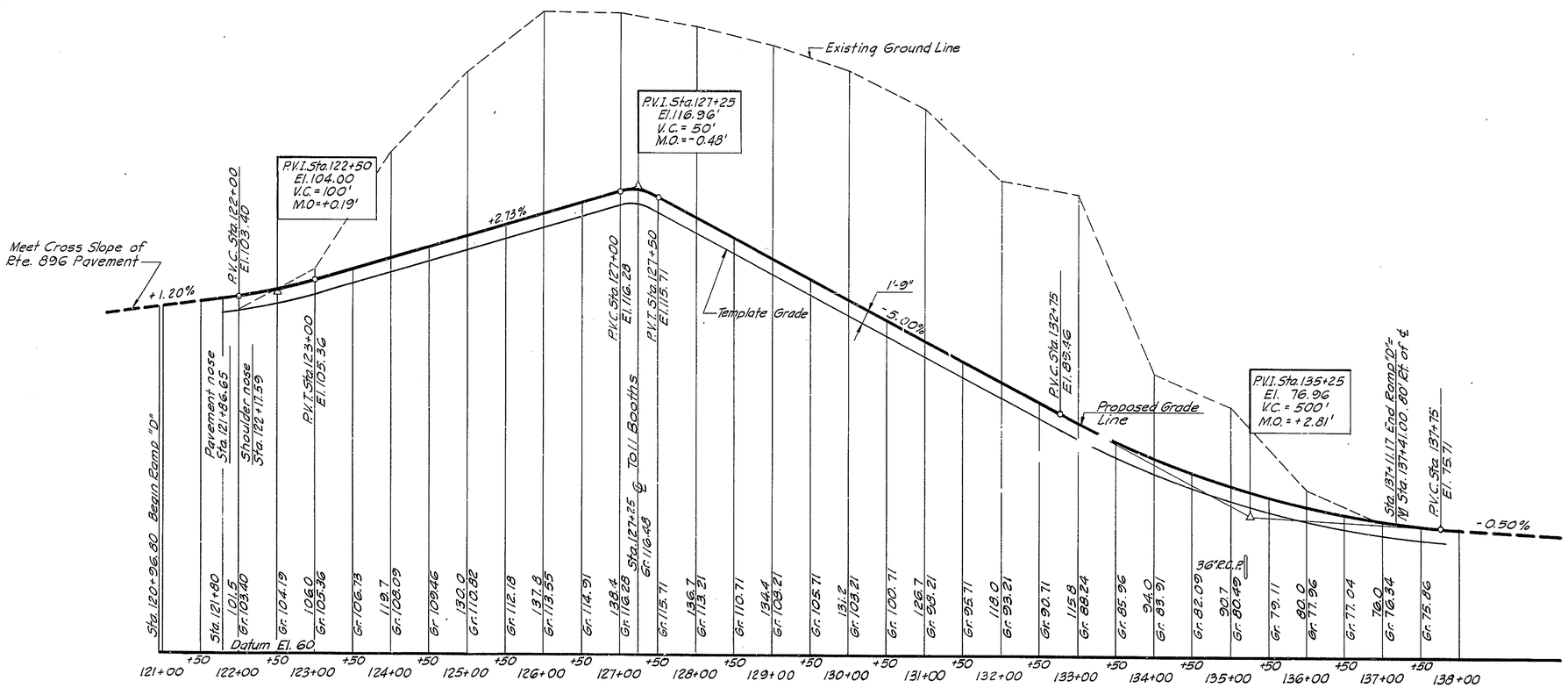

RAMP "D"

RAMP PROFILES

SCALE: HOR. 1IN = 80 FT.
VERT. 1IN = 8 FT.

COUNTY	CONTRACT	P.R.R. REG. NO.	STATE	FED. AID PROJECT NO.	FISCAL YEAR	SHEET NO.	TOTAL SHEETS
NEW CASTLE	7002		DEL.	-		16	224

DELAWARE TURNPIKE

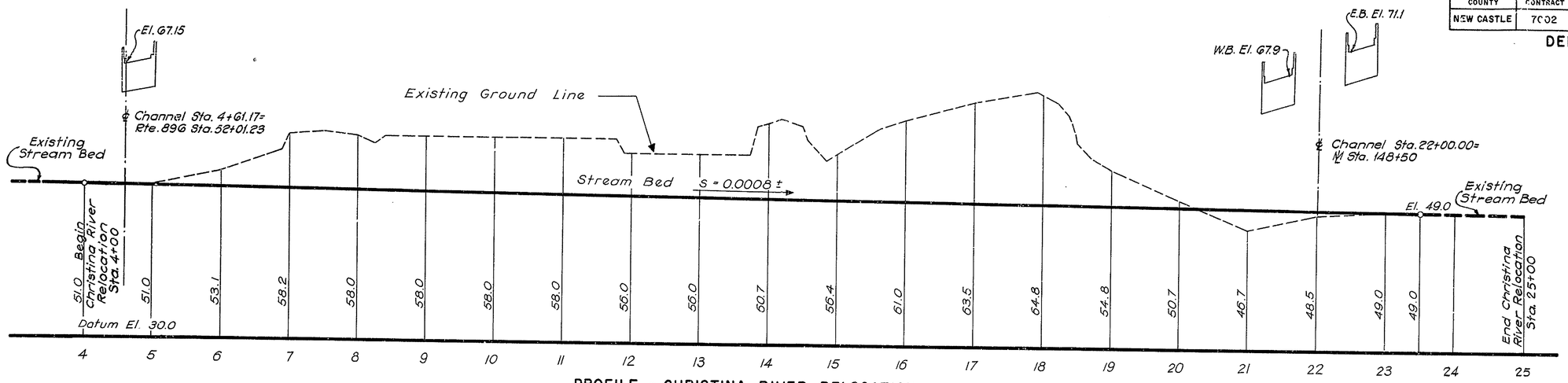

PROFILE - CHRISTINA RIVER RELOCATION

SCALES HOR: 1 IN. = 80 FT. VERT: 1 IN. = 8 FT.

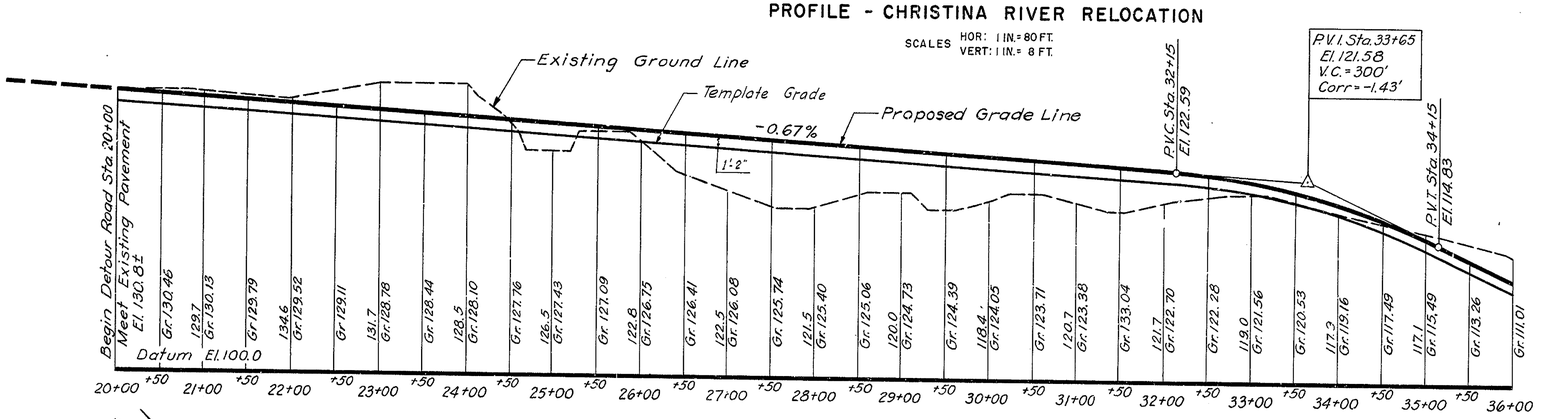

PROFILE - ROUTE 896 DETOUR ROAD

SCALES HOR: 1 IN. = 80 FT. VERT: 1 IN. = 8 FT.

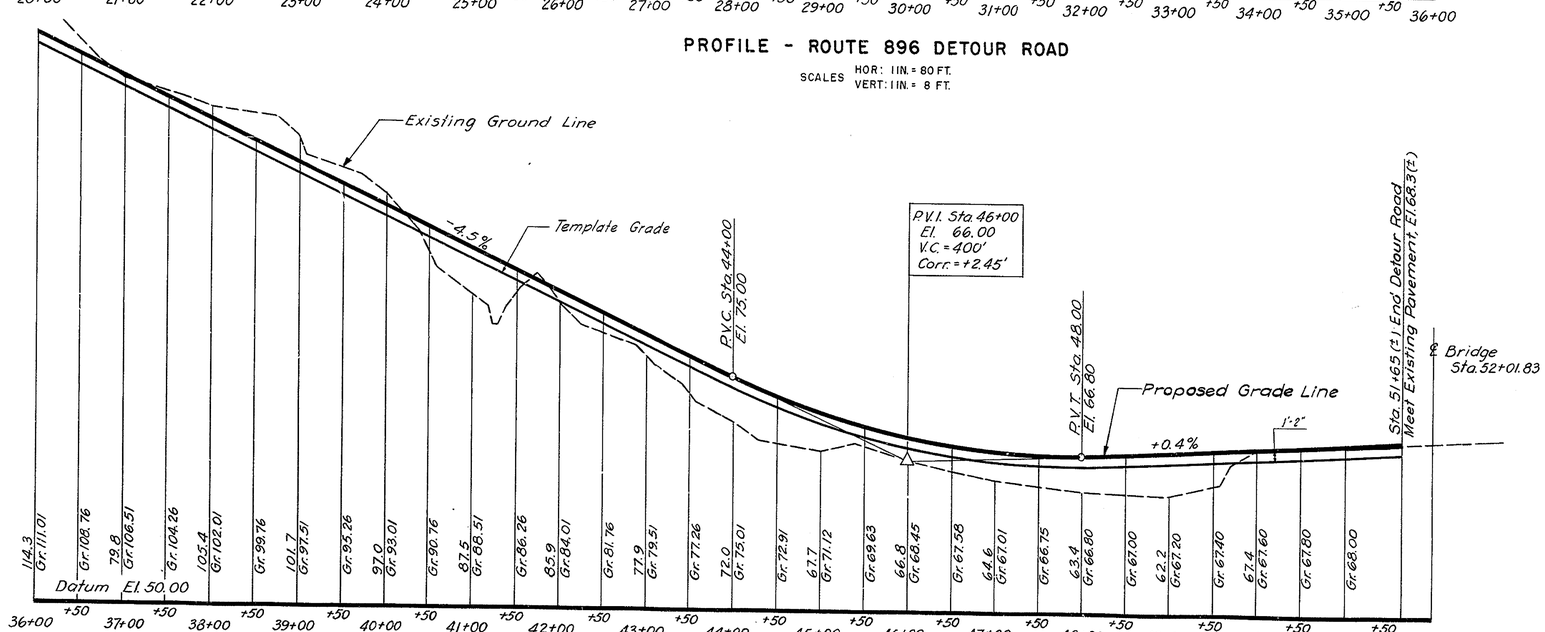

PROFILE - ROUTE 896 DETOUR ROAD

SCALES HOR. 1 IN. = 80 FT. VERT. 1 IN. = 8 FT.

COUNTY	CONTRACT	P.R.A. REG. NO.	STATE	FED. AID PROJECT NO.	FISCAL YEAR	SHEET NO.	TOTAL SHEETS
NEW CASTLE	7002		DEL.			17	224

DELAWARE TURNPIKE

Notes:
1. Prior to completion of construction of west shoulder and ditch of Route 896, between Sta. 23+00 and Sta. 32+00 traffic is to be rerouted back onto this road and the temporary detour road removed.
2. Following construction of Relocated Rte. 896 and removal of the temporary road, the area is to be regraded and seeded as directed by the Engineer.

Detour Road-
Sta. 23+00 to 24+00 (Left) Transition Back Slopes from 1.5:1 to 2:1.
Sta. 21+00 to 23+00 (Left) Use 1.5:1 Back Slope.

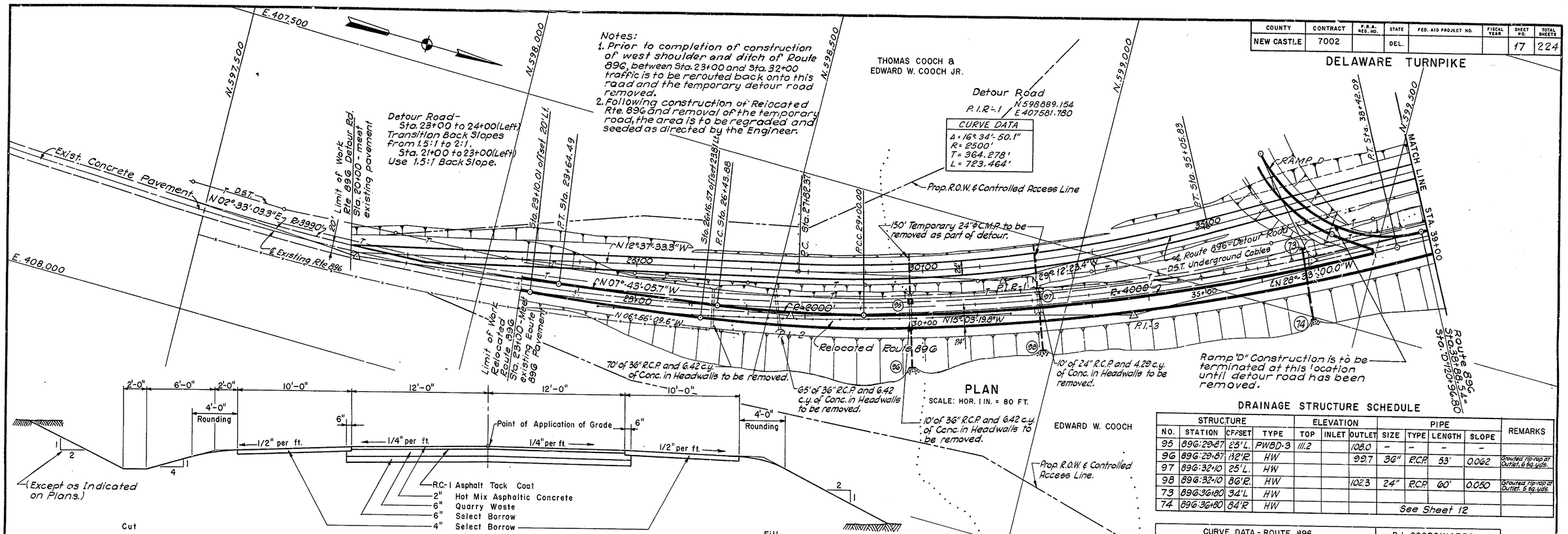

PLAN

SCALE: HOR. 1 IN. = 80 FT.

TYPICAL SECTION
ROUTE 896 - DETOUR ROAD

SCALE: 1/4 IN. = 1 FT.

For Steel Beam Guard Rail and Corrugated Metal Downspouts, See Sheet No. 13.

DRAINAGE STRUCTURE SCHEDULE

STRUCTURE				ELEVATION			PIPE				REMARKS
NO.	STATION	OFFSET	TYPE	TOP	INLET	OUTLET	SIZE	TYPE	LENGTH	SLOPE	
95	896:29+87	25' L.	PWBD-3	111.2		108.0	–	–	–	–	
96	896:29+87	132' R.	HW			99.7	36"	R.C.P.	53'	0.062	Grouted rip-rap at Outlet, 6 sq. yds.
97	896:32+10	25' L.	HW								
98	896:32+10	80' R.	HW			102.3	24"	R.C.P.	60'	0.050	Grouted rip-rap at Outlet, 5 sq. yds.
73	896:36+80	34' L	HW								
74	896:36+80	84' R	HW				See Sheet 12				

CURVE DATA - ROUTE 896					P.I. COORDINATES	
P.I. NO.	Δ	R	T	L	N	E
P.I.-1	10° 16' 09.0"	3990	358.526	715.132	597777.441	407838.202
P.I.-2	07° 20' 14.1"	2000	128.234	256.118	598536.656	407735.305
P.I.-3	13° 29' 40.2"	4000	473.236	942.093	599117.481	407579.070

1. For Geometry of Ramp D, See Sheet No. 12.
2. For Geometry of Ramp D Nose, See Ramp Terminal Details, Sheet No. 23.

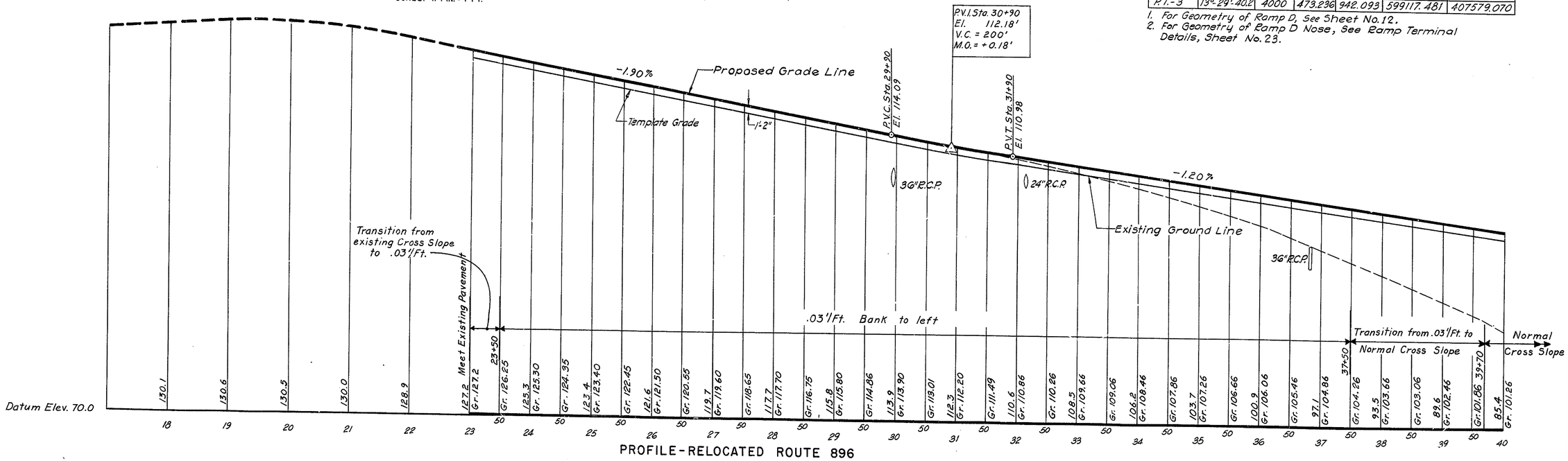

PROFILE - RELOCATED ROUTE 896

SCALE: HOR. 1 IN. = 80 FT.
VERT. 1 IN = 8 FT.

ROUTE 896

COUNTY	CONTRACT	P.R.A. REG. NO.	STATE	FED. AID PROJECT NO.	FISCAL YEAR	SHEET NO.	TOTAL SHEETS
NEW CASTLE	7002		DEL.			18	224

DELAWARE TURNPIKE

REVISED : JULY 15, 1963
RAMP "B" ADDED

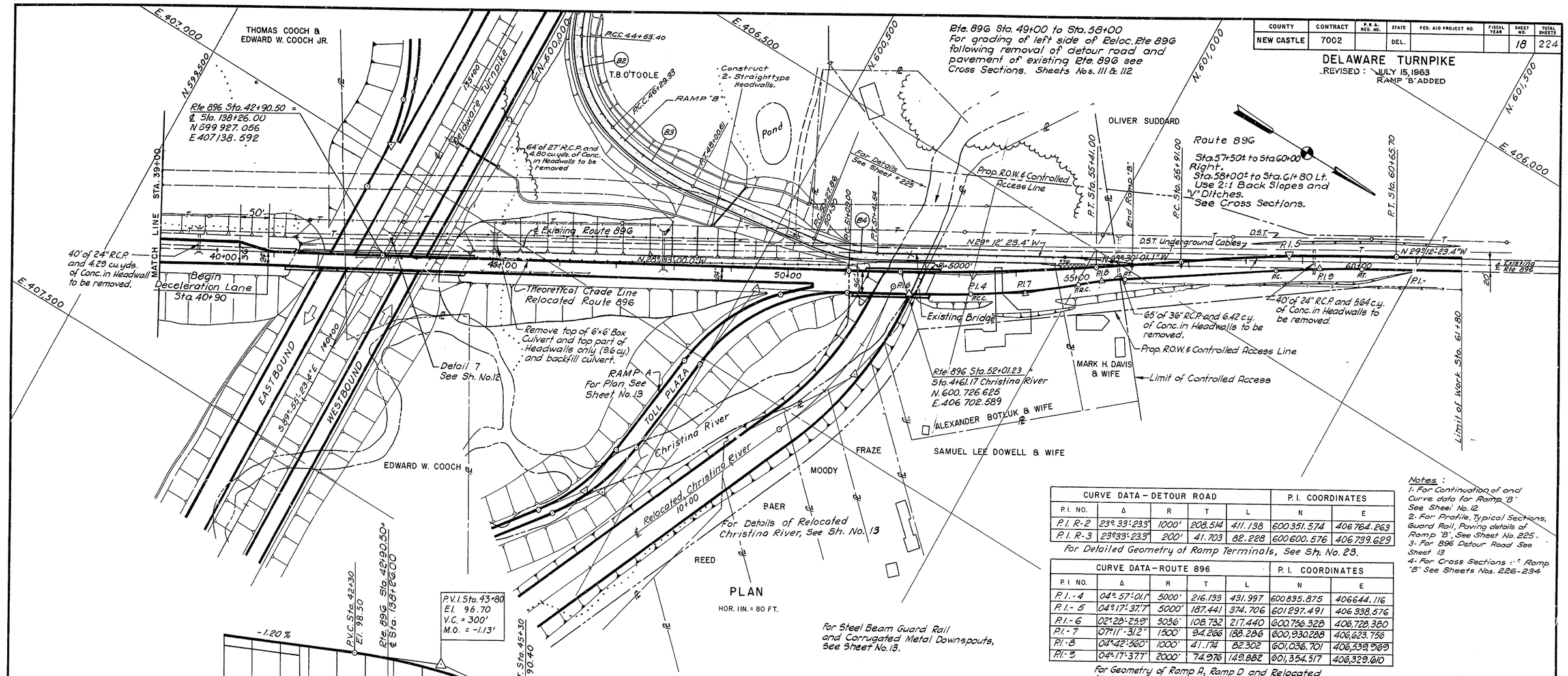

CURVE DATA – DETOUR ROAD					P. I. COORDINATES	
P. I. NO.	Δ	R	T	L	N	E
P. I. R-2	23° 33' 23.3"	1000'	208.514	411.138	600 351.574	406 764.263
P. I. R-3	23° 33' 23.3"	200'	41.703	82.228	600 600.576	406 739.629

For Detailed Geometry of Ramp Terminals, See Sh. No. 23.

CURVE DATA – ROUTE 896					P. I. COORDINATES	
P. I. NO.	Δ	R	T	L	N	E
P. I. - 4	04° 57' 01.1"	5000'	216.133	431.997	600 835.875	406644.116
P. I. - 5	04° 17' 37.7"	5000'	187.441	374.706	601 297.491	406 338.576
P. I. - 6	02° 28' 25.9"	5036'	108.732	217.440	600 756.328	406,728.380
P. I. - 7	07° 11' 31.2"	1500'	94.266	188.286	600,930.288	406,623.756
P. I. - 8	04° 42' 56.0"	1000'	41.174	82.302	601,036.701	406,539.969
P. I. - 9	04° 17' 37.7"	2000'	74.976	149.882	601,354.517	406,329.610

For Geometry of Ramp A, Ramp D and Relocated Christina River, See Sheet Nos 12 & 13.

Notes :
1- For Continuation of and Curve data for Ramp "B" See Sheet No. 12
2- For Profile, Typical Sections, Guard Rail, Paving details of Ramp "B", See Sheet No. 225.
3- For 896 Detour Road See Sheet 13
4- For Cross Sections of Ramp "B" See Sheets Nos. 226-234

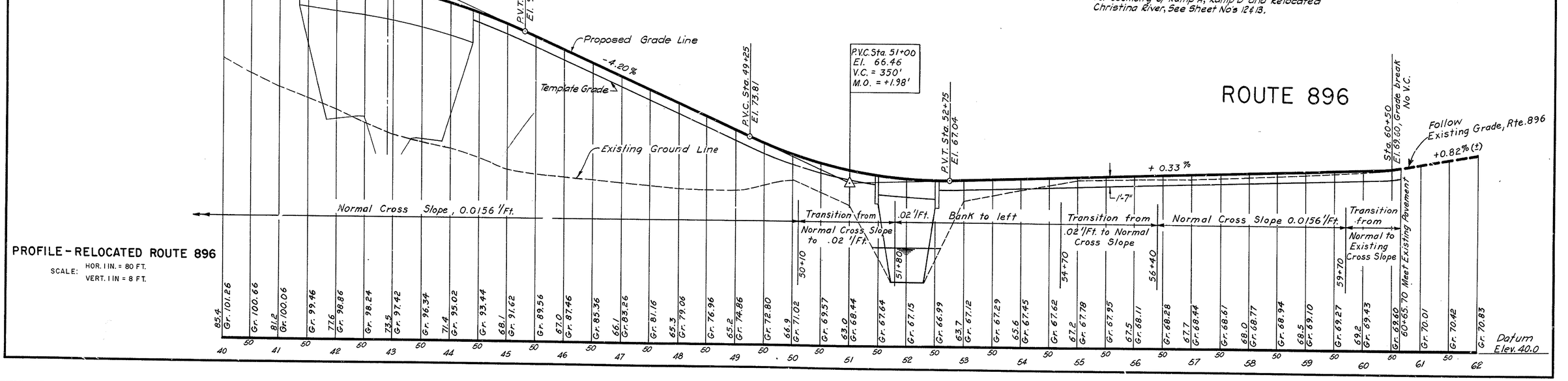

COUNTY	CONTRACT	P.R.A. REQ. NO.	STATE	FED. AID PROJECT NO.	FISCAL YEAR	SHEET NO.	TOTAL SHEETS
NEW CASTLE	7002		DEL.			19	224

DELAWARE TURNPIKE

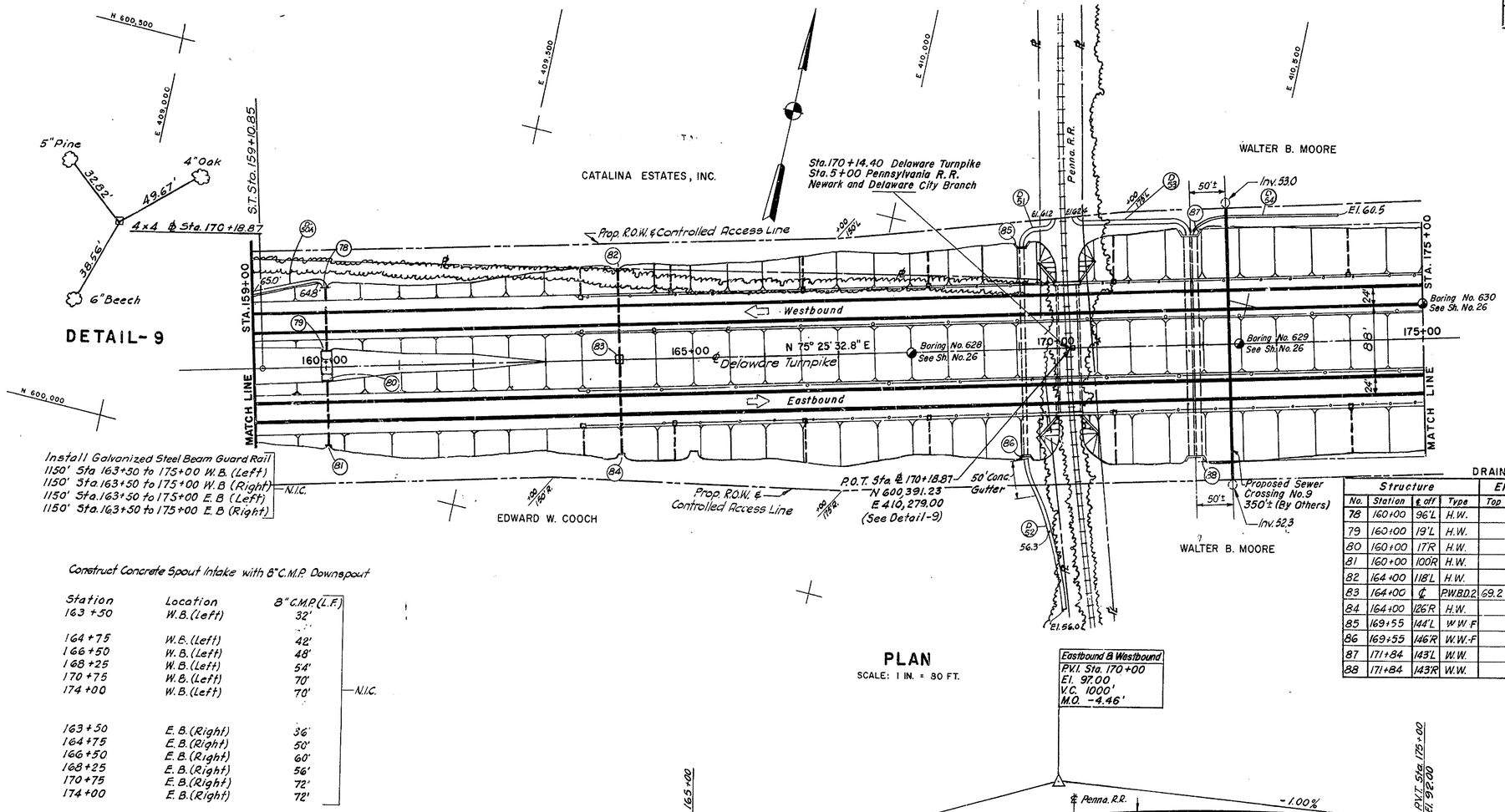

DITCH SCHEDULE

Ditch No.	Ditch Width	Length	Slope	Treatment
D-51	5'-6"	70'	0.057	Conc. Gutter
D-52	5'-6"	200'	0.003	Seed & Mulch; 50' Conc. Gutter
D-53	14'	160'	0.024	Seed & Mulch
D-54	2'	200'	0.010	Seed & Mulch
D-50A	2'	100'	0.002	Seed & Mulch

DRAINAGE STRUCTURE SCHEDULE

Structure No.	Station	℄ off	Type	Elevation Top	Inlet	Outlet	Pipe Size	Type	Length	Slope	Remarks	
78	160+00	96'L	H.W.		64.8		30"	R.C.P.	78'	.0051	Standard H.W's.	By 7001
79	160+00	19'L	H.W.			64.4					Standard H.W's.	
80	160+00	17'R	H.W.		64.3		30"	R.C.P.	84'	.0060	Standard H.W's. Grouted rip rap 15'@ outlet (G.S.Y.)	
81	160+00	100'R	H.W.			63.8						
82	164+00	118'L	H.W.		67.0						Standard H.W.	
83	164+00	℄	P.W.B.D.2	69.2	66.0	66.0	24"	R.C.P.	118'	.0085	Standard P.W.C.D.-2	
84	164+00	126'R	H.W.			65.0	24"	R.C.P.	126'	.0079	Std. H.W. Grouted rip rap 12'@ outlet (G.S.Y.)	
85	169+55	144'L	W.W.-F		57.4		54"	E.S.R.C.P.	290'	.00028	See Sheet no. 27628	
86	169+55	146'R	W.W.-F			56.6					See Sheet no. 27628	
87	171+84	143'L	W.W.		58.5		2-6'x5'	R.C. Box Culvert	283	.0017	See Sheet no. 206	This Cont.
88	171+84	143'R	W.W.			58.0					See Sheet no. 206	

Construct Concrete Spout Intake with 8" C.M.P. Downspout

Station	Location	8" C.M.P. (L.F.)
163+50	W.B. (Left)	32'
164+75	W.B. (Left)	42'
166+50	W.B. (Left)	48'
168+25	W.B. (Left)	54'
170+75	W.B. (Left)	70'
174+00	W.B. (Left)	70'
163+50	E.B. (Right)	36'
164+75	E.B. (Right)	50'
166+50	E.B. (Right)	60'
168+25	E.B. (Right)	56'
170+75	E.B. (Right)	72'
174+00	E.B. (Right)	72'

N.I.C.

PLAN

SCALE: 1 IN. = 80 FT.

Eastbound & Westbound
P.V.I. Sta. 170+00
El. 97.00
V.C. 1000'
M.O. -4.46'

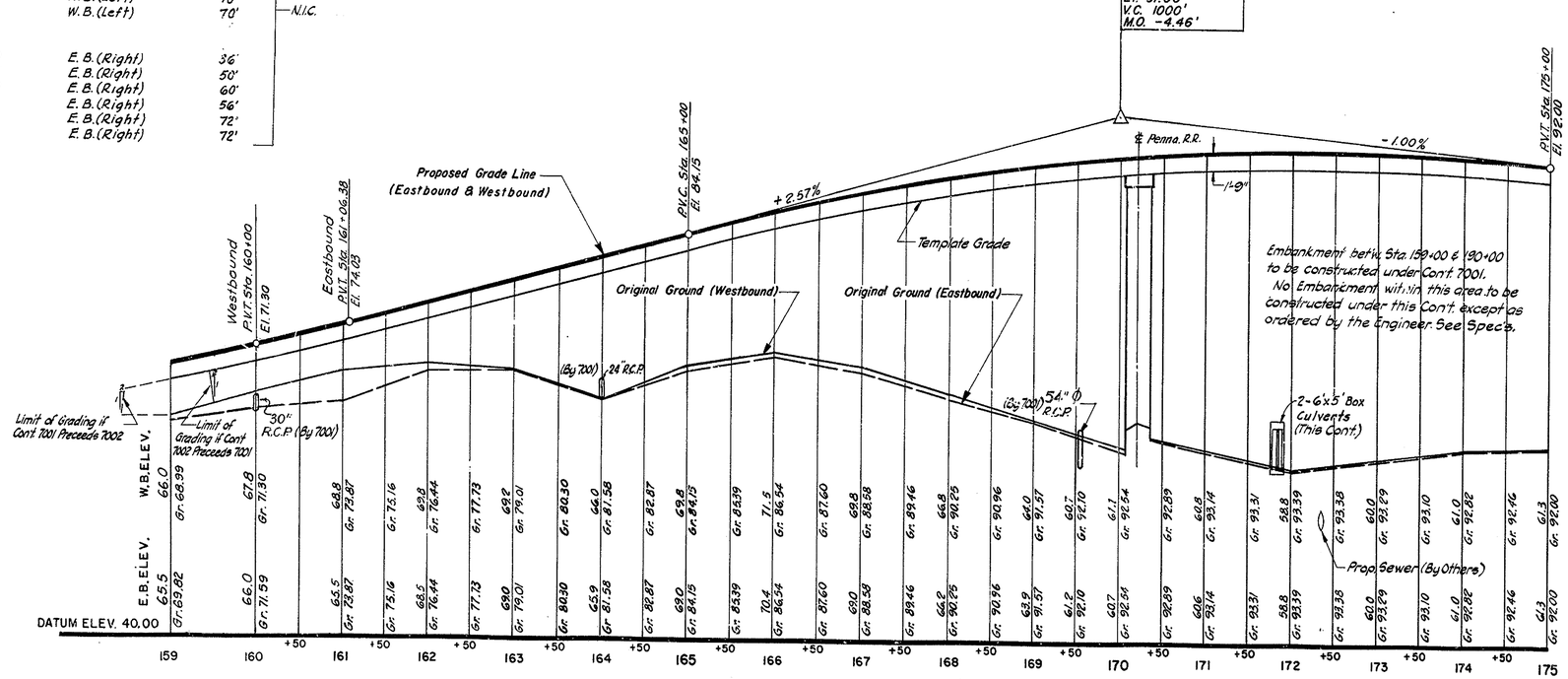

PROFILE

SCALE: HOR. 1 IN. = 80 FT. VERT. 1 IN. = 8 FT.

COUNTY	CONTRACT	P.R.A. REG. NO.	STATE	FED. AID PROJECT NO.	FISCAL YEAR	SHEET NO.	TOTAL SHEETS
NEW CASTLE	7002		DEL.			20	224

DELAWARE TURNPIKE

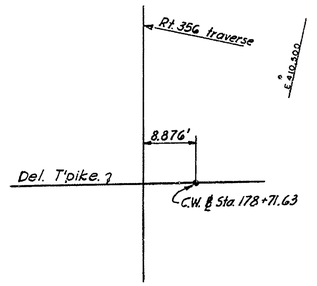

DETAIL-10

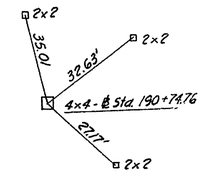

DETAIL-11

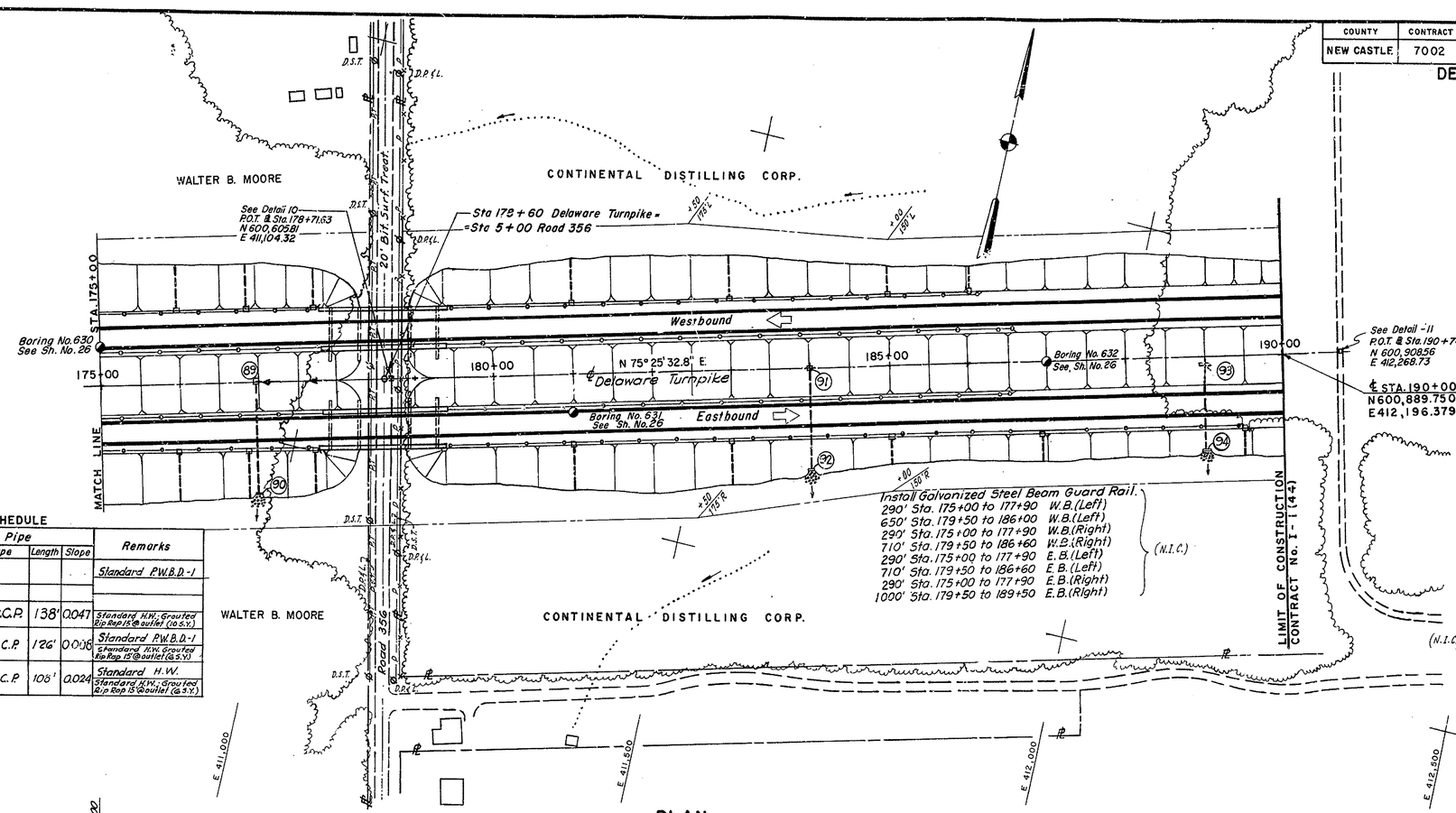

PLAN

SCALE: 1 IN. = 80 FT.

DRAINAGE STRUCTURE SCHEDULE

Structure No.	Station	℄ of ℄	Type	Elevation Top	Elevation Inlet	Elevation Outlet	Pipe Size	Pipe Type	Pipe Length	Pipe Slope	Remarks
89	177+00	℄	P.W.B.D.-1	72.0	68.6						Standard P.W.B.D.-1
(N.I.C.)											
90	177+00	139'R	H.W.			62.0	18"	R.C.P.	138'	0.047	Standard H.W.; Grouted Rip Rap 15' @ outlet (10 S.Y.)
91	184+00	℄	P.W.B.D.-1	72.0	68.8		18"	R.C.P.	126'	0.036	Standard P.W.B.D.-1
92	184+00	126'R	H.W.			68.0					Standard H.W. Grouted Rip Rap 15' @ outlet (8 S.Y.)
93	189+00	6'R	H.W.		68.5		18"	R.C.P.	108'	0.024	Standard H.W.
94	189+00	112'R	H.W.			66.0					Standard H.W.; Grouted Rip Rap 15' @ outlet (8 S.Y.)

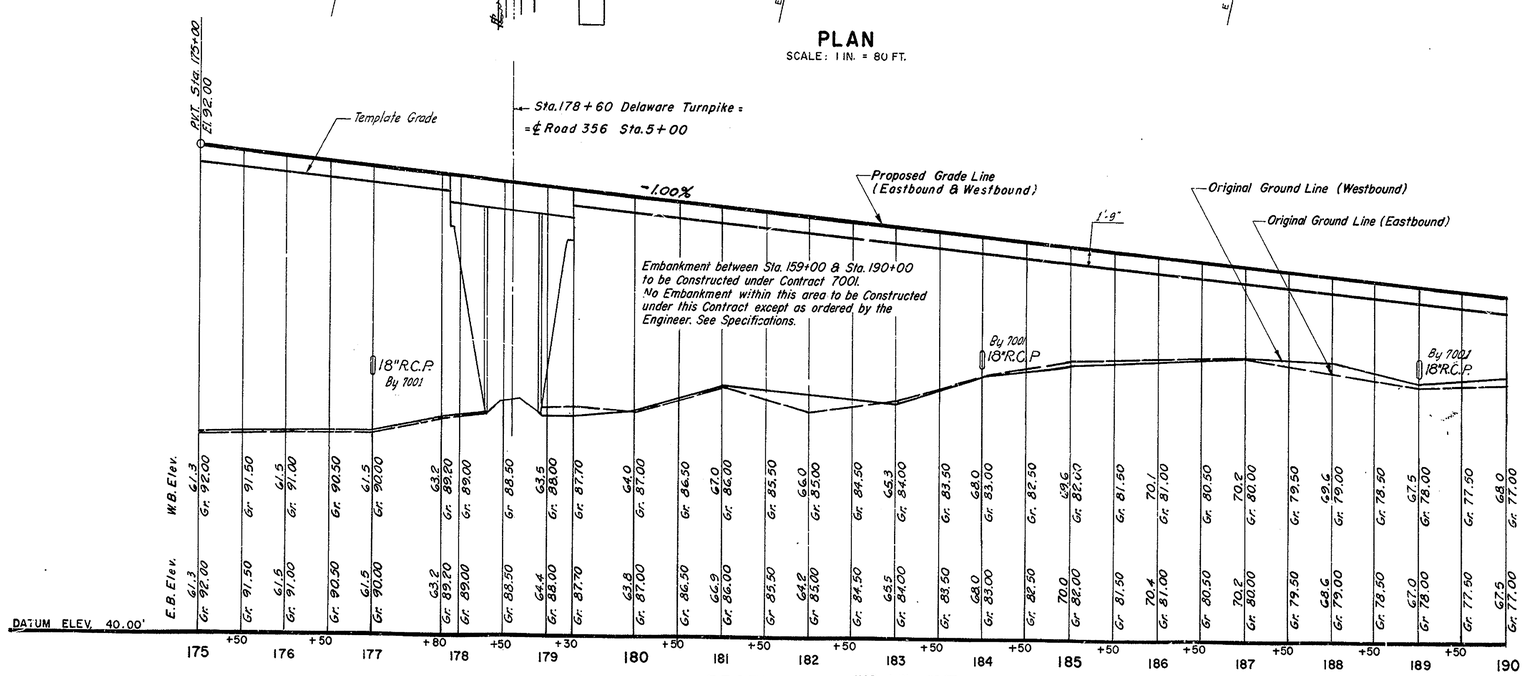

PROFILE

SCALE: HOR. 1 IN. = 80 FT. VERT. 1 IN. = 8 FT.

COUNTY	CONTRACT	P.R.A. REG. NO.	STATE	FED. AID PROJECT NO	FISCAL YEAR	SHEET NO.	TOTAL SHEETS
NEW CASTLE	7002		DEL			21	224

DELAWARE TURNPIKE

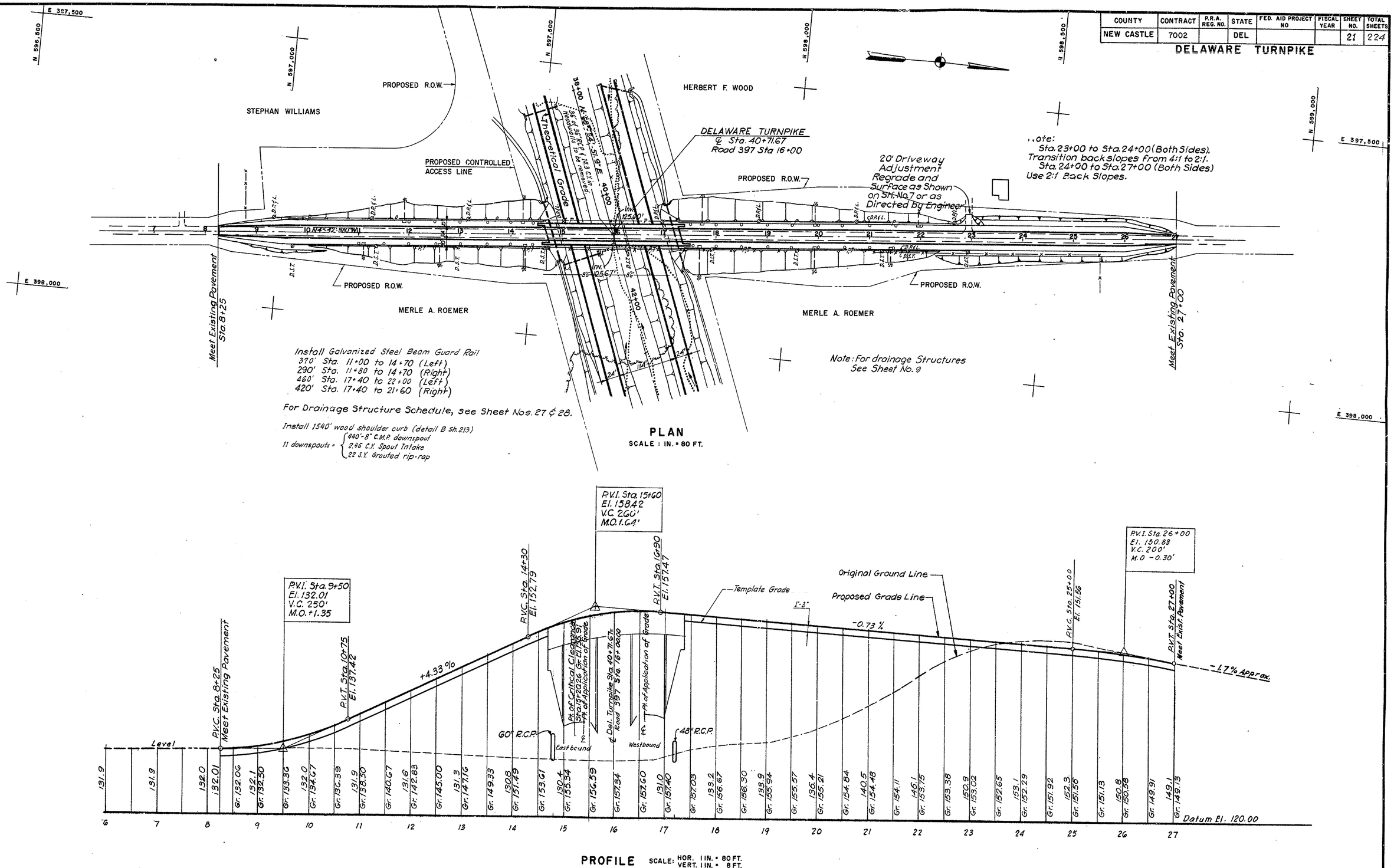

ROAD 397

COUNTY	CONTRACT	F.P.A. REG. NO.	STATE	FED. AID PROJECT NO	FISCAL YEAR	SHEET NO.	TOTAL SHEETS
NEW CASTLE	7002		DEL			22	224

DELAWARE TURNPIKE

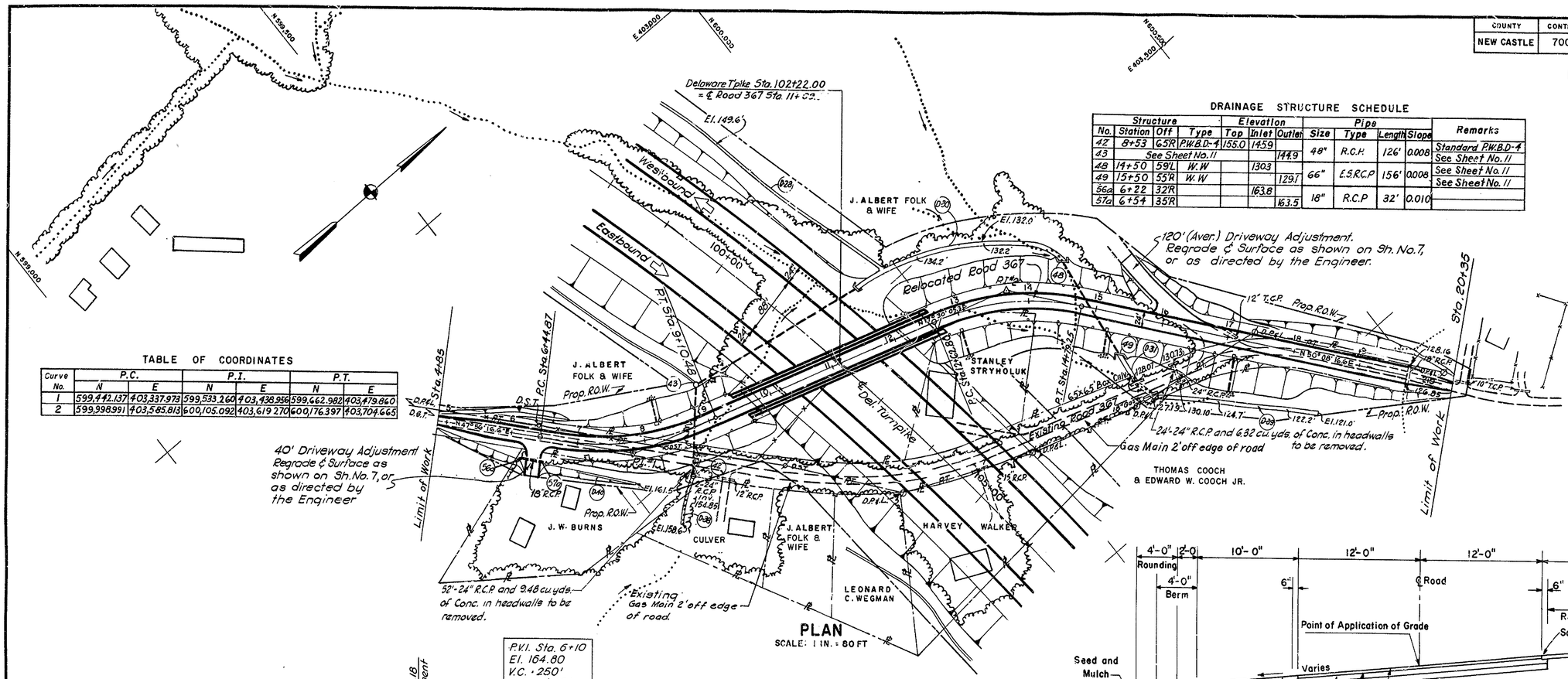

PLAN

SCALE: 1 IN. = 80 FT

DRAINAGE STRUCTURE SCHEDULE

Structure				Elevation			Pipe				Remarks
No.	Station	Off	Type	Top	Inlet	Outlet	Size	Type	Length	Slope	
42	8+53	65'R	P.W.B.D-4	155.0	149.9		48"	R.C.P.	126'	0.008	Standard P.W.B.D-4
43	See Sheet No. 11					144.9					See Sheet No. 11
48	14+50	59'L	W.W		130.3		66"	E.S.R.C.P	156'	0.008	See Sheet No. 11
49	15+50	55'R	W.W			129.1					See Sheet No. 11
56a	6+22	32'R			163.8		18"	R.C.P	32'	0.010	
57a	6+54	35'R				163.5					

DITCH SCHEDULE

No.	Width	Leng.	Slope	Treatment
37	6'	35'	0.028	Conc. Gutter
38	2'	70'	0.080	Conc. Gutter
39	6	250'	0.025	Conc. Gutter
40	2'	90	0.017	Seed & Mulch

TABLE OF COORDINATES

Curve No.	P.C. N	P.C. E	P.I. N	P.I. E	P.T. N	P.T. E
1	599,442.137	403,337.973	599,533.260	403,438.956	599,662.982	403,479.860
2	599,998.991	403,585.813	600,105.092	403,619.270	600,176.397	403,704.665

CURVE DATA

Item	Curve No. 1	Curve No. 2
Δ	30°-26'-113"	32°-38'-11.3"
R	500'	380'
L	265.61'	216.45'
T	136.02'	111.25'
E	18.17'	15.95'
S.E.	0.07 FT/FT	0.08 FT/FT

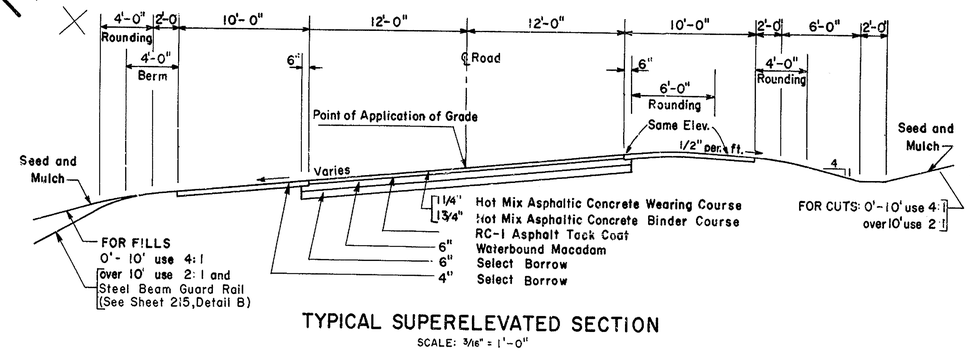

TYPICAL SUPERELEVATED SECTION

SCALE: 3/16" = 1'-0"

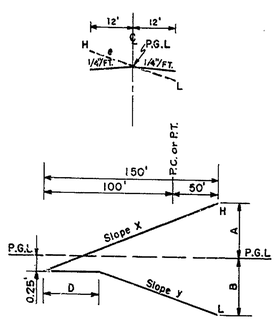

TRANSITION TABLE

Radius	e	A	B	D	x	y
500	.07 FT/FT	0.84'	0.84'	68.81'	1:137.61	1:137.61
380'	.08 FT/FT	0.96'	0.96'	61.98'	1:123.97	1:123.97

SUPERELEVATION TRANSITION DETAIL

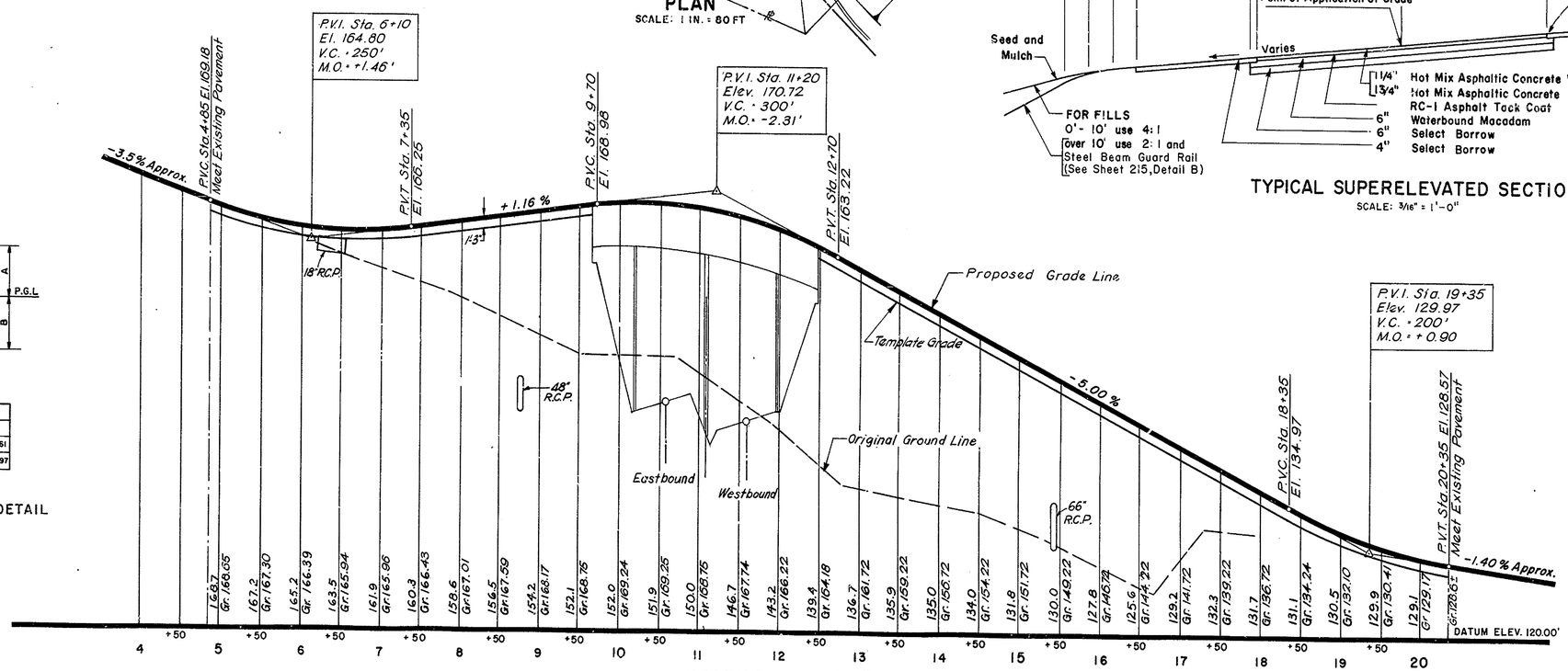

PROFILE

SCALE: HOR. 1 IN. = 80 FT. VERT 1 IN. = 8 FT.

ROAD 367

COUNTY	CONTRACT	P.R.A. REG. NO.	STATE	FED. AID PROJECT NO.	FISCAL YEAR	SHEET NO.	TOTAL SHEETS
NEW CASTLE	7002		DEL.			23	224

DELAWARE TURNPIKE

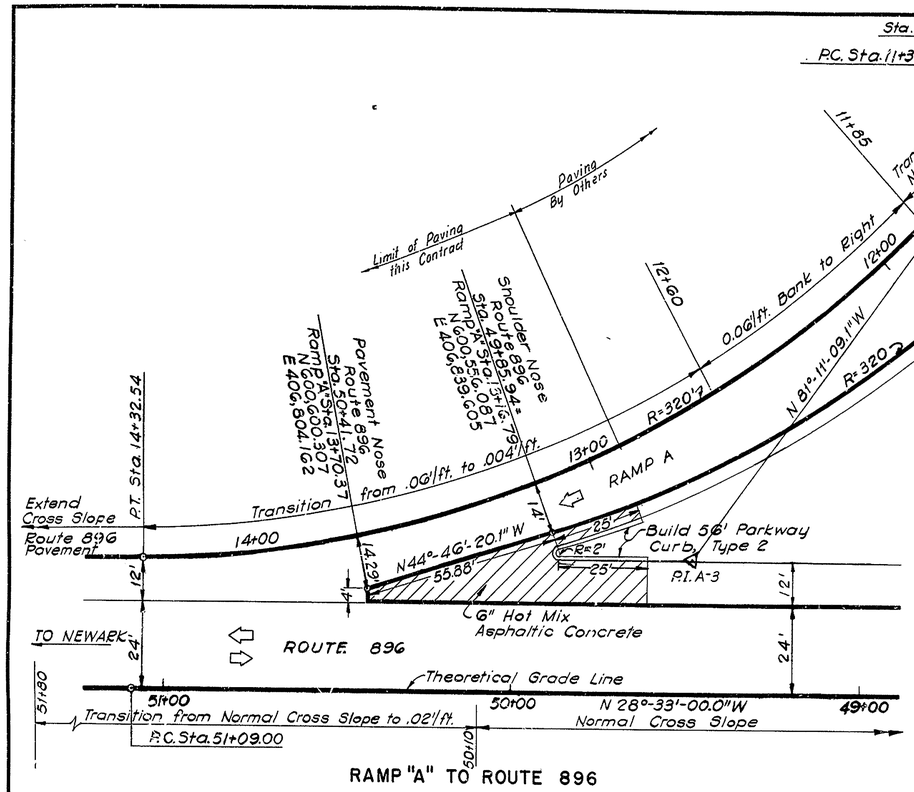

RAMP "A" TO ROUTE 896

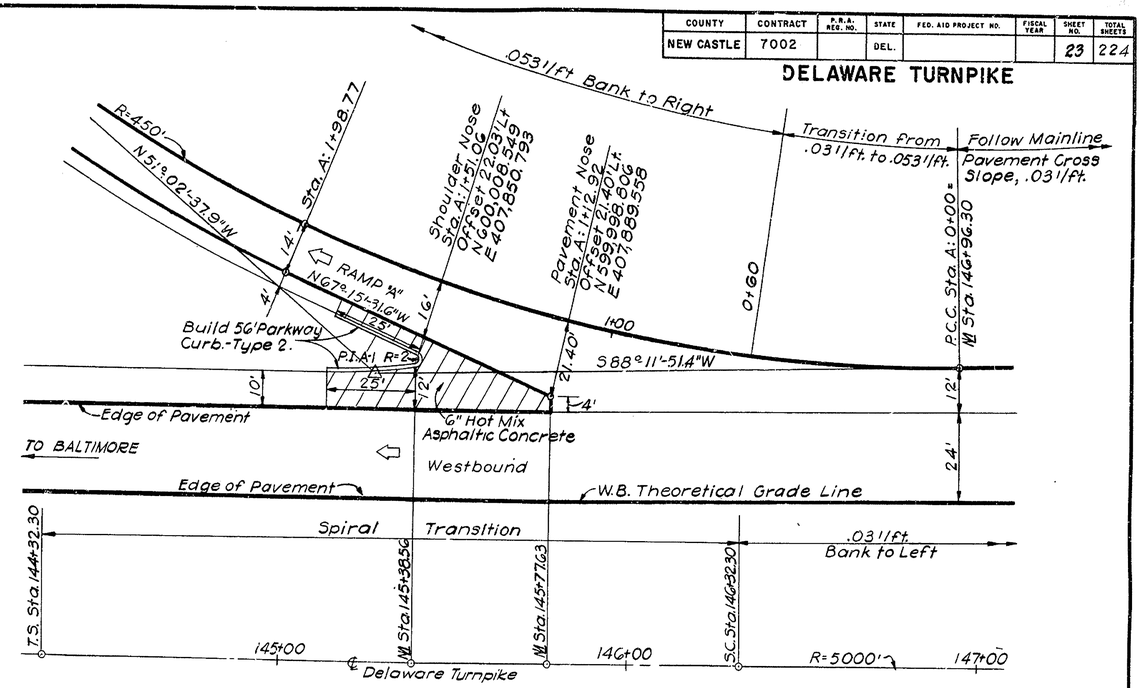

TURNPIKE TO RAMP "A"
(N.I.C.)

Notes:
1. For P.I. Coordinates shown, refer to Highway plan sheets.
2. For method of Spiral Transition, see Sheet No. 6
3. 6" Hot Mix Asphaltic Concrete will consist of:
   1¼" Wearing Course
   4¾" Binder Course.

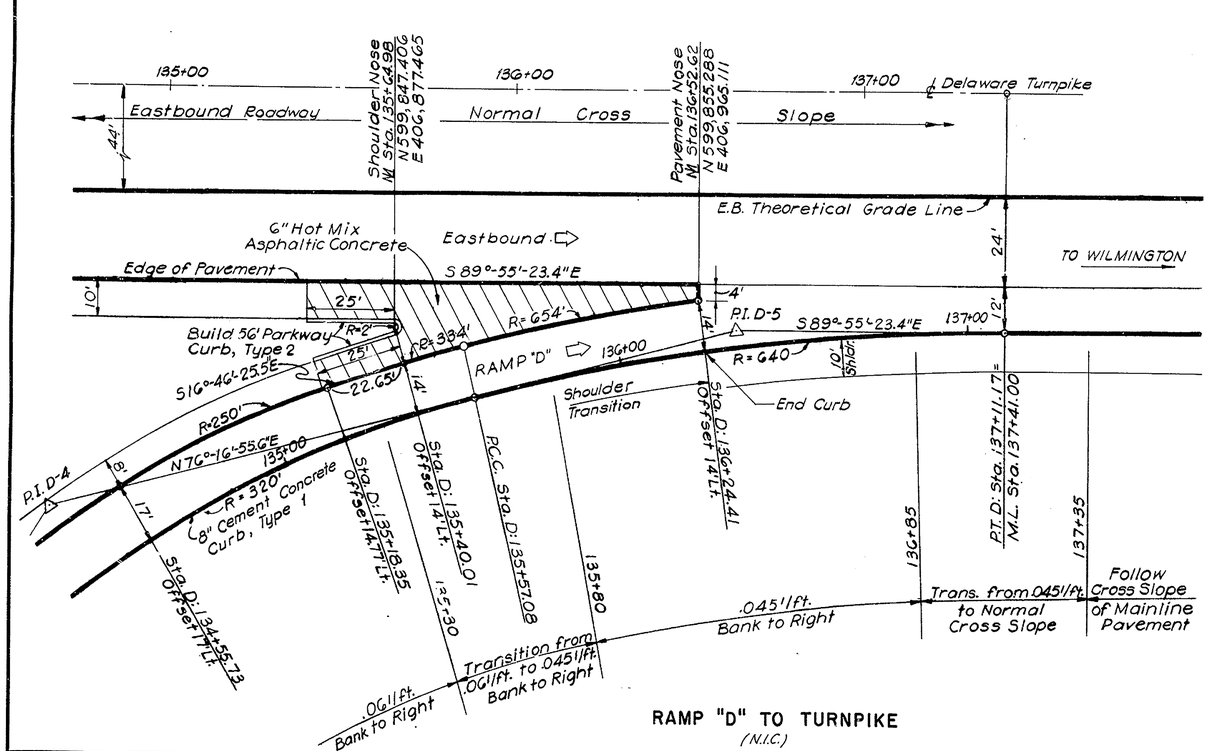

RAMP "D" TO TURNPIKE
(N.I.C.)

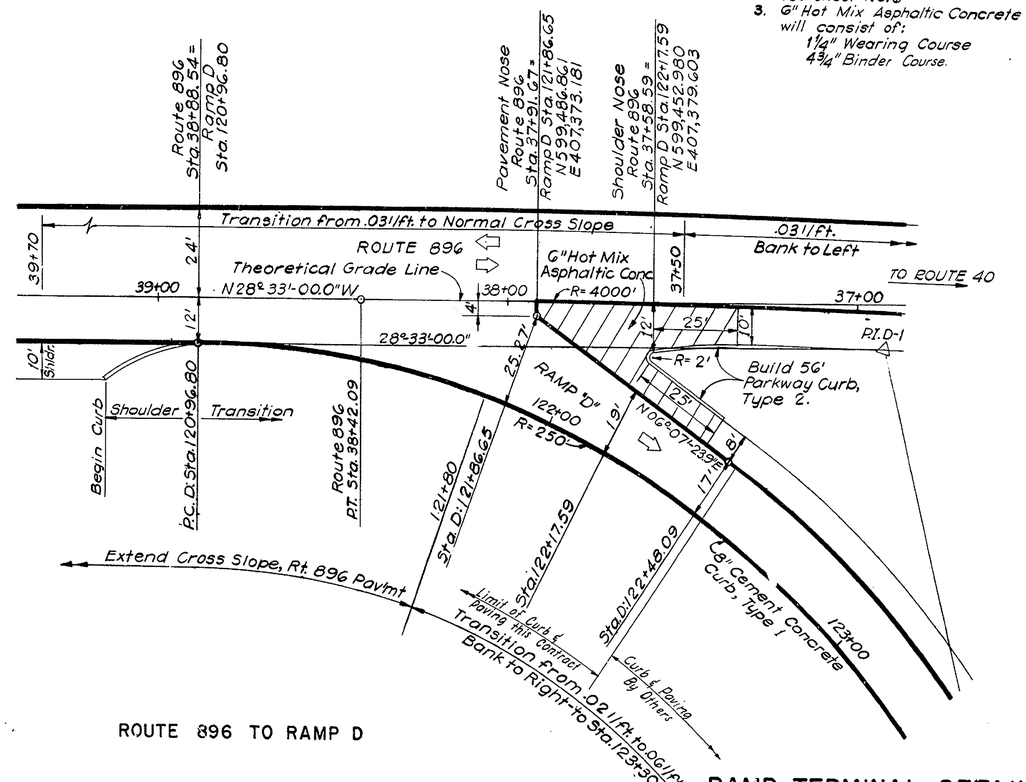

ROUTE 896 TO RAMP D

RAMP TERMINAL DETAILS

COUNTY	CONTRACT	P.R.A. REG. NO.	STATE	FED. AID PROJECT NO.	FISCAL YEAR	SHEET NO.	TOTAL SHEETS
NEW CASTLE	7002		DEL.			24	224

DELAWARE TURNPIKE

BORING No 601
Sta. 21+05 16' Left El. 125.6'

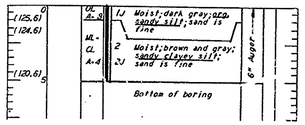

BORING No 602
Sta. 26+82 37' Left El. 120.6'

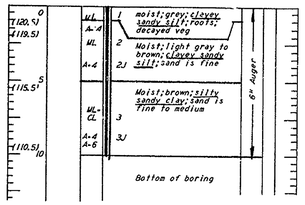

BORING No 603
Sta. 28+66 74' Right El. 121.1'

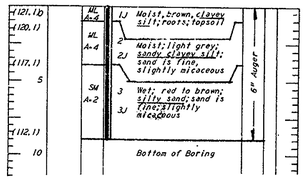

BORING No 604
Sta. 33+00 58' Left El. 133.6'

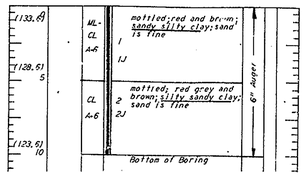

BORING No 605
Sta. 37+35 68' Right El. 127.8'

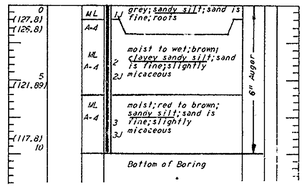

BORING No 606
Sta. 48+00 60' Right El. 139.8'

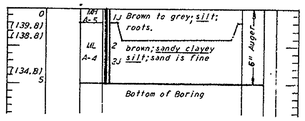

BORING No 607
Sta. 54+00 63' Left El. 152.0'

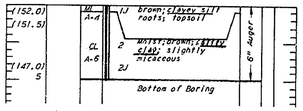

BORING No 608
Sta. 58+00 60' Right El. 144.4'

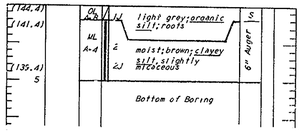

BORING No 609
Sta. 66+05 67' Left El. 144.0'

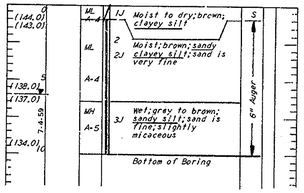

BORING No 610
Sta. 68+00 ℄ El. 143.1'

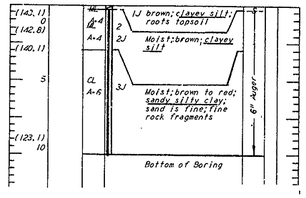

BORING No 611
Sta. 74+00 62' Left El. 162.4'

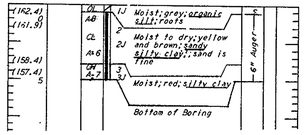

BORING No 612
Sta. 80+00 62' Left El. 157.3'

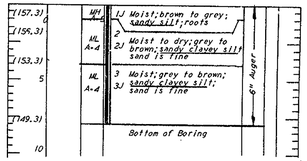

BORING No 613
Sta. 87+00 57' Right El. 169.6'

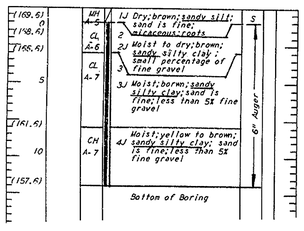

BORING No 614
Sta. 92+40 50' Right El. 165.0'

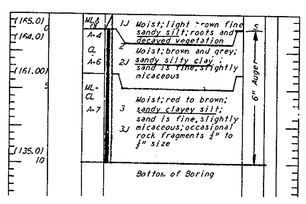

BORING No 615
Sta. 96+96 58' Right El. 154.1'

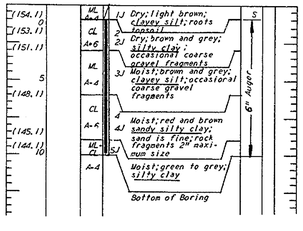

BORING No 616
Sta. 100+00 50' Left El. 146.3'

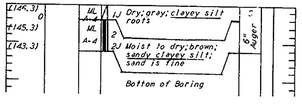

BORING No 227
Sta. 104+90 ℄ El. 147.1'

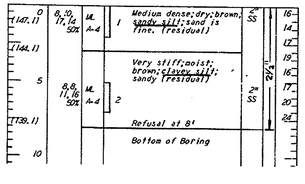

BORING No 228
Sta. 111+00 45' Right El. 140.4'

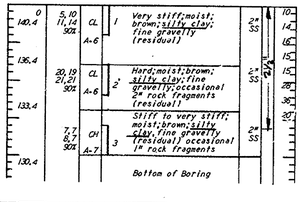

TYPICAL BORING LOG SYMBOLS AND NOTES

BORING LOG

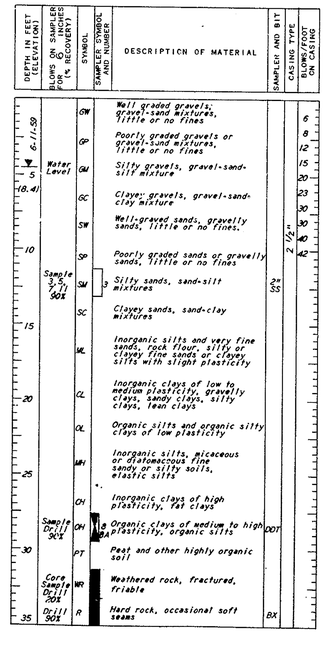

DEFINITION OF SYMBOLS AND ABBREVIATIONS

A	Auger Sample
ang	angular
AX	AX size
bl	black
blu	blue
bn	brown
B	Boulder
BX	BX size
c	coarse
DDT	Denison Double Tube Soil Sample
DT	Double Tube Core Barrel Sample
dk	dark
f	fine
frags	fragments
gn	green
gy	gray
lt	light
"M"	Series "M" Core Barrel
m	medium
max	maximum
mot	mottled
NX	NX size Core or Casing
org	organic
pkts	pockets
PL	Plastic Limit
rd	red
rnd	round
R	Rock
RP	Retractable Plug Sample
S	Shovel Sample
SS	Split Spoon Sample
ST	Shelby Tube Sample
Subang	Subangular
Subrnd	Subrounded
TDT	TAMS Double Tube Soil Sample
TPP	TAMS Piston Plug Sample
TSP	TAMS Stationary Piston Sample
TT	TAMS Thinwall Sample
ye	yellow
wh	white
WOH	Weight of Hammer
WOC	Weight of Casing
WOR	Weight of Rod
WR	Weathered Rock

GENERAL NOTES ON SUBSURFACE EXPLORATION

1. Elevations are referred to United States Geological Survey datum.
2. The coordinate system is referred to the Delaware Grid System - 1927 N.A. Datum.
3. For locations of borings, see Plan & Profile Sheets. Borings are located with reference to the ℄ of Route Del.Tpk.unless otherwise indicated.
4. The information furnished or referred to on these Boring Sheets is not guaranteed as to accuracy or completeness and is not necessarily indicative of the material that will be encountered during construction. It is to be expressly understood that the State will not be responsible for any interpretation or conclusion drawn therefrom by the contractor.
5. The classification and symbols shown on the boring logs representing the various materials are in accordance with the Unified Soil Classification System. In addition all route borings have been classified according to the Public Roads Administration & Highway Research Board Classification System.
6. Water levels recorded during subsurface exploration seldom correspond to the natural level of free ground water, except in extensive and thick deposits of sand and gravels which are sufficiently pervious to permit rapid stabilization of subsurface water level in the exploratory hole. Absence of subsurface water level in the log of any exploration is not necessarily to be construed as meaning ground water will not be encountered in the excavation at that level.
7. The lowest elevation shown on the log indicates the bottom of the boring.
8. Driving Energy:

2" O.D. Split Spoon samplers	4200 in-lbs.
3" O.D. Split Spoon sampler	5100 in-lbs. 5400 in-lbs
NX size coring	7200 in-lbs, 6300 in-lbs
2½" casing	7200 in-lbs, 9000 in-lbs
4" casing	14,400 in-lbs, 7200 in-lbs

9. In rock, diamond bits and saw tooth bits were used to take AX size (1-3/16" I.D.) BX size (1-5/8" I.D.) and NX size (2-1/8" I.D.)
10. All borings were performed during May, June and July of 1959 under the supervision of Tippetts-Abbett-McCarthy-Stratton, Engineers and Architects.

BORING LOGS

COUNTY	CONTRACT	P.R.A. REG NO	STATE	FED. AID PROJECT NO.	FISCAL YEAR	SHEET NO.	TOTAL SHEETS
NEW CASTLE	7002		DEL.			25	224

DELAWARE TURNPIKE

BORING No 617
Sta. 115+64 50' Right El. 133.67

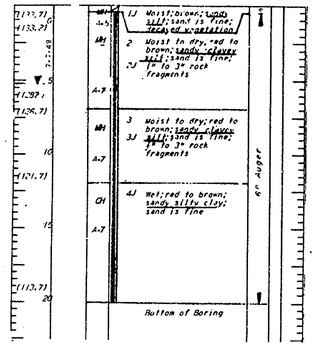

BORING No 618
Sta. 120+00 50' Right El. 132.39

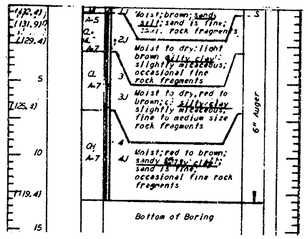

BORING No 619
Sta. 127+60 50' Right El. 101.45

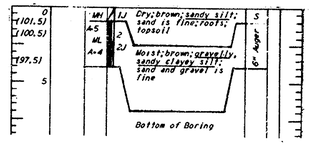

BORING No 620
Sta. 130+00 50' Left El. 85.07

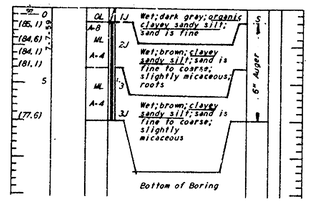

BORING No 621
Sta. 133+00 55' Right El. 92.62

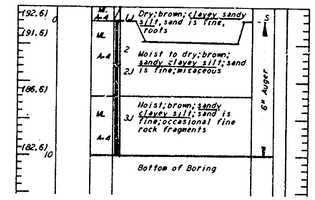

BORING No 622
Sta. 143+10 45' Left El. 57.72

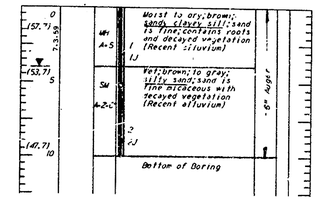

BORING No 623
Sta. 145+95 48' Left El. 58.88

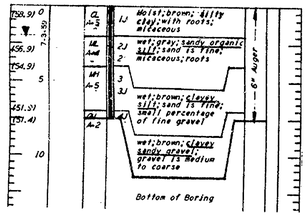

BORING No 418
Sta. 146+90 50' Right El. +55.1

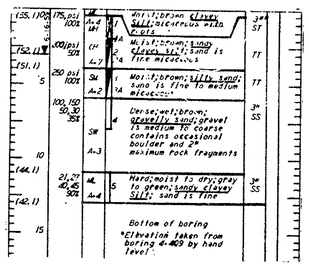

BORING No 627
Sta. 153+00 44' Left El. 68.16

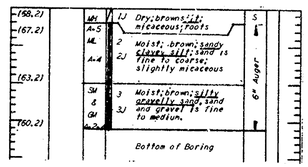

BORING No 229
Sta. A3+48 12' Left El. +56.41

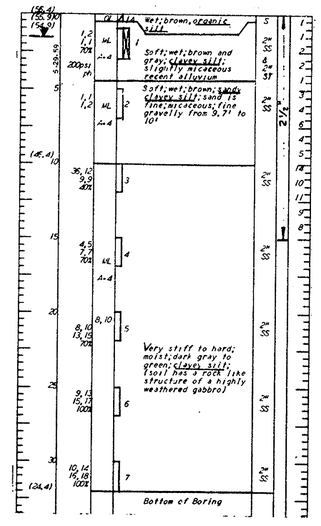

BORING No 625
Sta. A10+90 27' Left El. 58.23

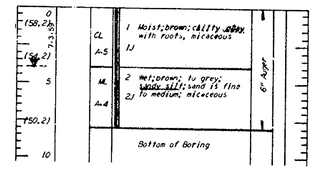

BORING No 231
Sta. D129+04 100' Left El. 150.62

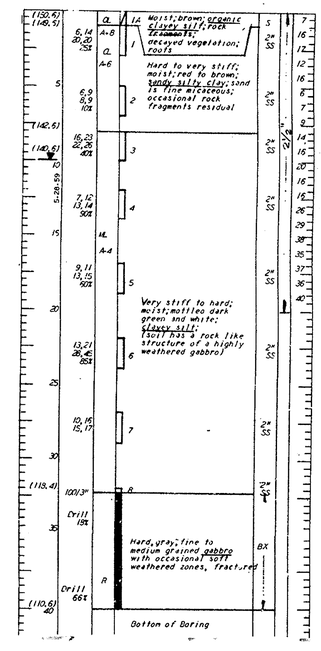

BORING No 230
Sta. 139+55 442' Left El. 59.40

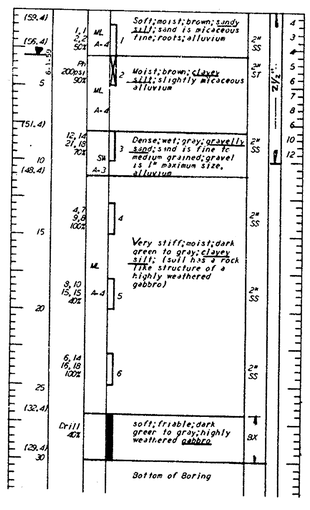

For symbols and notes see Sheet 24

BORING LOGS

COUNTY	CONTRACT	P.R.A. REG. NO.	STATE	FED. AID PROJECT NO.	FISCAL YEAR	SHEET NO.	TOTAL SHEETS
NEW CASTLE	7002		DEL.			26	224

DELAWARE TURNPIKE

BORING Nº628

Sta.168+00 ℄ El. 66.0'

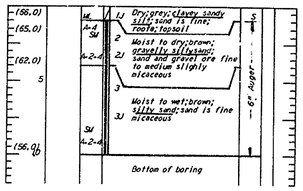

BORING Nº629

Sta.172+50 ℄ El. 58.5'

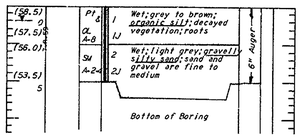

BORING Nº630

Sta.175+00 45' Right El. 62.7'

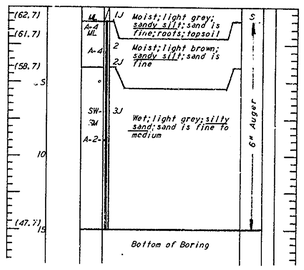

BORING Nº631

Sta.182+00 45' Right El. 65.5'

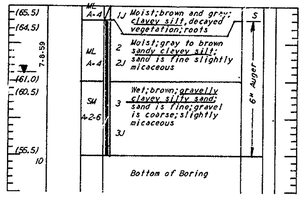

BORING Nº632

Sta.187+00 ℄ El. 67.8'

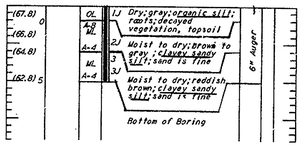

For symbols and notes see Sheet 24

BORING LOGS

COUNTY	CONTRACT	P.R.A. REG. NO.	STATE	FED. AID PROJECT NO.	FISCAL YEAR	SHEET NO.	TOTAL SHEETS
NEW CASTLE	7002	2	DEL.			27	224

DELAWARE TURNPIKE

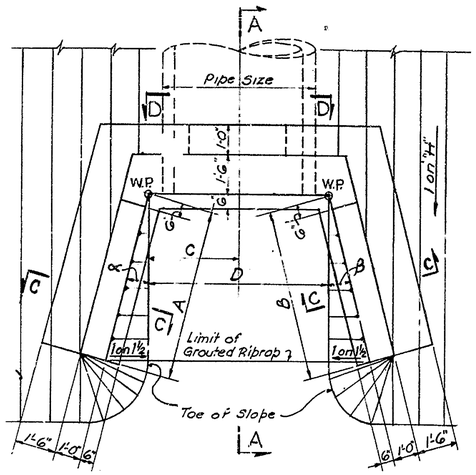

PLAN
(SKEW = 0°)

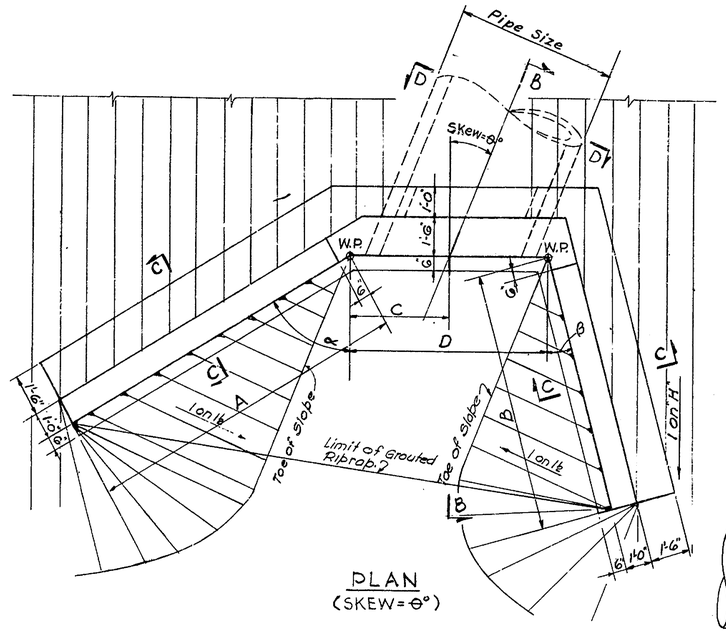

PLAN
(SKEW = θ°)

WING WALLS

SCHEDULE OF DIMENSIONS

TYPE	PIPE SIZE	DIRECTION OF θ	θ	α	β	A	B	C	D	E	F	G	H	QUANTITIES / WALL REINF. (LBS.)	CONC. (CU.YDS)	GROUTED RIP RAP (SQ.YDS)
WW-A	48"φ	—	0°	15°	15°	6'-6"	6'-6"	3'-0"	6'-0"	4'-3"	4'-3"	8'-0"	2	300	7.0	6.0
WW-B	60"φ	—	0°	15°	15°	8'-8"	8'-8"	3'-6"	7'-0"	4'-6"	4'-6"	9'-1"	2	400	9.0	8.5
WW-C	60"×38"	R	30°	60°	15°	8'-8"	5'-6"	4'-0"	8'-0"	6'-3"	5'-11"	7'-2½"	4	400	9.0	7.5
WW-D	60"×38"	R	30°	60°	30°	8'-8"	4'-8"	4'-0"	8'-7"	6'-3"	6'-3"	7'-2½"	4	400	9.0	7.0
WW-E	66"φ	L	41°	15°	60°	6'-0"	12'-9"	6'-0"	12'-0"	5'-10"	5'-6"	9'-8"	2	450	11.0	10.0
WW-F	54"φ	—	0°	15°	15°	7'-6"	7'-6"	3'-3"	6'-6"	4'-5"	4'-5"	8'-7"	2	350	8.0	7.0
WW-G	54"φ	R	26°	60°	30°	12'-6"	7'-4"	3'-10"	8'-8"	5'-3"	5'-3"	8'-7"	3	500	12.0	12.0
WW-H	60"φ	R	23°	60°	15°	10'-4"	8'-5"	3'-9"	7'-7"	7'-7"	6'-9"	9'-1"	4	500	120	11.0

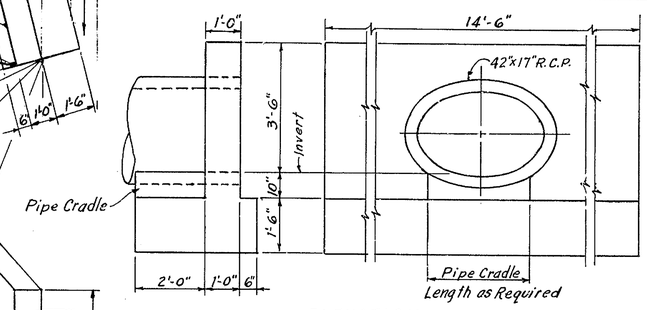

ELEVATION

HEADWALL DETAILS - 42"×27" ELLIPTICAL R.C.P.

QUANTITIES / WALL REINF. (LBS.)	CONCRETE (CU.YDS.) WALL	FOOTING	TOTAL
90	1.61	2.82	4.43

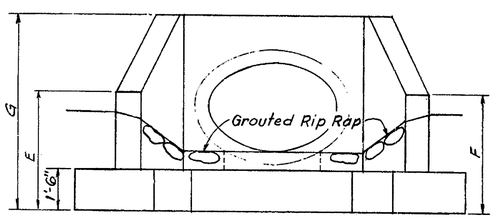

ELEVATION

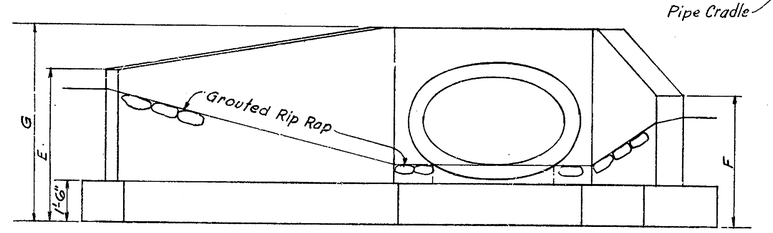

ELEVATION

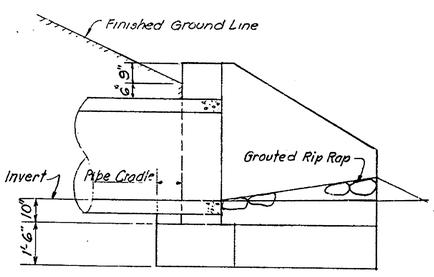

SECTION A-A

SECTION B-B SIMILAR

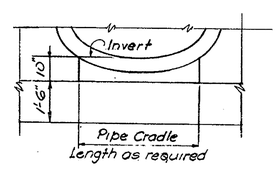

SECTION D-D

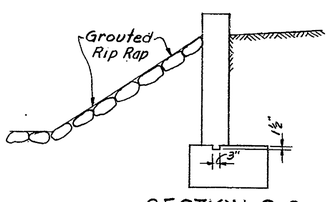

SECTION C-C

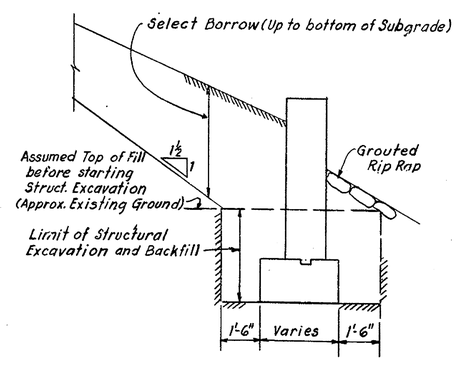

PAYMENT LINES FOR EXCAVATION AND BACKFILL

NOTES:

1. DESIGN SPECIFICATIONS: A.A.S.H.O. 1957.
2. MATERIAL AND FABRICATION SPECIFICATIONS: State of Delaware, State Highway Department. Standard Specifications for Highway Construction, July 1, 1960, and as given in the Special Provisions.
3. DESIGN STRESSES: Reinforcing Steel = 18,000 p.s.i. Concrete; f'_c = 1,200 p.s.i. n = 10
4. Splices for stress bars shall be a minimum of 30 diameters, all other splices a minimum of 20 diameters.
5. All exposed concrete edges shall be bevelled 1"×1" unless otherwise noted.
6. For location of Headwalls see Plan and Profile sheets.
7. For Bar List see Sheet No. 28
8. Headwalls for Culverts 36" or less shall conform to the State Standard Detail Sheets.

CULVERT HEAD WALLS - DETAILS

NOT TO SCALE

COUNTY	CONTRACT	P.R.A. REQ.NO.	STATE	FED. AID PROJECT NO.	FISCAL YEAR	SHEET NO.	TOTAL SHEETS
NEW CASTLE	7002	2	DEL.			28	224

DELAWARE TURNPIKE

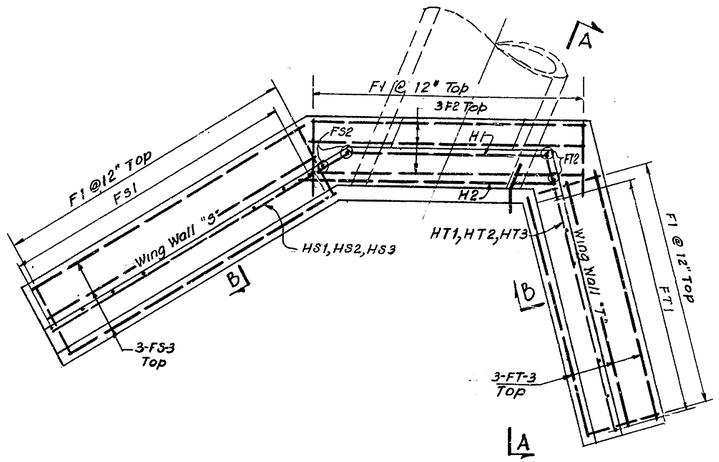

PLAN

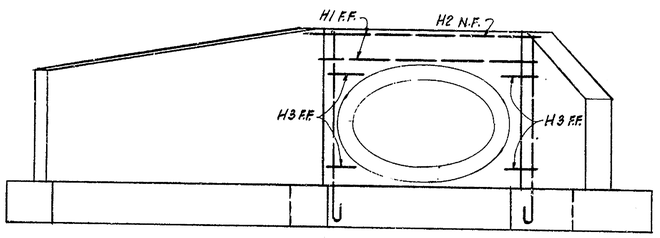

ELEVATION

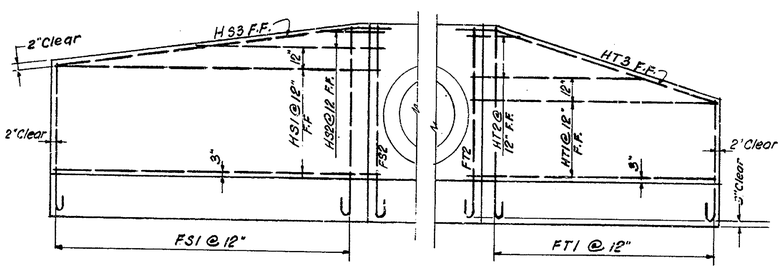

ELEVATION WINGWALL "S"

ELEVATION WINGWALL "T"

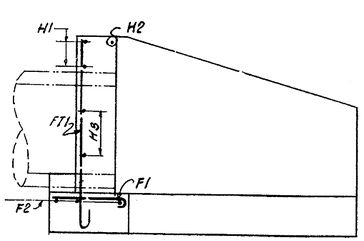

SECTION A-A

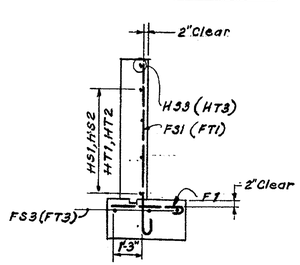

SECTION B-B

WING WALLS - BAR LIST

TYPE	MARK	SIZE	AM'T REQ'D	LENGTH	BAR TYPE	A	B	C	Δ
WW-A	F1	5	21	3'-1"	I	2'-6"	7"	5"	
	F2		3	10'-0"	STR.				
	FS1		1 EA. TOT. 7	4'-5" to 8'-11"	I	3'-10" to 7'-6"	7"	5"	7"
	FS2		2	8'-2"	I	7'-7"	7"	5"	
	FT1		1 EA. TOT. 7	4'-5" to 8'-11"	I	3'-10" to 7'-6"	7"	5"	7"
	FT2		2	8'-2"	I	7'-7"	7"	5"	
	H1		2	7'-0"	STR.				
	H2		1	7'-7"					
	H3		4	1'-6"					
	HS1		3	7'-6"					
	HS2		1 EA. TOT. 2	3'-3" to 4'-6"	STR.				1'-3"
	HS3		1	8'-5"	II	1'-8"	6'-9"	8 3/16"	
	HT1		3	7'-6"	STR.				
	HT2		1 EA. TOT. 2	3'-3" to 4'-6"	STR.				1'-3"
	HT3		1	8'-5"	II	1'-8"	6'-9"	8 3/16"	
	FS3		3	7'-6"	STR.				
	FT3	5	3	7'-6"	STR.				
WW-B	F1	5	23	3'-1"	I	2'-6"	7"	5"	
	F2		3	11'-0"	STR.				
	FS1		1 EA. TOT. 8	4'-9" to 8'-11"	I	4'-2" to 8'-4"	7"	5"	7"
	FS2		2	9'-1"	I	8'-6"	7"	5"	
	FT1		1 EA. TOT. 8	4'-9" to 8'-11"	I	4'-2" to 8'-4"	7"	5"	7"
	FT2		2	9'-1"	I	8'-6"	7"	5"	
	H1		2	8'-0"	STR.				
	H2		1	8'-7"					
	H3		4	1'-6"					
	HS1		3	9'-3"					
	HS2		1 EA. TOT. 3	3'-3" to 5'-11"	STR				1'-4"
	HS3		1	10'-3"	II	1'-8"	6'-7"	7 9/16"	
	HT1		3	9'-3"	STR.				
	HT2		1 EA. TOT. 3	3'-3" to 5'-11"	STR.				1'-4"
	HT3		1	10'-3"	II	1'-8"	6'-7"	7 9/16"	
	FS3		3	9'-3"	STR.				
	FT3	5	3	9'-3"	STR.				
WW-C	F1	5	23	3'-1"	I	2'-6"	7"	5"	
	F2		2	10'-11"	STR.				
	FS1		1 EA. TOT. 9	4'-5" to 7'-2"	I	3'-10" to 6'-7"	7"	5"	1'-4"
	FS2		2	7'-4"	I	6'-9"	7"	5"	
	FT1		1 EA. TOT. 5	6'-1" to 7'-2"	I	5'-6" to 6'-7"	7"	5"	8"
	FT2		2	7'-4"	I	6'-9"	7"	5"	
	H1		2	7'-10"	STR.				
	H2		1	10'-1"					
	H3		4	1'-6"					
	HS1		5	9'-8"					
	HS2		1	4'-0"	STR.				
	HS3		1	9'-8"	II	1'-8"	8'-0"	1 7/16"	
	HT1		4	6'-6"	STR.				
	HT2		1	5'-10"	STR.				
	HT3		1	6'-8"	II	1'-8"	5'-0"	3 1/8"	
	FS3		3	9'-8"	STR.				
	FT3	5	3	6'-6"	STR.				
WW-D	F1	5	23	3'-1"	I	2'-6"	7"	5"	
	F2		2	11'-1"	STR.				
	FS1		1 EA. TOT. 9	6'-5" to 7'-3"	I	5'-10" to 6'-8"	7"	5"	1 1/4"
	FS2		2	7'-4"	I	6'-9"	7"	5"	
	FT1		1 EA. TOT. 5	6'-5" to 7'-3"	I	5'-10" to 6'-8"	7"	5"	2 1/8"
	FT2		2	7'-4"	I	6'-9"	7"	5"	
	H1		2	8'-2"	STR.				
	H2		1	10'-8"					
	H3		4	1'-6"					
	HS1		5	9'-8"					
	HS2		1	4'-0"	STR.				
	HS3		1	9'-8"	II	1'-8"	8'-0"	1 7/16"	
	HT1		5	5'-6"	STR.				
	HT2		1	4'-0"	STR.				
	HT3		1	5'-7"	II	1'-6"	4'-1"	2 3/4"	
	FS3		3	9'-8"	STR.				
	FT3	5	3	5'-8"	STR.				
WW-E	F1	5	31	3'-1"	I	2'-6"	7"	5"	
	F2		3	14'-0"	STR.				
	FS1		1 EA. TOT. 6	6'-0" to 9'-8"	I	5'-5" to 9'-1"	7"	5"	9"
	FS2		2	9'-9"	I	9'-2"	7"	5"	
	FT1		1 EA. TOT. 13	5'-7" to 9'-8"	I	5'-0" to 9'-1"	7"	5"	4"
	FT2		2	9'-9"	I	9'-2"	7"	5"	
	H1		2	11'-6"	STR.				
	H2		1	13'-0"					
	H3		4	1'-6"					
	HS1		4	7'-0"					
	HS2		1 EA. TOT. 3	2'-8" to 4'-9"	STR				1'-0½"
	HS3		1	7'-8"	II	1'-8"	6'-0"	8½"	
	HT1		5	13'-9"	STR.				
	HT2		1 EA. TOT. 8	3'-2" to 9'-2"	STR.				3'-0"
	HT3		1	14'-0"	II	1'-8"	12'-4"	4"	
	FS3		3	7'-0"	STR.				
	FT3	5	3	13'-9"	STR.				
WW-F	F1	5	23	3'-1"	I	2'-6"	7"	5"	
	F2		3	8'-6"	STR.				
	FS1		1 EA. TOT. 7	4'-7" to 8'-7"	I	4'-0" to 8'-0"	7"	5"	8"
	FS2		2	8'-9"	I	8'-2"	7"	5"	
	FT1		1 EA. TOT. 7	4'-7" to 8'-7"	I	4'-0" to 8'-0"	7"	5"	8"
	FT2		2	8'-9"	I	8'-2"	7"	5"	
	H1		2	8'-0"	STR.				
	H2		1	7'-6"					
	H3		4	1'-6"					
	HS1		4	8'-6"					
	HS2		1	4'-7"	STR				
	HS3		1	8'-8"	II	1'-8"	7'-0"	7¼"	
	HT1		4	8'-6"	STR.				
	HT2		1	4'-7"	STR.				
	HT3		1	8'-8"	II	1'-8"	7'-0"	7¼"	
	FS3		3	8'-6"	STR.				
	FT3	5	3	8'-6"	STR.				
WW-G	F1	5	30	3'-1"	I	2'-6"	7"	5"	
	F2		3	10'-3"	STR.				
	FS1		1 EA. TOT. 12	5'-5" to 8'-7"	I	4'-10" to 8'-0"	7"	5"	3½"
	FS2		2	8'-9"	I	8'-2"	7"	5"	
	FT1		1 EA. TOT. 7	5'-5" to 8'-7"	I	4'-10" to 8'-0"	7"	5"	6½"
	FT2		2	8'-9"	I	8'-7"	7"	5"	
	H1		2	7'-6"	STR.				
	H2		1	9'-3"					
	H3		4	1'-6"					
	HS1		4	13'-6"					
	HS2		1	4'-7"	STR.				
	HS3		1	13'-8"	II	1'-8"	12'-0"	3¼"	
	HT1		4	8'-4"	STR.				
	HT2		1	2'-10"	STR.				
	HT3		1	8'-8"	II	1'-8"	7'-0"	5½"	
	FS3		3	13'-6"	STR.				
	FT3	5	3	13'-6"	STR.				
WW-H	F1	5	28	3'-1"	I	2'-6"	7"	5"	
	F2		2	10'-3"	STR.				
	FS1		1 EA. TOT. 10	7'-9" to 9'-1"	I	7'-2" to 8'-6"	7"	5"	1¾"
	FS2		2	9'-3"	I	8'-8"	7"	5"	
	FT1		1 EA. TOT. 8	6'-11" to 9'-1"	I	6'-4" to 8'-6"	7"	5"	3 9/16"
	FT2		2	9'-3"	I	8'-8"	7"	5"	
	H1		2	7'-5"	STR.				
	H2		1	9'-8"					
	H3		4	1'-6"					
	HS1		6	11'-4"					
	HS2		1	6'-7"	STR.				
	HS3		1	11'-4	II	1'-8"	9'-8	1 9/16"	
	HT1		5	9'-5"	STR.				
	HT2		1 EA. TOT. 2	8'-5" to 6'-9"	STR.				
	HT3		1	9'-9"	II	1'-8"	8'-1"	8 9/16"	
	FS3		3	11'-4"	STR.				
	FT3	5	3	9'-5"	STR.				

All bar dimensions are out to out

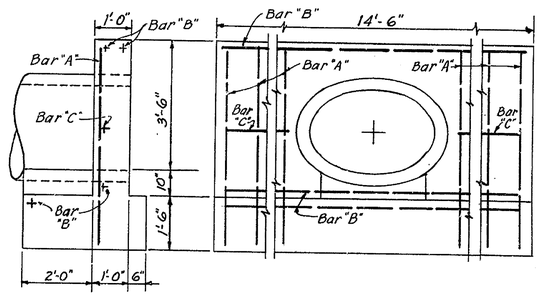

BAR LIST & DETAILS
HEADWALL FOR 42"x27" ELLIP. R.C.P.

Spacing of Vertical Bars	1/2" REINFORCING BARS								
	BARS "A"			BARS "B"			BARS "C"		
	NO.	Length	Total Length	NO.	Length	Total Length	NO.	Length	Total Length
11"	12	5'-6	66'	4	14'	56'	2	4'-6	9'

NOTES:

1. For Location of Headwalls see Plan and Profile Sheets.
2. For Dimensions of Headwalls see Sheet No. 27

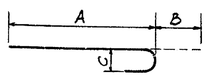

TYPE I

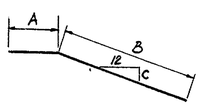

TYPE II

CULVERT HEAD WALLS - BAR LIST

NOT TO SCALE

COUNTY	CONTRACT	P.R.A. REG. NO.	STATE	FED. AID PROJECT NO.	FISCAL YEAR	SHEET NO.	TOTAL SHEETS
NEW CASTLE	7002	2	DEL.			125	224

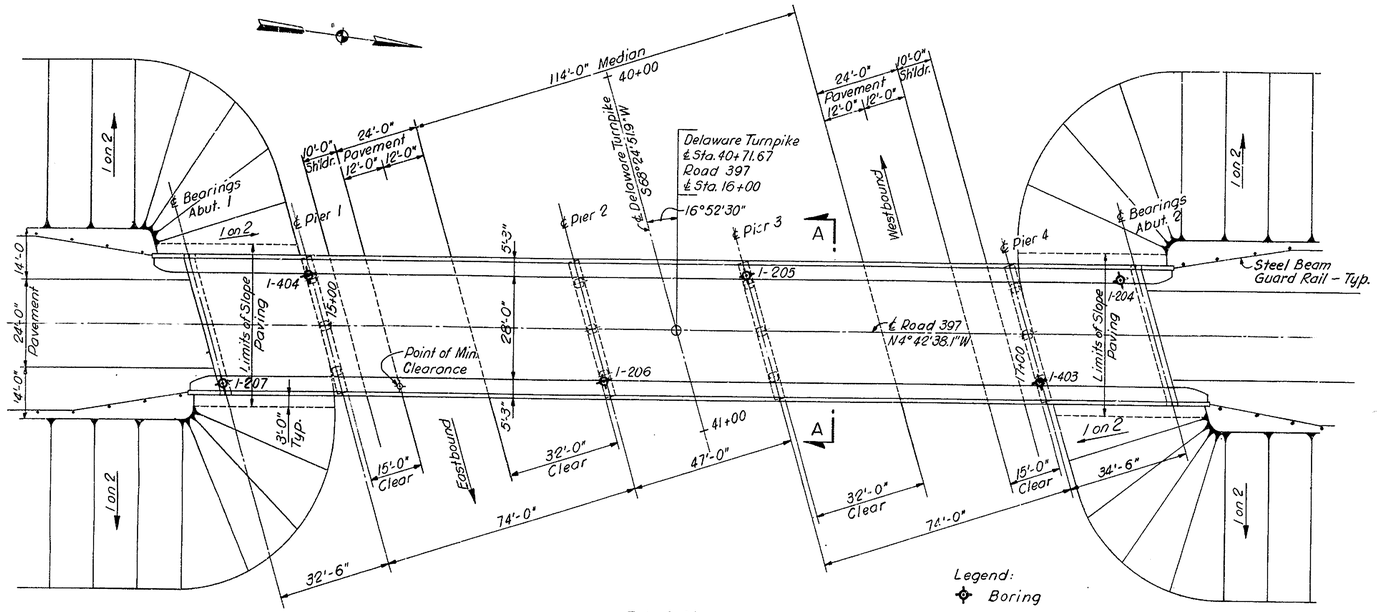

PLAN
SCALE: 1 IN. = 20 FT.

Note:
For drainage of Turnpike see Plan & Profile Sheets

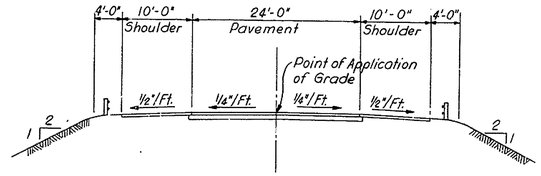

APPROACH SECTION
ROAD 397
SCALE: 1 IN. = 10 FT.

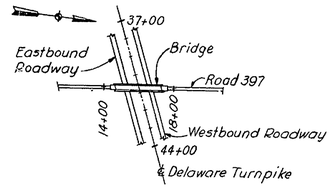

LOCATION PLAN
SCALE: 1 IN. = 400 FT.

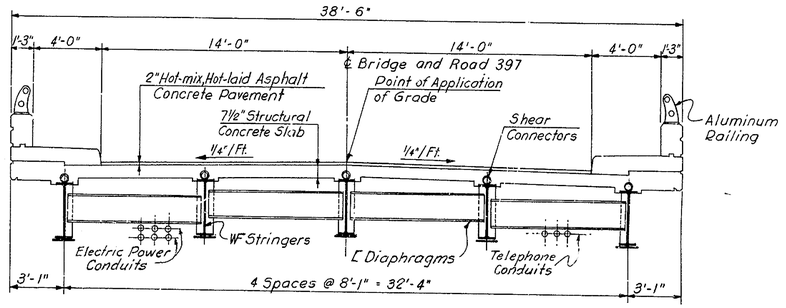

SECTION A-A
SCALE: 1/4 IN. = 1 FT.

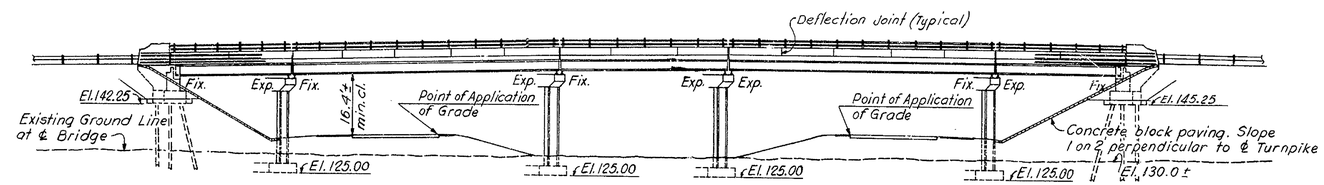

ELEVATION
SCALE: 1 IN. = 20 FT.

GENERAL NOTES:

Design Specifications: A.A.S.H.O.-1957; and Standard Specifications for Welded Highway and Railway Bridges of the American Welding Society-1957.

Material and Fabrication Specifications: State of Delaware, State Highway Department, Standard Specifications, July 1, 1960; and as given in the Special Provisions.

Design Loads: A.A.S.H.O. H20-S16-44.

Design Stresses: Structural and Reinforcing Steel: 18,000 psi. Reinforced Concrete: f_c=1,200 psi, n=10.

Design of Composite Construction based on no temporary intermediate supports to be used during construction.

Fill at Abutments shall be placed to an elevation one foot above bottom of concrete footing before starting footing excavation and pile driving.

Backfill behind abutments to be placed only after bridge deck slab has been completed.

Minimum Waiting Period before loads are permitted on the bridge, after completion of the bridge deck slab: 10 days for loads of 2 tons to 10 tons, and 28 days for loads of 10 tons to the legal limit.

Test Piles shall be in accordance with Standard Specifications and Special Provisions.

Quantities shown shall not relieve the Contractor of the responsibility of checking them in preparing his bid.

For Concrete Notes, see Drawing 1-6.

For Steel Notes, see Drawing 1-5.

For Boring Logs, see Sheet 208

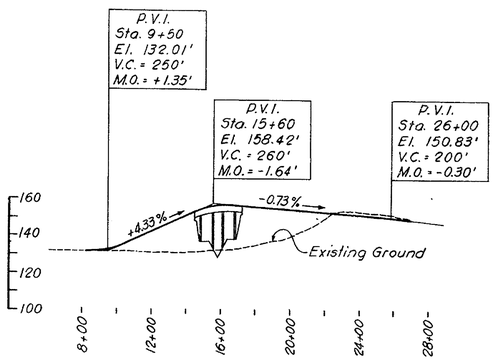

ROAD 397

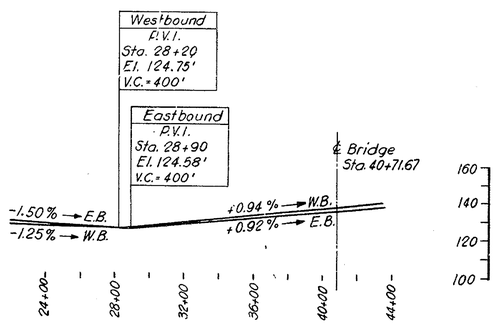

DELAWARE TURNPIKE

℄ PROFILES
SCALE: HOR. 1 IN. = 400 FT.
VER. 1 IN. = 40 FT.

TABLE OF QUANTITIES

ITEM NO.	DESCRIPTION	UNIT	QUANTITY
4	Excavation for Structures	C.Y.	447
7	Select Borrow - Grade "A"	C.Y.	390
11	Hot-mix, Hot-laid Asphaltic Conc. Pavement	Tons	110
	RC-1 Asphalt Tack Coat	Gal.	180
18*	Portland Cement Concrete Masonry		
	Footings	C.Y.	258
	Substructure	C.Y.	203
	Superstructure	C.Y.	408
19	Superficial Waterproofing	S.Y.	74
20*	Bar Reinforcement	Lbs.	146,400
22	Structural Steel (Approx. Wt. 363,000 lbs.)	L.S.	
31	6" Perforated Corr. Metal Pipe Underdrain	L.F.	90
35	Cast-in-place Concrete Piles	L.F.	1720
	Steel Shell Test Piles	L.F.	190
	Aluminum Railing - Double Rail	L.F.	556
	Slope Paving	S.Y.	413
	Coal Tar Epoxy Underseal	S.Y.	855
	Protective Coating for Concrete	S.F.	819

* indicates Fixed Quantity Item – See Proposal

DELAWARE STATE HIGHWAY DEPARTMENT
DELAWARE TURNPIKE

ROAD 397 BRIDGE OVER TURNPIKE

GENERAL ARRANGEMENT

DRAWN: E.A.N.	SCALE: AS NOTED	DATE: MAY 9, 1962	DWG.: 1-1
TRACED:	TIPPETTS-ABBETT-McCARTHY-STRATTON ENGINEERS AND ARCHITECTS		CONTRACT 7002
CHECKED: F.J.F.			
CHARGE OF			SHEET 125 OF 224

COUNTY	CONTRACT	P.R.A. REG. NO	STATE	FED. AID PROJECT NO.	FISCAL YEAR	SHEET NO.	TOTAL SHEETS
NEW CASTLE	7002	2	DEL			126	224

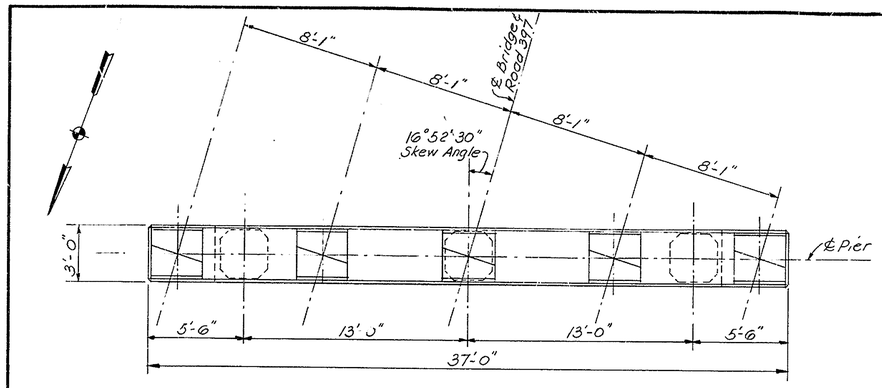

PIER PLAN

SCALE 1/4 IN = 1 FT

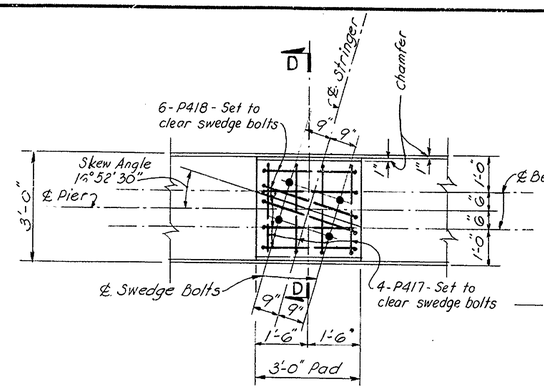

PLAN OF TYPICAL PIER PAD

SCALE 1/2 IN = 1 FT

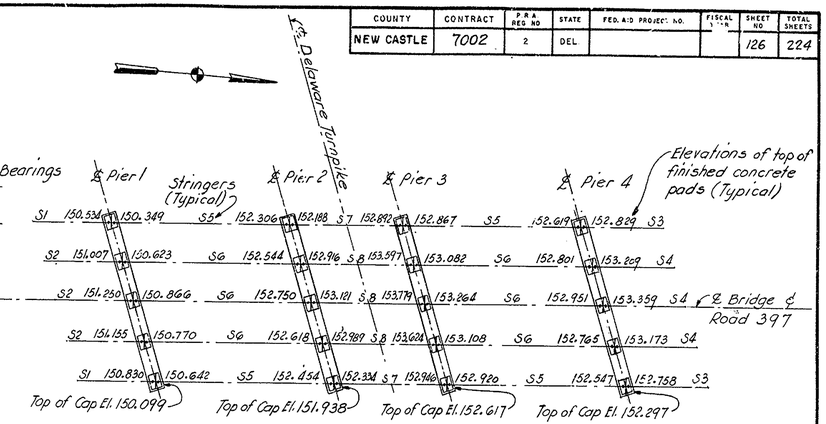

PIER PAD ELEVATIONS

NO SCALE

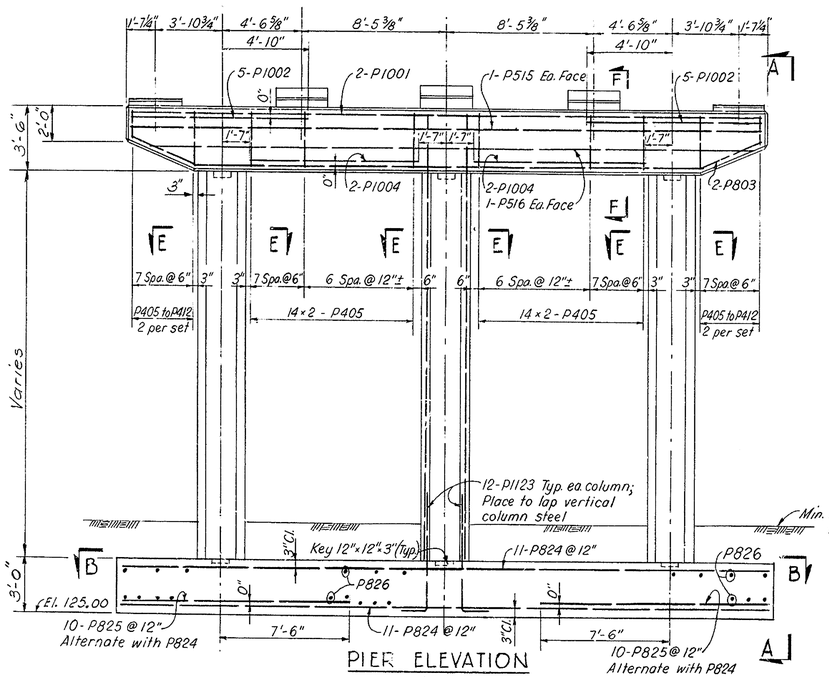

PIER ELEVATION

SCALE 1/4 IN = 1 FT

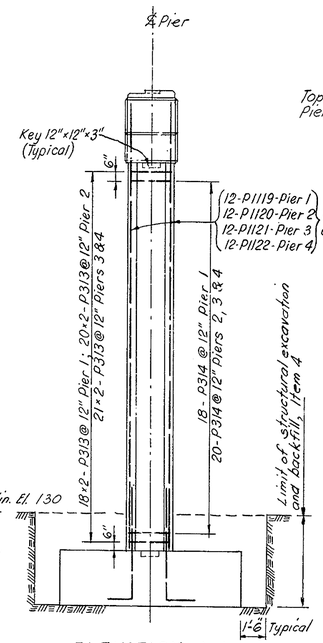

ELEVATION A-A

SCALE 1/4 IN = 1 FT

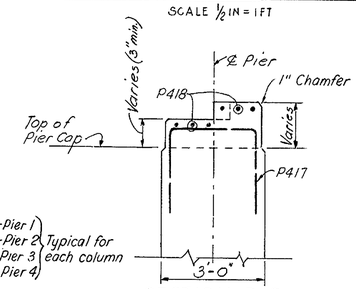

SECTION D-D

SCALE 1/2 IN = 1 FT

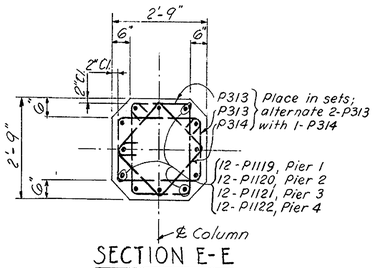

SECTION E-E

SCALE 1/2 IN = 1 FT

NOTES AND DETAILS APPLICABLE TO BRIDGE NO's 1,2,3,4,5 & 7:

1. The tops of piers and abutment bridge seats, including tops and sides of bearing pads, shall be painted with an epoxy protective coating for concrete. See Special Provisions.
2. A coal tar epoxy waterproofing membrane shall be placed on top of the bridge decks, prior to the placement of the asphaltic wearing surface. See Special Provisions.
3. The Contractor shall provide the detail shown below on the top flange of each steel stringer to insure proper placement of deck reinforcing bars:

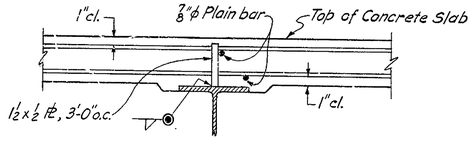

NOTES:
All concrete to be placed in the dry.
For details of anchor bolts for shoes, see Dwg. 1-7.
For General Notes, see Dwg. 1-1.
For Concrete Notes, see Dwg. 1-6.
Maximum allowable soil pressure: 2 Tons/sq. ft.

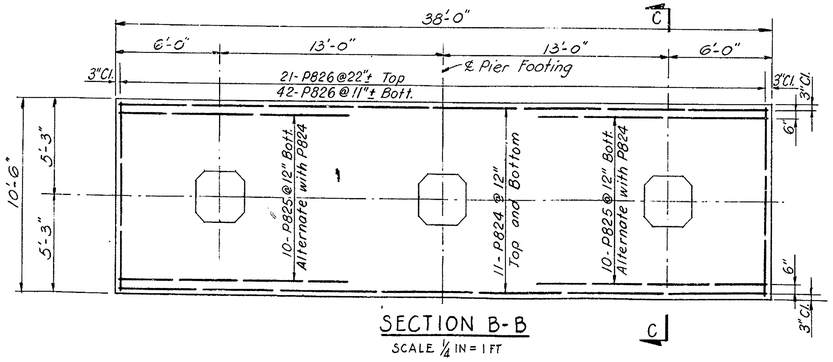

SECTION B-B

SCALE 1/4 IN = 1 FT

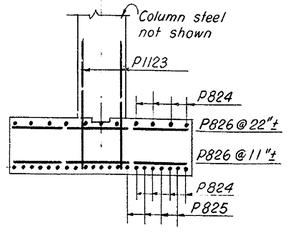

SECTION C-C

SCALE: 1/4 IN. = 1 FT.

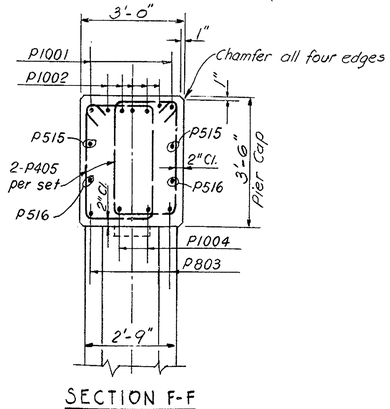

SECTION F-F

SCALE 1/2 IN = 1 FT

DELAWARE STATE HIGHWAY DEPARTMENT

DELAWARE TURNPIKE

ROAD 397 BRIDGE OVER TURNPIKE

PIERS

DRAWN: S.L.T.- A.T.	SCALE: AS NOTED	DATE: MAY 9, 1962	DWG.: 1-2
TRACED:	TIPPETTS-ABBETT-McCARTHY-STRATTON ENGINEERS AND ARCHITECTS		CONTRACT 7002
CHECKED: E.J.F.- S.T.			
CHARGE OF			SHEET 126 OF 224

COUNTY	CONTRACT	P.R.A. REG. NO.	STATE	FED. AID PROJECT NO.	FISCAL YEAR	SHEET NO.	TOTAL SHEETS
NEW CASTLE	7002	2	DEL.			127	224

LEGEND:
- Vertical Pile
- Battered Pile
- Steel Shell Test Pile

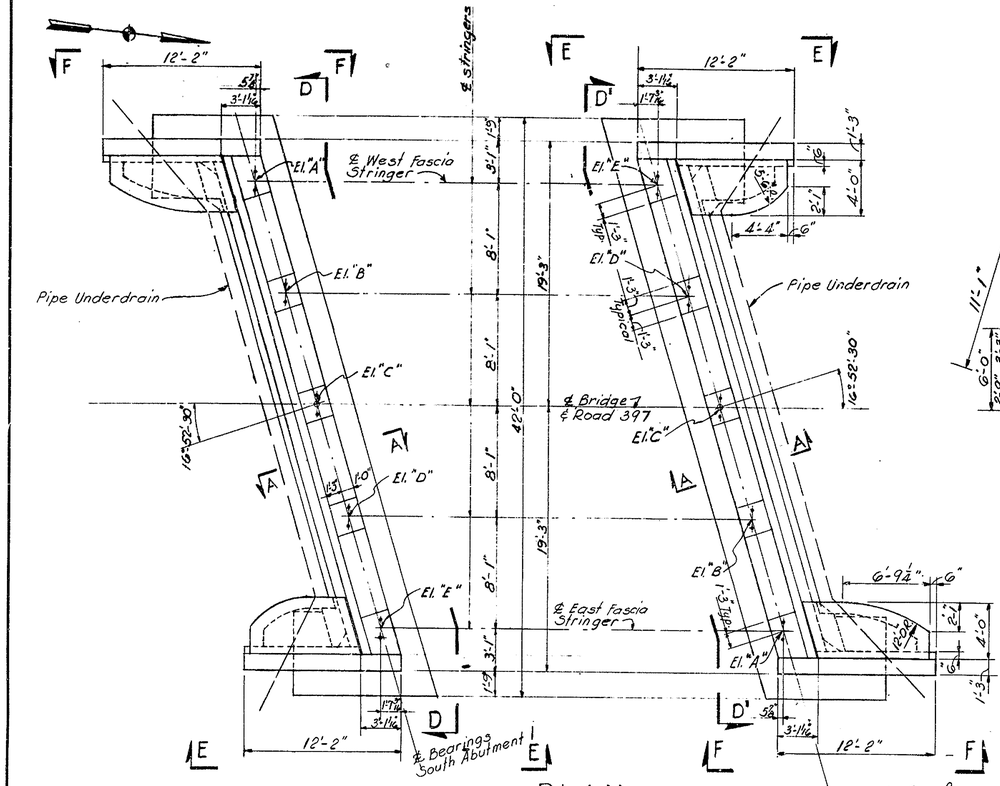

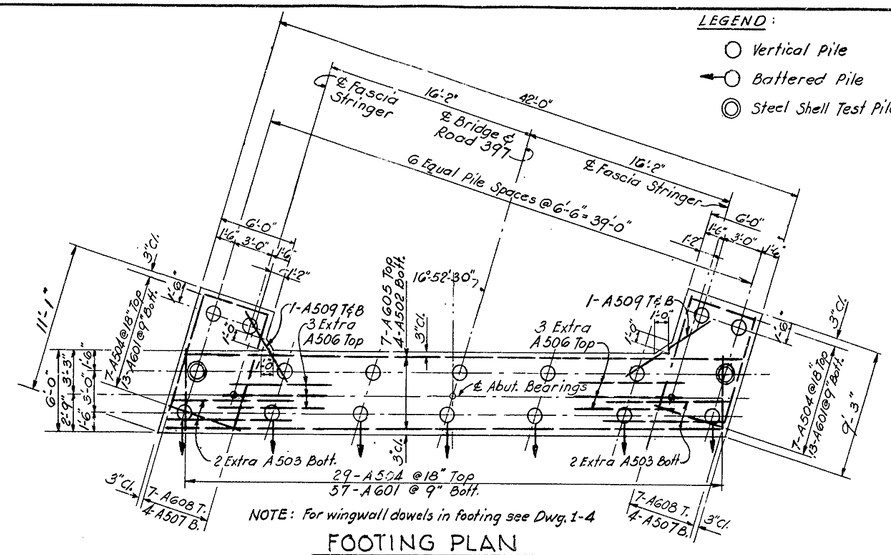

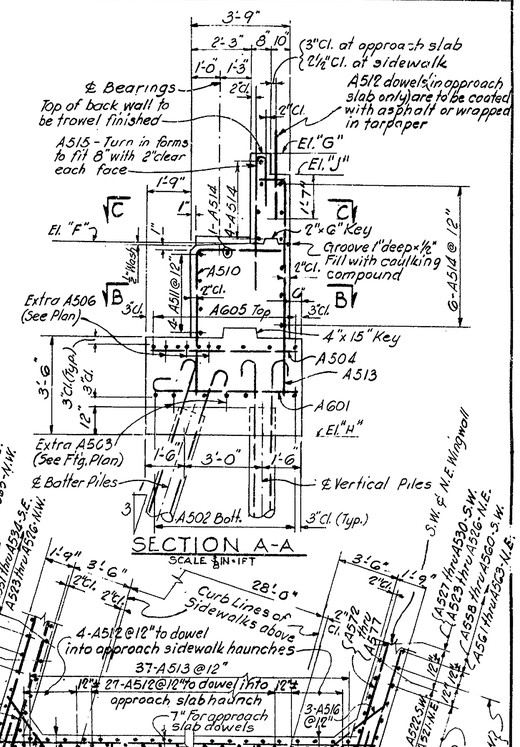

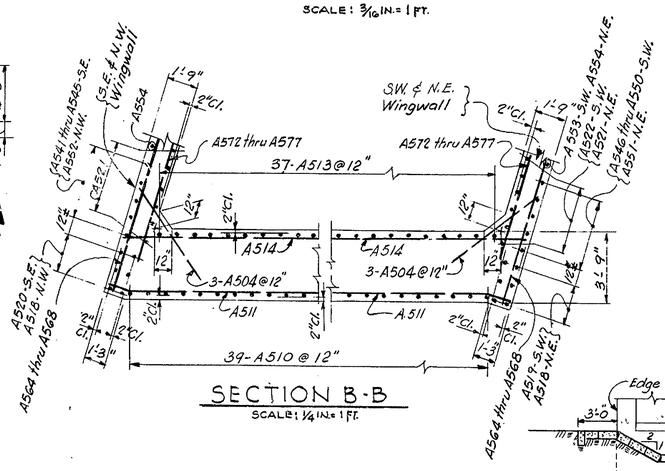

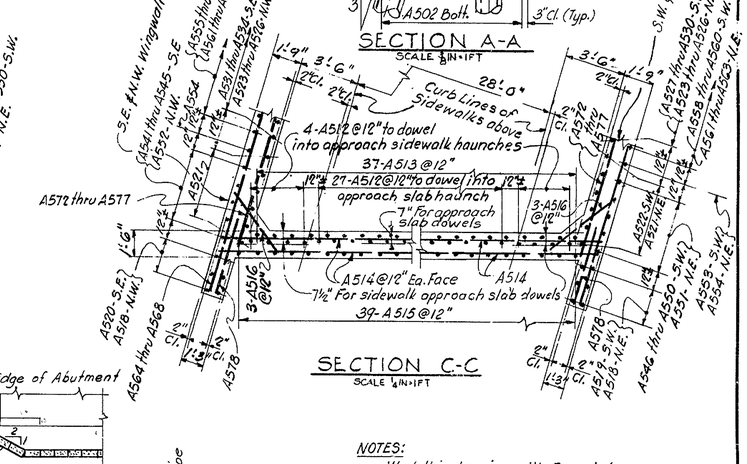

ABUTMENT ELEVATIONS		
Point	South Abutment	North Abutment
A	149.218	152.332
B	149.707	152.748
C	149.966	152.934
D	149.887	152.784
E	149.578	152.404
F	148.97	152.08
G	152.33	155.42
H	142.25	145.25
J	151.60	154.80

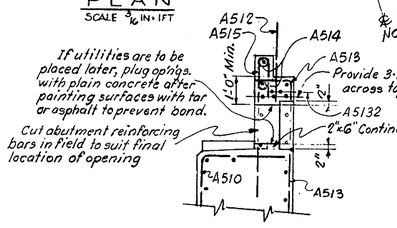

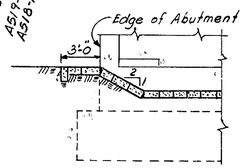

NOTES:
Work this drawing with Dwg. 1-4.
For details of anchor bolts for shoes, see Dwg. 1-7.

Pad Elevations given denote top of finished concrete pad.
For General Notes, see Dwg. 1-1.
For Concrete Notes, see Dwg. 1-6.

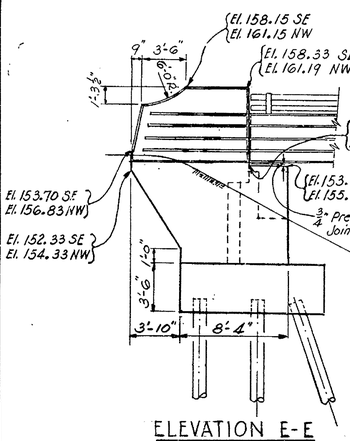

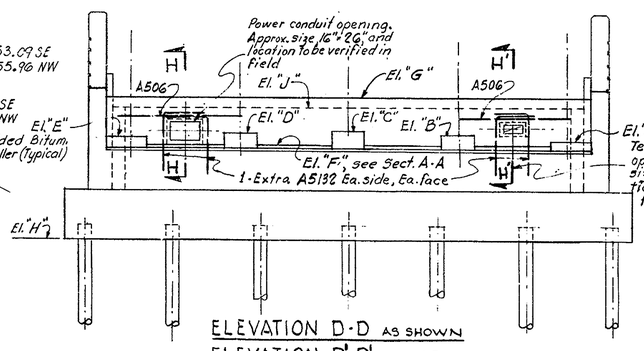

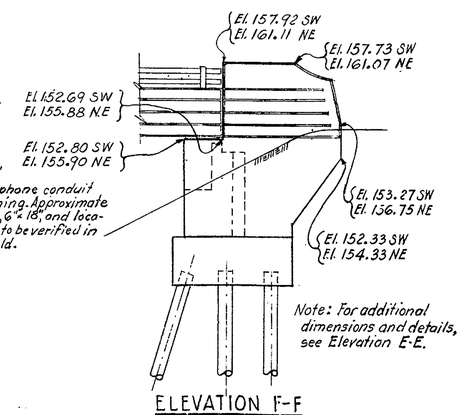

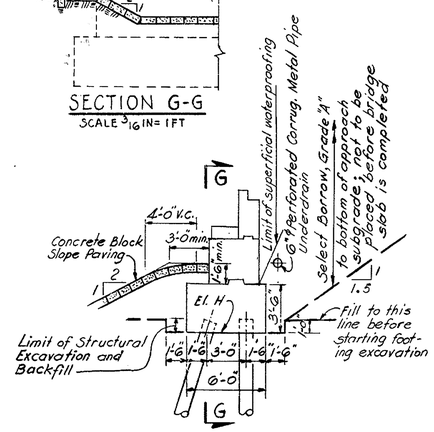

DELAWARE STATE HIGHWAY DEPARTMENT
DELAWARE TURNPIKE

ROAD 397 BRIDGE OVER TURNPIKE
ABUTMENTS
PLAN, ELEVATIONS AND SECTIONS

DRAWN: S.L.T.	SCALE: AS NOTED	DATE: MAY 9, 1962	DWG.: 1-3
TRACED:	TIPPETTS-ABBETT-McCARTHY-STRATTON ENGINEERS AND ARCHITECTS		CONTRACT 7002
CHECKED: F.J.E.			
CHARGE OF			SHEET 127 OF 224

COUNTY	CONTRACT	P.R.A. REG. NO.	STATE	FED. AID PROJECT NO.	FISCAL YEAR	SHEET NO.	TOTAL SHEETS
NEW CASTLE	7002	2	DEL.			128	224

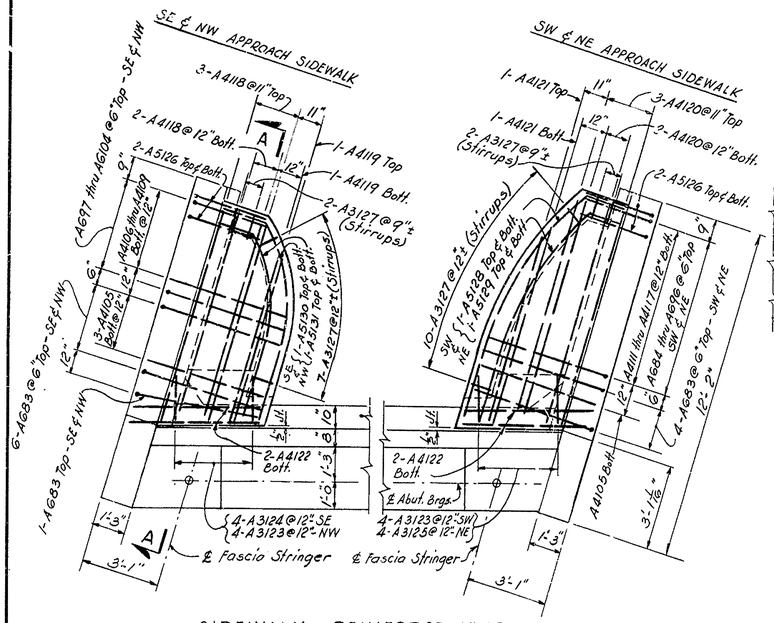

SIDEWALK REINFORCEMENT
SCALE 3/8 IN = 1 FT

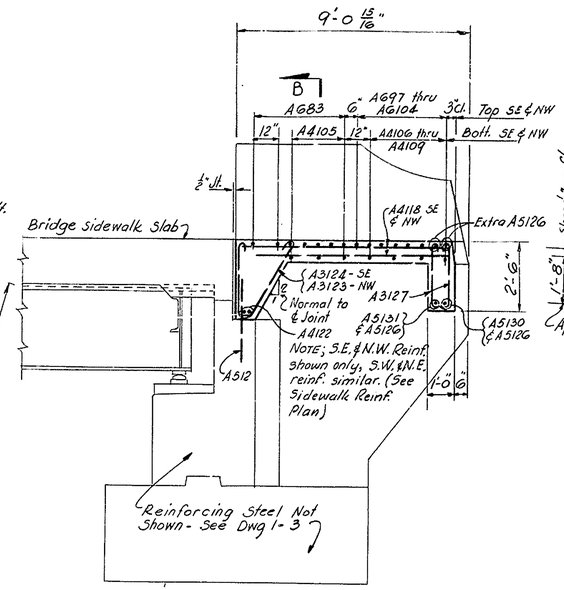

SECTION A-A
SCALE 3/8 IN = 1 FT

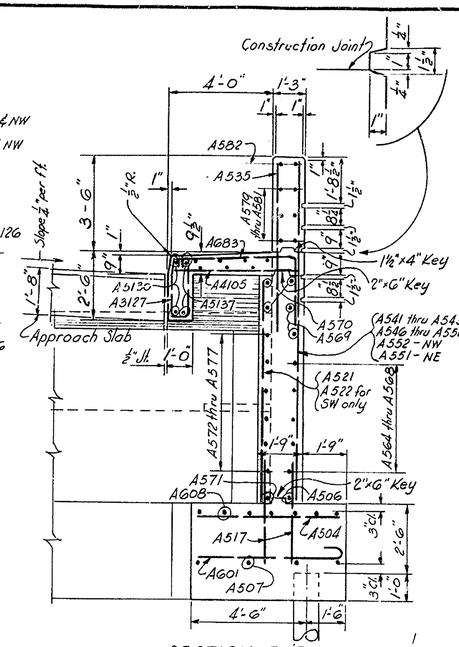

SECTION B-B
SCALE 3/8 IN = 1 FT

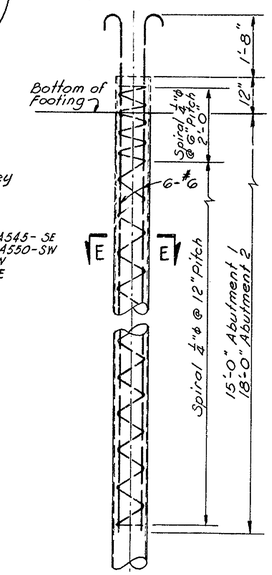

PILE DETAIL
SCALE ½ IN = 1 FT

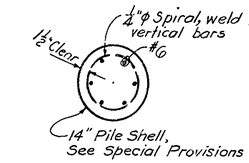

SECTION E-E
SCALE 1 IN = 1 FT

PILE NOTES:

Approved Metal Spacers shall be attached to the top and bottom coils to insure that the minimum required clear distance to the shell will be obtained.

Pile Capacity shall be 50 tons.

Estimated Pile Length: 55 ft at Abutment 1; 40 ft. at Abutment 2. Actual pile lengths shall be determined by test piles. For location of test piles see Dwg. 1-3

Pile Reinforcement: Cost to be included in "Cast-in-place concrete-filled Piles", Item 35.

Preboring of piles through embankment fill will be permissible.

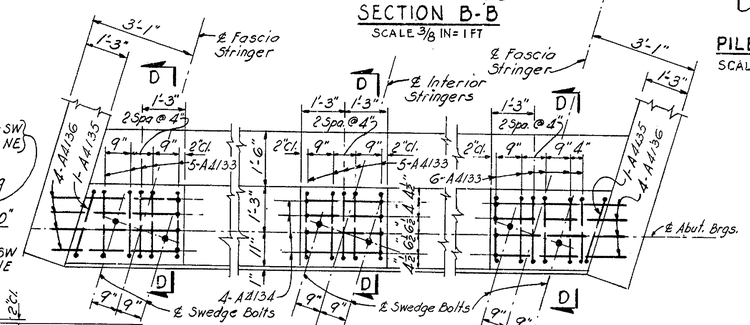

ABUTMENT PAD DETAILS
SCALE ½ IN = 1 FT

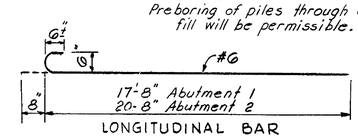

LONGITUDINAL BAR

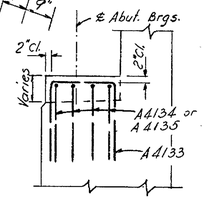

SECTION D-D
SCALE ½ IN = 1 FT

PILE SCHEDULE						
LOCATION	NUMBER BY FOOTING					
	PILES		REINFORCING BARS			
	ESTIMATED LENGTH		#6 LONGIT. BARS		¼"φ SPIRAL	
	55 ft.	40 ft.	LENGTH 18'-4"	LENGTH 21'-4"	LENGTH 60'-2"	LENGTH 69'-3"
ABUTMENT 1	18		108		18	
ABUTMENT 2		18		108		18
TOTAL NUMBER	18	18	108	108	18	18

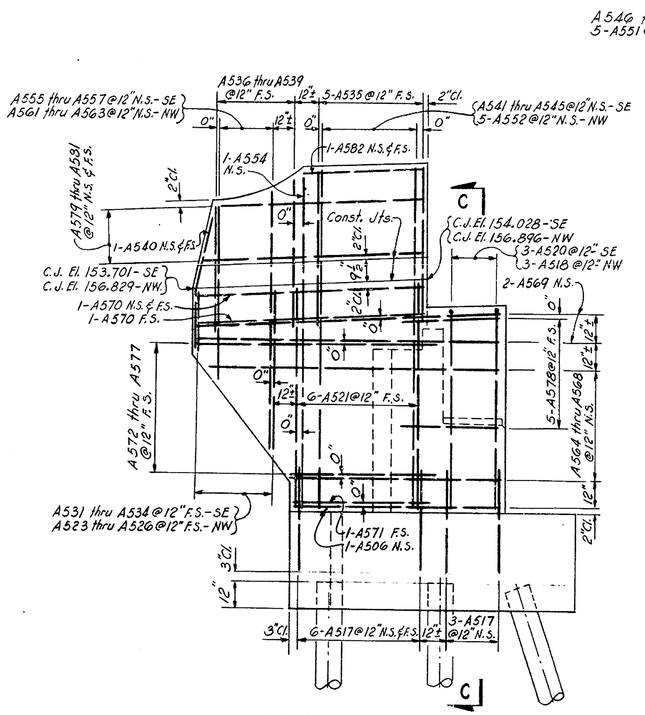

SE AND NW WINGWALL
SCALE 3/8 IN = 1 FT.

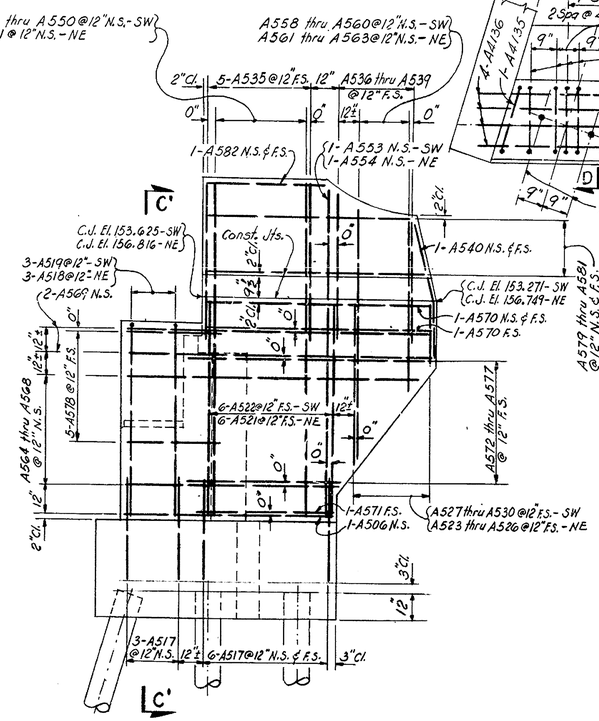

SW AND NE WINGWALL
SCALE 3/8 IN = 1 FT

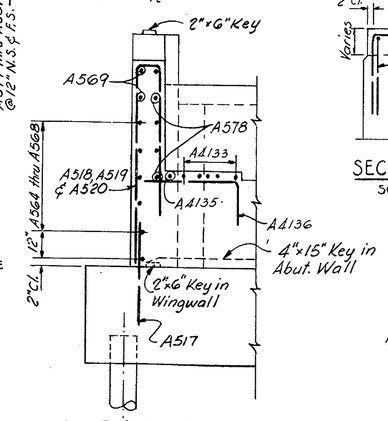

SECTION C-C AS SHOWN
SECTION C'-C' SIMILAR
SCALE 3/8 IN = 1 FT

NOTES:
Work this drawing with Dwg. 1-3.

DELAWARE STATE HIGHWAY DEPARTMENT
DELAWARE TURNPIKE

ROAD 397 BRIDGE OVER TURNPIKE
ABUTMENTS
SECTIONS, DETAILS AND PILE DETAILS

DRAWN: S.L.T.	SCALE: AS NOTED	DATE: MAY 9, 1962	DWG.: 1-4
TRACED:	TIPPETTS-ABBETT-McCARTHY-STRATTON ENGINEERS AND ARCHITECTS		CONTRACT 7002
CHECKED: F.J.F.			
CHARGE OF			SHEET 128 OF 224

COUNTY	CONTRACT	P.R.A. REG. NO.	STATE	FED. AID PROJECT NO.	FISCAL YEAR	SHEET NO.	TOTAL SHEETS
NEW CASTLE	7002	2	DEL.			129	224

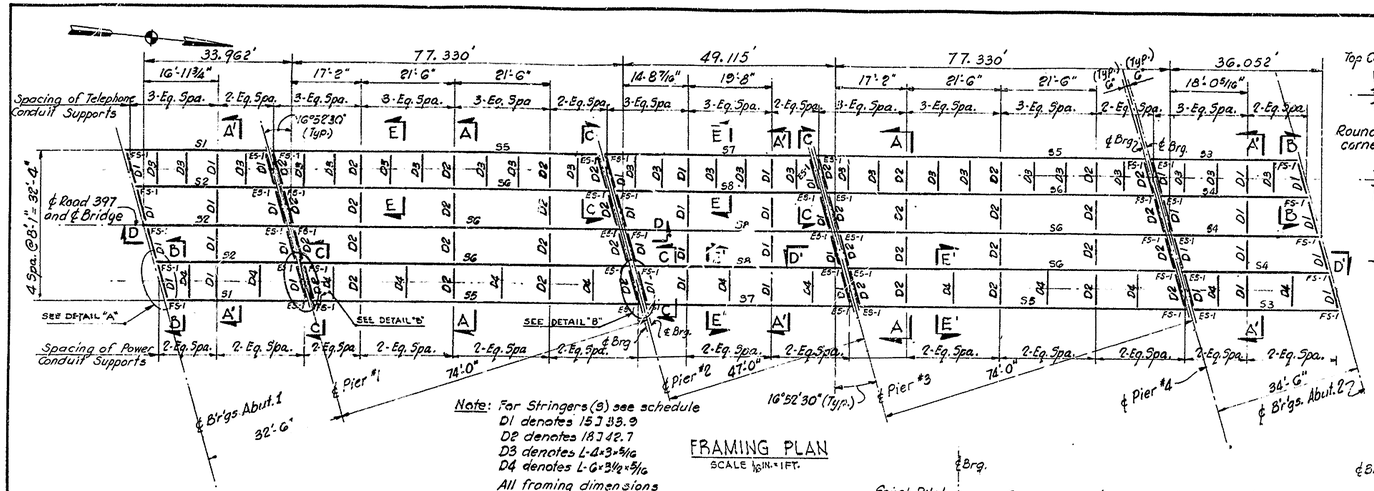

Note: For Stringers (S) see schedule
D1 denotes 15 J 33.9
D2 denotes 18 J 42.7
D3 denotes L-4×3×5/16
D4 denotes L-6×3½×5/16
All framing dimensions are horizontal

FRAMING PLAN
SCALE 1/8 IN. = 1 FT.

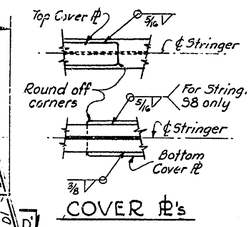

COVER ℔'s

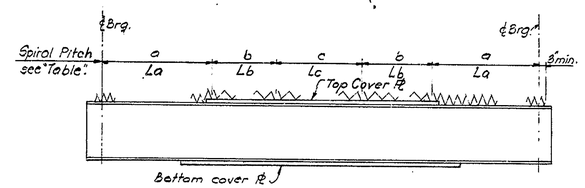

ELEVATION

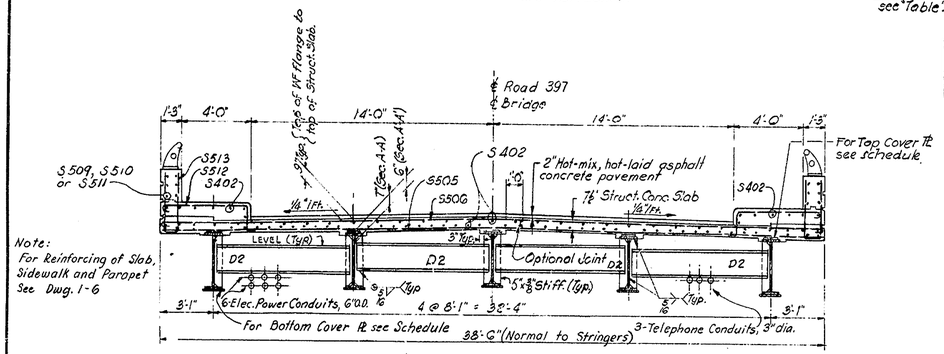

Note:
For reinforcing of Slab, Sidewalk and Parapet
See Dwg. 1-6

SECTION A-A AS SHOWN
SECTION A'-A' SIMILAR
SCALE ¼" = 1'-0"

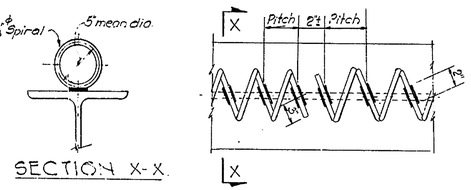

SECTION X-X.

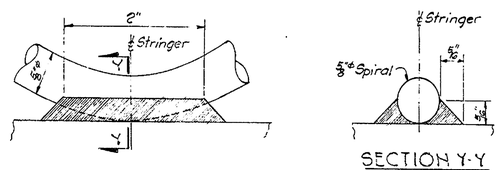

SPIRAL DETAILS

SECTION Y-Y

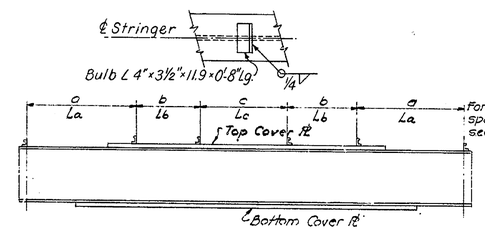

BULB ANGLE DETAILS

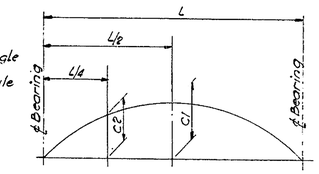

CAMBER DIAGRAM

STRINGER SCHEDULE

SPAN			END SPANS				INTERIOR SPANS			
			SOUTH		NORTH		OVER TPKE. ROADWAYS		OVER TURNPIKE MALL	
STRINGER MARK			S1	S2	S3	S4	S5	S6	S7	S8
Max. Shear at Bearing (Kips)	D.L. I		27.2	26.3	28.8	27.9	45.9	40.2	25.6	22.4
	D.L. II		—	—	—	—	25.3	25.3	16.2	16.2
	L.L.		34.8	38.1	35.6	39.0	42.3	46.4	38.9	42.6
	I.		10.4	11.4	10.7	11.7	10.5	11.5	11.2	12.3
	S.W.L.L.		5.7	—	6.0	—	13.0	—	8.2	—
Moments (Ft. Kips)	D.L. I		227	220	256	245	909	795	311	273
	D.L. II		—	—	—	—	500	500	198	198
	L.L.		224	246	249	272	736	807	397	435
	I.		67	74	75	82	183	201	115	126
	S.W.L.L.		48	—	54	—	248	—	98	—
Structural Section	Structural Shape		36WF150	33WF130	36WF150	33WF130	36WF194	36WF170	36WF170	30WF108
	Top Cover Plate		None	None	None	None	10"×3/8" ×43'-6"	10"×3/8" ×45'-0"	None	None
	Bottom Cover Plate		None	None	None	None	14"×2" ×66'-8"	14"×1⅛" ×65'-10"	None	13"×1 3/16" ×39'-0"
Unit (ksi) Stress	Steel	Bottom	13.5	16.0	15.1	17.8	17.94	17.88	17.90	17.71
		Top	13.5	16.0	15.1	17.8	17.40	17.66	8.59	12.54
Shear Connector	Spiral Pitch	a La	—	—	—	—	4"	12'-0"	4½"	8'-0"	3½"	6'-0"
		b Lb	—	—	—	—	6"	14'-0"	6"	14'-0"	6"	8'-0"	5"	10'-0"
		c Lc	—	—	—	—	10"	Balance	10"	Balance	9"	Balance	8"	Balance
	Bulb Angle Spacing	a La	—	—	—	—	10"	12'-0"	10"	12'-0"	11"	8'-0"	8½"	6'-0"
		b Lb	—	—	—	—	15"	14'-0"	15"	14'-0"	15"	8'-0"	12½"	10'-0"
		c Lc	—	—	—	—	25"	Balance	25"	Balance	22½"	Balance	20"	Balance
Camber		C1	Natural Rolled Camber Up.				½ 3 15/16"	* 4"	1 5/16"	1 9/16"
		C2	———		———		¼ 1 15/16"	* 3"	15/16"	1⅛"
		C1	Natural Rolled Camber Up.				1 3⅞"	† 3 15/16"	———	
		C2	———		———		† 2 13/16"	† 2 15/16"	———	

* For South Intermediate Span
† For North Intermediate Span

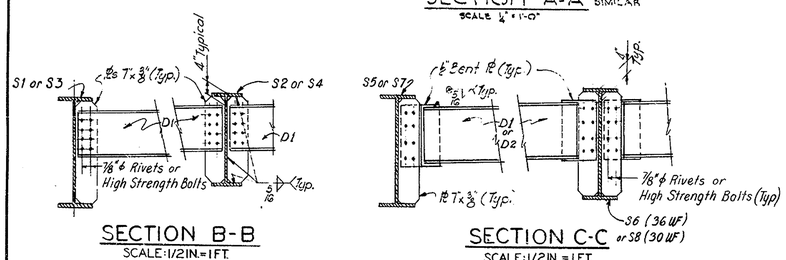

SECTION B-B
SCALE: 1/2 IN. = 1 FT.

SECTION C-C
SCALE: 1/2 IN. = 1 FT.

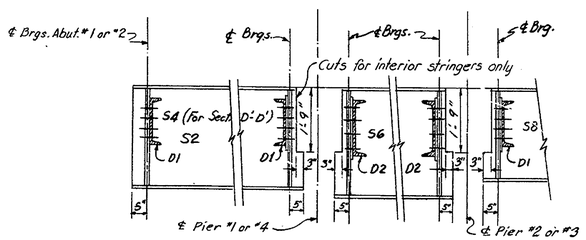

SECTION D-D
SECTION D'-D'
SCALE: 1/2 IN. = 1 FT.

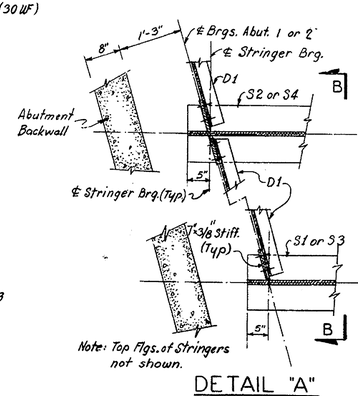

DETAIL "A"
SCALE: 3/4 IN. = 1 FT.

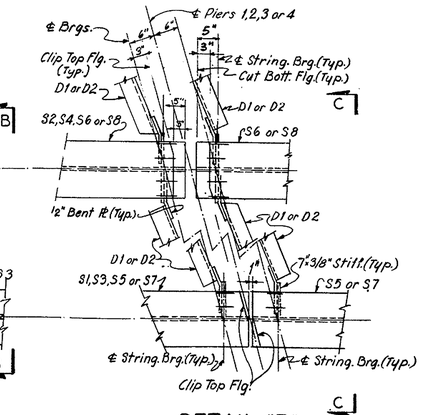

DETAIL "B"
SCALE: 3/4 IN. = 1 FT.

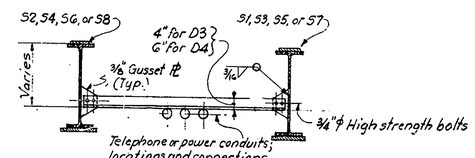

SECTION E-E AS SHOWN
SECTION E'-E' SIMILAR
SCALE: 3/8 IN. = 1 FT.

NOTES:
For General Notes, see Drawing 1-1.
For Steel reinforcement in deck slab, see Drawing 1-6.
For Special notes and deck reinforcement support detail see Dwg. 1-2.

STEEL NOTES:
For material specifications see Special Provisions.
Basic allowable flexural tensile stress = 18,000 psi.
All stiffener plates and transverse framing members shall be vertical when stringers are in final erected position.
Contractor has the option of using either spirals or bulb angles where shear connectors are called for. Nelson studs may be substituted with the approval of the Engineer. See Special Provisions.
Composite Construction: No intermediate temporary supports shall be used during construction. No superimposed dead loads shall be added before 7 days after concrete is poured.
Rolled Beams shall have their rolled camber upward before welding of cover plates.
Field Connections shall be made with ⅞" ⌀ high strength bolts or rivets, unless otherwise indicated.
Painting: For Shops and Field painting see Standard Specifications and Special Provisions.

DELAWARE STATE HIGHWAY DEPARTMENT
DELAWARE TURNPIKE

ROAD 397 BRIDGE OVER TURNPIKE
SUPERSTRUCTURE
FRAMING AND DETAILS

DRAWN: B.M.-A.T.	SCALE: AS NOTED	DATE: MAY 9, 1962	DWG.: 1-5
TRACED:	TIPPETTS-ABBETT-McCARTHY-STRATTON ENGINEERS AND ARCHITECTS		CONTRACT 7002
CHECKED: E.J.F.			
CHARGE OF			SHEET 129 OF 224

COUNTY	CONTRACT	P.R.A. REG NO	STATE	FED AID PROJECT NO.	FISCAL YEAR	SHEET NO.	TOTAL SHEETS
NEW CASTLE	7002	2	DEL.			130	224

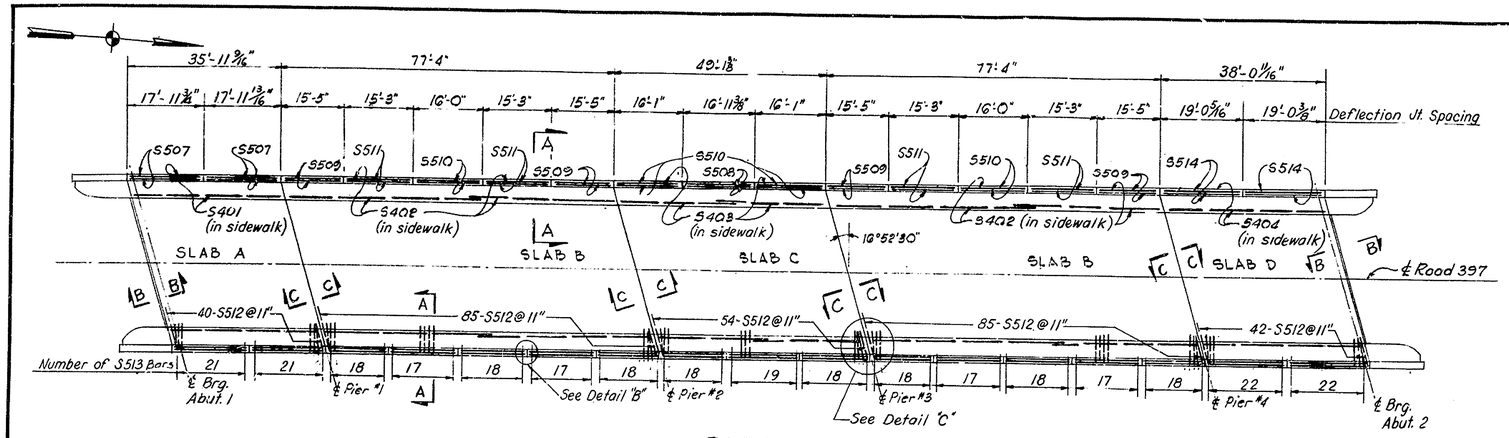

DECK PLAN
SCALE 1/8 IN.=1 FT.

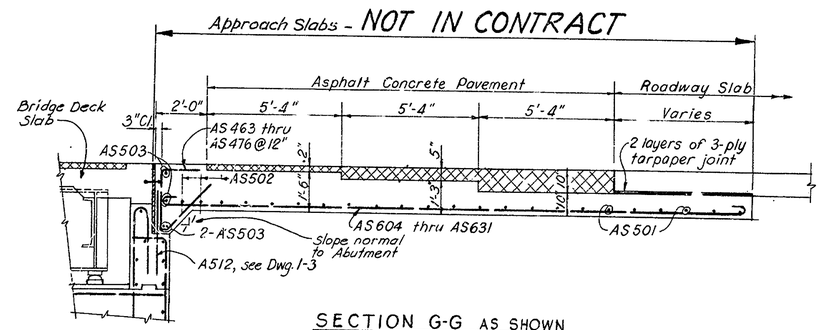

SECTION G-G AS SHOWN
SECTION G'-G' SIMILAR
SCALE: 3/8 IN. = 1 FT.

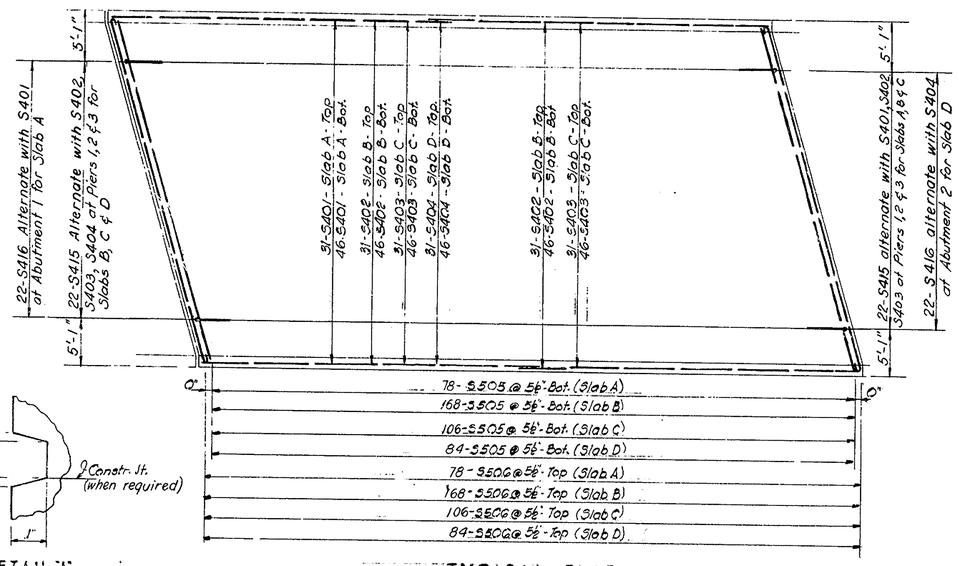

TYPICAL SLAB
SCALE: 1/8 IN.=1 FT.

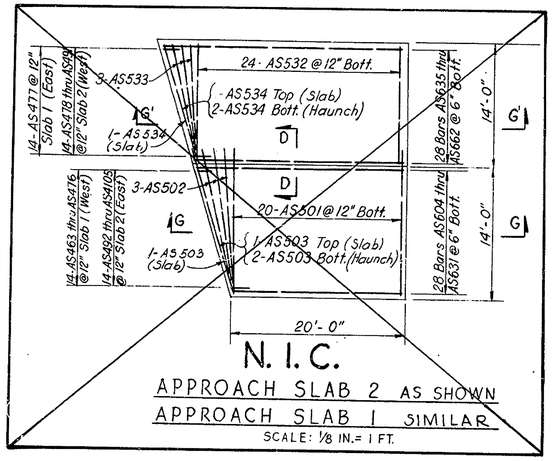

N. I. C.
APPROACH SLAB 2 AS SHOWN
APPROACH SLAB 1 SIMILAR
SCALE: 1/8 IN.= 1 FT.

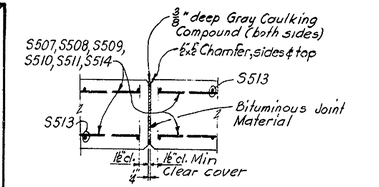

PARAPET DEFLECTION JOINT
DETAIL "B"
SCALE 1/2 IN.=1 FT.

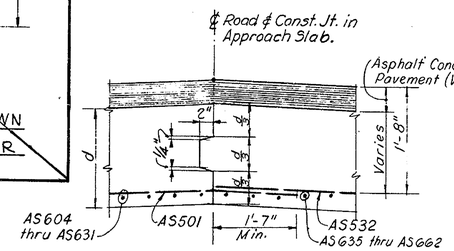

SECTION D-D

CONCRETE NOTES:

Concrete Water-reducing Retarder Admixture shall be added to all superstructure concrete (see Special Provisions).
Splices for stress bars shall be a minimum of 30 diameters; all other splices a minimum of 20 diameters.
Construction Joints other than those shown will not be permitted without written approval of the Engineer.
Exposed Concrete Edges shall be beveled 1 in. by 1 in., unless otherwise noted.
Concrete Cover as per A.A.S.H.O., or as noted.
Cost of furnishing and placing all bituminous joint materials, joint seal, caulking compound, tar paper, etc., and concrete water-reducing retarder admixture will be included in Item 18, "Portland Cement Concrete Masonry."

NOTES:
For transverse section through deck slab, see Dwg. 1-5.
All parapet joints shall be perpendicular to fascia line.
For joint details, see Dwg. 1-8.
For General Notes, see Dwg. 1-1.

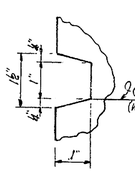

DETAIL "A"

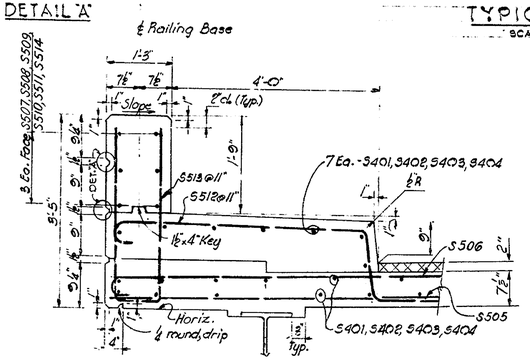

SECTION A-A
SCALE 1/2 IN.=1 FT.

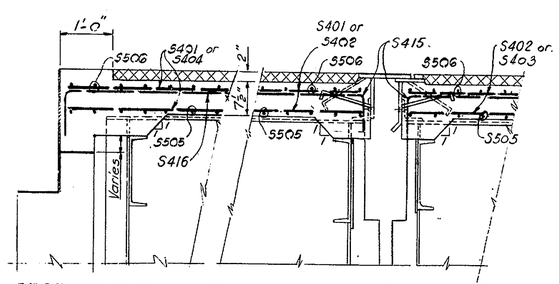

SECTION B-B
SCALE 1/2 IN.=1 FT.

SECTION C-C
SCALE 1/2 IN.=1 FT.

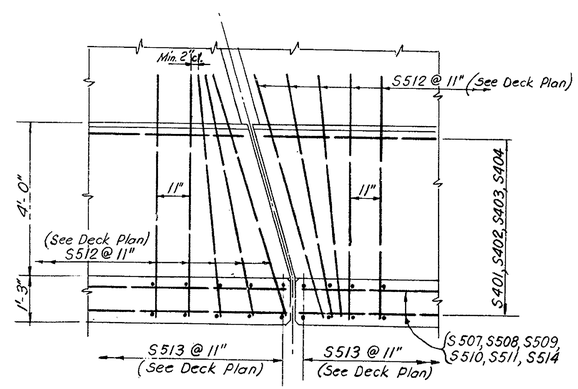

DETAIL "C"
SCALE: 1/2 IN. = 1 FT.

DELAWARE STATE HIGHWAY DEPARTMENT
DELAWARE TURNPIKE

ROAD 397 BRIDGE OVER TURNPIKE
SUPERSTRUCTURE
CONCRETE DECK AND APPROACH SLABS

DRAWN: H.P.-A.T.	SCALE: AS NOTED	DATE: MAY 9, 1962	DWG.: 1-6
TRACED:	TIPPETTS-ABBETT-McCARTHY-STRATTON ENGINEERS AND ARCHITECTS		CONTRACT 7002
CHECKED: F. F.			
CHARGE OF			SHEET 130 OF 224

COUNTY	CONTRACT	P.R.A. REG. NO.	STATE	FED. AID PROJECT NO.	FISCAL YEAR	SHEET NO.	TOTAL SHEETS
NEW CASTLE	7002	2	DEL.			131	224

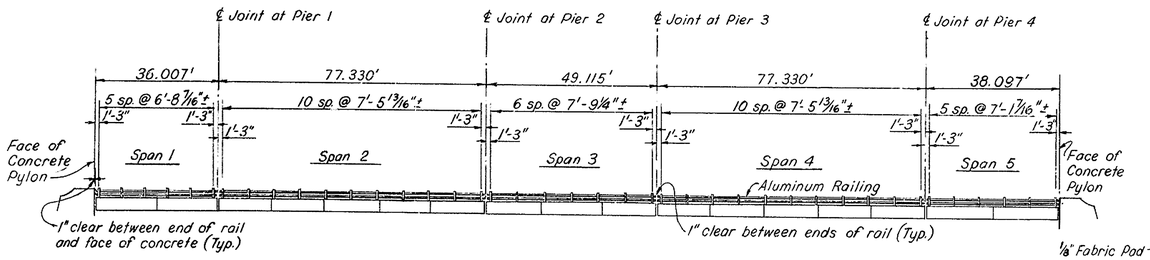

Note: All dimensions shown are horizontal.

RAILING ELEVATIONS

SCALE: 1 IN. = 20 FT.

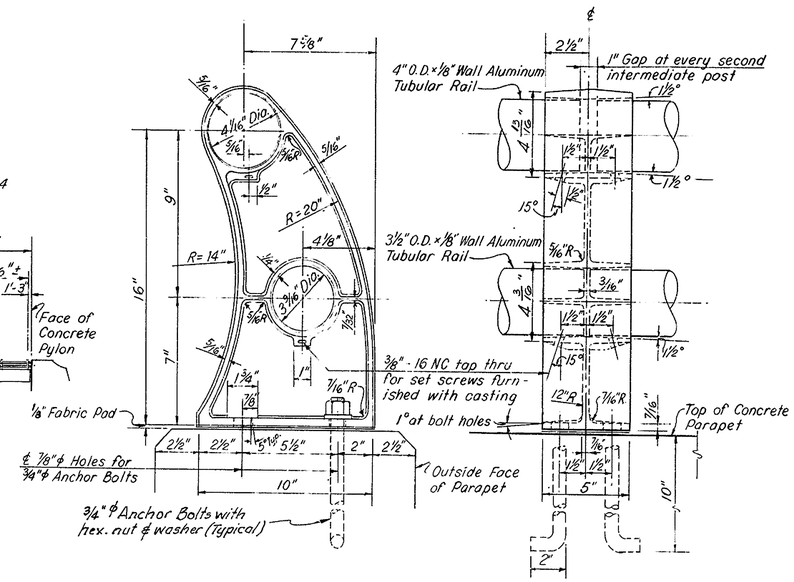

RAILING DETAILS

SCALE: 3 IN. = 1 FT.

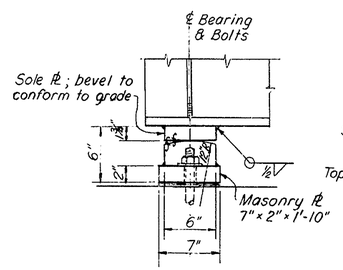

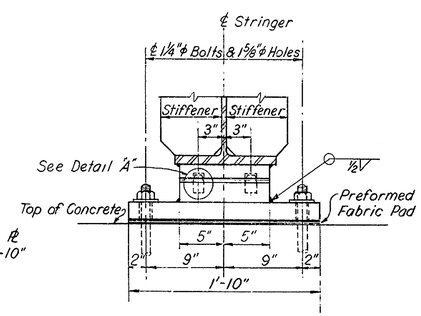

FIXED SHOE FS-1

SCALE: 1 1/2 IN. = 1 FT.

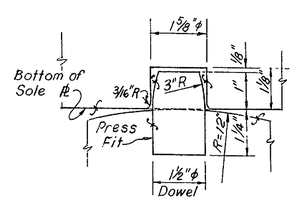

DETAIL "A"

SCALE: 6 IN. = 1 FT.

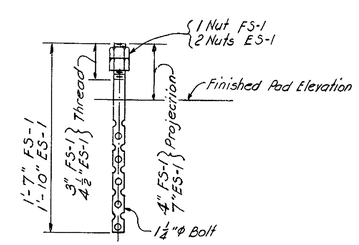

SWEDGE BOLT DETAIL

NO SCALE

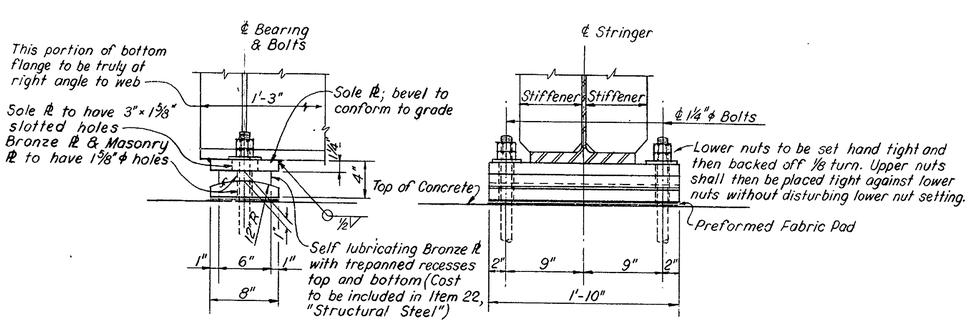

EXPANSION SHOE ES-1

SCALE: 1 1/2 IN. = 1 FT.

RAILING NOTES:

Railing Posts shall be erected normal to grade and rails shall be parallel to established grade.
Anchor Bolts shall be of aluminum alloy meeting the requirement of ASTM-B211 alloy 2024-T4. Finished aluminum alloy bolts, nuts and washers shall be given an anodic coating at least 0.0002 in. thick and a chromate seal.
Anchor Bolts shall be set accurately by means of a template.
After Nuts have been placed and tightened to the satisfaction of the Engineer, bolts shall be cut off 1/8" above nuts and peened.
Tubular Rails shall be closed at all piers and abutments with a welded aluminum plug.
Rails shall be continuous at all end posts.
Preformed Fabric Pads shall be 1/8" thick.

NOTES:

Shoes to have vertical and horizontal ℄'s mutually perpendicular at 65°F.
For Steel Notes, see Drawing 1-5.

DELAWARE STATE HIGHWAY DEPARTMENT

DELAWARE TURNPIKE

ROAD 397 BRIDGE OVER TURNPIKE

SUPERSTRUCTURE

RAILING AND SHOE DETAILS

DRAWN: A.T.	SCALE: AS NOTED	DATE: MAY 9, 1962	DWG.: 1-7
TRACED:	TIPPETTS-ABBETT-McCARTHY-STRATTON ENGINEERS AND ARCHITECTS		CONTRACT 7002
CHECKED: F.J.F.			
CHARGE OF			SHEET 131 OF 224

COUNTY	CONTRACT	P.R.A. REG. NO.	STATE	FED. AID PROJECT NO.	FISCAL YEAR	SHEET NO.	TOTAL SHEETS
NEW CASTLE	7002	2	DEL.			132	224

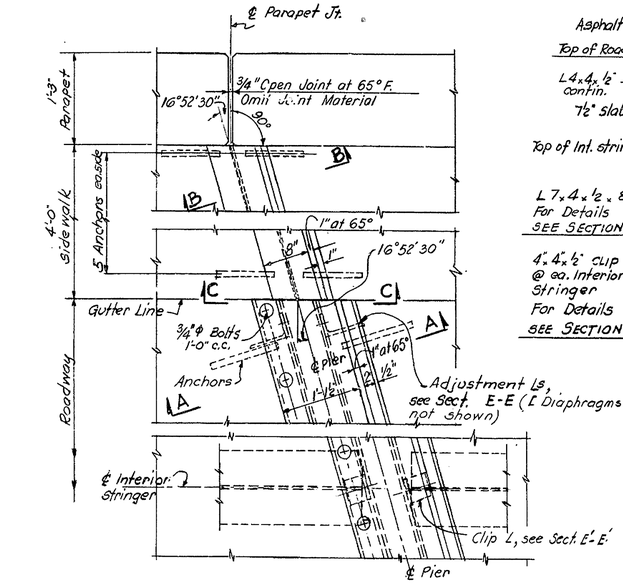

PLAN AT PIER JOINT
SLIDING PLATE DETAIL
SCALE: 1 IN. = 1 FT.

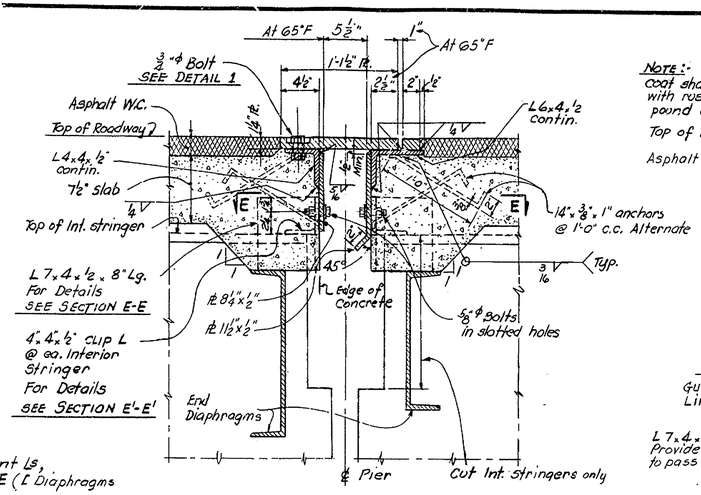

SECTION A-A
SCALE: 1 1/2 IN. = 1 FT.

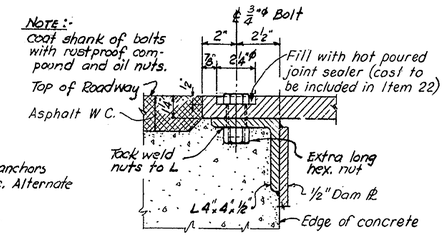

DETAIL 1
SCALE: 3 IN. = 1 FT.

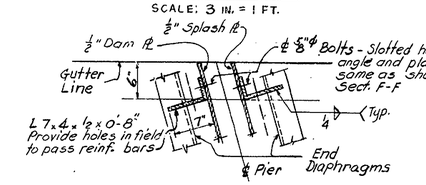

SECTION E-E
SCALE: 1 IN. = 1 FT.

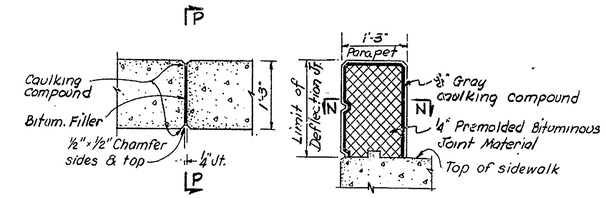

SECTION N-N SECTION P-P
DETAILS AT PARAPET DEFLECTION JOINT
SCALE: 3/4 IN. = 1 FT.

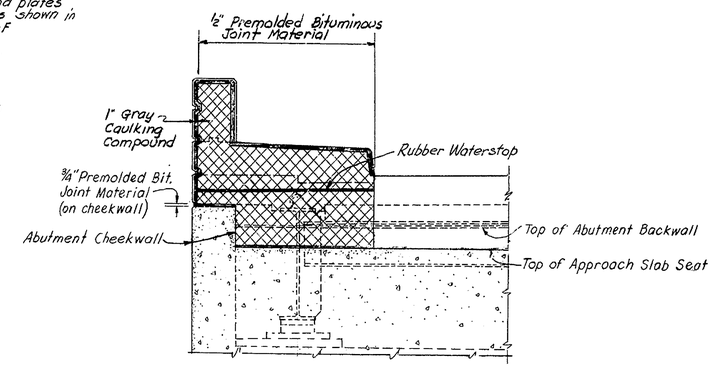

SECTION K-K
SCALE 1/2 IN. = 1 FT.

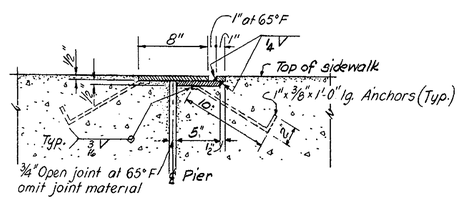

SECTION B-B
SECTION B'-B' SIMILAR
SCALE 1 1/2 IN. = 1 FT

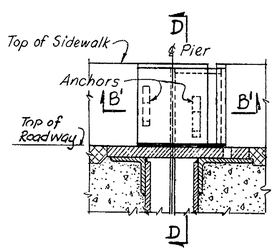

SECTION C-C
SCALE: 1 1/2 IN. = 1 FT.

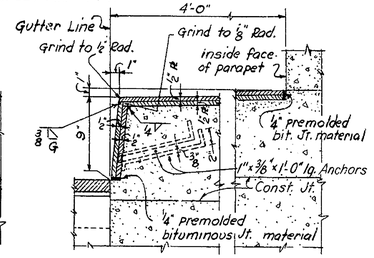

SECTION D-D
SCALE: 1 1/2 IN. = 1 FT.

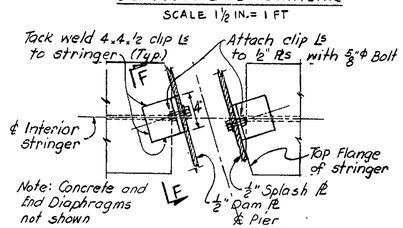

SECTION E'-E'
SCALE: 1 1/2 IN. = 1 FT.

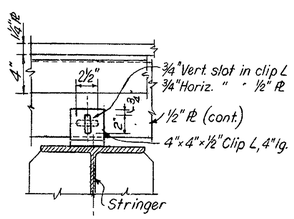

SECTION F-F
SCALE: 1/2 IN. = 1 FT.

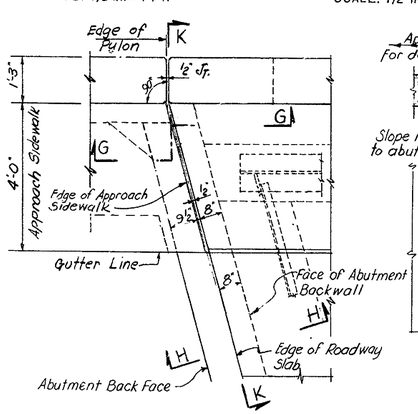

PLAN AT ABUTMENT JOINT
SCALE: 1/2 IN. = 1 FT.

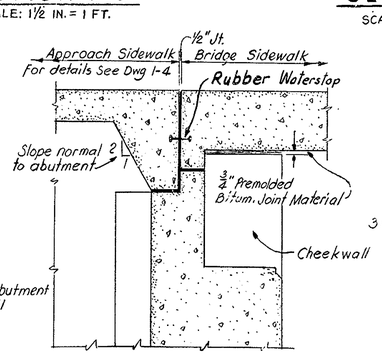

SECTION G-G
SCALE: 1/2 IN. = 1 FT.

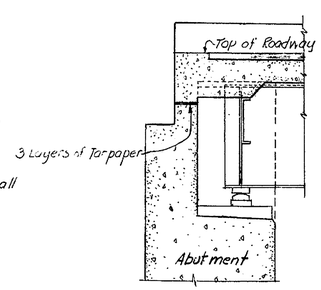

SECTION H-H
SCALE: 1/2 IN. = 1 FT.

NOTES:
Top of Expansion Joint detail to conform to roadway cross section.

For location of Parapet Deflection Joints, see Drawing 1-6.
For General Notes, see Drawing 1-1.
For Concrete Notes, see Drawing 1-6.
For Steel Notes, see Drawing 1-5.

Cost of furnishing & placing joint details at Piers shall be included in Item 22, "Structural Steel."
Cost of furnishing and placing joint details at abutments including water stops, shall be included in Item 18, "Portland Cement Concrete Masonry."

DELAWARE STATE HIGHWAY DEPARTMENT
DELAWARE TURNPIKE

ROAD 397 BRIDGE OVER TURNPIKE
SUPERSTRUCTURE
JOINT DETAILS

DRAWN: W.K.-A.T.	SCALE: AS NOTED	DATE: MAY 9, 1962	DWG.: 1-8
TRACED:	TIPPETTS-ABBETT-McCARTHY-STRATTON ENGINEERS AND ARCHITECTS		CONTRACT 7002
CHECKED: F.J.F.			
CHARGE OF			SHEET 132 OF 224

COUNTY	CONTRACT	P.R.A. REQ. NO.	STATE	FED. AID PROJECT NO.	FISCAL YEAR	SHEET NO.	TOTAL SHEETS
NEW CASTLE	7002	2	DEL.			133	224

REINFORCING BAR SCHEDULE

WINGWALLS AND ABUTMENT WINGWALLS

MARK	SIZE	AMT. REQ'D.	LENGTH	TYPE	A	B	C	D	E	F	G	REMARKS
A 601	6	166	6'-2"	V	5'-6"	0'-8"	0'-6"					Footing
A 502	5	8	43'-5"	Str.								
A 503	5	8	9'-6"	Str.								
A 504	5	98	5'-6"	Str.								
A 605	6	14	43'-5"	Str.								Footing
A 506	5	28	8'-0"	Str.								Footing & Backwall
A 507	5	16	8'-9"	Str.								Footing
A 608	6	28	8'-9"	Str.								Footing
A 509	5	8	7'-0"	Str.								Footing
A 510	5	78	8'-9"	V	5'-4"	3'-5"						Pedestal
A 511	5	8	40'-3"	VII	37'-7"	1'-4"	1'-3¼"	0'-4¾"	40'-1½"			Pedestal
A 512	5	74	3'-2"	Str.								Backwall Dowels
A 513	5	74	9'-2"	V	8'-0"	1'-2"						Footing, Pedestal & Backwall
A 514	5	22	40'-0"	Str.								Backwall
A 515	5	78	7'-4"	VIII	4'-10"	0'-5"	2'-4"					Backwall
A 516	5	12	4'-0"	Str.								Backwall
A 517	5	60	3'-10"	Str.								Wingwall Dowels
A 518	5	6	13'-0"	IX	7'-0"	0'-10"	5'-2"					N.W. & N.E. Cheekwalls
A 519	5	3	12'-8"	IX	6'-9"	0'-10"	5'-1"					S.W. Cheekwall
A 520	5	3	13'-6"	IX	7'-2"	0'-10"	5'-6"					S.E. Cheekwall
A 521	5	18	7'-10"	Str.								N.W., N.E. & S.E. Wingwalls
A 522	5	6	7'-4"	Str.								S.W. Wingwall
~~A 523 thru A 526~~	~~5~~	~~2 Ea.~~	~~2'-2" thru 5'-11" Δ = 1'-3" ±~~	~~Str.~~								~~N.W. & N.E. Wingwalls~~
~~A 527 thru A 530~~	~~5~~	~~1 Ea.~~	~~1'-9" thru 5'-6" Δ = 1'-3" ±~~	~~Str.~~								~~S.W. Wingwall~~
~~A 531 thru A 534~~	~~5~~	~~1 Ea.~~	~~2'-2" thru 5'-11" Δ = 1'-3" ±~~	~~Str.~~								~~S.E. Wingwall~~
A 535	5	20	5'-9"	Str.								All Wingwalls
~~A 536 thru A 539~~	~~5~~	~~4 Ea.~~	~~4'-6" thru 5'-6" Δ = 4"~~	~~Str.~~								~~All Wingwalls~~
A 540	5	8	4'-11"	X	3'-0"	1'-11"	0'-8¼"	2'-11¼"				All Wingwalls
~~A 541 thru A 545~~	~~5~~	~~1 Ea.~~	~~12'-2" thru 12'-4" Δ = ½"~~	~~Str.~~								~~S.E. Wingwall~~
~~A 546 thru A 550~~	~~5~~	~~1 Ea.~~	~~11'-10" thru 12'-0" Δ = ½"~~	~~Str.~~								~~S.W. Wingwall~~
A 551	5	5	12'-2"	Str.								N.E. Wingwall
A 552	5	5	12'-3"	Str.								N.W. Wingwall
A 553	5	1	11'-9"	Str.								S.W. Wingwall
A 554	5	3	12'-1"	Str.								N.E., N.W. & S.E. Wingwalls
~~A 555 thru A 557~~	~~5~~	~~1 Ea.~~	~~6'-7" thru 9'-7" Δ = 18"~~	~~Str.~~								~~S.E. Wingwall~~
~~A 558 thru A 560~~	~~5~~	~~1 Ea.~~	~~6'-1" thru 9'-1" Δ = 18"~~	~~Str.~~								~~S.W. Wingwall~~
~~A 561 thru A 563~~	~~5~~	~~2 Ea.~~	~~6'-5" thru 9'-5" Δ = 18"~~	~~Str.~~								~~N.E. & N.W. Wingwalls~~
~~A 564 thru A 568~~	~~5~~	~~4 Ea.~~	~~8'-0" thru 11'-4" Δ = 10"~~	~~Str.~~								~~All Wingwalls~~
A 569	5	8	11'-10"	Str.								
A 570	5	12	8'-9"	Str.								
A 571	5	4	5'-3"	Str.								
~~A 572 thru A 577~~	~~5~~	~~4 Ea.~~	~~5'-8" thru 9'-5" Δ = 9"~~	~~Str.~~								
A 578	5	20	4'-0"	Str.								
~~A 579 thru A 581~~	~~5~~	~~4 Ea.~~	~~8'-0" thru 8'-5" Δ = 2½"~~	~~Str.~~								
A 582	5	4	4'-7"	Str.								All Wingwalls
A 5132	5	16	5'-2"	V	3'-7"	1'-7"						Backwall
A 4133	4	52	6'-8"	IX	2'-5"	1'-10"	2'-5"					Abut. Inter. & Exter. Pads
A 4134	4	24	6'-10"	IX	2'-4"	2'-2"	2'-4"					Abutment Interior Pads
A 4135	4	4	6'-9"	IX	2'-5"	1'-11"	2'-5"					Abutment Exterior Pads
A 4136	4	16	6'-3"	V	3'-11"	2'-4"						Abutment Exterior Pads

APPROACH SIDEWALKS

MARK	SIZE	AMT. REQ'D.	LENGTH	TYPE	A	B	C	D	E	F	G	REMARKS
A683	6	22	7'-5"	V	4'-10"	2'-7"						All Approach Sidewalks
A684			7'-5" thru 5'-6"		4'-10"	2'-7"						S.W. & N.E. Approach
thru	6	2 Ea.	*Δ Cut bar to fit	V	2'-11"	2'-7"						Sidewalks
A696			Sidewalk Radius (12'-0")		*Δ							
A697			7'-5" thru 5'-6"		4'-10"	2'-7"						S.E. & N.W. Approach
thru	6	2 Ea.	*Δ Cut bar to fit	V	2'-11"	2'-7"						Sidewalks
A6104			Sidewalk Radius (5'-6")		*Δ							
A4105	4	8	4'-10"	Str.								All Approach Sidewalks
~~A4106 thru A4109~~	~~4~~	~~2 Ea.~~	~~4'-10" thru 2'-11" Δ = 7 1/4" ±~~	~~Str.~~								~~All Approach Sidewalks~~
~~A4110~~	~~—~~	~~—~~	~~—~~									
~~A4111 thru A4117~~	~~4~~	~~2 Ea.~~	~~4'-10" thru 2'-11" Δ = 3 5/8" ±~~	~~Str.~~								~~All Approach Sidewalks~~
A4118	4	10	7'-9"	Str.								S.E. & N.W. App. Sidewalks
A4119	4	4	6'-6"	Str.								S.E. & N.W. App. Sidewalks
A4120	4	10	8'-3"	Str.								S.W. & N.E. App. Sidewalks
A4121	4	4	7'-0"	Str.								S.W. & N.E. App. Sidewalks
A4122	4	8	5'-2"	Str.								All Approach Sidewalks
A3123	3	8	6'-4"	XI	0'-5"	2'-5"	0'-6"	2'-7"	2'-5"	1'-1½"	0'-3"	S.W. & N.W. App. Sidewalks
A3124	3	4	7'-1"	XI	0'-5"	2'-9"	0'-6"	3'-0"	2'-9"	1'-3½"	0'-3"	S.E. Approach Sidewalks
A3125	3	4	6'-3"	XI	0'-5"	2'-4½"	0'-6"	2'-6½"	2'-4½"	1'-1"	0'-3"	N.E. Approach Sidewalks
A5126	5	16	4'-0"	V	2'-9"	1'-3"						All Approach Sidewalks
A3127	3	42	5'-8"	XII	0'-5"	2'-1"	0'-8"	0'-3"				All Approach Sidewalks
A5128	5	4	10'-10"	XIII	2'-6"	7'-3"	1'-1"	6'-7"	2'-1"	11'-9½"		S.W. & N.E. Sidewalks
A5129	5	4	9'-0"	XIII	2'-6"	6'-0"	0'-6"	5'-2½"	1'-7"	11'-2"		S.W. & N.E. Sidewalks
A5130	5	4	8'-9"	XIII	2'-9"	4'-11"	1'-1"	4'-2"	2'-1"	5'-3½"		S.E. & N.W. Sidewalks
A5131	5	4	7'-4"	XIII	2'-9"	4'-1"	0'-6"	3'-4½"	1'-7"	4'-8"		S.E. & N.W. Sidewalks

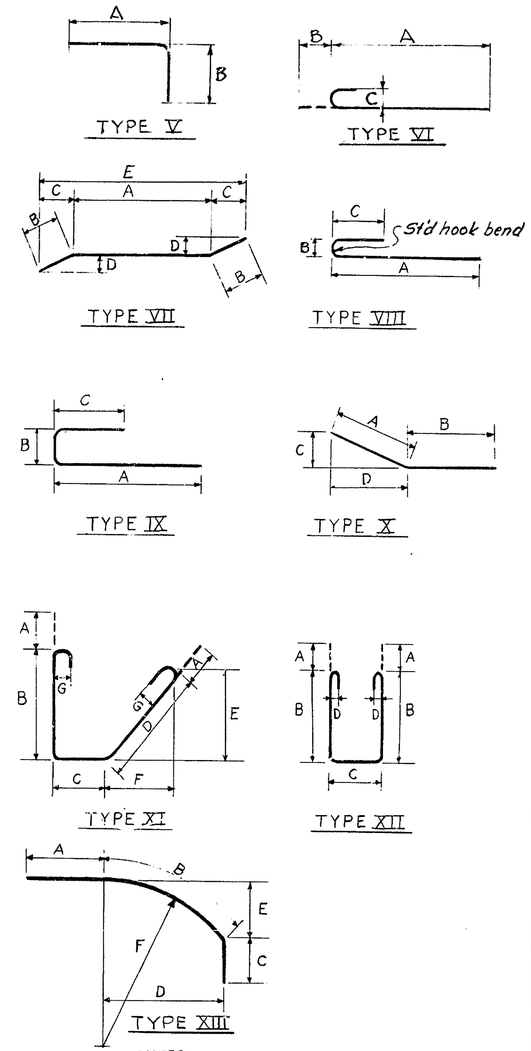

NOTES:
For additional bar types, see Dwg. 1-11.
All bar dimensions are out to out.
For Concrete Notes, see Dwg. 1-6.

DELAWARE STATE HIGHWAY DEPARTMENT
DELAWARE TURNPIKE

ROAD 397 BRIDGE OVER TURNPIKE
REINFORCING BAR SCHEDULE
ABUTMENTS

DRAWN: F. J. F.	SCALE:	DATE: MAY 9, 1962	DWG.: 1-10
TRACED: N. F.	TIPPETTS-ABBETT-McCARTHY-STRATTON ENGINEERS · AND ARCHITECTS		CONTRACT 7002
CHECKED: S. T.			
CHARGE OF			SHEET 133 OF 224

COUNTY	CONTRACT	P.R.A. REG. NO.	STATE	FED. AID PROJECT NO.	FISCAL YEAR	SHEET NO.	TOTAL SHEETS
NEW CASTLE	7002	2	DEL			134	224

REINFORCING BAR SCHEDULE

	MARK	SIZE	AMT. REQ'D.	LENGTH	TYPE	A	B	C	D	E	F	G	REMARKS
DECK SLAB, SIDEWALK & PARAPET	S401	4	91	35'-4½"	Straight								
	S402		364	39'-0"									These bars also placed in sidewalk
	S403		182	24'-9"									
	S404	4	91	37'-5½"									
	S505	5	604	39'-6"	Straight								Deck Slab
	S506		604	40'-8"	I	39'-6"	0'-7"	0'-5"					" "
	S507		24	17'-6½"	Straight								
	S508		12	16'-6½"									
	S509		48	15'-0"									Parapet Horizontal Steel
	S510		48	15'-7"									
	S511		48	14'-10"	Straight								
	S512		612	8'-1⅝"	II	4'-10"	0'-7"	0'-5"	1'-2½"	0'-1⅝"	1'-6"	1'-2⅝"	Sidewalk steel doweled in slab
	S513		634	7'-1"	III	3'-1"	0'-11"	3'-1"					Parapet dowels in deck slab
	S514	5	24	18'-7½"	Straight								Parapet horizontal steel
	S415	4	176	5'-8½"	V	5'-0"	0'-8½"						Deck Slab
	S416	4	44	7'-10"	V	6'-0"	1'-10"						" "
APPROACH SLAB	~~AS-501~~	~~5~~	~~40~~	~~15'-5"~~	~~Straight~~								~~Approach Slab 1 & 2~~
	~~AS-502~~	~~5~~	~~6~~	~~12'-8"~~	~~"~~								
	~~AS-503~~	~~5~~	~~8~~	~~16'-1"~~	~~"~~								
	~~AS-604 thru AS-631~~	~~6~~	~~2 Ea.~~	~~22'-0" thru 26'-3" Δ = 1⅞"±~~	~~I~~	~~19'-8" thru 23'-11"~~	~~0'-8"~~	~~0'-6"~~					
	~~AS-532~~	~~5~~	~~48~~	~~13'-8"~~	~~Straight~~								
	~~AS-533~~	~~5~~	~~6~~	~~11'-5"~~	~~"~~								
	~~AS-534~~	~~5~~	~~8~~	~~14'-3½"~~	~~"~~								
	~~AS-635 thru AS-662~~	~~6~~	~~2 Ea~~	~~26'-2½" thru 30'-5½" Δ = 1⅞"~~	~~I~~	~~23'-10½" thru 28'-1½"~~	~~0'-8"~~	~~0'-6"~~					~~Approach Slab 1 & 2~~
	~~AS-463 thru AS-476~~	~~4~~	~~1 Ea.~~	~~5'-7" thru 6'-7" Δ = 15/16"±~~	~~IV~~	~~1'-8"~~	~~1'-8"~~	~~0'-7"~~	~~1'-8"~~	~~1'-2"~~			~~Approach Slab 1- West~~
						~~1'-8"~~	~~2'-1"~~	~~0'-7"~~	~~2'-3"~~	~~1'-7⅛"~~			
							~~Δ=3/16"±~~		~~Δ=3/16"±~~				
	~~AS-477~~	~~4~~	~~14~~	~~6'-5"~~	~~IV~~	~~1'-8"~~	~~2'-0"~~	~~0'-7"~~	~~2'-2"~~	~~1'-6⅜"~~			~~Approach Slab 1- East~~
	~~AS-478 thru AS-491~~	~~4~~	~~1 Ea~~	~~5'-7" thru 6'-2" Δ = 9/16"±~~	~~IV~~	~~1'-8"~~	~~1'-8"~~	~~0'-7"~~	~~1'-8"~~	~~1'-2"~~			~~Approach Slab 2- West~~
						~~1'-8"~~	~~1'-11"~~	~~0'-7"~~	~~2'-0"~~	~~1'-5"~~			
							~~Δ=1/16"±~~		~~Δ=5/16"±~~				
	~~AS-492 thru AS-4105~~	~~4~~	~~1 Ea.~~	~~5'-3½" thru 6'-2" Δ = 13/16"±~~	~~IV~~	~~1'-8"~~	~~1'-7⅛"~~	~~0'-7"~~	~~1'-5"~~	~~1'-0"~~			~~Approach Slab 2- East~~
						~~1'-8"~~	~~1'-11"~~	~~0'-7"~~	~~2'-0"~~	~~1'-5"~~			
							~~Δ=5/16"±~~		~~Δ=9/16"±~~				
PIERS	P1001	10	8	36'-8"	Straight								Pier Cap Girders
	P1002	10	40	10'-2"	Straight								
	P803	8	8	37'-3"	XIV	4'-0½"	29'-2"	1'-5½"	3'-9"	36'-8"			
	P1004	10	16	9'-10"	Straight								
	P405	4	240	11'-1"	XV	1'-11½"	3'-2"	0'-5"					
	P406		16	10'-8"		1'-11½"	2'-11½"	0'-5"					
	P407		16	10'-3"		1'-11½"	2'-9"	0'-5"					
	P408		16	9'-10"		1'-11½"	2'-6½"	0'-5"					
	P409		16	9'-5"		1'-11½"	2'-4"	0'-5"					
	P410		16	9'-0"		1'-11½"	2'-1½"	0'-5"					
	P411		16	8'-7"		1'-11½"	1'-11"	0'-5"					
	P412	4	16	8'-2"		1'-11½"	1'-8½"	0'-5"					Pier Cap Girders
	P313	3	480	8'-11"		1'-8½"	2'-5"	0'-4"					Column Ties
	P314	3	234	7'-10"	XV	1'-9½"	1'-9½"	0'-4"					Column Ties
	P515	5	8	36'-8"	Straight								Pier Cap Girders
	P516	5	8	34'-2"	Straight								Pier Cap Girders
	P417	4	80	7'-0"	III	2'-3"	2'-6"	2'-3"					Pier Cap Pads
	P418	4	120	8'-2"	III	2'-9"	2'-8"	2'-9"					Pier Cap Pads
	P1119	11	36	21'-10"	Straight								Column Steel- Pier 1
	P1120	11	36	23'-8"									Column Steel- Pier 2
	P1121	11	36	24'-4"									Column Steel- Pier 3
	P1122	11	36	24'-1"	Straight								Column Steel- Pier 4
	P1123	11	144	7'-6"	V	6'-4"	1'-2"						Pier Column Dowels
	P824	8	88	37'-6"	Straight								Pier Footing
	P825	8	80	13'-3"	Straight								Pier Footing
	P826	8	256	10'-0"	Straight								Pier Footing

MARK	SIZE	AMT. REQ'D.	LENGTH	TYPE	A	B	C	D	E	F	G	REMARKS

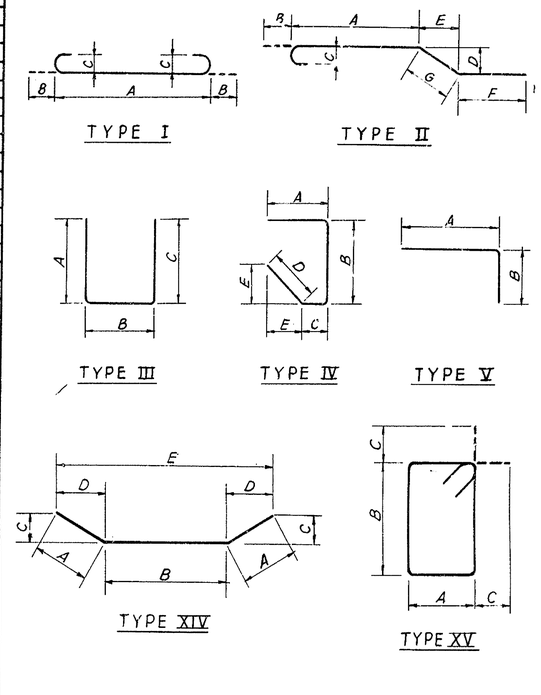

NOTES:
For additional bar types, see Dwg. 1-10.
All bar dimensions are out to out.
For Concrete Notes, see Dwg. 1-6.

DELAWARE STATE HIGHWAY DEPARTMENT
DELAWARE TURNPIKE

ROAD 397 BRIDGE OVER TURNPIKE
REINFORCING BAR SCHEDULE
DECK AND APPROACH SLABS - PIERS

DRAWN: P. P.	SCALE:	DATE: MAY 9, 1962	DWG.: 1-11
TRACED: A. T.	TIPPETTS-ABBETT-McCARTHY-STRATTON ENGINEERS AND ARCHITECTS		CONTRACT 7002
CHECKED: F. J. F.			
CHARGE OF			SHEET 134 OF 224

COUNTY	CONTRACT	P.R.A. REG. NO.	STATE	FED. AID PROJECT NO.	FISCAL YEAR	SHEET NO.	TOTAL SHEETS
NEW CASTLE	7002	2	DEL.			135	224

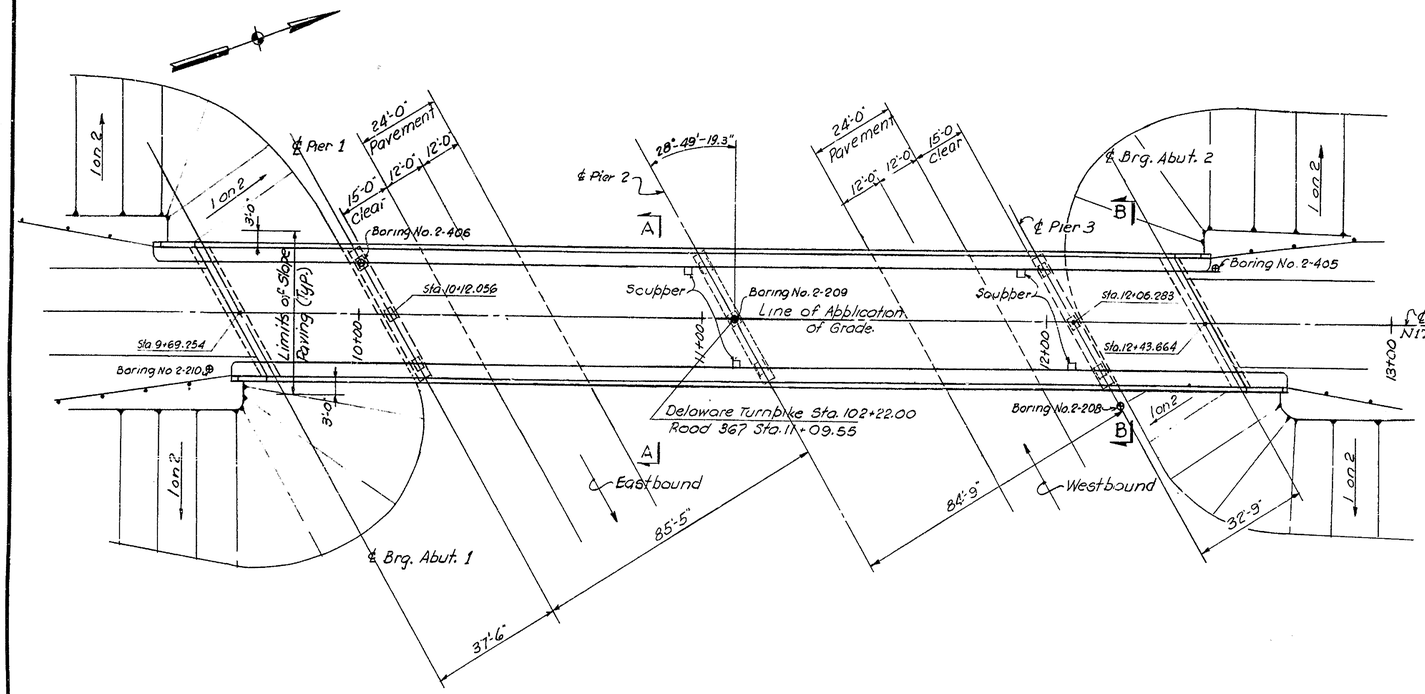

PLAN
SCALE 1 IN = 20'-0"

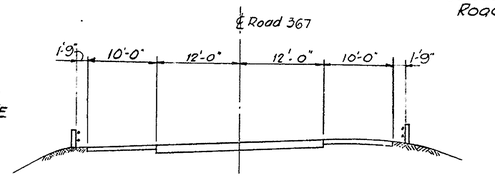

APPROACH SECTION
SCALE: 1 IN. = 10'-0"

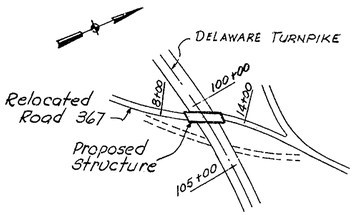

LOCATION PLAN
SCALE 1 IN. = 500 FT.

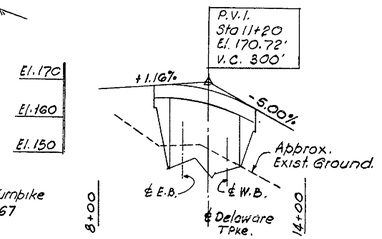

ROAD 367
SCALES HORIZ. 1 IN. = 200 FT
VERT. 1 IN. = 20 FT.

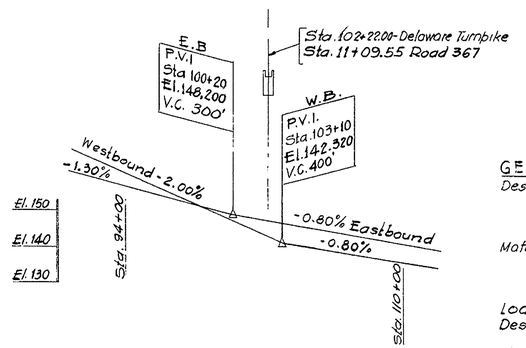

DELAWARE TURNPIKE
SCALE: HORIZ. 1 IN = 400'-0"
VERT. 1 IN = 20'-0"

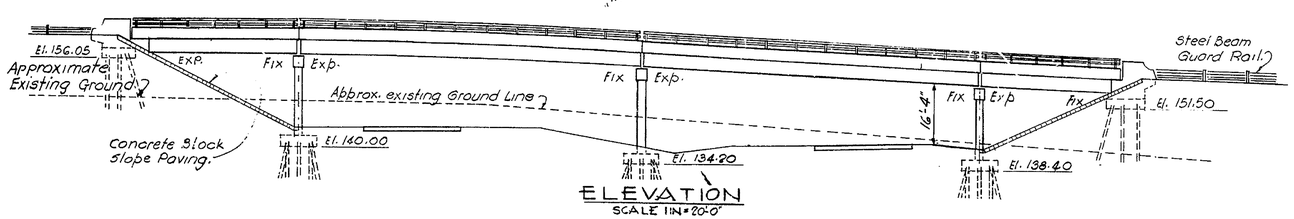

ELEVATION
SCALE 1 IN = 20'-0"

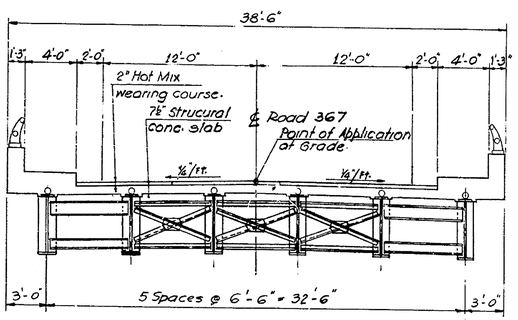

SECTION A-A
SCALE 3/16 IN = 1'-0"

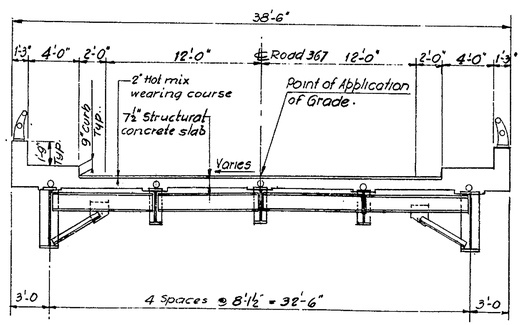

SECTION B-B
SCALE: 3/16 IN = 1'-0"

TABLE OF QUANTITIES

ITEM No.	DESCRIPTION	UNIT	QUANTITY
4	Excavation for Structures	C.Y.	800
7	Select Borrow - Grade "A"	C.Y.	550
11	Hot-mix, Hot-laid Asphaltic Concr. Pvmt	Tons	92
11	RC-1 Asphalt Tack Coat	Gal.	184
*	Portland Cement Concrete Masonry		
18	Footings	C.Y.	207
	Substructure	C.Y.	228
	Superstructure	C.Y.	440
19	Superficial Waterproofing	S.Y.	115
20*	Bar Reinforcement	Lbs.	143,500
22	Structural Steel (Approx. Wt. 319,000 lbs.)	L.S.	
31	6" ϕ Perforated Corr. Metal Pipe Underdrain.	L.F.	130
	Steel Bearing Piles, 12 BP 53	L.F.	2140
	Steel Pile Load Test	Each	One
	Aluminum Railing - Double Rail	L.F.	558
	Bridge Catch Basins	L.S.	
	Bridge Drainage	L.S.	
	Slope Paving	S.Y.	460
	Coal Tar Epoxy Underseal	S.Y.	875
	Protective Coating for Concrete	S.F.	947

* indicates Fixed Quantity Item, see Proposal.

GENERAL NOTES

Design Specifications: A.A.S.H.O-1957; and standard Specifications for Welded Highway and Railway Bridges of the American Welding Society.

Material and Fabrication Specifications: State of Delaware, State Highway Department Standard Specifications, July 1, 1960 and as given in the Special Provisions.

Loading A.A.S.H.O H-20-S-16-44

Design Stresses: Structural and Reinf Steel: 18000 psi
Reinforced Conc.: fc = 1800 psi n = 10

Composite Construction: No intermediate temporary Supports shall be used during construction.

Fill at abutment shall be placed to an elevation one foot above bottom of concrete footing before starting footing excavation and pile driving.

Backfill behind abutments to be placed only after bridge deck slab has been completed.

Minimum waiting period before loads are permitted on the bridge, after completion of the bridge deck slab: 10 days for loads of 2 tons to 10 tons, and 28 days for loads of 2 tons to the legal load limit.

For steel Notes see Dwg No. 2-5
For Concrete Notes see Dwg. No. 2-7
For Pile Notes see Dwg. No. 2-3
For Boring Logs see Sheet 208

DELAWARE STATE HIGHWAY DEPARTMENT

DELAWARE TURNPIKE

ROAD 367 BRIDGE OVER TURNPIKE

GENERAL ARRANGEMENT

DRAWN: W. K.	SCALE: AS NOTED	DATE: MAY 9, 1962	DWG.: 2-1
TRACED:	TIPPETTS-ABBETT-McCARTHY-STRATTON ENGINEERS AND ARCHITECTS		CONTRACT 7002
CHECKED: B. S.			
CHARGE OF			SHEET 135 OF 224

COUNTY	CONTRACT	P.R.A. REG. NO	STATE	FED. AID PROJECT NO.	FISCAL YEAR	SHEET NO.	TOTAL SHEETS
NEW CASTLE	7002	2	DEL.			136	224

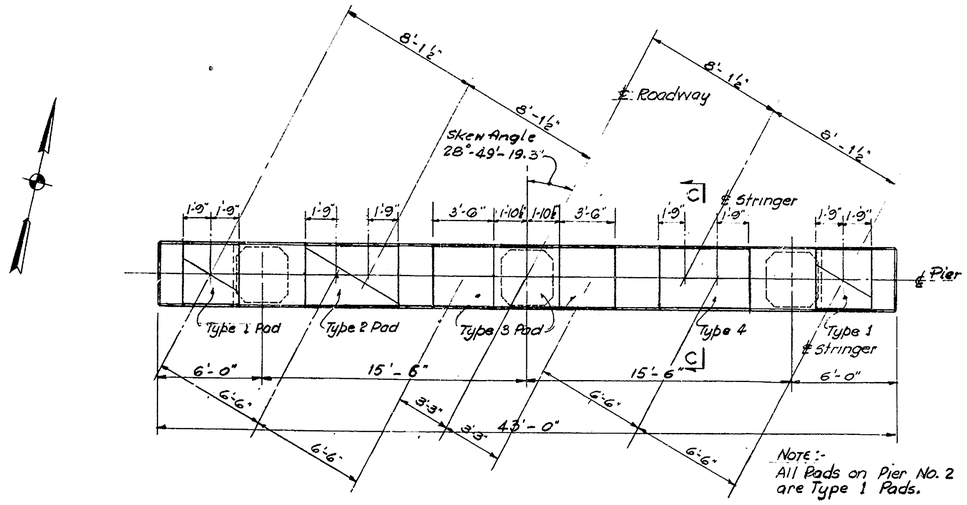

PLAN
SCALE: ¼ IN = 1 FT.

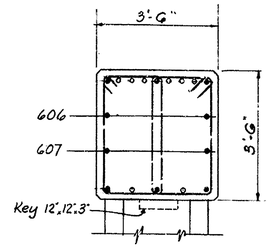

SECTION A-A
SCALE ½ IN.=1FT

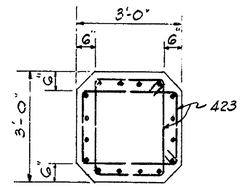

SECTION B-B
SCALE ½ IN.=1FT.

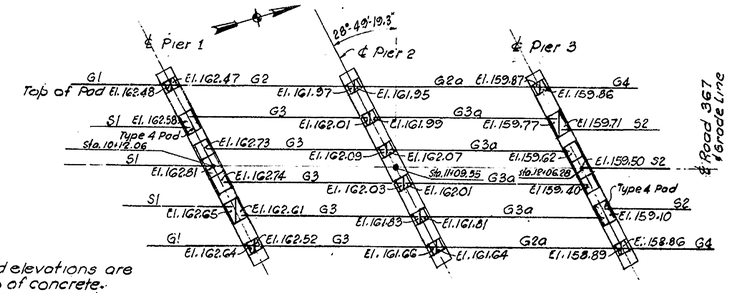

Note
Bearing Pad elevations are given to top of concrete. Pads to be poured ¼" higher and then bush-hammered to elevation shown.

KEY PLAN
NO SCALE

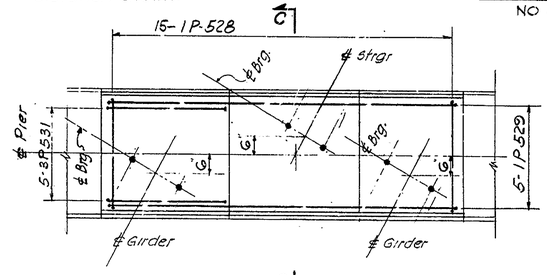

TYPE 3 PAD
SCALE ½ IN.=1 FT

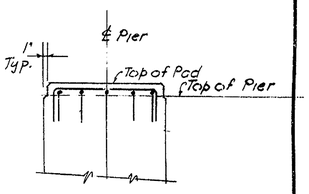

SECTION C-C
SCALE ½ IN.=1 FT.

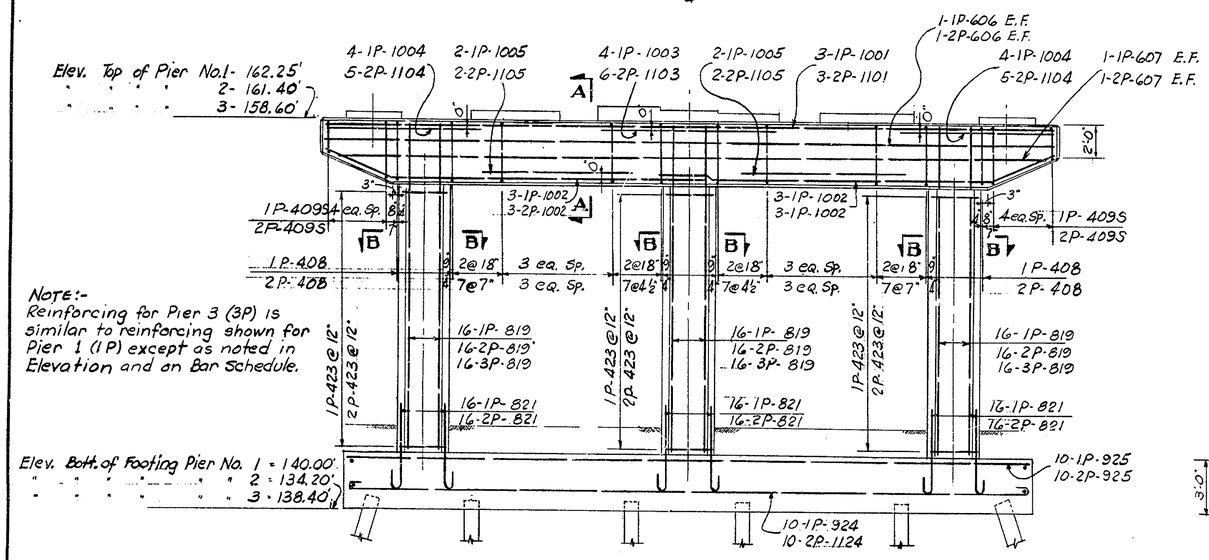

Note:-
Reinforcing for Pier 3 (3P) is similar to reinforcing shown for Pier 1 (1P) except as noted in Elevation and on Bar Schedule.

ELEVATION
SCALE: ¼ IN=1FT

Note: Bars 1P-1003 & 2P-1103 to be centered about ℄ pile.
Bars 1P-1005 & 2P-1105 to be centered about ℄ Span.

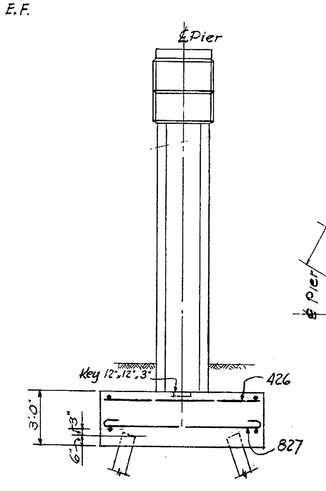

END VIEW
SCALE: ¼ IN=1FT

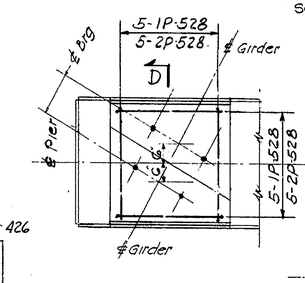

TYPE 1 PAD
SCALE ½ IN=1FT.

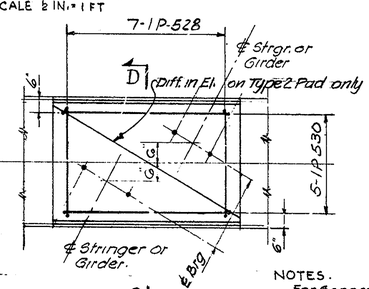

TYPE 2 PAD
TYPE 4 PAD
SCALE ½ IN.=1FT.

NOTES.
For General Notes see Dwg No. 2-1
For Concrete Notes see Dwg No. 2-7
For Pile Schedule, Pile Notes and Pile details see Dwg. No 2-8
For Anchor Bolts see Dwg. No. 2-8
For Reinforcing Bar Schedule see Dwg. Nos. 2-11 to 2-13

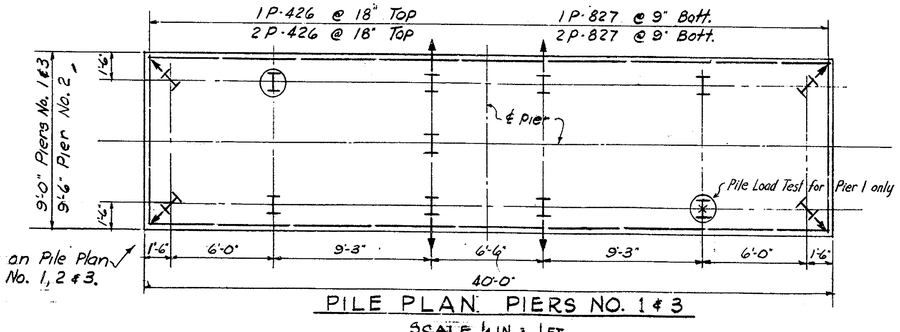

PILE PLAN. PIERS NO. 1 & 3
SCALE ¼ IN. = 1 FT.

Note:-
Reinforcing shown on Pile Plan applies to Piers No. 1, 2 & 3.

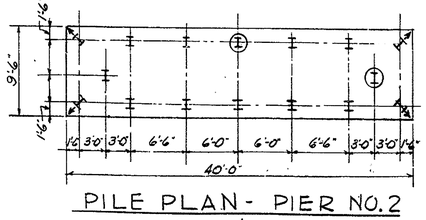

PILE PLAN - PIER NO. 2
SCALE ⅛ IN. = 1 FT.

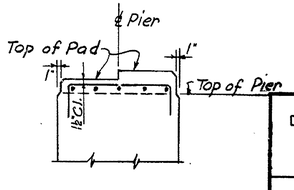

SECTION D-D
SCALE ½ IN. = 1 FT.

DELAWARE STATE HIGHWAY DEPARTMENT
DELAWARE TURNPIKE

ROAD 367 BRIDGE OVER TURNPIKE

PIERS

DRAWN: W. K.	SCALE: AS NOTED	DATE: MAY 9, 1962	DWG.: 2-2
TRACED:	TIPPETTS-ABBETT-McCARTHY-STRATTON ENGINEERS AND ARCHITECTS		CONTRACT 7002
CHECKED: T. K.			
CHARGE OF			SHEET 136 OF 224

COUNTY	CONTRACT	REL. NO.	STATE	FED. AID PROJECT NO.	FISCAL YEAR	SHEET NO.	TOTAL SHEETS
NEW CASTLE	7002	2	DEL.			137	224

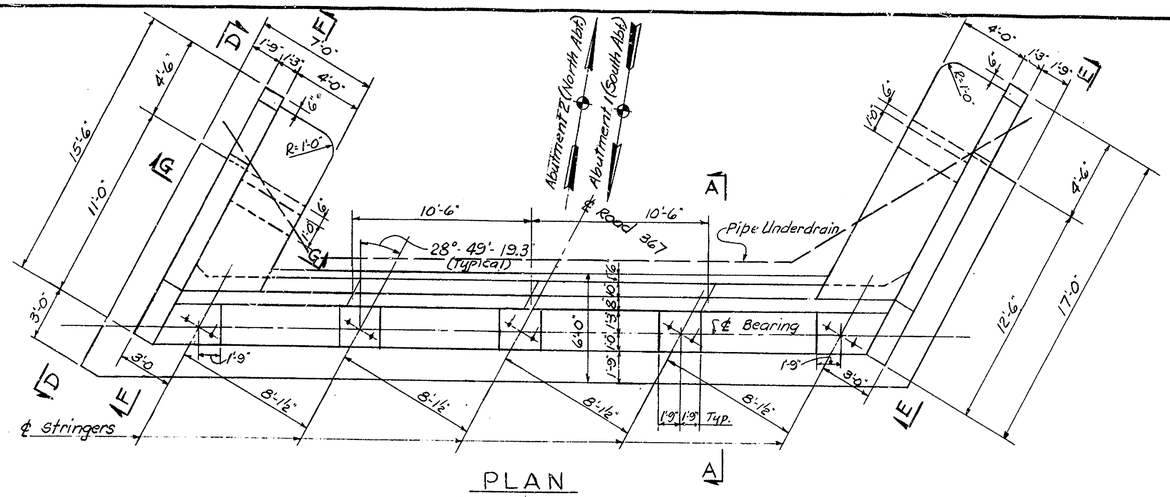

PLAN
SCALE 1/4 IN. = 1 FT.

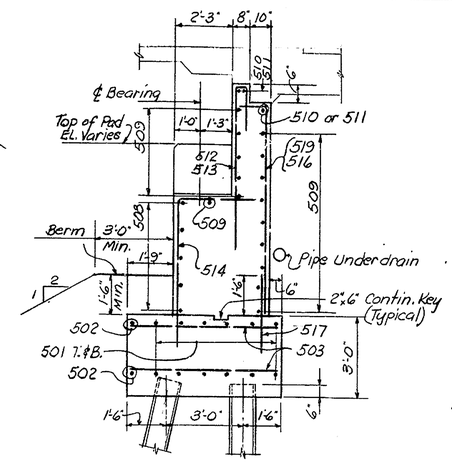

SECTION A-A
SCALE 3/8 IN. = 1 FT.

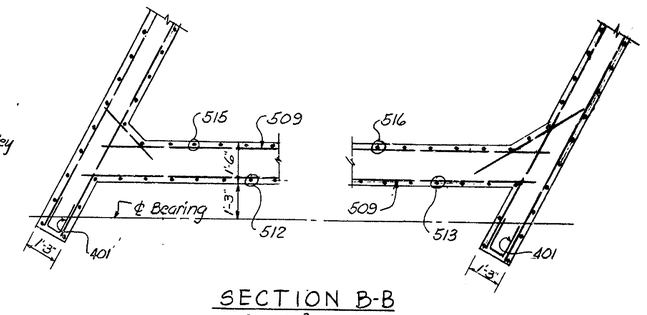

SECTION B-B
SCALE 3/8 IN. = 1 FT.

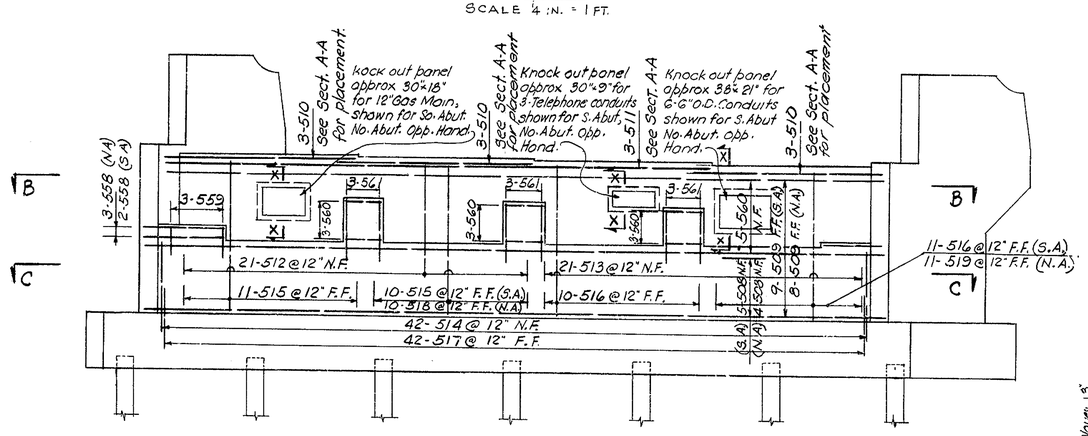

ELEVATION
SCALE 1/4 IN = 1 FT.

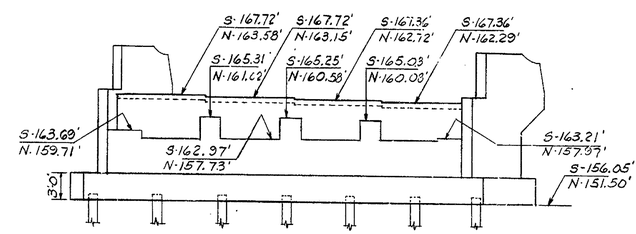

ABUTMENT ELEVATIONS
"S" Indicates South Abmt.
"N" " North "
SCALE 1/8 IN. = 1 FT.

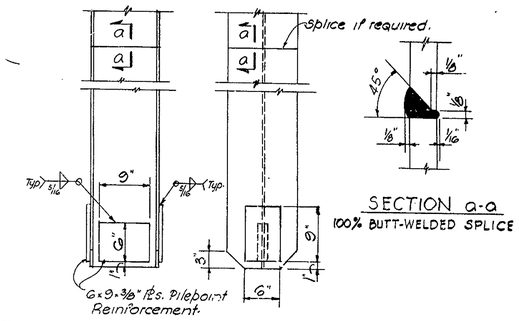

SECTION a-a
100% BUTT-WELDED SPLICE

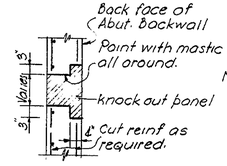

SECTION X-X

Note: Bearing Pad El's are given to top of concrete. Pads to be poured 1/4" higher and then Bush-hammered to elevation shown.

PILE SCHEDULE		
LOCATION	CAPACITY IN TONS	ESTIM. LENGTH
Abut 1	35*	30'
Abut. 2	35*	40'
Pier 1	50	25'
Pier 2	50	10'
Pier 3	50	25'

NOTE: All piles 12 PB 53.
* The total capacity of all piles shall be 50 tons. A 15 ton negative skin friction allowance is made for Abutm. piles

H PILE DETAILS

PILE NOTES

Pile Driving: Single-acting Pile Driver with adjustable leads; 15,000 ft-lb minimum driving energy.
Actual pile lengths to be determined by test piles.
Pile load tests shall be at a test pile location as shown on the plans.
All obstructions within 15 feet below original ground surface of the abutments and 15 feet below the bottom of the pile cap at the piers shall be overcome by methods approved by the Engineer to allow advancing the piles beyond such obstruction.

For General Notes See Dwg. No. 2-1
For Concrete Notes See Dwg. No. 2-7
For Anchor Bolts see Dwg No. 2-8
For Reinf. Bar Schedule see Dwg. Nos. 2-11 to 2-13
Work this drawing with Dwg. No. 2-4

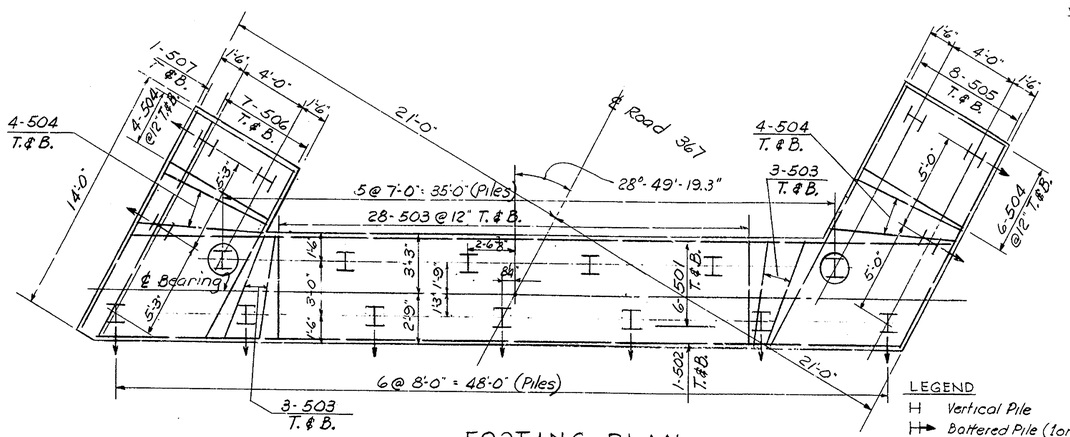

FOOTING PLAN
SCALE 1/4 IN. = 1 FT.

LEGEND
H Vertical Pile
Battered Pile (1 on 4)
(H) Test Pile
Pile Load Test

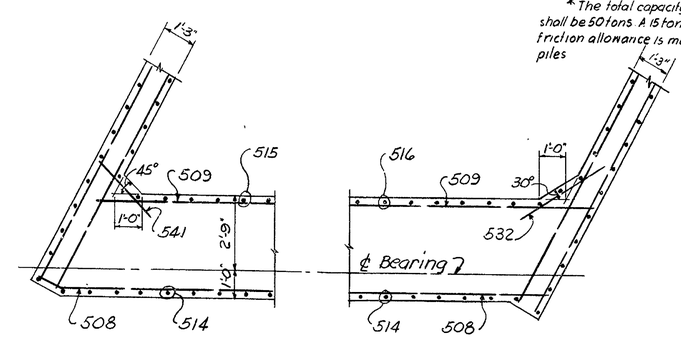

SECTION C-C
SCALE 3/8 IN. = 1 FT.

DELAWARE STATE HIGHWAY DEPARTMENT
DELAWARE TURNPIKE

ROAD 367 BRIDGE OVER TURNPIKE

ABUTMENTS

DRAWN: W. K.	SCALE AS NOTED	DATE: MAY 9, 1962	DWG.: 2-3
TRACED:	TIPPETTS-ABBETT-McCARTHY-STRATTON ENGINEERS AND ARCHITECTS		CONTRACT 7002
CHECKED: B. S.			
CHARGE OF			SHEET 137 OF 224

COUNTY	CONTRACT	P.R.A. REQ. NO.	STATE	FED. AID PROJECT NO.	FISCAL YEAR	SHEET NO.	TOTAL SHEETS
NEW CASTLE	7002	2	DEL.			138	224

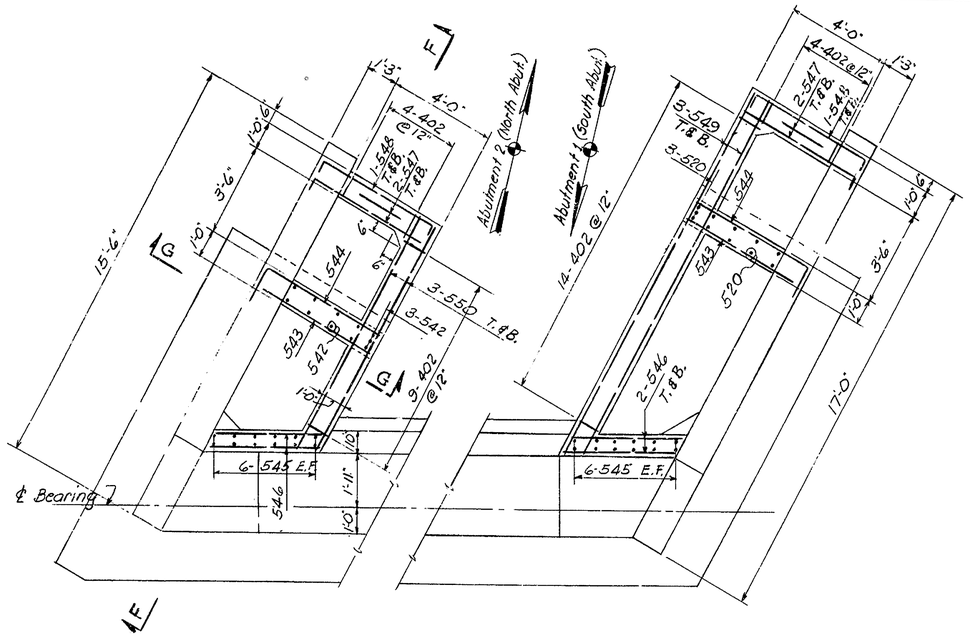

PLAN
SIDEWALK FRAMING
SCALE 3/8 IN. = 1 FT

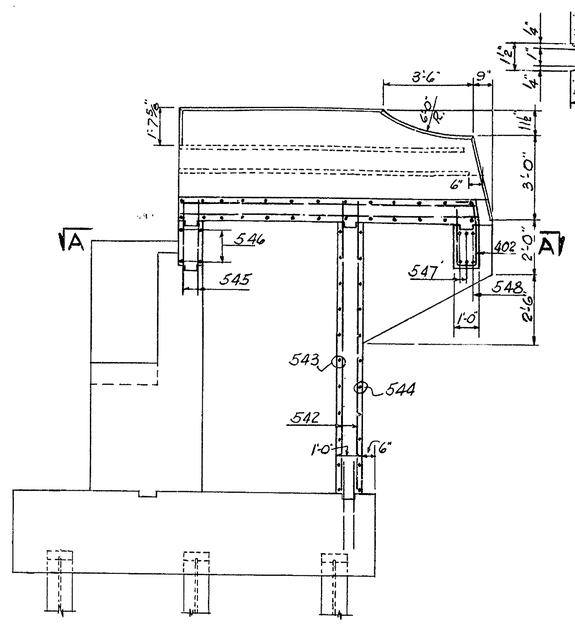

SECTION F-F
SCALE 3/8 IN. = 1 FT.

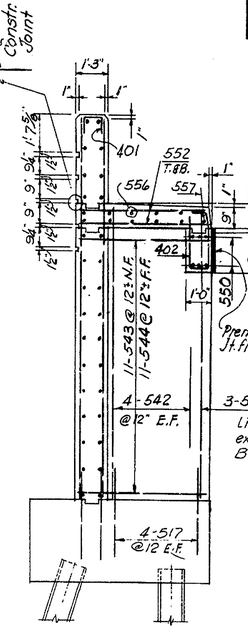

SECTION G-G
SCALE 3/8 IN. = 1 FT

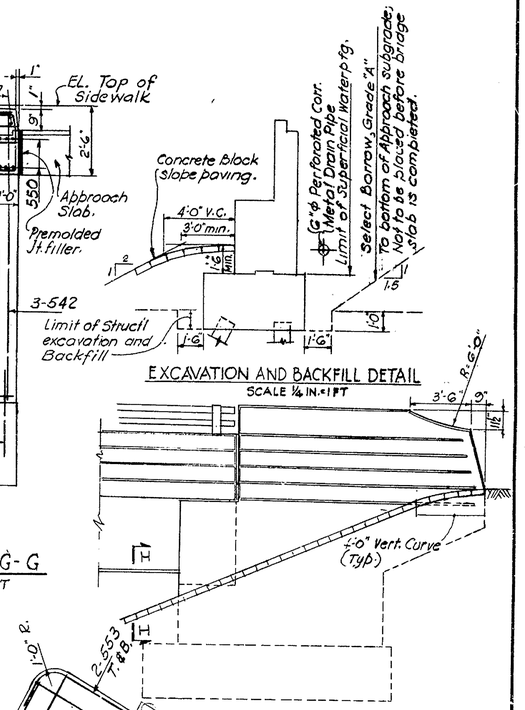

EXCAVATION AND BACKFILL DETAIL
SCALE 1/4 IN. = 1 FT

WINGWALL ELEVATION
SCALE 1/4 IN. = 1 FT.

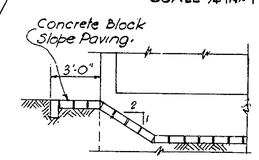

SECTION H-H
NO SCALE

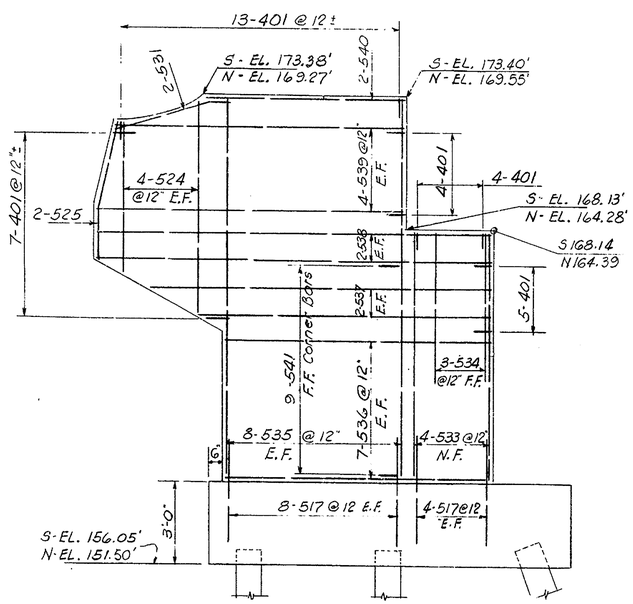

ELEVATION D-D
SCALE 3/8 IN. = 1 FT.

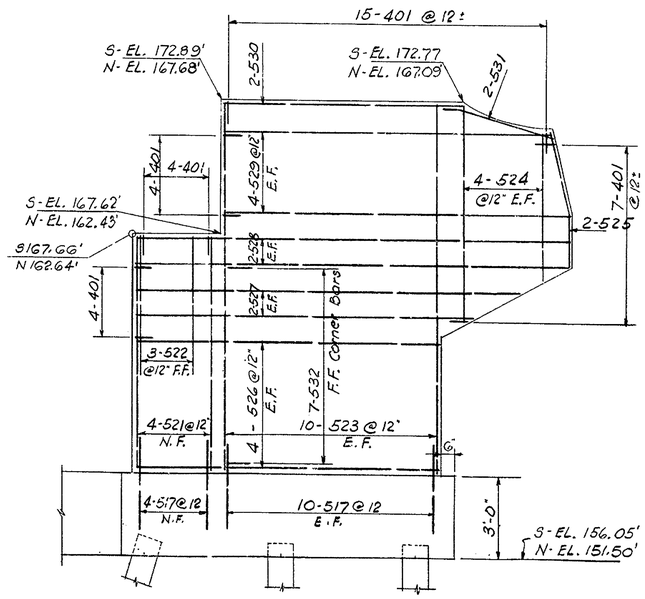

ELEVATION E-E
SCALE 3/8 IN. = 1 FT.

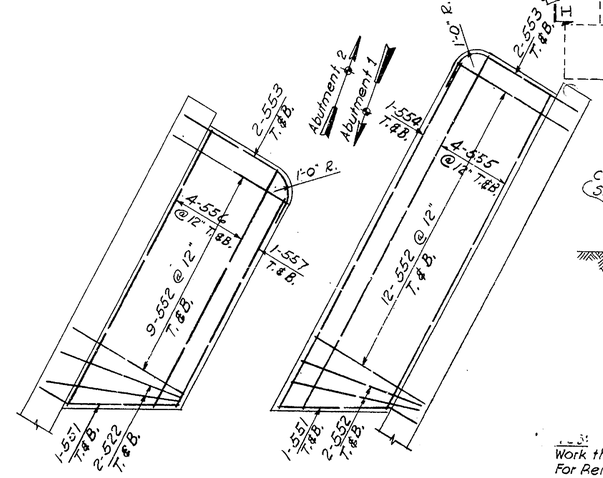

PLAN
SIDEWALK REINFORCING
SCALE 3/8 IN. = 1 FT.

Work this drawing with Dwg. No. 2-3
For Reinf. Bar Schedule see Dwg. Nos 2-11 to 2-13

DELAWARE STATE HIGHWAY DEPARTMENT
DELAWARE TURNPIKE

ROAD 367 BRIDGE OVER TURNPIKE

ABUTMENT DETAILS

DRAWN: W.J.K.	SCALE: AS NOTED	DATE: MAY 9, 1962	DWG.: 2-4
TRACED:	TIPPETTS-ABBETT-McCARTHY-STRATTON ENGINEERS AND ARCHITECTS		CONTRACT 7002
CHECKED: B.S.			
CHARGE OF			SHEET 138 OF 224

COUNTY	CONTRACT	P.R.A. REG. NO.	STATE	FED. AID PROJECT NO.	FISCAL YEAR	SHEET NO.	TOTAL SHEETS
NEW CASTLE	7002	2	DEL.			139	224

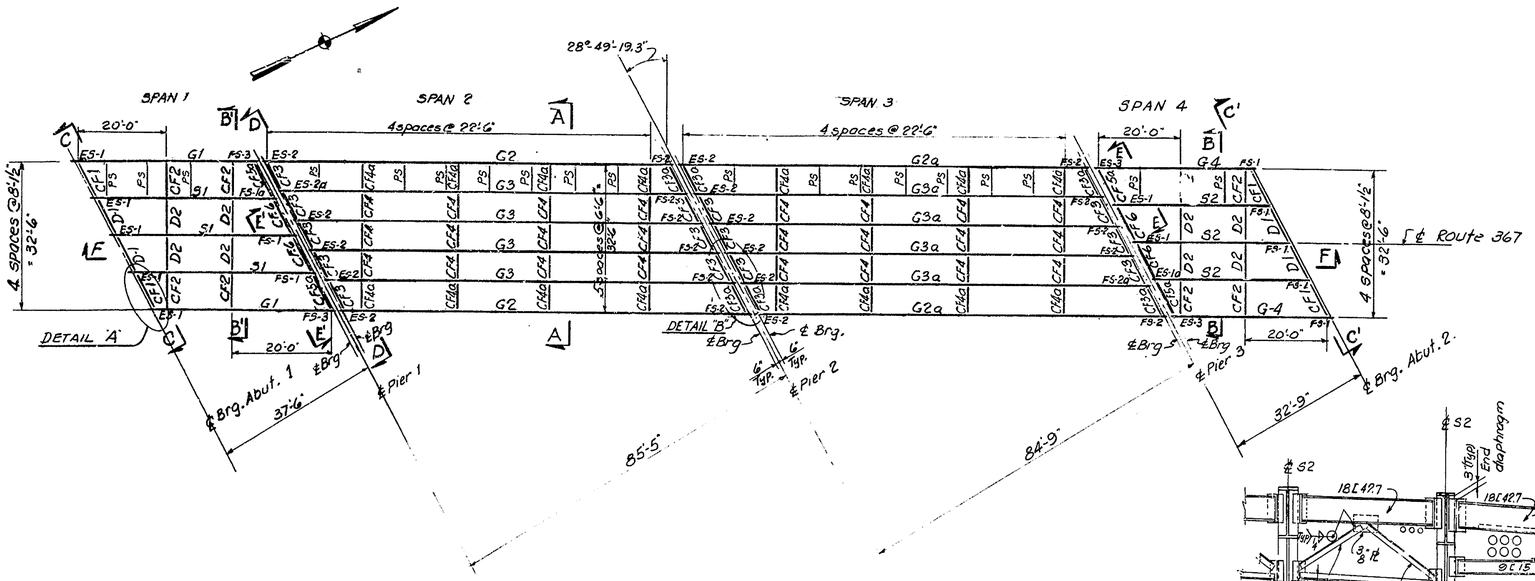

FRAMING PLAN
SCALE 1/16 IN = 1 FT

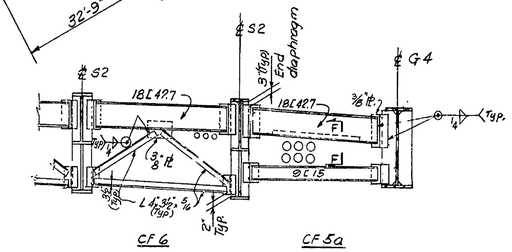

SECTION E-E (SHOWN)
SECTION E'-E' (SIMILAR)
SCALE ¼ IN = 1 FT

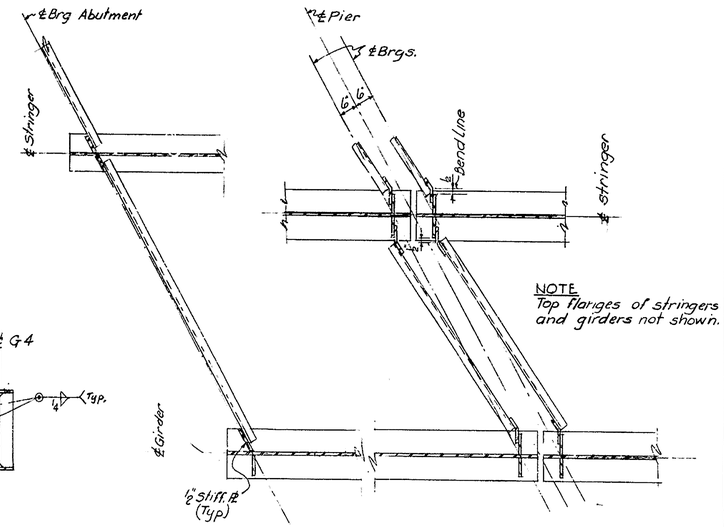

DETAIL 'A'
TYPICAL AT ABUTMENTS
SCALE ½ IN = 1 FT

DETAIL 'B'
TYPICAL AT PIERS
SCALE ½ IN = 1 FT

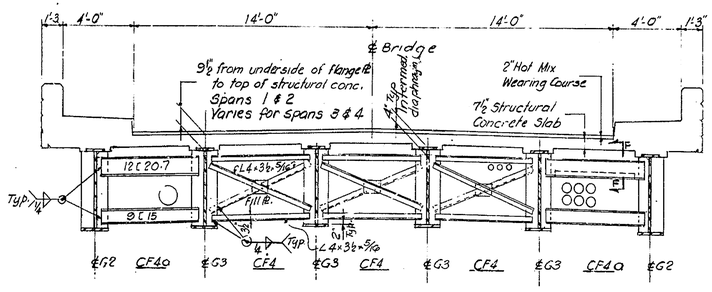

SECTION A-A
SCALE ¼ IN = 1 FT

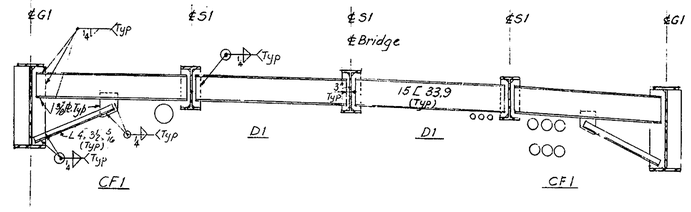

SECTION C-C (SHOWN)
SECTION C'-C' (SIMILAR)
SCALE ¼ IN = 1 FT

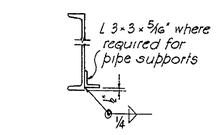

SECTION F-F
SCALE 1 IN = 1 FT

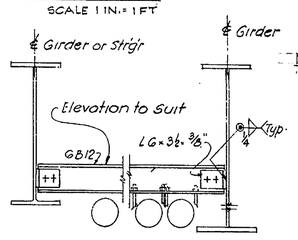

DETAIL OF PIPE SUPPORT

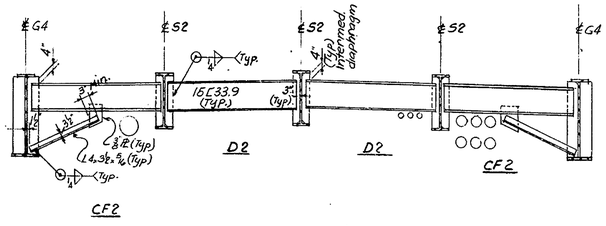

SECTION B-B (SHOWN)
SECTION B'-B' (SIMILAR)
SCALE ¼ IN = 1 FT

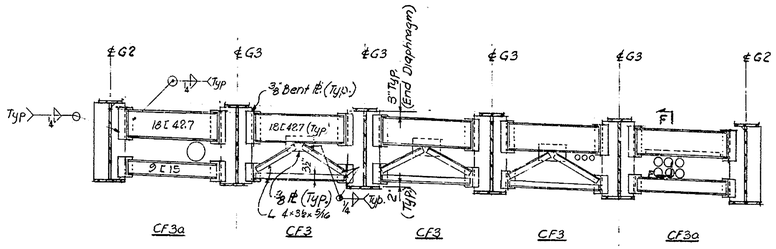

SECTION D-D
SCALE ¼ IN = 1 FT

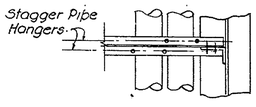

SECTION G-G

NOTES

For General Notes see Dwg. No. 2-1
For material specifications see Special Provisions.
All shop connections to be welded.
All field connections to be welded or bolted with 7/8" Φ high strength bolts.
All diaphragms to be in a vertical plane when girders are in final erected position.
Painting: For shop and field painting see Standard Specifications and Special Provisions.
For stringer schedule and details see Dwg No. 2-6
For Bearing Shoes see Dwg No. 2-8
Work this drawing with Dwg. No. 2-6
All Utility installations are by Others.
For special notes and deck reinforcement support detail, see Dwg. 1-2.

DELAWARE STATE HIGHWAY DEPARTMENT

DELAWARE TURNPIKE

ROAD 367 BRIDGE OVER TURNPIKE

SUPERSTRUCTURE

FRAMING

DRAWN: W. K.	SCALE: AS NOTED	DATE: MAY 9, 1962	DWG.: 2-5
TRACED:	TIPPETTS-ABBETT-McCARTHY-STRATTON ENGINEERS AND ARCHITECTS		CONTRACT 7002
CHECKED: B. S.			
CHARGE OF			SHEET 139 OF 224

COUNTY	CONTRACT	P.R.A. REG. NO.	STATE	FED. AID PROJECT NO.	FISCAL YEAR	SHEET NO.	TOTAL SHEETS
NEW CASTLE	7002	2	DEL.			140	224

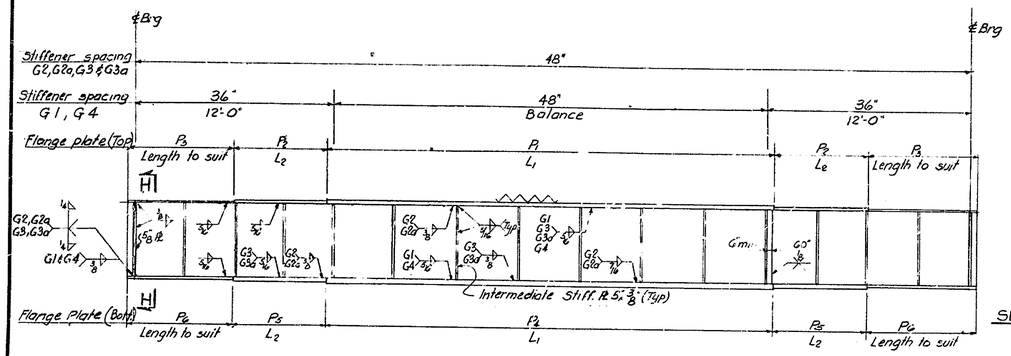

GIRDER ELEVATION
NO SCALE

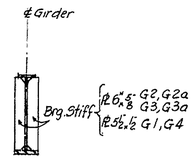

SECTION H-H

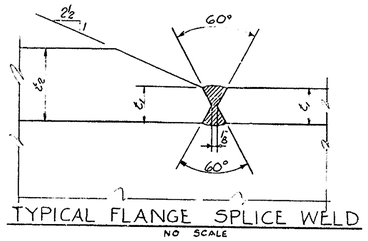

TYPICAL FLANGE SPLICE WELD
NO SCALE

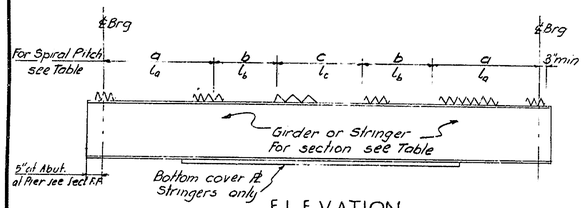

ELEVATION

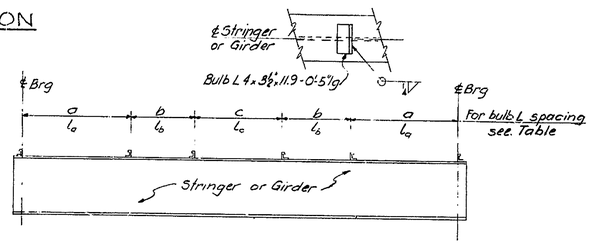

BULB ANGLE DETAILS

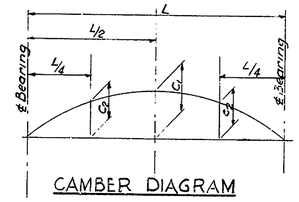

CAMBER DIAGRAM

STRINGER SCHEDULE

			S1	S2	G1	G2 / G2a	G3 / G3a	G4
REACTION KIPS	DL - I		19.0	16.5	22.0	49.5	45.6	19.2
	DL - II		11.3	9.8	11.4	22.8	22.9	9.9
	LL		41.4	39.7	37.6	37.4	38.4	36.0
	I		12.4	11.9	11.2	8.4	8.6	10.8
	SW - LL		—	—	7.2	16.5	—	6.3
MOMENT FT. KIPS	DL - I		206	154	229	1200	1030	174
	DL - II		119	91	119	554	555	90
	LL		361	290	328	845	868	263
	I		108	87	98	190	195	79
	SW - LL		—	—	75	400	—	57
STRESS SECTION KSI	SHAPE		30WF108	30WF108	SEE TABLE BELOW			
	BOTTOM COVER PL		12"x 7/16"x 30'0	—				
	STEEL - BOTTOM		17.4	17.1	15.0	18.0	18.0	11.6
	STEEL - TOP		9.6	7.0	7.5	17.7	17.6	5.7
SHEAR CONNECTOR	SPIRAL PITCH	a/L_a	4" / 6'-0"	4 1/2" / 9'-0"	7" / 11'-0"	5 1/2" / 22'-0"	6 1/2" / 22'-0"	7" / 10'-0"
		b/L_b	5" / 10'-0"	7" / 6'-0"	11" / 4'-0"	10" / 14'-0"	11" / 14'-6"	12" / 5'-0"
		c/L_c	11" / balance	11" / balance	16" / balance	16" / balance	16" / balance	16" / balance
	BULB ANGLE SPACING	a/L_a	9" / 6'-0"	11" / 9'-0"	17" / 11'-0"	13" / 22'-0"	15" / 22'-0"	17" / 10'-0"
		b/L_b	12 / 10-0	17" / 10'-0"	26" / 4-0	24" / 14'-0"	26" / 14'-6"	29" / 5'-0"
		c/L_c	26" / balance	26" / balance	38" / balance	38" / balance	38" / balance	38" / balance
CAMBER		C_1	1"	7/8"	7/8"	5 3/8" / 4 1/4"	5 3/8" / 4 1/2"	1/2"
		C_2				4 1/8" / 3 1/8"	4 3/8" / 3 3/8"	

FLANGE PLATES

GIRDER MARK	WEB PLATE	P_1	L_1	P_4	P_2	L_2	P_3	P_3	P_6
G1	48" x 5/16"	12" x 1/2"	Full Length	12" x 3/4"	—	—	—	—	—
G2 & G2a	48" x 7/16"	12" x 1 5/8"	52'-0"	16" x 2 1/2"	12" x 1"	11'-0"	16" x 1 1/2"	12" x 1/2"	16" x 1"
G3 & G3a	48" x 7/16"	12" x 1 3/8"	52'-0"	16" x 2"	12" x 7/8"	10'-0"	16" x 1 1/2"	12" x 1/2"	16" x 7/8"
G4	48" x 5/16"	12" x 1/2"	Full Length	12" x 3/4"	—	—	—	—	—

DL-I Weight of beam and deck slab.
DL-II Weight of wearing surface, curb, parapet and railing.

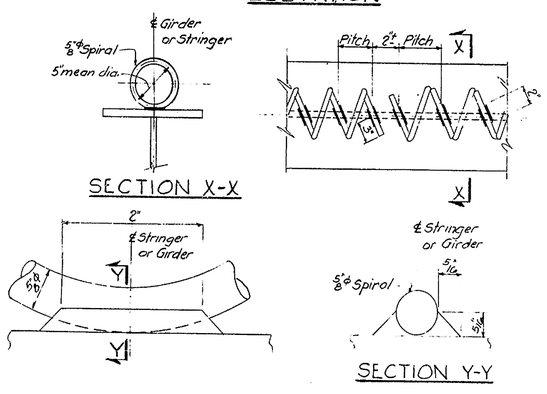

SECTION X-X

SPIRAL DETAILS

SECTION Y-Y

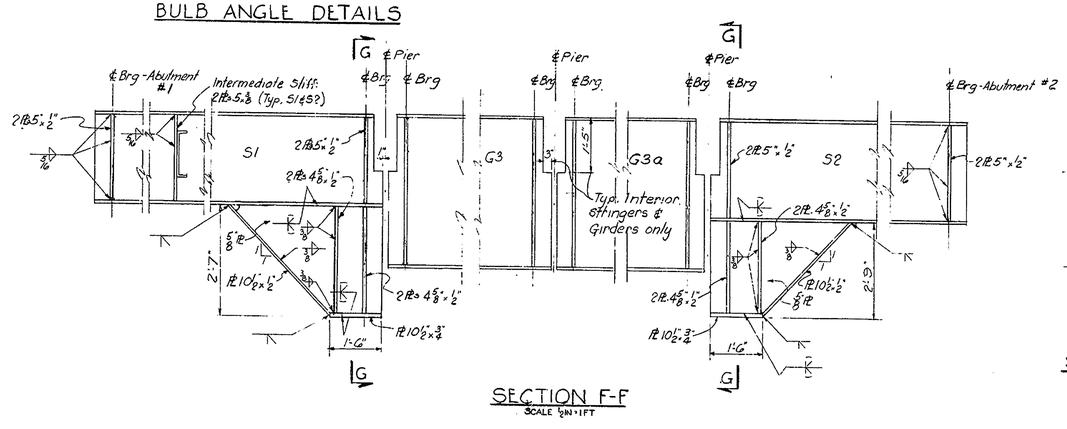

SECTION F-F
SCALE 1/2 IN = 1 FT

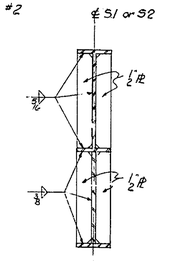

SECTION G-G
SCALE 1/2 IN = 1 FT

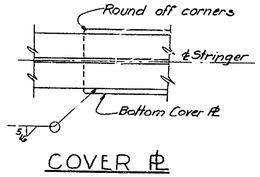

COVER PL

NOTES
For General Notes see Dwg. No. 2-1
All stiffener plates to be vertical when stringers are in final erected position.
All shear connectors to be 5/8" ϕ spirals or bulb angles at the option of the contractor. Nelson studs may be substituted with the approval of the Engineer. See Special Provisions.
Rolled beams shall have their rolled camber upward before welding of bottom cover plate.
For additional steel notes see Dwg. No. 2-5
Work this drawing with Dwg. No. 2-5

DELAWARE STATE HIGHWAY DEPARTMENT
DELAWARE TURNPIKE

ROAD 367 BRIDGE OVER TURNPIKE
SUPERSTRUCTURE
STRINGERS

DRAWN: W. K.	SCALE: AS NOTED	DATE: MAY 9, 1962	DWG.: 2-6
TRACED:	TIPPETTS-ABBETT-McCARTHY-STRATTON ENGINEERS AND ARCHITECTS		CONTRACT 7002
CHECKED: B.S.			
CHARGE OF			SHEET 140 OF 224

COUNTY	CONTRACT	P.R.A. REG. NO.	STATE	FED. AID PROJECT NO.	FISCAL YEAR	SHEET NO.	TOTAL SHEETS
NEW CASTLE	7002	2	DEL.			141	224

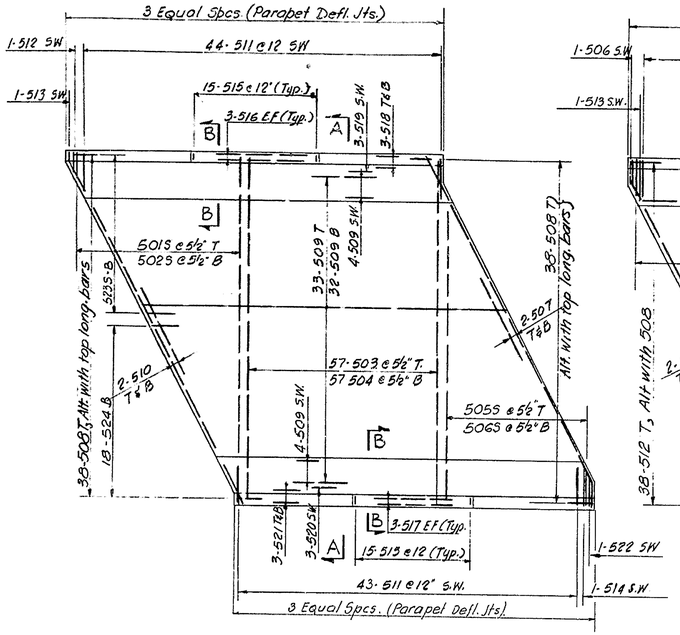

SLAB "A"

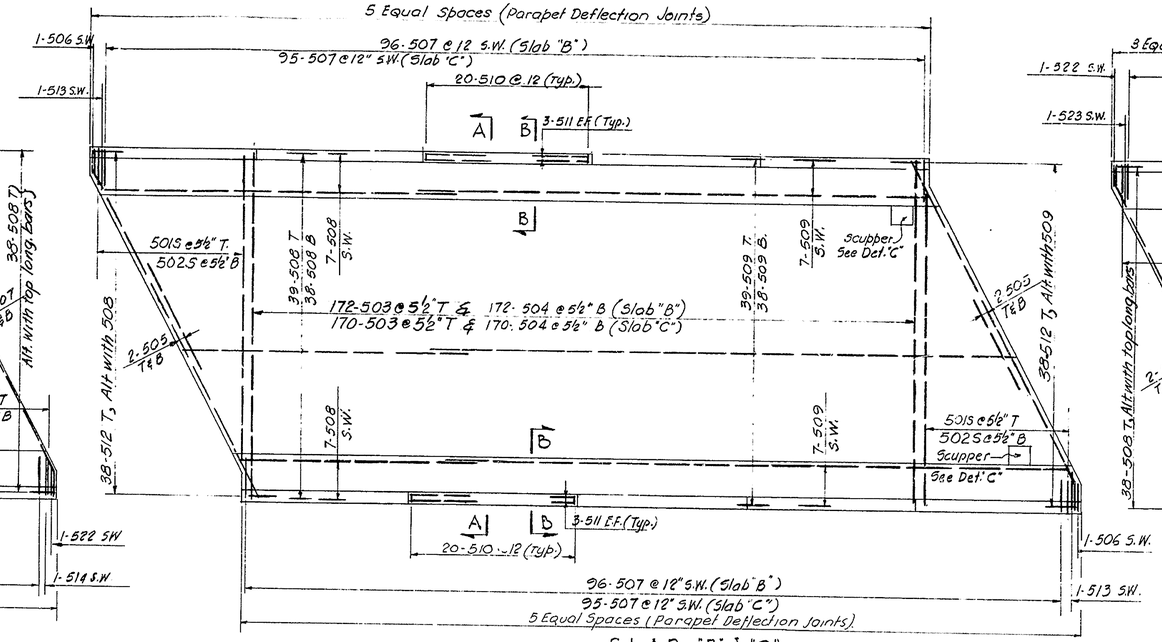

SLAB "B" & "C"

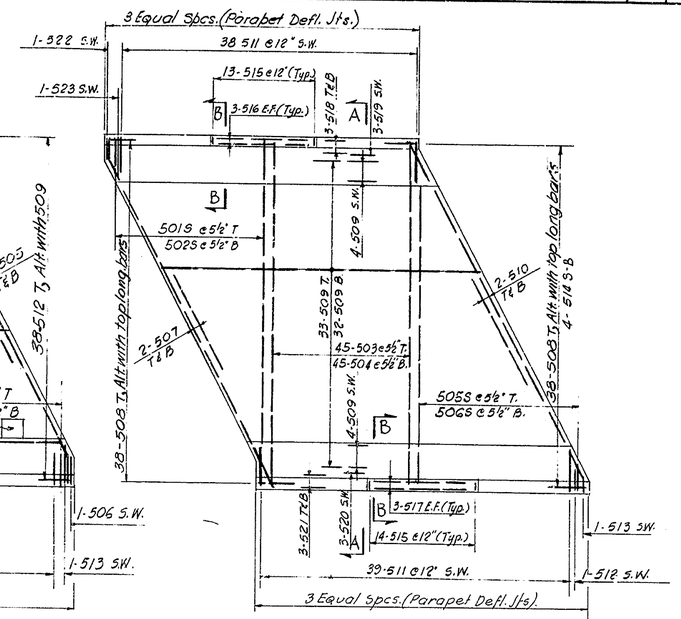

SLAB "D"

NOTES:

CONCRETE NOTES:

Concrete Water-reducing Retarder Admixture shall be added to all superstructure concrete (see Special Provisions).

Splices for stress bars shall be a minimum of 30 diameters, all other splices a minimum of 20 diameters.

Construction joints other than those shown will not be permitted without written approval by the Engineer.

Exposed Concrete Edges shall be chamfered 1" unless otherwise noted.

Concrete cover for reinforcement as per AASHO or as noted.

For Railing Posts see Dwg. No. 2-8
For Joint Details see Dwg. No. 2-9
For Reinforcing Bar Schedule see Dwg Nos. 2-11 to 2-13

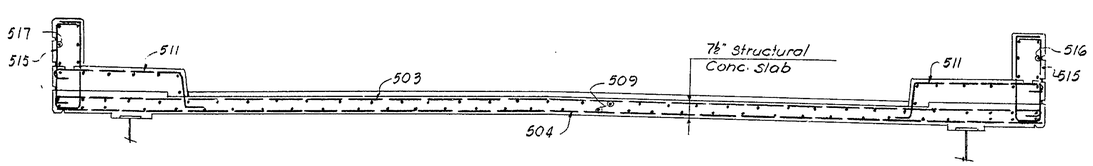

SECTION A-A
SCALE 3/8 IN. = 1 FT.

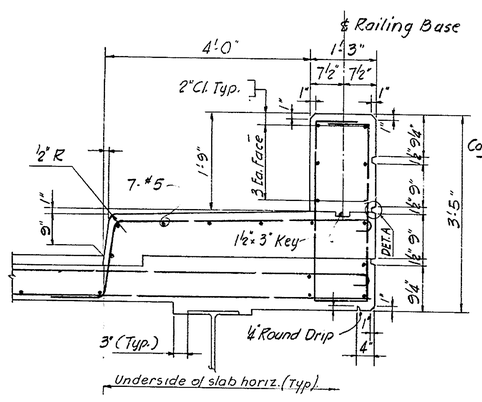

SECTION B-B
SCALE: 3/4 IN. = 1 FT.

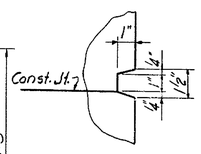

DETAIL A

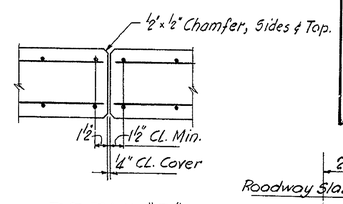

DETAIL "B"
SCALE: 3/4 IN. = 1 FT.

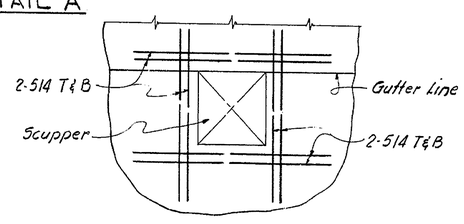

DETAIL "C"
NO SCALE

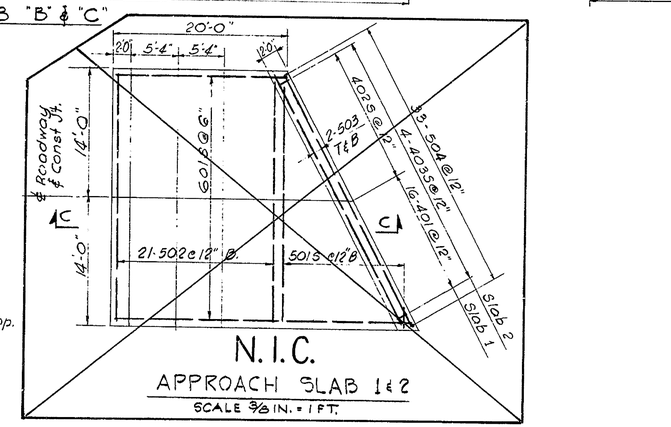

N.I.C.
APPROACH SLAB 1 & 2
SCALE 3/8 IN. = 1 FT.

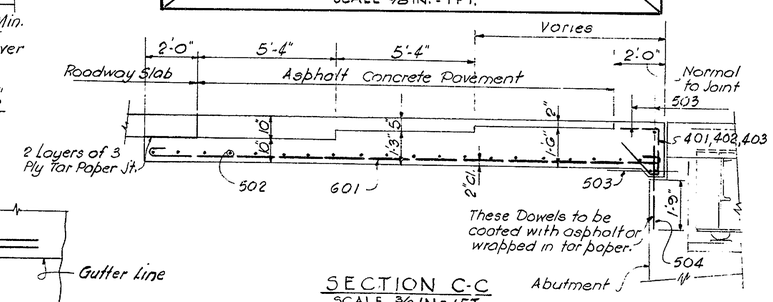

SECTION C-C
SCALE 3/8 IN. = 1 FT

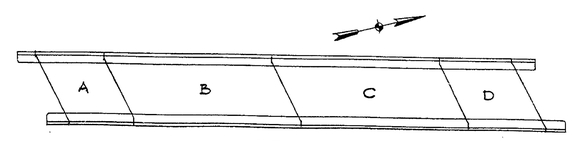

KEY PLAN
SCALE 1 IN. = 40 FT.

DELAWARE STATE HIGHWAY DEPARTMENT
DELAWARE TURNPIKE

ROAD 367 BRIDGE OVER TURNPIKE
SUPERSTRUCTURE
DECK AND APPROACH SLABS

DRAWN: S.V.	SCALE: AS NOTED	DATE: MAY 9, 1962	DWG.: 2-7
TRACED:	TIPPETTS-ABBETT-McCARTHY-STRATTON ENGINEERS AND ARCHITECTS		CONTRACT 7002
CHECKED: A.Z.E.			
CHARGE OF			SHEET 141 OF 224

COUNTY	CONTRACT	P.R.A. REG. NO	STATE	FED. AID PROJECT NO	FISCAL YEAR	SHEET NO	TOTAL SHEETS
NEW CASTLE	7002	2	DEL			142	224

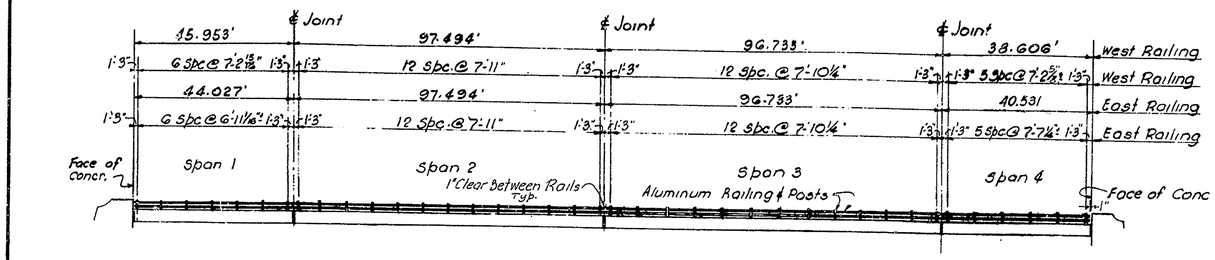

RAILING ELEVATION

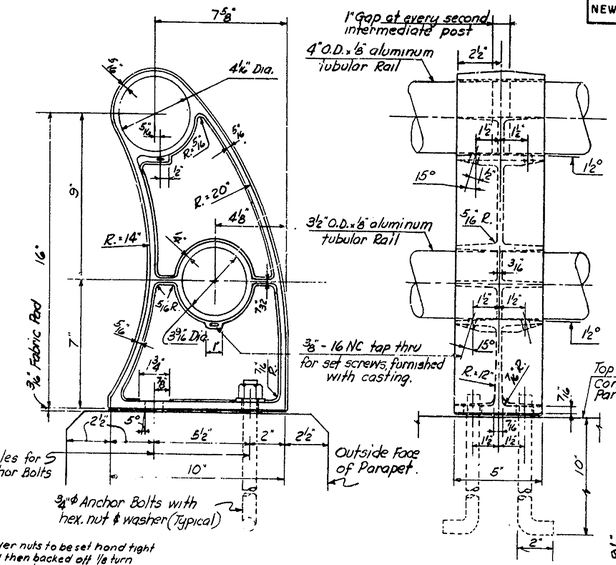

RAILING DETAILS
Scale 3" = 1'-0"

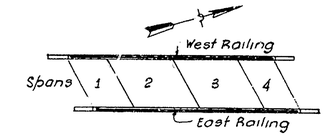

KEY PLAN

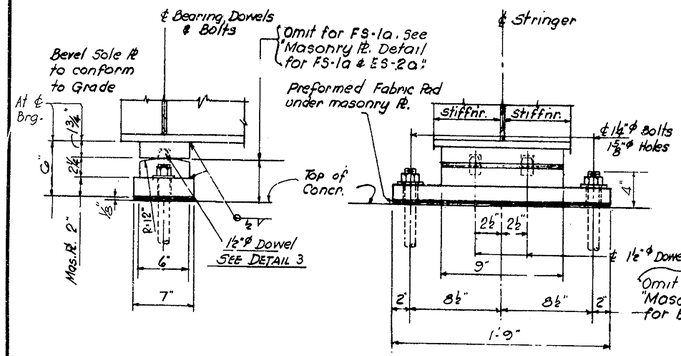

FIXED SHOES FS-1 & FS-1a
SCALE 1½ IN.=1FT.

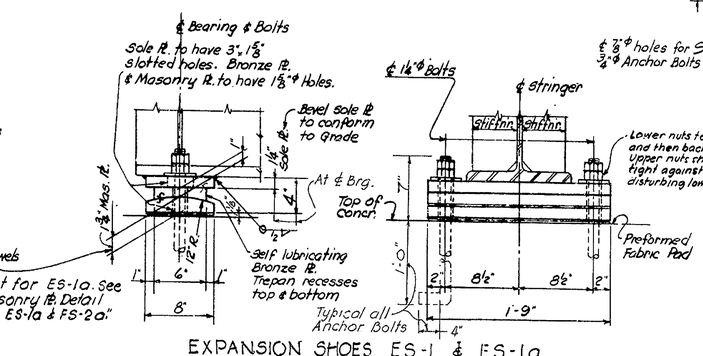

EXPANSION SHOES ES-1 & ES-1a
SCALE 1½ IN.=1FT.

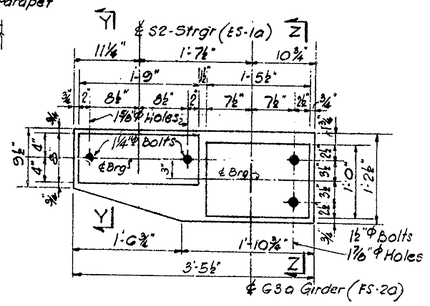

MASONRY PLATE FOR ES-1a & FS-2a
SCALE 1IN.=1FT.

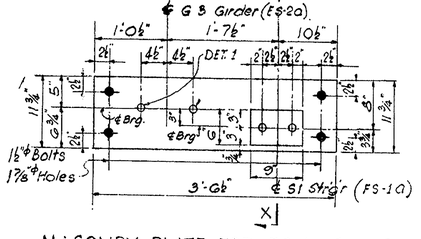

MASONRY PLATE FOR FS-1a & ES-2a
SCALE 1 IN.=1FT.

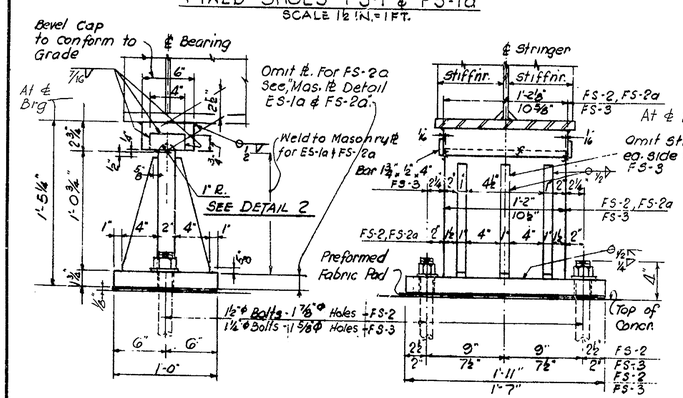

FIXED SHOES FS-2, FS-2a & FS-3
SCALE 1½ IN.=1FT.

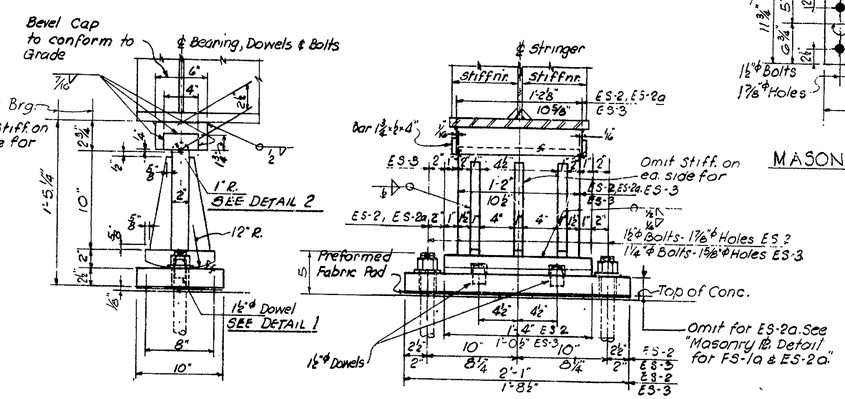

EXPANSION SHOES ES-2, ES-2a & ES-3
SCALE 1½ IN.=1FT.

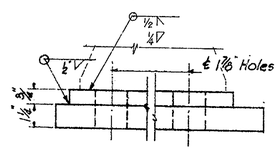

SECTION Z-Z
SCALE 3 IN.=1FT.

RAILING NOTES

Railing Posts shall be erected normal to grade and rails shall be parallel to established grade.
Anchor Bolts for railing posts shall be aluminum alloy meeting the requirements of ASTM-B211 alloy 2024-T4. Finished aluminum alloy bolts, nuts and washers shall be given an anodic coating at least 0.0002 in. thick and a chromate seal.
Anchor bolts shall be set accurately by means of template after nuts have been placed and tightened to the satisfaction of the Engineer, bolts shall be cut off ⅛" above nuts and peened.
Tubular Rails shall be closed at all piers and abutments with welded aluminum plug.
Rails shall be continuous at all end posts.

NOTES

Shoes to have vertical and horizontal ℄'s mutually perpendicular at 65° F.
For location of shoes see Dwg No. 2-5
For steel notes see Dwg No. 2-5

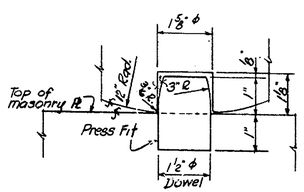

DETAIL 1
Scale 6" = 1'-0"

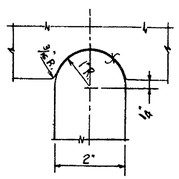

DETAIL 2
Scale 6" = 1'-0"

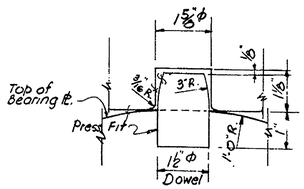

DETAIL 3
SCALE 6 IN.=1FT.

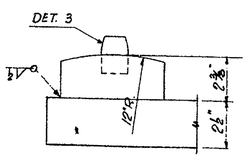

SECTION X-X
SCALE 3 IN.=1FT

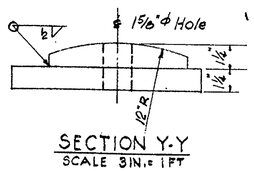

SECTION Y-Y
SCALE 3IN.=1FT

DELAWARE STATE HIGHWAY DEPARTMENT
DELAWARE TURNPIKE

ROAD 367 BRIDGE OVER TURNPIKE
SUPERSTRUCTURE
RAILING AND SHOE DETAILS

DRAWN: H.R.P.	SCALE: AS NOTED	DATE: MAY 9, 1962	DWG. 2-8
TRACED:	TIPPETTS-ABBETT-McCARTHY-STRATTON ENGINEERS AND ARCHITECTS		CONTRACT 7002
CHECKED: M.K.			
CHARGE OF			SHEET 142 OF 224

COUNTY	CONTRACT	P.R.A. REG. NO.	STATE	FED. AID PROJECT NO.	FISCAL YEAR	SHEET NO.	TOTAL SHEETS
NEW CASTLE	7002	2	DEL			143	224

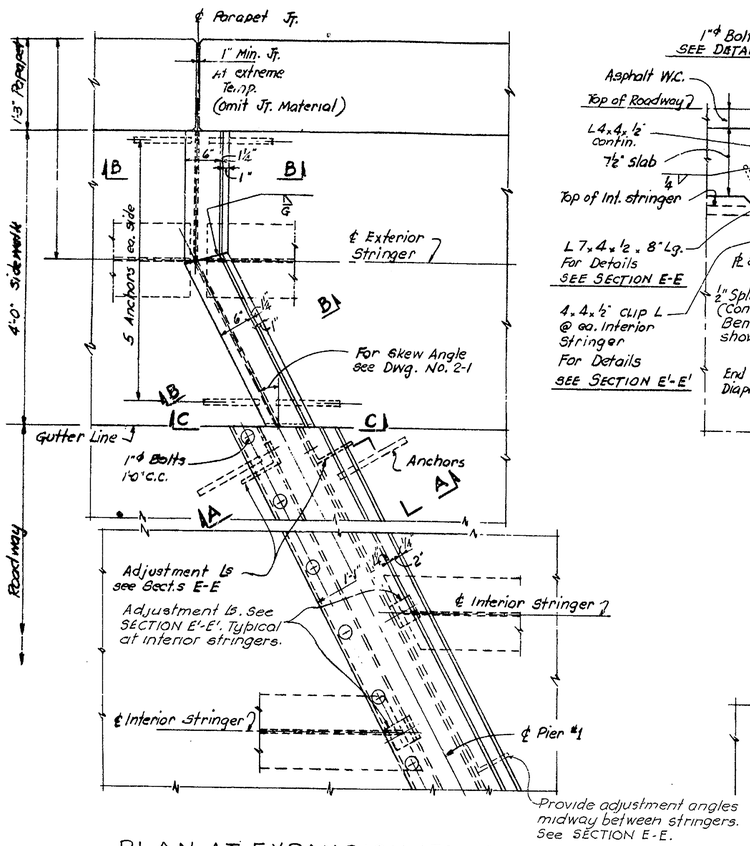

PLAN AT EXPANSION JOINT
SLIDING PLATE DETAIL
Scale 1" = 1'-0"

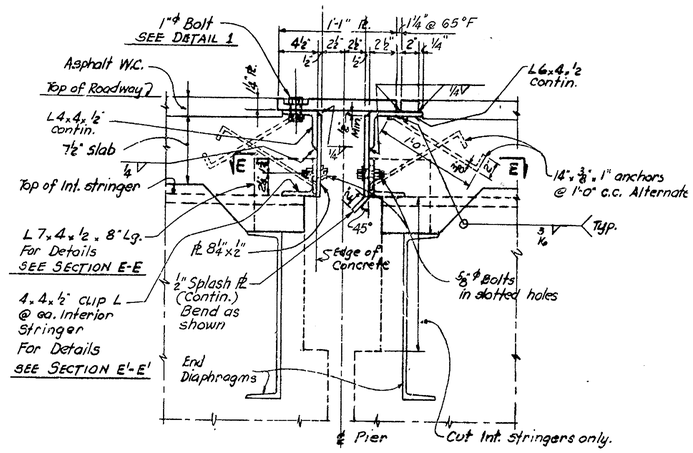

SECTION A-A
Scale ½" = 1'-0"

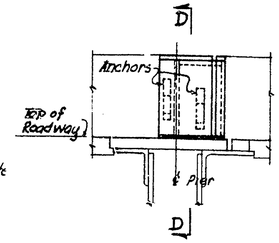

SECTION C-C
Scale ½" = 1'-0"

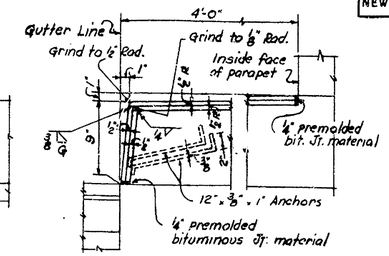

SECTION D-D
Scale ½" = 1'-0"

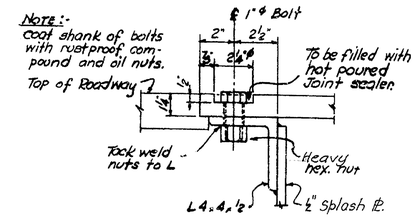

DETAIL 1
Scale 3" = 1'-0"

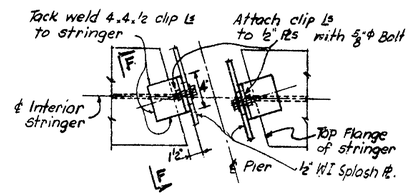

SECTION E'-E'
Scale ½" = 1'-0"

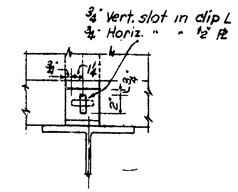

SECTION F-F
Scale ½" = 1'-0"

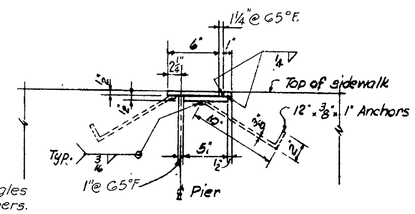

SECTION B-B
Scale ½" = 1'-0"

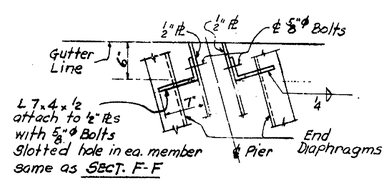

SECTION E-E
Scale 1" = 1'-0"

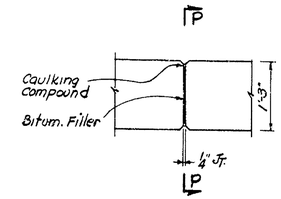

SECTION N-N

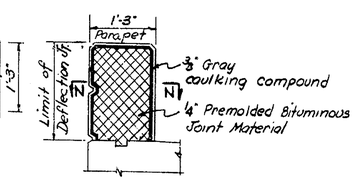

SECTION P-P

DETAILS AT PARAPET DEFLECTION JOINT
Scale ¾" = 1'-0"

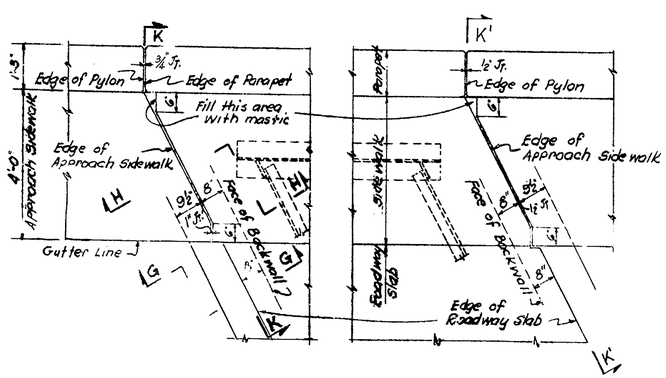

PLAN AT ABUT. #1 PLAN AT ABUT. #2
Scale ½" = 1'-0"

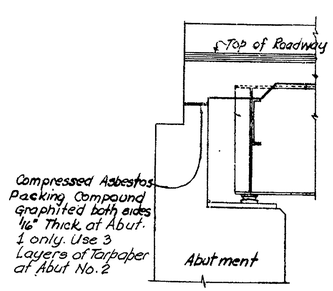

SECTION G-G

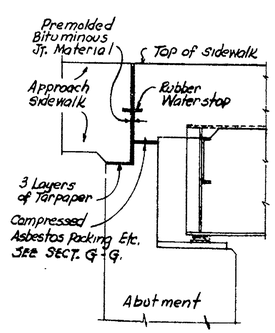

SECTION H-H

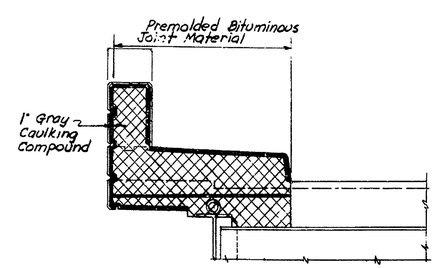

SECTION K-K as shown
SECTION K'-K' SIMILAR

NOTES

Top of expansion joint to conform to roadway cross-section.

For painting see Standard Specifications and Special Provisions.

For location of Parapet Deflection Joints see Dwg. No. 2-7.
For General Notes see Dwg. 2-1.

DELAWARE STATE HIGHWAY DEPARTMENT
DELAWARE TURNPIKE

ROAD 367 BRIDGE OVER TURNPIKE
SUPERSTRUCTURE
JOINT DETAILS

DRAWN: W.J.K.	SCALE: AS NOTED	DATE: MAY 9, 1962	DWG. 2-9
TRACED:	TIPPETTS-ABBETT-McCARTHY-STRATTON ENGINEERS AND ARCHITECTS		CONTRACT 7002
CHECKED: M.K.			
CHARGE OF			SHEET 143 OF 224

COUNTY	CONTRACT	P.R.A. REG. NO	STATE	FED. AID PROJECT NO.	FISCAL YEAR	SHEET NO.	TOTAL SHEETS
NEW CASTLE	7002	2	DEL.			144	224

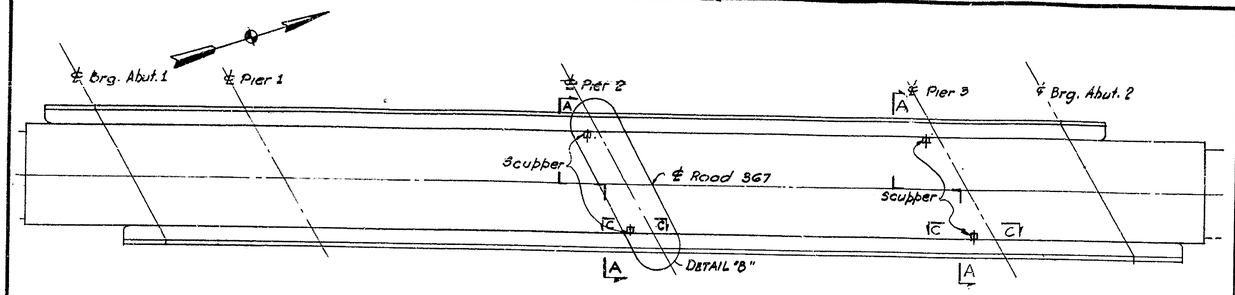

PLAN
SCALE 1IN=20FT.

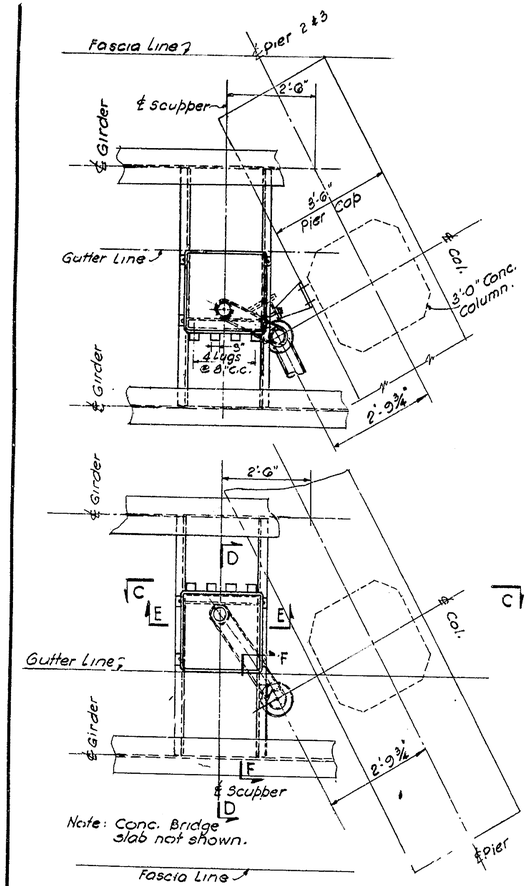

DETAIL "B"
SCALE ½ IN.= 1FT.

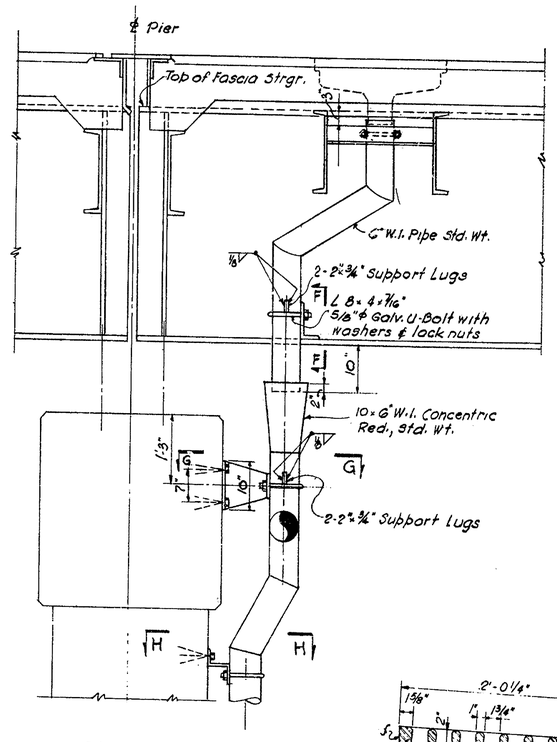

SECTION C-C
SCALE ¾ IN.= 1 FT.

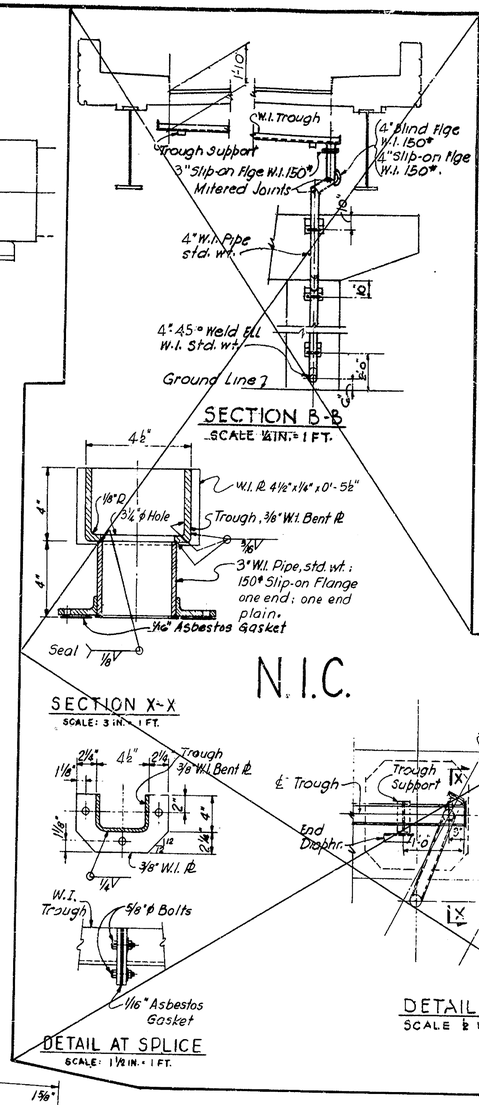

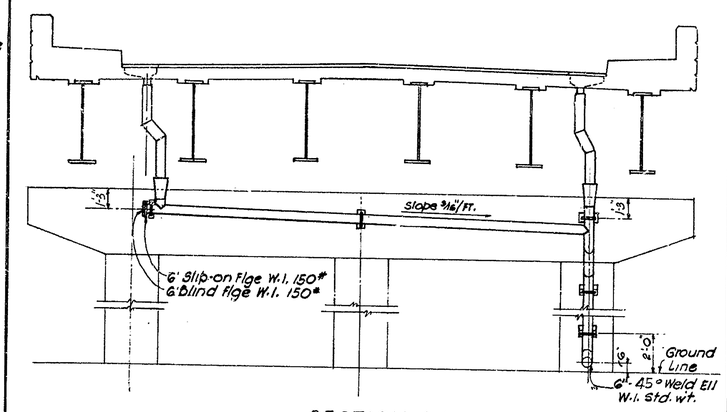

SECTION A-A
SCALE ¼ IN.= 1 FT.

NOTES:

W.I. Pipes shall be Standard Black Wrought Iron, galvanized.

Cost of furnishing and placing all W.I. pipes and their supports and connections shall be included in Item "Bridge Drainage".

All frames and gratings shall be cast steel in accordance with A.S.T.M. A27-60 Grade 65-35.

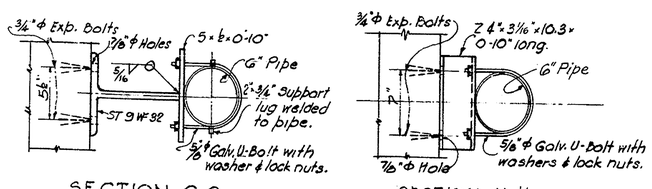

SECTION G-G
SCALE 1 IN.= 1 FT.

SECTION H-H
SCALE 1½ IN.= 1 FT.

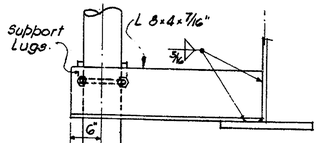

SECTION F-F
SCALE 1IN.= 1 FT.

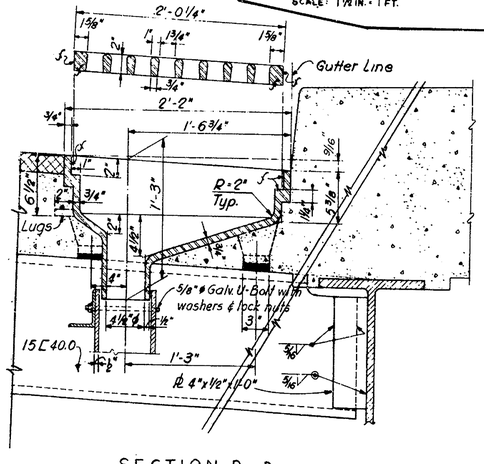

SECTION D-D
SCALE: 1⅛ IN.= 1 FT.

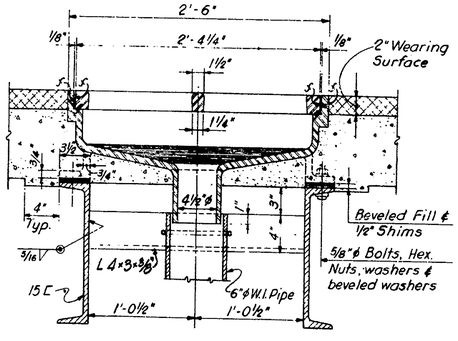

SECTION E-E
SCALE: 1½ IN.= 1 FT

DELAWARE STATE HIGHWAY DEPARTMENT

DELAWARE TURNPIKE

ROAD 367 BRIDGE OVER TURNPIKE

SUPERSTRUCTURE

DRAINAGE DETAILS

DRAWN: H. R. P.	SCALE: AS NOTED	DATE: MAY 9, 1962	DWG.: 2-10
TRACED:	TIPPETTS-ABBETT-McCARTHY-STRATTON ENGINEERS AND ARCHITECTS		CONTRACT 7002
CHECKED: M.K.			
CHARGE OF			SHEET 144 OF 224

COUNTY	CONTRACT	F.P.A. REG. NO.	STATE	FED. AID PROJECT NO.	FISCAL YEAR	SHEET NO.	TOTAL SHEETS
NEW CASTLE	7002	2	DEL.			145	224

REINFORCING BAR SCHEDULE

N.I.C.

	MARK	SIZE	AMT. REQ'D.	LENGTH	TYPE	A	B	C	D	E	F	G	REMARKS
APPROACH SLABS	~~A 401~~	~~4~~	~~16~~	~~5'-4"~~	~~VIII~~	~~1'-8"~~	~~1'-6"~~	~~0'-5"~~	~~1'-10½"~~	~~1'-4"~~			~~APPROACH SLABS~~
	~~A 402S~~	~~4~~	~~1 Set of 16~~	~~5'-3" To 6'-1"~~	~~VIII~~	~~1'-8"~~	~~1'-8" TO 1'-10~~	~~0'-5"~~	~~1'-10½" TO 2'-4~~	~~1'-4" TO 1'-6"~~			~~"~~
	~~A 501S~~	~~5~~	~~2 Sets of 14~~	~~2'-0" To 25'-10"~~	~~STR.~~								~~Δ=1'-10½"~~
	~~A 502~~	~~5~~	~~42~~	~~27'-8"~~	~~STR.~~								~~"~~
	~~A 503~~	~~5~~	~~8~~	~~31'-6"~~	~~STR.~~								~~"~~
	~~A 504~~	~~5~~	~~66~~	~~31'-0"~~	~~STR.~~								~~"~~
	~~A 403S~~	~~4~~	~~4 Sets of 12~~	~~5'-4" TO 6'-4"~~	~~VIII~~	~~1'-8"~~	~~1'-9" TO 1'-11~~	~~0'-5"~~	~~1'-10½" TO 2'-5½~~	~~1'-4" TO 1'-9"~~			~~"~~
	~~A 601S~~	~~6~~	~~2 Sets of 56~~	~~20'-10" TO 36'-4"~~	~~V~~	~~0'-8"~~	~~19'-6" TO 35'-0"~~	~~0'-8"~~					~~Δ=3'-4"~~ ~~"~~
DECK SLAB "A"	SA 501S	5	Set of 42	3'-9" To 37'-11"	V	0'-7"	2'-7" TO 36'-9"	0'-7"					DECK SLAB
	SA 502S	"	Set of 42	2'-7" To 36'-9"	STR.								" "
	SA 503	"	57	39'-4"	V	0'-7"	38'-2"	0'-7"					" "
	SA 504	"	57	38'-2"	STR.								" "
	SA 505S	"	Set of 38	5'-2" To 36'-2"	V	0'-7"	4'-10" TO 35'-0"	0'-7"					" "
	SA 506S	"	Set of 38	4'-0" To 35'-0"	STR.								Δ=10"± "
	SA 507	"	4	43'-2"	X	1'-3"	2'-6"	40'-3"					"
	SA 508	"	74	8'-7"	I	8'-0"	0'-7"	0					"
	SA 509	"	73	44'-6"	STR.								" "
	SA 510	"	4	43'-5"	X	0'-5½"	1'-0½"	42'-3"					" "
	SA 511	"	87	7'-6"	VI	0'-7"	4'-10"	1'-3"	0'-10"				SIDE WALK
	SA 512	"	1	4'-7"	V	0'-7"	4'-0"						" "
	SA 513	"	1	2'-7"	V	0'-7"	2'-0"						" "
	SA 514	"	1	5'-6"	V	0'-7"	4'-11"						" "
	SA 515	"	90	8'-7"	VII	0'-10"	3'-1"	0'-11"	3'-1"	0'-10"			PARAPET
	SA 516	"	18	15'-0"	STR.								"
	SA 517	"	18	14'-3"	STR.								"
	SA 518	"	6	45'-0"	STR.								DECK SLAB
	SA 519	"	3	45'-6"	STR.								SIDE WALK
	SA 520	"	3	43'-6"	STR.								" "
	SA 521	"	6	43'-6"	STR.								DECK SLAB
	SA 522	"	1	3'-9"	V	0'-7"	3'-2"						SIDE WALK
	SA 523S	5	Set of 18	1'-11½" TO 2'-6"	X	0'-11" TO 1'-4"	1'-0½" TO 1'-5½"	6"					DECK SLAB
	SA 524	5	18	1'-11½"	X	0'-11"	1'-0½"	6"					
DECK SLAB "B"	SB 501S	5	2 Sets of 38	3'-10" To 36'-4"	V	0'-7"	2'-8" TO 35'-2"	0'-7"					DECK SLAB Δ=10½"±
	SB 502S	"	2 Sets of 38	2'-8" To 35'-2"	STR.								" " Δ=10½"±
	SB 503	"	172	39'-4"	V	0'-7"	38'-2"	0'-7"					" "
	SB 504	"	172	38'-2"	STR.								" "
	SB 505	"	8	43'-2"	X	1'-3"	2'-6"	40'-3"					" "
	SB 506	"	2	3'-9"	V	0'-7"	3'-2"						SIDE WALK
	SB 507	"	192	7'-6"	VI	0'-7"	4'-10"	1'-3"	0'-10"				" "
	SB 508	"	91	37'-9"	STR.								SIDE WALK & DECK SLAB
	SB 509	"	91	60'-0"	STR.								" " " "
	SB 510	"	200	8'-7"	VII	0'-10"	3'-1"	0'-11"	3'-1"	0'-10"			PARAPET
	SB 511	"	60	19'-1"	STR.								"
	SB 512	"	76	8'-7"	I	8'-0"	0'-7"	0					DECK SLAB
	SB 514	5	32	4'-2"	STR.								AT SCUPPERS
	SB 513	5	2	5'-6"	V	0'-7"	4'-11"						
DECK SLAB "C"	SC 501S	5	2 Sets of 39	3'-10" To 36'-4"	V	0'-7"	2'-8" To 35'-2"						DECK SLAB Δ=10½"±
	SC 502S	"	2 Sets of 39	2'-8" To 35'-2"	STR.								" " Δ=10½"±
	SC 503	"	170	39'-4"	V	0'-7"	38'-2"	0'-7"					" "
	SC 504	"	170	38'-2"	STR.								" "
	SC 505	"	8	43'-2"	X	1'-3"	2'-6"	40'-3"					" "
	SC 506	"	2	3'-9"	V	0'-7"	3'-2"						SIDE WALK
	SC 507	"	190	7'-6"	VI	0'-7"	4'-10"	1'-3"	0'-10"				" "
	SC 508	"	91	37'-2"	STR.								" " & DECK SLAB
	SC 509	"	91	60'-0"	STR.								" " " "
	SC 510	"	200	8'-7"	VII	0'-10"	3'-1"	0'-11"	3'-1"	0'-10"			PARAPET
	SC 511	"	60	19'-0"	STR.								"
	SC 512	"	76	8'-7"	I	8'-0"	0'-7"						DECK SLAB
	SC 513	"	2	5'-6"	V	0'-7"	4'-11"						SIDE WALK
	SC 514	5	32	4'-2"	STR.								AT SCUPPERS

	MARK	SIZE	AMT. REQ'D.	LENGTH	TYPE	A	B	C	D	E	F	G	REMARKS
DECK SLAB "D"	SD 501S	5	Set of 38	5'-2" To 36'-2"	V	0'-7"	4'-10" To 35'-0"	0'-7"					DECK SLAB Δ=10"±
	SD 502S	"	Set of 38	4'-0" To 35'-0"	STR.								" " Δ=10"±
	SD 503	"	45	39'-4"	V	0'-7"	38'-2"	0'-7"					" "
	SD 504	"	45	38'-2"	STR.								" "
	SD 505S	"	Set of 42	3'-9" To 37'-11"	V	0'-7"	2'-7" To 36'-9"	0'-7"					" " Δ=10"±
	SD 506S	"	Set of 42	2'-7" To 36'-9"	STR.								" " Δ=10"±
	SD 507	"	4	43'-2"	X	1'-3"	2'-6"	40'-3"					" "
	SD 508	"	76	8'-7"	I	8'-0"	0'-7"	0					" "
	SD 509	"	73	39'-0"	STR.								" "
	SD 510	"	4	43'-5"	X	0'-5½"	1'-0½"	42'-3"					" "
	SD 511	"	77	7'-6"	VI	0'-7"	4'-10"	1'-3"	0'-10"				SIDE WALK
	SD 512	"	1	4'-7"	V	0'-7"	4'-0"						" "
	SD 513	"	1	2'-7"	V	0'-7"	2'-0"						" "
	SD 514S	"	4 Sets of 10	1'-11½" TO 2'-7½"	X	0'-11½" TO 1'-5"	1'-0½" TO 1'-5½"	0'-6"					" "
	SD 515	"	81	8'-3"	VII	0'-7"	3'-1"	0'-11"	3'-1"	0'-7"			PARAPET
	SD 516	"	18	12'-6"	STR.								"
	SD 517	"	18	13'-2"	STR.								"
	SD 518	"	6	38'-0"	STR.								DECK SLAB
	SD 519	"	3	38'-0"	STR.								SIDE WALK
	SD 520	"	3	39'-6"	STR.								" "
	SD 521	"	6	39'-6"	STR.								DECK SLAB
	SD 522	5	1	3'-9"	V	0'-7"	3'-2"						SIDE WALK
	SD 523	5	1	5'-6"	V	0'-7"	4'-11"						
NORTH ABUTMENT	NA 501	5	12	47'-7"	STR.								NORTH ABUTMENT
	NA 502	"	2	46'-8"	"								
	NA 503	"	68	5'-6"	"								
	NA 504	"	36	6'-6"	"								
	NA 505S	"	2 Sets of 8	12'-6" To 16'-4"	"								Δ=6'-2"
	NA 506	"	2 Sets of 7	10'-6" To 15'-8"	"								Δ=6'-2"
	NA 507	"	2	13'-8"	STR.								
	NA 508	"	4	43'-5"	II	0	42'-4"	1'-1"	0'-6"				
	NA 509	"	14	43'-6"	STR.								
	NA 510	"	9	11'-4"	"								
	NA 511	"	3	32'-11"	STR.								
	NA 512	"	21	9'-0"	I	7'-3"	0'-4"	1'-5"					
	NA 513	"	21	8'-2"	I	6'-5"	0'-4"	1'-5"					
	NA 514	"	42	7'-10"	I	4'-8"	3'-2"	0					
	NA 515	"	11	9'-7"	I	8'-5"	1'-2"	0					
	NA 516	"	10	8'-9"	I	7'-7"	1'-2"	0					
	NA 517	"	102	3'-1"	STR.								
	NA 518	"	10	9'-2"	I	8'-0"	1'-2"						
	NA 519	"	11	8'-4"	I	7'-2"	1'-2"						
	NA 520	"	11	9'-1"	STR.								
	NA 521	"	4	7'-9"	"								
	NA 522	"	3	5'-10"	"								
	NA 523S	"	2 Sets of 10	12'-4" To 13'-0"	"								Δ=1"±
	NA 524S	"	4 Sets of 4	5'-0" To 7'-9"	STR.								Δ=11"
	NA 525	"	4	4'-10"	II	0	1'-11"	2'-11"	0'-9"				
	NA 526	"	8	11'-8"	STR.								
	NA 527S	"	2 Sets of 2	12'-8" To 14'-8"	"								Δ=2'-0"
	NA 528	"	4	16'-8"	"								
	NA 529S	"	2 Sets of 4	12'-7" To 13'-4"	"								Δ=3"
	NA 530	"	2	9'-3"	STR.								
	NA 531	"	4	5'-1"	II	0	1'-1"	4'-0"	1'-5"				
	NA 532	"	7	4'-0"	STR.								
	NA 533	"	4	9'-7"	"								
	NA 534	"	3	6'-0"	"								
	NA 535S	"	2 Sets of 8	14'-7" To 14'-10"	"								Δ=½"±
	NA 536	"	14	10'-2"	"								
	NA 537S	"	2 Sets of 2	11'-2" TO 13'-2"	"								Δ=2'-0"
	NA 538	"	4	15'-2"	"								
	NA 539S	"	2 Sets of 4	11'-1" To 11'-10"	"								Δ=3"
	NA 540	"	2	7'-10"	"								
	NA 541	"	9	3'-3"	"								
	NA 542	"	11	10'-11"	"								
	NA 543	"	22	4'-11"	STR.								
	NA 544	"	22	6'-6"	I	4'-11"	1'-7"	0					
	NA 545	"	24	5'-9"	STR.								
	NA 546	"	8	4'-3"	STR.								
	NA 547	"	8	5'-10"	I	1'-1"	4'-9"	0					
	NA 548	5	4	6'-11"	I	1'-1"	4'-9"	1'-1"					NORTH ABUTMENT

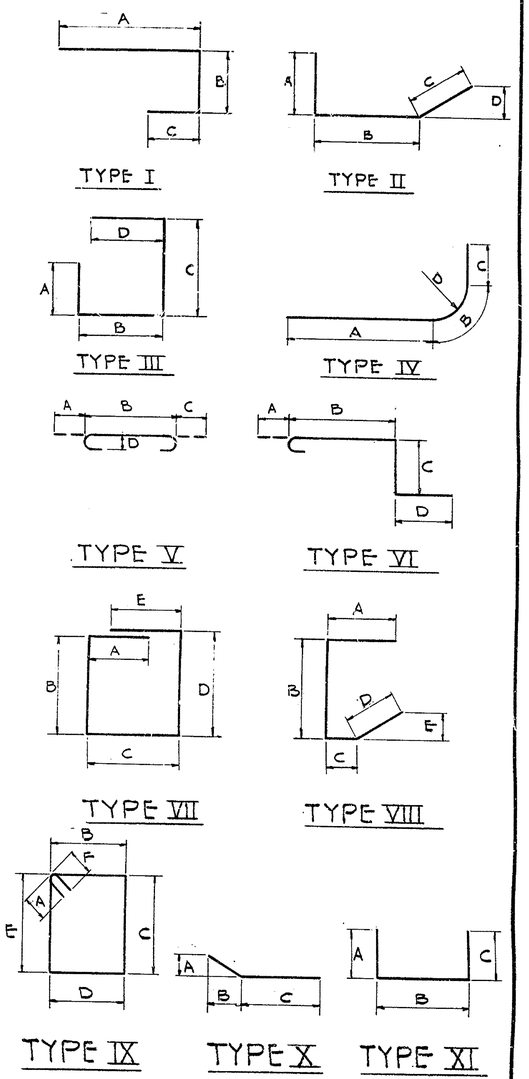

NOTES:

All dimensions are out to out of bar.

DELAWARE STATE HIGHWAY DEPARTMENT

DELAWARE TURNPIKE

ROAD 367 BRIDGE OVER TURNPIKE

REINFORCING BAR SCHEDULE

DRAWN: S.V.	SCALE NONE	DATE MAY 9, 1962	DWG 2-11
TRACED:	TIPPETTS-ABBETT-McCARTHY-STRATTON ENGINEERS AND ARCHITECTS		CONTRACT 7002
CHECKED: BS-AZE			
CHARGE OF			SHEET 145 OF 224

COUNTY	CONTRACT	F.A.A. REG NO	STATE	FED AID PROJECT NO	FISCAL YEAR	SHEET NO	TOTAL SHEETS
NEW CASTLE	7002	2	DEL			146	224

REINFORCING BAR SCHEDULE

NORTH ABUTMENT

MARK	SIZE	AMT. REQ'D.	LENGTH	TYPE	A	B	C	D	E	F	G	REMARKS
NA549S	5	2Sets of 3	14'-5" To 14'-9"	STR.								Δ=2" NORTH ABUTMENT
NA550	"	2Sets of 3	9'-2" To 9'-6"	STR.								Δ=2" "
NA551	"	4	5'-5"	II	0	4'-4"	1'-1"	0'-7"				"
NA552	"	50	4'-11"	STR.								"
NA553	"	4	6'-6"	IV	4'-1"	1'-4"	1'-1"	0'-10"				"
NA554	"	2	14'-2"	STR.								"
NA555	"	2Sets of 4	12'-10" To 14'-7"	"								Δ=7" "
NA556	"	2Sets of 4	9'-6" To 11'-3"	"								Δ=7" "
NA557	"	2	8'-3"	STR.								"
NA558	"	3	8'-0"	II	3'-2"	3'-9"	1'-1"	0'-6¼"				"
NA559	"	3	6'-1"	I	3'-2"	2'-11"	0					"
NA560	"	9	9'-0"	I	3'-2"	2'-8"	3'-2"					"
NA561	5	9	7'-5"	I	3'-2"	4'-9"	0					"
NA401	4	69	2'-5"	I	0'-10"	0'-11"	0'-10"					"
NA402	4	31	5'-5"	III	2'-0"	0'-8"	2'-1"	0'-10"				NORTH ABUTMENT

SOUTH ABUTMENT

MARK	SIZE	AMT. REQ'D.	LENGTH	TYPE	A	B	C	D	E	F	G	REMARKS
SA501	5	12	47'-7"	STR.								SOUTH ABUTMENT
SA502	"	2	46'-8"	"								
SA503	"	68	5'-6"	"								
SA504	"	36	6'-6"	"								
SA505S	"	2Sets of 8	12'-6" To 16'-4"	"								Δ=6½"
SA506S	"	2Sets of 7	10'-6" To 13'-8"	"								
SA507	"	2	13'-8"	STR.								
SA508	"	5	43'-5	II	0	42'-4"	1'-1"	0'-6"				
SA509	"	15	43'-6"	STR.								
SA510	"	9	11'-4"	"								
SA511	"	3	11'-5"	STR.								
SA512	"	21	7'-11"	I	6'-2"	0'-4"	1'-5"					
SA513	"	21	7'-7"	I	5'-10"	0'-4"	1'-5"					
SA514	"	42	8'-6"	I	5'-4"	3'-2"	0					
SA515	"	21	9'-2"	I	8'-0"	1'-2"	0					
SA516	"	21	8'-10"	I	7'-8"	1'-2"	0					
SA517	"	102	3'-1"	STR.								
SA518	"											
SA519	"											
SA520	"	11	10'-0"	STR.								
SA521	"	4	8'-5"	"								
SA522	"	3	8'-10"	"								
SA523	"	20	13'-8"	"								
SA524S	"	4Sets of 4	5'-0" To 7'-9"	STR.								Δ=11"
SA525	"	4	4'-10"	II	0	1'-11"	2'-11"	0'-9"				
SA526	"	8	11'-8"	STR								
SA527S	"	2Sets of 2	12'-8" To 14'-8"	"								Δ=2'-0"
SA528	"	4	16'-8"	"								
SA529S	"	2Sets of 4	12'-7 To 13'-4"	"								Δ=3"
SA530	"	2	9'-3"	STR.								
SA531	"	4	5'-1"	II	0	1'-11"	4'-0"	1'-3"				
SA532	"	7	4'-0"	STR.								
SA533	"	4	8'-11"	"								
SA534	"	3	15'-10"	"								
SA535	"	16	14'-2"	"								
SA536	"	14	10'-2"	"								
SA537S	"	2Sets of 2	11'-2" To 13'-2"	"								Δ=2'-0"
SA538	"	4	15'-2"	"								
SA539S	"	2Sets of 4	11'-1" To 11'-10"	"								Δ=3"
SA540	"	2	7'-10"	"								
SA541	"	9	3'-3"	"								
SA542	"	11	10'-7"	"								
SA543	5	22	4'-11"	STR								SOUTH ABUTMENT
SA544	5	22	6'-6"	I	4'-11"	1'-7"	0					SOUTH ABUTMENT.
SA545	"	24	3'-9"	STR.								
SA546	"	8	4'-3"	STR.								
SA547	"	8	5'-10"	I	1'-1"	4'-9"	0					
SA548	"	4	6'-11"	I	1'-1"	4'-9"	1'-1"					
SA549S	"	2Sets of 3	14'-5" To 14'-9"	STR.								Δ=2"
SA550S	"	2Sets of 3	9'-2" To 9'-6"	STR.								Δ=2"
SA551	"	4	5'-5"	II	0	4'-4"	1'-1"	0'-7"				
SA552	"	50	4'-11"	STR.								
SA553	"	4	6'-6"	IV	4'-1"	1'-4"	1'-1"	0'-10"				
SA554	"	2	14'-2"	STR.								
SA555S	"	2Sets of 4	12'-10" To 14'-7"	"								Δ=7"
SA556S	"	2Sets of 4	9'-6" To 11'-3"	"								Δ=7"
SA557	"	2	8'-3"	STR.								
SA558	"	2	8'-0"	II	3'-2"	3'-9"	1'-1"	6¼"				
SA559	"	3	4'-10"	I	3'-2"	1'-8"	0					
SA560	"	9	9'-0"	I	3'-2"	2'-8"	3'-2"					
SA561	5	9	6'-5"	I	3'-2"	3'-3"	0					
SA401	4	69	2'-5"	I	0'-10"	0'-11"	0'-10"					
SA402	4	31	5'-5"	III	2'-0"	0'-8"	2'-1"	0'-10"				SOUTH ABUTMENT

PIER NO. 1

MARK	SIZE	AMT. REQ'D.	LENGTH	TYPE	A	B	C	D	E	F	G	REMARKS
1P1001	10	3	42'-8"	STR.								PIER NO. 1
1002	"	6	22'-1"	X	1'-6"	4'-1"	18'-0"					
1003	"	4	12'-0"	STR.								
1004	"	8	13'-5"	V	1'-5"	12'-0"						
1005	10	4	8'-0"	"								
606	6	2	42'-8"	"								
607	6	2	42'-0"	STR.								
408	4	56	10'-6"	IX	0'-5"	1'-8"	3'-2"	1'-8"	3'-2"	0'-5"		
409S	4	4Sets of 5	10'-2" To 7'-10"	IX	0'-5"	1'-8"	3'-0" To 1'-10"	1'-8"	3'-0" To 1'-10"	0'-5"		Δ=3½" FOR B & D
819	8	48	19'-0"	STR.								
821	8	48	5'-10"	V	1'-1"	4'-9						
423	4	96	10'-2"	IX	0'-5	2'-8	2'-0	2'-8	2'-0	0'-5"		
924	9	10	42'-0"	V	1'-3"	39'-6	1'-3					
925	9	10	39'-6"	STR.								
426	4	28	8'-6"	STR								
827	8	54	10'-8	V	1'-1"	8'-6"	1'-1"					
928	5	49	6'-0"	I	1'-6	3'-0	1'-6					
829	"	5	13'-6"	XI	1'-6	10'-6	1'-6					
1P530	5	10	8'-2"	XI	1'-6	5'-2	1'-6					PIER NO. 1

Note
For Bar bending details see Dwg. 2-11

DELAWARE STATE HIGHWAY DEPARTMENT
DELAWARE TURNPIKE

ROAD 367 BRIDGE OVER TURNPIKE

REINFORCING BAR SCHEDULE

DRAWN: S.V.	SCALE NONE	DATE: MAY 9, 1962	DWG. 2-12
TRACED:	TIPPETTS-ABBETT-McCARTHY-STRATTON ENGINEERS AND ARCHITECTS		CONTRACT 7002
CHECKED: TK-AZE			
CHARGE OF			SHEET 146 OF 224

COUNTY	CONTRACT	F.A.A. REG. NO.	STATE	FED. AID PROJECT NO.	FISCAL YEAR	SHEET NO.	TOTAL SHEETS
NEW CASTLE	7002	8	DEL			147	224

REINFORCING BAR SCHEDULE

PIER NO. 2

MARK	SIZE	AMT. REQ'D.	LENGTH	TYPE	A	B	C	D	E	F	G	REMARKS
2P1101	11	3	42'-8"	STR.								
1002	10	6	22'-1"	X	1'-6	4'-1	18'-1					
1103	11	6	12'-0"	STR.								
1104	11	10	13'-7	V	1'-7"	12'-0"						
1105	11	4	12'-6"	"								
606	6	2	42'-8	"								
607	6	2	42'-0	STR.								
408	4	76	10'-6"	IX	0'-5	1'-8	3'-2	1'-8	3'-2	0'-5		
409	4	45 sets of 5	10'-2" To 7'-10"	IX	0'-5	1'-8	3'-0 To 1'-10	1'-8	3'-0 To 1'-10	0'-5		Δ = 3½ FOR B & D
819	8	48	24'-0"	STR								
821	8	48	5'-10	V	1'-1	4'-9						
423	4	132	10'-2	IX	0'-5	2'-8	2'-0	2'-8	2'-0	0'-5		
1124	11	10	42'-8	V	1'-7	39'-6	1'-7					
925	9	10	39'-6	STR.								
426	4	28	9'-0	STR.								
827	8	54	11'-2	V	1'-1	9'-0	1'-1					
2P528	5	60	6'-4	XI	1'-8	3'-0	1'-8					

PIER NO. 3

MARK	SIZE	AMT. REQ'D.	LENGTH	TYPE	A	B	C	D	E	F	G	REMARKS
3P1001	10	3	42'-8"	STR.								
1002	"	6	22'-1"	X	1'-6"	4'-1	18'-0					
1003	"	4	12'-0"	STR.								
1004	"	8	13'-5"	V	1'-5"	12'-0"						
1005	10	4	8'-0"	"								
606	6	2	42'-8"	"								
607	6	2	42'-0"	STR.								
408	4	36	10'-6"	IX	0'-5	1'-8	3'-2	1'-8	3'-2	0'-5		
409	4	45 sets of 5	10'-2" To 7'-10"	IX	0'-5	1'-8	3'-0 To 1'-10	1'-8	3'-0 To 1'-10	0'-5		Δ = 3½ FOR B & D
819	8	43	17'-0"	STR.								
821	8	48	5'-10	V	1'-1	4'-9						
423	4	84	10'-2"	IX	0'-5	2'-8	2'-0	2'-8	2'-0	0'-5		
924	9	10	42'-0"	V	1'-3	39'-6	1'-3					
925	9	10	39'-6"	STR								
426	4	28	8'-6"	STR								
827	8	54	10'-8"	V	1'-1	8'-6	1'-1					
528	5	49	7'-6"	XI	2'-3	3'-0	2'-3					
529	"	3	10'-0	XI	1'-9	8'-3						
530	"	10	9'-2"	XI	2'-0	5'-2	2'-0					
3P531	5	5	7'-3"	XI	2'-0	3'-3	2'-0					

MARK	SIZE	AMT. REQ'D.	LENGTH	TYPE	A	B	C	D	E	F	G	REMARKS

Note
For Bar bending details see Dwg 2-11

DELAWARE STATE HIGHWAY DEPARTMENT
DELAWARE TURNPIKE

ROAD 367 BRIDGE OVER TURNPIKE

REINFORCING BAR SCHEDULE

DRAWN: S.V.	SCALE NONE	DATE: MAY 9, 1962	DWG. 2-13
TRACED:	TIPPETTS-ABBETT-McCARTHY-STRATTON ENGINEERS AND ARCHITECTS		CONTRACT 7002
CHECKED: T.K.			
CHARGE OF			SHEET 147 OF 224

COUNTY	CONTRACT	P.R.A. REG. NO.	STATE	FED. AID PROJECT NO.	FISCAL YEAR	SHEET NO.	TOTAL SHEETS
NEW CASTLE	7002	2	DEL			148	224

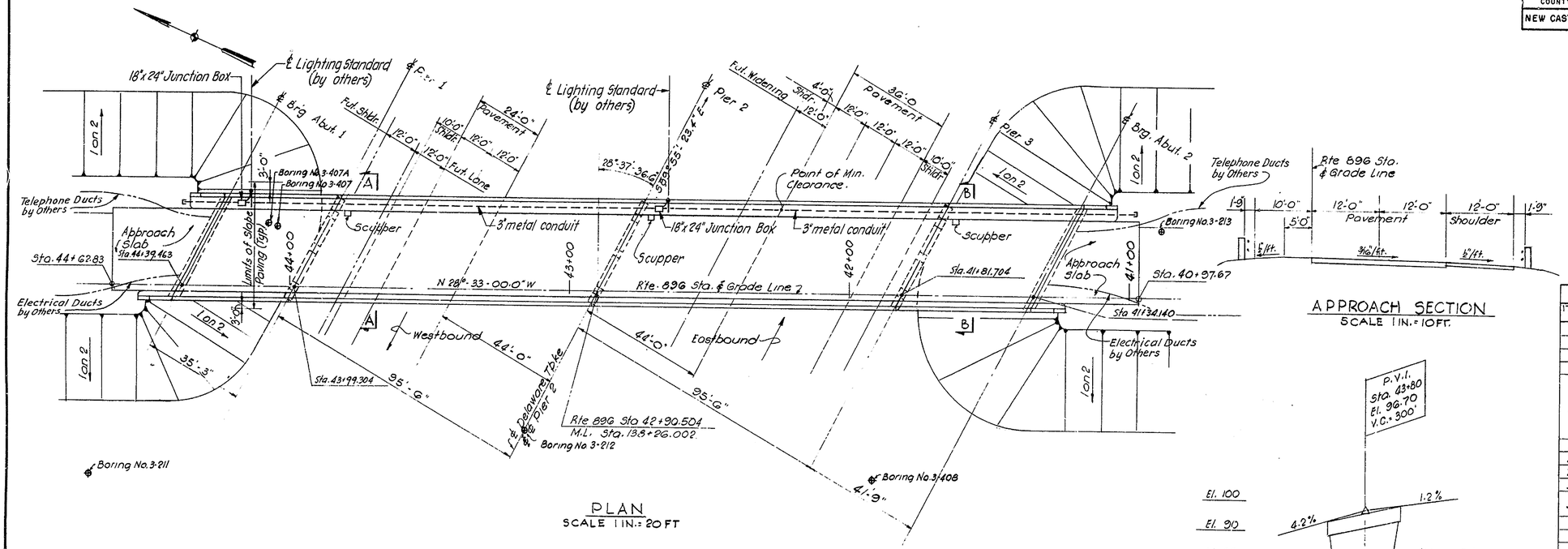

PLAN
SCALE 1 IN. = 20 FT

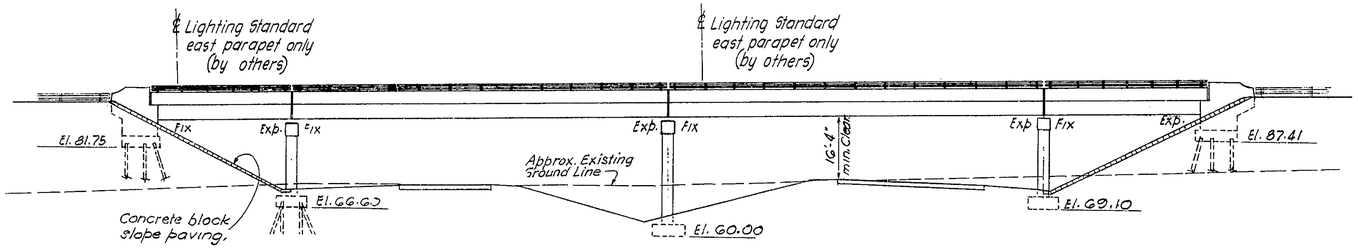

ELEVATION
SCALE 1 IN. = 20 FT.

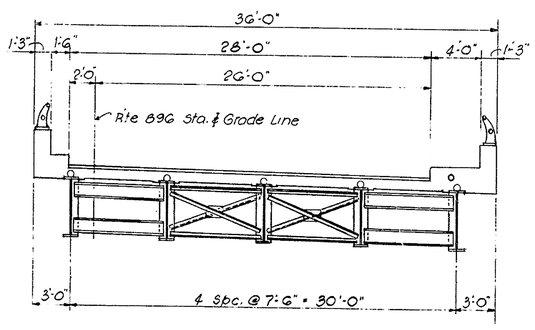

SECTION A-A
SCALE 3/16 IN. = 1 FT.

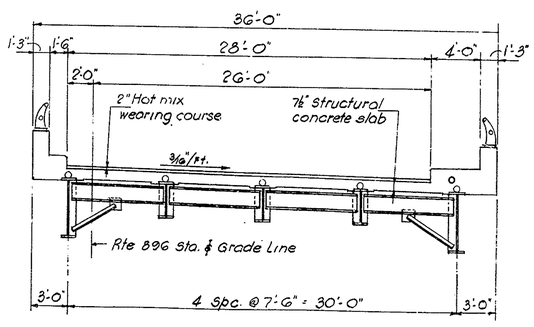

SECTION B-B
SCALE 3/16 IN. = 1 FT.

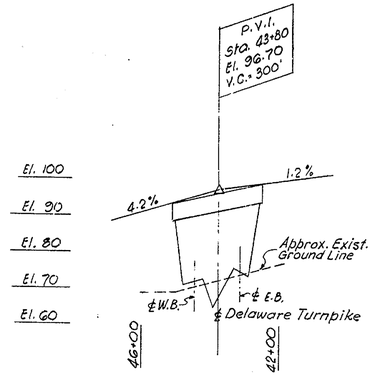

ROUTE 896
SCALE HORIZ. 1 IN. = 200'
VERT. 1 IN. = 20'

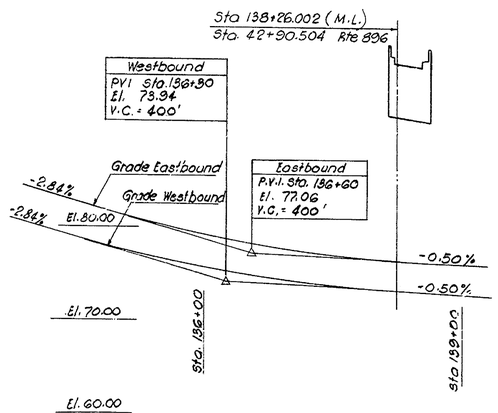

DELAWARE TPKE
SCALES HORIZ. 1 IN. = 80 FT.
VERT. 1 IN. = 8 FT.

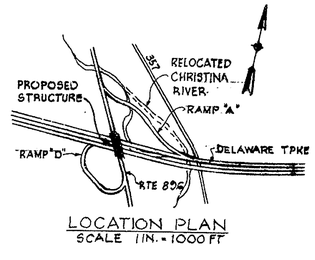

LOCATION PLAN
SCALE 1 IN. = 1000 FT

APPROACH SECTION
SCALE 1 IN. = 10 FT.

TABLE OF QUANTITES

ITEM NO.	DESCRIPTION	UNIT	QUANTITY
4	Excavation for Structures	C.Y.	510
7	Select Borrow, Grade "A"	C.Y.	440
11	Hot-mix, Hot-laid Asphaltic conc. Pavemt.	Tons	130
11	RC-1 Asphalt Tack Tack Coat	Gal.	215
*	Portland Cement Concrete Masonry		
18	Footings	C.Y.	202
	Substructure	C.Y.	228
	Superstructure	C.Y.	435
	Approach Slabs	C.Y.	58
19	Superficial Waterproofing	S.Y.	100
20*	Bar Reinforcement	Lbs.	155,000
22	Structural Steel (Approx. Wt. 410,000 lbs.)	L.S.	
31	6"ϕ Perforated Corr. Metal Pipe Underdrain	L.F.	120
35	C.I.P. Concr. Piles	L.F.	2,300
	Steel Shell Test Piles	L.F.	260
	Aluminum Railing – Double Rail	L.F.	620
	Bridge Catch Basins	L.S.	
	Bridge Drainage	L.S.	
	Slope Paving	S.Y.	450
	Coal Tar Epoxy Underseal	S.Y.	970
	Protective Coating for Concrete	S.F.	770

* indicates Fixed Quantity Item, see Proposal.

GENERAL NOTES

Design Specifications: A.A.SHO-1957; and Standard Specifications for Welded Highway and Railway Bridges of the American Welding Society.

Material and Fabrication Specifications. State of Delaware, State Highway Department Standard Specifications, July 1, 1960 and as given in the Special Provisions.

Loading A.A.SHO H-20-S-16-44

Design Stresses: Structural and Reinf Steel: 18000 psi
Reinforced Conc. = f_c = 1200 psi n = 10

Composite Construction: No intermediate temporary supports shall be used during construction.

Fill at abutment shall be placed to an elevation one foot above bottom of concrete footing before starting footing excavation and pile driving.

Backfill behind abutments to be placed only after bridge deck slab has been completed.

Minimum waiting period before loads are permitted on the bridge, after completion of the bridge deck slab: 10 days for loads of 2 tons to 10 tons, and 28 days for loads of 2 tons to the legal load limit.

For steel Notes see Dwg No. 3-5
For Concrete Notes see Dwg No. 3-7
For Pile Notes see Dwg No. 3-2
For Boring Logs see sheet 201
For details of electric conduits and junction boxes in sidewalk see Dwg. No. 5-8.

DELAWARE STATE HIGHWAY DEPARTMENT

DELAWARE TURNPIKE

ROUTE 896 BRIDGE OVER TURNPIKE

GENERAL ARRANGEMENT

DRAWN: H.R.P.	SCALE: AS NOTED	DATE: MAY 9, 1962	DWG.: 3-1
TRACED:	TIPPETTS-ABBETT-McCARTHY-STRATTON ENGINEERS AND ARCHITECTS		CONTRACT 7002
CHECKED: B.S.			
CHARGE OF			SHEET 148 OF 224

COUNTY	CONTRACT	P.R.A. REQ. NO	STATE	FED. AID PROJECT NO.	FISCAL YEAR	SHEET NO	TOTAL SHEETS
NEW CASTLE	7002	2	DEL.			149	224

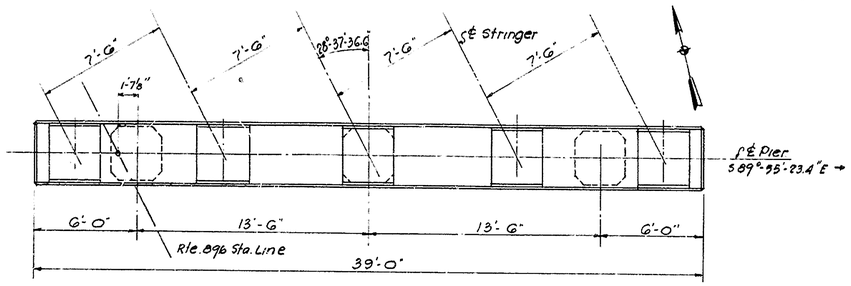

PLAN
SCALE ¼ IN. = 1 FT.

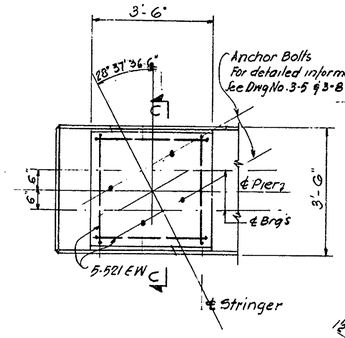

PAD - PLAN
SCALE ½ IN = 1 FT.

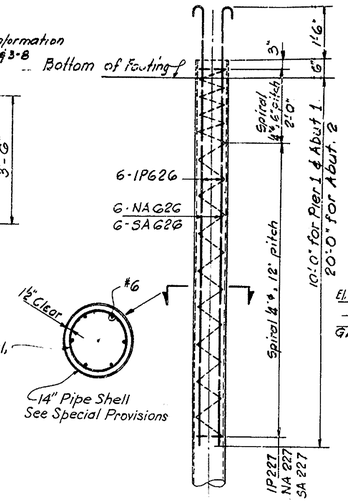

PILE DETAIL
SCALE: ½ IN = 1 FT.

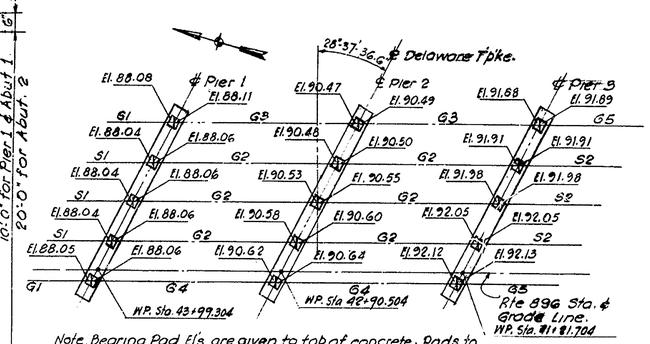

Note. Bearing Pad El's are given to top of concrete. Pads to be poured ¼" higher and the Bush-hammered to elevations shown.

KEY PLAN
NO SCALE

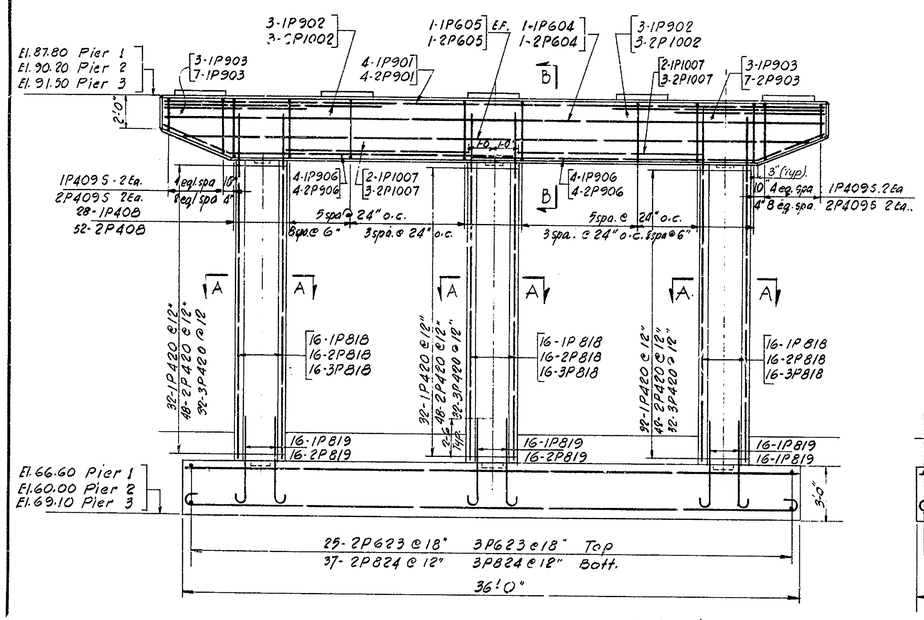

Note
Arrangement of reinforcing steel for Pier #3 (3P) to be similar to shown for Pier #2 (2P) except as noted

Footing shown applies to Piers 2 & 3 only.

ELEVATION
SCALE ¼ IN. = 1 FT

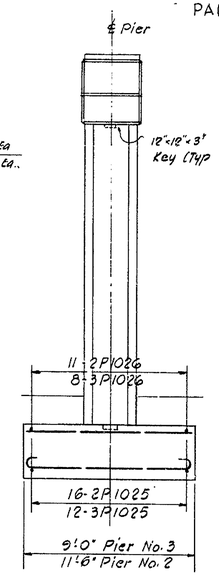

END VIEW
SCALE ¼ IN. = 1 FT

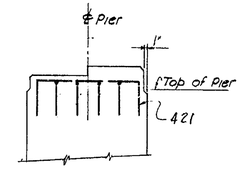

SECTION C-C

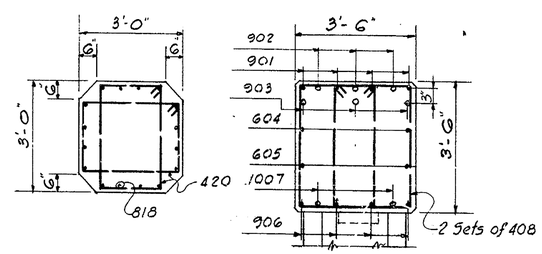

SECTION A-A SECTION B-B
SCALE ½ IN = 1 FT.

PILE NOTE:
Pile driving: Single-acting piledriver with adjustable loads; 15,000 ft-lbs minimum driving energy.
Actual pile lengths to be determined by test piles.

All obstructions within 15 feet below original ground surface at the abutments and 15 feet below the bottom of the pile cap at pier No. 3 shall be overcome by methods approved by Engineer to allow advancing the piles beyond such obstruction.

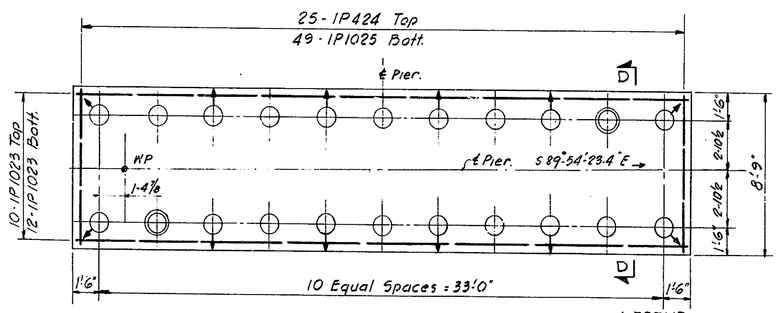

PILE PLAN PIER No. 1
SCALE: 1/4 IN. = 1 FT.

LEGEND
○ - Vertical Piles
○→ Batter Piles (1 on 4)
◎ - Test Pile.

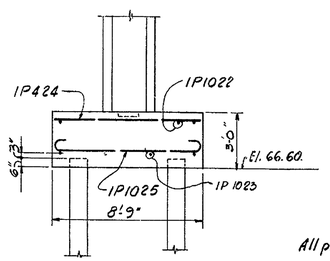

SECTION D-D
SCALE: 1/4 IN. = 1 FT.

PILE SCHEDULE		
LOCATION	CAPACITY IN TONS	ESTIM. LENGTH
Abutment #1	35*	50'
Abutment #2	50	50'
Pier 1	35*	30'
Pier 2	SPREAD FOOTINGS ALLOWABLE SOIL PRESSURE 4,000 psf.	
Pier 3		

All piles CIP, Concr piles, min. butt 14" ϕ.

*The total capacity of all piles shall be 50 tons. A 15 ton negative skin friction allowance is made for Abutment 1 and Pier 1.

NOTES:
For General Notes see Dwg. No. 3-1
For Concrete Notes see Dwg. No. 3-7
For Anchor Bolts see Dwg. No. 3-8
For Reinforcing Bar Schedule see Dwg. Nos. 3-11 To 3-13
Maximum allowable soil pressure: 2 Tons/sq. ft. at Piers 2 & 3.

DELAWARE STATE HIGHWAY DEPARTMENT
DELAWARE TURNPIKE

ROUTE 896 BRIDGE OVER TURNPIKE

PIERS

DRAWN: S. V.	SCALE: AS NOTED	DATE: MAY 9, 1962	DWG.: 3-2
TRACED:	TIPPETTS-ABBETT-McCARTHY-STRATTON ENGINEERS AND ARCHITECTS		CONTRACT 7002
CHECKED: T. K.			
CHARGE OF			SHEET 149 OF 224

COUNTY	CONTRACT	P.R.A. REG. NO.	STATE	FED. AID PROJECT NO.	FISCAL YEAR	SHEET NO.	TOTAL SHEETS
NEW CASTLE	7002	2	DEL			150	224

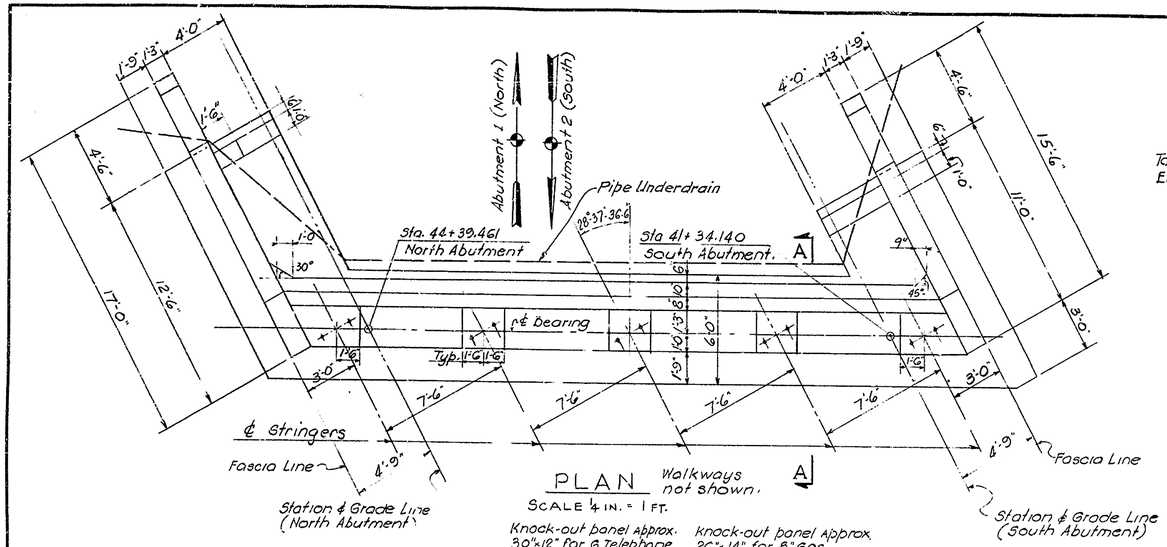

PLAN
SCALE 1/4 IN. = 1 FT.
Walkways not shown.

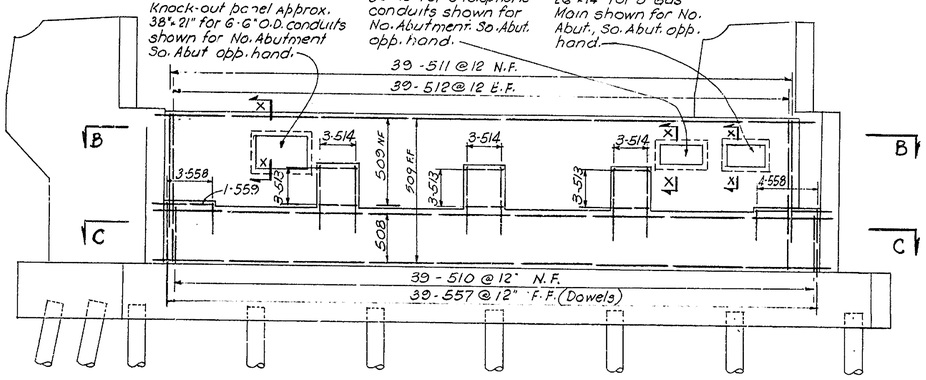

ELEVATION
SCALE 1/4 IN. = 1 FT.

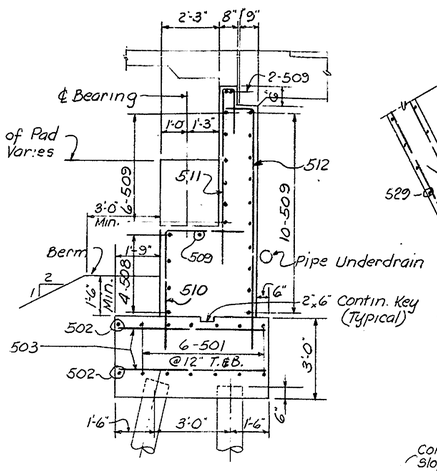

SECTION A-A
SCALE 3/8 IN. = 1 FT.

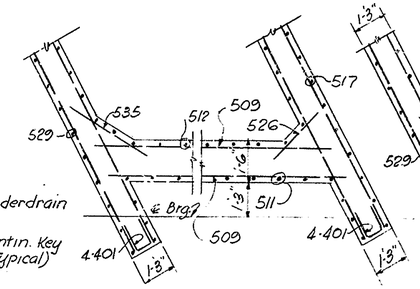

SECTION B-B
SCALE 3/8 IN. = 1 FT.

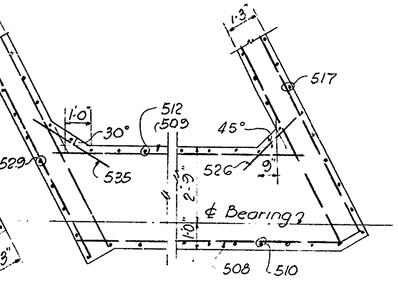

SECTION C-C
SCALE 3/8 IN. = 1 FT.

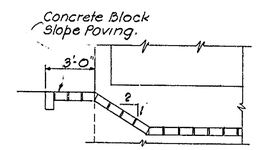

SECTION D-D
NO SCALE

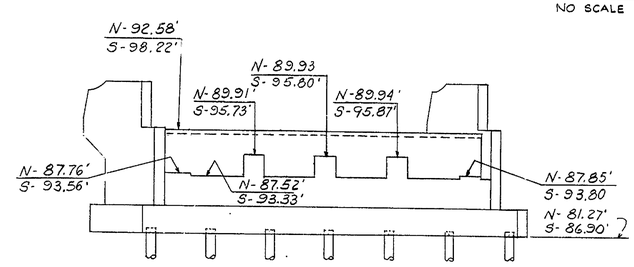

ABUTMENT ELEVATIONS
'N' Indicates North Abm't.
'S' " South "
SCALE 1/8 IN. = 1 FT.

Note:-
Bearing Pad El's are given to top of concrete. Pads to be poured 1/4" higher and Bush-hammered to elevation shown.

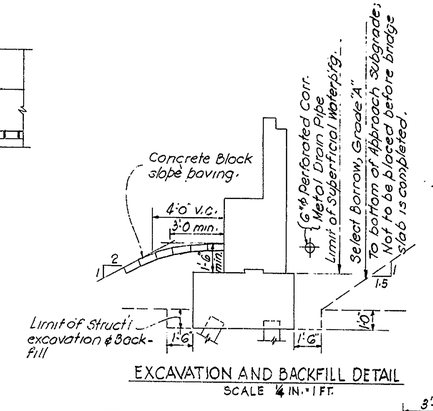

EXCAVATION AND BACKFILL DETAIL
SCALE 1/4 IN. = 1 FT.

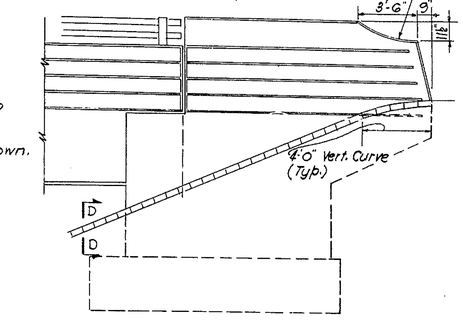

WINGWALL ELEVATION
SCALE 1/4 IN. = 1 FT.

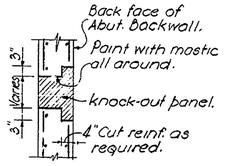

SECTION X-X

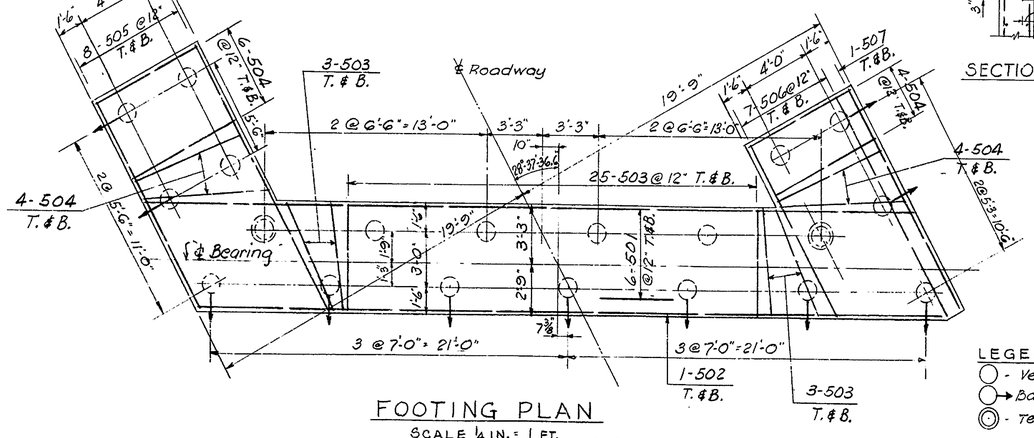

FOOTING PLAN
SCALE 1/4 IN. = 1 FT.
Piles shown are for North Abut. only.

LEGEND
- Vertical Piles
- Batter Piles (1 on 4)
- Test Pile

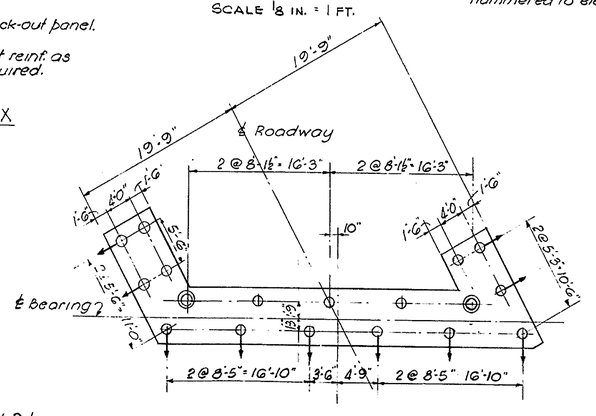

PILE PLAN
SOUTH ABUTMENT
SCALE 1/8 IN. = 1 FT.

NOTES
Work this drawing with Dwg. No. 3-4
For Reinf. Bar Schedule see Dwg. Nos 3-11 to 3-13

DELAWARE STATE HIGHWAY DEPARTMENT
DELAWARE TURNPIKE

ROUTE 896 BRIDGE OVER TURNPIKE

ABUTMENTS

DRAWN: W. J. K.	SCALE: AS NOTED	DATE: MAY 9, 1962	DWG.: 3-3
TRACED:	TIPPETTS-ABBETT-McCARTHY-STRATTON ENGINEERS AND ARCHITECTS		CONTRACT 7002
CHECKED: A.Z.E.			
CHARGE OF			SHEET 150 OF 224

COUNTY	CONTRACT	P.R.A. REG. NO	STATE	FED. AID PROJECT NO.	FISCAL YEAR	SHEET NO	TOTAL SHEETS
NEW CASTLE	7002	2	DEL.			151	224

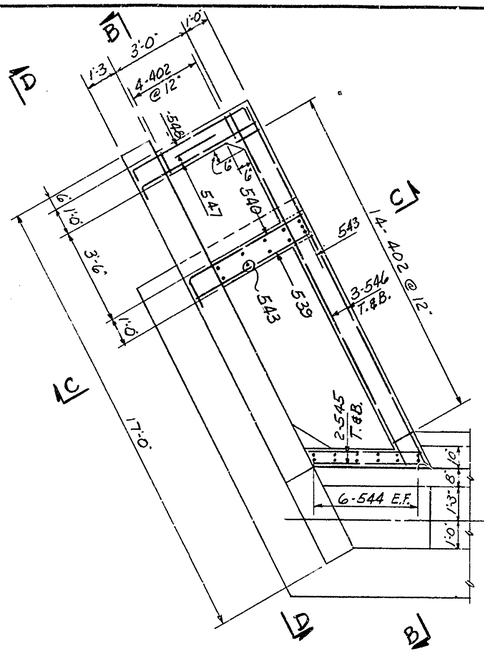

SECTION A-A
ABUTMENT #2 - SOUTH

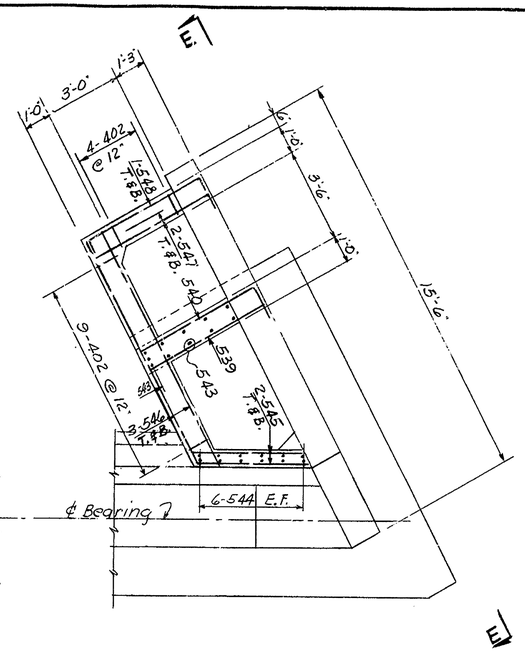

SECTION A'-A'
ABUTMENT #1 - NORTH

SCALE 3/8 IN. = 1 FT.

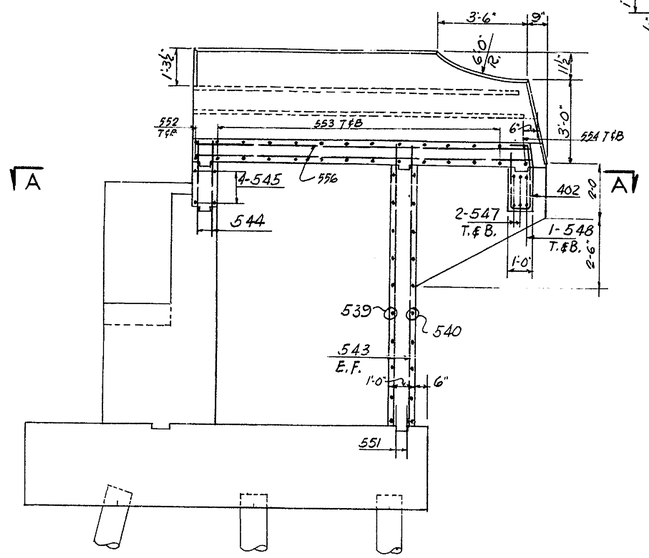

SECTION B-B

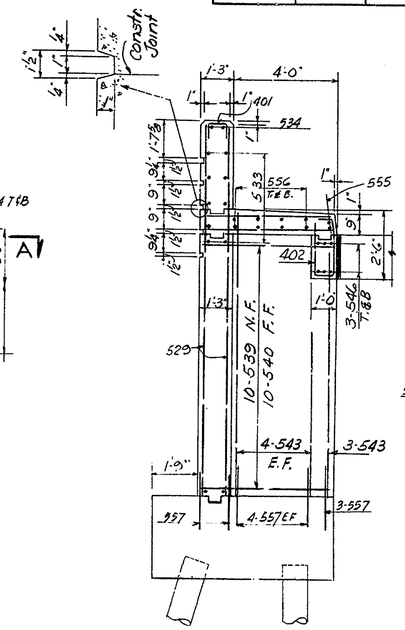

SECTION C-C

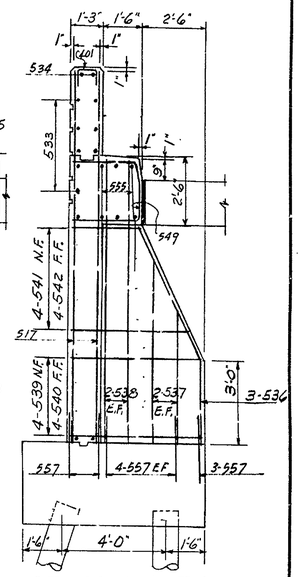

SECTION F-F

SCALE 3/8 IN. = 1 FT.

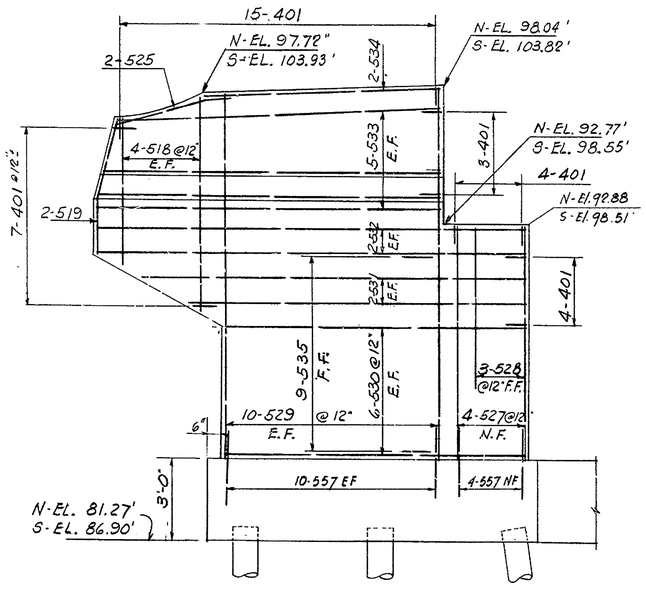

ELEVATION D-D

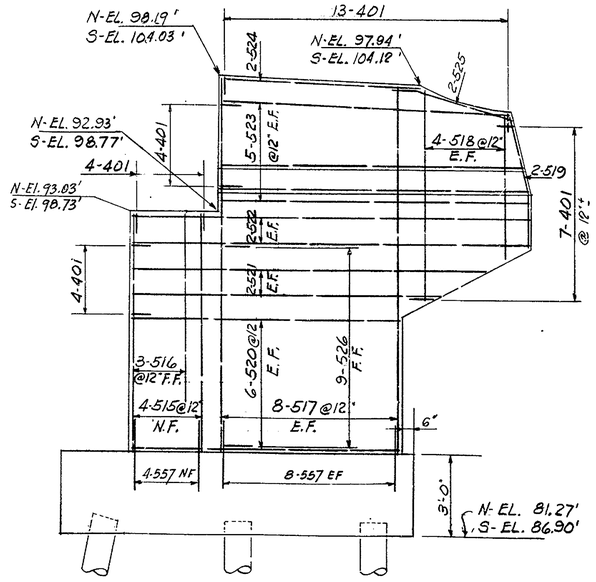

ELEVATION E-E

SCALE 3/8 IN. = 1 FT.

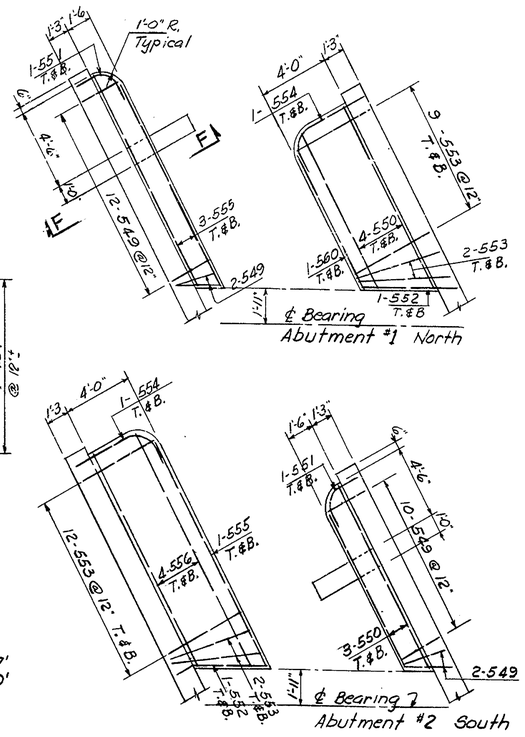

PLAN
SIDEWALK REINFORCING
SCALE 1/4 IN. = 1 FT.

NOTES

For General Notes see Dwg. No. 3-1
For Concrete notes see Dwg. No. 3-7
For Pile Schedule and Pile Notes see Dwg. No. 3-2
For Reinforcing Bar Schedule see Dwg. Nos. 3-11 to 3-13
Work this drawing with Dwg. No. 3-3
For electric conduits in abutments see Dwg. No. 3-1 & 5-8.

DELAWARE STATE HIGHWAY DEPARTMENT
DELAWARE TURNPIKE

ROUTE 896 BRIDGE OVER TURNPIKE

ABUTMENT DETAILS

DRAWN: W.J.K.	SCALE: AS NOTED	DATE: MAY 9, 1962	DWG.: 3-4
TRACED:	TIPPETTS-ABBETT-McCARTHY-STRATTON ENGINEERS AND ARCHITECTS		CONTRACT 7002
CHECKED: A.Z.E.			
CHARGE OF			SHEET 151 OF 224

COUNTY	CONTRACT	P.R.A. REG. NO.	STATE	FED. AID PROJECT NO.	FISCAL YEAR	SHEET NO.	TOTAL SHEETS
NEW CASTLE	7002	2	DEL			152	224

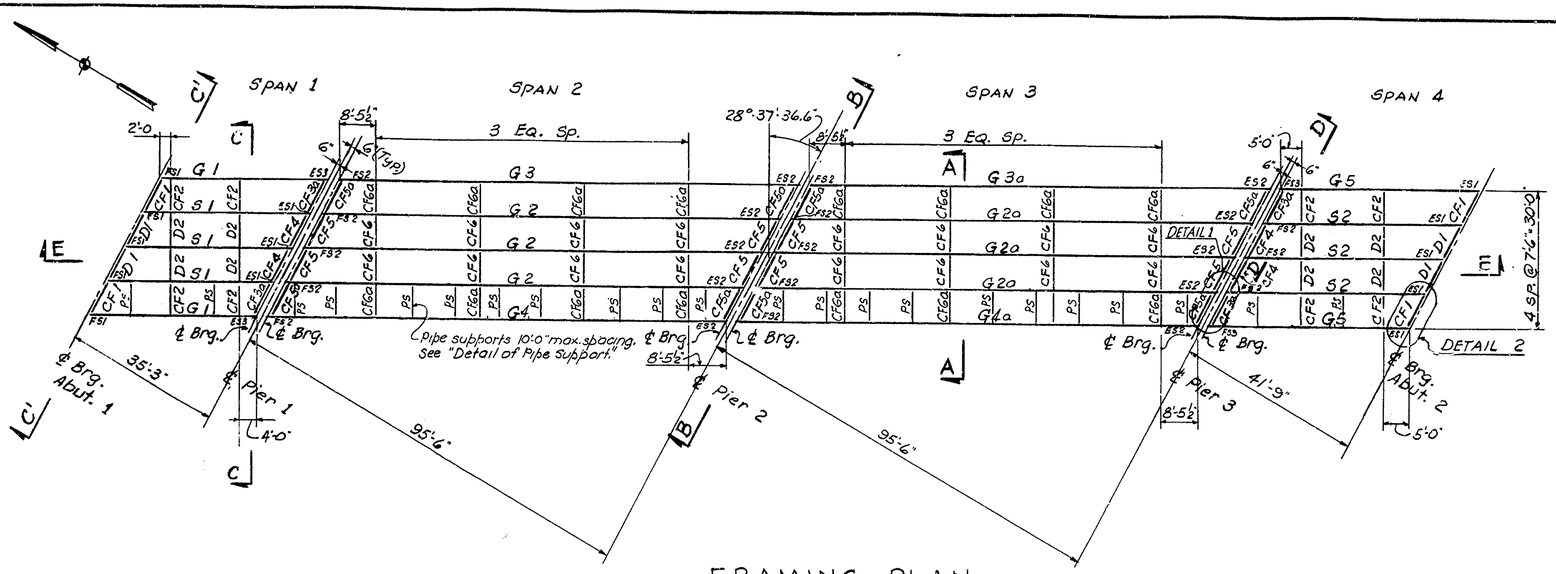

FRAMING PLAN

SCALE 1/16 IN. = 1 FT.

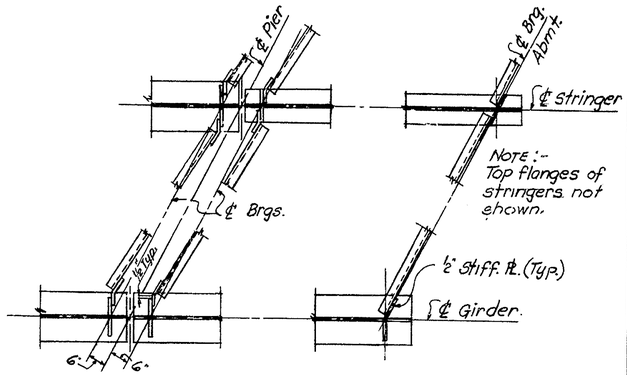

DETAIL 1
Typical at Piers

DETAIL 2
Typical at Abut's.

SCALE 1/2 IN. = 1 FT.

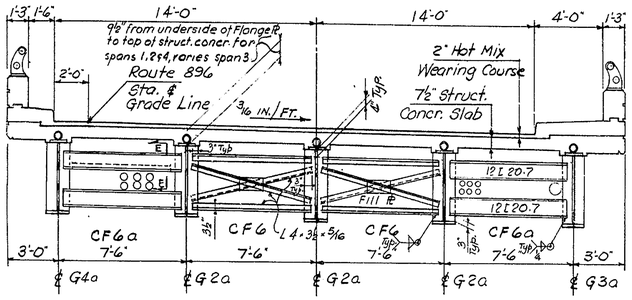

SECTION A-A

SCALE 1/4 IN. = 1 FT.

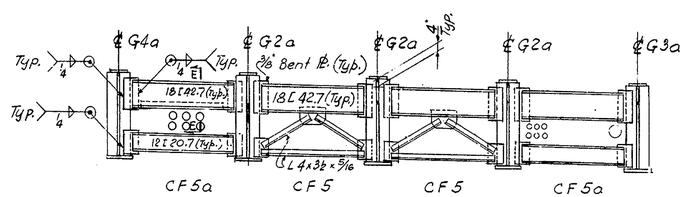

SECTION B-B

SCALE 1/4 IN. = 1 FT.

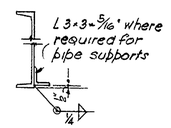

SECTION E-E

SCALE 1 IN. = 1 FT.

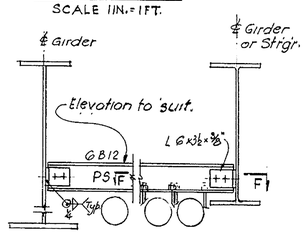

DETAIL OF PIPE SUPPORT

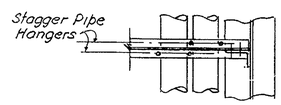

SECTION F-F

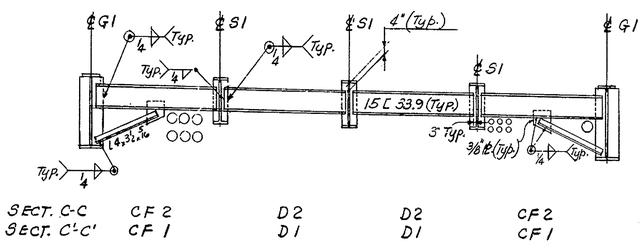

SECT. C-C	CF 2	D2	D2	CF2
SECT. C'-C'	CF 1	D1	D1	CF1

SECTION C-C (SHOWN)
SECTION C'-C' (SIMILAR)

SCALE 1/4 IN. = 1 FT.

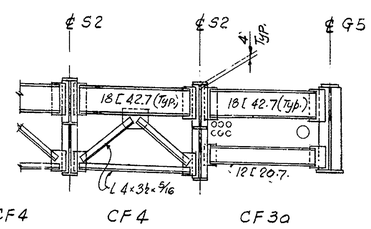

SECTION D-D

SCALE 1/4 IN. = 1 FT.

NOTES

For General Notes see Dwg. No. 3-1
For material specifications see Special Provisions.
All shop connections to be welded.
All field connections to be welded or bolted with 7/8" Φ high strength bolts.
All Diaphragms to be in a vertical plane when girders are in final erected position.
Painting: For shop and field painting see Standard Specifications and Special Provisions.
For stringer schedule and details see Dwg. No. 3-6
For Bearing shoes see Dwg. No. 3-8
Work this drawing with Dwg. No. 3-6
For special notes and deck reinforcement support detail, see Dwg. 1-2.
All utility installations are by Others.

DELAWARE STATE HIGHWAY DEPARTMENT
DELAWARE TURNPIKE

ROUTE 896 BRIDGE OVER TURNPIKE
SUPERSTRUCTURE
FRAMING

DRAWN: W.J.K.	SCALE AS NOTED	DATE MAY 9, 1962	DWG.: 3-5
TRACED:	TIPPETTS-ABBETT-McCARTHY-STRATTON ENGINEERS AND ARCHITECTS		CONTRACT 7002
CHECKED: B.S.			
CHARGE OF			SHEET 152 OF 224

COUNTY	CONTRACT	P.R.A. REG NO	STATE	FED. AID PROJECT NO.	FISCAL YEAR	SHEET NO	TOTAL SHEETS
NEW CASTLE	7002	2	DEL.			153	224

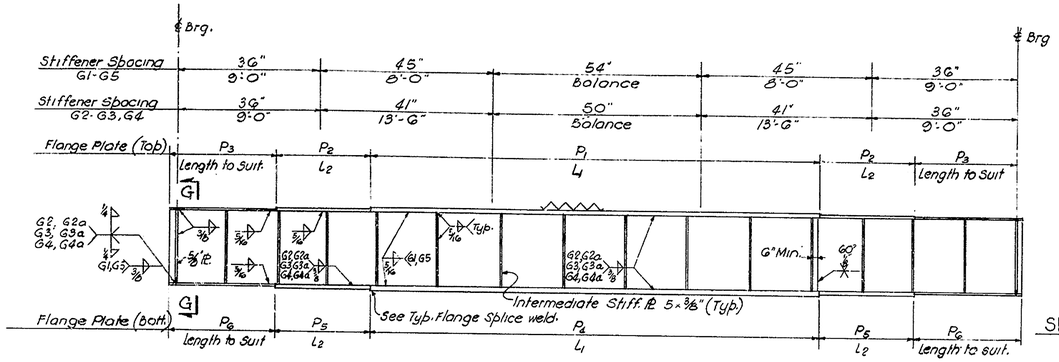

GIRDER ELEVATION

NO SCALE

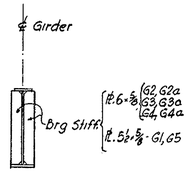

SECTION G-G

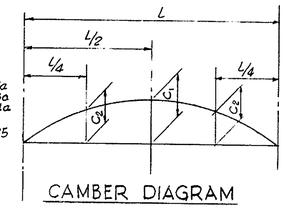

CAMBER DIAGRAM

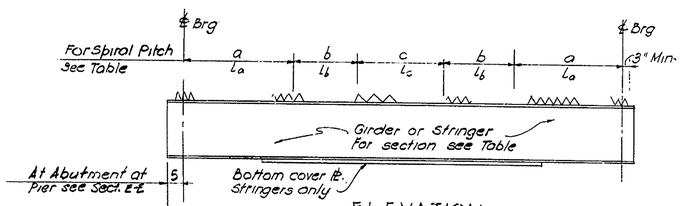

ELEVATION

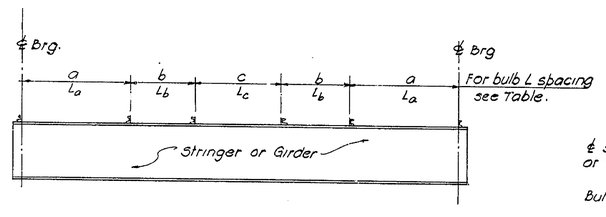

BULB ANGLE DETAILS

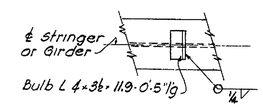

PLAN

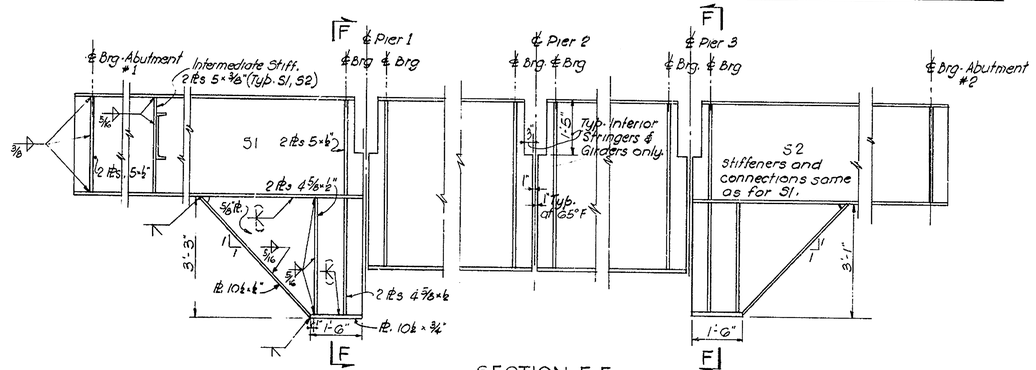

SECTION E-E

SCALE ½ IN.=1 FT.

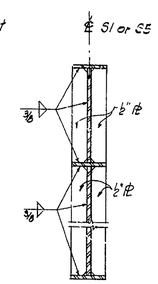

SECTION F-F

SCALE ½ IN.=1 FT.

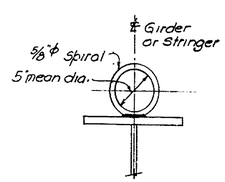

SECTION X-X

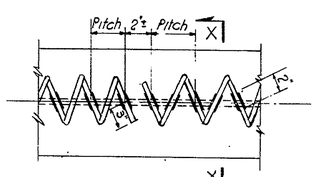

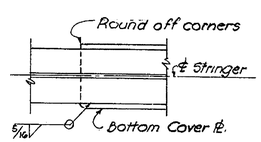

COVER PL

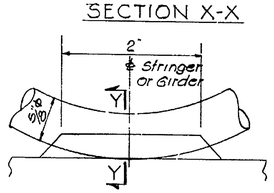

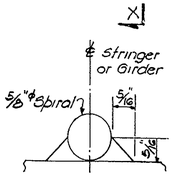

SECTION Y-Y

SPIRAL DETAILS

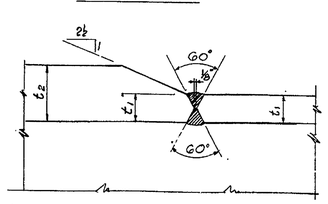

TYPICAL FLANGE SPLICE WELD

STRINGER SCHEDULE

		S1	S2	G1	G2 / G2a	G3 / G3a	G4 / G4a	G5
REACTION	DL - I	19.5	19.9	20.3	56.4	67.2	60.3	24.1
	DL - II	8.1	9.7	14.3	25.3	25.3	25.3	16.9
	LL	37.5	39.3	35.2	44.8	42.1	42.1	36.9
	I	11.3	11.4	10.6	9.6	9.0	9.0	10.7
	SW-LL	—	—	6.7	—	18.3	—	8.0
MOMENT	DL - I	196	241	198	1517	1807	1620	280
	DL - II	81	114	139	680	680	680	197
	LL	302	391	283	1133	1064	1064	368
	I	91	114	85	244	229	229	107
	SW-LL	—	—	66	—	492	—	93
STRESS SECTION	SHAPE	30WF108	30WF108	SEE TABLE BELOW				
	BOTTOM COVER PL	—	18"×9/16"×34'-0"					
	STEEL - BOTTOM	16.7	17.6	11.8	17.7	17.5	17.7	16.1
	STEEL - TOP	7.1	10.9	5.9	17.6	18.0	17.3	8.3
SHEAR CONNECTOR	SPIRAL PITCH a/La	5½"/5'-0"	4½"/6'-6"	7"/5'-0"	6½"/11'-0"	5½"/10'-0"	7"/10'-0"	6½"/4'-0"
	SPIRAL PITCH b/Lb	7"/8'-6"	6"/9'-6"	9"/8'-6"	9"/20'-0"	9"/22'-0"	9"/19'-0"	8"/13'-0"
	SPIRAL PITCH c/Lc	12" Balance	10" Balance	16" Balance	16" Balance	16" Balance	16" Balance	16" Balance
	BULB ANGLE SPACING a/La	12"/5'-0"	11"/6'-6"	16"/5'-0"	15"/11'-0"	12"/10'-0"	16"/10'-0"	15"/4'-0"
	BULB ANGLE SPACING b/Lb	16"/8'-6"	14"/9'-6"	21"/11'-0"	21"/23'-0"	16"/22'-0"	21"/23'-0"	19"/13'-0"
	BULB ANGLE SPACING c/Lc	24" Bal.	24" Bal	24" Bal.	24" Bal.	24" Bal.	24" Bal.	24" Bal.
CAMBER	C1	5/8"	3/4"	1/4"	4 7/8 / 3 7/8	4 7/8 / 3¾	4 7/8 / 4¼	3/8"
	C2	1/8"	5/8"	1/8"	3 5/8 / 2¾	3 5/8 / 2⅝	3 5/8 / 2¾	1/4"

Beams to be cambered as shown. If the required camber is less than the camber likely to remain permanent, beam is to have natural camber turned in direction to reduce haunch.

DL I = Weight of beam and deck slab.
DL II = Wt. of wearing surface, curb, parapet & railing.

GIRDER MARK	WEB PLATE	FLANGE PLATES P1	L1	P4	P2	L2	P5	P3	P6
G1	54×5/16	12×½"	F.L.	12×¾"	—	—	—	—	—
G2, G2a	54×3/8	14×1 5/16"	65'-0"	18×2¼"	14×⅞"	10'-3"	18×2"	14×¾"	18×1"
G3, G3a	54×3/8	14×1⅞"	64'-0"	18×2¾"	14×1"	12'-6"	18×2⅜"	14×¾"	18×1"
G4, G4a	54×3/8	14×1¾"	65'-0"	18×2¼"	14×⅞"	10'-3"	18×2"	14×¾"	18×1"
G5	54×5/16	12×½"	F.L.	12×¾"	—	—	—	—	—

NOTES

For General Notes see Dwg No. 3-1
All stiffener plates to be vertical when stringers are in final erected position.
All shear connectors to be 5/8" ϕ spirals or bulb angles at the option of the contractor. Nelson Studs may be substituted with the approval of the Engineer.
Rolled beams shall have their rolled camber upward before welding of bottom cover plate.
For additional steel notes see Dwg No. 3-5
Work this drawing with Dwg. No. 3-5

DELAWARE STATE HIGHWAY DEPARTMENT

DELAWARE TURNPIKE

ROUTE 896 BRIDGE OVER TURNPIKE

SUPERSTRUCTURE

STRINGERS

DRAWN: H.R.P.	SCALE: AS NOTED	DATE MAY 9, 1962	DWG.: 3-6
TRACED:	TIPPETTS-ABBETT-McCARTHY-STRATTON ENGINEERS AND ARCHITECTS		CONTRACT 7002
CHECKED: T.K.			
CHARGE OF			SHEET 153 OF 224

COUNTY	CONTRACT	F.R.A. REG. NO.	STATE	FED. AID PROJECT NO.	FISCAL YEAR	SHEET NO.	TOTAL SHEETS
NEW CASTLE	7002	2	DEL.			154	224

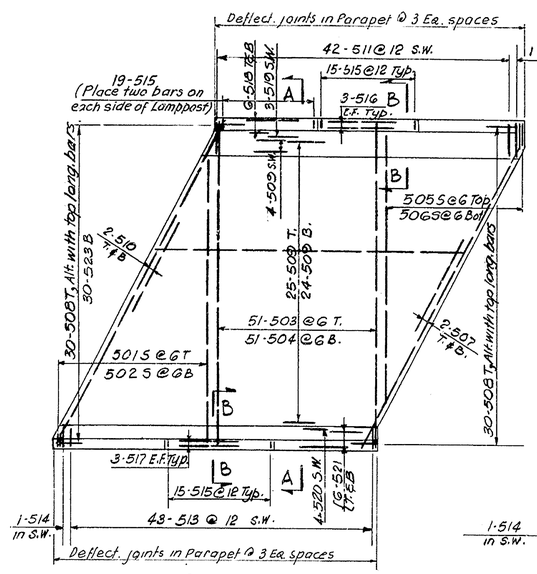

SLAB "A"

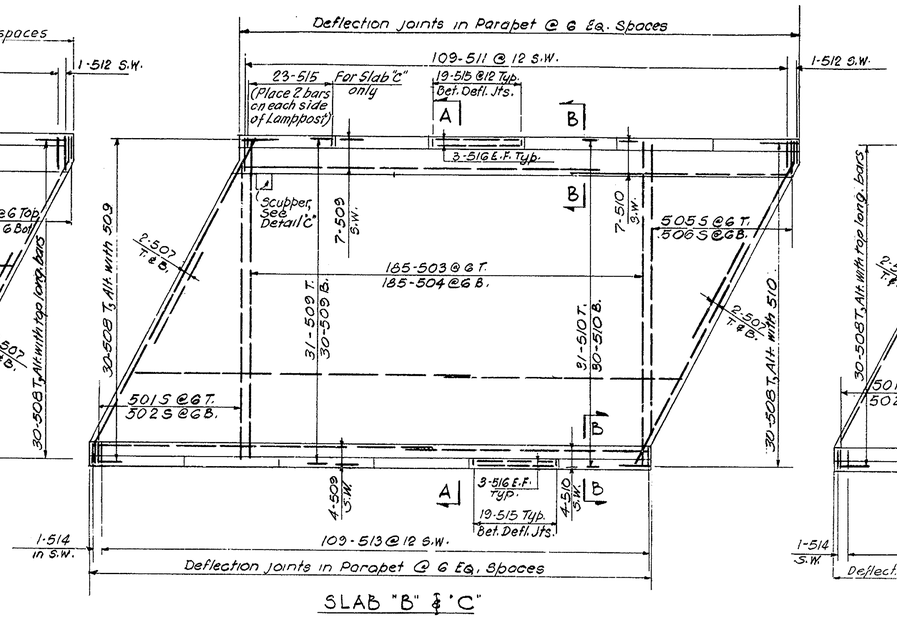

SLAB "B" & "C"

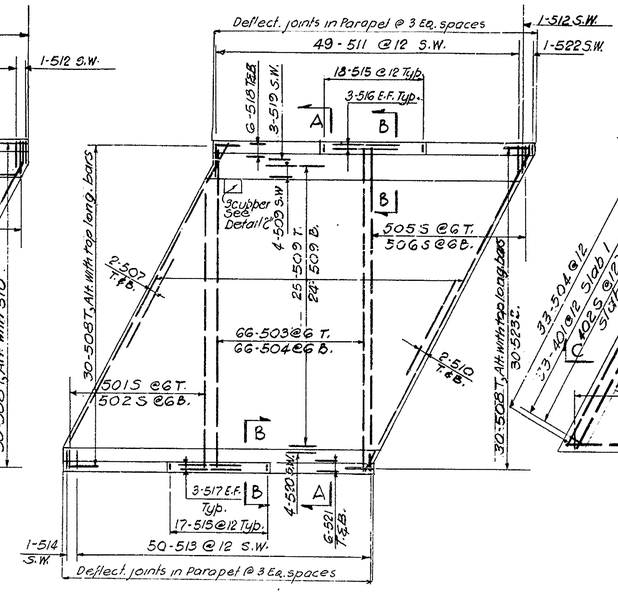

SLAB "D"

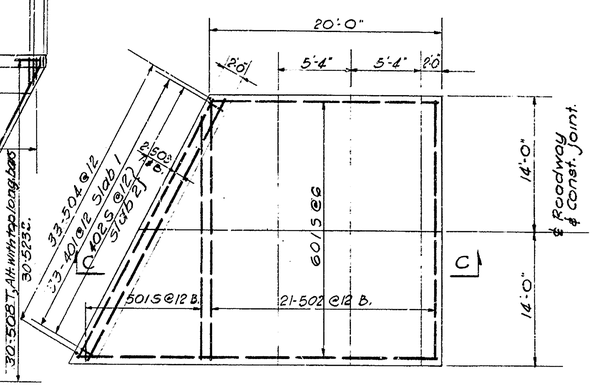

APPROACH SLAB 1 & 2

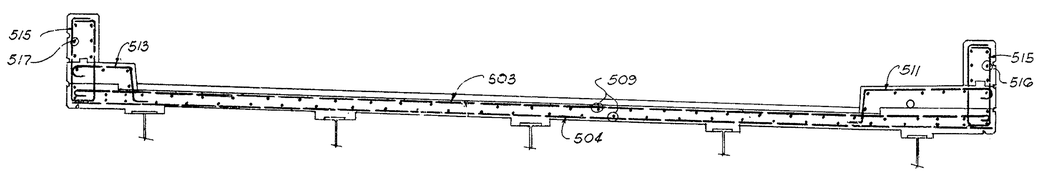

SECTION A-A
SCALE 3/8 IN. = 1 FT.

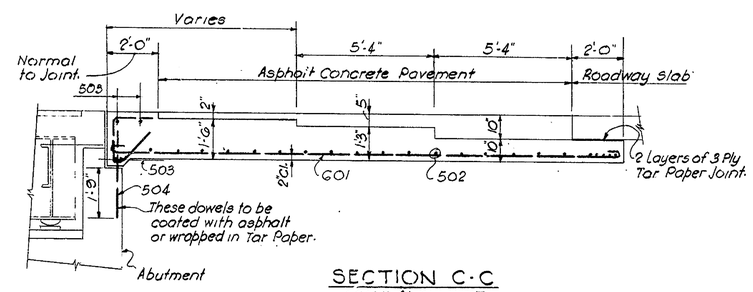

SECTION C-C
SCALE 3/8 IN. = 1 FT.

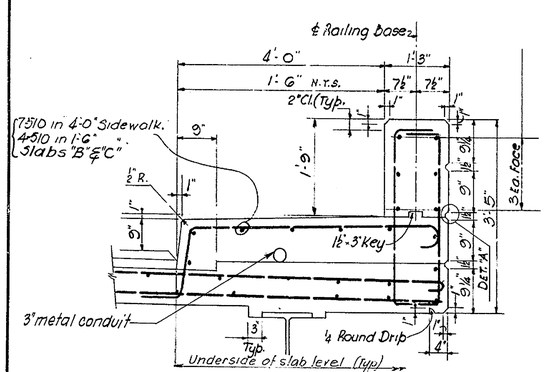

SECTION B-B
SCALE 3/4 IN. = 1 FT.

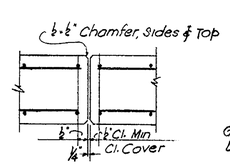

DETAIL "B"
SCALE 3/4 IN. = 1 FT.

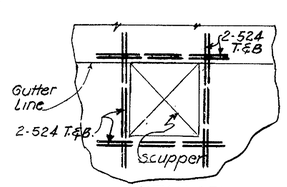

DETAIL "C"
SCALE 1/2 IN. = 1 FT.

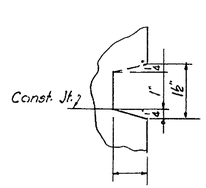

DETAIL "A"

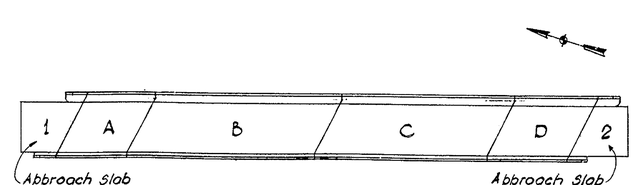

KEY PLAN
SCALE 1 IN. = 40 FT.

NOTES:

CONCRETE NOTES:

Concrete Water-reducing Retarder Admixture shall be added to all superstructure concrete (see Special Provisions).
Splices for stress bars shall be a minimum of 30 diameters, all other splices a minimum of 20 diameters.
Construction joints other than those shown will not be permitted without the written approval by the Engineer.
Exposed concrete edges shall be chamfered 1" unless otherwise noted.
Concrete cover for reinforcement as per AASHO or as noted.

For Railing Posts see Dwg. 3-8
For Joint Details see Dwg. 3-9
For Reinforcing Bar Schedule see Dwg Nos 2-11 to 2-13.

DELAWARE STATE HIGHWAY DEPARTMENT
DELAWARE TURNPIKE

ROUTE 896 BRIDGE OVER TURNPIKE
SUPERSTRUCTURE
DECK AND APPROACH SLABS

DRAWN: H.R.P.	SCALE: AS NOTED	DATE: MAY 9, 1962	DWG. 3-7
TRACED:	TIPPETTS-ABBETT-McCARTHY-STRATTON ENGINEERS AND ARCHITECTS		CONTRACT 7002
CHECKED: A.Z.E.			
CHARGE OF			SHEET 154 OF 224

COUNTY	CONTRACT	P.R.A. REG. NO.	STATE	FED. AID PROJECT NO.	FISCAL YEAR	SHEET NO.	TOTAL SHEETS
NEW CASTLE	7002	2	DEL			155	224

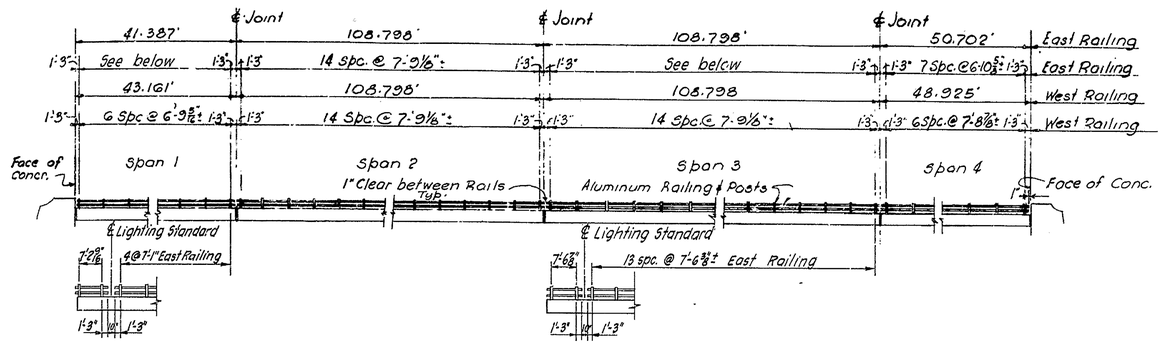

RAILING ELEVATION

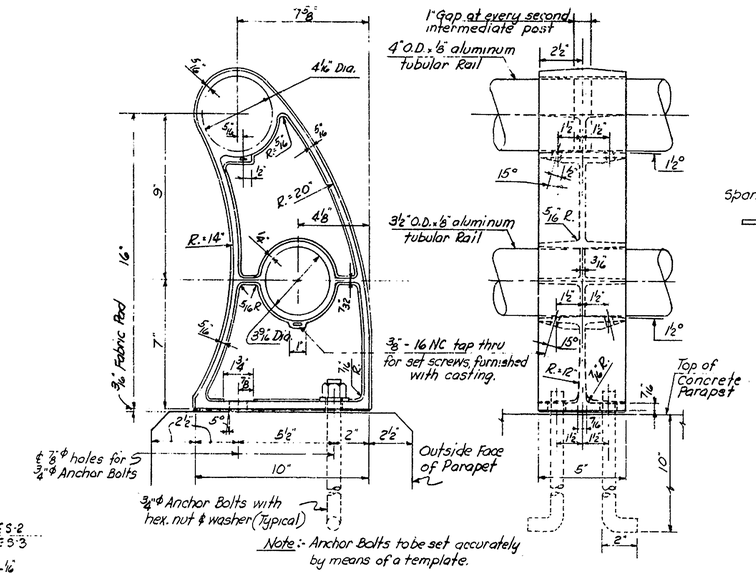

Note:- Anchor Bolts to be set accurately by means of a template.

RAILING DETAILS
Scale 3" = 1'-0"

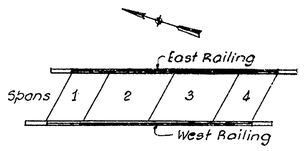

KEY PLAN

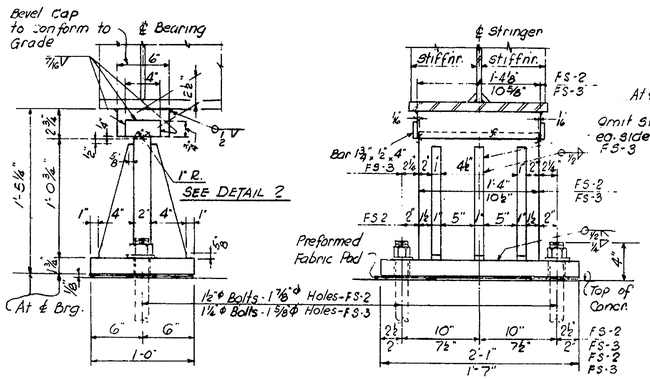

FIXED SHOE FS 2 & 3
SCALE 1 1/2 IN. = 1 FT.

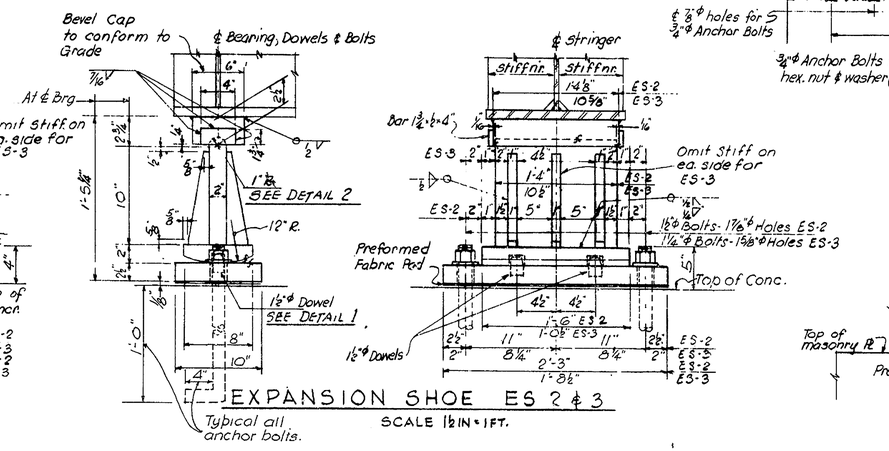

EXPANSION SHOE ES 2 & 3
SCALE 1 1/2 IN. = 1 FT.

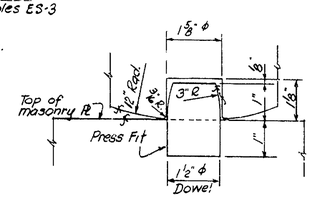

DETAIL 1
Scale 6" = 1'-0"

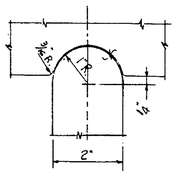

DETAIL 2
Scale 6" = 1'-0"

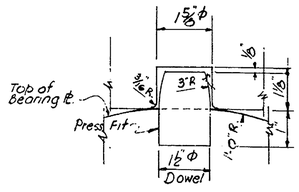

DETAIL 3
SCALE 6 IN. = 1 FT.

RAILING NOTES

Railing Posts shall be erected normal to grade and rails shall be parallel to established grade.

Anchor bolts for railing posts shall be aluminum alloy meeting the requirements of ASTM-B211 alloy 2024-T4. Finished aluminum alloy bolts, nuts and washers shall be given an anodic coating at least 0.0002 in. thick and a chromate seal.

Anchor bolts shall be set accurately by means of template after nuts have been placed and tightened to the satisfaction of the Engineer, bolts shall be cut off 1/8" above nuts and peened.

Tubular rails shall be closed at all piers and abutments with welded aluminum plug.

Rails shall be continuous at all end posts.

NOTES

Shoes to have vertical and horizontal ℄'s mutually perpendicular at 65° F.

For location of shoes see Dwg. No. 3-5

For steel notes see Dwg. No. 3-5

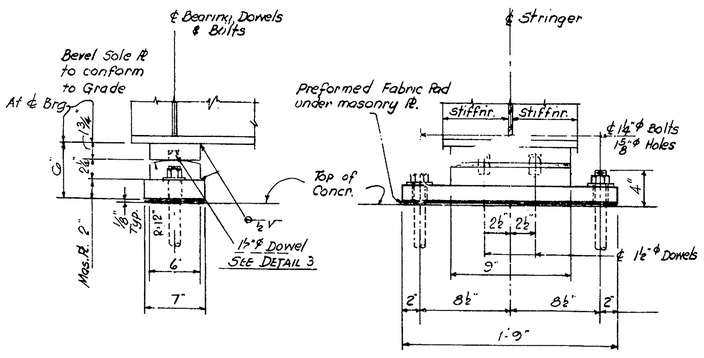

FIXED SHOES FS-1
SCALE 1 1/2 IN. = 1 FT.

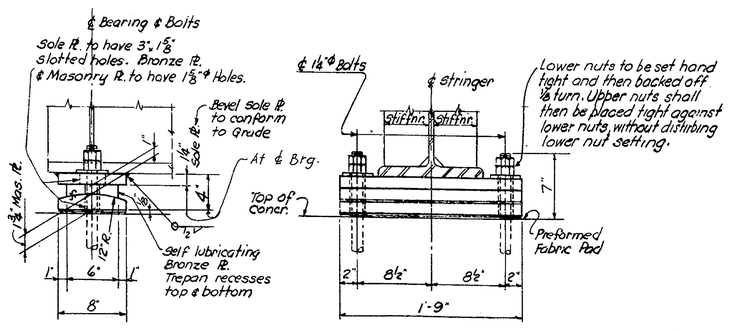

EXPANSION SHOE ES-1
SCALE 1 1/2 IN. = 1 FT.

DELAWARE STATE HIGHWAY DEPARTMENT
DELAWARE TURNPIKE

ROUTE 896 BRIDGE OVER TURNPIKE
SUPERSTRUCTURE
RAILING AND SHOE DETAILS

DRAWN: H.R.P.	SCALE: AS NOTED	DATE: MAY 9, 1962	DWG.: 3-8
TRACED:	TIPPETTS-ABBETT-McCARTHY-STRATTON ENGINEERS AND ARCHITECTS		CONTRACT 7002
CHECKED: M.K.			
CHARGE OF			SHEET 155 OF 224

COUNTY	CONTRACT	P.R.R. REG. NO	STATE	FED. AID PROJECT NO.	FISCAL YEAR	SHEET NO	TOTAL SHEETS
NEW CASTLE	7002	2	DEL			156	224

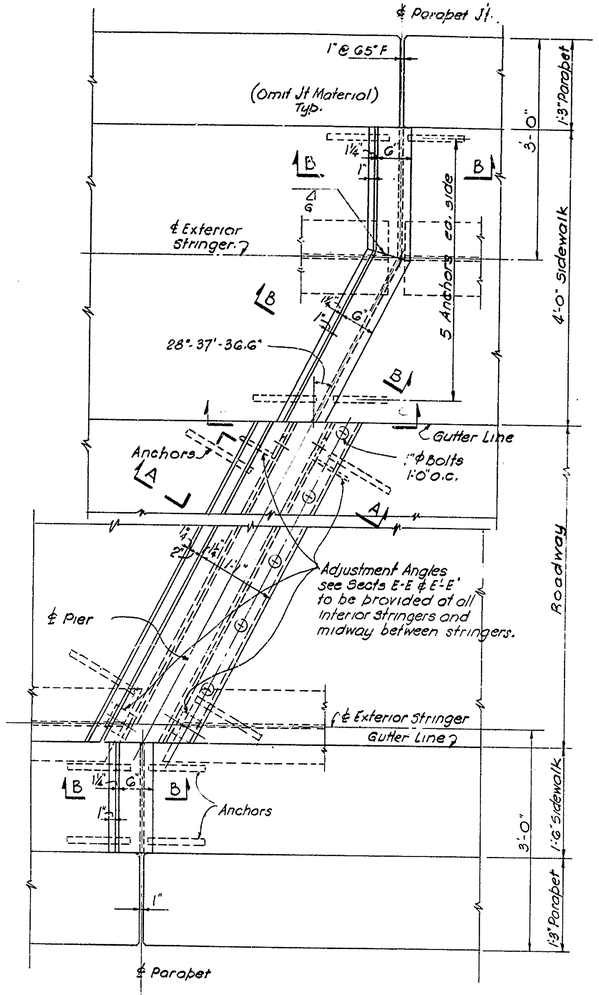

PLAN AT EXPANSION JOINT
SLIDING PLATE DETAIL
SCALE 1 IN. = 1 FT.

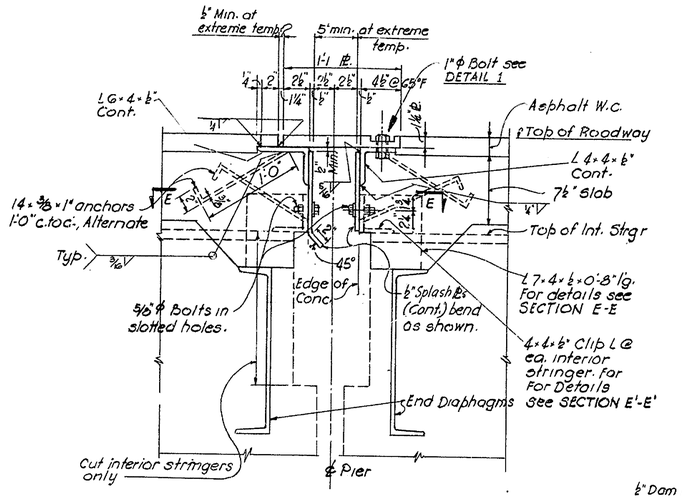

SECTION A-A
SCALE 1½ IN. = 1 FT.

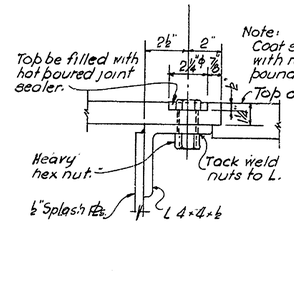

DETAIL 1
SCALE 3 IN. = 1 FT

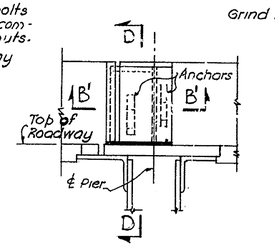

SECTION C-C
SCALE 1½ IN. = 1 FT.

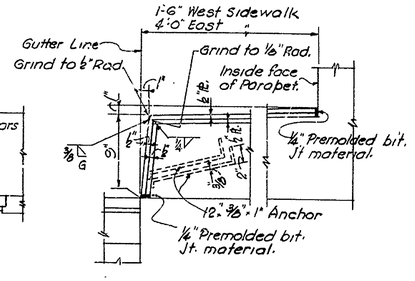

SECTION D-D
SCALE 1½ IN. = 1 FT.

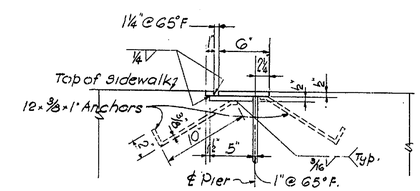

SECTION B-B
SCALE 1½ IN. = 1 FT.

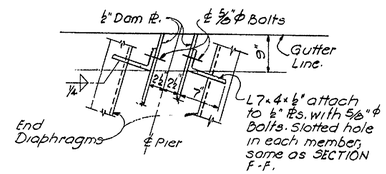

SECTION E-E
SCALE 1 IN. = 1 FT.

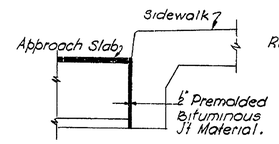

SECTION J-J
SCALE ½ IN. = 1 FT.

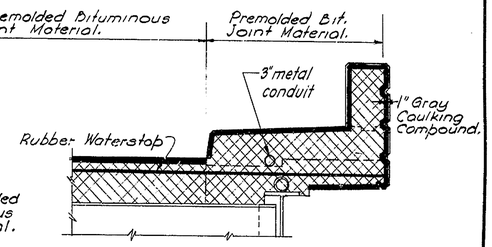

SECTION K-K shown
SECTION K'-K' similar
SCALE ½ IN. = 1 FT.

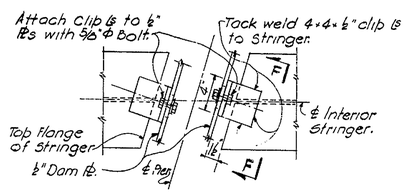

SECTION E'-E'
SCALE 1½ IN. = 1 FT.

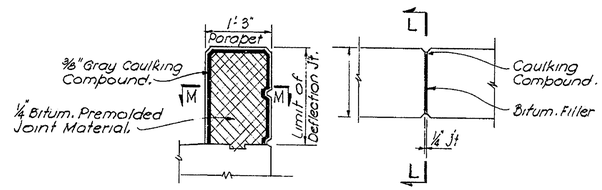

SECTION L-L SECTION M-M
DETAILS AT PARAPET DEFLECTION JOINT
SCALE ¾ IN. = 1 FT.

NOTES

Top of expansion joint to conform to roadway cross-section.

For painting see Standard Specifications and Special Provisions.

For location of Parapet Deflection Joints see Dwg. No. 3-7.
For General Notes see Dwg. 3-1.

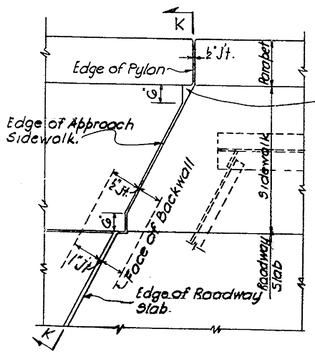

PLAN AT ABUTMENT #1

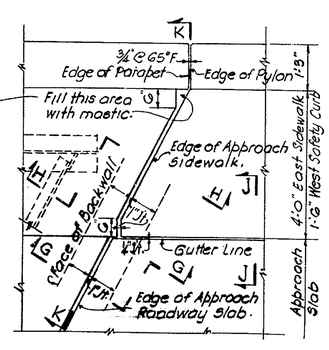

PLAN AT ABUTMENT #2
SCALE ½ IN. = 1 FT

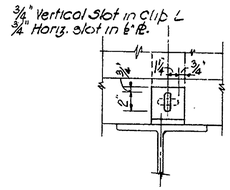

SECTION F-F
SCALE 1½ IN. = 1 FT.

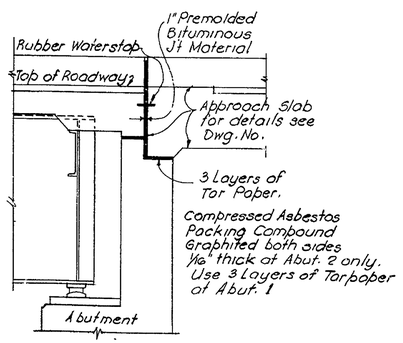

SECTION G-G
SCALE ½ IN. = 1 FT.

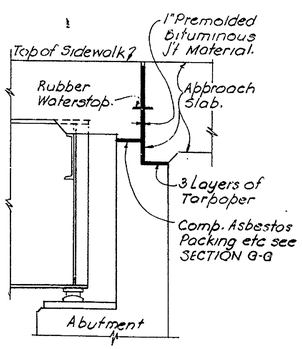

SECTION H-H
SCALE ½ IN. = 1 FT

DELAWARE STATE HIGHWAY DEPARTMENT
DELAWARE TURNPIKE

ROUTE 896 BRIDGE OVER TURNPIKE
SUPERSTRUCTURE
JOINT DETAILS

DRAWN: H.R.P.	SCALE: AS NOTED	DATE: MAY 9, 1962	DWG.: 3-9
TRACED:	TIPPETTS-ABBETT-McCARTHY-STRATTON ENGINEERS AND ARCHITECTS		CONTRACT 7002
CHECKED: M.K.			
CHARGE OF			SHEET 156 OF 224

COUNTY	CONTRACT	P.R.A. REG. NO	STATE	FED. AID PROJECT NO.	FISCAL YEAR	SHEET NO	TOTAL SHEETS
NEW CASTLE	7002	2	DEL.			157	224

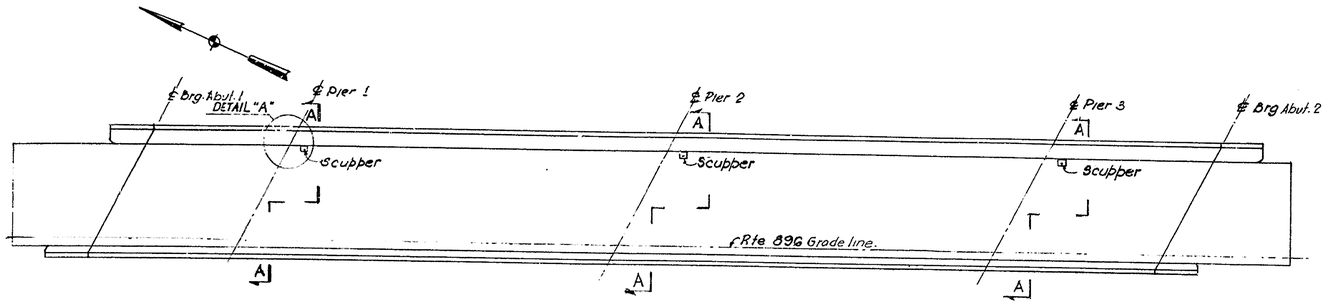

PLAN
SCALE 1 IN. = 20 FT.

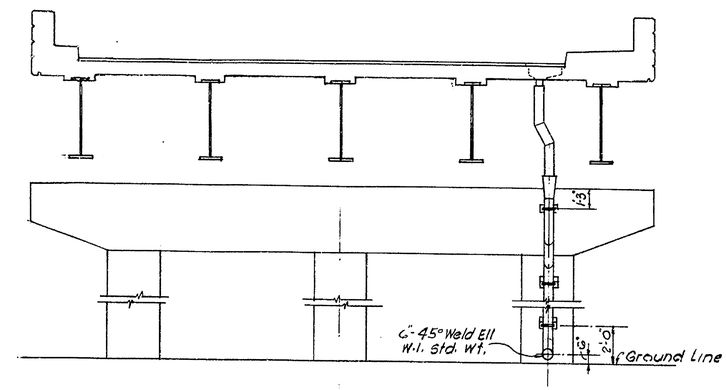

SECTION A-A
SCALE 1/4 IN. = 1 FT.

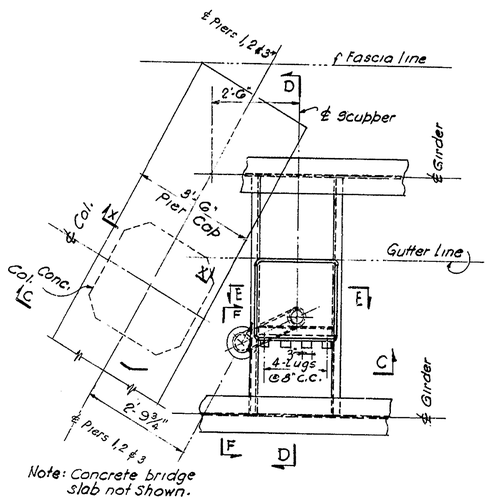

DETAIL "A"
SCALE 1/2 IN. = 1 FT.

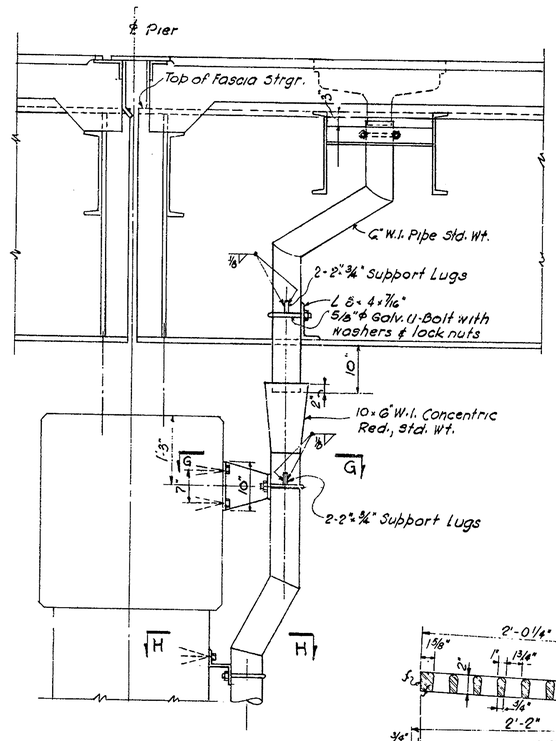

SECTION C-C
SCALE 3/4 IN. = 1 FT.

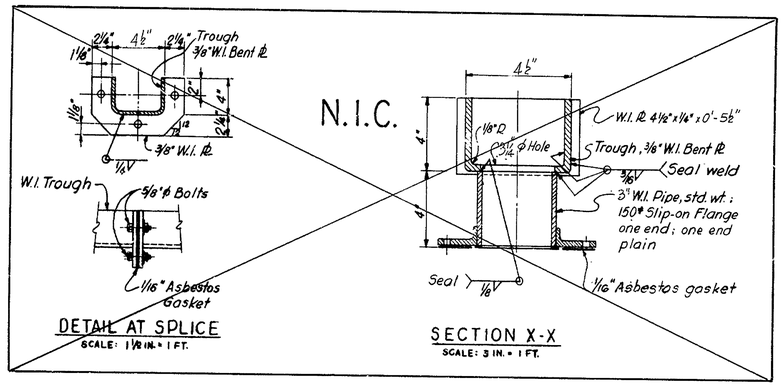

NOTES:

W.I. Pipes shall be standard Black Wrought Iron, galvanized.

Cost of furnishing and placing all W.I. pipes and their supports and connections shall be included in Item "Bridge Drainage".

All frames and gratings shall be cast steel in accordance with A.S.T.M. A27-60 Grade 65-35.

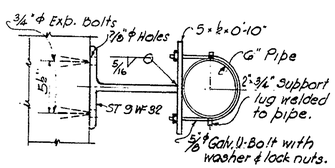

SECTION G-G
SCALE 1 IN. = 1 FT.

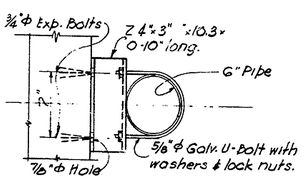

SECTION H-H
SCALE 1/2 IN. = 1 FT.

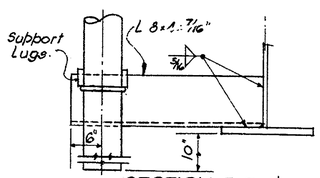

SECTION F-F
SCALE 1 IN. = 1 FT.

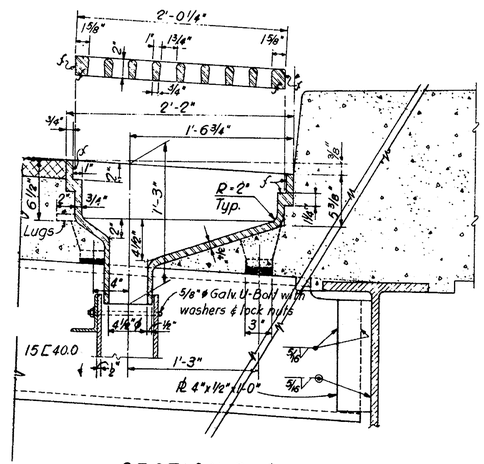

SECTION D-D
SCALE: 1 1/2 IN. = 1 FT.

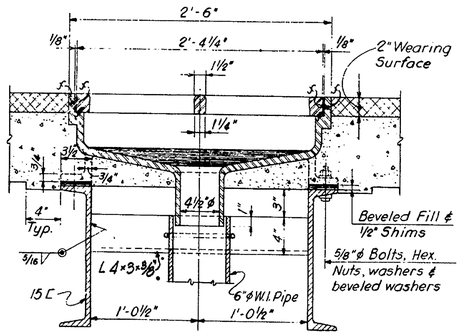

SECTION E-E
SCALE: 1 1/2 IN. = 1 FT.

DELAWARE STATE HIGHWAY DEPARTMENT

DELAWARE TURNPIKE

ROUTE 896 BRIDGE OVER TURNPIKE

SUPERSTRUCTURE

DRAINAGE DETAILS

DRAWN: H.R.P.	SCALE: AS NOTED	DATE: MAY 9, 1962	DWG.: 3-10
TRACED:	TIPPETTS-ABBETT-McCARTHY-STRATTON ENGINEERS AND ARCHITECTS		CONTRACT 7002
CHECKED: M.K.			
CHARGE OF			SHEET 157 OF 224

COUNTY	CONTRACT	P.R.A. REG. NO.	STATE	FED AID PROJECT NO	FISCAL YEAR	SHEET NO	TOTAL SHEETS
NEW CASTLE	7002	2	DEL			158	224

REINFORCING BAR SCHEDULE

	MARK	SIZE	AMT. REQ'D.	LENGTH	TYPE	A	B	C	D	E	F	G	REMARKS
APPROACH SLAB	A 401	4	33	5'-7"	VIII	1-8	1-6	0-5	2-1½	1-6			
	" 5015	5	2sets of 14	1'-6" To 25'-10"	STR.								A = 1'-10½" ±
	" 502	"	42	27'-8"	"								
	" 503	"	8	31'-6"	"								
	" 504	5	66	3'-0"	STR.								
	A 601	6	2sets of 56	20'-10" To 36'-4"	V	0-8	19-6 To 38-0	0-8					Δ = 3½" ±
	A 402S	4	1set of 33	5'-7" To 6'-0	VIII	1'-8"	1-6 To 1-8	0-5	2-1½ To 2-4	1-6 To 1-8			
DECK SLAB "A"	SA 501S	5	1set of 36	2'-6" To 34'-10"	V	0-7	1-4 To 33-8	0-7					
	" 502S	"	1set of 36	1'-4" To 33'-8	STR.								
	" 503	"	51	36'-10"	V	0-7	35-8	0-7					
	" 504	"	51	35'-8"	STR.								
	" 505S	"	1set of 33	4'-2" To 33'-2"	V	0-7	3-0 To 32-0	0-7					
	" 506S	"	1set of 33	3'-0" To 32'-0"	STR.								
	" 507	"	4	40'-3"	X	1'-5"	2'-6"	37'-4"					
	" 508	"	60	8'-7"	I	8-0	0-7	0					
	" 509	"	53	42'-0"	STR.								
	" 510	"	4	40'-6"	X	0'-8"	1'-0"	39'-4"					
	" 511	"	42	7'-6"	VI	0-7	4-10	1-3	0-10				
	" 512	"	1	4'-0"	V	0-7	3-5	0					
	" 513	"	43	5'-0"	VI	0-7	2-4	1-3	0-10				
	" 514	"	1	1'-10"	V	0-7	1-3	0					
	" 515	"	94	8'-7	VII	0-10	3-1	0-11	3-1	0-10			
	" 516	"	18	13'-6"	STR.								
	" 517	"	18	14'-0"	"								
	" 518	"	6	41'-0"	"								
	" 519	"	3	41'-0"	"								
	" 520	"	4	42'-8"	"								
	" 521	"	6	48'-6"	STR.								
	" 522												
	SA 523	5	30	1'-11"	X	0-11"	1'-1"	0'-6"					
DECK SLAB "B & C"	SB 501S	5	2sets of 33	3'-9" To 33'-1"	V	0-7	2-7 To 31-11	0-7					Δ = 11"±
	" 502S	"	2sets of 33	2'-7" To 31'-11"	STR.								Δ = 11"±
	" 503	"	370	36'-10"	V	0-7	35-8	0-7					
	" 504	"	370	35'-8"	STR.								
	" 505S	"	2sets of 33	4'-2" To 33'-2"	V	0-7	3-0 To 32-0	0-7					Δ = 11"±
	" 506S	"	2sets of 33	3'-0" To 32'-0	STR.								Δ = 11"±
	" 507	"	16	40'-3"	X	1'-5"	2'-6"	37'-4"					
	" 508	"	120	8'-7	I	8-0	0-7	0					
	" 509	"	144	60'-0"	STR.								
	" 510	"	144	49'-7"	STR.								
	" 511	"	218	7'-6"	VI	0-7	4-10	1-3	0-10				
	" 512	"	2	4'-0"	V	0-7	3'-5"	0					
	" 513	"	218	5'-0"	VI	0-7	2-4	1-3	0-10				
	" 514	"	2	2'-11"	V	0-7	2-4	0					
	" 515	"	460	8'-7"	VII	0-10"	3-1	0-11	3-1	0-10"			
	" 516	"	144	17'-10"	STR.								
	SB 524	5	32	4'-2"	STR.								SCUPPER

	MARK	SIZE	AMT. REQ'D.	LENGTH	TYPE	A	B	C	D	E	F	G	REMARKS
DECK SLAB "D"	SD 501S	5	1set of 33	3'-9" To 33'-1"	V	0-7	2-7 To 31-11	0-7					Δ = 11"±
	" 502S	"	1set of 33	2'-7" To 31'-11"	STR.								Δ = 11"±
	" 503	"	66	33'-10"	V	0-7	35-8	0-7					
	" 504	"	66	35'-8"	STR.								
	" 505S	"	36	4'-0" To 33'-4"	V	0-7	2-10 To 32-2	0-7					Δ = 11"±
	" 506	"	1set of 36	1'-4" To 33'-8"	STR.								Δ = 11"±
	" 507	"	4	40'-3"	X	1'-5"	2'-6"	37'-4"					
	" 508	"	60	8'-7"	I	8'-0"	0-7	0					
	" 509	"	53	49'-5"	STR.								
	" 510	"	4	40'-6"	X	0'-8"	1'-0"	39'-4"					
	" 511	"	49	7'-6"	VI	0-7	4-10	1-3	0-10				
	" 512	"	1	3'-9"	V	0-7	3'-2"						
	" 513	"	50	5'-0"	VI	0-7	2-4	1-3	0-10				
	" 514	"	1	4'-2"	V	0-7	2-4						
	" 515	"	105	8'-7"	VII	0-10"	3-1	0-11	3-1	0-10"			
	" 516	"	18	16'-7"	STR.								
	" 517	"	18	16'-0"	"								
	" 518	"	6	50'-0"	"								
	" 519	"	3	50'-2"	"								
	" 520	"	4	48'-11	"								
	" 521	"	6	48'-9	STR.								
	" 522	"	1	1'-11"	V	0-7	1'-4"						
	" 523	"	30	2'-1½"	X	1'-1"	1-3	0-6"					
	" 524	"	16	4'-2	STR								SCUPPER
NORTH ABUTMENT	NA 501	5	12	44'-6"	STR.								
	502	"	2	43'-6"	"								
	503	"	68	5'-6"	"								
	504	"	36	6'-6"	"								
	505S	"	2sets of 8	12'-6" To 16'-0"	"								Δ = 6
	506S	"	2sets of 7	10'-6" To 13'-6"	"								Δ = 6
	507	"	2	13'-6"	STR								
	508	"	4	40'-4"	II	0	39-3	1-1	0-6				
	509	"	19	40'-8"	STR.								
	510	"	39	7'-10"	I	4-8	3-2	0					
	511	"	39	7'-9"	I	6-0	0-4	1-5					
	512	"	39	8'-10"	I	7-8	1-2	0					
	513	"	9	9'-0"	I	3-2	2-8	3-2					
	514	"	9	6'-6"	I	3-4	3-2						
	515	"	4	8'-6"	STR.								
	516	"	3	9'-9"	"								
	517	"	16	13'-6"	"								
	518S	"	4sets of 4	5'-0" To 8'-11"	STR.								Δ = 1'-4"
	519	"	4	4'-10"	II	0	1-11	2-11	0-9				
	520	"	12	10'-2"	STR.								
	521S	"	25sets of 2	11'-2" To 13'-2"	"								Δ = 2'-0"
	522	"	4	15'-2"	"								
	523S	"	25sets of 5	11'-1" To 11'-10"	"								Δ = 2'4
	524	"	2	7'-10"	STR.								
	525	"	4	5'-1"	II	0	1-1	4-0	1-5				
	526	"	9	3'-3"	STR.								
	527	"	4	8'-4"	"								
	528	"	3	6'-6"	"								
	529	"	20	18'-3"	"								
	530	"	12	11'-8"	"								
	531S	"	25sets of 2	12'-8" To 14'-8"	"								Δ = 2'-0"
	NA 532	5	4	16'-8"	STR.								

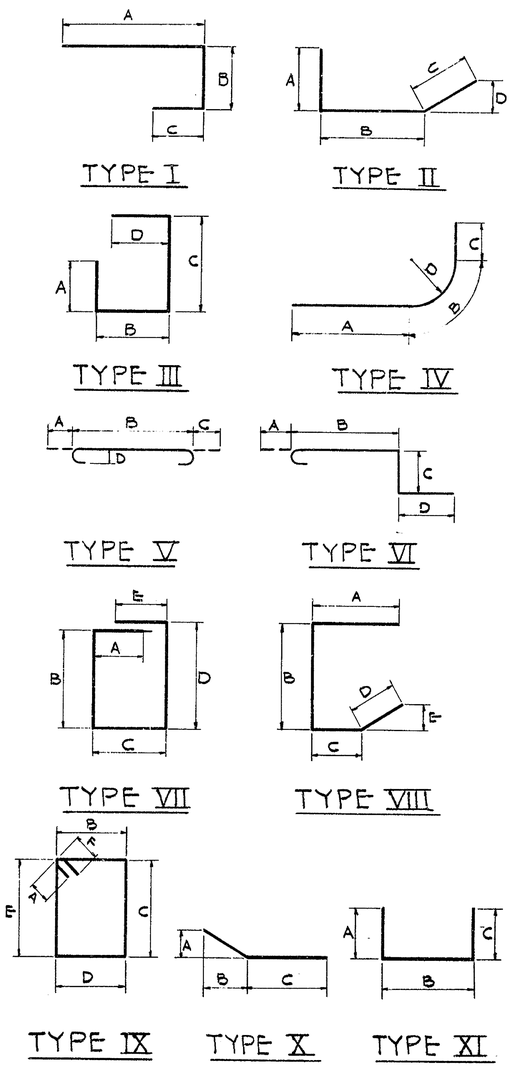

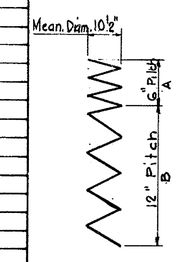

NOTES:

All dimensions are out to out of bar

DELAWARE STATE HIGHWAY DEPARTMENT

DELAWARE TURNPIKE

ROUTE 896 BRIDGE OVER TURNPIKE

REINFORCING BAR SCHEDULE

DRAWN: S. V.	SCALE NONE	DATE MAY 5, 1962	DWG. 3-11
TRACED:	TIPPETTS-ABBETT-McCARTHY-STRATTON ENGINEERS AND ARCHITECTS		CONTRACT 7002
CHECKED: A.Z.E.			
CHARGE OF			SHEET 158 OF 224

COUNTY	CONTRACT	F.R.A. REG. NO.	STATE	FED. AID PROJECT NO.	FISCAL YEAR	SHEET NO.	TOTAL SHEETS
NEW CASTLE	7002	2	DEL.			159	224

REINFORCING BAR SCHEDULE

NORTH ABUTMENT

MARK	SIZE	AMT. REQ'D.	LENGTH	TYPE	A	B	C	D	E	F	G	REMARKS
NA 533 S	5	2 Sets of 5	12'-7" To 13'-4"	STR.								Δ = 2¼"
534	"	2	9'-3"	"								
535	"	9	4'-0"	STR.								
536	"	3	7'-11"	II	0	2-11	5-0	2-6				
537 S	"	2 Sets of 2	4'-5" To 6'-2"	STR								Δ = 1'-9"
538	"	4	9'-0"	"								
539	"	14	4'-11"	STR.								
540	"	14	6'-6"	I	4-11	1-7	0					
541 S	"	1 Set of 4	2'-5" To 4'-5"	STR.								Δ = 8"
542 S	"	1 Set of 4	4'-0" To 6'-0"	I	2-5 To 4-5	1-7	0					
543	"	11	9'-9"	STR.								
544	"	12	3'-9"	"								
545	"	4	4'-3"	"								
546 S	"	2 Sets of 3	9'-2" To 9'-6"	STR.								
547	"	4	5'-9"	I	1-1	4-9	0					
548	"	2	6'-9"	I	1-1	4-9	1-1					
549	"	14	6'-7"	I	2-4	2-1	2-4					
550 S	"	2 Sets of 4	9'-8 To 11'-5"	STR								Δ = 7
551	"	2	4'-0"	IV	1-7	1-4	1-1	0-10				
552	"	2	5'-5"	STR.								
553	"	22	4'-9"	STR.								
554	"	2	6'-2"	IV	3-9	1-4	1-1	0-10				
555	"	6	12'-10"	STR.								
557	"	105	3'-1"	STR								
558	"	7	4'-6"	I	3-2	1-4						
559	"	2	7'-2"	I	3-2	4-0						
NA 560	5	2	8'-4"	STR.								
NA 401	4	64	2'-5"	I	0-10	0-11	0-10					
NA 402	4	13	5'-5"	III	2-0	0-8	2-1	0-10				
NA 227	2	20	34'-7" Developed	XII	2-0	8-0						14" ϕ SPIRAL. MEAN DIA. 10½"
NA 626	6	120	12'-8"	V	0-8	12-0						PILE reinf.

SOUTH ABUTMENT

MARK	SIZE	AMT. REQ'D.	LENGTH	TYPE	A	B	C	D	E	F	G	REMARKS
SA 501	5	12	44'-6"	STR								
502	"	2	43'-6"	"								
503	"	62	5'-6"	"								
504	"	36	6'-6"	"								
505 S	"	2 Sets of 6	12'-6" To 16'-0"	"								Δ = 6"
506 S	"	2 Sets of 7	10'-6" To 13'-6"	"								Δ = 6"
507	"	2	13'-6"	STR.								
508	"	4	40'-4"	II	0	39-3	1-1	0-6				
509	"	19	40'-8"	STR.								
510	"	39	8'-10"	I	4-10	3-2	0					
511	"	39	7'-9"	I	6-0	0-4	1-5					
512	"	39	8'-10"	I	7-8	1-2	0					
513	"	9	9'-0"	I	3-2	2-8	3-2					
514	"	9	6'-8"	I	3-6	3-2	0					
515	"	4	8'-8"	STR.								
516	"	3	6'-9"	"								
517	"	16	14'-0"	"								
518 S	"	4 Sets of 4	5'-0" To 8'-11"	STR.								Δ = 1'-4"
519	"	4	4'-10"	II	1-11	2-11	0-9					
520	"	12	10'-2"	STR.								
521 S	"	2 Sets of 2	11'-2" To 13'-2"	"								Δ = 2'-0"
522	"	4	15'-2"	"								
523 S	"	2 Sets of 5	11'-1" To 11'-10	"								Δ = 2¼"
SA 524	5	2	7'-10	STR.								

SOUTH ABUTMENT

MARK	SIZE	AMT. REQ'D.	LENGTH	TYPE	A	B	C	D	E	F	G	REMARKS
SA 525	5	4	5'-1"	II.	0	1-1	4-0	1-5				
" 526	"	9	3'-3"	STR.								
" 527	"	4	8'-6"	"								
" 528	"	3	6'-6"	"								
" 529	"	20	13'-9"	"								
" 530	"	12	11'-8"	"								
" 531 S	"	2 Sets of 2	12'-8" To 14'-8"	"								Δ = 2'-0"
" 532	"	4	16'-8"	"								
" 533 S	"	2 Sets of 5	12'-7" To 13'-4"	"								Δ = 2¼"
" 534	"	2	9'-3"	"								
" 535	"	9	4'-0"	STR.								
" 536	"	3	9'-9"	II	0	2-11	6-10	2-6				
" 537 S	"	2 Sets of 2	4'-8" To 6'-9	STR								Δ = 2'-1"
" 538	"	4	10'-10"	"								
" 539	"	14	4'-11"	STR.								
" 540	"	14	6'-6"	I	4-11	1-7	0					
" 541 S	"	1 Set of 4	2'-5" To 4'-5"	STR								Δ = 8"
" 542 S	"	1 Set of 4	4'-0" To 6'-0"	I	2-5 To 4-5	1-7	0-0					Δ = 8"
" 543	"	11	10'-2"	STR.								
" 544	"	12	3'-9"	"								
" 545	"	4	4'-3"	"								
" 546 S	"	2 Sets of 3	14'-5" To 14'-9"	STR.								Δ = 2"
" 547	"	4	5'-9"	I	1-4	4-9	0					
" 548	"	2	6'-9"	I	1-1	4-9	1-1					
" 549	"	12	6'-7"	I	2-4	2-1	2-4					
" 550 S	"	2 Sets of 3	9'-6" To 11'-1"	STR.								Δ = 10"
" 551	"	2	4'-0"	IV.	1-7	1-4	1-1	0-10				
" 552	"	2	5'-5"	STR								
" 553	"	28	4'-9"	STR.								
" 554	"	2	6'-2"	IV	3-9	1-4	1-1	0-10				
" 555	"	2	14'-2"	STR.								
" 556 S	"	2 Sets of 4	12'-10" To 14'-7"	STR.								Δ = 7"
" 557	"	105	3'-1"	STR.								
" 558	"	7	4'-6"	I	3-2	1-4						
SA 559	5	2	7'-2"	I	3-2	4-0						
SA 401	4	64	2'-5"	I	0-10	0-11	0-10					
SA 402	4	18	5'-5"	III	2-0	0-8	2-1					
SA 227	2	18	63'-10" Developed	XII	2-0	18-0						14" ϕ SPIRAL. MEAN DIA 10½"
SA 626	6	108	22'-8"	V	0-8	22-0						PILE REINF.

PIER NO. 1

MARK	SIZE	AMT. REQ'D.	LENGTH	TYPE	A	B	C	D	E	F	G	REMARKS
1P 901	9	4	39'-9"	V	1-3	38-6						
" 902	9	6	15'-3"	V	1-3	14-0						
" 903	9	6	12'-0"	STR.								
" 604	6	2	38'-8"	STR								
" 605	6	2	35'-10"	STR								
" 906	9	8	21'-2"	X	1-4	5-7	15-7					
" 1007	10	4	11'-6"	STR								
" 408	4	28	11'-2"	IX	0-5	2-0	3-2	2-0	3-2	0-5		
" 409 S	4	4 Sets of 5	8'-2" to 10'-6"	IX	0-5	2-0	0-10 to 1-8	2-0	0-10 to 1-8	0-5		Δ = 3½" For C & E
" 818	8	48	18'-0"	STR								
" 819	8	48	5'-10"	V	1-1	4-9						
" 420	4	96	11'-2"	IX	0-5	2-0	3-2	2-0	3-2	0-5		
" 521	5	40	5'-6"	XI	1-3	3-0	1-3					
" 1022	10	10	35'-8"	STR								
" 1023	10	12	38'-6"	V	1-5	35-8	1-5					
" 424	4	25	8'-5	STR								
" 1025	10	49	11'-3"	V	1-5	8-5	1-5					
" 626	6	132	12'-8"	V	0-8	12-0						
1P 227	2	22	34'-7" Developed	XII	2-0	8-0						14" ϕ SPIRAL MEAN DIA 10½"

Note
For Bar bending details see Dwg. 3-11.

DELAWARE STATE HIGHWAY DEPARTMENT
DELAWARE TURNPIKE

ROUTE 896 BRIDGE OVER TURNPIKE

REINFORCING BAR SCHEDULE

DRAWN: S.V.	SCALE: NONE	DATE: MAY 9, 1962	DWG.: 3-12
TRACED:	TIPPETTS-ABBETT-McCARTHY-STRATTON ENGINEERS · AND ARCHITECTS		CONTRACT 7002
CHECKED: AZE-TK			
CHARGE OF			SHEET 159 OF 224

COUNTY	CONTRACT	P.R.A. REG. NO.	STATE	FED. AID PROJECT NO.	FISCAL YEAR	SHEET NO.	TOTAL SHEETS
NEW CASTLE	7002	2	DEL.			160	224

REINFORCING BAR SCHEDULE

	MARK	SIZE	AMT. REQ'D.	LENGTH	TYPE	A	B	C	D	E	F	G	REMARKS
PIER NO. 2	2P 901	9	4	39'-9"	V	1-3	38-6						
	" 1002	10	6	15'-5"	V	1-5	14-0						
	" 903	9	14	10'-0"	STR.								
	" 604	6	2	38'-8"	STR.								
	" 605	6	2	35'-10"	STR.								
	" 906	9	8	21'-2"	X	1-4	5-7	15-7					
	" 1007	10	6	11'-6"	STR.								
	" 408	4	52	11'-2"	IX	0-5	2-0	3-2	2-0	3-2	0-5		
	" 409B	4	4 Sets of 5	8'-2" to 10'-10"	IX	0-5	2-0	3-0 to 1-8	2-0	3-0 to 1-8	0-5		Δ = 2" for C & E
	" 818	8	48	27'-0"	STR.								
	" 819	8	48	6'-3"	V	1-1	5-2						
	" 420	4	144	11'-2"	IX	0-5	2-0	3-2	2-0	3-2	0-5		
	" 521	5	40	5'-6"	XI	5'-6	1-3	3-0	1-3				
	" 623	6	25	11'-0"	STR								
	" 624	6	37	13'-2"	V	1-1	11-0	1-1					
	" 1025	10	16	38'-6"	V	1-5	35-8	1-5					
	2P 1026	10	11	35'-8"	STR.								
PIER NO. 3	3P 901	9	4	39'-9"	V	1-3	38-6						
	" 902	9	6	15'-3"	V	1-3	14-0						
	" 903	9	6	12'-0"	STR.								
	" 604	6	2	38'-8"	STR								
	" 605	6	2	35'-10"	STR								
	" 906	9	8	21'-2"	X	1-4	5-7	15-7					
	" 1007	10	4	11'-6"	STR.								
	" 408	4	28	11'-2"	IX	0-5	2-0	3-2	2-0	3-2	0-5		
	" 409B	4	4 Sets of 5	8'-2" to 10'-6"	IX	0-5	2-0	2-10 to 1-8	2-0	2-10 to 1-8	0-5		Δ = 3½" for C & E
	" 818	8	48	18'-2"	STR.								
	" 819	8	48	5'-10"	V	1-1	4-9						
	" 420	4	96	11'-2"	IX	0-5	2-0	3-2	2-0	3-2	0-5		
	" 521	5	40	5'-6"	XI	1-3	3-0	1-3					
	" 1022	10	10	35'-8"	STR.								
	" 623	6	25	8'-8"	STR.								
	" 824	8	37	10'-10"	V	1-1	8-8	1-1					
	" 1025	10	12	38'-6"	V	1-5	35-8	1-5					
	3P 1026	10	8	35'-8"	STR.								

MARK	SIZE	AMT. REQ'D.	LENGTH	TYPE	A	B	C	D	E	F	G	REMARKS

Note
For Bar bending details see Dwg 3-11

DELAWARE STATE HIGHWAY DEPARTMENT
DELAWARE TURNPIKE

ROUTE 896 BRIDGE OVER TURNPIKE

REINFORCING BAR SCHEDULE

DRAWN: H.R.P.	SCALE AS NOTED	DATE: MAY 9, 1962	DWG 3-13
TRACED:	TIPPETTS-ABBETT-McCARTHY-STRATTON ENGINEERS AND ARCHITECTS		CONTRACT 7002
CHECKED: T. K.			
CHARGE OF			SHEET 160 OF 224

COUNTY	CONTRACT	P R A REG NO	STATE	FED. AID PROJECT NO	FISCAL YEAR	SHEET NO	TOTAL SHEETS
NEW CASTLE	7002	2	DEL.			161	224

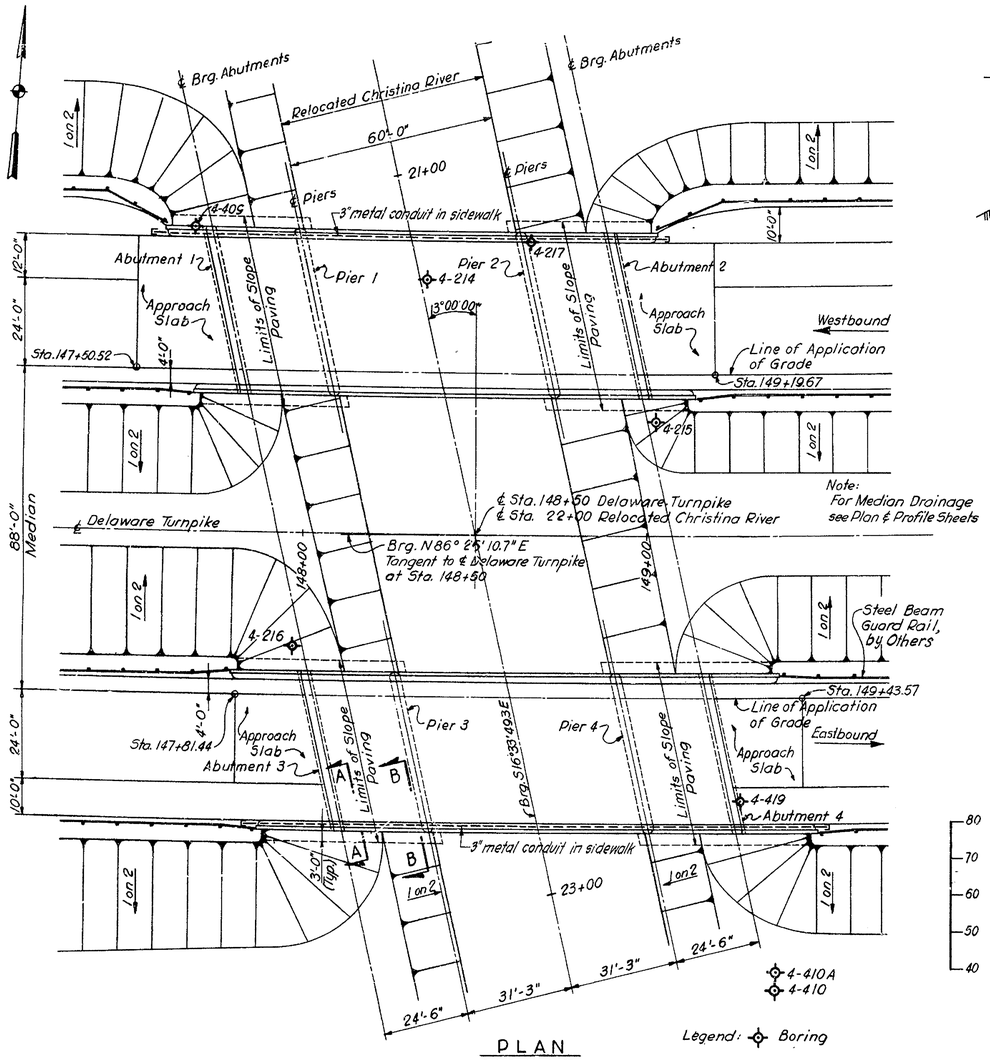

PLAN

SCALE: 1 IN. = 20 FT.

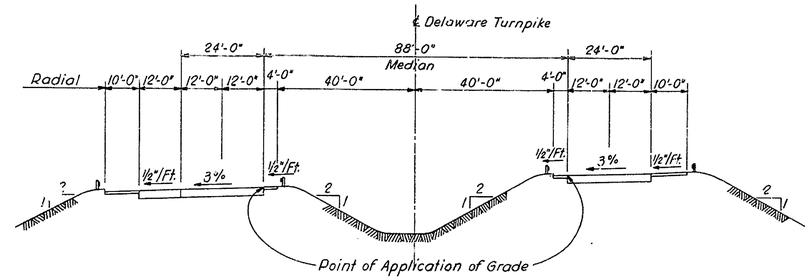

APPROACH SECTION

SCALE: 1 IN. = 20 FT.

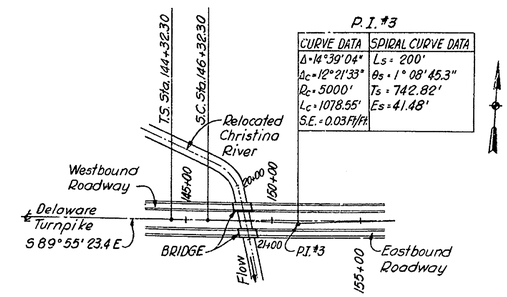

LOCATION PLAN

NO SCALE

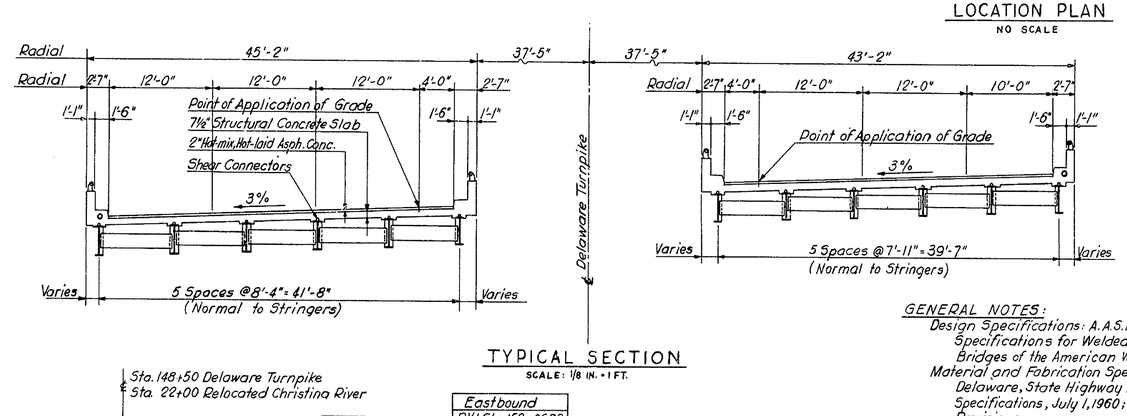

TYPICAL SECTION

SCALE: 1/8 IN. = 1 FT.

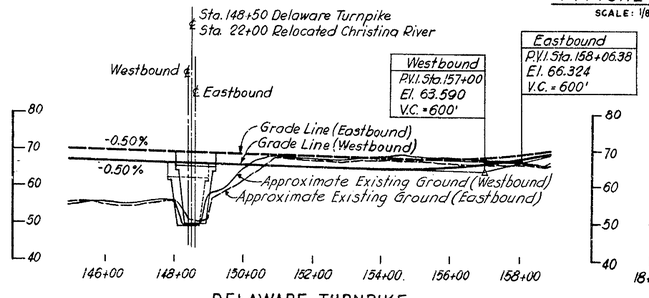

DELAWARE TURNPIKE

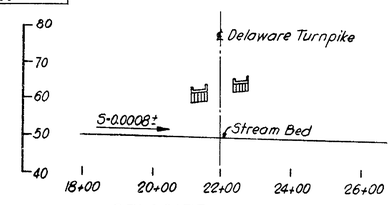

RELOCATED CHRISTINA RIVER

℄ PROFILES

SCALE: HOR. 1 IN. = 200 FT. VER. 1 IN. = 20 FT.

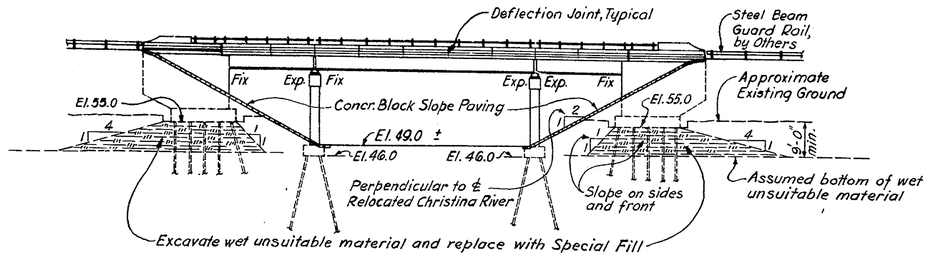

ELEVATION

SCALE: 1 IN. = 20 FT.

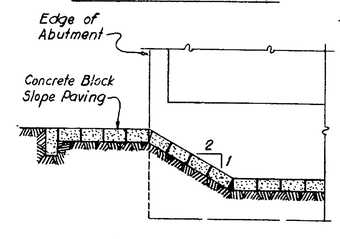

SECTION A-A

NO SCALE

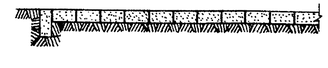

SECTION B-B

NO SCALE

TABLE OF QUANTITIES

ITEM No.	DESCRIPTION	UNIT	QUANTITY
4	Excavation for Structures	C.Y.	412
7	Select Borrow - Grade "A"	C.Y.	1,100
11	Hot-mix, Hot-laid Asphaltic Conc. Pavement	Tons.	179
	RC-1 Asphalt Tack Coat	Gal.	248
18*	Portland Cement Concrete Masonry		
	Footings	C.Y.	310
	Substructure	C.Y.	598
	Superstructure	C.Y.	380
	Approach Slabs	C.Y.	125
19	Superficial Waterproofing	S.Y.	308
20*	Bar Reinforcement	Lbs.	142,500
22	Structural Steel (Approx. Wt. 284,000 lbs.)	Lbs.	
31	6" ø Perf. Corr. Metal Pipe Underdrain	L.F.	300
	Steel Bearing Piles, 12 BP 53	L.F.	6,400
	Aluminum Railing, Single Rail	L.F.	490
	Bridge Drainage	L.S.	
	Steel Pile Load Test	Each	One
	Coal Tar Epoxy Underdrain	S.Y.	1,060
	Protective Coating for Concrete	S.F.	1,230

* indicates Fixed Quantity Item, see Proposal.

GENERAL NOTES:

Design Specifications: A.A.S.H.O.-1957; and Standard Specifications for Welded Highway and Railway Bridges of the American Welding Society - 1957.

Material and Fabrication Specifications: State of Delaware, State Highway Department, Standard Specifications, July 1, 1960; and as given in the Special Provisions.

Design Loads: A.A.S.H.O. H20-S16-44.

Design Stresses: Structural and Reinforcing Steel: 18,000 psi. Reinforced Concrete: f'c = 1,200 psi., n = 10.

Design of Composite Construction based on no temporary intermediate supports to be used during construction.

Unsuitable material under the footings shall be removed and replaced by special fill up to either 2 ft. above existing ground water level or 1 ft. above bottom of footing, whichever is higher. Cost to be included in Highway Payment Items.

Backfill behind abutments to be placed only after bridge deck slab has been completed.

Minimum Waiting Period before loads are permitted on the bridge, after completion of the bridge deck slab: 10 days for loads of 2 tons to 10 tons, and 28 days for loads of 10 tons to the legal load limit.

Test Piles shall be in accordance with Standard Specifications and Special Provisions.

Quantities shown shall not relieve the Contractor of the responsibility of checking them in preparing his bid.

For Concrete Notes, see Dwg. 4-3.
For Steel Notes, see Dwg. 4-6.
For Boring Logs, see Sheet 210.

DELAWARE STATE HIGHWAY DEPARTMENT

DELAWARE TURNPIKE

TURNPIKE BRIDGE OVER CHRISTINA RIVER

GENERAL ARRANGEMENT

DRAWN: E. A. N.	SCALE: AS NOTED	DATE: MAY 9, 1962	DWG.: 4-1
TRACED:	TIPPETTS-ABBETT-McCARTHY-STRATTON ENGINEERS AND ARCHITECTS		CONTRACT 7002
CHECKED: D.F.-D.L.			
CHARGE OF			SHEET 161 OF 224

COUNTY	CONTRACT	P.R.A. REG. NO.	STATE	FED. AID PROJECT NO.	FISCAL YEAR	SHEET NO.	TOTAL SHEETS
NEW CASTLE	7002	2	DEL.			162	224

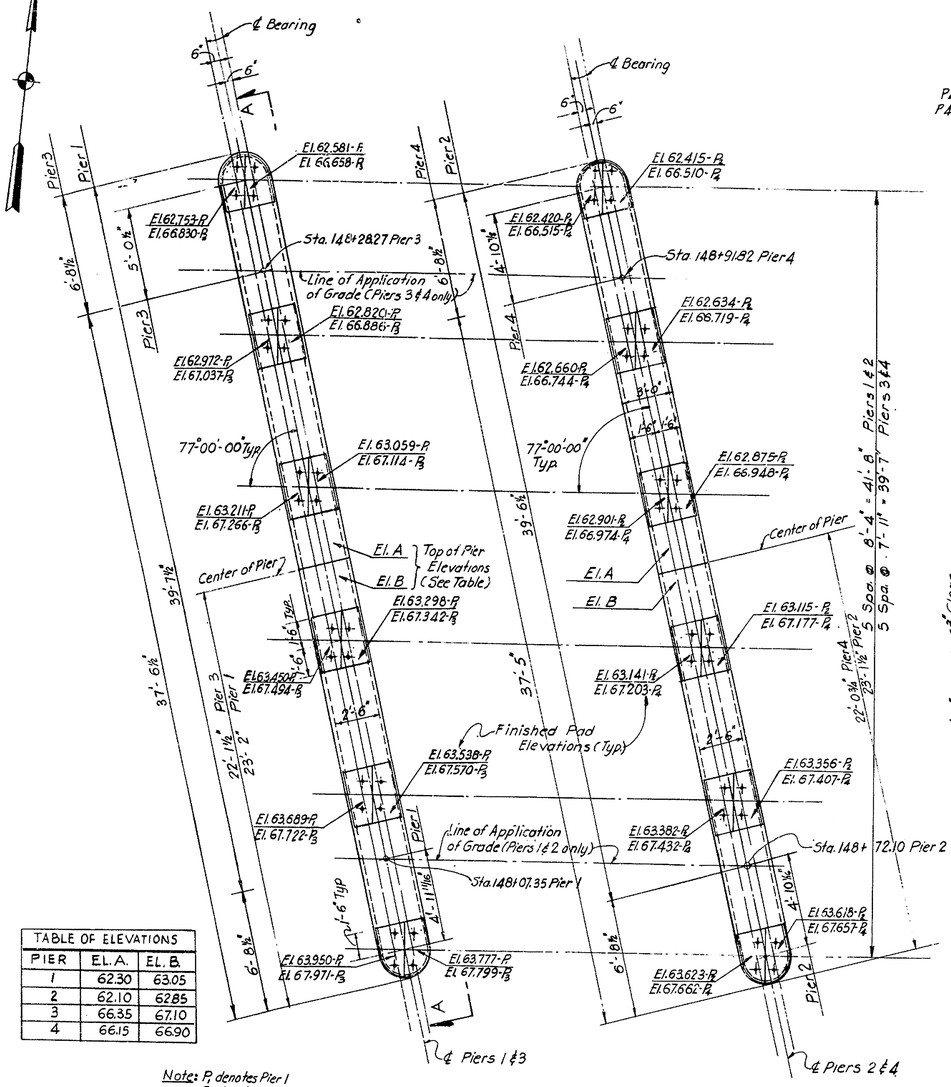

TABLE OF ELEVATIONS		
PIER	EL. A.	EL. B.
1	62.30	63.05
2	62.10	62.85
3	66.35	67.10
4	66.15	66.90

Note: P_1 denotes Pier 1
P_2 denotes Pier 2
P_3 denotes Pier 3
P_4 denotes Pier 4

PLAN
SCALE: 1/4 IN. = 1 FT.

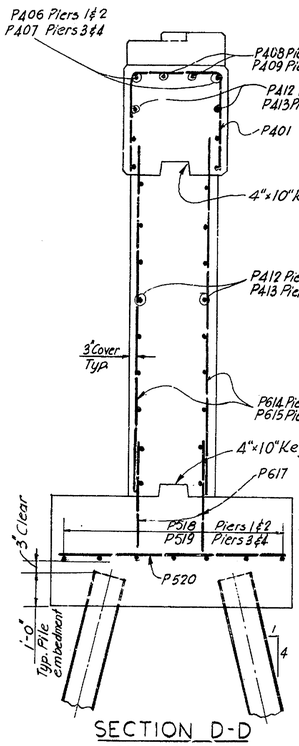

SECTION D-D
SCALE: 1/2 IN. = 1 FT.

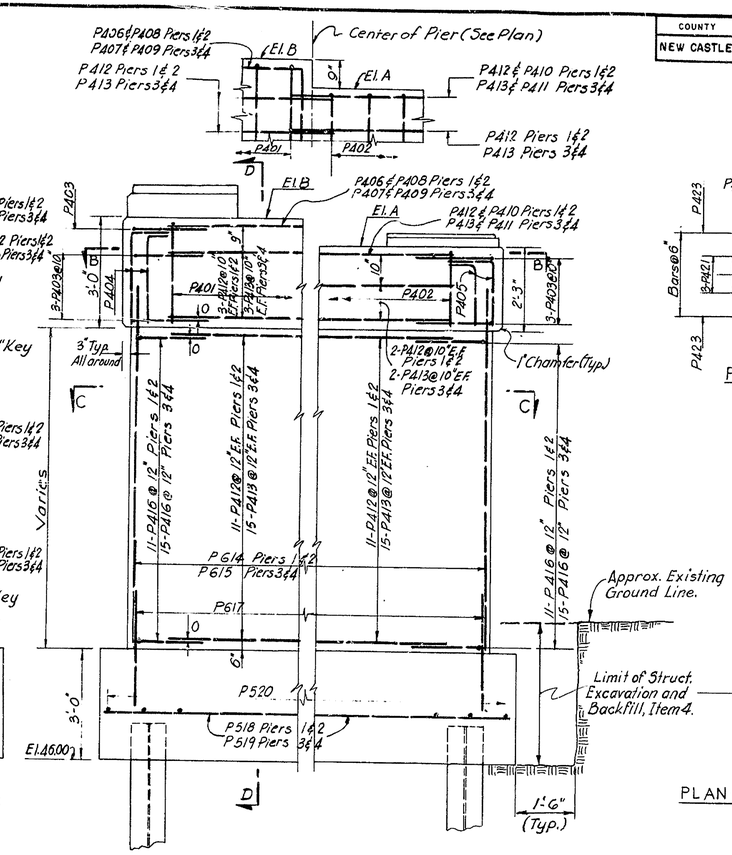

ELEVATION A-A
SCALE: 1/2 IN. = 1 FT.

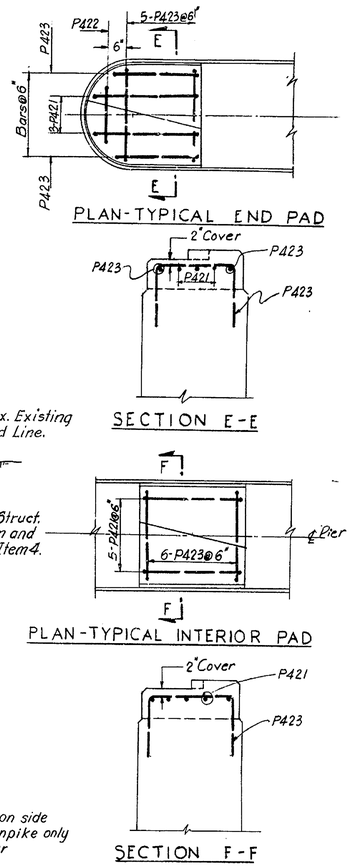

PAD DETAILS
SCALE: 1/2 IN. = 1 FT.

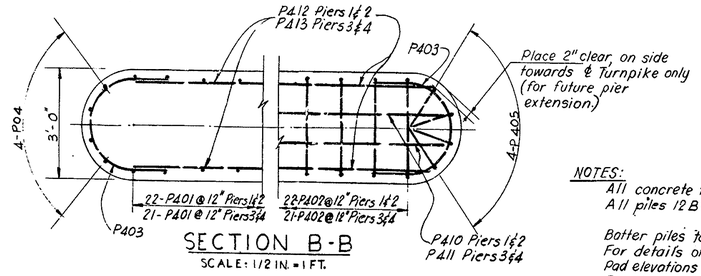

SECTION B-B
SCALE: 1/2 IN. = 1 FT.

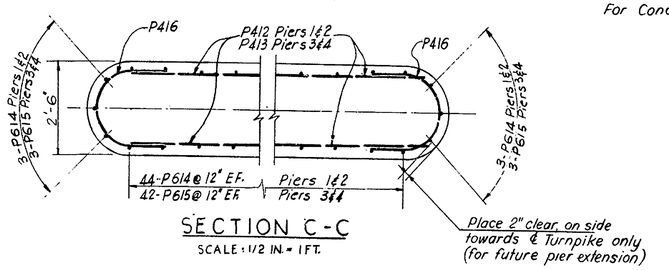

SECTION C-C
SCALE: 1/2 IN. = 1 FT.

NOTES:
All concrete to be placed in the dry.
All piles 12 BP53; for details see Dwg. 4-8.

Batter piles to have 4 on 1 batter.
For details of anchor bolts for shoes, see Dwg. 4-8.
Pad elevations given denote top of finished concrete pad.
For General Notes, see Dwg. 4-1.
For Concrete Notes, see Dwg. 4-4.

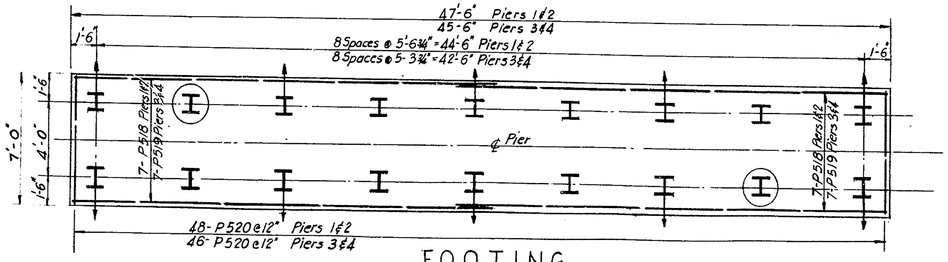

FOOTING
SCALE: 1/4 IN. = 1 FT.

LEGEND
- Vertical Pile
- Battered Pile (4 on 1 batter)
- Test Pile

DELAWARE STATE HIGHWAY DEPARTMENT
DELAWARE TURNPIKE

TURNPIKE BRIDGE OVER CHRISTINA RIVER

PIERS

DRAWN: P.V.P.	SCALE: AS NOTED	DATE: MAY 9, 1962	DWG.: 4-2
TRACED:	TIPPETTS-ABBETT-McCARTHY-STRATTON ENGINEERS AND ARCHITECTS		CONTRACT 7002
CHECKED: D.E.L.			
CHARGE OF			SHEET 162 OF 224

COUNTY	CONTRACT	P.R.A. REG. NO.	STATE	FED. AID PROJECT NO.	FISCAL YEAR	SHEET NO	TOTAL SHEETS
NEW CASTLE	7002	2	DEL.			163	224

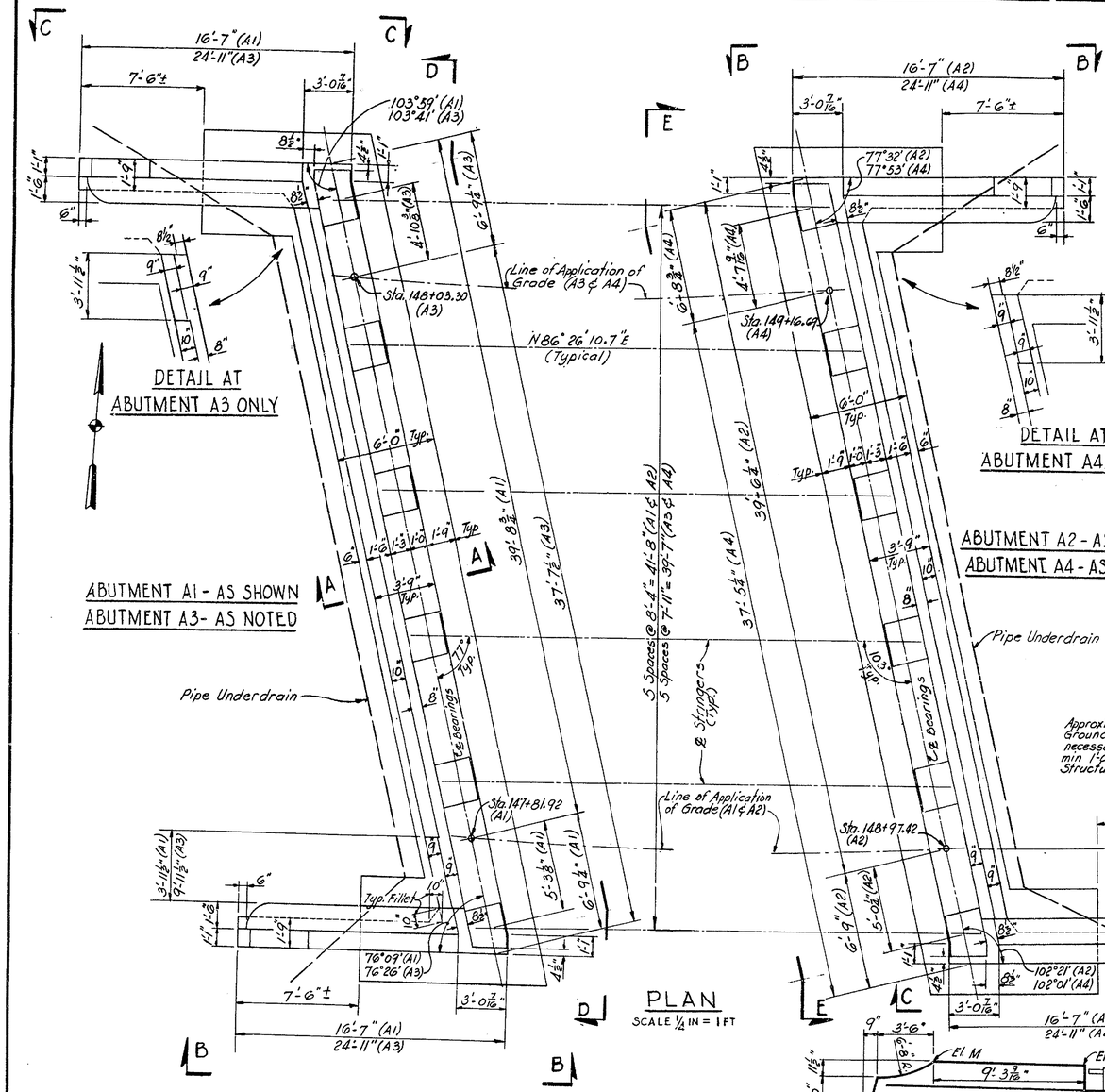

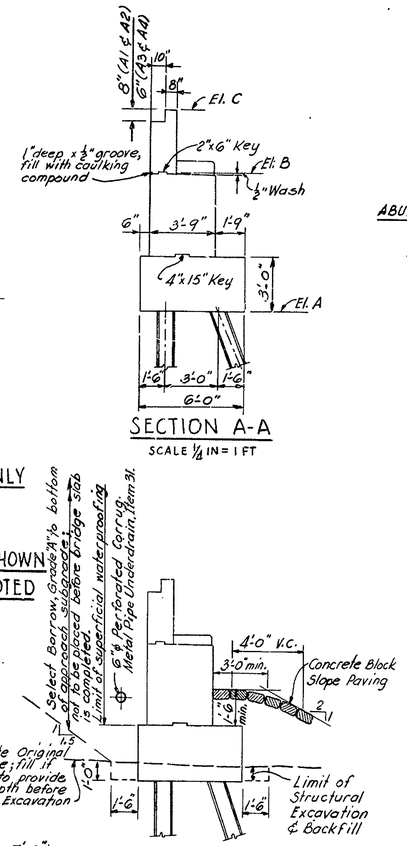

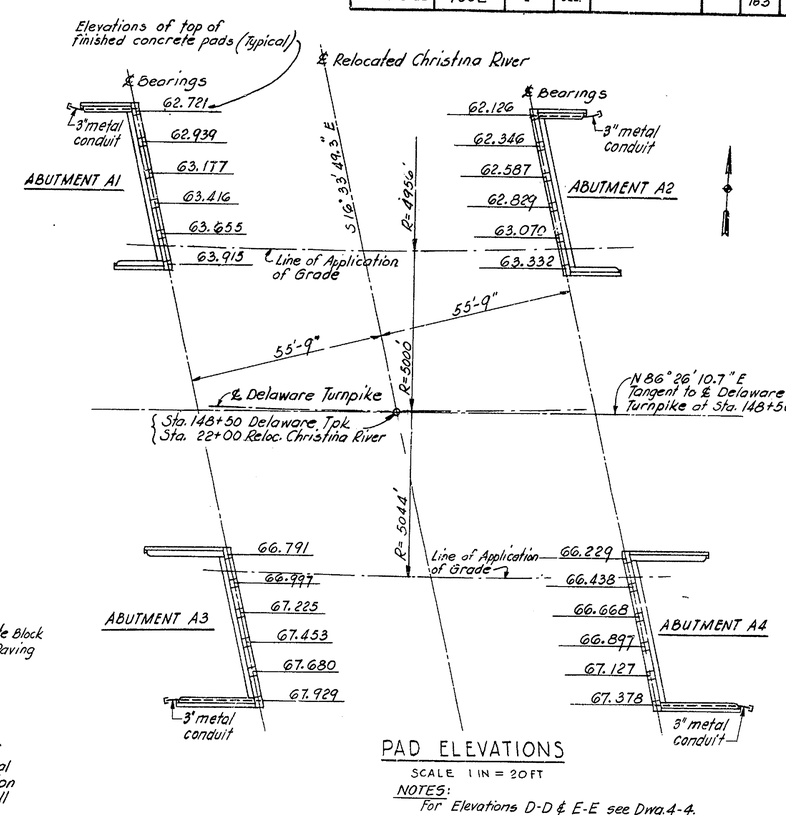

NOTES:

For Elevations D-D & E-E see Dwg. 4-4.
Work this drawing with Dwgs. 4-4 and 4-5.
For details of Anchor Bolts for Shoes see Dwg. 4-8.
For General Notes see Dwg. 4-1.
For details of Piles see Dwg. 4-8.

CONCRETE NOTES:

Concrete Water-reducing Retarder Admixture shall be added to all superstructure concrete (see Special Provisions).
Splices for stress bars shall be a minimum of 30 diameters; all other splices a minimum of 20 diameters.
Construction Joints other than those shown will not be permitted without written approval by the Engineer.
Exposed Concrete Edges shall be beveled 1 in. by 1 in., unless otherwise noted.
Concrete Cover as per A.A.S.H.O. or as noted.
Cost of furnishing and placing all bituminous joint materials, joint seal, caulking compound, tar paper, water stops, and concrete water-reducing retarder admixture will be included in Item 18, "Portland Cement Concrete Masonry."

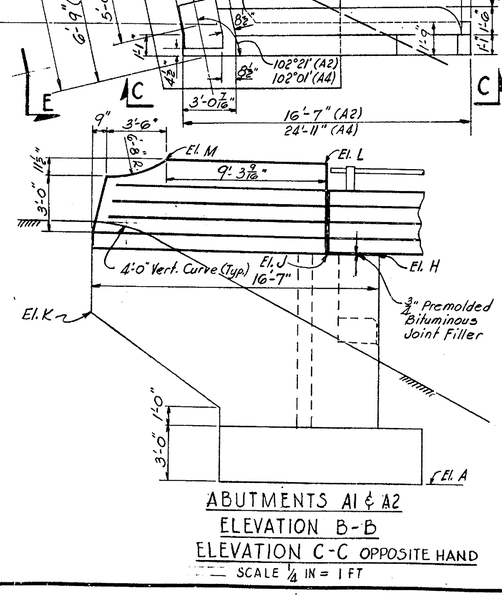

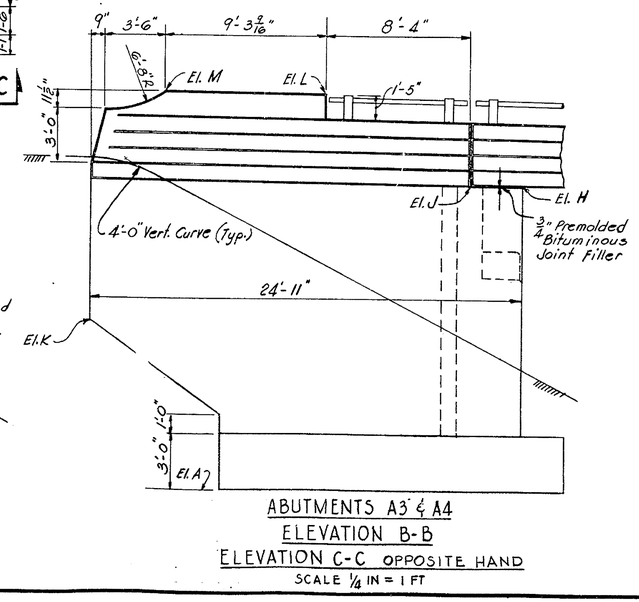

TABLE OF ELEVATIONS

POINT	A	B	C	D	E	F	G	H	J	K	L	M
ABUTMENT A1	55.00	62.47	65.89	68.31	68.19	—	—	N 66.18	66.20	64.00	71.10	71.15
								S 67.33	67.35	64.00	72.24	72.29
ABUTMENT A2	55.00	61.88	65.30	67.71	67.59	—	—	N 65.61	65.60	64.00	70.49	70.44
								S 66.76	66.75	64.00	71.65	71.60
ABUTMENT A3	55.00	66.54	69.96	71.23	71.35	72.04	72.33	N 70.26	70.27	64.00	75.23	75.28
								S 71.35	71.37	64.00	76.32	76.36
ABUTMENT A4	55.00	65.98	69.40	70.65	70.76	71.46	71.75	N 69.71	69.69	64.00	74.55	74.50
								S 70.80	70.79	64.00	75.64	75.59

DELAWARE STATE HIGHWAY DEPARTMENT

DELAWARE TURNPIKE

TURNPIKE BRIDGE OVER CHRISTINA RIVER

ABUTMENTS

PLAN, ELEVATIONS AND SECTIONS

DRAWN: E.N.-S.T.	SCALE: AS NOTED	DATE: MAY 9, 1962	DWG.: 4-3
TRACED:	TIPPETTS-ABBETT-McCARTHY-STRATTON ENGINEERS AND ARCHITECTS		CONTRACT 7002
CHECKED: D.F.-D.L.			
CHARGE OF			SHEET 163 OF 224

COUNTY	CONTRACT	P R A REG NO	STATE	FED. AID PROJECT NO.	FISCAL YEAR	SHEET NO	TOTAL SHEETS
NEW CASTLE	7002	2	DEL			164	224

LEGEND:

- Vertical Pile
- Battered Pile
- Test Pile
- Pile load test

Battered piles to have 3 on 1 batter.

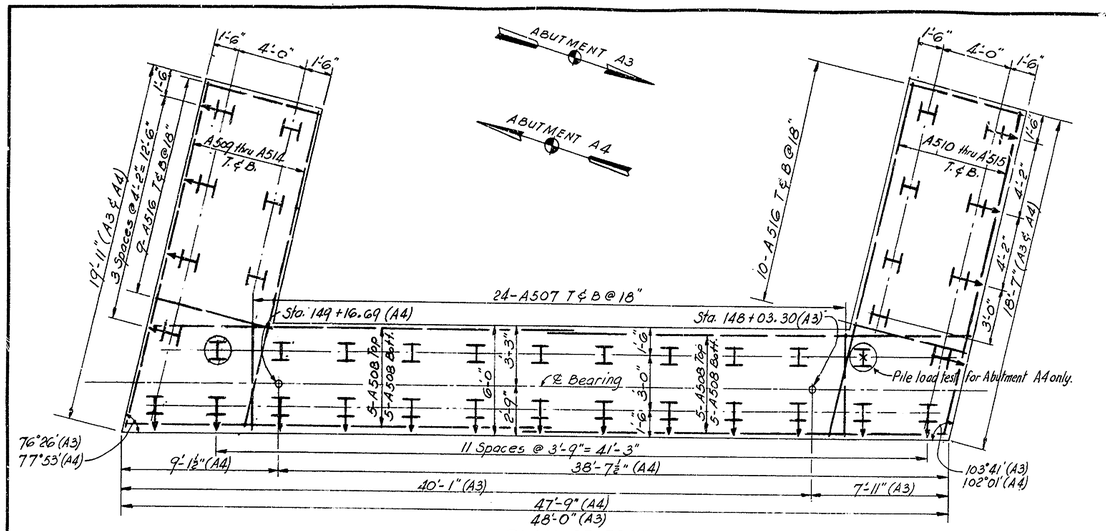

PLAN OF FOOTING
ABUTMENT A3 AS SHOWN
ABUTMENT A4 AS NOTED
SCALE ¼ IN = 1 FT

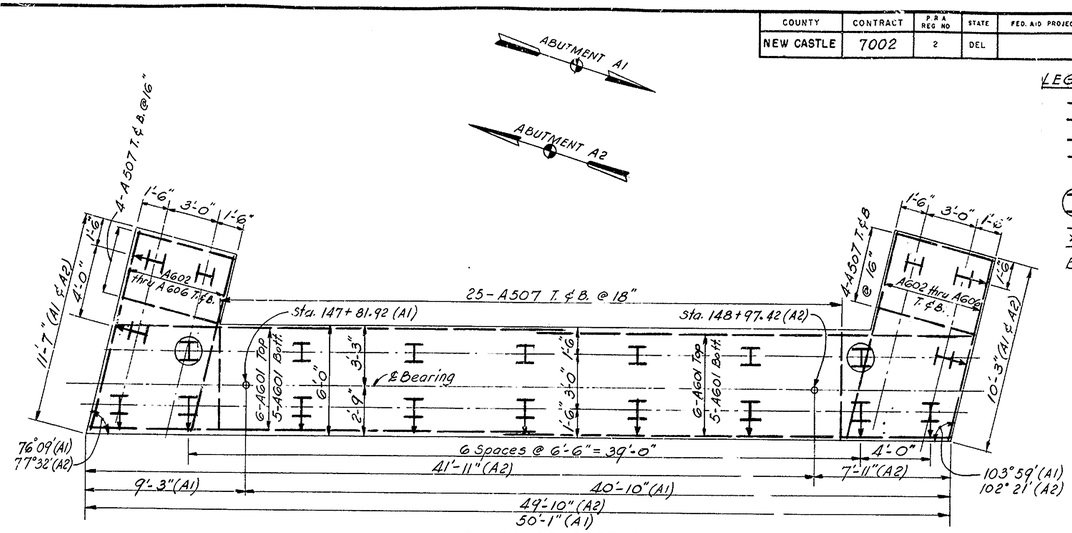

PLAN OF FOOTING
ABUTMENT A1 AS SHOWN
ABUTMENT A2 AS NOTED
SCALE ¼ IN = 1 FT

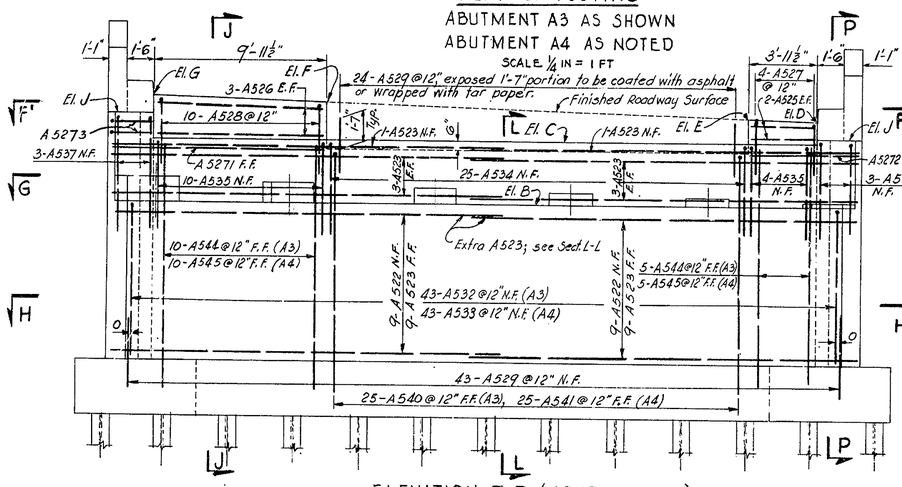

ELEVATION D-D (ABUTMENT A3)
ELEVATION E-E OPP. HAND (ABUTMENT A4)
SCALE ¼ IN = 1 FT

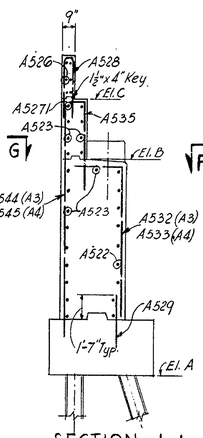

SECTION J-J
SCALE ¼ IN = 1 FT

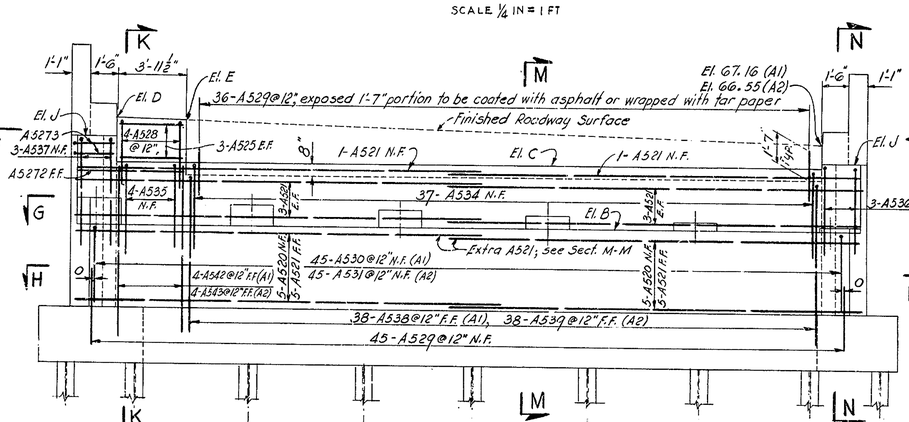

ELEVATION D-D (ABUTMENT A1)
ELEVATION E-E OPP. HAND (ABUTMENT A2)
SCALE ¼ IN = 1 FT

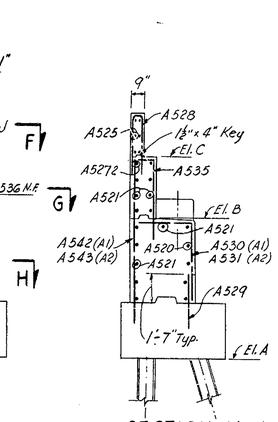

SECTION K-K
SCALE ¼ IN = 1 FT

NOTES:
Work this drawing with Dwgs. 4-3 & 4-5
For Sections L-L, M-M, N-N and P-P see Dwg 4-5.

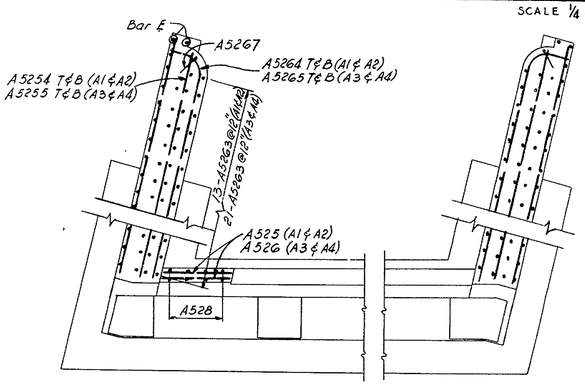

SECTION F-F (AS SHOWN)
SECTION F'-F' (SIMILAR)
SCALE ¼ IN = 1 FT

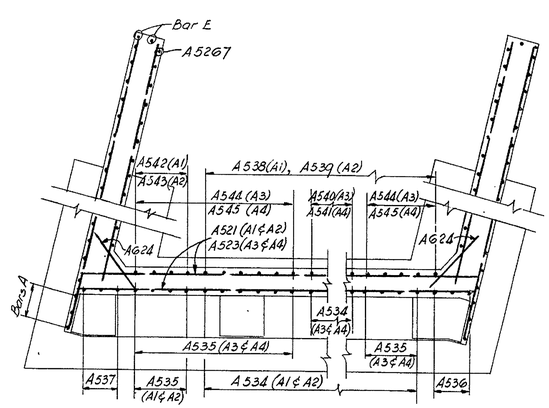

SECTION G-G
SCALE ¼ IN = 1 FT

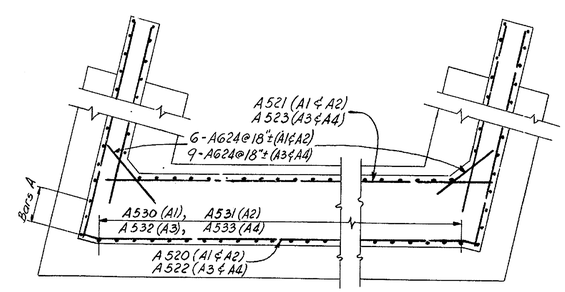

SECTION H-H
SCALE ¼ IN = 1 FT

DELAWARE STATE HIGHWAY DEPARTMENT
DELAWARE TURNPIKE

TURNPIKE BRIDGE OVER CHRISTINA RIVER
ABUTMENTS
FOOTING PLANS, ELEVATIONS & SECTIONS

DRAWN: S.L.T.	SCALE: AS NOTED	DATE: MAY 9, 1962	DWG.: 4-4
TRACED:	TIPPETTS-ABBETT-McCARTHY-STRATTON ENGINEERS AND ARCHITECTS		CONTRACT 7002
CHECKED: D.F.-D.L.			
CHARGE OF			SHEET 164 OF 224

COUNTY	CONTRACT	P R A REG NO	STATE	FED AID PROJECT NO.	FISCAL YEAR	SHEET NO	TOTAL SHEETS
NEW CASTLE	7002	2	DEL.			165	224

TABLE I			
ABUT. NO.	WING-WALL	NO. OF BARS REQ'D. A5162 A5252	A5163 A5253
A1	N	3	—
	S	4	—
A2	N	3	—
	S	4	—
A3	N	—	7
	S	—	8
A4	N	—	7
	S	—	8

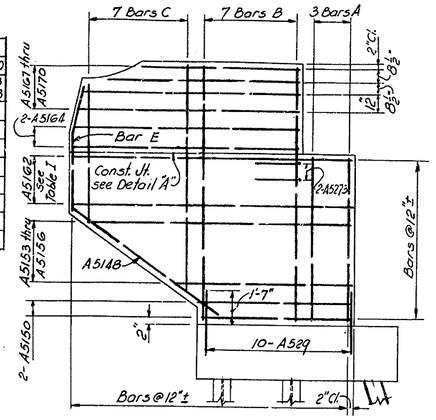

ABUTMENTS A1 & A2
OUTSIDE FACE OF WINGWALL

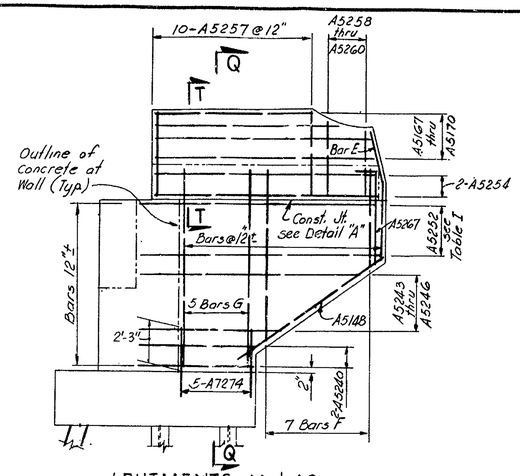

ABUTMENTS A1 & A2
INSIDE FACE OF WINGWALL

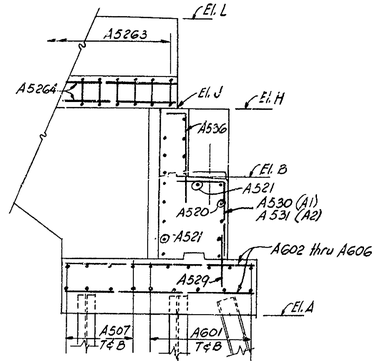

SECTION N-N
SCALE 1/4 IN = 1 FT

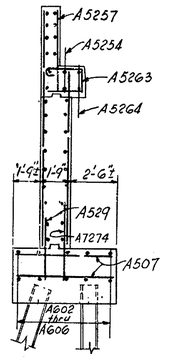

SECTION Q-Q
SCALE 1/4 IN = 1 FT

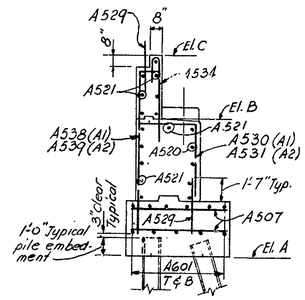

SECTION M-M
SCALE 1/4 IN = 1 FT

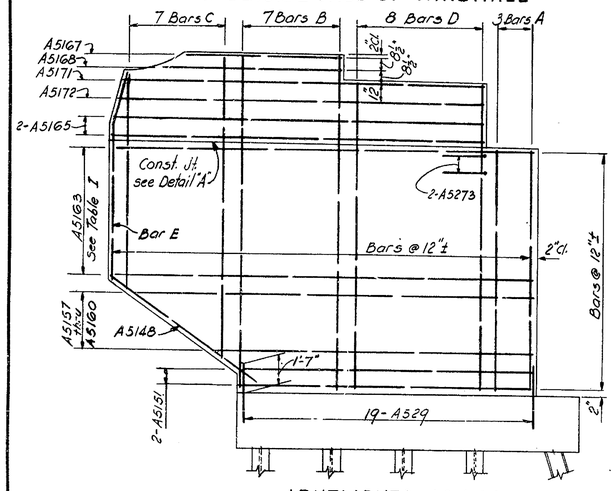

ABUTMENTS A3 & A4
OUTSIDE FACE OF WINGWALL

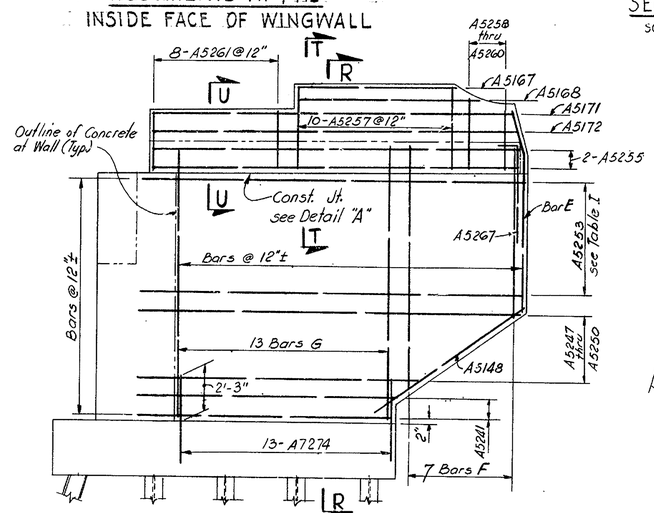

ABUTMENTS A3 & A4
INSIDE FACE OF WINGWALL

WINGWALL REINFORCEMENT DETAILS
SCALE 1/4 IN = 1 FT

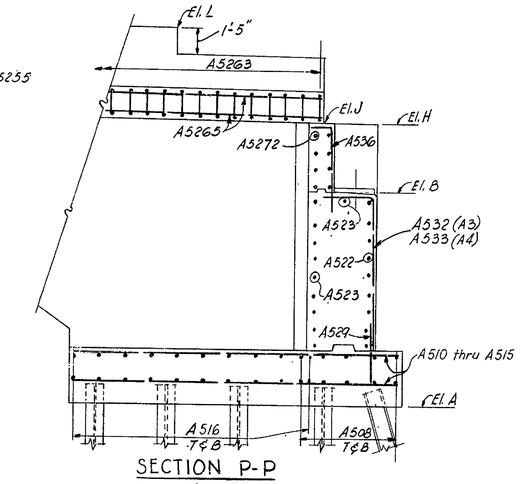

SECTION P-P
SCALE 1/4 IN = 1 FT

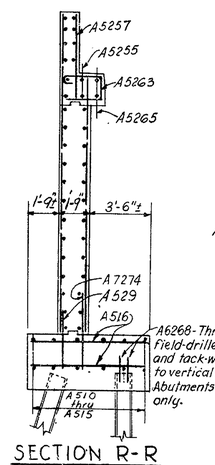

SECTION R-R
SCALE 1/4 IN = 1 FT

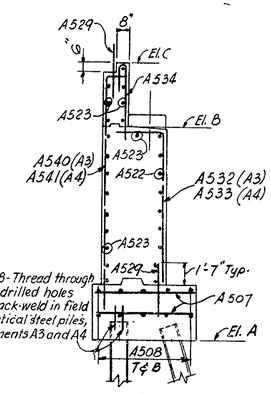

SECTION L-L
SCALE 1/4 IN = 1 FT

NOTES:
Work this drawing with Dwgs. 4-3 and 4-4.

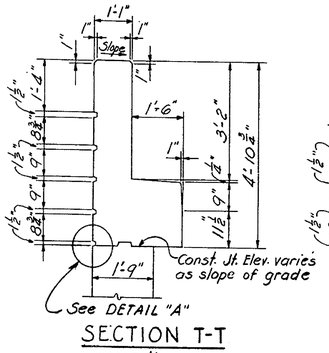

SECTION T-T
SCALE 1/2 IN = 1 FT

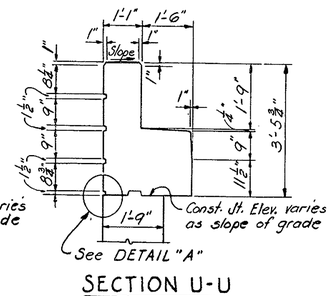

SECTION U-U
SCALE 1/2 IN = 1 FT

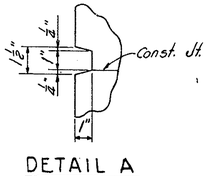

DETAIL A
SCALE 3 IN = 1 FT

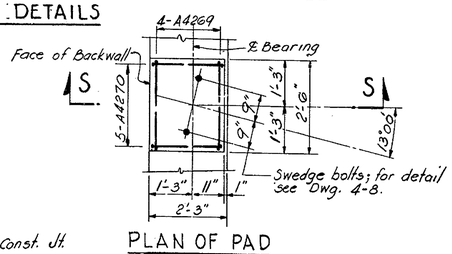

PLAN OF PAD
SCALE 1/2 IN = 1 FT

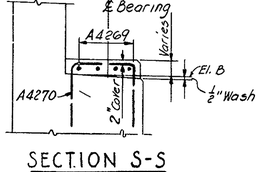

SECTION S-S
SCALE 1/2 IN = 1 FT

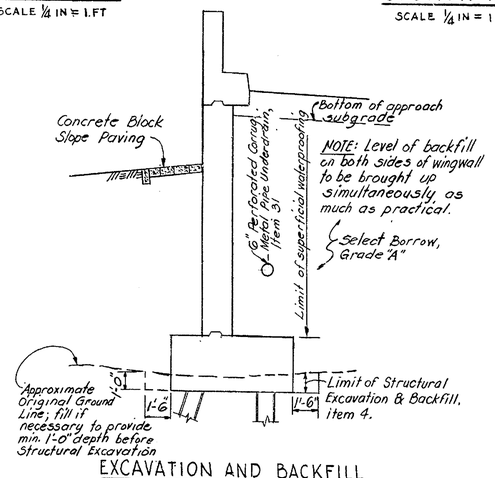

EXCAVATION AND BACKFILL
DETAIL AT WINGWALLS
SCALE 1/4 IN = 1 FT

DELAWARE STATE HIGHWAY DEPARTMENT
DELAWARE TURNPIKE

TURNPIKE BRIDGE OVER CHRISTINA RIVER
ABUTMENTS
SECTIONS AND DETAILS

DRAWN: S.L.T.	SCALE: AS NOTED	DATE: MAY 9, 1962	DWG.: 4-5
TRACED:	TIPPETTS-ABBETT-McCARTHY-STRATTON ENGINEERS AND ARCHITECTS		CONTRACT 7002
CHECKED: D.L.-D.F.			
CHARGE OF			SHEET 165 OF 224

COUNTY	CONTRACT	P.R.A. REG. NO.	STATE	FED. AID PROJECT NO.	FISCAL YEAR	SHEET NO.	TOTAL SHEETS
NEW CASTLE	7002	2	DEL.			166	224

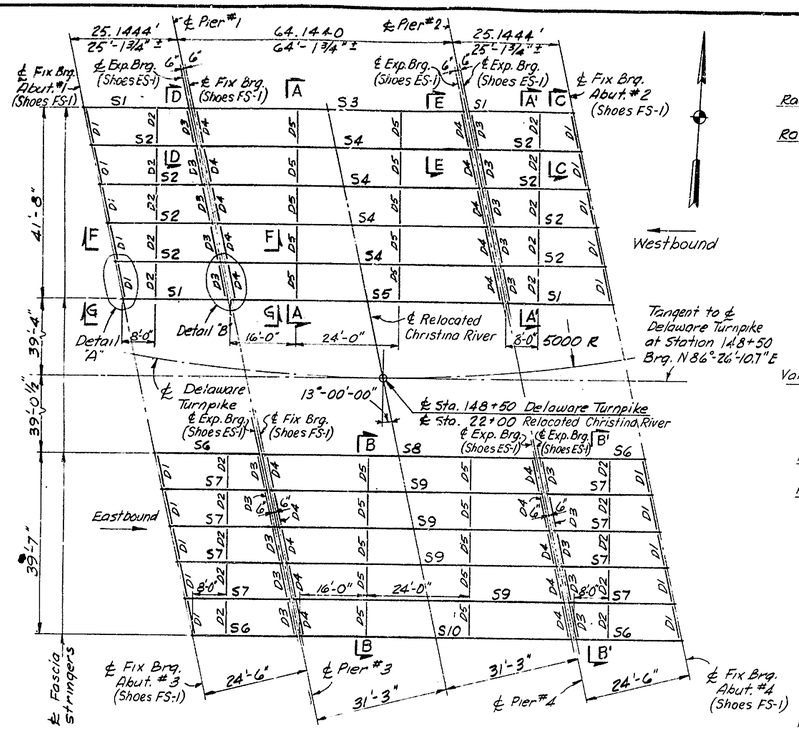

FRAMING PLAN

SCALE 1/16 IN. = 1 FT.

Note: Diaphragms:
D1, D2, D3 - 15 J 33.9
D4, D5 - 18 J 42.7
All framing dimensions are horizontal.

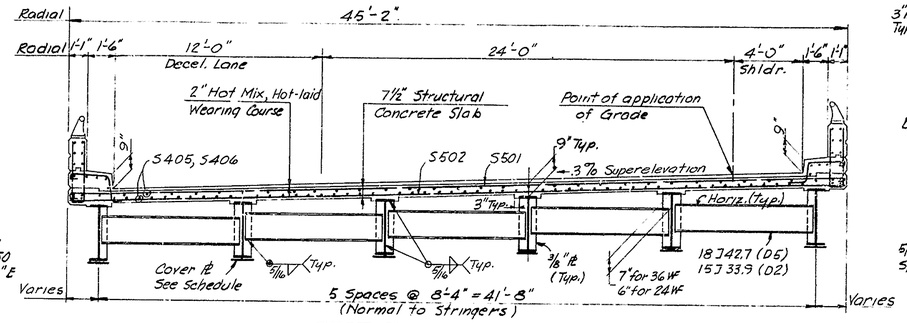

SECTION A-A AS SHOWN

SECTION A'-A' SIMILAR

SCALE 1/4 IN. = 1 FT.

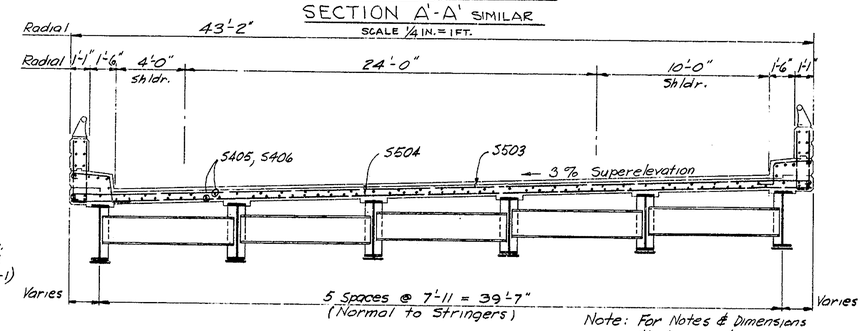

SECTION B-B AS SHOWN

SECTION B'-B' SIMILAR

SCALE 1/4 IN. = 1 FT.

Note: For Notes & Dimensions that are not shown, see Section A-A.

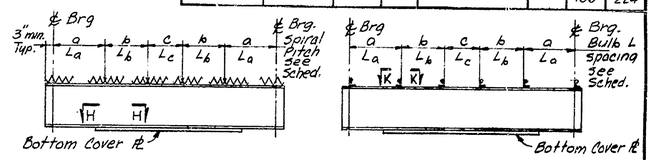

SPIRAL ARRANGEMENT

BULB ANGLE ARRANGEMENT

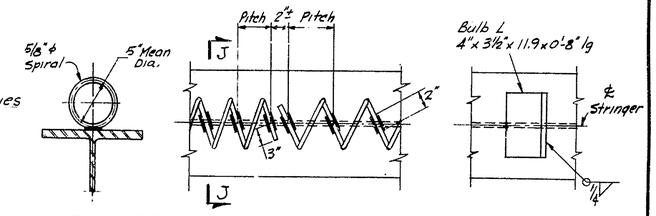

SECTION J-J

PLAN

VIEW K-K

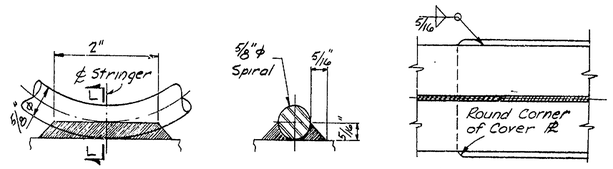

SPIRAL DETAIL

SECTION L-L

SECTION H-H

SPIRAL DETAILS

NOT TO SCALE

STRINGER SCHEDULE

		S1	S2	S3	S4	S5	S6	S7	S8	S9	S10
SHEAR KIPS	D.L. I	14.4	15.6	26.5	31.6	26.8	14.1	15.1	26.3	30.2	26.1
	D.L. II	—	—	11.3	11.3	11.3	—	—	11.1	11.1	11.1
	L.L.	31.4	34.7	42.0	46.5	42.0	30.3	33.0	40.6	44.2	40.6
	I	9.4	10.4	11.2	12.4	11.2	9.1	9.9	10.8	11.7	10.8
MOMENT FT-KIPS	D.L. I	88.5	96.0	430.9	513.0	436.0	86.8	92.5	428.0	491.8	424.9
	D.L. II	—	—	183.3	183.4	183.3	—	—	179.3	179.4	179.3
	L.L.	138.3	153.0	590.7	653.3	590.7	133.7	145.2	570.9	620.7	570.9
	I	41.5	45.9	157.0	173.6	157.0	40.1	43.6	151.7	165.0	151.7
SECTION	SHAPE	36 WF 150	24 WF 84	36 WF 150	36 WF 150	36 WF 150	36 WF 150	24 WF 84	36 WF 150	36 WF 150	36 WF 150
	TOP COVER ℞	None	None	None	None	None	None	None	None	None	None
	BOTT. COVER ℞	None	None	14 x 5/16 x 45'-9"	14 x 7/16 x 49'-0"	14 x 7/16 x 49'-0"	None	None	14 x 3/16 x 48'-9"	14 x 3/16 x 48'-9"	14 x 5/16 x 45'-9"
STRESS KSI	STEEL - BOTT.	6.4	18.0	17.8	17.8	16.3	6.3	17.2	16.2	17.5	17.4
	STEEL - TOP	6.4	18.0	13.0	14.2	11.9	6.3	17.2	11.8	13.7	12.7
SPIRAL PITCH	a/L_a	None	None	5"/14'-0"	5"/14'-0"	5"/14'-0"	None	None	5"/14'-0"	5"/14'-0"	5"/14'-0"
	b/L_b	↓	↓	8"/11'-0"	7"/11'-0"	7"/11'-0"	↓	↓	7"/11'-0"	7"/11'-0"	8"/11'-0"
	c/L_c			12"/Balance	11"/Balance	11"/Balance			11"/Balance	11"/Balance	13"/Balance
BULB ANGLE SPACING	a/L_a	↓	↓	12"/14'-0"	12"/14'-0"	12"/14'-0"	↓	↓	12"/14'-0"	12"/14'-0"	12"/14'-0"
	b/L_b			19"/11'-0"	16"/11'-0"	16"/11'-0"			16"/11'-0"	16"/11'-0"	19"/11'-0"
	c/L_c	None	None	29"/Balance	26"/Balance	26"/Balance	None	None	26"/Balance	26"/Balance	31"/Balance
Camber *	C_1	Natural camber up		1¼"	1 5/16"	1⅛"	Natural camber up		1⅛"	1¼"	1 3/16"
	C_2			15/16"	1"	13/16"			13/16"	15/16"	⅞"

* Dead load deflection (minimum camber to be held).

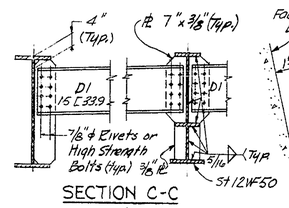

SECTION C-C

SCALE 1/2 IN. = 1 FT

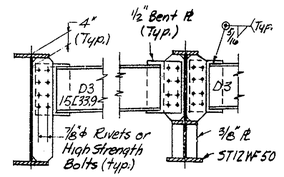

SECTION D-D

SCALE 1/2 IN. = 1 FT.

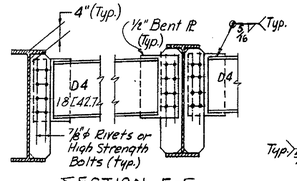

SECTION E-E

SCALE 1/2 IN. = 1 FT.

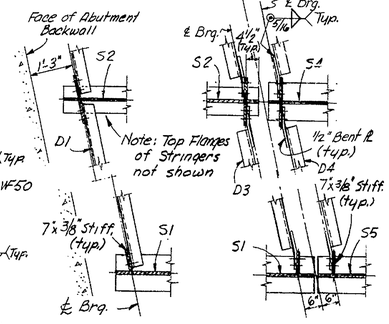

DETAIL A

SCALE 1/2 IN. = 1 FT.

DETAIL B

SCALE 1/2 IN. = 1 FT.

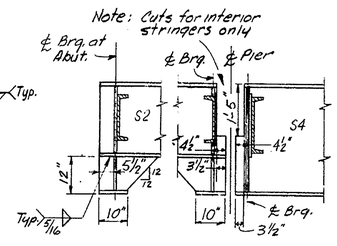

SECTION F-F

SCALE 1/2 IN. = 1 FT.

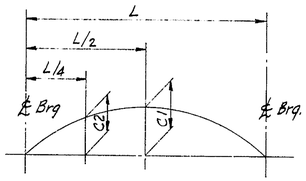

CAMBER DIAGRAM

NOT TO SCALE

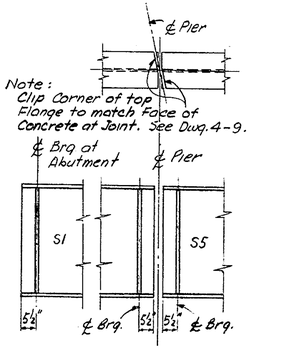

VIEW G-G

SCALE 1/2 IN. = 1 FT.

STEEL NOTES:

For material specifications see Special Provisions.
Basic allowable flexural tensile stress = 18,000 psi.
All stiffener plates and transverse framing members shall be vertical when stringers are in final erected position.
Contractor has the option of using either spirals or bulb angles where shear connectors are called for. Nelson studs may be substituted with the approval of the Engineer.
Composite Construction: No intermediate temporary supports shall be used during construction. No superimposed dead loads shall be added before 7 days after concrete is poured.
Rolled Beams shall have their rolled camber upward before welding of bottom plates.
Field Connections shall be made with 7/8" ϕ high strength bolts or rivets, unless otherwise indicated.
Painting: For Shop and Field painting see Standard Specifications and Special Provisions.

NOTE: For General Notes, see Dwg. 4-1.
For Special Notes and Deck Reinforcement support detail, see Dwg. 1-2.

DELAWARE STATE HIGHWAY DEPARTMENT

DELAWARE TURNPIKE

TURNPIKE BRIDGE OVER CHRISTINA RIVER

SUPERSTRUCTURE

FRAMING AND DETAILS

DRAWN: J.S.B.	SCALE: AS NOTED	DATE: MAY 9, 1962	DWG.: 4-6
TRACED:	TIPPETTS-ABBETT-McCARTHY-STRATTON ENGINEERS AND ARCHITECTS		CONTRACT 7002
CHECKED: D.F.-D.L.			
CHARGE OF			SHEET 166 OF 224

COUNTY	CONTRACT	P.R.A. RES. NO	STATE	FED. AID PROJECT NO.	FISCAL YEAR	SHEET NO.	TOTAL SHEETS
NEW CASTLE	7002	2	DEL			167	224

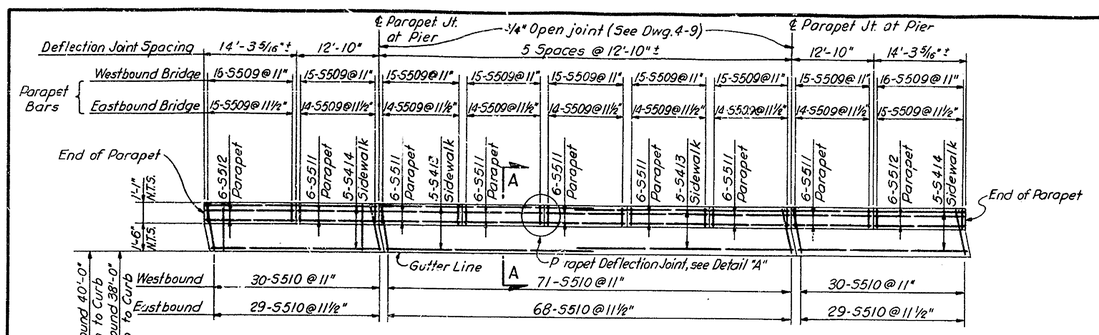

PARAPET AND SIDEWALK PLAN
SCALE: 3/32 IN. = 1 FT.

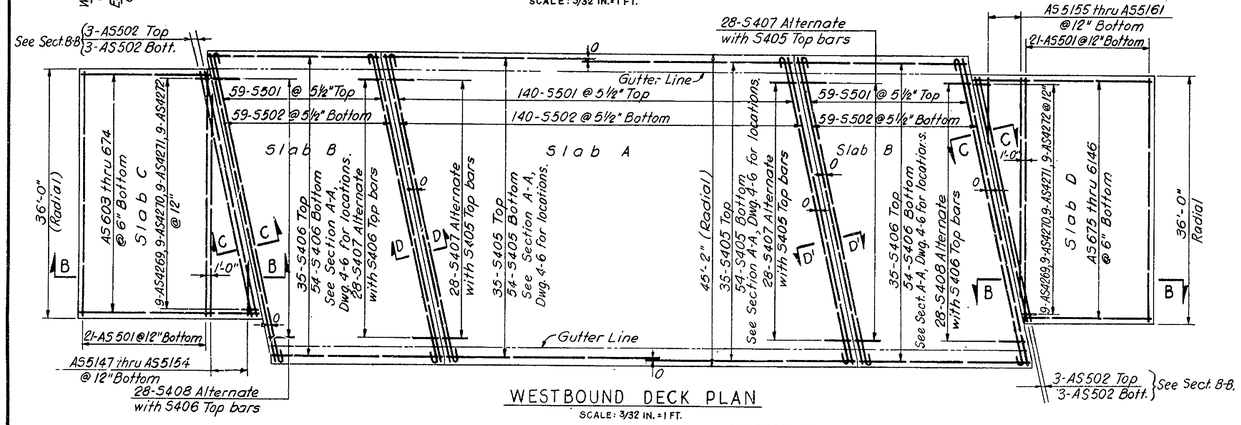

WESTBOUND DECK PLAN
SCALE: 3/32 IN. = 1 FT.

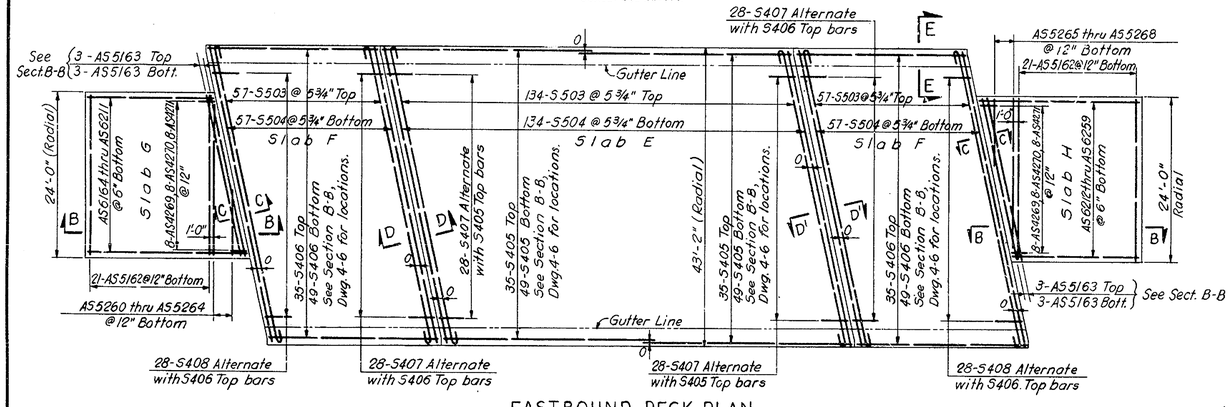

EASTBOUND DECK PLAN
SCALE: 3/32 IN. = 1 FT.

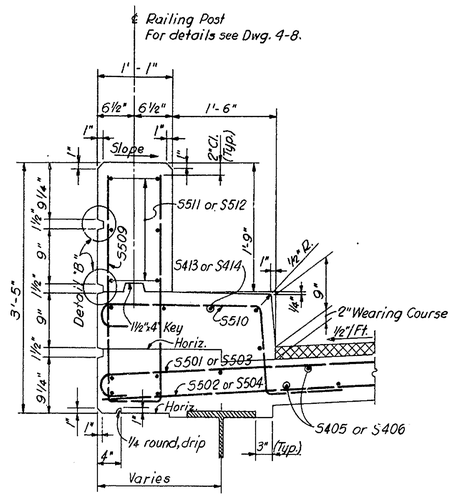

SECTION A-A
SCALE: 1 IN. = 1 FT.

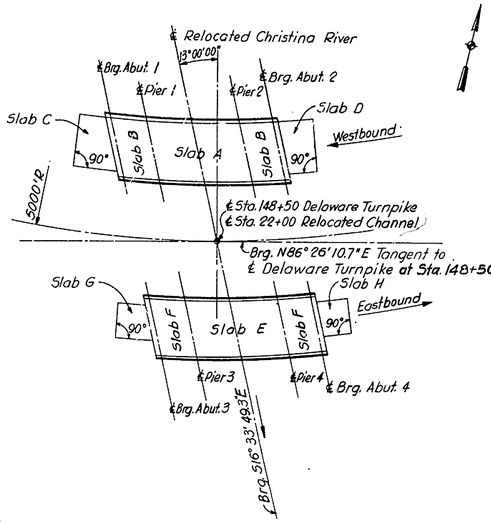

KEY PLAN
NO SCALE

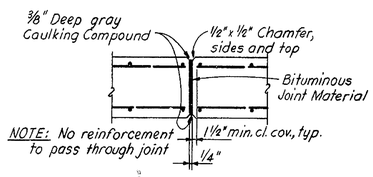

PARAPET DEFLECTION JOINT
DETAIL "A"
SCALE: 3/4 IN. = 1 FT.

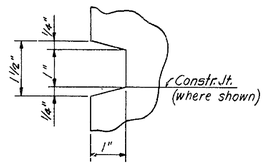

DETAIL "B"

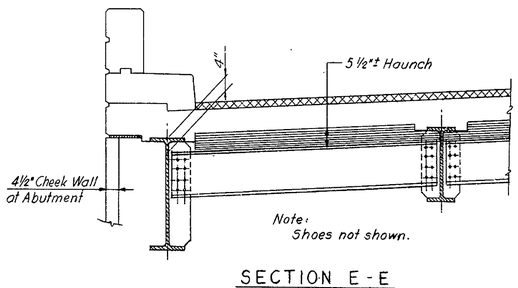

SECTION E-E
SCALE: ½ IN. = 1 FT.

NOTES:
For transverse section through deck slab, see Dwg. 4-6.
All parapet joints shall be radial, (perpendicular to fascia line.)
For joint details, see Dwg. 4-9.
For General Notes, see Dwg. 4-1.
For Concrete Notes, see Dwg. 4-3.

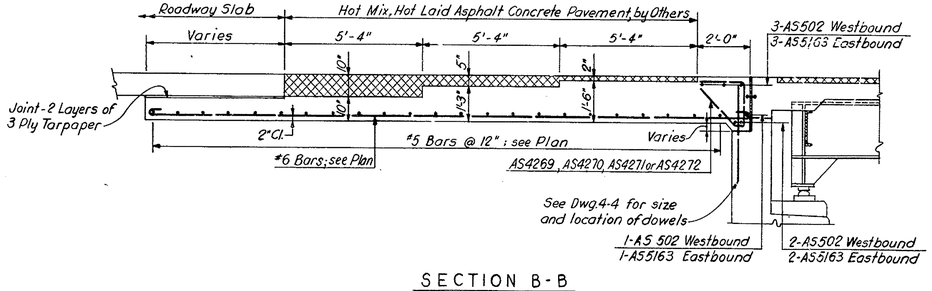

SECTION B-B
SCALE: 3/8 IN. = 1 FT.

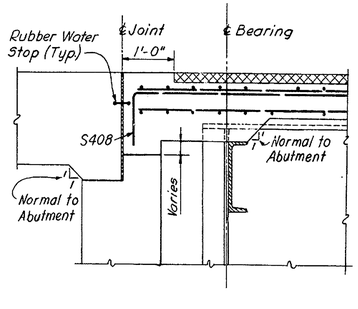

SECTION C-C
SCALE: 3/4 IN. = 1 FT.

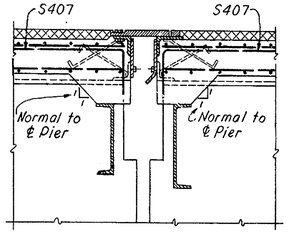

SECTION D-D (AS SHOWN)
SECTION D'-D' (SIMILAR)
SCALE: 3/4 IN. = 1 FT.

DELAWARE STATE HIGHWAY DEPARTMENT
DELAWARE TURNPIKE

TURNPIKE BRIDGE OVER CHRISTINA RIVER
SUPERSTRUCTURE
CONCRETE DECK AND APPROACH SLAB

DRAWN: E.A.N.-A.T.	SCALE: AS NOTED	DATE: MAY 9, 1962	DWG.: 4-7
TRACED:	TIPPETTS-ABBETT-McCARTHY-STRATTON ENGINEERS AND ARCHITECTS		CONTRACT 7002
CHECKED: D.F.-D.L.			
CHARGE OF			SHEET 167 OF 224

COUNTY	CONTRACT	P.R.A. REG. NO.	STATE	FED. AID PROJECT NO.	FISCAL YEAR	SHEET NO.	TOTAL SHEETS
NEW CASTLE	7002	2	DEL.			168	224

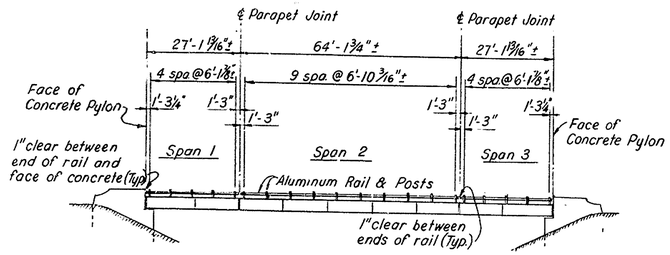

RAILING ELEVATION
WEST-BOUND BRIDGE
SCALE: 1 IN. = 20 FT.

NOTE: All dimensions shown are horizontal.

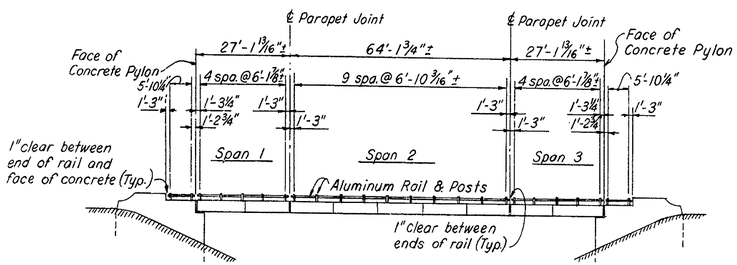

RAILING ELEVATION
EAST-BOUND BRIDGE
SCALE: 1 IN. = 20 FT.

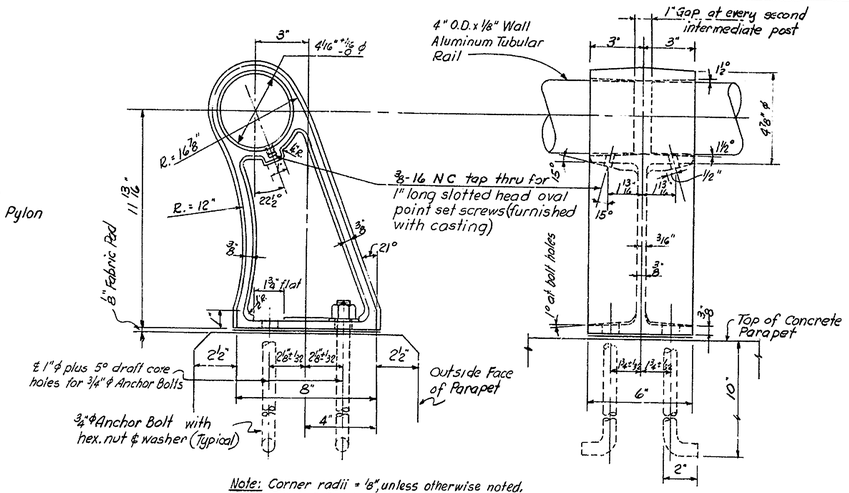

Note: Corner radii = 1/8", unless otherwise noted.
Fillets 5/16" unless otherwise noted.

RAILING DETAILS
SCALE: 3 IN. = 1 FT.

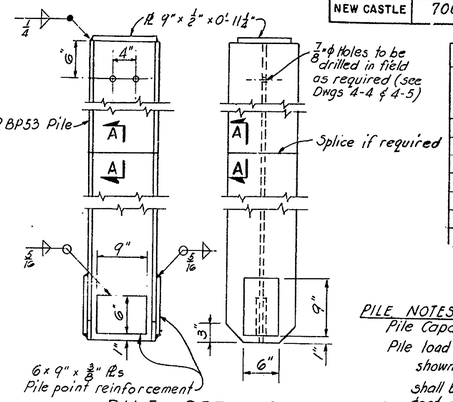

PILE DETAILS
SCALE: 1 IN. = 1 FT.

PILE SCHEDULE					
LOCATION	NUMBER BY FOOTING — ESTIMATED LENGTH 20 ft.	25 ft.	30 ft.	35 ft.	40 ft.
Abutment 1		22			
Pier 4				18	
Pier 1	18				
Piers 2 & 3			18		
Abutment 2			22		
Abutments 3 & 4					39
Total Number	18	22	58	18	78

PILE NOTES:
Pile Capacity shall be 50 tons.
Pile load test shall be at a test pile location as shown on the plans. Actual pile lengths shall be determined by test piles. For location of test piles see Dwgs 4-2 & 4-4.
Preboring of piles through embankment fill shall not be permissible.
All Obstructions within 15 ft. below original ground surface at the abutments and 15 ft. below the bottom of pier footings shall be overcome by methods approved by the Engineer to allow advancing the piles beyond such obstructions.

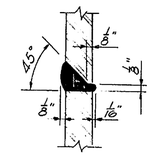

SECTION A-A
100% BUTT-WELDED
SPLICE DETAIL

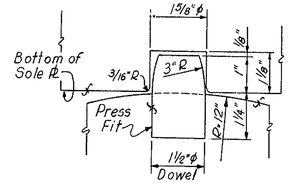

DETAIL "A"
SCALE: 6 IN. = 1 FT.

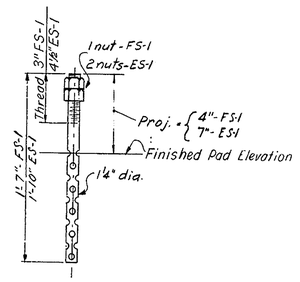

SWEDGE BOLT DETAIL
NO SCALE

RAILING NOTES:
Railing Posts shall be erected normal to grade and rails shall be parallel to established grade.
Anchor Bolts shall be of aluminum alloy meeting the requirements of ASTM-B211 alloy 2024-T4. Finished aluminum alloy bolts, nuts and washers shall be given an anodic coating at least 0.0002 in. thick and a chromate seal.
Anchor Bolts shall be set accurately by means of a template.
After Nuts have been placed and tightened to the satisfaction of the Engineer, bolts shall be cut off 1/8" above nuts and peened.
Tubular Rails shall be closed at all piers and abutments with a welded aluminum plug.
Rails shall be continuous at all end posts.
Preformed Fabric Pads shall be 1/8" thick.

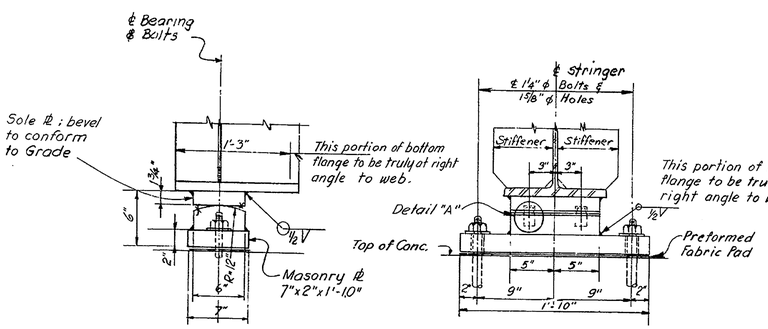

FIXED SHOE FS-1
SCALE: 1 1/2 IN. = 1 FT.

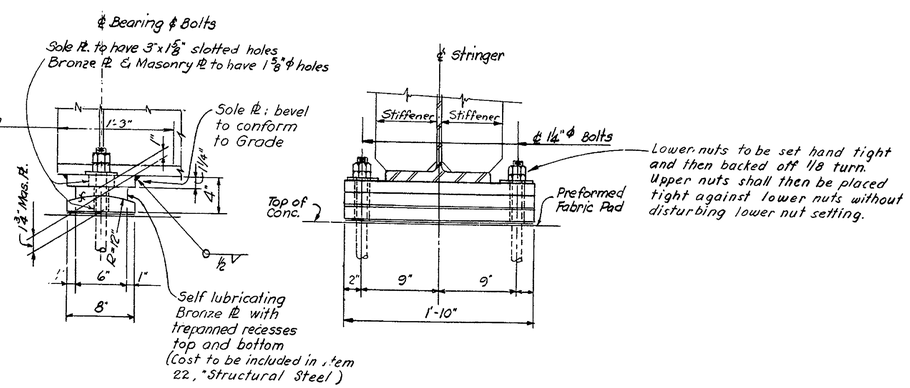

EXPANSION SHOE ES-1
SCALE: 1 1/2 IN. = 1 FT.

NOTES:
Shoes to have vertical and horizontal ℄'s mutually perpendicular at 65° F.
For Steel Notes, see Drawing 4-6
For location of parapet deflection joints, see Dwg. 4-7.

DELAWARE STATE HIGHWAY DEPARTMENT
DELAWARE TURNPIKE

TURNPIKE BRIDGE OVER CHRISTINA RIVER
SUPERSTRUCTURE
RAILING, SHOE AND PILE DETAILS

DRAWN: B.M.-A.T.	SCALE: AS NOTED	DATE: MAY 9, 1962	DWG.: 4 - 8
TRACED:	TIPPETTS-ABBETT-McCARTHY-STRATTON ENGINEERS AND ARCHITECTS		CONTRACT 7002
CHECKED: DL-D.F.			
CHARGE OF			SHEET 168 OF 224

COUNTY	CONTRACT	P.R.A. REG. NO.	STATE	FED. AID PROJECT NO.	FISCAL YEAR	SHEET NO.	TOTAL SHEETS
NEW CASTLE	7002	2	DEL.			169	224

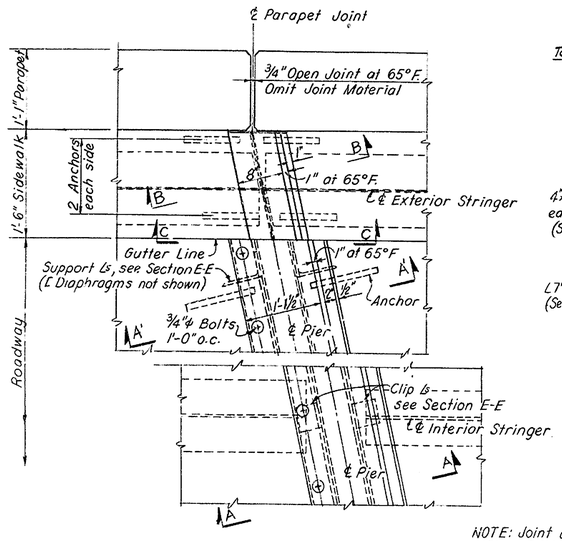

PLAN AT PIER JOINT
SLIDING PLATE DETAIL
SCALE: 1 IN. = 1 FT.

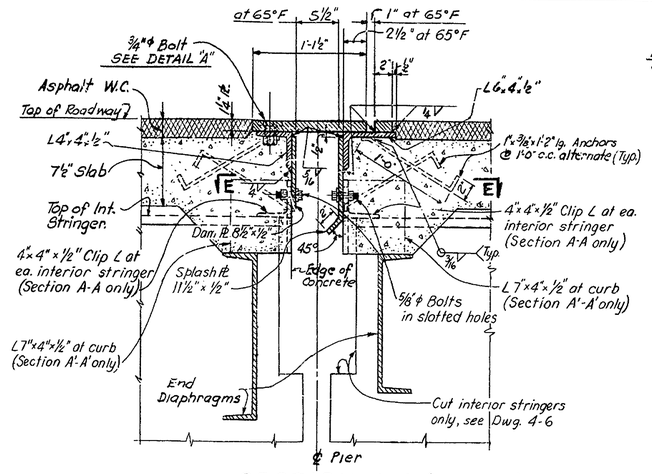

SECTION A-A (AS SHOWN)
SECTION A'-A' (SAME EXCEPT AS NOTED)
SCALE: 1 1/2 IN. = 1 FT

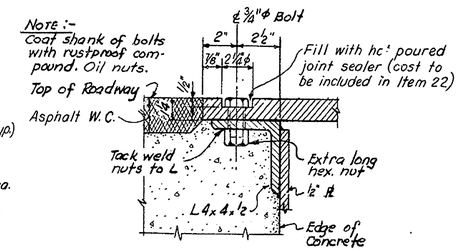

DETAIL "A"
SCALE: 3 IN. = 1 FT.

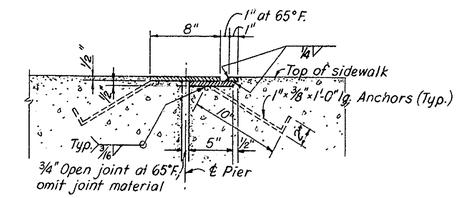

SECTION B-B (SHOWN)
SECTION B'-B' (SIMILAR)
SCALE: 1 1/2 IN. = 1 FT.

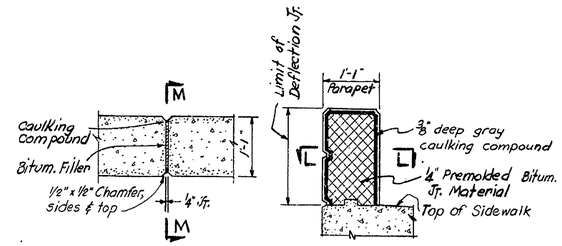

SECTION L-L
SECTION M-M
DETAILS AT PARAPET DEFLECTION JOINT
SCALE: 3/4 IN. = 1 FT.

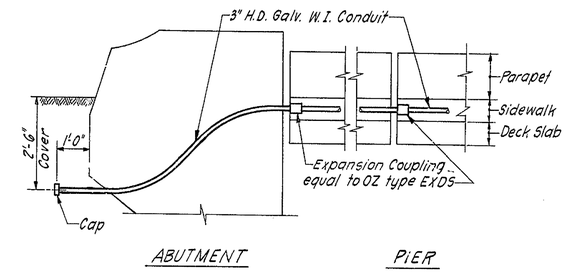

EXPANSION JOINT DETAILS FOR CONDUITS
NO SCALE

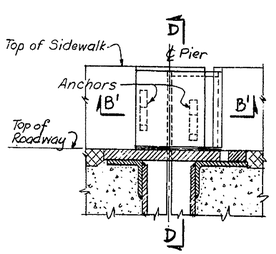

SECTION C-C

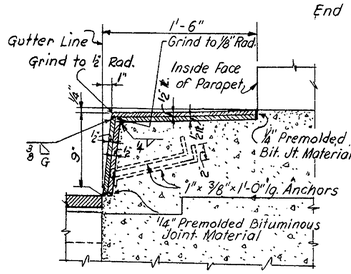

SECTION D-D

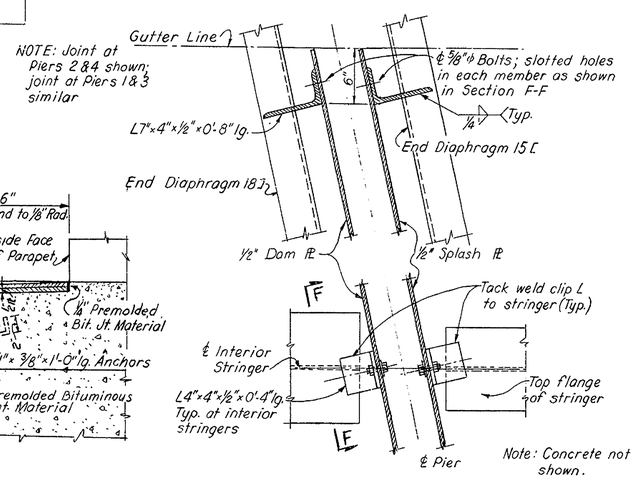

SECTION E-E

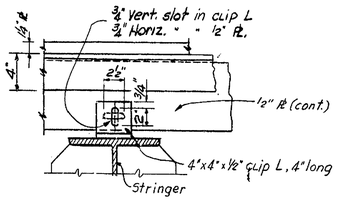

SECTION F-F

JOINT AT PIER
SCALE: 1 1/2 IN. = 1 FT.

NOTES:

Top of Expansion Joint detail to conform to roadway cross section

For location of Parapet Deflection Joints, see Drawing 4-7.
For General Notes, see Drawing 4-1.
For Concrete Notes, see Drawing 4-3
For Steel Notes, see Drawing 4-6
Cost of furnishing and placing joint details at piers, shall be included in Item 22, "Structural Steel".

Cost of furnishing and placing joint details at abutments, including water stops, shall be included in Item 18, "Portland Cement Concrete Masonry".

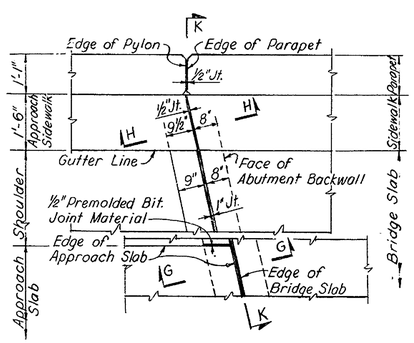

SOUTH SIDE - ABUTS. 1 & 2
NORTH & SOUTH SIDES - ABUTS. 3 & 4.

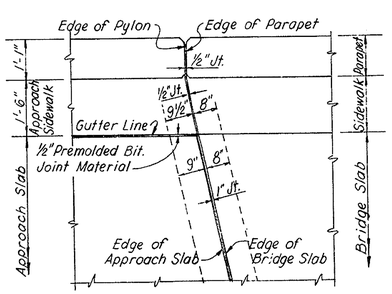

NORTH SIDE - ABUTS. 1 & 2

PLANS AT ABUTMENT JOINT
SCALE: 1/2 IN. = 1 FT.

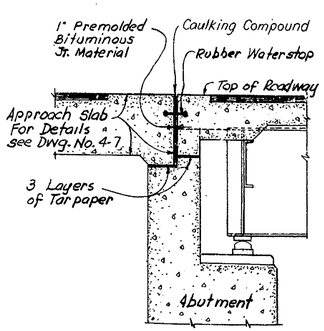

SECTION G-G

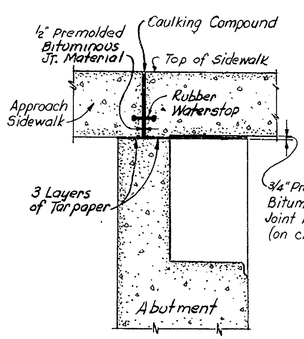

SECTION H-H

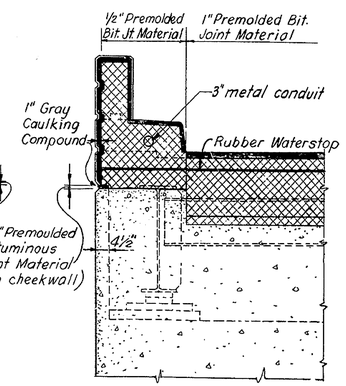

SECTION K-K

JOINT AT ABUTMENT
SCALE: 1/2 IN. = 1 FT.

DELAWARE STATE HIGHWAY DEPARTMENT
DELAWARE TURNPIKE

TURNPIKE BRIDGE OVER CHRISTINA RIVER

SUPERSTRUCTURE
JOINT DETAILS

DRAWN: B. M.	SCALE: AS NOTED	DATE: MAY 9, 1962	DWG.: 4-9
TRACED:	TIPPETTS-ABBETT-McCARTHY-STRATTON ENGINEERS AND ARCHITECTS		CONTRACT 7002
CHECKED: D.L.-D.F.			
CHARGE OF			SHEET 169 OF 224

COUNTY	CONTRACT	F.D.A. REG. NO	STATE	FED. AID PROJECT NO.	FISCAL YEAR	SHEET NO	TOTAL SHEETS
NEW CASTLE	7002	2	DEL.			170	224

* Amt. Req'd:
A509 & A515 : 4 ea.
A510 thru A514 : 8 ea.

REINFORCING BAR SCHEDULE

ABUTMENTS

MARK	SIZE	AMT. REQ'D.	LENGTH	TYPE	A	B	C	D	E	F	G	REMARKS
A601	6	44	25'-5"	Str								Footing - Abut. A1 & A2
A602 thru A606	6	8 ea.	11'-0" thru 9'-8", Δ=4"	Str.								A1 & A2
A507	5	228	5'-6"	Str.								A1, A2, A3 & A4
A508	5	40	24'-5"	Str.								A3 & A4
A509 thru A515	5	See Above*	19'-9" thru 17'-9" Δ=4"	Str.								A3 & A4
A516	5	76	6'-6"	Str.								Footing - A3 & A4
A520	5	20	23'-8"	II	1'-0"	22'-8"	2½"	11"				Horiz. Bars - A1 & A2
A521	5	52	23'-8"	Str.								A1 & A2
A522	5	36	22'-7"	II	1'-0"	21'-7"	2½"	11"				A3 & A4
A523	5	68	22'-7"	Str.								Horiz. Bars - A3 & A4
A624	6	60	4'-0"	Str.								Fillet Bars
A525	5	20	3'-7"	Str.								Shoulder Wall
A526	5	12	9'-7"	Str.								
A527	5	8	5'-11"	III	2'-9"	0'-5"	2'-9"					
A528	5	28	7'-11"	III	3'-9"	5"	3'-9"					Shoulder Wall & Footing
A529	5	412	3'-4"	Str.								Approach Slab Dowels
A530	5	45	7'-8"	I	3'-5"	4'-3"						Front Face Bars - A1
A531	5	45	7'-1"	I	3'-5"	3'-8"						A2
A532	5	43	11'-9"	I	3'-5"	8'-4"						A3
A533	5	43	11'-2"	I	3'-5"	7'-9"						Front Face Bars - A4
A534	5	124	6'-9"	III	4'-10"	5"	1'-6"					Backwall, N.F.
A535	5	36	6'-0"	I	1'-2"	4'-10"						Backwall, N.F.
A536	5	12	6'-4"	I	1'-2"	5'-2"						Backwall, North side
A537	5	12	7'-6"	I	1'-2"	6'-4"						Backwall, South side
A538	5	38	10'-0"	I	1'-2"	8'-10"						Backwall, F.F. (A1)
A539	5	38	9'-4"	I	1'-2"	8'-2"						(A2)
A540	5	25	14'-0"	I	1'-2"	12'-10"						(A3)
A541	5	25	13'-6"	I	1'-2"	12'-4"						Backwall, F.F. (A4)
A542	5	4	9'-4"	Str.								Backwall, F.F. (A1)
A543	5	4	8'-8"	Str.								(A2)
A544	5	15	13'-5"	Str.								(A3)
A545	5	15	12'-10"	Str.								Backwall, F.F. (A4)
			BARS A									
A550	5	3	8'-0"	Str.								Wingwall O.F. A1-N
A551	5	3	9'-1"									A1-S
A552	5	3	7'-5"									A2-N
A553	5	3	8'-7"									A2-S
A554	5	3	12'-1"									A3-N
A555	5	3	13'-2"									A3-S
A556	5	3	11'-6"									A4-N
A557	5	3	12'-7"	Str.								Wingwall O.F. A4-S
			BARS B									
A560	5	7	12'-11"	Str.								Wingwall O.F. - A1-N
A561		7	14'-0"									A1-S
A562		7	12'-3"									A2-N
A563		7	13'-5"									A2-S
A564		7	17'-0"									A3-N
A565		7	18'-1"									A3-S
A566		7	16'-4"									A4-N
A567	5	7	17'-5"	Str.								Wingwall O.F. - A4-S
			BARS C									
A570	5	1	6'-5"	Str.								Wingwall O.F. - A1-N
A571		1	7'-2"									
A572		1	8'-1"									
A573		1	9'-3"									
A574		1	10'-0"									
A575		1	10'-8"									
A576	5	1	11'-4"	Str.								Wingwall O.F. - A1-N

ABUTMENTS

MARK	SIZE	AMT. REQ'D.	LENGTH	TYPE	A	B	C	D	E	F	G	REMARKS
			BARS C									
A578	5	1	7'-7"	Str.								Wingwall O.F. - A1-S
A579		1	8'-4"									
A580		1	9'-3"									
A581		1	10'-5"									
A582		1	11'-2"									
A583		1	11'-10"									
A584	5	1	12'-6"	Str.								Wingwall O.F. - A1-S
A586	5	1	5'-9"	Str.								Wingwall O.F. A2-N
A587		1	6'-6"									
A588		1	7'-5"									
A589		1	8'-7"									
A590		1	9'-4"									
A591		1	10'-0"									
A592	5	1	10'-8"	Str.								Wingwall O.F. A2-N
A594	5	1	6'-11"	Str.								Wingwall O.F. A2-S
A595		1	7'-8"									
A596		1	8'-7"									
A597		1	9'-9"									
A598		1	10'-6"									
A599		1	11'-2"									
A5100	5	1	11'-10"	Str.								Wingwall O.F. A2-S
A5102	5	1	10'-7"	Str.								Wingwall O.F. A3-N
A5103		1	11'-4"									
A5104		1	12'-3"									
A5105		1	13'-5"									
A5106		1	14'-2"									
A5107		1	14'-10"									
A5108	5	1	15'-6"	Str.								Wingwall O.F. A3-N
A5110	5	1	11'-8"	Str.								Wingwall O.F. A3-S
A5111		1	12'-5"									
A5112		1	13'-4"									
A5113		1	14'-6"									
A5114		1	15'-3"									
A5115		1	15'-11"									
A5116	5	1	16'-7"	Str.								Wingwall O.F. A3-S
A5118	5	1	9'-9"	Str.								Wingwall O.F. A4-N
A5119		1	10'-6"									
A5120		1	11'-5"									
A5121		1	12'-7"									
A5122		1	13'-4"									
A5123		1	14'-0"									
A5124	5	1	14'-8"	Str.								Wingwall O.F. A4-N
A5126	5	1	10'-11"	Str.								Wingwall O.F. A4-S.
A5127		1	11'-8"									
A5128		1	12'-7"									
A5129		1	13'-9"									
A5130		1	14'-6"									
A5131		1	15'-2"									
A5132	5	1	15'-10"	Str.								Wingwall O.F. A4-S
			BARS D									
A5134	5	8	15'-7"	Str.								Wingwall O.F. A3-N
A5135		8	16'-8"									A3-S
A5136		8	14-11"									A4-N
A5137	5	8	16'-0"	Str.								Wingwall O.F. A4-S
			BARS E									
A5139	5	2	6'-0"	II	2'-11"	3'-1"	9"	2'-10"				Wingwall E.F. A1-N
A5140		2	7'-2"			4'-3"						A1-S
A5141		2	5'-4"			2'-5"						A2-N
A5142		2	6'-6"			3'-7"						A2-S
A5143		2	10'-2"			7'-3"						A3-N
A5144		2	11'-3"			8'-4"						A3-S
A5145		2	9'-4"			6'-5"						A4-N
A5146	5	2	10'-5"	II	2'-11"	7'-6"	9	2'-10"				Wingwall E.F. A4-S

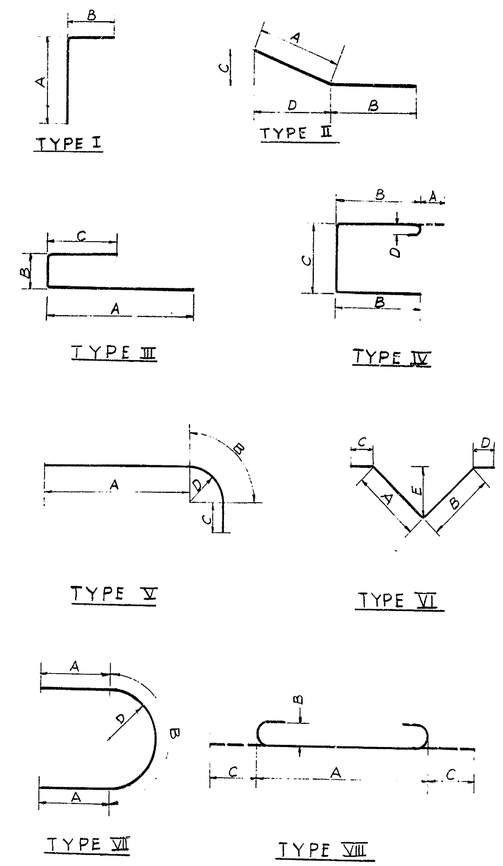

Notes:
For bar types IX, X & XI, see Dwg. 4-12.
All bar dimensions are out to out.
For Concrete Notes see Dwg. 4-3.

DELAWARE STATE HIGHWAY DEPARTMENT
DELAWARE TURNPIKE

TURNPIKE BRIDGE OVER CHRISTINA RIVER
REINFORCING BAR SCHEDULE
ABUTMENTS - SHEET I

DRAWN: D.J.F.	SCALE:	DATE: MAY 9, 1962	DWG.: 4 - 11
TRACED:	TIPPETTS-ABBETT-McCARTHY-STRATTON ENGINEERS AND ARCHITECTS		CONTRACT 7002
CHECKED: D.E.L.			
CHARGE OF			SHEET 170 OF 224

COUNTY	CONTRACT	P R A REF NO	STATE	FED AID PROJECT NO	FISCAL YEAR	SHEET NO	TOTAL SHEETS
NEW CASTLE	7002	2	DEL			171	224

REINFORCING BAR SCHEDULE

ABUTMENTS

MARK	SIZE	AMT. REQ'D.	LENGTH	TYPE	A	B	C	D	E	F	G	REMARKS
A5148	5	16	10'-0"	Str.								Wingwall E.F., A1, A2, A3, A4
A5150	5	8	8'-9"	Str.								Wingwall O.F., A1 & A2
A5151	5	8	17'-1"	Str.								Wingwall O.F., A3 & A4
A5153 thru A5156	5	4 ea.	10'-5" thru 14'-11", Δ=18"	Str.								Wingwall O.F., A1 & A2
A5157 thru A5160	5	4 ea.	18'-9" thru 23'-3", Δ=18"	Str.								Wingwall O.F., A3 & A4
A5162	5	14	16'-3"	Str.								Wingwall O.F., A1 & A2
A5163	5	30	24'-7"	Str.								Wingwall O.F., A3 & A4
A5164	5	8	13'-2"	Str.								Wingwall O.F., A1 & A2
A5165	5	8	21'-6"	Str.								Wingwall O.F., A3 & A4
A5167	5	16	9'-2"	Str.								Wingwall E.F. A1, A2, A3 & A4
A5168		16	10'-8"									A1, A2, A3 & A4
A5169		8	12'-7"									A1 & A2
A5170		8	12'-10"									A1 & A2
A5171		8	20'-11"									A3 & A4
A5172	5	8	21'-2"	Str.								Wingwall E.F. A3 & A4
			BARS F									
A5174 thru A5180	5	1 ea.	4'-1" thru 8'-1", Δ=8"	Str.								Wingwall I.F., A1-N
A5181 thru A5187		1 ea.	5'-3" thru 9'-3", Δ=8"									A1-S
A5188 thru A5194		1 ea.	3'-5" thru 7'-5", Δ=8"									A2-N
A5195 thru A5201		1 ea.	4'-7" thru 8'-7", Δ=8"									A2-S
A5202 thru A5208		1 ea.	8'-2" thru 12'-2", Δ=8"									A3-N
A5209 thru A5215		1 ea.	9'-3" thru 13'-3", Δ=8"									A3-S
A5216 thru A5222		1 ea.	7'-6" thru 11'-6", Δ=8"									A4-N
A5223 thru A5229	5	1 ea.	6'-7" thru 12'-7", Δ=8"	Str.								Wingwall I.F., A4-S
			BARS G									
A5231	5	5	9'-8"	Str.								Wingwall I.F., A1-N
A5232		5	10'-10"									A1-S
A5233		5	9'-1"									A2-N
A5234	5	5	10'-2"									A2-S
A7235	7	13	13'-9"									A3-N
A7236		13	14'-10"									A3-S
A7237		13	13'-1"									A4-N
A7238	7	13	14'-2"	Str.								Wingwall I.F., A4-S
A5240	5	8	6'-1"	Str.								Wingwall I.F., A1 & A2
A5241	5	8	14'-5"	Str.								Wingwall I.F., A3 & A4
A5243 thru A5246	5	4 ea.	7'-9" thru 12'-3", Δ=18"	Str.								Wingwall I.F., A1 & A2
A5247 thru A5250	5	4 ea.	16'-1" thru 20'-7", Δ=18"	Str.								Wingwall I.F., A3 & A4
A5252	5	14	13'-10"	Str.								Wingwall I.F., A1 & A2
A5253	5	30	22'-2"	Str.								Wingwall I.F., A3 & A4
A5254	5	8	12'-8"	Str.								Wingwall I.F., A1 & A2
A5255	5	8	21'-0"	Str.								Wingwall I.F., A3 & A4
A5257	5	80	4'-7"	Str.								Wingwall I.F., A1, A2, A3 & A4
A5258		8	4'-1"									
A5259		8	3'-9"									
A5260		8	3'-7"									Wingwall I.F., A1, A2, A3 & A4
A5261	5	32	3'-2"	Str.								Wingwall I.F., A3 & A4
A5263	5	136	6'-5"	IV	7"	2'-3"	1'-4"	5"				Sidewalk Bars
A5264	5	8	13'-9"	V	10'-11"	1'-11"	11"	1'-2½"				Sidewalk Bars
A5265	5	8	22'-1"	V	19'-3"	1'-11"	11"	1'-2½"				Sidewalk Bars
A5267	5	8	5'-1"	I	3'-10"	1'-3"						Sidewalk Bars
A5268	6	72	3'-6"	VI	1'-5"	1'-5"	4"	4"	12"			Anchors
A4269	4	96	7'-2"	III	2'-6"	2'-2"	2'-6"					Pad Bars
A4270	4	120	6'-10"	III	2'-6"	1'-10"	2'-6"					Pad Bars
A5271	5	2	12'-0"	Str.								Backwall, N.F.
A5272	5	4	6'-0"	Str.								Backwall, N.F.
A5273	5	8	3'-10"	XI	2'-3"	1'-7"	0'-4"	1'-6"				Wingwall, O.F.
A7274	7	72	4'-0"	Str.								Wingwall Dowels

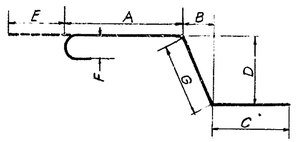

TYPE IX

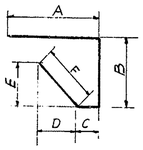

TYPE X

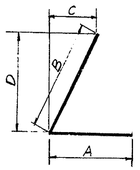

TYPE XI

NOTES:

For bar types I through VIII, see Dwg. 4-11.
All bar dimensions are out to out.
For Concrete Notes, see Dwg. 4-3.

DELAWARE STATE HIGHWAY DEPARTMENT
DELAWARE TURNPIKE

TURNPIKE BRIDGE OVER CHRISTINA RIVER
REINFORCING BAR SCHEDULE
ABUTMENTS - SHEET 2

DRAWN D.J.F.	SCALE	DATE MAY 9, 1962	DWG 4-12
TRACED	TIPPETTS-ABBETT-McCARTHY-STRATTON ENGINEERS AND ARCHITECTS		CONTRACT 7002
CHECKED D.E.L.			
CHARGE OF			SHEET 171 OF 224

COUNTY	CONTRACT	P R A REG NO	STATE	FED AID PROJECT NO	FISCAL YEAR	SHEET NO	TOTAL SHEETS
NEW CASTLE	7002	2	DEL			172	244

REINFORCING BAR SCHEDULE

PIERS

MARK	SIZE	AMT. REQ'D.	LENGTH	TYPE	A	B	C	D	E	F	G	REMARKS
P401	4	86	7'- 6"	III	2'-6"	2'-6"	2'-6"					Pier Top
P402	4	86	6'- 0"	III	1'-9"	2'-6"	1'-9"					
P403	4	28	5'- 11"	VII	1'-0"	3'-11"	2'-6"	1'-3"				
P404	4	16	3'- 8"	I	2'-6"	1'-2"						
P405	4	16	2'- 11"		1'-9"	1'-2"						
P406	4	4	22'- 11"		21'-4"	1'-7"						
P407	4	4	21'- 10"		20'-3"	1'-7"						
P408	4	4	24'- 3"		22'-8"	1'-7"						
P409	4	4	23'- 2"	I	21'-7"	1'-7"						
P410	4	4	24'- 4"	Str.								
P411	4	4	23'- 4"									Pier Top
P412	4	112	22'- 6"									Pier Top & Shaft
P413	4	144	20'- 11"									Pier Top & Shaft
P614	6	188	12'- 4"									Pier Shaft
P615	6	180	16'- 5"	Str.								Pier Shaft
P416	4	104	5'- 2"	VII	1'-0"	3'-2"	2'-0"	1'-0"				Pier Shaft
P617	6	368	4'- 0"	Str.								Footing Dowels
P518	5	28	24'- 6"									Footing
P519	5	28	23'- 6"									Footing
P520	5	188	6'- 6"	Str.								Footing
P421	4	104	6'- 0"	III	1'-8"	2'-8"	1'-8"					Pad Bars
P422	4	8	4'- 10"	III	1'-8"	1'-6"	1'-8"					Pad Bars
P423	4	152	5'- 8"	III	1'-8"	2'-4"	1'-8"					Pad Bars

MARK	SIZE	AMT. REQ'D.	LENGTH	TYPE	A	B	C	D	E	F	G	REMARKS

NOTES:

For bar types I through VIII, see Dwg. 4-11.
For bar types IX, X & XI, see Dwg. 4-12.
All bar dimensions are out to out.
For Concrete Notes, see Dwg. 4-3.

DELAWARE STATE HIGHWAY DEPARTMENT
DELAWARE TURNPIKE

TURNPIKE BRIDGE OVER CHRISTINA RIVER
REINFORCING BAR SCHEDULE
PIERS

DRAWN: P.V.P.	SCALE	DATE: MAY 9, 1962	DWG. 4 - 13
TRACED	TIPPETTS-ABBETT-McCARTHY-STRATTON ENGINEERS AND ARCHITECTS		CONTRACT 7002
CHECKED: D.F.-D.L.			
CHARGE OF			SHEET 172 OF 224

COUNTY	CONTRACT	P.R.A. REQ. NO	STATE	FED AID PROJECT NO	FISCAL YEAR	SHEET NO	TOTAL SHEETS
NEW CASTLE	7002	2	DEL			173	224

REINFORCING BAR SCHEDULE

	MARK	SIZE	AMT. REQ'D	LENGTH	TYPE	A	B	C	D	E	F	G	REMARKS
APPROACH SLAB	AS501	5	42	35'-8"	Str.								Slabs C & D
	AS502	5	12	36'-5"	Str.								Slabs C & D
	AS603 thru AS614	6	1 ea.	21'-0" thru 30'-0"; Δ=1½°	VIII	See Remarks	0'-6"	0'-8"					Slab C. Dim. A: 19'-8" thru 28'-8"; Δ=1½°
	AS615 thru AS626	6	1 ea.	21'-0" thru 28'-9"; Δ=1¼°	VIII	See Remarks	0'-6"	0'-8"					Slab D. Dim. A: 19'-8" thru 27'-8"; Δ=1½°
	AS5147 thru AS5154	5	1 ea.	3'-8" thru 31'-8"; Δ=4'-0"	Str.								Slab C
	AS5155 thru AS5161	5	1 ea.	3'-3" thru 31'-0"; Δ=4'-7½"	↕								Slab D
	AS5162	5	42	23'-8"	↕								Slabs G & H
	AS5163	5	12	24'-2"	Str.								Slabs G & H
	AS6164 thru AS6211	6	1 ea.	21'-0" thru 26'-10"; Δ=1½°	VIII	See Remarks	0'-6"	0'-8"					Slab G. Dim. A: 19'-8" thru 25'-6"; Δ=1½°
	AS6212 thru AS6259	6	1 ea.	21'-0" thru 25'-10"; Δ=1½°	VIII	See Remarks	0'-6"	0'-8"					Slab H. Dim. A: 19'-8" thru 24'-6"; Δ=1½°
	AS5260 thru AS5264	5	1 ea.	3'-3" thru 19'-7"; Δ=4'-1"	Str.								Slab G
	AS5265 thru AS5268	5	1 ea.	4'-8" thru 18'-11"; Δ=4'-9"	Str.								Slab H
	AS4269	4	34	5'-4"	X	1'-8"	1'-6"	0'-5"	1'-3"	1'-3"	1'-9"		Slabs C, D, G & H
	AS4270	4	34	5'-11"	↕	1'-8"	1'-9"	0'-5"	1'-6"	1'-6"	2'-1"		Slabs C, D, G & H
	AS4271	4	34	6'-7"	↕	1'-8"	2'-0"	0'-5"	1'-9"	1'-9"	2'-6"		Slabs C, D, G & H
	AS4272	4	18	7'-2"	X	1'-8"	2'-3"	0'-5"	2'-0"	2'-0"	2'-10"		Slabs C & D
DECK SLAB	S501	5	258	47'-1"	VIII	45'-11"	0'-5"	0'-7"					Deck - Slabs A & B
	S502	5	258	45'-11"	Str.								Slabs A & B
	S503	5	248	45'-10"	VIII	43'-10"	0'-5"	0'-7"					Slabs E & F
	S504	5	248	43'-10"	Str.								Slabs E & F
	S405	4	346	32'-2"	Str.								Slabs A & E
	S406	4	346	26'-6"	Str.								Slabs B & F
	S407	4	224	4'-8"	I	4'-0"	0'-8"						Slabs A, B, E & F
	S408	4	112	6'-8"	I	6'-0"	0'-8"						Deck - Slabs A, B, E & F
	S509	5	530	6'-11"	III	3'-1"	0'-9"	3'-1"					Parapet
	S510	5	514	5'-2"	IX	2'-2"	0'-2"	1'-1"	1'-3"	0'-7"	0'-5"	1'-4"	Sidewalk
	S511	5	168	12'-6"	Str.								Parapet
	S512	5	48	13'-11"	↕								Parapet
	S413	4	40	32'-2"	↕								Sidewalk
	S414	4	40	26'-9"	Str.								Sidewalk

MARK	SIZE	AMT. REQ'D.	LENGTH	TYPE	A	B	C	D	E	F	G	REMARKS

NOTES:

For bar types I through VIII, see Dwg. 4-11.
For bar types IX, X & XI, see Dwg. 4-12.
All bar dimensions are out to out.
For Concrete Notes, see Dwg. 4-3.

DELAWARE STATE HIGHWAY DEPARTMENT
DELAWARE TURNPIKE

TURNPIKE BRIDGE OVER CHRISTINA RIVER
REINFORCING BAR SCHEDULE
APPROACH AND DECK SLABS

DRAWN: P.V.P.	SCALE	DATE MAY 9, 1962	DWG 4-14
TRACED	TIPPETTS-ABBETT-McCARTHY-STRATTON ENGINEERS AND ARCHITECTS		CONTRACT 7002
CHECKED: D.F.-D.L.			
CHARGE OF			SHEET 173 OF 224

COUNTY	CONTRACT	P.R.A. REG. NO.	STATE	FED. AID PROJECT NO.	FISCAL YEAR	SHEET NO.	TOTAL SHEETS
NEW CASTLE	7002	2	DEL.			174	224

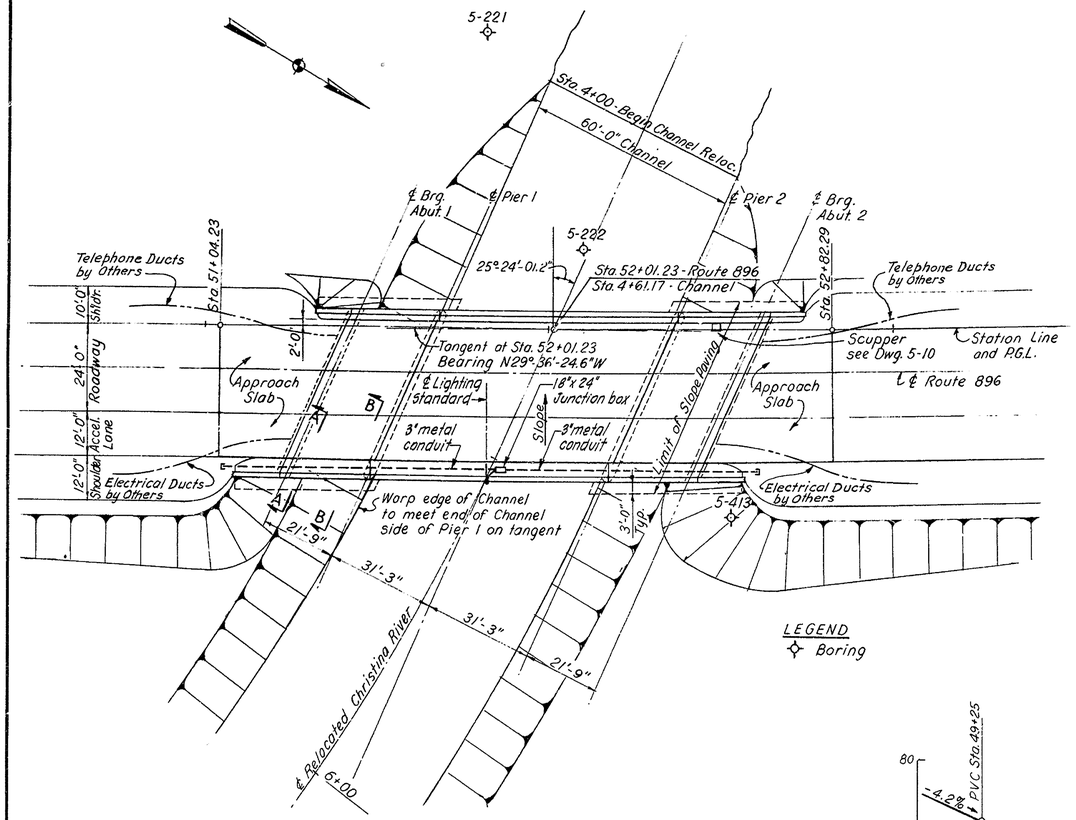

LEGEND
Boring

PLAN
SCALE: 1 IN. = 20 FT.

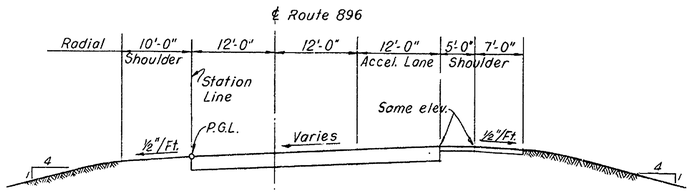

APPROACH SECTION
SCALE: 1 IN. = 10 FT.

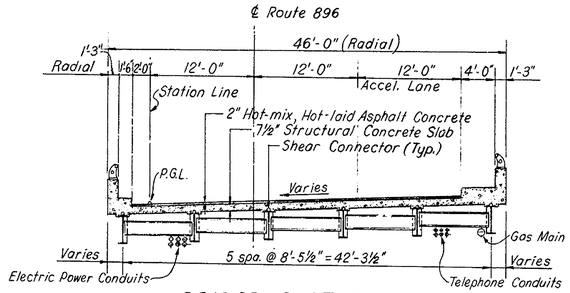

BRIDGE SECTION
SCALE: 1/8 IN. = 1 FT.

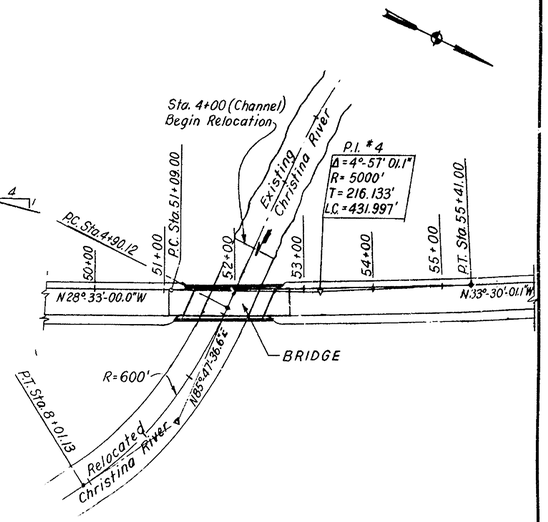

LOCATION PLAN
NO SCALE

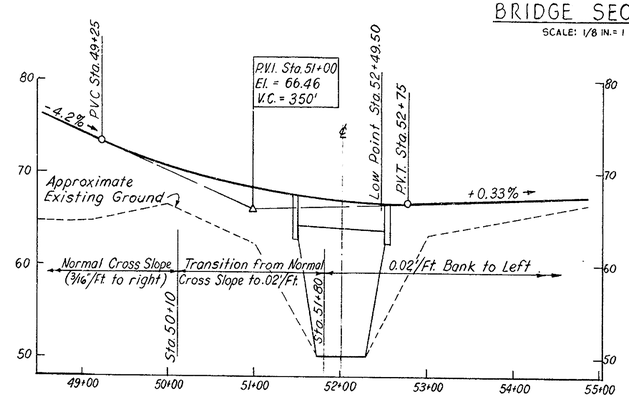

ROUTE 896

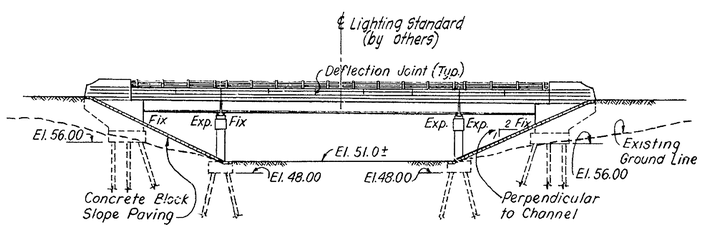

ELEVATION
SCALE: 1 IN. = 20 FT.

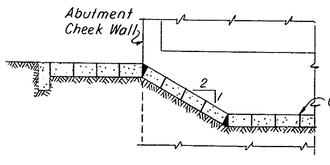

SECTION A-A
NO SCALE

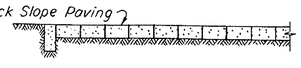

SECTION B-B
NO SCALE

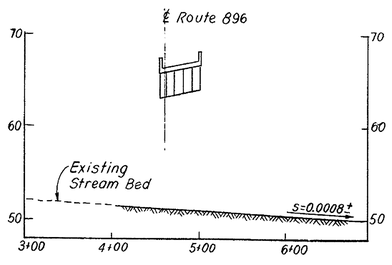

RELOCATED CHRISTINA RIVER

℄ PROFILES
SCALE: HOR. 1 IN. = 80 FT.
VERT. 1 IN. = 8 FT.

* indicates Fixed Quantity Item, see Proposal.

TABLE OF QUANTITIES

ITEM NO.	DESCRIPTION	UNIT	QUANTITY
4	Excavation for Structures	C.Y.	170
7	Select Borrow	C.Y.	350
11	Hot-mix, Hot-laid Asphaltic Conc. Pavement	Tons	99
	RC-1 Asphalt Tack Coat	Gal.	122
18 *	Portland Cement Concrete Masonry		
	Footings	C.Y.	163
	Substructure	C.Y.	223
	Superstructure	C.Y.	195
	Approach Slabs	C.Y.	85
19	Superficial Waterproofing	S.Y.	105
20*	Bar Reinforcement	Lbs.	68,900
22	Structural Steel (Approx. Wt. 169,000 lbs.)	L.S.	
31	6" ϕ Perforated Corr. Metal Pipe Underdrain	L.F.	130
	Steel Bearing Piles, 12 BP 53	L.F.	2,580
	Aluminum Railing - Double Rail	L.F.	240
	Bridge Drainage	L.S.	
	Slope Paving	S.Y.	360
	Bridge Catch Basins	L.S.	
	Coal Tar Epoxy Underseal	S.Y.	510
	Protective Coating for Concrete	S.F.	660
	Steel Pile Load Test	Each	One

GENERAL NOTES:

Design Specifications: A.A.S.H.O.-1957; and Standard Specifications for Welded Highway and Railway Bridges of the American Welding Society - 1957.

Material and Fabrication Specifications: State of Delaware, State Highway Department, Standard Specifications, July 1, 1960; and as given in the Special Provisions.

Design Loads: A.A.S.H.O. H20-S16-44.

Design Stresses: Structural and Reinforcing Steel: 18,000 psi. Reinforced Concrete: f_c = 1,200 psi., n = 10.

Design of Composite Construction based on no temporary intermediate supports to be used during construction.

Unsuitable material under the footings shall be removed and replaced by special fill, up to either 2 ft. above existing ground water level or 1 ft. above bottom of footing, whichever is higher. For details of wet unsuitable excavation and replacement by special fill, see Sheet 7. Cost to be included in Highway Payment Items.

Backfill behind abutments to be placed only after bridge deck slab has been completed.

Minimum Waiting Period before loads are permitted on the bridge, after completion of the bridge deck slab: 10 days for loads of 2 tons to 10 tons, and 28 days for loads of 10 tons to the legal load limit.

Test Piles shall be in accordance with Standard Specifications and Special Provisions.

Quantities shown shall not relieve the Contractor of the responsibility of checking them in preparing his bid.

For Concrete Notes, see Dwg. 5-4.
For Steel Notes, see Dwg. 5-6.
For Pile Details, see Dwg. 5-8.
For Boring Logs, see Sheet 209

DELAWARE STATE HIGHWAY DEPARTMENT
DELAWARE TURNPIKE

ROUTE 896 BRIDGE OVER CHRISTINA RIVER

GENERAL ARRANGEMENT

DRAWN: A.T.	SCALE: AS NOTED	DATE: MAY 9, 1962	DWG.: 5-1
TRACED:	TIPPETTS-ABBETT-McCARTHY-STRATTON ENGINEERS AND ARCHITECTS		CONTRACT 7002
CHECKED: D.E.L.			
CHARGE OF			SHEET 174 OF 224

COUNTY	CONTRACT	P.R.A. REG. NO.	STATE	FED. AID PROJECT NO.	FISCAL YEAR	SHEET NO.	TOTAL SHEETS
NEW CASTLE	7002	2	DEL.			175	224

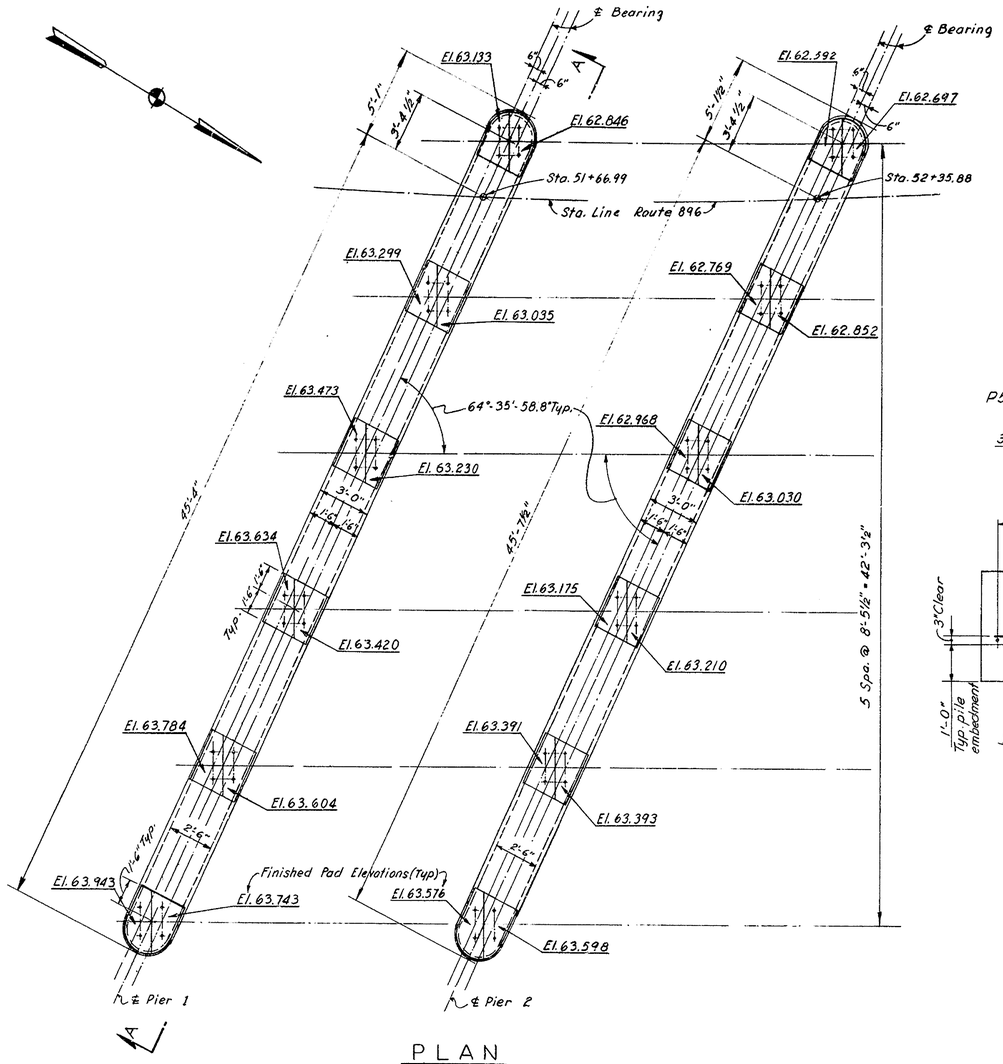

PLAN

SCALE: 1/4 IN. = 1 FT.

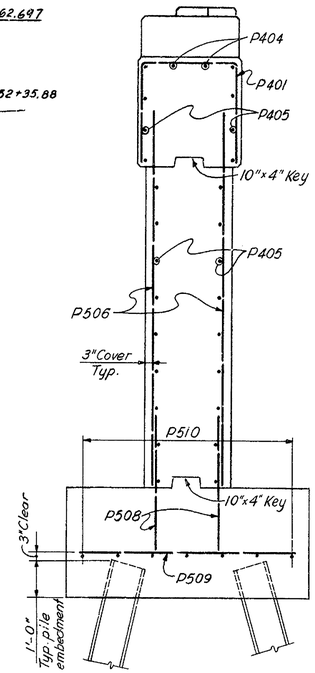

SECTION D-D

SCALE: 1/2 IN. = 1 FT.

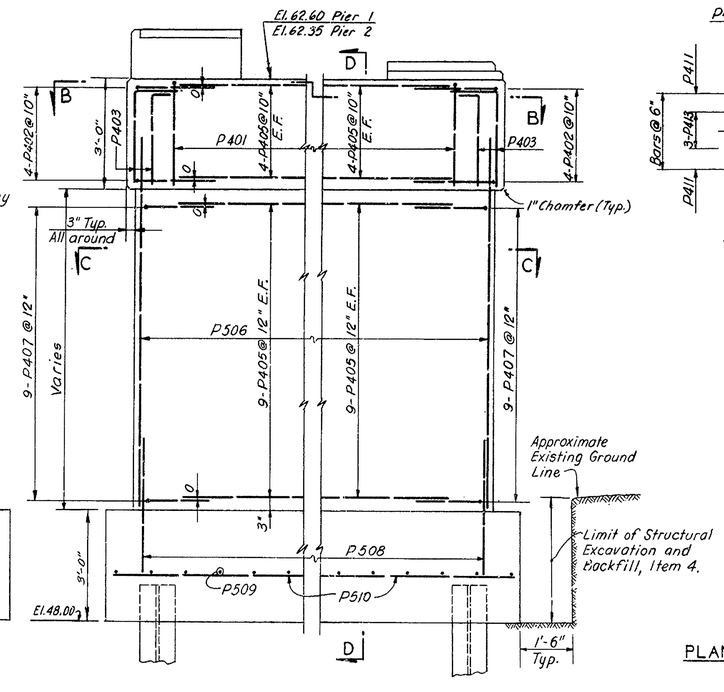

ELEVATION A-A

SCALE: 1/2 IN. = 1 FT.

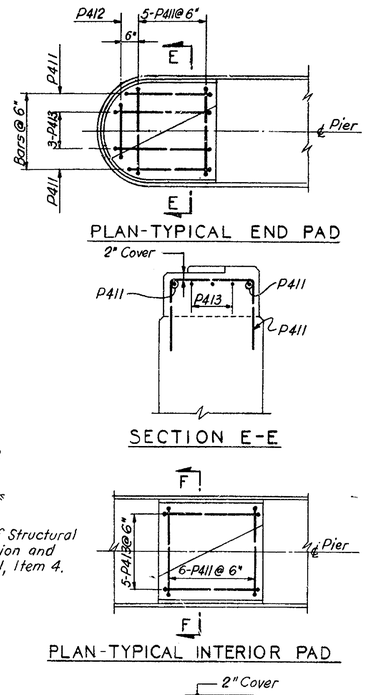

PAD DETAILS

SCALE: 1/2 IN. = 1 FT.

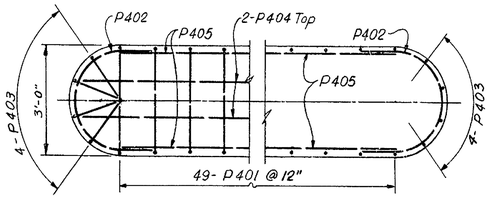

SECTION B-B

SCALE: 1/2 IN. = 1 FT.

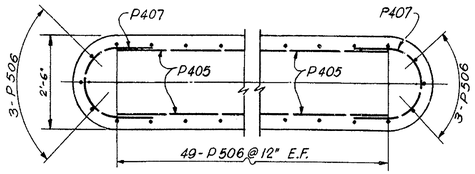

SECTION C-C

SCALE: 1/2 IN. = 1 FT.

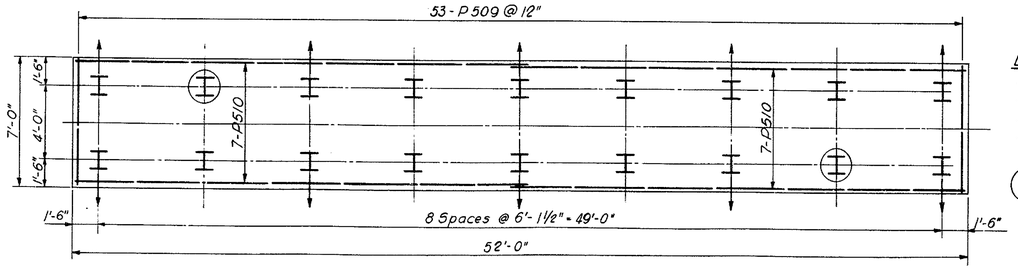

FOOTING

SCALE: 1/4 IN. = 1 FT.

LEGEND

- Vertical Pile
- Battered Pile (4 on 1 batter)
- Test Pile

NOTES:

All concrete to be placed in the dry.
All piles 12BP53; for details see Dwg. 5-8.

Batter piles to have 4 on 1 batter.
Pad elevations given denote top of finished concrete pad.
For details of anchor bolts for shoes, see Dwg. 5-8.
For General Notes, see Dwg. 5-1.
For Concrete Notes, see Dwg. 5-4.

DELAWARE STATE HIGHWAY DEPARTMENT

DELAWARE TURNPIKE

ROUTE 896 BRIDGE OVER CHRISTINA RIVER

PIERS

DRAWN: P.V.R.	SCALE: AS NOTED	DATE: MAY 9, 1962	DWG.: 5-2
TRACED:	TIPPETTS-ABBETT-McCARTHY-STRATTON ENGINEERS AND ARCHITECTS		CONTRACT 7002
CHECKED: D.E.L.			
CHARGE OF			SHEET 175 OF 224

COUNTY	CONTRACT	P.R.A. REG. NO.	STATE	FED. AID PROJECT NO.	FISCAL YEAR	SHEET NO.	TOTAL SHEETS
NEW CASTLE	7002	2	DEL			176	224

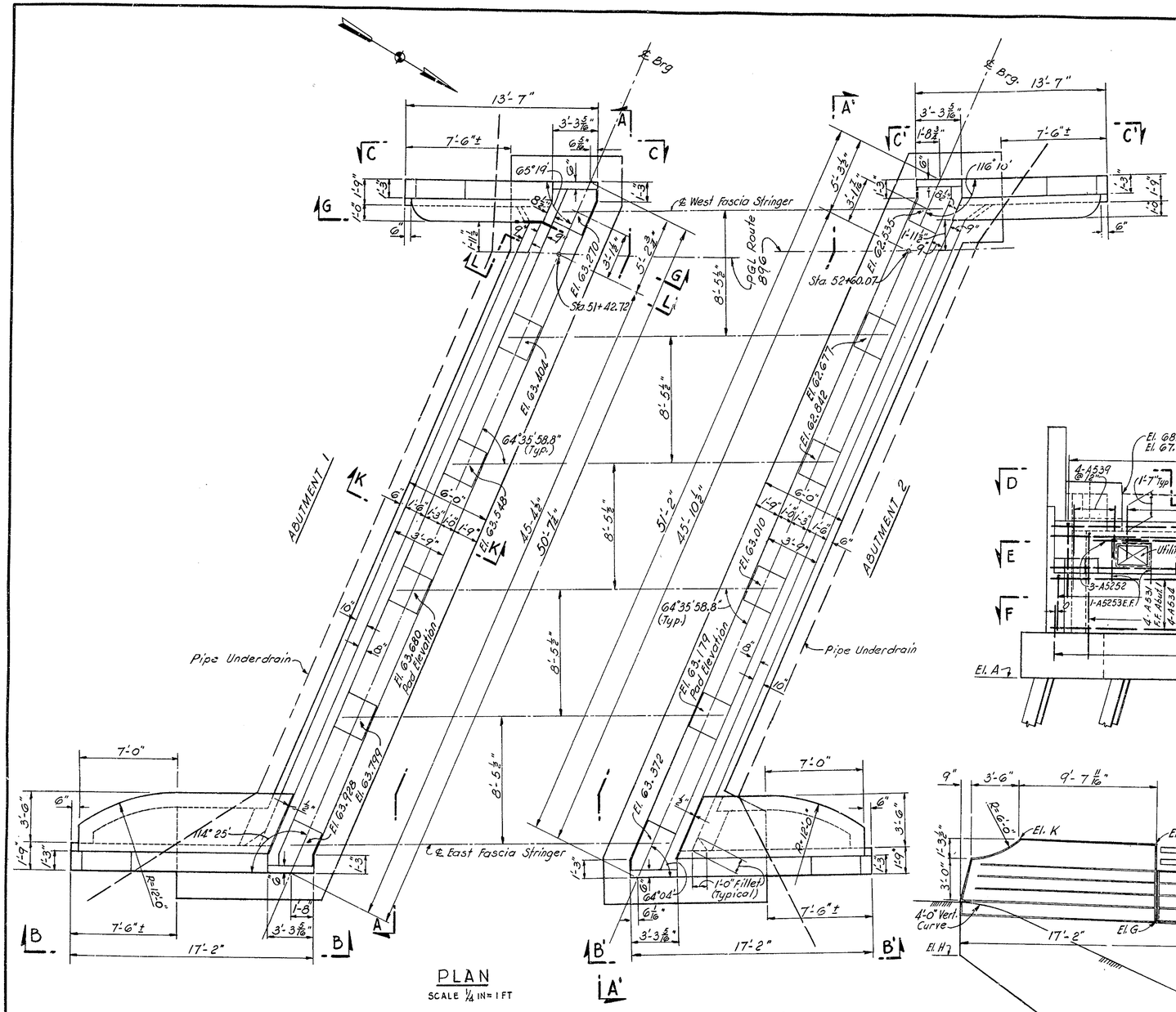

PLAN

SCALE 1/4 IN = 1 FT

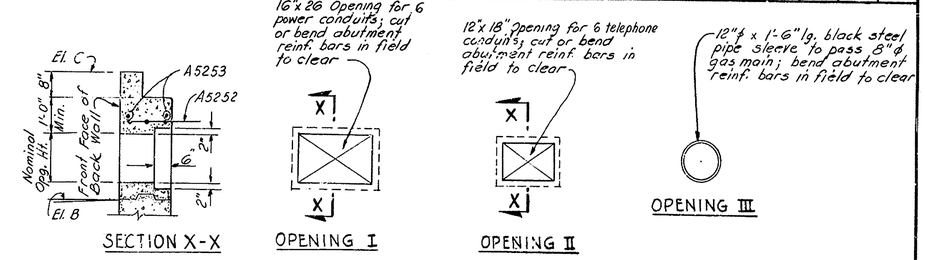

SECTION X-X

OPENING I

OPENING II

OPENING III

NOTE: Exact sizes and locations of all openings to be determined in the field. If utilities are to be placed in the future, plug openings with plain concrete after painting surfaces with tar or asphalt to prevent bond.

UTILITY OPENING DETAILS

SCALE 1/2 IN = 1 FT

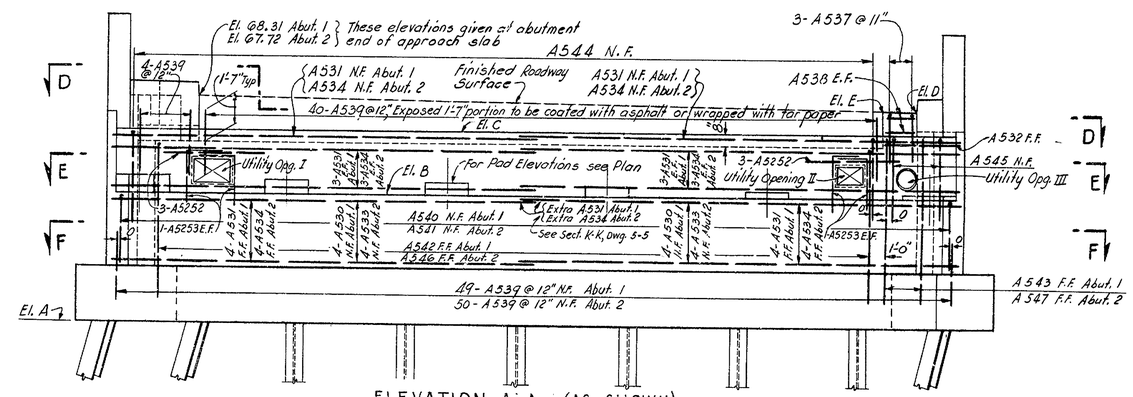

ELEVATION A-A (AS SHOWN)

ELEVATION A'-A' (OPP. HAND)

SCALE 1/4 IN = 1 FT

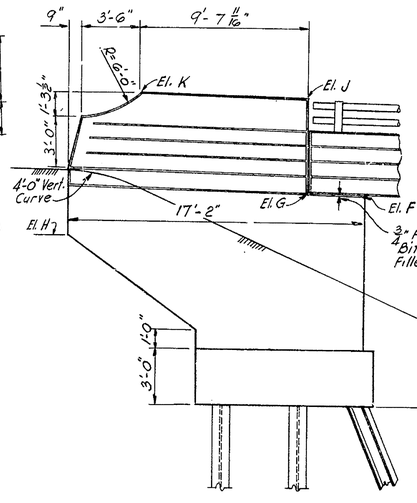

ELEVATION B-B (AS SHOWN)

ELEVATION B'-B' (OPP. HAND)

SCALE 1/4 IN = 1 FT

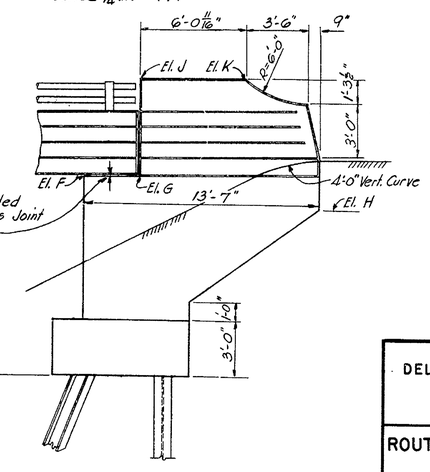

ELEVATION C-C (AS SHOWN)

ELEVATION C'-C' (OPP. HAND)

SCALE 1/4 IN = 1 FT

NOTES:
- For Sections D-D thru G-G see Dwg 5-4.
- For Sections K-K and L-L see Dwg 5-5.
- Work this drawing with Dwgs 5-4 & 5-5.
- For details of anchor bolts for shoes, see Dwg 5-8.
- Pad Elevations given denote top of finished concrete pads.
- For Pile Details, see Dwg. 5-8.
- For General Notes, see Dwg. 5-1.
- For Concrete Notes, see Dwg. 5-4.

TABLE OF ELEVATIONS

POINT	A	B	C	D	E	F	G	H	J	K
ABUTMENT 1	56.00	63.02	66.48	67.73	67.76	W 66.71	66.76	65.00	71.99	72.08
						E 67.32	67.37	65.00	72.60	72.76
ABUTMENT 2	56.00	62.28	65.74	66.97	67.01	W 66.07	66.07	65.00	71.30	71.32
						E 66.83	66.82	65.00	72.05	72.05

DELAWARE STATE HIGHWAY DEPARTMENT

DELAWARE TURNPIKE

ROUTE 896 BRIDGE OVER CHRISTINA RIVER

ABUTMENTS

PLAN AND ELEVATIONS

DRAWN: E.A.N.	SCALE: AS NOTED	DATE: MAY 9, 1962	DWG.: 5-3
TRACED:	TIPPETTS-ABBETT-McCARTHY-STRATTON ENGINEERS AND ARCHITECTS		CONTRACT 7002
CHECKED: D.L.-D.F.			
CHARGE OF			SHEET 176 OF 224

COUNTY	CONTRACT	P.R.A. REG. NO.	STATE	FED. AID PROJECT NO.	FISCAL YEAR	SHEET NO	TOTAL SHEETS
NEW CASTLE	7002	2	DEL.			177	224

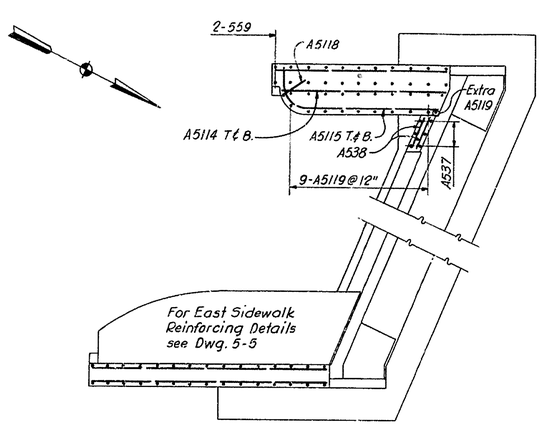

SECTIONAL PLAN D-D

SCALE: 1/4 IN. = 1 FT.

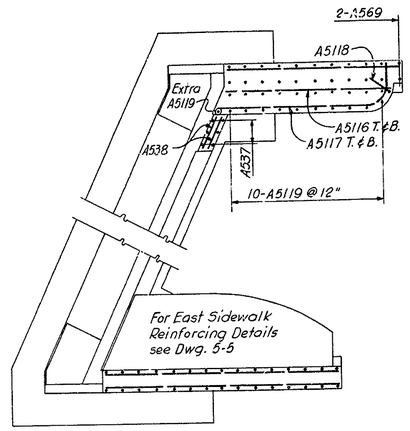

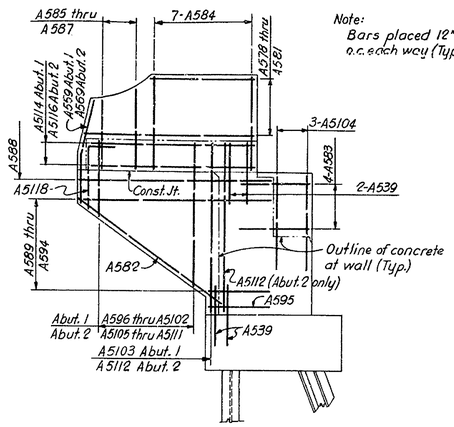

INSIDE FACE OF WINGWALL

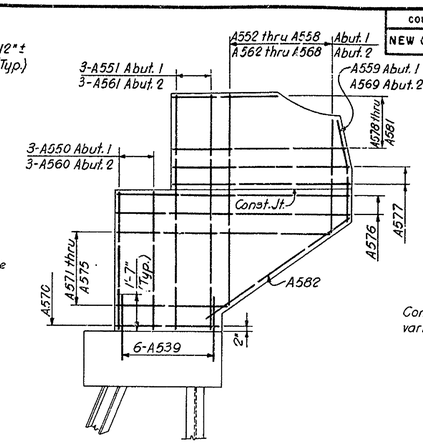

OUTSIDE FACE OF WINGWALL

WEST WINGWALL REINFORCEMENT DETAILS

SCALE: 1/4 IN. = 1 FT.

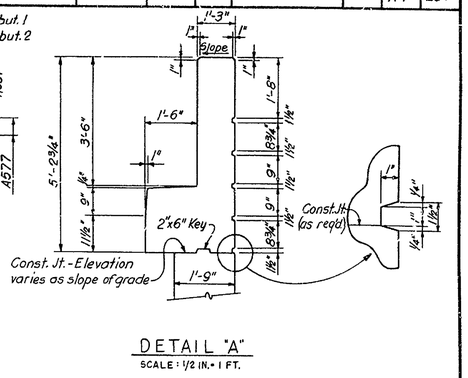

DETAIL "A"

SCALE: 1/2 IN. = 1 FT.

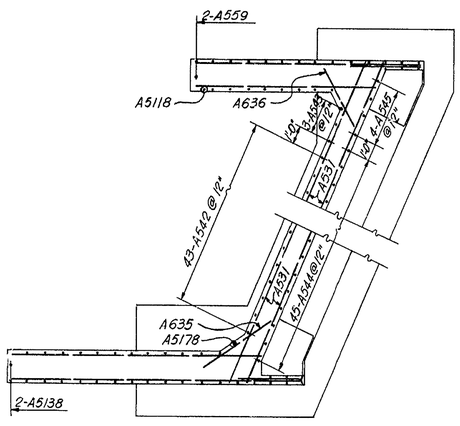

SECTIONAL PLAN E-E

SCALE: 1/4 IN. = 1 FT.

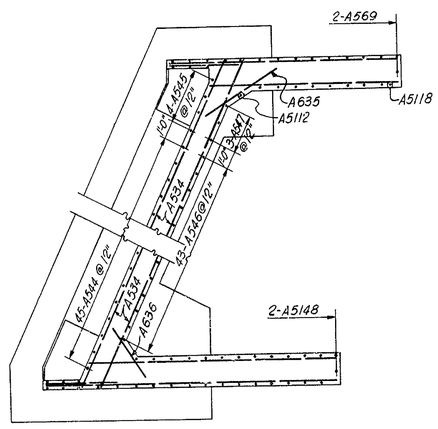

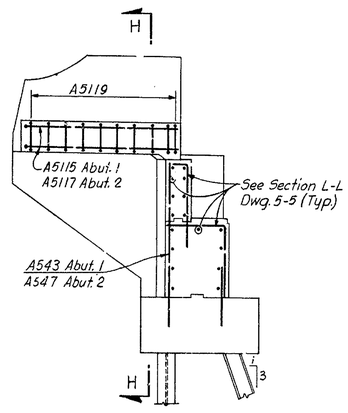

SECTIONAL ELEVATION G-G

SCALE: 1/4 IN. = 1 FT.

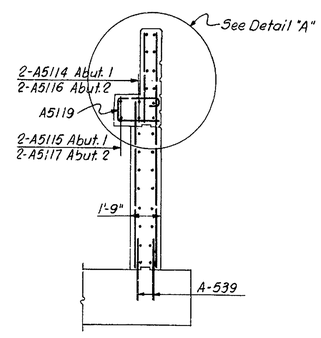

SECTION H-H

SCALE: 1/4 IN. = 1 FT.

NOTES:

Work this drawing with Dwgs. 5-3 and 5-5.
For electric conduits see Dwgs. 5-1 and 5-8

CONCRETE NOTES:

Concrete Water-reducing Retarder Admixture shall be added to all superstructure concrete (see Special Provisions).
Splices for stress bars shall be a minimum of 30 diameters; all other splices a minimum of 20 diameters.
Construction Joints other than those shown will not be permitted without written approval by the Engineer.
Exposed Concrete Edges shall be beveled 1 in. by 1 in., unless otherwise noted.
Concrete Cover as per A.A.S.H.O. or as noted.
Cost of furnishing and placing all bituminous joint materials, joint seal, caulking compound, tar paper, water stops, and concrete water-reducing retarder admixture will be included in Item 18, "Portland Cement Concrete Masonry".

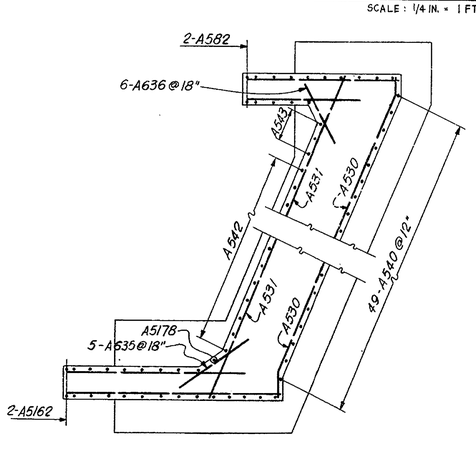

SECTIONAL PLAN F-F

SCALE: 1/4 IN. = 1 FT.

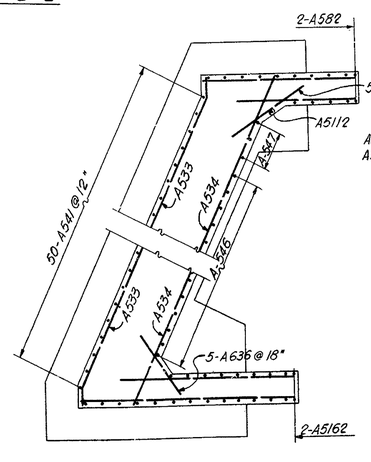

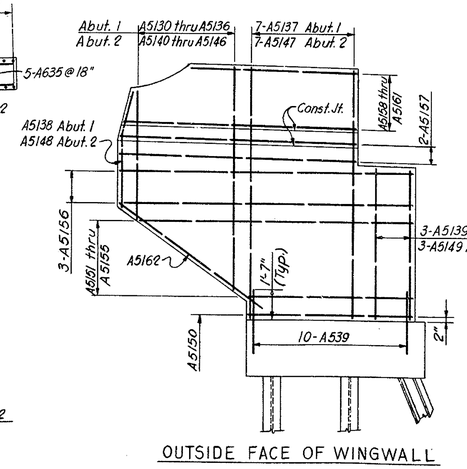

OUTSIDE FACE OF WINGWALL

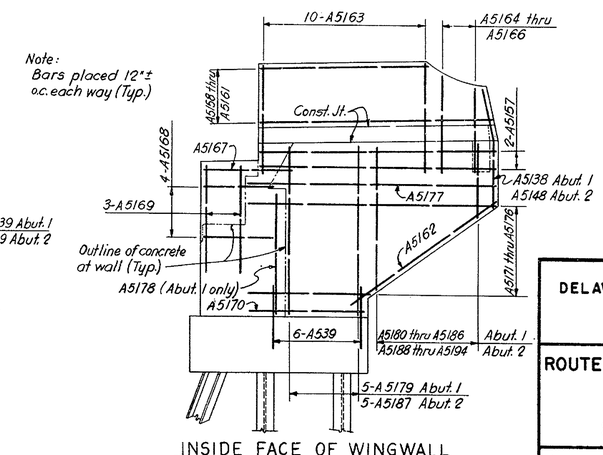

INSIDE FACE OF WINGWALL

EAST WINGWALL REINFORCEMENT DETAILS

SCALE: 1/4 IN. = 1 FT.

DELAWARE STATE HIGHWAY DEPARTMENT

DELAWARE TURNPIKE

ROUTE 896 BRIDGE OVER CHRISTINA RIVER

ABUTMENTS

SECTIONS AND DETAILS

DRAWN: E. A. N.	SCALE: AS NOTED	DATE: MAY 9, 1962	DWG.: 5-4
TRACED:	TIPPETTS-ABBETT-McCARTHY-STRATTON ENGINEERS AND ARCHITECTS		CONTRACT 7002
CHECKED: D.L.-D.F.			
CHARGE OF			SHEET 177 OF 224

COUNTY	CONTRACT	P R A REG NO	STATE	FED. AID PROJECT NO.	FISCAL YEAR	SHEET NO	TOTAL SHEETS
NEW CASTLE	7002	2	DEL			178	224

LEGEND:

- Vertical Pile
- Battered Pile (3 on 1 batter)
- Test Pile
- Pile Load Test.

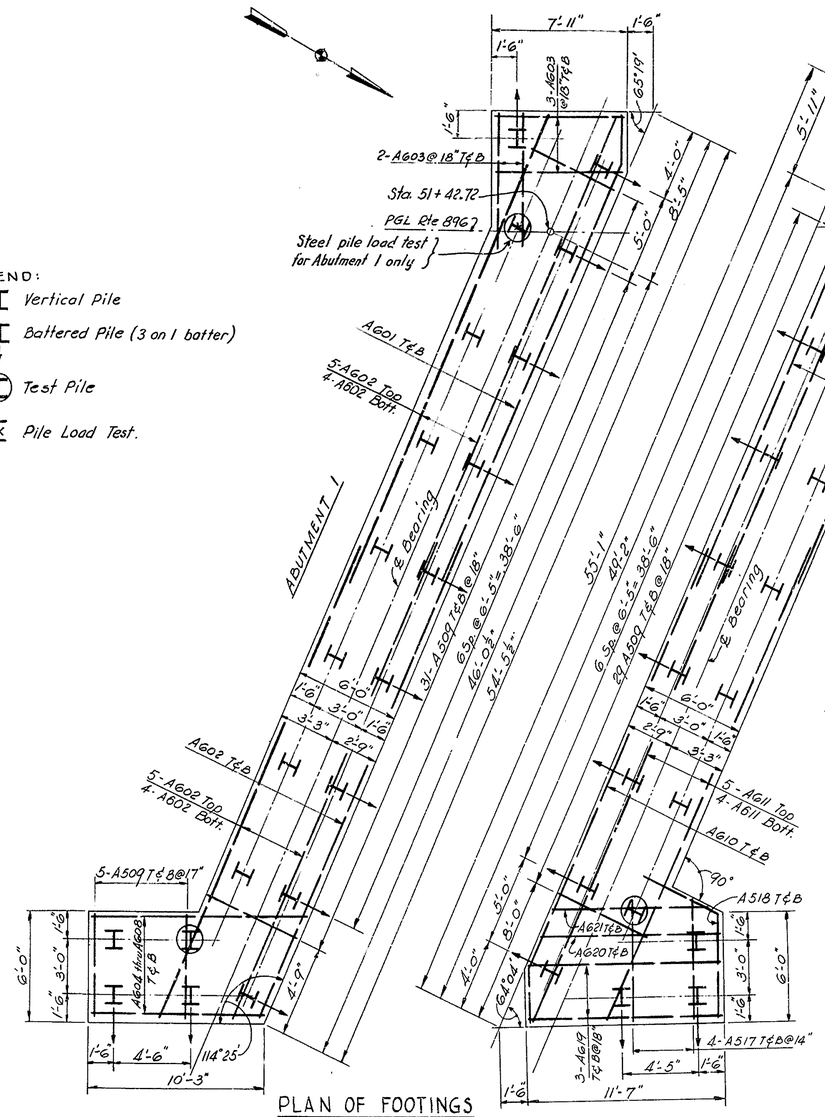

PLAN OF FOOTINGS

SCALE 1/4 IN = 1 FT

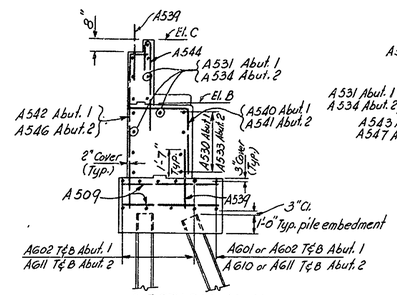

SECTION K-K

SCALE 1/4 IN = 1 FT

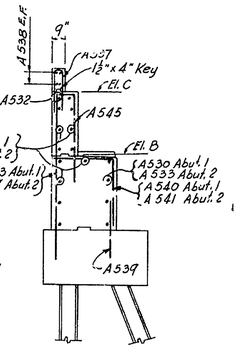

SECTION L-L

SCALE 1/4 IN = 1 FT

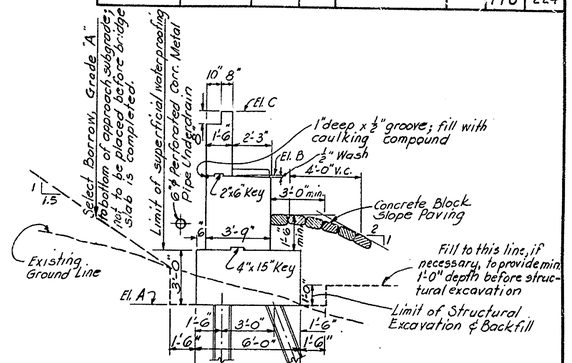

EXCAVATION AND BACKFILL DETAIL

SCALE 1/4 IN = 1 FT

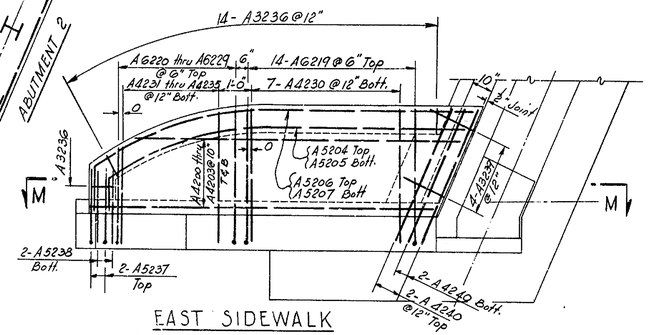

EAST SIDEWALK
PLAN AT ABUTMENT 1

SCALE 3/8 IN = 1 FT

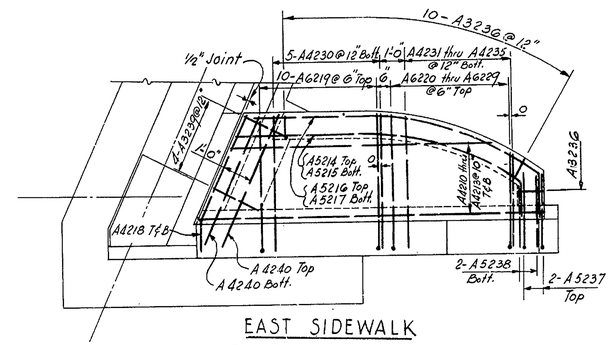

EAST SIDEWALK
PLAN AT ABUTMENT 2

SCALE 3/8 IN = 1 FT

NOTES:
Work this drawing with Dwgs. 5-3 & 5-4.
All piles 12BP53; for details, see Dwg. 5-8.

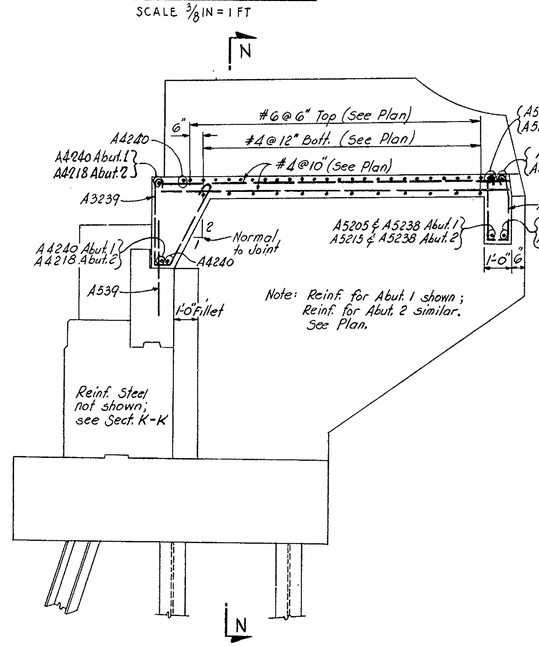

SECTION M-M

SCALE 3/8 IN = 1 FT

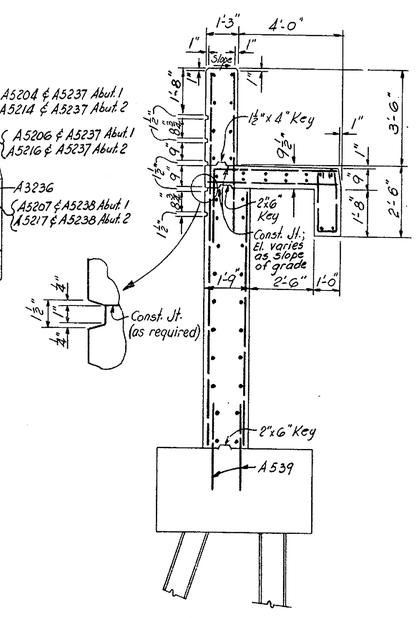

SECTION N-N

SCALE 3/8 IN = 1 FT

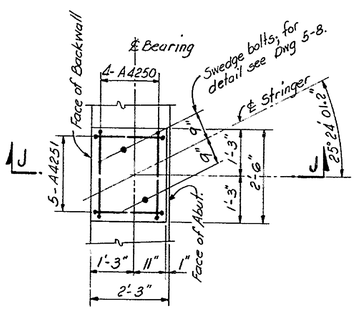

PLAN OF PAD

SCALE 1/2 IN = 1 FT

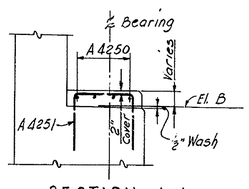

SECTION J-J

SCALE 1/2 IN = 1 FT

DELAWARE STATE HIGHWAY DEPARTMENT
DELAWARE TURNPIKE

ROUTE 896 BRIDGE OVER CHRISTINA RIVER
ABUTMENTS
FOOTING PLAN, SECTIONS AND DETAILS

DRAWN: E. A. N.	SCALE: AS NOTED	DATE: MAY 9, 1962	DWG.: 5-5
TRACED:	TIPPETTS-ABBETT-McCARTHY-STRATTON ENGINEERS AND ARCHITECTS		CONTRACT 7002
CHECKED: D.L.-D.F.			
CHARGE OF			SHEET 178 OF 224

COUNTY	CONTRACT	P.R.A. REG. NO.	STATE	FED. AID PROJECT NO.	FISCAL YEAR	SHEET NO.	TOTAL SHEETS
NEW CASTLE	7002	?	DEL			179	224

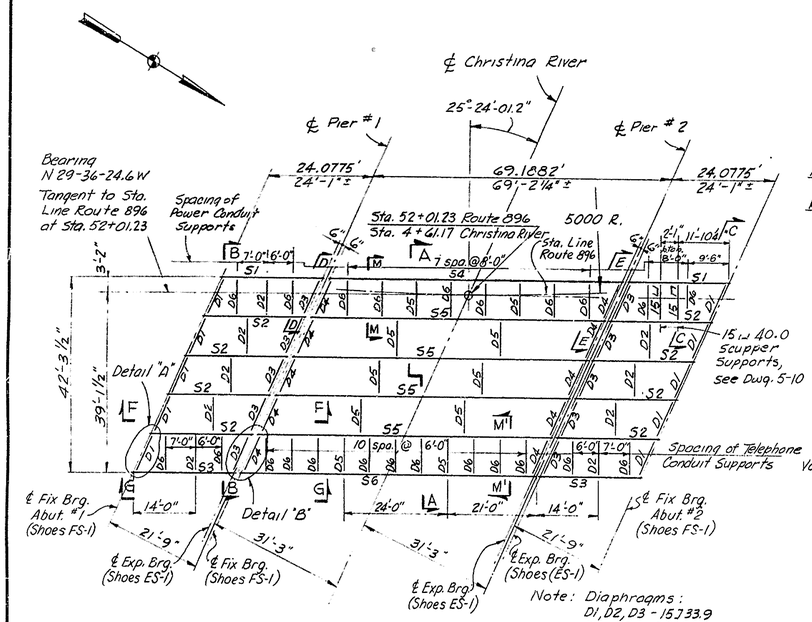

FRAMING PLAN

SCALE 1/16 IN. = 1 FT.

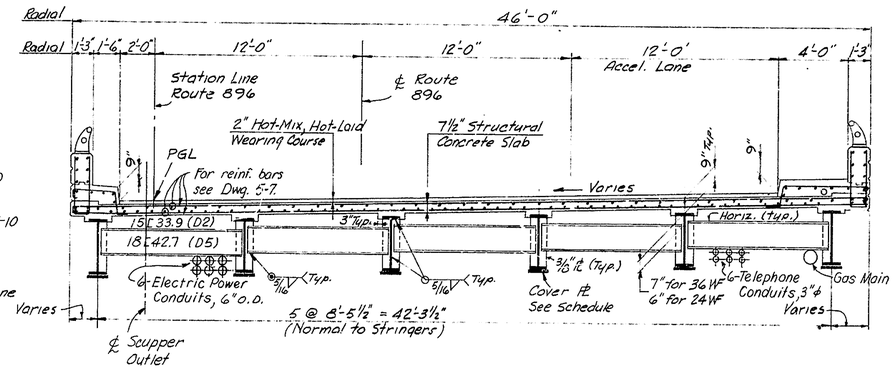

SECTION A-A AS SHOWN

SECTION B-B SIMILAR

SCALE 1/4 IN. = 1 FT.

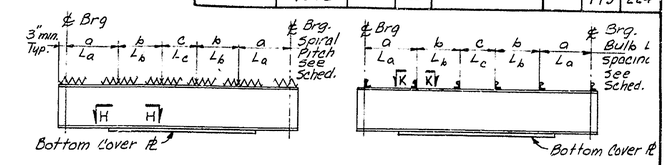

SPIRAL ARRANGEMENT

BULB ANGLE ARRANGEMENT

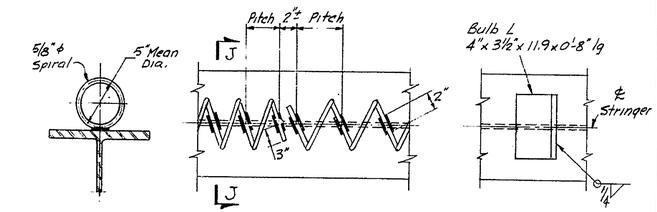

SECTION J-J

PLAN

VIEW K-K

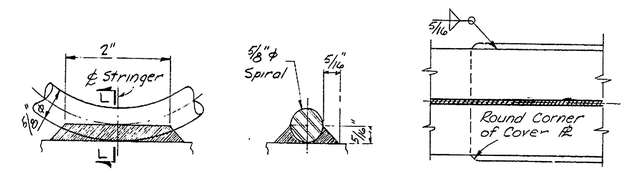

SPIRAL DETAIL

SECTION L-L

SECTION H-H

SPIRAL DETAILS

NOT TO SCALE

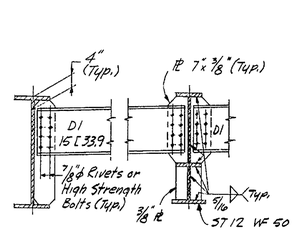

SECTION C-C

SCALE 1/2 IN. = 1 FT.

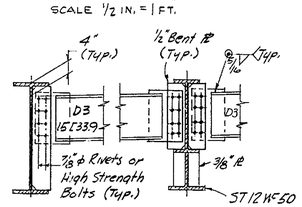

SECTION D-D

SCALE 1/2 IN. = 1 FT.

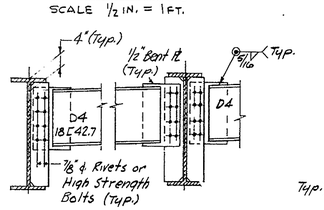

SECTION E-E

SCALE 1/2 IN. = 1 FT.

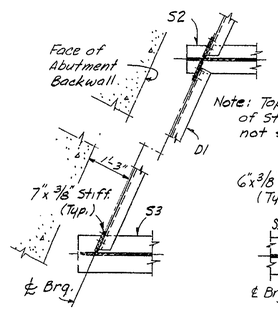

DETAIL "A"

SCALE 1/2 IN. = 1 FT.

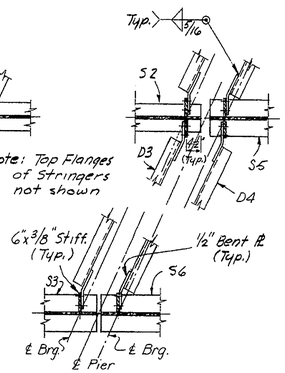

DETAIL "B"

SCALE 1/2 IN. = 1 FT.

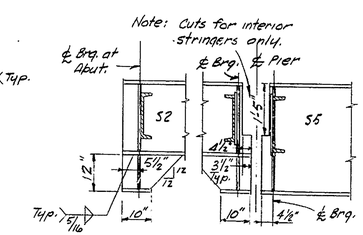

SECTION F-F

SCALE 1/2 IN. = 1 FT.

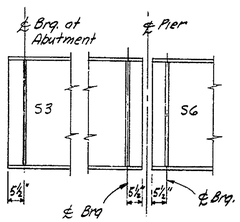

VIEW G-G

SCALE 1/2 IN. = 1 FT.

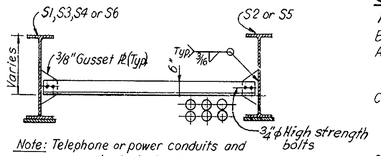

Note: Telephone or power conduits and gas main to be located by others; connections to be made in field in accordance with details furnished by others. Installation by others.

SECTION M-M AS SHOWN

SECTION M'-M' SIMILAR

SCALE 3/8 IN. = 1 FT.

STRINGER SCHEDULE

			S1	S2	S3	S4	S5	S6
SHEAR KIPS	D.L. I		15.7	16.9	15.9	29.2	35.7	31.7
	D.L. II		—	—	—	16.3	16.2	16.2
	L.L.		31.1	34.5	31.1	43.0	47.8	43.0
	I		9.3	10.4	9.3	11.1	12.4	11.1
	SWLL		—	—	4.0	—	—	11.6
MOMENT FT-KIPS	D.L. I		92.2	99.2	93.6	513.4	626.9	561.9
	D.L. II		—	—	—	285.6	284.3	285.6
	L.L.		130.4	145.0	130.4	658.2	731.6	658.2
	I		39.1	43.5	39.1	170.5	189.5	170.5
	SWLL		—	—	23.5	—	—	197.0
SECTION	Shape		36 WF 150	24 WF 84	36 WF 150	36 WF 170	36 WF 170	36 WF 170
	Top Cover ℞		None	None	None	None	None	None
	Bott. Cover ℞		None	None	None	14 x 7/8 x 5/1-4	14 x 1 3/16 x 54'-8"	14 x 1 3/16 x 54'-8"
STRESS KSI	Steel - bott.		6.2	17.6	6.8	17.6	17.7	17.8
	Steel - top		6.2	17.6	6.8	14.3	15.6	15.1
Spiral Pitch	a	L_a	None	None	None	4½"	10'-0"	4½"	16'-0"	4½"	16'-0"
	b	L_b	↑	↑	↑	7"	15'-0"	7"	9'-0"	7"	9'-0"
	c	L_c				11"	Balance	10"	Balance	10"	Balance
Bulb Angle Spacing	a	L_a				11"	10'-0"	11"	16'-0"	11"	16'-0"
	b	L_b				16"	15'-0"	16"	9'-0"	16"	9'-0"
	c	L_c	None	None	None	26"	Balance	24"	Balance	24"	Balance
Camber	C_1		Natural Camber up.			1½"		1 3/16"		2 1/8"	
	C_2					1 1/8"		1 9/16"		1 5/8"	

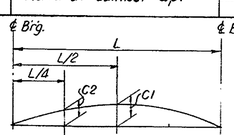

CAMBER DIAGRAM

NOT TO SCALE

STEEL NOTES:

For material specifications see Special Provisions.

Basic allowable flexural tensile stress = 18,000 psi.

All stiffener plates and transverse framing members shall be vertical when stringers are in final erected position.

Contractor has the option of using either spirals or bulb angles where shear connectors are called for. Nelson studs may be substituted with the approval of the Engineer.

Composite Construction: No intermediate temporary supports shall be used during construction. No superimposed dead loads shall be added before 7 days after concrete is poured.

Rolled Beams shall have their rolled camber upward before welding of bottom plates.

Field Connections shall be made with 7/8" ϕ high strength bolts or rivets, unless otherwise indicated.

Painting: For Shop and Field painting see Standard Specifications and Special Provisions.

NOTE: For General Notes, see Dwg. 5-1.
For Special Notes and deck reinforcement support detail, see Dwg. 1-2.

DELAWARE STATE HIGHWAY DEPARTMENT

DELAWARE TURNPIKE

ROUTE 896 BRIDGE OVER CHRISTINA RIVER

SUPERSTRUCTURE

FRAMING AND DETAILS

DRAWN: J.S.B.	SCALE: AS NOTED	DATE: MAY 9, 1962	DWG.: 5-6
TRACED:	TIPPETTS-ABBETT-McCARTHY-STRATTON ENGINEERS AND ARCHITECTS		CONTRACT 7002
CHECKED: D.L.-D.F.			
CHARGE OF			SHEET 179 OF 224

COUNTY	CONTRACT	P.R.A. REL. NO	STATE	FED. AID PROJECT NO.	FISCAL YEAR	SHEET NO.	TOTAL SHEETS
NEW CASTLE	7002	2	DEL			180	224

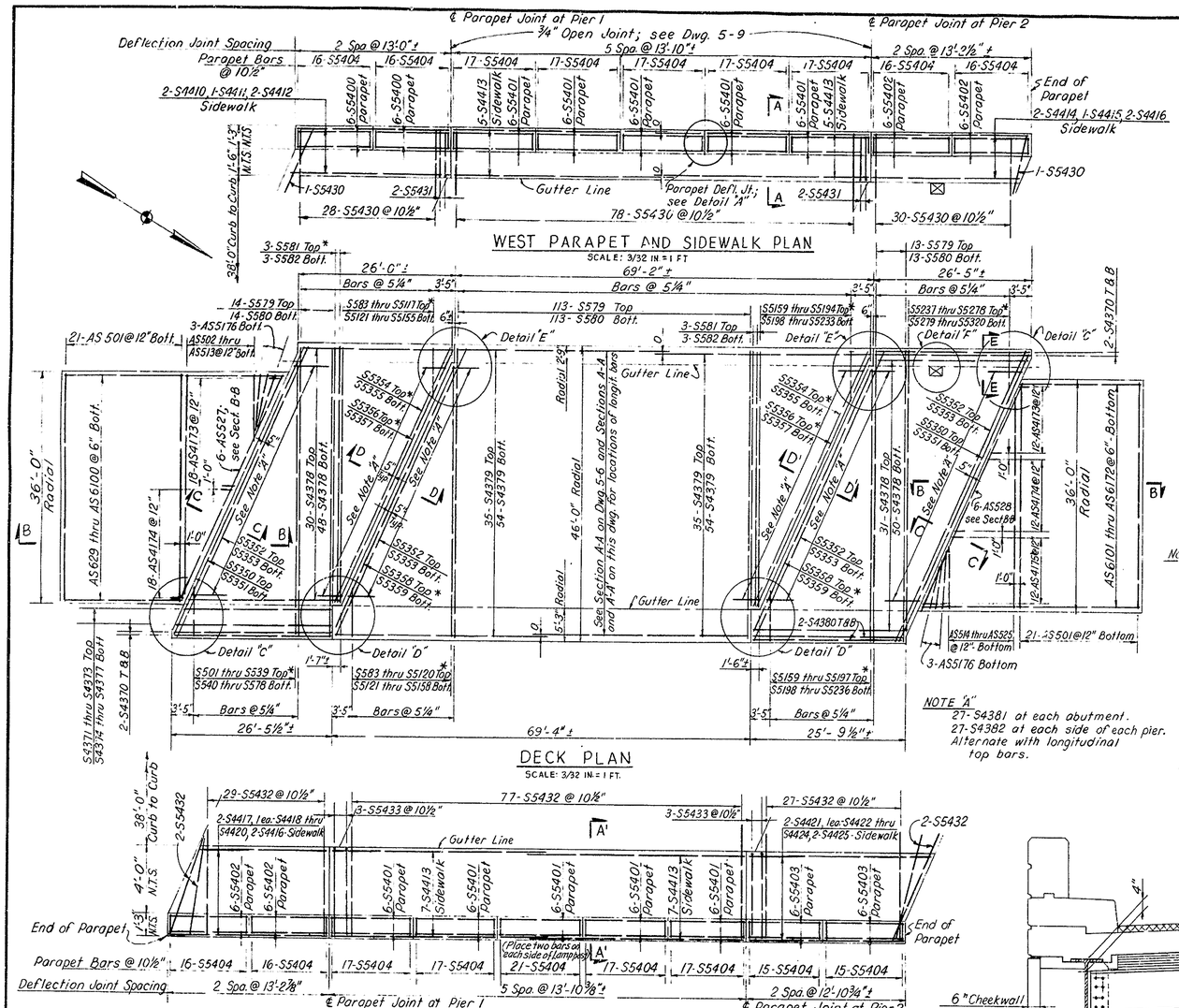

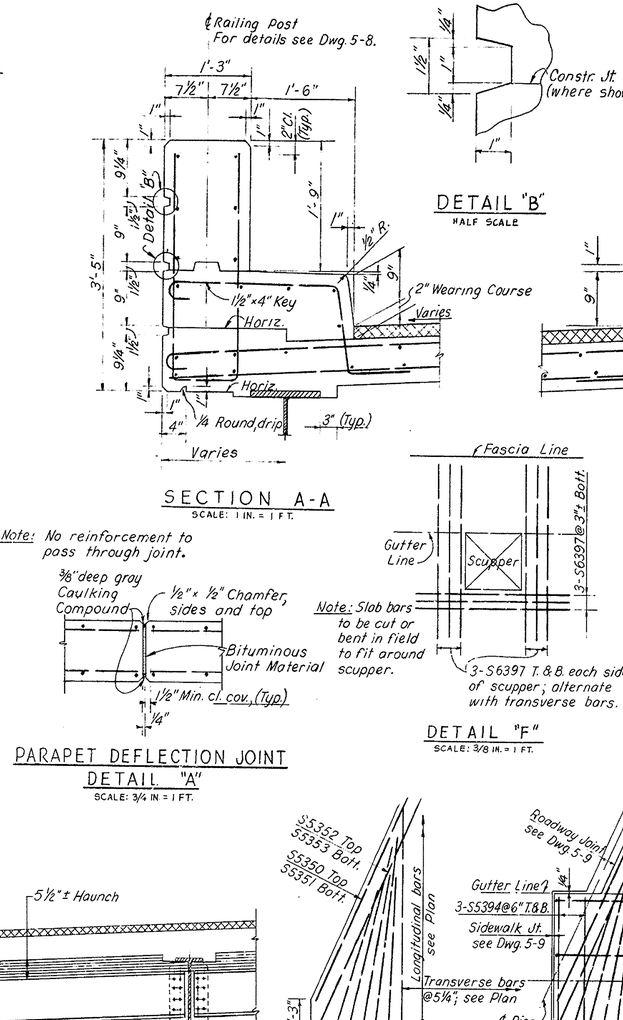

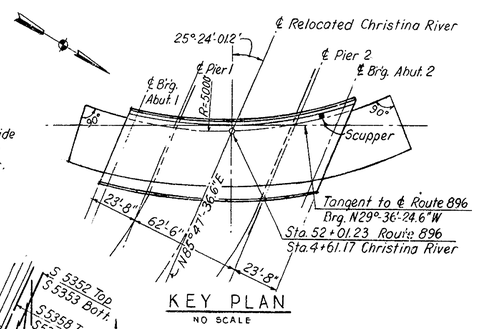

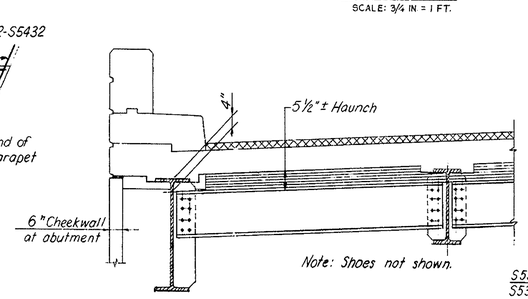

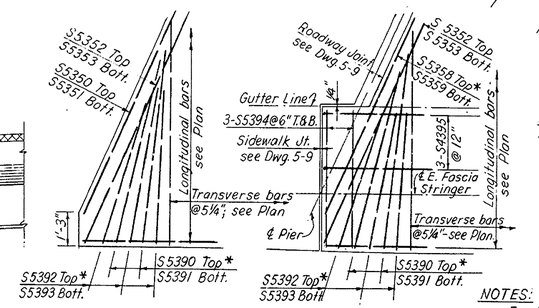

*NOTE: Type IV bars denoted thus have hooks at the fascia ends of the bars.

NOTES:
For transverse section through deck slab, see Dwg. 5-6.
All parapet and sidewalk joints shall be radial, (perpendicular to fascia line.)
For joint details, see Dwg. 5-9.
For General Notes, see Dwg. 5-1.
For Concrete Notes, see Dwg. 5-4.

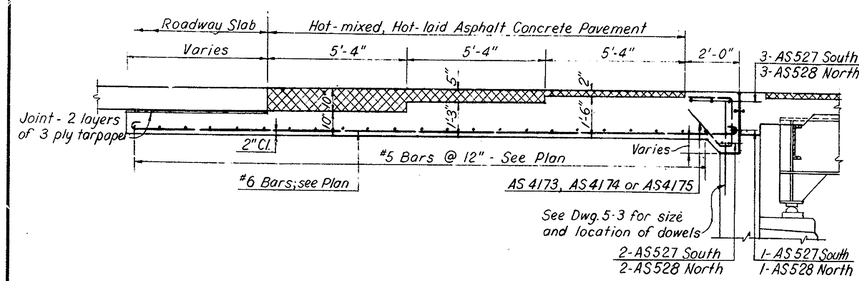

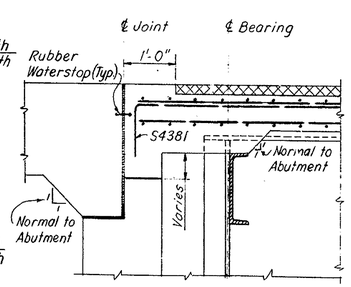

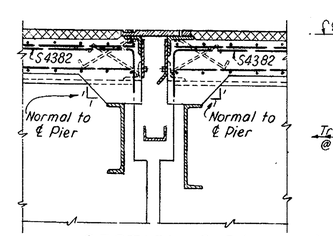

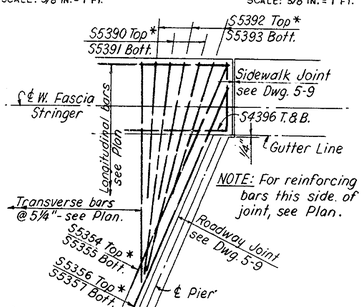

DELAWARE STATE HIGHWAY DEPARTMENT
DELAWARE TURNPIKE

ROUTE 896 BRIDGE OVER CHRISTINA RIVER
SUPERSTRUCTURE
CONCRETE DECK AND APPROACH SLABS

DRAWN: P.P.	SCALE: AS NOTED	DATE: MAY 9, 1962	DWG.: 5-7
TRACED: A.T.	TIPPETTS-ABBETT-McCARTHY-STRATTON ENGINEERS AND ARCHITECTS		CONTRACT 7002
CHECKED: D.E.L.			
CHARGE OF			SHEET 180 OF 224

COUNTY	CONTRACT	P.R.A. REG NO	STATE	FED. AID PROJECT NO.	FISCAL YEAR	SHEET NO	TOTAL SHEETS
NEW CASTLE	7002	2	DEL			181	224

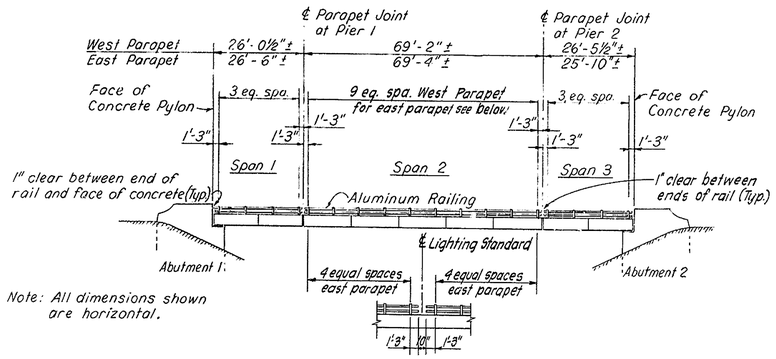

RAILING ELEVATION

SCALE: 1 IN = 20 FT.

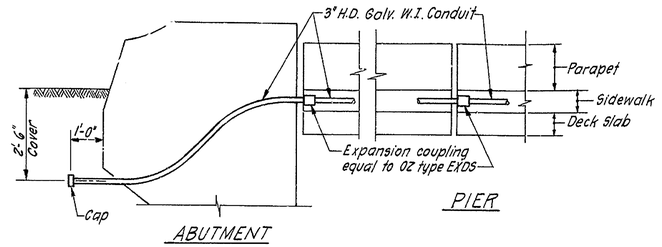

EXPANSION JOINT DETAILS FOR CONDUITS

NO SCALE

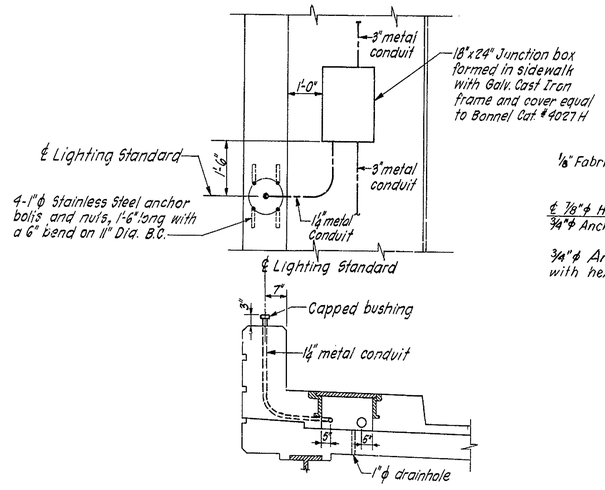

JUNCTION BOX DETAIL

SCALE: ½ IN. = 1 FT.

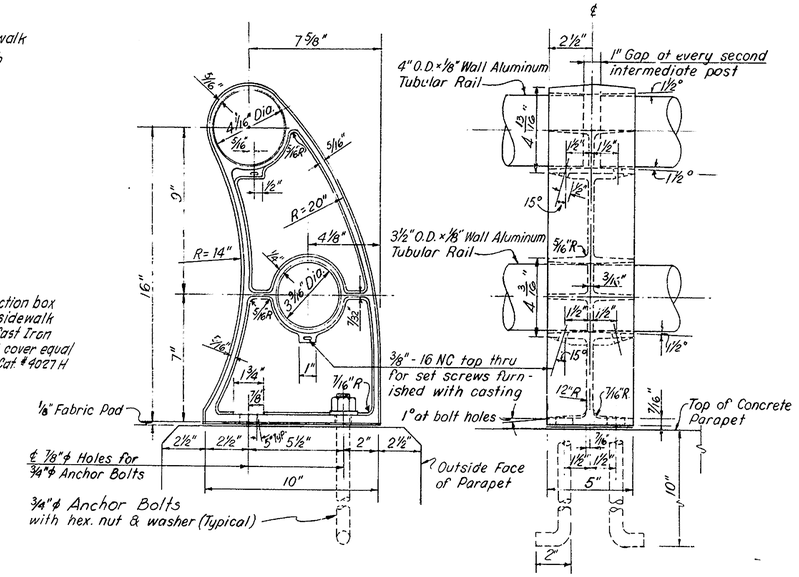

RAILING DETAILS

SCALE: 3 IN. = 1 FT.

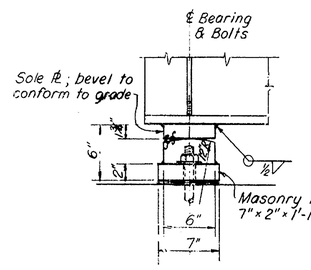

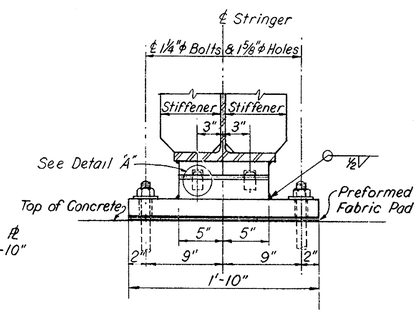

FIXED SHOE FS-1

SCALE: 1½ IN. = 1 FT.

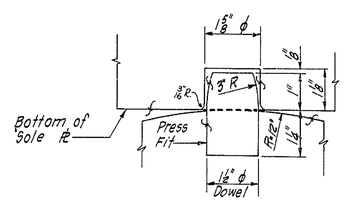

DETAIL "A"

SCALE: 6 IN. = 1 FT.

PILE SCHEDULE			
LOCATION	ESTIMATED LENGTH		
	25 ft.	40 ft.	
Abutment 1		21	
Pier 1	18		
Pier 2	18		
Abutment 2		21	
Total Number	36	42	

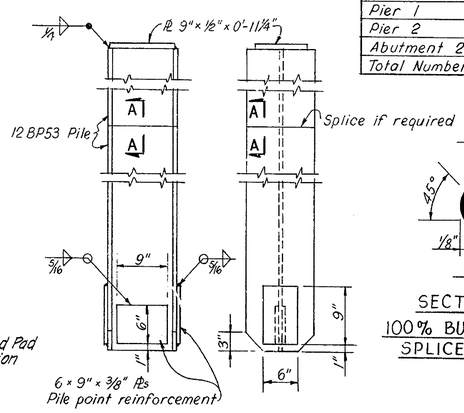

PILE DETAILS

SCALE: 1 IN. = 1 FT.

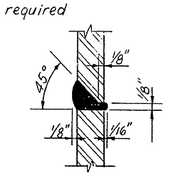

SECTION A-A

100% BUTT-WELDED SPLICE DETAIL

RAILING NOTES:

Railing Posts shall be erected normal to grade and rails shall be parallel to established grade.
Anchor Bolts shall be of aluminum alloy meeting the requirement of ASTM-B211 alloy 2024-T4. Finished aluminum alloy bolts, nuts and washers shall be given an anodic coating at least 0.0002 in. thick and a chromate seal.
Anchor Bolts shall be set accurately by means of a template.
After Nuts have been placed and tightened to the satisfaction of the Engineer, bolts shall be cut off ⅛" above nuts and peened.
Tubular Rails shall be closed at all piers and abutment with a welded aluminum plug.
Rails shall be continuous at all end posts.
Preformed Fabric Pads shall be ⅛" thick.

NOTES:

Shoes to have vertical and horizontal ℄s mutually perpendicular at 65° F.
For Steel Notes, see Dwg. 5-6.

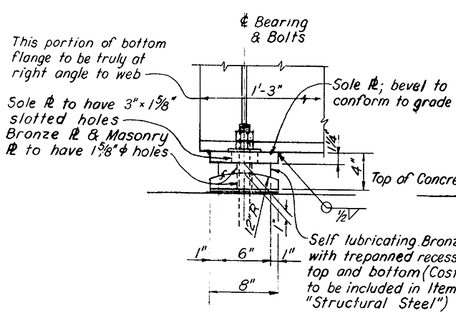

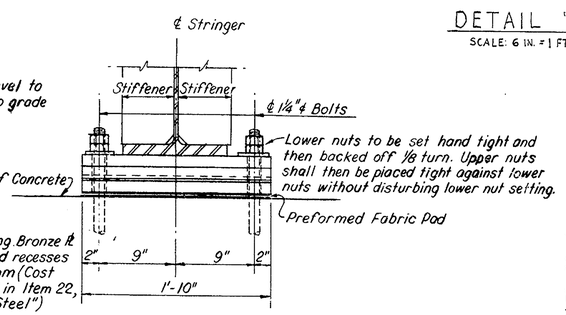

EXPANSION SHOE ES-1

SCALE: 1½ IN. = 1 FT.

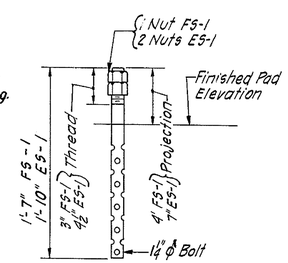

SWEDGE BOLT DETAIL

NO SCALE

PILE NOTES:

Pile Capacity shall be 50 tons.
Pile load test shall be at a test pile location as shown on the plans. Actual pile lengths shall be determined by test piles. For location of test piles see Dwg's 5-2 & 5-5.
Preboring of piles through embankment fill shall not be permissible.

DELAWARE STATE HIGHWAY DEPARTMENT

DELAWARE TURNPIKE

ROUTE 896 BRIDGE OVER CHRISTINA RIVER

SUPERSTRUCTURE

RAILING, SHOE AND PILE DETAILS

DRAWN: A.T.	SCALE: AS NOTED	DATE: MAY 9, 1962	DWG.: 5-8
TRACED:	TIPPETTS-ABBETT-McCARTHY-STRATTON ENGINEERS AND ARCHITECTS		CONTRACT 7002
CHECKED: D.L.-D.F.			
CHARGE OF			SHEET 181 OF 224

COUNTY	CONTRACT	P.R.A. REG. NO.	STATE	FED. AID PROJECT NO.	FISCAL YEAR	SHEET NO.	TOTAL SHEETS
NEW CASTLE	7002	2	DEL.			182	224

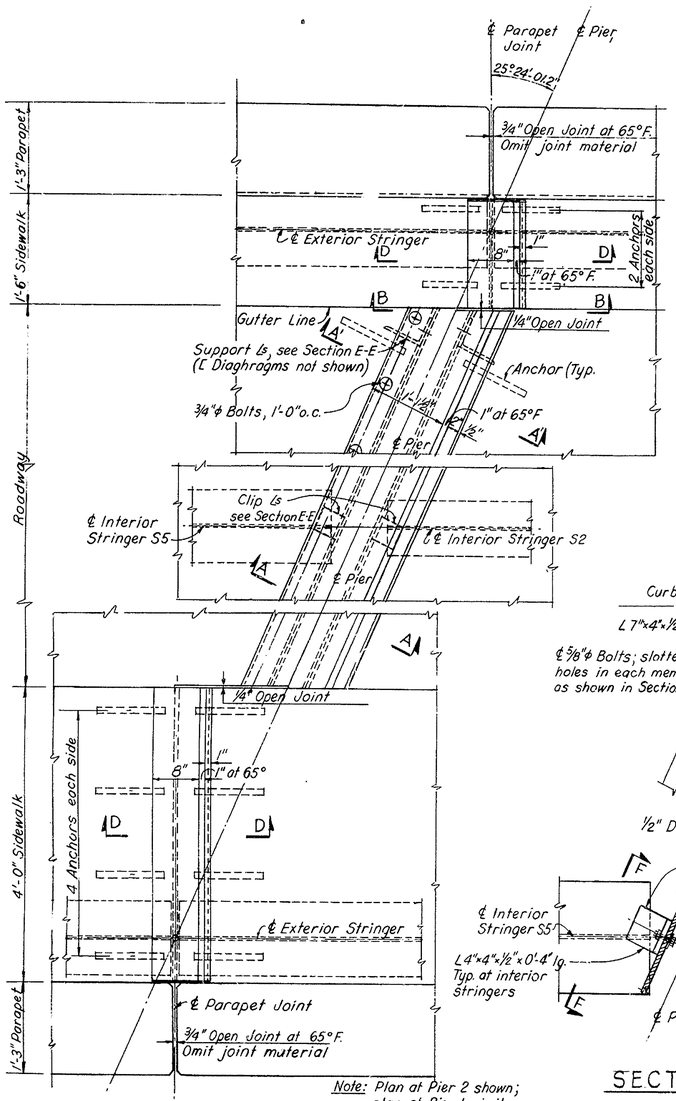

PLAN AT PIER JOINT

SLIDING PLATE DETAIL

SCALE: 1 IN. = 1 FT.

Note: Plan at Pier 2 shown; plan at Pier 1 similar.

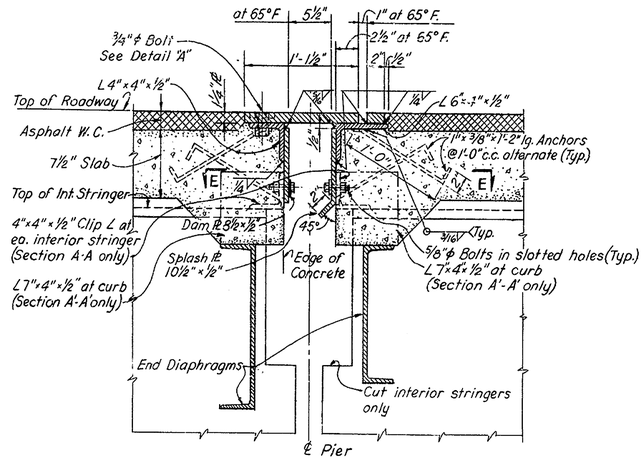

SECTION A-A (AS SHOWN)

SECTION A'-A' (SAME EXCEPT AS NOTED)

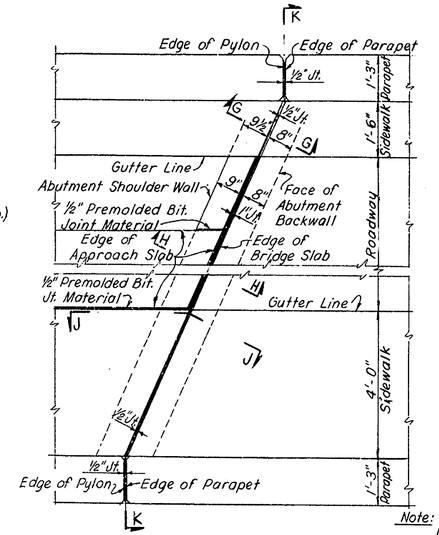

PLAN AT ABUTMENT JOINT

Note: Plan at Abutment 1 shown; Abutment 2 similar.

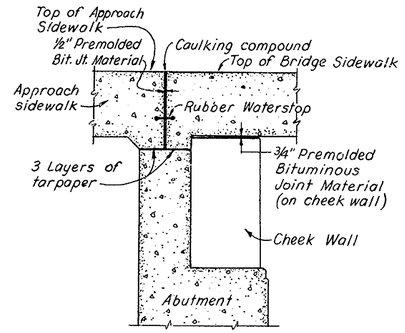

SECTION G-G

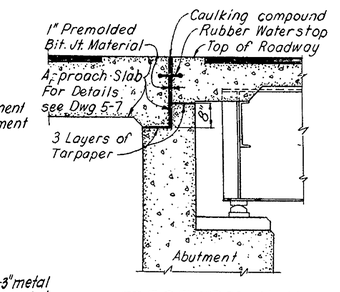

SECTION H-H

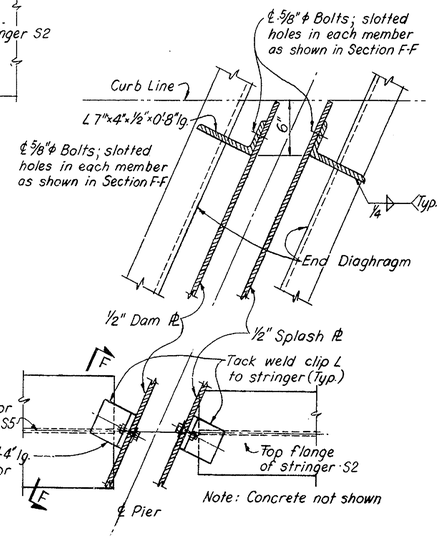

SECTION E-E

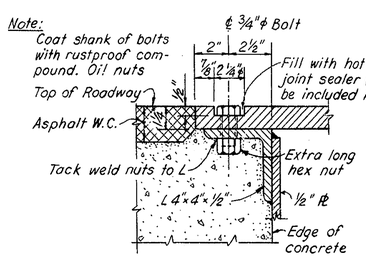

DETAIL "A"

SCALE: 3 IN. = 1 FT.

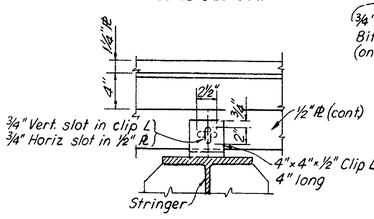

SECTION F-F

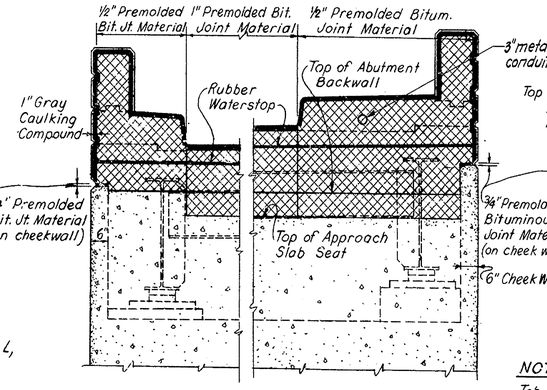

SECTION K-K

JOINT AT ABUTMENT

SCALE: ½ IN. = 1 FT.

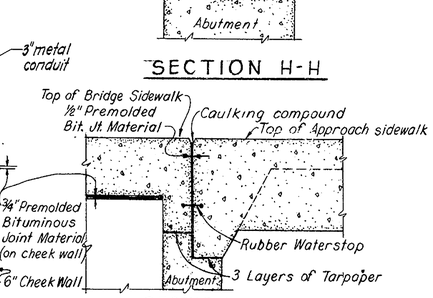

SECTION J-J

NOTES:

Top of Expansion Joint detail to conform to roadway cross section.
Cost of furnishing and placing joint details at piers included in Item 22, "Structural Steel."
Cost of furnishing and placing joint details at abutments, including water stops, shall be included in Item 18, "Portland Cement Concrete Masonry."
For location of Parapet Deflection Joints, see Dwg. 5-7.
For General Notes, see Dwg. 5-1.
For Concrete Notes, see Dwg. 5-4.
For Steel Notes, see Dwg. 5-6.

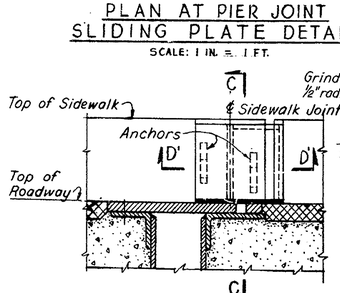

SECTION B-B

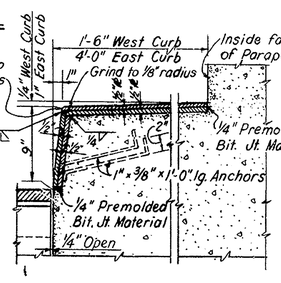

SECTION C-C

JOINT AT PIER

SCALE: 1½ IN. = 1 FT. UNLESS NOTED

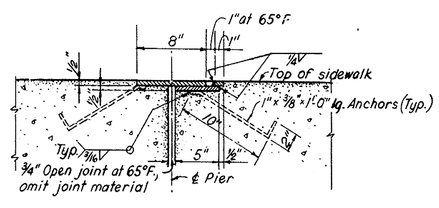

SECTION D-D (SHOWN)

SECTION D'-D' (SIMILAR)

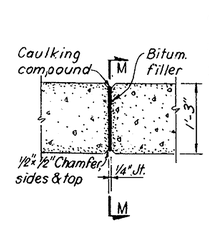

SECTION L-L

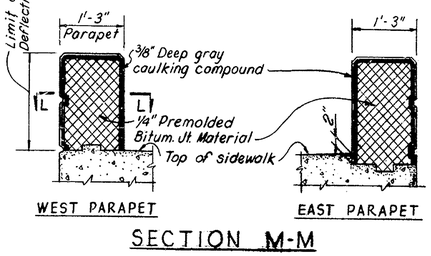

SECTION M-M

DETAILS AT PARAPET DEFLECTION JOINT

SCALE: ¾ IN. = 1 FT.

DELAWARE STATE HIGHWAY DEPARTMENT

DELAWARE TURNPIKE

ROUTE 896 BRIDGE OVER CHRISTINA RIVER

SUPERSTRUCTURE

JOINT DETAILS

DRAWN: A.T.	SCALE: AS NOTED	DATE: MAY 9, 1962	DWG.: 5-9
TRACED:	TIPPETTS-ABBETT-McCARTHY-STRATTON ENGINEERS AND ARCHITECTS		CONTRACT 7002
CHECKED: D.E.L.			
CHARGE OF			SHEET 182 OF 224

COUNTY	CONTRACT	P.R.A. REG. NO.	STATE	FED. AID PROJECT NO.	FISCAL YEAR	SHEET NO.	TOTAL SHEETS
NEW CASTLE	7002	2	DEL.			183	224

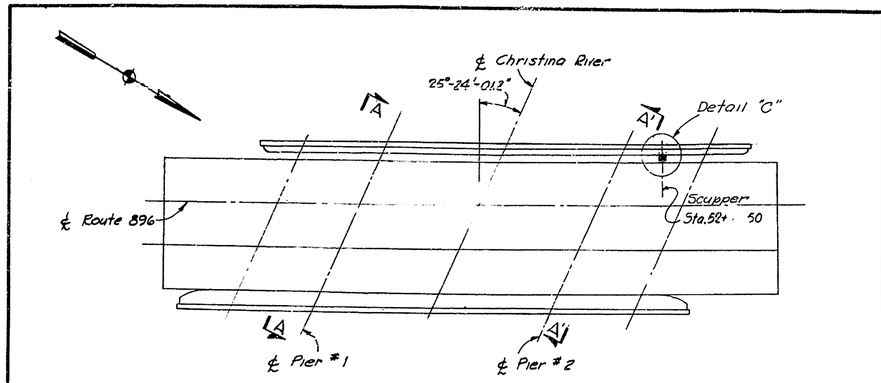

PLAN
SCALE 1 IN. = 20 FT.

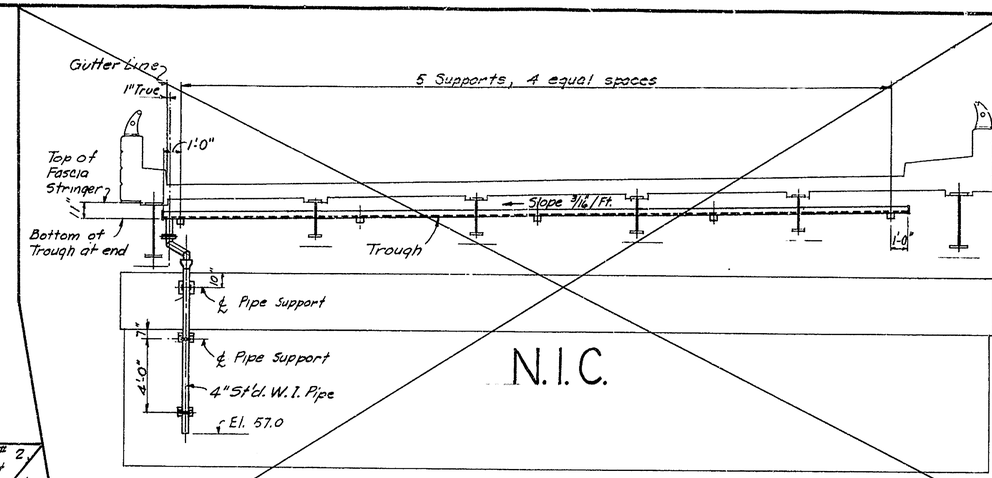

SECTION A-A AS SHOWN
SECTION A'-A' OPP. HAND
SCALE 1/4 IN. = 1 FT.

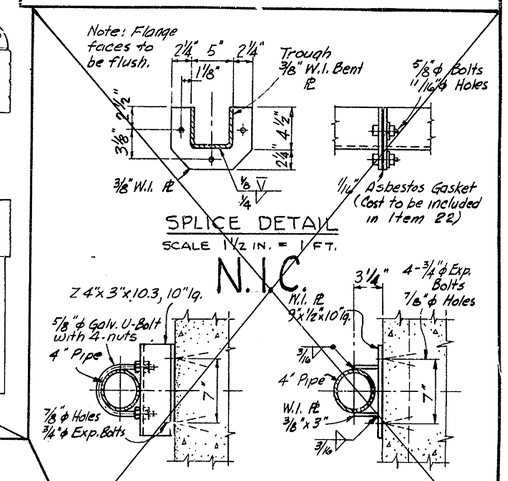

SPLICE DETAIL
SCALE 1 1/2 IN. = 1 FT.

SECTION D-D
SCALE 1 1/2 IN. = 1 FT.

SECTION E-E
SCALE 1 1/2 IN. = 1 FT.

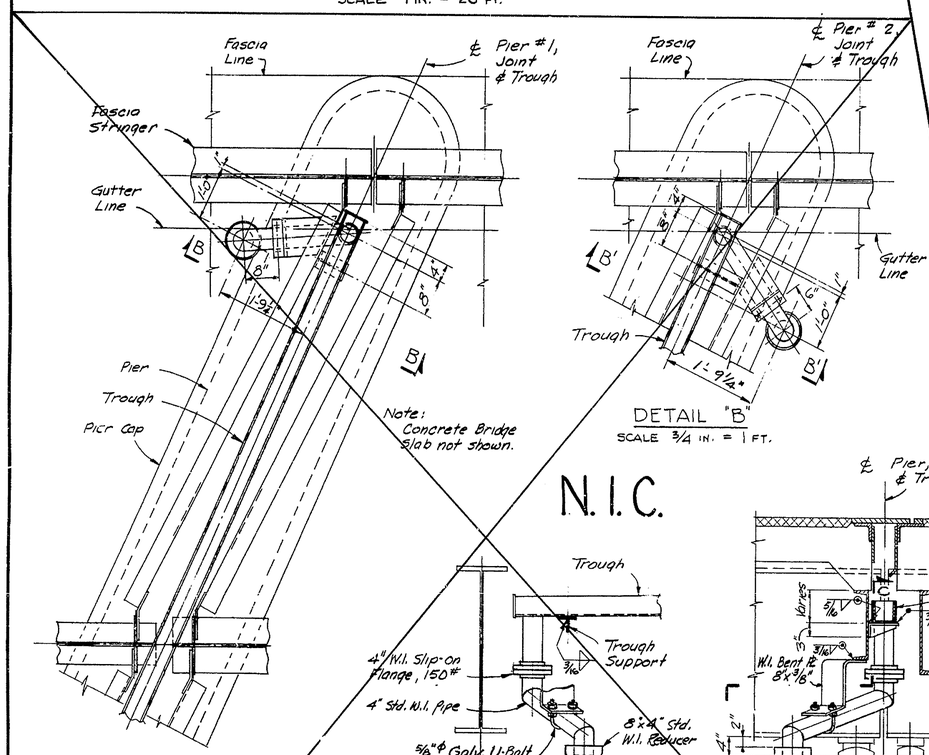

DETAIL "A"
SCALE 3/4 IN. = 1 FT.

DETAIL "B"
SCALE 3/4 IN. = 1 FT.

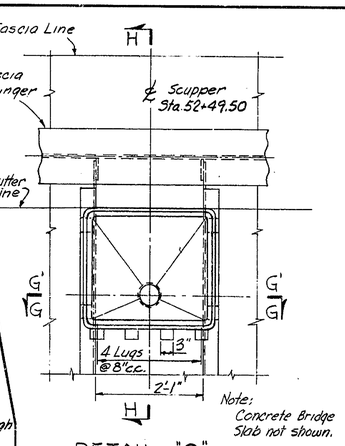

DETAIL "C"
SCALE 3/4 IN. = 1 FT.

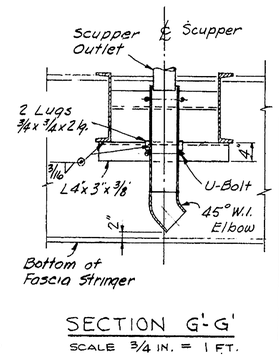

SECTION G'-G'
SCALE 3/4 IN. = 1 FT.

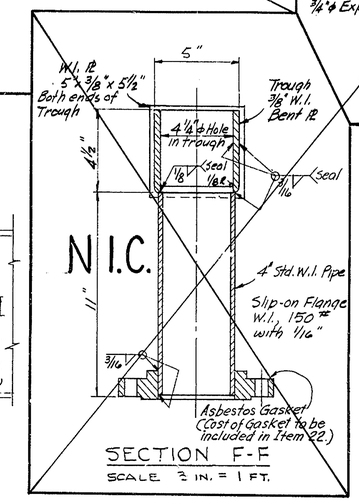

SECTION F-F
SCALE 3 IN. = 1 FT.

SCUPPER NOTES:

All frames and gratings shall be cast steel in accordance with A.S.T.M. A27-60 Grade 65-35. Metal thicknesses less than those shown will not be acceptable, under any circumstances. Bottom and sides of grating shall be finished so as to mate with frame and seat properly with a smooth uniform bearing on the finished surfaces of the scupper casting.

NOTES:

W.I. Pipes shall be Standard Black Wrought Iron, galvanized.

Cost of furnishing and placing all W.I pipes and their supports and connections shall be included in Item "Bridge Drainage."

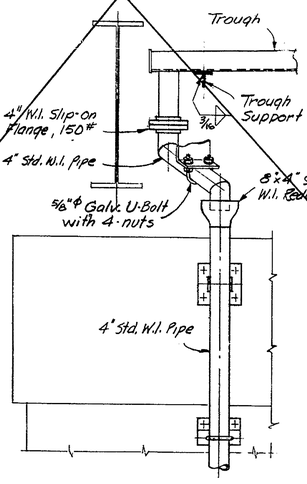

SECTION C-C
SCALE 3/4 IN. = 1 FT.

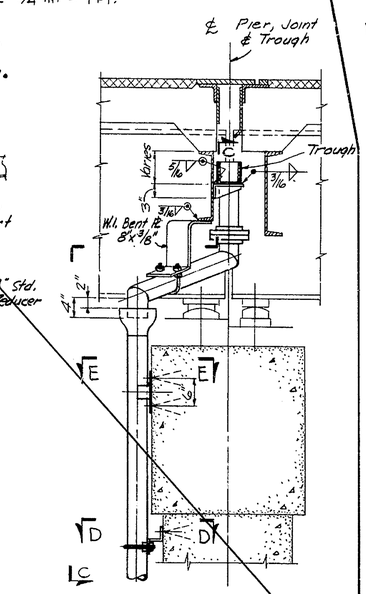

SECTION B-B AS SHOWN
SECTION B'-B' OPP. HAND
SCALE 3/4 IN. = 1 FT.

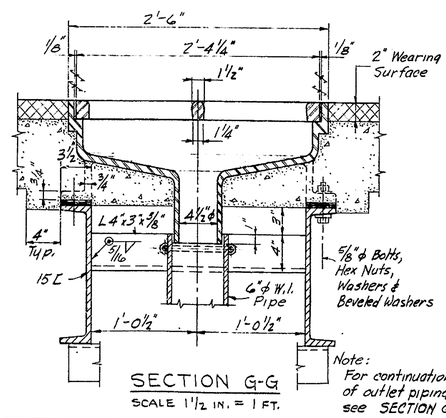

SECTION G-G
SCALE 1 1/2 IN. = 1 FT.

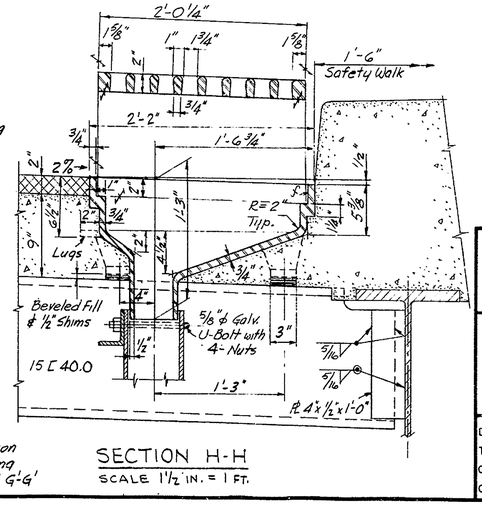

SECTION H-H
SCALE 1 1/2 IN. = 1 FT.

DELAWARE STATE HIGHWAY DEPARTMENT
DELAWARE TURNPIKE

ROUTE 896 BRIDGE OVER CHRISTINA RIVER

SUPERSTRUCTURE
DRAINAGE DETAILS

DRAWN: J.S.B.	SCALE: AS NOTED	DATE: MAY 9, 1962	DWG.: 5-10
TRACED:	TIPPETTS-ABBETT-McCARTHY-STRATTON ENGINEERS AND ARCHITECTS		CONTRACT 7002
CHECKED: D.E.L.			
CHARGE OF			SHEET 183 OF 224

COUNTY	CONTRACT	F.B.A. REG. NO	STATE	FED. AID PROJECT NO	FISCAL YEAR	SHEET NO	TOTAL SHEETS
NEW CASTLE	7002	?	DEL			184	224

REINFORCING BAR SCHEDULE

ABUTMENTS

MARK	SIZE	AMT. REQ'D	LENGTH	TYPE	A	B	C	D	E	F	G	REMARKS
A 501	6	2	27'- 7"	II	2'-10"	24'-9"	1'-3"	2'-6"				Footing - Abut. 1
A 602	6	20	27'- 11"	Str.								
A 603	6	10	7'- 5'	Str.								
A604 thru A608	6	2ea.	9'-9" thru 12'-5"; Δ=8"	Str.								
A 509	5	134	5'- 6"	Str.								- Abut. 1
A 610	6	2	27'- 10"	II	2'-10"	25'-0"	1'-3"	2'-6"				- Abuts. 1 & 2
A 611	6	20	28'- 3"	Str.								- Abut. 2
A612 thru A616	6	2ea.	6'-1" thru 8'-9"; Δ=8"	Str.								
A 517	5	8	6'- 3"	Str.								
A 518	5	2	10'- 6"	II	5'-0"	5'-6"	4'-6"	2'-2"				
A 619	6	6	11'- 0"	Str.								
A 620	6	2	10'- 4"	Str.								
A 621	6	2	9'- 0"	Str.								Footing - Abut 2
A 530	5	8	25'- 9"	II	1'-0"	24'-9"	0'-5"	0'-11"				Horiz. Bars - Abut 1
A 531	5	24	25'- 9"	Str.								- Abut. 1
A 532	5	2	4'- 10"	Str.								- Abuts. 1 & 2
A 533	5	8	26'- 1"	II	1'-0"	25'-1"	0'-5"	0'-11"				- Abut. 2
A 534	5	24	26'- 1"	Str.								Horiz. Bars - Abut. 2
A 635	6	10	5'- 0"	Str.								Fillet Bars
A 636	6	11	4'- 0"	Str.								Fillet Bars
A 537	5	6	5'- 11"	III	2'-9"	0'-5"	2'-9"					Shoulder Wall
A 538	5	8	1'- 10"	Str.								Shoulder Wall
A 539	5	237	3'- 2"	Str.								Appr. Slab, Sdwk. & Footing Dowels
A 540	5	49	7'- 2"	I	3'-5"	3'-9"						Front Face Bars - Abut 1
A 541	5	50	6'- 6"	I	3'-5"	3'-1"						Front Face Bars - Abut 2
A 542	5	43	9'- 5"	I	8'-3"	1'-2"						Backwall - Abut. 1
A 543	5	3	8'- 10"	Str.								- Abut. 1
A 544	5	90	6'- 9"	III	4'-10"	0'-5"	1'-6"					- Abuts. 1 & 2
A 545	5	8	6'- 3"	I	5'-1"	1'-2"						- Abuts. 1 & 2
A 546	5	43	8'- 8"	I	7'-6"	1'-2"						- Abut 2
A 547	5	3	8'- 1"	Str.								Backwall - Abut 2
A 550	5	3	7'- 6"	Str.								West Wingwall - O.F. - Abut. 1
A 551	5	3	12'- 9"									
A 552	5	1	11'- 5"									
A 553	5	1	10'- 9"									
A 554	5	1	10'- 1"									
A 555	5	1	9'- 1"									
A 556	5	1	7'- 10"									
A 557	5	1	6'- 10"									
A 558	5	1	6 - 1"	Str.								
A 559	5	2	5- 7"	II	2'-11"	2'-8"	0'-9"	2'-10"				- Abut. 1
A 560	5	3	6'- 10"	Str.								- Abut. 2
A 561	5	3	12'- 1"									
A 562	5	1	10'- 9"									
A 563	5	1	10'- 1"									
A 564	5	1	9'- 5"									
A 565	5	1	8'- 5"									
A 566	5	1	7'- 2"									
A 567	5	1	6'- 2"									
A 568	5	1	5'- 5"	Str.								
A 569	5	2	4'- 10"	II	2'-11"	1'-11"	0'-9"	2'-10"				- Abut. 2
A 570	5	2	5'- 9"	Str.								- Abuts. 1 & 2
A571 thru A575	5	2 ea.	5'-10" thru 11'-10"; Δ=18"									
A 576	5	4	13'- 3"									
A 577	5	4	9'- 11"									O.F.
A 578	5	4	9'- 7"									E.F.
A 579	5	4	9'- 4"									
A 580	5	4	7'- 7"									
A 581	5	4	5'- 9"									
A 582	5	4	10'- 0"									
A 583	5	8	4'- 0"									E.F.
A 584	5	14	4'- 11"									I.F.
A 585	5	2	4'- 4"									
A 586	5	2	3'- 11"									
A 587	5	2	3'- 8"									
A 588	5	2	10'- 8"	Str.								West Wingwall - I.F. - Abuts. 1 & 2

ABUTMENTS

MARK	SIZE	AMT. REQ'D	LENGTH	TYPE	A	B	C	D	E	F	G	REMARKS
A589 thru A594	5	2 ea.	3'-2" thru 10'-8"; Δ=18"	Str.								West Wingwall - I.F. - Abuts. 1 & 2
A 595	5	2	3'- 2"									Abuts. 1 & 2
A596 thru A5102	5	1 ea.	3'-11" thru 7'-11"; Δ=8"									Abut. 1
A5103	5	1	9'- 3"									Abut. 1
A5104	5	6	5'- 3"									Abuts. 1 & 2
A5105 thru A5111	5	1 ea.	3'-3" thru 7'- 3"; Δ=8"									Abut 2
A 5112	5	2	8'- 7"	Str.								I.F. Abut. 2
A 5114	5	2	9'- 2"	Str.								
A 5115	5	2	10'- 5"	IX	7'-7"	1'-11"	0'-11"	1'-2½"				Sdwk. - Abut. 1
A 5116	5	2	9'- 6"	Str.								Abut. "
A 5117	5	2	11'- 7"	IX	8'-9"	1'-11"	0'-11"	1'-2½"				Abut. 2
A 5118	5	2	4'- 7"	I	3'-0"	1'-7"						Abut. 2
A 5119	5	21	6'- 7"	V	0'-7"	2'-3"	1'-4"	0'-5"				Abuts. 1 & 2
												West Wingwall - Sdwk. - Abuts. 1 & 2
A 5130	5	1	6'- 9"	Str.								East Wingwall - O.F. - Abut. 1
A 5131	5	1	7'- 6"									
A 5132	5	1	8'- 6"									
A 5133	5	1	9'- 9"									
A 5134	5	1	10'- 7"									
A 5135	5	1	11'- 4"									
A 5136	5	1	12'- 0"									
A 5137	5	7	13'- 5"	Str.								O.F.
A 5138	5	2	6'- 3"	II	2'-11"	3'-4"	0'-9"	2'-10"				E.F.
A 5139	5	3	8'- 1"	Str.								O.F. - Abut. 1
A 5140	5	1	6'- 2"									Abut. 2
A 5141	5	1	6'- 11"									
A 5142	5	1	7'- 11"									
A 5143	5	1	9'- 2"									
A 5144	5	1	10'- 0"									
A 5145	5	1	10'- 9"									
A 5146	5	1	11'- 5"									
A 5147	5	7	12'- 10"	Str.								O.F.
A 5148	5	2	5'- 7"	II	2'-11"	2'-8"	0'-9"	2'-10"				E.F.
A 5149	5	3	7'- 7"	Str.								O.F. Abut. 2
A 5150	5	2	9'- 4"									Abuts. 1 & 2
A5151 thru A5155	5	2 ea.	9'-5" thru 15'-5"; Δ=18"									
A 5156	5	6	16'- 10"									O.F.
A 5157	5	8	13'- 6"									E.F.
A 5158	5	4	13'- 2"									
A 5159	5	4	12'- 11"									
A 5160	5	4	11'- 2"									
A 5161	5	4	9'- 4"									
A 5162	5	4	10'- 0"									E.F.
A 5163	5	20	5'- 9"									I.F.
A 5164	5	2	5'- 2"									
A 5165	5	2	4'- 9"									
A 5166	5	2	4'- 6"									
A 5167	5	2	4'- 9"									
A 5168	5	8	4'- 0"									
A 5169	5	6	6'- 0"									
A 5170	5	2	6'- 9"									
A5171 thru A5176	5	2 ea.	6'-9" thru 14'-3"; Δ=18"									
A 5177	5	2	14'- 3"									Abuts. 1 & 2
A 5178	5	1	6'- 7"									Abut. 1
A 5179	5	5	9'- 2"									Abut. 1
A5180 thru A5186	5	1 ea.	3'-11" thru 7'-11"; Δ=8"									Abut. 1
A 5187	5	5	8'- 8"									Abut. 2
A5188 thru A5194	5	1 ea.	3'-2" thru 7'-2"; Δ=8"	Str.								I.F. - Abut. 2
A 4200	4	2	13'- 0"	Str.								Sdwk. - Abut. 1
A 4201	4	2	13'- 5"									
A 4202	4	2	13'- 10"									
A 4203	4	2	12'- 6"	Str.								
A 5204	5	1	15'- 4"	VIII	7'-8"	6'-5"	1'-3"	6'-2"	1'-10"	11'-2"		
A 5205	5	1	14'- 10"		7'-8"	6'-5"	0'-9"	6'-2"	1'-10"	11'-2"		
A 5206	5	1	16'- 7"		7'-11"	7'-3"	1'-5"	6'-8"	2'-2"	11'-8"		
A 5207	5	1	16'- 1"	VIII	7'-11"	7'-3"	0'-11"	6'-8"	2'-2"	11'-8"		East Wingwall - Sdwk. - Abut. 1

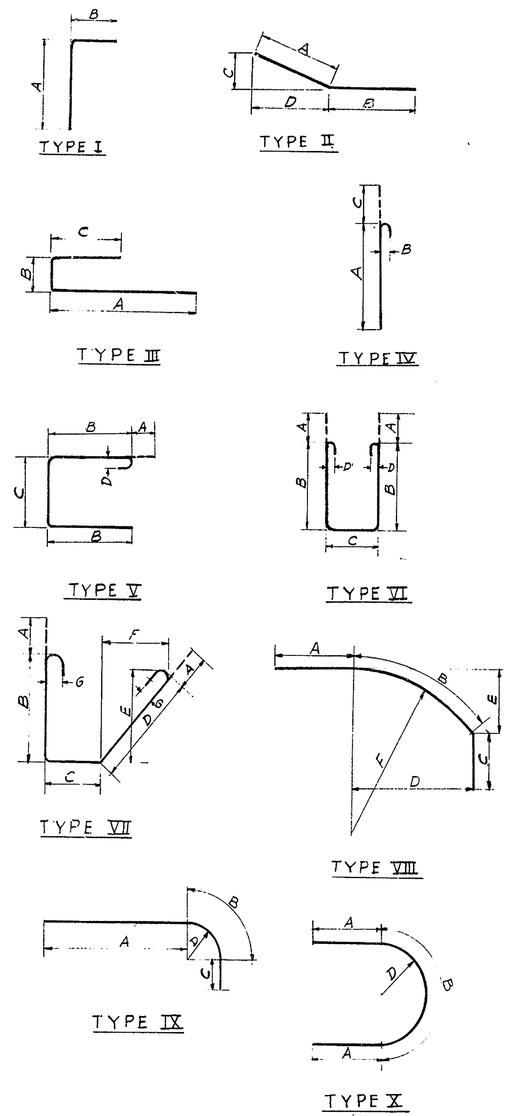

NOTES:
For bar types XI thru XIV, see Dwg. 5-12.
All bar dimensions are out to out.
For Concrete Notes, see Dwg. 5-4.

DELAWARE STATE HIGHWAY DEPARTMENT
DELAWARE TURNPIKE

ROUTE 896 BRIDGE OVER CHRISTINA RIVER
REINFORCING BAR SCHEDULE
ABUTMENTS

DRAWN: P.V.P.	SCALE	DATE: MAY 9, 1962	DWG 5-11
TRACED	TIPPETTS-ABBETT-McCARTHY-STRATTON ENGINEERS AND ARCHITECTS		CONTRACT 7002
CHECKED: D.L.-D.F.			
CHARGE OF			SHEET 184 OF 224

COUNTY	CONTRACT	F.A.P. REG. NO.	STATE	FED. AID PROJECT NO.	FISCAL YEAR	SHEET NO.	TOTAL SHEETS
NEW CASTLE	7002	2	DEL			185	224

* Amt. Req'd:
S5383 thru S5117 & S5121 thru S5155 ; 2 ea.
S5118 thru S5120 & S5156 thru S5158 ; 1 ea.
S5159 thru S5194 & S5198 thru S5233 ; 2 ea.
S5195 thru S5197 & S5234 thru S5236 ; 1 ea.

REINFORCING BAR SCHEDULE

	MARK	SIZE	AMT. REQ'D	LENGTH	TYPE	A	B	C	D	E	F	G	REMARKS
ABUTMENTS	A4210	4	2	13'- 0"	Str.								East Wingwall-Schwk.-Abut 2
	A4211	4	2	12'- 7"									
	A4212	4	2	12'- 1"									
	A4213	4	2	10'- 0"	Str.								
	A5214	5	1	12'- 4"	VIII	4'-8"	6'-5"	1'-3"	6'-2"	1'-10"	11'-2"		
	A5215	5	1	11'- 10"		4'-8"	6'-5"	0'-9"	6'-2"	1'-10"	11'-2"		
	A5216	5	1	13'- 1"		4'-5"	7'-3"	1'-5"	6'-8"	2'-2"	11'-8"		
	A5217	5	1	12'- 7"	VIII	4'-5"	7'-3"	0'-11"	6'-8"	2'-2"	11'-8"		
	A4218	4	2	5'- 3"	II	1'-0"	4'-3"	0'-5"	0'-11"				Abut 2
	A6219	6	24	7'- 3"	I	4'-9"	2'-6"						Abuts. 1 & 2
	A6220	6	2	7'- 2"		4'-8"	2'-6"						
	A6221	6	2	7'- 1"		4'-7"	2'-6"						
	A6222	6	2	7'- 0"		4'-6"	2'-6"						
	A6223	6	2	6'- 11"		4'-5"	2'-6"						
	A6224	6	2	6'- 9"		4'-3"	2'-6"						
	A6225	6	2	6'- 8"		4'-2"	2'-6"						
	A6226	6	2	6'- 5"		3'-11"	2'-6"						
	A6227	6	2	6'- 3"		3'-9"	2'-6"						
	A6228	6	2	6'- 0"		3'-6"	2'-6"						
	A6229	6	2	5'- 9"	I	3'-3"	2'-6"						
	A4230	4	12	4'- 10"	Str.								
	A4231	4	2	4'- 8"									
	A4232	4	2	4'- 6"									
	A4233	4	2	4'- 3"									
	A4234	4	2	3'- 10"									
	A4235	4	2	3'- 4"	Str.								
	A3236	3	26	5'- 8"	VI	0'-5"	2'-1"	0'-8"	0'-3"				
	A5237	5	4	4'- 11"	I	2'-9"	2'-2"						
	A5238	5	4	2'- 9"	Str.								
	A3239	3	8	7'- 4"	VII	0'-5"	2'-11"	0'-5"	3'-2"	2'-10"	1'-5"	0'-3"	
	A4240	4	6	5'- 4"	Str.								East Wingwall-Schwk.-Abuts. 1 & 2
	A4250	4	48	5'- 8"	III	1'-9"	2'-2"	1'-9"					Pad Bars
	A4251	4	60	5'- 4"	III	1'-9"	1'-10"	1'-9"					Pad Bars
	A4252	5	12	6'- 0"	Str.								Bars at Utility Openings
	A5253	5	16	4'- 11"	I	3'-3"	1'-8"						Bars at Utility Openings
PIERS	P401	4	98	7'- 6"	III	2'-6"	2'-6"	2'-6"					Pier Top
	P402	4	16	5'- 11"	X	1'-0"	3'-11"	2'-6"	1'-3"				
	P403	4	16	3'- 8"	I	2'-6"	1'-2"						
	P404	4	8	25'- 7"	Str.								Pier Top
	P405	4	104	24'- 2"	Str.								Pier Top & Shaft
	P506	5	208	10'- 2"	Str.								Pier Shaft
	P407	4	36	5'- 2"	X	1'-0"	3'-2"	2'-0"	1'-0"				Pier Shaft
	P508	5	208	3'- 6"	Str.								Footing Dowels
	P509	5	106	6'- 6"	Str.								Footing
	P510	5	28	26'- 7"	Str.								Footing
	P411	4	76	6'- 4"	III	2'-0"	2'-4"	2'-0"					Pad Bars
	P412	4	4	5'- 6"	III	2'-0"	1'-6"	2'-0"					Pad Bars
	P413	4	52	6'- 8"	III	2'-0"	2'-8"	2'-0"					Pad Bars
APPROACH SLABS	AS501	5	42	35'- 8"	Str.								
	AS502 thru AS513	5	1 ea.	9'-2" thru 33'-3"; Δ=26½"±									
	AS514 thru AS525	5	1 ea.	11'-4" thru 33'-4"; Δ=24"									
	AS527	5	6	39'- 0"									
	AS528	5	6	39'- 8"	Str.								
	AS529 thru AS6100	6	1 ea.	21'-0" thru 37'-2"; Δ=2¾"±	XI	See	0'-6"	0'-8"					Dim. A: 19'-8" thru 35'-10"; Δ=23¼"±
	AS6101 thru AS6172	6	1 ea.	21'-0" thru 38'-7"; Δ=3"±	XI	Remarks	0'-6"	0'-8"					Dim. A: 19'-8" thru 37'-3"; Δ=3"±
	AS4173	4	30	5'- 5"	XII	1'-8"	1'-6"	0'-5"	1'-4"	1'-3"	1'-10"		
	AS4174	4	30	6'- 0"	XII	1'-8"	1'-9"	0'-5"	1'-7"	1'-6"	2'-2"		
	AS4175	4	12	6'- 7"	XII	1'-8"	2'-0"	0'-5"	1'-10"	1'-9"	2'-6"		
	AS5176	5	6	8'- 6"	Str.								

	MARK	SIZE	AMT. REQ'D.	LENGTH	TYPE	A	B	C	D	E	F	G	REMARKS
DECK SLAB	S501 thru S539	5	1 ea.	8'-7" thru 45'-0"; Δ=11¼"	IV	See Remarks	0'-5"	0'-7"					Dim. A: 8'-0" thru 44'-5"; Δ=11½"
	S540 thru S578	5	1 ea.	8'-0" thru 44'-5"; Δ=11¼"	Str.								
	S579	5	140	46'- 10"	VI	45'-8"	0'-5"	0'-7"					
	S580	5	140	45'- 8"	Str.								
	S581	5	6	41'- 0"	IV	40'-5"	0'-5"	0'-7"					
	S582	5	6	40'- 5"	Str.								
	S583 thru S5120	5	See Above *	8'-7" thru 43'-3"; Δ=11¼"	IV	See Remarks	0'-5"	0'-7"					Dim. A: 8'-0" thru 42'-8"; Δ=11¼"
	S5121 thru S5158	5		8'-0" thru 42'-8"; Δ=11¼"	Str.								
	S5159 thru S5197	5		8'-7" thru 43'-5"; Δ=11"	IV	See Remarks	0'-5"	0'-7"					Dim. A: 8'-0" thru 42'-10"; Δ=11"
	S5198 thru S5236	5		8'-0" thru 42'-10"; Δ=11"	Str.								
	S5237 thru S5278	5	1 ea.	8'-7" thru 45'-4"; Δ=10½"	IV	See Remarks	0'-5"	0'-7"					Dim. A: 8'-0" thru 44'-9"; Δ=10½"
	S5279 thru S5320	5	1 ea.	8'-0" thru 44'-9"; Δ=10½"	Str.								
	S5350	5	2	50'- 2"	XI	49'-0"	0'-5"	0'-7"					
	S5351	5	2	49'- 0"	Str.								
	S5352	5	4	51'- 5"	XI	50'-3"	0'-5"	0'-7"					
	S5353	5	4	50'- 3"	Str.								
	S5354	5	2	45'- 1"	IV	44'-6"	0'-5"	0'-7"					
	S5355	5	2	44'- 6"	Str.								
	S5356	5	2	44'- 1"	IV	43'-6"	0'-5"	0'-7"					
	S5357	5	2	43'- 6"	Str.								
	S5358	5	2	46'- 3"	IV	45'-8"	0'-5"	0'-7"					
	S5359	5	2	45'- 8"	Str.								
	S4370	4	8	26'- 0"	Str.								
	S4371 thru S4373	4	1 ea.	24'-10" thru 25'-11"; Δ=6¼"									
	S4374 thru S4377	4	1 ea.	24'-8" thru 25'-7"; Δ=3¾"±									
	S4378	4	159	25'- 5"									
	S4379	4	178	35'- 0"									
	S4380	4	4	25'- 5"	Str.								
	S4381	4	54	6'- 8"	I	6'-0"	0'-8"						
	S4382	4	108	4'- 8"	I	4'-0"	0'-8"						
	S5390	5	12	7'- 7"	IV	7'-0"	0'-5"	0'-7"					
	S5391	5	12	7'- 0"	Str.								
	S5392	5	18	5'- 7"	IV	5'-0"	0'-5"	0'-7"					
	S5393	5	18	5'- 0"	Str.								
	S5394	5	6	4'- 11"	Str.								
	S4395	4	6	8'- 4"	III	4'-0"	0'-4"	4'-0"					
	S4396	4	2	6'- 5"	I	4'-0"	2'-5"						
	S6397	6	15	6'- 0"	Str.								
	S5400	5	12	12'- 8"	Str.								
	S5401	5	60	13'- 6"									
	S5402	5	24	12'- 10"									
	S5403	5	12	12'- 6"	Str.								
	S5404	5	300	7'- 1"	III	3'-1"	0'-11"	3'-1"					
	S4410	4	2	26'- 2"	Str.								
	S4411	4	1	25'- 11"									
	S4412	4	2	25'- 8"									
	S4413	4	24	35'- 0"									
	S4414	4	2	25'- 6"									
	S4415	4	1	25'- 9"									
	S4416	4	4	26'- 1"									
	S4417	4	2	24'- 4"									
	S4418 thru S4420	4	1 ea.	24'-9" thru 25'-8"; Δ=5¼"									
	S4421	4	2	27'- 2"									
	S4422 thru S4424	4	1 ea.	25'-10" thru 26'-9"; Δ=5¼"									
	S4425	4	2	25'- 5"	Str.								
	S5430	5	138	5'- 4"	XIII	2'-4"	0'-2"	1'-1"	1'-3"	0'-7"	0'-5"	1'-4"	
	S5431	5	4	4'- 10"	XIV	2'-4"	0'-2"	1'-4"	1'-3"	0'-7"	0'-5"		
	S5432	5	137	7'- 10"	XIII	4'-10"	0'-2"	1'-1"	1'-3"	0'-7"	0'-5"	1'-4"	
	S5433	5	6	7'- 4"	XIV	4'-10"	0'-2"	1'-4"	1'-3"	0'-7"	0'-5"		

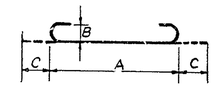

TYPE XI

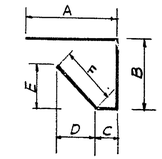

TYPE XII

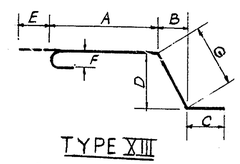

TYPE XIII

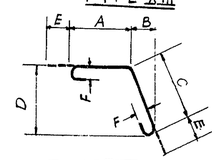

TYPE XIV

NOTES:

For bar types I through X, see Dwg. 5-11.
All bar dimensions are out to out
For Concrete Notes, see Dwg. 5-4.

DELAWARE STATE HIGHWAY DEPARTMENT
DELAWARE TURNPIKE

ROUTE 896 BRIDGE OVER CHRISTINA RIVER
REINFORCING BAR SCHEDULE
APPROACH AND DECK SLABS-PIERS

DRAWN: P.V.P.	SCALE	DATE MAY 9, 1962	DWG 5-12
TRACED	TIPPETTS-ABBETT-McCARTHY-STRATTON ENGINEERS AND ARCHITECTS		CONTRACT 7002
CHECKED: D.L.-D.F.			
CHARGE OF			SHEET 185 OF 224

COUNTY	CONTRACT	P.R.A. REG. NO.	STATE	FED. AID. PROJECT NO.	FISCAL YEAR	SHEET NO.	TOTAL SHEETS
NEW CASTLE	7002	2	DEL.			186	224

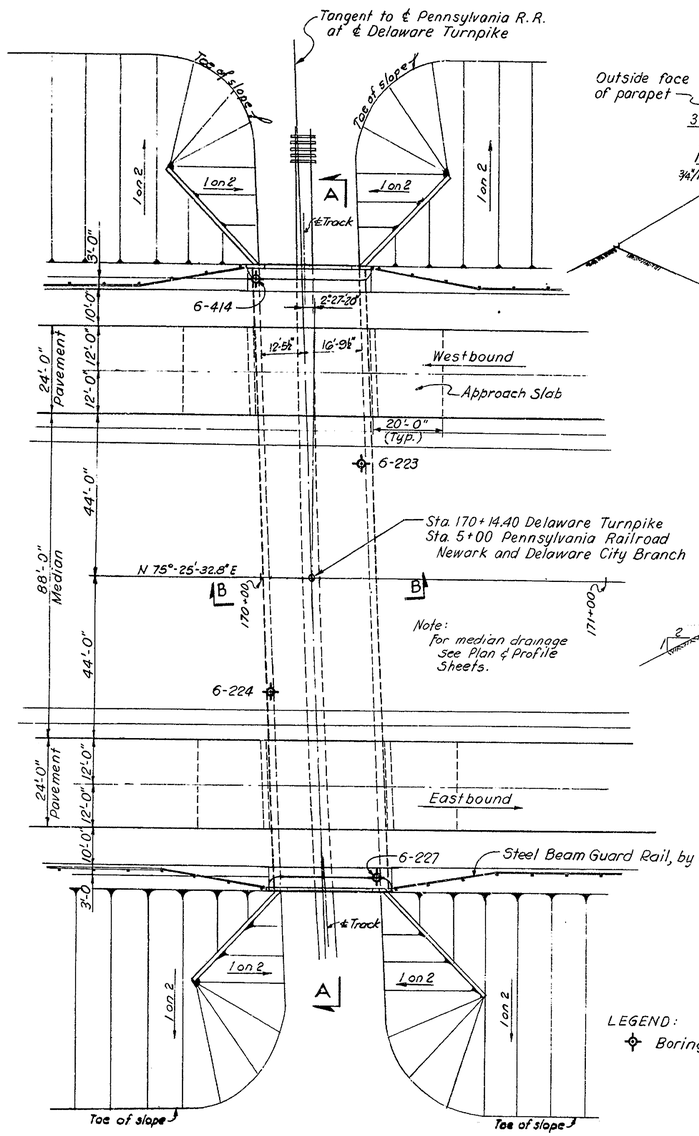

PLAN
SCALE: 1 IN. = 20 FT.

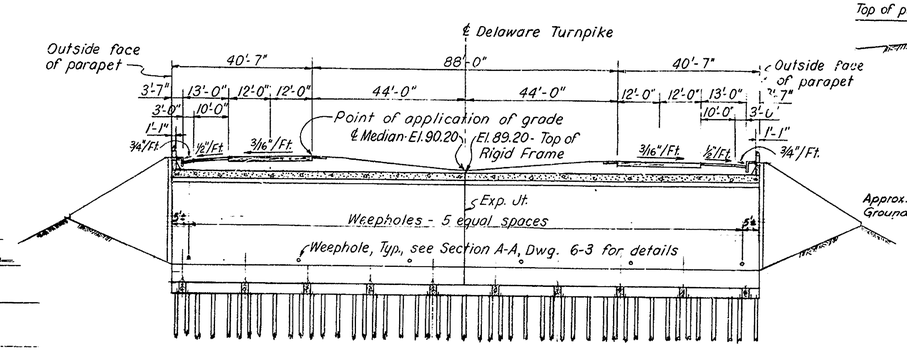

SECTION A-A
SCALE: 1 IN. = 20 FT.

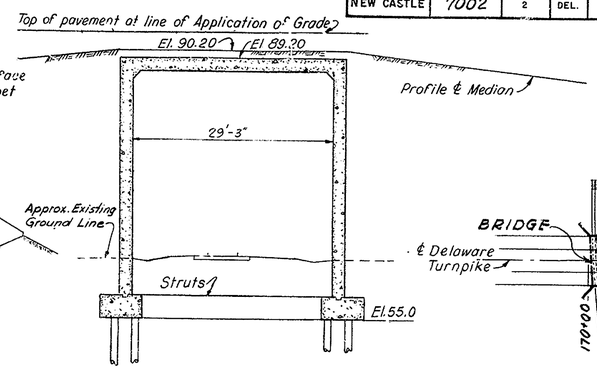

SECTION B-B
SCALE: 1 IN. = 10 FT.

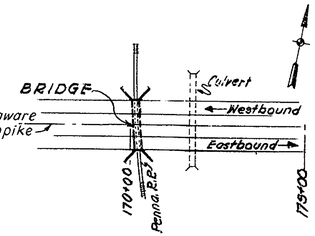

LOCATION PLAN
SCALE: 1 IN. = 200 FT.

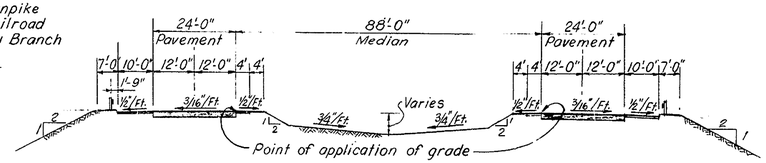

APPROACH SECTION
SCALE: 1 IN. = 20 FT.

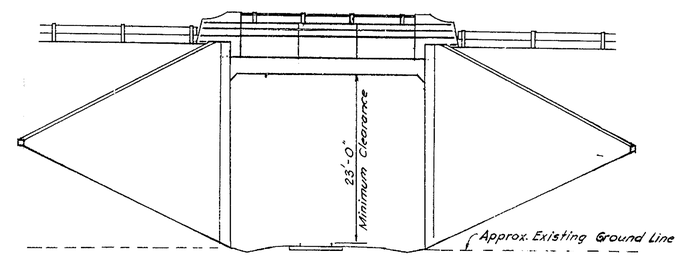

ELEVATION
SCALE: 1 IN. = 10 FT.

TABLE OF QUANTITIES			
ITEM NO.	DESCRIPTION	UNIT	QUANTITY
4	Excavation for Structures	C.Y.	850
18 *	Portland Cement Concrete Masonry		
	Footings	C.Y.	551
	Substructure	C.Y.	1,430
	Approach Slabs	C.Y.	84
19	Superficial Waterproofing	S.Y.	1,210
	Membrane Waterproofing	S.Y.	630
20*	Bar Reinforcement	Lbs.	387,000
35	Cast-in-place Concrete Piles	L.F.	19,840
	Steel Shell Test Piles	L.F.	600
	Aluminum Railing - Single Rail	L.F.	50

* indicates Fixed Quantity Item, see Proposal.

GENERAL NOTES:

Design Specifications: Standard Specifications for Highway Bridges of the American Association of State Highway Officials, dated 1957.

Material and Fabrication Specifications: Standard Specifications of State Highway Department, July 1, 1960; and as given in Special Provisions.

Unsuitable Material under the structure shall be removed and replaced by well-compacted fill; cost to be included in Highway Payment Items.

Fill under structure shall be placed to an elevation 1 ft. above bottom of footing before piles are driven.

Embankment for frame shall be placed by Others, simultaneously on both sides and to the same elevations.

The minimum waiting period before loads are permitted on the structure after the frame top slab is placed shall be 10 days for loads of 2 tons to 10 tons and 28 days for loads of 10 tons to the legal load limit.

Test Piles shall be in accordance with Standard Specifications.

Quantities shown will not relieve the Contractor of the responsibility of checking them in preparing his bid.

For Boring Logs see Sheet 211.

CONCRETE NOTES:

Design Stresses: Reinforcing Steel = 18,000 psi; concrete f_c = 1,200 psi, n = 10.

Splices for stress bars shall be a minimum of 30 diameters; all other splices a minimum of 20 diameters.

Construction Joints other than those shown will not be permitted without written approval by the Engineer.

Exposed Concrete Edges shall be bevelled 1 in. by 1 in., unless otherwise noted.

Concrete Cover as per A.A.S.H.O. or as noted.

Cost of furnishing and placing all bituminous joint materials, caulking compound and water stops shall be included in Item 18, "Portland Cement Concrete Masonry."

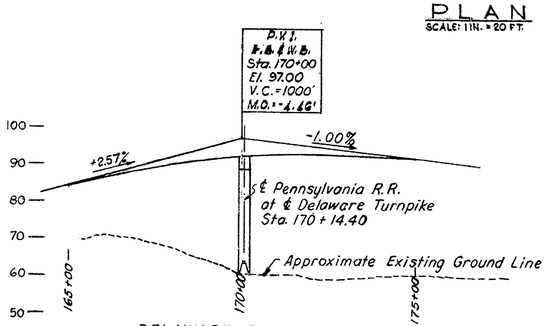

DELAWARE TURNPIKE

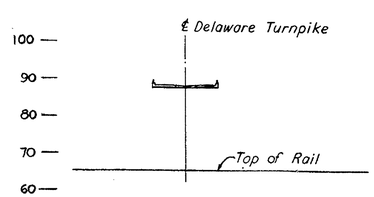

PENNSYLVANIA RAILROAD

℄ PROFILES
SCALES: HOR. 1 IN. = 200 FT. VER. 1 IN. = 20 FT.

DELAWARE STATE HIGHWAY DEPARTMENT
DELAWARE TURNPIKE

TURNPIKE BRIDGE OVER PENNSYLVANIA R.R.

GENERAL ARRANGEMENT

DRAWN: B.M.-A.T.	SCALE: AS NOTED	DATE: MAY 9, 1962	DWG.: 6-1
TRACED:	TIPPETTS-ABBETT-McCARTHY-STRATTON ENGINEERS AND ARCHITECTS		CONTRACT 7002
CHECKED: T.K.-D.F.			
CHARGE OF			SHEET 186 OF 224

COUNTY	CONTRACT	P.R.A. REG. NO.	STATE	FED. AID PROJECT NO.	FISCAL YEAR	SHEET NO.	TOTAL SHEETS
NEW CASTLE	7002	2	Del.			187	224

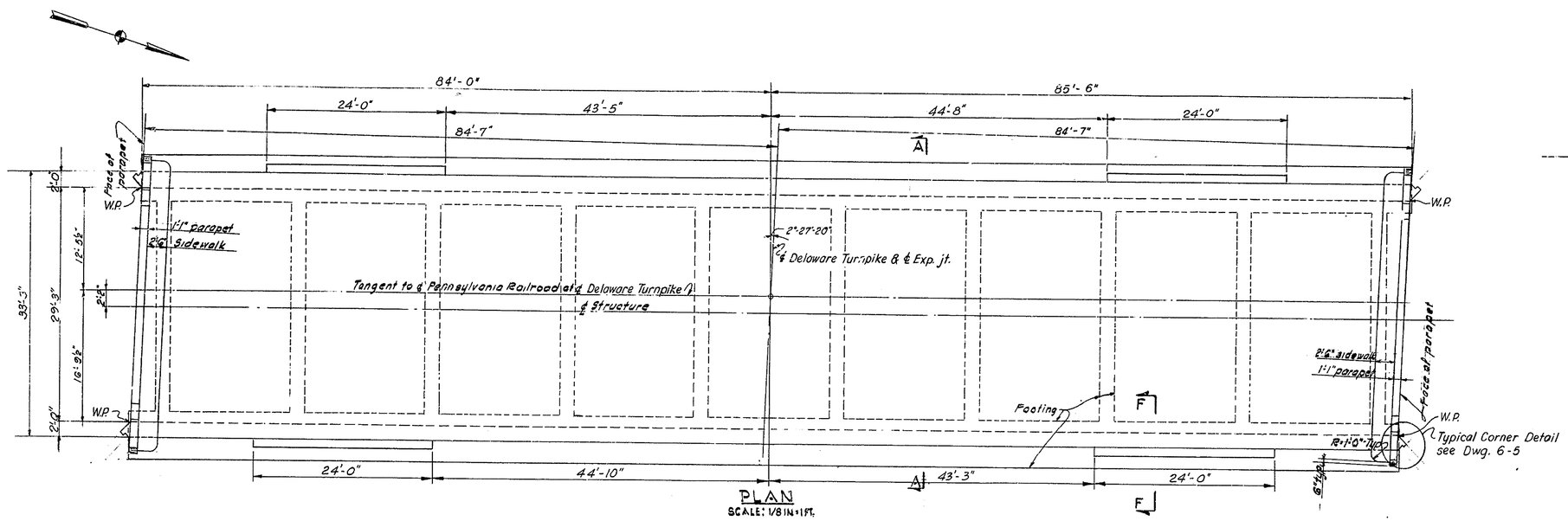

PLAN
SCALE: 1/8 IN.=1 FT.

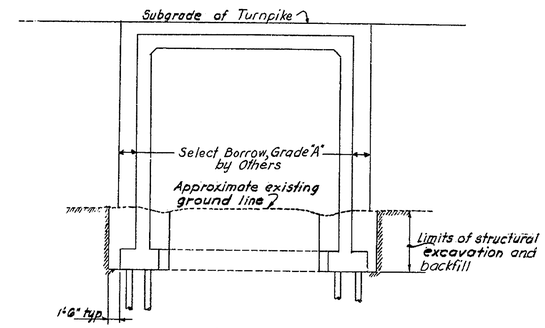

AT FRAME

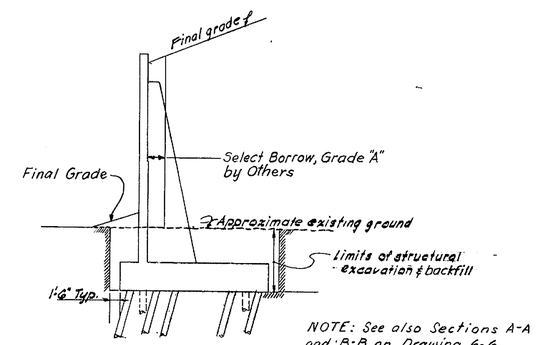

AT WINGWALLS

NOTE: See also Sections A-A and B-B on Drawing 6-6.

EXCAVATION & BACKFILL DETAILS
NO SCALE

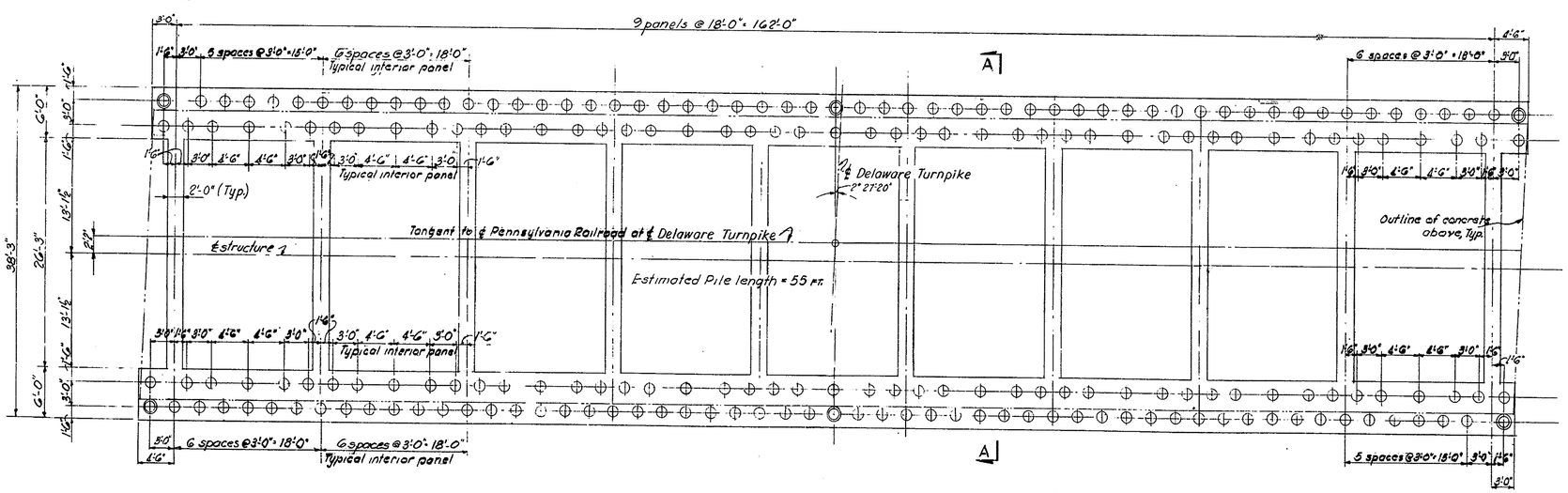

FOUNDATION PLAN
SCALE: 1/8 IN.=1 FT.

LEGEND:
- ○ Vertical Piles
- ◎ Steel Shell Test Pile

NOTES:
- For Section A-A, see Drawing 6-3.
- For General Notes and Concrete Notes, see Drawing 6-1.
- For Section "F-F" see Dwg. 6-4.

DELAWARE STATE HIGHWAY DEPARTMENT
DELAWARE TURNPIKE

TURNPIKE BRIDGE OVER PENNSYLVANIA R.R.

FRAME PLAN AND FOUNDATION

DRAWN: B.M.-A.T.	SCALE: AS NOTED	DATE: MAY 9, 1962	DWG.: 6 - 2
TRACED: CHECKED: T.K.-D.F. CHARGE OF	TIPPETTS-ABBETT-McCARTHY-STRATTON ENGINEERS AND ARCHITECTS		CONTRACT 7002
			SHEET 187 OF 224

COUNTY	CONTRACT	P.R.A. REG. NO.	STATE	FED. AID PROJECT NO.	FISCAL YEAR	SHEET NO.	TOTAL SHEETS
NEW CASTLE	7002	2	DEL.			188	224

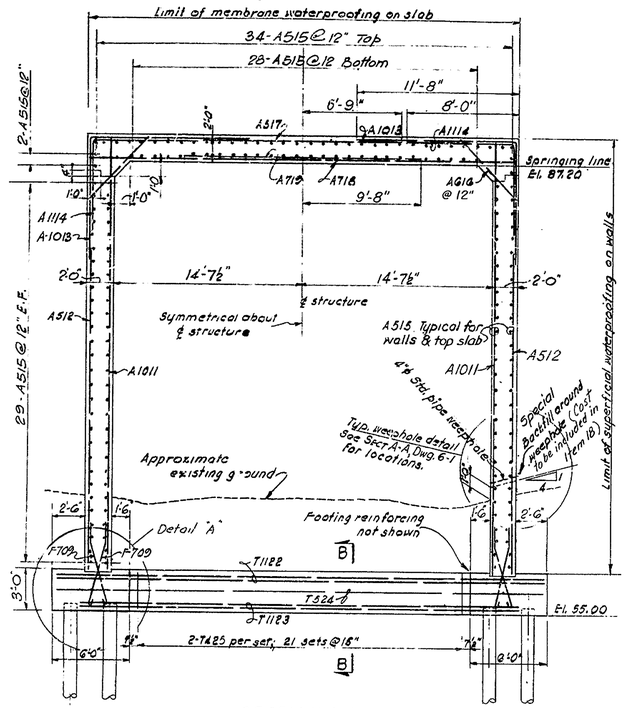

SECTION A-A
SCALE: 3/16 IN. = 1 FT.

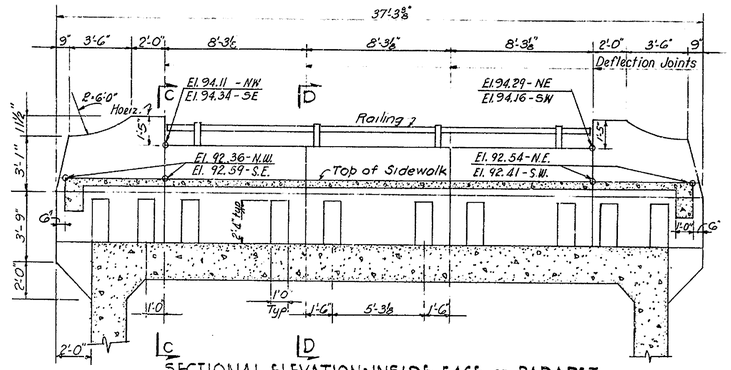

SECTIONAL ELEVATION - INSIDE FACE OF PARAPET
SCALE: 1/4 IN. = 1 FT.

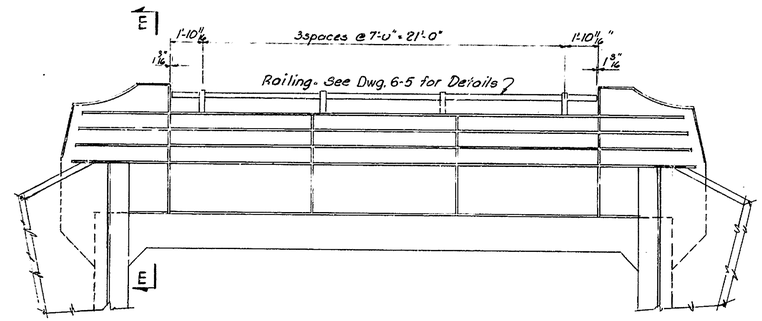

ELEVATION - OUTSIDE FACE OF PARAPET
SCALE: 1/4 IN. = 1 FT.

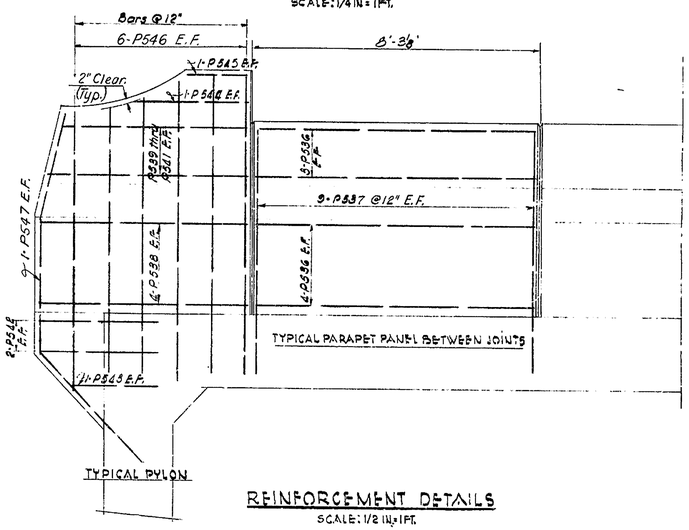

REINFORCEMENT DETAILS
SCALE: 1/2 IN. = 1 FT.

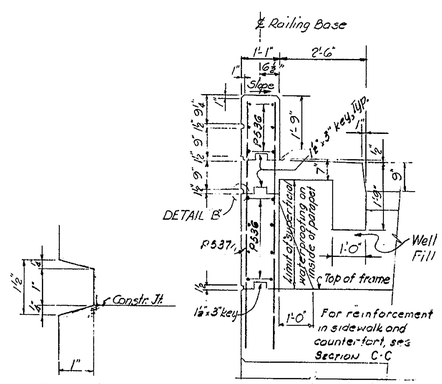

DETAIL "B"
SCALE: 6 IN. = 1 FT.

SECTION D-D
SCALE: 1/2 IN. = 1 FT.

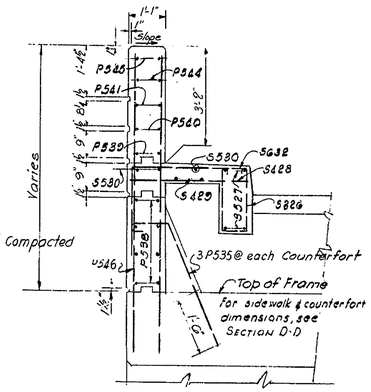

SECTION C-C
SCALE: 1/2 IN. = 1 FT.

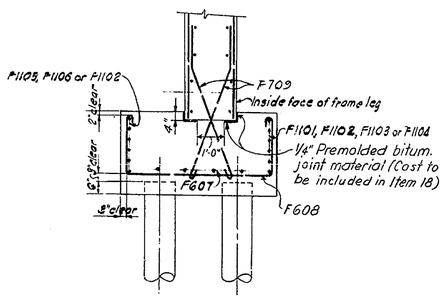

DETAIL "A"
SCALE 3/8 IN. = 1 FT.

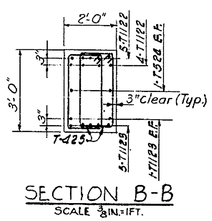

SECTION B-B
SCALE 3/8 IN. = 1 FT.

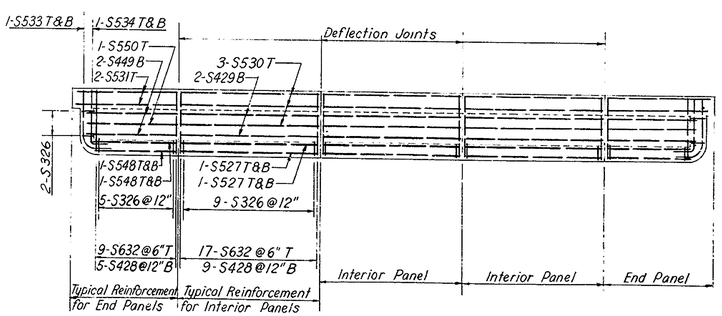

PLAN AT SIDEWALK
SCALE: 1/4 IN. = 1 FT.

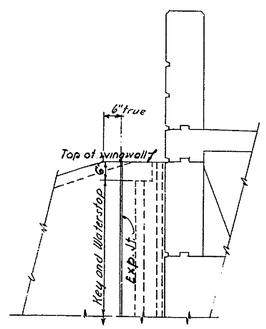

SECTION E-E
SCALE: 1/2 IN. = 1 FT.

NOTES:
For location of Section A-A, see Drawing 6-1.
For General Notes and Concrete Notes, see Drawing 6-1.

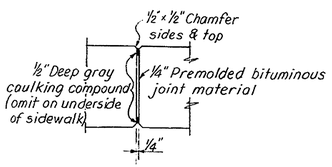

DEFLECTION JOINT
SCALE: 1 IN. = 1 FT.

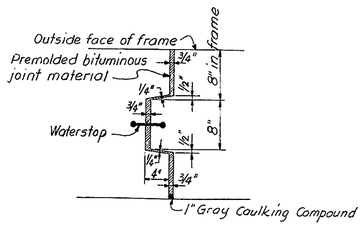

EXPANSION JOINT
SCALE: 1 IN. = 1 FT.

DELAWARE STATE HIGHWAY DEPARTMENT
DELAWARE TURNPIKE

TURNPIKE BRIDGE OVER PENNSYLVANIA R.R.

FRAME
ELEVATION, SECTIONS AND DETAILS

DRAWN: B.M.-A.T.	SCALE AS NOTED	DATE: MAY 9, 1962	DWG 6 - 3
TRACED:	TIPPETTS-ABBETT-McCARTHY-STRATTON ENGINEERS AND ARCHITECTS		CONTRACT 7002
CHECKED: T.K.-D.F.			
CHARGE CF			SHEET 188 OF 224

COUNTY	CONTRACT	P.R.A. REG. NO.	STATE	FED. AID PROJECT NO.	FISCAL YEAR	SHEET NO.	TOTAL SHEETS
NEW CASTLE	7002	2	DEL.			189	224

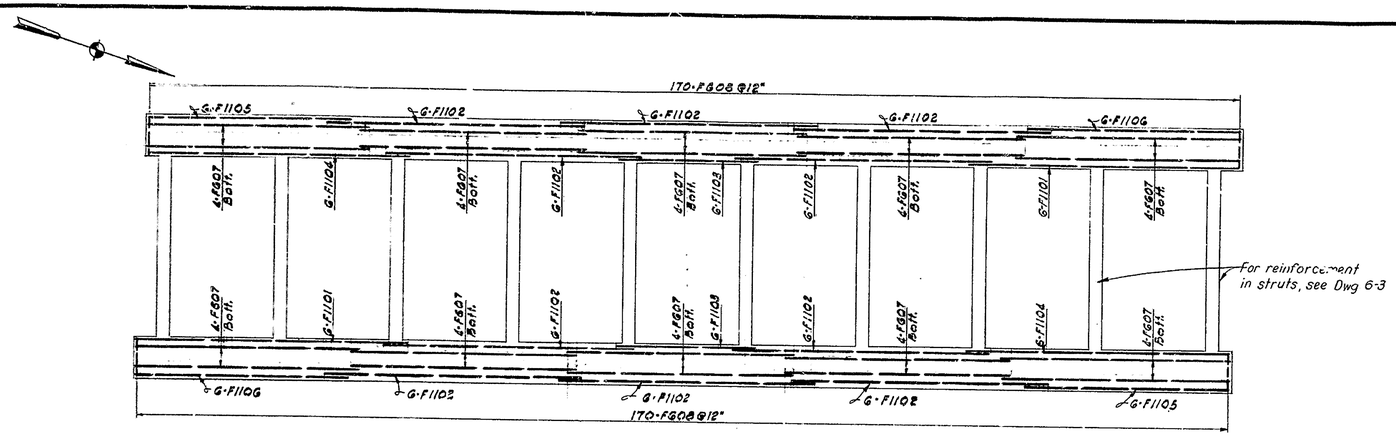

FOOTING PLAN

SCALE: 3/32 IN = 1 FT

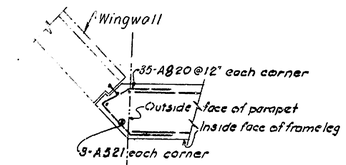

SECTION A-A (SHOWN)

SECTION A'-A' (OPPOSITE HAND)

SCALE: 3/8 IN = 1 FT.

PILE SCHEDULE				
LOCATION	NUMBER BY FOOTING			
	PILES		REINFORCING BARS	
	ESTIM. LENGTH		#6 LONGIT. BARS	1/4" Φ SPIRAL
	55ft	65ft	Length 12'-10"	Length 41'-10"
FRAME FOOTINGS	206		1236	206
WINGWALL FOOTINGS				
TYPE "A"	22		132	22
TYPE "B"		14	84	14
TOTAL NUMBER	294	56	2,100	350

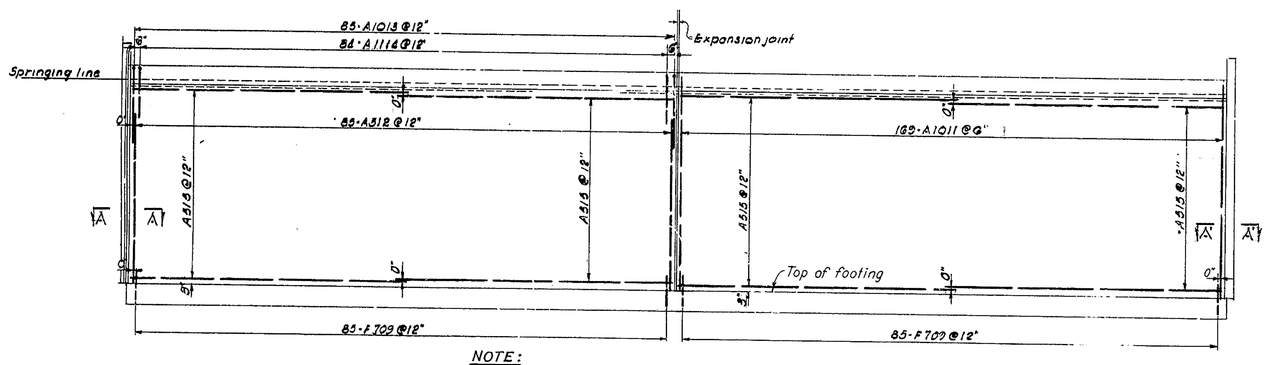

OUTSIDE FACE

NOTE:
For additional bars at approach slab seat, see Section "F-F."

INSIDE FACE

ELEVATION OF FRAME LEG

SCALE: 3/32 IN = 1 FT.

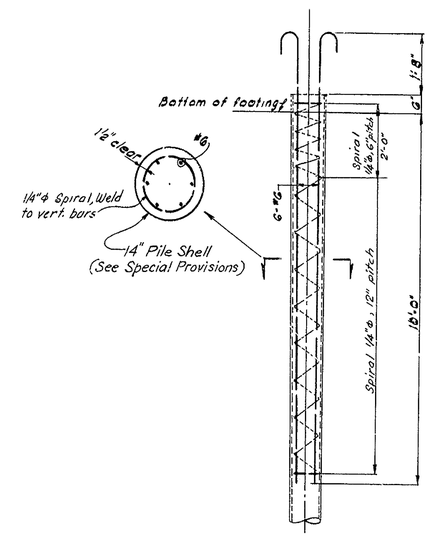

PILE DETAIL

SCALE: 1/2 IN = 1 FT.

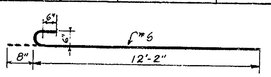

PILE NOTES:

Approved Metal Spacers shall be attached to the top and bottom coils to insure that the minimum required clear distance to the shell will be maintained.

Pile Capacity shall be 50 tons.

Estimated Pile Length: 55 ft. under frame footing and wingwall footing Type "A"; 65 ft. under wingwall footing Type "B".

Actual pile lengths shall be determined by test piles. For location of steel shell test piles see Dwg's 6-2 & 6-5.

Pile Reinforcement: Cost to be included in "Cast-in-place concrete-filled Piles", Item 35.

For location of Section "F-F" see Dwg. 6-2

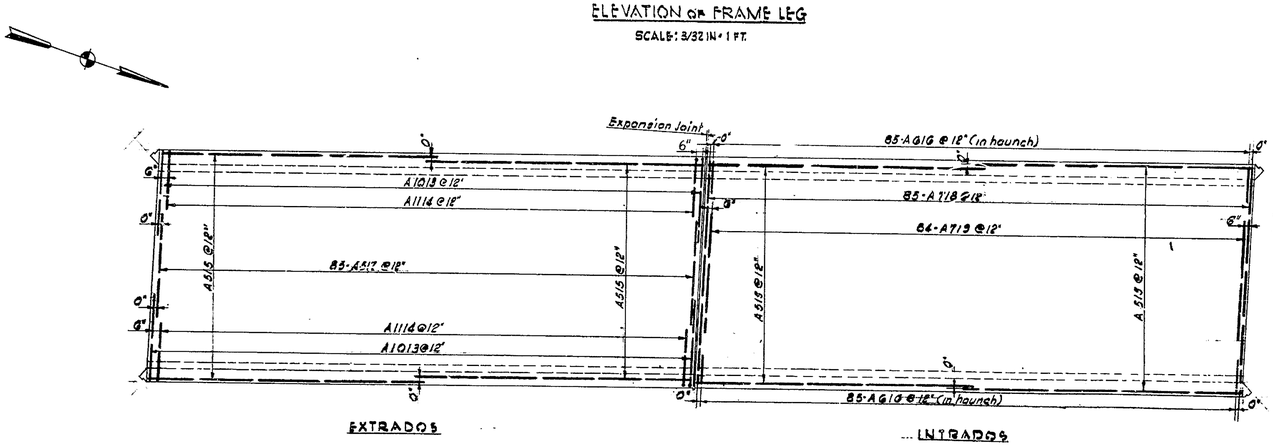

EXTRADOS

INTRADOS

PLAN OF DECK

SCALE: 3/32 IN = 1 FT.

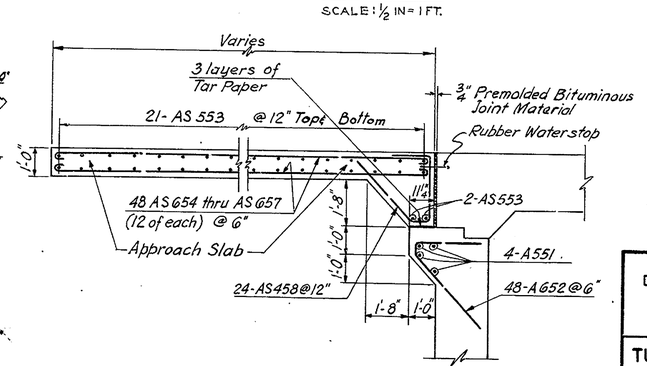

SECTION F-F

SCALE: 3/8 IN = 1 FT.

DELAWARE STATE HIGHWAY DEPARTMENT

DELAWARE TURNPIKE

TURNPIKE BRIDGE OVER PENNSYLVANIA R.R.

FRAME REINFORCEMENT AND PILE DETAILS

DRAWN: B.M.-A.T.	SCALE: AS NOTED	DATE: MAY 9, 1962	DWG.: 6 - 4
TRACED:	TIPPETTS-ABBETT-McCARTHY-STRATTON ENGINEERS AND ARCHITECTS		CONTRACT 7002
CHECKED: T.K.-D.F.			
CHARGE OF			SHEET 189 OF 224

COUNTY	CONTRACT	P.R.A. REG. NO.	STATE	FED. AID PROJECT NO.	FISCAL YEAR	SHEET NO.	TOTAL SHEETS
NEW CASTLE	7002	2	DEL.			190	224

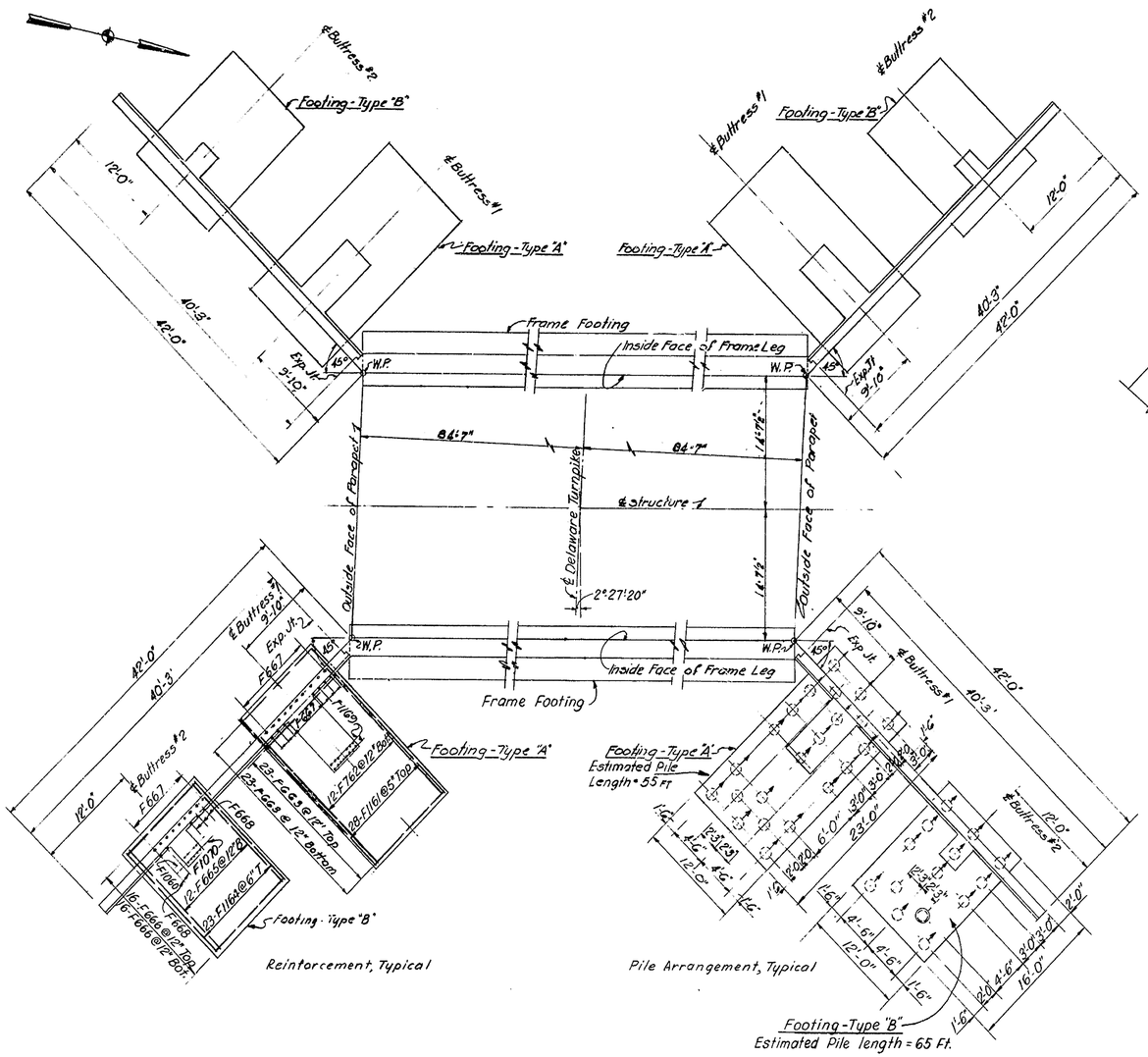

FOUNDATION PLAN
SCALE: 1/8 IN. = 1 FT.

LEGEND
- ○ Vertical Pile
- ○→ Battered Pile
- ◎ Steel Shell Test Pile

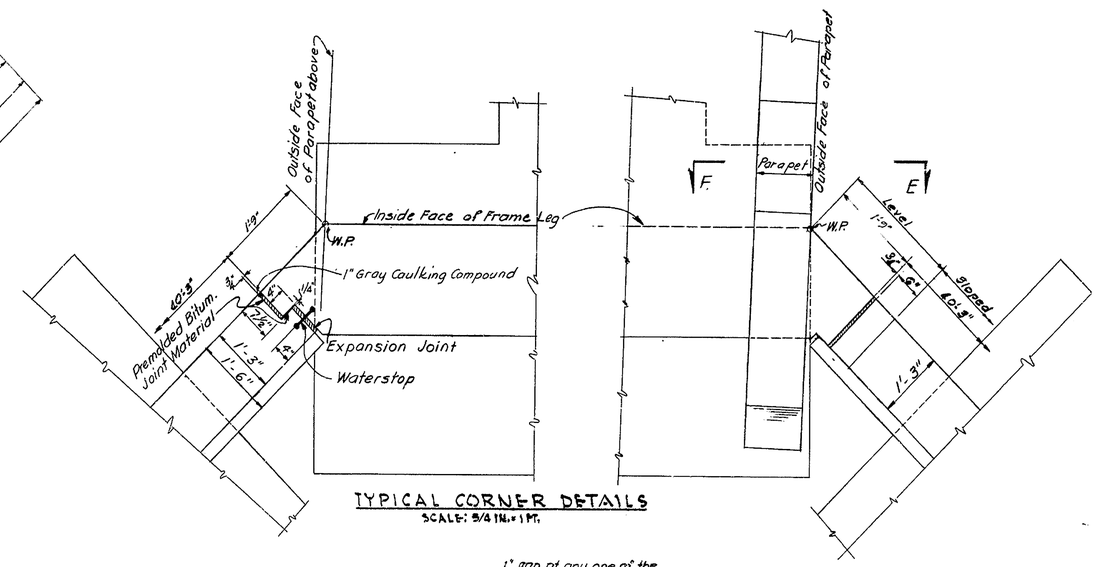

TYPICAL CORNER DETAILS
SCALE: 3/8 IN. = 1 FT.

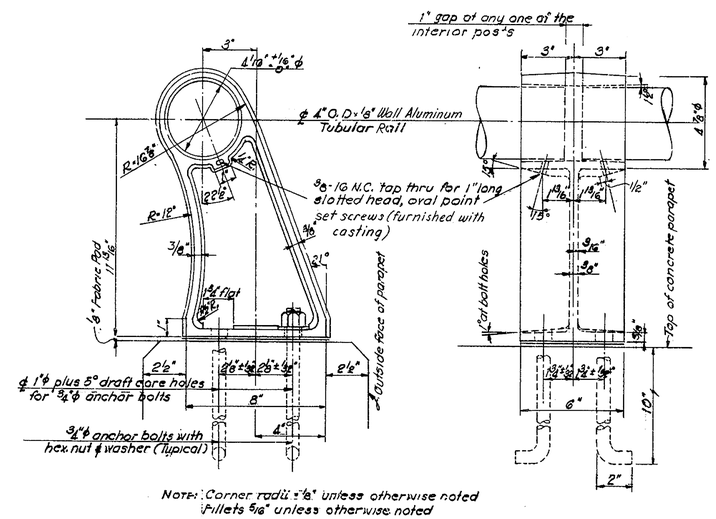

RAILING DETAILS
SCALE: 3 IN. = 1 FT.

RAILING NOTES:
- Railing Posts shall be erected normal to parapet and rails shall be parallel to top of parapet.
- Anchor Bolts shall be of aluminum alloy meeting the requirements of ASTM-B211 Alloy 2024-T4. Finished aluminum alloy bolts, nuts and washers shall be given an anodic coating at least 0.0002 in. thick and a chromate seal.
- Anchor Bolts shall be set accurately by means of a template.
- After Nuts have been placed, and tightened to the satisfaction of the Engineer, bolts shall be cut off 1/8 inch above nuts and peened.
- Tubular Rails shall be closed at ends with a welded aluminum plug.
- Rails shall be continuous at all end posts.
- Preformed Fabric Pads shall be 1/8 in. thick.

NOTES:
- For elevation, sections and reinforcement of Wing Walls, see Drawing 6-6.
- For General Notes and Concrete Notes, see Drawing 6-1.

DELAWARE STATE HIGHWAY DEPARTMENT
DELAWARE TURNPIKE

TURNPIKE BRIDGE OVER PENNSYLVANIA R.R.

WINGWALL FOUNDATION AND RAILING DETAILS

DRAWN: B.M.-A.T.	SCALE: AS NOTED	DATE: MAY 9, 1962	DWG.: 6 - 5
TRACED:	TIPPETTS-ABBETT-McCARTHY-STRATTON ENGINEERS AND ARCHITECTS		CONTRACT 7002
CHECKED: T.K.-D.F.			
CHARGE OF			SHEET 190 OF 224

COUNTY	CONTRACT	P.R.A. REG. NO.	STATE	FED. AID PROJECT NO.	FISCAL YEAR	SHEET NO.	TOTAL SHEETS
NEW CASTLE	7002	2	DEL.			191	224

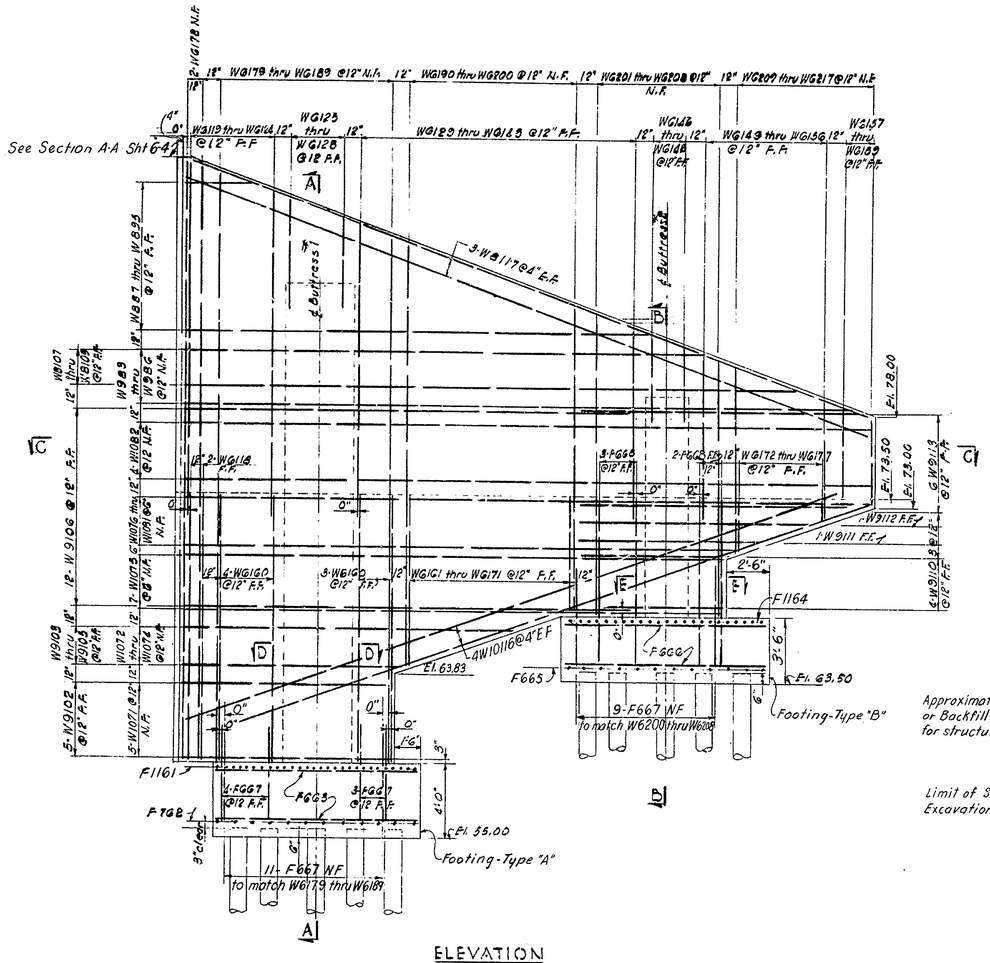

ELEVATION
SCALE: 1/4 IN. = 1 FT.

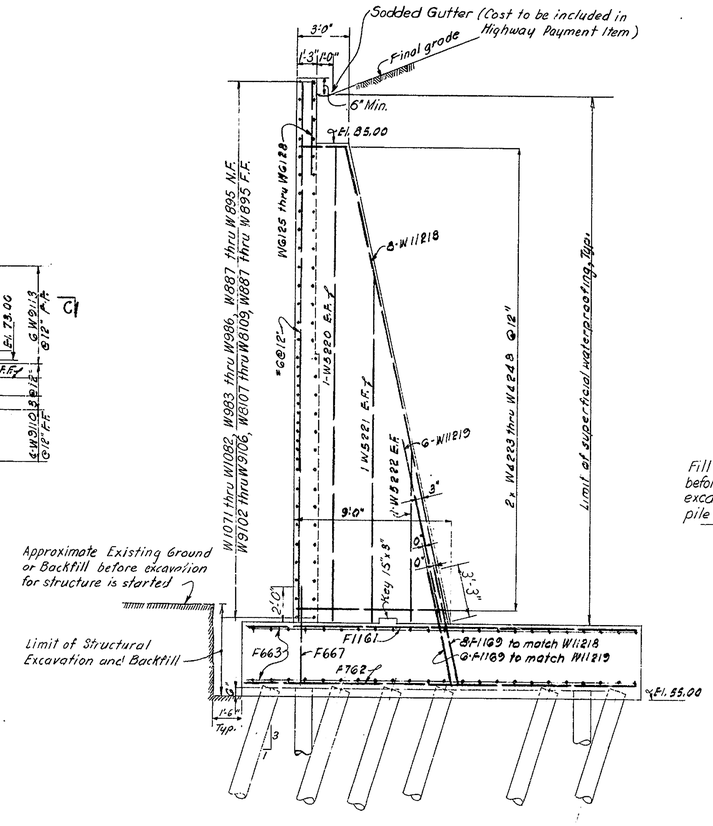

SECTION A-A
SCALE: 1/4 IN. = 1 FT.

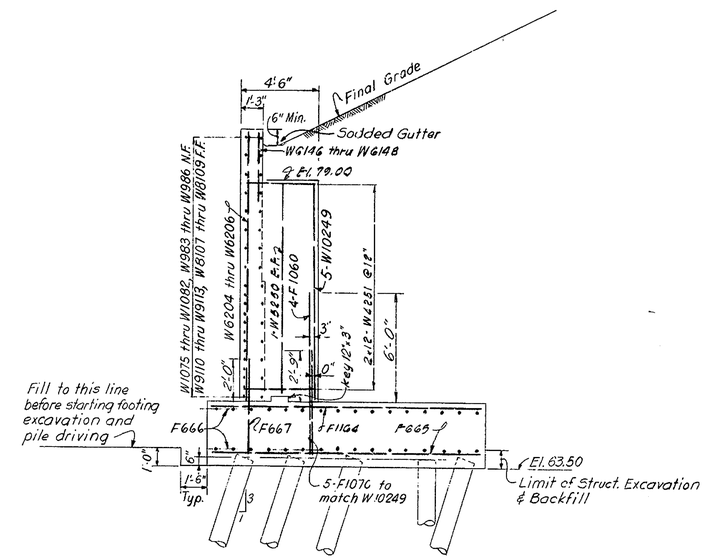

SECTION B-B
SCALE: 1/4 IN = 1 FT.

NOTES:
Work this drawing with Drawing 6-5.

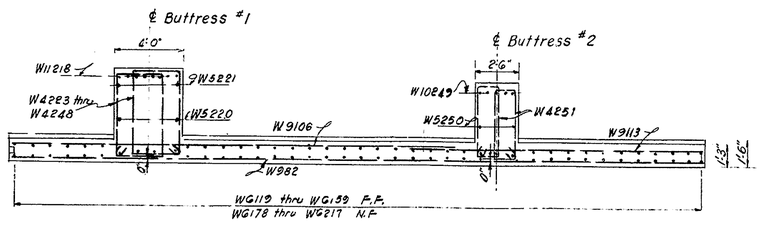

SECTION C-C
SCALE: 1/4 IN. = 1 FT.

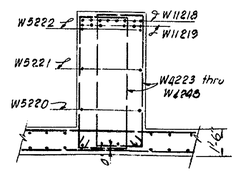

SECTION D-D
SCALE: 1/4 IN. = 1 FT.

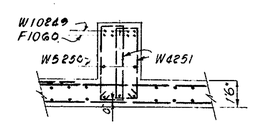

SECTION E-E
SCALE: 1/4 IN. = 1 FT.

DELAWARE STATE HIGHWAY DEPARTMENT
DELAWARE TURNPIKE

TURNPIKE BRIDGE OVER PENNSYLVANIA R.R.

WINGWALLS
ELEVATION AND SECTIONS

DRAWN: B.M.-A.T.	SCALE AS NOTED	DATE: MAY 9, 1962	DWG. 6-6
TRACED:	TIPPETTS-ABBETT-McCARTHY-STRATTON ENGINEERS AND ARCHITECTS		CONTRACT 7002
CHECKED: T.K.-D.F.			
CHARGE OF			SHEET 191 OF 224

COUNTY	CONTRACT	P.R.A. REG. NO.	STATE	FED. AID PROJECT NO.	FISCAL YEAR	SHEET NO.	TOTAL SHEETS
NEW CASTLE	7002	2	DEL.			192	224

REINFORCING BAR SCHEDULE

MARK	SIZE	AMT. REQ'D.	LENGTH	TYPE	A	B	C	D	E	F	REMARKS
F1101	11	12	81'-6"	Strght.							Frame - Footing - sides
F1102		60	38'-5"								
F1103		12	20'-5"								
F1104		12	40'-0"								
F1105		12	31'-0"								
F1106	11	12	32'-6"								sides
F607	6	40	35'-0"	Strght.							bottom
F608	6	340	11'-0"	I	8"	6"	2'-1"	5'-6"	2'-1"		ties
F709	7	680	6'-10	IX	10"	7"	4'-4"	1'-8"	1'-8"		Frame - Footing - dowels
A1011	10	676	31'-3"	Strght.							Frame - Legs
A512	5	340	24'-3"	Strght.							
A1013	10	340	20'-6"	V	9'-0"	11'-6"					
A1114	11	336	14'-4"	V	6'-6"	7'-10"					
A515	5	728	12'-3"	Strght.							Legs and roof
A616	6	340	6'-3"								Roof
A517	5	170	13'-6"								
A718	7	170	32'-11"								
A719	7	168	19'-4"	Strght.							Roof
A820	8	140	7'-6"	III	2'-1"	2'-4"	1'-6"	1'-8"			Corners
A521	5	12	33'-3"	Strght.							Corners
T1122	11	90	37'-9"								Ftg. struts - Top
T1123	11	70	38'-9"								Bott
T524	5	20	37'-9"	Strght.							Sides
T425	4	420	8'-5"	IV	1'-3"	2'-7"	4½"				Frame - Ftg. struts - Ties
S326	3	82	4'-3"	I	5"	8"	1'-5"	7"	1'-5"		Sidewalk - Beam - Ties
S527	5	24	7'-11"	Strght.							Beam - T&B
S428	4	74	8'-2"								Slab - Bott
S429	4	12	7'-11"								Bott
S530	5	18	7'-11"								Top
S531	5	8	5'-8"	Strght.							Top
S632	6	138	3'-8"	V	3'-2"	2'-6"					Slab - Top
S533	5	8	5'-2"	VI	2'-5"	1'-0"	1'-9"	8"			Beam - T&B
S534		8	9'-4"	V	2'-7"	1'-9"					Sidewalk - Beam - T&B
P535		60	5'-2"	VII	7"	5"	1'-0"	3'-7"	5⅛"		Parapet - Counterfort
P536		84	7'-11"	Strght.							Parapet - Horiz
P537		108	6'-3"								Parapet - Vert
P538		32	5'-11"								Pylon - Horizontal
P539		8	5'-7"								
P540		8	5'-5"								
P541		8	5'-3"								
P542		16	3'-5"								
P543		8	2'-4"								
P544		8	3'-3"								
P545		8	1'-9"								Horizontal
P546		48	7'-8"	Strght.							Vertical
P547		8	10'-8"	VIII	3"	3'-0"	3'-6"	4'-2"	12"		Pylon - Vertical
S548	5	16	4'-7"	Strght.							Sidewalk - Beam - Top
S449	4	8	5'-5"	Strght.							Sidewalk - Slab - Bott.
S550	5	4	5'-5"	Strght.							Sidewalk - Slab - Top
A551	5	16	23'-6"	Strght.							Frame Haunch
AG52	6	192	6'-11"	X	2'-8"	6"	3'-9"				Frame Haunch
AS553	5	176	23'-6"	Strght.							Approach Slab, Transv. (T.&B.)
AS654A AS655	6	96 each	21'-0" to 22'-0"	II	19'-8" to 20'-8"	6"	8"				Approach Slab, Longit. (T.&B.)
AS458	4	96	6'-10"	XI	1'-3"	2'-0"	7"	3'-0"			Approach Slab Haunch
F1060	10	16	8'-9"	Strght.							Wingwalls - Ftg. - Type B
F1161	11	112	22'-6"								A
F762	7	48	22'-6"								A
F663	6	184	11'-6"								A
F1164	11	96	15'-6"								B
F665	6	48	15'-6"								B
F666		128	11'-6"								B
F667		108	4'-9"								A & B
F668	6	20	9'-1"								B
F1169	11	56	6'-6"								A
F1070	10	20	5'-6"								Ftg. - Type B
W1071	10	20	12'-2"	Strght.							Wingwalls - Stem - Horiz. N.F.

MARK	SIZE	AMT. REQ'D.	LENGTH	TYPE	A	B	C	D	E	F	REMARKS
W1072	10	4	13'-2"	Strght.							Wingwalls - Stem - Horiz. - N.F.
W1073		4	16'-2"								
W1074		4	19'-2"								
W1075		28	31'-4"								
W1076 to W1081		4 each	32'-4" to 39'-10" Δ = 1'-9"								
W1082	10	16	39'-10"								
W983 to W988	9	4 each	38'-9" to 25'-9" Δ = 3'-0"								N.F.
W989 to W892	8	8 each	26'-9" to 3'-3" Δ = 1'-2"								E.F.
W9102	9	20	12'-2"								F.F.
W9103		4	13'-2"								
W9104		4	16'-2"								
W9105		4	19'-2"								
W9106	9	48	25'-8"								
W8107	8	4	35'-9"								
W8108	8	4	32'-9"								
W8109	8	4	29'-9"								
W9110	9	16	7'-6"								
W9111		4	10'-6"								
W9112		4	13'-6"								
W9113	9	24	15'-2"								Horiz.; F.F.
W10116	10	32	39'-8"								Slope bar E.F.
W8117	8	24	42'-0"								Slope bar E.F.
WG118	6	8	14'-1"								Vert. F.F.
WG119 to WG124		4 each	19'-4" to 17'-5" Δ = 4"								
WG125 to WG128		4 each	35'-0" to 31'-0" Δ = 4"								
WG129 to WG145		4 each	16'-2" to 11'-10" Δ = 4"								
WG146		4	4'-6"								
WG147		4	4'-2"								
WG148		4	8'-10"								
WG149 to WG156		4 each	8'-10" to 6'-6" Δ = 4"								
WG157		4	4'-11"								
WG158		4	4'-7"								
WG159		4	4'-3"								
WG160		28	14'-4"								
WG161 to WG171		4 each	9'-1" to 5'-7" Δ = 4½"								
WG172 to WG177		4 each	2'-11" to 1'-3" Δ = 4½"								F.F.
WG178		8	32'-3"								N.F.
WG179 to WG189		4 each	31'-9" to 28'-3" Δ = 4"								
WG190 to WG200		4 each	22'-11" to 16'-2" Δ = 8½"								
WG201 to WG208		4 each	16'-3" to 13'-11" Δ = 4"								
WG209 to WG217	6	4 each	10'-0" to 4'-6" Δ = 8½"								Stem - Vert. - N.F.
W11218	11	32	26'-6"								Buttress 1 -
W11219	11	24	10'-3"								
W5220	5	8	25'-10"								
W5221	5	8	18'-9"								
W5222	5	8	9'-0"	Strght.							
W4229 to W4248	4	8 each	17'-5" to 22'-11" Δ = 8½"	IV	2'-8"	2'-8" to 8'-5" Δ = 3'-0"	4½"				1 - Ties
W10249	10	20	11'-10"	Strght.							2
W5250	5	8	11'-7"	Strght.							2
W4251	4	96	11'-5"	IV	4'-2"	1'-2"	4½"				Wingwalls - Buttress 2 - Ties

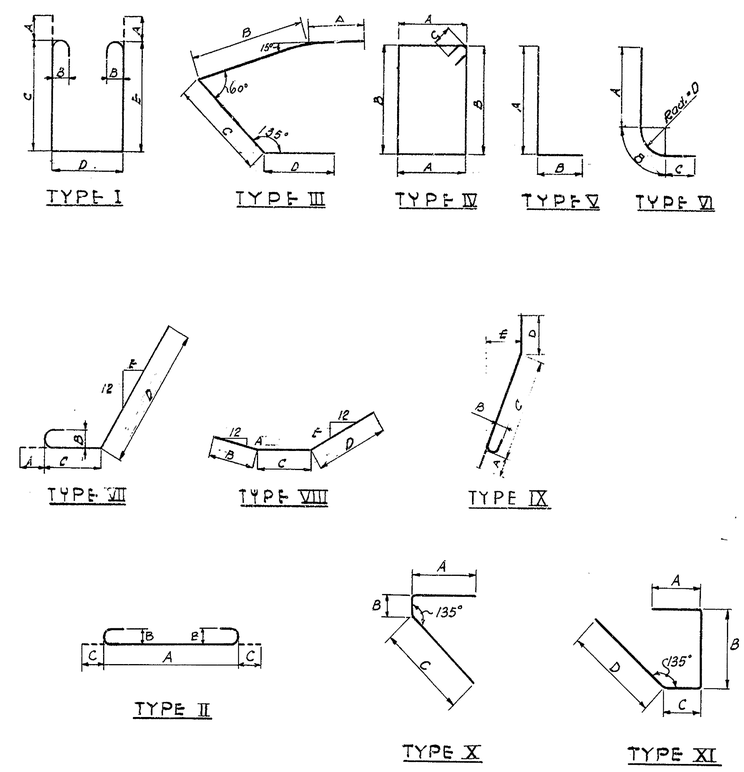

NOTE:
All dimensions are out to out.
For Concrete Notes, see Drawing 6-1.

DELAWARE STATE HIGHWAY DEPARTMENT
DELAWARE TURNPIKE

TURNPIKE BRIDGE OVER PENNSYLVANIA R.R.

REINFORCING BAR SCHEDULE

DRAWN: T.K.-A.T.	SCALE:	DATE: MAY 9, 1962	DWG.: 6 - 7
TRACED:	TIPPETTS-ABBETT-McCARTHY-STRATTON ENGINEERS AND ARCHITECTS		CONTRACT 7002
CHECKED: T.K.-D.F.			
CHARGE OF			SHEET 192 OF 224

COUNTY	CONTRACT	P.R.A. R&D NO.	STATE	FED. AID PROJECT NO.	FISCAL YEAR	SHEET NO.	TOTAL SHEETS
NEW CASTLE	7002	2	DEL.			193	224

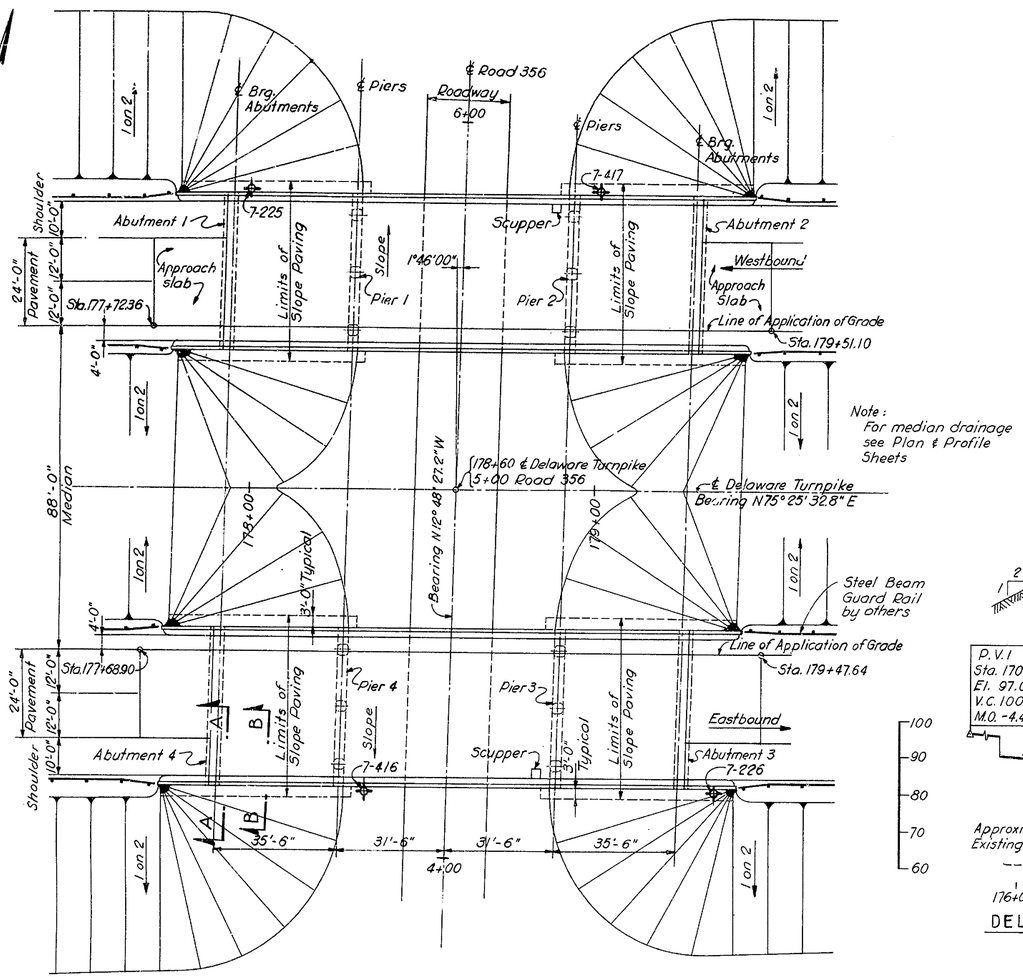

PLAN
SCALE: 1 IN. = 20 FT.

Legend: ⊕ Boring

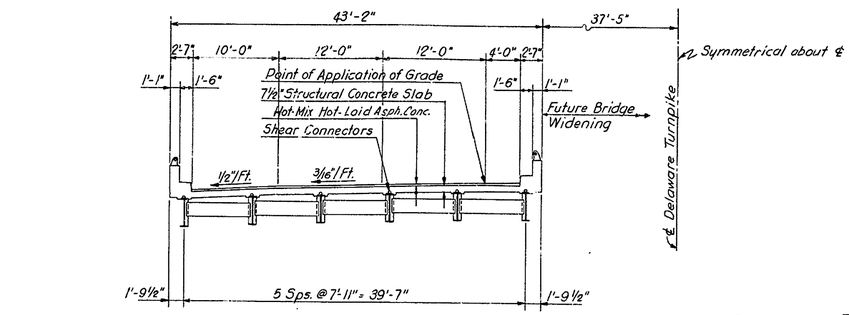

TYPICAL HALF SECTION
SCALE: 1/8 IN. = 1 FT.

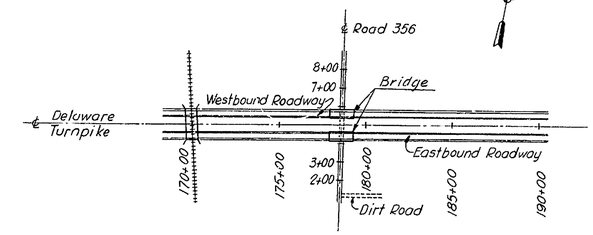

LOCATION PLAN
SCALE: 1 IN. = 400 FT.

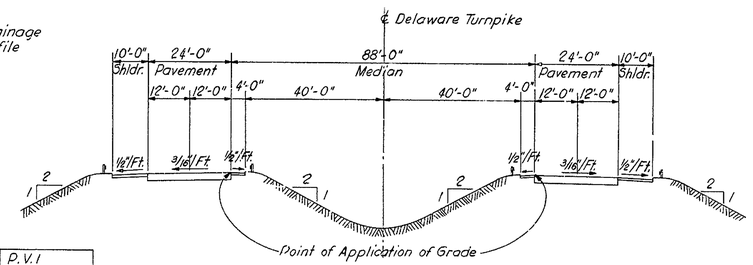

APPROACH SECTION
SCALE: 1 IN. = 20 FT.

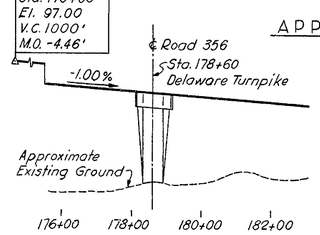

DELAWARE TURNPIKE

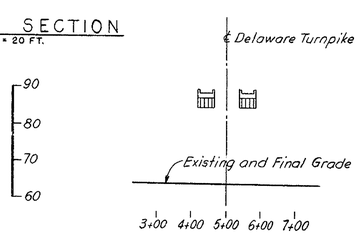

ROAD 356

℄ PROFILES
SCALE: HOR. 1 IN. = 200 FT.
VER. 1 IN. = 20 FT.

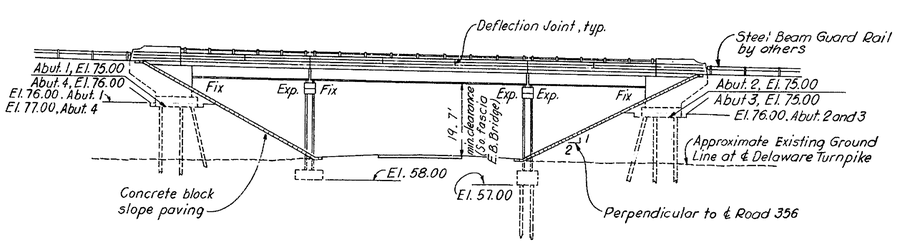

ELEVATION
SCALE: 1 IN. = 20 FT.

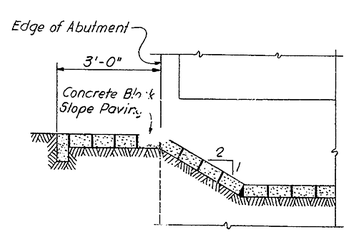

SECTION A-A
NO SCALE

SECTION B-B
NO SCALE

TABLE OF QUANTITIES

ITEM No.	DESCRIPTION	UNIT	QUANTITY
4	Excavation for Structures	C.Y.	716
7	Select Borrow - Grade "A"	C.Y.	1,000
11	Hot-mix, Hot-laid Asphaltic Conc. Pavement	Tons.	185
	RC-1 Asphalt Tack Coat	Gal.	264
* 18	Portland Cement Concrete Masonry		
	Footings	C.Y.	331
	Substructure	C.Y.	386
	Superstructure	C.Y.	400
	Approach Slabs	C.Y.	90
19	Superficial Waterproofing	S.Y.	254
20*	Bar Reinforcement	Lbs.	164,500
22	Structural Steel (Approx. Wt. 338,000 lbs.)	L.S.	
31	6"ϕ Perforated Corr. Metal Pipe Underdrain	L.F.	200
35	Cast-in-place Concrete Piles	L.F.	7,300
	Steel Shell Test Piles	L.F.	720
	Aluminum Railing - Single Rail	L.F.	551
	Bridge Catch Basins	L.S.	
	Bridge Drainage	L.S.	
	Slope Paving	S.Y.	1,030
	Coal Tar Epoxy Underseal	S.Y.	1,140
	Protective Coating for Concrete	S.F.	1,333

* indicates Fixed Quantity Item, see Proposal.

GENERAL NOTES:

Design Specifications: A.A.S.H.O. -1957; and Standard Specifications for Welded Highway and Railway Bridges of the American Welding Society-1957.

Material and Fabrication Specifications: State of Delaware, State Highway Department, Standard Specifications, July 1, 1960; and as given in the Special Provisions.

Design Loads: A.A.S.H.O. H20-S16-44.

Design Stresses: Structural and Reinforcing Steel: 18,000 psi Reinforced Concrete: f_c = 1,200 psi; n = 10.

Design of Composite Construction based on no temporary intermediate supports to be used during construction.

Fill at Abutments will be placed by Others to an elevation one foot above bottom of concrete footing before starting footing excavation and pile driving.

Backfill behind abutments to be placed only after bridge deck slab has been completed.

Minimum Waiting Period before loads are permitted on the bridge, after completion of the bridge deck slab: 10 days for loads of 2 tons to 10 tons, and 28 days for loads of 10 tons to the legal load limit.

Test Piles shall be in accordance with Standard Specifications and Special Provisions.

Quantities shown shall not relieve the Contractor of the responsibility of checking them in preparing his bid.

For Concrete Notes, see Drawing 7-4.

For Steel Notes, see Drawing 7-5.

For Boring Logs, see Sheet 212.

DELAWARE STATE HIGHWAY DEPARTMENT

DELAWARE TURNPIKE

TURNPIKE BRIDGE OVER ROAD 356

GENERAL ARRANGEMENT

DRAWN: E.A.N.	SCALE: AS NOTED	DATE: MAY 9, 1962	DWG.: 7 - 1
TRACED:	TIPPETTS-ABBETT-McCARTHY-STRATTON ENGINEERS AND ARCHITECTS		CONTRACT 7002
CHECKED: DL-DF.			
CHARGE OF			SHEET 193 OF 224

COUNTY	CONTRACT	P.R.A. REG. NO.	STATE	FED. AID PROJECT NO.	FISCAL YEAR	SHEET NO.	TOTAL SHEETS
NEW CASTLE	7002	2	DEL			194	224

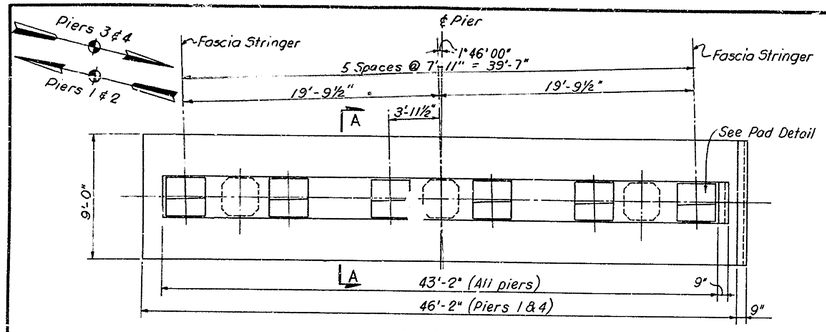

PLAN
PIERS 1 & 4 AS SHOWN
PIERS 2 & 3 EXCEPT FOOTING
SCALE: 3/16 IN. = 1 FT.

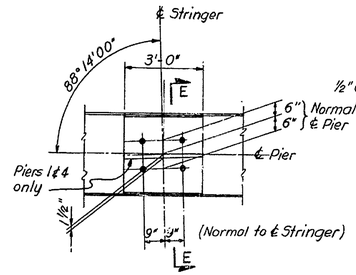

PAD DETAIL
SCALE: 3/8 IN. = 1 FT.

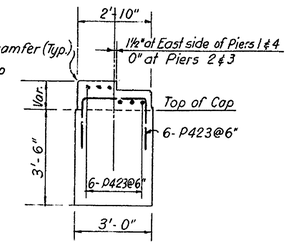

SECTION E-E
SCALE: 3/8 IN. = 1 FT.

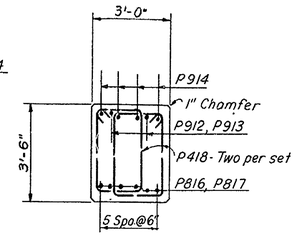

SECTION C-C
SCALE: 3/8 IN. = 1 FT.

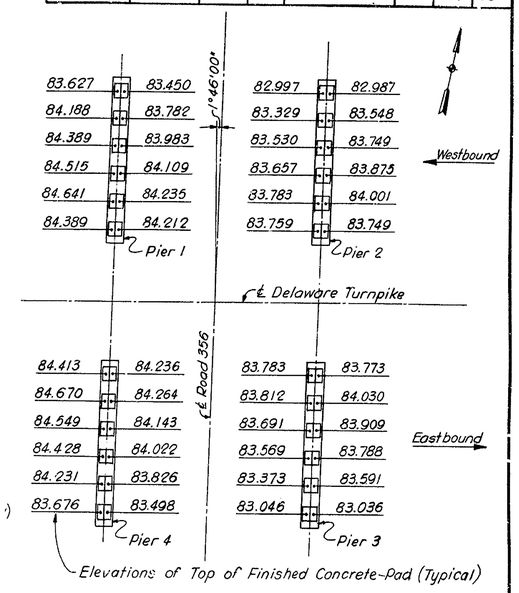

PAD ELEVATIONS
NO SCALE

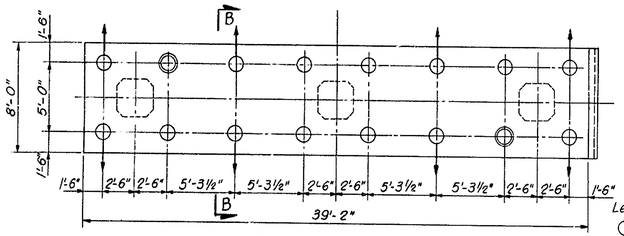

PILE LAYOUT
PIERS 2 & 3
SCALE: 3/16 IN. = 1 FT.

Legend:
- Vertical Pile
- Battered Pile (4 on 1 batter)
- Steel Shell Test Pile

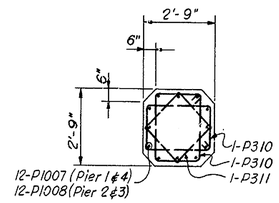

SECTION D-D
SCALE: 3/8 IN. = 1 FT.

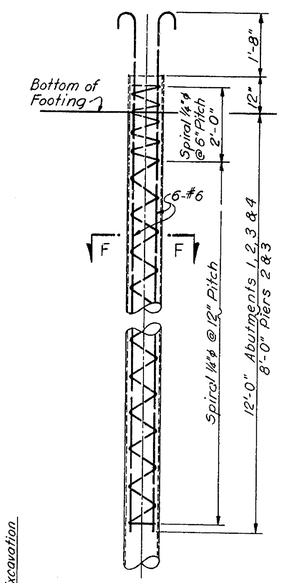

PILE DETAIL
SCALE: ½ IN. = 1 FT.

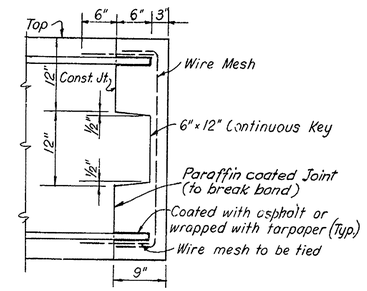

DETAIL OF PIER CAP AND FOOTING
FOR FUTURE PIER EXTENSION
SCALE: 1 IN. = 1 FT.

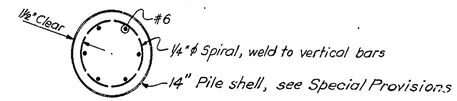

SECTION F-F
SCALE: 1 IN. = 1 FT.

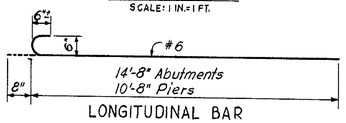

LONGITUDINAL BAR

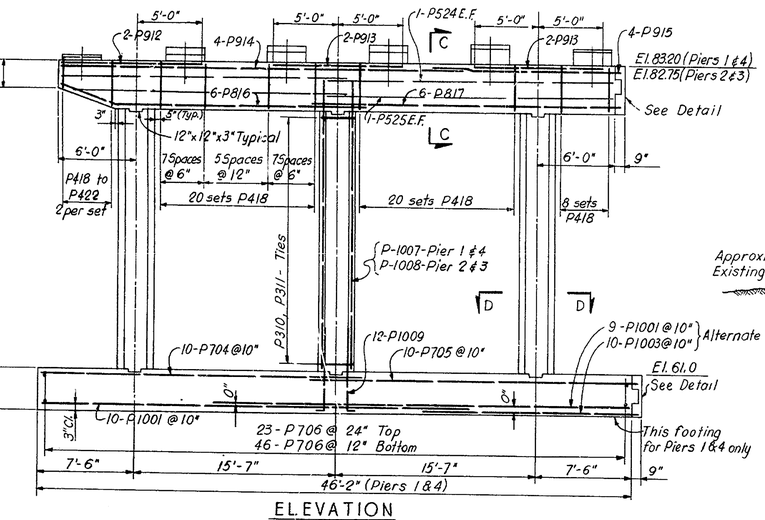

ELEVATION
SCALE: 3/16 IN. = 1 FT.

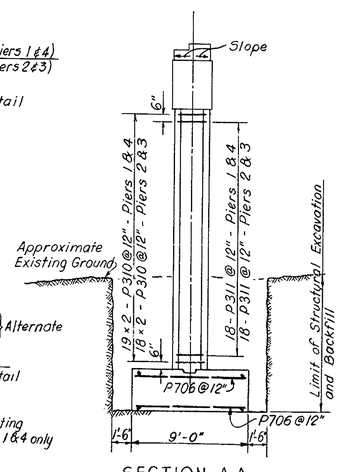

SECTION A-A
SCALE: 3/16 IN. = 1 FT.

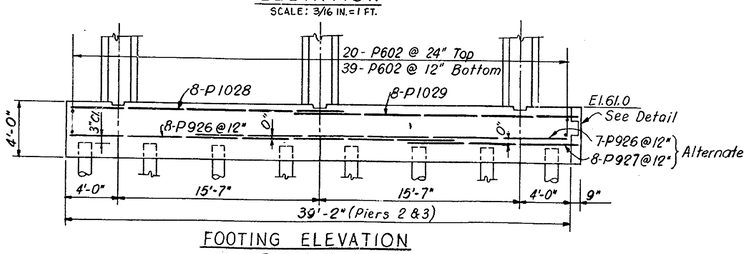

FOOTING ELEVATION
PIERS 2 & 3
SCALE: 3/16 IN. = 1 FT.

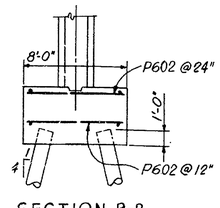

SECTION B-B
SCALE: 3/16 IN. = 1 FT.

PILE SCHEDULE

LOCATION	NUMBER BY FOOTING					
	PILES		REINFORCING BARS			
	ESTIMATED LENGTH		#6 LONGIT. BARS		¼" ϕ SPIRAL	
	65 ft.	50 ft.	LENGTH 15'-4"	LENGTH 11'-4"	LENGTH 46'-2"	LENGTH 38'-10"
ΔABUTMENTS 1, 2, 3 & 4	22		132		22	
PIERS 2 & 3		16		96		16
TOTAL NUMBER	88	32	528	192	88	32

Δ For location of piles, see Dwg. 7-3.

PILE NOTES:

Approved Metal Spacers shall be attached to the top and bottom coils to insure that the minimum clear distance to the shell will be obtained.
Pile Capacity shall be 50 tons.
Estimated Pile Length: 65 ft. at Abutments 1, 2, 3 & 4; 50 ft. at Piers 2 & 3; Actual pile lengths shall be determined by test piles. For location of test piles see this dwg. and 7-3.
Preboring of piles through embankment fill shall be required.
Pile Reinforcement: Cost to be included in "Cast-in-place concrete-filled Piles", Item 35.

NOTES:

All concrete to be placed in the dry.
For details of anchor bolts for shoes, see Dwg. 7-7.
For General Notes, see Dwg. 7-1.
For Concrete Notes, see Dwg. 7-4.
Maximum allowable soil pressure: 2 Tons/sq. ft. at Piers 1 & 4.

DELAWARE STATE HIGHWAY DEPARTMENT
DELAWARE TURNPIKE

TURNPIKE BRIDGE OVER ROAD 356

PIERS

DRAWN: E. A. N.	SCALE: AS NOTED	DATE: MAY 9, 1962	DWG.: 7 - 2
TRACED:	TIPPETTS-ABBETT-McCARTHY-STRATTON ENGINEERS AND ARCHITECTS		CONTRACT 7002
CHECKED: GK-S.T.			
CHARGE OF			SHEET 194 OF 224

COUNTY	CONTRACT	P. R. A. REG. NO.	STATE	FED. AID PROJECT NO.	FISCAL YEAR	SHEET NO.	TOTAL SHEETS
NEW CASTLE	7002	2	DEL.			195	224

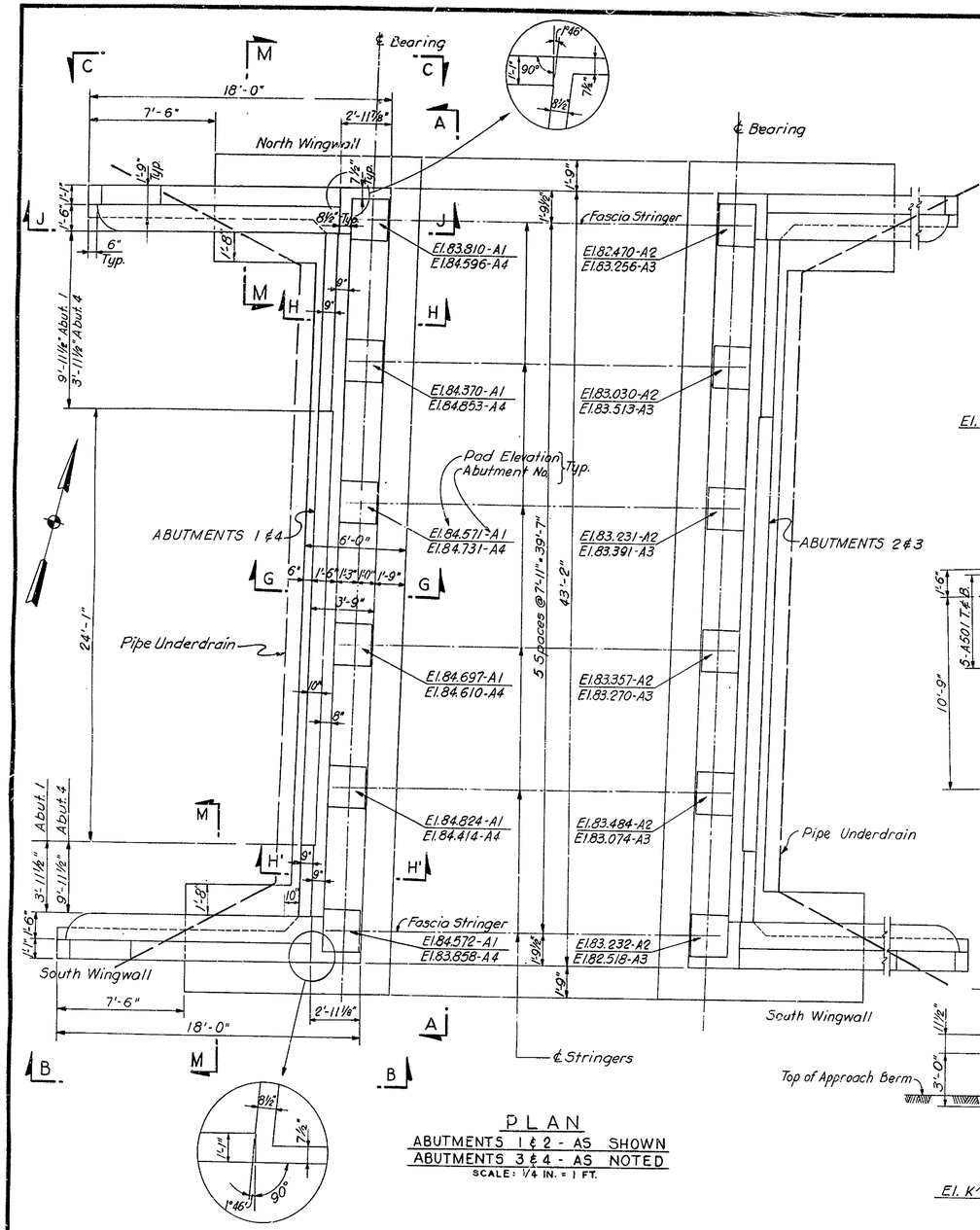

PLAN
ABUTMENTS 1 & 2 - AS SHOWN
ABUTMENTS 3 & 4 - AS NOTED
SCALE: 1/4 IN. = 1 FT.

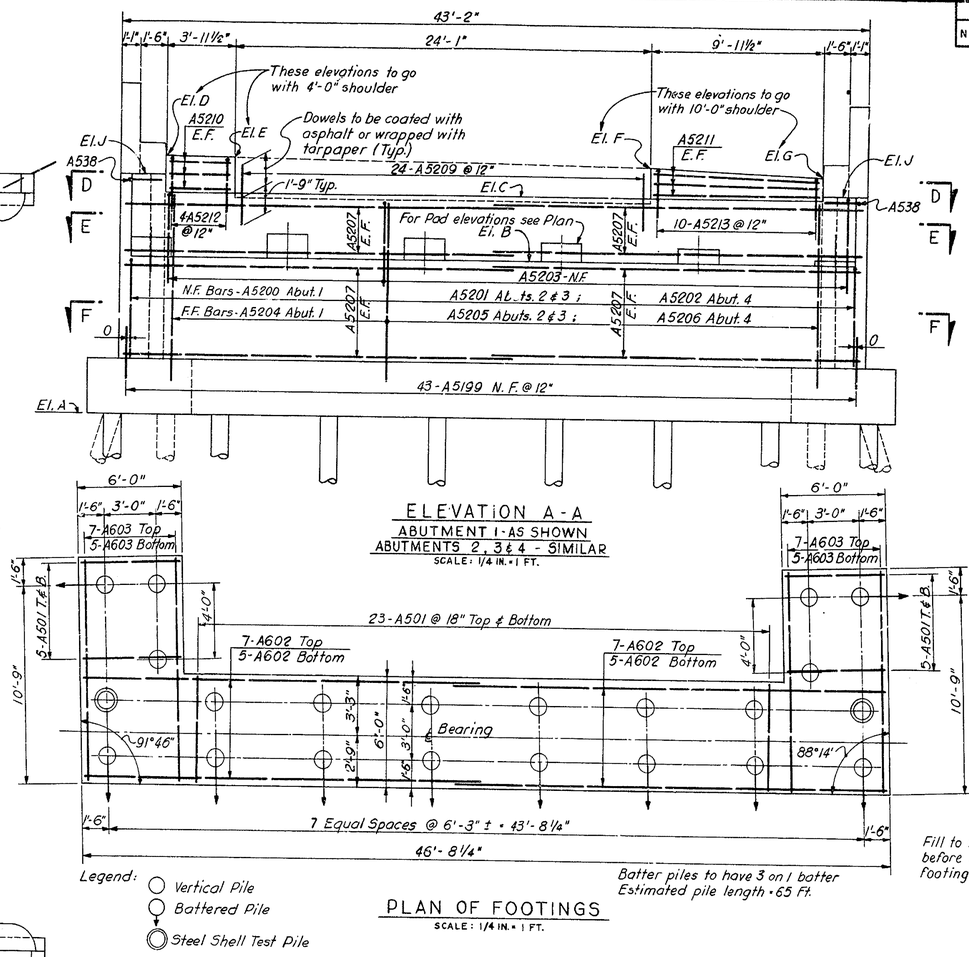

ELEVATION A-A
ABUTMENT 1 - AS SHOWN
ABUTMENTS 2, 3 & 4 - SIMILAR
SCALE: 1/4 IN. = 1 FT.

PLAN OF FOOTINGS
SCALE: 1/4 IN. = 1 FT.

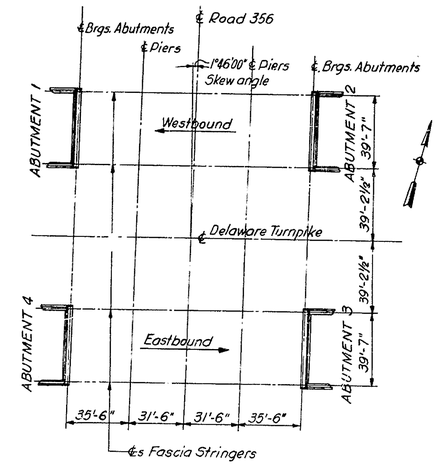

KEY PLAN
SCALE: 1 IN. = 40 FT.

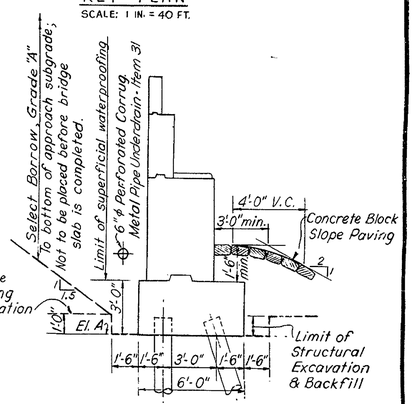

EXCAVATION AND BACKFILL DETAIL
SCALE: 1/4 IN. = 1 FT.

NOTES:
For Sections D-D thru J-J and Section M-M, see Dwg. 7-4.
Work this drawing with Dwg. 7-4.
For details of Anchor Bolts for shoes see Dwg. 7-7.
Pad Elevations given denote top of finished concrete pad.
For details of Piles, see Dwg. 7-2.
For General Notes, see Dwg. 7-1.
For Concrete Notes, see Dwg. 7-4.

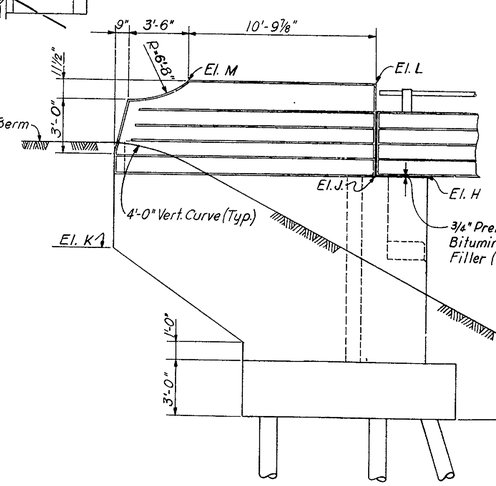

ELEVATION B - B
SCALE: 1/4 IN. = 1 FT.

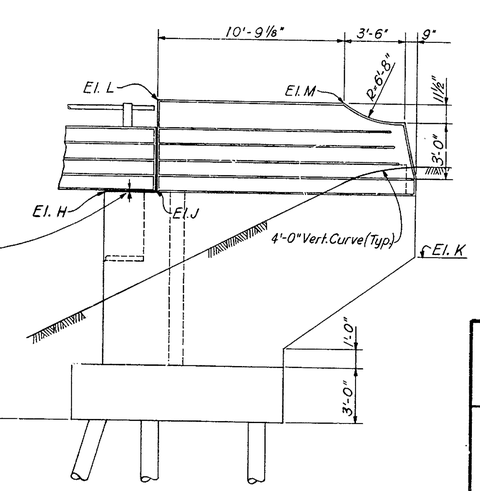

ELEVATION C - C
SCALE: 1/4 IN. = 1 FT.

TABLE OF ELEVATIONS

POINT	A	B	C	D	E	F	G	H	J	K	L	M
ABUTMENT 1	75.00	83.56	87.03	89.14	89.08	88.69	88.27	N-87.29	87.32	84.00	92.21	92.32
								S-88.03	88.06	84.00	93.08	93.19
ABUTMENT 2	75.00	82.22	85.65	87.76	87.70	87.31	86.89	N-85.97	85.94	84.00	90.83	90.72
								S-86.71	86.68	84.00	91.70	91.59
ABUTMENT 3	75.00	82.27	85.69	87.79	87.72	87.36	86.94	N-86.73	86.70	84.00	91.72	91.62
								S-86.01	85.98	84.00	90.88	90.77
ABUTMENT 4	76.00	83.61	87.07	89.17	89.10	88.74	88.32	N-88.05	88.08	85.00	93.10	93.21
								S-87.34	87.36	85.00	92.26	92.37

DELAWARE STATE HIGHWAY DEPARTMENT
DELAWARE TURNPIKE

TURNPIKE BRIDGE OVER ROAD 356

ABUTMENTS
PLAN, ELEVATIONS AND SECTIONS

DRAWN: E.A.N.	SCALE: AS NOTED	DATE: MAY 9, 1962	DWG: 7-3
TRACED:	TIPPETTS-ABBETT-McCARTHY-STRATTON ENGINEERS AND ARCHITECTS		CONTRACT 7002
CHECKED: D.L.-D.F.			
CHARGE OF			SHEET 195 OF 224

COUNTY	CONTRACT	F.H.A. REG. NO.	STATE	FED. AID PROJECT NO.	FISCAL YEAR	SHEET NO.	TOTAL SHEETS
NEW CASTLE	7002	2	DEL.		-	196	224

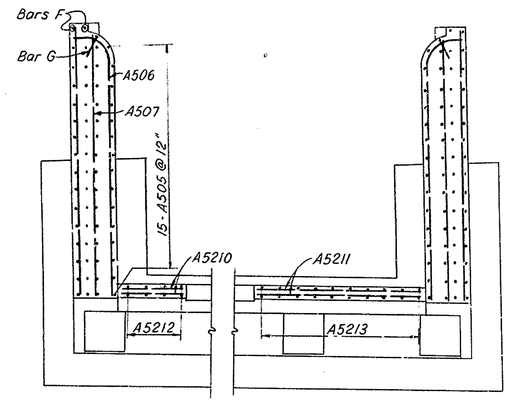

SECTIONAL PLAN D-D

SCALE: 1/4 IN. = 1 FT.

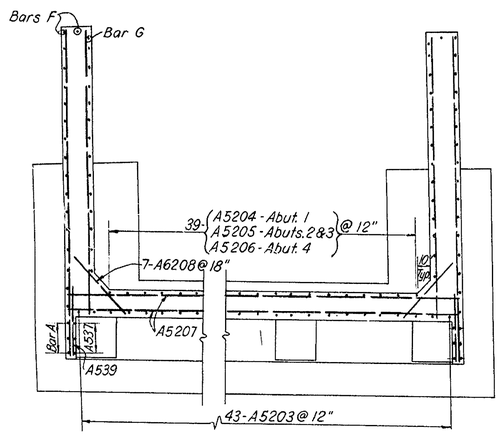

SECTIONAL PLAN E-E

SCALE: 1/4 IN. = 1 FT.

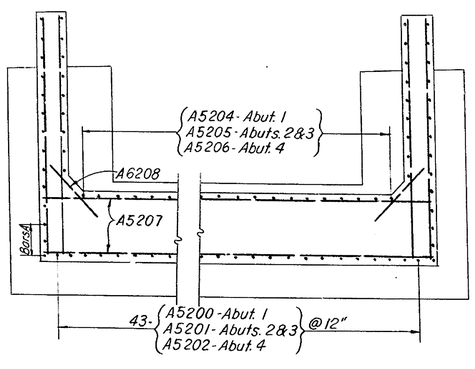

SECTIONAL PLAN F-F

SCALE: 1/4 IN. = 1 FT.

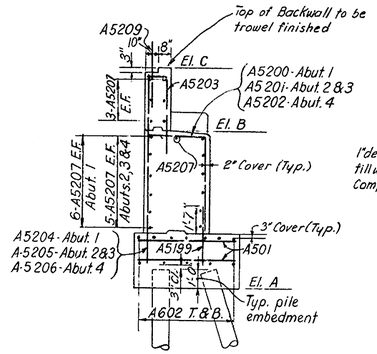

Note: For additional information see Section H-H

SECTION G-G

SCALE: 1/4 IN. = 1 FT.

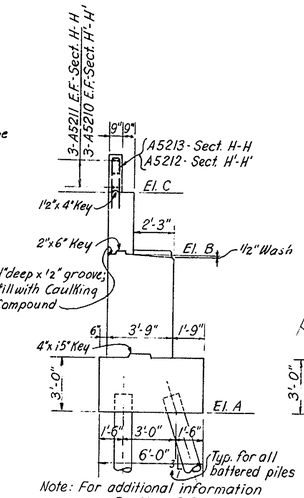

Note: For additional information see Section G-G

SECTION H-H

SECTION H'-H'

SCALE: 1/4 IN. = 1 FT.

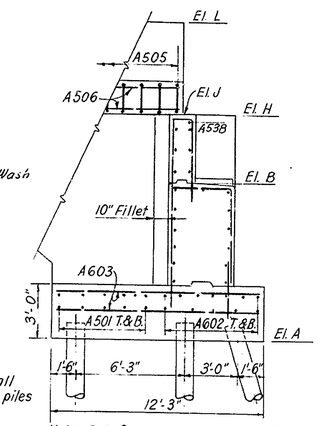

Note: Reinforcement as in Sect. G-G except as noted

SECTIONAL ELEVATION J-J

SCALE: 1/4 IN. = 1 FT.

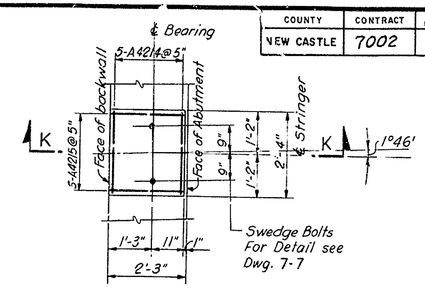

PLAN

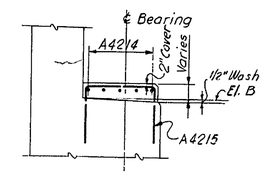

SECTION K-K

PAD DETAIL

SCALE: 1/2 IN. = 1 FT.

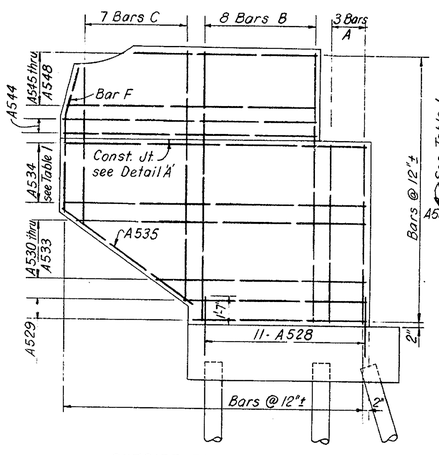

OUTSIDE FACE OF WINGWALL

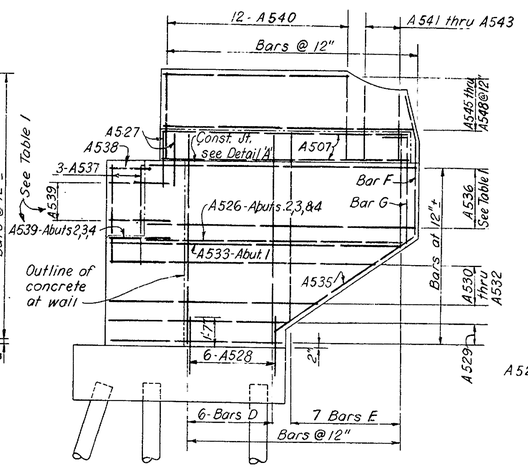

INSIDE FACE OF WINGWALL

WINGWALL REINFORCEMENT DETAILS

SCALE: 1/4 IN. = 1 FT.

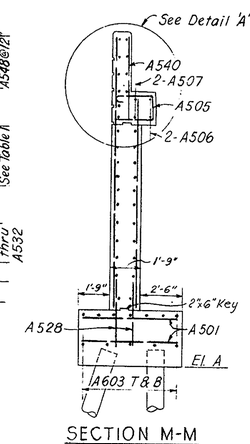

SECTION M-M

SCALE: 1/4 IN. = 1 FT.

NOTES:

Work this drawing with Drawing 7-3.

CONCRETE NOTES:

Concrete Water-reducing Retarder Admixture shall be added to all superstructure concrete (see Special Provisions).

Splices for stress bars shall be a minimum of 30 diameters; all other splices a minimum of 20 diameters.

Construction Joints other than those shown will not be permitted without written approval of the Engineer.

Exposed Concrete Edges shall be beveled 1 in. by 1 in., unless otherwise noted.

Concrete Cover as per A.A.S.H.O. or as noted.

Cost of furnishing and placing all bituminous joint materials, joint seal, caulking compound, tar paper, water stops, and concrete water-reducing retarder admixture will be included in Item 18," Portland Cement Concrete Masonry."

TABLE I

ABUTMENT NO.	WINGWALL	NO. OF BARS REQ'D. Mark A534 Mark A536	Mark A539
1	N	4	3
	S	5	4
2	N	3	3
	S	4	4
3	N	4	4
	S	3	3
4	N	4	4
	S	3	3

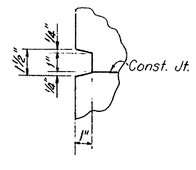

DETAIL "B"

SCALE: 3 IN. = 1 FT.

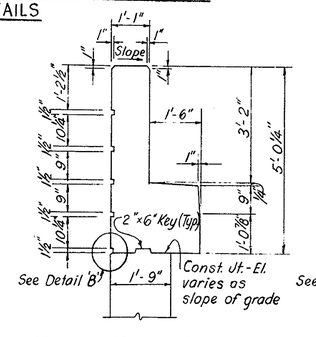

ABUTMENTS 1 & 2 SOUTH WINGWALL

ABUTMENTS 3 & 4 NORTH WINGWALL

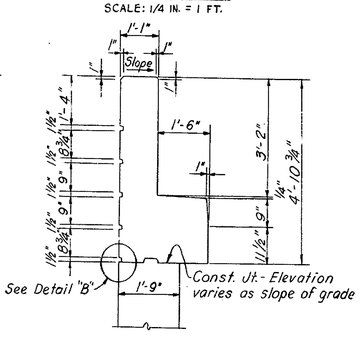

ABUTMENTS 1 & 2 NORTH WINGWALL

ABUTMENTS 3 & 4 SOUTH WINGWALL

DETAIL "A"

SCALE: 1/2 IN. = 1 FT.

DELAWARE STATE HIGHWAY DEPARTMENT

DELAWARE TURNPIKE

TURNPIKE BRIDGE OVER ROAD 356

ABUTMENTS

SECTIONS AND DETAILS

DRAWN: A.T.	SCALE: AS NOTED	DATE: MAY 9, 1962	DWG: 7-4
TRACED:	TIPPETTS-ABBETT-McCARTHY-STRATTON ENGINEERS AND ARCHITECTS		CONTRACT 7002
CHECKED: D.L.-D.F.			
CHARGE OF			SHEET 196 OF 224

COUNTY	CONTRACT	P.R.A. REG. NO.	STATE	FED. AID PROJECT NO.	FISCAL YEAR	SHEET NO.	TOTAL SHEETS
NEW CASTLE	7002	2	DEL.			197	224

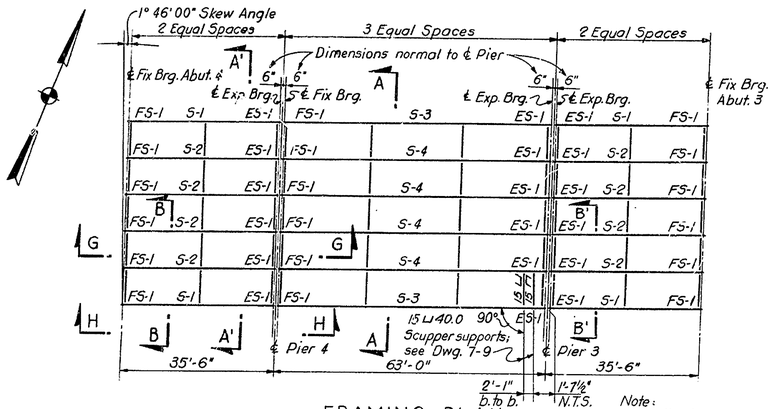

FRAMING PLAN
EASTBOUND ROADWAY AS SHOWN
WESTBOUND ROADWAY SIMILAR
SCALE: 1/16 IN. = 1 FT.

Note: All diaphragms: 18 [42.7 (except scupper supports). All framing plan dimensions are horizontal

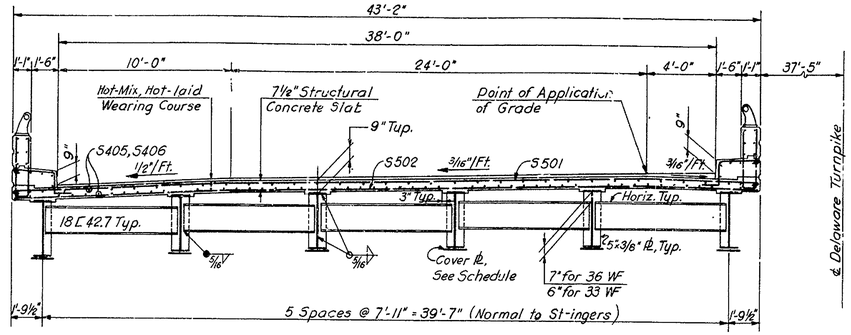

Note: Shear connectors not shown

SECTION A-A AS SHOWN
SECTION A'-A' SIMILAR
SCALE: 1/4 IN. = 1 FT.

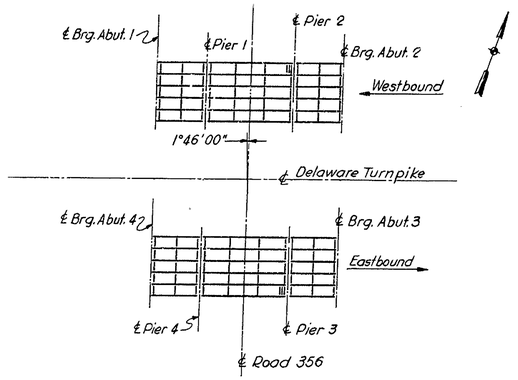

KEY PLAN
NO SCALE

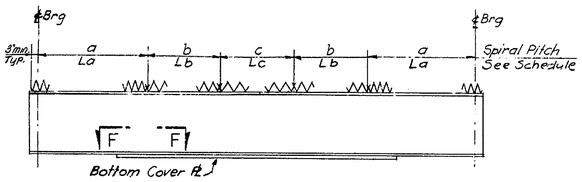

ELEVATION

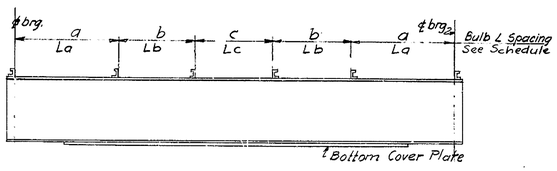

ELEVATION

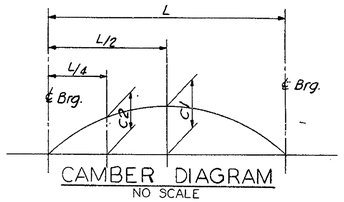

CAMBER DIAGRAM
NO SCALE

STRINGER SCHEDULE			S1	S2	S3	S4
SHEAR KIPS	DL-I		20.4	22.4	26.1	29.6
	DL-II		--	--	10.8	10.8
	LL		35.0	38.0	40.5	44.0
	I		10.5	11.4	10.8	11.8
MOMENT FT-KIPS	DL-I		178	196	417	471
	DL-II		--	--	173	172
	LL		239	260	558	606
	I		72	78	149	162
SECTION	SHAPE		36 WF 150	33 WF 130	36 WF 150	36 WF 150
	TOP COVER PLATE		None	None	None	None
	BOTTOM COVER ℒ.		None	None	14 × 1 1/16 × 46'-6"	14 × 1 1/16 × 46'-6"
STRESS KSI	STEEL - BOTTOM		11.7	15.8	16.5	18.0
	STEEL - TOP		11.7	15.8	12.0	13.2
SPIRAL PITCH	a	La	None	None	5" 12'-0"	5" 12'-0"
	b	Lb			8" 12'-0"	7" 12'-0"
	c	Lc			12" balance	11" balance
BULB ANGLE SPACING	a	La			12" 12'-0"	12" 12'-0"
	b	Lb			19" 12'-0"	16" 12'-0"
	c	Lc	None	None	29" balance	26" balance
CAMBER *	C1		Natural Camber up		1 1/16"	1 1/4"
	C2		— — —		13/16"	15/16"

* Dead load deflection (minimum camber to be held)

STEEL NOTES:

For material specifications see Special Provisions.
Basic allowable flexural tensile stress = 18,000 psi.
All stiffener plates and transverse framing members shall be vertical when stringers are in final erected position.
Contractor has the option of using either spirals or bulb angles where shear connectors are called for. Nelson studs may be substituted with the approval of the Engineer.
Composite Construction: No intermediate temporary supports shall be used during construction. No superimposed dead loads shall be added before 7 days after concrete is poured.
Rolled Beams shall have their rolled camber upward before welding of cover plates.
Field Connections shall be made with 7/8" ϕ high strength bolts or rivets, unless otherwise indicated.
Painting: For Shop and Field painting see Standard Specifications and Special Provisions.

NOTES:

For General Notes, see Drawing 7-1
For steel reinforcement in deck slab, see Dwg. 7-6
For special notes and deck reinforcement support detail, see Dwg. 1-2.

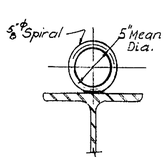

SECTION C-C

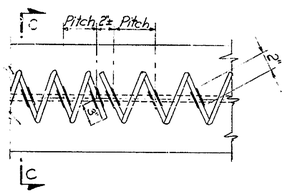

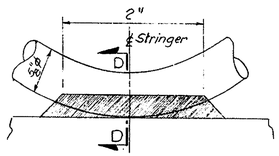

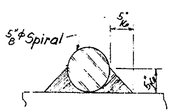

SPIRAL DETAILS
NO SCALE

SECTION D-D

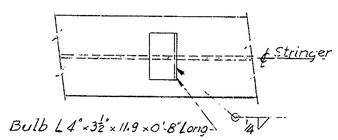

BULB ANGLE DETAILS
NO SCALE

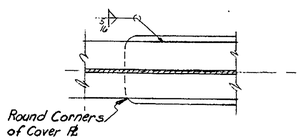

SECTION F-F
NO SCALE

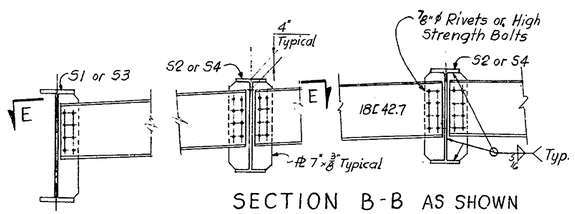

SECTION B-B AS SHOWN
SECTION B'-B' SIMILAR
TYPICAL FOR ALL END DIAPHRAGMS
SCALE: 1/2 IN. = 1 FT.

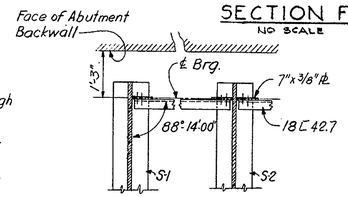

SECTION E-E

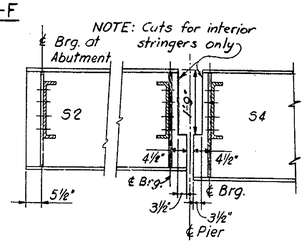

SECTION G-G
SCALE: 1/2 IN. = 1 FT.

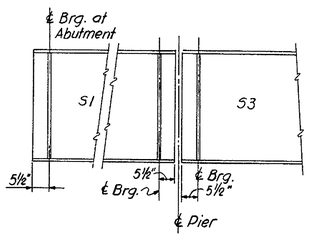

SECTION H-H
SCALE: 1/2 IN. = 1 FT.

DELAWARE STATE HIGHWAY DEPARTMENT
DELAWARE TURNPIKE

TURNPIKE BRIDGE OVER ROAD 356

SUPERSTRUCTURE
FRAMING AND DETAILS

DRAWN: E.A.N.	SCALE: AS NOTED	DATE: MAY 9, 1962	DWG.: 7-5
TRACED: CHECKED: D.L.-D.F. CHARGE OF	TIPPETTS-ABBETT-McCARTHY-STRATTON ENGINEERS AND ARCHITECTS		CONTRACT 7002
			SHEET 197 OF 224

COUNTY	CONTRACT	P.R.A. REG. NO.	STATE	FED. AID PROJECT NO.	FISCAL YEAR	SHEET NO.	TOTAL SHEETS
NEW CASTLE	7002	2	DEL.			198	224

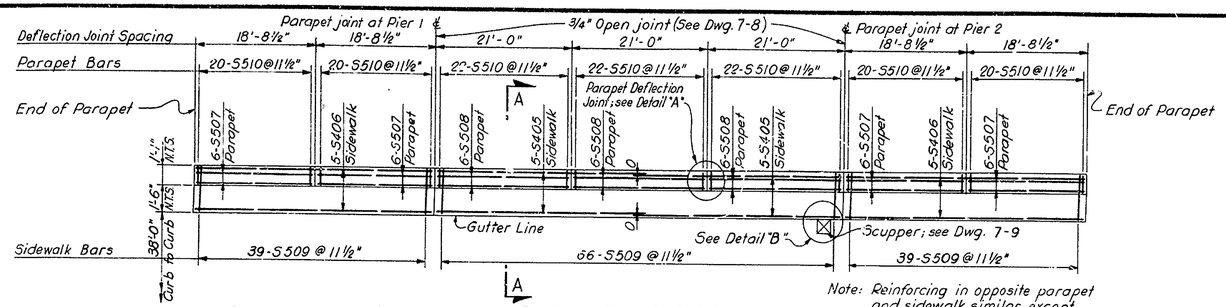

PARAPET AND SIDEWALK PLAN

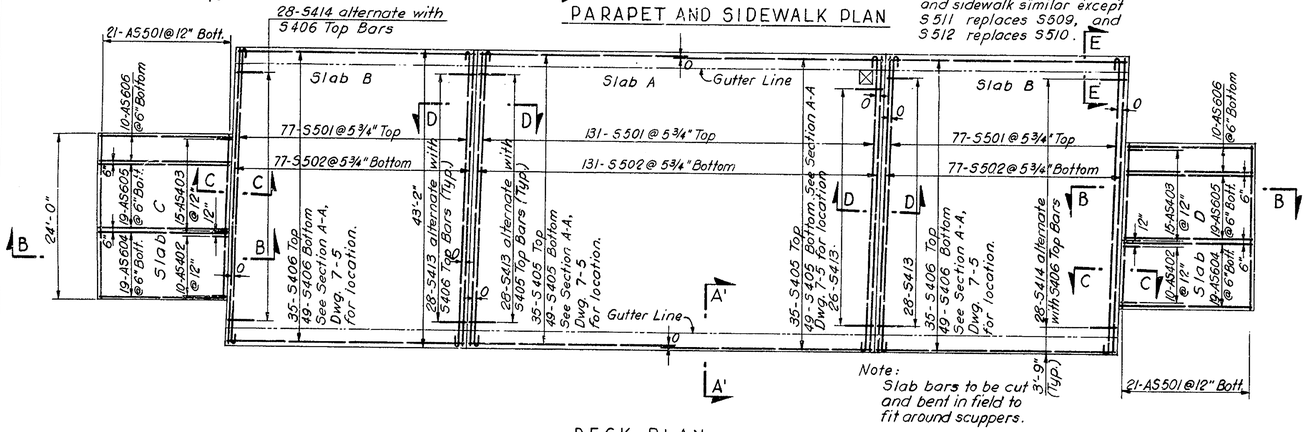

DECK PLAN
WESTBOUND DECK SHOWN
EASTBOUND DECK SIMILAR
SCALE: 3/32 IN. = 1 FT.

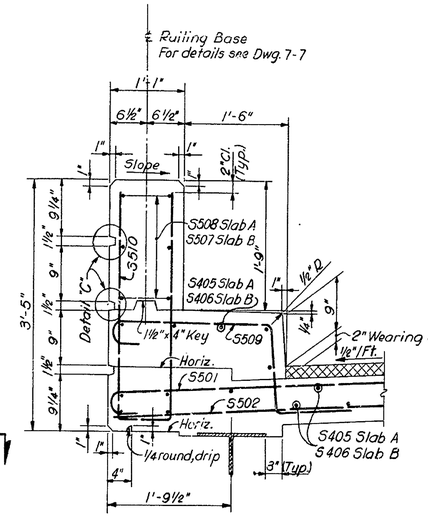

SECTION A-A
SCALE: 1 IN. = 1 FT.

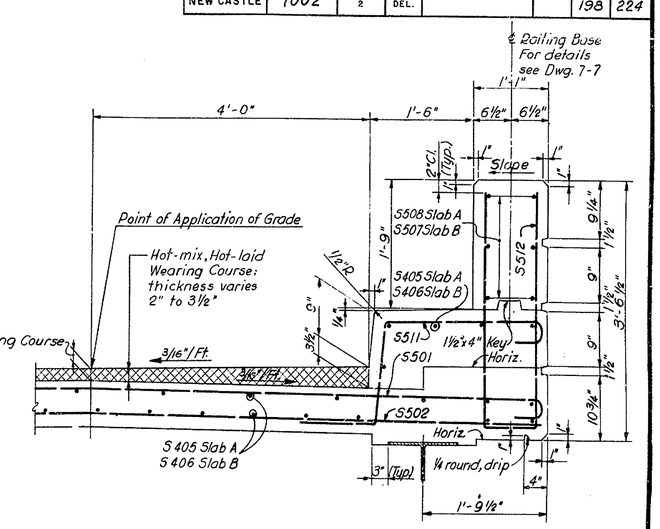

SECTION A'-A'
SCALE: 1 IN. = 1 FT.

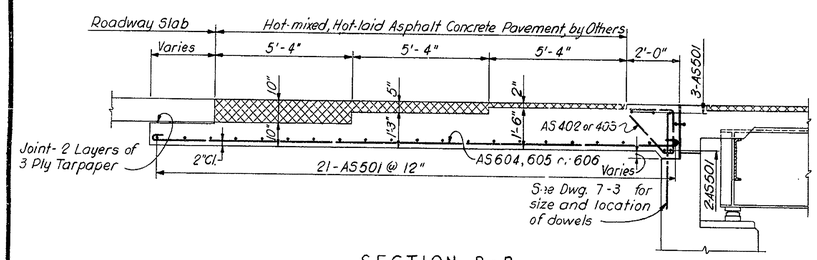

SECTION B-B
SCALE: 3/8 IN. = 1 FT.

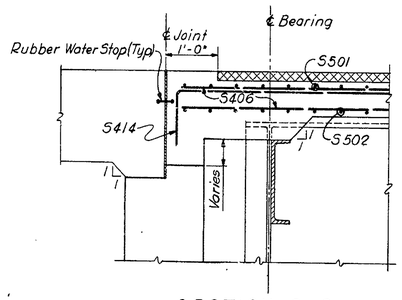

SECTION C-C
SCALE: 3/4 IN. = 1 FT.

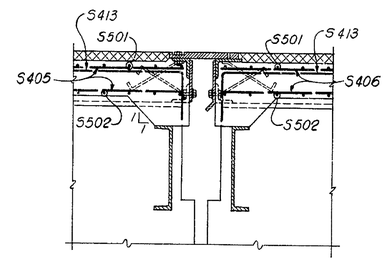

SECTION D-D
SCALE: 3/4 IN. = 1 FT.

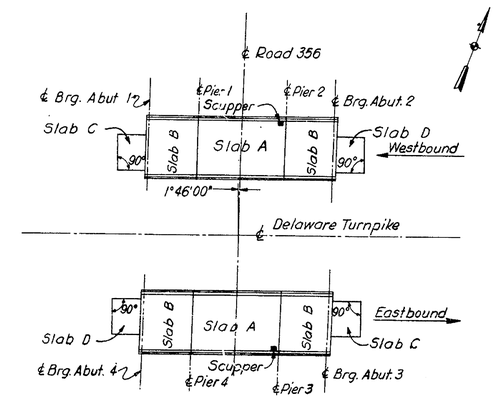

KEY PLAN
NO SCALE

NOTES:
For transverse section through deck slab, see Dwg. 7-5
All parapet joints shall be perpendicular to fascia line
For joint details, see Dwg. 7-8
For General Notes, see Dwg. 7-1
For Concrete Notes, see Dwg. 7-4

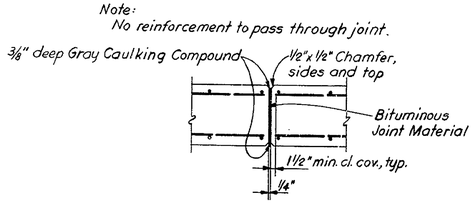

PARAPET DEFLECTION JOINT
DETAIL "A"
SCALE: 3/4 IN. = 1 FT.

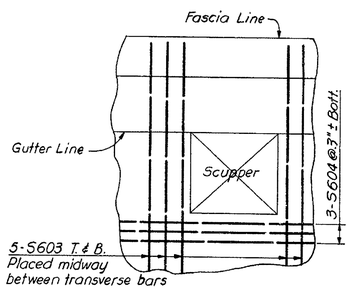

DETAIL "B"
SCALE: 1/2 IN. = 1 FT.

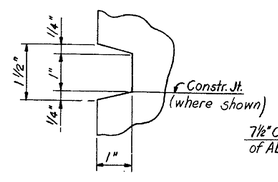

DETAIL "C"

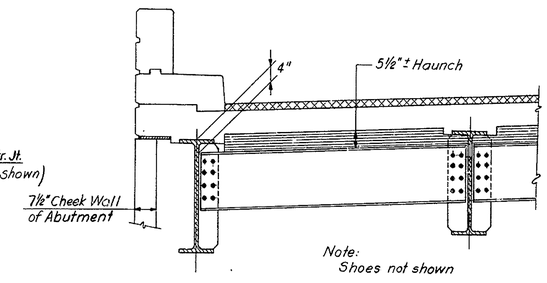

SECTION E-E
SCALE: 1/2 IN. = 1 FT.

DELAWARE STATE HIGHWAY DEPARTMENT
DELAWARE TURNPIKE

TURNPIKE BRIDGE OVER ROAD 356

SUPERSTRUCTURE
CONCRETE DECK AND APPROACH SLAB

DRAWN: E.A.N.	SCALE: AS NOTED	DATE: MAY 9, 1962	DWG.: 7-6
TRACED:	TIPPETTS-ABBETT-McCARTHY-STRATTON ENGINEERS AND ARCHITECTS		CONTRACT 7002
CHECKED: D.L.-D.F.			
CHARGE OF			SHEET 198 OF 224

COUNTY	CONTRACT	P.R.A. REG. NO.	STATE	FED. AID PROJECT NO.	FISCAL YEAR	SHEET NO.	TOTAL SHEETS
NEW CASTLE	7002	2	DEL.			199	224

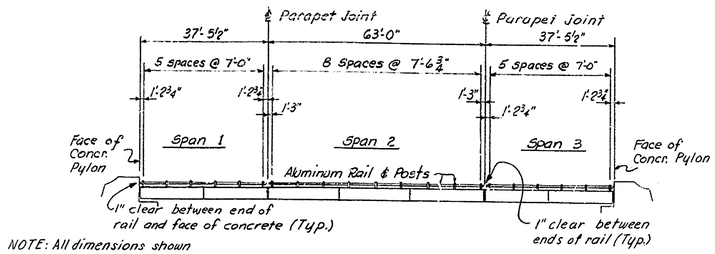

NOTE: All dimensions shown are horizontal.

RAILING ELEVATION

SCALE: 1 IN. = 20 FT.

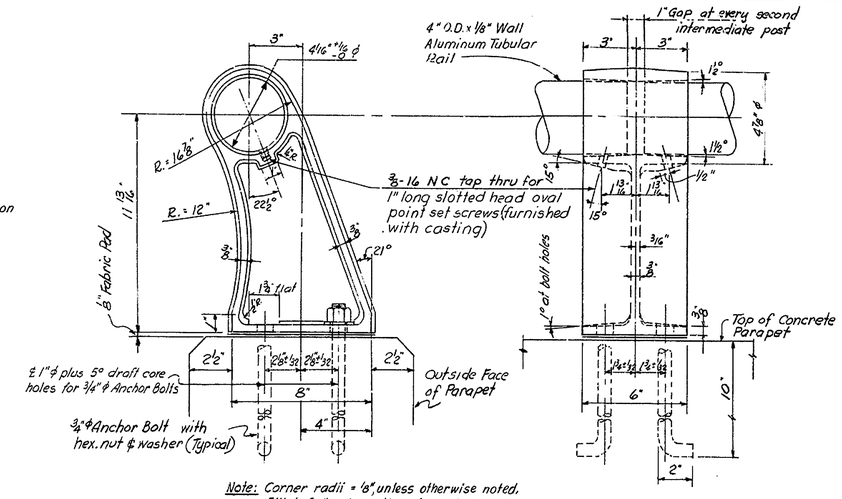

Note: Corner radii = 1/8" unless otherwise noted. Fillets 5/16" unless otherwise noted.

RAILING DETAILS

SCALE: 3 IN. = 1 FT.

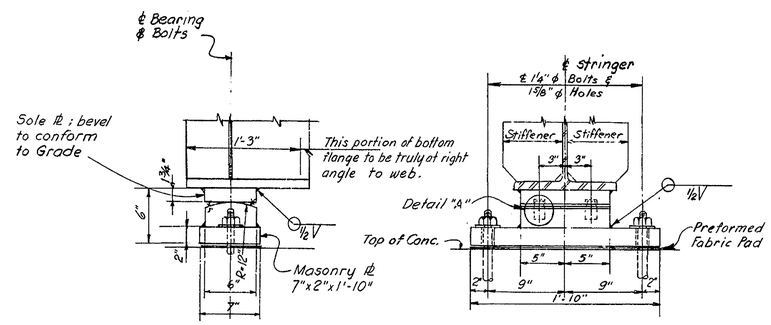

FIXED SHOE FS-1

SCALE: 1½ IN. = 1 FT.

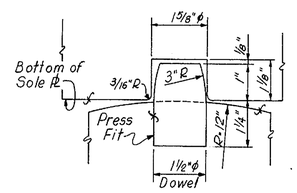

DETAIL "A"

SCALE: 6 IN. = 1 FT.

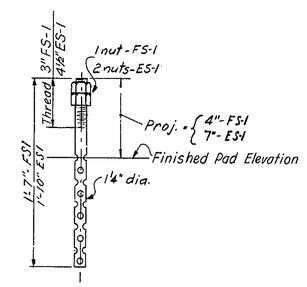

SWEDGE BOLT DETAIL

NO SCALE

RAILING NOTES:

Railing Posts shall be erected normal to grade and rails shall be parallel to established grade.

Anchor Bolts shall be of aluminum alloy meeting the requirements of ASTM-B211 alloy 2024-T4. Finished aluminum alloy bolts, nuts and washers shall be given an anodic coating at least 0.0002 in. thick and a chromate seal.

Anchor Bolts shall be set accurately by means of a template.

After Nuts have been placed and tightened to the satisfaction of the Engineer, bolts shall be cut off 1/8" above nuts and peened.

Tubular Rails shall be closed at all piers and abutments with a welded aluminum plug.

Rails shall be continuous at all end posts.

Preformed Fabric Pads shall be 1/8" thick.

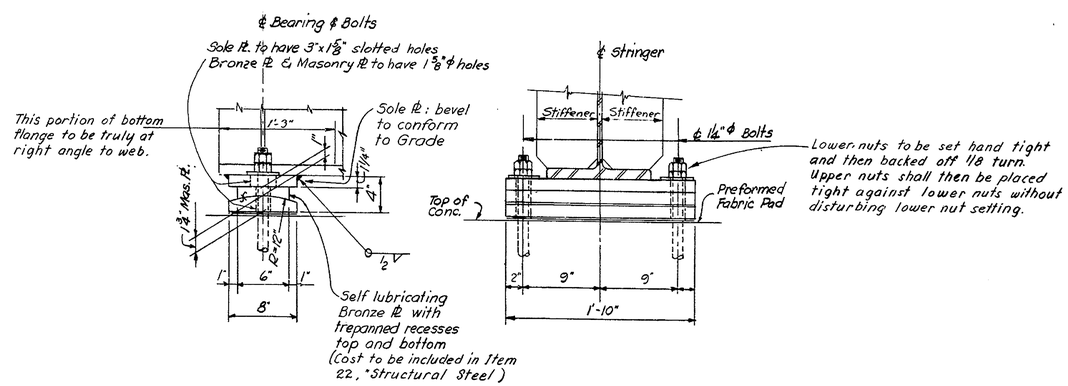

EXPANSION SHOE ES-1

SCALE: 1½ IN. = 1 FT.

NOTES:

Shoes to have vertical and horizontal ℄'s mutually perpendicular at 65° F.

For Steel Notes, see Drawing 7-5.

DELAWARE STATE HIGHWAY DEPARTMENT

DELAWARE TURNPIKE

TURNPIKE BRIDGE OVER ROAD 356

SUPERSTRUCTURE

RAILING AND SHOE DETAILS

DRAWN: A.D.-B.M.	SCALE: AS NOTED	DATE: MAY 9, 1962	DWG.: 7-7
TRACED:	TIPPETTS-ABBETT-McCARTHY-STRATTON ENGINEERS AND ARCHITECTS		CONTRACT 7002
CHECKED: D.L.-D.F.			
CHARGE OF			SHEET 199 OF 224

COUNTY	CONTRACT	P.R.A. REG. NO.	STATE	FED. AID PROJECT NO.	FISCAL YEAR	SHEET NO.	TOTAL SHEETS
NEW CASTLE	7002	2	DEL.			200	224

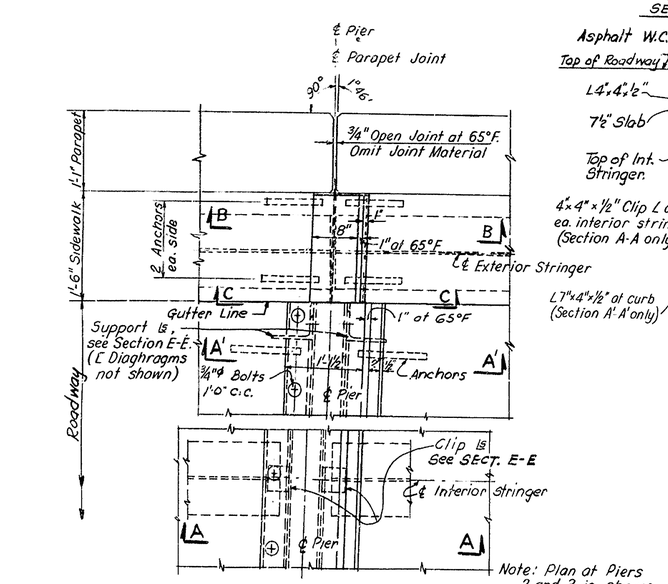

PLAN AT PIER JOINT
SLIDING PLATE DETAIL
SCALE: 1 IN. = 1 FT.

Note: Plan at Piers 2 and 3 is shown. Joints at Piers 1 and 4 are reversed

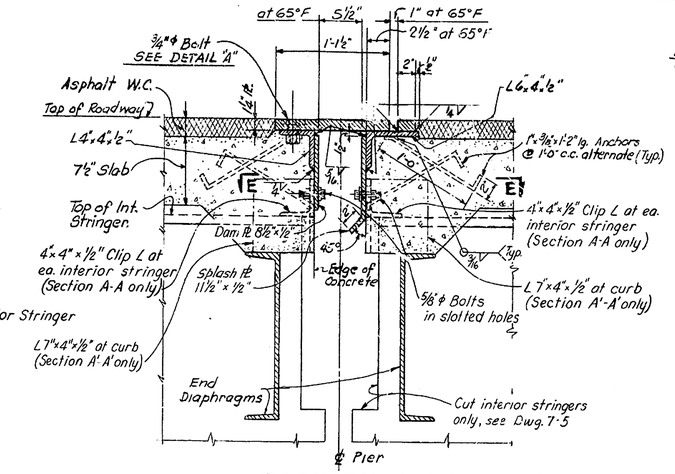

SECTION A-A (AS SHOWN)
SECTION A'-A' (SAME EXCEPT AS NOTED)
SCALE: 1 1/2 IN. = 1 FT.

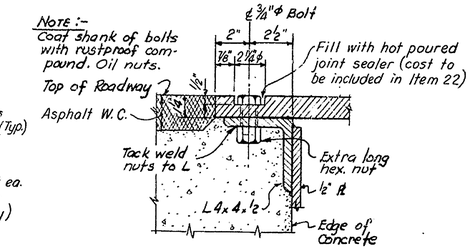

DETAIL "A"
SCALE: 3 IN. = 1 FT.

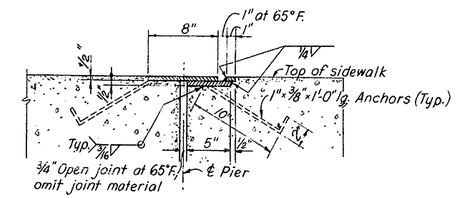

SECTION B-B (SHOWN)
SECTION B'-B' (SIMILAR)
SCALE: 1 1/2 IN. = 1 FT.

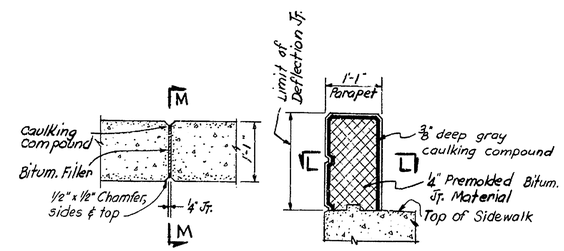

SECTION L-L SECTION M-M

DETAILS AT PARAPET DEFLECTION JOINT
SCALE: 3/4 IN. = 1 FT.

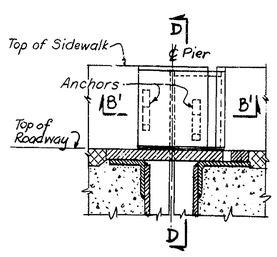

SECTION C-C

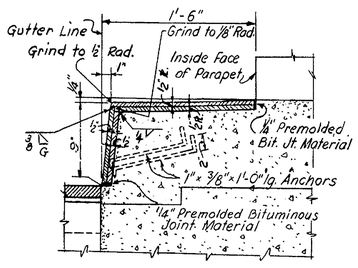

SECTION D-D

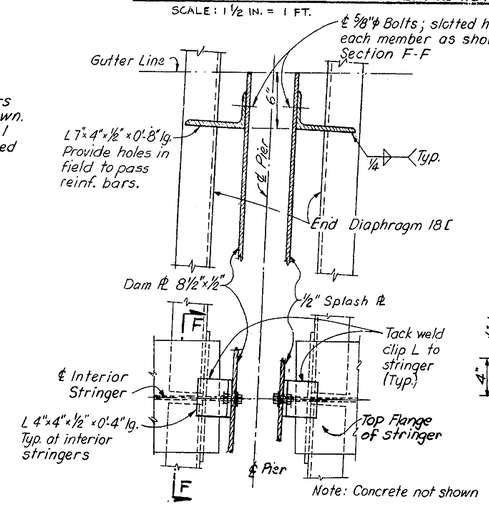

SECTION E-E

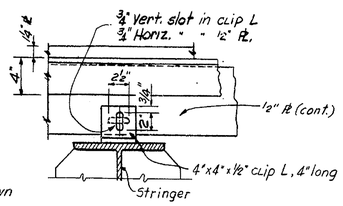

SECTION F-F

JOINT AT PIER
SCALE: 1 1/2 IN. = 1 FT.

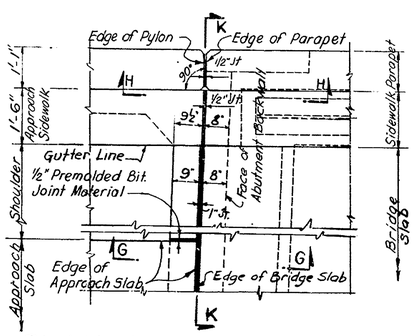

PLAN AT ABUTMENT JOINT

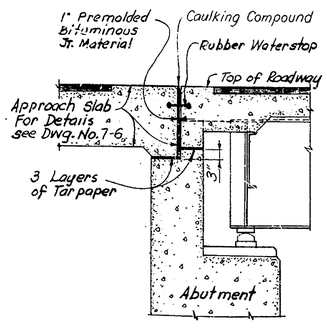

SECTION G-G

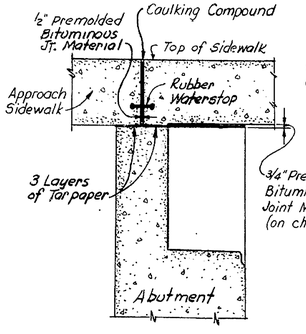

SECTION H-H

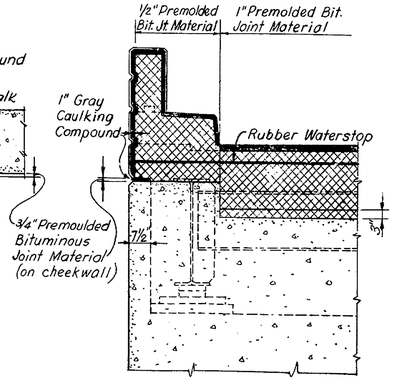

SECTION K-K

JOINT AT ABUTMENT
SCALE: 1/2 IN. = 1 FT.

NOTES:

Top of Expansion Joint detail to conform to roadway cross section.
For location of Parapet Deflection Joints, see Drawing 7-6.
For General Notes, see Drawing 7-1.
For Concrete Notes, see Drawing 7-4.
For Steel Notes, see Drawing 7-5.
Cost of furnishing and placing joint details at piers, shall be included in Item 22, "Structural Steel."

Cost of furnishing and placing joint details at abutments, including water stops, shall be included in Item 18, "Portland Cement Concrete Masonry".

DELAWARE STATE HIGHWAY DEPARTMENT
DELAWARE TURNPIKE

TURNPIKE BRIDGE OVER ROAD 356

SUPERSTRUCTURE
JOINT DETAILS

DRAWN: B. M.	SCALE: AS NOTED	DATE: MAY 9, 1962	DWG.: 7-8
TRACED:	TIPPETTS-ABBETT-McCARTHY-STRATTON ENGINEERS AND ARCHITECTS		CONTRACT 7002
CHECKED: D.L.-D.F.			
CHARGE OF			SHEET 200 OF 224

COUNTY	CONTRACT	P R A REG NO	STATE	FED. AID PROJECT NO.	FISCAL YEAR	SHEET NO	TOTAL SHEETS
NEW CASTLE	7002	2	DEL			201	224

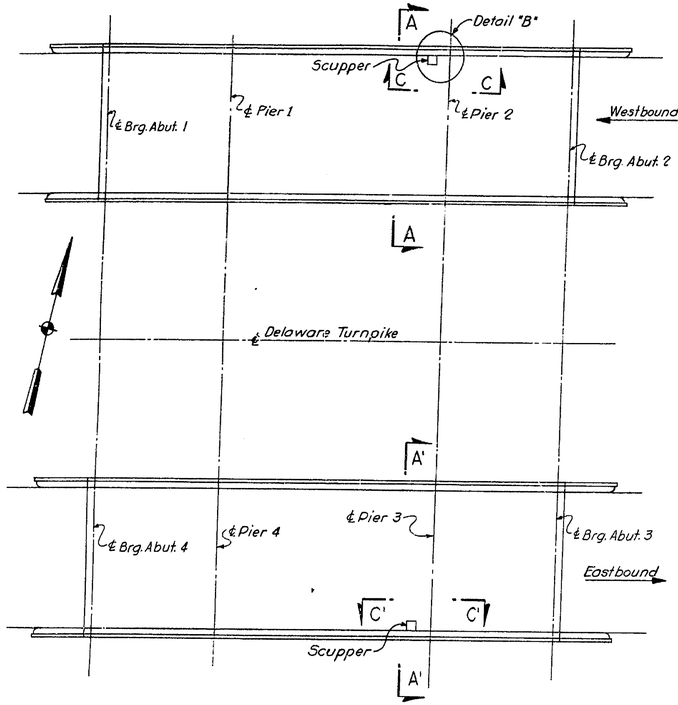

PLAN
SCALE: 1 IN. = 20 FT.

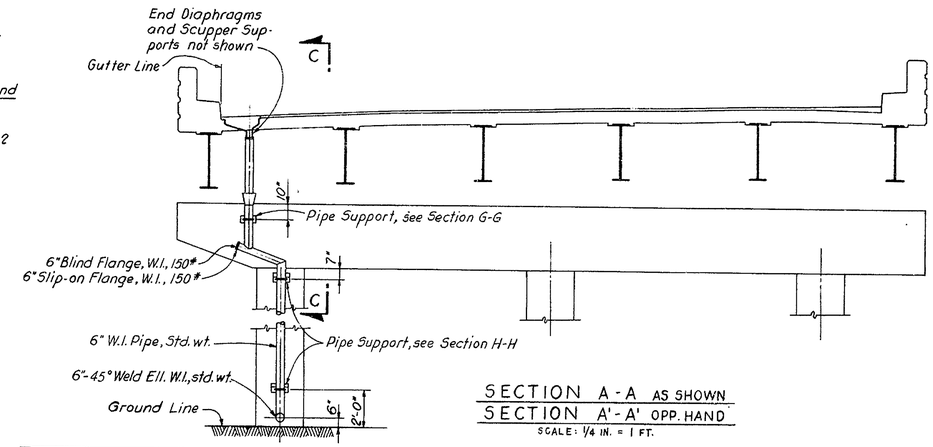

SECTION A-A AS SHOWN
SECTION A'-A' OPP. HAND
SCALE: 1/4 IN. = 1 FT.

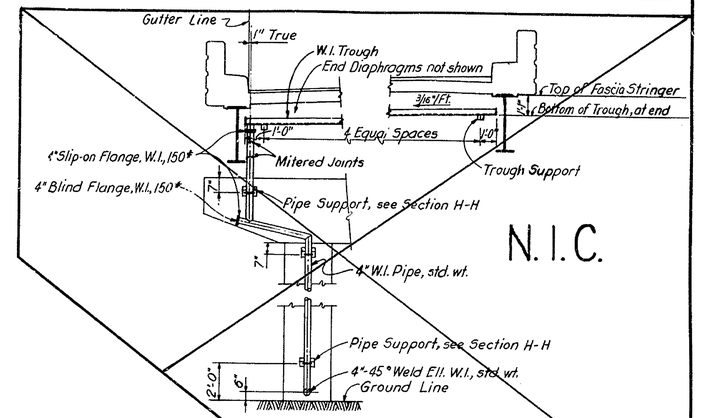

SECTION B-B AS SHOWN
SECTION B'-B' OPP. HAND
SCALE: 1/4 IN. = 1 FT.

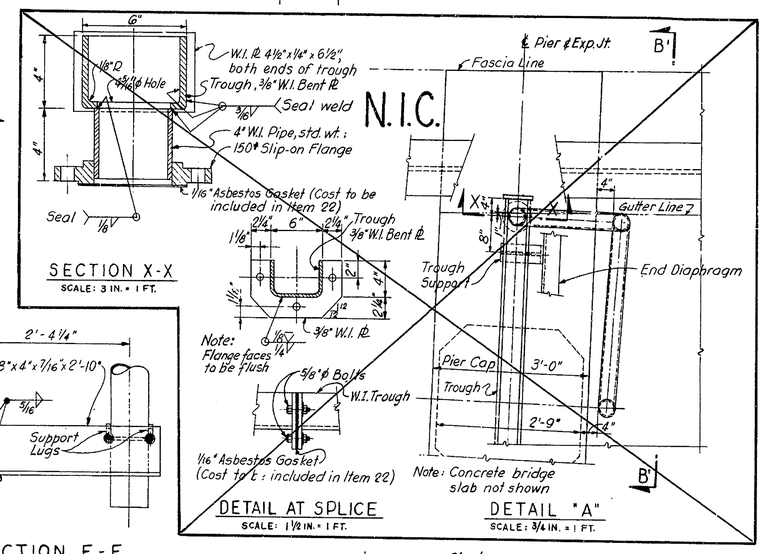

SECTION X-X
SCALE: 3 IN. = 1 FT.

DETAIL AT SPLICE
SCALE: 1 1/2 IN. = 1 FT.

DETAIL "A"
SCALE: 3/4 IN. = 1 FT.

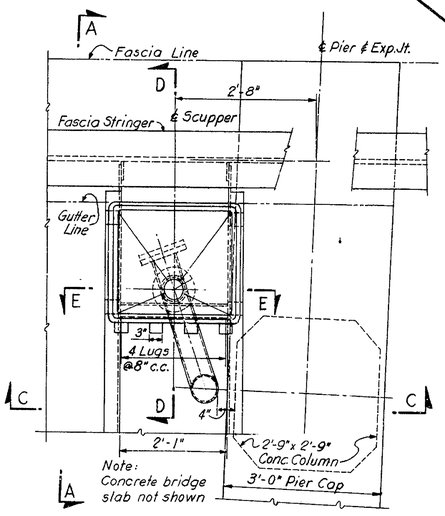

DETAIL "B"
SCALE: 3/4 IN. = 1 FT.

SCUPPER NOTES:
All frames and gratings shall be cast steel in accordance with A.S.T.M. A27-60 Grade 65-35. Metal thicknesses less than those shown will not be acceptable, under any circumstances. Bottom and sides of grating shall be finished so as to mate with frame and seat properly with a smooth uniform bearing on the finished surfaces of the scupper casting.

NOTES:
W.I. Pipes shall be Standard Black Wrought Iron, galvanized.
Cost of furnishing and placing all W.I. pipes and their supports and connections shall be included in Item "Bridge Drainage".

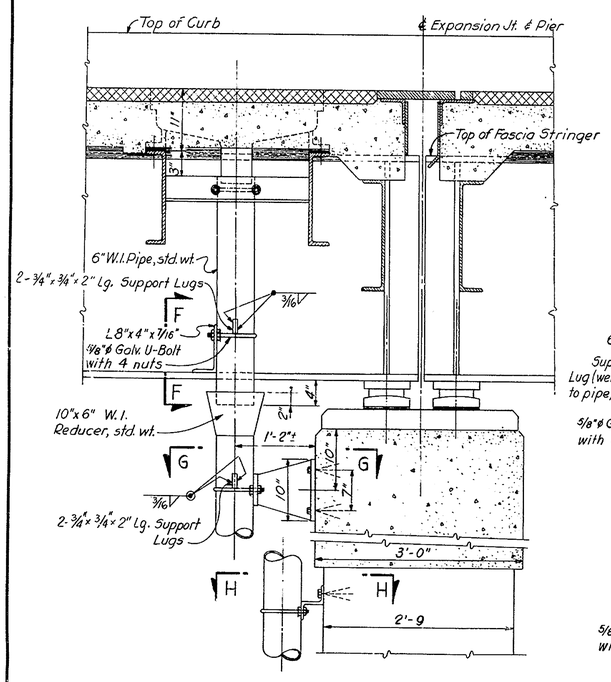

SECTION C-C AS SHOWN
SECTION C'-C' OPP. HAND
SCALE: 1 IN. = 1 FT.

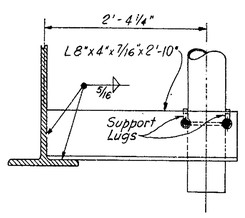

SECTION F-F
SCALE: 1 IN. = 1 FT.

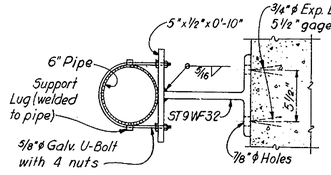

SECTION G-G
SCALE: 1 1/2 IN. = 1 FT.

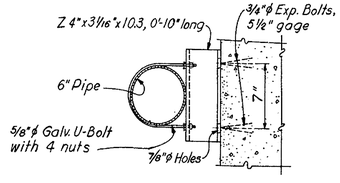

SECTION H-H
SCALE: 1 1/2 IN. = 1 FT.

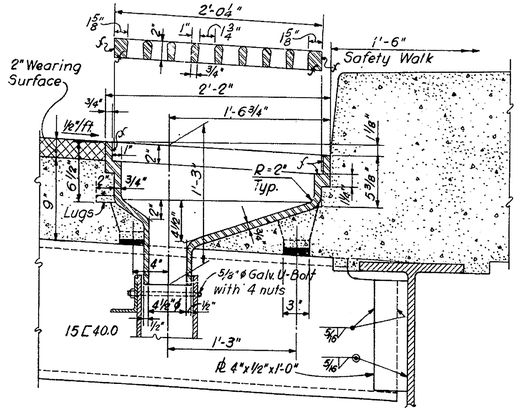

SECTION D-D
SCALE: 1 1/2 IN. = 1 FT.

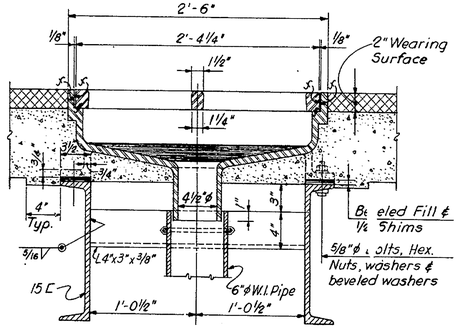

SECTION E-E
SCALE: 1 1/2 IN. = 1 FT.

DELAWARE STATE HIGHWAY DEPARTMENT
DELAWARE TURNPIKE

TURNPIKE BRIDGE OVER ROAD 356

SUPERSTRUCTURE
DRAINAGE DETAILS

DRAWN: E. A. N.	SCALE: AS NOTED	DATE: MAY 9, 1962	DWG.: 7 - 9
TRACED:	TIPPETTS-ABBETT-McCARTHY-STRATTON ENGINEERS AND ARCHITECTS		CONTRACT 7002
CHECKED: DL.-G.S.			
CHARGE OF			SHEET 201 OF 224

COUNTY	CONTRACT	P R A REG NO	STATE	FED. AID PROJECT NO.	FISCAL YEAR	SHEET NO	TOTAL SHEETS
NEW CASTLE	7002	2	DEL			202	224

REINFORCING BAR SCHEDULE

MARK	SIZE	AMT. REQ'D.	LENGTH	TYPE	A	B	C	D	E	F	G	REMARKS
A501	5	264	5'-6"	Straight								Footings
A602	6	96	24'-0"	Straight								Footings
A603	6	96	11'-9"	Straight								Footings
A505	5	120	6'-5"	I	7"	5"	2'-3"	1'-4"				Sidewalk
A506	5	16	15'-8"	III	12'-10"	1'-11"	11"	1'-2½"				Sidewalk
A507	5	16	14'-1"	Straight								Sidewalk
A526	5	6	14'-0"	Straight								Walls
A527		16	3'-0"									
A528		136	3'-3"									
A529		32	10'-2"									
A530		16	11'-9"									
A531		16	13'-3"									
A532		16	14'-9"									
A533		10	16'-3"									
A534		30	17'-8"									
A535		16	9'-0"									
A536		30	15'-5"									
A537		24	5'-7"	Straight								
A538		8	4'-3"	II	2'-3"	2'-0"						
A539		28	3'-6"	Straight								
A540		96	4'-7"									
A541		8	4'-1"									
A542		8	3'-9"									
A543		8	3'-7"									
A544		16	14'-8"									
A545		16	14'-5"									
A546		16	14'-2"									
A547		16	13'-11"									
A548	5	16	10'-5"	Straight								Walls
		BARS A										
A550	5	3	9'-1"	Straight								North Wall-Abutment 1
A551		3	9'-10"									South Wall-Abutment 1
A552		6	7'-9"									N. Wall-Abut.2;S.Wall-Abut.3
A553		6	8'-6"									S. Wall-Abut.2;N.Wall-Abut 3
A554		3	8'-10"									North Wall-Abutment 4
A555	5	3	8'-1"	Straight								South Wall-Abutment 4
		BARS B										
A557	5	8	14'-0"	Straight								North Wall-Abutment 1
A558		8	14'-10"									South Wall-Abutment 1
A559		16	12'-7"									N.Wall-Abut.2;S.Wall-Abut.3
A560		16	13'-5"									S.Wall-Abut.2;N.Wall-Abut.3
A561		8	13'-11"									North Wall-Abutment 4
A562	5	8	13'-1"	Straight								South Wall-Abutment 4
		BARS C										
A563	5	1	7'-7"	Straight								North Wall-Abutment 1
A564			8'-5"									
A565			9'-5"									
A566			10'-7"									
A567			11'-3"									
A568			11'-11"									
A569			12'-7"									
A570			8'-5"									North Wall-Abutment 1
A571			9'-3"									South Wall-Abutment 1
A572			10'-3"									
A573			11'-5"									
A574			12'-1"									
A575			12'-9"									
A576		1	13'-5"									South Wall-Abutment 1
A577		2	6'-1"									N.Wall-Abut.2;S.Wall-Abut.3
A578			6'-11"									
A579			7'-11"									
A580			9'-1"									
A581			9'-9"									
A582			10'-5"									
A583	5	2	11'-1"	Straight								N.Wall-Abut.2;S.Wall-Abut.3

MARK	SIZE	AMT. REQ'D.	LENGTH	TYPE	A	B	C	D	E	F	G	REMARKS
		BARS C	(Cont'd.)									
A584	5	2	7'-0"	Straight								S.Wall-Abut.2;N.Wall-Abut.3
A585			7'-10"									
A586			8'-10"									
A587			10'-0"									
A588			10'-8"									
A589			11'-4"									
A590		2	12'-0"									S.Wall-Abut.2;N.Wall-Abut.3
A591		1	7'-6"									North Wall-Abutment 4
A592			8'-4"									
A593			9'-4"									
A594			10'-6"									
A595			11'-2"									
A596			11'-10"									
A597			12'-6"									North Wall-Abutment 4
A598			6'-7"									South Wall-Abutment 4
A599			7'-5"									
A5100			8'-5"									
A5101			9'-7"									
A5102			10'-3"									
A5103			10'-11"									
A5104	5	1	11'-7"	Straight								South Wall-Abutment 4
		BARS D										
A5120	5	6	10'-7"	Straight								North Wall-Abutment 1
A5121		6	11'-4"									South Wall-Abutment 1
A5122		12	9'-2"									N. Wall-Abut.2;S.Wall-Abut.3
A5123		12	9'-11"									S.Wall-Abut.2;N.Wall-Abut.3
A5124		6	10'-4"									North Wall-Abutment 4
A5125	5	6	9'-8"	Straight								South Wall-Abutment 4
		BARS E										
A5126-A5132	5	1 ea.	5'-3" to 9'-3" Δ=8"	Straight								North Wall-Abutment 1
A5133-A5139		1 ea.	6'-1" to 10'-1"									South Wall-Abutment 1
A5140-A5146		2 ea.	3'-9" to 7'-9"									N.Wall-Abut.2;S.Wall-Abut.3
A5147-A5153		2 ea.	4'-8" to 8'-8"									S.Wall-Abut.2;N.Wall-Abut.3
A5154-A5160		1 ea.	5'-2" to 9'-2"									North Wall-Abutment 4
A5161-A5167	5	1 ea.	4'-3" to 8'-3" Δ=8"	Straight								South Wall-Abutment 4
		BARS F										
A5170	5	2	7'-2"	VII	9	2'-11"	4'-3"					North Wall-Abutment 1
A5171		2	8'-0"				5'-1"					South Wall-Abutment 1
A5172		4	5'-7"				2'-8"					N.Wall-Abut.2;S.Wall-Abut.3
A5173		4	6'-5"				3'-6"					S.Wall-Abut.2;N.Wall-Abut.3
A5174		2	7'-1"				4'-2"					North Wall-Abutment 4
A5175	5	2	6'-3"	VII	9	2'-11"	3'-4					South Wall-Abutment 4
		BARS G										
A5176	5	1	6'-6"	II	5'-3"	1'-3"						North Wall-Abutment 1
A5177		1	7'-3"		6'-0"							South Wall-Abutment 1
A5178		2	4'-11"		3'-8"							N.Wall-Abut.2;S.Wall-Abut.3
A5179		2	5'-8"		4'-5"							S.Wall-Abut.2;N.Wall-Abut.3
A5180		1	6'-3"		5'-0"							North Wall-Abutment 4
A5181	5	1	5'-6"	II	4'-3"	1'-3"						South Wall-Abutment 4
A5199	5	172	3'-2"	Straight								Footing Dowels
A5200		43	8'-9"	II	3'-5"	5'-4"						Front Face-Abutment 1
A5201		86	7'-5"		3'-5"	4'-0"						Front Face-Abuts.2&3
A5202		43	7'-10"		3'-5"	4'-5"						Front Face-Abutment 4
A5203		172	5'-8"	II	1'-2"	4'-6"						Front Face-Back Wall
A5204		39	10'-0"	Straight								Rear Face-Abutment 1
A5205		78	8'-7"									Rear Face-Abuts.2&3
A5206		39	9'-0"									Rear Face-Abutment 4
A5207	5	140	21'-10"									Abutment-Horiz. Bars
A6208	6	56	4'-6"									Fillet Bars
A5209	5	96	3'-6"									Approach Slab Dowels
A5210		24	3'-8"									Shoulder Walls
A5211		24	9'-8"	Straight								
A5212		16	7'-7"	IV	5"	3'-7"	3'-7"					
A5213	5	40	6'-9"		5"	3'-2"	3'-2"					Shoulder Walls
A4214	4	120	6'-6"		2'-0"	2'-3"	2'-3"					Pad Bars
A4215	4	120	6'-4"	IV	1'-10"	2'-3"	2'-3"					Pad Bars

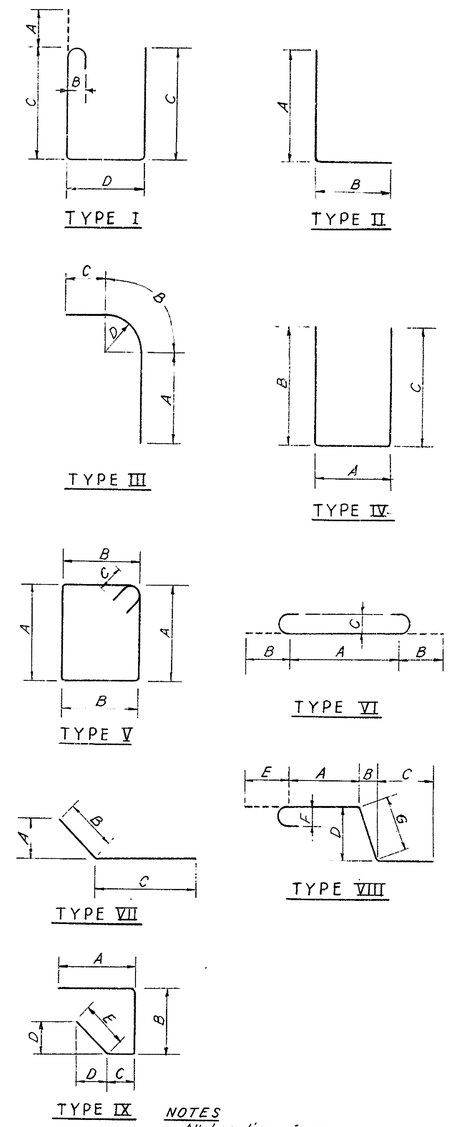

NOTES
All bar dimensions are out to out.
For Concrete Notes, see Drawing 7-4.

DELAWARE STATE HIGHWAY DEPARTMENT
DELAWARE TURNPIKE

TURNPIKE BRIDGE OVER ROAD 356
REINFORCING BAR SCHEDULE
ABUTMENTS

DRAWN: A.T.
TRACED:
CHECKED: D.L.-D.F.
CHARGE OF

SCALE:
DATE: MAY 9, 1962
DWG.: 7 - 10
TIPPETTS-ABBETT-McCARTHY-STRATTON
ENGINEERS AND ARCHITECTS
CONTRACT 7002
SHEET 202 OF 224

COUNTY	CONTRACT	P.R.A. REG. NO.	STATE	FED. AID PROJECT NO.	FISCAL YEAR	SHEET NO.	TOTAL SHEETS
NEW CASTLE	7002	2	DEL.			203	224

REINFORCING BAR SCHEDULE

	MARK	SIZE	AMT. REQ'D.	LENGTH	TYPE	A	B	C	D	E	F	G	REMARKS
APPROACH SLAB	AS501	5	104	23'-8"	Straight								
	AS402	4	40	5'-7"	IX	1'-7"	1'-10"	5"	1'-8"	2'-0"			
	AS403	4	60	6'-2"	IX	1'-7"	1'-7"	5"	1'-5"	2'-4"			
	AS604	6	76	21'-0"	VI	19'-8"	8"	6"					
	AS605	6	76	21'-3"	VI	19'-11"	8"	6"					
	AS606	6	40	21'-6"	VI	20'-2"	8"	6"					
DECK SLAB	S501	5	570	44'-10"	VI	42'-10"	7"	5"					Slabs A & B
	S502	5	570	42'-10"	Straight								Slabs A & B
	S603	6	20	6'-0"									At Scuppers
	S604	6	6	6'-0"									At Scuppers
	S405	4	376	31'-10"									Slab A
	S406	4	376	36'-10"									Slab B
	S507	5	96	18'-4"									Slab B Parapets
	S508	5	72	20'-8"	Straight								Slab A Parapets
	S509	5	288	5'-2"	VIII	2'-2"	2"	1'-1"	1'-3"	7"	5"	1'-4"	Slabs A&B Sidewalks
	S510	5	292	6'-11"	IV	9"	3'-1"	3'-1"					Slabs A&B Parapets
	S511	5	288	5'-3"	VIII	2'-2"	2"	1'-1"	1'-4"	7"	5"	1'-5"	Slabs A&B Sidewalks
	S512	5	292	7'-2"	IV	9"	3'-2½"	3'-2½"					Slabs A&B Parapets
	S413	4	220	4'-8"	II	4'-0"	8"						Slabs A&B
	S414	4	112	6'-8"	II	6'-0"	8"						Slab B

	MARK	SIZE	AMT. REQ'D.	LENGTH	TYPE	A	B	C	D	E	F	G	REMARKS
PIERS	P1001	10	38	31'-10"	Str.								Footing-Piers 1&4
	P602	6	118	7'-6"									-Piers 2&3
	P1003	10	20	17'-0"									-Piers 1&4
	P704	7	20	24'-2"									
	P705	7	20	24'-10"									
	P706	7	138	8'-6"									Footing-Piers 1&4
	P1007	10	72	21'-0"									Columns-Piers 1&4
	P1008	10	72	20'-6"	Str.								-Piers 2&3
	P1009	10	144	6'-6"	II	6'-0"	0'-6"						-Dowels
	P310	3	444	8'-11"	V	2'-5"	1'-8½"	0'-4"					-Ties
	P311	3	216	7'-10"	V	1'-9¾"	1'-9½"	0'-4"					Columns-Ties
	P912	9	8	10'-10"	Str.								Cap
	P913	9	16	10'-10"									
	P914	9	16	30'-10"									
	P915	9	16	15'-9"									
	P816	8	24	21'-3"	VII	1'-6"	4'-7"	16'-8"					
	P817	8	24	23'-0"	Str.								
	P418	4	392	11'-8"	V	3'-1½"	2'-4"	0'-4¼"					
	P419	4	8	10'-11"	V	2'-9"	2'-4"	0'-4½"					
	P420	4	8	10'-4"	V	2'-4½"	2'-4"	0'-4½"					
	P421	4	8	9'-5"	V	2'-0"	2'-4"	0'-4¼"					
	P422	4	8	8'-8"	V	1'-7½"	2'-4"	0'-4¼"					
	P423	4	288	6'-8"	IV	2'-6"	2'-1"	2'-1"					Cap
	P524	5	8	22'-0"	Str.								Pads
	P525	5	8	21'-0"									Cap
	P926	9	30	28'-8"									Cap
	P927	9	16	13'-9"									Footing Piers 2&3
	P1028	10	16	20'-6"									
	P1029	10	16	21'-2"	Str.								Footing Piers 2&3

NOTES:
For bar types, see Drawing 7-10.
All bar dimensions are out to out.
for Concrete Notes, see Drawing 7-4.

DELAWARE STATE HIGHWAY DEPARTMENT
DELAWARE TURNPIKE

TURNPIKE BRIDGE OVER ROAD 356
REINFORCING BAR SCHEDULE
APPROACH AND DECK SLABS AND PIERS

DRAWN: A.T.	SCALE:	DATE: MAY 9, 1962	DWG.: 7 - 11
TRACED:	TIPPETTS-ABBETT-McCARTHY-STRATTON ENGINEERS AND ARCHITECTS		CONTRACT 7002
CHECKED: DL-DF			
CHARGE OF			SHEET 203 OF 224

COUNTY	CONTRACT	P.R.A. REG. NO.	STATE	FED. AID PROJECT NO.	FISCAL YEAR	SHEET NO.	TOTAL SHEETS
NEW CASTLE	7002	2	DEL			204	224

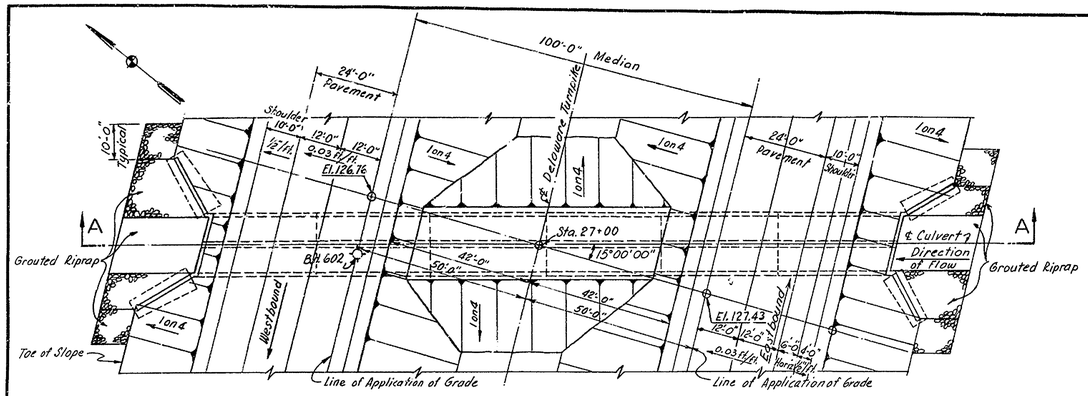

PLAN

SCALE: 1 IN. = 20 FT.

Legend: ⊙ Bore Hole

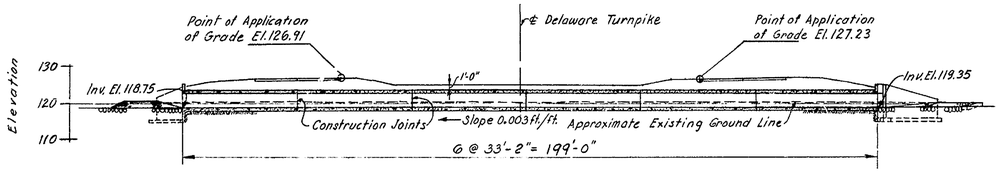

SECTION A-A

SCALE: 1 IN. = 20 FT.

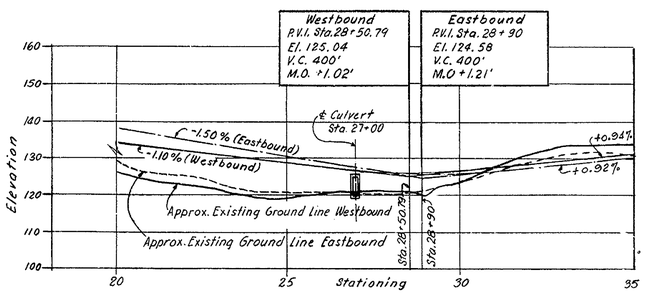

TURNPIKE ℄ PROFILE

SCALES: HOR. 1 IN. = 200 FT. VERT. 1 IN. = 20 FT.

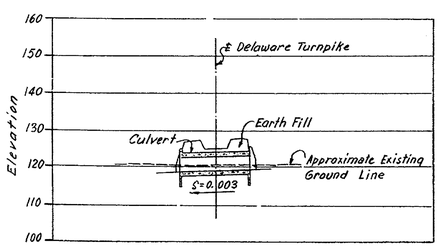

CULVERT ℄ PROFILE

SCALE: HOR. 1 IN. = 200 FT. VERT. 1 IN. = 20 FT.

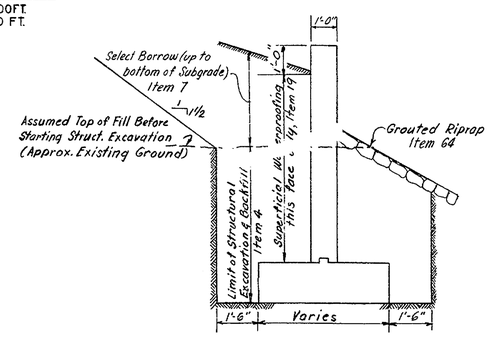

WING WALL

EXCAVATION AND BACKFILL DETAIL

NOT TO SCALE

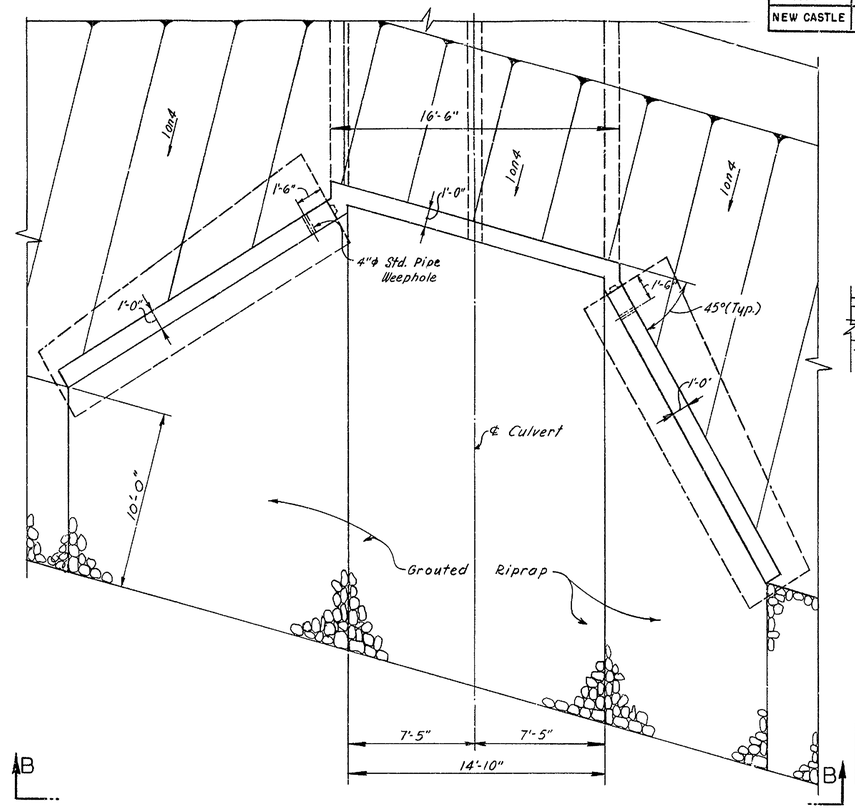

PLAN - WINGWALL

SCALE: 1/4 IN. = 1 FT.

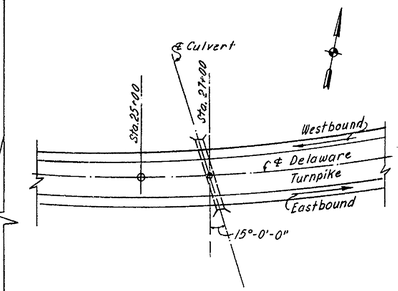

LOCATION - PLAN

SCALE: 1 IN. = 200 FT.

TABLE OF QUANTITIES			
ITEM NO.	DESCRIPTION	UNIT	QUANTITY
4	Excavation for Structures	C.Y.	430
7	Select Borrow	C.Y.	820
18 *	Portland Cement Concrete Masonry		
	Box Culvert	C.Y.	371
19	Superficial Waterproofing	S.Y.	690
20 *	Bar Reinforcement	Lbs.	58,000
64	Grouted Riprap	S.Y.	222

* indicates Fixed Quantity Item, see Proposal

GENERAL NOTES:

Design Specifications: A.A.S.H.O 1957

Material and Fabrication Specifications: State of Delaware, State Highway Department, Standard Specifications, July 1, 1960; and as given in the Special Provisions.

Unsuitable Material under the structure shall be removed and replaced by well-compacted fill; cost to be included in Highway Payment Items.

Embankment around culvert shall be placed simultaneously on both sides and to the same elevations.

The minimum waiting period before loads are permitted on the structure after the culvert top slab is placed shall be 10 days for loads of 2 tons to 10 tons and 28 days for loads of 10 tons to the legal load limit.

Quantities shown will not relieve the Contractor of the responsibility of checking them in preparing his bid.

For Boring Logs, see Sheet 24.

Maximum allowable soil pressure: 1 Ton/sq. ft.

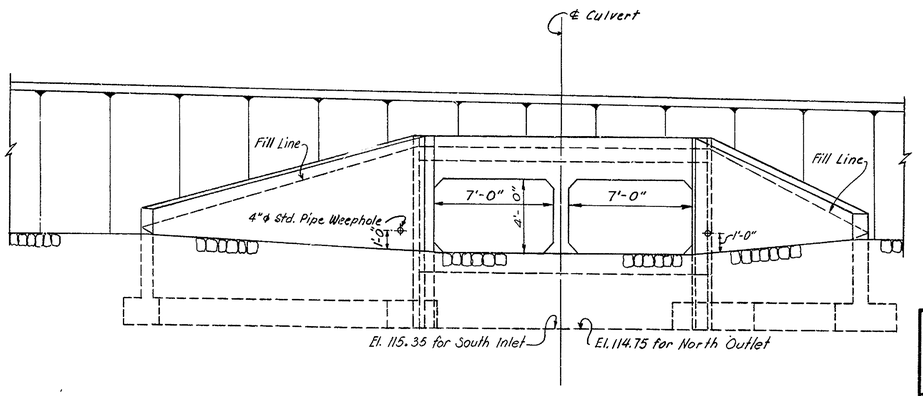

END ELEVATION

SECTION B-B

SCALE: 1/4 IN. = 1 FT.

DELAWARE STATE HIGHWAY DEPARTMENT

DELAWARE TURNPIKE

CULVERT AT STA. 27+00

GENERAL PLAN

DRAWN: H.M.T.	SCALE: AS SHOWN	DATE: MAY 9, 1962	DWG.: C 2-1
TRACED:	TIPPETTS-ABBETT-McCARTHY-STRATTON ENGINEERS AND ARCHITECTS		CONTRACT 7002
CHECKED: G.K.			
CHARGE OF			SHEET 204 OF 224

COUNTY	CONTRACT	P.R.A. REG. NO	STATE	FED. AID PROJECT NO	FISCAL YEAR	SHEET NO	TOTAL SHEETS
NEW CASTLE	7002	2	DEL			205	224

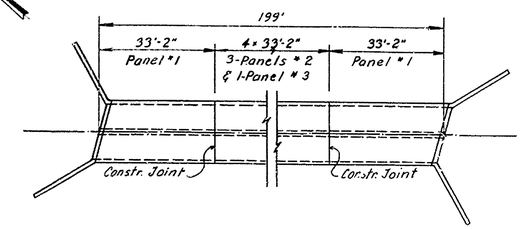

PLAN
LOCATION OF CONSTRUCTION JOINTS AND PANELS
SCALE: 1 IN. = 20 FT.

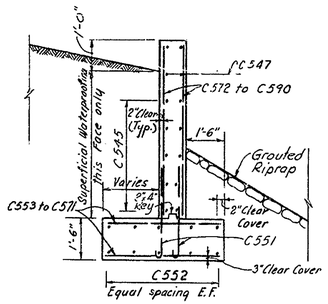

SECTION B-B
SCALE: 3/8 IN. = 1 FT.

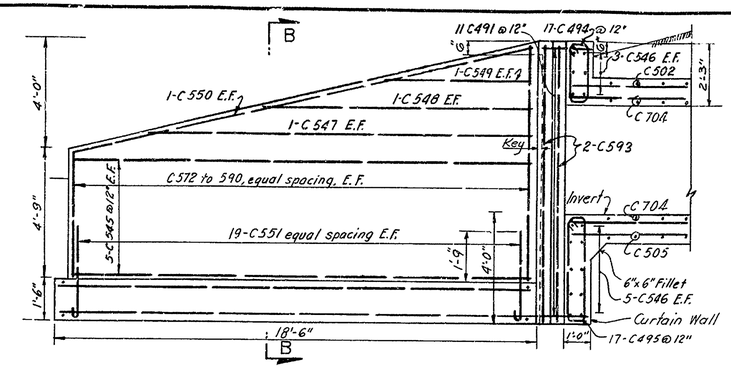

ELEVATION A-A
SCALE: 3/8 IN. = 1 FT.

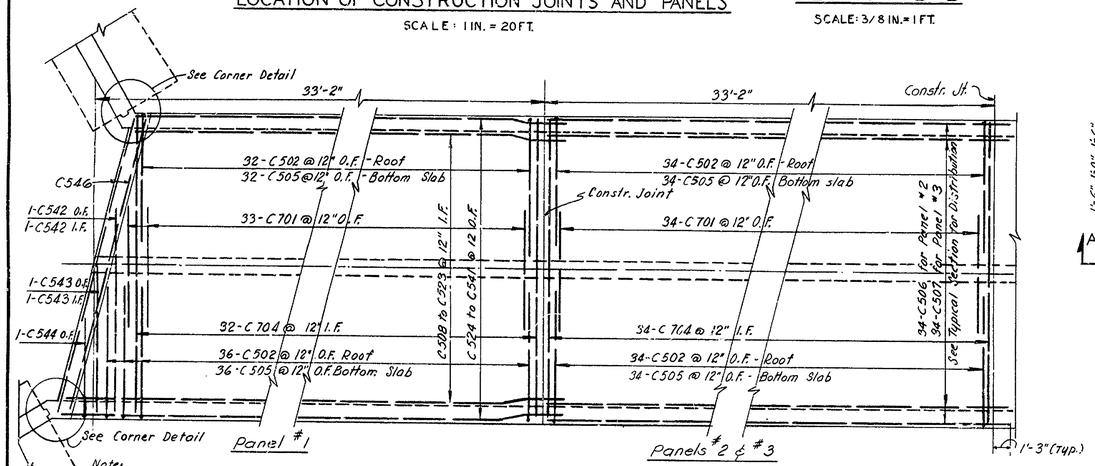

Note:
Floor slab reinforcing same as shown for Roof slab except ties at Portal and as otherwise noted

PLAN - ROOF SLAB
SCALE: 1/4 IN. = 1 FT.

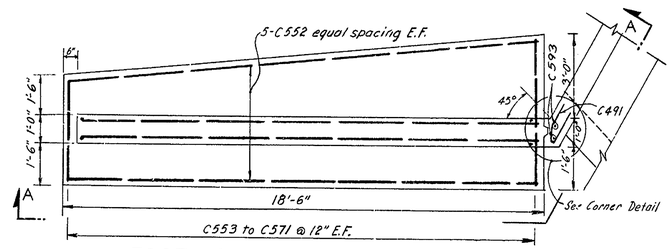

FOOTING PLAN - TYPICAL WINGWALL
SCALE: 3/8 IN. = 1 FT.

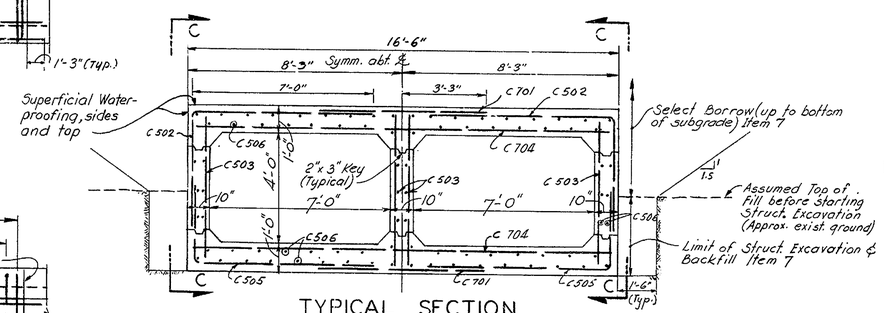

TYPICAL SECTION
SCALE: 3/8 IN. = 1 FT.

Note:
Longitudinal Bars are denoted only for Panel #2.
See Plan Roof Slab, Section C-C and Elevation Center Wall for other Panels.

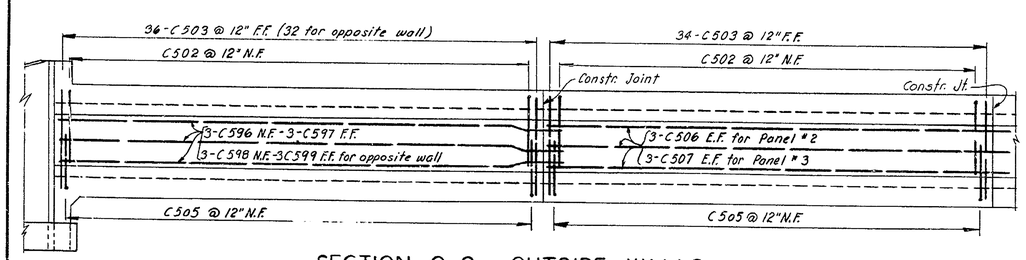

SECTION C-C — OUTSIDE WALLS
SCALE: 1/4 IN. = 1 FT.

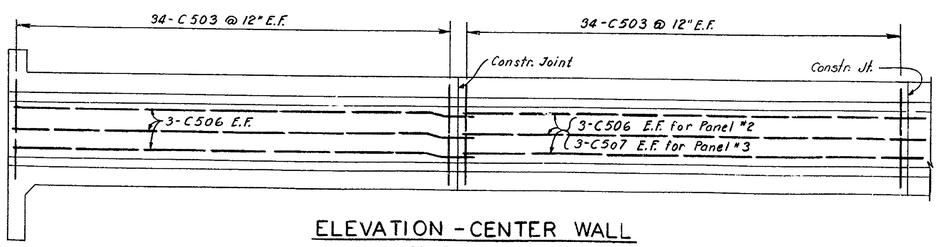

ELEVATION - CENTER WALL
SCALE: 1/4 IN. = 1 FT.

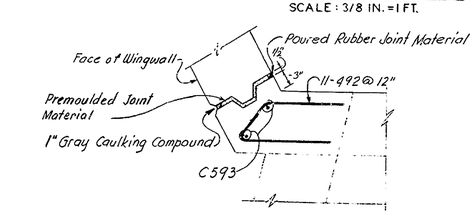

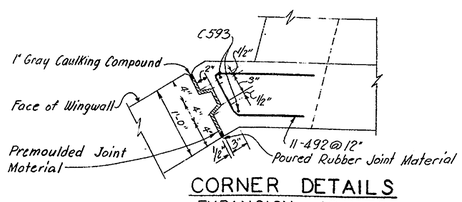

CORNER DETAILS
EXPANSION JOINTS
SCALE: 1 IN. = 1 FT.

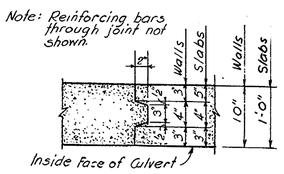

CONSTRUCTION JOINT DETAIL
SCALE: 1 IN. = 1 FT.

BAR LIST

MARK	SIZE	AMT. REQ'D	LENGTH	TYPE	A	B	C	D	Δ	REMARKS
C701	#7	404	6'-6"	STR.						Culvert
C502	5	408	11'-2"	I	7'-0"	4'-2"				"
C503	5	816	5'-3"	STR.						"
C704	7	400	16'-2"	STR.						"
C505	5	408	10'-0"	I	7'-0"	3'-0"				"
C506	5	270	34'-3"	STR.						"
C507	5	86	32'-9"	STR.						"
C508 to C523	5	4 Each	32'-6" to 36'-3"	STR.					3"	"
C542	5	8	12'-6"	STR.						"
C543	5	8	8'-9"	STR.						"
C544	5	4	9'-2"	I	5'-0"	4'-2"				Culvert
C545	5	40	17'-8"	STR.						Wingwall
C546	5	32	16'-9"	STR.						Portal
C547	5	8	14'-9"	STR.						Wingwall
C548	5	8	10'-3"	STR.						"
C549	5	8	5'-9"	STR.						"
C550	5	8	18'-1"	STR.						"
C551	5	152	3'-7"	II	3'-0"	7"	5"			Wingwall
C552	5	40	18'-2"	STR.						Footing
C553 to C571	5	8 each	3'-9" to 5'-4"	STR.					1"	Footing
C572 to C590	5	8 each	4'-6 to 8'-3"	STR.					2½"	Wingwall
C491	4	22	3'-3"	III	1'-2"	9"	1'-4"	5"		Portal
C492	4	22	3'-1"	III	1'-0"	8"	1'-5"	4"		Portal
C593	5	8	10'-0"	STR						Portal
C494	4	34	6'-0"	IV	2'-0"	7½"	4½"			Portal
C495	4	34	9'-3"	IV	3'-7½"	7½"	4½"			Portal
C596	5	6	36'-6"	STR.						Culvert
C597	5	6	36'-4"	STR.						"
C598	5	6	32'-0"	STR.						"
C599	5	6	32'-2"	STR.						"
C524 to C541	5	4 each	32'-3" to 36'-6"	STR.					3"	Culvert

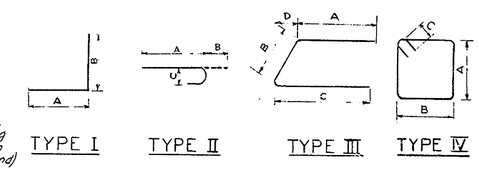

CONCRETE NOTES:

Splices for stress bars shall be a minimum of 30 diameters; all other splices a minimum of 20 diameters.
Construction Joints other than those shown will not be permitted without written approval of the Engineer.
Exposed Concrete Edges shall be beveled 1 inch by 1 inch, unless otherwise noted.
Concrete Cover as per A.A.S.H.O. or as noted.
Cost of furnishing and placing all bituminous joint materials, caulking compound, joint filler, water stops and pipe weepholes shall be included in Item 18, "Portland Cement Concrete Masonry."
Design Stresses: reinforcing steel = 18,000 p.s.i.; reinforced concrete f_c = 1,200 p.s.i.; n = 10.

DELAWARE STATE HIGHWAY DEPARTMENT
DELAWARE TURNPIKE

CULVERT AT STA. 27+00
SECTIONS AND DETAILS

DRAWN: H.M.T.	SCALE: AS NOTED	DATE: MAY 9, 1962	DWG.: C 2-2
TRACED:	TIPPETTS-ABBETT-McCARTHY-STRATTON ENGINEERS AND ARCHITECTS		CONTRACT 7002
CHECKED: G.K.			
CHARGE OF			SHEET 205 OF 224

COUNTY	CONTRACT	P.R.A. REG. NO.	STATE	FED. AID PROJECT NO.	FISCAL YEAR	SHEET NO.	TOTAL SHEETS
NEW CASTLE	7002	2	DEL.			206	224

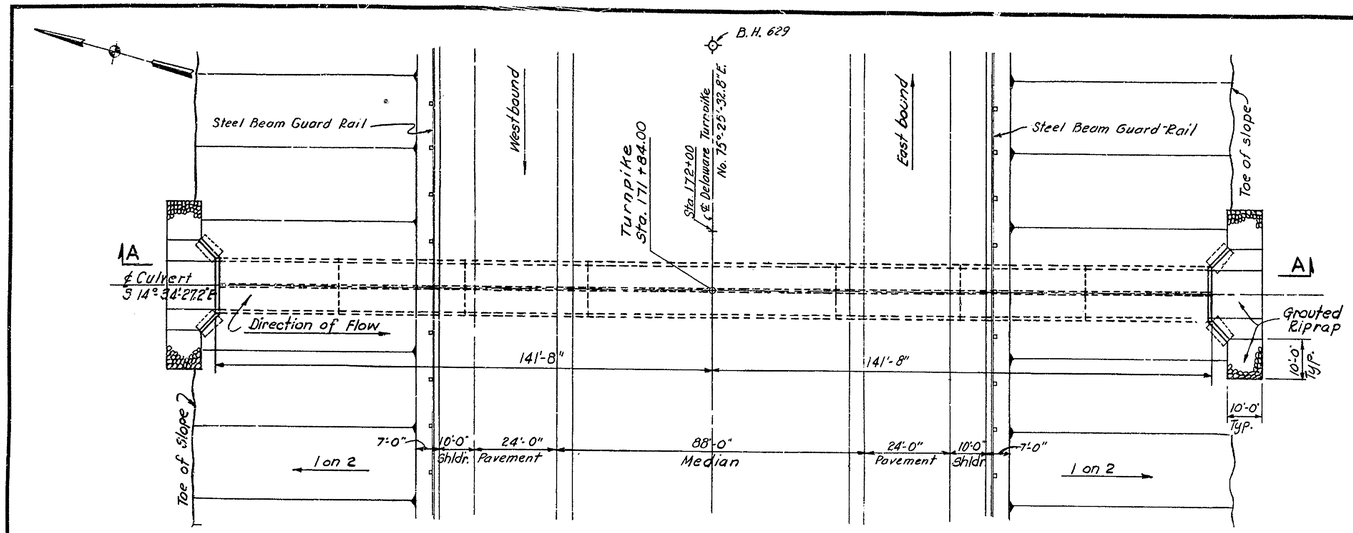

PLAN
SCALE 1 IN. = 20 FT.

LEGEND:
Bore Hole

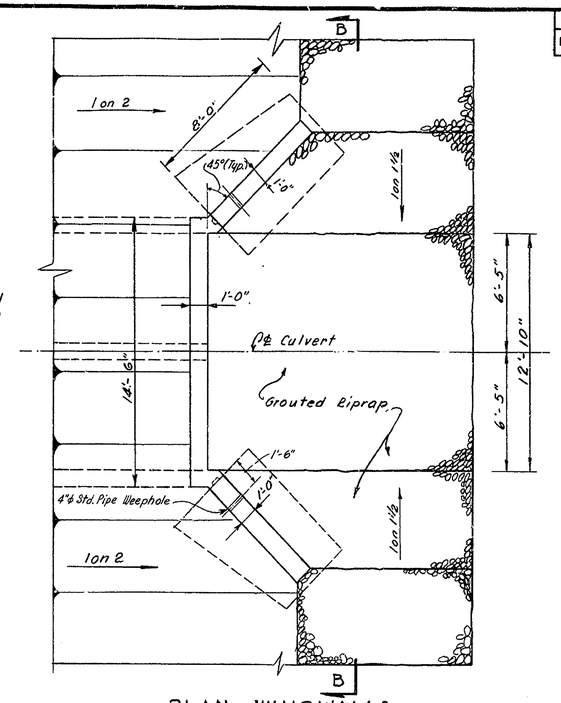

PLAN - WINGWALLS
SCALE 1/4 IN. = 1 FT.

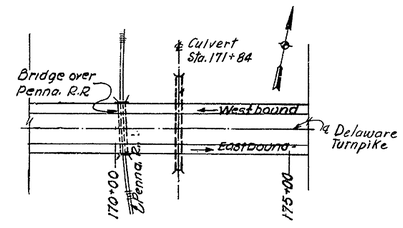

LOCATION PLAN
SCALE 1 IN. = 200 FT.

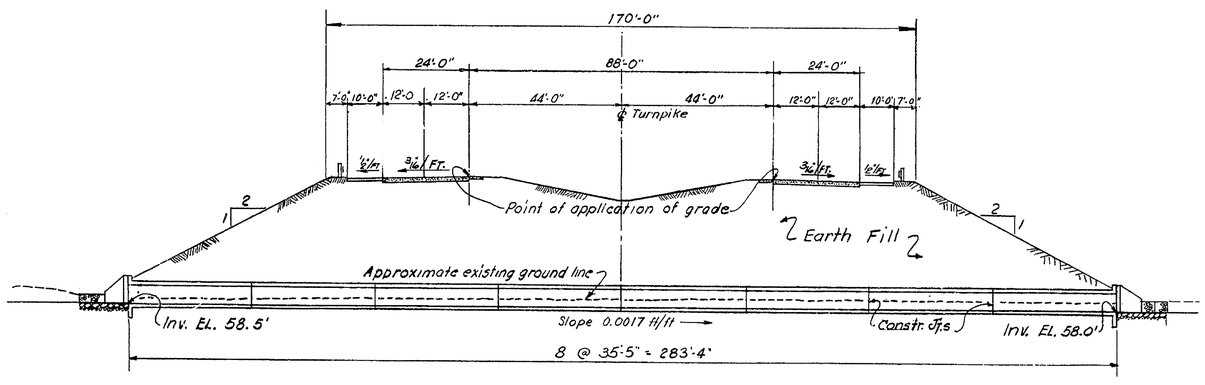

SECTION A-A
SCALE 1 IN. = 20 FT

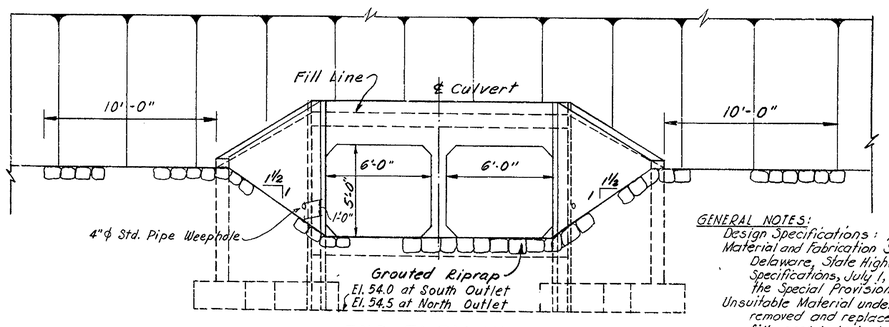

END ELEVATION
SECTION B-B
SCALE 1/4 IN = 1 FT.

GENERAL NOTES:

Design Specifications: A.A.S.H.O. 1957.

Material and Fabrication Specifications: State of Delaware, State Highway Department, Standard Specifications, July 1, 1960; and as given in the Special Provisions.

Unsuitable Material under the structure shall be removed and replaced by well-compacted fill; cost to be included in Highway Payment Items.

Embankment around culvert shall be placed simultaneously on both sides and to the same elevations.

The minimum waiting period before loads are permitted on the structure after the culvert top slab is placed shall be 10 days for loads of 2 tons to 10 tons and 28 days for loads of 10 tons to the legal load limit.

Quantities shown will not relieve the Contractor of the responsibility of checking them in preparing his bid.

For Boring Logs, see Sheet 26.

Maximum allowable soil pressure: 2 Tons/sq. ft.

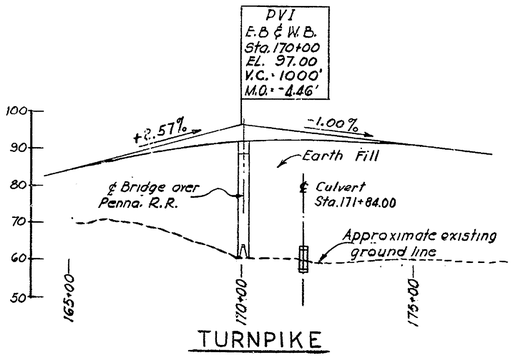

TURNPIKE

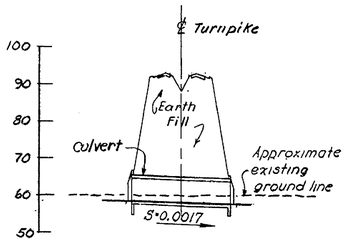

CULVERT

℄ PROFILES
SCALES: HOR. 1 IN. = 200 FT.
VERT. 1 IN. = 20 FT.

TABLE OF QUANTITIES

ITEM NO.	DESCRIPTION	UNIT	QUANTITY
4	Excavation for Structures	C.Y.	876
* 18	Portland Cement Concrete Masonry		
		C.Y.	19
	Box Culvert	C.Y.	504
19	Superficial Waterproofing	S.Y.	900
20*	Bar Reinforcement	lbs.	81,000
64	Grouted Rip-Rap	S.Y.	142
7	Select Borrow	C.Y.	200

* indicates Fixed Quantity Item, see Proposal.

DELAWARE STATE HIGHWAY DEPARTMENT

DELAWARE TURNPIKE

CULVERT AT STA. 171+84

GENERAL PLAN

DRAWN: B.M.-H.M.T.	SCALE: AS NOTED	DATE: MAY 9, 1962	DWG.: C1-1
TRACED:	TIPPETTS-ABBETT-McCARTHY-STRATTON ENGINEERS AND ARCHITECTS		CONTRACT 7002
CHECKED: G. K.			
CHARGE OF			SHEET 206 OF 224

COUNTY	CONTRACT	P.R.A. REV. NO.	STATE	FED. AID PROJECT NO.	FISCAL YEAR	SHEET NO.	TOTAL SHEETS
NEW CASTLE	7002	2	DEL.			207	224

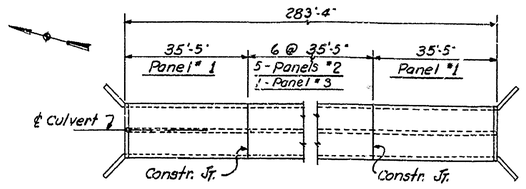

PLAN
LOCATION OF CONSTRUCTION JOINTS AND PANELS
SCALE 1 IN. = 20 FT.

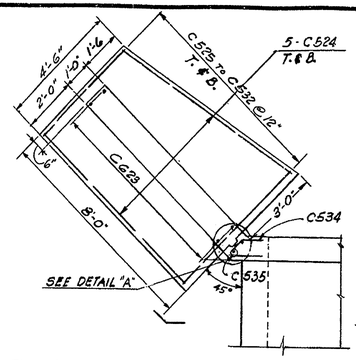

FOOTING PLAN-TYPICAL WINGWALL
SCALE 3/8 IN. = 1 FT.

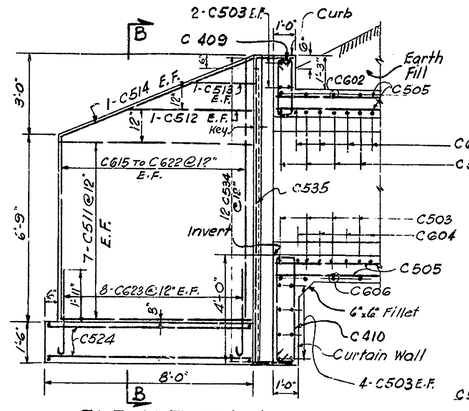

ELEVATION A-A
SCALE 3/8 IN. = 1 FT.

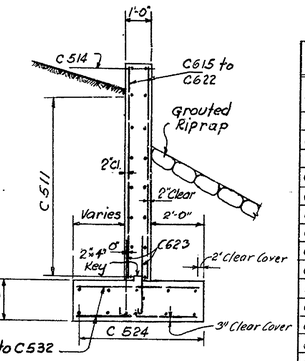

SECTION B-B
SCALE 3/8 IN. = 1 FT.

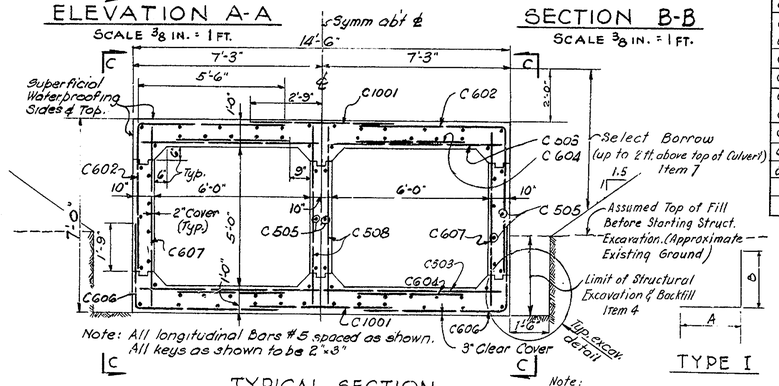

Note: All longitudinal Bars #5 spaced as shown. All keys as shown to be 2"x3"

TYPICAL SECTION
SCALE 3/8 IN. = 1 FT.

Note: Longitudinal Bars are denoted only for Panels "1 and "2. See Plan Roof Slab, Section C-C and Elevation Center Wall for Panel "3.

BAR LIST

MARK	SIZE	AMT. REQ'D.	LENGTH	TYPE	A	B	C	D	Δ	REMARKS
C1001	#10	576	5'-6"	STR.						Culvert
C602	6	576	10'-10"	I	5'-6"	5'-4"				"
C503	5	600	14'-2"	STR.						Culvert and Portal
C604	6	1120	4'-6"	STR.						Culvert
C505	5	504	36'-6"	STR.						"
C606	6	576	8'-6"	I	5'-6"	3'-0"				"
C607	6	576	6'-7"	STR.						"
C508	5	576	6'-7"	STR.						Culvert
C409	4	30	5'-9"	IV	1'-10½"	7½"	4½"			Portal
C410	4	30	9'-3"	IV	7½"	3'-7½"	4½"			Portal
C511	5	56	7'-2"	STR.						Wingwall
C512	5	8	5'-10"	STR.						"
C513	5	8	3'-2"	STR.						"
C514	5	8	7'-8"	STR.						"
C615 THRU C622	6	8 EACH	6'-7" TO 9'-6"	STR.					5°	Wingwall
C623	6	64	3'-10"	II	3'-2"	8"	6"			Wingwall-F'tg.
C524	5	40	7'-6"	STR.						Footing
C525 THRU C532	5	8 EACH	4'-2" TO 5'-8"	STR					38°	Footing
C533	5	72	35'-1"	STR.						Culvert
C534	5	48	2'-11"	III	1'-0"	8"	1'-4"			Portal
C535	5	8	10'-10"	STR.						Portal

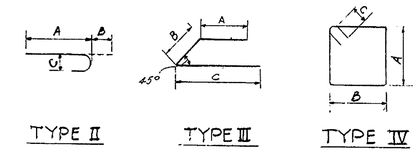

TYPE I TYPE II TYPE III TYPE IV

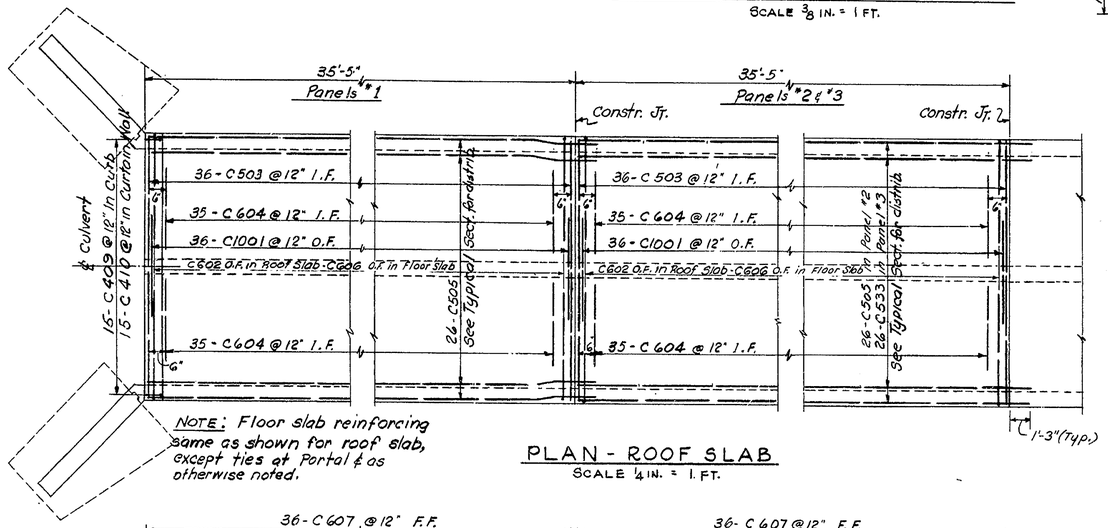

NOTE: Floor slab reinforcing same as shown for roof slab, except ties at Portal & as otherwise noted.

PLAN - ROOF SLAB
SCALE 1/4 IN. = 1 FT.

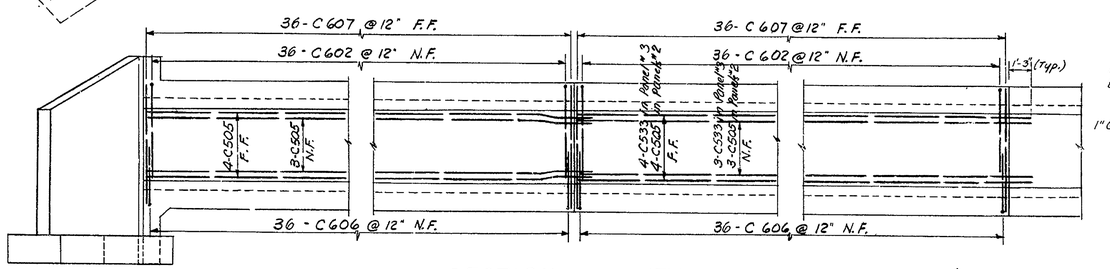

SECTION C-C - OUTSIDE WALLS
SCALE 1/4 IN. = 1 FT.

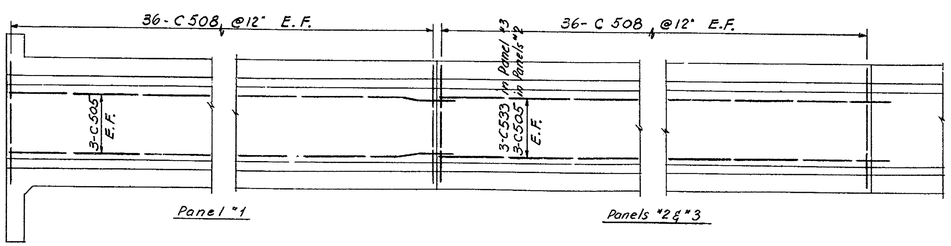

ELEVATION - CENTER WALL
SCALE 1/4 IN. = 1 FT.

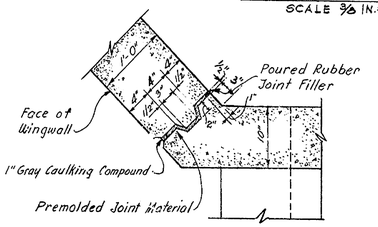

DETAIL "A"
EXPANSION JOINT
SCALE 1 IN. = 1 FT.

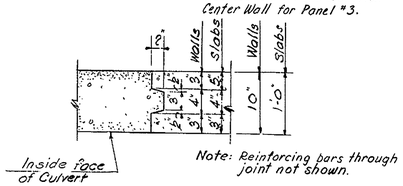

CONSTRUCTION JOINT DETAIL
SCALE 1 IN. = 1 FT.

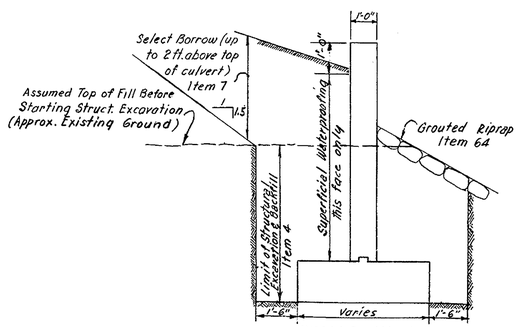

WING WALL
EXCAVATION AND BACKFILL DETAIL
NOT TO SCALE

CONCRETE NOTES:

Splices for stress bars shall be a minimum of 30 diameters; all other splices a minimum of 20 diameters.
Construction Joints other than those shown will not be permitted without written approval of the Engineer.
Exposed Concrete Edges shall be beveled 1 inch by 1 inch, unless otherwise noted.
Concrete Cover as per A.A.S.H.O. or as noted.
Cost of furnishing and placing all bituminous joint materials, caulking compound, joint filler, water stops and pipe weepholes shall be included in Item 18, "Portland Cement Concrete Masonry."
Design Stresses: reinforcing steel = 18,000 p.s.i.; reinforced concrete f_c = 1,200 p.s.i.; n = 10.

DELAWARE STATE HIGHWAY DEPARTMENT
DELAWARE TURNPIKE

CULVERT AT STA. 171 + 84
SECTIONS AND DETAILS

DRAWN: B.M.-HMT	SCALE: AS NOTED	DATE: MAY 9, 1962	DWG.: C1-2
TRACED:	TIPPETTS-ABBETT-McCARTHY-STRATTON ENGINEERS AND ARCHITECTS		CONTRACT 7002
CHECKED: G. K.			
CHARGE OF			SHEET 207 OF 224

COUNTY	CONTRACT	P.R.A. REG. NO.	STATE	FED. AID PROJECT NO.	FISCAL YEAR	SHEET NO.	TOTAL SHEETS
NEW CASTLE	7002	2	DEL.			208	224

DELAWARE TURNPIKE

STRUCTURE NO. 1 BORING NO. 1-204
Sta. 40+94 127' Left El. 130.52

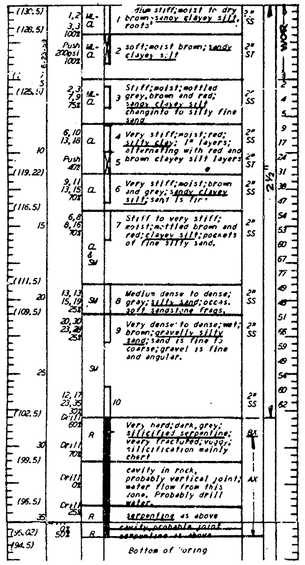

STRUCTURE NO. 1 BORING NO. 1-205
Sta. 40+63 24' Left El. 129.41

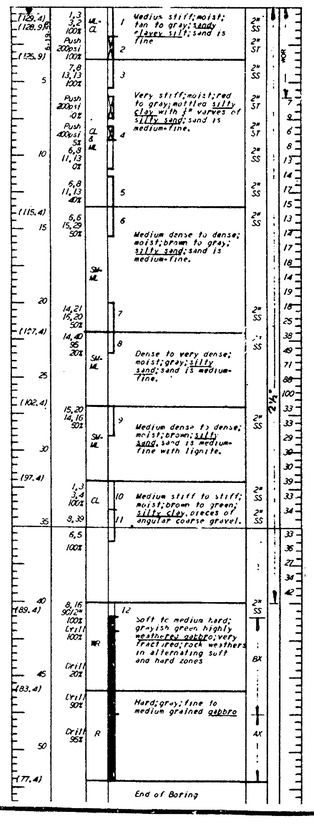

STRUCTURE NO. 1 BORING NO. 1-206
Sta. 40+79 24' Right El. 129.76

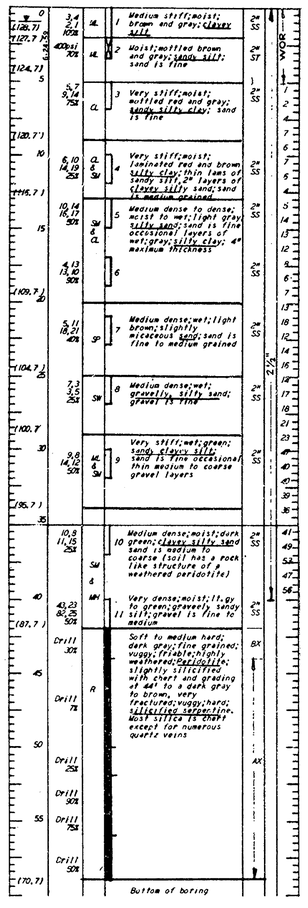

STRUCTURE NO. 2 BORING NO. 2-406
Sta. 101+56 85' Right El. 150.59

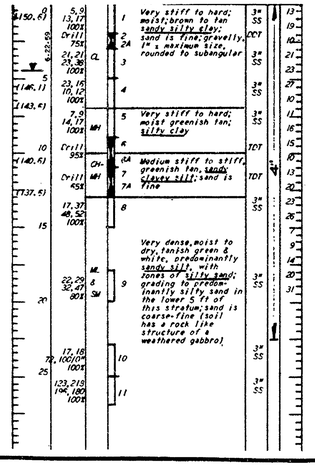

STRUCTURE NO. 1 BORING NO. 1-207
Sta. 40+49 130' Right El. 130.42

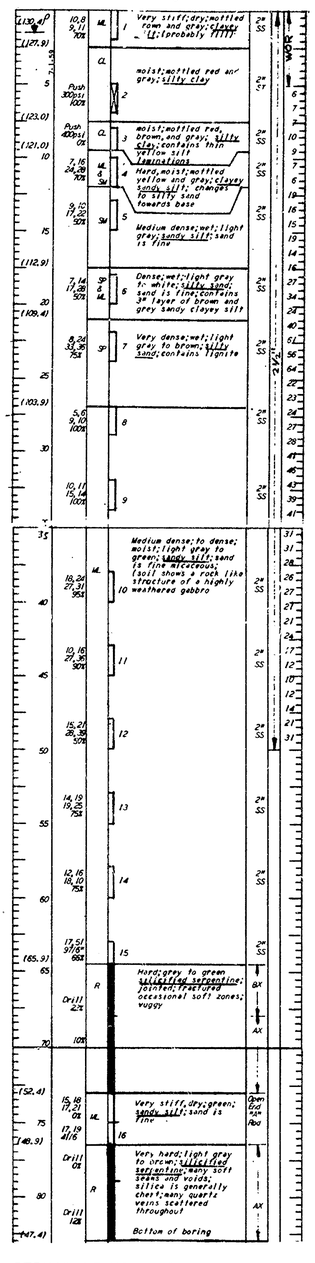

STRUCTURE NO. 2 BORING NO. 2-406 (Cont'd)

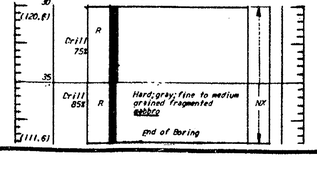

STRUCTURE NO. 1 BORING NO. 1-403
Sta. 41+14 98' Left El. 130.69

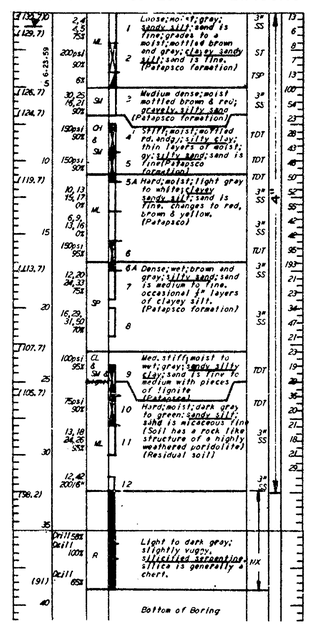

STRUCTURE NO. 2 BORING NO. 2-209
Sta. 102+22 ℄ El. 147.60

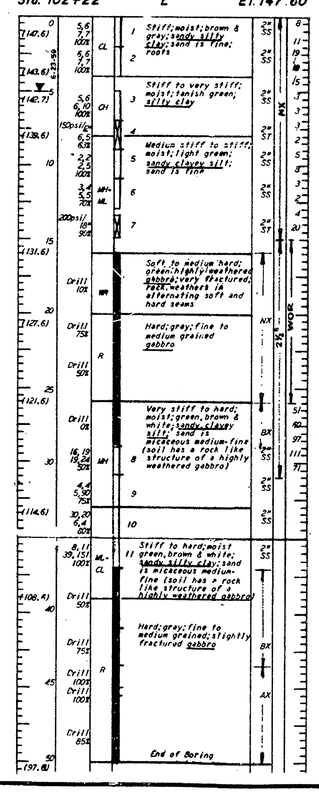

STRUCTURE NO. 1 BORING NO. 1-404
Sta. 40+28 98' Right El. 129.39

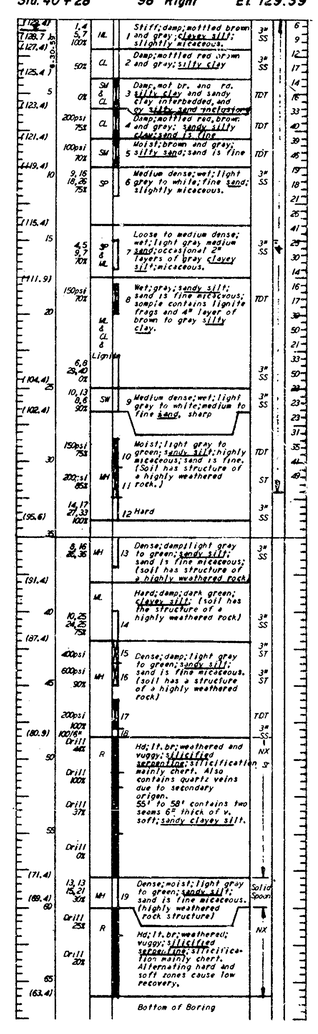

STRUCTURE NO. 2 BORING NO. 2-208
Sta. 102+89 85' Left El. 143.57

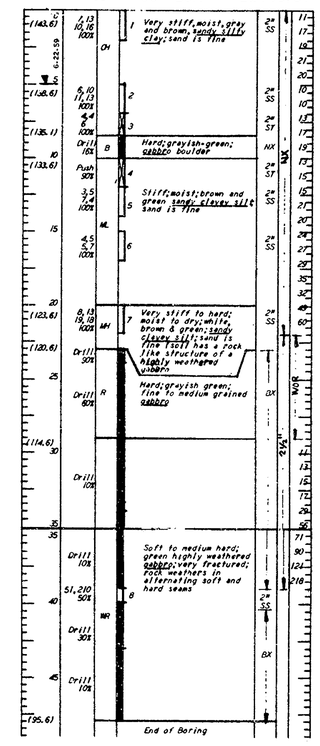

STRUCTURE NO. 2 BORING NO. 2-405
Sta. 102+82 137' Left El. 136.99

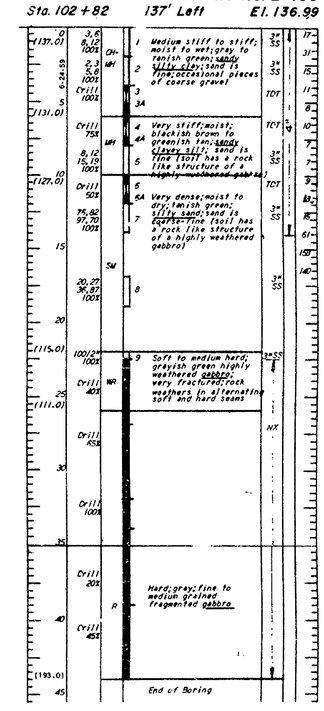

STRUCTURE NO. 2 BORING NO. 2-210
Sta. 101+56 138' Right El. 152.42

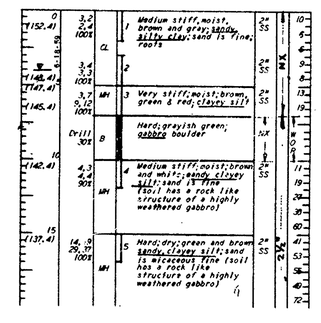

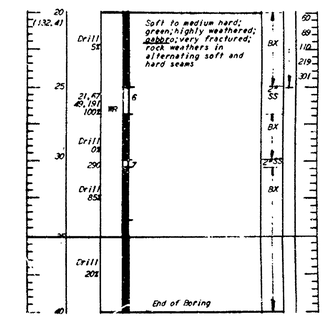

STRUCTURE NO 1 - Road 397 Bridge Over Turnpike
STRUCTURE NO 2 - Road 367 Bridge Over Turnpike

For symbols and notes see Sheet 24

DELAWARE STATE HIGHWAY DEPARTMENT
DELAWARE TURNPIKE

BORING LOGS

DRAWN:	SCALE:	DATE:	DWG.:
TRACED:	TIPPETTS-ABBETT-McCARTHY-STRATTON ENGINEERS AND ARCHITECTS		CONTRACT 7002
CHECKED:			
CHARGE OF			SHEET 208 OF 224

COUNTY	CONTRACT	P.R.A. REG. NO.	STATE	FED. AID PROJECT NO.	FISCAL YEAR	SHEET NO.	TOTAL SHEETS
NEW CASTLE	7002	2	DEL			209	224

DELAWARE TURNPIKE

STRUCTURE NO.3 BORING NO.3-211
Sta. 136+81 130' Left El. 63.58

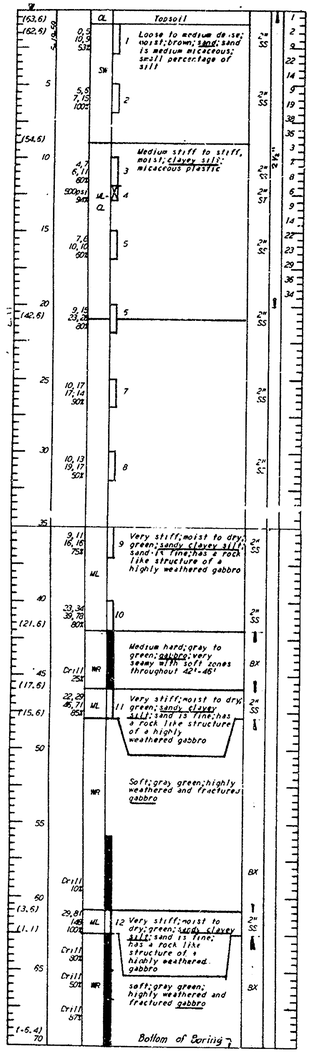

STRUCTURE NO.3 BORING NO.3-212
Sta. 137+73 ℄ El. 73.20

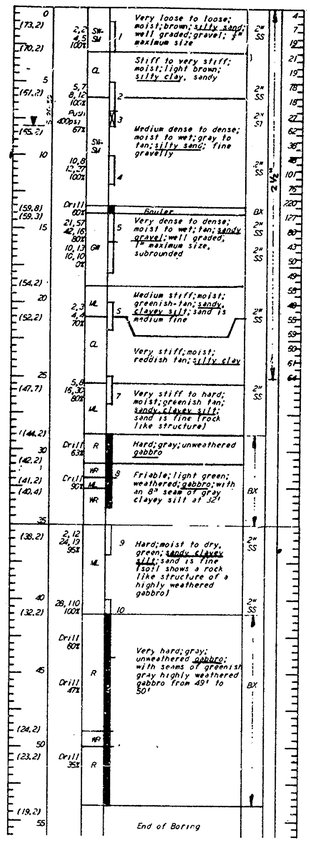

STRUCTURE NO.3 BORING NO.3-213
Sta. 139+42 166' Right El. 77.77

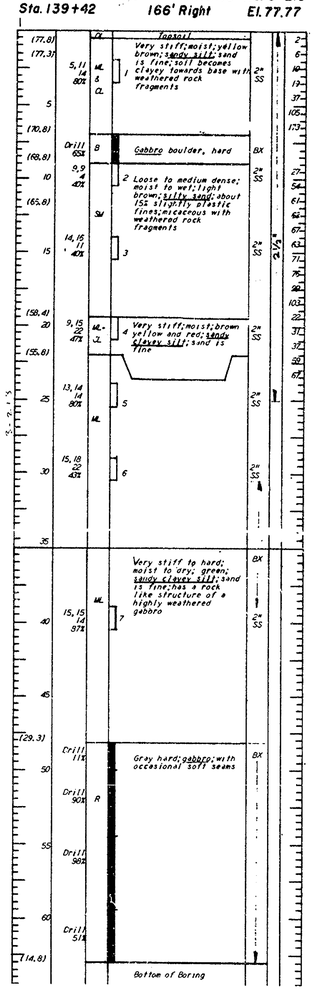

STRUCTURE NO.3 BORING NO.3-407
Sta. 137+89 111' Left El. 64.83

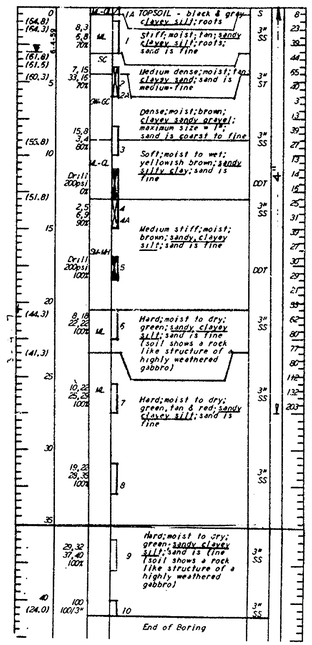

STRUCTURE NO.3 BORING NO.3-408
Sta. 138+19 116' Right El. 78.58

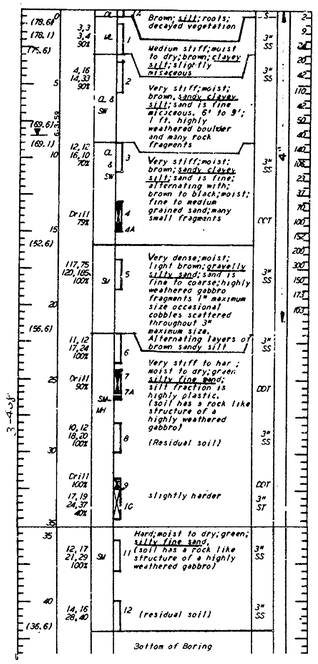

STRUCTURE NO.5 BORING NO.5-222
Sta. 52+10 22' Left El. 50.4

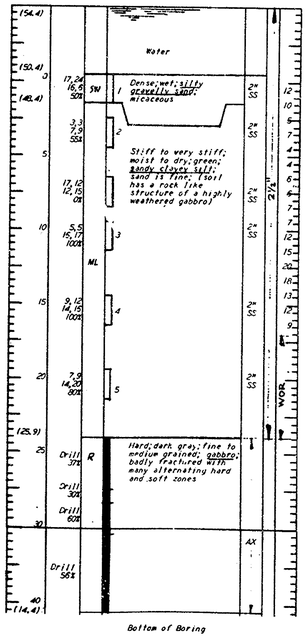

STRUCTURE NO.5 BORING NO.5-221
Sta. 51+82 81' Left El. 59.62

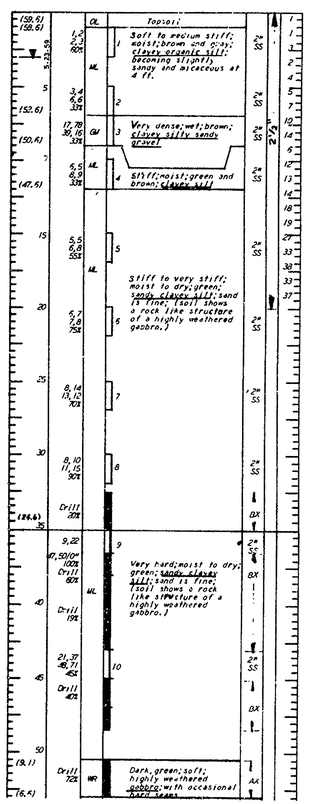

STRUCTURE NO.5 BORING NO.5-413
Sta. 52+53 51' Right El. 58.12

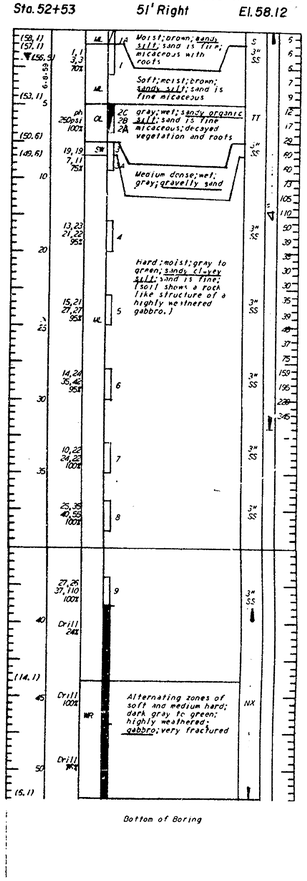

For symbols and notes see Sheet 24

STRUCTURE NO 3 - Route 896 Bridge Over Turnpike
STRUCTURE NO 5 - Route 896 Bridge Over Christina R.

DELAWARE STATE HIGHWAY DEPARTMENT
DELAWARE TURNPIKE

BORING LOGS

DRAWN:	SCALE:	DATE:	DWG.:
TRACED:	TIPPETTS-ABBETT-McCARTHY-STRATTON ENGINEERS AND ARCHITECTS		CONTRACT 7002
CHECKED:			
CHARGE OF			SHEET 209 OF 224

COUNTY	CONTRACT	P.R.A. REG. NO.	STATE	FED. AID PROJECT NO.	FISCAL YEAR	SHEET NO.	TOTAL SHEETS
NEW CASTLE	7002	2	DEL			210	224

DELAWARE TURNPIKE

STRUCTURE NO.4 BORING NO.4-214
Sta. 148+35 69' Left El. 49.5

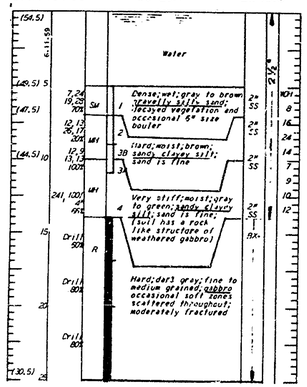

STRUCTURE NO.4 BORING NO.4-215
Sta. 149+02 31' Left El. 55.89

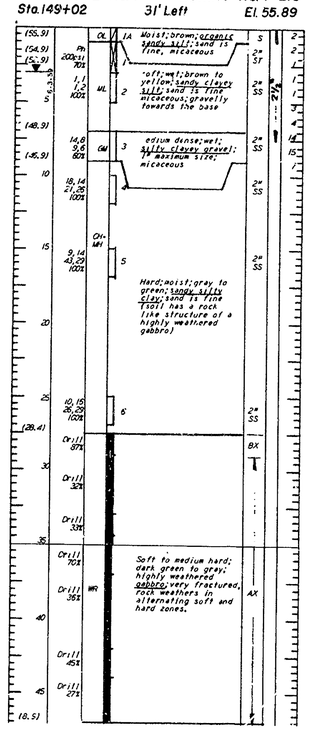

STRUCTURE NO.4 BORING NO.4-216
Sta. 147+98 31' Right 56.03

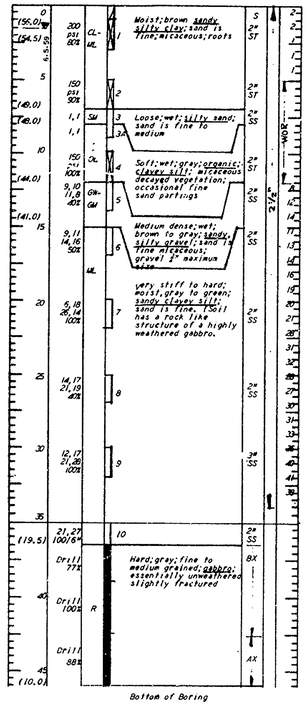

STRUCTURE NO.4 BORING NO.4-217
Sta. 148+69 91' Left El. 50.0

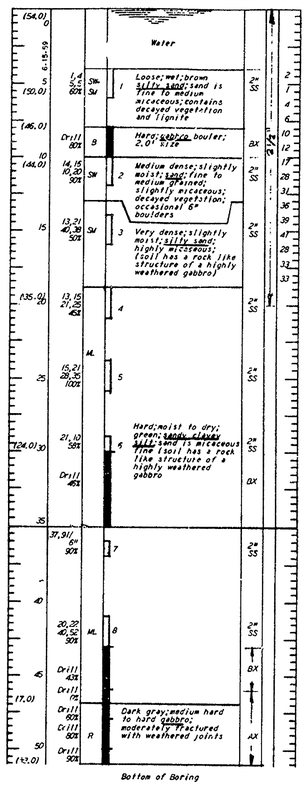

STRUCTURE NO.4 BORING NO.4-409
Sta. 147+69 83' Left El. 56.04

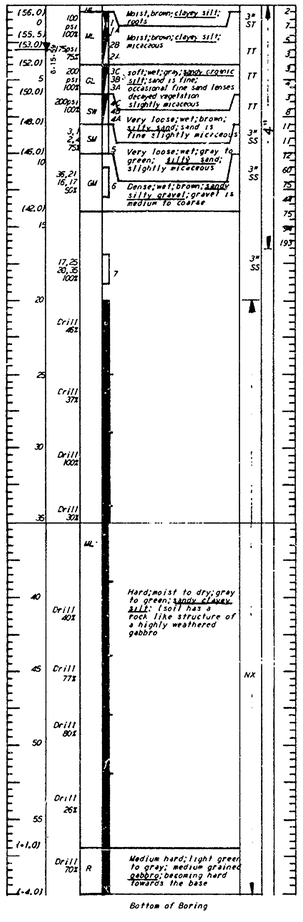

STRUCTURE NO.4 BORING NO.4-410
Sta. 149+37 122' Right El. 55.88

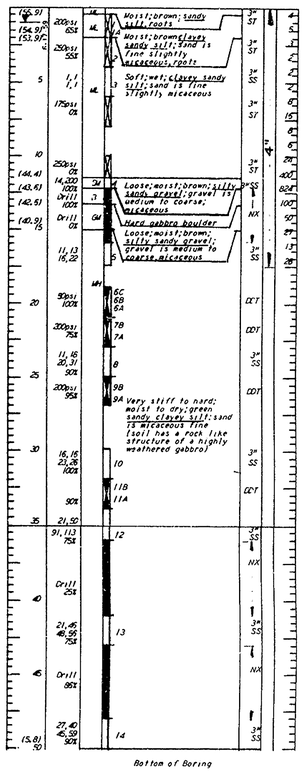

STRUCTURE NO.4 BORING NO.4-410-A
Sta. 149+37 118' Right El. 55.80

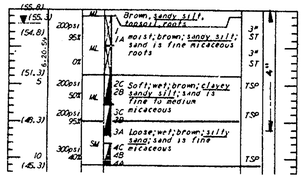

STRUCTURE NO.4 BORING NO.4-419
Sta. 149+27 72' Right El. 55.70

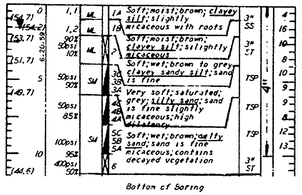

For symbols and notes see Sheet 24

STRUCTURE NO 4 - Turnpike Bridge Over Christina River

DELAWARE STATE HIGHWAY DEPARTMENT
DELAWARE TURNPIKE

BORING LOGS

DRAWN:	SCALE:	DATE:	DWG.:
TRACED:	TIPPETTS-ABBETT-McCARTHY-STRATTON ENGINEERS AND ARCHITECTS		CONTRACT 7002
CHECKED:			
CHARGE OF			SHEET 210 OF 224

COUNTY	CONTRACT	P.R.A. REG. NO.	STATE	FED. AID PROJECT NO.	FISCAL YEAR	SHEET NO.	TOTAL SHEETS
NEW CASTLE	7002	2	DEL.			211	224

DELAWARE TURNPIKE

STRUCTURE NO.6 BORING NO. 6-223

Sta. 170+29 31' Left El. 62.71

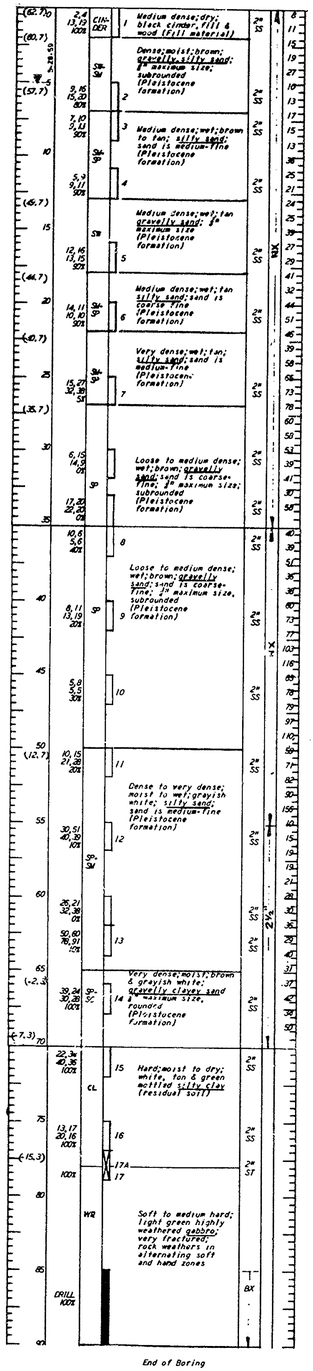

STRUCTURE NO.6 BORING NO. 6-224

Sta. 170+03 31' Right El. 61.07

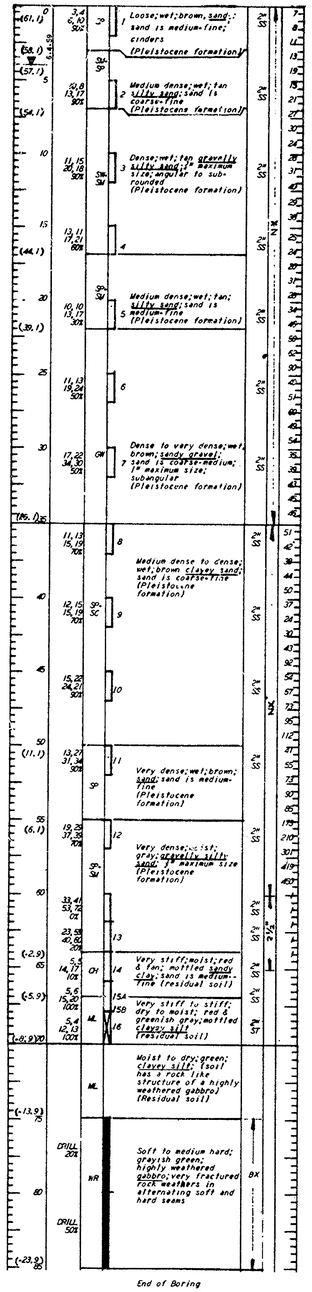

STRUCTURE NO.6 BORING NO. 6-227

Sta. 170+34 81' Right El. 62.48

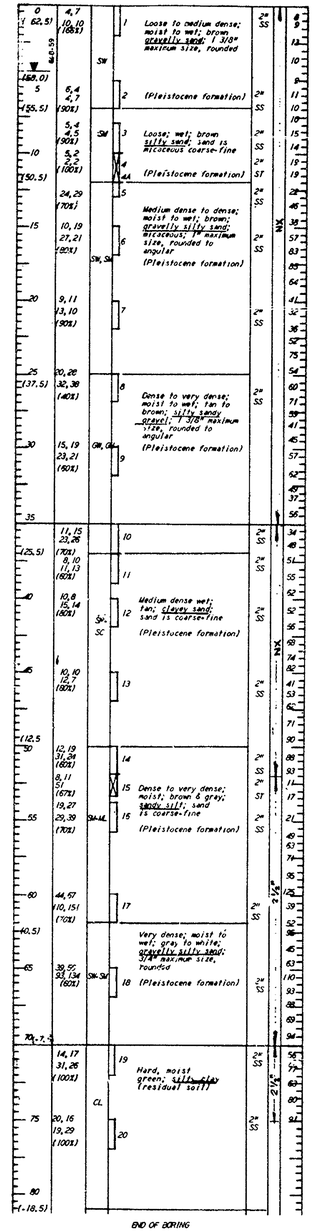

STRUCTURE NO.6 BORING NO. 6-414

Sta. 169+96 81' Left El. 61.48

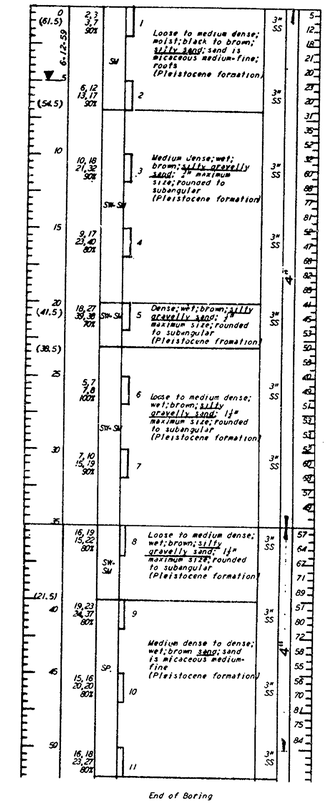

For symbols and notes see Sheet 24

STRUCTURE NO 6 – Turnpike Bridge Over Penna. R.R.

DELAWARE STATE HIGHWAY DEPARTMENT

DELAWARE TURNPIKE

BORING LOGS

DRAWN:	SCALE:	DATE:	DWG.:
TRACED:	TIPPETTS-ABBETT-McCARTHY-STRATTON ENGINEERS AND ARCHITECTS		CONTRACT 7002
CHECKED:			
CHARGE OF			SHEET 211 OF 224

COUNTY	CONTRACT	P.R.A. REG. NO	STATE	FED. AID PROJECT NO.	FISCAL YEAR	SHEET NO	TOTAL SHEETS
NEW CASTLE	7002	?	DEL			212	224

DELAWARE TURNPIKE

STRUCTURE NO. 7 BORING NO. 7-225
Sta. 178+00 81' Left El. 63.48

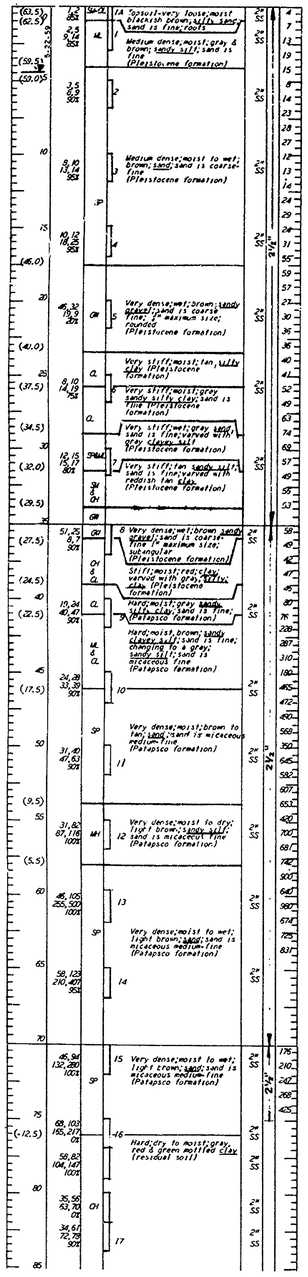

STRUCTURE NO. 7 BORING NO. 7-225
(Cont'd)

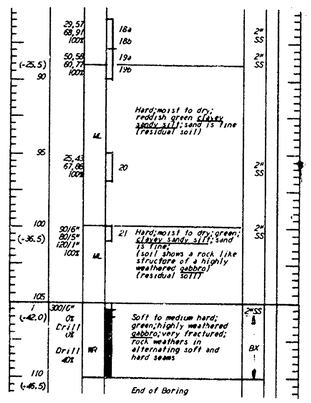

STRUCTURE NO. 7 BORING NO. 7-226
Sta. 179+35 81' Right El. 63.79

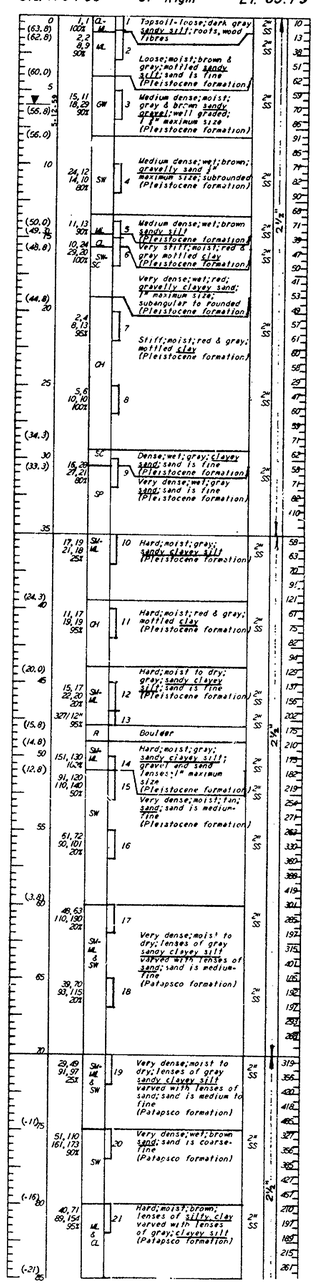

STRUCTURE NO. 7 BORING NO. 7-226
(Cont'd)

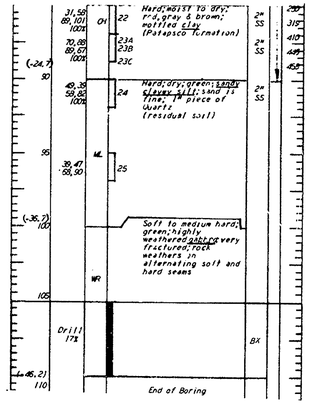

STRUCTURE NO. 7 BORING NO. 7-416
Sta. 178+34 81' Right El. 65.38

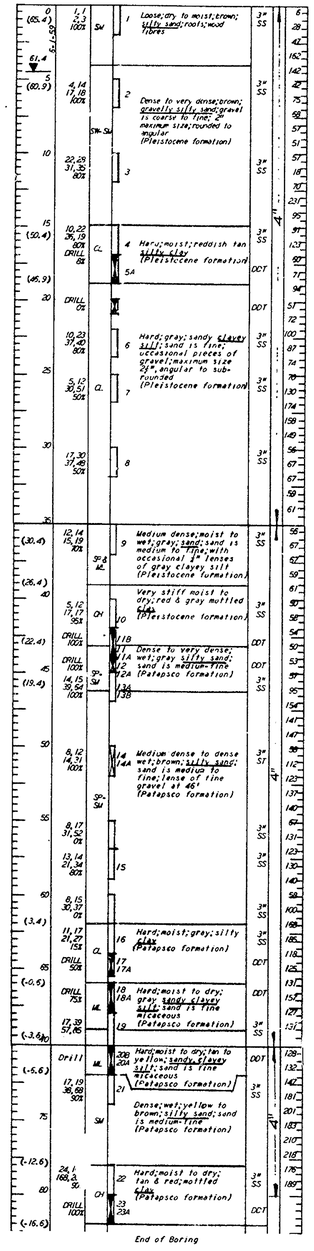

STRUCTURE NO. 7 BORING NO. 7-417
Sta. 179+01 81' Left El. 63.57

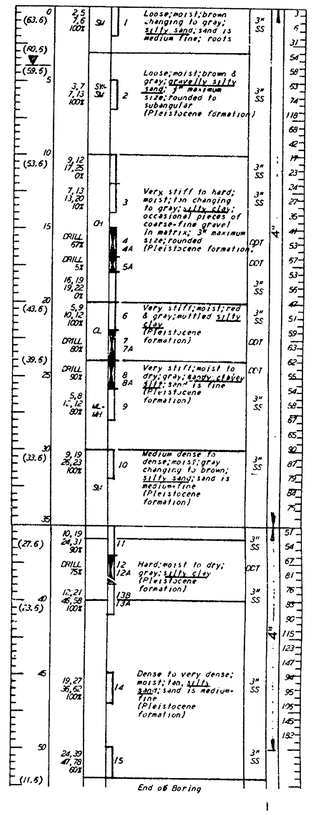

For symbols and notes see Sheet 24

STRUCTURE NO 7 - Turnpike Bridge Over Road 356

DELAWARE STATE HIGHWAY DEPARTMENT
DELAWARE TURNPIKE

BORING LOGS

DRAWN:	SCALE:	DATE:	DWG.:
TRACED:	TIPPETTS-ABBETT-McCARTHY-STRATTON ENGINEERS AND ARCHITECTS		CONTRACT 7002
CHECKED:			
CHARGE OF			SHEET 212 OF 224

FED ROAD DIV NO	FED AID PROJECT NO	STATE	FISCAL YEAR	SHEET NO.	TOTAL SHEETS
				213	224

DELAWARE TURNPIKE
CONTRACT 7002
1962

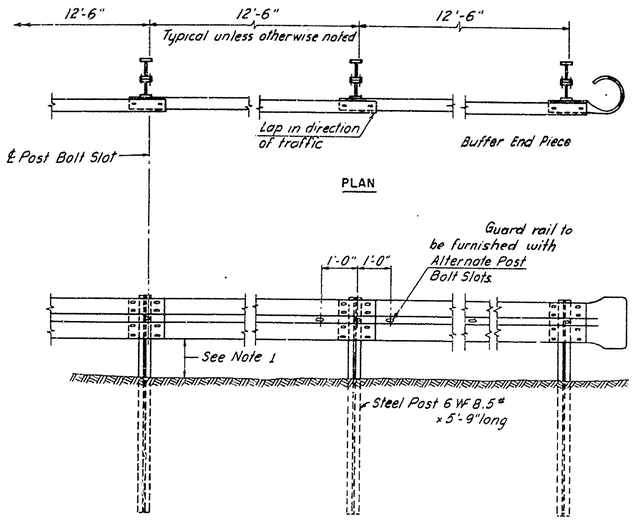

PLAN

ELEVATION

TYPICAL GUARD RAIL SECTIONS
$\frac{1}{2}$" = 1'-0"

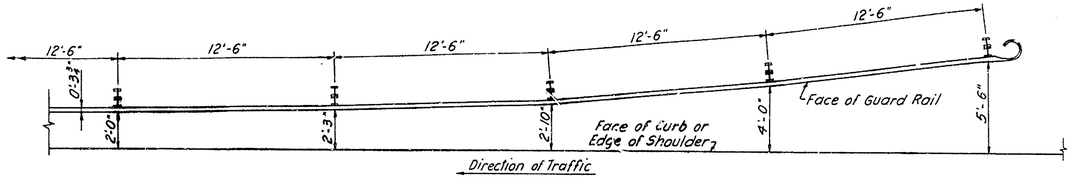

FLARE AT BEGINNING OF GUARD RAIL SECTION
$\frac{1}{4}$" = 1'-0"

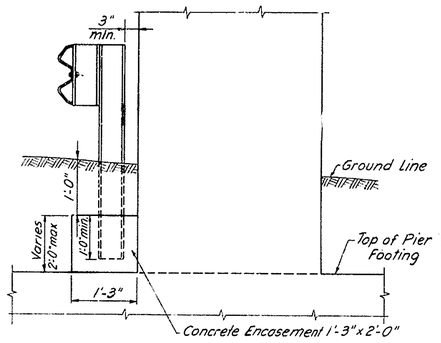

SHORT POSTS AT PIERS
$\frac{3}{4}$" = 1'-0"

Note: Concrete block to be 2'-0" x 2'-0" where short post is required and is not located at pier base or pier shaft, and also at any other sub-surface structure where fill is not deep enough for a normal length post.

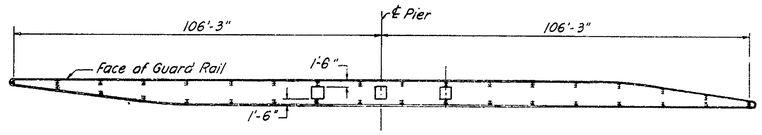

MEDIAN PIER PROTECTION
1" = 20'

Note A: Guard Rail to be bolted to Posts at all locations.

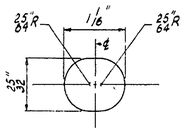

PARAPET CONNECTION SLOT
Full Scale

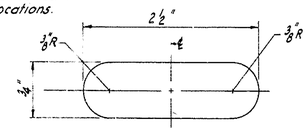

POST BOLT SLOT
Full Scale

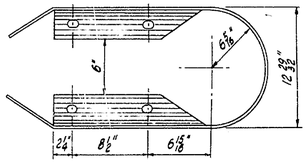

PLAN

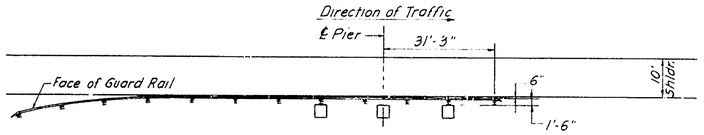

PIER PROTECTION
1" = 20'

This detail applies to piers adjacent to Turnpike Shoulder. At piers adjacent to ramps face of Guard Rail shall be located 2'-0" from face of curb.

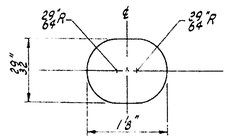

SPLICE BOLT SLOT
Full Scale

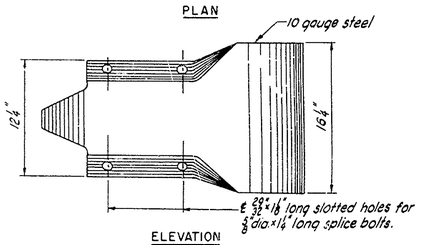

ELEVATION

END SECTION DETAILS

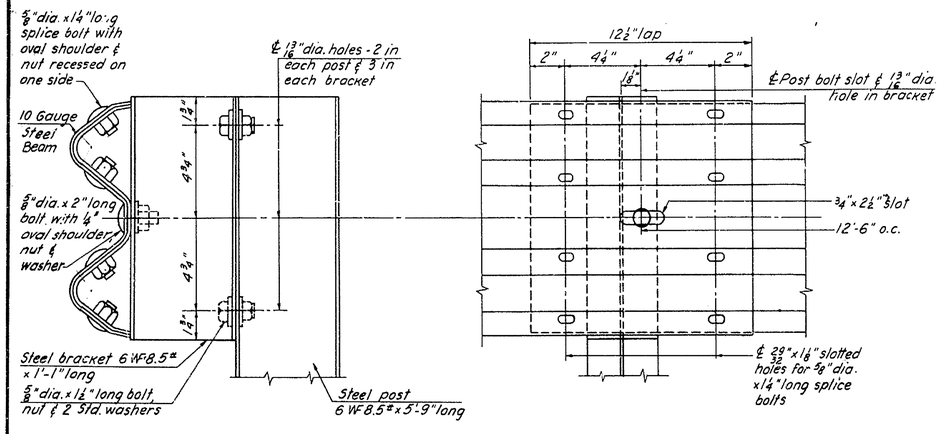

SPLICE DETAILS
3" = 1'-0"

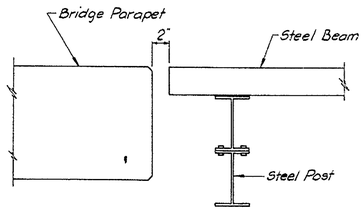

GUARD RAIL ADJACENT TO PARAPET
½" = 1'-0"

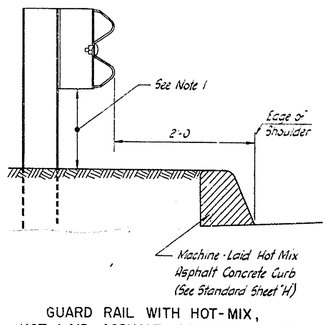

GUARD RAIL WITH HOT-MIX, HOT-LAID ASPHALT CONCRETE CURB
1" = 1'-0"

DETAIL "A"

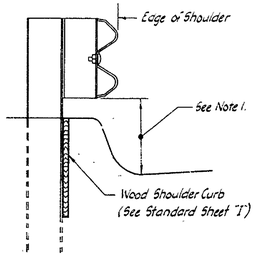

GUARD RAIL WITH WOOD SHOULDER CURB
1" = 1'-0"

DETAIL "B"

General Notes:

1. Nominal dimension to be 1'-1" but to be varied as necessary to produce profile with no humps or dips.
2. All rail elements posts & brackets to be galvanized steel.
3. Oval holes in rail & bent plate detailed in parapet connection are to be punched.

COUNTY	CONTRACT	P.R.A. REG. NO.	STATE	FED. AID PROJECT NO.	FISCAL YEAR	SHEET NO.	TOTAL SHEETS
NEW CASTLE	7002	2	DEL.			214	224

ITEM	DESCRIPTION	UNIT	HIGHWAY QUANTITIES NEAT	STRUCTURAL QUANTITIES NEAT	TOTAL QUANTITIES HIGHWAY & STRUCTURES NEAT	PROPOSAL
1	Clearing & Grubbing	L.S.				Lump Sum
2	Excavation	C.Y.	497,785		497,785	500,000
2A	Removal of Existing Masonry	C.Y.	128		128	150
2B	Channel Excavation	C.Y.	35,325		35,325	40,000
-	Longitudinal Ditch Excavation	C.Y.	7,849		7,849	9,000
-	Special Fill	C.Y.	4,400		4,400	4,500
-	Check Borings	L.F.				200
3	Additional Cost for Rock Excavation, Roadway	C.Y.	39,880		39,880	40,000
4	Excavation for Structures	C.Y.		5,211	5,211	5,500
5	Borrow	C.Y.	150,000		150,000	165,000
6	Borrow Pit Stripping	C.Y.				1,000
7	Select Borrow	C.Y.	28,485	1,720	30,205	33,000
	Select Borrow-Grade A	C.Y.		3,830	3,830	3,900
8	Waterbound Macadam Base Course	S.Y.	8,055		8,055	8,200
8C	Quarry Waste Base Course, 4" Thick	S.Y.	11,086		11,086	12,000
11	Hot-Mix, Hot-Laid Asphaltic Concrete Pavement	Tons	4,448	801	5,249	5,400
	RC-1 Asphalt Tack Coat	Gals.	2,549	1,213	3,762	4,000
13	Cold Laid Bituminous Concrete	Tons				100
-	Coal-Tar Epoxy Underseal	S.Y.		5,410	5,410	5,500
14	RC-1 Asphalt for Bituminous Surface Treatment	Gals.	1,871		1,871	2,000
	RC-3 Asphalt for Bituminous Surface Treatment	Gals.	1,871		1,871	2,000
	Coarse Aggregate for Bituminous Surface Treatment	S.Y.	3,742		3,742	4,000
15	Portland Cement Concrete Pavement	C.Y.	2,200		2,200	2,300
18	Portland Cement Concrete Masonry - Drainage Structure	C.Y.	228		228	250
	Portland Cement Concrete Masonry - Box Culverts	C.Y.		875	875	875
	Portland Cement Concrete Masonry - Footings	C.Y.		2,022	2,022	2,022
	Portland Cement Concrete Masonry - Substructure	C.Y.		3,296	3,296	3,296
	Portland Cement Concrete Masonry - Superstructure	C.Y.		2,258	2,258	2,258
	Portland Cement Concrete Masonry - Approach Slabs	C.Y.		442	442	442
19	Superficial Waterproofing	S.Y.		3,756	3,756	3,850
-	Membrane Waterproofing	S.Y.		630	630	650
20	Bar Reinforcement	Lbs.	7,886	1,346,800	1,354,686	1,355,000
21	Wire Mesh Reinforcement	Squares	870		870	950
22	Structural Steel (Approximate Weight 1,885,000 lbs.)	L.S.				Lump Sum
26	18" Reinforced Concrete Pipe	L.F.	1,552		1,552	1,600
	24" Reinforced Concrete Pipe	L.F.	274		274	300
	30" Reinforced Concrete Pipe	L.F.	118		118	150
	36" Reinforced Concrete Pipe	L.F.	437		437	500
	48" Reinforced Concrete Pipe	L.F.	446		446	500
	54" Reinforced Concrete Pipe	L.F.	286		286	300
	60" Reinforced Concrete Pipe	L.F.	388		388	400
	66" Extra Strength Reinforced Concrete Pipe	L.F.	156		156	170
-	60"x 38" Elliptical Reinforced Concrete Pipe	L.F.	501		501	510
-	42"x 27" Elliptical Reinforced Concrete Pipe	L.F.	228		228	240
-	Concrete Pipe Cradle	C.Y.				50
-	Stone Bedding for Pipes	Tons				100
29	24" Corrugated Metal Pipe, Plain - 16 Gage	L.F.	150		150	150
-	6" Plain Corrugated Metal Pipe Underdrain Outlet	L.F.				500

ITEM	DESCRIPTION	UNIT	HIGHWAY QUANTITIES NEAT	STRUCTURAL QUANTITIES NEAT	TOTAL QUANTITIES HIGHWAY & STRUCTURES NEAT	PROPOSAL
31	Perforated Corrugated Metal Pipe Underdrains	L.F.	20,492	970	21,462	23,000
35	Cast-in-Place Concrete Piles	L.F.		31,160	31,160	32,600
	Steel Shell Test Piles	L.F.		1,770	1,770	1,850
-	Steel Bearing Piles, 12BP53	L.F.		11,120	11,120	11,600
-	Steel Pile Load Test	Each		3	3	3
-	Aluminum Bridge Railing - Single Rail	L.F.		1,091	1,091	1,100
-	Aluminum Bridge Railing - Double Rail	L.F.		1,974	1,974	1,990
-	Bridge Catch Basins (Scuppers)	L.S.				Lump Sum
-	Bridge Drainage Pipe - Wrought Iron Pipe and Fittings	L.S.				Lump Sum
37	Portland Cement Concrete Gutter, 4" Thick	S.Y.	4,750		4,750	5,000
38	Portland Cement Concrete Curb, Type 1	L.F.	180		180	200
40	Portland Cement Concrete Parkway Curb, Type 2	L.F.	112		112	120
-	Machine Laid, Hot-Mix Asphalt Concrete Curb	L.F.	1,065		1,065	1,200
42	Wood Shoulder Curb	L.F.	2,115		2,115	2,200
43	Corrugated Metal Downspouts	L.F.	1,105		1,105	1,200
44	Catch Basin, Type PWBD-1	Each	10		10	13
	Catch Basin, Type PWBD-2	Each	2		2	2
	Catch Basin, Type PWBD-3	Each	2		2	2
	Catch Basin, Type PWBD-4	Each	3		3	3
45	Manhole, Type W-48	Each	1		1	1
52	Topsoiling	S.Y.	34,300		34,300	38,000
53	Seeding	Acre	68.7		68.7	72
54	Mulching	S.Y.	332,300		332,300	350,000
55	Sodding	S.Y.	880		880	1,000
57	Sand for Footings	Tons				100
60	Lateral Ditching	L.F.	2,400		2,400	2,800
61	Calcium Chloride for Dust Control	Tons				15
64	Riprap, Grouted	S.Y.	915	364	1,279	1,500
-	Slope Paving	S.Y.		3,493	3,493	3,550
-	Removal of Existing Concrete Pavement	S.Y.	1,790		1,790	1,900
-	Construction and Removal of Route 896 Detour	L.S.				Lump Sum
-	Steel Beam Guard Rail, Galvanized	L.F.	4,582		4,582	5,000
-	Protective Coating for Concrete	S.F.		5,759	5,759	5,900
-	Permanent Wood Barricades	L.F.	108		108	110
-	Furnish and Install Six (6)-Five (5) Inch Fibre Ducts in Conc. Encasement	L.F.	260		260	260
-	Removal of Existing Bridge	L.S.				Lump Sum
-	Field Office	L.S.				Lump Sum
-	Maintenance and Protection of Vehicular Traffic	L.S.				Lump Sum
-	Maintenance and Protection of Railroad Traffic	L.S.				Lump Sum

EARTHWORK

Location	Excavation	Volume of Embankment in Place
Sta.15+64.17 to Sta.43+00	20,557	53,390
Sta.43+00 to Sta.75+00	33,701	76,766
Sta.75+00 to Sta.105+25	83,539	35,969
Sta.105+25 to Sta.128+00	125,529	772
Sta.128+00 to Sta.150+20	33,850	89,281
Sta.150+20 to Sta.159+00	21,887	2,320
Ramp A	342	69,682
Ramp D	143,706	504
Road 367	181	35,449
Road 397	2,553	46,803
Route 896	7,596	89,920
TOTAL	473,424	500,856

DELAWARE TURNPIKE	CONT. NO.	TITLE	SHEET NO.	TOTAL SHEETS
	7002		225	

July 13, 1963
Revised: July 29, 1963

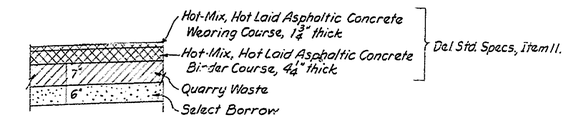

6" HOT MIX ASPHALTIC CONCRETE
Sta. 54+20 to 56+00
2" = 1'-0"

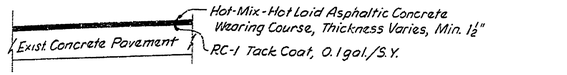

RESURFACING ASPHALTIC CONCRETE
Sta. 50+30 to 56+00
See Sheet Nos. 12 & 19 for Continuation of Ramp "B"

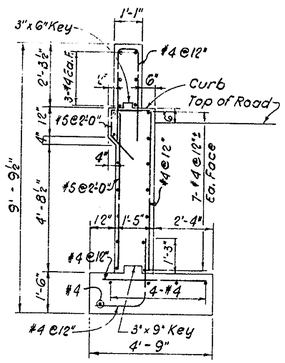

SECTION B-B
Scale: ⅜" = 1'-0"

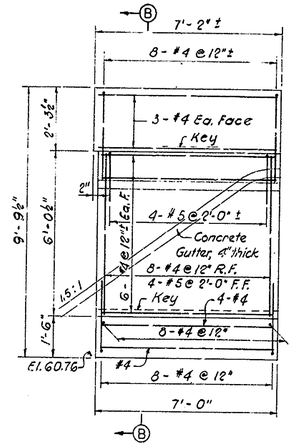

RETAINING WALL NORTH
Scale: ⅜" = 1'-0"

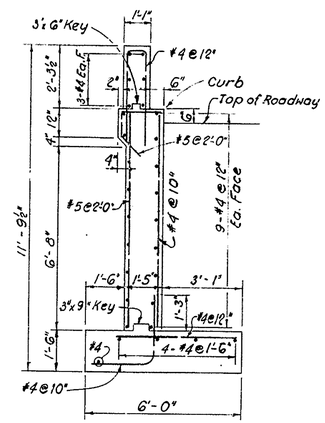

SECTION A-A
Scale: ⅜" = 1'-0"

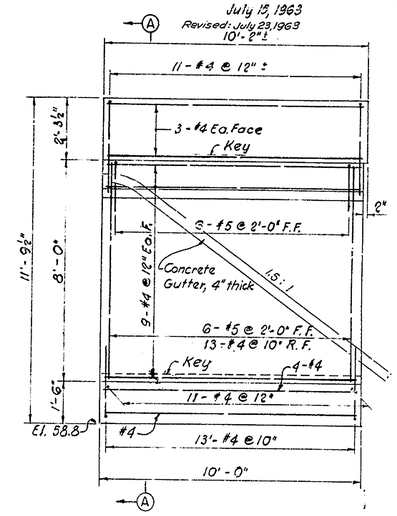

RETAINING WALL SOUTH
Scale: ⅜" = 1'-0"

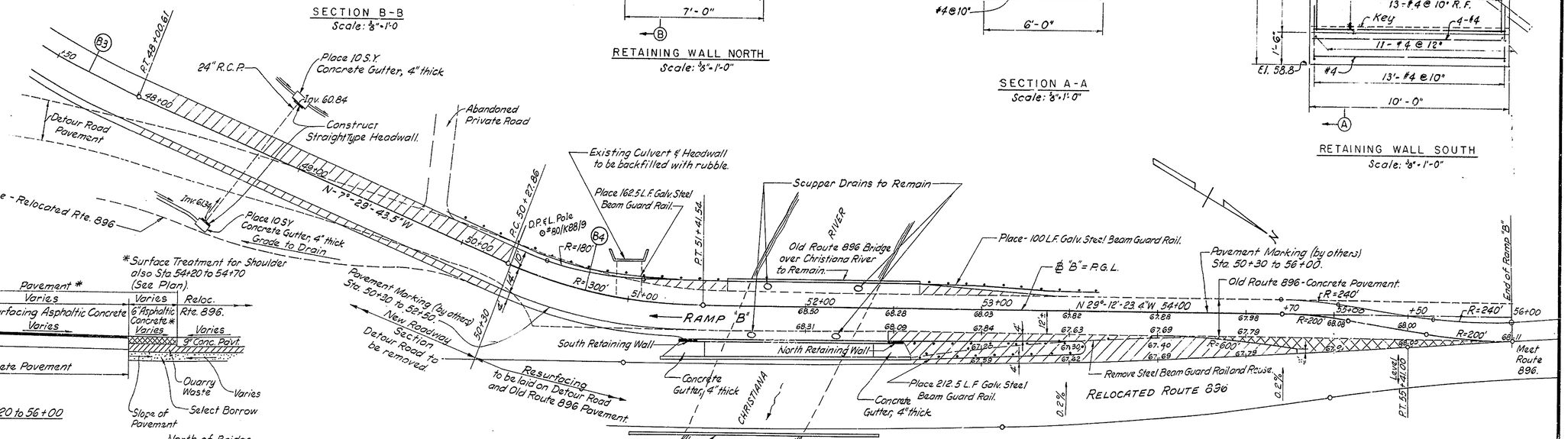

PLAN
1" = 30'

Surface Treatment (Del. Std. Specs, Item 14)
6" Hot-Mix Asphaltic Concrete
Hot-Mix Asphaltic Concrete Wearing Course, also Binder - Sta 44+30 to 50+30.
67.82 Pavement Elevations (Proposed)

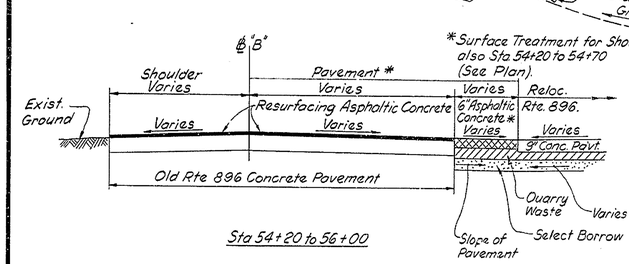

*Surface Treatment for Shoulder also Sta 54+20 to 54+70 (See Plan).

Sta 54+20 to 56+00

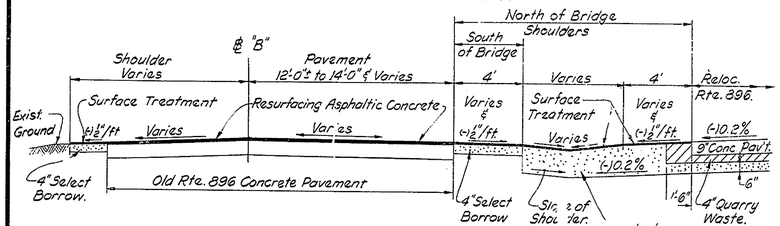

Sta. 50+30 to 54+20

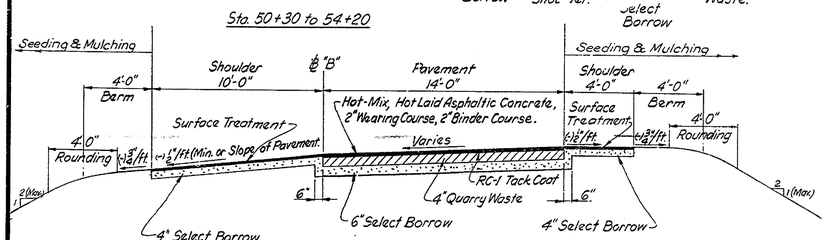

TYPICAL SECTIONS - RAMP "B"
Sta. 44+30 — 50+30
4" = 1'-0"