COUNTY	CONTRACT	P.R.A. REG. NO.	STATE	FED. AID PROJECT NO.	FISCAL YEAR	SHEET NO.	TOTAL SHEETS
NEW CASTLE	64-04-022	2	DEL.	I-95-2(1)122 I-495-3(10)22		94	164

SUMMARY OF BRIDGE QUANTITIES

ITEM Nº	ITEM	UNIT	ABUT. 1	PIER 1	PIER 2	PIER 3	PIER 4	ABUT. 2	SUPERST.	APPROACH SLABS	QUANTITY	PROPOSAL
3A	Rock excavation for structures.	Cu. Yd.	7	3	4	—	—	—	—	—	14	
4	Excavation for structures.	Cu. Yd.	363	133	140	—	27	259	—	—	922	
11	Hot-Mix Asphaltic concrete	Tons	—	—	—	—	—	—	168.1	57.0	225.1	
18	Portland cement conc. masonry (Approach Slabs)	Cu. Yd.	—	—	—	—	—	—	—	82.1	82.1	
18	Portland cement conc. masonry (Abutments)	Cu. Yd.	124.0	—	—	—	—	169.0	—	—	293.0	
18	Portland cement conc. masonry (Piers)	Cu. Yd.	—	54.9	82.1	99.7	87.0	—	—	—	323.7	
18	Portland cement conc. masonry (Superstructure)	Cu. Yd.	—	—	—	—	—	—	478.0	—	478.0	
18	Sub-Foundation concrete	Cu. Yd.	—	—	—	—	—	—	—	—	—	
19	Superficial waterproofing	Sq. Yd.	80	—	—	—	—	87	—	—	167	
20	Bar reinforcement (Bridges)	lbs.	9,723	9,347	12,153	21,592	12,067	8,438	116,405	—	189,725	
22	Structural steel (Approximately 450,400 lbs)	Lump Sum	—	—	—	—	—	—	450,400 lbs	—	Lump Sum	
	Bridge drainage	Lump Sum	—	—	—	—	—	—	Lump Sum	—	Lump Sum	
	Slope protection	Sq. Yd.	266	—	—	—	—	470	—	—	736	
	Steel 'H' piles, 12BP53	Lin. Ft.	—	—	—	31 Piles = 651'	17 Piles = 305'	24 Piles = 1032'	—	—	1,988	
	Steel 'H' test piles, 12BP53	Lin. Ft.	—	—	—	1@ 25'	1@ 25'	1@ 45'	—	—	95	
	Parapet railing (One Pipe)	Lin. Ft.	—	—	—	—	—	—	778.65	—	778.65	
18	Portland cement conc. masonry (Abut. Pedestals)	Cu. Yd.	72.0	—	—	—	—	—	—	—	72.0	
20	Bar reinforcement (Approach Slabs)	lbs.	—	—	—	—	—	—	—	14,837	14,837	
7	Select Borrow	Cu. Yd.	59	—	—	—	—	104	—	—	163	

* Fixed Quantity Items.
Payment for RC-1 asphalt for tack coat shall be included in the Unit Bid Price for Item 11.

NOTES:

- Railing to be continuous through a minimum of 2 panels and continuous through end posts. Joints to be at ℄ of posts with 1" clearance.
- Exposed ends of pipe rails to be closed with a plug welded in.
- Posts to be normal to grade and rail to be parallel to established grade.
- Anchor bolts to be set by template and to be normal to grade.
- After nuts have been placed and tightened to the satisfaction of the Engineer, bolt threads shall be peened.
- Parapet railing shall be paid on a linear foot basis measured continuously ℄ to ℄ of end posts which includes all posts, rails, end closures and anchor bolts.
- Materials to be either aluminum alloy or steel:

Aluminum Alloy:

1. The chemical composition of posts shall conform to A.S.T.M. Specifications B-108-59T, alloy designation SG-70-A and the casting shall be treated to a T-6 temper.
2. Aluminum alloy for Extruded Tubes shall be A.S.T.M. designation B-235-61, alloy GS11-A, condition T6 (6061-T6). Tubing shall be .125" thick.
3. All bolts and nuts shall be made of aluminum alloy as per A.S.T.M. B-211, alloy 2024-T4 (Bolts), alloy 6061-T6 (Nuts). All washers shall be made of aluminum alloy, A.S.T.M. B209 Alclad 2024-T4.

The finished aluminum alloy bolts, nuts, and washers shall be given an anodic coating at least 0.0002 inches thick and a chromate seal.

Steel

1. Posts shall be Malleable Iron Castings A.S.T.M. A47 Grade 35018. Galvanize to A.S.T.M. A-123-59.
2. Rails shall be 3½"φ Standard Weight welded wrought iron pipe A.S.T.M. A72. Galvanize to A.S.T.M. A-123-59.
3. Anchor bolts and nuts to be galvanized to A.S.T.M. A-153 and washers galvanized to A.S.T.M. A-123-59.

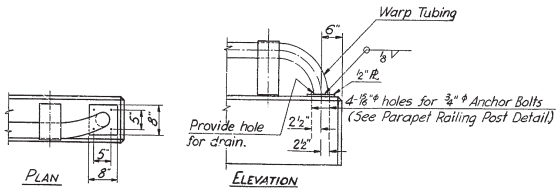

TYPICAL END RAILING DETAIL
Scale: ¾"=1'-0"

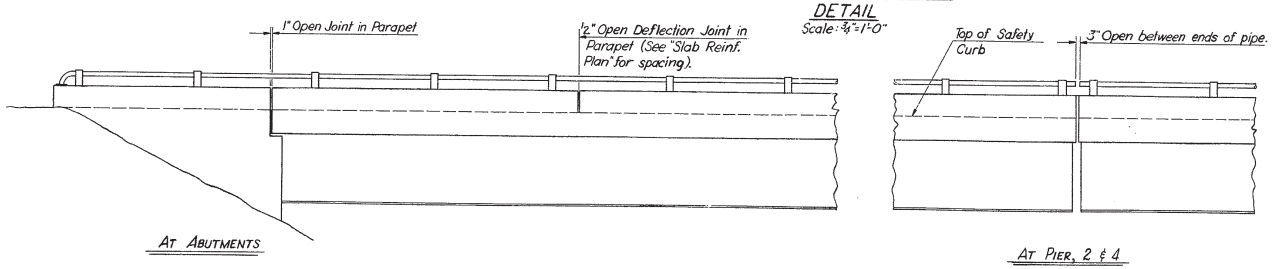

ELEVATION SHOWING PARAPET RAILING
Scale: ¼"=1'-0"

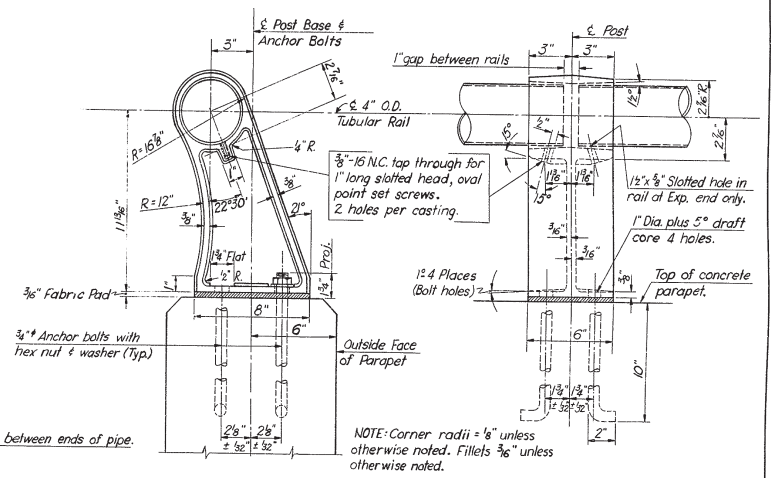

NOTE: Corner radii = ⅛" unless otherwise noted. Fillets 3/16" unless otherwise noted.

PARAPET RAILING POST DETAIL
Scale: 3"=1'-0"

DELAWARE
STATE HIGHWAY DEPARTMENT

FIVE-SPAN STEEL BEAM BRIDGE
CARRYING
I-495 S.B. OVER I-95 & RAMP F

SUMMARY OF QUANTITIES

D.	SCALE	APPROVED BY:
T. R. K.	AS SHOWN	Edwin H. Pearson
C. A. G.		BRIDGE ENGINEER

COUNTY	CONTRACT	P.R.A. REG. NO.	STATE	FED AID PROJECT NO.	FISCAL YEAR	SHEET NO.	TOTAL SHEETS
NEW CASTLE	64-04-022	2	DEL.	I-95-2(14)22 I-495-300(22)		95	164

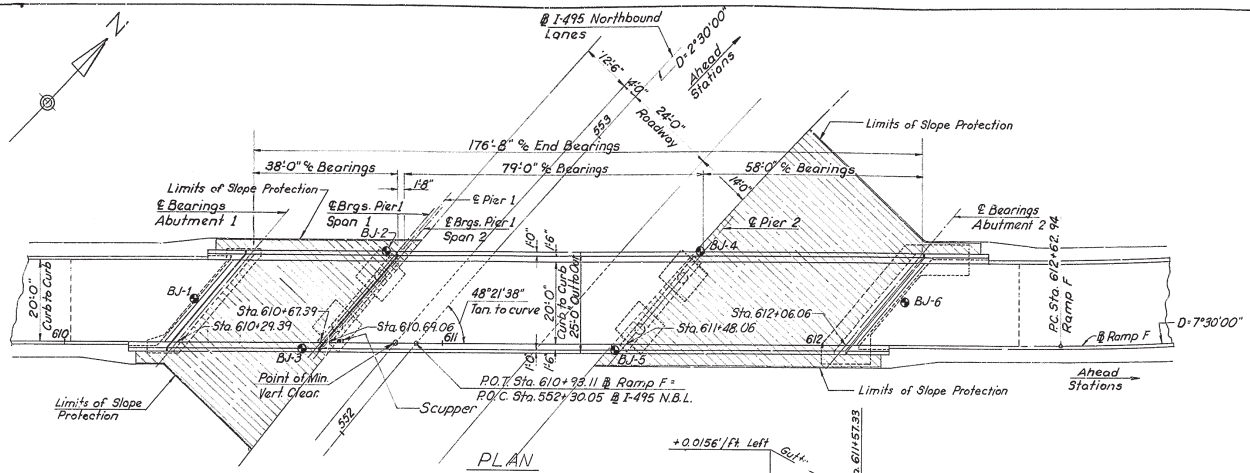

PLAN
Scale 1" = 15'-0"

● Indicates Boring Locations

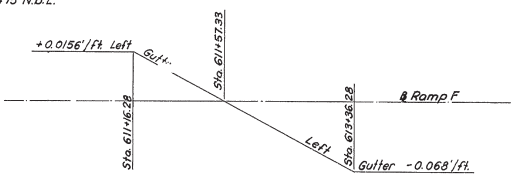

TRANSITION OF RAMP "F"
ROADWAY CROSS SECTION
No Scale

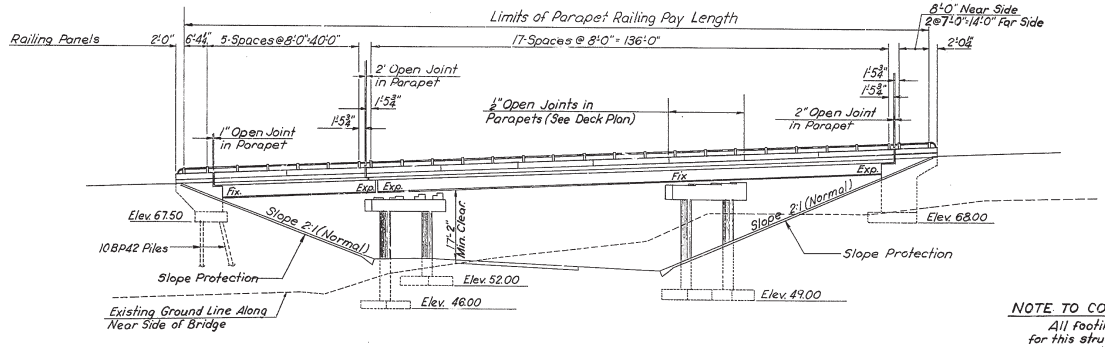

DATUM: 30

ELEVATION
Scale : 1" = 15'-0"

-2.24% +3.53%

P.V.I. Sta. 607+75.00
Elev. 68.56
V.C. 350'

GRADE DATA
RAMP F

-2.03% +2.85%

P.V.I. Sta. 553+00.00
Elev. 53.01
V.C. 900'

GRADE DATA
I-495 NORTHBOUND

GENERAL NOTES

Specifications: Design criteria are based on 1961 Standard Specifications for Highway Bridges, American Association of State Highway Officials, including 1961, 1962 and 1963 interim Specifications.
Material and workmanship are to conform with the State of Delaware, State Highway Department Standard Specifications, dated July 1, 1960, unless otherwise noted and/or specified in Special Provisions. All welding shall conform to the current Specifications for Welded Highway and Railway Bridges by the A.W.S.

Loading: H20-S16-44. Live Load. Dead Load includes a bituminous wearing course of 35 lbs per square foot.

Elevations: Elevations are based on U.S.C. and G.S. datum.

Foundation Data: Foundation design and foundation quantities are based on a study of the borings made at the site. This boring information, the accuracy of which the State does not guarantee, is presented with these plans to the contractor for his information only. The contractor must make his own deductions of subsoil conditions, which may affect his method or cost of construction.

Excavation For Structures. The depth of excavation measured for payment shall be the vertical distance from the bottom of concrete to the ground or fill line existing at the time of excavation. The horizontal limits of excavation for payment shall be as per Section 3A and 4 of the Specifications.

Portland Cement Concrete Masonry: All concrete shall have 28 day strength of 3,000 p.s.i. min. Cover over the bar reinforcement shall be 2 inches except as otherwise noted on the drawings. Bearing for shoes shall be finished at least 6" high, and after curing ground to a true plane and elevation over an area extending 1" beyond the contact surfaces. All exposed edges of concrete shall be chamfered ¾" × ¾" unless otherwise noted. Metal forms to remain in place shall not be used.

Bar Reinforcement: Bar reinforcement to be deformed type (A.S.T.M. A-305) billet steel of intermediate grade (A.S.T.M. A-15). Lapped splices, unless otherwise noted, shall be 24 bar diameters. Bars are detailed as per A.C.I. Code.

Structural Steel: All structural steel shall conform to the requirements of A.S.T.M. A36-62T. Field connections shall be fastened with ¾" high strength bolts or rivets. Beams shall be cambered as shown on drawings; allow for loss of camber due to welding. Do not paint steel surfaces in contact with concrete. The shoes when in final position are to be painted in order to prevent rust stains on concrete. Anchor bolts, immediately after the concrete has attained its initial set, shall be thoroughly coated with an approved heavy grease and securely wrapped in burlap. Payment for these rust preventive measures shall be included in the price bid for Item 22. Welded field splices will not be permitted.

Superficial Waterproofing: The rear faces of the abutments and wingwalls above the top of the footings in contact with fill shall be waterproofed. See Standard Specifications Item 19 and Special Provisions.

Slope Protection: For information on Slope Protection, see Special Provisions. See Sheet Nº 140 for details of Slope Protection.

Painting Metal Surfaces: For type of paint see Special Provisions.

Footings: The footings may be ordered by the Engineer to be at any elevation or of any dimensions necessary to provide a proper foundation.

Piles: See Special Provisions.

NOTE TO CONTRACTOR:

All footings, except that of Abutment Nº 1 for this structure will be founded on material that may seriously disintegrate if exposed to weather and moisture. The contractor will be required to keep foundation area covered with existing material, or a 2" layer of concrete or tarpaulins until concrete footing is poured.

Forms shall be removed at the earliest practical time and areas around footings backfilled and compacted with plastic soil.

All costs in connection with the above requirements will be considered incidental to the item "Excavation for Structures."

DELAWARE
STATE HIGHWAY DEPARTMENT

THREE SPAN STEEL BEAM BRIDGE
CARRYING
RAMP "F" OVER I-495 N.B.

GENERAL PLAN & ELEVATION

D. T. C. Y.S.T.

SCALE 1" = 15'-0"

APPROVED BY: Edwin H. Hansen
BRIDGE ENGINEER

COUNTY	CONTRACT	P.R.A. RES. NO.	STATE	FED. AID PROJECT NO.	FISCAL YEAR	SHEET NO.	TOTAL SHEETS
NEW CASTLE	64-04-022	2	DEL.	I-95-2(14)22 I-495-3(10)22		98	164

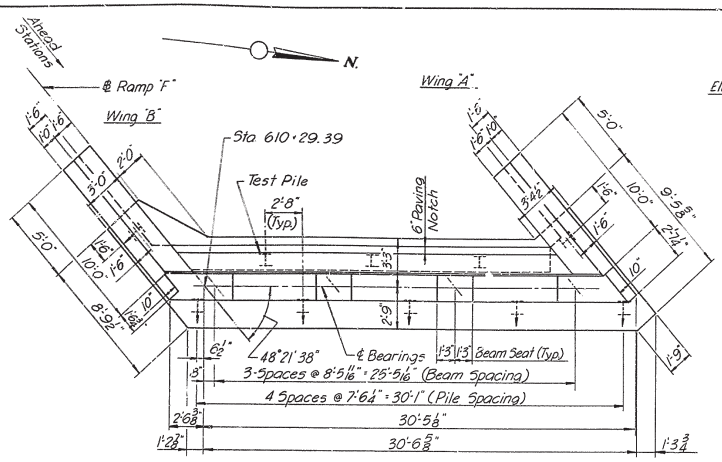

PLAN

Scale: 1/4" = 1'-0"

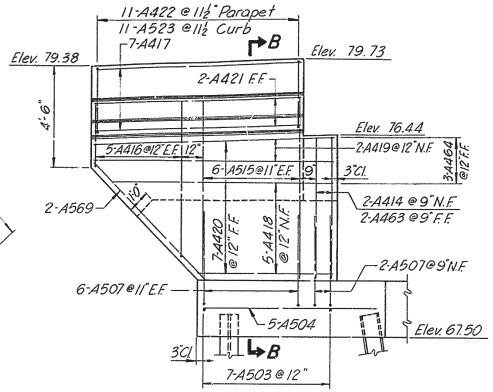

WING "B" ELEVATION

Scale: 3/8" = 1'-0"

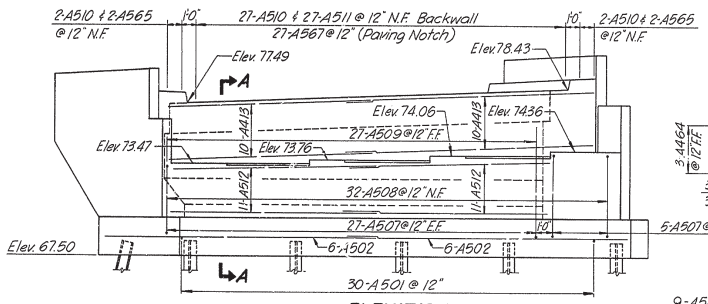

ELEVATION

Scale: 1/4" = 1'-0"

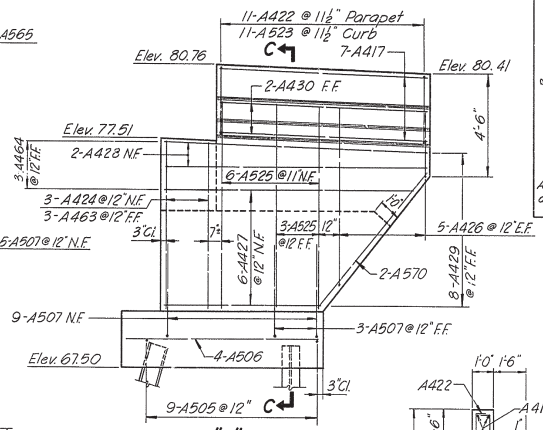

WING "A" ELEVATION

Scale: 3/8" = 1'-0"

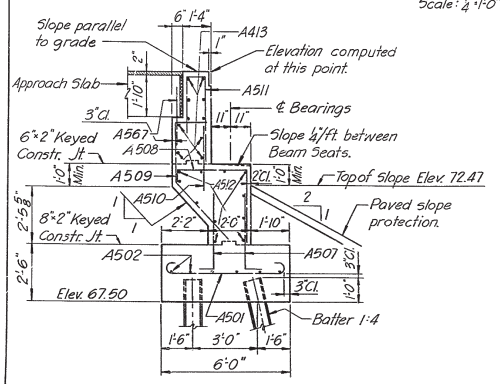

SECTION A-A

Scale: 3/8" = 1'-0"

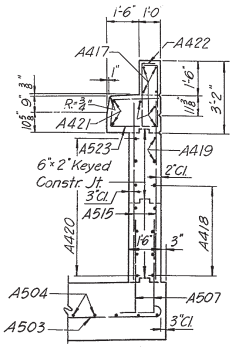

SECTION B-B

Scale: 3/8" = 1'-0"

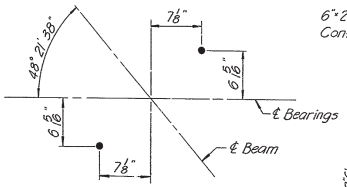

ANCHOR BOLT LAYOUT

No Scale

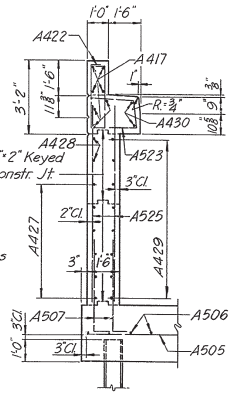

SECTION C-C

Scale: 3/8" = 1'-0"

BAR SCHEDULE FOR ABUTMENTS

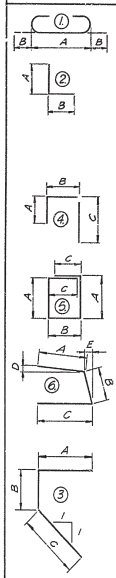

All bar dimensions are out to out.

Mark	No. Required Abut.1	Abut.2	Total	Size	Length	Type	A	B	C	D	E	Remarks
A501	30		30	5	6'-8"	1	5'-6"	7"				
A502	12		12	5	17'-6"	Str.						
A503	7		7	5	3'-8" to 5'-8"	1	2'-6" to 4'-6"	7"				1 ea. vary "A" by 4" - Fan bars
A504	5		5	5	8'-6"	Str.						
A505	9		9	5	4'-0"	Str.						
A506	4		4	5	8'-6"	Str.						
A507	85	83	168	5	4'-5"	2	3'-8"	9"				Dowells in footer
A508	32		32	5	7'-4"	4	3'-3"	3'-3"	9"			
A509	27		27	5	8'-5" to 9'-5"	3	1'-9"	3'-8 1/2" to 2'-8 1/2"	3'-3"			9 Groups of 3 ea. vary "B" by 1 1/2"
A510	31	31	62	5	2'-10"	Str.						Dowells in backwall
A511	27		27	5	7'-2"	4	2'-6"	10"	3'-10"			
A512	22	32	54	5	17'-0"	Str.						
A413	20	20	40	4	16'-9"	Str.						
A414	2		2	4	6'-2"	Str.						
A515	12		12	5	7'-10"	Str.						
A416	10		10	4	2'-8" to 6'-8"	Str.						2 each vary by 1'-0"
A417	14		14	4	9'-8"	Str.						
A418	5		5	4	6'-2" to 10'-2"	Str.						1 each vary by 1'-0"
A419	2		2	4	11'-2"	Str.						
A420	7		7	4	7'-0" to 9'-6"	Str.						1 each vary by 5"
A421	2		2	4	10'-9"	Str.						
A422	22	30	52	4	7'-4"	5	2'-10"	8"	6"			
A523	22	30	52	5	5'-5"	6	2'-0"	1'-3"	2'-2"	1/2"	1 7/8"	
A424	3		3	4	7'-2"	Str.						
A525	9		9	5	8'-9"	Str.						
A426	10		10	4	2'-8" to 7'-4"	Str.						2 each vary by 1'-2"
A427	6		6	4	7'-4" to 11'-4"	Str.						1 each vary by 10"
A428	2		2	4	14'-0"	Str.						
A429	8		8	4	3'-4" to 8'-0"	Str.						1 each vary by 8"
A430	2		2	4	8'-2"	Str.						
A631		30	30	6	7'-6"	Str.						
A632		10	10	6	5'-9"	Str.						Fan bars to fit
A633		19	19	5	8'-3"	Str.						
A634		25	25	6	6'-0"	Str.						Fan bars at footing
A635		6	6	5	32'-0"	Str.						
A636		14	14	5	16'-9"	Str.						
A637		24	24	6	7'-0"	Str.						
A638		5	5	5	12'-7"	Str.						
A539		32	32	5	12'-0"	4	8'-0"	3'-3"	9"			
A640		27	27	5	7'-3"	Str.						
A541		27	27	5	8'-2"	4	2'-6"	10"	4'-10"			
A742		32	32	7	6'-9"	2	5'-6"	1'-3"				
A643		32	32	6	8'-0"	Str.						
A544		1	1	5	12'-3"	Str.						
A445		5	5	4	5'-0"	Str.						
A546		13	13	5	14'-0"	Str.						
A547		13	13	5	5'-9"	Str.						
A548		20	20	5	2'-7" to 5'-3"	Str.						4 each vary by 8"
A549		12	12	5	13'-7"	Str.						
A450		6	6	4	11'-9" to 14'-7"	Str.						2 each vary by 1'-5"
A451		11	11	4	17'-2"	Str.						
A452		2	2	4	18'-1"	Str.						
A653		7	7	5	13'-10"	Str.						
A654		8	8	5	8'-9"	Str.						
A655		3	3	5	11'-11"	Str.						
A656		6	6	5	8'-8"	Str.						
A657		6	6	5	4'-0"	Str.						
A458		3	3	4	6'-2" to 9'-2"	Str.						1 each vary by 1'-7"
A459		3	3	4	4'-4" to 7'-6"	Str.						1 each vary by 1'-7"
A460		9	9	4	11'-2"	Str.						
A461		2	2	4	8'-6"	Str.						
A462		2	2	4	9'-10"	Str.						
A463	5		5	4	4'-3"	Str.						
A464	6	20	26	4	3'-8"	Str.						
A565	4		4	5	4'-6"	Str.						
A566		4	4	5	5'-7"	Str.						
A567	27	27	54	5	3'-3"	Str.						
A568		27	27	5	8'-2"	3	1'-5"	3'-9"	3'-0"			
A569	2		2	5	6'-10"	Str.						
A570	2		2	5	7'-8"	Str.						

NOTES:

- All piles to be 10BP42
- Maximum design pile load = 36 tons.
- Abbreviations:
  - N.F. = Near Face
  - F.F. = Far Face
  - E.F. = Each Face

DELAWARE
STATE HIGHWAY DEPARTMENT

THREE SPAN STEEL BEAM BRIDGE
CARRYING
RAMP "F" OVER I-495 N.B.

ABUTMENT I

D. T.H.M.
T. P.D.&E.J.
C. Y.S.T.

SCALE: AS SHOWN

APPROVED BY:
BRIDGE ENGINEER

COUNTY	CONTRACT	BRIDGE REG. NO.	STATE	FED. AID PROJECT NO.	FISCAL YEAR	SHEET NO.	TOTAL SHEETS
NEW CASTLE	64-04-022	2	DEL.	I-95-2(14)22 I-495-3(10)22		97	164

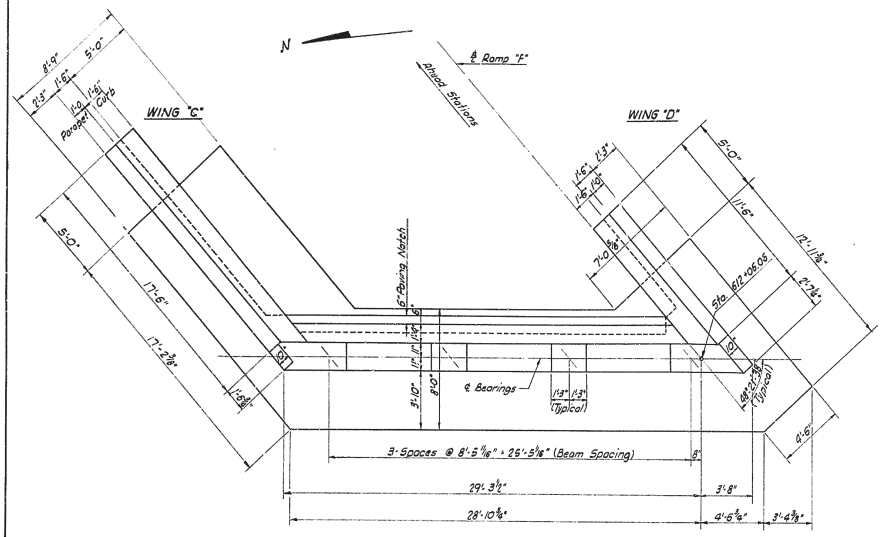

PLAN
Scale: 1/4" = 1'-0"

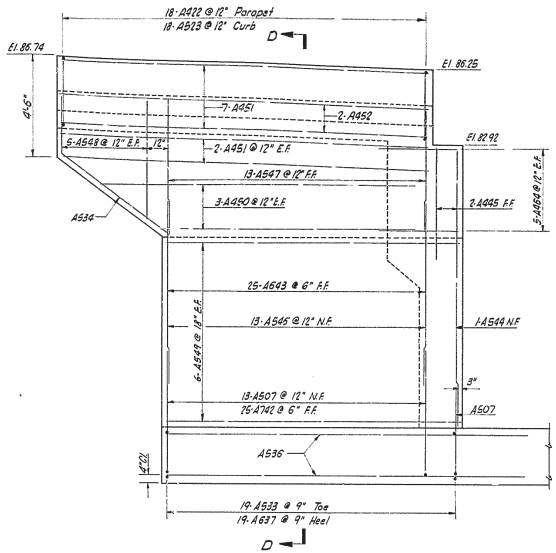

WING "C" ELEVATION
Scale: 3/8" = 1'-0"

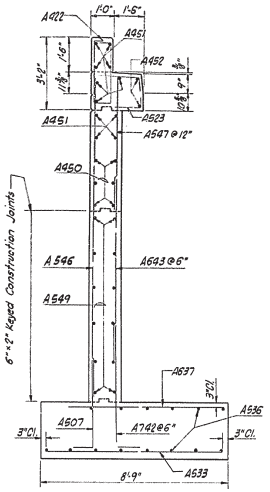

SECTION D-D
Scale: 3/8" = 1'-0"

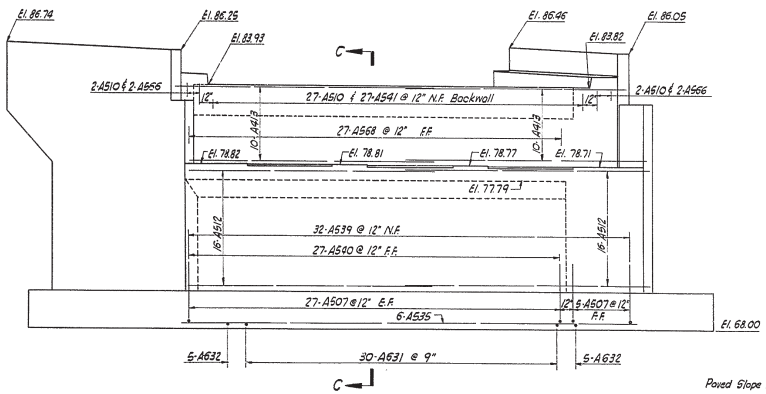

ELEVATION
Scale: 1/4" = 1'-0"

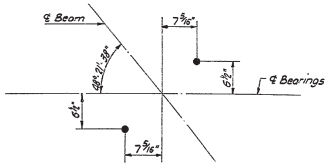

ANCHOR BOLT LAYOUT
No Scale

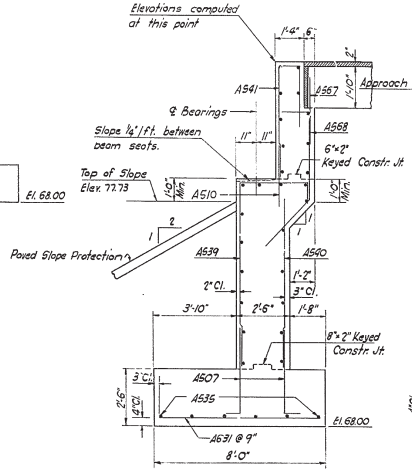

SECTION C-C
Scale: 3/8" = 1'-0"

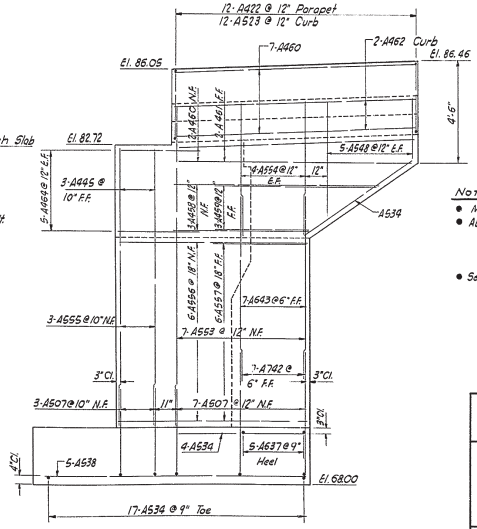

WING "D" ELEVATION
Scale: 3/8" = 1'-0"

Notes:
- Max. Design Found. Pressure: 1.7 Tons per sq. ft.
- Abbreviations:
  E.F. = Each Face
  N.F. = Near Face
  F.F. = Far Face
- See Sheet 3 for abutment bar schedule.

DELAWARE
STATE HIGHWAY DEPARTMENT

THREE SPAN STEEL BEAM BRIDGE
CARRYING
RAMP "F" OVER I-495 N.B.

ABUTMENT 2

D. T.H.M.	SCALE	APPROVED BY:
T. M.M.	AS SHOWN	BRIDGE ENGINEER
C. Y.S.T.		

COUNTY	CONTRACT	P.R.A. REG. NO.	STATE	FED. AID PROJECT NO.	FISCAL YEAR	SHEET NO.	TOTAL SHEETS
NEW CASTL.	64-04-022	2	DEL.	I-95-2(14)122 I-495-3(10)122		98	164

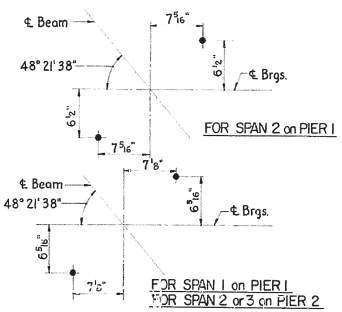

ANCHOR BOLT LAYOUT

No Scale

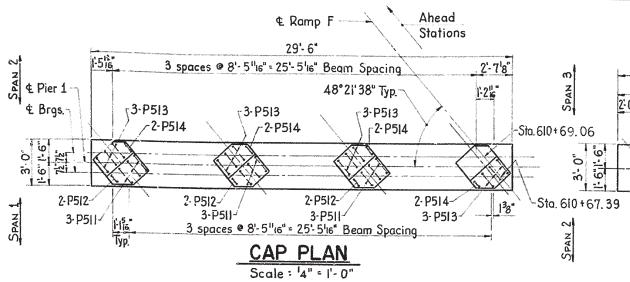

CAP PLAN

Scale : 1/4" = 1'-0"

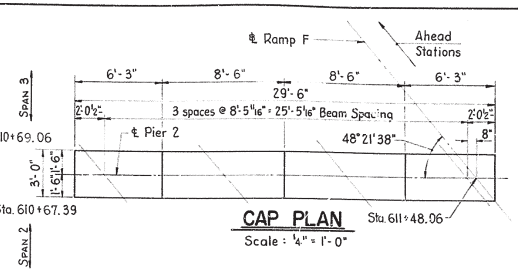

CAP PLAN

Scale : 1/4" = 1'-0"

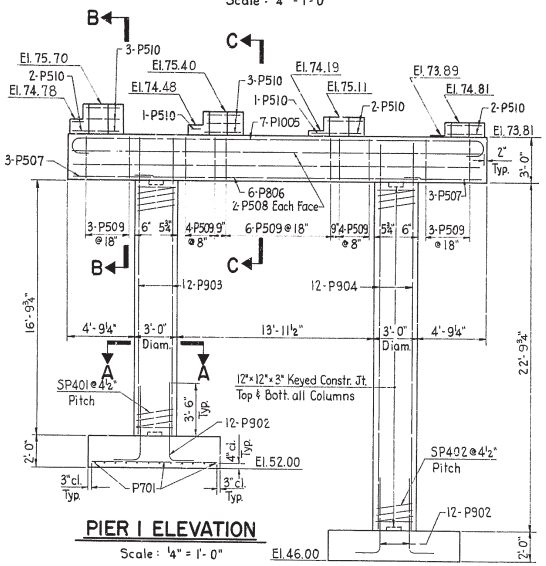

PIER 1 ELEVATION

Scale : 1/4" = 1'-0"

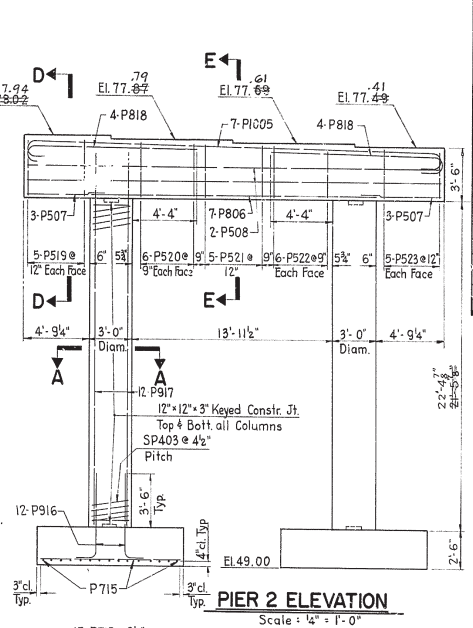

PIER 2 ELEVATION

Scale : 1/4" = 1'-0"

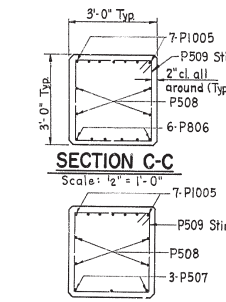

SECTION C-C

Scale : 1/2" = 1'-0"

SECTION B-B

Scale : 1/2" = 1'-0"

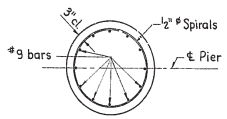

SECTION A-A

Scale : 1/2" = 1'-0"

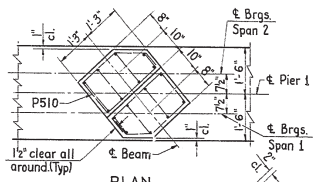

PLAN

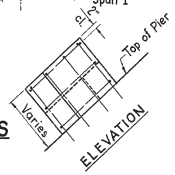

DETAIL OF PEDESTALS ON PIER 1

Scale : 1/2" = 1'-0"

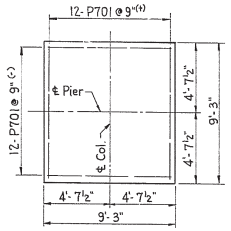

FOOTING PLAN (TYP)

Scale : 1/4" = 1'-0"

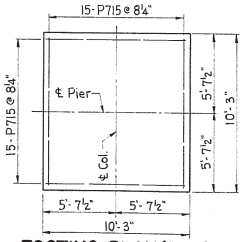

FOOTING PLAN (TYP)

Scale : 1/4" = 1'-0"

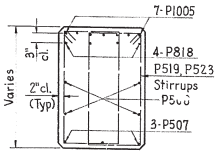

SECTION D-D

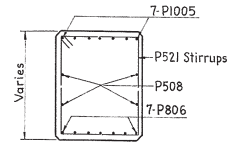

SECTION E-E

Scale : 1/2" = 1'-0"

PIER BAR SCHEDULE

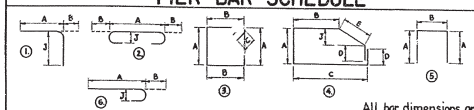

All bar dimensions are out to out

Mark	No. Req'd. Pier 1	Pier 2	Total	Size	Length	Type	A	B	C	D	E	J	Remarks
P701	48	—	48	7	8'-9"	Str.							
P902	24	—	24	9	6'-5"	1	5'-2"	1'-5"				1'-7"	
P903	12	—	12	9	19'-7"	Str.							
P904	12	—	12	9	25'-7"	Str.							
P1005	7	7	14	10	32'-0"	2	29'-2"	1'-5"				1'-0 1/2"	
P806	6	7	13	8	20'-0"	Str.							
P507	6	6	12	5	6'-3"	Str.							
P508	4	4	8	5	29'-2"	Str.							
P509	20	—	20	5	11'-10"	3	2'-8"	2'-8"	7"				
P510	14	—	14	5	6'-6"	4	1'-3"	1'-5"	2'-3"	4"	11"	7 1/2"	
P511	9	—	9	5	8'-0"	5	3'-5 1/8"	1'-1 3/4"					
P512	6	—	6	5	3'-5"	Str.							
P513	12	—	12	5	6'-2"	5	2'-6 1/8"	1'-1 3/4"					
P514	8	—	8	5	2'-6"	Str.							
P715	—	60	60	7	9'-9"	Str.							
P916	—	24	24	9	6'-11"	1	5'-6"	1'-5"				1'-7"	
P917	—	24	24	9	~~22'-5"~~ 22'-5 5/8"	Str.							
P818	—	8	8	8	13'-0"	6	11'-11"	1'-1"				10"	
P519	—	10	10	5	12'-0 1/2" to 12'-2 1/2"	3	3'-7 1/8" to 3'-8 1/8"	1'-10 1/8"	7"				2 ea. Vary A by 1/4"
P520	—	12	12	5	11'-8 1/4" to 11'-10 1/4"	3	3'-5" to 3'-6"	1'-10 1/8"	7"				2 ea. Vary A by 3/16"+
P521	—	5	5	5	13'-1 1/2" to 13'-3 1/2"	3	3'-3 3/4" to 3'-4 3/4"	2'-8"	7"				1 ea. Vary A by 1/4"
P522	—	12	12	5	11'-3 1/4" to 11'-5 1/4"	3	3'-2 1/4" to 3'-3 1/4"	1'-10 1/8"	7"				2 ea. Vary A by 3/16"+
P523	—	10	10	5	10'-11 1/4" to 11'-1 1/4"	3	3'-0 1/2" to 3'-1 1/2"	1'-10 1/8"	7"				2 ea. Vary A by 1/4"

SPIRAL BAR SCHEDULE

Mark	No. Req'd. Pier 1	Pier 2	Total	Size	Length	Pitch	No. of Turns	Out Diam.
SP401	1	—	1	1/2" ϕ	16'-9 3/4"	4 1/2"	48	30"
SP402	1	—	1	1/2" ϕ	22'-9 3/4"	4 1/2"	64	30"
SP403	—	2	2	1/2" ϕ	~~21'-5 5/8"~~ 22'-4 7/8"	4 1/2"	~~61~~ 63	30"

SPIRAL NOTES:

- The "length" shown in the steel list for spiral bars is the distance from the top of the footing to the bottom of the pier cap.
- The number of turns shown in the steel list for the spiral bars is the "length" divided by the pitch plus three turns (total number of closed coils), expressed as the nearest whole number.
- Spiral reinforcing bars shall not have deformations.
- 1 1/2 closed coils shall be provided at ends of each spiral unit.
- Four steel channel, tee or angle spacers, weighing approximately 0.68 lbs. per lin. ft. of spacer, shall be provided per each spiral unit.
- They shall be equally spaced along the periphery of the coil.
- The number of pounds of these spacers, based on 0.68 lbs. per lin. ft. will be paid for as reinforcing steel and is included in the tabulated quantity of "Bar Reinforcement."

NOTES:

- Maximum Design Foundation Pressure = 2.7 Tons per sq. ft.
- Pedestals and Pier Caps are to be placed monolithically.

DELAWARE
STATE HIGHWAY DEPARTMENT

THREE SPAN STEEL BEAM BRIDGE
CARRYING
RAMP "F" OVER I-495 N.B.

PIERS 1 & 2

D. HPL
T. P.T.R.
C. Y.S.T.

SCALE: AS SHOWN

APPROVED BY: Johnnie R. Lacey
BRIDGE ENGINEER

COUNTY	CONTRACT	P.R.A. REG. NO.	STATE	FED. AID PROJECT NO.	FISCAL YEAR	SHEET NO.	TOTAL SHEETS
NEW CASTLE	64-04-022	2	DEL.	I-95-2(41)82 I-495-510122		99	164

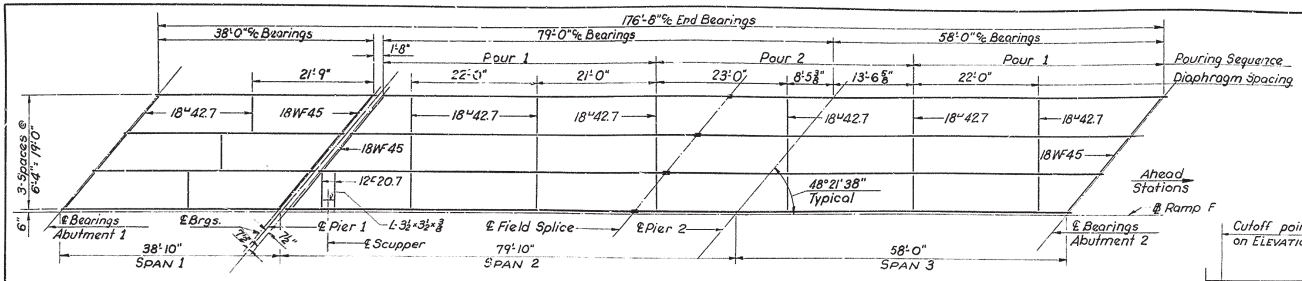

STEEL FRAMING PLAN
Scale: 1" = 10'-0"

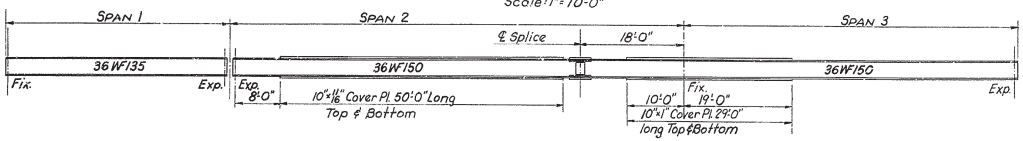

ELEVATION
Scale: 1" = 10'-0"

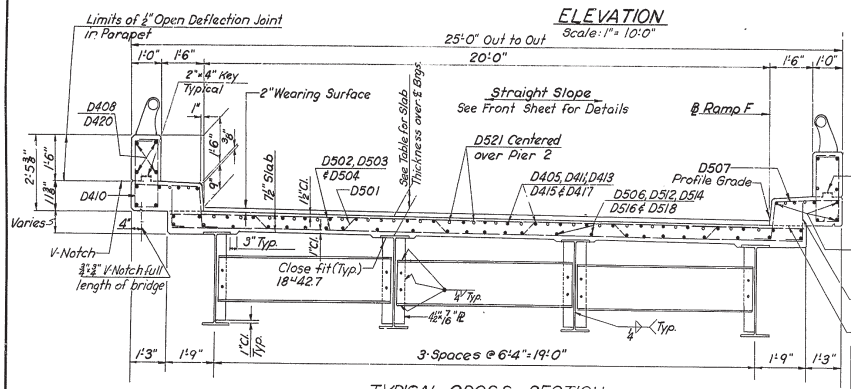

TYPICAL CROSS SECTION
Scale: ½" = 1'-0"

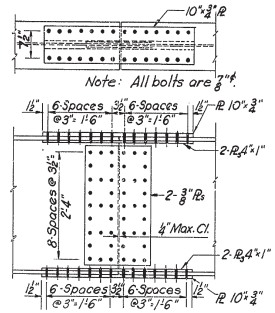

FIELD SPLICE DETAIL

SLAB THICKNESS OVER ℄ BEARINGS					
	ABUT. 1	PIER 1-SPAN 1	PIER 1-SPAN 2	PIER 2	ABUT. 2
Slab Thickness	8½"	8½"	9 3/16"	8 3/16"	9 3/16"

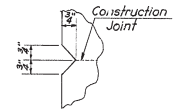

"V" NOTCH DETAIL
No Scale

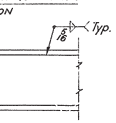

COVER PLATE CUTOFF DETAIL
Scale 1" = 10'-0"

Mill ends of Cover Plates to ⅜" min. thickness on a 3:1 taper.

BAR SCHEDULE

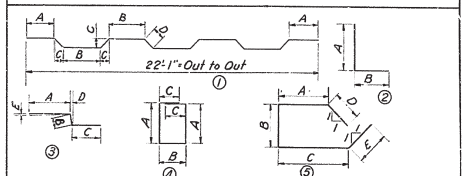

All bar dimensions are out to out

MARK	Nº	SIZE	LENGTH	TYPE	A	B	C	D	E	REMARKS
D501	139	5	23'-1"	1	2'-11"	2'-9"	5"	7"		
D502	274	5	22'-2"	Str.						
D503	72	5	2'-3¾" to 22'-0"	Str.						2-Each Vary by 6¾"
D504	210	5	1'-4½" to 20'-6"	Str.						2-Each Vary by 6¾"
D405	74	4	20'-5"	Str.						
D506	50	5	20'-6"	Str.						
D507	360	5	3'-9"	3	2'-0"	1'-3"	6"	2"	⅜"	
D408	48	4	19'-6"	Str.						
D509	360	5	1'-7"	2	1'-1"	6"				
D410	360	4	6'-1"	4	2'-12"	9"	6"			
D411	50	4	13'-9" to 30'-1"	Str.						2-Each Vary by 8¾"
D512	50	5	14'-1" to 30'-5"	Str.						2-Each Vary by 8¾"
D413	25	4	35'-0"	Str.						
D514	25	5	35'-0"	Str.						
D415	25	4	16'-6"	Str.						
D516	25	5	16'-9"	Str.						
D417	50	4	23'-0"	Str.						
D518	50	5	23'-1"	Str.						
D419	60	4	28'-7"	Str.						
D420	36	4	19'-4"	Str.						
D521	26	5	20'-0"	Str.						
D522	21	5	4'-9½"	5	1'-2"	10½"	1'-6"	9"	6"	See Expansion Dam
D523	12	5	8'-0"	Str.						See Expansion Dam
D524	26	5	29'-9"	Str.						See Expansion Dam
D525	42	5	4'-5"	5	1'-0½"	10½"	1'-3"	9"	6"	See Expansion Dam
D526	21	5	4'-7"	5	1'-3"	10½"	1'-2½"	9"	6"	See Expansion Dam
D527	8	5	6'-0"	Str.						

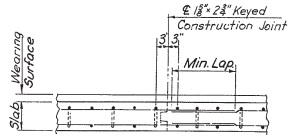

SLAB CONSTR. JT. DETAIL
Scale: ¾" = 1'-0"

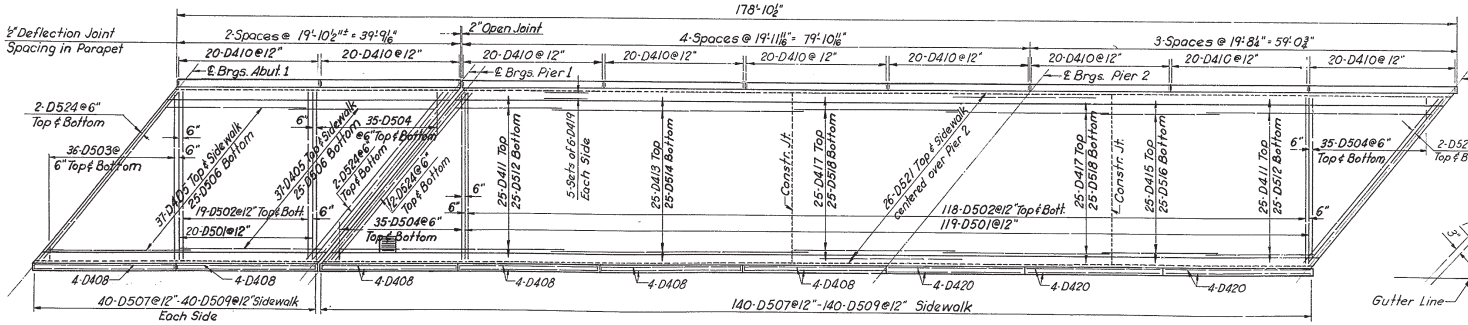

DECK PLAN
Scale: ⅛" = 1'-0"

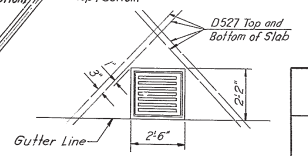

ADDITIONAL REINFORCEMENT IN SLAB IN VICINITY OF SCUPPER
(Cut or Spread Deck reinforcement as required for placement of scupper.)
Scale: ⅜" = 1'-0"

DELAWARE
STATE HIGHWAY DEPARTMENT

THREE SPAN STEEL BEAM BRIDGE
CARRYING
RAMP "F" OVER I-495 N.B.

DECK & CROSS SECTION

D. HPL T. RJ C. KSS	SCALE AS SHOWN	APPROVED BY: BRIDGE ENGINEER

COUNTY	CONTRACT	P.R.A. REG. NO.	STATE	FED. AID PROJECT NO.	FISCAL YEAR	SHEET NO.	TOTAL SHEETS
NEW CASTLE	64-04-022	2	DEL.	I-95-2(14)122 I-495-3(10)122		100	164

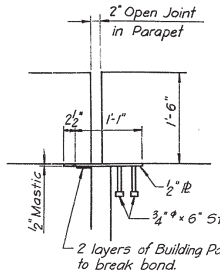

SECTION D-D
Scale: 1" = 1'-0"

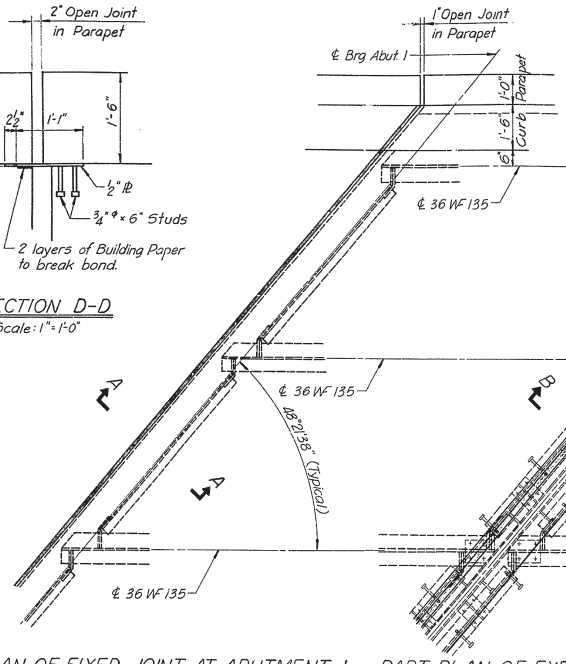

PART PLAN OF FIXED JOINT AT ABUTMENT 1
Scale: ½" = 1'-0"

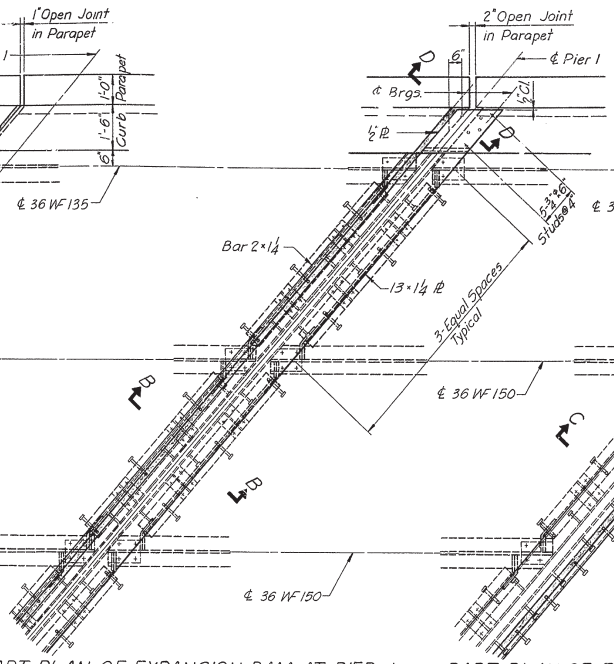

PART PLAN OF EXPANSION DAM AT PIER 1
Scale: ½" = 1'-0"

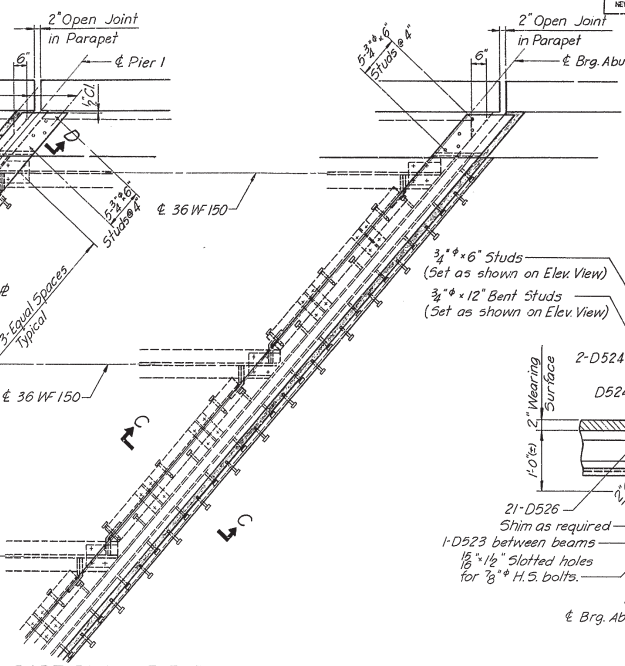

PART PLAN OF EXPANSION DAM AT ABUTMENT 2
Scale: ½" = 1'-0"

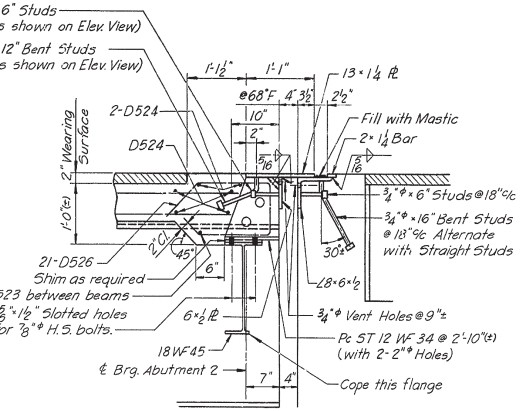

SECTION C-C
Scale: 1" = 1'-0"

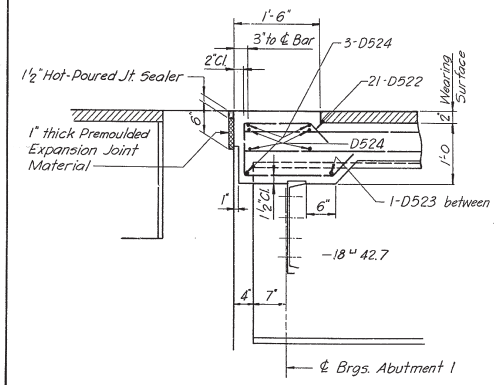

SECTION A-A
Scale: 1" = 1'-0"

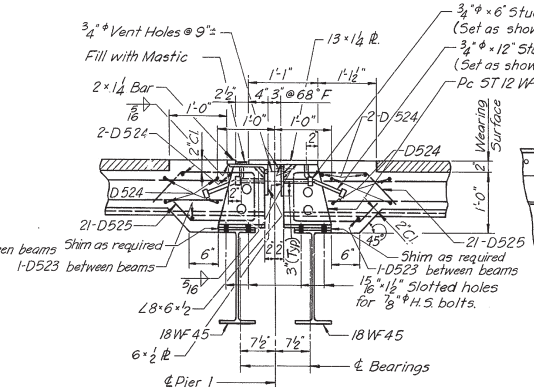

SECTION B-B
Scale: 1" = 1'-0"

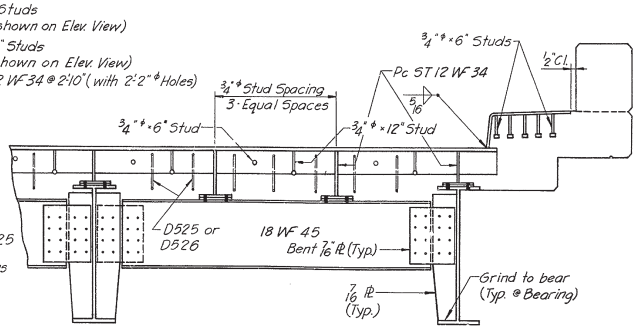

TYPICAL ELEVATION OF EXPANSION DAM
Scale: ¾" = 1'-0"

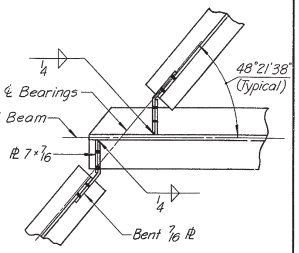

DIAPHRAGM CONNECTION DETAIL
Scale: 1" = 1'-0"

NOTE:

Field weld curb portions of dam to the main dam after pouring the deck slab.

DELAWARE
STATE HIGHWAY DEPARTMENT

THREE SPAN STEEL BEAM BRIDGE
CARRYING
RAMP "F" OVER I-495 N.B.

EXPANSION DAMS

D. M.P.L.	SCALE	APPROVED BY:
T. E.R.J.	AS SHOWN	
C. Y.S.T.		BRIDGE ENGINEER

COUNTY	CONTRACT	P.R.R. REG. NO.	STATE	FED. AID PROJECT NO.	FISCAL YEAR	SHEET NO.	TOTAL SHEETS
NEW CASTLE	64-04-022	2	DEL.	I-95-2(14)22 I-95-2(10)22		101	164

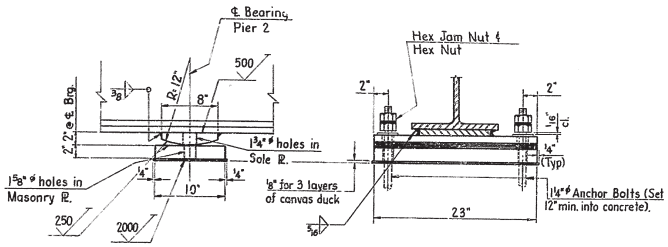

FIXED SHOES AT PIER NO. 2 (4 Required)

Scale: 1½" = 1'-0"

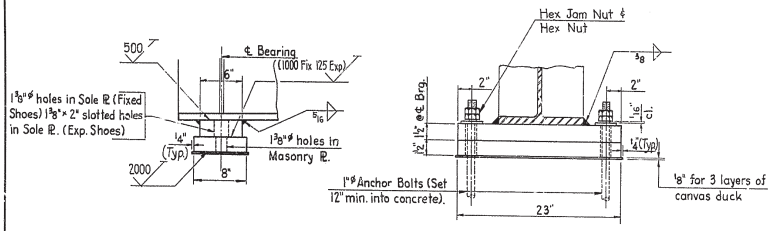

FIXED SHOES AT ABUTMENT NO. 1 (4 Required)

EXP. SHOES AT PIER NO. 1 - SPAN 1 (4 Required)

Scale: 1½" = 1'-0"

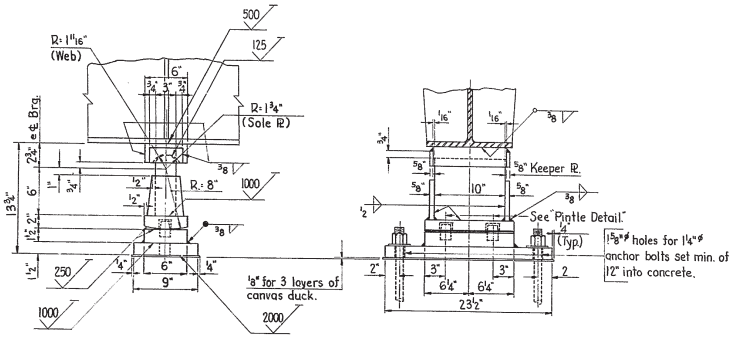

EXP. SHOES AT PIER NO. 1 - SPAN 2 (4 Required)

EXP. SHOES AT ABUT. NO. 2 (4 Required)

Scale: 1½" = 1'-0"

MAXIMUM MOMENTS IN FOOT KIPS

	SPAN 1		SPAN 2		PIER 2		SPAN 3	
	INTERIOR	EXTERIOR	INTERIOR	EXTERIOR	INTERIOR	EXTERIOR	INTERIOR	EXTERIOR
DEAD LOAD	222	197	649	584	-819	-736	200	180
LIVE LOAD	238	235	515	506	-376	-370	368	362
IMPACT LOAD	72	70	126	124	-96	-96	100	99
TOTAL	532	502	1290	1214	-1291	-1202	668	641

MAXIMUM REACTIONS IN KIPS

	ABUT. 1 OR PIER 1 SPAN 1		PIER 1 SPAN 2		PIER 2		ABUT. 2	
	INTERIOR	EXTERIOR	INTERIOR	EXTERIOR	INTERIOR	EXTERIOR	INTERIOR	EXTERIOR
DEAD LOAD	23.4	20.9	41.1	36.9	113.8	102.2	23.7	21.3
LIVE LOAD	35.6	30.8	39.6	34.7	47.2	46.4	37.9	33.0
IMPACT LOAD	10.7	9.3	9.7	8.5	12.2	12.0	10.3	9.0
TOTAL	69.7	61.0	90.4	80.1	173.2	160.6	71.9	63.3

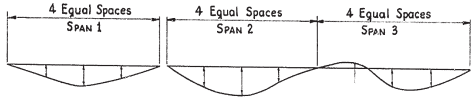

Steel	0"	0"	0"	3/16"	¼"	⅛"	0"	0"	1/16"
Concrete Pavement	1/16"	⅛"	1/16"	½"	5/8"	⅜"	-1/16"	1/16"	⅛"
Curb, Parapet and 2" Wearing Surface	1/16"	⅛"	1/16"	⅜"	½"	5/16"	0"	1/16"	1/16"
Total Deflection	⅛"	¼"	⅛"	1 1/16"	1⅜"	1 3/16"	-1/16"	⅛"	¼"

DEFLECTION DIAGRAM

Fabricate beams with mill camber placed to offset dead load deflection

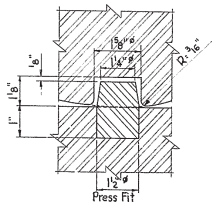

PINTLE DETAIL

No Scale

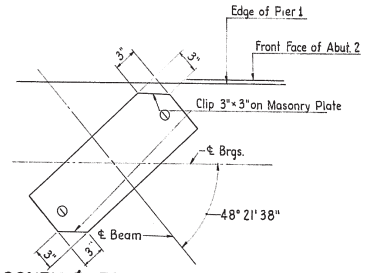

MASONRY PL FOR SPAN 2 AT PIER 1 & FOR SPAN 3 AT ABUT. 2

Scale: 1½" = 1'-0"

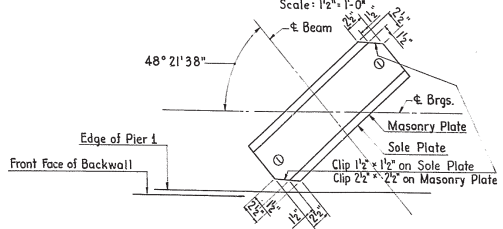

SOLE PL & MASONRY PL FOR SPAN 1 AT ABUT. 1 & PIER 1

Scale: 1½" = 1'-0"

TABLE OF PAVEMENT ELEVATIONS

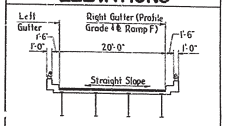

Looking Ahead Stations

STATION	LEFT GUTTER	RIGHT GUTTER
610+00	76.81	76.50
+10	77.17	76.86
+20	77.52	77.21
+30	77.87	77.56
+40	78.23	77.91
+50	78.58	78.27
+60	78.93	78.62
+70	79.29	78.97
+80	79.64	79.33
+30	79.99	79.68
611+00	80.34	80.03
+10	80.70	80.39
+20	81.02	80.74
+30	81.30	81.09
+40	81.58	81.44
+50	81.85	81.80
+60	82.13	82.15
+70	82.41	82.50
+80	82.68	82.86
+90	82.96	83.21
612+00	83.24	83.56
+10	83.52	83.92
+20	83.79	84.27
+30	84.07	84.62
+40	84.35	84.97
+50	84.62	85.33
+60	84.90	85.68

NOTES:

- Rockers or expansion shoes are to be set so as to be vertical under full dead load at a temperature of 68° F.
- Bottom of the main vertical stem shall be finished to bear on base plate or rocker plate.
- For Field adjustment, the base plates may be offset a maximum of 1½ inches in any direction.
- Tops of all sole plates shall be beveled parallel to grade.
- All anchor bolts shall be swedged.
- Anchor bolts at piers shall be set by templc before pouring concrete.
- Anchor bolts at abutments may be placed by drilling.
- Finish of contact surfaces shall conform to A.S.A. B46.1-55.

DELAWARE
STATE HIGHWAY DEPARTMENT

THREE SPAN STEEL BEAM BRIDGE
CARRYING
RAMP "F" OVER I-495 N.B.

SHOES

D. HPL
T. P.T.R.
C. K.S.T.

SCALE
AS SHOWN

APPROVED BY:
BRIDGE ENGINEER

COUNTY	CONTRACT	RR'A. REG. NO.	STATE	FED. AID PROJECT NO.	FISCAL YEAR	SHEET NO.	TOTAL SHEETS
NEW CASTLE	64-04-022	2	DEL.	I-95-2(4)122 I-495-3(10)22		102	164

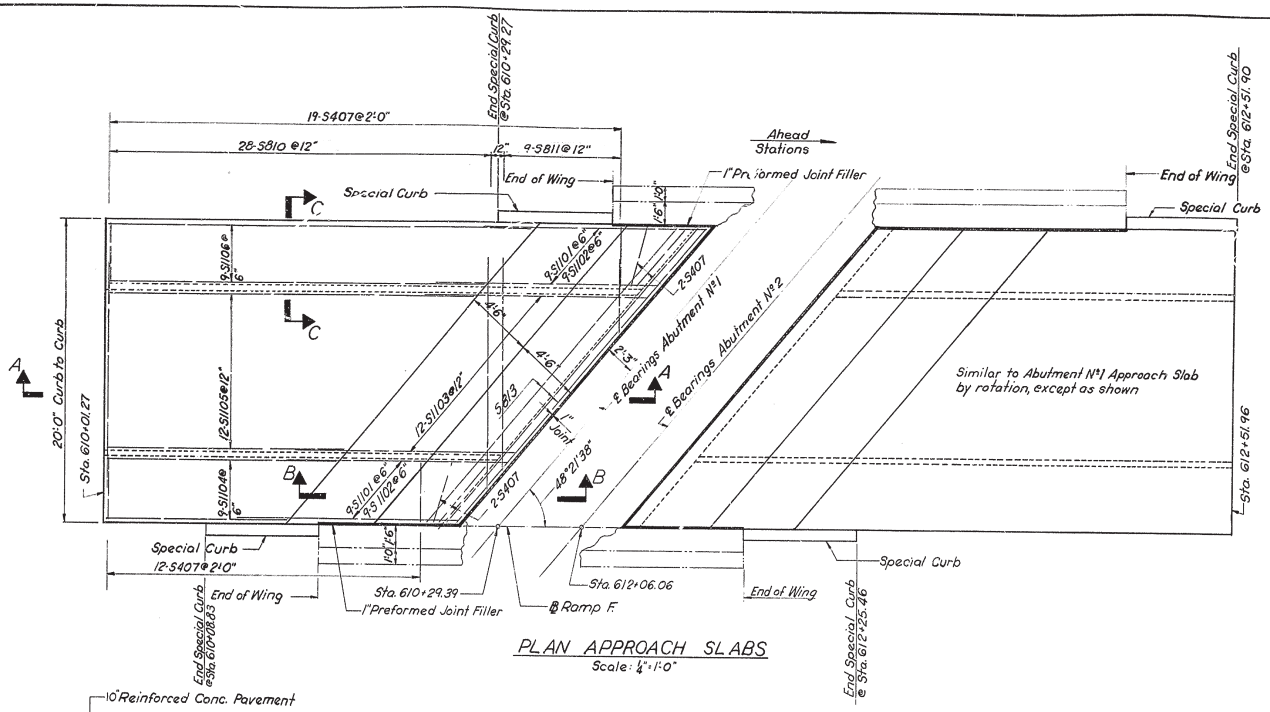

PLAN APPROACH SLABS
Scale: 1/4"=1'-0"

REINFORCING BAR SCHEDULE

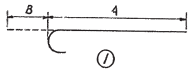

All dimensions are out to out.

MARK	APPROACH SLAB @ ABUT. 1	ABUT. 2	TOTAL	SIZE	LENGTH	TYPE	A	B	REMARKS
S1101	18	18	36	11	5'-7"	1	4'-0"	1'-7"	
S1102	18	18	36	11	15'-3	Str.			
S1103	12	12	24	11	17'-3"	1	15'-8"	1'-7"	
S1104	9	9	18	11	12'-7" to 16'-3"	Str.			2-Each Vary by 5 1/2"
S1105	12	12	24	11	18'-9" to 25'-11"	Str.			2-Each Vary by 11"
S1106	9	9	18	11	26'-6" to 30'-0"	Str.			2-Each Vary by 5 1/2"
S407	35	35	70	4	[illegible]'-2"	Str.			
S810	28	28	56	8	15'-0"	Str.			
S811	9	9	18	8	5'-0" to 13'-11"	Str.			2-Each Vary by 1'-1 1/2"
S512	2	2	4	5	26'-4"	Str.			
S813	3	3	6	8	26'-4"	Str.			

NOTE:
Clear distance from face of concrete to reinforcing steel shall be 2" except on bottom where it shall be 3".

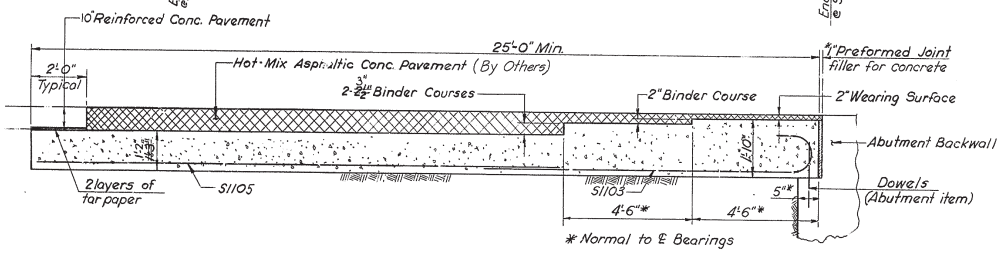

SECTION A-A

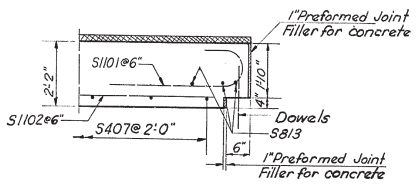

SECTION B-B
Scale: 1/2"=1'-0"

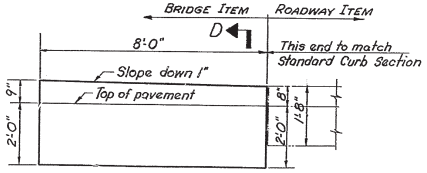

NOTE: These curbs are included with Approach Slab Quantities

SPECIAL CURB DETAIL
Scale: 1/2"=1'-0"

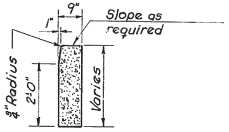

SECTION D-D
Scale: 1/4"=1'-0"

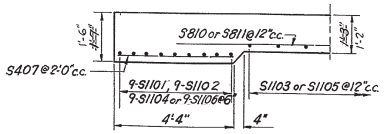

SECTION C-C
Scale: 1/2"=1'-0"

DELAWARE
STATE HIGHWAY DEPARTMENT

THREE SPAN STEEL BEAM BRIDGE
CARRYING
RAMP "F" OVER I-495 N.B.

APPROACH SLAB

D.
T.
C. Y.S.T.

SCALE
AS SHOWN

APPROVED BY:
BRIDGE ENGINEER

COUNTY	CONTRACT	P.R.A. REG. NO.	STATE	FED. AID PROJECT NO.	FISCAL YEAR	SHEET NO.	TOTAL SHEETS
NEW CASTLE	64-04-022	2	DEL.	I-95-2(14)22 I-495-3(10)22		103	164

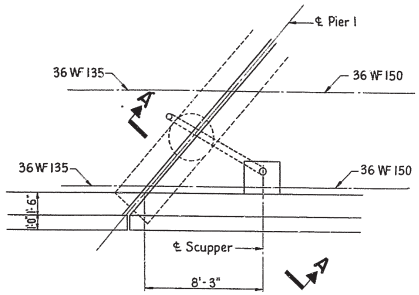

PLAN OF SCUPPER LOCATION

Scale: ¼" = 1'-0"

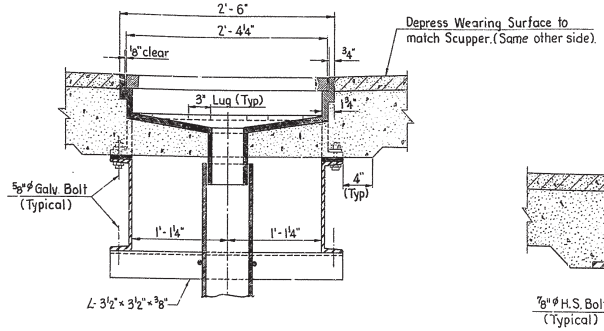

SECTION B-B

Scale: 1½" = 1'-0"

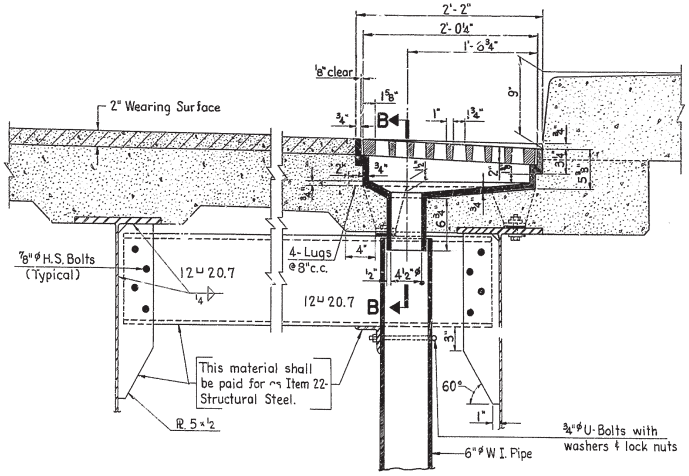

SCUPPER DETAIL

Scale: 1½" = 1'-0"

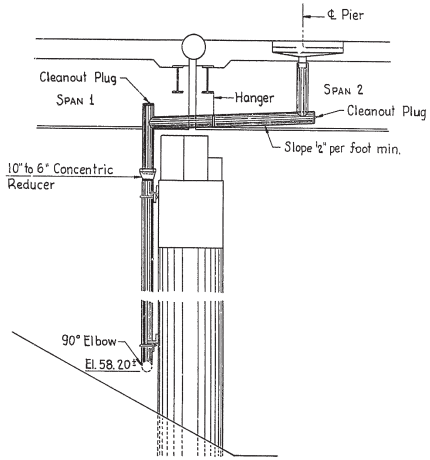

SECTION A-A

Scale: ¼" = 1'-0"

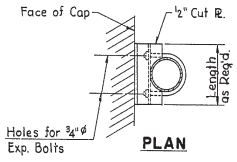

PLAN

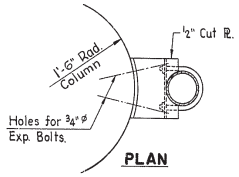

PLAN

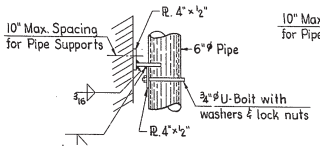

ELEVATION

PIPE SUPPORT DETAIL AT CAP

Scale: 1" = 1'-0"

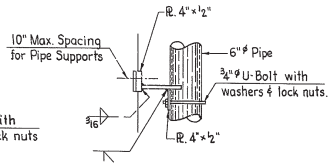

ELEVATION

PIPE SUPPORT DETAIL AT COLUMN

Scale: 1" = 1'-0"

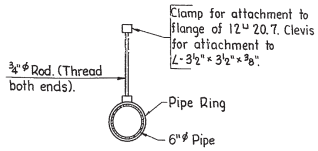

PIPE HANGER DETAIL

Scale: 1" = 1'-0"

NOTES:

- All Gratings to be Cast Steel in accordance with A.S.T.M. A27-60 Grade 65-35 (Galvanized).
- All Frames to be Iron Castings, conforming to A.S.T.M. Designation A48-60T, Class No. 30B.
- All Pipe to be 6"ø Wrought Iron standard weight conforming to A.S.T.M.-72.
- All Pipe Support material shall be hot-dip galvanized. No welding will be permitted after galvanizing.
- All pipe joints shall be made by welding or by use of "flexible" couplings and fittings.
- All material on this sheet shall be paid for as "Bridge Drainage" except as noted.

DELAWARE
STATE HIGHWAY DEPARTMENT

THREE SPAN STEEL BEAM BRIDGE
CARRYING
RAMP "F" OVER I-495 N.B.

SCUPPERS

D. HPL T. P.T.R. C. Y.S.T.	SCALE AS SHOWN	APPROVED BY: Johnnie R. Pearson BRIDGE ENGINEER

COUNTY	CONTRACT	P.R.A. REG. NO.	STATE	FED. AID PROJECT NO.	FISCAL YEAR	SHEET NO.	TOTAL SHEETS
NEW CASTLE	64-04-022	2	DEL.	I-95-2(14)22 I-495-3(10)22		104	164

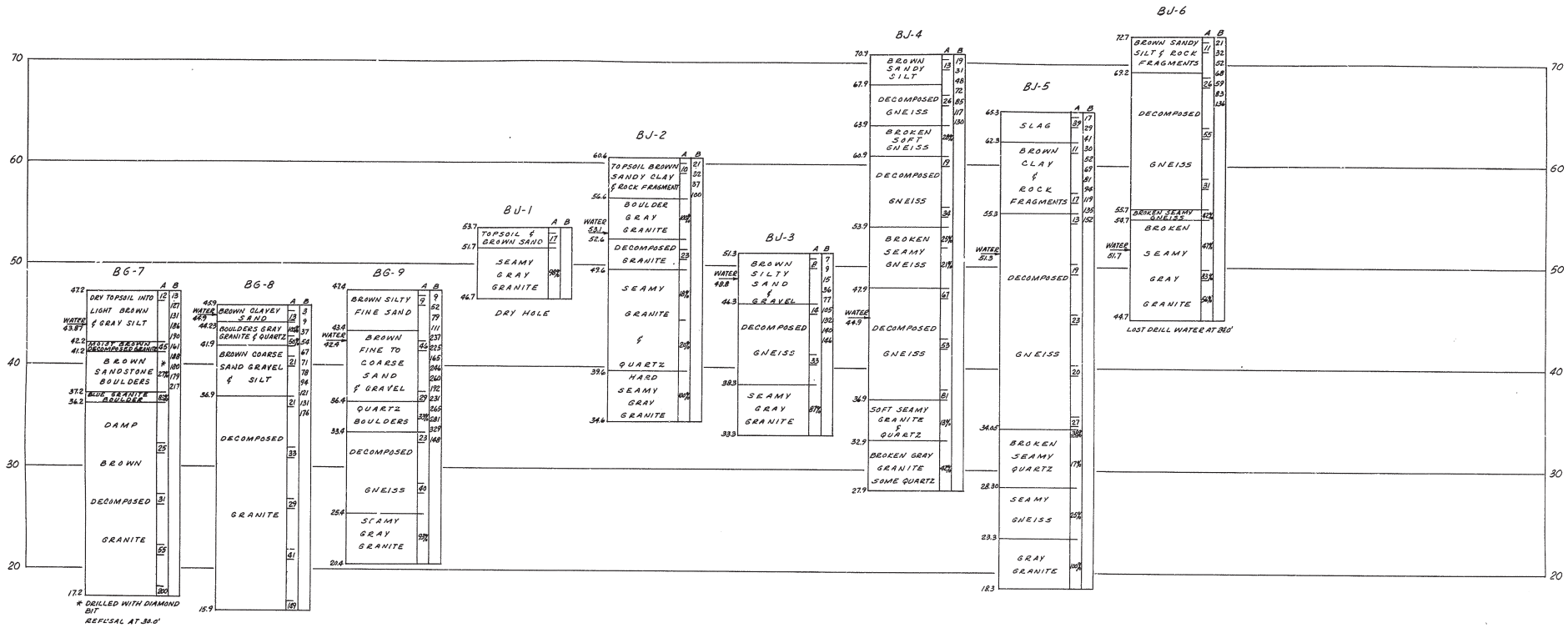

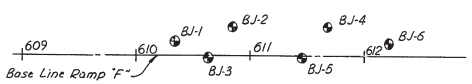

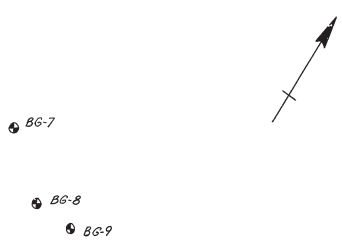

PLAN
SCALE: 1" = 5'

BORING	LOCATION		
	STATION	RT.	LT.
BG-7	609+51	138.5	
BG-8	609+72	199'	
BG-9	610+025	219'	
BJ-1	610+34		11'
BJ-2	610+85		23'
BJ-3	610+63	1.5'	
BJ-4	611+68		23'
BJ-5	611+45.5	1.5'	
BJ-6	612+22		105'

NOTE:
COLUMN A DENOTES SAMPLE BLOWS & CORE RECOVERY
COLUMN B DENOTES CASING BLOWS
SAMPLER HAMMER = 140 LBS., DROP = 30"
DRIVE HAMMER = 300 LBS., DROP = 24"
SAMPLER SIZE = 2" CASING SIZE = 4"
CORE BIT = NX

DELAWARE
STATE HIGHWAY DEPARTMENT

THREE SPAN STEEL BEAM BRIDGE
CARRYING
RAMP "F" OVER I-495 N.B.

BORINGS

D. T. C. Y.S.T	SCALE AS SHOWN	APPROVED BY: Johnnie R. Pearson, Jr. BRIDGE ENGINEER