PROJECT NOTES (CONTINUED)

MISCELLANEOUS

33. THE CONTRACTOR SHALL CONTACT MICHAEL ELLER, THE CHIEF OF SCHEDULING FOR DART FIRST STATE, 14 DAYS PRIOR TO THE START OF CONSTRUCTION AT 302-576-6061.

34. CROSS SECTIONS USED IN THE PREPARATION OF THIS CONTRACT ARE AVAILABLE FROM THE DEPARTMENT.

35. RIGHT-OF-WAY PLANS FOR RIGHT-OF-WAY OR EASEMENT STAKEOUT PURPOSES ARE AVAILABLE FROM THE DEPARTMENT.

36. AT STATION 154 +75 LT THE CLEARING AND GRUBBING OPERATIONS WITHIN THE LOC WILL EXTEND NO FURTHER THAN WHAT IS NEEDED TO INSTALL THE PROPOSED RIPRAP. THE WORK ASSOCIATED WITH THE ABANDONMENT OF THE 30" RCP PIPE LOCATED 50' DOWNSTREAM FROM THE RIPRAP WILL BE COMPLETED BE HAND. NO MOTORIZED VEHICLE ACCESS/USE TO THE PIPE LOCATION IS PERMITTED BEYOND THE RIPRAP LIMITS.

37. INSTALL RUMBLE STRIPS ON THE OUTSIDE SHOULDER OF ALL CURVES ON RAMPS FROM THE PC STATION TO THE PT STATION.

38. THE DEPARTMENT HAS SECURED A NATIONWIDE PERMIT #23 (NWP 23) FOR WORK AREAS ON THIS CONTRACT THAT ARE REGULATED BY THE U.S. ARMY CORPS OF ENGINEERS (USACE). THESE REGULATED AREAS, AS DENOTED BY AN OHW AND/OR WL LINE, AND THEIR ASSOCIATED CONSTRUCTION IMPACTS ARE SHOWN ON THE CONTRACT'S ENVIRONMENTAL COMPLIANCE PLAN SHEETS. ALL CONTRACTED WORK IN THE AREAS PERMITTED BY NWP 23 MUST BE COMPLETED BEFORE MARCH 18, 2013. NO CONTRACT TIME EXTENSIONS OR ADDITIONAL MONETARY COMPENSATION EXCEEDING THE BID PRICE FOR THE PROPOSED WORK SHOWN ON THE PLANS WILL BE GRANTED BY THE DEPARTMENT IF THE CONTRACTOR DOES NOT COMPLETE THE WORK BEFORE MARCH 18, 2013.

EARTHWORK SUMMARY

NOTE: THIS CHART IS FOR INFORMATIONAL PURPOSED ONLY. EARTHWORK SUMMARY IS BASED ON ESTIMATED QUANTITIES FOR EXCAVATION, BORROW, AND TOPSOIL.

EXCAVATION AND EMBANKMENT	PHASE 1	PHASE 2	PHASE 3
EXCAVATION FROM CROSS SECTIONS	41649 CY	56256 CY	1801 CY
ADD: BENCHING	9675 CY	0 CY	0 CY
ADD: TOPSOIL; REMOVED UNDER FILL	1514 CY	294 CY	0 CY
ADD: TOPSOIL PLACED IN CUT	3018 CY	2784 CY	774 CY
ADD: PAVEMENT REMOVED IN FILL	451 CY	71 CY	0 CY
SUBTRACT: ROOTMAT REMOVED IN CUT	3587 CY	13763 CY	0 CY
SUBTRACT: ROCK EXCAVATION	1205 CY	11781 CY	0 CY
TOTAL	51514 CY	33861 CY	2575 CY
STORMWATER MANAGEMENT POND EXCAVATION			
FROM CROSS SECTIONS	13344 CY	0 CY	0 CY
SUBTRACT: ROOTMAT REMOVED IN CUT	1359 CY	0 CY	0 CY
ADD: TOPSOIL PLACED IN CUT	739 CY	0 CY	0 CY
TOTAL	12724 CY	0 CY	0 CY
EXCAVATION AVAILABLE FOR EMBANKMENT			
NOTE: ALL EXCAVATION FROM PROJECT TO BE SPOIL	0 CY	0 CY	0 CY
MATERIAL FROM PHASE 1 TO BE WASTED OFFSITE	0 CY	0 CY	0 CY
MATERIAL FROM PHASE 2 AND PHASE 3 TO BE WASTED IN EXISTING RAMP 3 (US 202 SB TO I-95 SB) AND RAMP 7 (I-95 SB TO US 202 SB)	0 CY	0 CY	0 CY
MATERIAL TO CONSTRUCT TEMPORARY PAVEMENT	0 CY	281 CY	0 CY
COMPACTION FACTOR TO BE APPLIED TO SUM (20%)	0 CY	56 CY	0 CY
TOTAL	0 CY	337 CY	0 CY
EMBANKMENT AND BORROW TYPE "F" REQUIRED			
FROM CROSS SECTIONS	33064 CY	7502 CY	13 CY
ADD: TOPSOIL REMOVED UNDER FILL	1514 CY	294 CY	0 CY
ADD: ROOTMAT REMOVED UNDER FILL	7662 CY	1653 CY	0 CY
ADD: PCC AND HOTMIX PAVEMENT UNDER FILL	805 CY	570 CY	11 CY
ADD: BENCHING	9675 CY	0 CY	0 CY
SUBTRACT: TOPSOIL ON FILL SLOPES	2661 CY	693 CY	0 CY
TOTAL	50059 CY	9324 CY	24 CY
BORROW, TYPE C (FROM STRUCTURE PLANS)	2000 CY	0 CY	0 CY
FURNISHING BORROW TYPE C FOR PIPES, UTILITY AND STRUCTURE BACKFILL			
PIPE TRENCH BORROW TYPE C BACKFILL	2265 CY	0 CY	0 CY
STRUCTURE PLANS	6798 CY	0 CY	0 CY
TOTAL	9063 CY	0 CY	0 CY
FURNISH TYPE "A" REQUIRED			
ITEM 209001 - BORROW, TYPE A	5556 CY		
FURNISH TYPE "B" REQUIRED			
ITEM 209002 - BORROW, TYPE B	2329 CY		
REMOVAL OF EXISTING PORTLAND CEMENT PAVEMENT, CURB, SIDEWALK, ETC			
	354 CY	499 CY	864 CY
TOPSOIL SUMMARY			
TOPSOIL SALVAGED FROM PROJECT (NOTE ALL TOPSOIL STRIPPED TO BE SPOIL)	0 CY	0 CY	0 CY
TOPSOIL NEEDED FOR STORMWATER MANAGEMENT PONDS	739 CY	0 CY	0 CY
TOPSOIL NEEDED FOR ROADWAY CONSTRUCTION	5679 CY	3477 CY	774 CY
TOPSOIL NEEDED FOR WASTE AREA	0 CY	0 CY	5960 CY
TOTAL	6418 CY	3477 CY	6734 CY
EARTHWORK BALANCE			
WASTE MATERIAL TO BE REMOVED FROM PROJECT SITE (PHASE 1 EXCAVATION + SWM EXCAVATION + STRUCTURE EXCAVATION + PIPE EXCAVATION + TOPSOIL + UDRAIN EXCAVATION)	83644 CY	0 CY	0 CY
WASTE MATERIAL TO BE PLACED IN WASTE AREA RAMP 3 (US 202 SB TO I-95 SB) AND RAMP 7 (I-95 SB TO US 202 SB) (PHASE 2 + PHASE 3 EXCAVATION, + PHASE 2 + PHASE 3 ROCK EXCAVATION, + PIPE EXCAVATION + STRUCTURE REMOVAL + TOPSOIL + UDRAIN EXCAVATION)	0 CY	53485 CY	0 CY

NOTE: MATERIAL MAY BE WASTED IN THE EXISTING RAMP 7 AREA (I-95 SB TO US 202 SB) AFTER RELOCATED RAMP 7 HAS BEEN OPENED TO TRAFFIC

DRAINAGE INLET SCHEDULE

NO.	STATION	OFFSET	BOX SIZE	GRATE	T.G. EL.	INV. EL.
DI110	533+54.6	***	34"X24"	2	****	158.00
DI111	279+99.0	***	72"x48"	2	****	157.44
DI112	278+98.5	***	72"x48"	2	****	154.88
DI113	531+58.8	***	34"X24"	2	****	152.64
DI114	278+01.3	***	72"x48"	2	****	152.05
DI115	276+985	***	72"x48"	2	****	149.00
DI116	529+55.6	***	34"X24"	2	****	146.85
DI117	275+97.0	***	72"x48"	2	****	146.25

*** MATCH EDGE OF BARRIER.
**** MATCH FLOWLINE OF BARRIER AND GUTTER.

DRAINAGE PIPE SCHEDULE

NO.	SIZE / TYPE	CLASS	LENGTH	SLOPE	INT. EL.	DIS. EL.
P 19	18" RCP	IV	11	0.034	158.00	157.64
P 110	24" RCP	IV	97	0.025	157.44	155.00
P 111	24" RCP	IV	94	0.025	154.88	152.45
P 112	18" RCP	IV	14	0.032	152.64	152.25
P 113	24" RCP	IV	102	0.028	152.05	149.20
P 114	24" RCP	IV	102	0.026	149.00	146.45
P 115	18" RCP	IV	13	0.049	146.85	146.25
P 116	24" RCP	IV	122	0.030	146.25	142.35

BARRIER SCHEDULE

NO.	ITEM DESCRIPTION / TYPE	LENGTH
11	SAFETY BARRIER, PERMANENT, SINGLE FACE	199.11
12	~~P.C.C. BARRIER, MODIFIED~~	221.43
20	~~P.C.C. BARRIER, MODIFIED~~	220.74

SAFETY BARRIER, PERMANENT, SINGLE FACE 2

UNDERDRAIN SCHEDULE

NO.	SIZE / TYPE	LENGTH	DIS. TYPE	DIS. EL.
55	6" PERF. PVC	100.36	INLET	*
56	6" PERF. PVC	97.14	INLET	*
57	6" PERF. PVC	300.00	UDO	152.80
58	6" PERF. PVC	102.74	INLET	*
59	6" PERF. PVC	101.44	INLET	*
60	6" PERF. PVC	199.77	MANHOLE	*
61	6" PERF. PVC	121.92	INLET	*

* INVERT FOR CLOSED SYSTEM TO BE SET IN FIELD.
REFER TO UNDERDRAIN DETAIL.

UNDERDRAIN OUTLETS

NO.	LENGTH	DIS. EL.
87	18.00	162.37
88	18.00	152.75

NOTE: ALL OULET STRUCTURES USE
NON-PERFORATED PVC PIPE.

ROADWAY CORE SCHEDULE

NO.	STATION	OFFSET	DESCRIPTION
C#17	275+20.80	-2.31	12-1/4" ASPHALT
C#18	275+95.61	-35.61	8-3/4" ASPHALT
C#19	279+95.75	-22.69	3-1/2" ASPHALT OVER 10" PCC

SOIL BORING SCHEDULE

NO.	STATION	OFFSET	GRND EL.	ROCK ELEV.
OSWB-1	276+00.00	143.00	161.04	<145.0
OSWB-2	277+30.00	155.00	164.58	156.7
RMP3-09	216+86.00	146.00	198.10	181.1
RMP3-11	215+67.00	94.00	190.70	170.2
RMP3-12	213+92.00	67.00	178.00	<153.00

Y:\Projects\Jell4-202\Jel195 Cont 5\Plans\195cpl3c5.dgn

8/17/2011

DELAWARE
DEPARTMENT OF TRANSPORTATION

ADDENDUMS / REVISIONS
2 REVISED BARRIER TYPE

SCALE
0 30 60 90
FEET

I-95 & US 202 INTERCHANGE

CONTRACT	BRIDGE NO.	NA
T200510602	DESIGNED BY:	BMD
COUNTY		
NEW CASTLE	CHECKED BY:	DAG

CONSTRUCTION PLAN

SHEET NO. 63
TOTAL SHTS. 482

DRAINAGE INLET SCHEDULE

NO.	STATION	OFFSET	BOX SIZE	GRATE	T.G. EL.	INV. EL.
DI14	283+47.5	47.6' LT	72"X48"	2	173.27	170.52
DI15	283+13.0	***	48"x30"	2	***	164.55
DI16	282+21.8	37.9' LT	48"x30"	2	170.47	164.50
DI17	535+52.9	***	34"x24"	2	****	163.55
DI18	282+00.0	***	48"x30"	2	****	162.90
DI19	281+00.0	***	72"X48"	2	****	160.30
DI122	284+06.7	13.9' RT	72"X48"	2	171.33	167.40
DI125	285+00.0	15.4' RT	72"X48"	2	172.83	170.00

*** MATCH EDGE OF BARRIER.
**** MATCH FLOWLINE OF BARRIER AND GUTTER.

SOIL BORING SCHEDULE

NO.	STATION	OFFSET	GRND EL.	ROCK ELEV.
OSWB-3	279+00.00	192.00	169.72	<158.6
RMP3-10	216+93.00	96.00	195.70	193.2
RMP3-10A	216+93.00	100.00	195.70	173.2

RIPRAP SCHEDULE

NO.	TYPE	AREA
RR 12	R-4	11 SY

DRAINAGE PIPE SCHEDULE

NO.	SIZE / TYPE	CLASS	LENGTH	SLOPE	INT. EL.	DIS. EL.
P 13	18" RCP	IV	125	0.047	170.52	164.70
P 14	18" RCP	IV	44	0.032	164.50	163.10
P 15	18" RCP	IV	113	0.015	164.55	163.10
P 16	18" RCP	IV	13	0.045	163.55	163.10
P 17	18" RCP	IV	96	0.025	162.90	160.50
P 18	18" RCP	IV	100	0.027	160.30	157.64
P 122	18" RCP	IV	134	0.02	167.40	164.75
P 128	18" RCP	IV	91	0.026	170.00	167.60
P R84	18" RCP	IV	98'	0.097	178.00	168.50

SAFETY BARRIER, PERMANENT, SINGLE FACE 2

BARRIER SCHEDULE

NO.	ITEM DESCRIPTION / TYPE	LENGTH
13	~~P.C.C. BARRIER, MODIFIED~~	376.19
14	~~P.C.C. BARRIER, MODIFIED~~	378.08
15	SAFETY BARRIER, PERMANENT, SINGLE FACE	10.00

GUARDRAIL SCHEDULE

NO.	ITEM DESCRIPTION / TYPE	BEGIN STA.	OFFSET	LENGTH
7	GUARDRAIL END TREATMENT ATTENUATOR, TYPE 1	219+21.80	22	50
44	GUARDRAIL TO BARRIER CONNECTION (EXIT TYPE)	537+50.15	-4.03	14.23
45	GALVANIZED STEEL BEAM GUARDRAIL, TYPE 1	537+61.63	-4.03	150
46	GUARDRAIL TO BARRIER CONNECTION, APPROACH TYPE 1	283+99.60	6	27.6
47	GALVANIZED STEEL BEAM GUARDRAIL, TYPE 1	284+19.47	6	1500
59	END ANCHORAGE	534+62.08	36	12.5

UNDERDRAIN SCHEDULE

NO.	SIZE / TYPE	LENGTH	DIS. TYPE	DIS. EL.
48	6" PERF. PVC	300.00	UD-88	N/A
49	6" PERF. PVC	300.00	UD-90	N/A
51	6" PERF. PVC	210.58	DI-15	**
52	6" PERF. PVC	113.39	DI-18	**
53	6" PERF. PVC	99.84	DI-19	**
54	6" PERF. PVC	100.78	DI-111	**
84	6" PVC*	10.75	OUTLET	TBD
85	6" PVC*	11.15	OUTLET	TBD
86	6" PVC*	8.75	OUTLET	TBD

* ALL OUTLET STRUCTURES USE NON-PERFORATED PVC PIPE.
** INVERT FOR CLOSED SYSTEM TO BE SET IN FIELD. REFER TO UNDERDRAIN DETAIL.

ROADWAY CORE SCHEDULE

NO.	STATION	OFFSET	DESCRIPTION
C#20	284+96.30	-37.82	3-1/4" ASPHALT OVER 9-3/4" PCC

Y:\Projects\Del4-202\Del95 Cont 5\Pcns\95cpl4c5.dgn

8/17/2011

DELAWARE
DEPARTMENT OF TRANSPORTATION

ADDENDUMS / REVISIONS
2 REVISED BARRIER TYPE

SCALE
0 30 60 90
FEET

I-95 & US 202 INTERCHANGE

CONTRACT	BRIDGE NO.	NA
T200510602	DESIGNED BY:	BMD
COUNTY		
NEW CASTLE	CHECKED BY:	DAG

CONSTRUCTION PLAN

SHEET NO. 65
TOTAL SHTS. 482

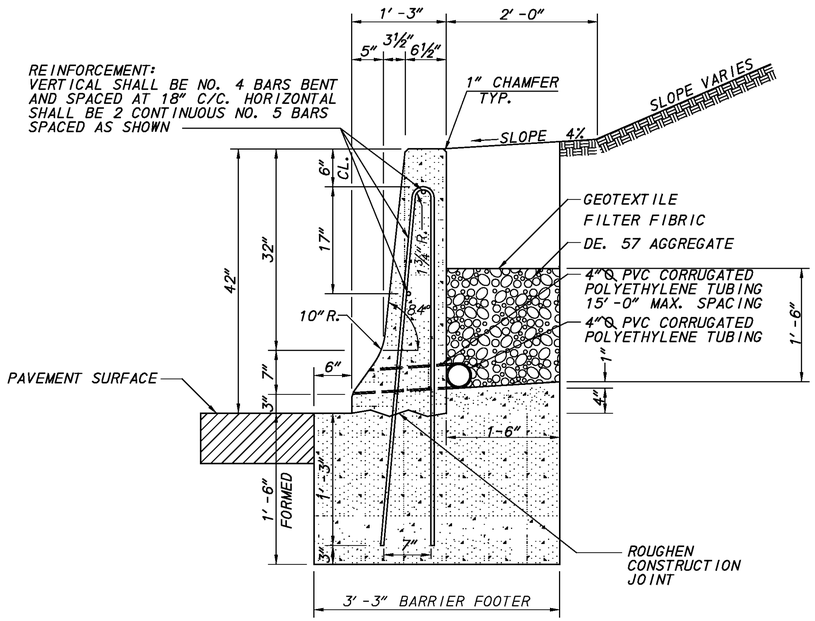

TYPICAL OUTSIDE SHOULDER INSTALLATION

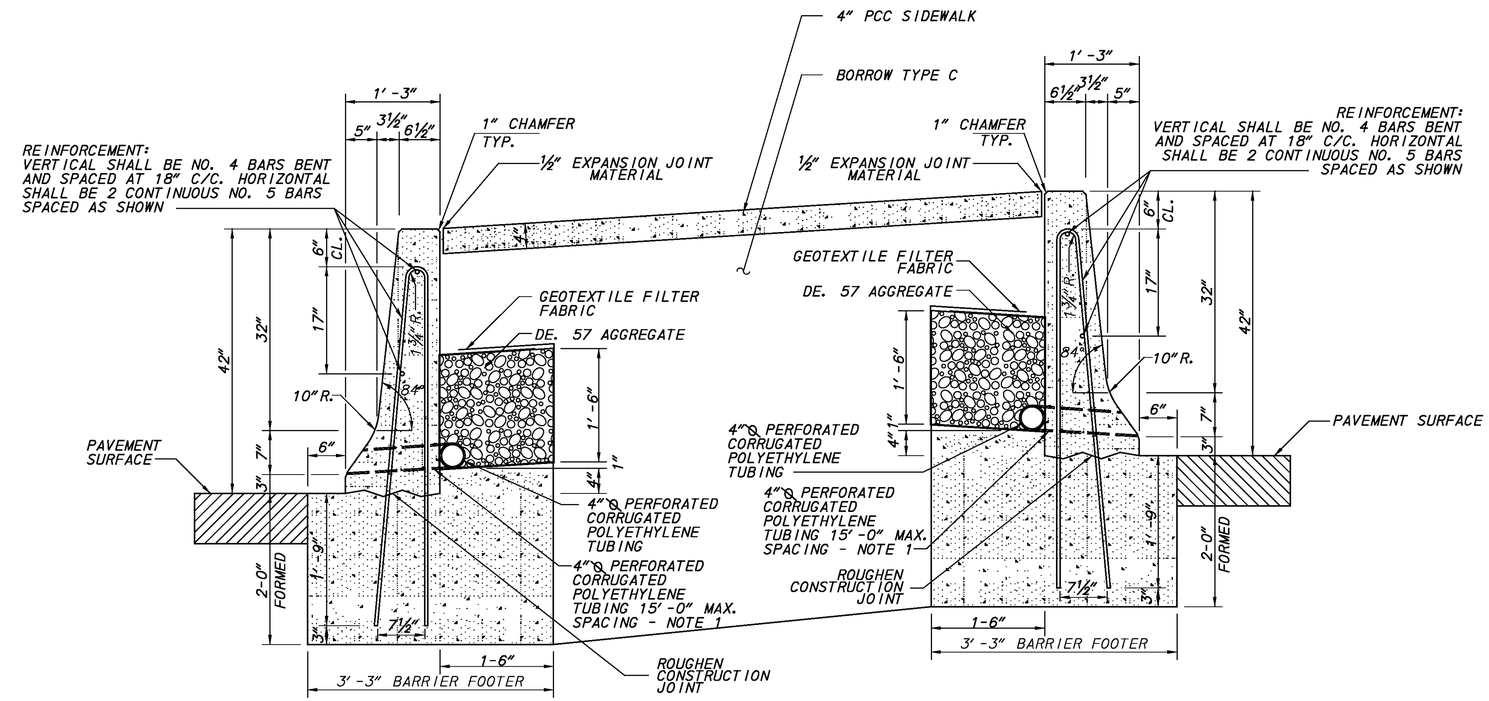

TYPICAL MEDIAN INSTALLATION

△2 PCC SAFETY BARRIER PERMANENT, SINGLE FACE (ITEM 720550)

~~PCC BARRIER, MODIFIED (720550)~~

NOTES:

1. OUTLET 4" PVC DRAIN INTO INLET WHERE POSSIBLE AS DIRECTED BY THE ENGINEER
2. 4" PERFORATED CORRUGATED POLYETHYLENE TUBING, 4" CORRUGATED POLYETHLENE TUBING, DE. 57 AGGREGATE, AND GEOTEXTILE FILTER FABRIC TO BE ~~PAID FOR UNDER PERFORATED PIPE UNDERDRAINS, 4" (ITEM 715000)~~ INCIDENTAL TO ITEM 720529- PCC SAFETY BARRIER PERMANENT, SINGLE FACE.△2
3. GEOTEXTILE FILTER FABRIC SHALL BE PLACE ENTIRELY AROUND DE. 57 AGGREGATE WITH A MINIMUM 12" OVERLAP
4. TRANSITION PROPOSED BARRIER TO MATCH EXISTING OVER THE LENGTH OF ONE JOINT SPACING (10' TO 20') AS DIRECTED BY THE ENGINEER.

Y:\Projects\Jell41-202\Jel195 Cont 5\DETAILS\95d102c5.dgn

8/17/2011

DELAWARE DEPARTMENT OF TRANSPORTATION	ADDENDUMS / REVISIONS	SCALE 0 30 60 90 FEET	I-95 & US 202 INTERCHANGE	CONTRACT T200510602	BRIDGE NO. NA	CONSTRUCTION DETAILS CD 3 OF 14	SHEET NO. 157
	△2 REVISED DETAIL TITLE AND NOTE			COUNTY NEW CASTLE	DESIGNED BY: TM		TOTAL SHTS. 482
					CHECKED BY: MAA		

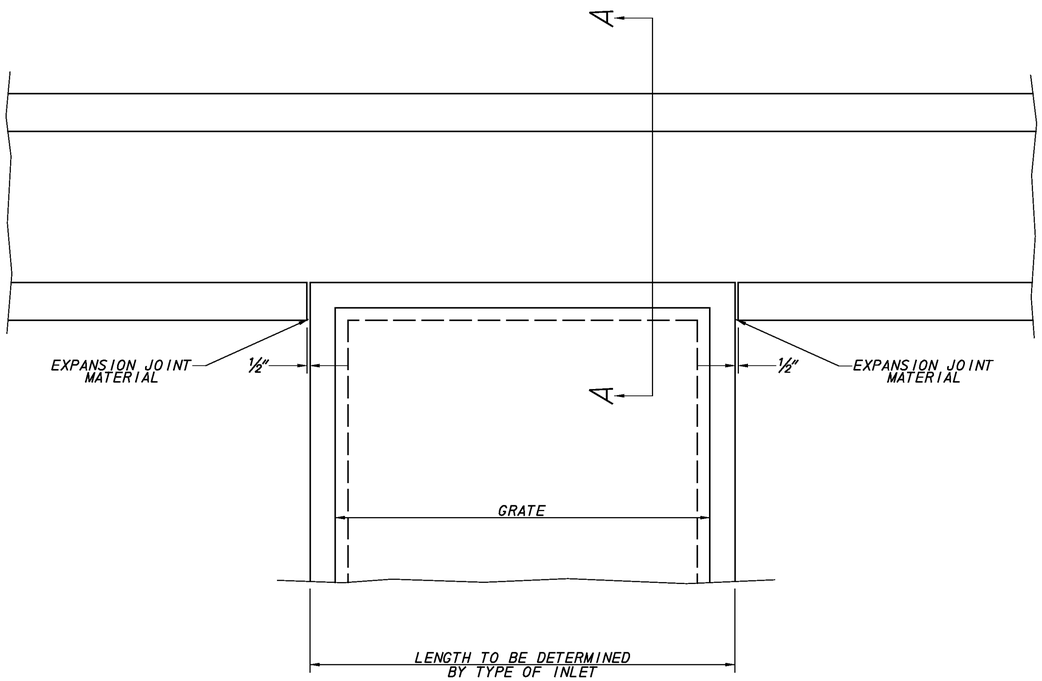

DRAINAGE INLET DETAIL AT BARRIER

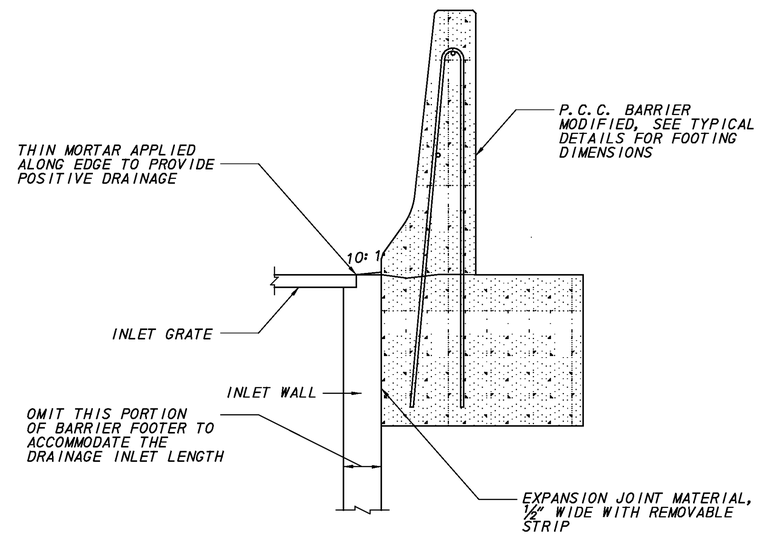

SECTION A–A

△ PCC SAFETY BARRIER PERMANENT, SINGLE FACE (ITEM 720550)

~~PCC BARRIER, MODIFIED (720550)~~

NOTES: SEE NOTES AND DETAILS PREVIOUS SHEET.

Y:\Projects\Del4-202\Del95 Cont 5\DETAILS\95d102c5.dgn

8/17/2011

DELAWARE DEPARTMENT OF TRANSPORTATION	ADDENDUMS / REVISIONS	SCALE 0 30 60 90 FEET	I-95 & US 202 INTERCHANGE	CONTRACT T200510602	BRIDGE NO. NA	CONSTRUCTION DETAILS CD 4 OF 14	SHEET NO. 158
	△ REVISED DETAIL TITLE			COUNTY NEW CASTLE	DESIGNED BY: TM		TOTAL SHTS. 482
					CHECKED BY: MAA		

BRIDGE 1-762 NOTES

1. LOCATION:
   BRIDGE 1-762 (I-95 RAMP 5 OVER U.S. 202), NEW CASTLE COUNTY, DELAWARE.

2. DESIGN CRITERIA:
   2007 AASHTO LRFD BRIDGE DESIGN SPECIFICATIONS, 4TH EDITION, WITH 2008 INTERIM, CUSTOMARY U.S. UNITS.

3. LOADING:
   LIVE LOAD: AASHTO HL-93 AND DELAWARE LEGAL LOADS
   FUTURE WEARING SURFACE: 25 PSF
   S.I.P. DECK FORMS: 15 PSF
   SEISMIC PERFORMANCE ZONE: ZONE 2

4. PORTLAND CEMENT CONCRETE:
   STRUCTURAL ELEMENTS OF PORTLAND CEMENT CONCRETE SHALL BE AS NOTED:
   (F'c = 28 DAY COMPRESSIVE STRENGTH)
   CLASS A - PARAPETS, ABUTMENTS, WINGWALLS, AND FOOTINGS (F'c = 4.5 KSI)
   CLASS D = CONCRETE DECK, AND APPROACH SLABS (F'c = 4.5 KSI)
   MIX REQUIREMENTS SHALL CONFORM TO SECTION 812 OF THE SPECIFICATIONS. ALL EXPOSED EDGES SHALL BE CHAMFERED ¾" UNLESS OTHERWISE NOTED. IT SHALL BE THE CONTRACTOR'S RESPONSIBILITY TO UTILIZE ANY APPROVED CONCRETE ADDITIVES OR HEATING TECHNIQUES TO MAINTAIN THE PROPER TEMPERATURE FOR ANY CONCRETE POURED DURING COLD WEATHER. PAYMENT SHALL BE INCIDENTAL TO THE RESPECTIVE CONCRETE BID ITEMS.

5. STRUCTURAL STEEL:
   STEEL PLATE GIRDER TOP AND BOTTOM FLANGES SHALL BE ASTM A709 GRADE 70W. STEEL PLATE GIRDER WEB, STIFFENERS, SOLE PLATES, AND CROSS-FRAMES SHALL BE ASTM A709 GRADE 50W. THE ADDITIONAL REQUIREMENTS FOR CHARPY V-NOTCH TESTING OF AASHTO M270 FOR PRIMARY LOAD CARRYING MEMBERS SHALL BE INCLUDED.

6. BEARINGS:
   ALL ELASTOMERIC BEARING PADS SHALL BE REINFORCED ELASTOMERIC AND SHALL CONFORM TO SUBSECTION 623.06 OF THE STANDARD SPECIFICATIONS.

7. BAR REINFORCEMENT:
   ALL REINFORCING STEEL SHALL CONFORM TO AASHTO M31 (ASTM A615), GRADE 60. ALL REINFORCING STEEL SHALL HAVE A CLEAR COVER OF 2" UNLESS OTHERWISE SPECIFIED ON THE PLANS. ALL REINFORCING STEEL SHALL BE PROTECTED WITH FUSION BONDED EPOXY. EPOXY COATED REINFORCING STEEL SHALL CONFORM TO AASHTO M284 (ASTM D3963).

8. CONSTRUCTION JOINTS:
   KEYED CONSTRUCTION JOINTS SHALL BE 2" x 4" OR AS NOTED. ALL EXPOSED CONSTRUCTION JOINT EDGES SHALL HAVE A ¾" V-NOTCH.

9. CONCRETE SEALER:
   SILICONE ACRYLIC CONCRETE SEALER SHALL BE APPLIED TO THE EXPOSED FACE OF BACKWALL, WINGWALLS, ABUTMENT SEATS, AND BARRIERS. PAYMENT UNDER ITEM #602646 - SILICONE ACRYLIC CONCRETE SEALER.

10. STABILIZING STRUCTURAL EXCAVATIONS:
    THE CONTRACTOR IS RESPONSIBLE FOR THE STABILITY OF ALL EXCAVATED SLOPES AND THE DESIGN OF ANY TEMPORARY SHORING AND BRACING THAT MAY BE USED. ALL SURFACE RUNOFF SHALL BE DIVERTED AWAY FROM EXCAVATIONS. THE CONTRACTOR SHALL PERFORM ALL EXCAVATIONS IN ACCORDANCE WITH OSHA REQUIREMENTS.

    IN LIEU OF A 2:1 SLOPE, THE CONTRACTOR SHALL USE SHORING FOR ANY EXCAVATIONS EXCEEDING 5 FEET IN HEIGHT. THE COST OF SHORING SHALL BE INCIDENTAL TO ITEM #207000 - EXCAVATION AND BACKFILL FOR STRUCTRUES.

11. PERFORATED PIPE UNDERDRAINS:
    MINIMUM INSTALLATION SLOPE SHALL BE 0.02 FT/FT. CAP FREE ENDS.

12. LOAD RATINGS:
    IN ACCORDANCE WITH AASHTO MANUAL FOR EVALUATION OF BRIDGES, 2008. NOTE THAT THE DECK ACTS COMPOSITELY WITH THE GIRDERS.

13. DECK SLAB:
    DECK SLAB INCLUDES ½" INTEGRAL WEARING SURFACE.

14. S.I.P. FORM SUBMITTALS:
    IN ADDITION TO THE REQUIREMENTS OF THE STANDARD SPECIFICATIONS, CALCULATIONS AND DRAWINGS FOR THE S.I.P. FORMS MUST BE SEALED B A PROFESSIONAL ENGINEER REGISTERED IN THE STATE OF DELAWARE AND SUBMITTED FOR APPROVAL. PAYMENT SHALL BE INCIDENTAL TO ITEM #602013 - PORTLAND CEMENT CONCRETE MASONRY, SUPERSTRUCTURE, CLASS D.

15. HAZARDOUS MATERIAL:
    THE CONTRACTOR IS ADVISED THAT THE EXISTING STRUCTURE OVER US-202 DOES CONTAIN LEAD BASED PAINT. AS A RESULT, THE CONTRACTOR'S PROPOSED DEMOLITION PLAN MUST ADDRESS, AS A MINIMUM, METHODS OF CUTTING THE BEAMS AND/OR DIAPHRAGMS, IF REQUIRED, AND HOW THOSE PERSONS PERFORMING SUCH WORK WILL BE PROTECTED IN ACCORDANCE WITH APPLICABLE OSHA REGULATIONS. ADDITIONALLY, THE CONTRACTOR MUST ADDRESS WHEN AND HOW THE LEAD BASED PAINT WILL BE REMOVED FROM THE STRUCTURAL STEEL AND ALL RELATED BRIDGE COMPONENTS. IF THE WORK IS PERFORMED ON SITE, THEN PROPER PROTECTION, CONTAINMENT, AND FINAL LEAD PAINT DISPOSAL MUST BE ADDRESSED IN THE PROPOSED PLAN. IF THE BEAMS WILL BE TRANSPORTED WITH THE PAINT STILL INTACT, THEN THE PLAN SHALL DETAIL HOW THE STRUCTURAL COMPONENTS WILL BE PROTECTED DURING TRANSPORT, WHERE AND HOW THE PAINT WILL BE REMOVED, AND THE LOCATION OF FINAL PAINT DISPOSAL, AGAIN IN ACCORDANCE WITH OSHA REGULATIONS. WRITTEN DOCUMENTATION MUST BE PROVIDED TO THE ENGINEER, PRIOR TO FINAL CONTRACT. ACCEPTANCE, NOTING WHEN AND WHERE THE LEAD BASED PAINT WAS REMOVED, AND THE LOCATION OF FINAL PAINT DISPOSAL. ALL COSTS INVOLVED WITH THE ABOVE LISTED WORK SHALL BE INCIDENTAL TO ITEM #211000 - REMOVAL OF STRUCTURES AND OBSTRUCTIONS.

16. ROCK PROFILE VARIATION:
    ANTICIPATING THAT THE ACTUAL PROFILE OF THE ROCK VARIES OVER WHAT HAS BEEN MEASURED, THE ESTIMATED QUANTITIES FOR THE ITEMS LISTED BELOW HAVE BEEN INCREASED BY 25% FROM THE QUANTITIES CALCULATED:
    ITEM #206500 - ROCK EXCAVATION FOR STRUCTURES AND TRENCHES
    ITEM #609000 - SUBFOUNDATION CONCRETE

17. REMOVAL OF STRUCTURES AND OBSTRUCTIONS
    ITEMS TO BE REMOVED UNDER ITEM #211000 - REMOVAL OF STRUCTURES AND OBSTRUCTIONS ASSOCIATED WITH BRIDGE 1-762 SHALL INCLUDE, BUT NOT BE LIMITED TO, THE FOLLOWING:
    -EXISTING BRIDGE SUPERSTRUCTURE INCLUDING CONCRETE DECK, APPROACH SLAB, PARAPET, STRUCTURAL STEEL BEAMS, DIAPHRAGMS, AND CROSS BRACING.
    -EXISTING BRIDGE SUBSTRUCTURE INCLUDING ABUTMENTS, PIERS, AND FOOTINGS.

18. BLAST MONITORING
    BOTH THE EXISTING STRUCTURE AND THE PROPOSED STRUCTURE SHALL BE MONITORED DURING ANY ROCK BLASTING TO ENSURE STRUCTURAL STABILITY THROUGHOUT ALL PHASES OF THE PROJECT. MONITORING SHALL BE INCIDENTAL TO ITEM #206000 - ROCK EXCAVATION AND BACKFILLING FOR STRUCTURES AND TRENCHES.

19. REBAR LAP SPLICES / MECHANICAL COUPLERS
    THE CONTRACTOR IS PERMITTED TO USE MECHANICAL COUPLERS IN LIEU OF LAP SPLICES FOR BAR REINFORCEMENT. IF USED, MECHANICAL COUPLERS SHALL BE EPOXY COATED. PAYMENT FOR MECHANICAL COUPLERS SHALL BE INCIDENTAL TO ITEM #604000 - BAR REINFORCEMENT, EPOXY COATED.

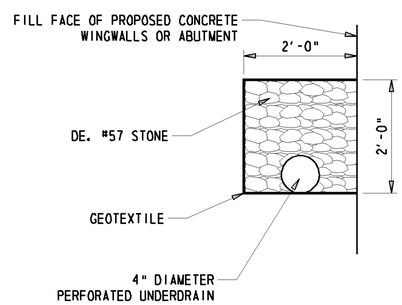

2 UNDERDRAIN DETAILS
N.T.S.

INDEX OF SHEETS

SHEET NO.	TITLE
1	PROJECT NOTES
2	BRIDGE PLAN, SECTION & ELEVATION
3	CONSTRUCTION PHASING TYPICAL SECTIONS
4	WEST ABUTMENT DETAILS
5	WEST ABUTMENT FOOTING DETAILS
6	EAST ABUTMENT DETAILS
7	EAST ABUTMENT FOOTING DETAILS
8	WINGWALL DETAILS
9	FRAMING PLAN
10	GIRDER DETAILS (1 OF 2)
11	GIRDER DETAILS (2 OF 2)
12	FINISHED DECK ELEVATIONS
13	DECK PLAN
14	APPROACH SLAB DETAILS
15	BARRIER DETAILS
16	EXPANSION JOINT DETAILS
17	REINFORCEMENT BAR SCHEDULE (1 OF 2)
18	REINFORCEMENT BAR SCHEDULE (2 OF 2)

QUANTITIES

ITEM NO.	ITEM TITLE	UNIT	QUANTITY
206500	ROCK EXCAVATION AND BACKFILLING FOR STRUCTURES AND TRENCHES	C.Y.	1700
207000	EXCAVATION AND BACKFILL FOR STRUCTURES	C.Y.	2500
207501	SHEETING AND SHORING	L.S.	-
209003	BORROW, TYPE C	C.Y.	1000
211000	REMOVAL OF STRUCTURES AND OBSTRUCTIONS	L.S.	-
601502	TEMPORARY PROTECTIVE SHEILD	L.S.	-
602003	PCC MASONRY, ABUTMENT FOOTING, CLASS A	C.Y.	520
602013	PCC MASONRY, SUPERSTRUCTURE, CLASS D	C.Y.	155
602014	PCC MASONRY, APPROACH SLAB, CLASS D	C.Y.	220
602015	PCC MASONRY, ABUTMENT ABOVE FOOTING, CLASS A	C.Y.	755
602017	PCC MASONRY, PARAPET, CLASS A	C.Y.	47
602646	SILICONE ACRYLIC CONCRETE SEALER	S.F.	9000
602579	DRILLING HOLES AND INSTALLING DOWELS	EACH	650
604000	BAR REINFORCEMENT, EPOXY COATED	LB	285,000
605002	STEEL STRUCTURES	L.S.	-
605657	STRIP SEAL EXPANSION JOINT	L.F.	115
609000	SUBFOUNDATION CONCRETE	C.Y.	1600
712020	RIPRAP, R-4	TON	490
713003	GEOTEXTILES, RIPRAP	S.Y.	745
715000	PERFORATED PIPE UNDERDRAINS, 4"	L.F.	400
720526	PORTABLE P.C.C. STRUCTURE-MOUNTED SAFETY BARRIER	L.F.	190

LRFR LOAD RATINGS

TYPE OF TRUCK	INVENTORY RATING		OPERATING RATING	
	RATING FACTOR	LOAD RATING (TONS)	RATING FACTOR	LOAD RATING (TONS)
AASHTO HL-93 (TRUCK + LANE)	1.370	N/A	1.780	N/A
AASHTO HL-93 (TANDEM + LANE)	1.680	N/A	2.170	N/A

DELAWARE
DEPARTMENT OF TRANSPORTATION

ADDENDUMS / REVISIONS
2 - ADDED UNDERDRAIN DETAIL, JKM 8/1/11

I-95 & US 202 INTERCHANGE
I-95 RAMP 5 OVER US 202

CONTRACT	BRIDGE NO. 1-762
T200510602	DESIGNED BY: JKM
COUNTY	
NEW CASTLE	CHECKED BY: BAB

PROJECT NOTES
S2 - 1 OF 18

SHEET NO. 169
TOTAL SHTS. 482

W:\MSV8\CELLS\PROJDEV\SB.CEL

*NOTE #1:
EXISTING STUB ABUTMENT BOTTOM ELEVATION IS 169.9.
PROPOSED FOOTING BOTTOM ELEVATION IS 154.5.
SHORING SHALL BE PROVIDED DURING PHASE 1, STAGE 2 TO ENSURE STRUCTURAL INTEGRITY OF EXISTING ABUTMENT AND FILL DURING PROPOSED CONSTRUCTION. SHORING SHALL BE REMOVED UPON DEMOLITION OF EXISTING STRUCTURE DURING PHASE 1, STAGE 4. SHORING TO BE PAID UNDER ITEM #207501 - SHEETING AND SHORING.

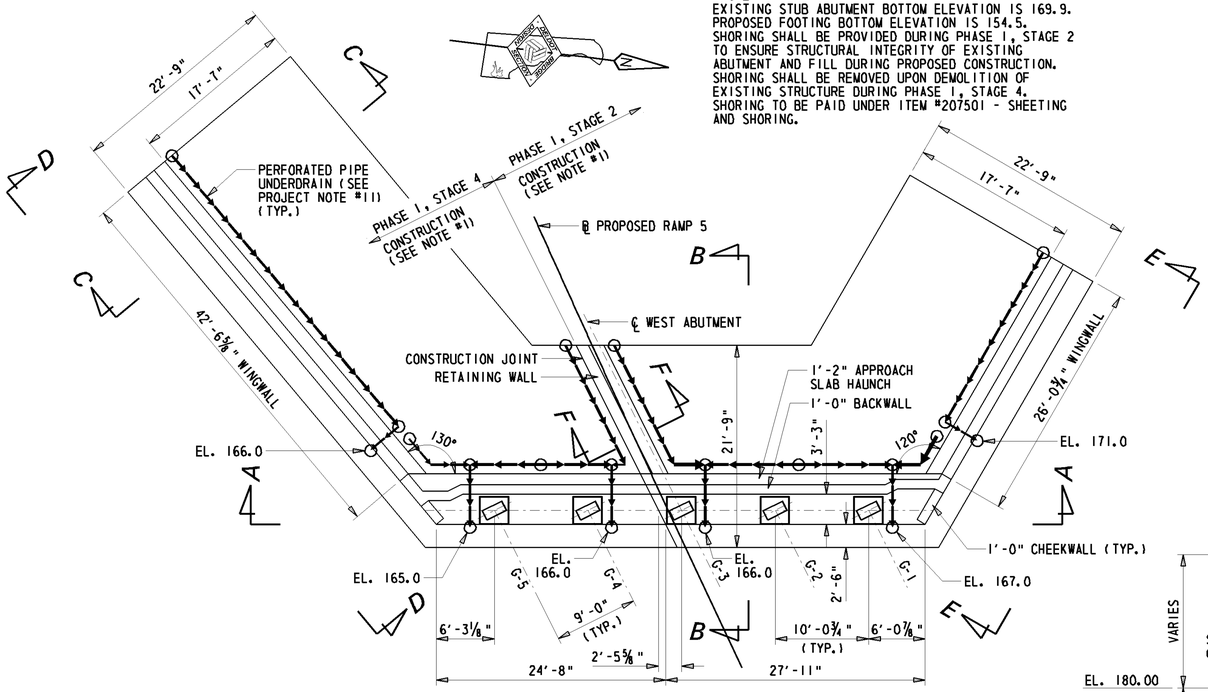

WEST ABUTMENT PLAN
⅛" = 1'-0"

MASONRY PAD ELEVATIONS	
PAD	ELEVATION
G-1	180.74
G-2	180.87
G-3	181.00
G-4	181.12
G-5	181.24

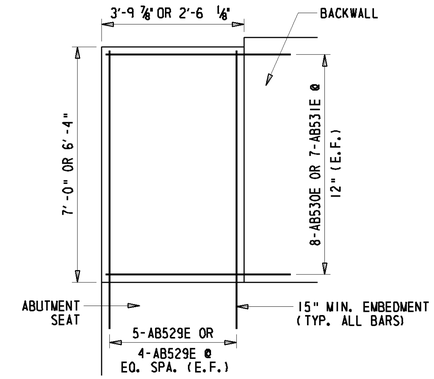

CHEEK WALL - ELEVATION
½" = 1'-0"

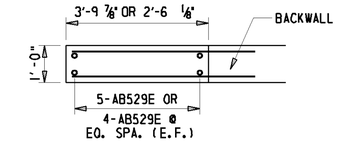

CHEEK WALL - PLAN
½" = 1'-0"

ABBREVIATIONS
E.F. - EACH FACE

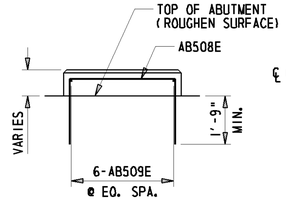

MASONRY PAD - ELEVATION
½" = 1'-0"

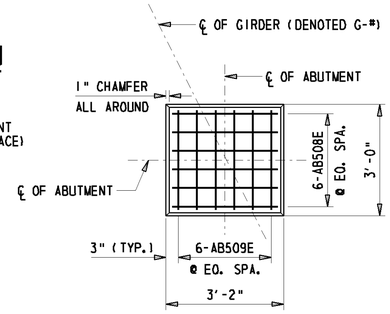

MASONRY PAD - PLAN
½" = 1'-0"

*NOTE #3:
ROADWAY SURFACE GRADE AT PHASING CONSTRUCTION JOINT IS APPROXIMATELY 2'-6" ABOVE TOP OF RETAINING WALL. HOTMIX SHALL BE SLOPED FROM THE TOP OF RETAINING WALL TO MATCH ROADWAY SURFACE GRADE FOR TRAFFIC DURING PHASE 1, STAGE 4. THIS 2'-6" OF HOTMIX SHALL BE REMOVED WHEN PHASE 1, STAGE 4 PORTION OF APPROACH SLAB IS POURED. PAYMENT UNDER ITEM #202000 - EXCAVATION AND EMBANKMENT.

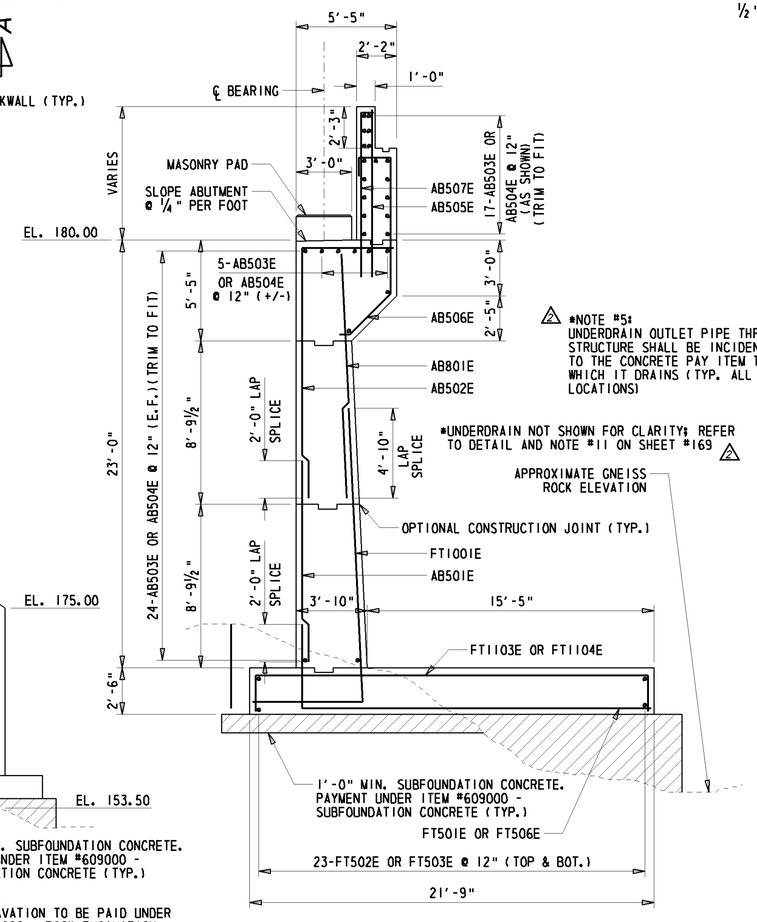

*NOTE #5:
UNDERDRAIN OUTLET PIPE THROUGH STRUCTURE SHALL BE INCIDENTAL TO THE CONCRETE PAY ITEM THROUGH WHICH IT DRAINS (TYP. ALL LOCATIONS)

*UNDERDRAIN NOT SHOWN FOR CLARITY; REFER TO DETAIL AND NOTE #11 ON SHEET #169

APPROXIMATE GNEISS ROCK ELEVATION

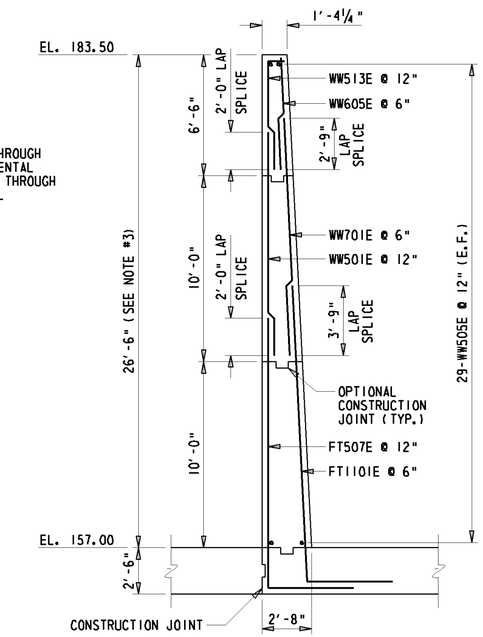

RETAINING WALL (SECTION F-F)
¼" = 1'-0"

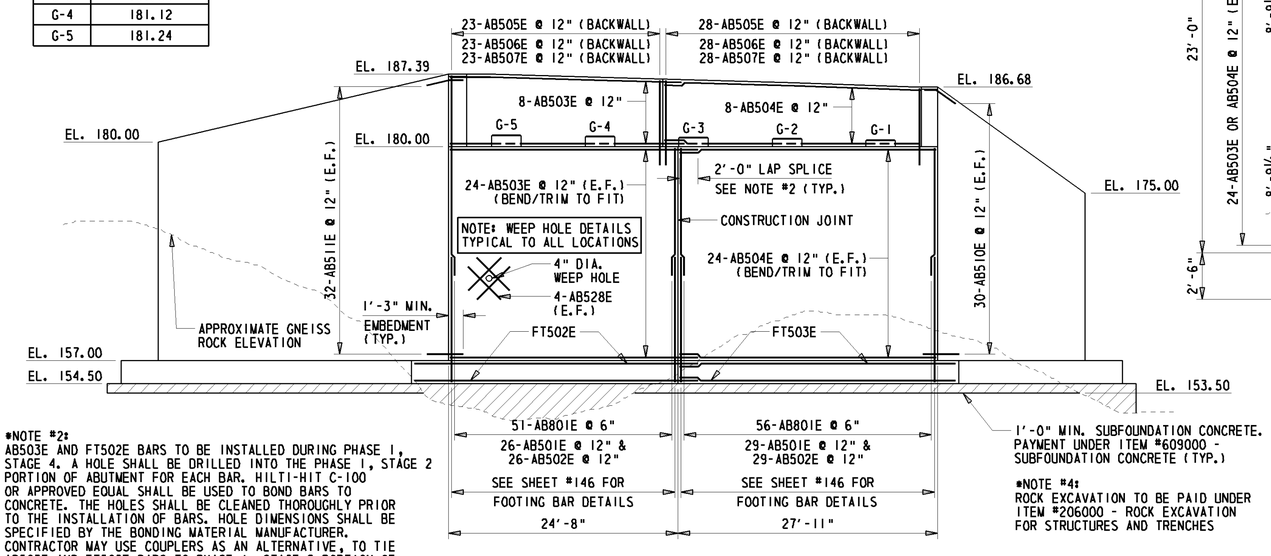

*NOTE #2:
AB503E AND FT502E BARS TO BE INSTALLED DURING PHASE 1, STAGE 4. A HOLE SHALL BE DRILLED INTO THE PHASE 1, STAGE 2 PORTION OF ABUTMENT FOR EACH BAR. HILTI-HIT C-100 OR APPROVED EQUAL SHALL BE USED TO BOND BARS TO CONCRETE. THE HOLES SHALL BE CLEANED THOROUGHLY PRIOR TO THE INSTALLATION OF BARS. HOLE DIMENSIONS SHALL BE SPECIFIED BY THE BONDING MATERIAL MANUFACTURER. CONTRACTOR MAY USE COUPLERS AS AN ALTERNATIVE, TO TIE AB503E AND FT502E BARS TO PHASE 1, STAGE 2 PORTION OF ABUTMENT (SEE PROJECT NOTE #19). PAYMENT SHALL BE MADE UNDER ITEM #602579 - DRILLING HOLES AND INSTALLING DOWELS.

*NOTE #4:
ROCK EXCAVATION TO BE PAID UNDER ITEM #206000 - ROCK EXCAVATION FOR STRUCTURES AND TRENCHES

WEST ABUTMENT ELEVATION (SECTION A-A)
⅛" = 1'-0"

WEST ABUTMENT (SECTION B-B)
¼" = 1'-0"

W:\MSV8\CELLS\PROJDEV\SB.CEL

DELAWARE DEPARTMENT OF TRANSPORTATION

ADDENDUMS / REVISIONS
2 - UNDERDRAIN NOTES ADDED & EDITED, JKM 8/1/11

I-95 & US 202 INTERCHANGE
I-95 RAMP 5 OVER US 202

CONTRACT	BRIDGE NO.	1-762
T200510602	DESIGNED BY: JKM	
COUNTY		
NEW CASTLE	CHECKED BY: BAB	

WEST ABUTMENT DETAILS
S2 - 4 OF 18

SHEET NO.
172
TOTAL SHTS.
482

*NOTE #1:
EXISTING STUB ABUTMENT BOTTOM ELEVATION IS 169.9.
PROPOSED FOOTING BOTTOM ELEVATION IS 161.0.
SHORING SHALL BE PROVIDED DURING PHASE 1, STAGE 2 TO ENSURE STRUCTURAL INTEGRITY OF EXISTING ABUTMENT AND FILL DURING PROPOSED CONSTRUCTION. SHORING SHALL BE REMOVED UPON DEMOLITION OF EXISTING STRUCTURE DURING PHASE 1, STAGE 4. SHORING TO BE PAID UNDER ITEM #207501 - SHEETING AND SHORING.

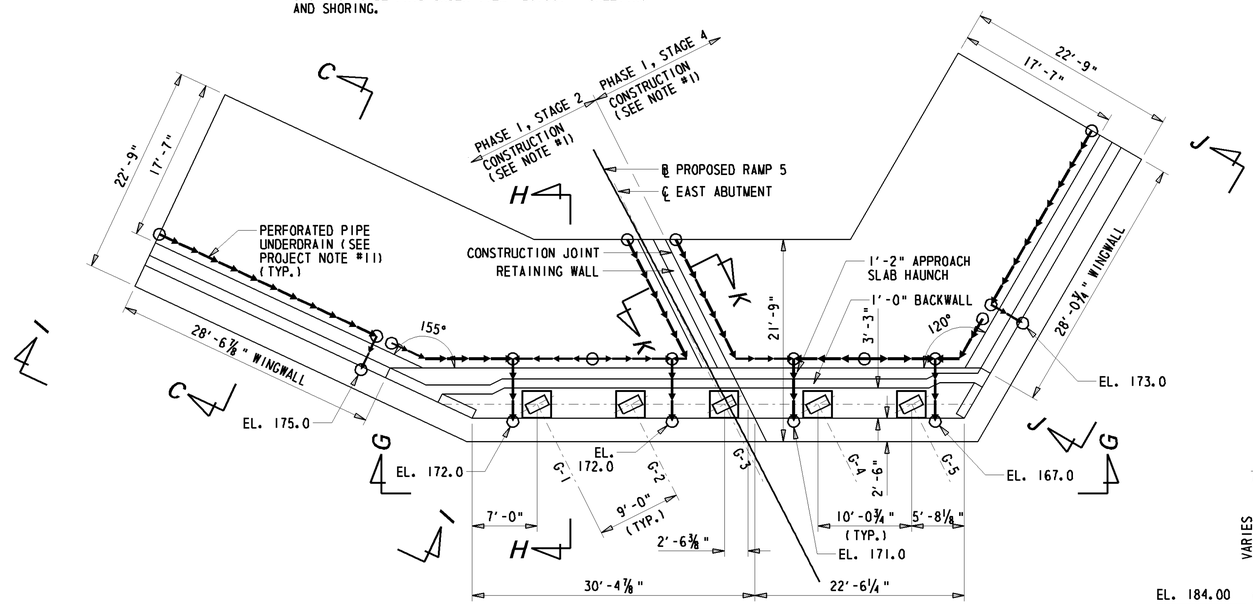

EAST ABUTMENT PLAN

⅛" = 1'-0"

MASONRY PAD ELEVATIONS	
PAD	ELEVATION
G-1	184.64
G-2	184.78
G-3	184.92
G-4	185.06
G-5	185.20

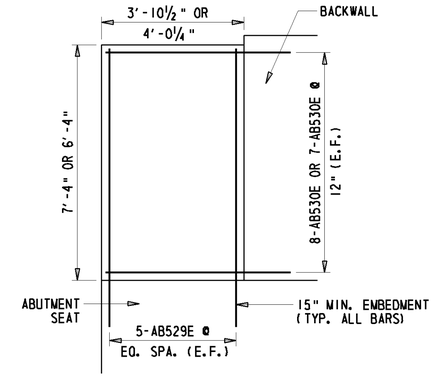

CHEEK WALL - ELEVATION

½" = 1'-0"

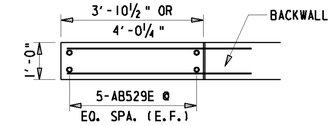

CHEEK WALL - PLAN

½" = 1'-0"

ABBREVIATIONS
E.F. - EACH FACE

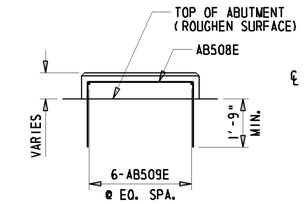

MASONRY PAD - ELEVATION

½" = 1'-0"

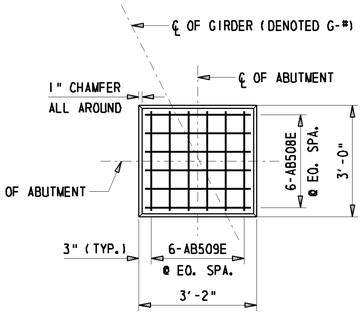

MASONRY PAD - PLAN

½" = 1'-0"

*NOTE #3:
ROADWAY SURFACE GRADE AT PHASING CONSTRUCTION JOINT IS APPROXIMATELY 2'-6" ABOVE TOP OF RETAINING WALL. HOTMIX SHALL BE SLOPED FROM THE TOP OF RETAINING WALL TO MATCH ROADWAY SURFACE GRADE FOR TRAFFIC DURING PHASE 1, STAGE 4. THIS 2'-0" OF HOTMIX SHALL BE REMOVED WHEN PHASE 1, STAGE 4 PORTION OF APPROACH SLAB IS POURED. PAYMENT UNDER ITEM #202000 - EXCAVATION AND EMBANKMENT.

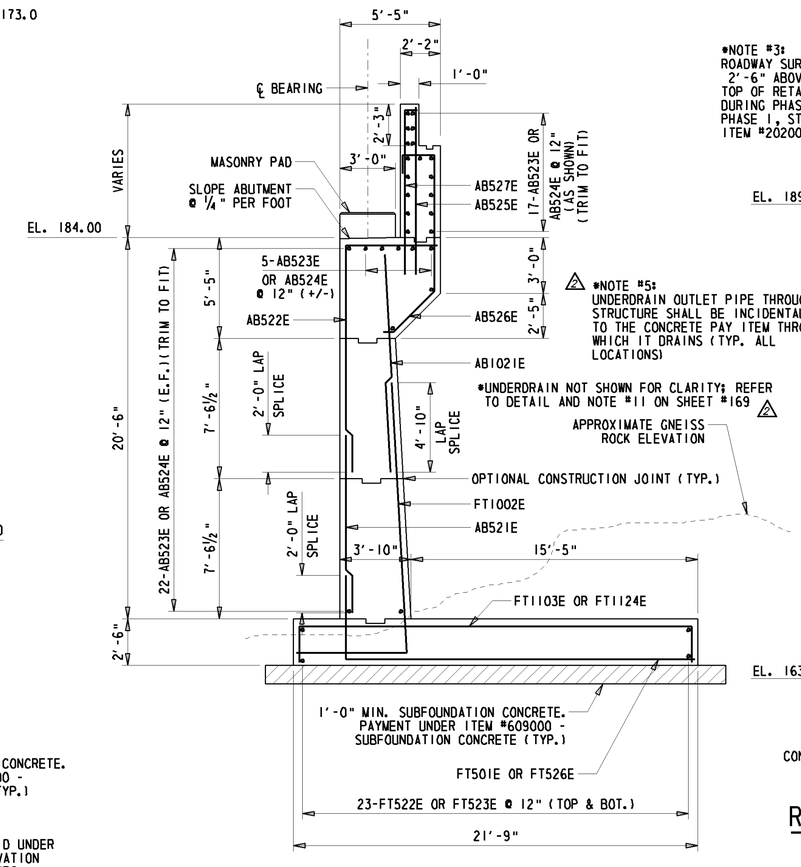

EAST ABUTMENT (SECTION H-H)

¼" = 1'-0"

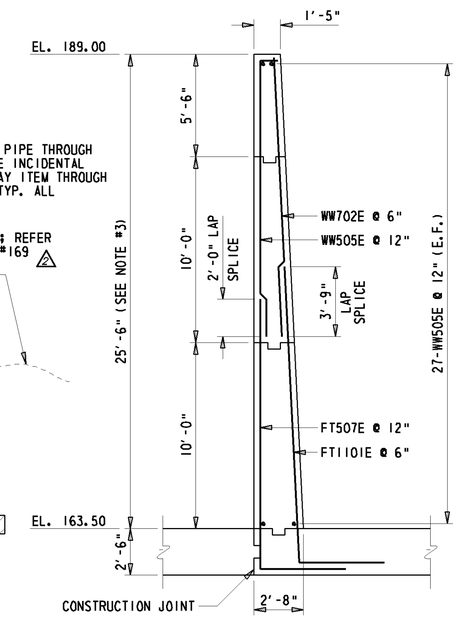

RETAINING WALL (SECTION K-K)

¼" = 1'-0"

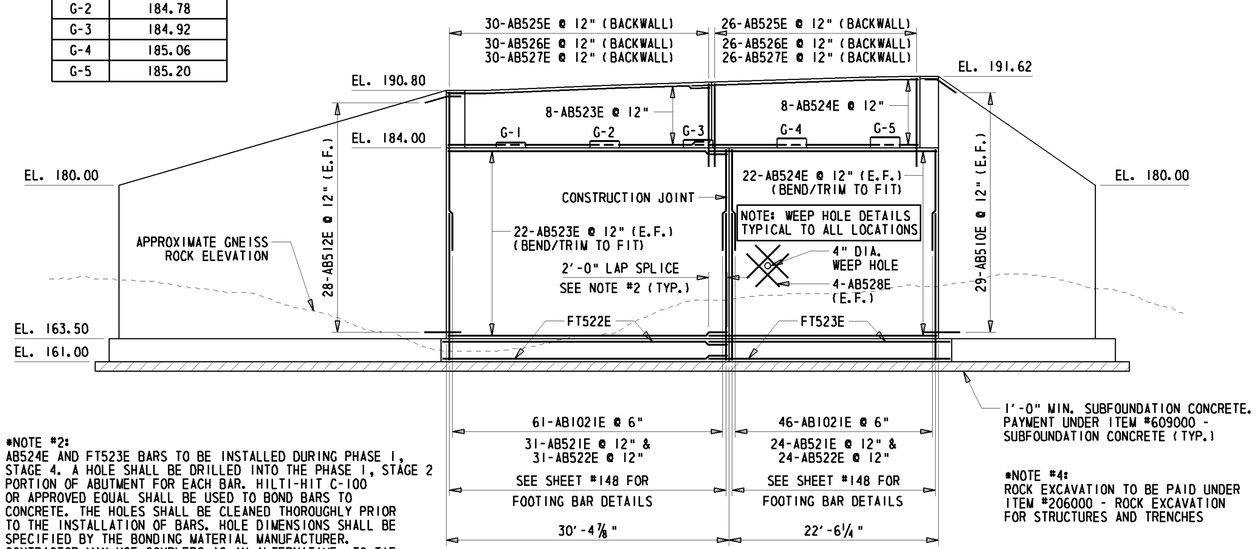

*NOTE #2:
AB524E AND FT523E BARS TO BE INSTALLED DURING PHASE 1, STAGE 4. A HOLE SHALL BE DRILLED INTO THE PHASE 1, STAGE 2 PORTION OF ABUTMENT FOR EACH BAR. HILTI-HIT C-100 OR APPROVED EQUAL SHALL BE USED TO BOND BARS TO CONCRETE. THE HOLES SHALL BE CLEANED THOROUGHLY PRIOR TO THE INSTALLATION OF BARS. HOLE DIMENSIONS SHALL BE SPECIFIED BY THE BONDING MATERIAL MANUFACTURER. CONTRACTOR MAY USE COUPLERS AS AN ALTERNATIVE, TO TIE AB524E AND FT523E BARS TO PHASE 1, STAGE 2 PORTION OF ABUTMENT (SEE PROJECT NOTE #19). PAYMENT SHALL BE MADE UNDER ITEM #602579 - DRILLING HOLES AND INSTALLING DOWELS.

*NOTE #4:
ROCK EXCAVATION TO BE PAID UNDER ITEM #206000 - ROCK EXCAVATION FOR STRUCTURES AND TRENCHES

EAST ABUTMENT ELEVATION (SECTION G-G)

⅛" = 1'-0"

W:\MSV8\CELLS\PROJDEV\SB.CEL

DELAWARE DEPARTMENT OF TRANSPORTATION

ADDENDUMS / REVISIONS
2 - UNDERDRAIN NOTES ADDED & EDITED, JKM 8/1/11

I-95 & US 202 INTERCHANGE
I-95 RAMP 5 OVER US 202

CONTRACT	BRIDGE NO. 1-762
T200510602	DESIGNED BY: JKM
COUNTY	CHECKED BY: BAB
NEW CASTLE	

EAST ABUTMENT DETAILS
S2 - 6 OF 18

SHEET NO. 174
TOTAL SHTS. 482

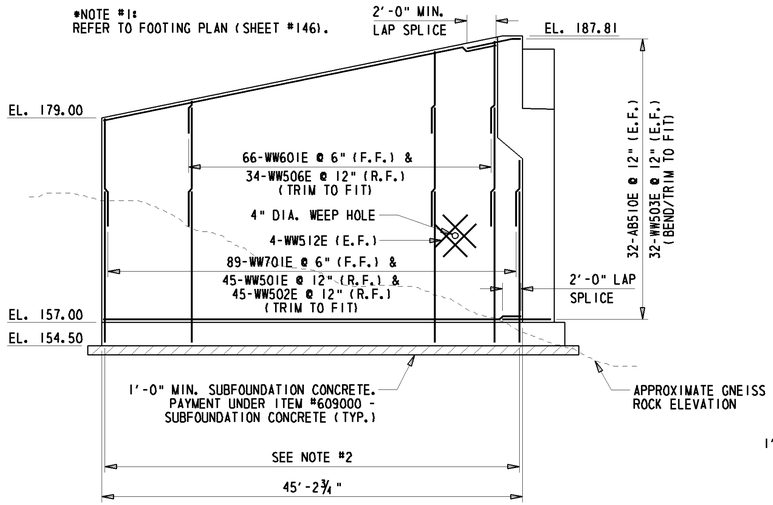

WINGWALL ELEVATION (SECTION D-D)

⅛" = 1'-0"

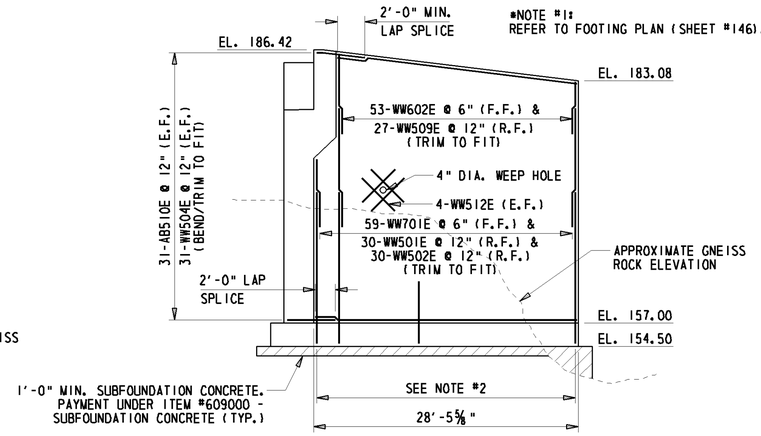

WINGWALL ELEVATION (SECTION E-E)

⅛" = 1'-0"

ABBREVIATIONS

F.F. - FILL FACE
R.F. - ROADWAY FACE
E.F. - EACH FACE

*NOTE #1:
ROCK EXCAVATION TO BE PAID UNDER ITEM #206000 - ROCK EXCAVATION FOR STRUCTURES AND TRENCHES

*NOTE #2:
REFER TO FOOTING PLAN

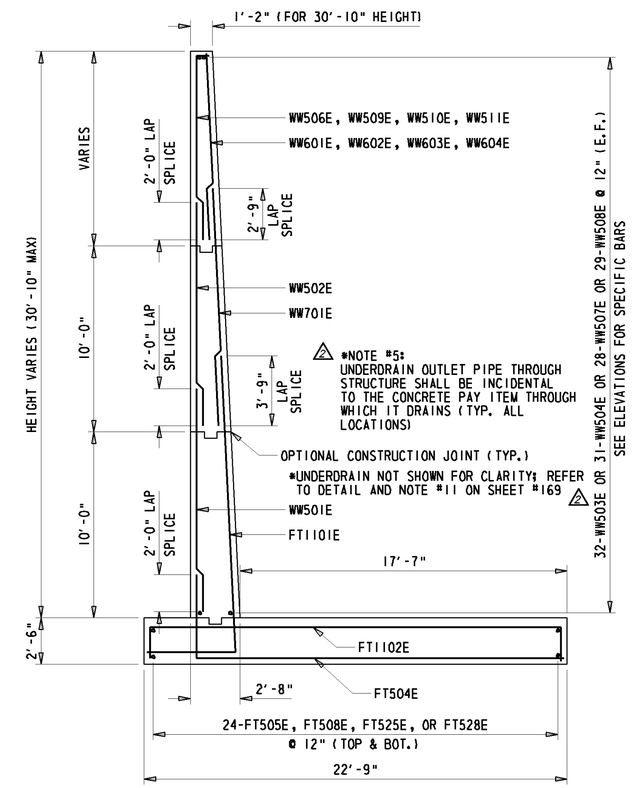

TYPICAL WINGWALL (SECTION C-C)

¼" = 1'-0"

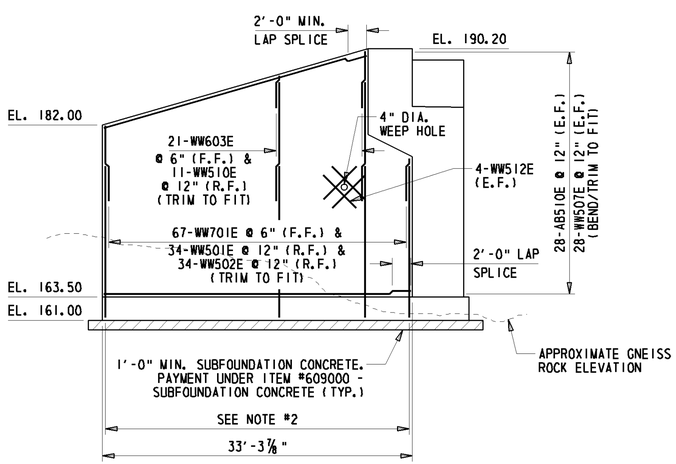

WINGWALL ELEVATION (SECTION I-I)

⅛" = 1'-0"

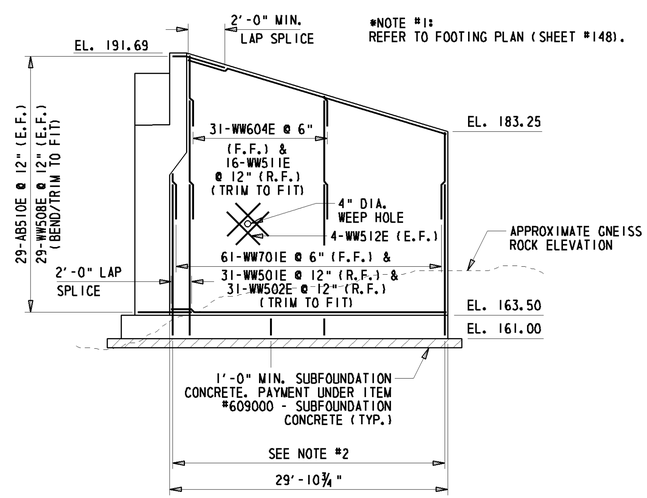

WINGWALL ELEVATION (SECTION J-J)

⅛" = 1'-0"

W:\MSV8\CELLS\PROJDEV\SB.CEL

DELAWARE DEPARTMENT OF TRANSPORTATION

ADDENDUMS / REVISIONS

2 - UNDERDRAIN NOTES ADDED & EDITED, JKM 8/1/11

I-95 & US 202 INTERCHANGE
I-95 RAMP 5 OVER US 202

CONTRACT	BRIDGE NO.	1-762
T200510602	DESIGNED BY: JKM	
COUNTY		
NEW CASTLE	CHECKED BY: BAB	

WINGWALL DETAILS
S2 - 8 OF 18

SHEET NO.
176
TOTAL SHTS.
482

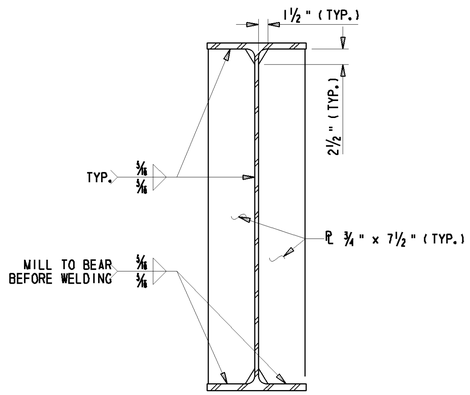

BEARING STIFFENERS

¼" = 1'-0"

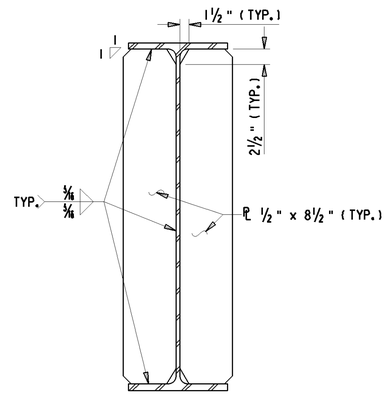

CONNECTION PLATE

¼" = 1'-0"

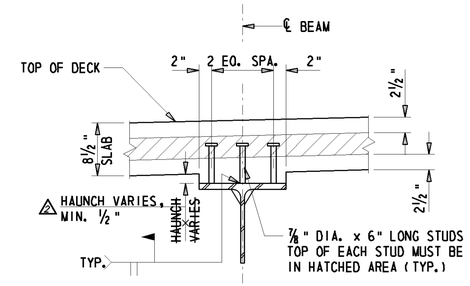

SHEAR CONNECTORS

¼" = 1'-0"

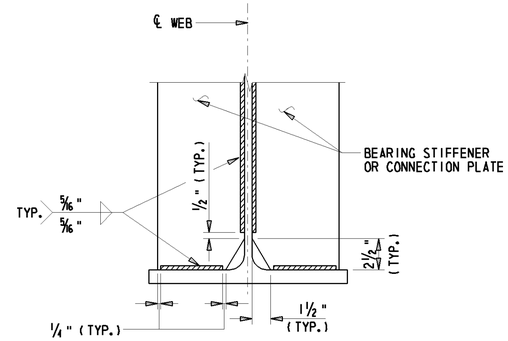

BEARING STIFFENER & CONNECTION PLATE WELD TERMINATION

N.T.S.

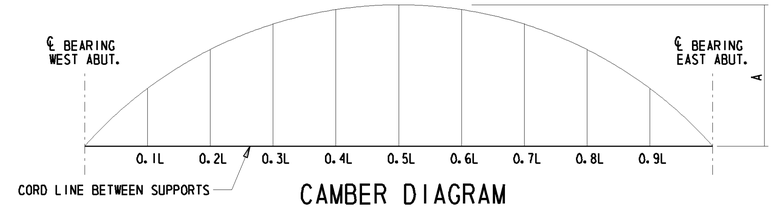

CAMBER DIAGRAM

DLS - DENOTES DEFLECTION DUE TO STRUCTURAL STEEL GIRDER

DLC - DENOTES DEFLECTION DUE TO DECK SLAB, HAUNCH, AND SIP FORMS

SDL - DENOTES DEFLECTION DUE TO PARAPET AND FUTURE WEARING SURFACE

TD - DENOTES TOTAL DEAD LOAD DEFLECTION

VCO - DENOTES CAMBER FOR VERTICAL CURVE ORDINATE DUE TO ROADWAY PROFILE

TOTAL CAMBER - DENOTES DESIRED CAMBER BEFORE INSTALLATION OF BEAMS

DEFLECTION AND TOTAL CAMBER (INCH)

GIRDER		0.1L	0.2L	0.3L	0.4L	0.5L	0.6L	0.7L	0.8L	0.9L
GIRDER 1	DLS	-1/8	-3/16	-1/4	-5/16	-5/16	-5/16	-1/4	-3/16	-1/8
	DLC	-7/16	-7/8	-1 3/16	-1 3/8	-1 7/16	-1 3/8	-1 3/16	-7/8	-7/16
	SDL	-1/16	-3/16	-1/4	-1/4	-5/16	-1/4	-1/4	-3/16	-1/16
	TD	-5/8	-1 3/16	-1 11/16	-1 5/16	-2 1/16	-1 5/16	-1 11/16	-1 3/16	-5/8
	VCO	5/16	5/8	11/16	7/8	15/16	7/8	11/16	5/8	5/16
	TOTAL CAMBER	15/16	1 11/16	2 1/2	2 13/16	3	2 13/16	2 1/2	1 11/16	15/16
GIRDER 2	DLS	-1/8	-3/16	-1/4	-5/16	-5/16	-5/16	-1/4	-3/16	-1/8
	DLC	-1/2	-15/16	-1 1/4	-1 7/16	-1 1/2	-1 7/16	-1 1/4	-15/16	-1/2
	SDL	-1/16	-3/16	-1/4	-1/4	-5/16	-1/4	-1/4	-3/16	-1/16
	TD	-5/8	-1 3/16	-1 11/16	-1 5/16	-2 1/16	-1 5/16	-1 11/16	-1 3/16	-5/8
	VCO	5/16	5/8	11/16	7/8	15/16	7/8	11/16	5/8	5/16
	TOTAL CAMBER	1	1 7/8	2 9/16	2 15/16	3 1/16	2 15/16	2 9/16	1 7/8	1
GIRDER 3	DLS	-1/8	-3/16	-1/4	-5/16	-5/16	-5/16	-1/4	-3/16	-1/8
	DLC	-1/2	-15/16	-1 1/4	-1 7/16	-1 1/2	-1 7/16	-1 1/4	-15/16	-1/2
	SDL	-1/16	-3/16	-1/4	-1/4	-5/16	-1/4	-1/4	-3/16	-1/16
	TD	-5/8	-1 3/16	-1 11/16	-1 5/16	-2 1/16	-1 5/16	-1 11/16	-1 3/16	-5/8
	VCO	5/16	5/8	11/16	7/8	15/16	7/8	11/16	5/8	5/16
	TOTAL CAMBER	1	1 7/8	2 9/16	2 15/16	3 1/16	2 15/16	2 9/16	1 7/8	1
GIRDER 4	DLS	-1/8	-3/16	-1/4	-5/16	-5/16	-5/16	-1/4	-3/16	-1/8
	DLC	-1/2	-15/16	-1 1/4	-1 7/16	-1 1/2	-1 7/16	-1 1/4	-15/16	-1/2
	SDL	-1/16	-3/16	-1/4	-1/4	-5/16	-1/4	-1/4	-3/16	-1/16
	TD	-5/8	-1 3/16	-1 11/16	-1 5/16	-2 1/16	-1 5/16	-1 11/16	-1 3/16	-5/8
	VCO	5/16	5/8	11/16	7/8	15/16	7/8	11/16	5/8	5/16
	TOTAL CAMBER	1	1 7/8	2 9/16	2 15/16	3 1/16	2 15/16	2 9/16	1 7/8	1
GIRDER 5	DLS	-1/8	-3/16	-1/4	-5/16	-5/16	-5/16	-1/4	-3/16	-1/8
	DLC	-7/16	-7/8	-1 3/16	-1 3/8	-1 7/16	-1 3/8	-1 3/16	-7/8	-7/16
	SDL	-1/16	-3/16	-1/4	-1/4	-5/16	-1/4	-1/4	-3/16	-1/16
	TD	-5/8	-1 3/16	-1 11/16	-1 5/16	-2 1/16	-1 5/16	-1 11/16	-1 3/16	-5/8
	VCO	5/16	5/8	11/16	7/8	15/16	7/8	11/16	5/8	5/16
	TOTAL CAMBER	15/16	1 11/16	2 1/2	2 13/16	3	2 13/16	2 1/2	1 11/16	15/16

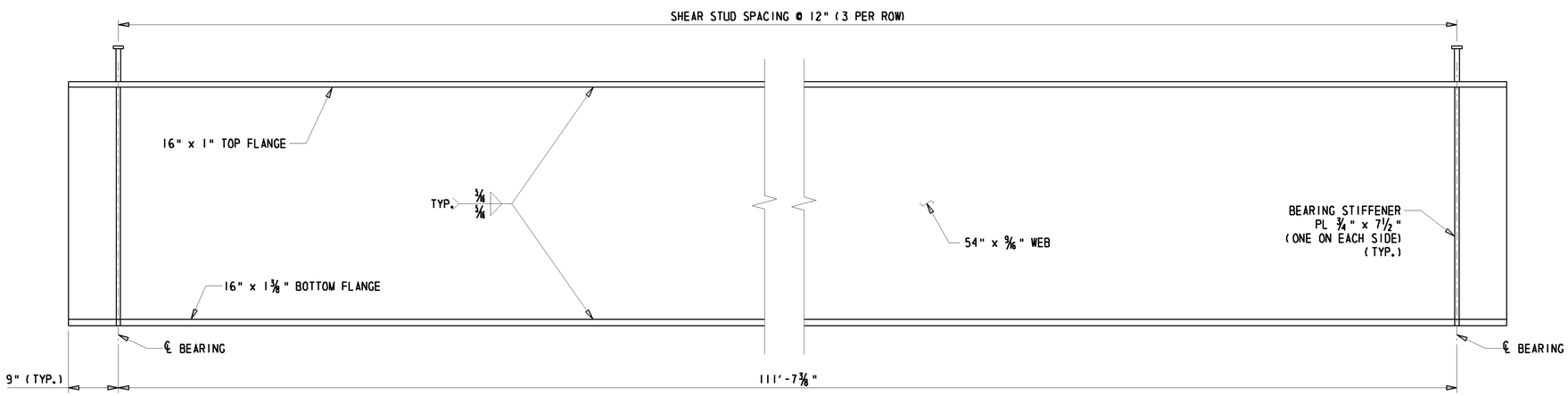

BEAM ELEVATION

¼" = 1'-0"

NOTES:

1. POSITIVE CAMBERS/DEFLECTIONS ARE UPWARD AND NEGATIVE CAMBERS/DEFLECTIONS ARE DOWNWARD.
2. BEAMS SHALL BE CAMBERED BY TOTAL CAMBER AMOUNTS SHOWN IN THE TABLE. TOLERANCE SHALL BE 0" UNDER 1/16" OVER.
3. AFTER THE ERECTION OF STEEL AND THE CONNECTIONS OF THE STEEL CROSS FRAMES ARE COMPLETE, THE CONTRACTOR SHALL OBTAIN ELEVATIONS AT TEN FOOT INTERVALS ON THE TOP FLANGES OF ALL BEAMS TO DETERMINE THE REQUIRED HAUNCH THICKNESS. ALL OF THE DATA SHALL BE SUBMITTED WITH DETAILS OF STAY-IN-PLACE FORMS FOR REVIEW AND APPROVAL BY THE ENGINEER IN THE FIELD.

STEEL NOTES:

1. STEEL PLATE GIRDER TOP AND BOTTOM FLANGES SHALL BE ASTM A709 GRADE 70W. STEEL PLATE GIRDER WEB, STIFFENERS, SOLE PLATES, AND CROSS-FRAMES SHALL BE ASTM A709 GRADE 50W. THE ADDITIONAL REQUIREMENTS FOR CHARPY V-NOTCH TESTING OF AASHTO M270 FOR PRIMARY LOAD CARRYING MEMBERS SHALL BE INCLUDED. SUPPLEMENT REQUIREMENTS FOR TOUGHNESS ON ALL MEMBER COMPONENTS MARKED (T).

2. WELDING SHALL CONFORM TO THE CURRENT ANSI/AASHTO/AWS BRIDGE WELDING CODE D1.5-08. WELDING AND NONDESTRUCTIVE TESTING SYMBOLS SHALL CONFORM TO SYMBOLS FOR WELDING, BRAZING, AND NONDESTRUCTIVE EXAMINATION AWS A2.4-93.

3. JOINT WELDING PROCEDURES, OVERALL FABRICATION METHODS, AND QUALITY CONTROL INSPECTION PROCEDURE SHALL BE INCLUDED AS WRITTEN PROCEDURE SPECIFICATIONS WITH THE SHOP PLAN SUBMISSION.

4. GIRDER WEBS SHALL BE GROUND SMOOTH AND SHALL BE PLUMB AT THE ENDS UNDER FULL DEAD LOAD.

5. ALL BOLTED CONNECTIONS SHALL BE MADE WITH 7/8" DIAMETER ASTM A325 HIGH STRENGTH BOLTS, TYPE 1, UNLESS OTHERWISE NOTED.

6. THE GIRDERS SHALL BE PAINTED WITH A URETHANE PAINT SYSTEM IN ACCORDANCE WITH SECTION 605 FROM EACH END TO A DISTANCE OF 5' FROM FACE OF ABUTMENT OR MSE WALL AND THE DISTANCE BETWEEN 5' FROM EACH FACE OF PIER CAP. IN ADDITION, EACH FASCIA GIRDER SHALL BE PAINTED AS PER PAINTING DETAIL ABOVE IN AREAS BETWEEN THE PIER AND ABUTMENTS. THE COLOR OF THE FINISHED PAINT SHALL BE BROWN (NO. 10076) FROM FEDERAL STANDARD 595C. THE COLOR SHALL BE SUBMITTED FOR APPROVAL. AT ALL LOCATIONS WHERE THE CONTRACTOR'S WORK DAMAGES THE EXISTING PAINT SYSTEM, THE CONTRACTOR SHALL CLEAN THE DAMAGED LOCATION AND REPAINT THE AREA. ALL CLEANING AND PAINTING IS INCIDENTAL TO ITEM #605002 - STEEL STRUCTURES.

7. OVERSIZED HOLES SHALL BE USED ON DIAPHRAGM CONNECTORS.

8. ALL BOLTS ON DIAPHRAGMS SHALL BE FINGER TIGHT AT ERECTION. BOLTS ARE TO BE TORQUED BEFORE THE DECK CONCRETE IS POURED.

9. DIRECTION OF WELDS IS NOT APPLICABLE IF STIFFENERS ARE FITTED WITH TACK WELDS.

10. TIGHT FIT AT TENSION FLANGES AT INTERIOR SUPPORTS. FILLET WELDS OVER END SUPPORTS.

11. BEARING AREAS: PROVIDE BOTTOM FLANGE IN A TRUE HORIZONTAL PLANE IN TRANSVERSE DIRECTION AND IN A TRUE PLANE LONGITUDINALLY OVER DIMENSION "L", WHERE L = WIDTH OF SOLE PLATE + 6" AHEAD AND BACK. WHERE APPLICABLE. IF THE SOLE PLATE IS WELDED TO THE BOTTOM FLANGE, PROVIDE THE SOLE PLATE MEETING THE SAME FLATNESS REQUIREMENTS. EACH BEARING MUST BE STRESSED UNIFORMLY AFTER ALL DEAD LOAD IS PLACED. MAKE NECESSARY SHOP AND/OR FIELD ADJUSTMENTS TO PROVIDE UNIFORM BEARING STRESS UNDER ALL DEAD LOADS.

12. GIRDERS ARE TO BE SHOP ERECTED BEFORE SHIPPING.

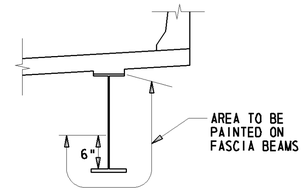

PAINTING DETAIL (NOTE #6)

N.T.S.

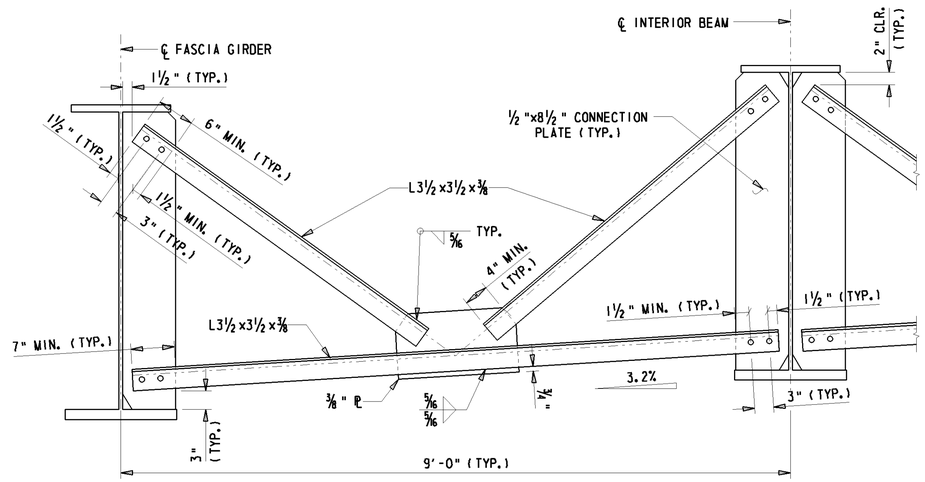

INTERMEDIATE DIAPHRAGM

N.T.S.

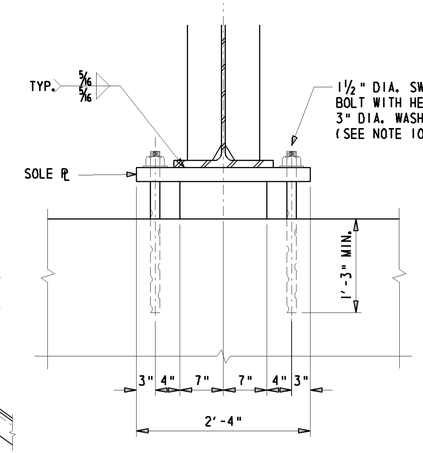

BEARING ELEVATION

1" = 1'-0"

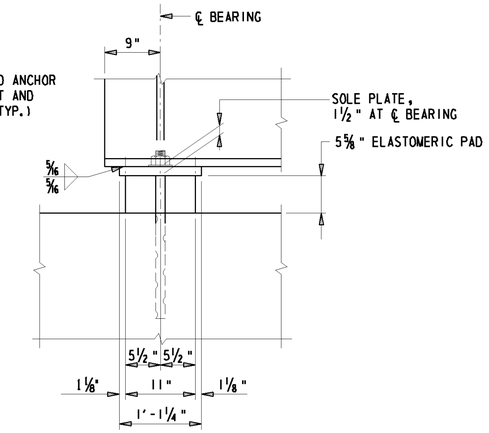

SIDE ELEVATION

1" = 1'-0"

BEARING PAD DIMENSIONS (TYP. ALL BEARINGS)

BEARING PAD LENGTH = 11"
BEARING PAD WIDTH = 14"
COVER LAYER THICKNESS = ¼"
INTERNAL LAYER THICKNESS = ½"
NUMBER OF STEEL LAYERS = 9
STEEL LAYER GAGE = 16
EDGE DISTANCE = ¼"
SOLE PLATE THICKNESS = 1½" (@ ℄ BEARING)

LAMINATED ELASTOMERIC PAD

N.T.S.

GENERAL NOTES:

1. FOR FRAMING PLAN, SEE BRIDGE SHEET S2-9.

2. ~~ALL BOLTS FOR DIAPHRAGM CONNECTIONS SHALL BE HOT DIPPED GALVANIZED 1" DIA. HIGH STRENGTH BOLTS AASHTO M164 (ASTM A325) IN 1⅛" DIA. OPEN HOLES.~~ △2

3. PAYMENT FOR ELASTOMETRIC PADS, SOLE PLATES & ANCHOR BOLTS SHALL BE INCIDENTAL TO ITEM #605002 - STEEL STRUCTURES.

4. CONTRACTOR SHALL BE RESPONSIBLE FOR SECURING THE GIRDER SYSTEM UNTIL THE DECK HAS CURED.

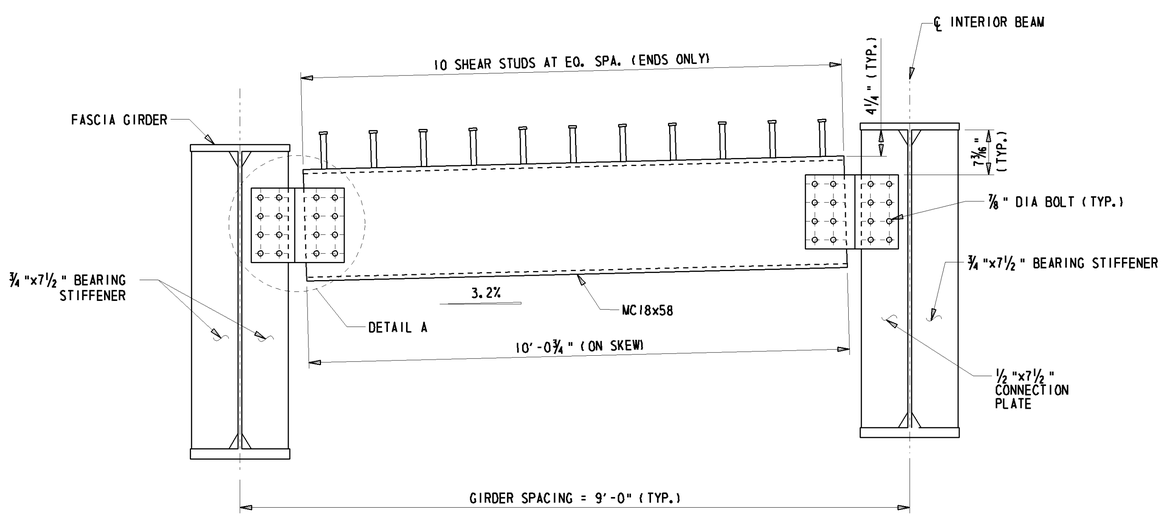

END & PIER DIAPHRAGMS

N.T.S.

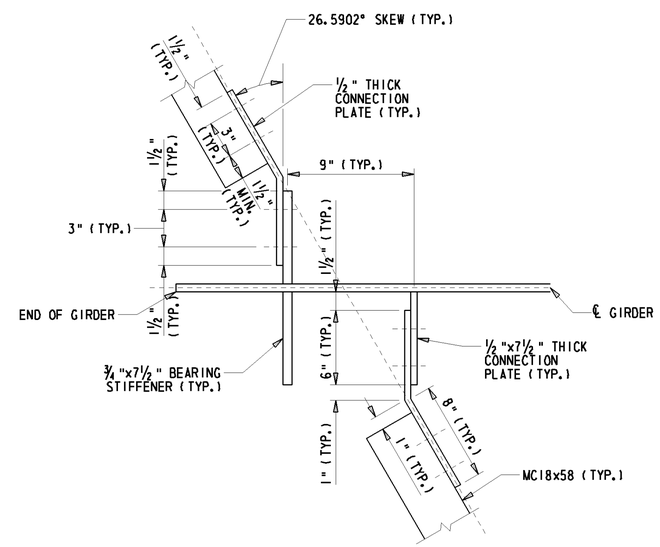

DETAIL A

N.T.S.

BEARING NOTES:

1. STEEL FOR BEARING LAMINATES SHALL CONFORM TO ASTM A709 GRADE 36.

2. NEOPRENE IN BEARING PAD SHALL HAVE A SHORE 'A' DUROMETER HARDNESS OF 60 POINTS.

3. ANCHOR BOLTS AND WASHERS SHALL BE UNPAINTED A709 GRADE 50 GALVANIZED STEEL. ALL NUTS SHALL BE UNPAINTED A307 GALVANIZED STEEL. SET NUTS ¼" CLEAR OF SOLE PLATES AND BURR THREADS ABOVE AND BELOW NUTS.

4. USE SWEDGED ANCHOR BOLTS. BOLTS MAY BE CAST-IN-PLACE OR GROUTED WITH NON-SHRINK GROUT IN PREFORMED (SLEEVED OR DRILLED) HOLES. THE PREFORMED & DRILLED HOLES SHALL HAVE A DIAMETER OF AT LEAST 1" LARGER THAN THE DIAMETER OF THE BOLTS.

5. SOLE PLATES ARE TO BE BEVELED TO MATCH GRADE WHEN GRADE EXCEEDS 1 PERCENT.

6. STEEL SURFACES OF SOLE PLATE TO BE MACHINE FINISHED, MEASURED IN ACCORDANCE WITH ANSI B46.1.

7. STEEL PLATES SHALL MEET A FLATNESS REQUIREMENT OF 0.5 PERCENT IN THE DIRECTION BEING MEASURED (WIDTH, LENGTH, AND DIAGONALS) MAXIMUM, BUT NOT TO EXCEED ⅛ INCH.

8. BEARING PADS SHALL BE PLACED NORMAL TO CENTERLINE OF BEAM.

9. FILL SLOTS AND HOLES IN STEEL AROUND ANCHOR BOLTS WITH AN APPROVED NON-HARDENING CAULKING COMPOUND OR ELASTIC JOINT SEALER.

10. FOR EXPANSION BEARINGS:
USE 2⅛" x 3" SLOTS IN SOLE PLATE AND ⅜"x3"x 5½" WASHERS WITH 1⅝" DIA. HOLE IN WASHERS.

W:\MSV8\CELLS\PROJDEV\SB.CEL

DELAWARE DEPARTMENT OF TRANSPORTATION	ADDENDUMS / REVISIONS	I-95 & US 202 INTERCHANGE	CONTRACT T200510602	BRIDGE NO. 1-762	GIRDER DETAILS (2 OF 2) S2 – 11 OF 18	SHEET NO. 179
	△2 - DELETED CONFLICTING NOTE, JKM 7/26/11		COUNTY NEW CASTLE	DESIGNED BY: JKM		TOTAL SHTS. 482
				CHECKED BY: BAB		

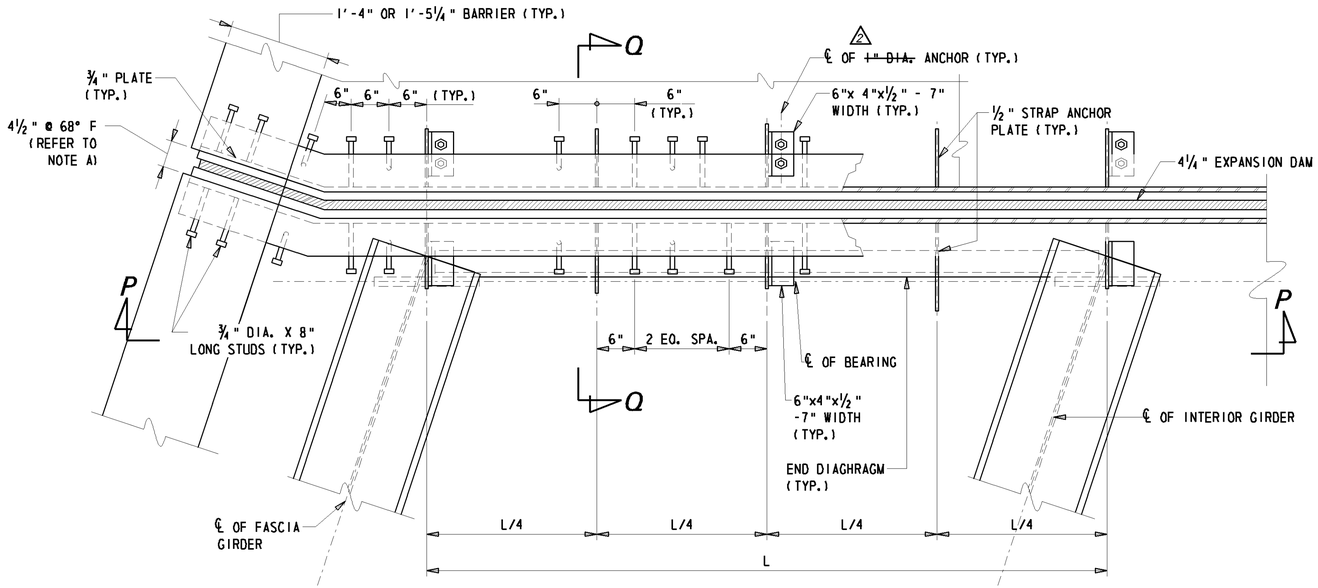

TYPICAL JOINT PLAN

1" = 1'-0"

EXPANSION JOINT NOTES:

1. STEEL FOR DECK JOINTS AND STEEL EXTRUSIONS SHALL BE AASHTO M270, GR. 36 (ASTM A36)
2. NEOPRENE EXTRUSION TO MEET D-2628-81 MODIFIED, (RECOVERY TESTS EXCLUDED).
3. THE EXPANSION JOINT SHALL BE CAPABLE OF SEALING THE DECK TO PREVENT MOISTURE AND OTHER CONTAIMINANTS FROM DESCENDING THROUGHT THE JOINT.
4. ENTIRE EXPANSION DAM SHALL BE PAINTED AFTER FABRICATION USING URETHANE SYSTEM, EXCEPT AS NOTED.
5. LUBRICANT-ADHESIVE FOR USE IN INSTALLING AND BONDING NEPORENE SEAL ELEMENTS TO STEEL JOINT COMPONENTS SHALL BE A ONE QUART MOISTURE-CURING POLYURETHAN AND HYDROCARBON SOLVENT MIXTURE HAVING THE FOLLOWING PHYSICAL PROPERTIES:

AVERAGE WEIGHT, POUNDS PER GALLON	8 +/- 10%
SOLIDS CONTENT	65%
ADHESIVE SHALL REMAIN LIQUID FROM	5°F TO 120°F
FILM STRENGTH, AS PER ASTM D-412	2,000 PSI
ELONGATION	250%

6. HOLES SHALL BE PLACED IN THE RIB PLATES AND STRAP ANCHOR PLATES FOR BAR REINFORCEMENT. IF THIS IS DONE IN THE FIELD AN APPROVED PAINT SHALL BE USED TO TOUCH-UP THE HOLES. PAYMENT INCIDENTAL TO #605657 - STRIP SEAL EXPANSION JOINT.
7. AT CONSTRUCTION JOINTS, ANCHOR PLATE AND STEEL EXTRUSION SHALL BE WELDED TO BE WATERTIGHT. PAYMENT INCIDENTAL TO #605657 - STRIP SEAL EXPANSION JOINT.
8. CONTRACTOR SHALL SUBMIT A PLAN FOR PLACEMENT OF STRIP SEAL DUE TO PHASING.

NOTE A:
THE CONTRACTOR SHALL ADJUST THE OPEN DECK JOINT AS REQUIRED BY THE WIDTH OF THE STEEL EXTRUSION USED SO AS TO PROVIDE A 1½" JOINT OPENING AT 68°F.

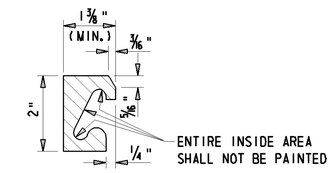

STEEL EXTRUSION DETAIL

6" = 1'-0"

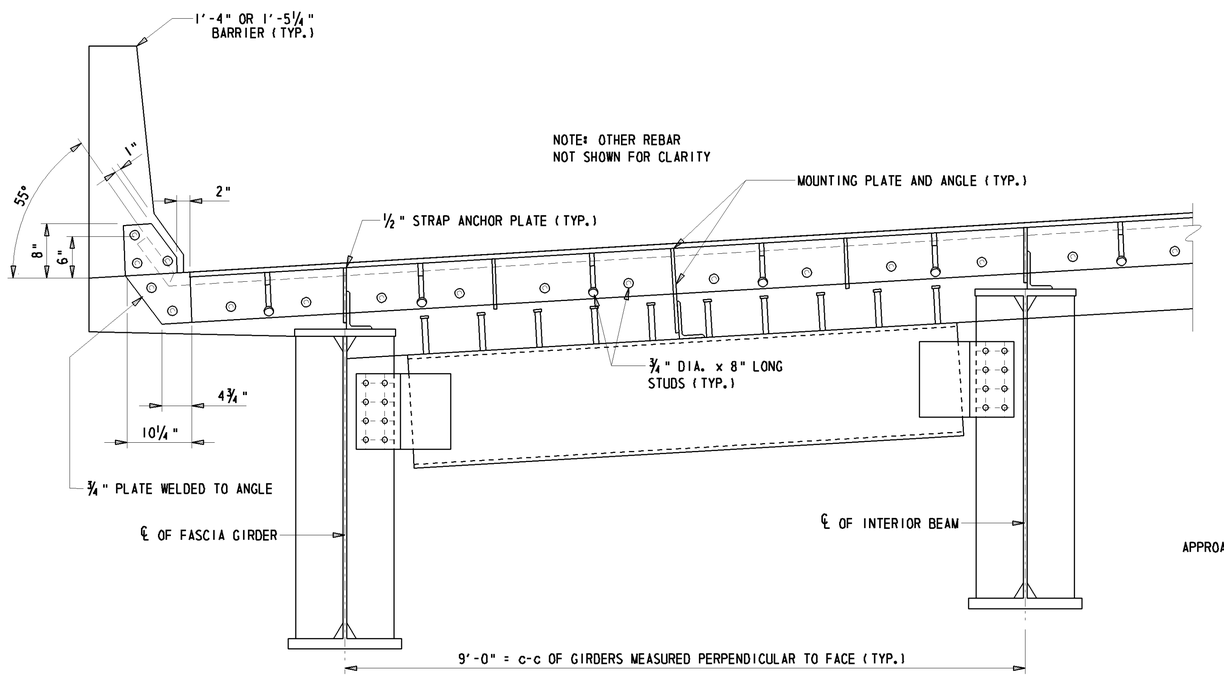

SECTION P-P

1" = 1'-0"

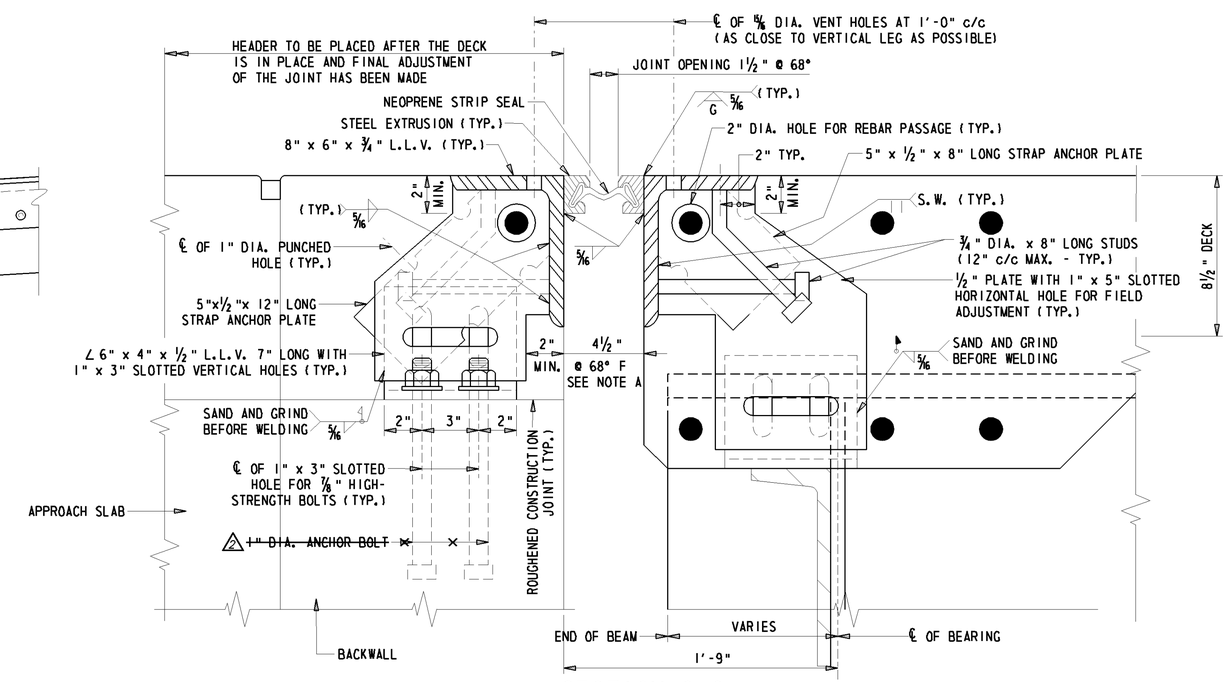

SECTION Q-Q

NTS

W:\MSV8\CELLS\PROJDEV\SB.CEL

DELAWARE DEPARTMENT OF TRANSPORTATION	ADDENDUMS / REVISIONS 2 - DELETED CONFLICTING DIMENSIONS, JKM 7/26/11	**I-95 & US 202 INTERCHANGE**	CONTRACT T200510602	BRIDGE NO. **1-762**	**EXPANSION JOINT DETAILS S2 – 16 OF 18**	SHEET NO. 184
			COUNTY NEW CASTLE	DESIGNED BY: JKM CHECKED BY: BAB		TOTAL SHTS. 482

BRIDGE PROJECT NOTES

1. LOCATION
PROPOSED NEW BRIDGE 1-764 (I-95 RAMP 5 OVER I-95), NEW CASTLE COUNTY, DELAWARE

2. GENERAL
PROVIDE MATERIALS AND PERFORM WORK IN ACCORDANCE WITH DELAWARE DEPARTMENT OF TRANSPORTATION STANDARD SPECIFICATIONS FOR ROAD AND BRIDGE CONSTRUCTION, ANSI/AASHTO/AWS D1.5-08 BRIDGE WELDING CODE AND PROJECT SPECIAL PROVISIONS. ALL DIMENSIONS ARE HORIZONTAL, EXCEPT AS NOTED. SUPERSTRUCTURE DIMENSIONS SHOWN ARE FOR A NORMAL TEMPERATURE OF 68 DEGREES FAHRENHEIT.

3. DESIGN SPECIFICATIONS
AASHTO LRFD BRIDGE DESIGN SPECIFICATIONS, 4TH EDITION WITH INTERIMS THROUGH 2009, AS SUPPLEMENTED BY THE DELAWARE DEPARTMENT OF TRANSPORTATION BRIDGE DESIGN MANUAL.

LIVE LOAD DISTRIBUTION TO THE GIRDERS IS BASED ON THE GRILLAGE METHOD

DESIGN IS IN ACCORDANCE WITH THE LRFD METHOD

4. DESIGN LIVE LOADS
HL-93 LOADING, WHICH CONSISTS OF A DESIGN TRUCK OR TANDEM WITH DYNAMIC LOAD ALLOWANCE AND LANE LOAD. FATIGUE DESIGN IS BASED ON THE FOLLOWING ONE DIRECTIONAL TRAFFIC VOLUMES:
ADTT= 1096 (YEAR 2027)

5. DEAD LOADS
INCLUDES 25 PSF FOR FUTURE WEARING SURFACE ON DECK SLAB AND 15 PSF FOR STAY-IN-PLACE FORMS (INCLUDES CONCRETE IN FORM CORRUGATIONS)

6. PORTLAND CEMENT CONCRETE
PORTLAND CEMENT CONCRETE FOR CAST-IN-PLACE ELEMENTS SHALL BE AS FOLLOWS:
(f'c= 28 DAY COMPRESSIVE STRENGTH)
CLASS A - PARAPETS, ABUTMENTS, PIER ABOVE FOOTING, MOMENT SLABS, AND WINGWALLS (f'c= 4.5 KSI)
CLASS B - PIER FOOTING (f'c= 3.0 KSI)
CLASS D - CONCRETE DECK AND APPROACH SLAB (f'c= 4.5 KSI)
MIX REQUIREMENTS SHALL CONFORM TO SECTION 812 OF THE STANDARD SPECIFICATIONS
ALL EXPOSED EDGES SHALL BE CHAMFERED 3/4" X 3/4" UNLESS OTHERWISE NOTED
IT SHALL BE THE CONTRACTOR'S RESPONSIBILITY TO UTILIZE ANY APPROVED CONCRETE ADDITIVES OR HEATING TECHNIQUES TO MAINTAIN THE PROPER TEMPERATURE FOR ANY CONCRETE POURED DURING COLD WEATHER.
PAYMENT SHALL BE INCIDENTAL TO THE RESPECTIVE CONCRETE BID ITEM
NO SLIP-FORMING OF BARRIERS IS PERMITTED, UNLESS OTHERWISE APPROVED BY THE DEPARTMENT

7. STRUCTURAL STEEL
PROVIDE STRUCTURAL STEEL CONFORMING TO AASHTO M270, GRADE 50W (ASTM A709, GRADE 50W) DESIGNATION, EXCEPT WHEN NOTED OTHERWISE. THE ADDITIONAL REQUIREMENTS FOR CHARPY V-NOTCH TESTING OF AASHTO M270 FOR PRIMARY LOAD CARRYING MEMBERS SHALL BE INCLUDED. SUPPLEMENTAL NOTCH TOUGHNESS REQUIREMENTS ARE MANDATORY FOR:
-TOP AND BOTTOM GIRDER FLANGES AS SHOWN ON PLANS
-GIRDER WEB PLATES
-GIRDER FIELD SPLICE PLATES
-ALL DIAPHRAGM MEMBERS AND DIAPHRAGM CONNECTION PLATES
ALL FASTENERS ARE 7/8" DIAMETER ASTM A325 HIGH STRENGTH BOLTS, TYPE 1, UNLESS OTHERWISE NOTED

IF GIRDERS CAN BE FABRICATED IN LENGTHS LONGER THAN THE SECTIONS SHOWN ON THE PLANS BY ELIMINATING FIELD SPLICES, FIELD SPLICES MAY BE OMITTED AT THE REQUEST OF THE CONTRACTOR. THE CONTRACTOR ASSUMES FULL RESPONSIBILITY FOR SECURING A HAULING PERMIT. APPROVAL FOR ELIMINATION OF A FIELD SPLICE AT THE SHOP DRAWING STAGE DOES NOT OBLIGATE THE DEPARTMENT TO ISSUE A HAULING PERMIT.

DO NOT MAKE WELDS BY MANUAL SHIELDED METAL ARC PROCESS FOR PRIMARY GIRDER WELDS SUCH AS FLANGE TO WEB WELDS OR FOR SHOP SPLICES OF WEB AND FLANGES. DO NOT USE FORM SUPPORT SYSTEMS THAT WILL CAUSE UNACCEPTABLE OVERSTRESS OR DEFORMATION TO PERMANENT BRIDGE MEMBERS.

THE FASCIA GIRDERS ARE DESIGNED FOR A TEMPORARY CONSTRUCTION LOAD APPLIED TO THE WEB WITHIN 6" OF THE BOTTOM FLANGE AT APPROXIMATELY 4'-0" INTERVALS. THIS LOAD APPROXIMATES THE HORIZONTAL COMPONENT OF A DECK SLAB OVERHANG FORM SUPPORT BRACKET AND CONSISTS OF A 1.05 KIP/FT ALLOWANCE FOR THE WEIGHT OF THE CONCRETE, FORMS, AND DECK FINISHING MACHINE.

GIRDER WEBS SHALL BE PLUMB UNDER THE FULL DEAD LOAD EXISTING AT THE END OF CONSTRUCTION. THE OUT-OF-PLANE ROTATIONS ANTICIPATED FOR THE CURVED GIRDERS ARE WITHIN THE TOLERANCE LEVEL FOR FABRICATION OF PLUMB WEBS.

SHOP ASSEMBLE THE ENTIRE STEEL SUPERSTRUCTURE FOLLOWING THE SAME ERECTION PROCEDURES AND SUPPORT CONDITIONS TO ENSURE THE PROPER FIT FOR ALL STRUCTURAL STEEL COMPONENTS PRIOR TO REAMING OF BOLT HOLES FOR SPLICES AND DIAPHRAGM CONNECTION PLATES

DO NOT WELD PERMANENT METAL DECK FORMS OR OTHER ATTACHMENTS TO GIRDER TOP FLANGES IN TENSION ZONES (TENSION ZONES OF TOP FLANGE ARE DESIGNATED ON THE PLANS)

PROVIDE WELDED STUD SHEAR CONNECTORS MANUFACTURED FROM STEEL CONFORMING TO ASTM A 108

SET ANCHOR BOLTS TO TEMPLATE OR IN PERFORMED HOLES. DO NOT DRILL UNLESS SPECIFICALLY INDICATED ON PLANS. FILL THE PERFORMED HOLES WITH NON-SHRINK GROUT. FILL THE CLEARANCE BETWEEN ANCHOR BOLTS AND HOLES IN MASONRY PLATES WITH APPROVED NON-HARDENING CAULKING COMPOUND.

STABILITY OF PARTIAL GIRDERS AND COMPLETED GIRDERS IS TO BE MAINTAINED BY THE CONTRACTOR DURING ERECTION UNTIL ALL GIRDERS AND DIAPHRAGMS ARE IN-PLACE AND ALL BOLTS ARE PROPERLY INSTALLED. ERECTION LOADS INCLUDING SELF-WEIGHT OF THE STEEL MEMBERS, WIND LOADING AND CONSTRUCTION LIVE LOAD EFFECTS ARE TO BE EVALUATED BY THE CONTRACTOR FOR STABILITY, STRESSES AND DEFLECTIONS ON THE STEEL MEMBERS DURING ANY STAGE OF ERECTION

AN ALTERNATE SLAB PLACEMENT SEQUENCE MAY BE PERMITTED AT THE REQUEST OF THE CONTRACTOR. SUBMIT FOR REVIEW AND APPROVAL TO THE DEPARTMENT A REVISED SLAB PLACEMENT SEQUENCE WITH SUPPORT CALCULATIONS AND COMPUTER STRESS ANALYSIS. SATISFY THE REQUIREMENTS OF THE ORIGINAL SLAB PLACEMENT SUQUENCE. OBTAIN WRITTEN APPROVAL PRIOR TO THE USE OF THE REVISED SLAB PLACEMENT SEQUENCE AND/OR CAMBER VALUES. NO COMPENSATION WILL BE ALLOWED FOR THE DEVELOPMENT AND APPROVAL OF THE REVISED SLAB PLACEMENT SEQUENCE AND CAMBER VALUES. THE DEPARTMENT WILL BE THE SOLE JUDGE OF THE ACCEPTABILITY OF THE REVISED SLAB PLACEMENT SEQUENCE AND CAMBER VALUES.

8. BAR REINFORCEMENT
REINFORCING STEEL SHALL CONFORM TO AASHTO M31 (ASTM A615), GRADE 60. REINFORCING STEEL SHALL HAVE A 2" CLEAR COVER UNLESS OTHERWISE SPECIFIED ON THE PLANS. ALL REINFORCING STEEL SHALL BE PROTECTED WITH FUSION BONDED EPOXY. EPOXY COATED REINFORCING STEEL SHALL CONFORM TO AASHTO M284 (ASTM D3963).

9. CONSTRUCTION JOINTS
KEYED CONSTRUCTION JOINTS SHALL BE 2 INCHES X 4 INCHES OR AS NOTED. ALL EXPOSED CONSTRUCTION JOINTS SHALL HAVE A 3/4" V-NOTCH. ANY WATERSTOPS SHALL BE INCIDENTAL TO THE APPROPRIATE CONCRETE ITEM.

10. CONCRETE SEALER
SILICONE ACRYLIC CONCRETE SEALER SHALL BE APPLIED TO THE EXPOSED FACE AND TOP OF BACKWALL, ABUTMENT SEAT, EXPOSED ABUTMENT AND WINGWALL FACE, DECK OVERHANG SOFFIT, PIER CAP, EXPOSED PIER COLUMNS, AND PARAPET. PAYMENT UNDER ITEM #602646 - SILICONE ACRYLIC CONCRETE SEALER.

11 STABILIZING STRUCTURAL EXCAVATIONS
SHORING SHALL BE REQUIRED FOR ANY EXCAVATION EXCEEDING 5'-0" IN DEPTH. UNLESS SPECIFIED ON THE PLANS AS NEEDING SHEETING AND SHORING, THE COST OF SHORING SHALL BE INCIDENTAL TO ITEM #207000 - EXCAVATION AND BACKFILL FOR STRUCTURES. IN LIEU OF SHORING, THE CONTRACTOR MAY USE A 2:1 (H:V) CUT SLOPE. NO PAYMENT FOR ADDITIONAL CUT OR FILL WILL BE GIVEN, AS DESCRIBED IN SECTION 207 OF THE STANDARD SPECIFICATIONS. FOR AREAS DESIGNATED IN THE PLANS AS NEEDING SHEETING OR SHORING, THE CONTRACTOR SHALL SUBMIT A PROPOSED PLAN FOR SHEETING OR SHORING OF THE EXCAVATION. THE SUBMITTAL SHALL INCLUDE ANY DRAWINGS AND CALCULATIONS ASSOCIATED WITH THE WORK AND SHALL BE STAMPED BY A DELAWARE REGISTERED PROFESSIONAL ENGINEER. PAYMENT FOR SHEETING AND SHORING, AS WELL AS THE MATERIALS AND WORK ASSOCIATED WITH THE SUBMITTAL, SHALL BE MADE UNDER ITEM #207501 - SHEETING AND SHORING.

12. PERFORATED PIPE UNDERDRAINS
MINIMUM INSTALLATION SLOPE SHALL BE 0.02 FT./FT. CAP FREE ENDS.

13. DECK SLAB
THE DECK SLAB THICKNESS INCLUDES 1/2" INTEGRAL WEARING SURFACE.

14. LOAD RATINGS
IN ACCORDANCE WITH AASHTO MANUAL FOR BRIDGE EVALUATION OF BRIDGES, 2008. NOTE THAT THE DECK ACTS COMPOSITELY WITH THE GIRDERS.

15. S.I.P FORM SUBMITTALS
IN ADDITION TO THE REQUIREMENTS OF THE STANDARD SPECIFICATIONS, CALCULATIONS AND DRAWINGS FOR THE S.I.P. FORMS MUST BE SEALED BY A PROFESSIONAL ENGINEER REGISTERED IN THE STATE OF DELAWARE AND SUBMITTED FOR APPROVAL. PAYMENT SHALL BE INCIDENTAL TO ITEM #602013 - PORTLAND CEMENT CONCRETE MASONRY, SUPERSTRUCTURE, CLASS D.

16. HAZARDOUS MATERIAL
THE CONTRACTOR IS ADVISED THAT THE EXISTING STRUCTURE OVER I-95 DOES CONTAIN LEAD BASED PAINT. AS A RESULT, THE CONTRACTOR'S PROPOSED DEMOLITION PLAN MUST ADDRESS, AS A MINIMUM, METHODS OF CUTTING THE BEAMS AND/OR DIAPHRAGMS, IF REQUIRED, AND HOW THOSE PERSONS PERFORMING SUCH WORK WILL BE PROTECTED IN ACCORDANCE WITH APPLICABLE OSHA REGULATIONS. ADDITIONALLY, THE CONTRACTOR MUST ADDRESS WHEN AND HOW THE LEAD BASED PAINT WILL BE REMOVED FROM THE STRUCTURAL STEEL AND ALL RELATED BRIDGE COMPONENTS. IF THE WORK IS PERFORMED ON SITE, THEN PROPER PROTECTION, CONTAINMENT, AND FINAL LEAD PAINT DISPOSAL MUST BE ADDRESSED IN THE PROPOSED PLAN. IF THE BEAMS WILL BE TRANSPORTED WITH THE PAINT STILL INTACT, THEN THE PLAN SHALL DETAIL HOW THE STRUCTURAL COMPONENTS WILL BE PROTECTED DURING TRANSPORT, WHERE AND HOW THE PAINT WILL BE REMOVED, AND THE LOCATION OF FINAL PAINT DISPOSAL, AGAIN IN ACCORDANCE WITH OSHA REGULATIONS. WRITTEN DOCUMENTATION MUST BE PROVIDED TO THE ENGINEER, PRIOR TO FINAL CONTRACT ACCEPTANCE, NOTING WHEN AND WHERE THE LEAD BASED PAINT WAS REMOVED, AND THE LOCATION OF FINAL PAINT DISPOSAL. ALL COSTS INVOLVED WITH THE ABOVE LISTED WORK SHALL BE INCIDENTAL TO ITEM #211000 - REMOVAL OF STRUCTURES AND OBSTRUCTIONS.

17. ROCK PROFILE VARIATION
ANTICIPATING THAT THE ACTUAL PROFILE OF THE ROCK VARIES OVER WHAT HAS BEEN MEASURED, THE ESTIMATED QUANTITIES FOR THE ITEMS LISTED BELOW HAVE BEEN INCREASED 25% OVER THE QUANTITIES CALCULATED:
ITEM #206000 - ROCK EXCAVATION FOR STRUCTURES AND TRENCHES
ITEM #609000 - SUBFOUNDATION CONCRETE
ITEM #618071 - STEEL H PILES, HP 10 X 57
ITEM #618072 - STEEL H TEST PILES, HP 10 X 57
ITEM #619051 - INSTALL STEEL H PILES, HP 10 X 57
ITEM #619052 - INSTALL STEEL H TEST PILES, HP 10 X 57
ITEM #619512 - PREDRILLING FOR END BEARING PILES

18. REMOVAL OF STRUCTURES AND OBSTRUCTIONS
ITEMS TO BE REMOVED UNDER ITEM #211000 - REMOVAL OF STRUCTURES AND OBSTRUCTIONS ASSOCIATING WITH BRIDGE 1-764 SHALL INCLUDE, BUT NOT BE LIMITED TO, THE FOLLOWING:
-EXISTING BRIDGE SUPERSTRUCTURE INCLUDING CONCRETE DECK, APPROACH SLAB, PARAPET, STRUCTURAL STEEL BEAMS, DIAPHRAGMS, AND CROSS BRACING.
-EXISTING BRIDGE ABUTMENTS DOWN TO 1' BELOW GRADE.
-EXISTING BRIDGE PIER DOWN TO 1' BELOW GRADE.

19. BLAST MONITORING
BOTH THE EXISTING STRUCTURE AND THE PROPOSED STRUCTURE SHALL BE MONITORED DURING ANY BLASTING TO ENSURE STRUCTURAL STABILITY THROUGHOUT THE DURATION OF THE PROJECT. PAYMENT SHALL BE UNDER ITEM #206000 - ROCK EXCAVATION FOR STRUCTURES AND TRENCHES.

20. SPREAD FOOTINGS
ABUTMENT A AND THE PIER WILL BE CONSTRUCTED ON SPREAD FOOTINGS. CONTRACTOR SHALL PERFORM AIR TRACK DRILLING ON A 10-FOOT GRID TO DETERMINE THE TOP OF ROCK WITHIN THE LIMITS OF THE FOOTING IN THE AREA INDICATED ON THE PLANS AND IN THE SPECIAL PROVISIONS FOR ITEM 619511 - EXPLORATORY DRILLING. BASED ON THE RESULTS, THE ENGINEER WILL DETERMINE THE LIMITS OF THE SOIL/ROCK EXCAVATION AND SUBFOUNDATION CONCRETE NECESSARY TO CONSTRUCT THE PROPOSED FOUNDATION. ANY ADDITIONAL SOIL/ROCK EXCAVATION AND SUBFOUNDATION CONCRETE WILL BE PAID FOR AT CONTRACT BID PRICE.

THE CONTRACTOR SHALL EXCAVATE ANY SOIL ZONES BELOW THE PROPOSED BEARING ELEVATION TO COMPETENT ROCK. THE ENGINEER WILL EXAMINE THE ROCK AND APPROVE PRIOR TO CONTRACTOR BACKFILLING WITH CONCRETE TO THE BOTTOM OF FOOTING ELEVATION.

21. PILE FOUNDATIONS
ABUTMENT B WILL UTILIZE MECHANICALLY STABILIZED EARTH (MSE) WALLS AND A STUB ABUTMENT ON STEEL H-PILES. CONTRACTOR SHALL PERFORM AIR TRACK DRILLING ON A 10-FOOT GRID TO DETERMINE THE TOP OF ROCK WITHIN THE LIMITS OF THE FOOTING IN THE AREA INDICATED ON THE PLANS AND IN THE SPECIAL PROVISIONS FOR ITEM 619511 - EXPLORATORY DRILLING.

CONTRACTOR SHALL CONTROL THE PILE DRIVING BY THE WAVE EQUATION ANALYSIS. THE ENGINEER WILL VERIFY, FROM THE TEST PILE DRIVING RESULTS, THE CAPABILITY OF THE PILE DRIVING HAMMER SELECTED BY THE CONTRACTOR. PILES SHALL BE DRIVEN TO ABSOLUTE REFUSAL INTO THE STRATUM DEFINED BY THE PILE TIP ELEVATION WHICH IS PREDETERMINED BY THE ENGINEER FROM THE TEST PILES AND AIR TRACK DRILLING. THE ENGINEER WILL DETERMINE THE ACCEPTABILITY OF THE BEARING PILES THAT ATTAIN ABSOLUTE REFUSAL ABOVE THE PREDETERMINED PILE TIP ELEVATIONS.

CONTRACTOR SHALL PERFORM DYNAMIC PILE MONITORING ON THE TEST PILES AND IF DIRECTED ON SELECTED BEARING PILES AT LOCATIONS AS DETERMINED BY THE ENGINEER.

ALL PILES SHALL BE HP10X57 AND SHALL CONFORM TO ASTM A709, GRADE 50 AND SHALL HAVE A HEAVY-DUTY TIP REINFORCEMENT, SUCH AS HP77600B BY ASSOCIATED PILE AND FITTING CORPORATION, H-777 BY DOUGHERTY FOUNDATION PRODUCTS INC, OR APPROVED EQUAL. PAYMENT SHALL BE INCIDENTAL TO ITEM 618071 AND 618072.

△2 *EXPLORATORY DRILLING SHALL BE PERFORMED PRIOR TO CONSTRUCTION OF THE MSE WALLS. LOCATIONS SHALL BE AT EACH CORNER OF THE STUB ABUTMENT AND AT APPROXIMATELY 10-FOOT INTERVALS ALONG THE EDGE OF THE STUB ABUTMENT.*

INDEX OF SHEETS

SHEET NO.	TITLE
1	BRIDGE NOTES
1A	BRIDGE QUANTITIES & LOAD RATINGS
2	BRIDGE PLAN, TYPICAL SECTION, & ELEVATION
3	ABUTMENT A FOOTING DETAILS
4	ABUTMENT A PLAN & ELEVATION
5	WINGWALL DETAILS
6	PIER DETAILS
7	MSE WALL PLAN & ELEVATION
8	ABUTMENT B PLAN & ELEVATION
8A	ABUTMENT B REINFORCING STRAP DETAILS
9	ABUTMENT B FOOTING & PILE LAYOUT DETAILS
10	FRAMING PLAN
11	GIRDER DETAILS-1
12	GIRDER DETAILS-2
13	CAMBER DETAILS
14A-E	BEARING DETAILS (SHEETS 200A TO 200E)
15	DECK PLAN-1
16	DECK PLAN-2
17	APPROACH SLAB DETAILS
18	MOMENT SLAB DETAILS
19	BARRIER DETAILS
20	EXPANSION JOINT DETAILS
21	REINFORCEMENT BAR SCHEDULE-1
22	REINFORCEMENT BAR SCHEDULE-2
23	REINFORCEMENT BAR SCHEDULE-3

QUANTITIES

ITEM NO.	ITEM TITLE	UNIT	QUANTITY
206500	ROCK EXCAVATION FOR STRUCTURES AND TRENCHES	C.Y.	1625
207000	EXCAVATION AND BACKFILL FOR STRUCTURES	C.Y.	4150
207501	SHEETING AND SHORING	L.S.	L.S.
209003	BORROW, TYPE C	C.Y.	1000
210000	FURNISHING BORROW TYPE 'C' FOR ...	C.Y.	5395
211000	REMOVAL OF STRUCTURES AND OBSTRUCTIONS	L.S.	L.S.
2 302011	~~302500~~ DELAWARE NO. 3 STONE	TON	24
601502	TEMPORARY PROTECTIVE SHEILD	L.S.	L.S.
602001	PCC MASONRY, CLASS A	C.Y.	36
602003	PCC MASONRY, ABUTMENT FOOTING, CLASS A	C.Y.	310
602006	PCC MASONRY, PIER FOOTING, CLASS B	C.Y.	130
602007	PCC MASONRY, PIER ABOVE FOOTING, CLASS A	C.Y.	73
602011	PCC MASONRY, SUBSTRUCTURE, CLASS A	C.Y.	66
602013	PCC MASONRY, SUPERSTRUCTURE, CLASS D	C.Y.	265
602014	PCC MASONRY, APPROACH SLAB, CLASS D	C.Y.	186
602015	PCC MASONRY, ABUTMENT ABOVE FOOTING, CLASS A	C.Y.	380
602017	PCC MASONRY, PARAPET, CLASS A	C.Y.	75
602553	MECHANICALLY STABILIZED EARTH WALLS, TYPE I	S.F.	3200
602646	SILICONE ACRYLIC CONCRETE SEALER	S.F.	12750
604000	BAR REINFORCEMENT, EPOXY COATED	LB	288000
605002	STEEL STRUCTURES	L.S.	L.S.
605659	STRIP SEAL EXPANSION JOINT, 3"	L.F.	100
605697	POT BEARINGS	EA	15
609000	SUBFOUNDATION CONCRETE	C.Y.	530
618071	STEEL H PILES, HP 10 X 57	L.F.	1540
618072	STEEL H TEST PILES, HP 10 X 57	L.F.	220
619051	INSTALL STEEL H PILES, HP 10 X 57	L.F.	1540
619052	INSTALL STEEL H TEST PILES, HP 10 X 57	L.F.	220
619511	EXPLORATORY DRILLING	~~EA~~ L.F.	~~2~~ 1200 2
619512	PREDRILLING FOR END BEARING PILES	L.F.	1540
619519	DYNAMIC PILE TESTING BY CONTRACTOR	EA	2
712020	RIPRAP, R-4	TON	460
713003	GEOTEXTILES, RIPRAP	S.Y.	700
715000	PERFORATED PIPE UNDERDRAINS, 4"	L.F.	165
2 608000	COARSE AGGREGATE FOR FOUNDATION STABILIZATION	TON	34

LRFD LOAD RATINGS

TYPE OF TRUCK	RATING TYPE	CONTROLLING UNIT/SPAN/MEMBER	CONTROLLING POINT	LOAD EFFECT	LIMIT STATE	LOAD RATING FACTOR	LOAD RATING (TONS)
AASHTO HL-93 (TRUCK + LANE)	INVENTORY	G1	110.00	FLEXURE (STRESS) MIN. EFFECTS	STRENGTH I	1.19	N/A
AASHTO HL-93 (TANDEM + LANE)	INVENTORY	G1	110.00	FLEXURE (STRESS) MIN. EFFECTS	STRENGTH I	1.39	N/A
AASHTO HL-93 (TRUCK + LANE)	OPERATING	G1	206.00	FLANGE STRESS MAX. EFFECTS BOT. FLANGE	SERVICE II-0	1.72	N/A
AASHTO HL-93 (TANDEM + LANE)	OPERATING	G1	206.00	FLANGE STRESS MAX. EFFECTS BOT. FLANGE	SERVICE II-0	2.02	N/A
S220	LEGAL	G1	206.00	FLEXURE (STRESS) MAX. EFFECTS	STRENGTH I	3.08	61.58
S335	LEGAL	G1	206.00	FLEXURE (STRESS) MAX. EFFECTS	STRENGTH I	1.73	60.64
S437	LEGAL	G1	206.00	FLEXURE (STRESS) MAX. EFFECTS	STRENGTH I	1.65	60.44
T330	LEGAL	G1	206.00	FLEXURE (STRESS) MAX. EFFECTS	STRENGTH I	2.33	69.99
T435	LEGAL	G1	206.00	FLEXURE (STRESS) MAX. EFFECTS	STRENGTH I	2.01	70.48
T540	LEGAL	G1	206.00	FLEXURE (STRESS) MAX. EFFECTS	STRENGTH I	1.79	71.74

DISTRIBUTION FACTORS

	I-LANE	MULTI-LANE
(-) MOMENT	1.182	1.189
(+) MOMENT	1.291	1.297
V (ABUTMENT 1)	0.941	0.933
V (PIER)	0.907	0.925

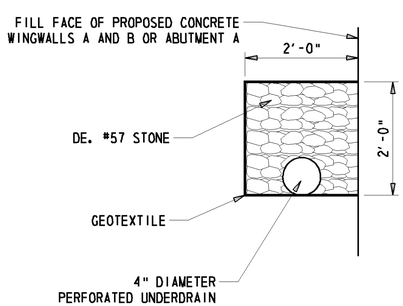

UNDERDRAIN DETAILS
N.T.S.

Y:\NEWCASTL\059\BRIDGE\2510602\BRIDGE 1-763\PLANS\ALTERNATIVE CURVED\PN01.DGN

DELAWARE DEPARTMENT OF TRANSPORTATION

ADDENDUMS / REVISIONS
2 ADDED/CHANGED ITEM NUMBER & QUANTITY, MJG 7/29/11

I-95 & US 202 INTERCHANGE

CONTRACT	BRIDGE NO.	1-764
T200510602	DESIGNED BY: MJG	
COUNTY		
NEW CASTLE	CHECKED BY: JNH	

BRIDGE QUANTITIES & LOAD RATINGS S4-1A OF 23

SHEET NO. 187A
TOTAL SHTS. 482

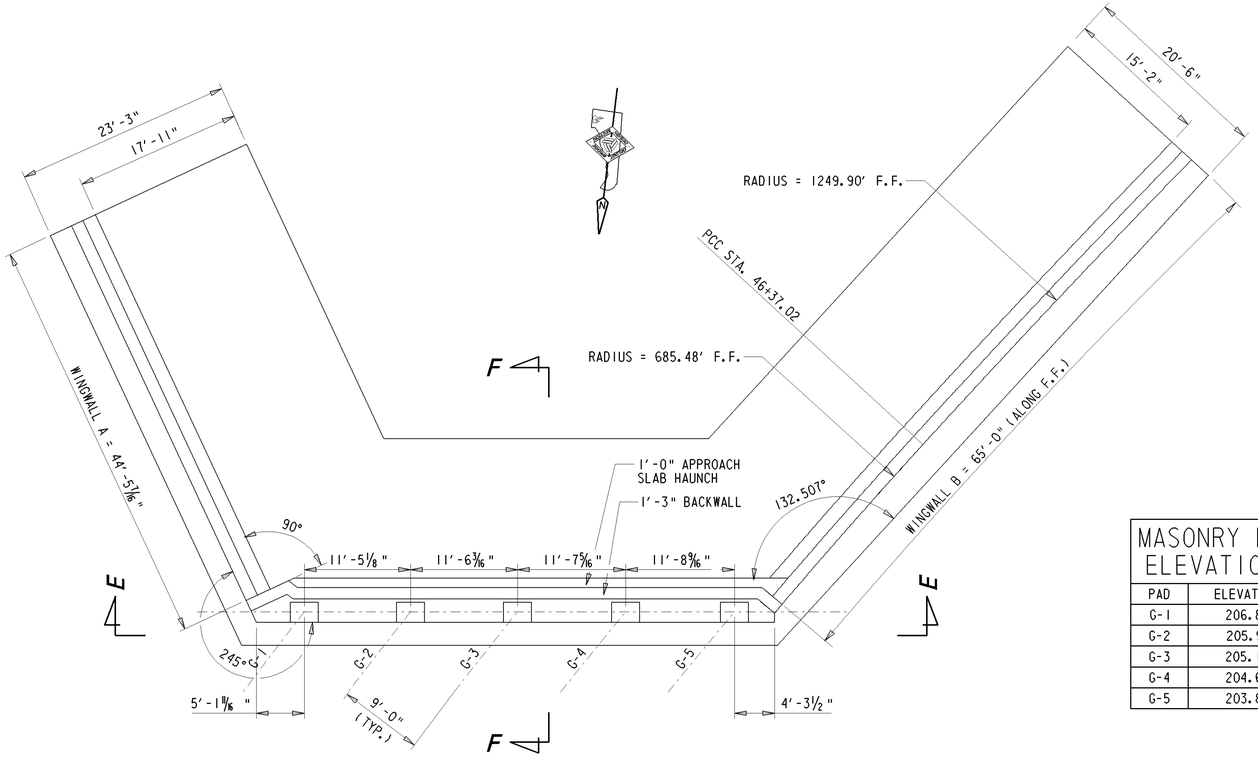

ABUTMENT A PLAN

1/8" = 1'-0"

MASONRY PAD ELEVATIONS	
PAD	ELEVATION
G-1	206.89
G-2	205.91
G-3	205.16
G-4	204.64
G-5	203.88

NOTE: CONCRETE FOR ABUTMENT A AND WINGWALL STEMS SHALL BE PAID FOR UNDER ITEM #602015 - P.C.C. MASONRY, ABUTMENT ABOVE FOOTING, CLASS A. CONCRETE FOR ABUTMENT A AND WINGWALL FOOTINGS SHALL BE PAID FOR UNDER ITEM #602003 - P.C.C. MASONRY, ABUTMENT FOOTING, CLASS A.

NOTE: FIELD CUT AND BEND BARS AS NEEDED. PAYMENT INCIDENTAL TO 604000 - BAR REINFORCEMENT, EPOXY COATED.

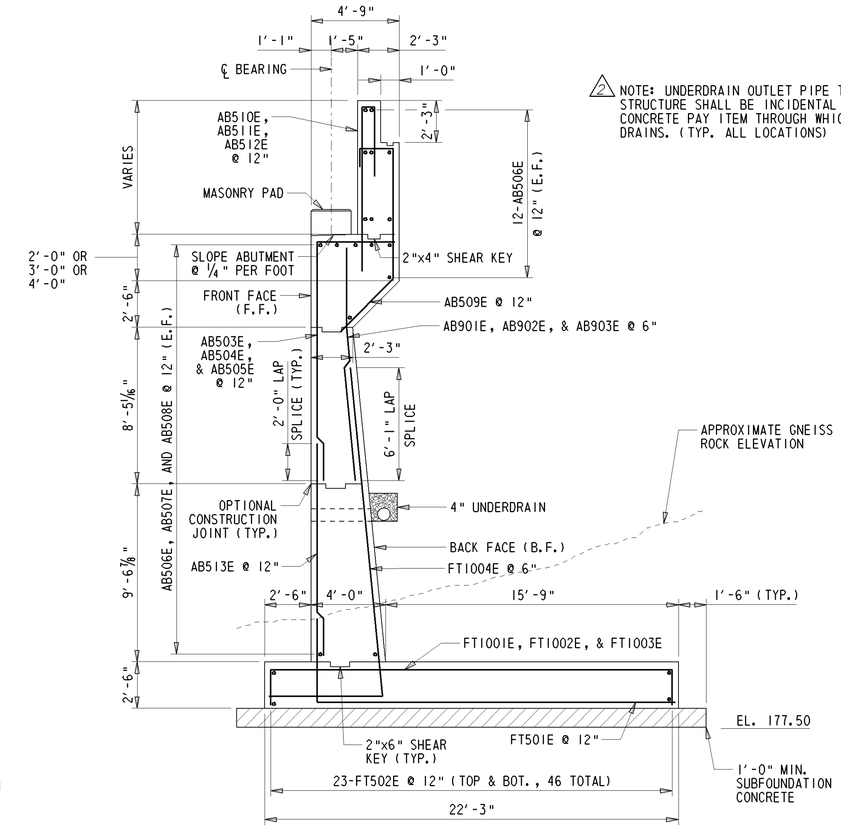

NOTE: UNDERDRAIN OUTLET PIPE THROUGH STRUCTURE SHALL BE INCIDENTAL TO THE CONCRETE PAY ITEM THROUGH WHICH IT DRAINS. (TYP. ALL LOCATIONS)

ABUTMENT A (SECTION F-F)

1/4" = 1'-0"

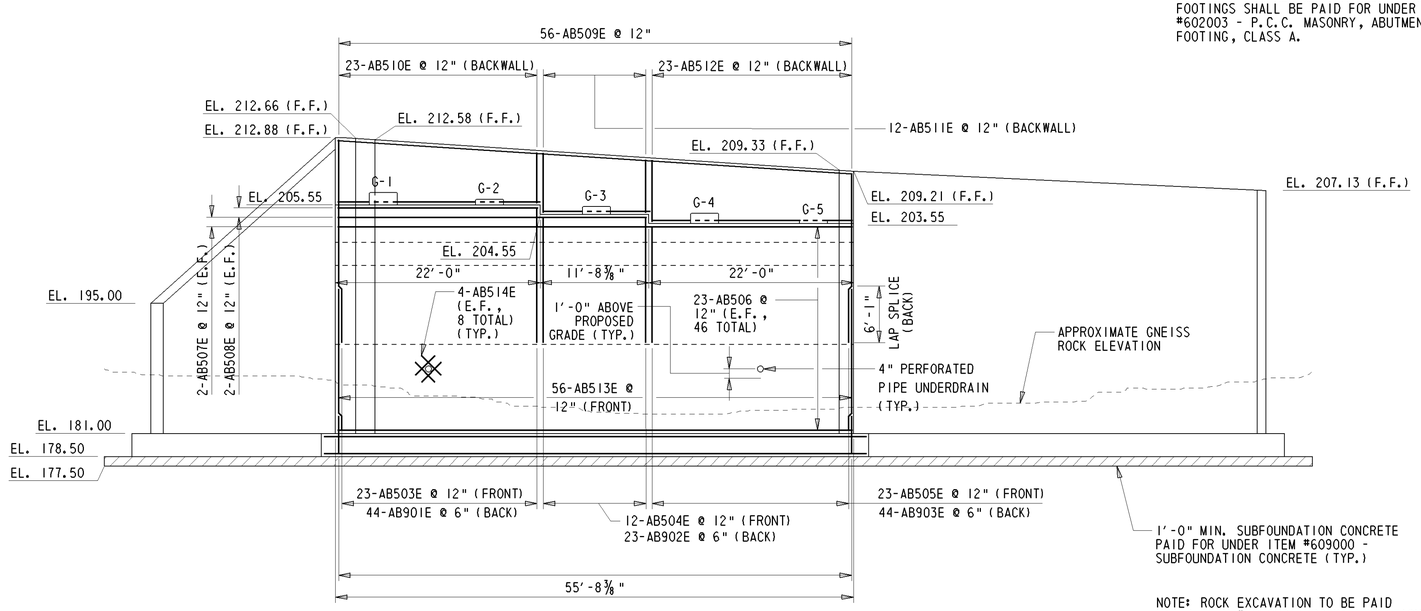

ABUTMENT A ELEVATION (SECTION E-E)

1/8" = 1'-0"

NOTE: ROCK EXCAVATION TO BE PAID UNDER ITEM #206000 - ROCK EXCAVATION FOR STRUCTURES AND TRENCHES

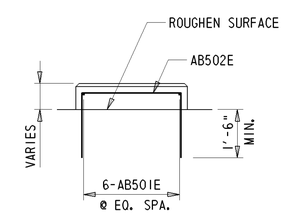

MASONRY PAD - ELEVATION

1/2" = 1'-0"

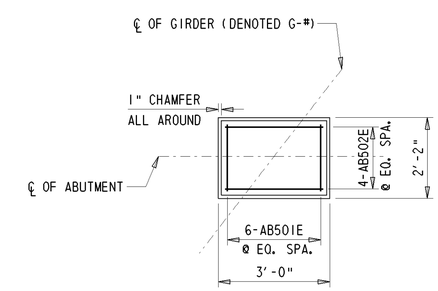

MASONRY PAD - PLAN

1/2" = 1'-0"

Y:\NEWCASTL\059\BRIDGE\2510602\BRIDGE 1-763\PLANS\ALTERNATIVE CURVED\AB01.DGN

DELAWARE DEPARTMENT OF TRANSPORTATION

ADDENDUMS / REVISIONS

2 ADDED NEW NOTE, MJG 7/29/11

I-95 & US 202 INTERCHANGE

CONTRACT	BRIDGE NO.	1-764
T200510602	DESIGNED BY: MJG	
COUNTY		
NEW CASTLE	CHECKED BY: JNH	

ABUTMENT A PLAN & ELEVATION S4-4 OF 23

SHEET NO. 190

TOTAL SHTS. 482

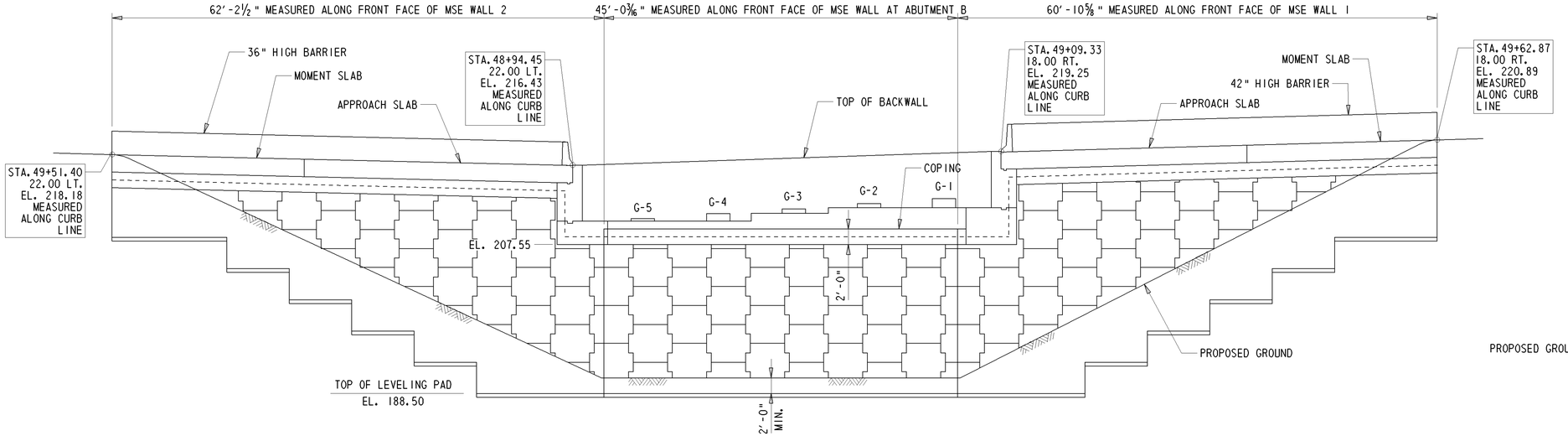

DEVELOPED ELEVATION

⅛" = 1'-0"

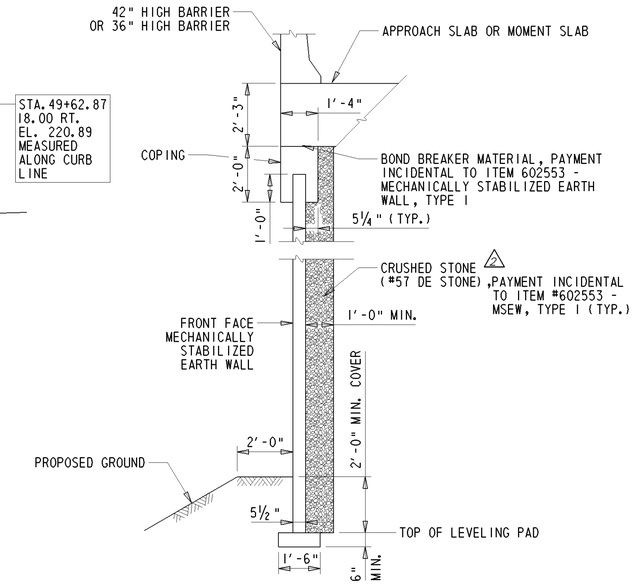

TYPICAL MSE WINGWALL SECTION

⅜" = 1'-0"

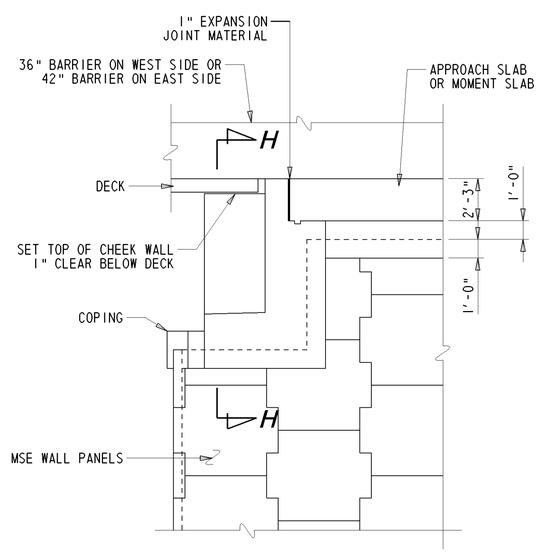

TYPICAL ELEVATION

¼" = 1'-0"

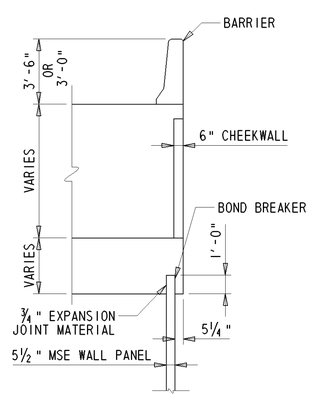

SECTION H-H

¼" = 1'-0"

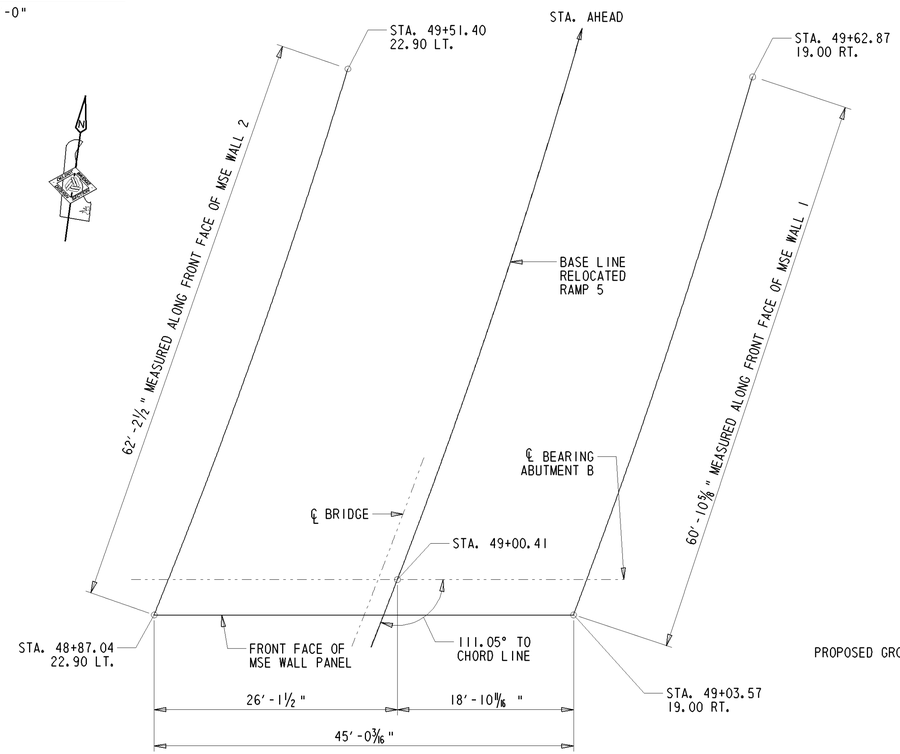

PLAN

⅛" = 1'-0"

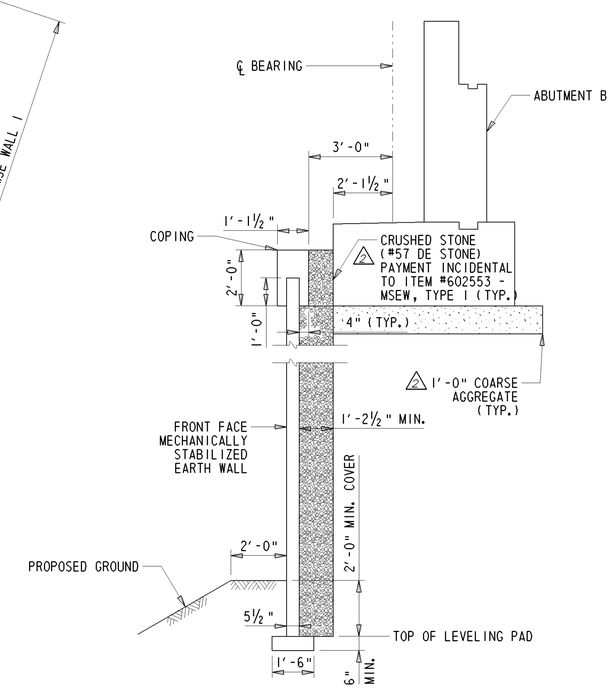

TYPICAL SECTION AT ABUTMENT B

⅜" = 1'-0"

Y:\NEWCASTL\059\BRIDGE\2510602\BRIDGE 1-763\PLANS\ALTERNATIVE CURVED\AB02.DGN

DELAWARE DEPARTMENT OF TRANSPORTATION

ADDENDUMS / REVISIONS

2 REVISED CONFLICTING NOTE, ADDED NOTES, MJG 7/29/11

I-95 & US 202 INTERCHANGE

CONTRACT	BRIDGE NO.	1-764
T200510602	DESIGNED BY: MJG	
COUNTY		
NEW CASTLE	CHECKED BY: JNH	

MSE WALL PLAN & ELEVATION S4-7 OF 23

SHEET NO.
193
TOTAL SHTS.
482

MASONRY PAD ELEVATIONS	
PAD	ELEVATION
G-1	213.43
G-2	212.55
G-3	211.92
G-4	211.52
G-5	210.88

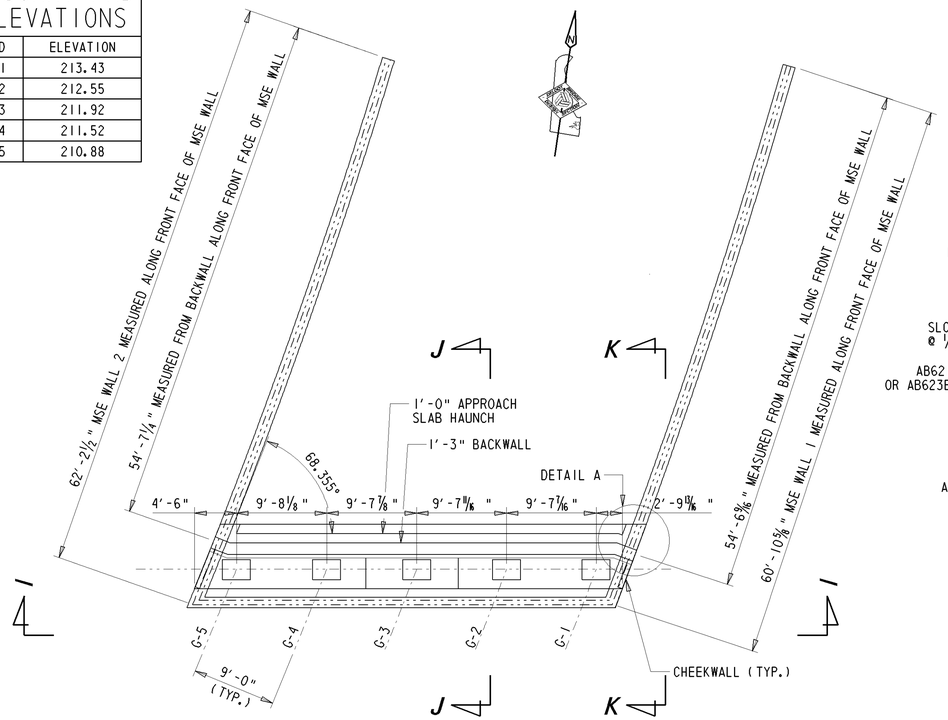

ABUTMENT B PLAN

⅛" = 1'-0"

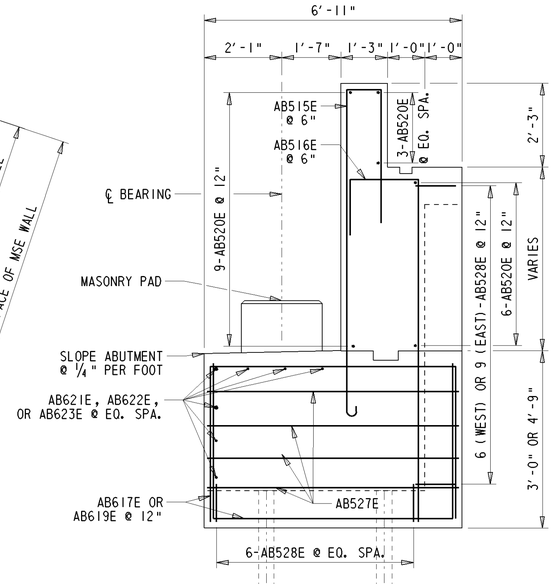

ABUTMENT B (SECTION K-K)

½" = 1'-0"

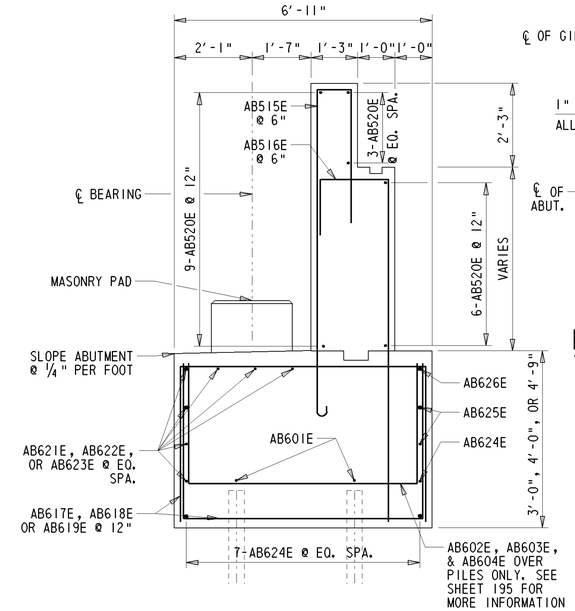

ABUTMENT B (SECTION J-J)

½" = 1'-0"

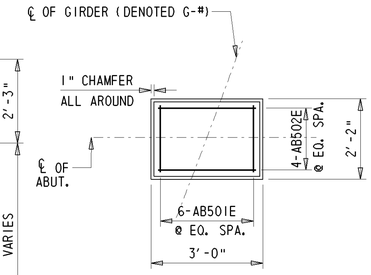

MASONRY PAD - PLAN

½" = 1'-0"

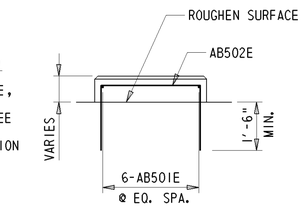

MASONRY PAD - ELEVATION

½" = 1'-0"

NOTE: CONCRETE FOR ABUTMENT B SHALL BE PAID FOR UNDER ITEM #602011 - P.C.C. MASONRY, SUBSTRUCTURE, CLASS A.

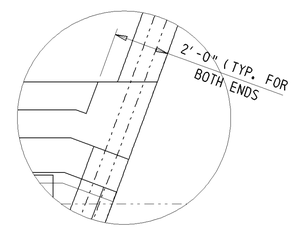

DETAIL A

⅜" = 1'-0"

NOTE: TOTAL OF TWO AB527E WILL BE NEEDED IN THE OUTSIDE FACE ON THE WEST SIDE OF ABUTMENT B WHILE FOUR AB527E WILL BE NEEDED ON THE OUTSIDE FACE ON THE EAST SIDE.

NOTE: FIELD CUT OR BEND BARS AS NEEDED FOR AB520E TO AB626E BARS. PAYMENT INCIDENTAL TO 604000 - BAR REINFORCEMENT, EPOXY COATED.

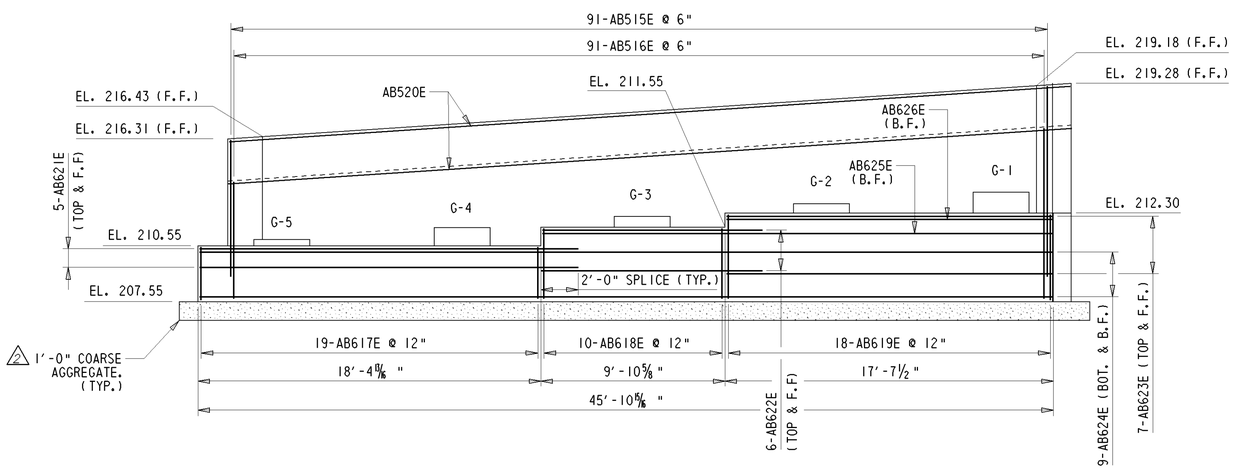

ABUTMENT B ELEVATION (SECTION I-I)

¼" = 1'-0"

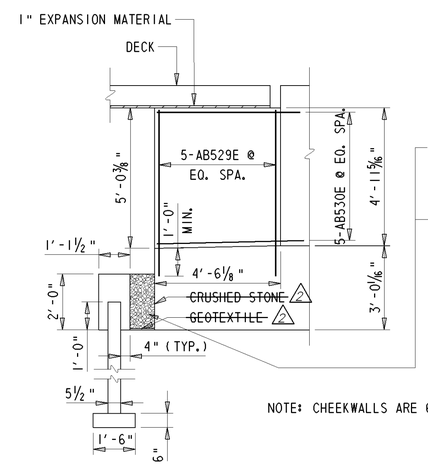

WEST CHEEKWALL DETAILS

⅜" = 1'-0"

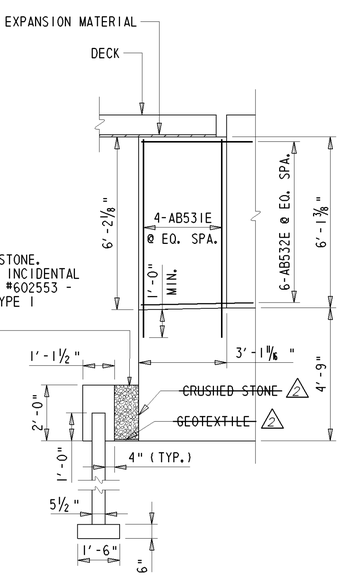

NOTE: CHEEKWALLS ARE 6" WIDE.

EAST CHEEKWALL DETAILS

⅜" = 1'-0"

Y:\NEWCASTL\059\BRIDGE\2510602\BRIDGE 1-763\PLANS\ALTERNATIVE CURVED\AB02.DGN

DELAWARE DEPARTMENT OF TRANSPORTATION

ADDENDUMS / REVISIONS

2 REVISED CONFLICTING NOTE, ADDED NOTES, MJG 7/29/11

I-95 & US 202 INTERCHANGE

CONTRACT	BRIDGE NO.	1-764
T200510602	DESIGNED BY: MJG	
COUNTY		
NEW CASTLE	CHECKED BY: JNH	

ABUTMENT B PLAN & ELEVATION
S4-8 OF 23

SHEET NO. 194
TOTAL SHTS. 482

NOTES:

1. PIPES FOR SEPARATING THE PILES FROM THE MSE WALL BACKFILL SHALL BE INSTALLED AT LOCATIONS OF PILES PRIOR TO CONSTRUCTING MSE WALL. ~~PILES SHALL BE INSTALLED AFTER QUARANTINE PERIOD AT THE CENTER OF THE PIPES.~~
2. PIPE SHALL BE 18" DIAMETER HIGH DENSITY POLYETHYLENE. CONTRACTOR SHALL FILL THE VOIDS WITH LOOSE AND UNCOMPACTED SAND PRIOR TO FOOTING POUR. PAYMENT FOR PIPES AND SAND SHALL BE INCIDENTAL TO ITEM #602553 - MECHANICALLY STABILIZED EARTH WALLS.
3. SEE BRIDGE NOTES FOR MORE INFORMATION REGARDING THE PILE FOUNDATION.
4. △2 MEASUREMENT FOR PAYMENT FOR ITEM #619511 SHALL BEGIN AT ORIGINAL GROUND.

△2 PILES SHALL BE INSTALLED AT THE CENTER OF THE PIPES AFTER THE QUARANTINE PERIOD OF 30 DAYS. QUARANTINE PERIOD BEGINS ONCE THE MSE WALLS HAVE BEEN BROUGHT UP TO PROPOSED GRADE.

EPTE TABLE	
PILE #	EPTE
P-1	128.00
P-2	123.00
P-3	118.00
P-4	117.00
P-5	115.00
P-6	114.00
P-7	113.00
P-8	128.00
P-9	123.00
P-10	118.00
P-11	117.00
P-12	115.00
P-13	114.00
P-14	113.00

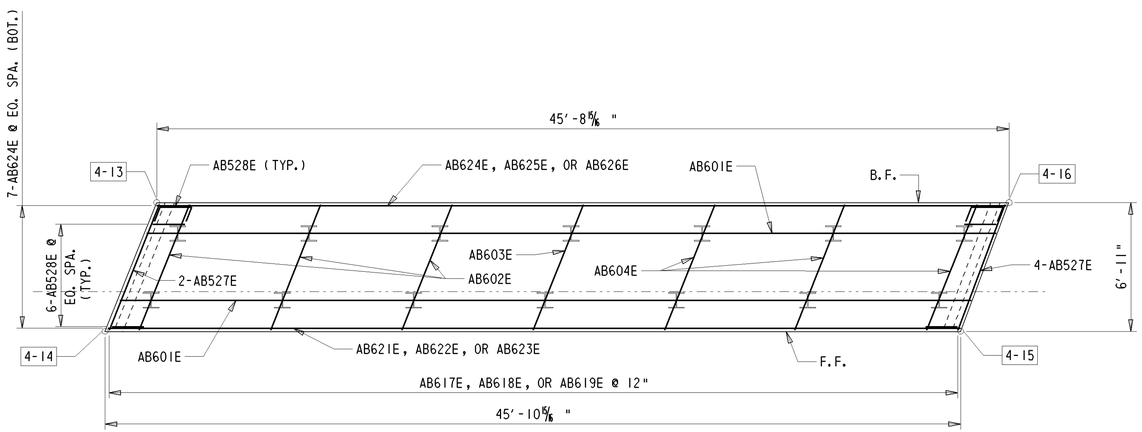

ABUTMENT B FOOTING PLAN

1/4" = 1'-0"

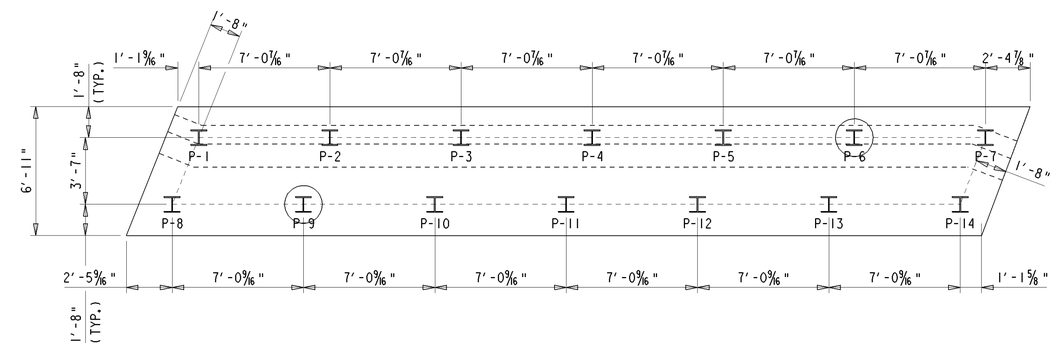

PILE LAYOUT - ABUTMENT B

1/4" = 1'-0"

ABUTMENT B WORKING POINTS					
PT.	STATION	OFFSET	ELEV.	NORTHING	EASTING
4-13	48+96.47	L 23.33	207.55	643770.25	621274.67
4-14	48+88.77	L 23.33	207.55	643763.04	621272.81
4-15	49+05.05	R 19.44	207.55	643768.94	621318.34
4-16	49+12.69	R 19.44	207.55	643776.13	621320.02

PILE FOOTING DESIGN LOADS	
SUBSTRUCTURE UNIT(S)	ABUTMENT B
B.F.E.	207.55
FACTORED AXIAL LOAD (KIP)	120
FACTORED AXIAL RESISTANCE (KIP)	420
GOVERNING LIMIT STATE	STR-1 (MAX)

LEGEND

I = DENOTES HP10x57 PILE

(I) = DENOTES TEST PILE

Y:\NEWCASTL\059\BRIDGE\2510602\BRIDGE 1-763\PLANS\ALTERNATIVE CURVED\AB02.DGN

DELAWARE DEPARTMENT OF TRANSPORTATION

ADDENDUMS / REVISIONS

△2 REVISED CONFLICTING NOTE, MJG 7/29/11

I-95 & US 202 INTERCHANGE

CONTRACT	BRIDGE NO.	1-764
T200510602	DESIGNED BY: MJG	
COUNTY		
NEW CASTLE	CHECKED BY: JNH	

ABUTMENT B FOOTING & PILE LAYOUT DETAILS S4-9 OF 23

SHEET NO. 195

TOTAL SHTS. 482

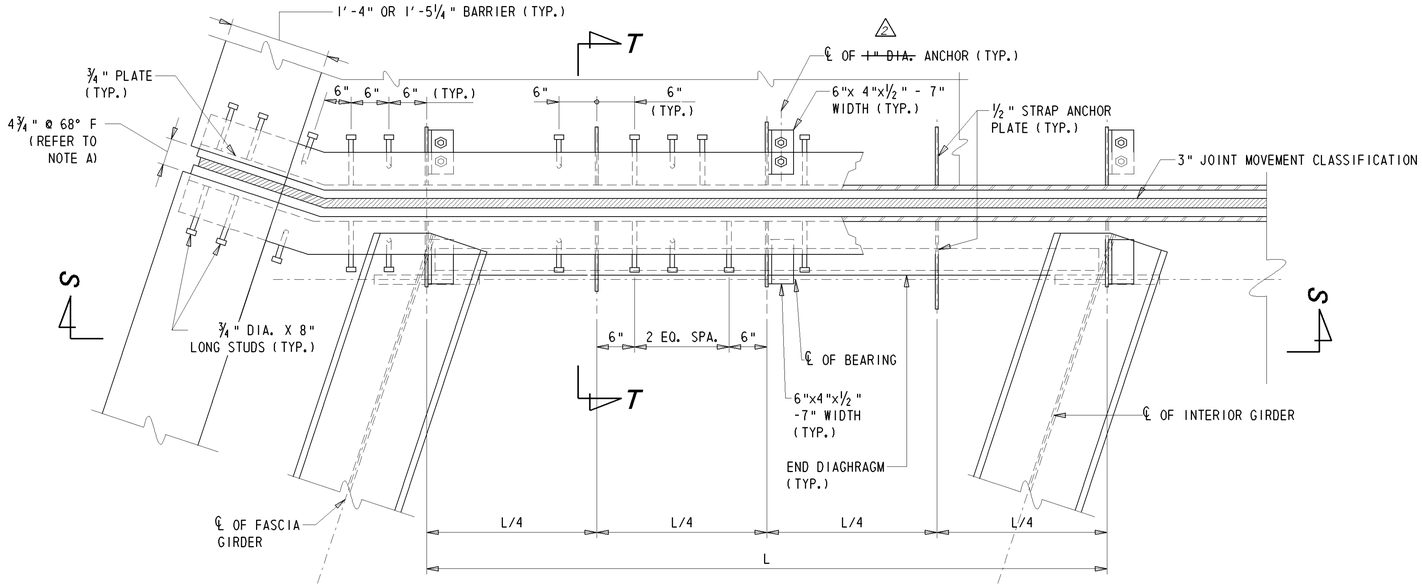

TYPICAL JOINT PLAN

1" = 1'-0"

EXPANSION JOINT NOTES:

1. STEEL FOR DECK JOINTS AND STEEL EXTRUSIONS SHALL BE AASHTO M270, GR. 36 (ASTM A36)
2. NEOPRENE EXTRUSION TO MEET D-2628-81 MODIFIED, (RECOVERY TESTS EXCLUDED).
3. THE EXPANSION JOINT SHALL BE CAPABLE OF SEALING THE DECK TO PREVENT MOISTURE AND OTHER CONTAIMINANTS FROM DESCENDING THROUGHT THE JOINT.
4. ENTIRE EXPANSION DAM SHALL BE PAINTED AFTER FABRICATION USING URETHANE SYSTEM, EXCEPT AS NOTED.
5. LUBRICANT-ADHESIVE FOR USE IN INSTALLING AND BONDING NEPORENE SEAL ELEMENTS TO STEEL JOINT COMPONENTS SHALL BE A ONE QUART MOISTURE-CURING POLYURETHAN AND HYDROCARBON SOLVENT MIXTURE HAVING THE FOLLOWING PHYSICAL PROPERTIES:

AVERAGE WEIGHT, POUNDS PER GALLON	8 +/- 10%
SOLIDS CONTENT	65%
ADHESIVE SHALL REMAIN LIQUID FROM	5°F TO 120°F
FILM STRENGTH, AS PER ASTM D-412	2,000 PSI
ELONGATION	250%

6. HOLES SHALL BE PLACED IN THE RIB PLATES AND STRAP ANCHOR PLATES FOR BAR REINFORCEMENT. IF THIS IS DONE IN THE FIELD AN APPROVED PAINT SHALL BE USED TO TOUCH-UP THE HOLES.

NOTE A:
THE CONTRACTOR SHALL ADJUST THE OPEN DECK JOINT AS REQUIRED BY THE WIDTH OF THE STEEL EXTRUSION USED SO AS TO PROVIDE A 2" JOINT OPENING AT 68°F.

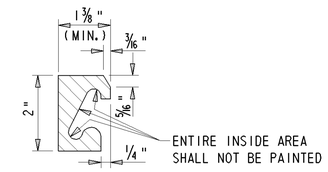

STEEL EXTRUSION DETAIL

6" = 1'-0"

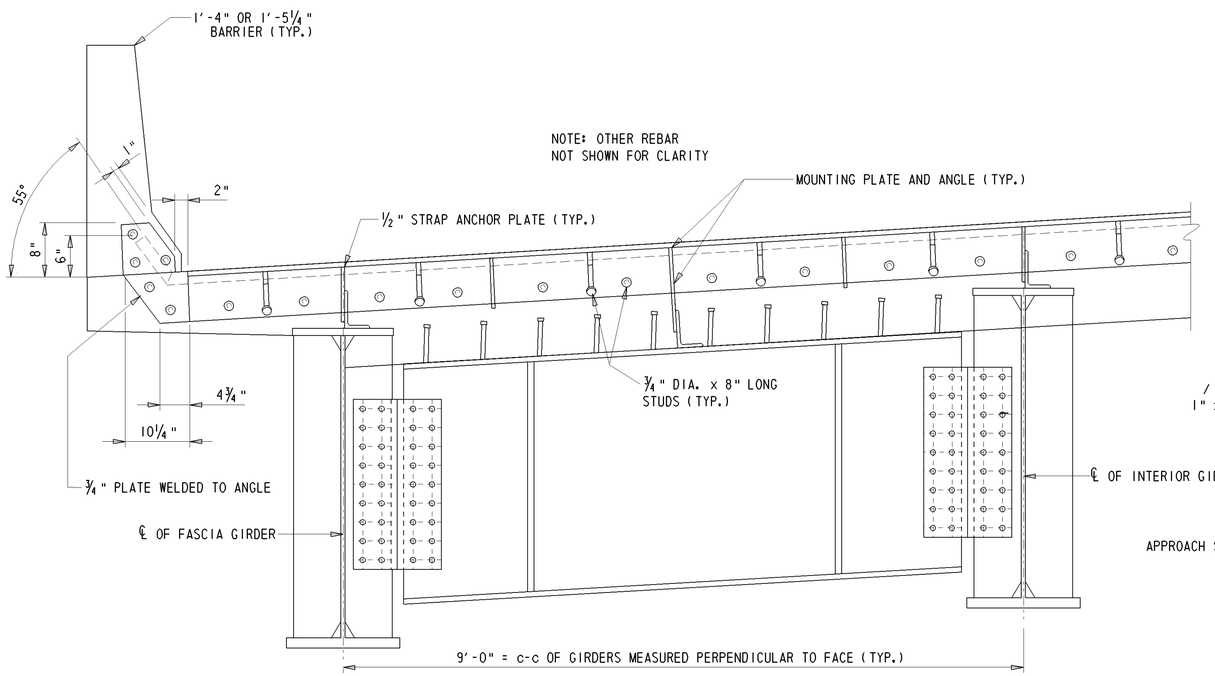

SECTION S-S

1" = 1'-0"

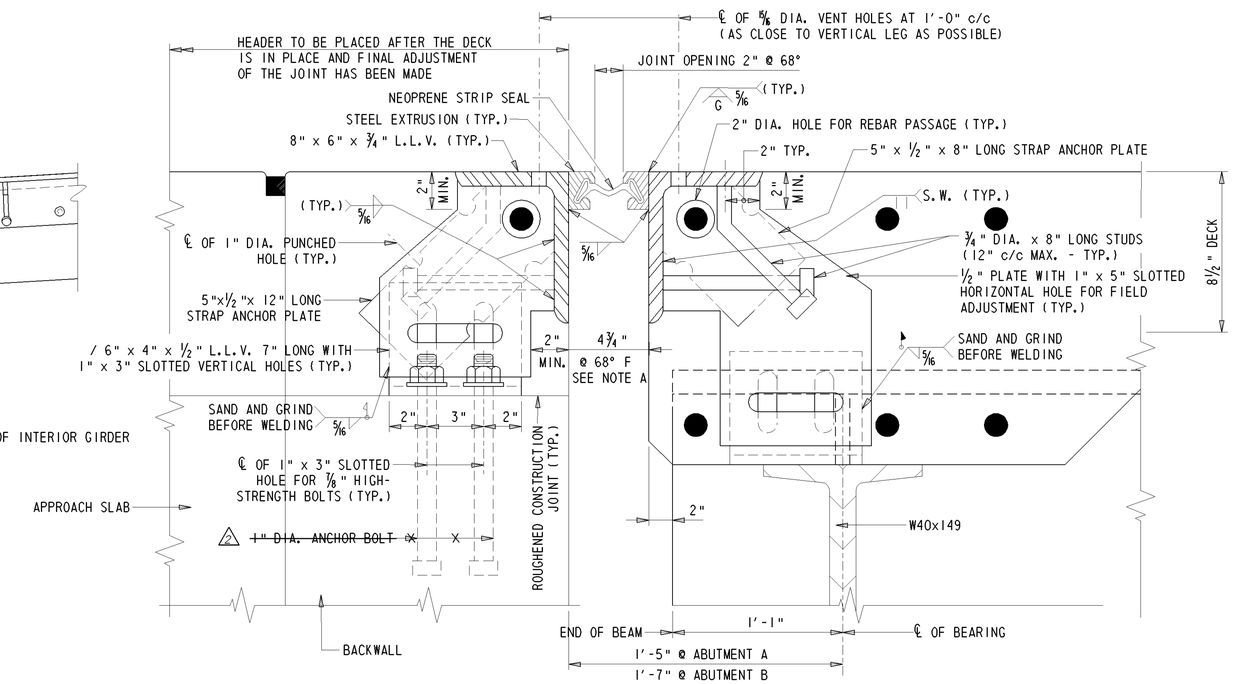

SECTION T-T

3" = 1'-0"

DELAWARE DEPARTMENT OF TRANSPORTATION	ADDENDUMS / REVISIONS △2 - DELETED CONFLICTING DIMENSIONS, MJG 7/26/11	**I-95 & US 202 INTERCHANGE**	CONTRACT T200510602	BRIDGE NO. **1-764**	**EXPANSION JOINT DETAILS S4-20 OF 23**	SHEET NO. 206
			COUNTY NEW CASTLE	DESIGNED BY: MJG CHECKED BY: JNH		TOTAL SHTS. 482

Y:\NEWCASTL\059\BRIDGE\2510602\BRIDGE 1-763\PLANS\ALTERNATIVE CURVED\EX01.DGN

BRIDGE PROJECT NOTES

1. LOCATION
   PROPOSED NEW BRIDGE I-763 (I-95 RAMP 5 OVER I-95 RAMP 7), NEW CASTLE COUNTY, DELAWARE.

2. DESIGN CRITERIA
   2007 AASHTO LRFD BRIDGE DESIGN SPECIFICATIONS, 4TH EDITION, WITH INTERIMS THROUGH 2009.
   U.S. CUSTOMARY UNITS.

3. LOADING
   DEAD LOAD INCLUDES 25 PSF FOR FUTURE WEARING SURFACE AND 15 PSF FOR S.I.P FORMS.
   VEHICULAR LIVE LOAD IS HL-93.

4. PORTLAND CEMENT CONCRETE
   STRUCTURAL ELEMENTS OF PORTLAND CEMENT CONCRETE SHALL BE AS NOTED:
   (F'c = 28 DAY COMPRESSIVE STRENGTH)
   CLASS A - PARAPETS, ABUTMENTS, PIER ABOVE FOOTING, MOMENT SLABS, AND WINGWALLS (F'c = 4.5 KSI)
   CLASS B - PIER FOOTING (F'c = 3.0 KSI)
   CLASS D - CONCRETE DECK AND APPROACH SLAB (F'c = 4.5 KSI)
   MIX REQUIREMENTS SHALL CONFORM TO SECTION 812 OF THE STANDARD SPECIFICATIONS. ALL EXPOSED EDGES SHALL BE CHAMFERED 3#4" UNLESS OTHERWISE NOTED. IT SHALL BE THE CONTRACTOR'S RESPONSIBILITY TO UTILIZE ANY APPROVED CONCRETE ADDITIVES OR HEATING TECHNIQUES TO MAINTAIN THE PROPER TEMPERATURE FOR ANY CONCRETE POURED DURING COLD WEATHER. PAYMENT SHALL BE INCIDENTAL TO THE RESPECTIVE CONCRETE BID ITEMS.

5. STRUCTURAL STEEL
   STEEL BEAMS, WEB STIFFENERS, SOLE PLATES, AND CROSS FRAMES SHALL BE ASTM A709 GRADE 50W. THE ADDITIONAL REQUIREMENTS FOR CHARPY V-NOTCH TESTING OF AASHTO M270 FOR PRIMARY LOAD CARRYING MEMBERS SHALL BE INCLUDED.

6. BEARINGS
   ALL ELASTOMERIC BEARING PADS SHALL BE REINFORCED ELASTOMERIC AND SHALL CONFORM TO SUBSECTION 623.06 OF THE STANDARD SPECIFICATIONS.

7. BAR REINFORCEMENT
   REINFORCING STEEL SHALL CONFORM TO AASHTO M31 (ASTM A615), GRADE 60. REINFORCING STEEL SHALL HAVE A 3" COVER IF CAST AGAINST EARTH AND A 2" CLEAR COVER ELSEWHERE, UNLESS OTHERWISE SPECIFIED ON THE PLANS. ALL REINFORCING STEEL SHALL BE PROTECTED WITH FUSION BONDED EPOXY. EPOXY COATED REINFORCING STEEL SHALL CONFORM TO AASHTO M284 (ASTM D3963).

8. CONSTRUCTION JOINTS
   KEYED CONSTRUCTION JOINTS SHALL BE 2 INCHES X 4 INCHES OR AS NOTED. ALL EXPOSED CONSTRUCTION JOINTS SHALL HAVE A 3/4" V-NOTCH. ANY WATERSTOPS SHALL BE INCIDENTAL TO THE APPROPIATE CONCRETE ITEM.

9. CONCRETE SEALER
   SILICONE ACRYLIC CONCRETE SEALER SHALL BE APPLIED TO THE EXPOSED FACES OF BACKWALLS, ABUTMENTS, ABUTMENT SEATS, WINGWALLS, BARRIERS, AND OUTSIDE FACE AND UNDERSIDE OF DECK TO FASCIA BEAM. PAYMENT UNDER ITEM #602646 - SILICONE ACRYLIC CONCRETE SEALER.

10. STABILIZING STRUCTURAL EXCAVATIONS
    SHORING SHALL BE REQUIRED FOR ANY EXCAVATION EXCEEDING 5'-0" IN DEPTH. UNLESS SPECIFIED ON THE PLANS AS NEEDING SHEETING AND SHORING, THE COST OF SHORING SHALL BE INCIDENTAL TO ITEM #207000 - EXCAVATION AND BACKFILL FOR STRUCTURES. IN LIEU OF SHORING, THE CONTRACTOR MAY USE A 2:1 (H:V) CUT SLOPE. NO PAYMENT FOR ADDITIONAL CUT OR FILL WILL BE GIVEN, AS DESCRIBED IN SECTION 207 OF THE STANDARD SPECIFICATIONS. FOR AREAS DESIGNATED IN THE PLANS AS NEEDING SHEETING AND SHORING, THE CONTRACTOR SHALL SUBMIT A PROPOSED PLAN FOR SHEETING OR SHORING OF THE EXCAVATION. THE SUBMITTAL SHALL INCLUDE ANY DRAWINGS AND CALCULATIONS ASSOCIATED WITH THE WORK AND SHALL BE STAMPED BY A DELAWARE REGISTERED PROFESSIONAL ENGINEER. PAYMENT FOR SHEETING AND SHORING, AS WELL AS THE MATERIALS AND WORK ASSOCIATED WITH THE SUBMITTAL, SHALL BE MADE UNDER ITEM #207501 - SHEETING AND SHORING.

11. DECK SLAB
    THE DECK SLAB THICKNESS INCLUDES 1/2" INTEGRAL WEARING SURFACE.

12. LOAD RATINGS
    LRFR LOAD RATINGS IN ACCORDANCE WITH AASHTO MANUAL FOR BRIDGE EVALUATION, 2008
    NOTE THAT THE DECK ACTS COMPOSITELY WITH THE BEAMS.

13. S.I.P FORM SUBMITTALS
    IN ADDITION TO THE REQUIREMENTS OF THE STANDARD SPECIFICATIONS, CALCULATIONS AND DRAWINGS FOR THE S.I.P. FORMS MUST BE SEALED BY A PROFESSIONAL ENGINEER REGISTERED IN THE STATE OF DELAWARE AND SUBMITTED FOR APPROVAL. PAYMENT SHALL BE INCIDENTAL TO ITEM 602013 - PORTLAND CEMENT CONCRETE MASONRY, SUPERSTRUCTURE, CLASS D.

14. ROCK PROFILE VARIATION
    ANTICIPATING THAT THE ACTUAL PROFILE OF THE ROCK VARIES OVER WHAT HAS BEEN MEASURED, THE ESTIMATED QUANTITIES FOR THE ITEMS LISTED BELOW HAVE BEEN INCREASED 25% OVER THE QUANTITIES CALCULATED:
    ITEM #618071 - STEEL H PILES, HP 10 X 57
    ITEM #618072 - STEEL H TEST PILES, HP 10 X 57
    ITEM #619051 - INSTALL STEEL H PILES, HP 10 X 57
    ITEM #619052 - INSTALL STEEL H PILES, HP 10 X 57
    ITEM #619512 - PREDRILLING FOR END BEARING PILES

15. PILE FOUNDATIONS
    ABUTMENTS A & B WILL UTILIZE MECHANICALLY STABILIZED EARTH (MSE) WALLS AND STUB ABUTMENTS ON STEEL H-PILES. CONTRACTOR SHALL PERFORM AIR TRACK DRILLING ON A 10-FOOT GRID TO DETERMINE THE TOP OF ROCK WITHIN THE LIMITS OF THE ABUTMENT IN THE AREA INDICATED ON THE PLANS AND IN THE SPECIAL PROVISIONS FOR ITEM 619511 - EXPLORATORY DRILLING.

    CONTRACTOR SHALL CONTROL THE PILE DRIVING BY THE WAVE EQUATION ANALYSIS. THE ENGINEER WILL VERIFY, FROM THE TEST PILE DRIVING RESULTS, THE CAPABILITY OF THE PILE DRIVING HAMMER SELECTED BY THE CONTRACTOR. PILES SHALL BE DRIVEN TO ABSOLUTE REFUSAL INTO THE STRATUM DEFINED BY THE PILE TIP ELEVATION WHICH IS PREDETERMINED BY THE ENGINEER FROM THE TEST PILES AND AIR TRACK DRILLING. THE ENGINEER WILL DETERMINE THE ACCEPTABILITY OF THE BEARING PILES THAT ATTAIN ABSOLUTE REFUSAL ABOVE THE PREDETERMINED PILE TIP ELEVATIONS.

    CONTRACTOR SHALL PERFORM DYNAMIC PILE MONITORING ON THE TEST PILES AND IF DIRECTED ON SELECTED BEARING PILES AT LOCATIONS AS DETERMINED BY THE ENGINEER.

    ALL PILES SHALL BE ASTM A709, GRADE 50 AND SHALL HAVE A HEAVY-DUTY TIP REINFORCEMENT, SUCH AS HP77600B BY ASSOCIATED PILE AND FITTING CORPORATION, H-777 BY DOUGHERTY FOUNDATION PRODUCTS INC, OR APPROVED EQUAL. PAYMENT SHALL BE INCIDENTAL TO ITEM 618071 AND 618072.

2 *EXPLORATORY DRILLING SHALL BE PERFORMED PRIOR TO CONSTRUCTION OF THE MSE WALLS. LOCATIONS SHALL BE AT EACH CORNER OF THE STUB ABUTMENT AND AT APPROXIMATELY 10-FOOT INTERVALS ALONG THE EDGE OF THE STUB ABUTMENT.*

INDEX OF SHEETS

SHEET NO.	TITLE
1	PROJECT NOTES
2	BRIDGE PLAN, TYPICAL SECTION, & ELEVATION
3	PILE LAYOUT DETAILS
4	MSE WALL A DETAILS
5	MSE WALL B DETAILS
6	ABUTMENT A-B FOOTING DETAILS
7	ABUTMENT A DETAILS
8	ABUTMENT B DETAILS
9	FRAMING PLAN
10	BEAM DETAILS - 1
11	BEAM DETAILS - 2
12	DECK PLAN - 1
13	DECK PLAN - 2
14	APPROACH SLAB DETAILS
15	MOMENT SLAB DETAILS
16	BARRIER DETAILS
17	EXPANSION JOINT DETAILS
18	REINFORCEMENT BAR SCHEDULE - 1
19	REINFORCEMENT BAR SCHEDULE - 2

QUANTITIES

ITEM NO.	ITEM TITLE	UNIT	QUANTITY
207000	EXCAVATION AND BACKFILL FOR STRUCTURES	C.Y.	450
207501	SHEETING AND SHORING	L.S.	L.S.
210000	FURNISHING BORROW TYPE "C" FOR PIPE, UTILITY TRENCH, AND STRUCTURE BACKFILL	C.Y.	360
602001	PCC MASONRY, MOMENT SLAB, CLASS A	C.Y.	220
602011	PCC MASONRY, SUBSTRUCTURE, CLASS A	C.Y.	140
602013	PCC MASONRY, SUPERSTRUCTURE, CLASS D	C.Y.	85
602014	PCC MASONRY, APPROACH SLAB, CLASS D	C.Y.	112
602017	PCC MASONRY, PARAPET, CLASS A	C.Y.	45
602557	MECHANICALLY STABILIZED EARTH WALLS, TYPE 2	S.F.	2870
602646	SILICONE ACRYLIC CONCRETE SEALER	S.F.	5000
602670	MECHANICALLY STABILIZED EARTH WALLS, TYPE 3	S.F.	3250
604000	BAR REINFORCEMENT, EPOXY COATED	LB	65000
605002	STEEL STRUCTURES	L.S.	L.S.
605657	STRIP SEAL EXPANSION JOINT, 1 1/2"	L.F.	118
618071	STEEL H PILES, HP 10 X 57	L.F.	1920
618072	STEEL H TEST PILES, HP 10 X 57	L.F.	240
619051	INSTALL STEEL H PILES, HP 10 X 57	L.F.	1920
619052	INSTALL STEEL H TEST PILES, HP 10 X 57	L.F.	240
619511	EXPLORATORY DRILLING	~~EA~~ L.F.	~~4~~ 1200 2
619512	PREDRILLING FOR END BEARING PILES	L.F.	1920
619519	DYNAMIC PILE TESTING BY CONTRACTOR	EA	4
712020	RIPRAP, R-4	TON	125
713003	GEOTEXTILES, RIPRAP	S.Y.	180
2 608000	COARSE AGGREGATE FOR FOUNDATION STABILIZATION	TON	70

LRFR LOAD RATINGS

TYPE OF TRUCK	INVENTORY RATING		OPERATING RATING	
	RATING FACTOR	LOAD RATING (TONS)	RATING FACTOR	LOAD RATING (TONS)
AASHTO HL-93 (TRUCK + LANE)	2.580	N/A	3.350	N/A
AASHTO HL-93 (TANDEM + LANE)	2.900	N/A	3.770	N/A

PILE FOOTING DESIGN LOADS	
SUBSTRUCTURE UNIT(S)	ABUTMENT A
B.F.E.	219.45
FACTORED AXIAL LOAD (KIP)	118
FACTORED AXIAL RESISTANCE (KIP)	420
GOVERNING LIMIT STATE	STR-1 (MAX)

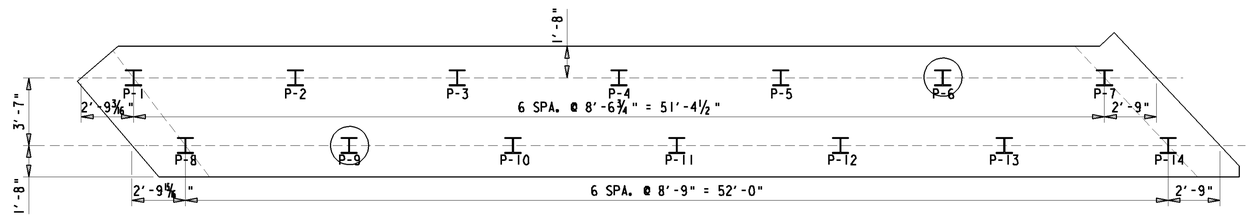

ABUTMENT A PILE LAYOUT PLAN

1/4" = 1'-0"

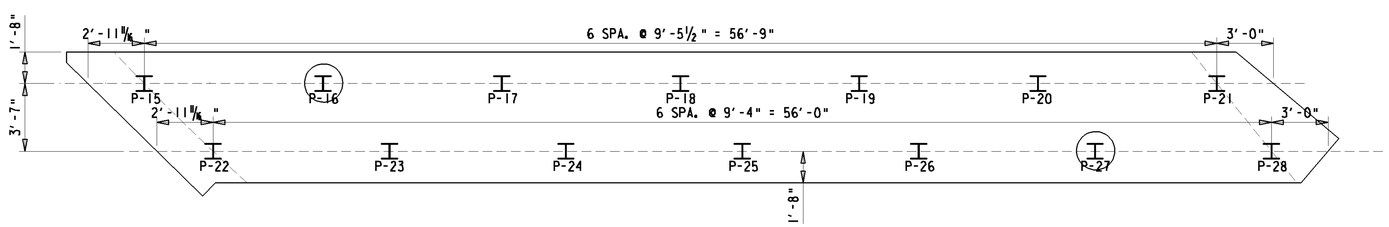

ABUTMENT B PILE LAYOUT PLAN

1/4" = 1'-0"

LEGEND

I = DENOTES HP10x57 PILE

(I) = DENOTES TEST PILE

PILE FOOTING DESIGN LOADS	
SUBSTRUCTURE UNIT(S)	ABUTMENT B
B.F.E.	220.92
FACTORED AXIAL LOAD (KIP)	118
FACTORED AXIAL RESISTANCE (KIP)	420
GOVERNING LIMIT STATE	STR-1 (MAX)

NOTES:

1. PIPES FOR SEPARATING THE PILES FROM THE MSE WALL BACKFILL SHALL BE INSTALLED AT LOCATIONS OF PILES PRIOR TO CONSTRUCTING MSE WALL. ~~PILES SHALL BE INSTALLED AFTER QUARANTINE PERIOD AT THE CENTER OF THE PIPES.~~
2. PIPE SHALL BE 18" DIAMETER HIGH DENSITY POLYETHYLENE. CONTRACTOR SHALL FILL THE VOIDS WITH LOOSE AND UNCOMPACTED SAND PRIOR TO FOOTING POUR. PAYMENT FOR PIPES AND SAND SHALL BE INCIDENTAL TO ITEM #602553 - MECHANICALLY STABILIZED EARTH WALLS.
3. SEE BRIDGE NOTES FOR MORE INFORMATION REGARDING THE PILE FOUNDATION.
4. (2) MEASUREMENT FOR PAYMENT ITEM #619511 SHALL BEGIN AT ORIGINAL GROUND.

(2) *PILES SHALL BE INSTALLED AT THE CENTER OF THE PIPES AFTER THE QUARANTINE PERIOD OF 30 DAYS. QUARANTINE PERIOD BEGINS ONCE THE MSE WALLS HAVE BEEN BROUGHT UP TO PROPOSED GRADE.*

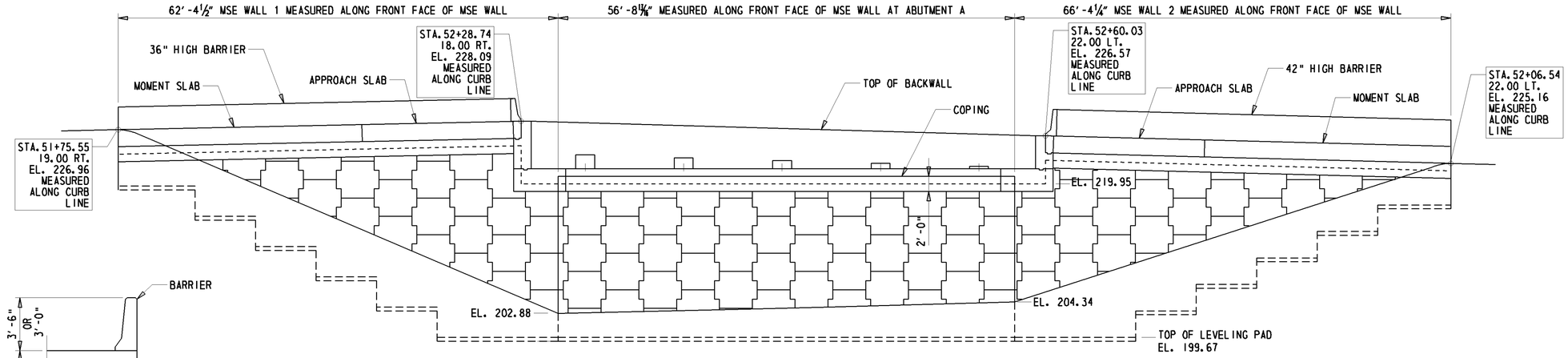

DEVELOPED ELEVATION
SOUTH MSE WALL
⅛" = 1'-0"

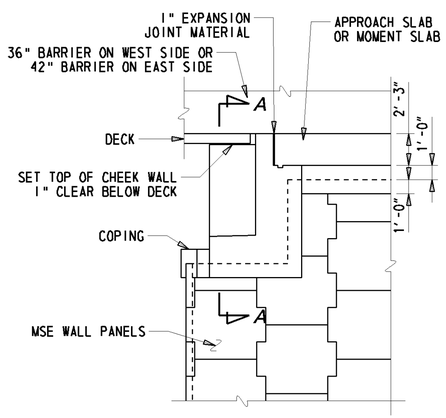

TYPICAL ELEVATION
⅜" = 1'-0"

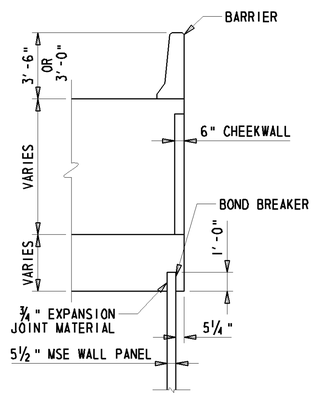

SECTION A-A
¼" = 1'-0"

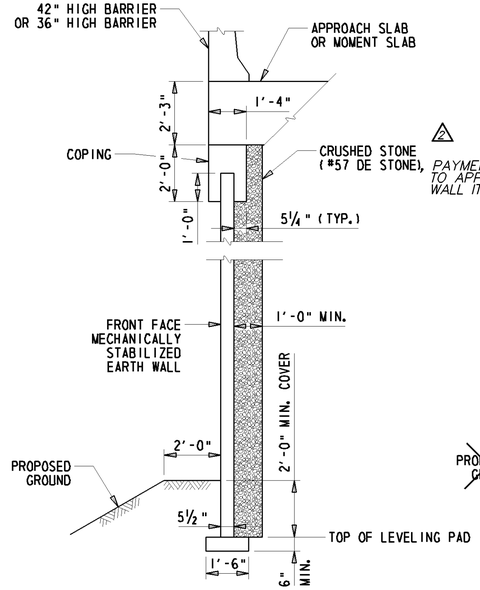

TYPICAL MSE WINGWALL SECTION
⅜" = 1'-0"

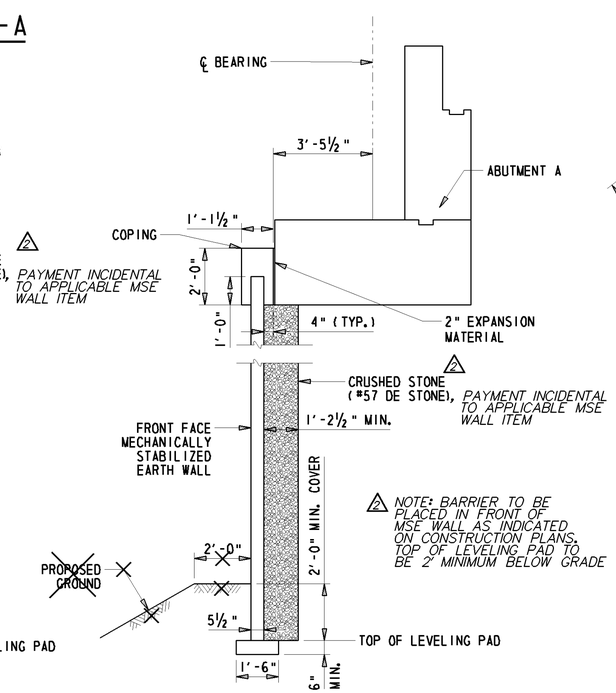

TYPICAL SECTION AT ABUTMENT A
⅜" = 1'-0"

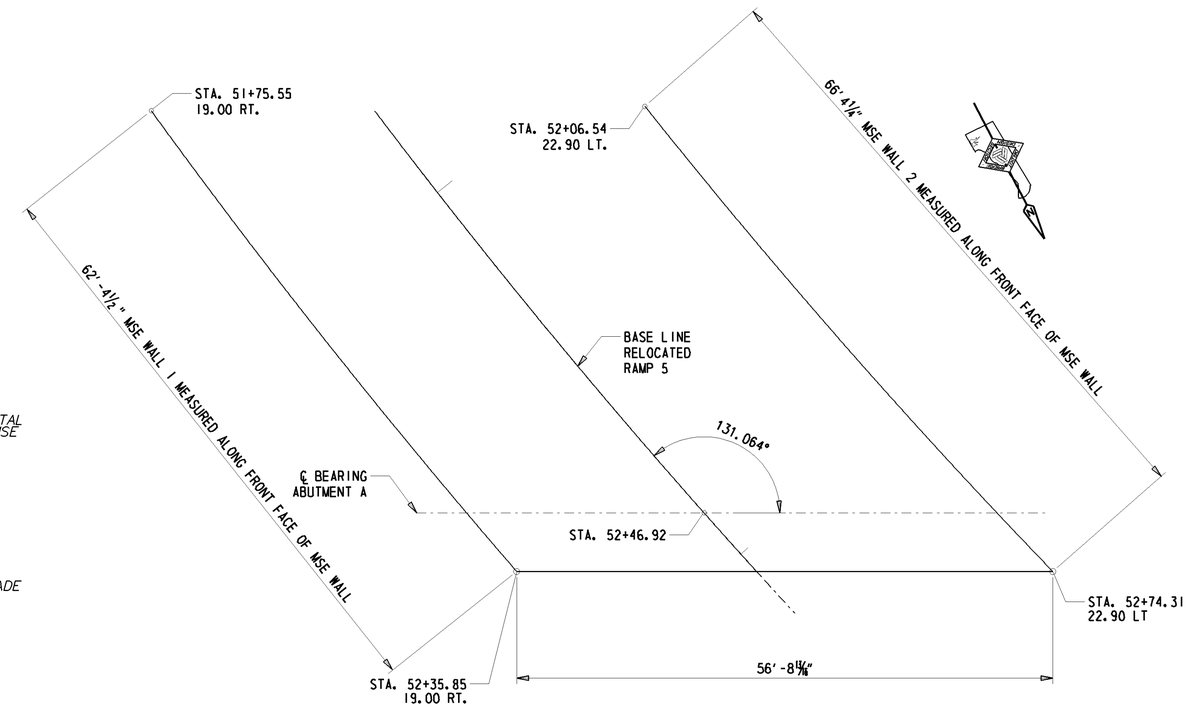

SOUTH MSE WALL PLAN
⅛" = 1'-0"

NOTE: REINFORCEMENT FOR MSE WALL SHALL BE SKEWED TO AVOID PILES.

DELAWARE DEPARTMENT OF TRANSPORTATION	ADDENDUMS / REVISIONS 2 - DELETED CONFLICTING DETAIL, ADDED NOTE, TRS 7/29/11	I-95 & US 202 INTERCHANGE	CONTRACT T200510602	BRIDGE NO. 1-763	MSE WALL 1 & 2 DETAILS S3 – 4 OF 19	SHEET NO. 213
			COUNTY NEW CASTLE	DESIGNED BY: TRS CHECKED BY: JNH		TOTAL SHTS. 482

W:\MSV8\CELLS\PROJDEV\SB.CEL

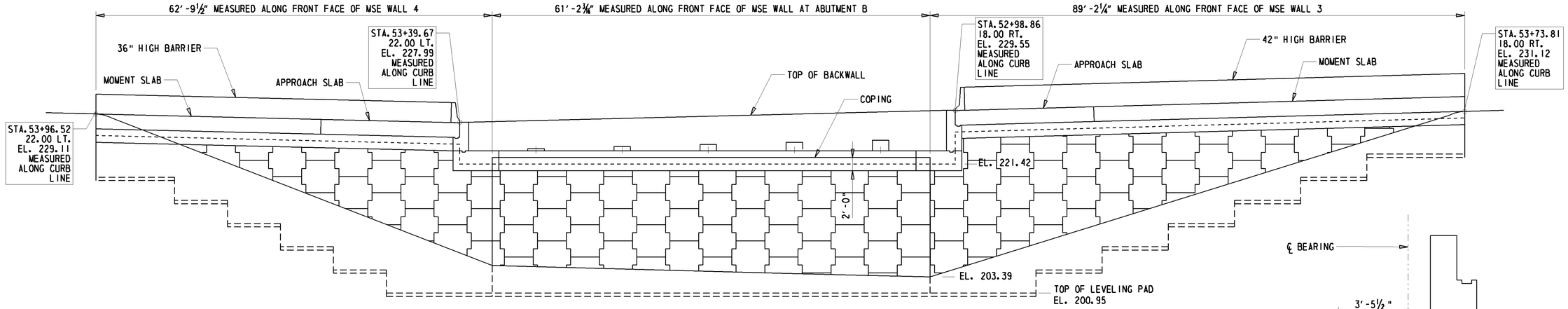

DEVELOPED ELEVATION
NORTH MSE WALL
⅛" = 1'-0"

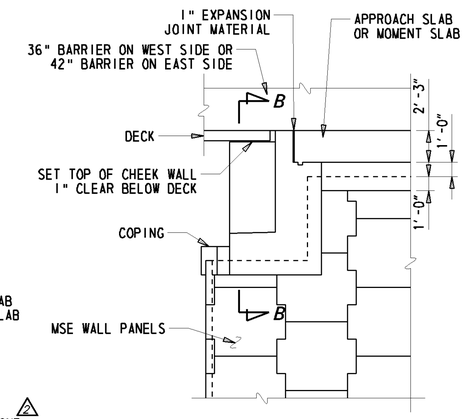

TYPICAL ELEVATION
3/16" = 1'-0"

TYPICAL MSE WINGWALL SECTION
⅜" = 1'-0"

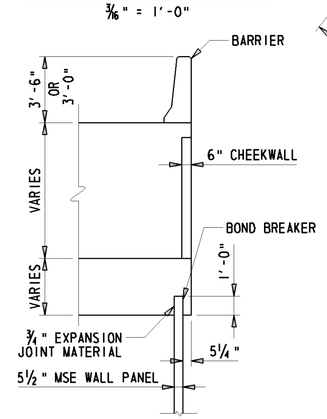

SECTION B-B
¼" = 1'-0"

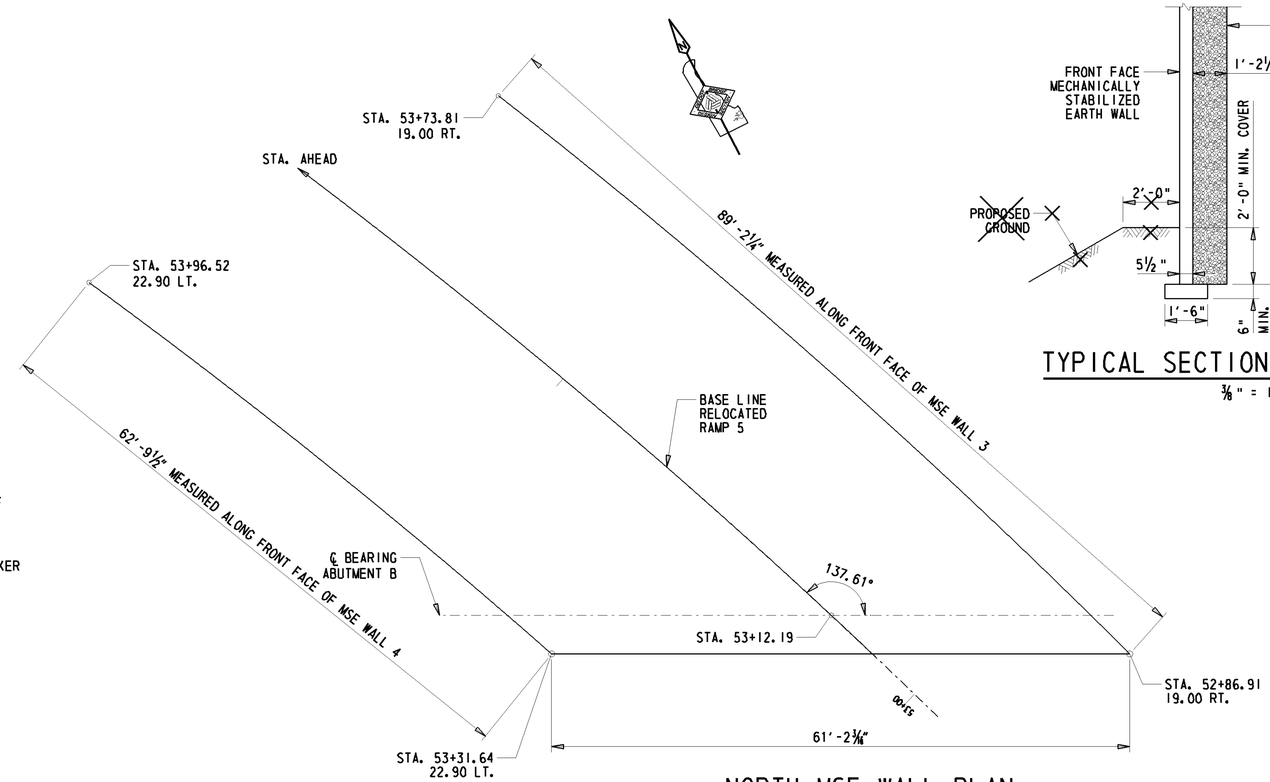

NORTH MSE WALL PLAN
⅛" = 1'-0"

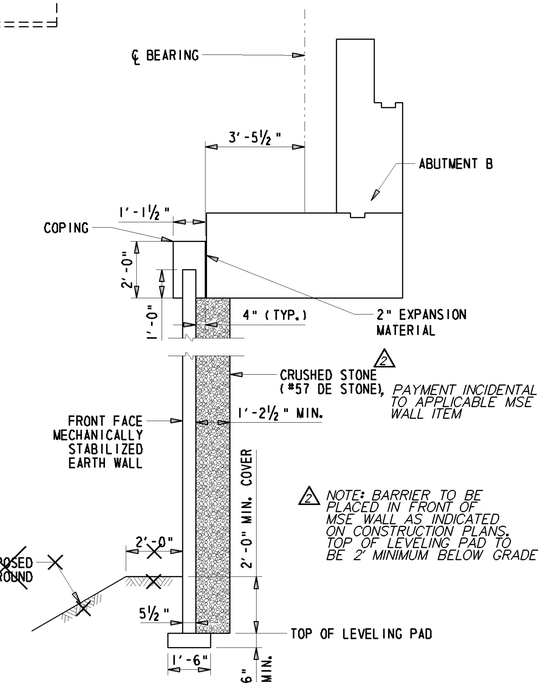

TYPICAL SECTION AT ABUTMENT B
⅜" = 1'-0"

NOTE: REINFORCEMENT FOR MSE WALL SHALL BE SKEWED TO AVOID PILES.

W:\MSV8\CELLS\PROJDEV\SB.CEL

DELAWARE DEPARTMENT OF TRANSPORTATION	ADDENDUMS / REVISIONS 2 - DELETED CONFLICTING DETAIL, ADDED NOTE, TRS 7/29/11		**I-95 & US 202 INTERCHANGE**	CONTRACT T200510602 COUNTY NEW CASTLE	BRIDGE NO. 1-763 DESIGNED BY: TRS CHECKED BY: JNH	**MSE WALL 3 & 4 DETAILS S3 – 5 OF 19**	SHEET NO. 214 TOTAL SHTS. 482

STEEL NOTES:

1. ALL STRUCTURAL STEEL SHALL BE ASTM A709 GRADE 50W. THE ADDITIONAL REQUIREMENTS FOR CHARPY V-NOTCH TESTING OF AASHTO M270 SHALL BE INCLUDED FOR THE PRIMARY LOAD CARRYING MEMBERS (W36x230 SECTIONS).
2. WELDING SHALL CONFORM TO THE CURRENT ANSI/AASHTO/AWS BRIDGE WELDING CODE D1.5-08. WELDING AND NONDESTRUCTIVE TESTING SYMBOLS SHALL CONFORM TO SYMBOLS FOR WELDING, BRAZING, AND NONDESTRUCTIVE EXAMINATION AWS A2-4:2007.
3. JOINT WELDING PROCEDURES, OVERALL FABRICATION METHODS, AND QUALITY CONTROL INSPECTION PROCEDURE SHALL BE INCLUDED AS WRITTEN PROCEDURE SPECIFICATIONS WITH THE SHOP PLAN SUBMISSION.
4. BEAM WEBS SHALL BE GROUND SMOOTH AND SHALL BE PLUMB AT THE ENDS UNDER FULL DEAD LOAD.
5. ALL BOLTED CONNECTIONS SHALL BE MADE WITH 7/8" DIAMETER ASTM A325 HIGH STRENGTH BOLTS, TYPE 1, UNLESS OTHERWISE NOTED.
6. THE GIRDERS SHALL BE PAINTED WITH A URETHANE PAINT SYSTEM IN ACCORDANCE WITH SECTION 605 FROM EACH END TO A DISTANCE OF 5' FROM FACE OF ABUTMENT OR MSE WALL AND THE DISTANCE BETWEEN 5' FROM EACH FACE OF PIER CAP. IN ADDITION, EACH FASCIA GIRDER SHALL BE PAINTED AS PER PAINTING DETAIL ON BEAM DETAILS - 2 (S3-11) IN AREAS BETWEEN THE PIER AND ABUTMENTS. THE COLOR OF THE FINISHED PAINT SHALL BE BROWN (NO. 10076) FROM FEDERAL STANDARD 595C. THE COLOR SHALL BE SUBMITTED FOR APPROVAL. AT ALL LOCATIONS WHERE THE CONTRACTOR'S WORK DAMAGES THE EXISTING PAINT SYSTEM, THE CONTRACTOR SHALL CLEAN THE DAMAGED LOCATION AND REPAINT THE AREA. ALL CLEANING AND PAINTING IS INCIDENTAL TO ITEM #605002 - STEEL STRUCTURES.
7. OVERSIZED HOLES SHALL BE USED ON DIAPHRAGM CONNECTORS.
8. ALL BOLTS ON DIAPHRAGMS SHALL BE FINGER TIGHT AT ERECTION. BOLTS ARE NOT TO BE TORQUED UNTIL AFTER THE DECK CONCRETE IS POURED.
9. DIRECTION OF WELDS IS NOT APPLICABLE IF STIFFENERS ARE FITTED WITH TACK WELDS.
10. TIGHT FIT AT TENSION FLANGES AT INTERIOR SUPPORTS. FILLET WELDS OVER END SUPPORTS.
11. BEARING AREAS: PROVIDE BOTTOM FLANGE IN A TRUE HORIZONTAL PLANE IN TRANSVERSE DIRECTION AND IN A TRUE PLANE LONGITUDINALLY OVER DIMENSION "L", WHERE L = WIDTH OF SOLE PLATE + 8" AHEAD AND BACK. WHERE APPLICABLE. IF THE SOLE PLATE IS WELDED TO THE BOTTOM FLANGE, PROVIDE THE SOLE PLATE MEETING THE SAME FLATNESS REQUIREMENTS. EACH BEARING MUST BE STRESSED UNIFORMLY AFTER ALL DEAD LOAD IS PLACED. MAKE NECESSARY SHOP AND/OR FIELD ADJUSTMENTS TO PROVIDE UNIFORM BEARING STRESS UNDER ALL DEAD LOADS.

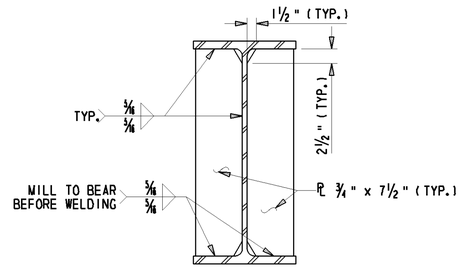

BEARING STIFFENERS

¼" = 1'-0"

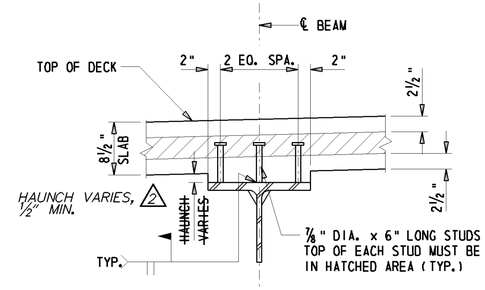

SHEAR CONNECTORS

¼" = 1'-0"

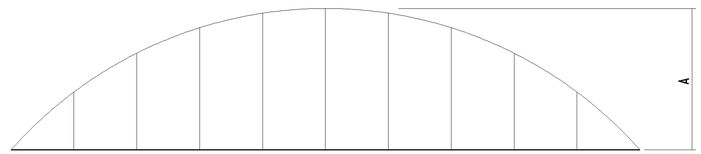

CAMBER DIAGRAM

DLS - DENOTES DEFLECTION DUE TO STRUCTURAL STEEL GIRDER

DLC - DENOTES DEFLECTION DUE TO DECK SLAB, HAUNCH, AND SIP FORMS

SDL - DENOTES DEFLECTION DUE TO PARAPET AND FUTURE WEARING SURFACE

TD - DENOTES TOTAL DEAD LOAD DEFLECTION

VCO - DENOTES CAMBER FOR VERTICAL CURVE ORDINATE DUE TO ROADWAY PROFILE

ALL BEAMS SHALL BE CAMBERED FOR DEAD LOAD DEFLECTION ORDINATES TO THE DIMENSIONS SHOWN ON THESE PLANS. THE CAMBER TOLERANCE IS ZERO UNDER TO 1/16" OVER.

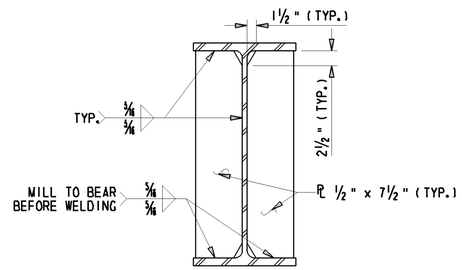

CONNECTION PLATE

¼" = 1'-0"

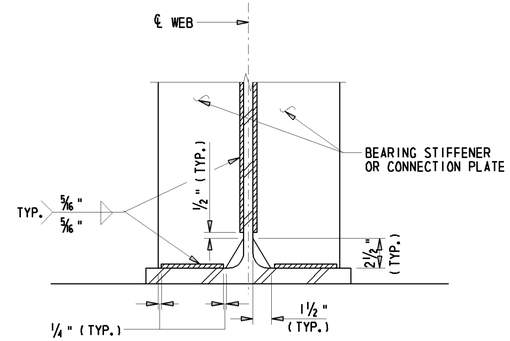

BEARING STIFFENER & CONNECTION PLATE WELD TERMINATION

½" = 1'-0"

DEFLECTION AND TOTAL CAMBER (INCH)										
GIRDER		0.1L	0.2L	0.3L	0.4L	0.5L	0.6L	0.7L	0.8L	0.9L
GIRDER 1	DLS	1/16	1/8	3/16	3/16	1/4	3/16	3/16	1/8	1/16
	DLC	5/16	5/8	7/8	1	1 1/16	1	7/8	5/8	5/16
	SDL	0	1/16	1/16	1/16	1/16	1/16	1/16	1/16	0
	TD	7/16	11/16	1 1/8	1 5/16	1 3/8	1 5/16	1 1/8	11/16	7/16
	VCO	0	0	0	0	0	0	0	0	0
	TD+VCO	7/16	11/16	1 1/8	1 5/16	1 3/8	1 5/16	1 1/8	11/16	7/16
GIRDER 2	DLS	1/16	1/8	3/16	3/16	1/4	3/16	3/16	1/8	1/16
	DLC	5/16	5/8	7/8	1	1 1/16	1	7/8	5/8	5/16
	SDL	0	1/16	1/16	1/16	1/16	1/16	1/16	1/16	0
	TD	7/16	11/16	1 1/8	1 5/16	1 3/8	1 5/16	1 1/8	11/16	7/16
	VCO	0	0	0	0	0	0	0	0	0
	TD+VCO	7/16	11/16	1 1/8	1 5/16	1 3/8	1 5/16	1 1/8	11/16	7/16
GIRDER 3	DLS	1/16	1/8	3/16	3/16	1/4	3/16	3/16	1/8	1/16
	DLC	5/16	5/8	7/8	1	1 1/16	1	7/8	5/8	5/16
	SDL	0	1/16	1/16	1/16	1/16	1/16	1/16	1/16	0
	TD	7/16	11/16	1 1/8	1 5/16	1 3/8	1 5/16	1 1/8	11/16	7/16
	VCO	0	0	0	0	0	0	0	0	0
	TD+VCO	7/16	11/16	1 1/8	1 5/16	1 3/8	1 5/16	1 1/8	11/16	7/16
GIRDER 4	DLS	1/16	1/8	3/16	3/16	1/4	3/16	3/16	1/8	1/16
	DLC	5/16	5/8	7/8	1	1 1/16	1	7/8	5/8	5/16
	SDL	0	1/16	1/16	1/16	1/16	1/16	1/16	1/16	0
	TD	7/16	11/16	1 1/8	1 5/16	1 3/8	1 5/16	1 1/8	11/16	7/16
	VCO	0	0	0	0	0	0	0	0	0
	TD+VCO	7/16	11/16	1 1/8	1 5/16	1 3/8	1 5/16	1 1/8	11/16	7/16
GIRDER 5	DLS	1/16	1/8	3/16	3/16	1/4	3/16	3/16	1/8	1/16
	DLC	5/16	5/8	7/8	1	1 1/16	1	7/8	5/8	5/16
	SDL	0	1/16	1/16	1/16	1/16	1/16	1/16	1/16	0
	TD	7/16	11/16	1 1/8	1 5/16	1 3/8	1 5/16	1 1/8	11/16	7/16
	VCO	0	0	0	0	0	0	0	0	0
	TD+VCO	7/16	11/16	1 1/8	1 5/16	1 3/8	1 5/16	1 1/8	11/16	7/16

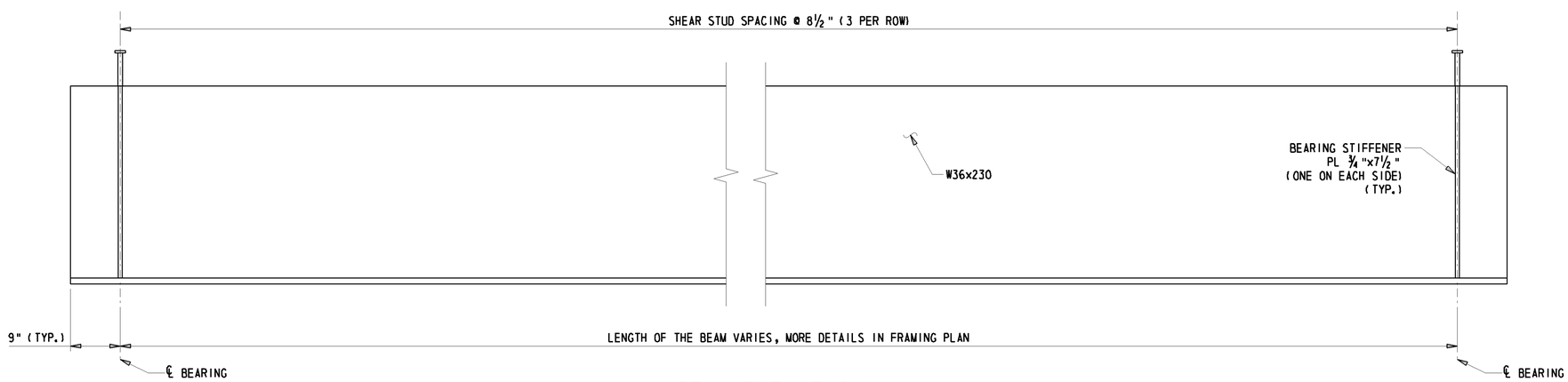

BEAM ELEVATION

¼" = 1'-0"

W:\MSV8\CELLS\PROJDEV\SB.CEL

DELAWARE DEPARTMENT OF TRANSPORTATION

ADDENDUMS / REVISIONS

2 - REVISED NOTE, TRS 7/29/11

I-95 & US 202 INTERCHANGE

CONTRACT	BRIDGE NO. 1-763	BEAM DETAILS - 1 S3-10 OF 19	SHEET NO.
T200510602	DESIGNED BY: TRS		219
COUNTY			TOTAL SHTS.
NEW CASTLE	CHECKED BY: JNH		482

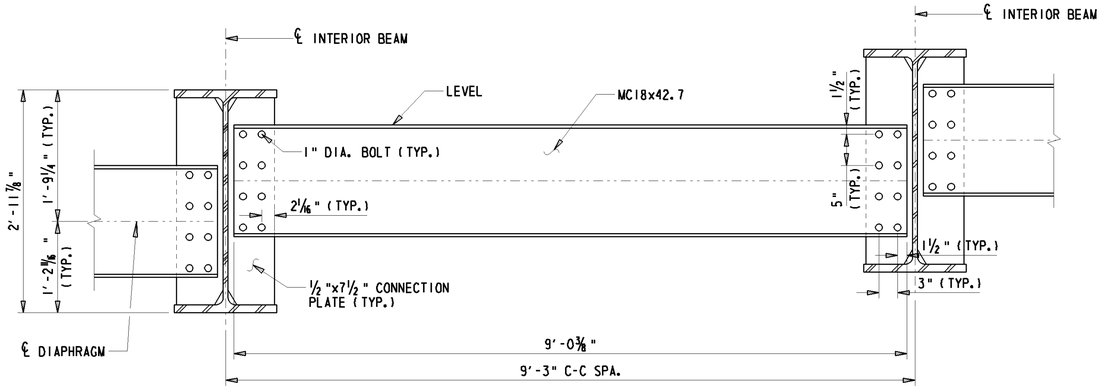

INTERMEDIATE DIAPHRAGM

1" = 1'-0"

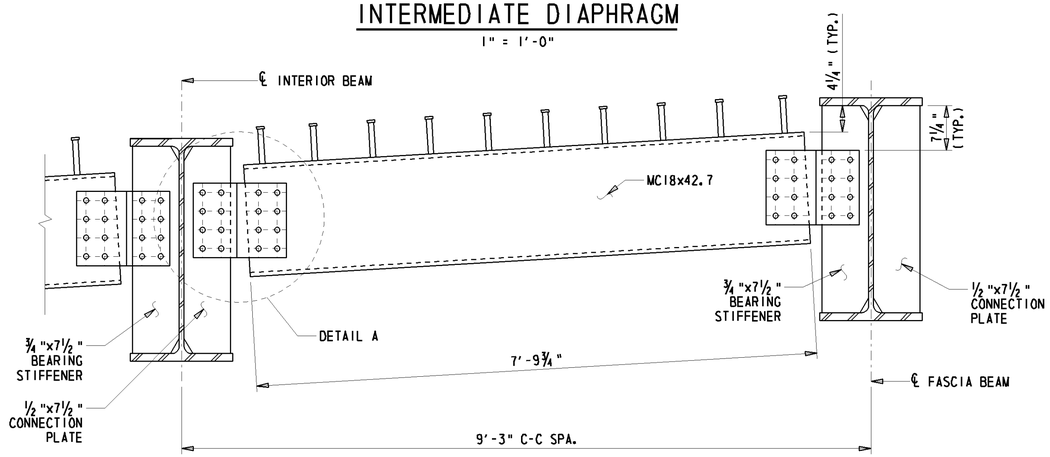

END DIAPHRAGM

1" = 1'-0"

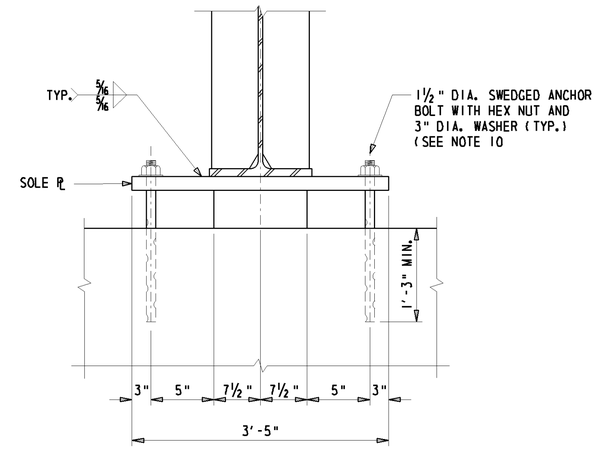

BEARING ELEVATION

1" = 1'-0"

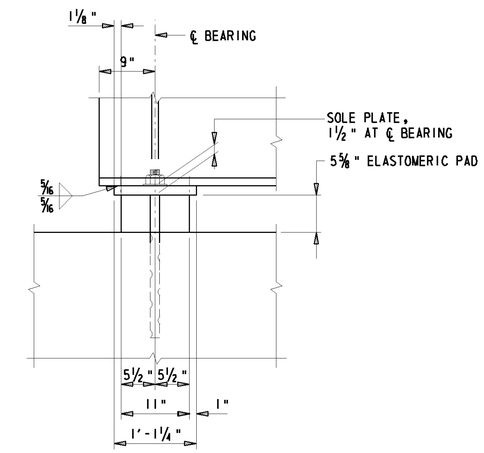

SIDE ELEVATION

1" = 1'-0"

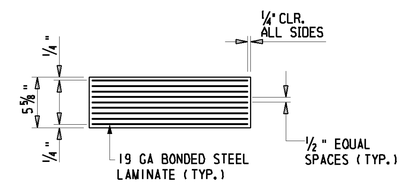

LAMINATED ELASTOMERIC PAD

N.T.S.

BEARING PAD DIMENSIONS (TYP.) ALL BEARINGS

BEARING PAD LENGTH = 11"
BEARING PAD WIDTH = 15"
COVER LAYER THICKNESS = 1/4"
INTERNAL LAYER THICKNESS = 1/2"
NUMBER OF STEEL LAYERS = 9
STEEL LAYER GAGE = 19
EDGE DISTANCE = 1/4"
SOLE PLATE THICKNESS = 1 1/2" (@ ℄ BEARING)

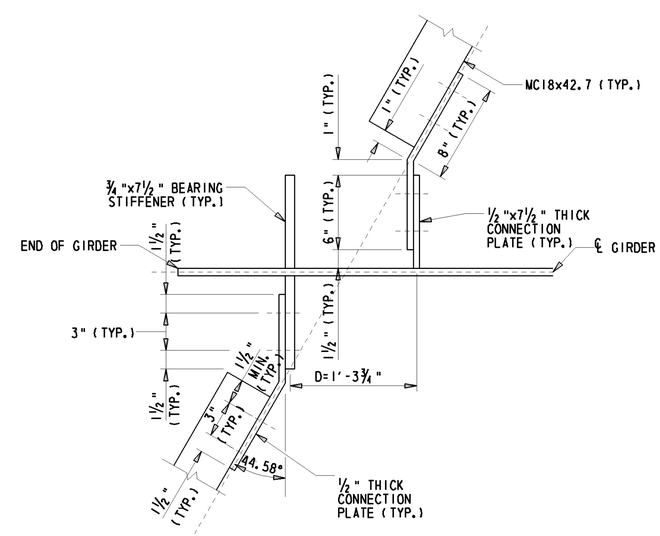

DETAIL A

N.T.S.

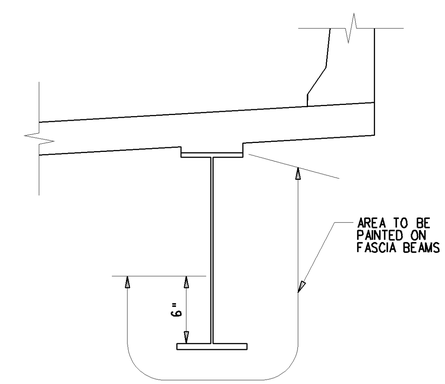

PAINTING DETAIL

N.T.S.

GENERAL NOTES:

1. FOR FRAMING PLAN, SEE BRIDGE SHEET S3-9.

2. ~~ALL BOLTS FOR DIAPHRAGM CONNECTIONS SHALL BE HOT DIPPED GALVANIZED 1" DIA. HIGH STRENGTH BOLTS AASHTO M164 (ASTM A325) IN 1 1/8" DIA. OPEN HOLES.~~

3. PAYMENT FOR ELASTOMETRIC PADS, SOLE PLATES & ANCHOR BOLTS SHALL BE INCIDENTAL TO ITEM "605002 - STRUCTURAL STEEL".

4. CONTRACTOR SHALL BE RESPONSIBLE FOR SECURING THE GIRDER SYSTEM UNTIL THE DECK HAS CURED.

BEARING NOTES:

1. STEEL FOR BEARING LAMINATES SHALL CONFORM TO ASTM A709 GRADE 36.

2. NEOPRENE IN BEARING PAD SHALL HAVE A SHORE 'A' DUROMETER HARDNESS OF 60 POINTS.

3. ANCHOR BOLTS AND WASHERS SHALL BE UNPAINTED A709 GRADE 50 GALVANIZED STEEL. ALL NUTS SHALL BE UNPAINTED A307 GALVANIZED STEEL. SET NUTS 1/4" CLEAR OF SOLE PLATES AND BURR THREADS ABOVE AND BELOW NUTS.

BEARING NOTES (CONTINUED):

4. USE SWEDGED ANCHOR BOLTS. BOLTS MAY BE CAST-IN-PLACE OR GROUTED WITH NON-SHRINK GROUT IN PREFORMED (SLEEVED OR DRILLED) HOLES. THE PREFORMED & DRILLED HOLES SHALL HAVE A DIAMETER OF AT LEAST 1" LARGER THAN THE DIAMETER OF THE BOLTS.

5. SOLE PLATES ARE TO BE BEVELED TO MATCH GRADE WHEN GRADE EXCEEDS 1 PERCENT.

6. STEEL SURFACES OF SOLE PLATE TO BE MACHINE FINISHED, MEASURED IN ACCORDANCE WITH ANSI B46.1.

7. STEEL PLATES SHALL MEET A FLATNESS REQUIREMENT OF 0.5 PERCENT IN THE DIRECTION BEING MEASURED (WIDTH, LENGTH, AND DIAGONALS) MAXIMUM, BUT NOT TO EXCEED 1/8 INCH.

8. BEARING PADS SHALL BE PLACED NORMAL TO CENTERLINE OF BEAM.

9. FILL SLOTS AND HOLES IN STEEL AROUND ANCHOR BOLTS WITH AN APPROVED NON-HARDENING CAULKING COMPOUND OR ELASTIC JOINT SEALER.

10. FOR EXPANSION BEARINGS:
USE 2 1/8" x 3" SLOTS IN SOLE PLATE AND 3/8"x3"x 5 1/2" WASHERS WITH 1 5/8" DIA. HOLE IN WASHERS.

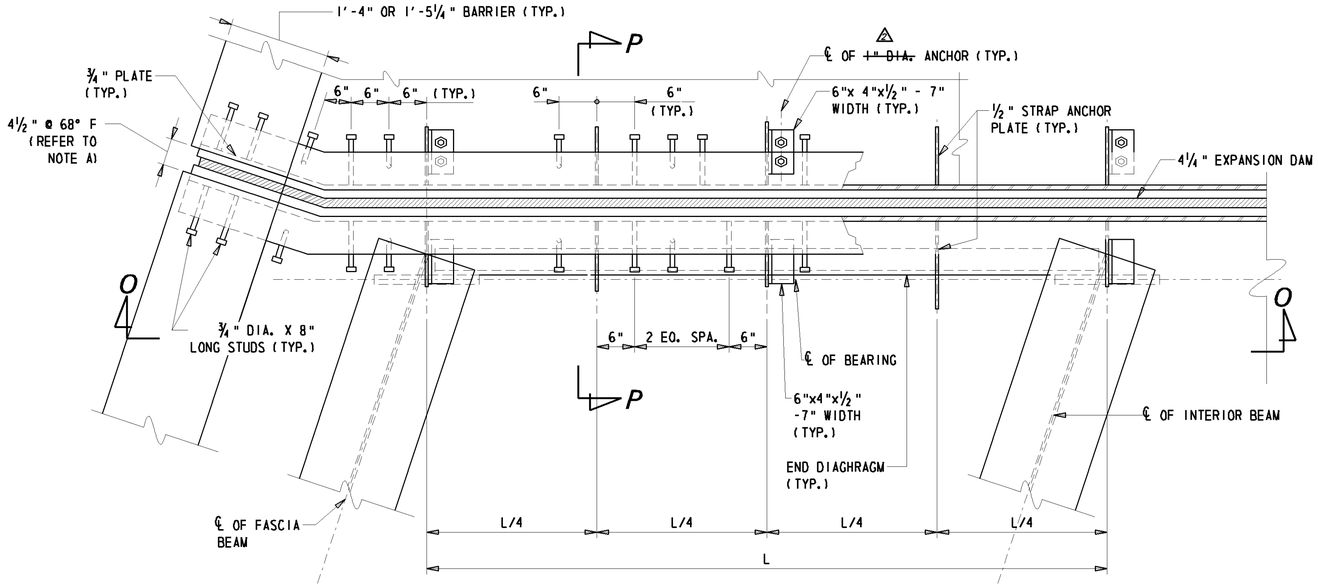

TYPICAL JOINT PLAN

1" = 1'-0"

EXPANSION JOINT NOTES:

1. STEEL FOR DECK JOINTS AND STEEL EXTRUSIONS SHALL BE AASHTO M270, GR. 36 (ASTM A36)
2. NEOPRENE EXTRUSION TO MEET D-2628-81 MODIFIED, (RECOVERY TESTS EXCLUDED).
3. THE EXPANSION JOINT SHALL BE CAPABLE OF SEALING THE DECK TO PREVENT MOISTURE AND OTHER CONTAIMINANTS FROM DESCENDING THROUGHT THE JOINT.
4. ENTIRE EXPANSION DAM SHALL BE PAINTED AFTER FABRICATION USING URETHANE SYSTEM, EXCEPT AS NOTED.
5. LUBRICANT-ADHESIVE FOR USE IN INSTALLING AND BONDING NEPORENE SEAL ELEMENTS TO STEEL JOINT COMPONENTS SHALL BE A ONE QUART MOISTURE-CURING POLYURETHAN AND HYDROCARBON SOLVENT MIXTURE HAVING THE FOLLOWING PHYSICAL PROPERTIES:

AVERAGE WEIGHT, POUNDS PER GALLON	8 +/- 10%
SOLIDS CONTENT	65%
ADHESIVE SHALL REMAIN LIQUID FROM	5°F TO 120°F
FILM STRENGTH, AS PER ASTM D-412	2,000 PSI
ELONGATION	250%

6. HOLES SHALL BE PLACED IN THE RIB PLATES AND STRAP ANCHOR PLATES FOR BAR REINFORCEMENT. IF THIS IS DONE IN THE FIELD AN APPROVED PAINT SHALL BE USED TO TOUCH-UP THE HOLES.

NOTE A:
THE CONTRACTOR SHALL ADJUST THE OPEN DECK JOINT AS REQUIRED BY THE WIDTH OF THE STEEL EXTRUSION USED SO AS TO PROVIDE A 1½" JOINT OPENING AT 68°F.

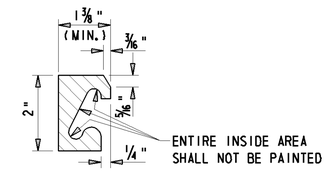

STEEL EXTRUSION DETAIL

6" = 1'-0"

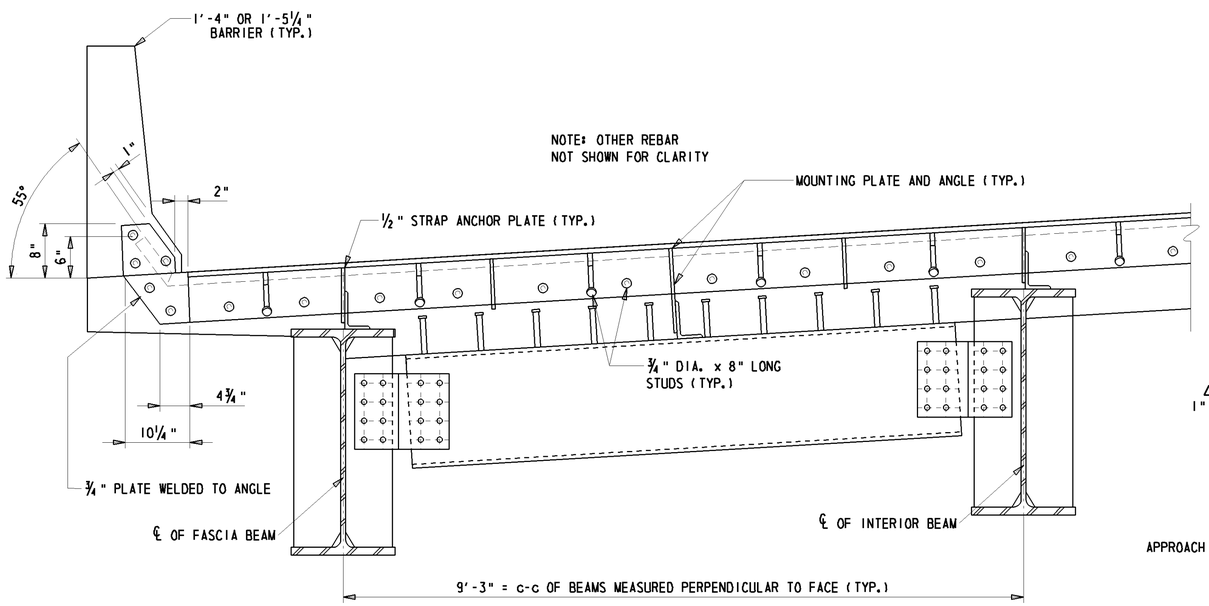

SECTION O-O

1" = 1'-0"

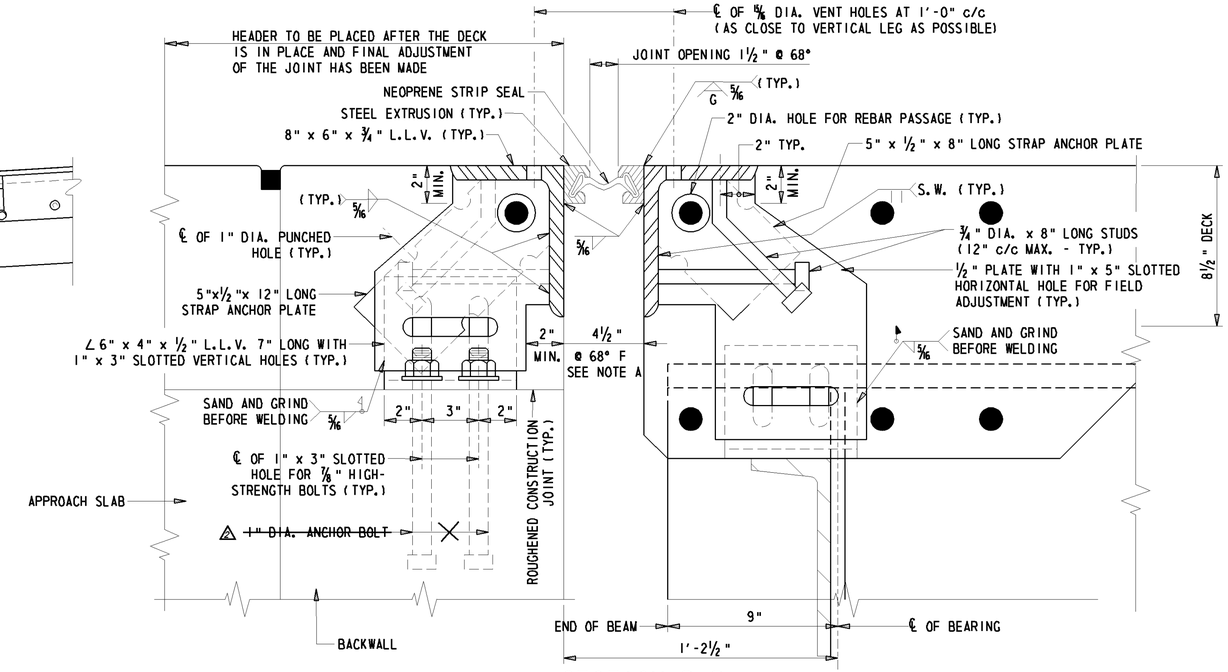

SECTION P-P

3" = 1'-0"

W:\MSV8\CELLS\PROJDEV\SB.CEL

DELAWARE DEPARTMENT OF TRANSPORTATION	ADDENDUMS / REVISIONS △- DELETED CONFLICTING DIMENSION, TRS 7/26/11	I-95 & US 202 INTERCHANGE	CONTRACT T200510602	BRIDGE NO. 1-763	EXPANSION JOINT DETAILS S3-17 OF 19	SHEET NO. 226
			COUNTY NEW CASTLE	DESIGNED BY: TRS CHECKED BY: JNH		TOTAL SHTS. 482

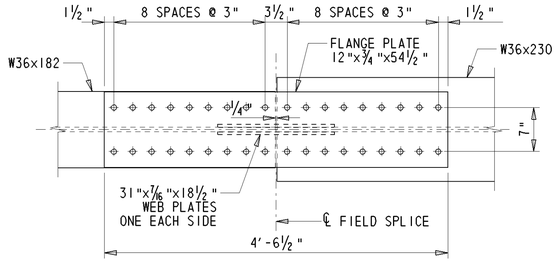

TOP & BOTTOM FLANGE

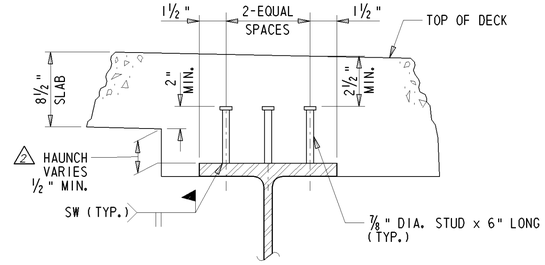

SHEAR CONNECTOR DETAIL

N.T.S.

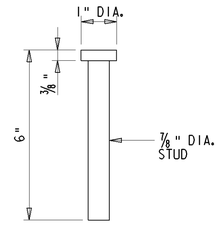

STUD DETAIL

N.T.S.

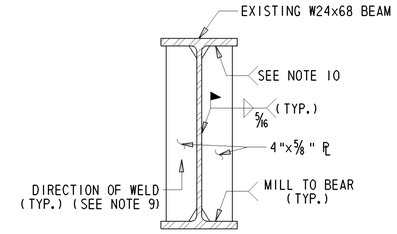

BEARING STIFFENER (SPAN 4 ONLY)

N.T.S.

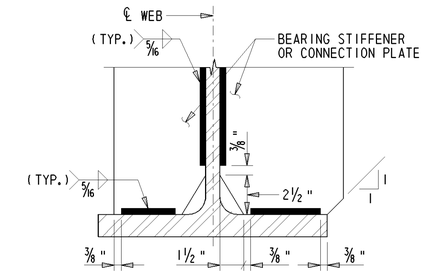

CORNER CHAMFER DETAIL

N.T.S.

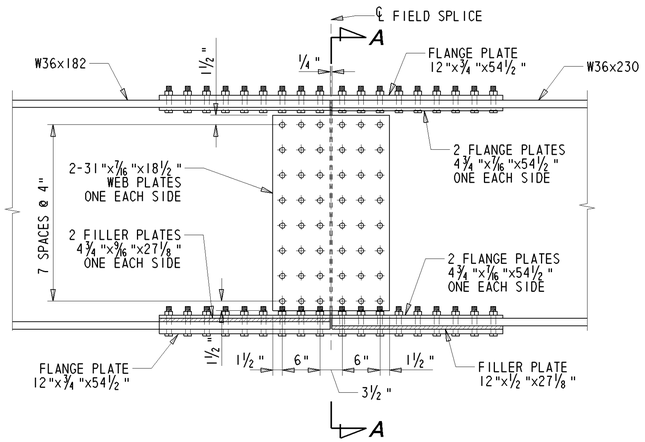

ELEVATION

SPLICE DETAIL

N.T.S.

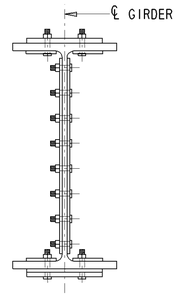

SECTION A-A

N.T.S.

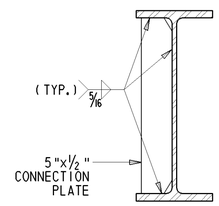

DIAPHRAGM CONNECTION PLATE

N.T.S.

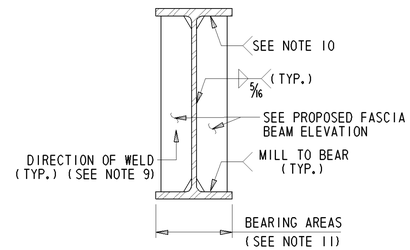

BEARING STIFFENER (FASCIA BEAMS, SPANS 2 & 3 ONLY)

N.T.S.

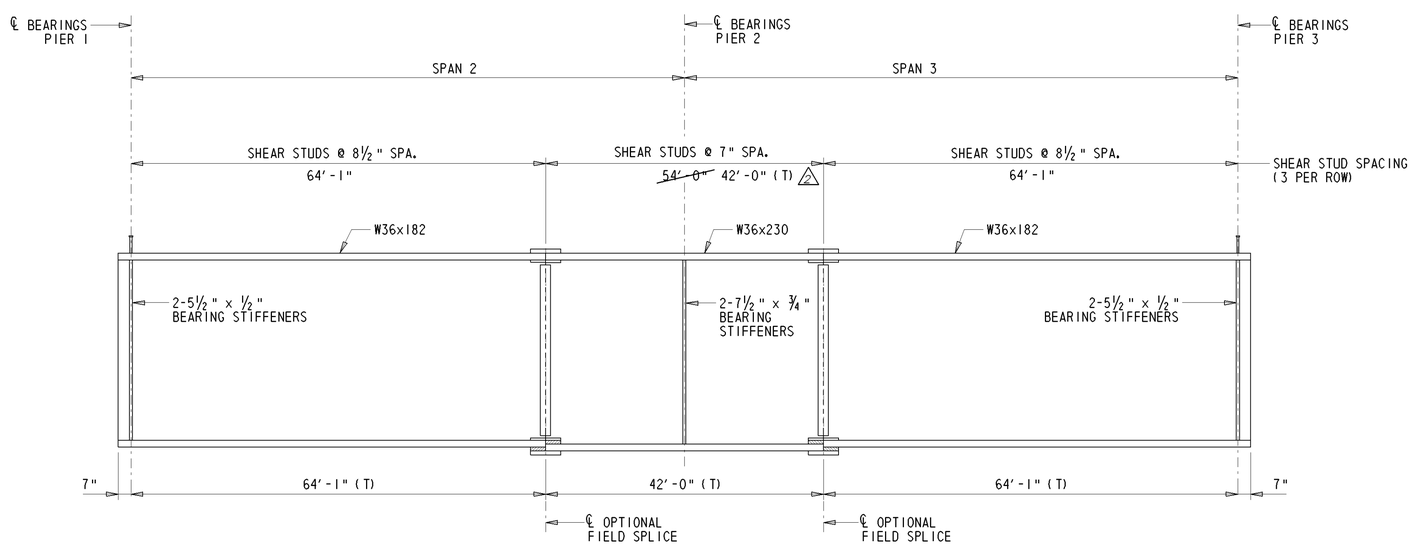

PROPOSED FASCIA BEAM ELEVATION

(SPANS 2 & 3 ONLY)
N.T.S.

STEEL NOTES:

1. ALL STRUCTURAL STEEL SHALL BE ASTM A709 GRADE 50 (AASHTO M270) WITH SUPPLEMENT REQUIREMENTS FOR TOUGHNESS ON ALL MEMBER COMPONENTS MARKED (T).
2. WELDING SHALL CONFORM TO THE CURRENT ANSI/AASHTO/AWS BRIDGE WELDING CODE D1.5-08. WELDING AND NONDESTRUCTIVE TESTING SYMBOLS SHALL CONFORM TO SYMBOLS FOR WELDING, BRAZING, AND NONDESTRUCTIVE EXAMINATION AWS A2-4:2007.
3. JOINT WELDING PROCEDURES, OVERALL FABRICATION METHODS, AND QUALITY CONTROL INSPECTION PROCEDURE SHALL BE INCLUDED AS WRITTEN PROCEDURE SPECIFICATIONS WITH THE SHOP PLAN SUBMISSION.
4. BEAM WEBS SHALL BE GROUND SMOOTH AND SHALL BE PLUMB AT THE ENDS UNDER FULL DEAD LOAD.
5. ALL BOLTED CONNECTIONS SHALL BE MADE WITH ⅞" DIAMETER ASTM A325 HIGH STRENGTH BOLTS, TYPE 1, UNLESS OTHERWISE NOTED.
6. ALL NEW AND EXISTING STRUCTURAL STEEL SHALL BE PAINTED WITH A URETHANE PAINT SYSTEM IN ACCORDANCE WITH SECTION 605. THE COLOR OF THE FINISHED PAINT SHALL BE BROWN (NO. 10076) FROM FEDERAL STANDARD 595C. THE COLOR SHALL BE SUBMITTED FOR APPROVAL. AT ALL LOCATIONS WHERE THE CONTRACTOR'S WORK DAMAGES THE EXISTING PAINT SYSTEM, THE CONTRACTOR SHALL CLEAN THE DAMAGED LOCATION AND REPAINT THE AREA. PAINTING FOR PROPOSED STEEL STRUCTURES IS INCIDENTAL TO THE ITEM #605002 - STEEL STRUCTURES. ALL CLEANING AND PAINTING ON EXISTING STEEL STRUCTURES SHALL BE PAID FOR UNDER ITEM #605522 - URETHANE PAINT SYSTEM, EXISTING STEEL AND ITEM #605533 - CLEANING EXISTING STEEL STRUCTURES, HAZARDOUS BASE. THE ESTIMATED AREA OF STEEL TO BE CLEANED AND PAINTED IS 24,000.00 S.F.
7. OVERSIZED HOLES SHALL BE USED ON DIAPHRAGM CONNECTORS.
8. ALL BOLTS ON DIAPHRAGMS SHALL BE FINGER TIGHT AT ERECTION. BOLTS ARE NOT TO BE TORQUED UNTIL AFTER THE DECK CONCRETE IS POURED.
9. DIRECTION OF WELDS IS NOT APPLICABLE IF STIFFENERS ARE FITTED WITH TACK WELDS.
10. TIGHT FIT AT TENSION FLANGES AT INTERIOR SUPPORTS. FILLET WELDS OVER END SUPPORTS.
11. BEARING AREAS: PROVIDE BOTTOM FLANGE IN A TRUE HORIZONTAL PLANE IN TRANSVERSE DIRECTION AND IN A TRUE PLANE LONGITUDINALLY OVER DIMENSION "L", WHERE L = WIDTH OF SOLE PLATE + 8" AHEAD AND BACK. WHERE APPLICABLE. IF THE SOLE PLATE IS WELDED TO THE BOTTOM FLANGE, PROVIDE THE SOLE PLATE MEETING THE SAME FLATNESS REQUIREMENTS. EACH BEARING MUST BE STRESSED UNIFORMLY AFTER ALL DEAD LOAD IS PLACED. MAKE NECESSARY SHOP AND/OR FIELD ADJUSTMENTS TO PROVIDE UNIFORM BEARING STRESS UNDER ALL DEAD LOADS.
12. BEARING STIFFENERS FOR SPANS 2 & 3 ARE FOR PROPOSED FASCIA BEAMS ONLY. BEARING STIFFENERS FOR SPAN 4 ARE TO BE ADDED TO BOTH ENDS OF ALL EXISTING BEAMS WITHIN THE SPAN.
13. IN ADDITION TO PROPOSED FASCIA BEAMS IN SPANS 2 & 3, SHEAR CONNECTORS SHALL BE FIELD WELDED ONTO ALL EXISTING BEAMS FOR ALL 4 SPANS. SPACING FOR SHEAR STUDS ON EXISTING BEAMS IN SPANS 2 & 3 SHALL BE AS LISTED IN PROPOSED FASCIA BEAM ELEVATION. SHEAR STUD SPACING ON EXISTING BEAMS IN SPANS 1 & 4 SHALL BE 8½".
14. PAYMENT FOR ALL STRUCTURAL STEEL, INCLUDING STIFFENERS, DIAPHRAGMS, BEAMS, BOLTS, PLATES, AND ETC., SHALL BE PAID UNDER ITEM #605002 - STEEL STRUCTURES.

SEQUENCE OF CONSTRUCTION

PHASE 1, STAGE 2

(1) INSTALL ALL EROSION AND SEDIMENT CONTROL MEASURES AS SHOWN ON THE PLANS.

(2) STABILIZE ALL DISTURBED AREAS WITH TOP SOIL SEED AND MULCH PRIOR TO THE REMOVAL OF THE SEDIMENT CONTROL DEVICES AS DIRECTED BY THE ENGINEER.

(3) COORDINATE SIGN STRUCTURE WORK OVER THE ROADWAY AND DRAINAGE WORK CROSSING THE ROADWAY WITH ROAD CLOSURES FOR BRIDGE STEEL BEAM ERECTION.

(4) DURING NIGHT WORK HOURS: USING LANE AND SHOULDER CLOSURES IN ACCORDANCE WITH THE CASES LISTED IN THE MOT GENERAL NOTES, REMOVE EXISTING STRIPING ON I-95 NORTHBOUND AND SOUTHBOUND, US 202 NORTHBOUND AND SOUTHBOUND, RAMP 2, RAMP 4 AND RAMP 5, AS NECESSARY, AND REMOVE EXISTING RAISED PAVEMENT MARKERS ON I-95 NORTHBOUND FROM STATION 498+30 TO STATION 503+00 AND ON RAMP 5 FROM STATION 50+50 TO STATION 60+25. PLACE TEMPORARY PAVEMENT STRIPING AS SHOWN UNDER PHASE 1, STAGE 2 TRAFFIC CONTROL USING CASE 23-C FOR I-95 AND RAMPS 2, 4, AND 5 AND CASE 23-B FOR US 202.

(5) USING LANE AND SHOULDER CLOSURES IN ACCORDANCE WITH THE CASES LISTED IN THE MOT GENERAL NOTES, RELOCATE AND INSTALL NEW TEMPORARY CONCRETE BARRIER AND ATTENUATORS AT THE FOLLOWING LOCATIONS:

1. RAMP 4 STATION 444+43 TO STATION 449+00, STATION 450+00 TO STATION 455+50, AND STATION 456+50 TO STATION 458+40
2. I-95 SOUTHBOUND STATION 302+18 TO STATION 306+80
3. I-95 SOUTHBOUND STATION 503+25 TO STATION 505+90
4. I-95 SOUTHBOUND STATION 481+54 TO STATION 483+00
5. I-95 NORTHBOUND STATION AT DELAWARE AVENUE ON-RAMP
6. I-95 NORTHBOUND STATION 501+04 TO RAMP 2 STATION 100+34
7. I-95 NORTHBOUND STATION 546+72 TO STATION 549+65. △2

△2 8. ~~7.~~ US 202 SOUTHBOUND STATION 1006+49 TO STATION 1010+61
△2 9. ~~8.~~ US 202 NORTHBOUND STATION 1006+23 TO STATION 1012+33
△2 10. ~~9.~~ RAMP 5 STATION 25+11 TO STATION ~~41+00, STATION 40+30 TO STATION 45+50 AND STATION 51+16 TO STATION 57+65~~ 40+30 (LEFT SIDE OF RAMP) AND STATION 40+50 TO STATION 57+65 (RIGHT SIDE OF RAMP). △2
△2 11. ~~10.~~ RELOCATE PORTABLE IMPACT ATTENUATOR FROM I-95 SOUTHBOUND STATION 314+19 TO I-95 SOUTHBOUND STATION 306+80
△2 12. ~~11.~~ INSTALL PORTABLE IMPACT ATTENUATORS AT:
  A. I-95 NORTHBOUND AT DELAWARE AVENUE ON-RAMP
  B. I-95 NORTHBOUND STATION 501+04
  C. I-95 NORTHBOUND STATION 546+72
  △2 D. ~~C.~~ I-95 SOUTHBOUND STATION 483+00
  △2 E. ~~D.~~ I-95 SOUTHBOUND STATION 505+88
  △2 F. ~~E.~~ RAMP 5 STATION 25+11
  △2 G. ~~F.~~ RAMP 5 STATION 40+30
  ~~G. RAMP 5 STATION 51+16~~
  H. RAMP 4 STATION ~~444+43~~ 443+60 △2
  I. RAMP 4 STATION 450+00
  J. RAMP 4 STATION 456+50
  K. US 202 NORTHBOUND STATION 1006+23
  L. US 202 SOUTHBOUND STATION 1006+49

(6) SHIFT TRAFFIC TO NEW LANES DESIGNATED FOR PHASE 1, STAGE 2.

RAMP 7 EXCAVATION

(7) EXCAVATE RAMP 7 FROM STATION 151+50 TO STATION 164+00.

RAMP 4, RAMPS 4/7 GORE AREA AND RAMP 4/I-95 SOUTHBOUND GORE AREA

(8) CONSTRUCT THE LEFT FOUNDATION AND SIGN SUPPORTS FOR PROPOSED SIGN STRUCTURE AT RAMP 4 STATION 447+00 AS SHOWN ON THE SIGN STRUCTURE PLANS.

(9) CONSTRUCT THE LEFT SIDE OF RAMP 4 FROM STATION 444+07 TO STATION 457+92.

(10) CONSTRUCT THE RIGHT SHOULDER OF I-95 SOUTHBOUND FROM STATION 302+58 TO STATION 306+28.

(11) CLOSE AND DETOUR RAMP 4 IN ACCORDANCE WITH THE RAMP #6174 DETOUR PLAN AND PERFORM THE FOLLOWING WORK: INSTALL EXISTING "202 SOUTH, CONCORD PIKE, WILMINGTON" SIGN PANEL REMOVED IN STAGE 1 AND NEW OVERLAY PANEL ONTO NEW OVERHEAD TRUSS IN ACCORDANCE WITH THE SIGNING, STRIPING AND CONDUIT PLANS. INSTALL NEW OVERHEAD TRUSS ON PROPOSED SIGN STRUCTURE AT RAMP 4 STATION 447+00. COVER SIGN PANEL UNTIL NEW RAMP 7 IS OPEN TO TRAFFIC IN PHASE 1 STAGE 4.

RAMP 6 ACCELERATION LANE

(12) DURING WEEKEND CLOSURES FOR BEAM ERECTION FOR STRUCTURE NO. ~~763,~~ 764 △2 CONSTRUCT RAMP 6 ACCELERATION LANE FROM I-95 NORTHBOUND STATION 543+42 TO STATION 546+90.

RAMP 1 DRAINAGE WORK

(13) CLOSE AND DETOUR RAMP 1 IN ACCORDANCE WITH THE RAMP #6171 DETOUR PLAN TO PERFORM DRAINAGE WORK CROSSING THE ROADWAY ON RAMP 1.

I-95 SIGNING WORK

(15) CONSTRUCT THE RIGHT AND LEFT FOUNDATION AND SIGN SUPPORTS FOR PROPOSED SIGN STRUCTURE AT I-95 STATION 503+81 AS SHOWN ON THE SIGN STRUCTURE PLANS PRIOR TO REMOVING THE EXISTING SIGN STRUCTURE AT I-95 STATION 504+40.

(16) CONSTRUCT THE GROUND-MOUNTED I-BEAM SIGN AT I-95 NORTHBOUND STATION 503+50 AS SHOWN ON THE SIGNING, STRIPING AND CONDUIT PLANS.

(17) REMOVE EXISTING GROUND-MOUNTED SIGN "CHESTER, PHILADELPHIA" AT I-95 NORTHBOUND STATION 317+10 AS SHOWN ON THE SIGNING, STRIPING AND CONDUIT PLANS.

(18) DURING THE WEEKEND CLOSURES FOR BEAM ERECTION FOR STRUCTURE NO. ~~763,~~ 764 △2 PERFORM THE FOLLOWING SIGNING WORK ON I-95 AS SHOWN ON THE SIGNING STRIPING AND CONDUIT PLANS:

1. USING 15-MINUTE STOPPAGES OF TRAFFIC IN ACCORDANCE WITH FIGURE A OF THE TRAFFIC CONTROL PLANS, INSTALL NEW OVERLAY PANEL ON "US 202 CONCORD PIKE" SIGN PANEL ON THE I-95 NORTHBOUND SIDE OF THE 8TH STREET OVERPASS.

2. REMOVE EXISTING OVERHEAD I-BEAM SIGN PANEL "DE 3 MARSH RD, HARVEY RD, DE 92 NAMMANS RD" ON THE I-95 NORTHBOUND SIDE OF THE 18TH STREET OVERPASS AND INSTALL NEW SIGN PANEL "I-95 NORTH PHILADELPHIA" ON THE EXISTING OVERHEAD I-BEAM SUPPORTS. INSTALL THE "DE 3 MARSH RD, HARVEY RD, DE 92 NAMMANS RD" SIGN PANEL ON NEW GROUND-MOUNTED I-BEAM SUPPORTS AT I-95 NORTHBOUND STATION 322+20 DURING THIS STAGE.

(14) 3. CONSTRUCT THE RIGHT AND LEFT FOUNDATIONS AND SIGN SUPPORTS FOR PROPOSED SIGN STRUCTURE AT I-95 SOUTHBOUND STATION 482+80 AS SHOWN ON THE SIGN STRUCTURE PLANS PRIOR TO REMOVING THE EXISTING SIGN STRUCTURE AT I-95 STATION 482+55.

USING THE I-95 OVERHEAD SIGN STRUCTURE WORK DETOUR PLAN IN CONJUNCTION WITH THE STRUCTURE NO. ~~763~~ 764 △2 DETOUR PLAN, TEMPORARILY DETOUR ALL I-95 TRAFFIC TO PERFORM THE FOLLOWING SIGNING WORK AS SHOWN ON THE SIGNING STRIPING AND CONDUIT PLANS:

A. REMOVE THE EXISTING OVERHEAD TRUSS FROM EXISTING SIGN STRUCTURE AT I-95 STATION 482+55. REMOVE THE EXISTING SIGN PANELS ON THE I-95 SOUTHBOUND SIDE OF THE EXISTING TRUSS AND INSTALL THE SIGN PANELS ON THE I-95 SOUTHBOUND SIDE OF THE NEW OVERHEAD TRUSS. INSTALL THE NEW OVERHEAD TRUSS ON NEW SIGN STRUCTURE AT I-95 STATION 482+80.

B. REMOVE THE EXISTING OVERHEAD TRUSS FROM EXISTING SIGN STRUCTURE AT I-95 STATION 504+40. REMOVE THE EXISTING SIGN PANELS ON THE I-95 SOUTHBOUND SIDE OF THE EXISTING TRUSS AND INSTALL THE SIGN PANELS ON THE I-95 SOUTHBOUND SIDE OF THE NEW OVERHEAD TRUSS. INSTALL THE NEW OVERHEAD TRUSS ON NEW SIGN STRUCTURE AT I-95 STATION 503+81.

C. REMOVE THE EXISTING CANTILEVER AT I-95 NORTHBOUND STATION 518+36.

D. REMOVE EXISTING OVERHEAD SIGN STRUCTURE AT I-95 NORTHBOUND STATION 522+20.

RAMP 5 SIGNING WORK

(19) CONSTRUCT THE RIGHT AND LEFT FOUNDATIONS AND SIGN SUPPORTS FOR PROPOSED SIGN STRUCTURE AT RAMP 5 STATION 26+20 AS SHOWN ON THE SIGN STRUCTURE PLANS PRIOR TO REMOVING THE EXISTING SIGN STRUCTURE AT RAMP 5 STATION 29+20.

(20) CONSTRUCT THE FOUNDATION AND SIDE SUPPORT FOR NEW CANTILEVER STRUCTURE AT RAMP 5 STATION 51+05 AS SHOWN ON THE SIGN STRUCTURE PLANS.

(21) DURING NIGHT CLOSURES FOR BEAM ERECTION FOR STRUCTURE NO. 762, USING 15-MINUTE STOPPAGES OF TRAFFIC IN ACCORDANCE WITH FIGURE A OF THE TRAFFIC CONTOL PLANS, INSTALL NEW OVERLAY PANEL ON THE "I-95 SOUTH, DEL MEM BRIDGE, BALTIMORE" SIGN PANEL AT US 202 NORTHBOUND STATION 1216+88.

(22) DURING WEEKEND CLOSURES FOR BEAM ERECTION FOR STRUCTURE NO. ~~763~~ 764 △2 PERFORM THE FOLLOWING SIGNING WORK ON RAMP 5 AS SHOWN ON THE SIGNING, STRIPING AND CONDUIT PLANS:

1. REMOVE THE EXISTING CANTILEVER AT RAMP 5 STATION 51+25 AND RELOCATE EXISTING SIGN TO PROPOSED CANTILEVER AT STATION 51+05 AS SHOWN ON THE SIGN STRUCTURE PLANS.

2. USING THE RAMP #6172 DETOUR PLAN IN CONJUNCTION WITH THE STRUCTURE NO. ~~763~~ 764 △2 DETOUR PLAN, TEMPORARILY DETOUR RAMP 2 AND RAMP 5 TO PERFORM THE FOLLOWING SIGNING WORK AS SHOWN ON THE SIGNING STRIPING AND CONDUIT PLANS:
A. REMOVE THE EXISTING OVERHEAD TRUSS FROM THE EXISTING SIGN STRUCTURE AT RAMP 5 STATION 29+20. REMOVE THE EXISTING SIGN PANELS FROM THE EXISTING TRUSS AND INSTALL THE SIGN PANELS ON THE NEW OVERHEAD TRUSS.

B. INSTALL THE NEW OVERHEAD TRUSS ON THE NEW SIGN STRUCTURE AT RAMP 5 STATION 26+20.

I-95 NORTHBOUND, RAMP 2 AND RAMP 5

(23) CONSTRUCT THE RIGHT SIDE OF I-95 NORTHBOUND / RAMP 2 FROM I-95 NORTHBOUND STATION 502+96 TO RAMP 2 STATION 100+34. COORDINATE DRAINAGE WORK CROSSING RAMP 2 WITH THE RAMP 2 AND RAMP 5 CLOSURES FOR THE SIGNING WORK AT RAMP 5 STATION 26+20 AND STATION 29+20.

(24) CONSTRUCT THE PROPOSED STORMWATER MANAGEMENT BASIN ALONG RAMP 2 AND US 202 SOUTHBOUND.

(25) CONSTRUCT THE LEFT SIDE OF RAMP 5 FROM STATION 28+00 TO STATION 40+44, THE FULL-WIDTH OF RAMP 5 FROM STATION 45+00 TO STATION 54+50, AND THE LEFT SIDE OF RAMP 5 FROM STATION 54+50 TO STATION 57+17.

(26) CONSTRUCT TEMPORARY PAVEMENT ON RAMP 5 FROM STATION 40+50 TO 46+54 AS SHOWN ON THE RAMP 5 TEMPORARY PAVEMENT PLANS IN THE PHASE 1 STAGE 2 TRAFFIC CONTROL PLANS.

RAMP 5 STRUCTURE WORK

(27) CONSTRUCT THE LEFT SIDE OF STRUCTURE NO. 762 (RAMP 5 OVER US 202) AS SHOWN ON THE STRUCTURE PLANS. ERECT BEAMS FOR LEFT SIDE OF STRUCTURE NO. 762 IN ACCORDANCE WITH THE FOLLOWING REQUIREMENTS:

1. PERFORM WORK DURING THE HOURS INDICATED IN THE MOT GENERAL NOTES FOR THIS ACTIVITY.

2. CLOSE AND DETOUR US 202 NORTHBOUND, U.S. 202 SOUTHBOUND AND RAMP 5 IN ACCORDANCE WITH THE STRUCTURE NO. 762 DETOUR PLAN.

3. ERECT BEAMS

(28) CONSTRUCT STRUCTURE NO. ~~763~~ 764 △2 (RAMP 5 OVER I-95) AS SHOWN ON THE STRUCTURE PLANS. ERECT BEAMS FOR STRUCTURE NO. ~~763~~ 764 △2 IN ACCORDANCE WITH THE FOLLOWING REQUIREMENTS:

1. PERFORM WORK DURING THE HOURS INDICATED IN THE MOT GENERAL NOTES FOR THIS ACTIVITY.

2. IMMEDIATELY PRIOR TO INSTALLING THE STRUCTURE NO. ~~763~~ 764 △2 DETOUR, DURING NIGHT WORK HOURS, USING CASE 7 OF THE TRAFFIC CONTROL MANUAL, CLOSE THE LANE ADJACENT TO THE EXISTING MEDIAN ON BOTH DIRECTIONS OF U.S. 202 TO REMOVE THE EXISTING MEDIAN FROM STATION 1006+07 TO STATION 1006+87.

3. INSTALL SIGNS AND DEVICES IN ACCORDANCE WITH MOT DETAIL B IN THE PHASE 1, STAGE 2 TRAFFIC CONTROL PLANS.

4. INSTALL SIGNAL EQUIPMENT AT US 202 AND RAMP 2 INTERSECTION AS SHOWN ON CONCORD PIKE (US 202) & I-95 NB OFF RAMP 2 MOT PHASE 1, STAGE 2 INTERIM SIGNAL PLAN SIGNAL 1 OF 4.

5. CLOSE AND DETOUR I-95 NORTHBOUND, I-95 SOUTHBOUND, RAMP 6, RAMP 8, RAMP 7 AND RAMP 5 IN ACCORDANCE WITH THE STRUCTURE NO. ~~763~~ 764 △2 DETOUR PLAN AND THE I-95 TO I-495 DETOUR PLAN. CONVERT THE US 202 AND RAMP 2 SIGNAL TO TEMPORARY OPERATION IN ACCORDANCE WITH THE CONCORD PIKE (US 202) & I-95 NB OFF RAMP 2 MOT PHASE 1, STAGE 2 INTERIM SIGNAL PLAN SIGNAL 1 OF 4.

6. ERECT BEAMS.

7. AT THE END OF THE BEAM ERECTION WEEKEND, OPEN ALL ROADS BACK TO TRAFFIC. CONVERT THE US 202 AND RAMP 2 SIGNAL BACK TO NORMAL OPERATION AS SHOWN ON THE CONCORD PIKE (US 202) & I-95 NB OFF RAMP 2 MOT ULTIMATE SIGNAL PLAN SIGNAL 2 OF 4. INSTALL TUBULAR MARKERS IN THE US 202 MEDIAN FROM STATION 1006+07 TO STATION 1006+87 AND COVER SIGNS AS SHOWN ON MOT DETAIL C IN THE PHASE 1, STAGE 2 TRAFFIC CONTROL PLANS.

(29) CONSTRUCT STRUCTURE NO. ~~764~~ 763 △2 (RAMP 5 OVER NEW RAMP 7) AS SHOWN ON THE STRUCTURE PLANS. ERECT BEAMS FOR STRUCTURE NO. ~~764~~ 763 △2 IN ACCORDANCE WITH THE FOLLOWING REQUIREMENTS:

1. PERFORM WORK DURING THE HOURS INDICATED IN THE MOT GENERAL NOTES FOR THIS ACTIVITY.

2. UTILIZE THE OPTION 1 DETOUR OR OPTION 2 DETOUR AS DESCRIBED IN THE MOT GENERAL NOTES, THE RULD SPECIAL PROVISION AND THE TRANSPORTATION MANAGMENT PLAN, AS DIRECTED BY THE ENGINEER.

3. ERECT BEAMS

△2 Revised Bridge Number

\\cjnda\eng\deldot\1625 (a2)\07 (contract 5)\submissions\2011-08-03 revisions\design files\i95motsh+015_PHStg2_Notes.dgn
8/3/2011

TYPICAL SECTIONS

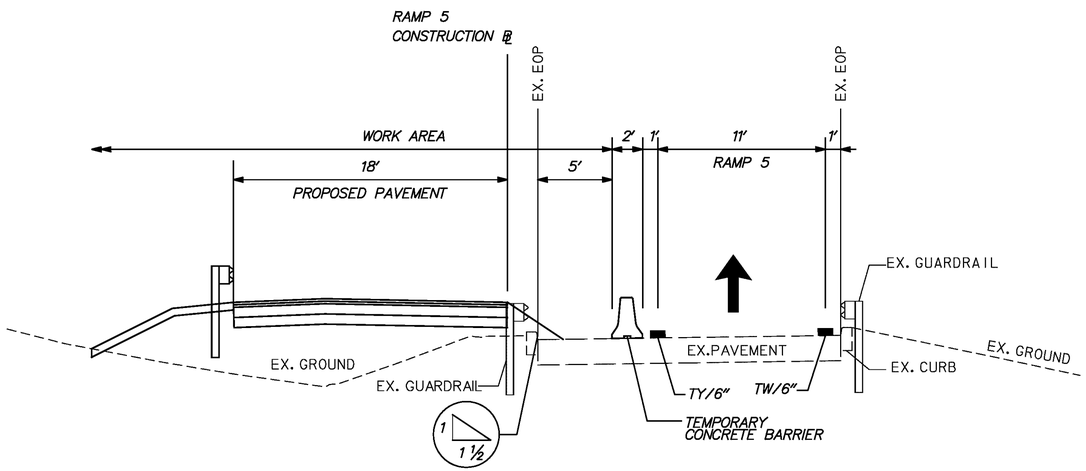

RAMP 5

STA. 28+00 TO STA. 35+97

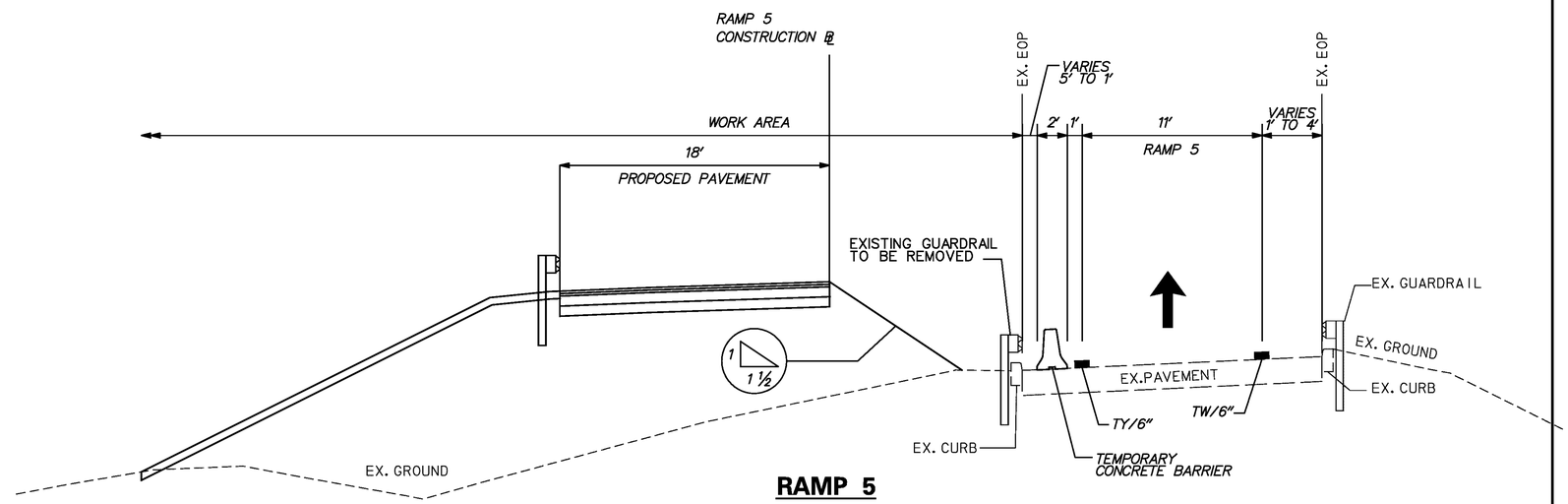

RAMP 5

STA. 35+97 TO STA. 39+24

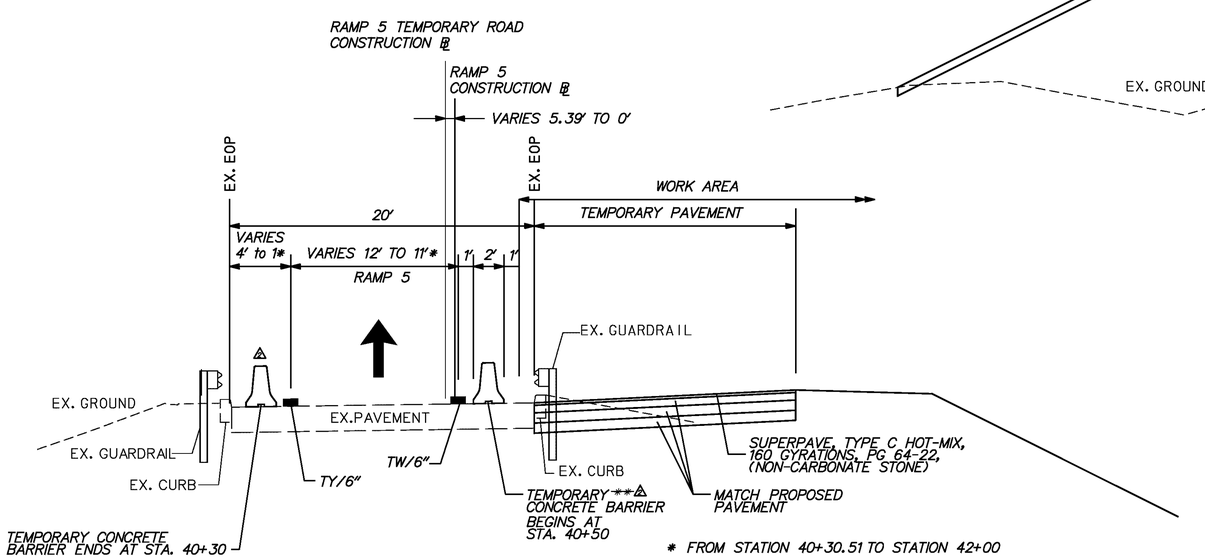

* FROM STATION 40+30.51 TO STATION 42+00

~~** TEMPORARY CONCRETE BARRIER ENDS AT STA 45+60~~

RAMP 5

STA. 39+24 TO STA. 45+00

\\highdat\eng\deldot\4625 (az)\07 (contract 5)\submissions\2011-08-03 revisions\design files\I95motsht017_PHISTg2_Typical2.cgn

8/3/2011

DELAWARE DEPARTMENT OF TRANSPORTATION	ADDENDUMS / REVISIONS △ Revised Typical Section	SCALE 0 30 60 90 FEET	**I-95 & US 202 INTERCHANGE**	CONTRACT T200510602 COUNTY NEW CASTLE	BRIDGE NO. NA DESIGNED BY: DJD / REM CHECKED BY: KMC	**CONSTRUCTION PHASING, MOT & EROSION CONTROL PHASE 1 STAGE 2 MOT 17 OF 139**	SHEET NO. 282 TOTAL SHTS. 482

TEMPORARY PAVEMENT MARKINGS LEGEND		
SYMBOL	ITEM	QUANTITY
(R)	6" SOLID WHITE TEMPORARY PAINT PAVEMENT STRIPING (ITEM 748020)	3,308 LF
(S)	6" SOLID YELLOW TEMPORARY PAINT PAVEMENT STRIPING (ITEM 748020)	2,898 LF
(U)	6" DASHED WHITE TEMPORARY PAINT PAVEMENT STRIPING (ITEM 748020)	214 LF
(V)	12" SOLID WHITE TEMPORARY PAINT PAVEMENT STRIPING (ITEM 748020)	2,257 LF

CONSTRUCTION PHASING LEGEND	
	WORK AREA THIS PHASE
	TEMPORARY CONSTRUCTION
	TEMPORARY PAVEMENT MARKING ARROW
	TEMPORARY WARNING SIGN
	PORTABLE IMPACT ATTENUATOR
	CHANNELIZING DEVICE
	TYPE III BARRICADE

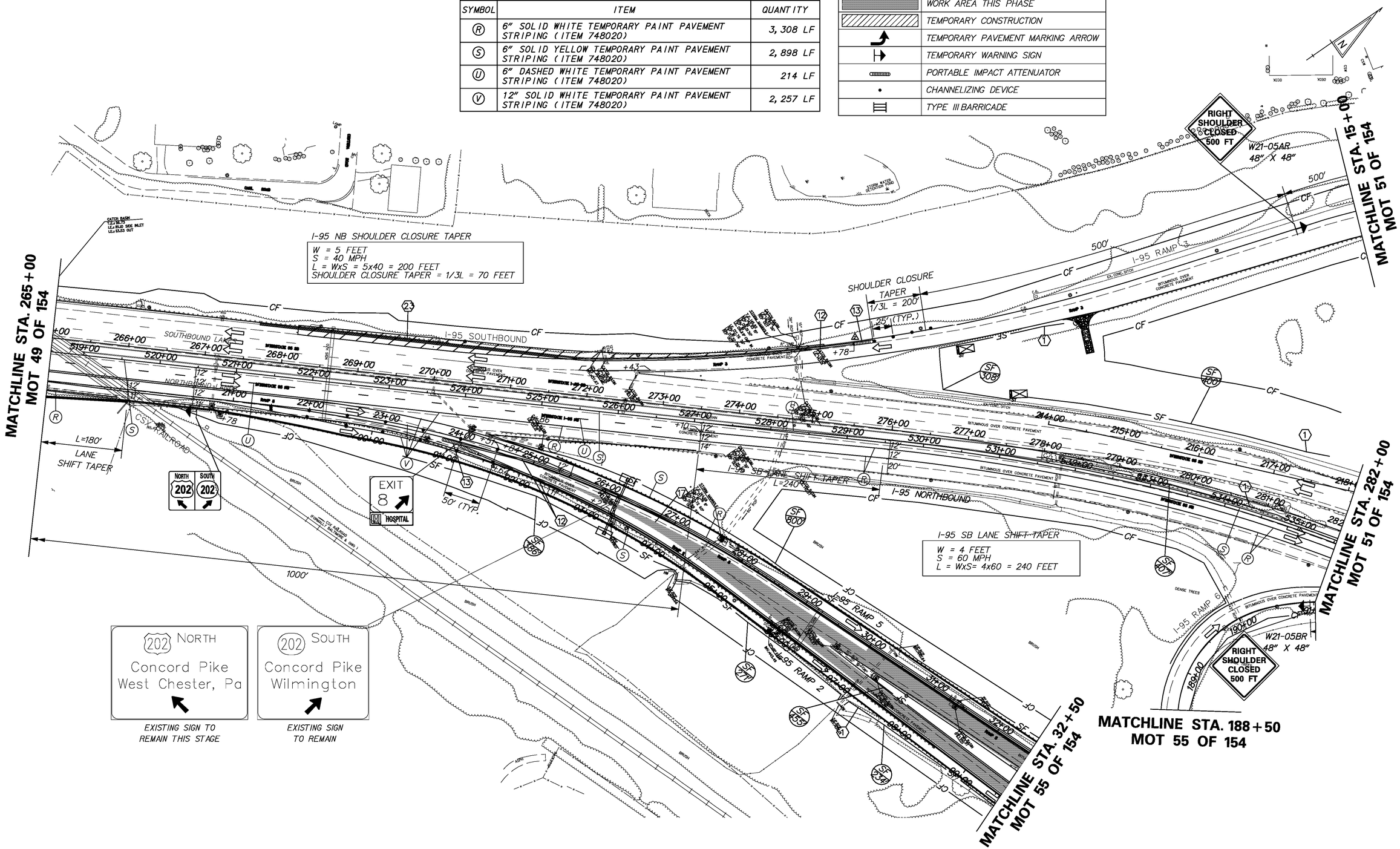

DELAWARE DEPARTMENT OF TRANSPORTATION	ADDENDUMS / REVISIONS	SCALE 0 30 60 90 FEET	I-95 & US 202 INTERCHANGE	CONTRACT T200510602	BRIDGE NO. NA	CONSTRUCTION PHASING, MOT & EROSION CONTROL PHASE 1, STAGE 4 MOT 50 OF 139	SHEET NO. 315
	1 Added Temporary Concrete Barrier and Attenuator			COUNTY NEW CASTLE	DESIGNED BY: DJD / REM		TOTAL SHTS. 482
					CHECKED BY: KMC		

8/3/2011

SEQUENCE OF CONSTRUCTION

PHASE 2, STAGE 2

1. INSTALL ALL EROSION AND SEDIMENT CONTROL MEASURES AS SHOWN ON THE PHASE 2 STAGE 2 CONSTRUCTION PHASING, MOT & EROSION CONTROL.

2. STABILIZE ALL DISTURBED AREAS WITH TOP SOIL SEED AND MULCH PRIOR TO THE REMOVAL OF THE SEDIMENT CONTROL DEVICES AS DIRECTED BY THE ENGINEER.

3. DURING NIGHT WORK HOURS: USING LANE AND SHOULDER CLOSURES IN ACCORDANCE WITH THE CASES LISTED IN THE MOT GENERAL NOTES, REMOVE EXISTING STRIPING ON I-95 NORTHBOUND, I-95 SOUTHBOUND, EXISTING RAMP 3 AND US 202 SOUTHBOUND, AS NECESSARY, AND REMOVE EXISTING RAISED PAVEMENT MARKERS ON I-95 NORTHBOUND FROM STATION 299+14 TO STATION 301+53. PLACE TEMPORARY STRIPING ON I-95 NORTHBOUND, I-95 SOUTHBOUND AND EXISTING RAMP 3 USING CASE 23-C AND ON US 202 SOUTHBOUND USING CASE 23-B AS SHOWN UNDER PHASE 2, STAGE 2.

4. SHIFT TRAFFIC TO NEW LANES DESIGNATED FOR PHASE 2 STAGE 2.

5. ADJUST TEMPORARY SIGNAL AT THE US 202 AND NEW RAMP 7 INTERSECTION TO NEW LANES DESIGNATED FOR PHASE 2, STAGE 2.

6. USING LANE AND SHOULDER CLOSURES IN ACCORDANCE WITH THE CASES LISTED IN THE MOT GENERAL NOTES, RELOCATE TEMPORARY CONCRETE BARRIER TO:
   - THE LEFT SIDE OF I-95 NORTHBOUND FROM STATION 527+48 TO STATION 539+60
   - THE LEFT SIDE OF I-95 SOUTHBOUND FROM STATION 274+~~37~~ 20 TO STATION 300+~~11~~ 35 △2
   - THE RIGHT SIDE FO US 202 SOUTHBOUND FROM STATION 1016+64 TO STATION 1021+50

   TEMPORARY BARRIER WILL NEED TO BE RELOCATED FROM OFF SITE LOCATION FOR THIS STAGE. THE TEMPORARY CONCRETE BARRIER ON EXISTING RAMP 3 FROM STATION 2+90 TO STATION 4+55 REMAINS IN THE SAME LOCATION AS PHASE 2, STAGE 1.

7. USING LANE AND SHOULDER CLOSURES IN ACCORDANCE WITH THE CASES LISTED IN THE MOT GENERAL NOTES, RELOCATE PORTABLE IMPACT ATTENUATORS:
   - FROM I-95 SOUTHBOUND STATION 284+38 TO I-95 SOUTHBOUND STATION 300+~~11~~ 35 △2
   - FROM EXISTING RAMP 3 STATION 21+34 TO I-95 NORTHBOUND STATION 527+48

   THE PORTABLE IMPACT ATTENUATORS REMAIN IN PLACE FROM PHASE 2, STAGE 1 AT EXISTING RAMP 3 STATION 2+90 AND US 202 SOUTHBOUND 1021+50.

8. CONSTRUCT THE LEFT SIDE OF I-95 NORTHBOUND FROM STATION 528+00 TO STATION 539+10.

9. CONSTRUCT THE RIGHT SIDE OF I-95 SOUTHBOUND FROM STATION 274+60 TO STATION 296+00. CONSTRUCT TEMPORARY PAVEMENT ON THE RIGHT SIDE OF I-95 SOUTHBOUND FROM STATION C 287+42 TO STATION C 299+70 AS SHOWN ON THE I-95 SOUTHBOUND TEMPORARY PAVEMENT PLANS IN THE PHASE 2 STAGE 2 TRAFFIC CONTROL PLANS.

SEQUENCE OF CONSTRUCTION

PHASE 2, STAGE 3

1. INSTALL ALL EROSION AND SEDIMENT CONTROL MEASURES AS SHOWN ON THE PHASE 2 STAGE 3 CONSTRUCTION PHASING, MOT & EROSION CONTROL.

2. STABILIZE ALL DISTURBED AREAS WITH TOP SOIL SEED AND MULCH PRIOR TO THE REMOVAL OF THE SEDIMENT CONTROL DEVICES AS DIRECTED BY THE ENGINEER.

3. DURING NIGHT WORK HOURS: USING LANE AND SHOULDER CLOSURES IN ACCORDANCE WITH THE CASES LISTED IN THE MOT GENERAL NOTES, REMOVE EXISTING STRIPING ON I-95 NORTHBOUND AND I-95 SOUTHBOUND, AS NECESSARY. PLACE TEMPORARY STRIPING ON I-95 NORTHBOUND AND I-95 SOUTHBOUND USING CASE 23-C AS SHOWN UNDER PHASE 2, STAGE 3.

4. SHIFT TRAFFIC TO NEW LANES DESIGNATED FOR PHASE 2, STAGE 3.

5. CLOSE AND DETOUR RAMP 8 IN ACCORDANCE WITH DETOUR PLAN RAMP *6178 TO CONSTRUCT RAMP 8 FROM STATION 10+38 TO STATION 13+01.

6. USING LANE AND SHOULDER CLOSURES IN ACCORDANCE WITH THE CASES LISTED IN THE MOT GENERAL NOTES, RELOCATE TEMPORARY CONCRETE BARRIER TO:
   - THE LEFT SIDE OF I-95 SOUTHBOUND FROM STATION ~~288+00~~ 283+65 TO STATION 301+16
   - THE RIGHT SIDE OF I-95 SOUTHBOUND FROM STATION ~~281+69~~ 277+50 TO STATION 297+46

   THE TEMPORARY CONCRETE BARRIER ON EXISTING RAMP 3 FROM STATION 2+90 TO STATION 4+55 AND THE RIGHT SIDE OF US 202 SOUTHBOUND FROM STATION 1016+64 TO STATION 1021+50 REMAINS IN THE SAME LOCATION AS PHASE 2, STAGE 2.

7. USING LANE AND SHOULDER CLOSURES IN ACCORDANCE WITH THE CASES LISTED IN THE MOT GENERAL NOTES, RELOCATE PORTABLE IMPACT ATTENUATORS:
   - FROM I-95 SOUTHBOUND STATION 300+~~11~~ 35 TO I-95 SOUTHBOUND STATION 301+16,
   - FROM I-95 NORTHBOUND STATION 527+48 TO I-95 SOUTHBOUND STATION 297+46.

   THE PORTABLE IMPACT ATTENUATORS FROM PHASE 2, STAGE 2 REMAIN IN PLACE AT EXISTING RAMP 3 STATION 2+90 AND US 202 SOUTHBOUND 1021+50.

8. CONSTRUCT THE RIGHT SIDE OF I-95 SOUTHBOUND AND THE I-95 SOUTHBOUND / NEW RAMP 3 GORE AREA FROM STATION 277+99 TO STATION 294+05 AND REMOVE I-95 SOUTHBOUND FROM STATION 282+18 TO STATION 290+88. DURING ONE WEEKEND (HOURS 9:00 PM FRIDAY NIGHT TO 5:00 AM MONDAY MORNING), USING LANE CLOSURES IN ACCORDANCE WITH THE CASES LISTED IN THE MOT GENERAL NOTES, CLOSE THE RIGHT LANE ON I-95 SOUTHBOUND TO CONSTRUCT PAVEMENT BETWEEN STATION 277+99 AND STATION 282+20.