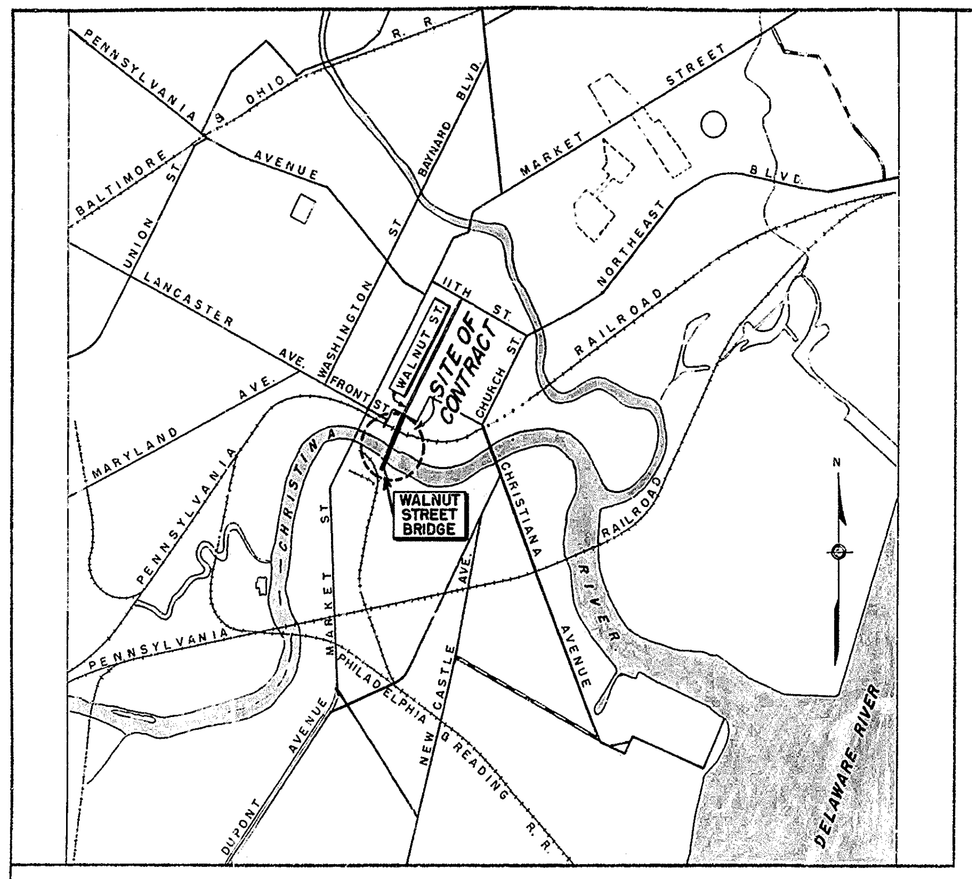

SCALE IN FEET
0 3000 6000

THE STATE OF DELAWARE

State of Delaware

STATE HIGHWAY DEPARTMENT

PLAN
FOR
CONSTRUCTION OF CONTRACT Nº 1224-(4)
STA. 9+60 TO STA. 19+40
980 FEET: 0.185 MILES

FEDERAL AID PROJECT Nº S.U-1(10)

COUNTY	CONTRACT	P.R.A. DIV. NO.	STATE	FED. AID PROJ. NO.	FISCAL YEAR	SHEET NO.	TOTAL SHEETS
NEW CASTLE	1224-(4)		DEL.	S.U-1(10)	1954	1	42

WALNUT STREET BRIDGE

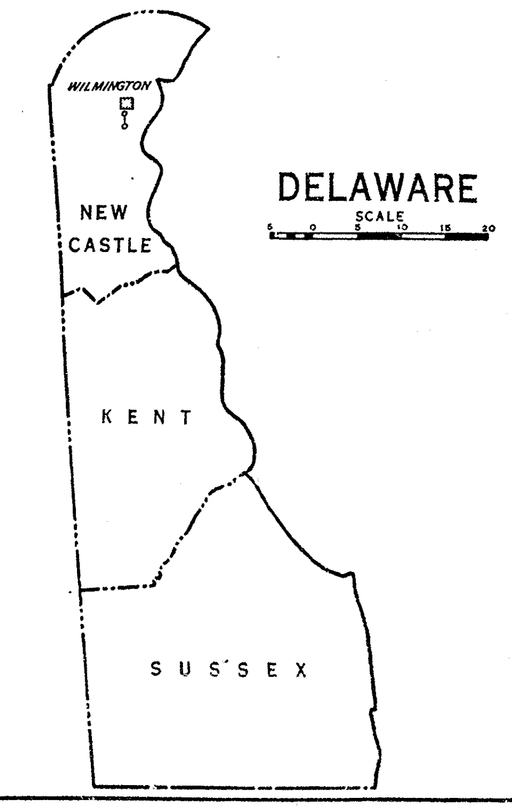

BOOK NUMBER

WALNUT STREET BRIDGE
SUPERSTRUCTURE

LIST OF DRAWINGS

SHEET NO.	TITLE
1.	TITLE SHEET
2.	GENERAL PLAN & ELEVATION & QUANTITIES
3.	ARCHITECTURAL ELEVATIONS & SECTIONS
4.	ROADWAY CONTOUR PLAN & UTILITY LINES
5.	APPROACH SPAN STRESS SHEET
6.	APPROACH SPAN DETAILS
7.	APPROACH SPAN SECTIONS
8.	DECK OVER BASCULE PIER
9.	DETAIL OF DECK OVER BASCULE PIER
10.	REINFORCING BARS IN DECK SLABS
11.	GENERAL VIEW OF BASCULE SPAN
12.	GENERAL MACHINERY ARRANGEMENT
13.	BASCULE SPAN STRESS SHEET
14.	TRUNNION GIRDER & COUNTERWEIGHT STRESS SHEET
15.	BASCULE GIRDER DETAILS
16.	BASCULE GIRDER DETAILS
17.	FLOORBEAMS FB0 AND FB1
18.	FLOORBEAMS FB2, FB3 AND FB4
19.	LATERALS AND LONGITUDINAL BRACINGS
20.	TRUNNION GIRDER
21.	COUNTERWEIGHT FRAME
22.	COUNTERWEIGHT AND PLATFORM
23.	CONCRETE IN COUNTERWEIGHT
23A.	SUPPLEMENTARY DETAILS FOR CTWT.
24.	MACHINERY LAYOUT
25.	TRUNNIONS AND BEARINGS
26.	DETAILS OF OPERATING MACHINERY
27.	SPAN LOCK AND CENTERING DEVICE
28.	STORAGE HOUSE ELEVATIONS
29.	CONTROL HOUSE ELEVATIONS
30.	CROSS-SECTIONS OF HOUSES
31.	STORAGE HOUSE, FLOOR PLANS
32.	CONTROL HOUSE, FLOOR PLANS
33.	DOOR AND WINDOW DETAILS AND SCHEDULES
34.	HOUSE DETAILS
35.	LADDERS AND STAIR DETAILS
36.	HEATING AND UTILITY PIPING
37.	WIRING DIAGRAMS, 480 VOLT POWER & LEAF MOTORS
38.	WIRING DIAGRAMS, TRAFFIC LIGHTS & INTERLOCKING
39.	WIRING DIAGRAMS, 120/208 VOLT DISTRIBUTION & DETAILS
40.	ELECTRICAL EQUIPMENT LIST
41.	TRANSFORMER INSTALLATION AND DETAILS
41A.	TRANSFORMER INSTALLATION AND DETAILS
42.	CONDUIT DIAGRAMS & DETAILS

CONVENTIONAL SIGNS

COUNTY LINE
CITY OR TOWN LINE
RIGHT OF WAY LINE
CENTRE LINE, PROPOSED ROAD — 240
MACADAM, TRAVELLED ROAD
TROLLEY OR RAILROAD
WIRE FENCE
PRESENT CULVERT
PROPOSED CULVERT
TELEGRAPH POLE
TREE

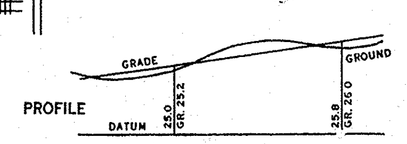

PREPARED BY
PARSONS, BRINCKERHOFF, HALL & MACDONALD
ENGINEERS NEW YORK

DATE 5/6/54

STATE OF DELAWARE
STATE HIGHWAY DEPARTMENT

EXAMINED 6/29 1954 John B. Larson
CONSTRUCTION ENGINEER

APPROVED 6/29 1954 Jas. S. Robinson
BRIDGE ENGINEER

APPROVED 6/30 1954 W. J. McCullough
CHIEF ENGINEER

DEPARTMENT OF COMMERCE
BUREAU OF PUBLIC ROADS

RECOMMENDED FOR APPROVAL:

DISTRICT ENGINEER DATE

APPROVED:

DIVISION ENGINEER DATE

MICROFILMED

COUNTY	CONTRACT	P. R. A. DIV. NO.	STATE	FED. AID PROJECT NO.	FISCAL YEAR	SHEET NO.	TOTAL SHEETS
NEW CASTLE	1224-(4)		DEL.	S.U-1 (10)	1954	2	42

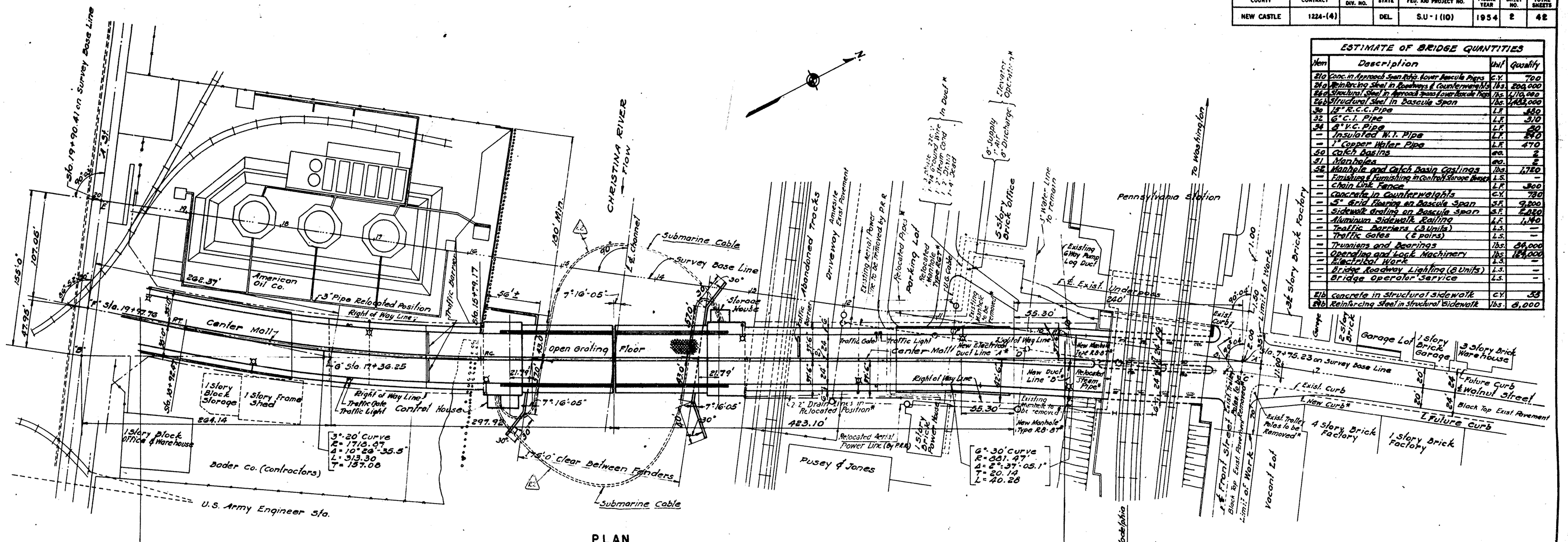

PLAN

Roadway Lighting
Fluorescent Lamps

* Indicates work not included in this contract.

Item	Description	Unit	Quantity
21a	Conc. in Approach Span Rdwy. over Bascule Piers	C.Y.	700
24a	Reinforcing Steel in Roadways & Counterweight Slab	lbs.	200,000
26a	Structural Steel in Approach Spans (overhead Tiers)	lbs.	1,170,000
26b	Structural Steel in Bascule Span	lbs.	1,485,000
30	12" R.C.C. Pipe	L.F.	580
32	6" C.I. Pipe	L.F.	310
34	8" V.C. Pipe	L.F.	20
—	Insulated W.I. Pipe	L.F.	540
—	1" Copper Water Pipe	L.F.	470
50	Catch Basins	ea.	2
51	Manholes	ea.	2
52	Manhole and Catch Basin Castings	lbs.	1,720
—	Finishing & Furnishing in Control & Storage Houses	L.S.	—
—	Chain Link Fence	L.F.	300
—	Concrete in Counterweights	C.Y.	730
—	5" Grid Flooring on Bascule Span	S.F.	9,200
—	Sidewalk Grating on Bascule Span	S.F.	2,850
—	Aluminum Sidewalk Railing	L.F.	1,140
—	Traffic Barriers (3 Units)	L.S.	—
—	Traffic Gates (2 pairs)	L.S.	—
—	Trunnions and Bearings	lbs.	54,000
—	Operating and Lock Machinery	lbs.	124,000
—	Electrical Work	L.S.	—
—	Bridge Roadway Lighting (8 Units)	L.S.	—
—	Bridge Operator Service	L.S.	—
21b	Concrete in Structural Sidewalk	C.Y.	55
24b	Reinforcing Steel in Structural Sidewalk	lbs.	8,000

Notes:
Duct Line "A" - 6 Way Vitrified Clay Duct Encased in 6" of Reinforced Concrete. See Pennsylvania R.R. Plan No. 24520 Sheet No. 6

Duct Line "B" - 12 Way Vitrified Clay Duct Encased in 6" of Reinforced Concrete. See Pennsylvania R.R. Plan No. 24520. Sheet No. 6

For Manhole Details See Pennsylvania R.R. Plan No. 25612

All Station Numbers are along ℄ of Bridge unless otherwise noted.

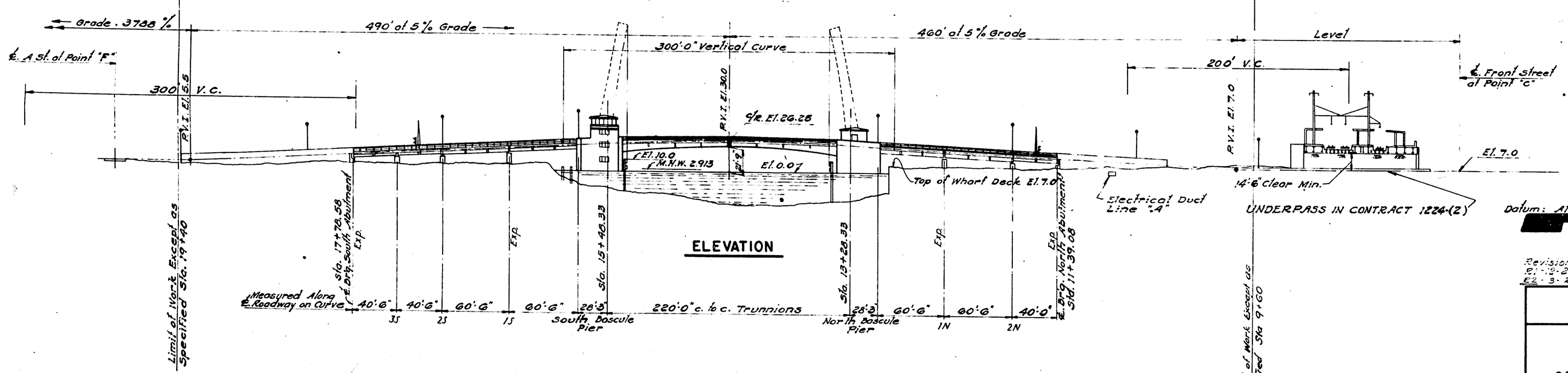

ELEVATION

Datum: All Elevations shown Refer to [redacted] M.S.L. at Sandy Hook, N. J.

Revision Date:
R1 - 12-20-54 - Datum of Elevation Changed to M.S.L.
R2 - 3-2-55 - Relocated Submarine Cable.

File 204

MADE BY J. F. E.
TRACED BY H.
CHECKED BY R. L.

APPROVED BRIDGE ENGINEER

APPROVED CHIEF ENGINEER

STATE OF DELAWARE
STATE HIGHWAY DEPARTMENT

WALNUT STREET BRIDGE
OVER CHRISTINA RIVER
WILMINGTON, DELAWARE

GENERAL PLAN & ELEVATION AND QUANTITIES

SCALE	DATE	SHEET NO.
1" = 50'	April 1954	2

PARSONS, BRINCKERHOFF, HALL & MACDONALD
ENGINEERS NEW YORK

20-4

COUNTY	CONTRACT	P. R. A. DIV. NO.	STATE	FED. AID PROJECT NO.	FISCAL YEAR	SHEET NO.	TOTAL SHEETS
NEW CASTLE	1224-(4)		DEL.	S. U - 1 (10)	1954	3	42

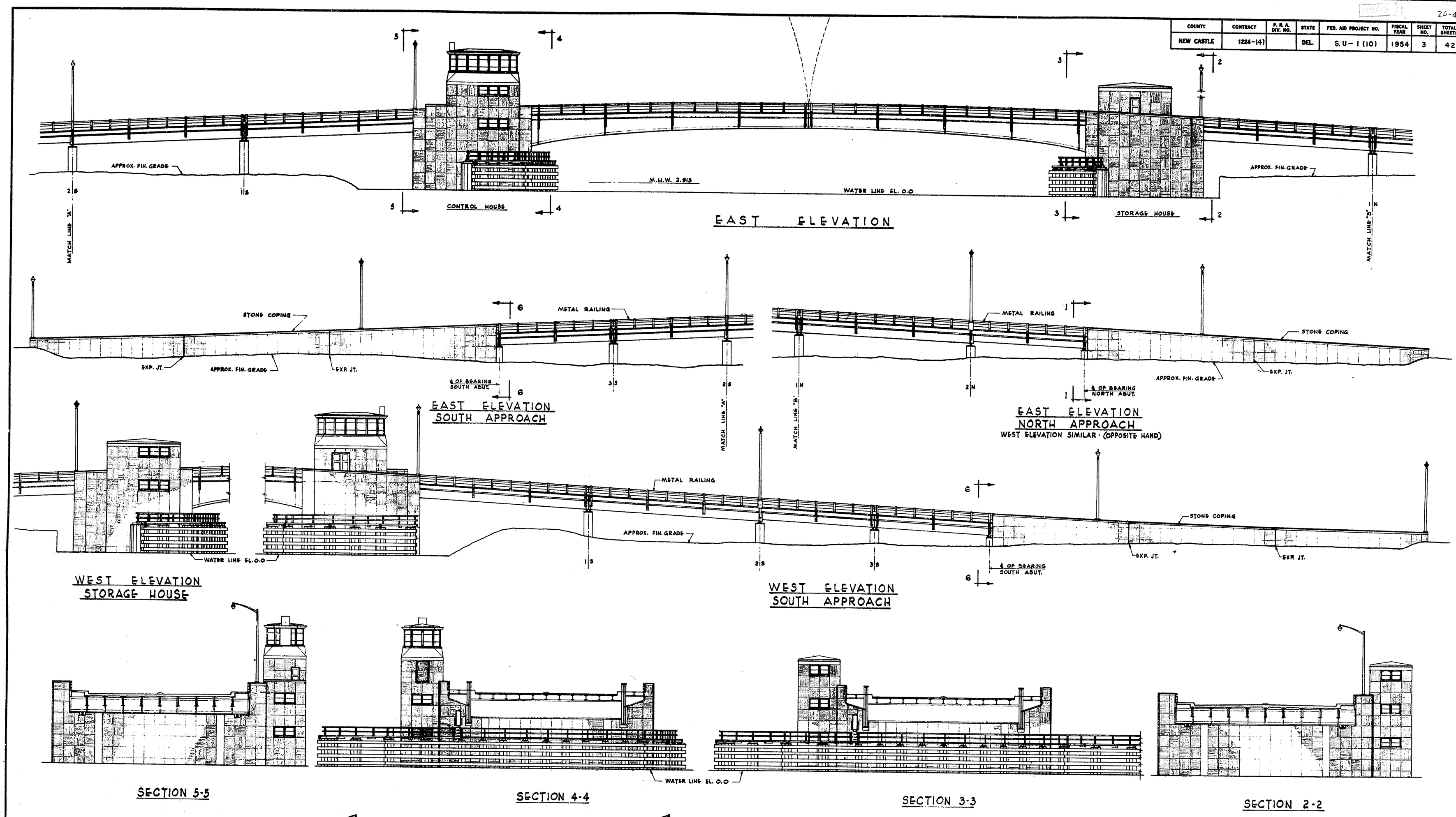

STATE OF DELAWARE
STATE HIGHWAY DEPARTMENT

WALNUT STREET BRIDGE
OVER CHRISTINA RIVER
WILMINGTON, DELAWARE

APPROVED Jac S. Robinson
BRIDGE ENGINEER

ARCHITECTURAL ELEVATIONS & SECTIONS

MICROFILMED

COUNTY	CONTRACT	F. R. A. DIV. NO.	STATE	FED. AID PROJECT NO.	FISCAL YEAR	SHEET NO.	TOTAL SHEETS
NEW CASTLE	1224-(4)		DEL.	S. U - 1 - (10)	1954	4	42

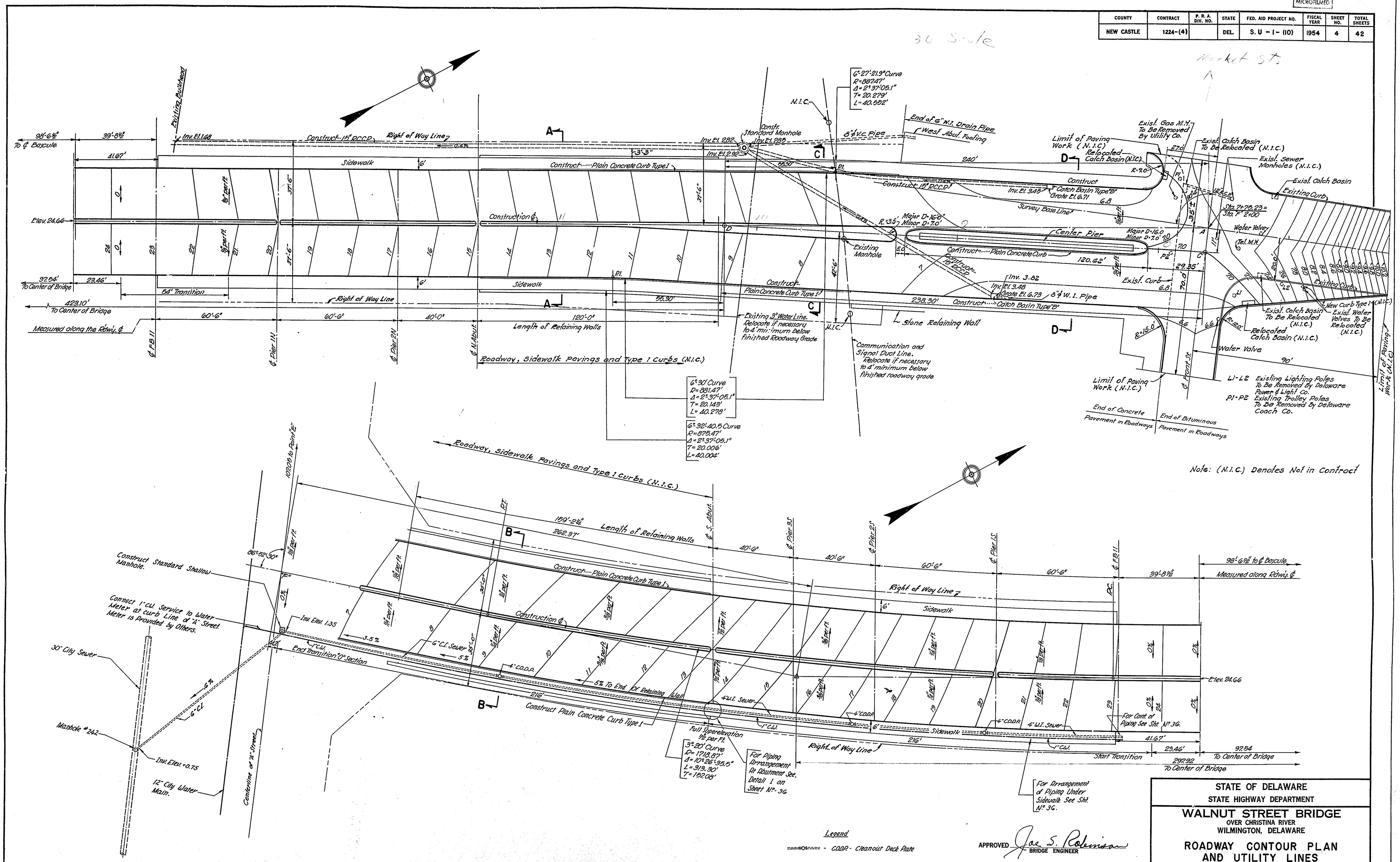

APPROVED Joe S. Robinson BRIDGE ENGINEER

MADE BY A.S.
TRACED BY J.T.
CHECKED BY L.J.

STATE OF DELAWARE
STATE HIGHWAY DEPARTMENT

WALNUT STREET BRIDGE
OVER CHRISTINA RIVER
WILMINGTON, DELAWARE

ROADWAY CONTOUR PLAN AND UTILITY LINES

SCALE	DATE	SHEET NO.
1"=20'	APRIL 1954	4

PARSONS, BRINCKERHOFF, HALL & MACDONALD
ENGINEERS NEW YORK

NOTE: Lengths of sidewalk Brackets in South Approach Beam Spans are not constant at 5'-5¾" since the curb beams are on chords and the Fascia beams are on curve at ends of brackets and diaphragms.

COUNTY	CONTRACT	P. R. A. DIV. NO.	STATE	FED. AID PROJECT NO.	FISCAL YEAR	SHEET NO.	TOTAL SHEETS
NEW CASTLE	1224-(4)		DEL.	S.U-1(10)	1954	5	42

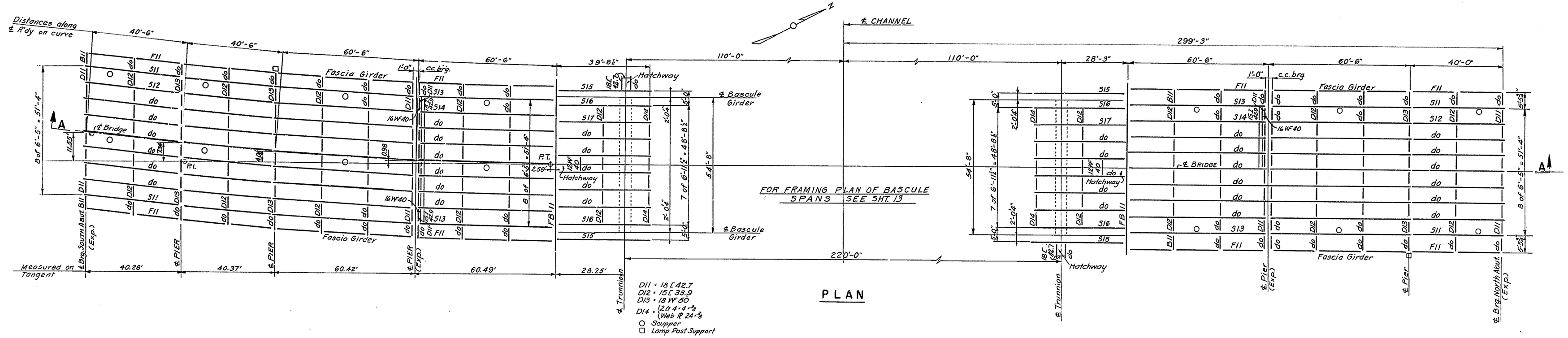

PLAN

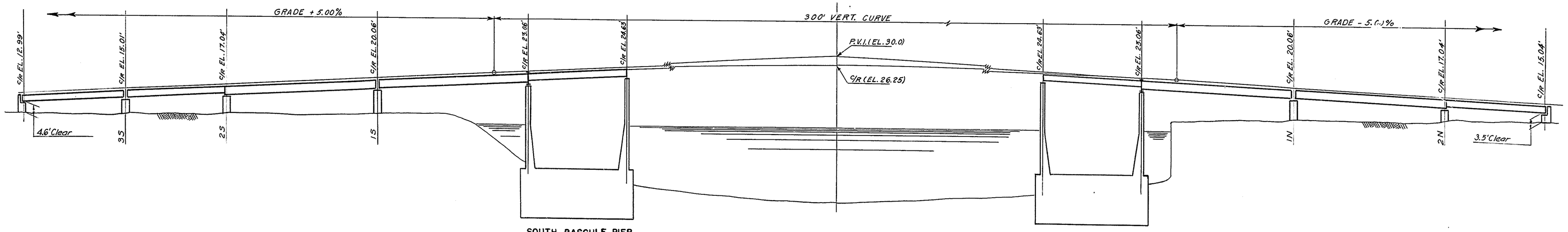

TABLE OF SECTIONS AND STRESSES

Mark		S11	S12	S13	S14	S15	S16	S1	F11	B11	FB11
Span lengths		40'-0"	40'-0"	60'-0"	60'-0"	39'-9"	39'-9"	39'-9"	20'-0"	5'-6"	54'-8"
Section		30WF172	30WF132	36WF245	36WF230	21WF62	24WF94	24WF160	Web 20×⅜, 2L 4×4×⅜, L 3½×3½×⅜	Web: ⅜" PL, L 3½×3½×⅜	Web: 60×½", 4L: 8×8×¾", 2L: 18×¾, 4L, 2L 18×½, 2L 18×½, 2L 18×½
Net Section Modulus		528.2	379.7	892.5	835.5	126.4	220.9	413.5	58.4	97.8	3095
Max. Shear ℄ Reaction in Kips	DL	28	17	43	27	7	12	17	2	6	V=199
	LL	30	35	40	39	8	20	38	3	5	106
	IMP	5	11	5	11	—	6	12	—	—	31
	ε	63	63	88	77	15	38	67	5	11	V=336
Max. Moment in ft. Kips	DL	280	170	650	405	73	119	168	12	29	2542
	LL	275	290	560	518	78	159	310	13	29	1515
	IMP	42	87	66	140	—	48	93	—	—	446
	ε	597	547	1276	1063	151	326	571	25	58	4503
Sec. Mod. Req'd @ 18⁰/₀"		398	364	850	710	101	218	381	17	39	3007

SECTION A—A

REACTIONS

Piers	2S and 2N		Bascule
Beams	S11 & S13	S12 & S14	FB11
D.L.	71	44	237
L.L.	54	38	106
IMP	6	11	31
ε	131	93	374

GENERAL NOTES

1. All work under this contract shall be in accordance with the Standard Specifications of the State Highway Department of Delaware, dated April 1, 1941, the Addenda of March, 1947, and the Special Provisions thereto dated April, 1954.
2. The design specification shall be in accordance with Division III of the 1953 Standard Specifications for Highway Bridges of the American Association of State Highway Officials, except where modified for machinery design by the Standard Specifications for Movable Railway Bridges of the American Railway Engineers Association, 1935 edition.
3. Live loads: H20-S16 loading on roadways and wind load 50 psf on fixed structure. Wind load on bascule span in open position to be 15 psf on 60% of the area of open gratings.
4. Allowable Unit Stresses in accordance with 1953 AASHO Specifications.
5. Rivets: ⅞"ϕ, except in bascule girder, flanges, splices and web reinforcing plates, and the connection of trunnion girder to the bascule girders where 1"ϕ rivets are required.
6. Material: Structural Carbon Steel unless otherwise indicated. The railings on the approach and bascule span are aluminum.
7. Camber: All girders and floorbeams shall be cambered so that they will retain their normal geometric shape under the full dead load. Rolled beam stringers to be erected with their initial camber upward.
8. Erection: The contractor may elect his own method of erection subject to the approval of the engineer. Attention is called to the field splice provided in the bascule girders in front of the heel floorbeam for the purpose of erecting the rear portion of the bascule span in a closed position. The front portion of the bascule span will be erected in the open position.
9. Deck: Bascule span 5" open grating flooring for roadways and 1¼" open grating over 3/16" steel plate and filled with bituminous cement for the sidewalks. On approach spans deck over bascule piers, the roadway and sidewalk slabs will be reinforced concrete.
10. All piece marks such as S1, S2 and B1, indicate members governed by the same stresses only.

APPROVED Jac S. Robinson BRIDGE ENGINEER

STATE OF DELAWARE
STATE HIGHWAY DEPARTMENT

WALNUT STREET BRIDGE
OVER CHRISTINA RIVER
WILMINGTON, DELAWARE

APPROACH SPAN STRESS SHEET

SCALE	DATE	SHEET NO.
1"=20'	APRIL 1954	5

PARSONS, BRINCKERHOFF, HALL & MACDONALD
ENGINEERS NEW YORK

MADE BY A.T.
TRACED BY S.M.M.
CHECKED BY J.A.W.

MICROFILMED

COUNTY	CONTRACT	P. R. A. DIV. NO.	STATE	FED. AID PROJECT NO.	FISCAL YEAR	SHEET NO.	TOTAL SHEETS
NEW CASTLE	1224-(4)		DEL.	S.U-1(10)	1954	6	42

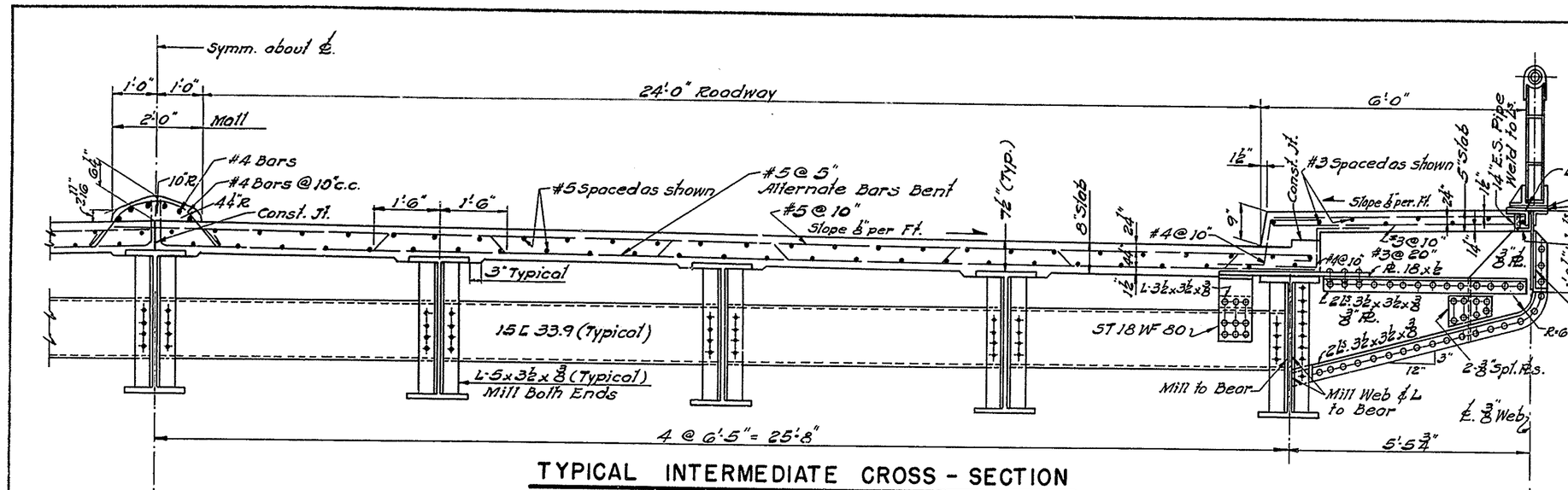

TYPICAL INTERMEDIATE CROSS - SECTION

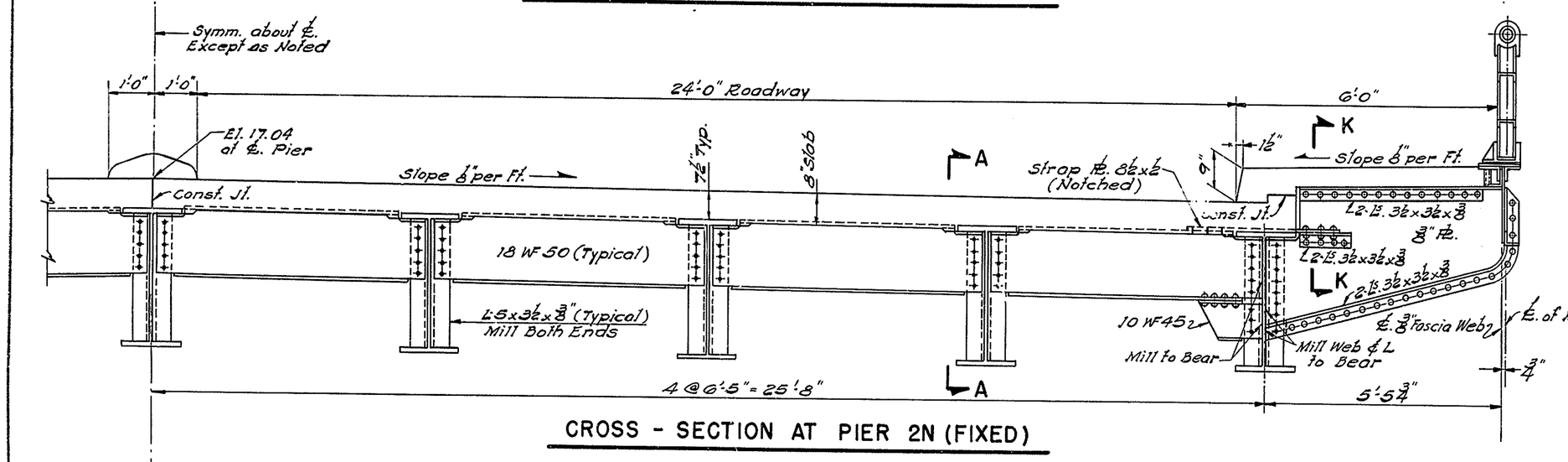

CROSS - SECTION AT PIER 2N (FIXED)

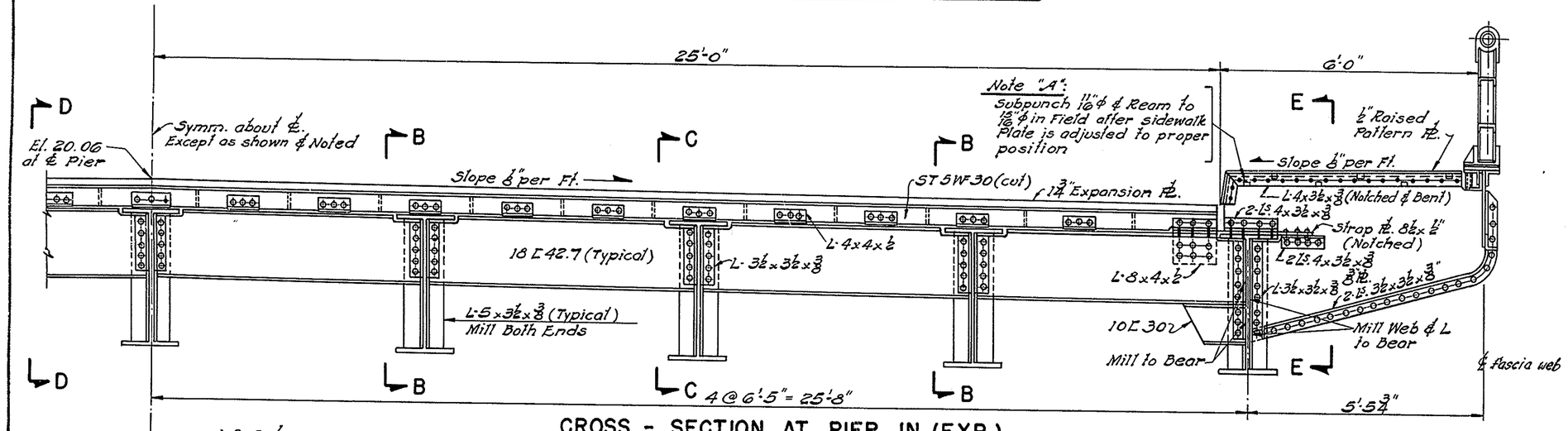

CROSS - SECTION AT PIER IN (EXP.)

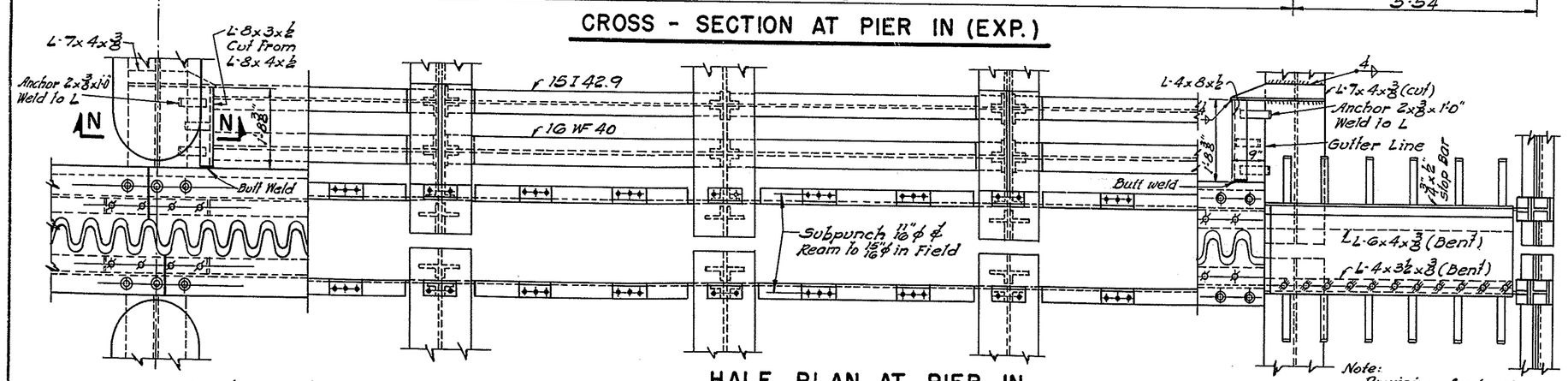

HALF PLAN AT PIER IN

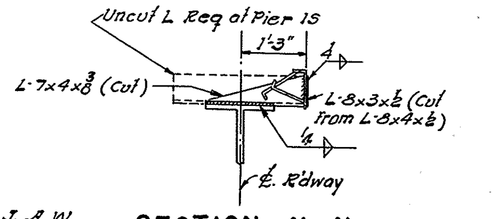

SECTION N-N.

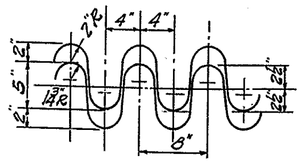

PLAN OF TEETH

Scale: 1" = 1'-0"

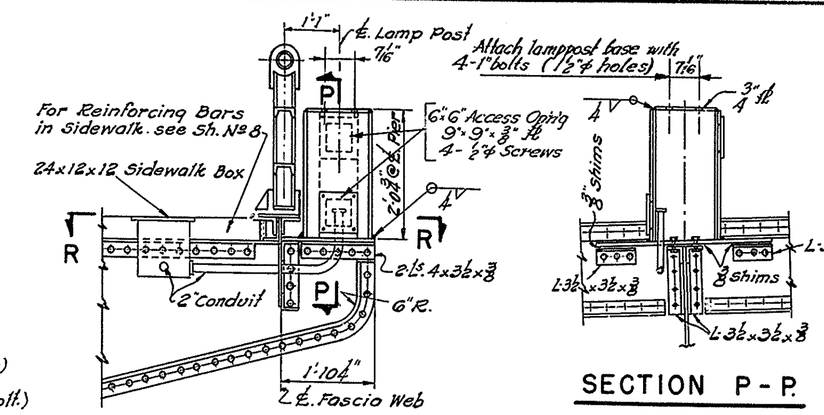

TYPICAL LAMPPOST SUPPORT

Required at east side of pier 2N and west side of pier 2S only.

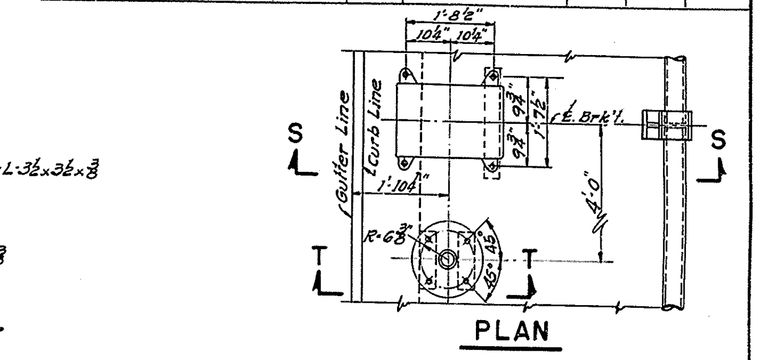

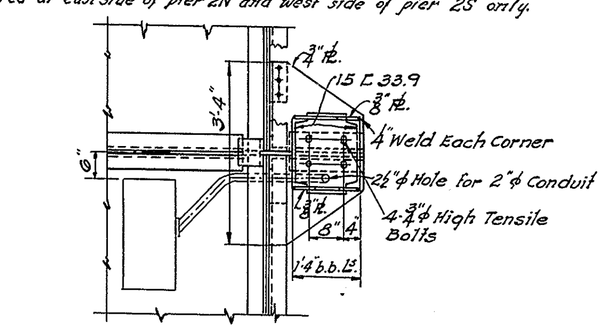

SECTION R-R.

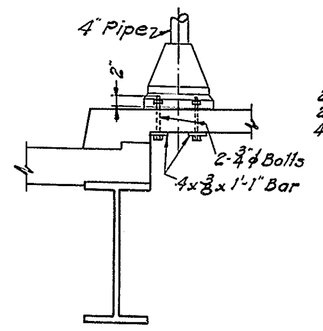

SECTION T-T.

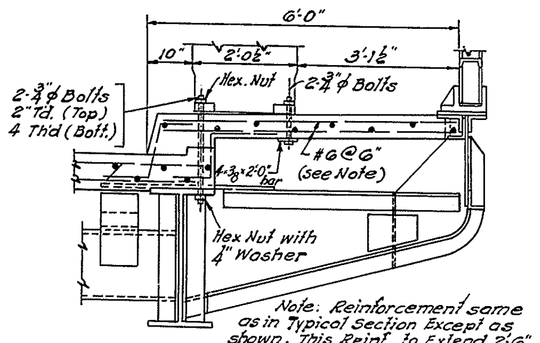

SECTION S-S.

TYPICAL SUPPORTS FOR TRAFFIC GATE & TRAFFIC LIGHT

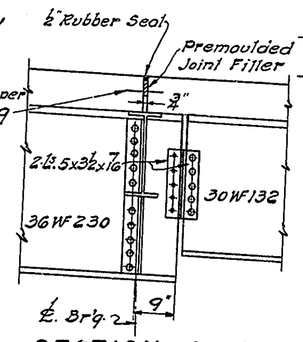

SECTION A-A

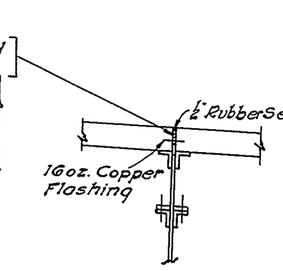

SECTION K-K.

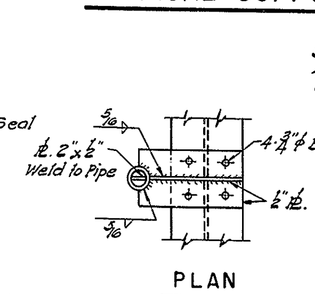

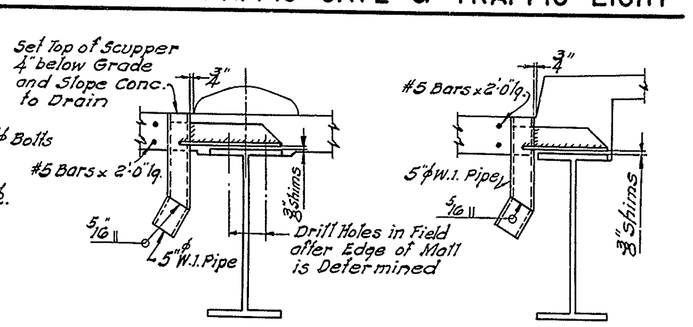

DETAILS OF SCUPPERS

For location of Scuppers - See sheet No. 5

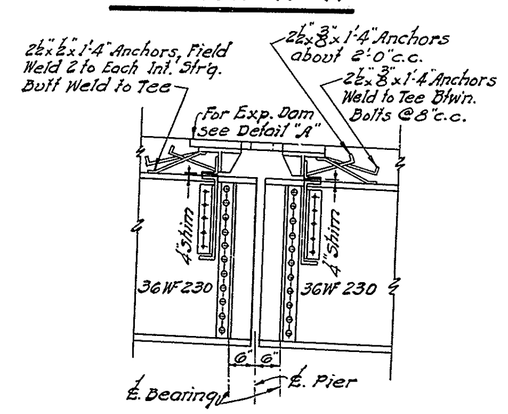

SECTION D-D

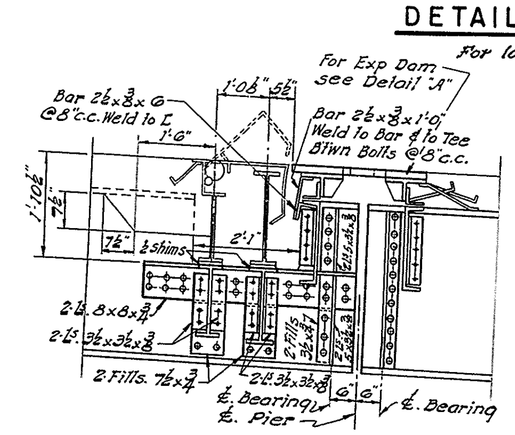

SECTION B-B

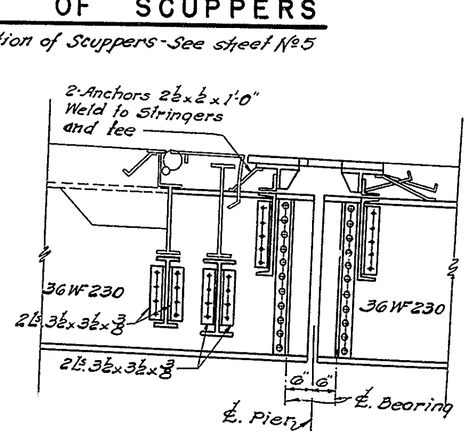

SECTION C-C.

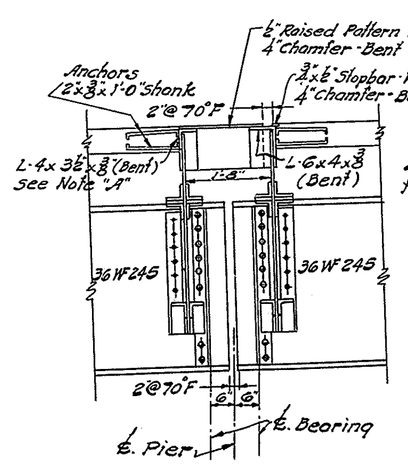

SECTION E-E.

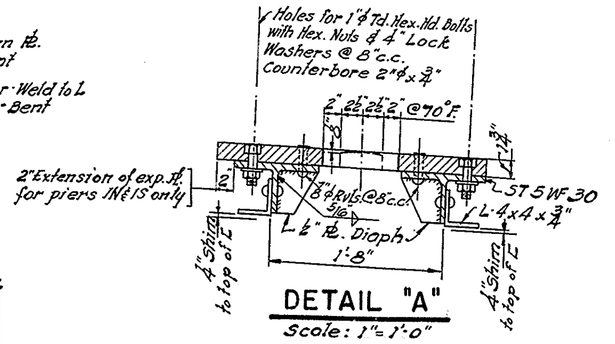

DETAIL "A"

Scale: 1" = 1'-0"

Use this sheet in conjunction with sheet No. 7.

MADE BY J. A. W.
TRACED BY H. Konnevig
CHECKED BY A. L.

APPROVED Jas. S. Robinson
BRIDGE ENGINEER

STATE OF DELAWARE
STATE HIGHWAY DEPARTMENT

WALNUT STREET BRIDGE

OVER CHRISTINA RIVER
WILMINGTON, DELAWARE

APPROACH SPAN DETAILS

SCALE	DATE	SHEET NO.
1/8" = 1'-0" & As Noted	APRIL 1954	6

PARSONS, BRINCKERHOFF, HALL & MACDONALD
ENGINEERS NEW YORK

COUNTY	CONTRACT	P. R. A. DIV. NO.	STATE	FED. AID PROJECT NO.	FISCAL YEAR	SHEET NO.	TOTAL SHEETS
NEW CASTLE	1224-(4)		DEL.	S. U - 1 (10)	1954	7	42

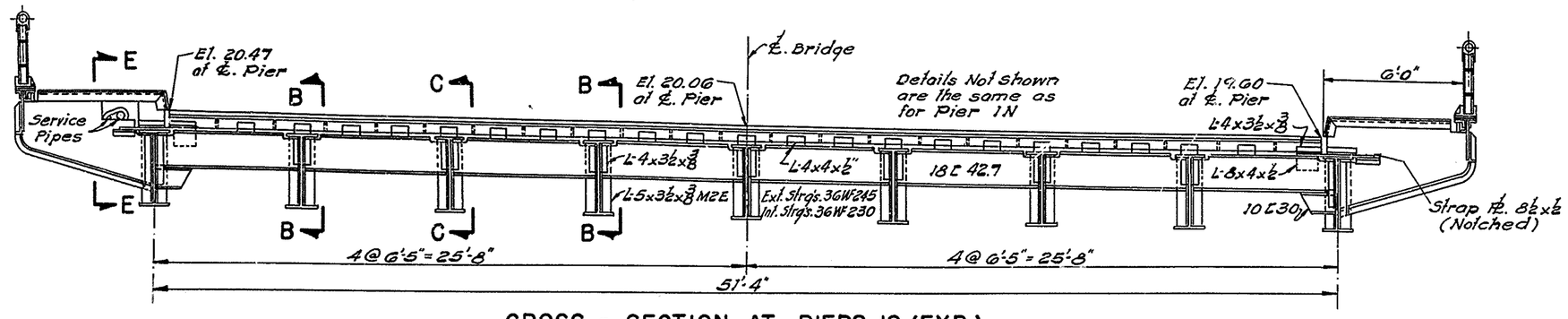

CROSS - SECTION AT PIERS 1S (EXP.)

Scale: ¼" = 1'-0"

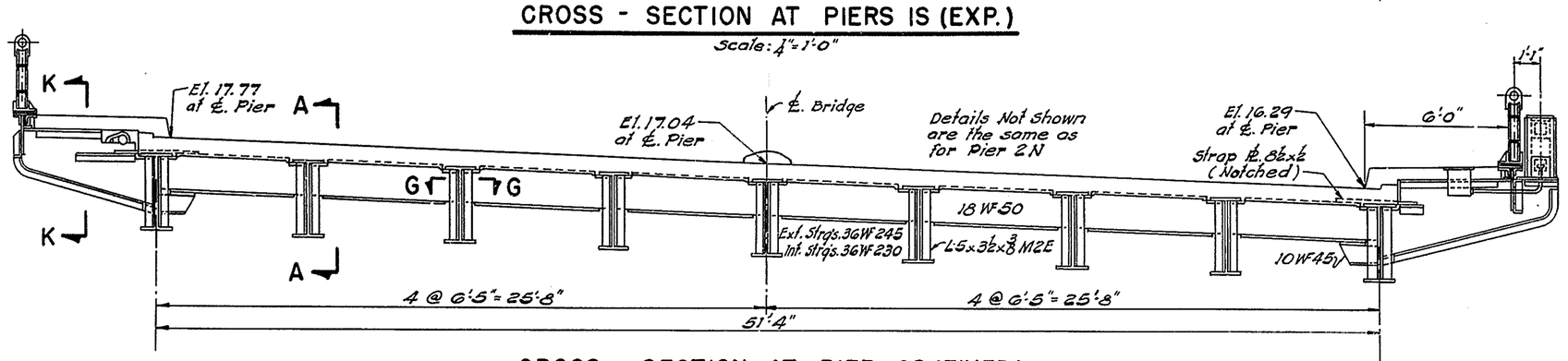

CROSS - SECTION AT PIER 2S (FIXED)

Scale: ¼" = 1'-0"

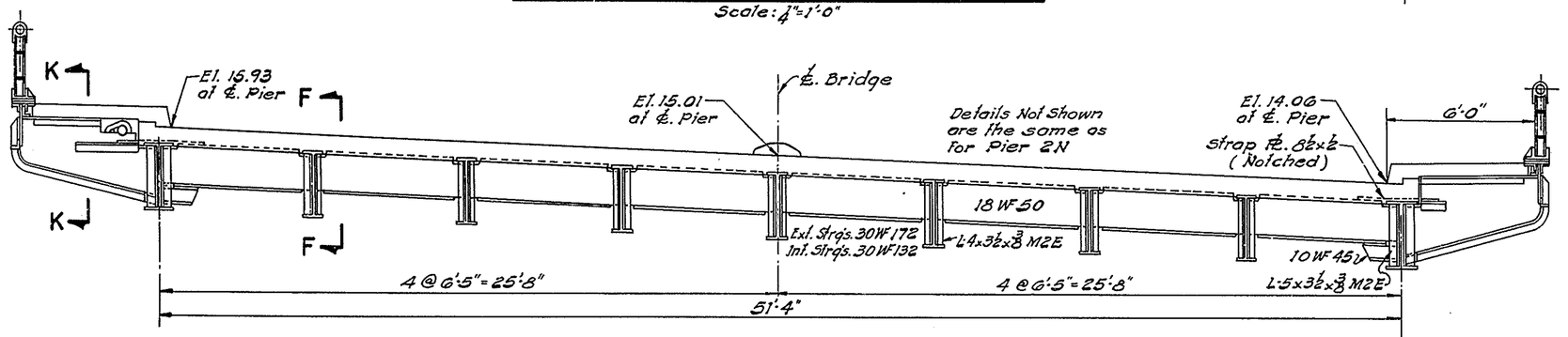

CROSS - SECTION AT PIER 3S (SLIDING)

Scale: ¼" = 1'-0"

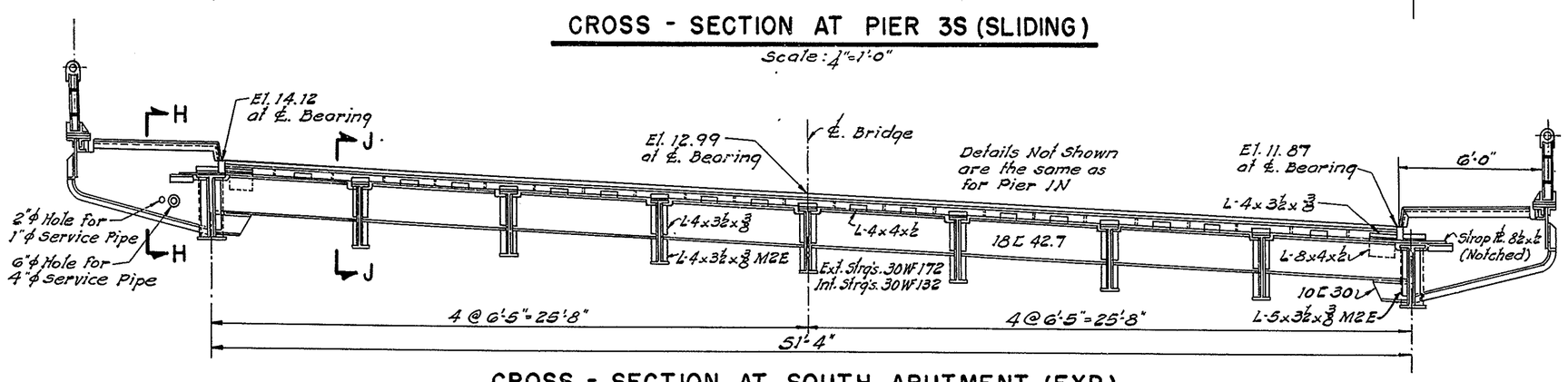

CROSS - SECTION AT SOUTH ABUTMENT (EXP.)

Scale: ¼" = 1'-0"

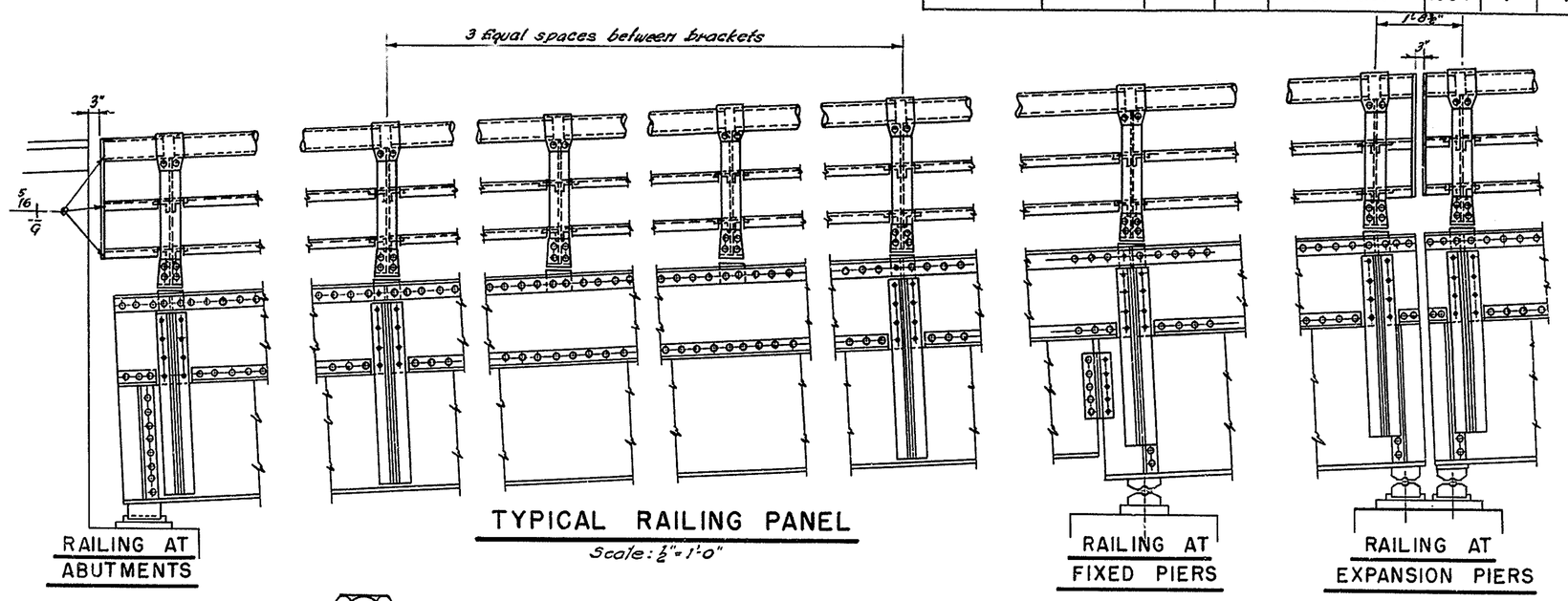

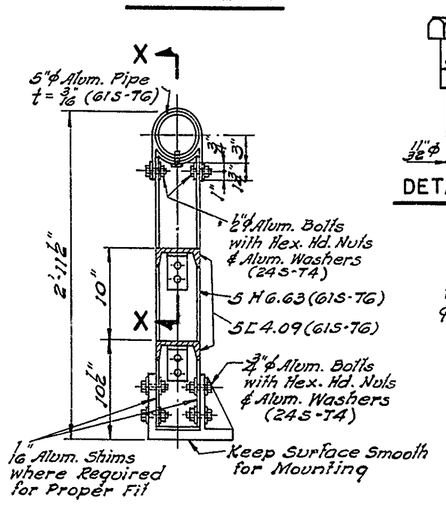

TYPICAL RAILING POST

Scale: 1" = 1'-0"

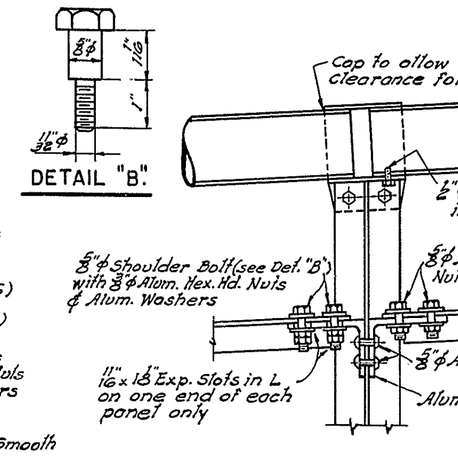

SECTION X-X.

Scale: 1½" = 1'-0"

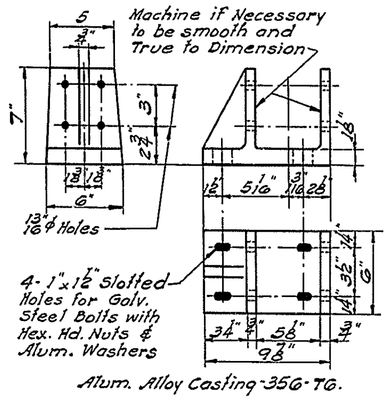

RAILING POST BASE

Scale: 1½" = 1'-0"

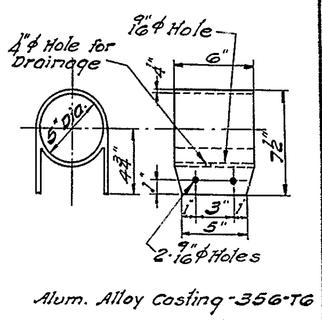

RAILING POST CAP

Scale: 1½" = 1'-0"

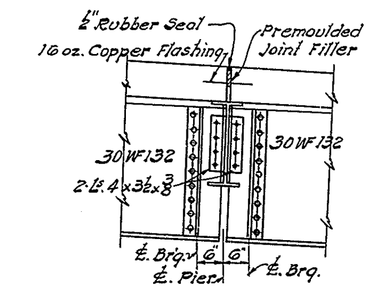

SECTION F-F

Scale: ½" = 1'-0"

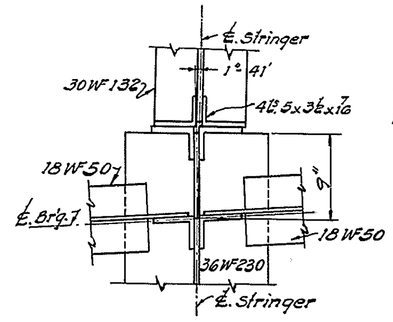

SECTION G-G.

Scale: 1" = 1'-0"

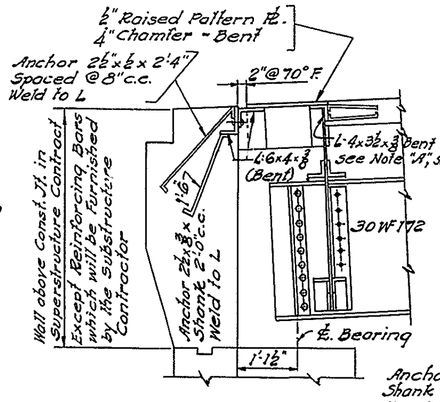

SECTION H-H.

Scale: ½" = 1'-0"

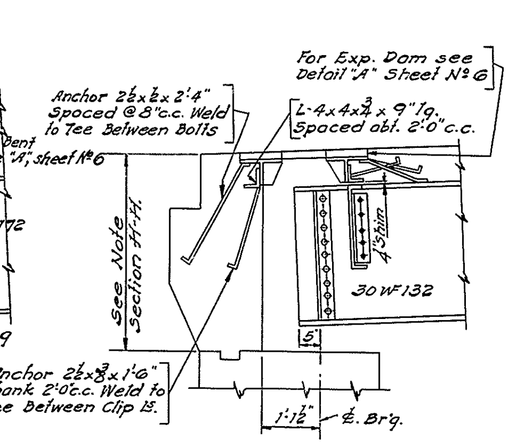

SECTION J-J.

Scale: ½" = 1'-0"

Corresponding sections at N. Abutment are similar.

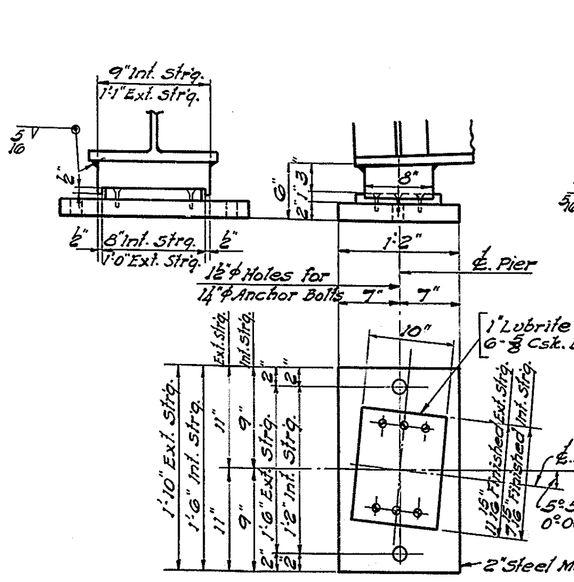

BEARING DETAILS AT ABUTMENTS

Scale: 1" = 1'-0"

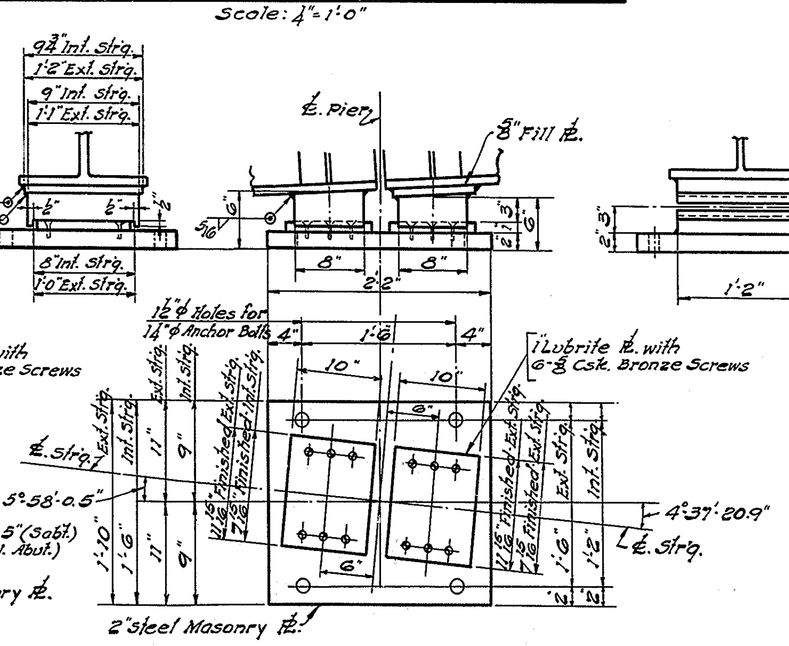

BEARING DETAILS AT PIER 3S

Scale: 1" = 1'-0"

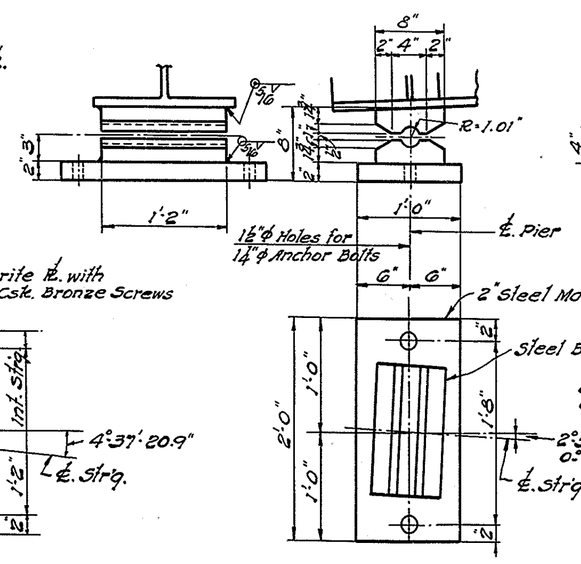

BEARING DETAILS AT PIERS 2S & 2N

Scale: 1" = 1'-0"

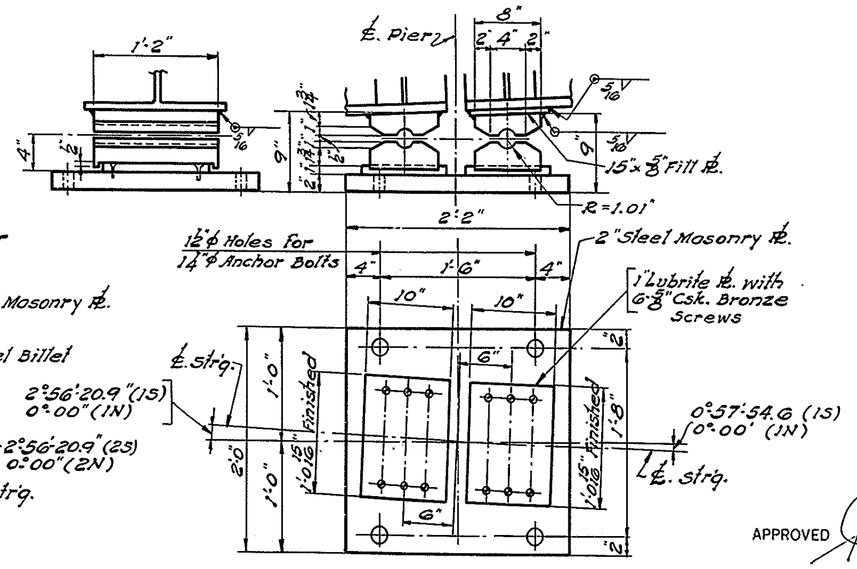

BEARING DETAILS AT PIERS 1S & 1N.

Scale: 1" = 1'-0"

2" ϕ PIN

(Finish All Over)

This sheet to be used in conjunction with sheet No 6.

APPROVED Jac. S. Robinson
BRIDGE ENGINEER

MADE BY J. A. W.
TRACED BY H.
CHECKED BY A. L.

STATE OF DELAWARE
STATE HIGHWAY DEPARTMENT

WALNUT STREET BRIDGE
OVER CHRISTINA RIVER
WILMINGTON, DELAWARE

APPROACH SPAN SECTIONS

SCALE	DATE	SHEET NO.
As Noted	APRIL 1954	7

PARSONS, BRINCKERHOFF, HALL & MACDONALD
ENGINEERS NEW YORK

COUNTY	CONTRACT	P. R. A. DIV. NO.	STATE	FED. AID PROJECT NO.	FISCAL YEAR	SHEET NO.	TOTAL SHEETS
NEW CASTLE	1224-(4)		DEL.	S.U-1(10)	1954	8	42

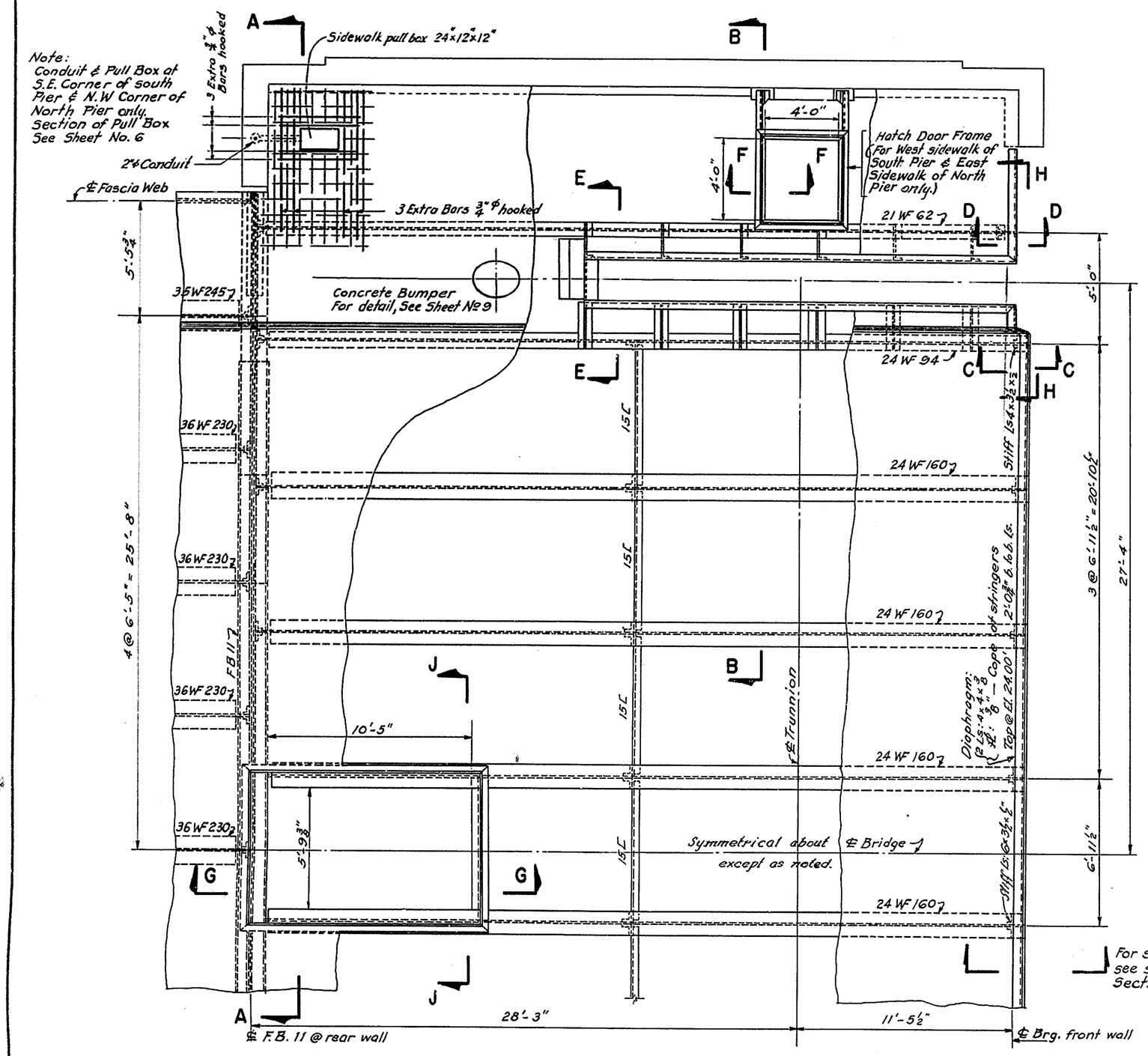

PLAN OF DECK OVER BASCULE SPAN

Scale: 1/4" = 1'-0"

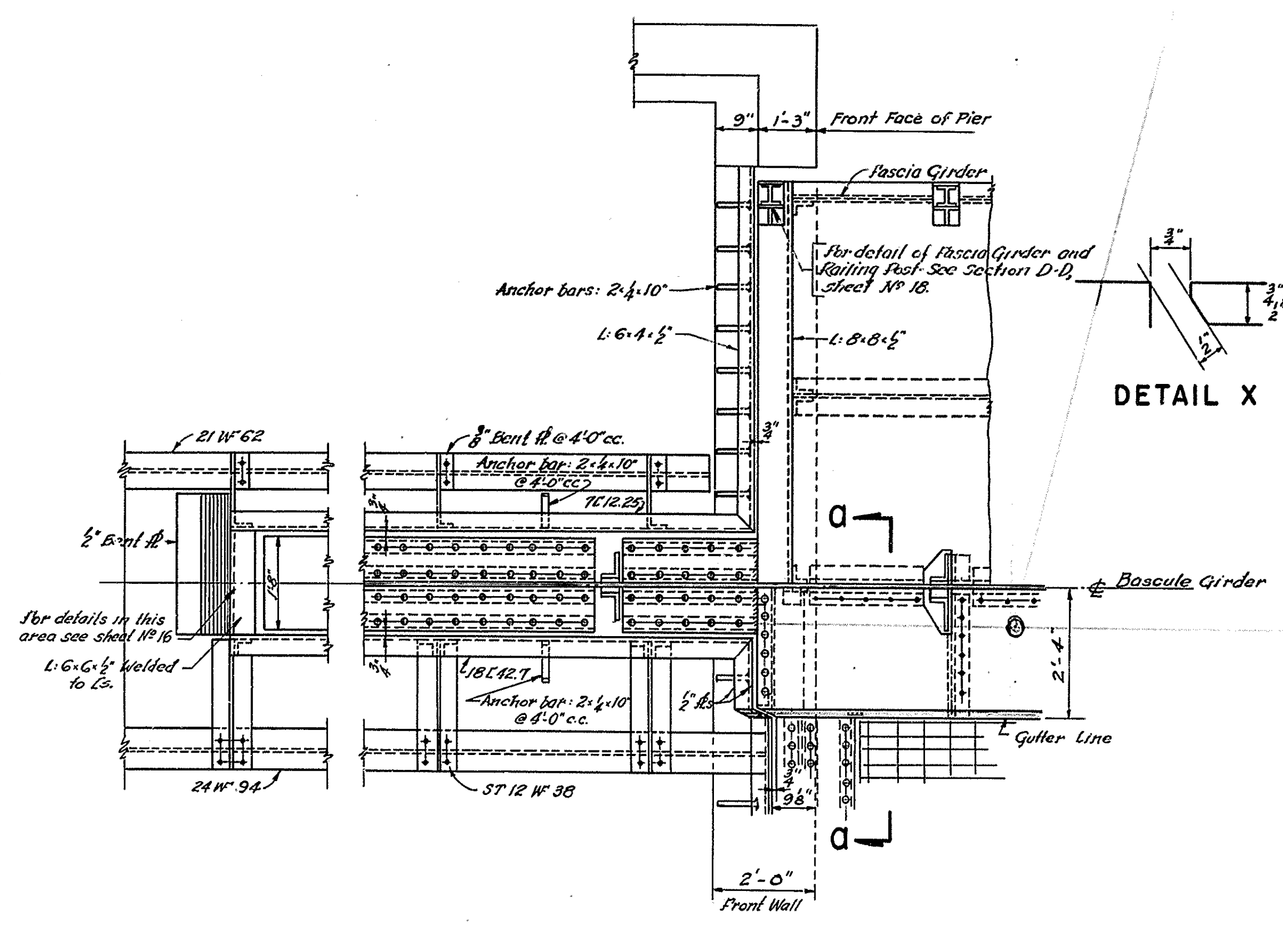

PLAN AT HEEL FLOOR BREAK OF BASCULE SPAN

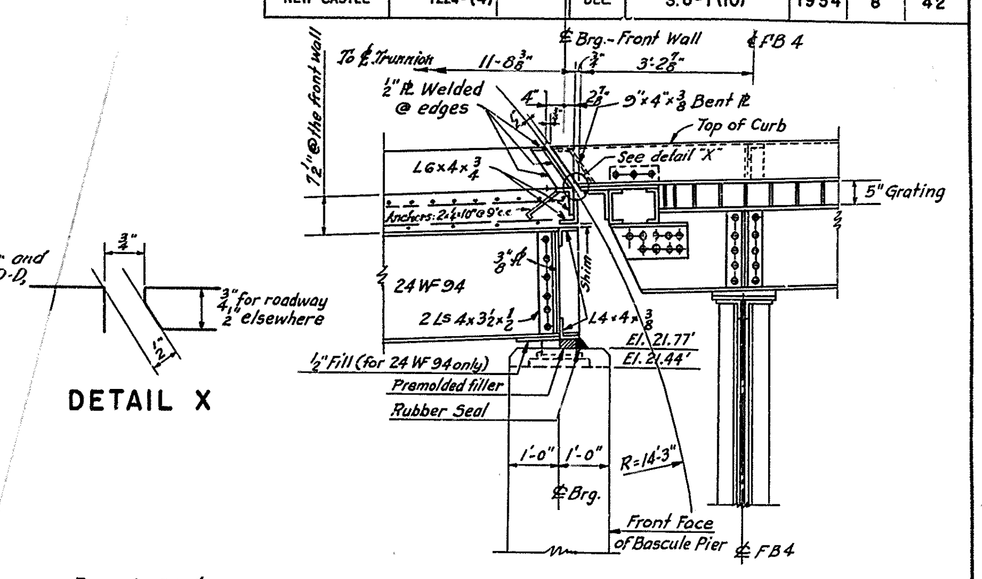

DETAIL X

SECTION C-C

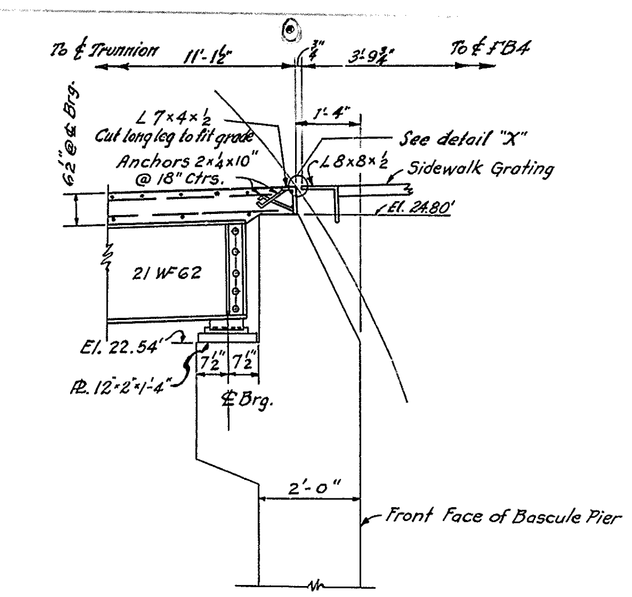

SECTION D-D

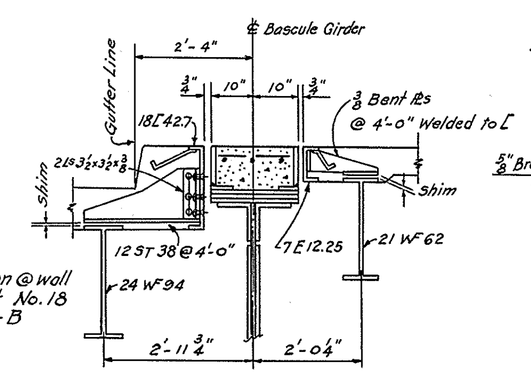

SECTION E-E

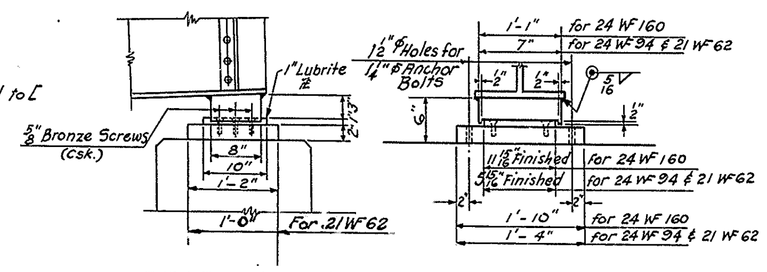

BEARING DETAILS FOR FRONT WALL

Scale 3/4" = 1'-0"

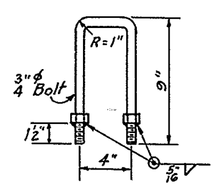

DETAIL FOR U-BOLTS

Scale: 1½" = 1'-0"

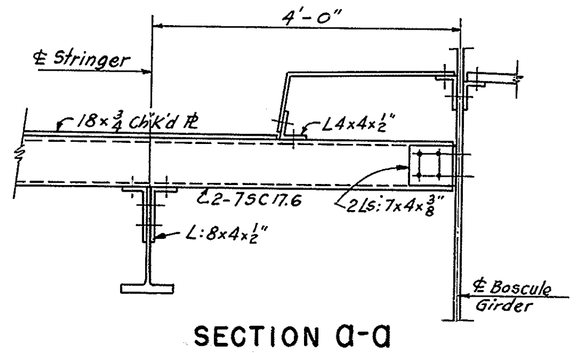

SECTION a-a

Scale: 3/4" = 1'-0"

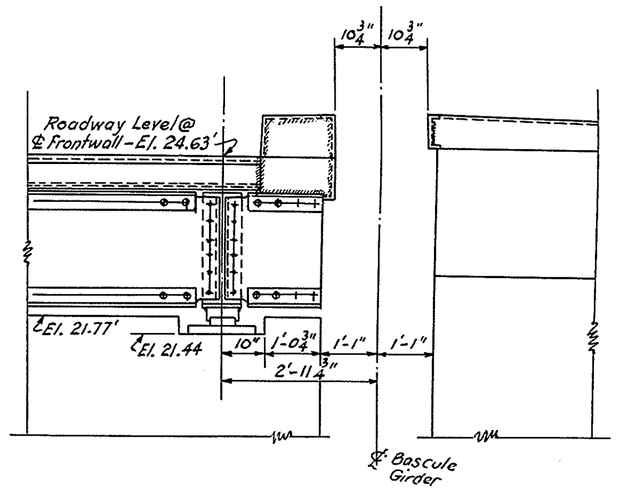

SECTION H-H

For sections A-A, G-G, and J-J see sheet No 9.

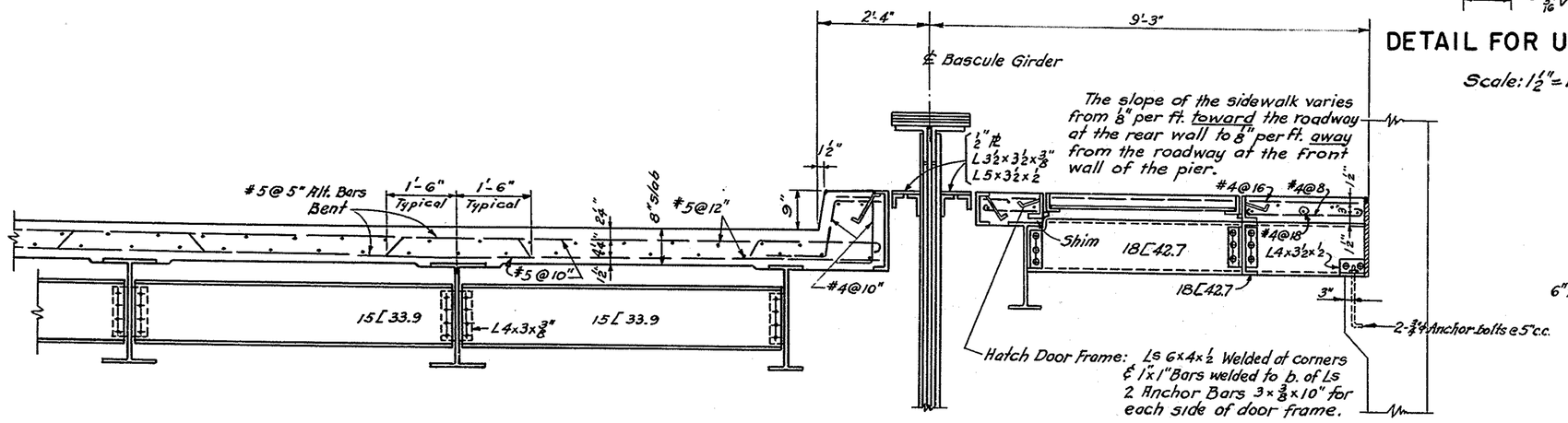

SECTION B-B

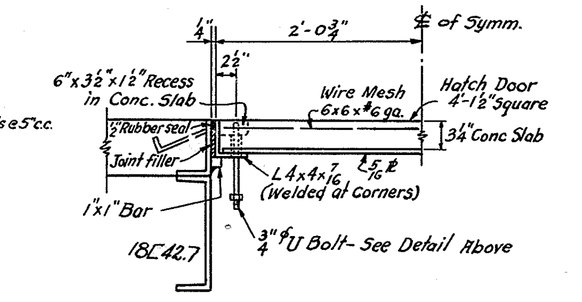

SECTION F-F

Scale 1½" = 1'-0"

MADE BY A.L.
TRACED BY R.C.R.
CHECKED BY R.H.S.

APPROVED Jac S. Robinson
BRIDGE ENGINEER

STATE OF DELAWARE
STATE HIGHWAY DEPARTMENT

WALNUT STREET BRIDGE
OVER CHRISTINA RIVER
WILMINGTON, DELAWARE

DECK OVER BASCULE PIER

SCALE	DATE	SHEET NO.
1/2" = 1'-0" except as noted	APRIL 1954	8

PARSONS, BRINCKERHOFF, HALL & MACDONALD
ENGINEERS NEW YORK

13-2

MICROFILMED

COUNTY	CONTRACT	P. R. A. CIV. NO.	STATE	FED. AID PROJECT NO.	FISCAL YEAR	SHEET NO.	TOTAL SHEETS
NEW CASTLE	1224 (4)		DEL.	S.U-1 (10)	1954	9	42

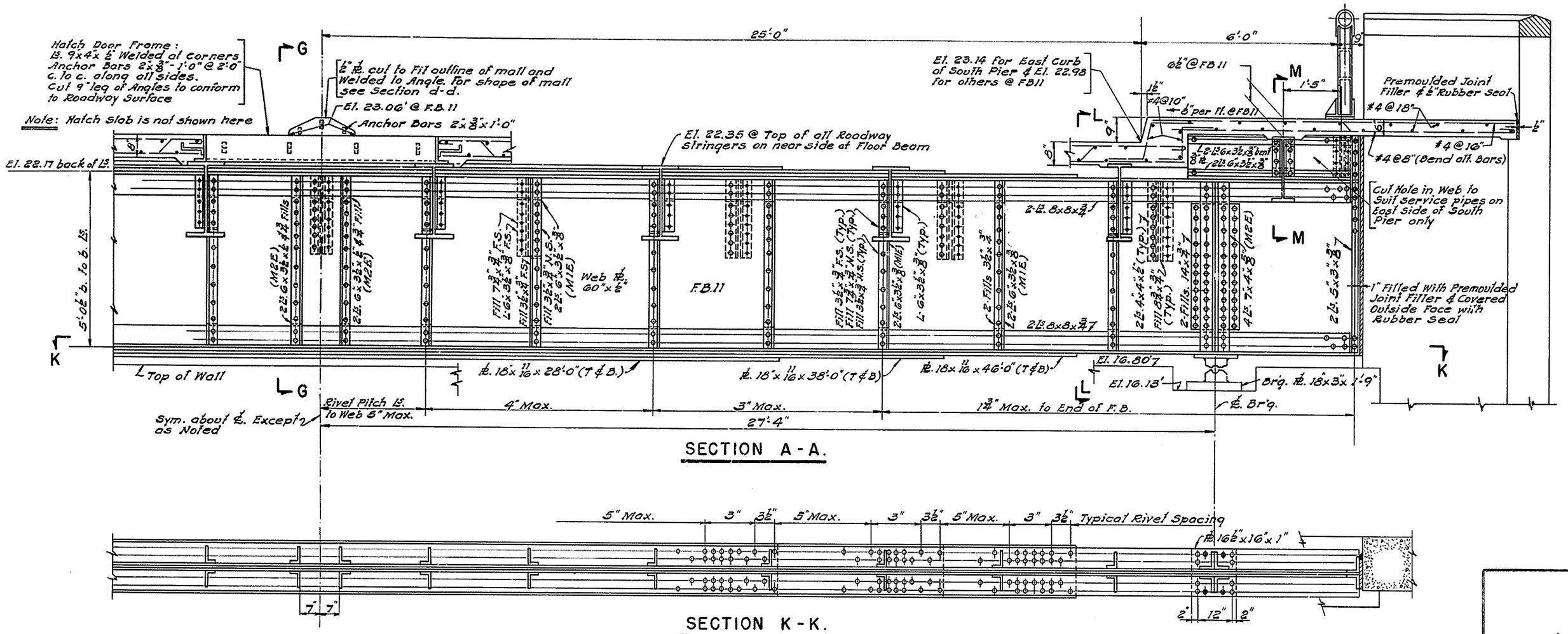

MADE BY A.L.
TRACED BY R.
CHECKED BY D.S.

APPROVED Jae S. Robinson
BRIDGE ENGINEER

STATE OF DELAWARE
STATE HIGHWAY DEPARTMENT

WALNUT STREET BRIDGE
OVER CHRISTINA RIVER
WILMINGTON, DELAWARE

DETAIL OF DECK OVER BASCULE PIER

SCALE	DATE	SHEET NO.
¼" = 1'-0" Except as Noted	APRIL 1954	9

PARSONS, BRINCKERHOFF, HALL & MACDONALD
ENGINEERS NEW YORK

COUNTY	CONTRACT	P. R. A. DIV. NO.	STATE	FED. AID PROJECT NO.	FISCAL YEAR	SHEET NO.	TOTAL SHEETS
NEW CASTLE	1224-(4)		DEL.	S.U-1(10)	1954	10	42

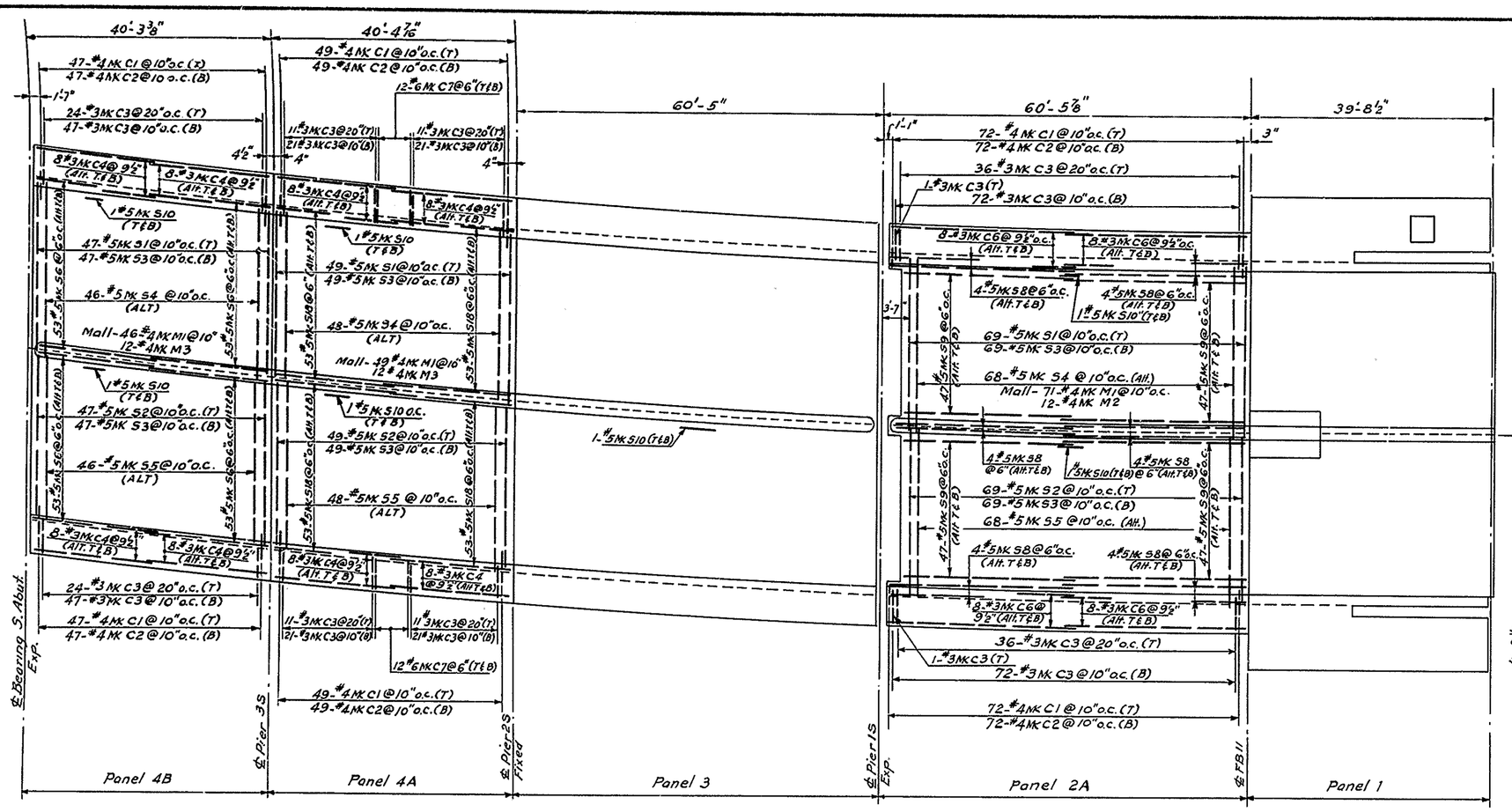

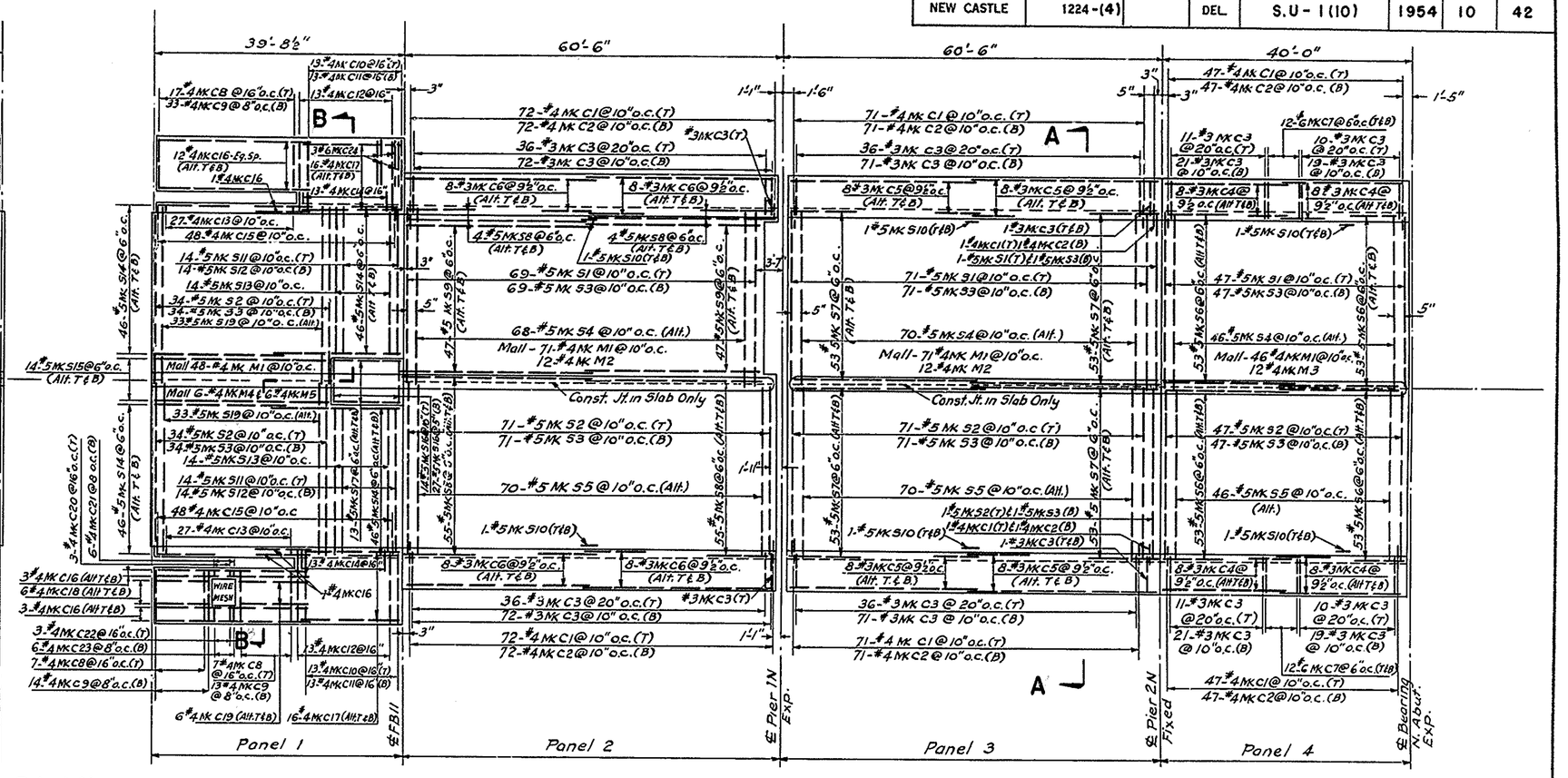

PLAN

Scale: 1" = 15'

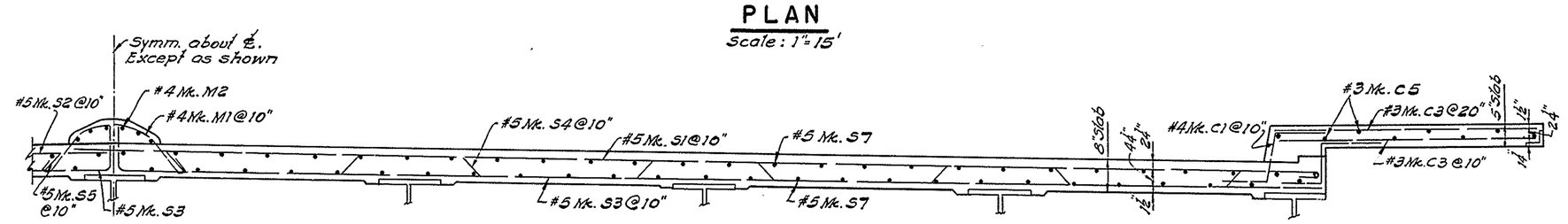

SECTION A-A.

Scale: 1/2" = 1'-0"

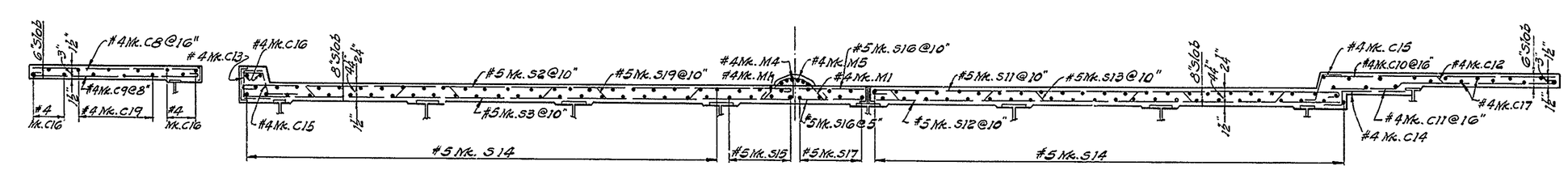

SECTION B-B

Scale: 1/4" = 1'-0"

BAR SCHEDULE

Mark	Size	Length	Type	DETAILS A	B	C	D	NO. OF BARS REQUIRED 2 Panels 1	Panel 2	Panel 2A	2 Panels 3	Panel 4	Panel 4A	Panel 4B	Total
S1	5	29'-0"	A	28'-5"	0'-7"				69	69	144	47	49	47	425
S2	5	26'-7"	A	26'-0"	0'-7"			130	71	69	144	47	49	47	563
S3	5	26'-8"	B	25'-10"	0'-10"			130	140	138	288	94	98	94	988
S4	5	30'-4"	C	3'-4"					68	68	140	46	48	46	416
S5	5	27'-11"	C	0'-11"					70	68	140	46	48	46	418
S6	5	20'-4"	Str.									212		212	424
S7	5	30'-7"	"								424				424
S8	5	30'-9"	"						118	24					142
S9	5	29'-6"	"						94	188					282
S10	5	2'-0"	Str.						4	4	8	4	4	4	28
S11	5	23'-10"	D	22'-8"	0'-7"			50							50
S12	5	22'-8"	Str.					50							50
S13	5	24'-8½"	I	10"				50							50
S14	5	20'-10"	Str.					368							368
S15	5	28'-0"	"					28							28
S16	5	6'-10"	"					82							82
S17	5	11'-1"	"					20							20
S18	5	21'-0"	Str.										212		212
S19	5	28'-2½"	I	4'-4"				132							132
C1	4	4'-6"	E	1'-8"	1'-2"	0'-2"	1'-8"		144	144	288	94	98	94	862
C2	4	4'-4"	E	1'-8"	1'-0"	0	1'-8"		144	144	288	94	98	94	862
C3	3	5'-8"	Str.						218	218	436	122	128	142	1264
C4	3	20'-6"	"									32	32	32	96
C5	3	30'-2"	"								64				64
C6	3	30'-4"	"						32	32					64
C7	6	5'-8"	"									48	48		96
C8	4	8'-0"	Str.					62							62
C9	4	9'-0"	D	8'-0"	0'-6"			120							120
C10	4	11'-1½"	Str.					52							52
C11	4	11'-5"	F					52							52
C12	4	11'-8½"	G					52							52
C13	4	3'-1"	H					108							108
C14	4	4'-4"	E	2'-11"	0'-7"	0	0'-10"	52							52
C15	4	3'-4"	E	1'-0"	1'-1"	0'-2"	1'-3"	192							192
C16	4	23'-10"	Str.					44							44
C17	4	16'-11"	"					64							64
C18	4	8'-7"	"					12							12
C19	4	10'-11"	"					12							12
C20	4	1'-0"	Str.					6							6
C21	4	1'-6	A	1'-0"	0'-6"			12							12
C22	4	2'-4"	Str.					6							6
C23	4	3'-4"	D	2'-4"	0'-6"			12							12
C24	6	4'-10"	D	3'-6"	0'-8"			24							24
M1	4	4'-6½"	J					96	71	71	142	46	49	46	521
M2	4	30'-9"	Str.						12	12	24				48
M3	4	20'-4"	"									12	12	12	36
M4	4	28'-0"	"					12							12
M5	4	11'-1"	Str.					12							12

BAR DETAILS

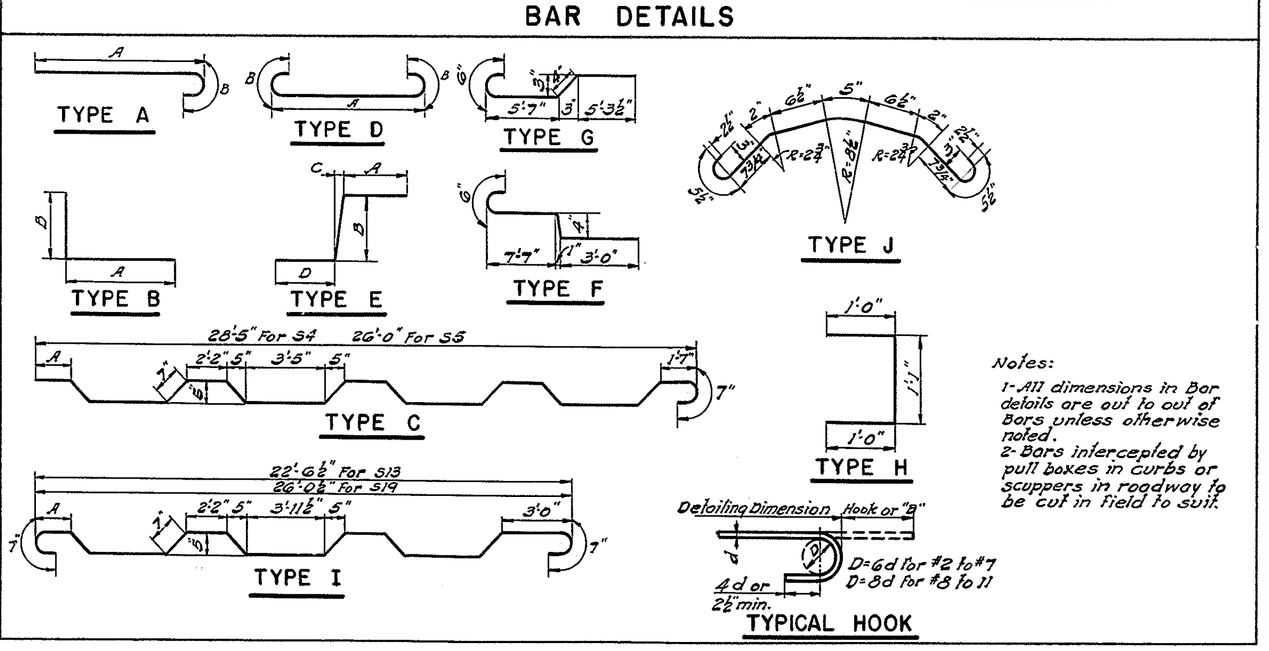

Notes:
1- All dimensions in Bar details are out to out of Bars unless otherwise noted.
2- Bars intercepted by pull boxes in curbs or scuppers in roadway to be cut in field to suit.

BAR SCHEDULE FOR ALTERNATE STRUCTURAL SIDEWALK ON SOUTH RETAINING WALL

Size	Mark	Length	BARS - No. REQUIRED West Wall	East Wall	Total
5		19'-6"	4	—	4
5		30'-0"	12	16	28
5		26'-0"	4	4	8
5		23'-0"	4	4	8
4		5'-9"	310	330	640
6	B3	6'-11"	51	54	105
6	B4	6'-11"	51	54	105
3		30'-0"	18	24	42
3		25'-3"	6	12	18
3		22'-6"	6	—	6
3		19'-0"	6	—	6
4		1'-6 to 2'-6	1@1'-9" every 1'-0"	1@0 to Bars 3"	350
4	T1	3'-2"	155	165	320

Note: For Details and Location of Bars in Structural Sidewalk, see Sh. No 9

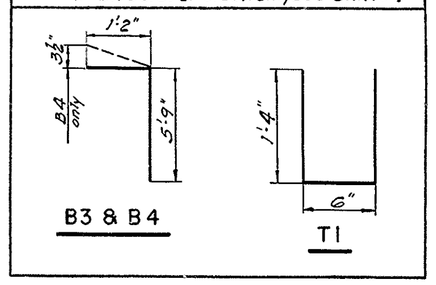

BAR SCHEDULE FOR ALTERNATE STRUCTURAL SIDEWALK ON NORTH RETAINING WALL

Size	Mark	Length	Bars - No. Required West Wall	East Wall	Total
#5		30'-0"	8	8	16
#5		31'-9"	4	4	8
#5		28'-6"	4	4	8
#4		5'-9"	236	236	472
#6	B3	6'-11"	39	39	78
#6	B4	6'-11"	39	39	78
#3		30'-0"	12	12	24
#3		31'-3"	6	6	12
#3		28'-0"	6	6	12
#4		1'-6 to 2'-6	1@0 varies every 1'-0"	1@0 to Bars 53"	260
#4	T1	3'-2"	118	118	236

APPROVED Joe S. Robinson
BRIDGE ENGINEER

STATE OF DELAWARE
STATE HIGHWAY DEPARTMENT

WALNUT STREET BRIDGE
OVER CHRISTINA RIVER
WILMINGTON, DELAWARE

REINFORCING BARS IN DECK SLABS

SCALE	DATE	SHEET NO.
As Shown	APRIL 1954	10

PARSONS, BRINCKERHOFF, HALL & MACDONALD
ENGINEERS NEW YORK

MADE BY J.A.W.
TRACED BY R.C.R. & J.R.
CHECKED BY R.O.E.

COUNTY	CONTRACT	P. B. A. DIV. NO.	STATE	FED. AID PROJECT NO.	FISCAL YEAR	SHEET NO.	TOTAL SHEETS
NEW CASTLE	1224-(4)		DEL.	S.U-1 (10)	1954	11	42

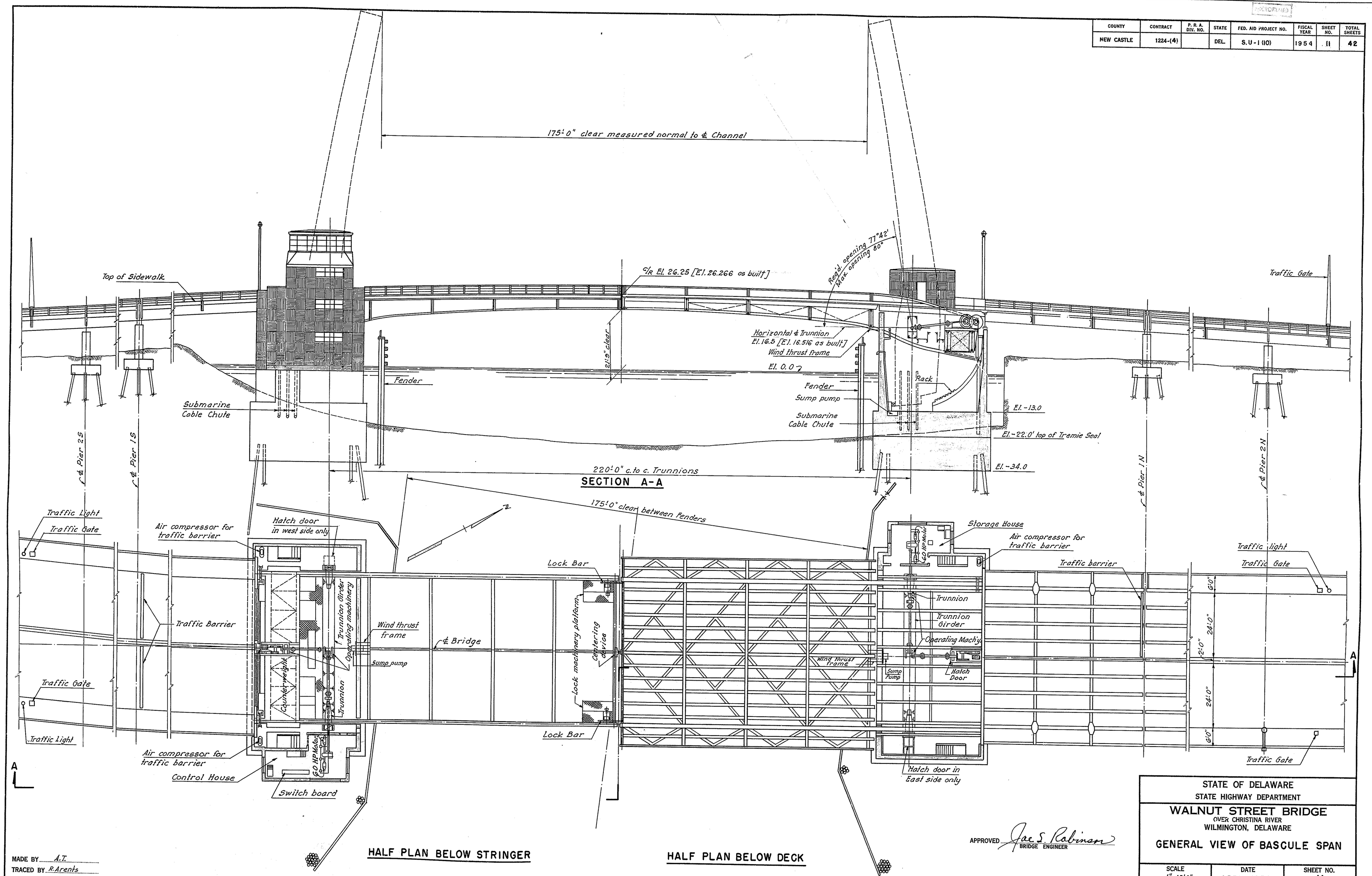

MADE BY A.T.
TRACED BY R. Arents
CHECKED BY R.L.

APPROVED Jac S. Robinson
BRIDGE ENGINEER

STATE OF DELAWARE
STATE HIGHWAY DEPARTMENT

WALNUT STREET BRIDGE

OVER CHRISTINA RIVER
WILMINGTON, DELAWARE

GENERAL VIEW OF BASCULE SPAN

SCALE	DATE	SHEET NO.
1"=15'-0"	APRIL 1954	11

PARSONS, BRINCKERHOFF, HALL & MACDONALD
ENGINEERS NEW YORK

COUNTY	CONTRACT	P. R. A. DIV. NO.	STATE	FED. AID PROJECT NO.	FISCAL YEAR	SHEET NO.	TOTAL SHEETS
NEW CASTLE	1224-(4)		DEL.	S.U-1 (10)	1954	12	42

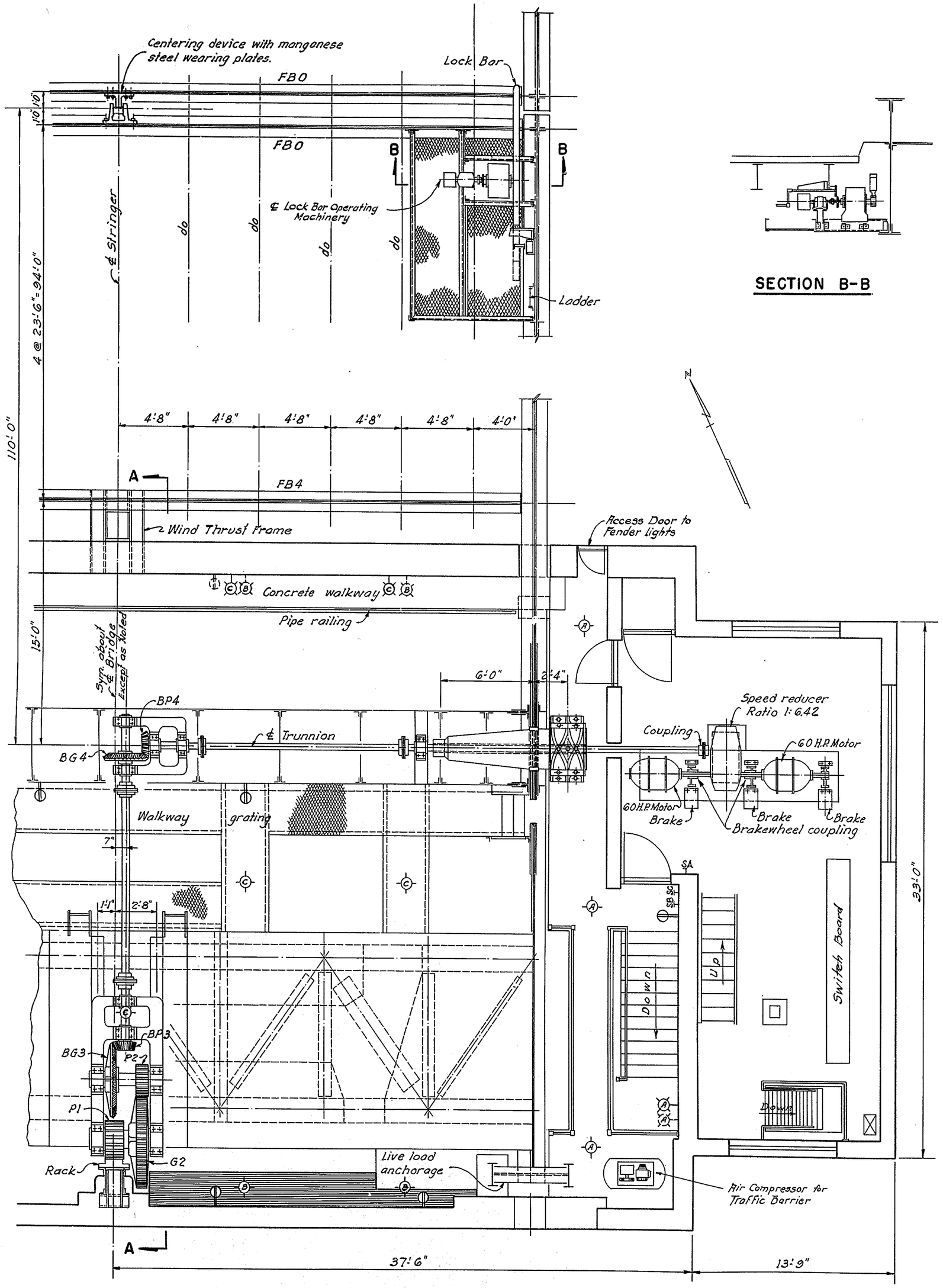

PLAN OF OPERATING MACHINERY

Note: Operating Machinery on East side of South Leaf and on West Side of North Leaf only.

SECTION B-B

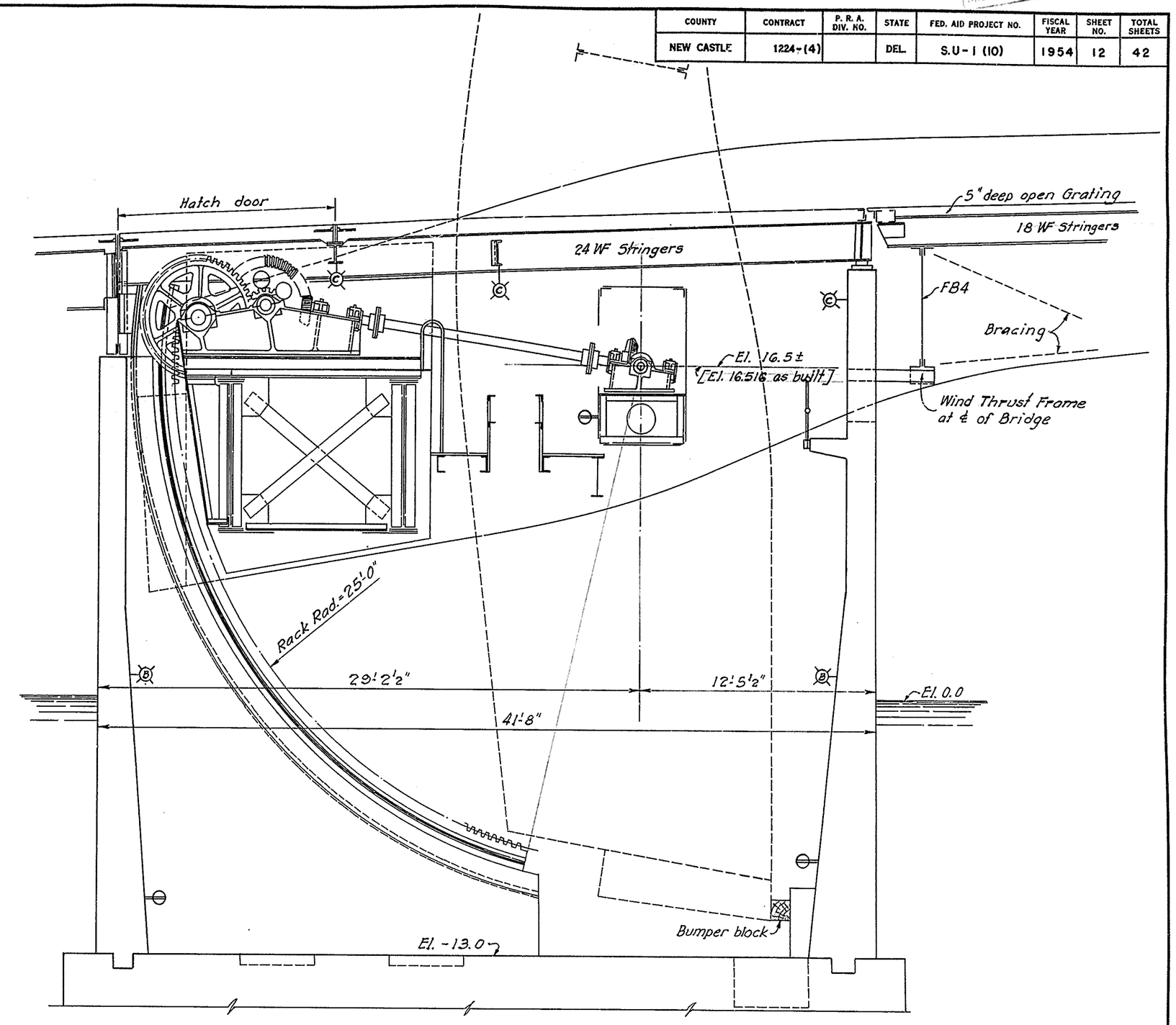

SECTION A-A

Note:

The time required for a full opening of the Span during normal motor operation of the machinery is 90 seconds.

The required angle of opening is 77°-42'. An overtravel of 2°-18' is provided, at which time the heel of the bascule girder will contact the bumper block.

LEGEND

- Ceiling fixture
- Wall bracket
- Outlet
- S Switch

APPROVED Jac S. Robinson
BRIDGE ENGINEER

MADE BY F.R.P.
TRACED BY R. Arents
CHECKED BY A.L.

STATE OF DELAWARE
STATE HIGHWAY DEPARTMENT

WALNUT STREET BRIDGE
OVER CHRISTINA RIVER
WILMINGTON, DELAWARE

GENERAL MACHINERY ARRANGEMENT

SCALE	DATE	SHEET NO.
¼" = 1'-0"	APRIL 1954	12

PARSONS, BRINCKERHOFF, HALL & MACDONALD
ENGINEERS NEW YORK

MICROFILMED

COUNTY	CONTRACT	P. R. A. DIV. NO.	STATE	FED. A'D PROJECT NO.	FISCAL YEAR	SHEET NO.	TOTAL SHEETS
NEW CASTLE	1224-(4)		DEL.	S.U-1(10)	1954	13	42

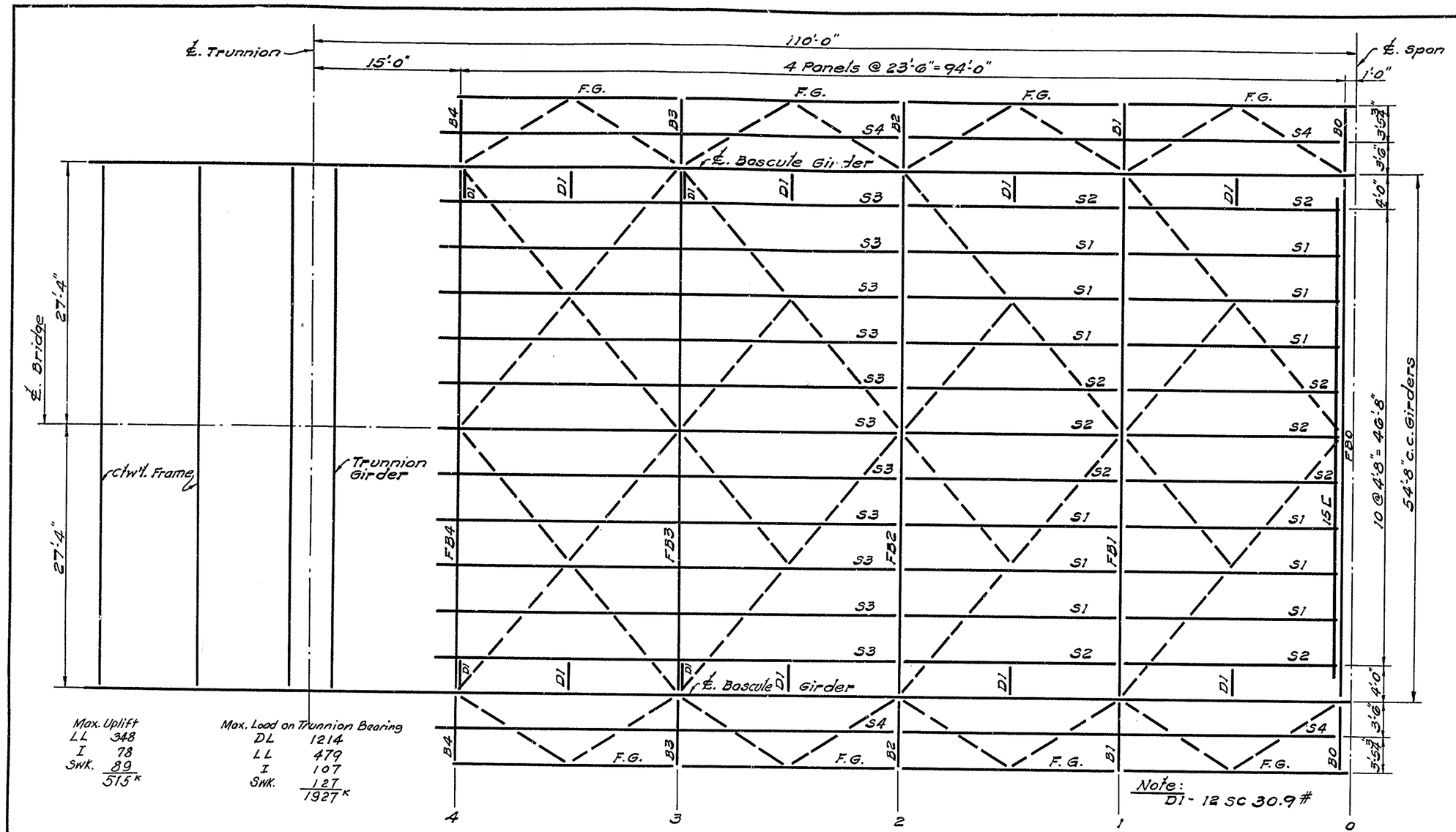

FRAMING PLAN

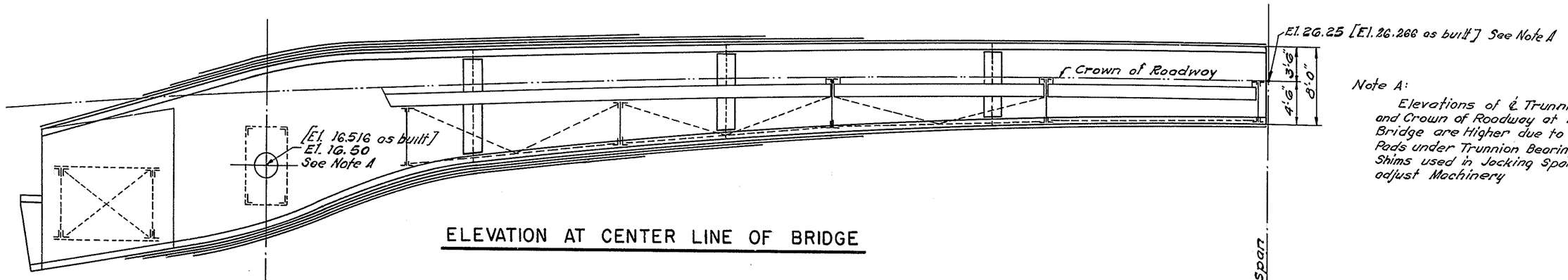

ELEVATION AT CENTER LINE OF BRIDGE

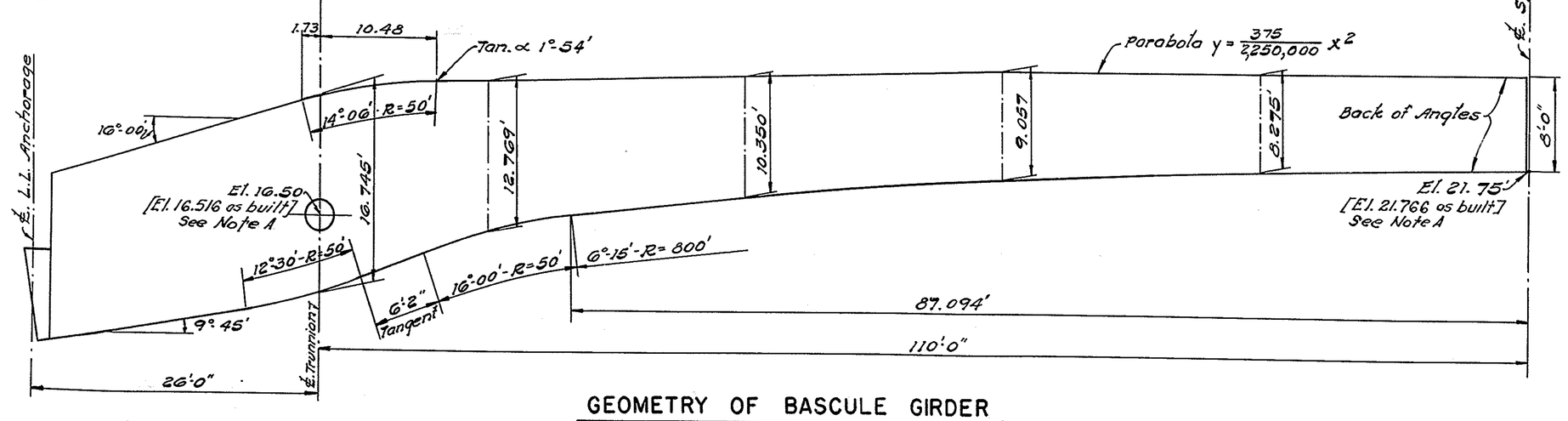

GEOMETRY OF BASCULE GIRDER

Note A:
Elevations of ℄ Trunnions and Crown of Roadway at ℄ of Bridge are higher due to Fabreeka Pads under Trunnion Bearings and Shims used in Jacking Spans to adjust Machinery

BASCULE GIRDERS

Panel Points At	0		1		2		3		4		℄ Trunnion			Front Cwt. Gr.		Rear Cwt. Gr.	
DL Concentration	38,700#		51,500#		57,100#		66,400#		55,200#		970,000#			402,000#		465,000#	
	Moment kip-ft.	Shear kips	Moment kip-ft.	Shear kips	Moment kip-ft.	Shear kips	Moment kip-ft.	Shear kips	Moment kip-ft.	Shear kips	Moment kip-ft.	Shear (kips) Chan. Side	Shear (kips) Cwt. Side	Moment kip-ft.	Shear kips	Moment kip-ft.	Shear kips
D.L.	0	30.4	862	82.0	2938	136.2	6382	197.6	11353	252.5	15418	307	90.7	4222	854.0	6	456.0
L.L.	0	54.8	1222	75.0	2585	101.4	3945	132.1	6430	152.2	6278	152	348	4150	348.0	1276	348.0
I.	0	16.4	367	21.6	747	25.8	1002	30.0	1460	34.7	1854	35	78	936	78.0	283	78.0
Sidewalk	0	4.9	116	14.0	445	23.1	985	32.2	1742	38.1	2310	38	89	1058	89.0	356	89.0
Total	0	106.5	2567	192.6	6715	286.5	12314	391.9	20985	477.5	27860	532	1422	10366	1369.0	1921	971.0
Web reqd. @ 11 K/□"	9.7		17.5		26.0		35.6		43.9		130.0			124.5		88.3	
Web Used (sq. in)	41.8		43.2		61.0		85.0		114.5		150.5			141.5		132.5	
S.M. reqd. @ 18 K/□"	0		1711		4477		8809		13990		18573			6910		1281	
Sections: Web	95½ × 7/16		98 13/16 × 7/16		108 9/16 × 9/16		123 1/16 × 11/16		152¾ × ¾		200 7/16 × ¾			188⅞ × ¾		176½ × ¾"	
Flange Angles	4 Ls. 8 × 8 × ⅝		4 Ls. 8 × 8 × ⅝		4 Ls. 8 × 8 × 1		4 Ls. 8 × 8 × 1"		4 Ls. 8 × 8 × 1		4 Ls. 8 × 8 × 1			4 Ls. 8 × 8 × 1		4 Ls. 8 × 8 × 1	
Cover Plates	2 Pls. 20 × ⅜		2 Pls. 20 × ⅜		2 Pls. 20 × ¾		8 Pls. 20 × ¾		8 Pls. 20 × ¾		8 Pls. 20 × ¾						
Gross S.M. (in³)	3060		3170		5650		12,400		16150		22420			9820		8910	
Net S.M. (in³)	2420		2535		4516		10,490		13580		18650			7480		6850	

FLOOR BEAMS

Panel Points	FB0		FB1		FB2		FB3		FB4	
	Moment kip-ft.	Shear kips	Moment kip-ft.	Shear kips	Moment kip-ft.	Shear kips	Moment kip-ft.	Shear kips	Moment kip-ft.	Shear kips
D.L.	255	21.2	381	30.4	381	30.4	381	30.4	244	19.5
L.L.	1162	82.5	1182	82.8	1182	82.8	1182	82.8	1270	88.6
I	587	41.3	348	24.4	348	24.4	348	24.4	635	44.3
Total	1998	145.0	1911	137.6	1911	137.6	1911	137.6	2149	152.4
Web reqd. @ 11 K/□"	13.2		12.5		12.5		12.5		14.9	
Web Used (in²)	18.4		20.2		24.0		20.2		31.5	
S.M. reqd. @ 18 K/□"	1332		1274		1274		1274		1432	
Sections: Web	49 × ⅜		54 × ⅜		64 × ⅜		54 × ⅜		72 × 7/16	
Flange Angles	4 Ls. 6 × 4 × ¾		4 Ls. 6 × 4 × ¾		4 Ls. 6 × 4 × ½		4 Ls. 6 × 4 × ¾		4 Ls. 6 × 4 × ⅝	
Top Cover Pls.	12½ × ¾ - F.L.		14 × ½ - F.L.		14 × 7/16 - F.L.		14 × ½ - F.L.		14 × ⅜ - F.L.	
	12½ × ¾ - 49'-11"		14 × ⅜ - 50'-0"		14 × 9/16 - 50'-0"		14 × ½ - 29'-8"			
Bott. Cover Pls.	12½ × ¾ - 40'-0"		14 × ½ - 40'-0"		14 × 7/16 - 40'-0"		14 × ½ - 40'-0"		14 × ⅝ - 32'-0"	
	12½ × ¾ - 30'-0"		14 × ½ - 29'-0"		14 × 7/16 - 29'-0"		14 × ½ - 29'-8"			
Gross S.M. (in³)	1660		1605		1595		1605		1760	
Net S.M. (in³)	1348		1304		1300		1304		1525	
b. to b. Ls.	49½		54½		64½		54½		72½	

STRINGERS

	S1		S2		S3		S4	
Section	18 WF 60		18 WF 50		18 WF 50		12 WF 45	
Span	23'-6"		23'-6"		2 Spans @ 23'-6"		2 Spans @ 23'-6"	
	Moment kip-ft.	Shear kips	Moment kip-ft.	Shear kips	Moment kip-ft.	Shear kips	Moment kip-ft.	Shear kips
D.L.	10.6	1.8	10.6	1.8	6.0	2.3	7.5	1.3
L.L.	88.0	21.0	88.0	21.0	72.5	22.2	20.1	3.4
I.	26.4	6.3	26.4	6.3	21.7	6.6	0	0
Total	125.0	29.1	125.0	29.1	100.2	31.1	27.6	4.7
Gr. S.M. (in³)	107.8		89.0		89.0		58.2	
Net S.M. (in³)	88.0				72.6		58.2	
S.M. reqd.	83.4		83.4		66.8		18.4	

Note:
Stresses are based on the loading of South Leaf. Some Sections will be used for both leafs.

SIDEWALK BRACKETS

Panel Points	B0		B1		B2		B3		B4	
	Moment kip-ft.	Shear kips	Moment kip-ft.	Shear kips	Moment kip-ft.	Shear kips	Moment kip-ft.	Shear kips	Moment kip-ft.	Shear kips
D.L.	19	4.5	35	8.4	35	8.4	35	8.4	23	5.5
L.L.	29	6.0	54	11.1	54	11.1	54	11.1	35	7.2
Total	48	10.5	89	19.5	89	19.5	89	19.5	58	12.7
S.M. Reqd. (in³)	32.0		59.3		59.3		59.3		38.7	
Section Used	⅜" Web & 4 Ls. 3½ × 3½ × ⅜" For All Brackets									

APPROVED Jae S. Robinson
BRIDGE ENGINEER

STATE OF DELAWARE
STATE HIGHWAY DEPARTMENT

WALNUT STREET BRIDGE
OVER CHRISTINA RIVER
WILMINGTON, DELAWARE

BASCULE SPAN STRESS SHEET

SCALE	DATE	SHEET NO.
3/8" = 1'-0"	APRIL 1954	13

PARSONS, BRINCKERHOFF, HALL & MACDONALD

MADE BY J. A. W.
TRACED BY H. Ronnevig.
CHECKED BY A. L.

COUNTY	CONTRACT	P. R. A. DIV. NO.	STATE	FED. AID PROJECT NO.	FISCAL YEAR	SHEET NO.	TOTAL SHEETS
NEW CASTLE	1224-(4)		DEL.	S.U-1 (10)	1954	14	42

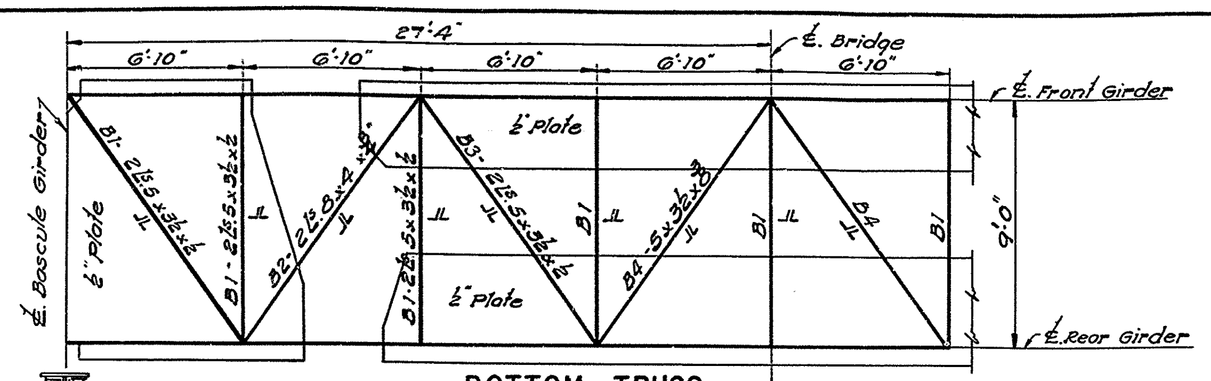

BOTTOM TRUSS

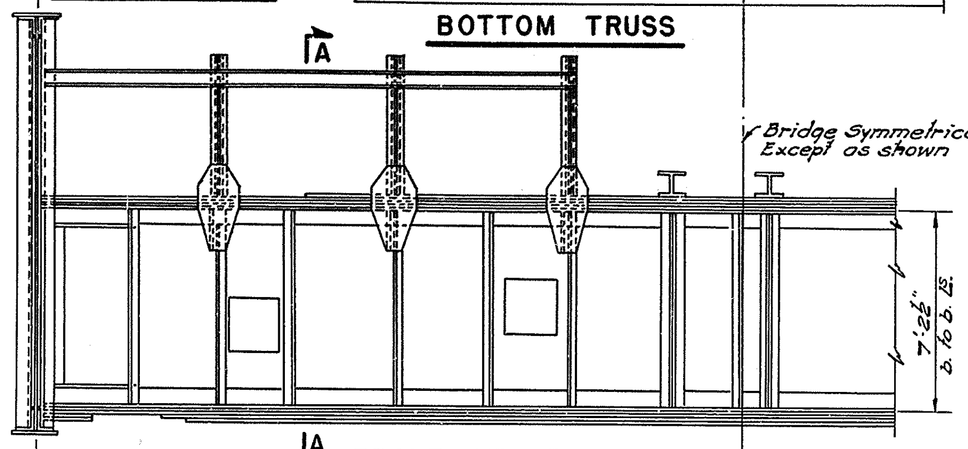

End Shear
DL 380
I 76
Total 456 K
Web Reqd @ 11 5/16" = 41.5 □"
Web Used:- 74 × 7/16 = 32.4
58 × ⅜ × 2 = 43.5
75.9 □"

FRONT GIRDER

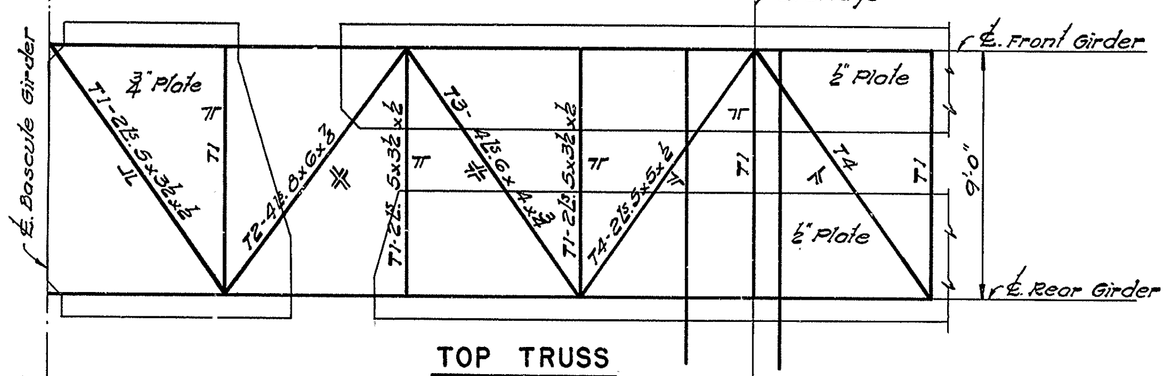

TOP TRUSS

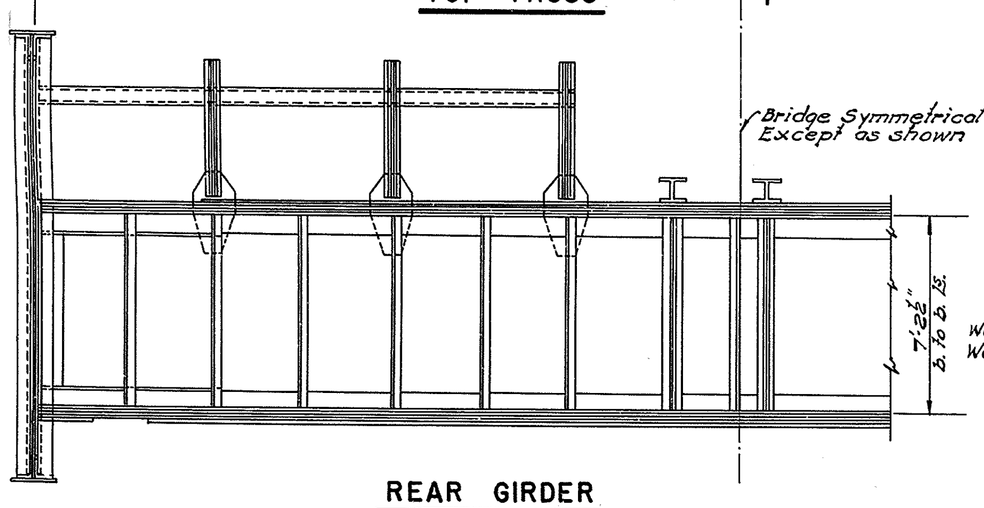

End Shear
DL 445
I 89
Total 534
Web Reqd @ 11 5/16" = 48.5 □"
Web Used:- 74 × ½ = 37
58 × ⅜ × 2 = 43.5
80.5 □"

REAR GIRDER

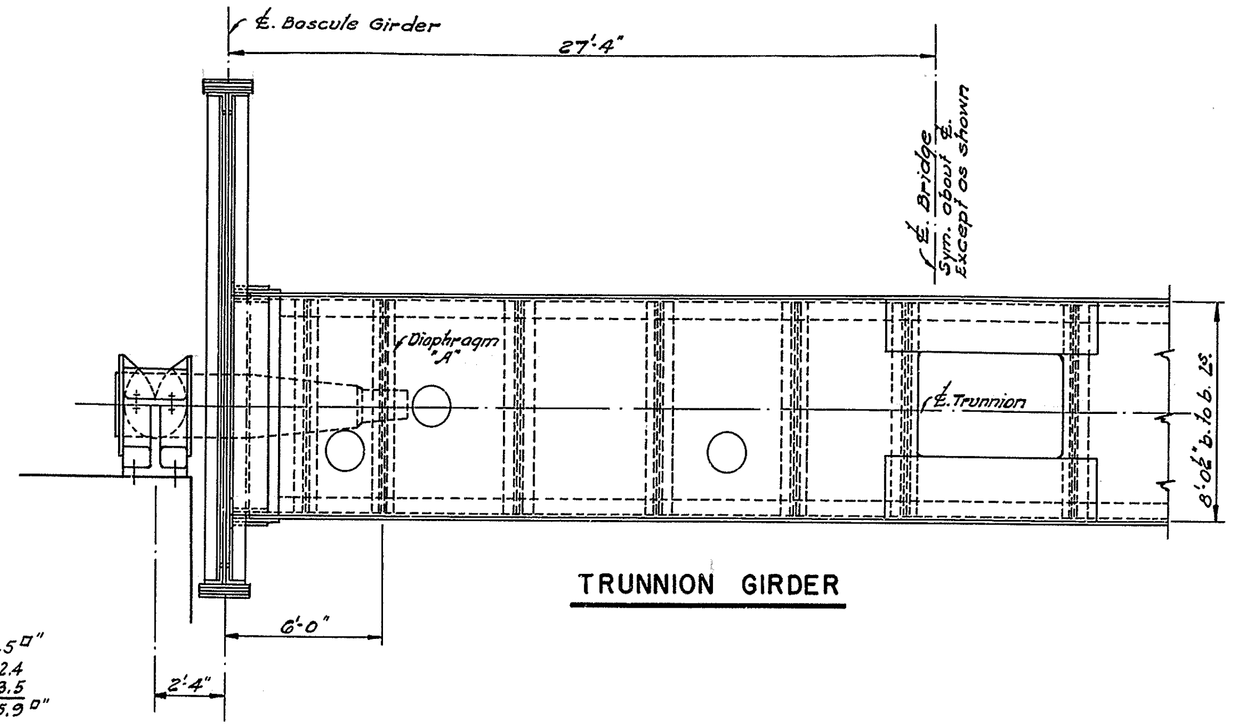

TRUNNION GIRDER

TRUNNION GIRDER				
	BRIDGE CLOSED		BRIDGE OPENED	
	Moment (k.ft.)	Shear (Kips)	Moment (k.ft.)	Shear (Kips)
D.L.	3347	508	3347	508
L.L.+I+SWK.	1658	275		
20% D.L.			669	116
Total	5005	783	4016	624
Web Reqd @ 11 5/16	71.4 in²		56.6 in²	
Web Used	96.0 in²		54.0 in²	
Section Used	2 PL 96 × ½ 2 PL 54 × ½ 4 Ls 8 × 8 × ¾			
Net S.M. (in³)	5040		3390	
Max. Flange Stress	11.9 K/□"		17.3 K/□"	

DIAPHRAGM "A"				
	BRIDGE CLOSED		BRIDGE OPENED	
At ℄ of Diaph.	Moment (k.ft.)	Shear (kips)	Moment (k.ft.)	Shear (kips)
D.L.	533	237	950	237
L.L.+I+SWK.	311	138		
20% D.L.			190	48
Total	844	375	1140	285
SM Reqd @ 18 5/16	546 in³		728 in³	
Section Used	1¾" Web PL & 2-¾" Reinforced PLs 4 Ls 4 × 4 × ½			
Net S.M. (in³)	2850		1110	

COUNTERWEIGHT FRAME										
	FRONT GIRDER					REAR GIRDER				
	TOP FLANGE			BOTTOM FLANGE		TOP FLANGE		BOTTOM FLANGE		
Angle of Opening	0°	54°-0'	80°	0	80°	0°	80°	0°	16°-56'	80°
D.L.	-723	-1225	-1100	+723	-142	-850	+825	+875	+890	+415
I	-145	-245	-220	+145	-28	-170	+165	+170	+178	+83
Reversal				+85	-85	-495	+495			
D+I+R	-868	-1470	-1320	+953	-255	-1515	+1485	+1020	+1068	+498
Flange Area Reqd @ 18 5/16		-81.5□"		+52.8□"		-84.0□"	+82.5□"			
D.+I.	-868	-1470	-1320	+868	-170	-1020	+990	+1020	+1068	+498
Operating Force	+86	+86	+86	-86	-86	-342	-342	+342	+342	+342
Reversal				+128	-128	-324	+324			
Total	-782	-1384	-1234	+910	-384	-1686	+972	+1362	+1410	+840
Flange Area Reqd @ 22.5 5/16		-61.5□"		+40.4□"		-74.8□"			+62.5□"	
Sections	Reqd A_G = -81.5□" Section Used		A_N = +52.8□"			Reqd A_G = -84.0□" Section Used		A_N = +82.5□"		
		A_G	A_N				A_G	A_N		
	Web 86 × 7/16	26.6	4.70			Web 86 × ½	7.16	5.38		
	Ls 8 × 8 × 1	30.00	24.00			Ls 8 × 8 × 1/8	33.46	26.71		
	3 PLs 18 × ¾	40.50	36.00			3 PLs 20 × ¾	45.00	40.50		
	1 PL 18 × ½	9.00	8.00			1 PL 20 × ½	10.00	9.00		
		85.76	72.70				95.62	81.59		

TRUSSES FOR COUNTERWEIGHT FRAME									
		TOP TRUSS				BOTTOM TRUSS			
		T1	T2	T3	T4	B1	B2	B3	B4
D.L.		±82	-510	+306	-103	±23	-141	+84	-28
I.		±16	-102	+61	-20	±4	-28	+17	-6
D.+I.		±98	-612	+367	-123	±27	-169	+101	-34
Area Reqd.	A_G (in²)	8.0	42.6		9.4	2.2	12.8		2.6
	A_N (in²)	5.4		20.4		1.5		5.6	
Section Used		2 Ls 5 × 3½ × ½	4 Ls 8 × 6 × ⅜	4 Ls 6 × 4 × ¾	2 Ls 5 × 3 × ½	2 Ls 5 × 3½ × ½	2 Ls 8 × 4 × ¾	2 Ls 5 × 3½ × ½	2 Ls 5 × 3½ × ⅜
Area Furnished	A_G (in²)	8.0	45.9		9.5	8.0	16.9		6.1
	A_N (in²)	6.9		20.0		6.9		6.9	
L/r		107	52	78	88	107	85	88	90
Allowable Stress K/□"	F_T	18.0		18.0		18.0		18.0	
	F_C	12.2	14.3		13.1	12.2	13.2		13.0
		End Shear DL 650 I (20%) 130 Total 780 K A_N Reqd @ 11 5/16" = 70.9 □" Use ¾" Shear PL A_N Furnished = 109 × ¾ = 81.8 □"				End Shear DL 179 I (20%) 36 D+I 215 K A_N Reqd @ 11 5/16" = 19.6 □" Use ½" shear PL A_N Furnished = 109 × ½ = 54.5 □"			

COUNTERWEIGHT BALANCE TABLE							
	NORTH LEAF				SOUTH LEAF		
Items	Weight	Horizontal Moment about ℄ of Trunnion		Vertical Moment about ℄ of Trunnion	Weight	Horizontal Moment about ℄ of Trunnion	Vertical Moment about ℄ of Trunnion
Struct. Steel-Girders	327,440	+ 7,432,292	+	1,352,340	327,440	+ 7,432,292	+ 1,352,340
(By A.B. Dix) - Others	426,129	+ 11,259,766	+	1,079,154	426,615	+ 11,308,151	+ 1,085,153
Paint (1.2% of Painted St.)	7,510	+ 251,585	+	35,072	7,516	+ 252,162	+ 35,175
Sidewalk Grating	25,643	+ 1,555,730	+	250,784	25,643	+ 1,555,730	+ 250,784
Roadway Grating	93,817	+ 5,677,950	+	843,415	93,817	+ 5,677,950	+ 843,415
Railing	3,541	+ 214,868	+	41,430	3,541	+ 214,868	+ 41,430
Bituminous Filler 100#/c.f.	11,600	+ 702,960	+	113,448	11,600	+ 702,960	+ 113,448
Operating Mech.-No trun.	30,384	- 477,160	+	48,674	30,834	- 477,160	+ 48,674
Lock Bar Machinery	1659	+ 181,195	+	12,171	8,730	+ 931,736	+ 65,175
Concrete on Bas. Girders	446	- 4,384	+	3,903	446	- 4,384	+ 3,903
Navigation Lights	40	+ 4,360	+	354	40	+ 4,360	+ 354
Platform grating -Op. Ma.	2720	- 15,120	-	14,744	2720	- 15,120	- 14,744
Platform Grating-Lock Ma.					1336	+ 137,111	+ 7,268
Steel Platform-Lock Ma.					3007	+ 314,679	+ 18,560
Total	931,379	+ 26,784,042	+	3,766,000	943,285	+ 28,035,335	+ 3,850,935
18 c.f. C. Iron Blocks @ 452#/c.f.	8,100	- 180,897	+	19,910			
Concrete Cwt. - 9219 c.f. @ 150.2#/c.f.	1,384,694	- 24,905,083	-	3,379,350	1,411,021 (9410 c.f. @ 149.9#/c.f.)	- 25,648,608	- 3,527,743
576 conc. blocks @ 129 ea.	74,534	- 1,347,798	-	360,228	74,534	- 1,337,512	341,588
Reinf. St'L. in Cwt.	19,230	- 345,196	-	50,452	19,230	- 345,196	- 50,452
C. Iron Block 69 c.f.					31,050	- 701,539	+ 76,321
Balance	2,417,937	+ 5068	-	4,120	2,479,120	+ 2,480	+ 7,476

Notes:

Stresses of Counterweight and Trunnion Girder are based on the loading of South Leaf. Some sections will be used for both Leafs unless noted.

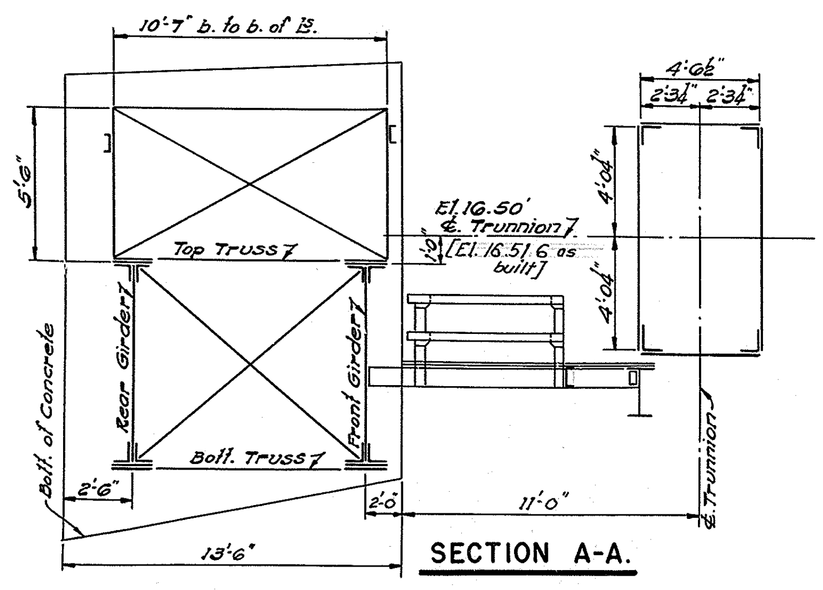

SECTION A-A.

MADE BY J. O'R.
TRACED BY H. Ronnevig.
CHECKED BY A.L.

APPROVED Jac S. Robinson
BRIDGE ENGINEER

STATE OF DELAWARE
STATE HIGHWAY DEPARTMENT

WALNUT STREET BRIDGE

OVER CHRISTINA RIVER
WILMINGTON, DELAWARE

TRUNNION GIRDER & COUNTERWEIGHT STRESS SHEET

SCALE	DATE	SHEET NO.
4" = 1'-0"	APRIL 1954	14

PARSONS, BRINCKERHOFF, HALL & MACDONALD
ENGINEERS NEW YORK

COUNTY	CONTRACT	P. R. A. DIV. NO.	STATE	FED. AID PROJECT NO.	FISCAL YEAR	SHEET NO.	TOTAL SHEETS
NEW CASTLE	1224-(4)		DEL.	S. U-1 (10)	1954	15	42

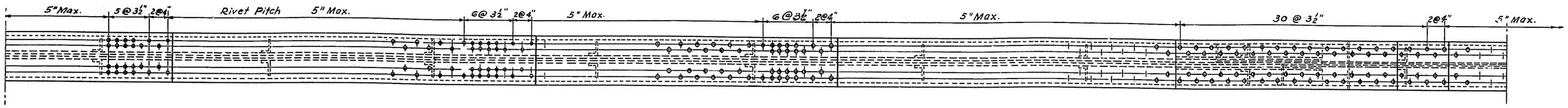

PLAN OF TOP FLANGE

Note: Due to fabrication or erection errors in the girders, the toe ends of the 2 leafs did not result in one level transversely. The warped condition was corrected by removing rivets and splice material in the top flanges and webs, supplied new splice plates and angles and welded and reamed certain holes to make new splices, after the girders were moved to the amounts as shown and the toe floorbeams were made level.

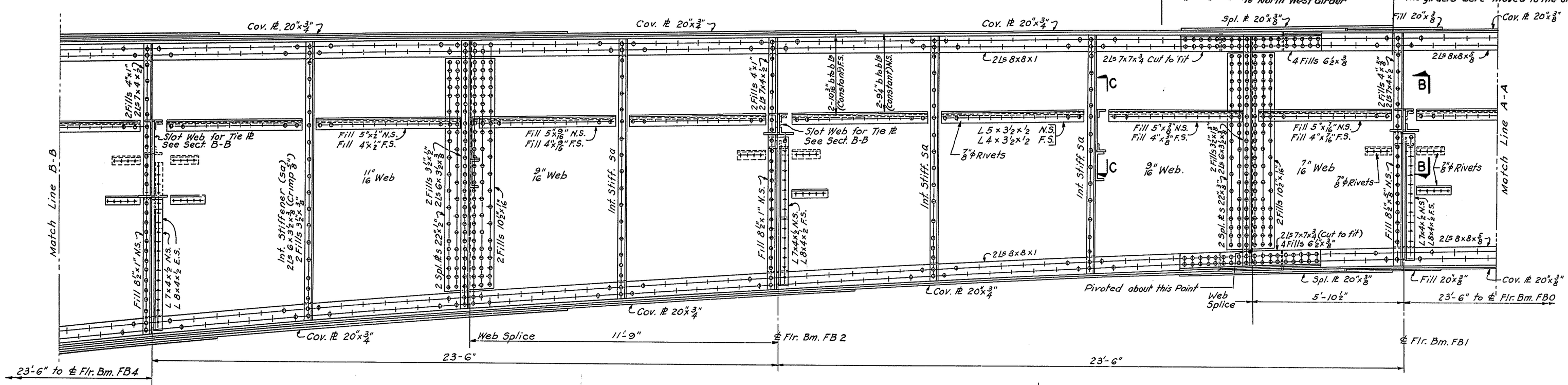

ELEVATION

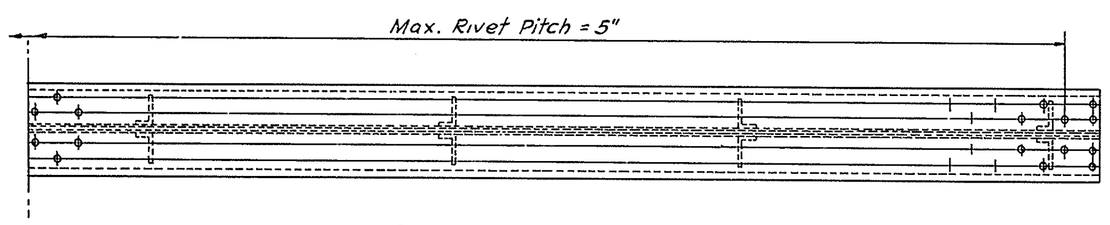

PLAN OF TOP FLANGE

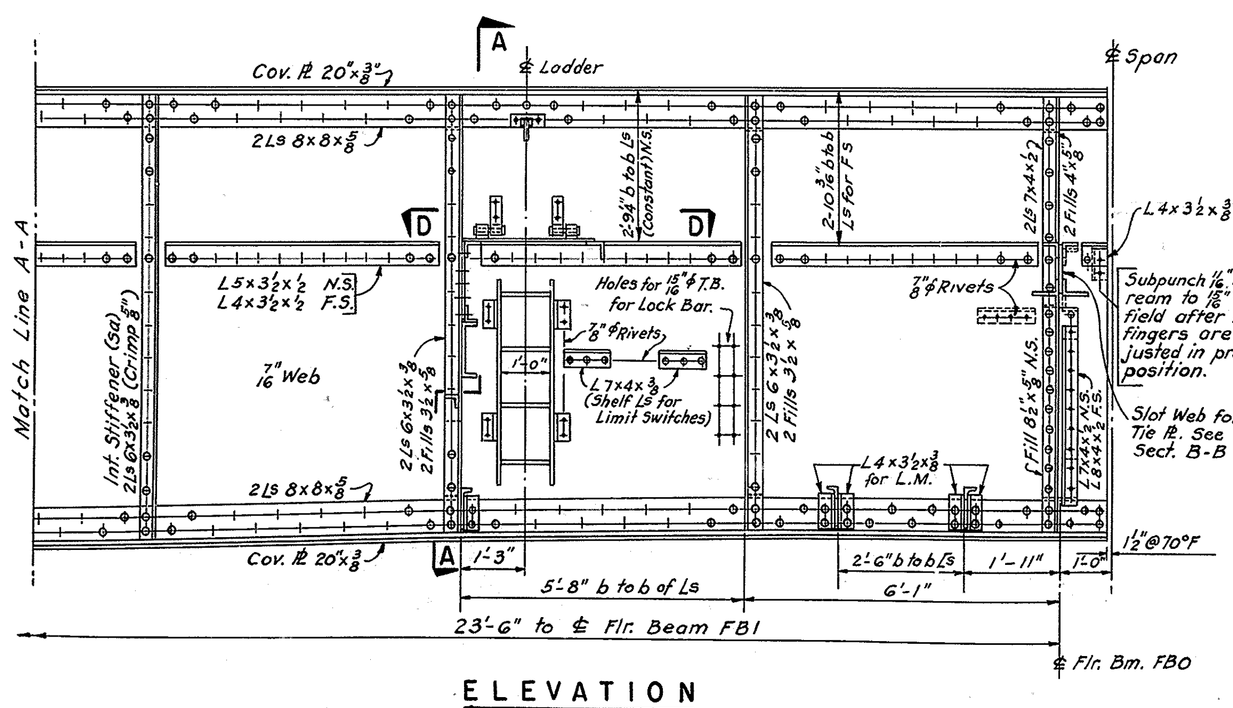

ELEVATION

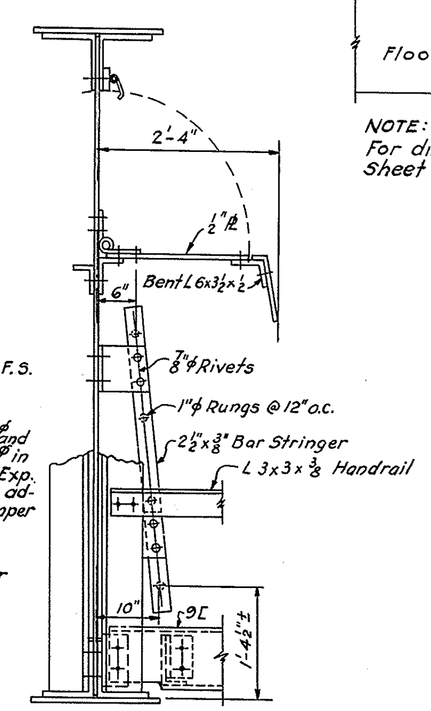

NOTE:
For details of platform framing see Sheet number 19

SECTION A-A
Scale: ¾" = 1'-0"

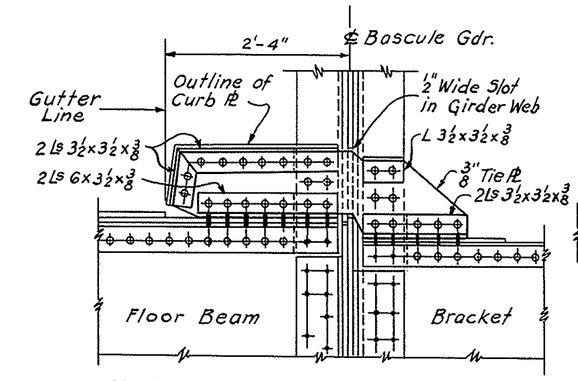

NOTE:
For dimensions of curb not shown see Sheet number 17

SECTION B-B
Scale: ¾" = 1'-0"

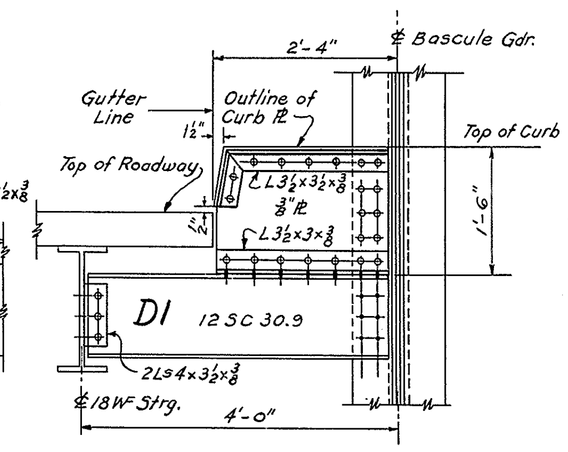

SECTION C-C
Scale: ¾" = 1'-0"

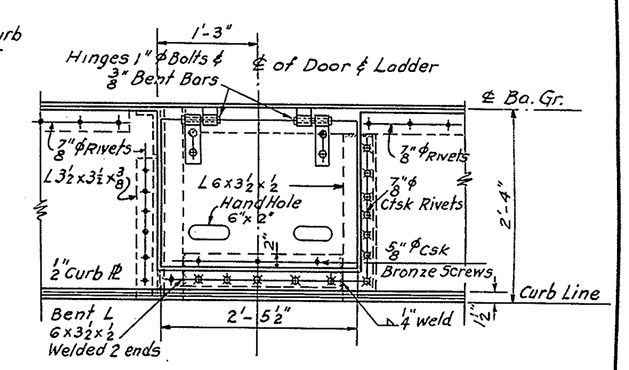

SECTION D-D
Scale: ¾" = 1'-0"

NOTES

1 For general notes see sheet number 5
2 L.M. indicates material for lock machinery.
3 Ladder and platform connections for Girders of South Leaf only.
4 All rivets to be 1"φ except as noted.
5 For geometry of bascule girders see sheet number 13

APPROVED Jas. S. Robinson
BRIDGE ENGINEER

STATE OF DELAWARE
STATE HIGHWAY DEPARTMENT

WALNUT STREET BRIDGE
OVER CHRISTINA RIVER
WILMINGTON, DELAWARE

BASCULE GIRDER DETAILS

SCALE	DATE	SHEET NO.
1" = 1'-0" EXCEPT AS NOTED	APRIL 1954	15

PARSONS, BRINCKERHOFF, HALL & MACDONALD
ENGINEERS NEW YORK

MADE BY W-W
TRACED BY R.C.R.
CHECKED BY J.L.

COUNTY	CONTRACT	P. R. A. DIV. NO.	STATE	FED. AID PROJECT NO.	FISCAL YEAR	SHEET NO.	TOTAL SHEETS
NEW CASTLE	1224-(4)		DEL.	S.U-1 (10)	1954	16	42

MICROFILMED

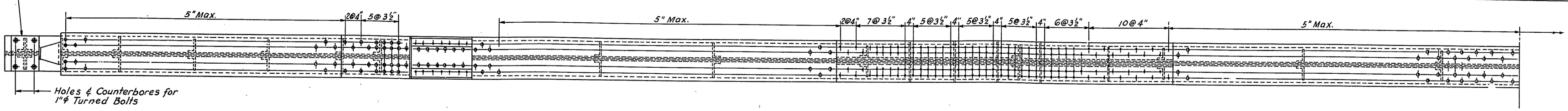

DEVELOPED PLAN OF TOP FLANGE

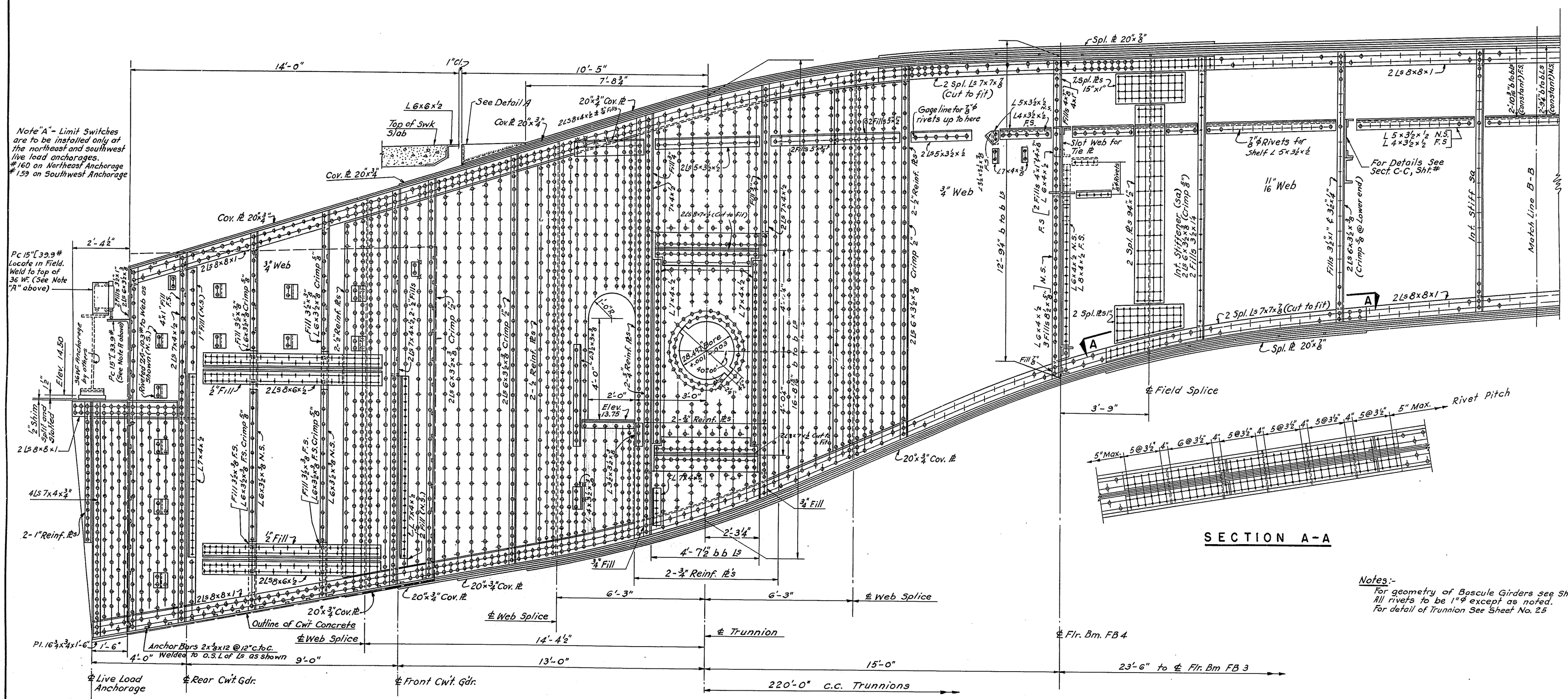
Note "A" - Limit Switches are to be installed only at the northeast and southwest live load anchorages.
#160 on Northeast Anchorage
#159 on Southwest Anchorage
Pc 15"[39.9# Locate in Field. Weld to top of 36 WF. (See Note "A" above)
Elev. 14.50
36WF Anchorage by others
Pc 15"[33.9# (See Note A above)
(Welded 2x2x¼ to Web as shown N.S.)
1/2" Shim Space and Solid
2 Ls 8x8x1
4 Ls 7x4x¾
2-1"Reinf. Pls
Pl. 16¾x¾x1'-6"
1'-6"
4'-0" Welded
Anchor Bars 2x¾x12 @ 12" c.to.c. to o.s. L of Ls as shown
Outline of Cwt Concrete
Live Load Anchorage
Rear Cwt. Gdr.
Front Cwt. Gdr.
Web Splice
Trunnion
Flr. Bm. FB 4
Flr. Bm. FB 3
220'-0" c.c. Trunnions
Field Splice
Rivet Pitch
Spl. Pl 20"x⅞"
2 Spl. Ls 7x7x⅞ (Cut to fit)
Gage line for ⅞"φ rivets up to here
Slot Web for Tie Pl
⅞"φ Rivets for Shelf L 5x3½x½
For Details See Sect. C-C, Sht. #
Inf. Stiff. Sa.
Match Line B-B
Elev. 13.75
Reinf. Pls
Cov. Pl 20"x¾"
¾" Web
11/16" Web
Fill ¾"
Fill ½"
Fill ⅜"
Crimp ⅜"
Crimp ½"
2 Ls 8x8x1
2 Ls 6x6x½
2 Ls 7x4x½
2 Ls 6x3½x⅜
2 Ls 5x3½x½
2 Ls 5x3½x½
2 Ls 8x6x½
2 Ls 7x4x½
2 Ls 6x4x½
2 Ls 6x3½x⅜
2 Ls 5x3½x½
2 Ls 8x7x½ (Cut to fit)
2 Ls 7x4x½
2 Ls 6x3½x⅜
2 Ls 6x3½x⅜
2 Ls 6x3½x⅜

MICROFILMED

COUNTY	CONTRACT	P. R. A. DIV. NO.	STATE	FED. AID PROJECT NO.	FISCAL YEAR	SHEET NO.	TOTAL SHEETS
NEW CASTLE	1224-(4)		DEL.	S.U - 1 (10)	1954	17	42

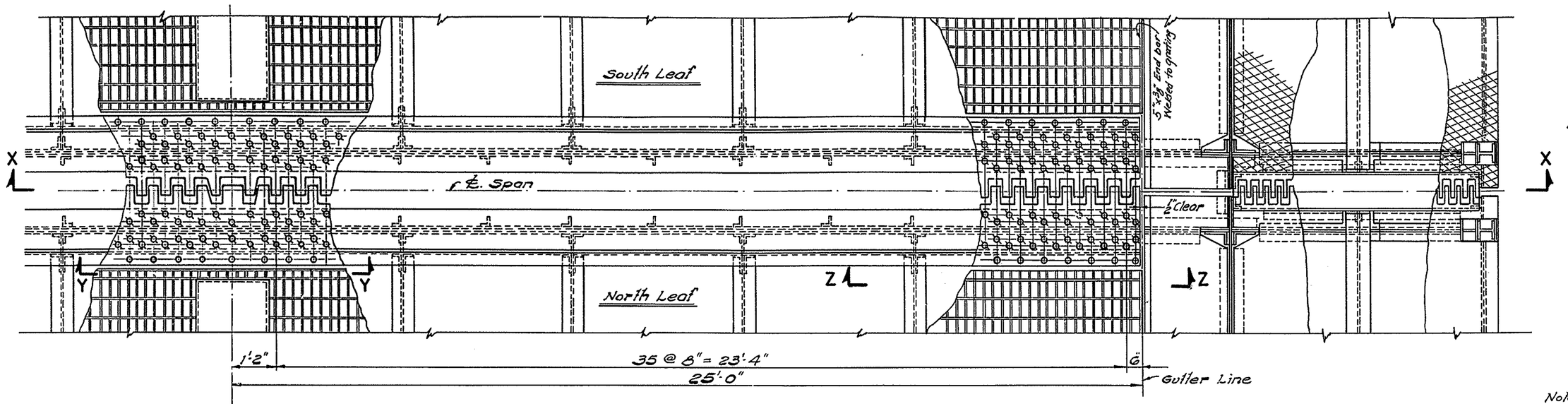

PLAN

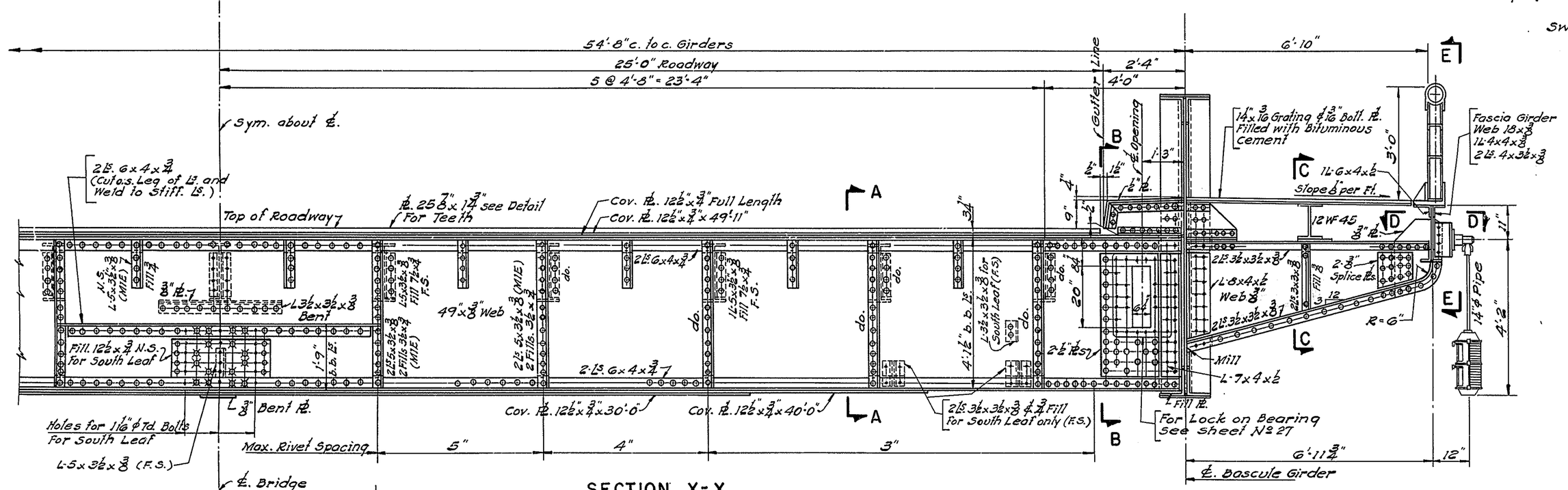

SECTION X-X.
FLOORBEAM - FBO

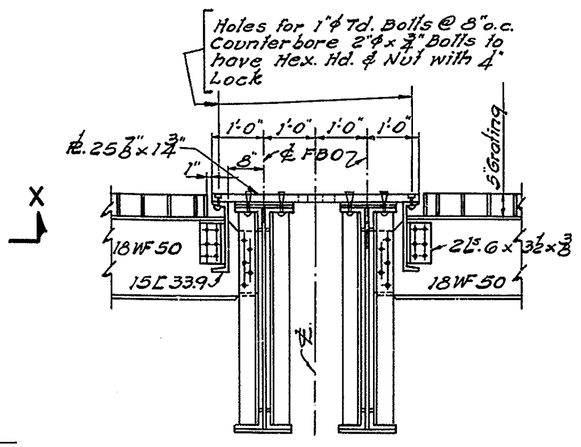

SECTION A-A

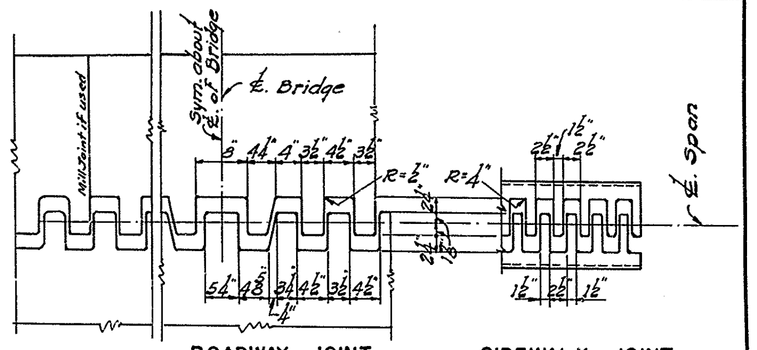

ROADWAY JOINT SIDEWALK JOINT
DETAIL OF TEETH
Scale: ¾" = 1'-0"

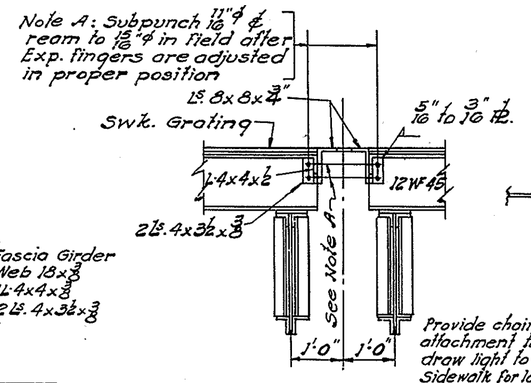

SECTION C-C

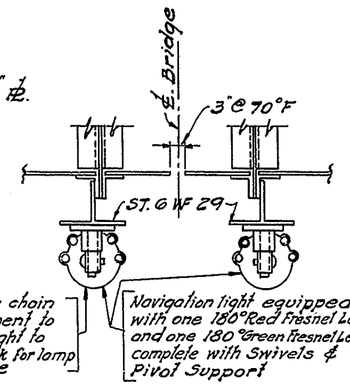

SECTION D-D.
Scale: ¾" = 1'-0"

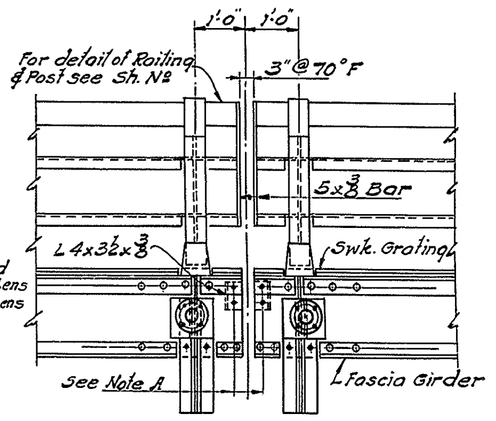

SECTION E-E

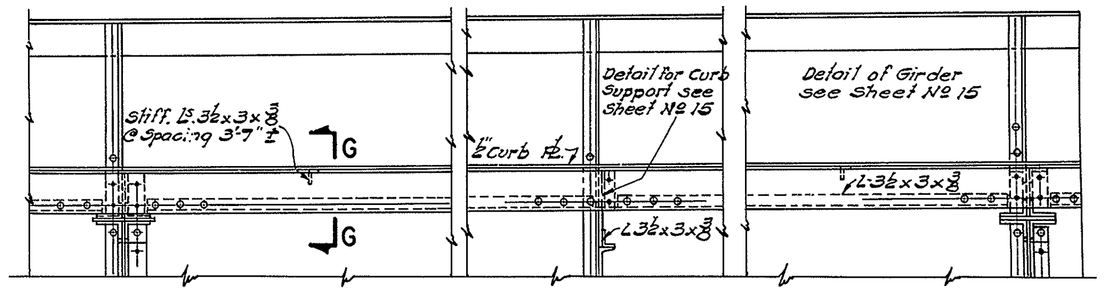

SECTION B-B

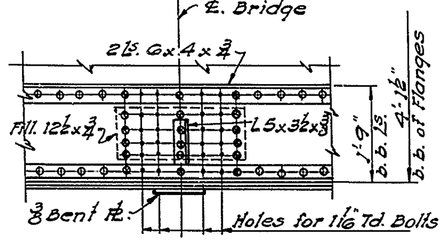

SECTION Y-Y.

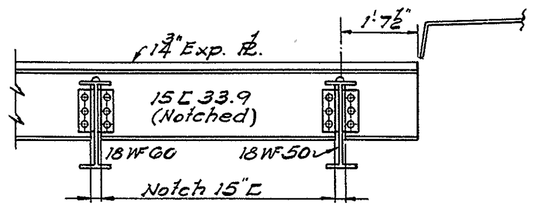

SECTION Z-Z.

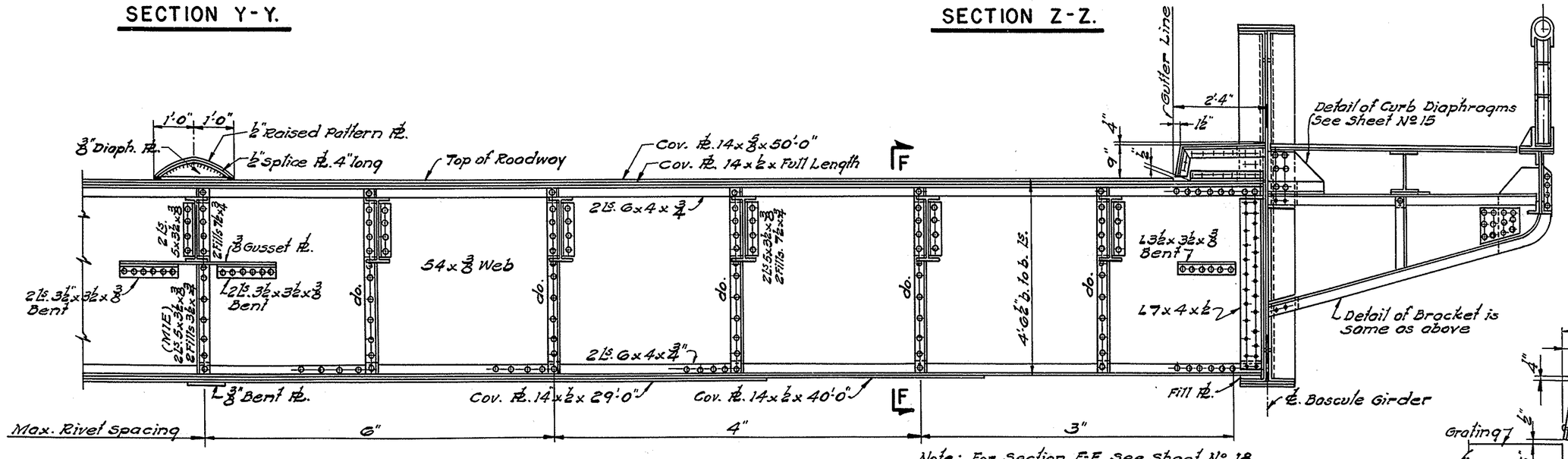

FLOORBEAM - FBI

DETAIL OF MALL
Scale: ¾" = 1'-0"

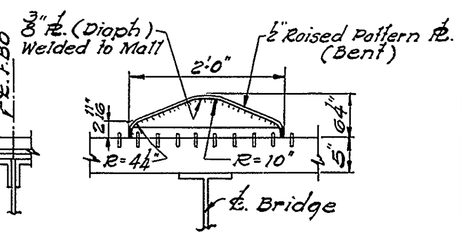

SECTION H-H.

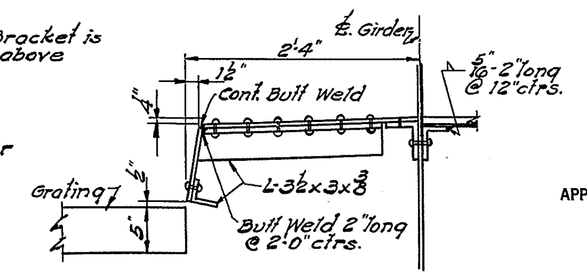

SECTION G-G
Scale: 1" = 1'-0"

MADE BY A.T.
TRACED BY Rennevig.
CHECKED BY A.L.

APPROVED Joe S. Robinson
BRIDGE ENGINEER

STATE OF DELAWARE
STATE HIGHWAY DEPARTMENT

WALNUT STREET BRIDGE
OVER CHRISTINA RIVER
WILMINGTON, DELAWARE

FLOORBEAMS FBO & FBI

SCALE	DATE	SHEET NO.
1" = 1'-0" Unless Noted	APRIL 1954	17

PARSONS, BRINCKERHOFF, HALL & MACDONALD
ENGINEERS NEW YORK

MICROFILMED

COUNTY	CONTRACT	F. R. A. DIV. NO.	STATE	FED. AID PROJECT NO	FISCAL YEAR	SHEET NO.	TOTAL SHEETS
NEW CASTLE	1224-(4)		DEL.	S.U-1 (10)	1954	18	42

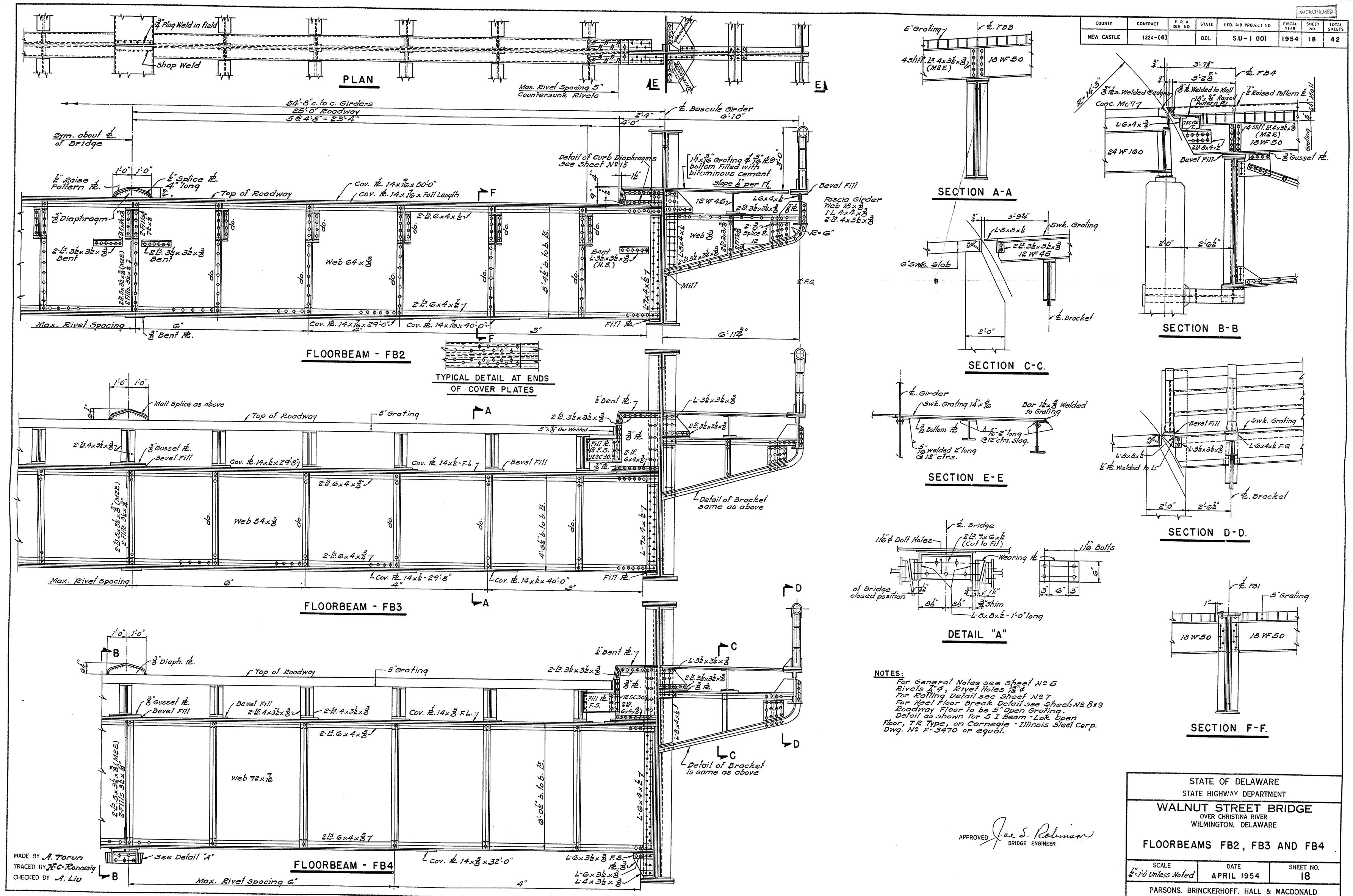

NOTES:

For General Notes see Sheet Nº 5
Rivets 3/4" ϕ, Rivet Holes 13/16" ϕ
For Railing Detail see Sheet Nº 7
For Heel Floor Break Detail see Sheets Nº 8 & 9
Roadway Floor to be 5" Open Grating.
Detail as shown for S 1 Beam - Lok Open Floor, T.R. Type, on Carnegie - Illinois Steel Corp. Dwg. Nº F-3470 or equal.

APPROVED Jas. S. Robinson
BRIDGE ENGINEER

MADE BY A. Torun
TRACED BY H.C. Ronnevig
CHECKED BY A. Liu

STATE OF DELAWARE
STATE HIGHWAY DEPARTMENT

WALNUT STREET BRIDGE

OVER CHRISTINA RIVER
WILMINGTON, DELAWARE

FLOORBEAMS FB2, FB3 AND FB4

SCALE	DATE	SHEET NO.
1/2" = 1'-0" Unless Noted	APRIL 1954	18

PARSONS, BRINCKERHOFF, HALL & MACDONALD
ENGINEERS NEW YORK

COUNTY	CONTRACT	P. R. A. DIV. NO.	STATE	FED. AID PROJECT NO.	FISCAL YEAR	SHEET NO.	TOTAL SHEETS
NEW CASTLE	1224-(4)		DEL.	S. U-1 (10)	1954	19	42

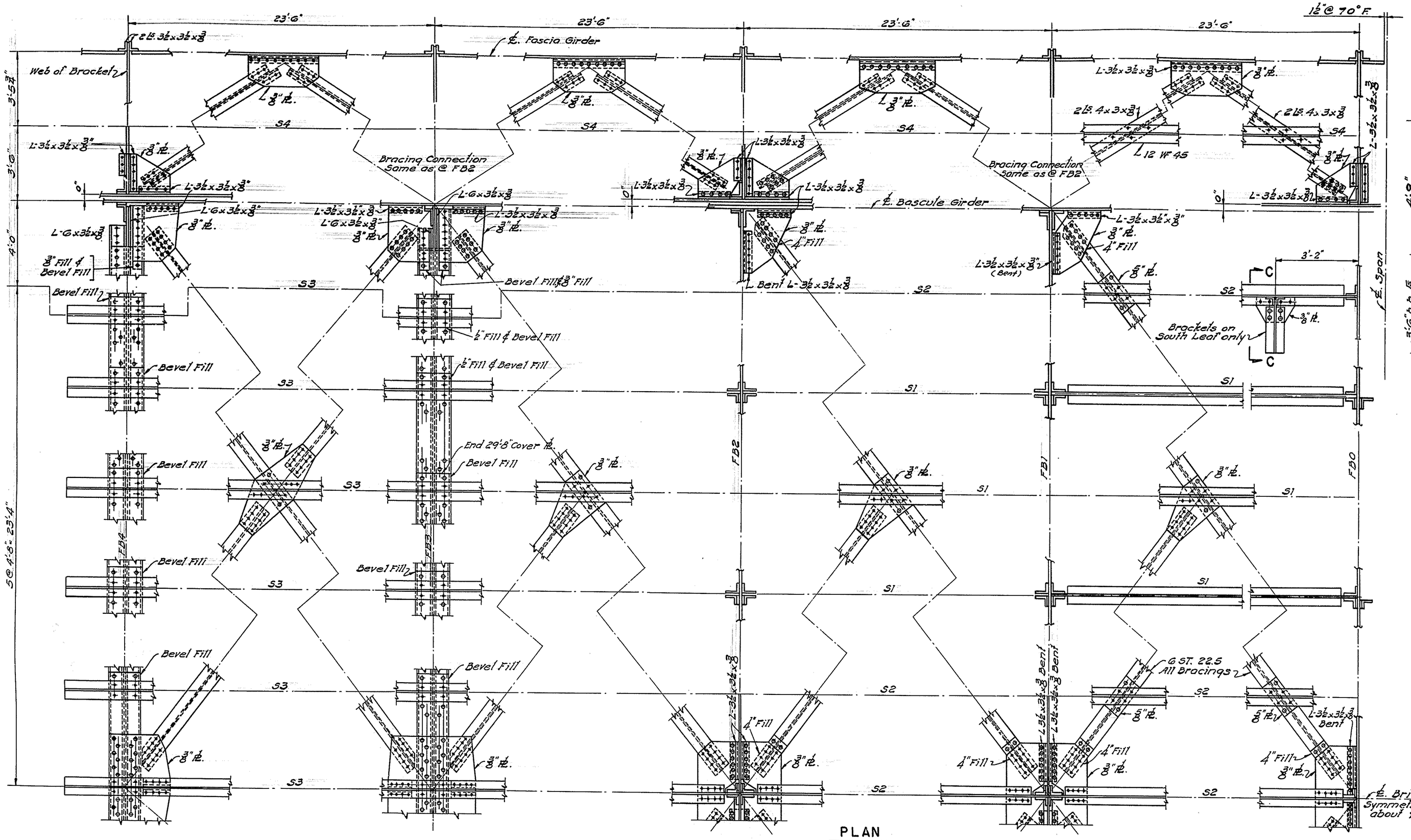

PLAN

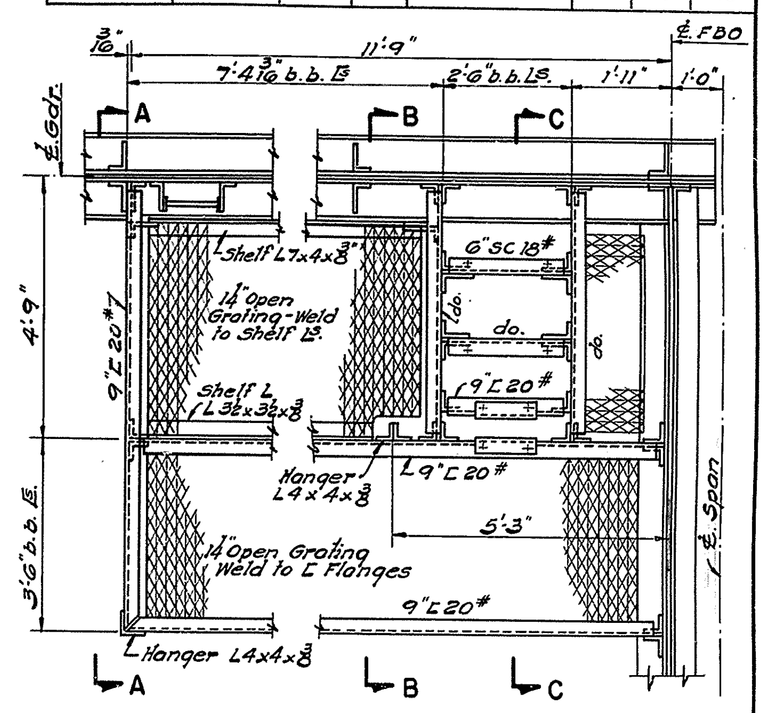

PLATFORM FRAMING
(For Girders of South Leaf Only)

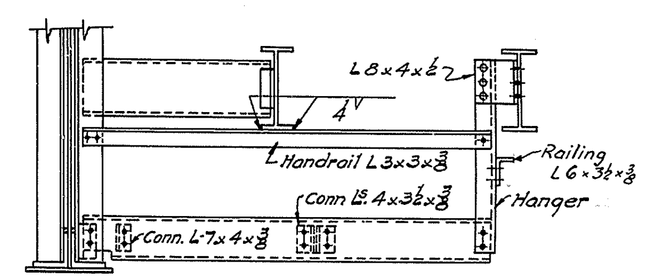

SECTION A-A

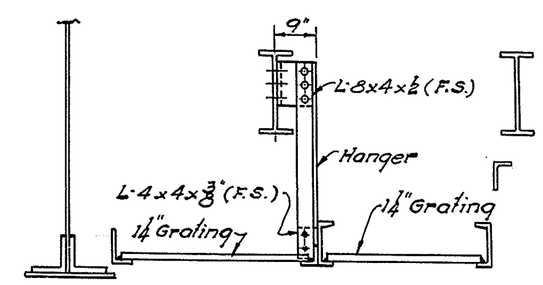

SECTION B-B

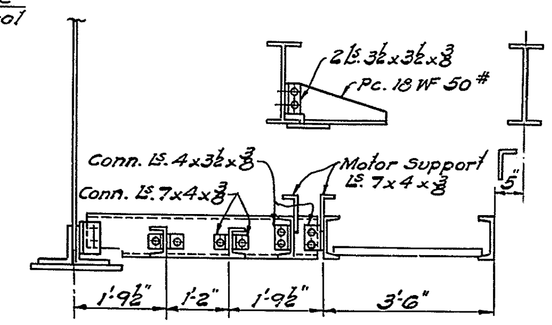

SECTION C-C.

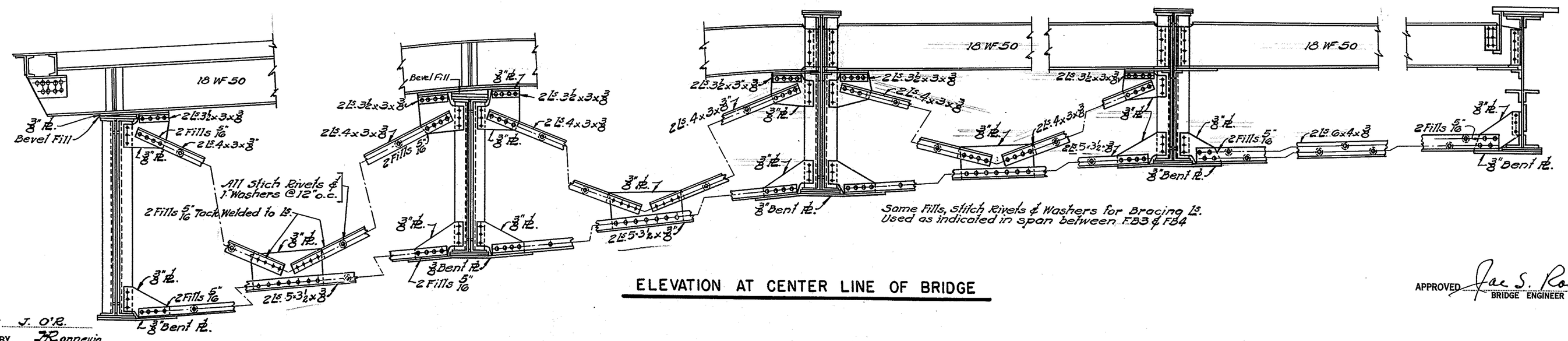

ELEVATION AT CENTER LINE OF BRIDGE

MADE BY J. O'R.
TRACED BY Ronneiq.
CHECKED BY A.L.

APPROVED Jac S. Robinson
BRIDGE ENGINEER

STATE OF DELAWARE
STATE HIGHWAY DEPARTMENT

WALNUT STREET BRIDGE

OVER CHRISTINA RIVER
WILMINGTON, DELAWARE

LATERALS & LONGITUDINAL BRACINGS

SCALE	DATE	SHEET NO.
1" = 1'-0"	APRIL 1954	19

PARSONS, BRINCKERHOFF, HALL & MACDONALD
ENGINEERS NEW YORK

MICROFILMED

COUNTY	CONTRACT	P. R. A. DIV. NO.	STATE	FED. AID PROJECT NO.	FISCAL YEAR	SHEET NO.	TOTAL SHEETS
NEW CASTLE	1224-(4)		DEL.	S.U-1-(10)	1954	20	42

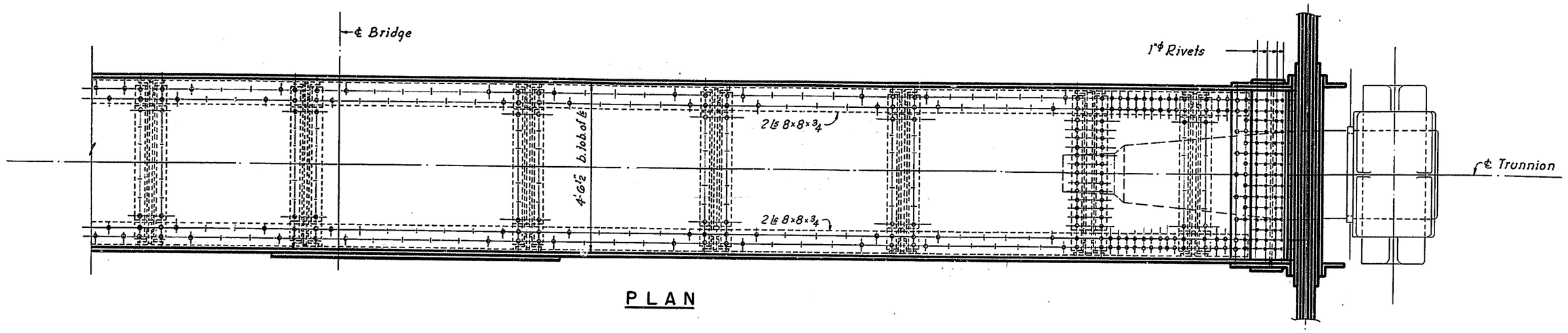

PLAN

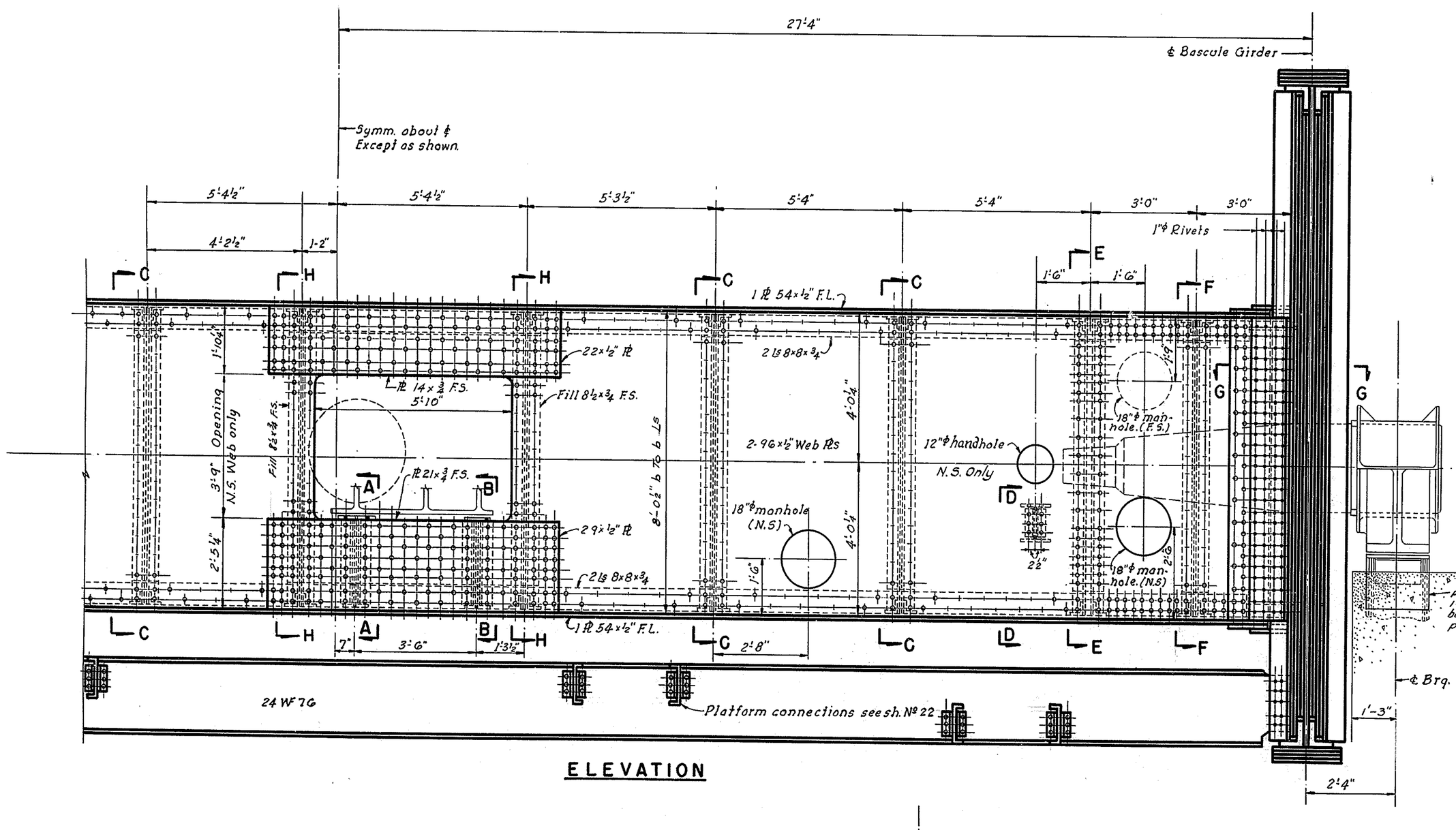

ELEVATION

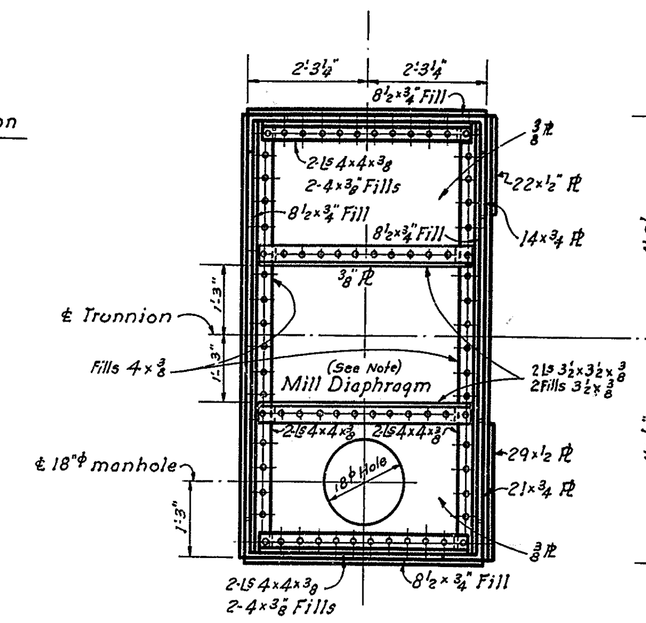

SECTION H-H

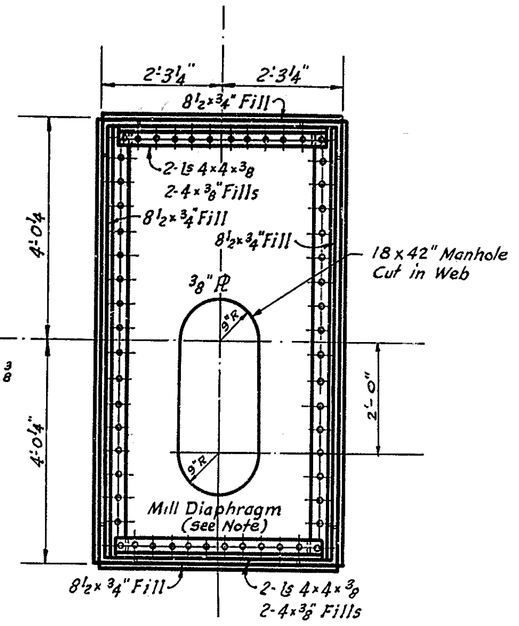

SECTION C-C

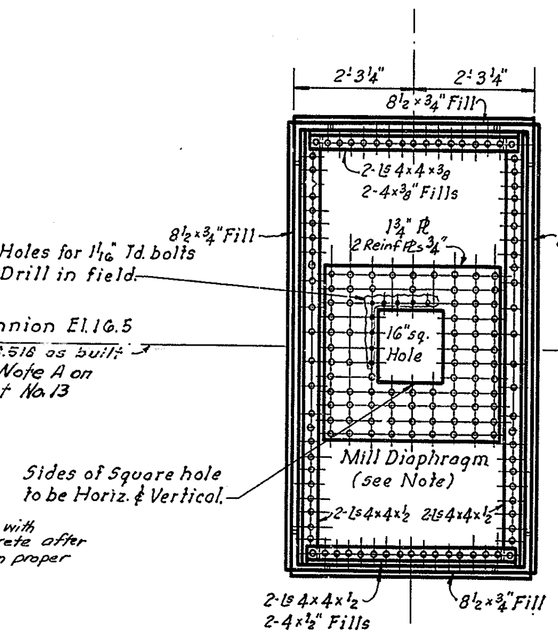

SECTION E-E

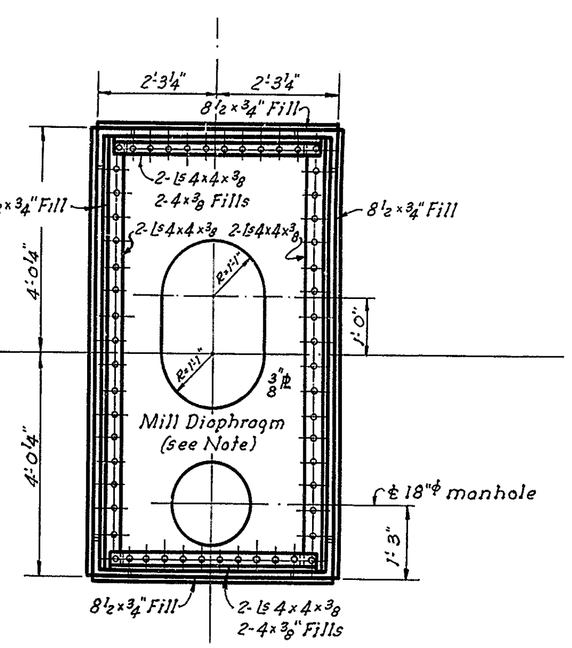

SECTION F-F

Notes:

1. For General Notes see Sheet No 5
2. Rivets 7/8" φ. Holes 15/16" φ, except as noted
3. Diaphragms shall be milled so that adjacent sides are square.
4. For Platform Details see Sheet No 22
5. For Trunnion Pin & Machinery see Sheet No 25

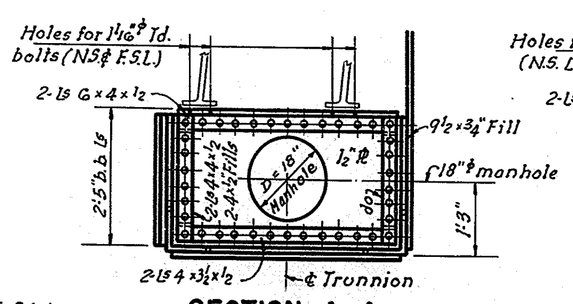

SECTION A-A

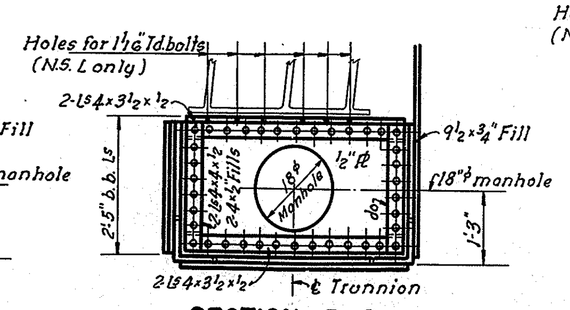

SECTION B-B

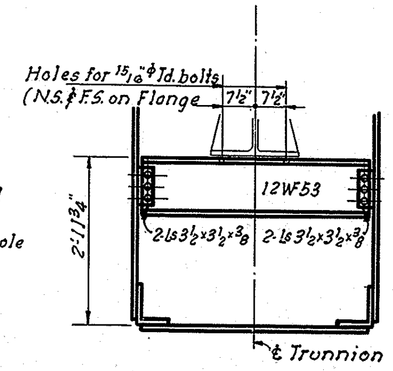

SECTION D-D

Reqd. at E. half of S. Trunnion Grd. & at W. half of N. Trunnion Grd only.

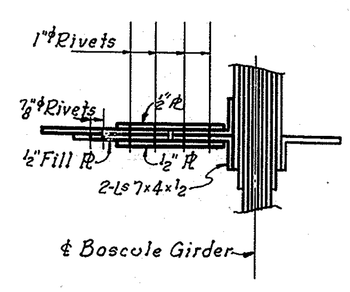

SECTION G-G

Scale: 1" = 1'-0"

MADE BY J. A. W.
TRACED BY J. Sveglioto
CHECKED BY A. L.

APPROVED Jae S. Robinson
BRIDGE ENGINEER

STATE OF DELAWARE
STATE HIGHWAY DEPARTMENT

WALNUT STREET BRIDGE

OVER CHRISTINA RIVER
WILMINGTON, DELAWARE

TRUNNION GIRDER

SCALE	DATE	SHEET NO.
1" = 1'-0" unless noted otherwise	APRIL 1954	20

PARSONS, BRINCKERHOFF, HALL & MACDONALD
ENGINEERS NEW YORK

COUNTY	CONTRACT	P. R. A. DIV. NO.	STATE	FED. AID PROJECT NO.	FISCAL YEAR	SHEET NO.	TOTAL SHEETS
NEW CASTLE	1224-(4)		DEL.	S. U-1 (10)	1954	21	42

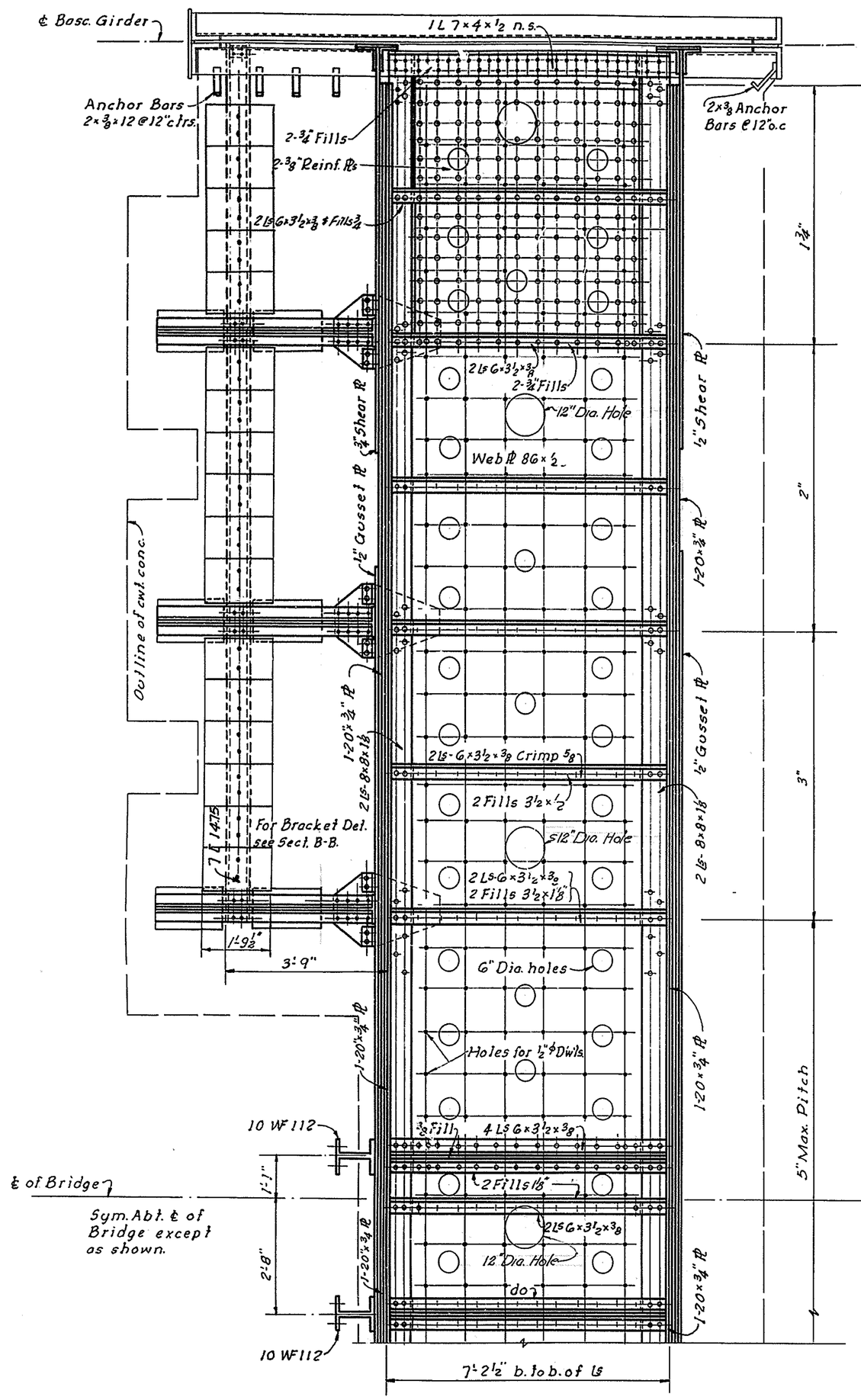

SECTION A-A REAR GIRDER

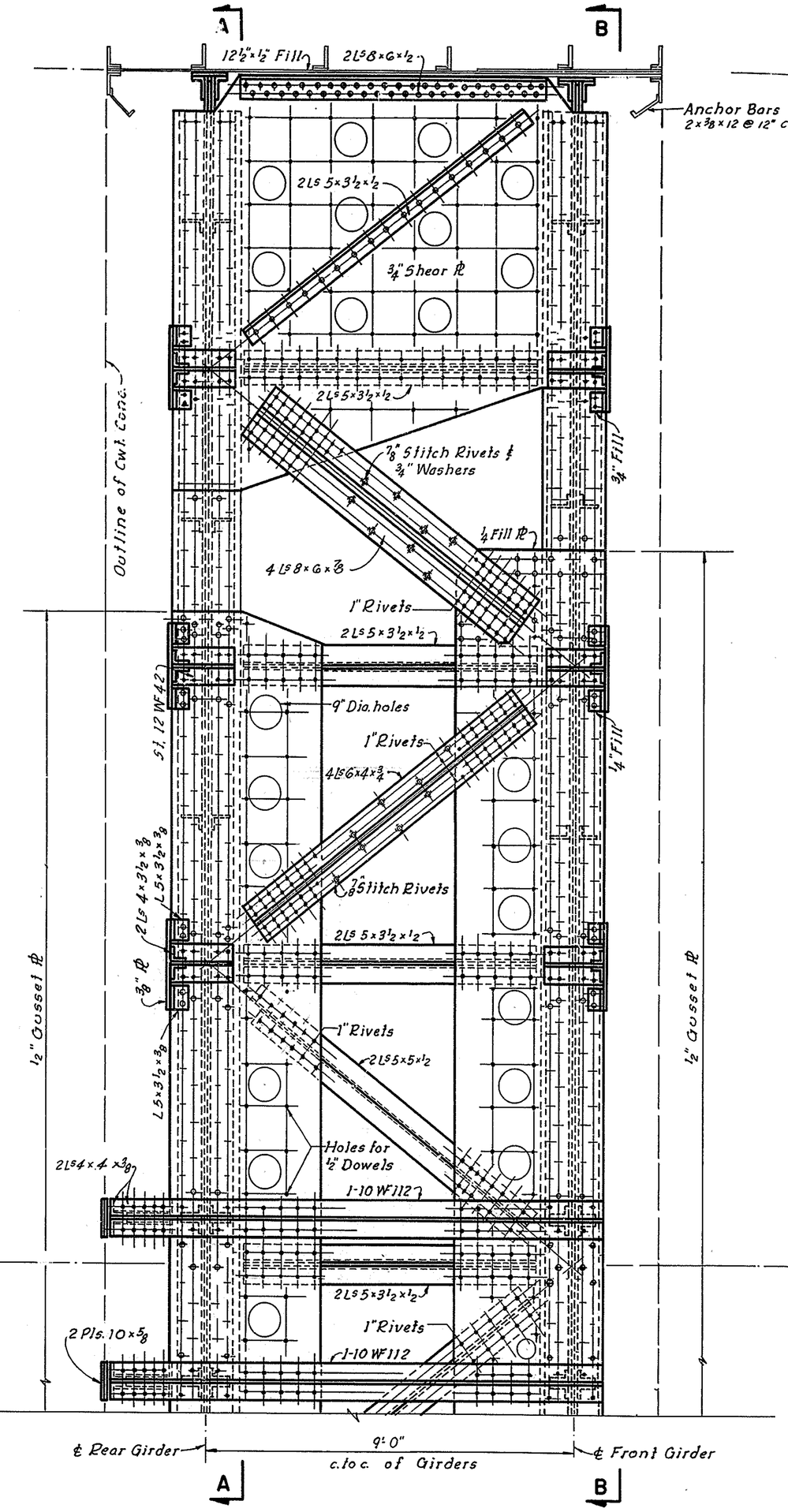

TOP TRUSS

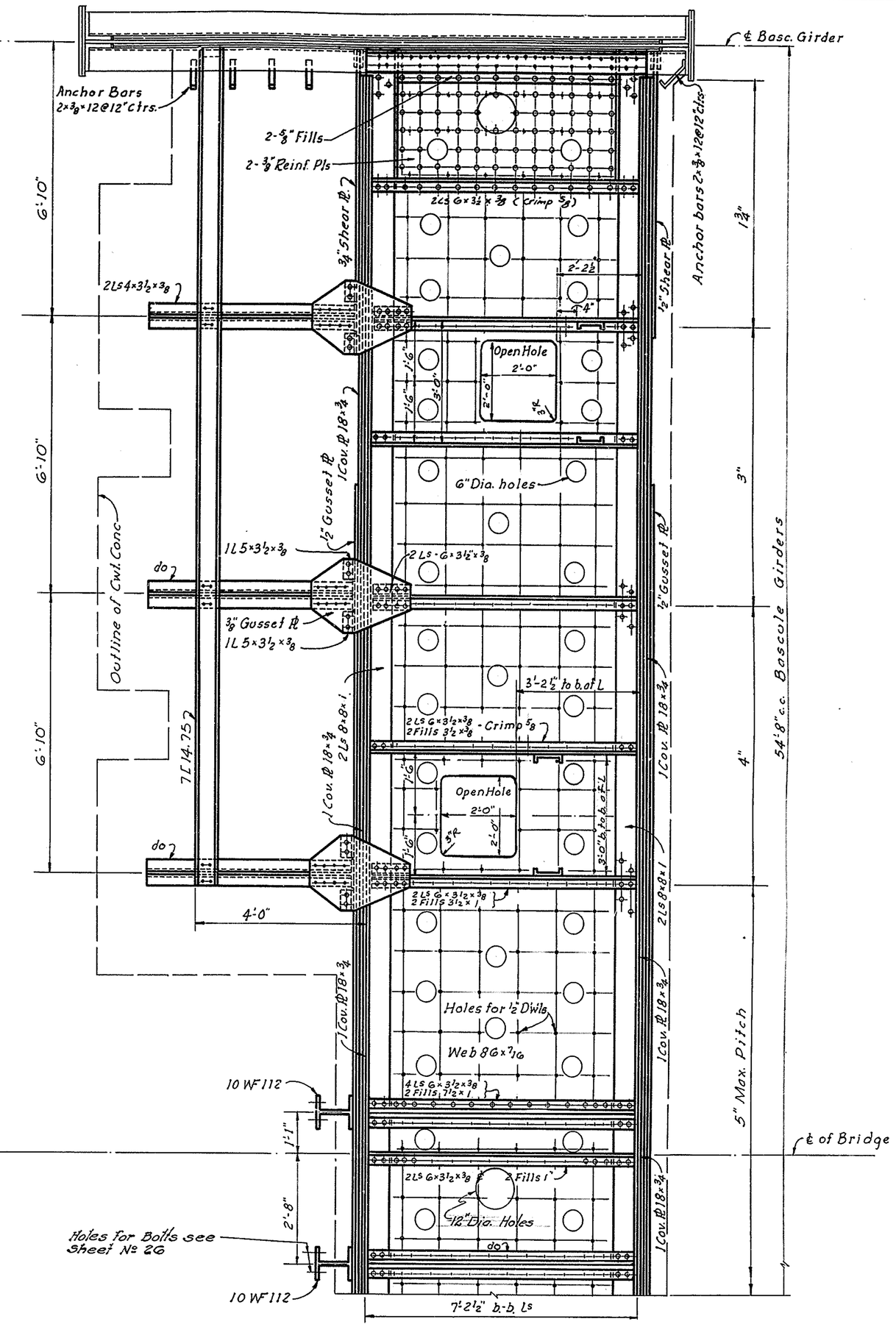

SECTION B-B FRONT GIRDER

Notes:
1. All Rivets are 7/8" ϕ Holes 15/16" except as noted.
2. For Bottom Truss & Sections see Sh. № 22

APPROVED Joe S. Robinson
BRIDGE ENGINEER

STATE OF DELAWARE
STATE HIGHWAY DEPARTMENT

WALNUT STREET BRIDGE
OVER CHRISTINA RIVER
WILMINGTON, DELAWARE

CONTERWEIGHT FRAME

SCALE	DATE	SHEET NO.
1" = 1'-0"	APRIL 1954	21

PARSONS, BRINCKERHOFF, HALL & MACDONALD
ENGINEERS NEW YORK

MADE BY A. B
TRACED BY J. Sveglioto
CHECKED BY A. L.

MICROFILMED

COUNTY	CONTRACT	P. R. A. DIV. NO.	STATE	FED. AID PROJECT NO.	FISCAL YEAR	SHEET NO.	TOTAL SHEETS
NEW CASTLE	1224-(4)		DEL.	S.U-1 (10)	1954	22	42

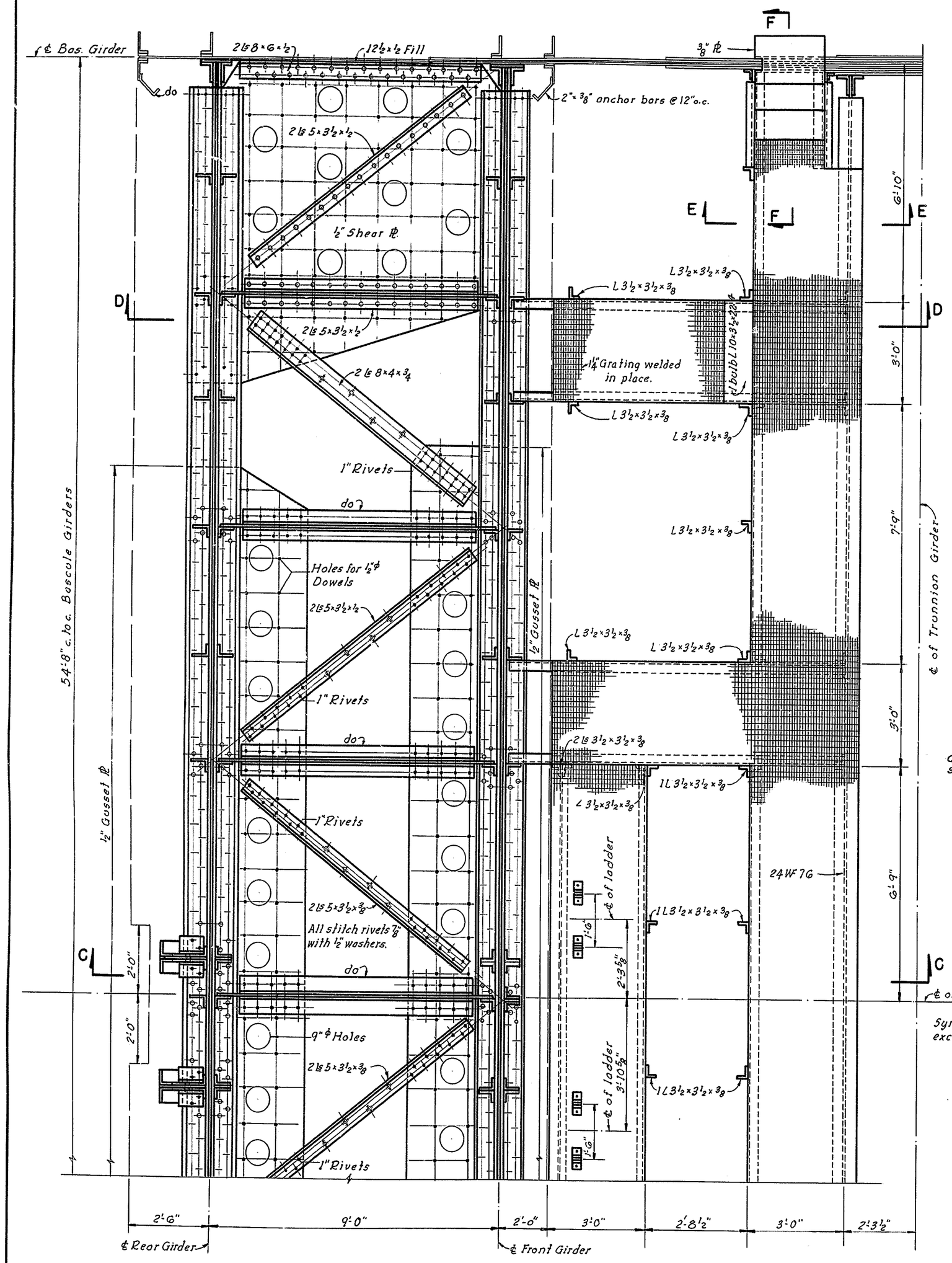

BOTTOM TRUSS

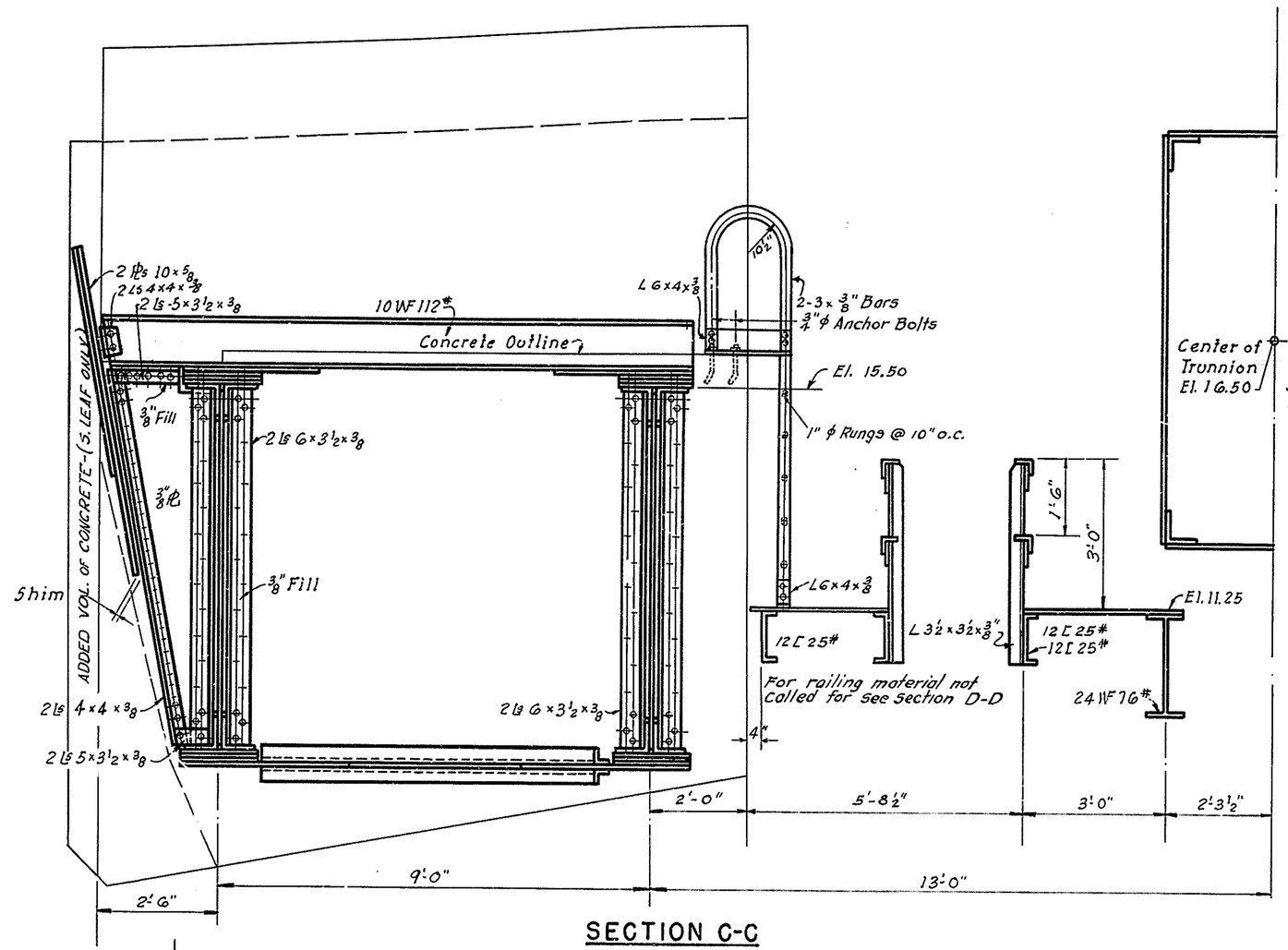

SECTION C-C

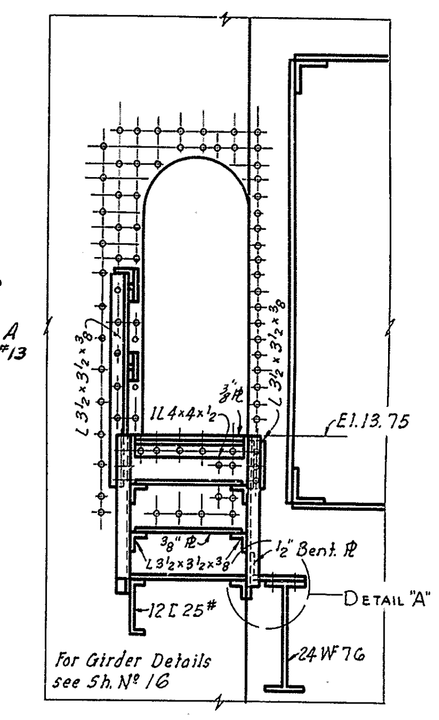

SECTION E-E

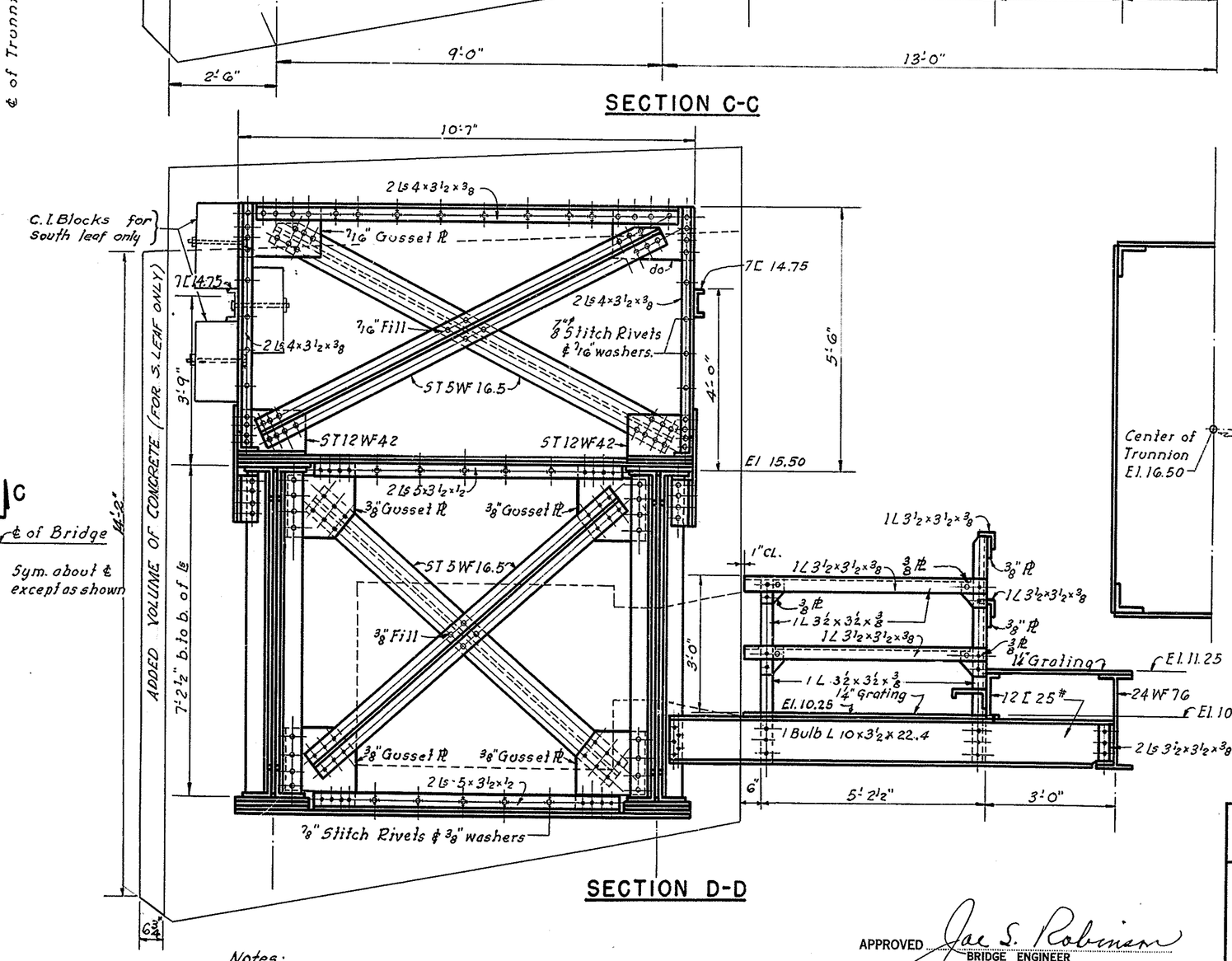

SECTION D-D

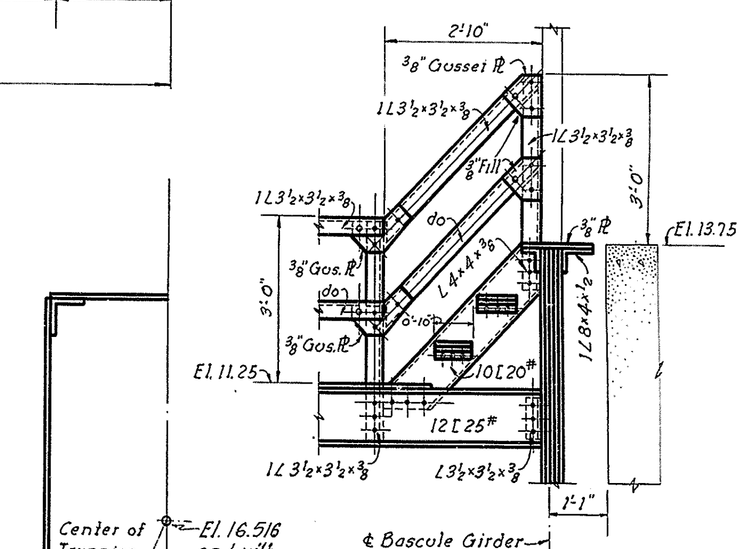

SECTION F-F

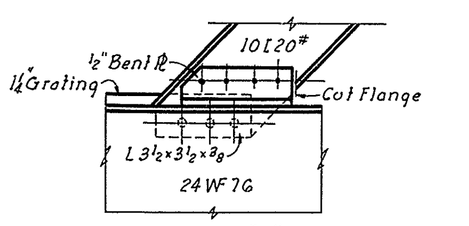

DETAIL "A"
Scale: 1" = 1'-0"

Notes:

All Rivets ⅞" ϕ & ℄ Holes 15/16" ϕ except as noted
For top truss, Rear & Front Girders see Sheet No. 21
For Counterweight concrete see Sheet No. 23

APPROVED Jae S. Robinson
BRIDGE ENGINEER

MADE BY H. B.
TRACED BY J. Sveglioto
CHECKED BY H. L.

STATE OF DELAWARE
STATE HIGHWAY DEPARTMENT

WALNUT STREET BRIDGE
OVER CHRISTINA RIVER
WILMINGTON, DELAWARE

COUNTERWEIGHT AND PLATFORMS

SCALE	DATE	SHEET NO.
1" = 1'-0" Except As Noted	APRIL 1954	22

PARSONS, BRINCKERHOFF, HALL & MACDONALD
ENGINEERS NEW YORK

COUNTY	CONTRACT	P. R. A. DIV. NO.	STATE	FED. AID PROJECT NO.	FISCAL YEAR	SHEET NO.	TOTAL SHEETS
NEW CASTLE	1224-(4)		DEL.	S.U-1-(10)	1954	23	42

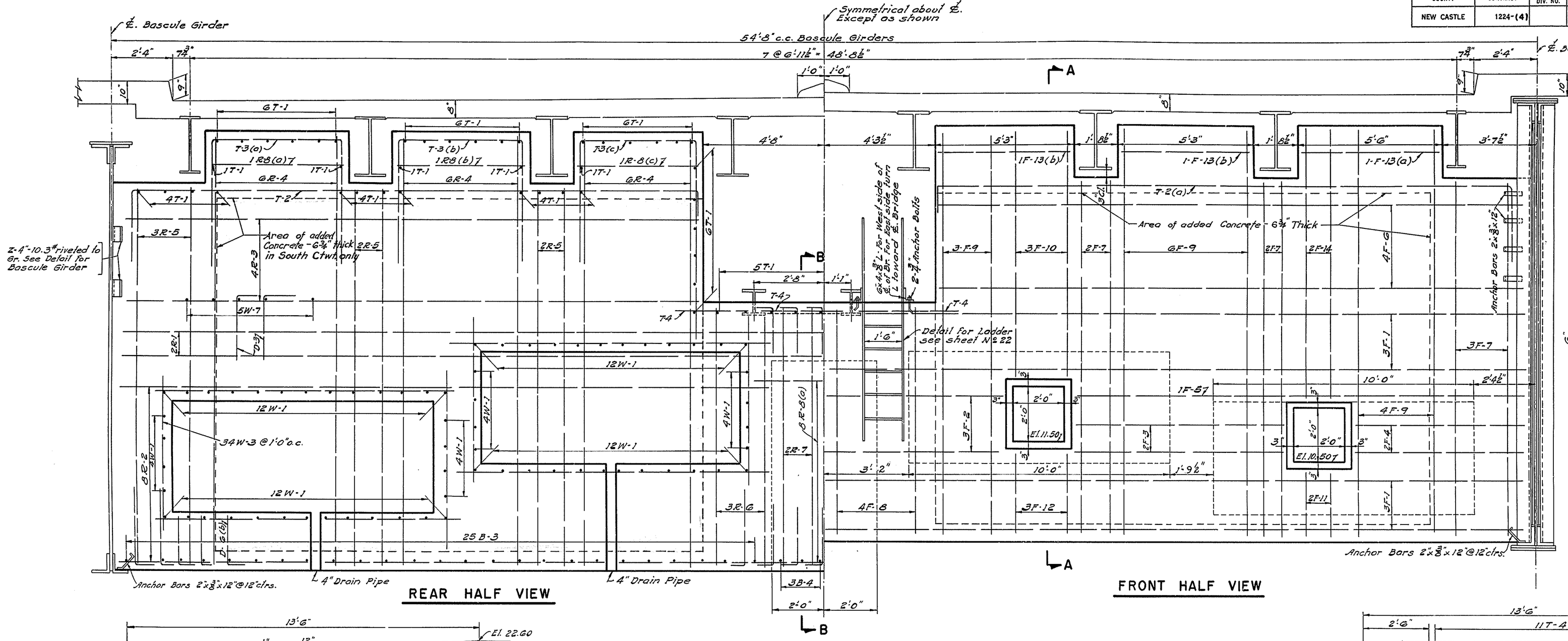

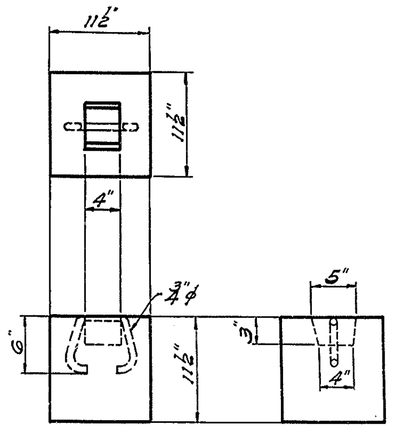

BALANCE BLOCKS

Scale: 1" = 1'-0"

Total Number Required - 1020 Blocks
576 Blocks used in South Leaf
576 " " " North Leaf
69 " to be stored in each Pier. More Blocks should be furnished to obtain balance of Counterweight if necessary.

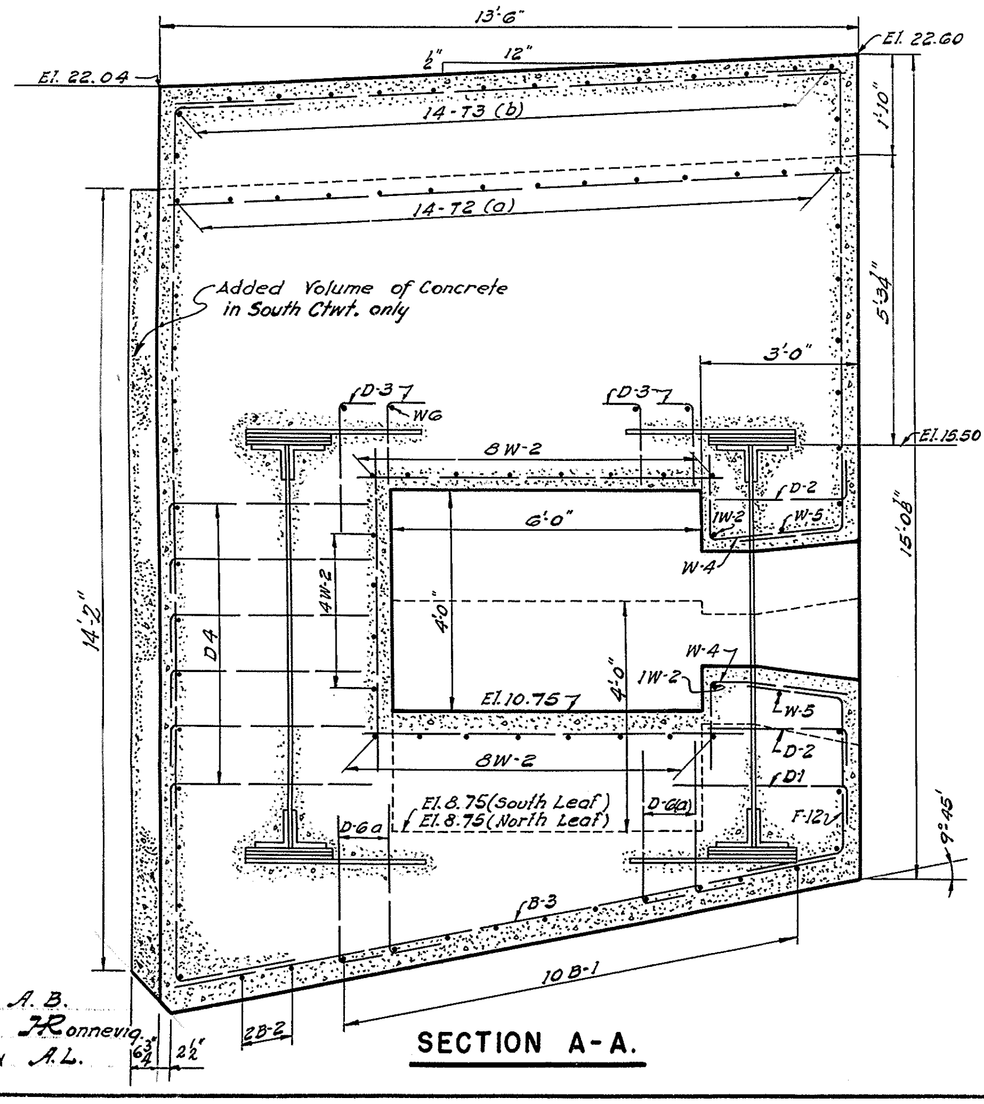

SECTION A-A.

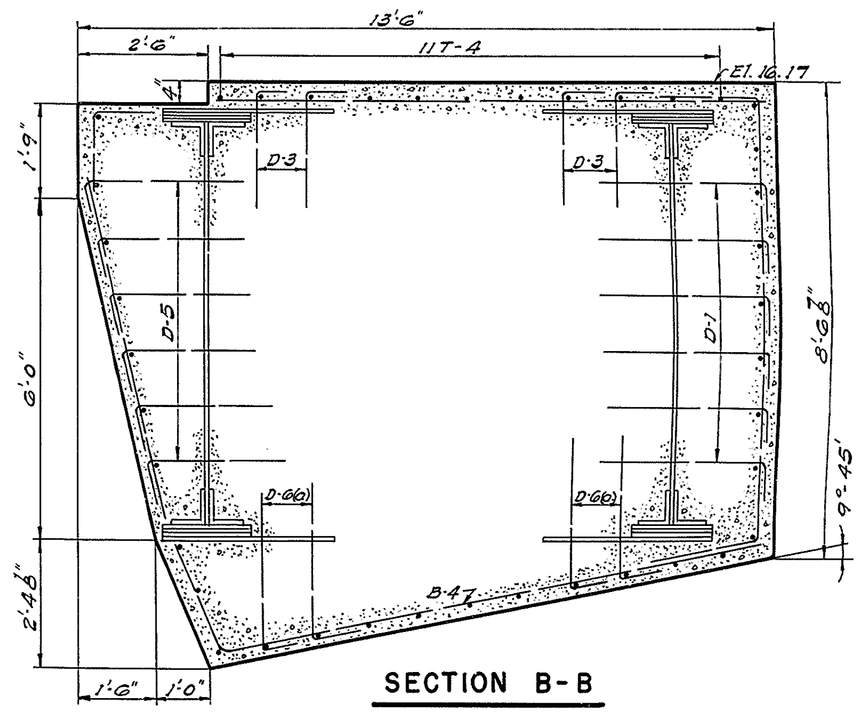

SECTION B-B

REINFORCING STEEL IN 2 COUNTERWEIGHTS

STRAIGHT BARS

No.	Mark	Size	Length	Remarks
8	R-1	#6	27'-9"	Rear Face
32	R-2		24'-10"	" "
8	R-3		22'-2"	" "
8	R3-1		22'-6½"	" "
22	R-8(a)		5'-0"	" "
6	R-8(b)		4'-9"	" "
2	R-8(c)		4'-4½"	" "
24	F-1		27'-9"	Front Face
6	F-2		13'-6"	" "
8	F-3		7'-9"	" "
8	F-4		6'-7"	" "
4	F-5		17'-4"	" "
8	F-6		22'-7"	" "
8	F-6(a)		22'-2"	" "
4	F-13(a)		5'-1"	" "
6	F-13(b)		4'-9"	" "
2	F-13(c)		4'-4½"	" "
162	T-1		13'-0"	Top Face
66	T-4		3'-6"	
40	D-1		27'-9"	Bottom Face
8	B-2		24'-10"	" "
100	B-3		13'-0"	" "
256	W-1		7'-0"	Well Faces
176	W-2		12'-0"	" "
272	W-3		6'-0"	" "
16	W-5		5'-0"	" "
16	W-6	#6	22'-8"	Above Top Truss

BENT BARS

No	Mark	Size	Length	Remarks
72	R-4	#6	21'-3"	Rear Face
28	R-5		19'-2	" "
12	R6		15'-5"	" "
8	R-7		12'-10"	" "
28	F-7		17'-8"	Front Face
16	F-8		13'-2"	" "
52	F-9		19'-6"	" "
12	F-10		11'-9"	" "
8	F-11		5'-4"	" "
12	F-12		6'-5"	" "
28	T-2		25'-0"	Top Face
28	T-2(a)		25'-4"	" "
56	T3(a)		10'-1"	" "
56	T3(b)		9'-10"	" "
28	T3(c)		15'-3"	" "
28	T3(c1)		15'-6"	Top Face West Side
10	B4		11'-11"	Bottom Face
40	W4	#6	4'-10"	Well Faces
296	D-1	#4	4'-0"	Dowels - Front Girders
300	D-2		3'-3"	Dowels in Front of Wells
376	D3		2'-9"	Dowels for Top Truss
564	D-4		4'-6"	Dowels for R.6 (Both Ends)
48	D-5		3'-9"	Do. (Center Portion)
308	D-6(a)		3'-6"	Dowels for Bott. Truss
36	D-6(b)	#4	1'-10" to 2'-8"	Do. Under Tower Wells
			ΔL = 2"	6 of Each
8	F-14	#6	13'-0"	Front Face
20	W-7	#6	13'-6"	Above Top Truss

BENDING DIAGRAMS
ALL DIMENSIONS ARE OUT TO OUT

M'k.	A	B	C	H1	H2
R-4	2'-6"	16'-3"	2'-6"	14"	5"
R-5	2'-6"	14'-5"	2'-6"	14"	5"
R-6	2'-6"	10'-5"	2'-6"	0	5"
F-7	2'-6"	12'-8"	2'-6"	5"	14"
F-8	2'-6"	8'-2"	2'-6"	5"	0
F-9	2'-6"	14'-6"	2'-6"	5"	14"
F-10	1'-0"	8'-3"	2'-6"	2"	14"
F-14	1'-0"	9'-6"	2'-6"	2"	14"
T-2	2'-6"	22'-0"	6"	0	0
T-2(a)	2'-6"	22'-4"	6"	0	0
T3(a)	2'-6"	5'-1"	2'-6"	0	0
T-3(b)	2'-6"	4'-10"	2'-6"	0	0
T-3(c)	2'-6"	4'-6"	7'-3"	0	0
T3(c1)	2'-6"	4'-9"	7'-3"	0	0
B-4	1'-9"	10'-2"	0	8½"	0
D-1	9"	3'-3"	0	0	0
D-2	9"	2'-6"	0	0	0
D-3	9"	2'-0"	0	0	0
D-4	9"	3'-9"	0	0	0
D-5	0	3'-0"	9"	0	1½"
D-6(a)	0	2'-9"	9"	0	1½"
D-6(b)	0	1'-1" to 1'-11"	9"	0	1½"
W-7	6"	12'-6"	6"	0	0

M'k.	A	B	C	H1	H2
F-11	2'-6"	1'-11"	1'-0"	5"	2"
F-12	2'-6"	2'-11"	1'-0"	5"	2"

M'k.	A	B	C	V
R-7	2'-6"	1'-6"	8'-10"	1'-6"
W-4	2'-6"	1'-0"	1'-4"	2"

Notes:

Counterweight Concrete outlines shall be as shown for both leaves
Reinforcing bars ¾"φ - 1'-0" ctrs. in both directions on all surfaces of Counterweight.
Dowels thru Structural Members ½" d - Length as shown ℄ Spaced as shown on Sheets N° 21 & 22.
Minimum Cover of Reinforcement 2"
The Counterweight Concrete in place shall balance as closely as possible 96½ % of the rest of the moving leaf.

APPROVED Jae S. Robinson BRIDGE ENGINEER

MADE BY A. B.
TRACED BY H. Ronnevig
CHECKED BY A. L.

STATE OF DELAWARE
STATE HIGHWAY DEPARTMENT

WALNUT STREET BRIDGE
OVER CHRISTINA RIVER
WILMINGTON, DELAWARE

CONCRETE IN COUNTERWEIGHT

SCALE	DATE	SHEET NO.
½"=1'-0" Unless Noted	APRIL 1954	23

PARSONS, BRINCKERHOFF, HALL & MACDONALD
ENGINEERS NEW YORK

COUNTY	CONTRACT	P. R. A. DIV. NO.	STATE	FED. AID PROJECT NO.	FISCAL YEAR	SHEET NO.	TOTAL SHEETS
NEW CASTLE	1224-(4)		DEL.	S.U-1(10)	1954	24	42

MICROFILMED

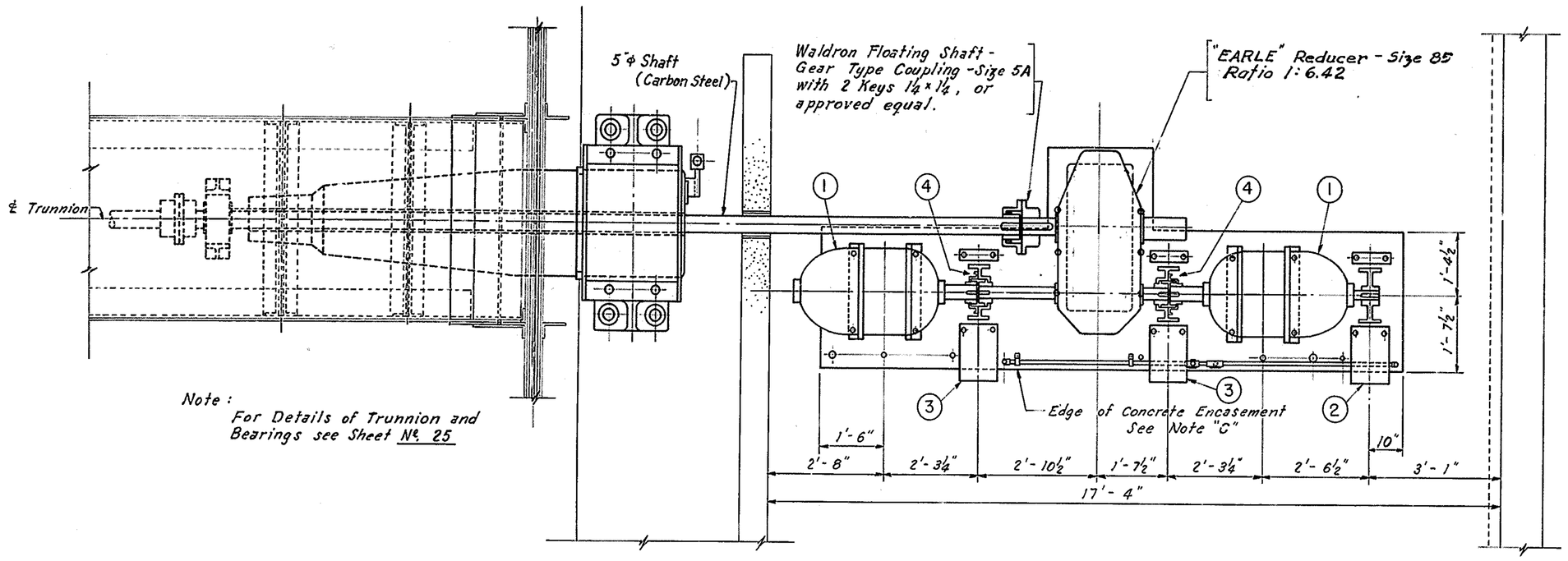

Note: For Details of Trunnion and Bearings see Sheet No. 25

PLAN D-D

ITEM	DESCRIPTION
1	60 HP Wound Rotor Motor - 720 R.P.M.
2	Alt. Current Thrustor Brake - G-E Brake Symbol 465 with 14" diam. Brakewheel, or approved equal.
3	Alt. Current Thrustor Brake - G-E Brake Symbol 465 without Brakewheel, or approved equal.
4	"Falk" Brakewheel Coupling - Size 12 BW, with 14" diam. x 6½" Brakewheel, or approved equal.

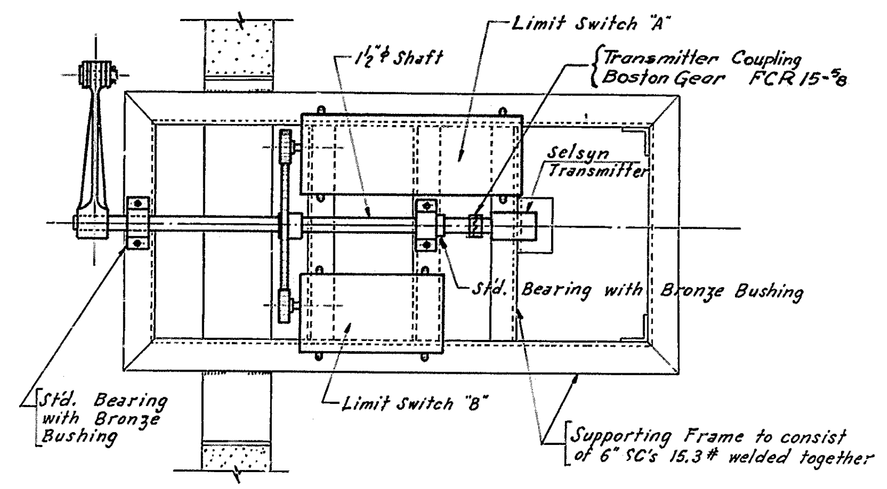

SECTION E-E

Scale: 1" = 1'-0"

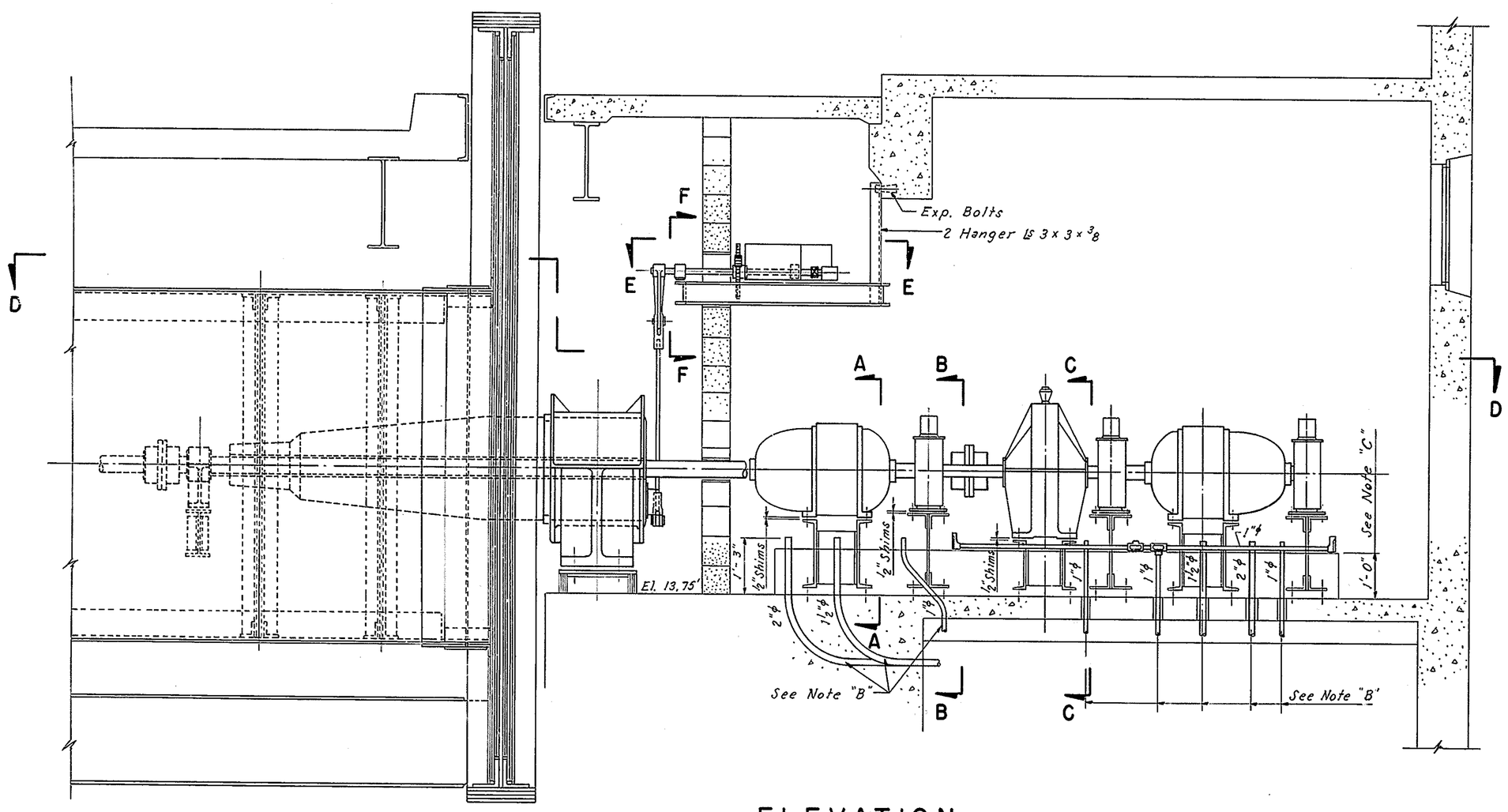

ELEVATION

Note "A"

Anchor Bolts will be furnished and set by the Substructure Contractor. Superstructure Contractor shall furnish the Engineer with the exact locations of these bolts, and be responsible for their correct placing in the field.

Note "B"

These Conduits and Pipe Sleeves will be furnished and set by the Substructure Contractor. Superstructure Contractor shall furnish the Engineer with bending details and exact location of these conduits and pipe sleeves.

Note "C"

The concrete encasement for the Machinery Supports above Elev. 13.75' is to be poured by the Superstructure Contractor after the supports are adjusted.

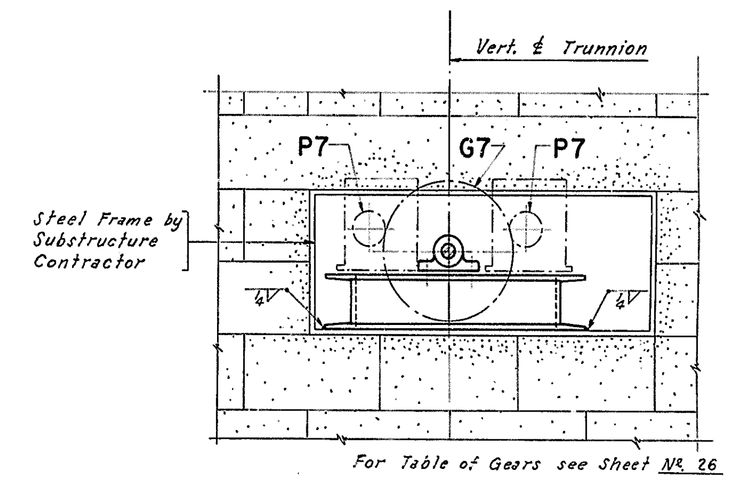

SECTION F-F

Scale: 1" = 1'-0"

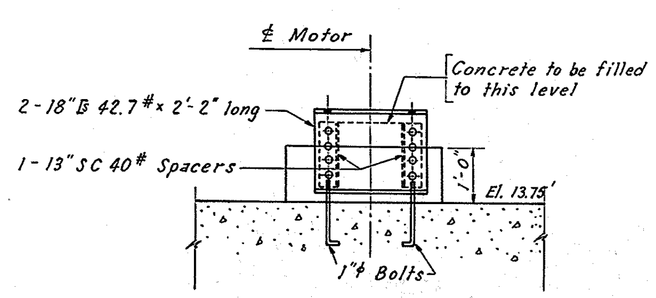

SECTION A-A

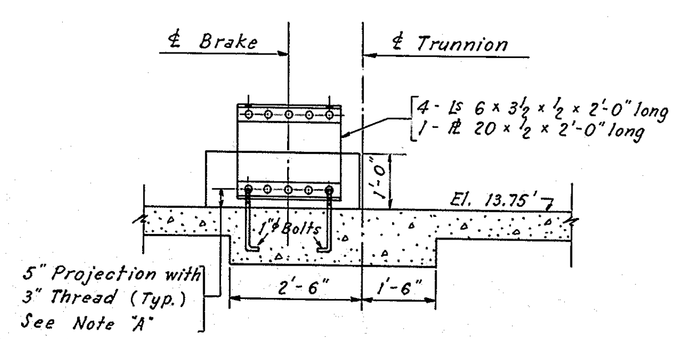

SECTION B-B

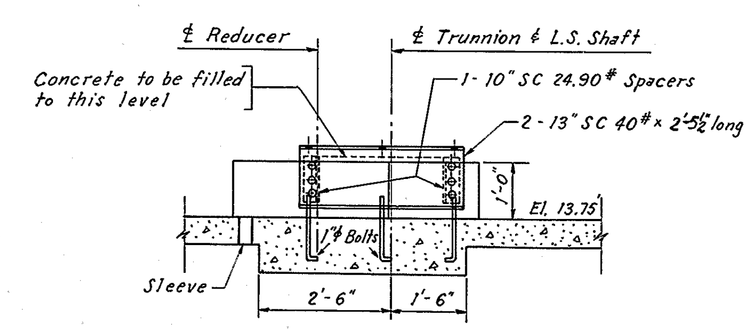

SECTION C-C

MADE BY A. T.
TRACED BY R. A. O.
CHECKED BY F. R. P.

APPROVED Jac S. Robinson BRIDGE ENGINEER

STATE OF DELAWARE
STATE HIGHWAY DEPARTMENT

WALNUT STREET BRIDGE

OVER CHRISTINA RIVER
WILMINGTON, DELAWARE

MACHINERY LAYOUT

SCALE	DATE	SHEET NO.
½" = 1'-0" & AS NOTED	APRIL 1954	24

PARSONS, BRINCKERHOFF, HALL & MACDONALD
ENGINEERS NEW YORK

MICROFILMED

COUNTY	CONTRACT	P. R. A. DIV. NO.	STATE	FED. AID PROJECT NO.	FISCAL YEAR	SHEET NO.	TOTAL SHEETS
NEW CASTLE	1224-(4)		DEL.	S.U-1 (10)	1954	25	42

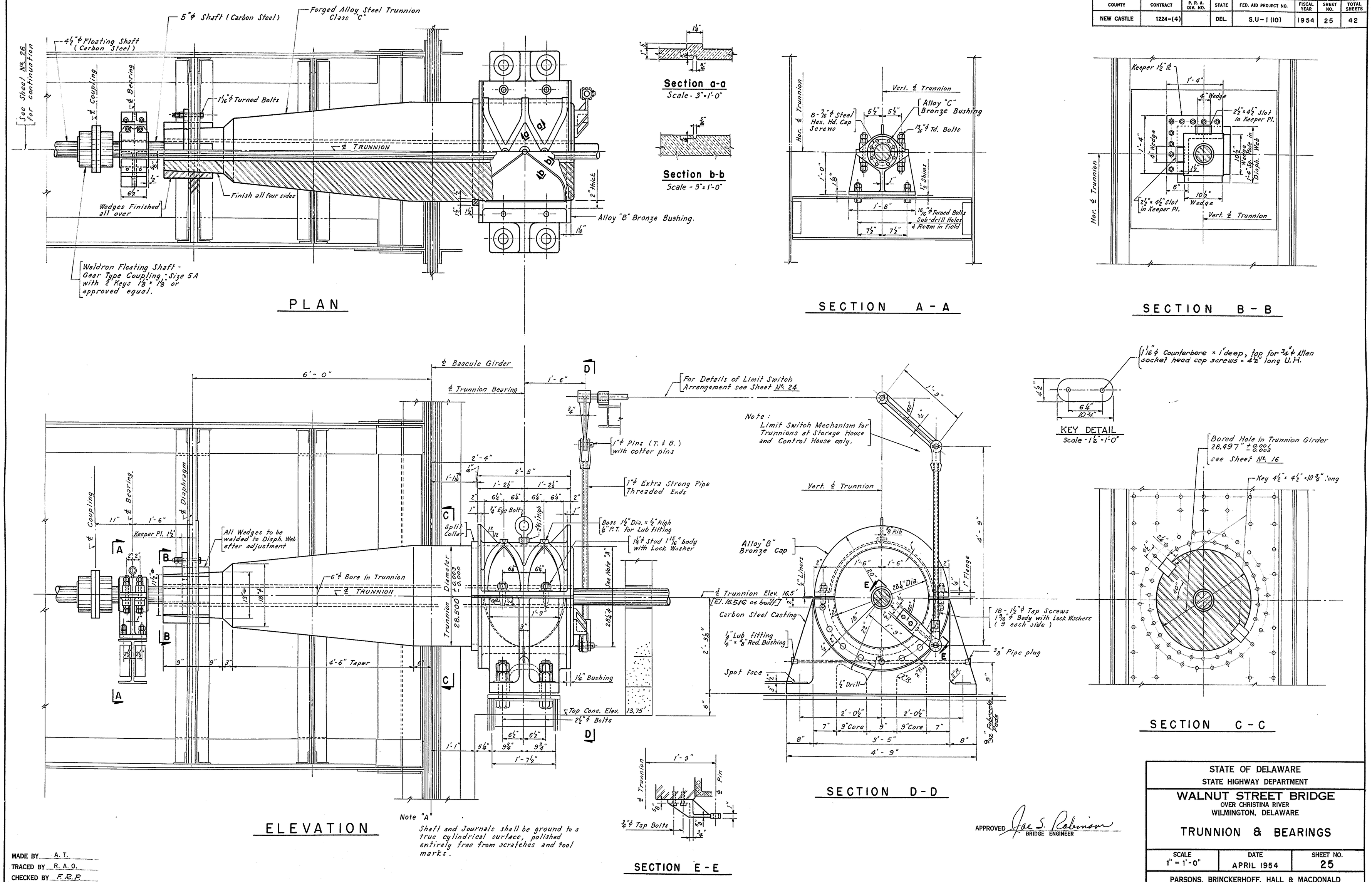

MADE BY A. T.
TRACED BY R. A. O.
CHECKED BY F.R.R.

APPROVED Jas. S. Robinson
BRIDGE ENGINEER

STATE OF DELAWARE
STATE HIGHWAY DEPARTMENT

WALNUT STREET BRIDGE
OVER CHRISTINA RIVER
WILMINGTON, DELAWARE

TRUNNION & BEARINGS

SCALE	DATE	SHEET NO.
1" = 1'-0"	APRIL 1954	25

PARSONS, BRINCKERHOFF, HALL & MACDONALD
ENGINEERS NEW YORK

MICROFILMED

COUNTY	CONTRACT	P. R. A. DIV. NO.	STATE	FED. AID PROJECT NO.	FISCAL YEAR	SHEET NO.	TOTAL SHEETS
NEW CASTLE	1224-(4)		DEL.	S.U-1 (10)	1954	26	42

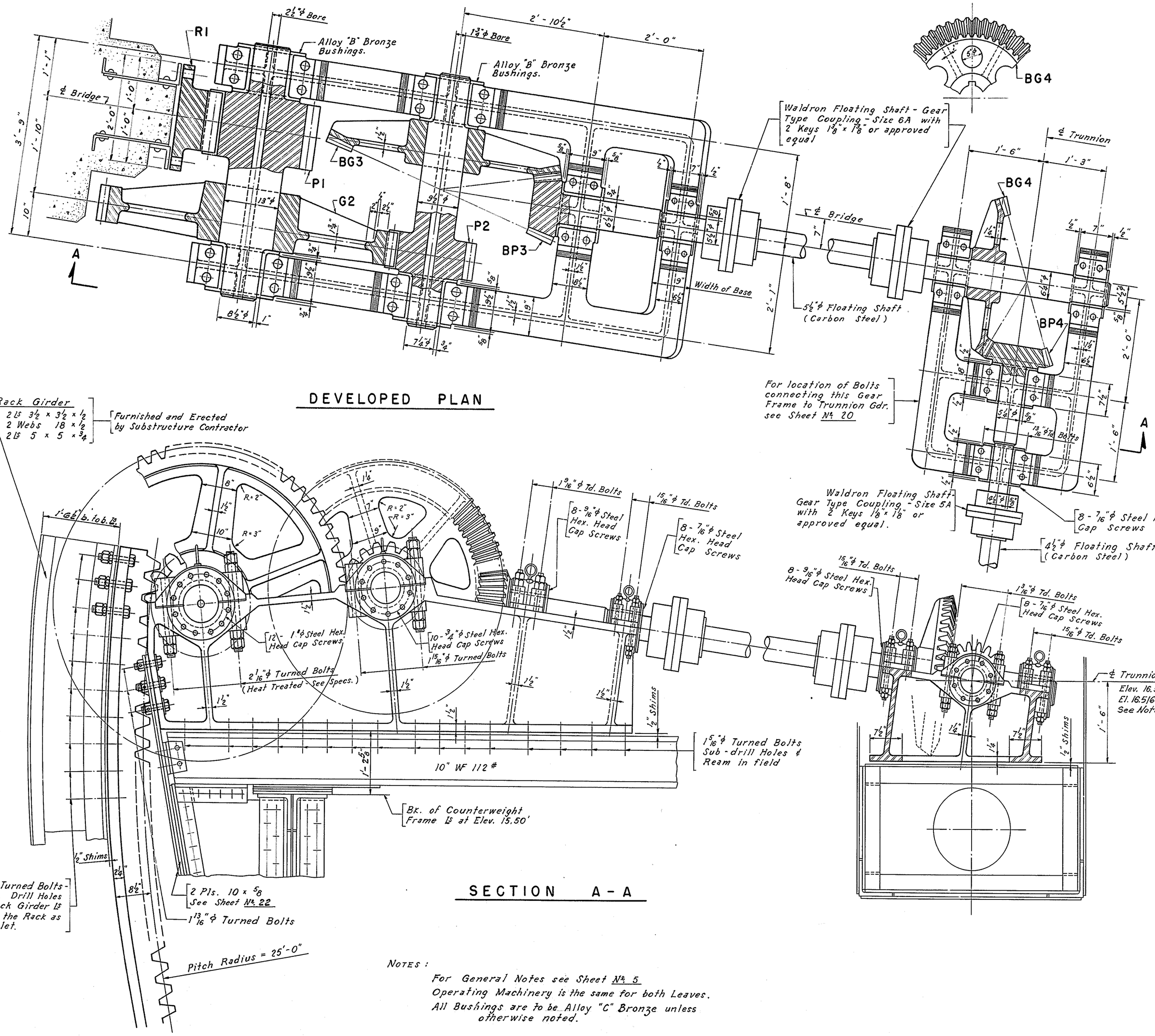

DEVELOPED PLAN

SECTION A-A

TABLE OF GEARS (20° INVOLUTE CUT TEETH)

Gear	№ Reqd.	Material	№ Teeth	Circ. Pitch	Pitch Diameter	Face	Hubs Bore	Hubs Diam.	Hubs Lgth.	Keys №	Keys Size	Remarks
R1	2	Cast Carbon Steel	88	5	600.000	13¾						Rack
P1	2	Forged Alloy Steel	15	5	23.873	14½						Integral with Shaft
G2	2	Cast Carbon Steel	63	3½	70.187	8	13	24	13	2	3¼ x 3¼	
P2	2	Forged Alloy Steel	17	3½	18.939	8½						Integral with Shaft
BG3	2	Cast Carbon Steel	79	2¼	56.580	6½	9½	18	10	2	2⅜ x 2⅜	
BP3	2	Forged Alloy Steel	21	2¼	15.040	6½						Integral with Shaft
BG4	2	Cast Carbon Steel	50	2¼	35.810	4¼	6¼	11½	8½	1	1 3/16 x 1 9/16	
BP4	2	Forged Alloy Steel	23	2¼	16.473	4¼						Integral with Shaft
R5	2	Cast Carbon Steel	26	1¼	—	2½						Bolt to Lock Bar
P5	2	Class E Forged Steel	17	1¼	6.764	3	3⅜	5¾	4½	1	⅞ x ⅞	Key to Reducer Shaft
				Diam. Pitch								
G6	4	Class E Forged Steel	56	7	8.000	1⅜	1⅜	Flush Faces		1	5/16 x 5/16	
P7	4	Carbon Steel	18	5	3.600	1¼	¾	2	2½	1	3/16 x 3/16	
G7	2	Carbon Steel	70	5	14.000	1	1½	3	3¼	1	⅜ x ⅜	

All Dimensions in this Table are in inches.
The required number of Gears given is for two Bascule Leaves.
Cast Carbon Steel shall be Grade 65-35.
Forged Alloy Steel shall be Class "A".
R1 & P1 are Special 20° Inv. Stub Cut Teeth

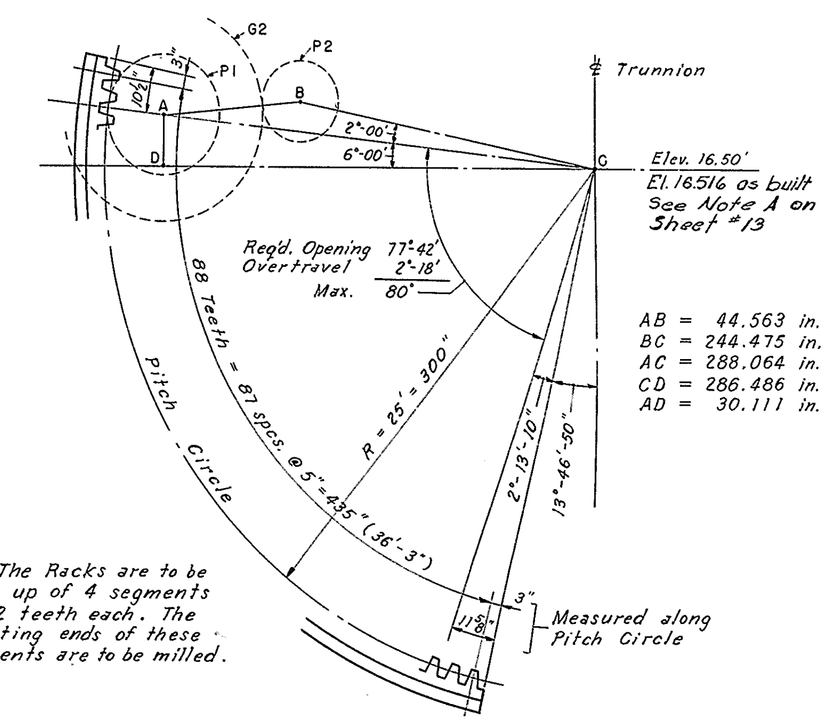

Note :
The Racks are to be made up of 4 segments of 22 teeth each. The abutting ends of these segments are to be milled.

GEOMETRY OF RACK AND GEARS
NO SCALE

NOTES :
For General Notes see Sheet № 5
Operating Machinery is the same for both Leaves.
All Bushings are to be Alloy "C" Bronze unless otherwise noted.

APPROVED Jae S. Robinson
BRIDGE ENGINEER

STATE OF DELAWARE
STATE HIGHWAY DEPARTMENT

WALNUT STREET BRIDGE
OVER CHRISTINA RIVER
WILMINGTON, DELAWARE

DETAILS OF OPERATING MACHINERY

SCALE	DATE	SHEET NO.
1" = 1'-0"	APRIL 1954	26

PARSONS, BRINCKERHOFF, HALL & MACDONALD
ENGINEERS NEW YORK

MADE BY F. R. P.
TRACED BY R. A. O.
CHECKED BY F.R.P.

COUNTY	CONTRACT	P. R. A. DIV. NO.	STATE	FED. AID PROJECT NO.	FISCAL YEAR	SHEET NO.	TOTAL SHEETS
NEW CASTLE	1224-(4)		DEL.	S.U-1 (10)	1954	27	42

MICROFILMED

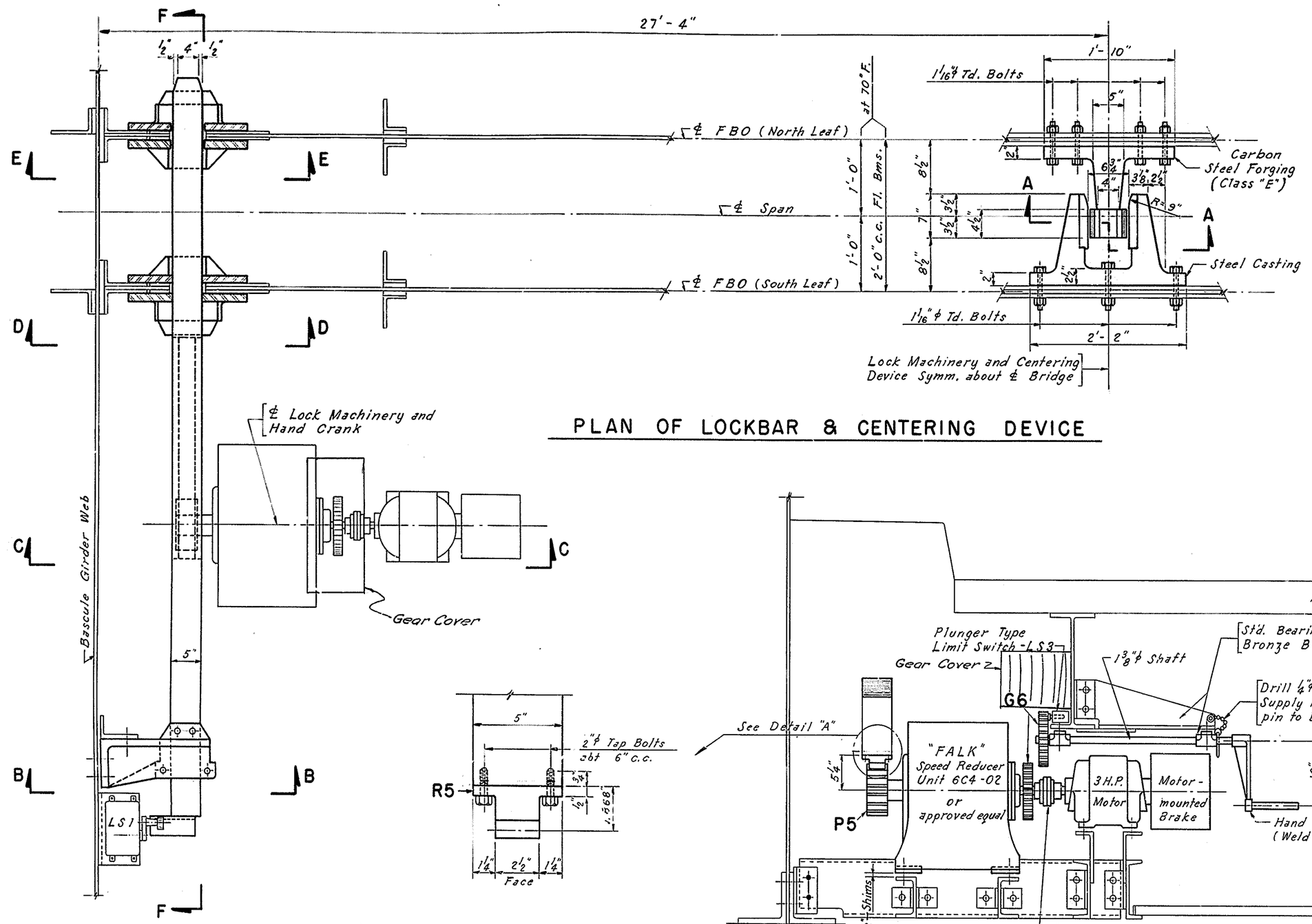

PLAN OF LOCKBAR & CENTERING DEVICE

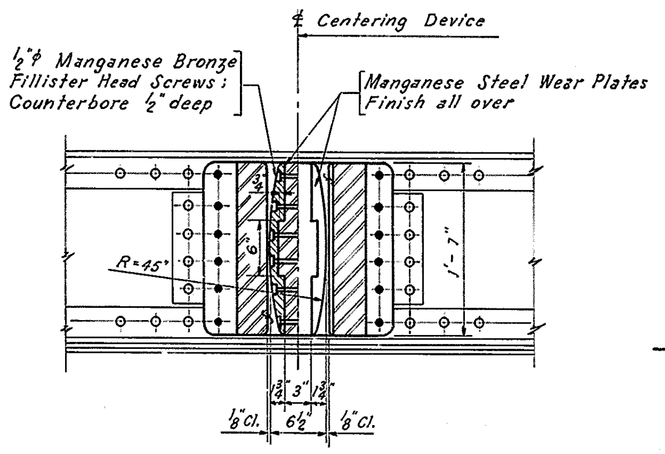

SECTION A-A

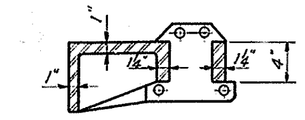

SECTION G-G

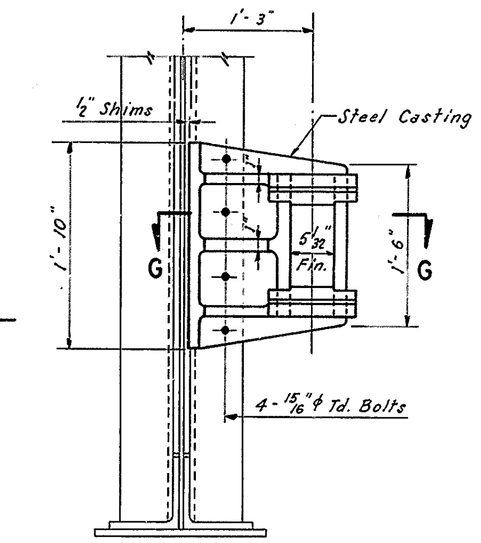

SECTION B-B

DETAIL "A"
Scale: 3" = 1'-0"

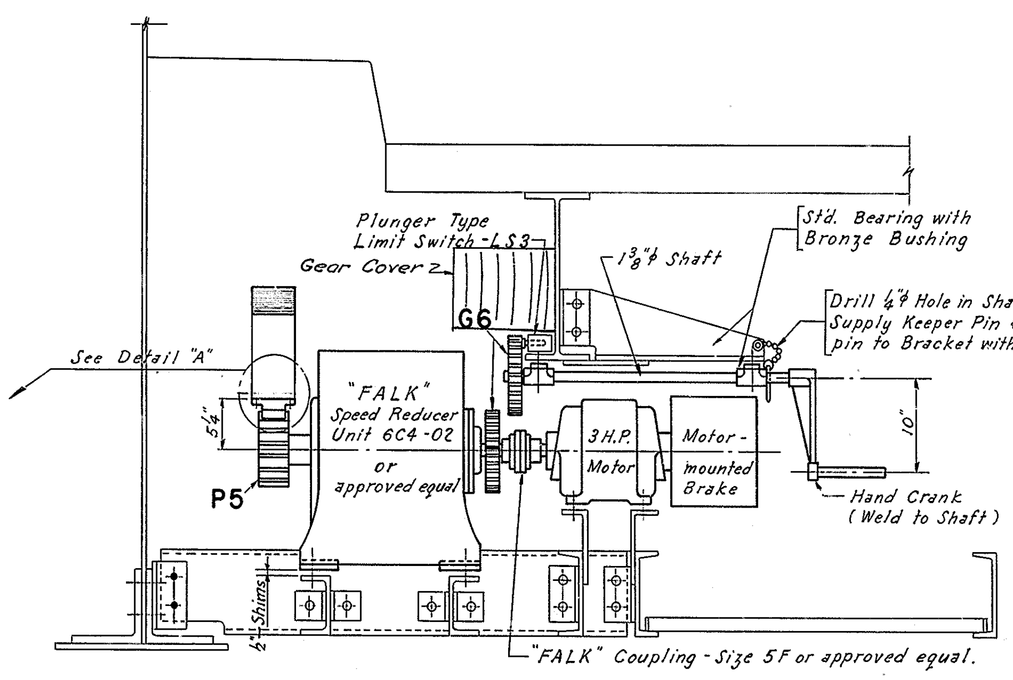

SECTION C-C

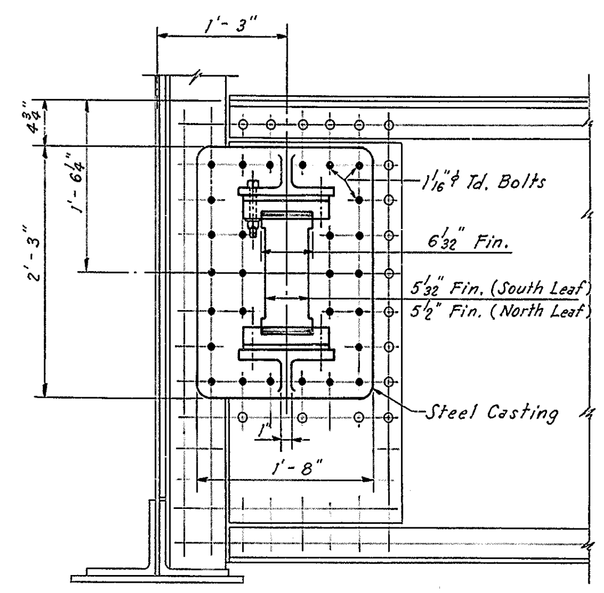

SECTION D-D

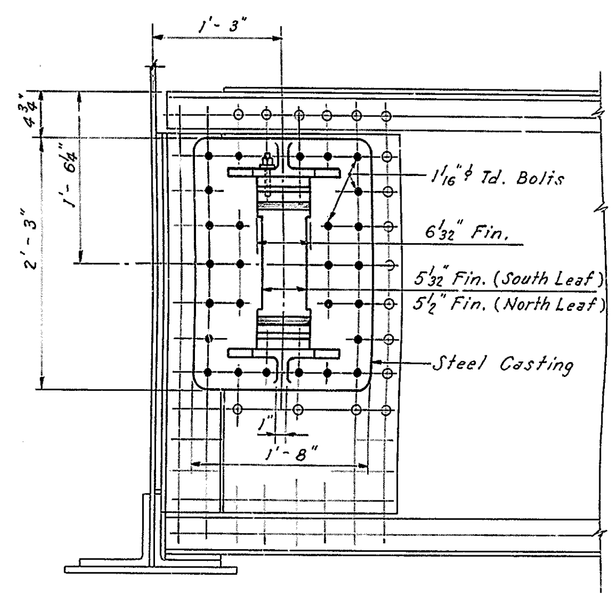

SECTION E-E

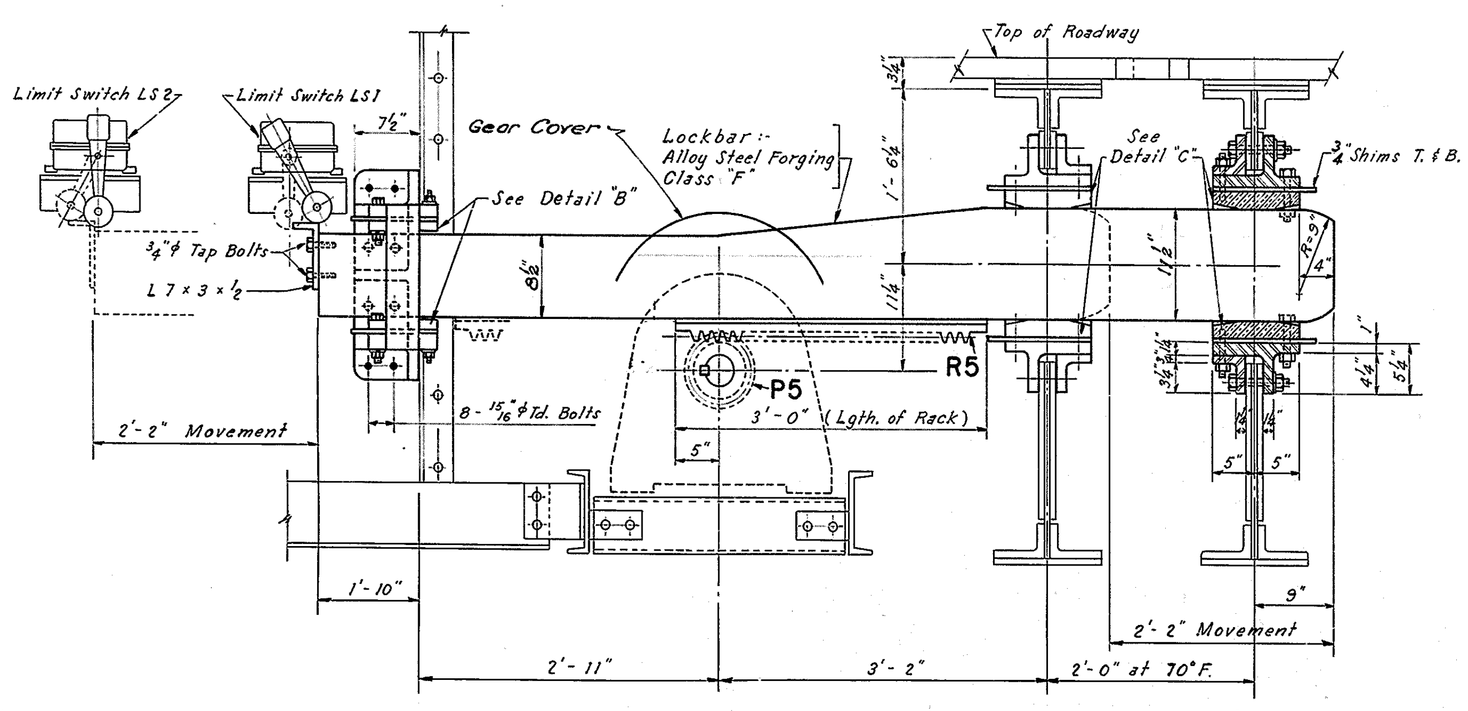

SECTION F-F

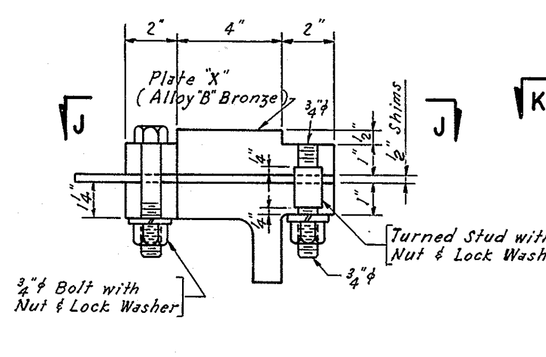

DETAIL "B"
Scale: 3" = 1'-0"

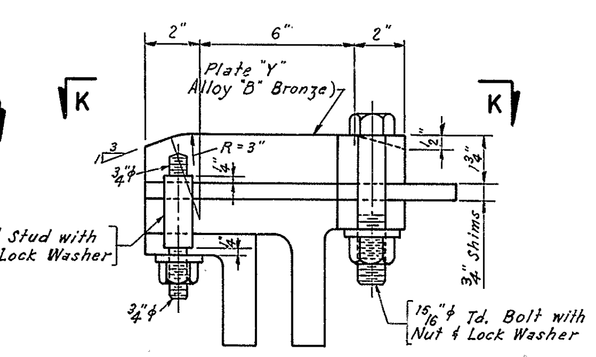

DETAIL "C"
Scale: 3" = 1'-0"

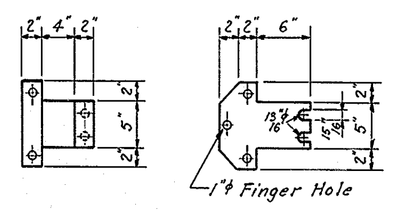

PLATE "X" SHIM

SECTION J-J
Scale: 1" = 1'-0"

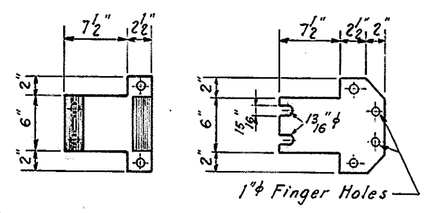

PLATE "Y" SHIM

SECTION K-K
Scale: 1" = 1'-0"

NOTES:

1. Lock Bars & Machinery required on South Leaf only.
2. For Table of Gears see Sheet No. 26
3. For Details of Platforms see Sheet No. 19
4. For each casting supporting the Lock Bar there shall be provided extra shims for the future adjustment of the bearings to the amount of 1/2" total thickness. The 1/2" shims shall be made up as follows: 1/8", 1/8", 1/16" & 2-1/32". These shims shall be stored conspicuously in the operators' house.

MADE BY F. R. P.
TRACED BY R. A. O.
CHECKED BY F. R. P.

APPROVED Joe S. Robinson
BRIDGE ENGINEER

STATE OF DELAWARE
STATE HIGHWAY DEPARTMENT

WALNUT STREET BRIDGE
OVER CHRISTINA RIVER
WILMINGTON, DELAWARE

SPAN LOCK & CENTERING DEVICE

SCALE	DATE	SHEET NO.
1" = 1'-0" & AS NOTED	APRIL 1954	27

PARSONS, BRINCKERHOFF, HALL & MACDONALD
ENGINEERS NEW YORK

COUNTY	CONTRACT	P. R. A. DIV. NO.	STATE	FED. AID PROJECT NO.	FISCAL YEAR	SHEET NO.	TOTAL SHEETS
NEW CASTLE	1224-(4)		DEL.	S.U-1 (10)	1954	28	42

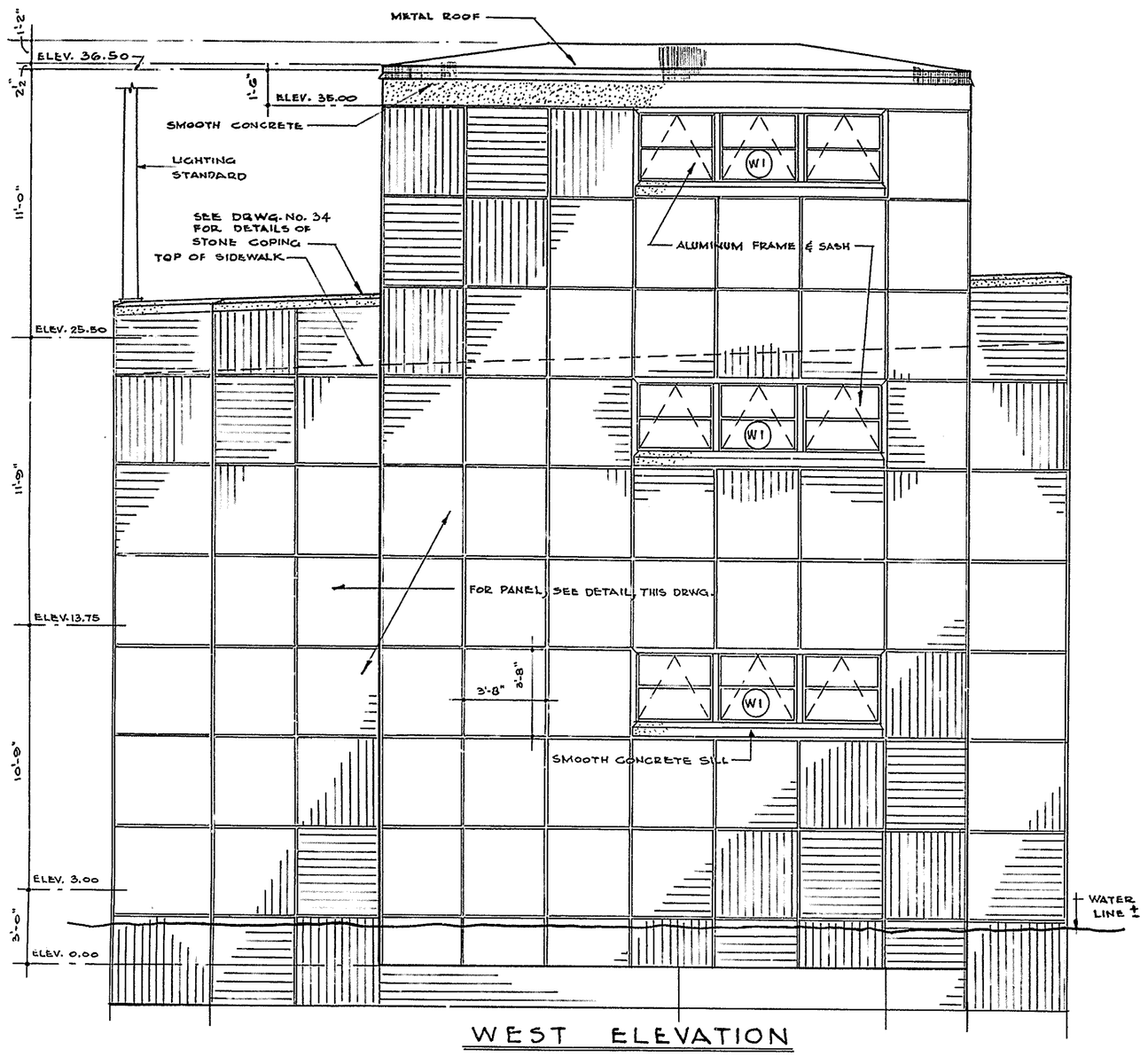

WEST ELEVATION

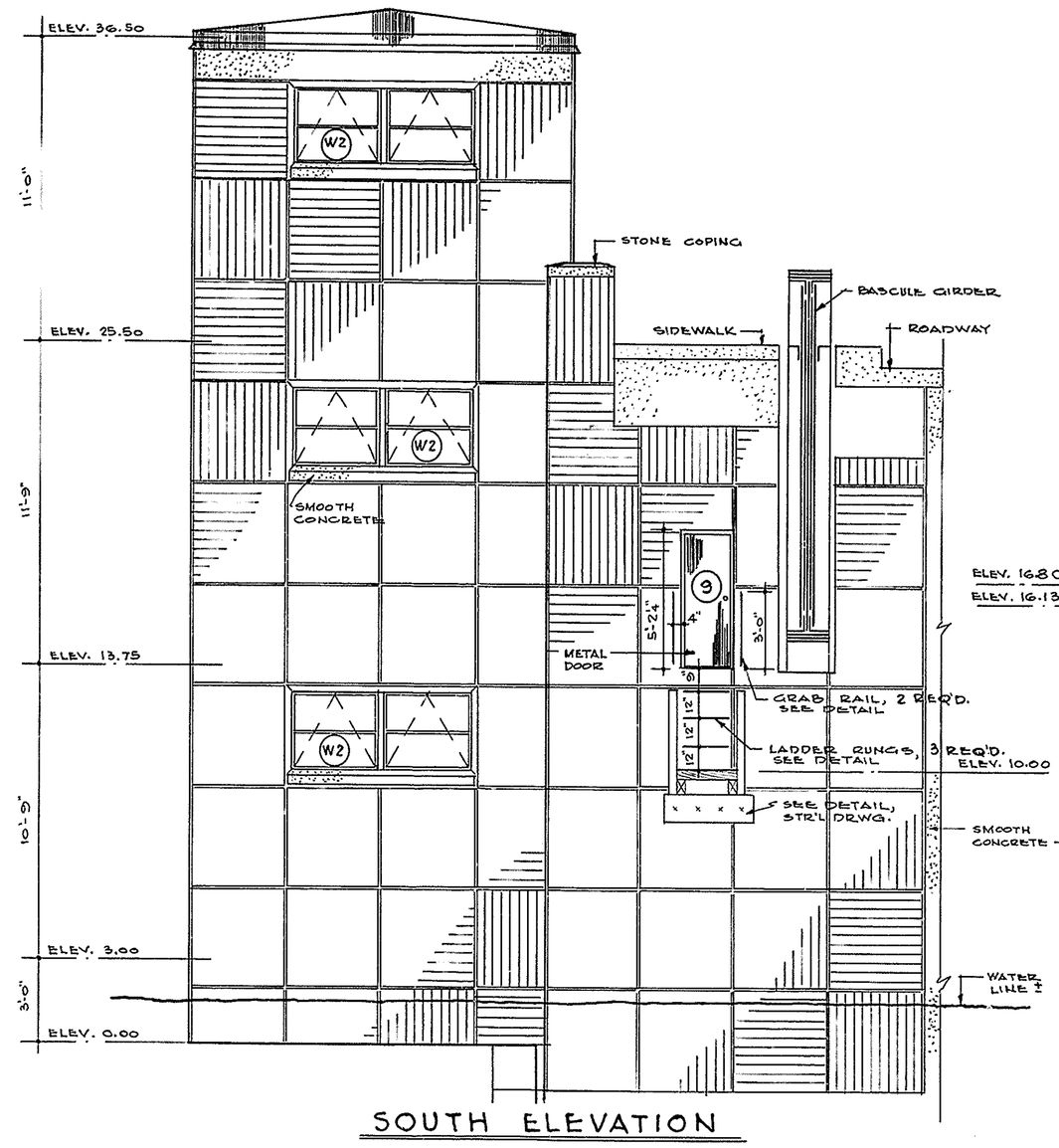

SOUTH ELEVATION

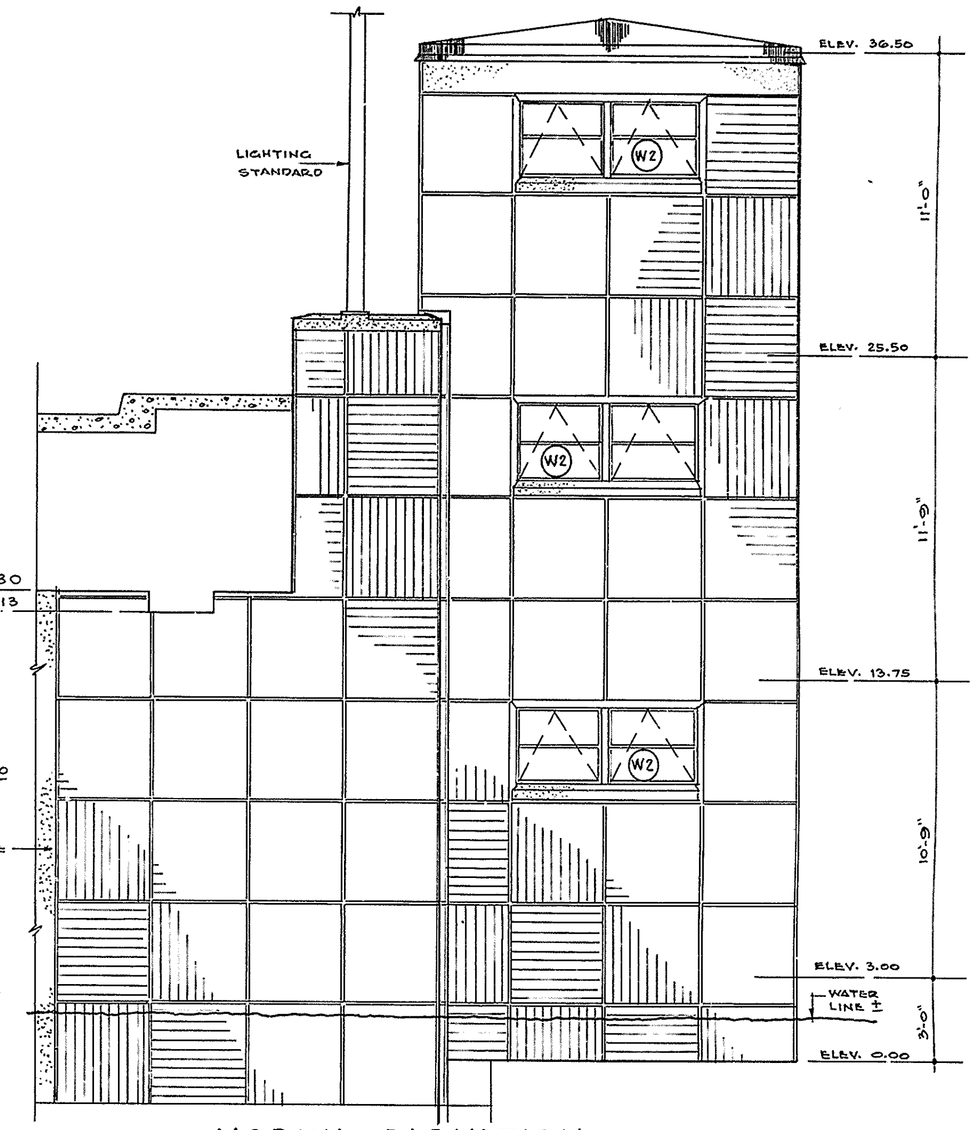

NORTH ELEVATION

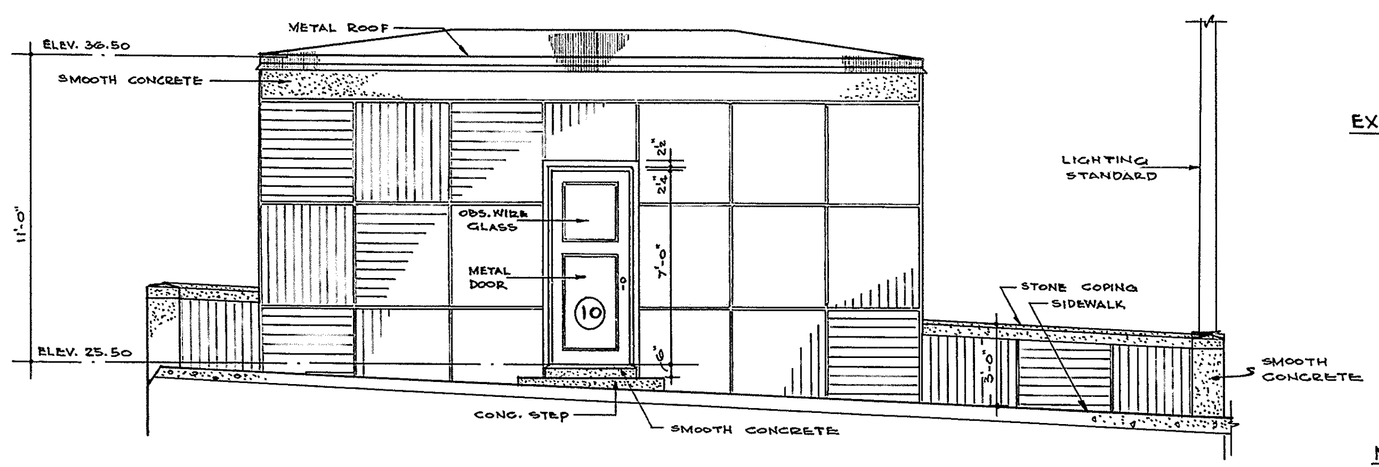

EAST ELEVATION

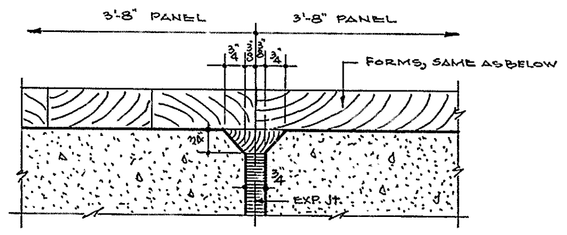

EXPANSION JOINT DETAIL IN RETAINING WALLS

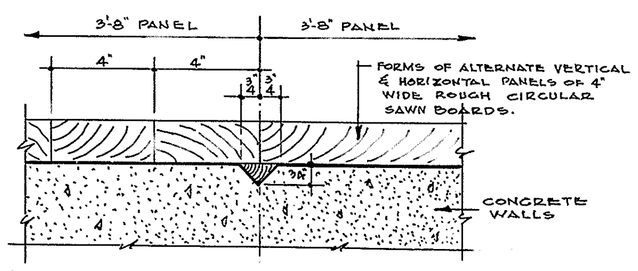

NOTE: WHERE SMOOTH CONCRETE IS CALLED FOR, USE MASONITE PANEL FORMS.

PANEL JOINT DETAIL

TYPICAL PANEL DETAILS

SCALE 3"=1'-0"

APPROVED Jae S. Robinson
BRIDGE ENGINEER

MADE BY W. S. F.
TRACED BY A. J. B.
CHECKED BY R. W. N.

STATE OF DELAWARE
STATE HIGHWAY DEPARTMENT

WALNUT STREET BRIDGE
OVER CHRISTINA RIVER
WILMINGTON, DELAWARE

STORAGE HOUSE
ELEVATIONS

SCALE	DATE	SHEET NO.
1/4"=1'-0" & 3"=1'-0"	APRIL 1954	28

PARSONS, BRINCKERHOFF, HALL & MACDONALD
ENGINEERS NEW YORK

COUNTY	CONTRACT	P. R. A. DIV. NO.	STATE	FED. AID PROJECT NO.	FISCAL YEAR	SHEET NO.	TOTAL SHEETS
NEW CASTLE	1224-(4)		DEL.	S.U-1 (10)	1954	29	42

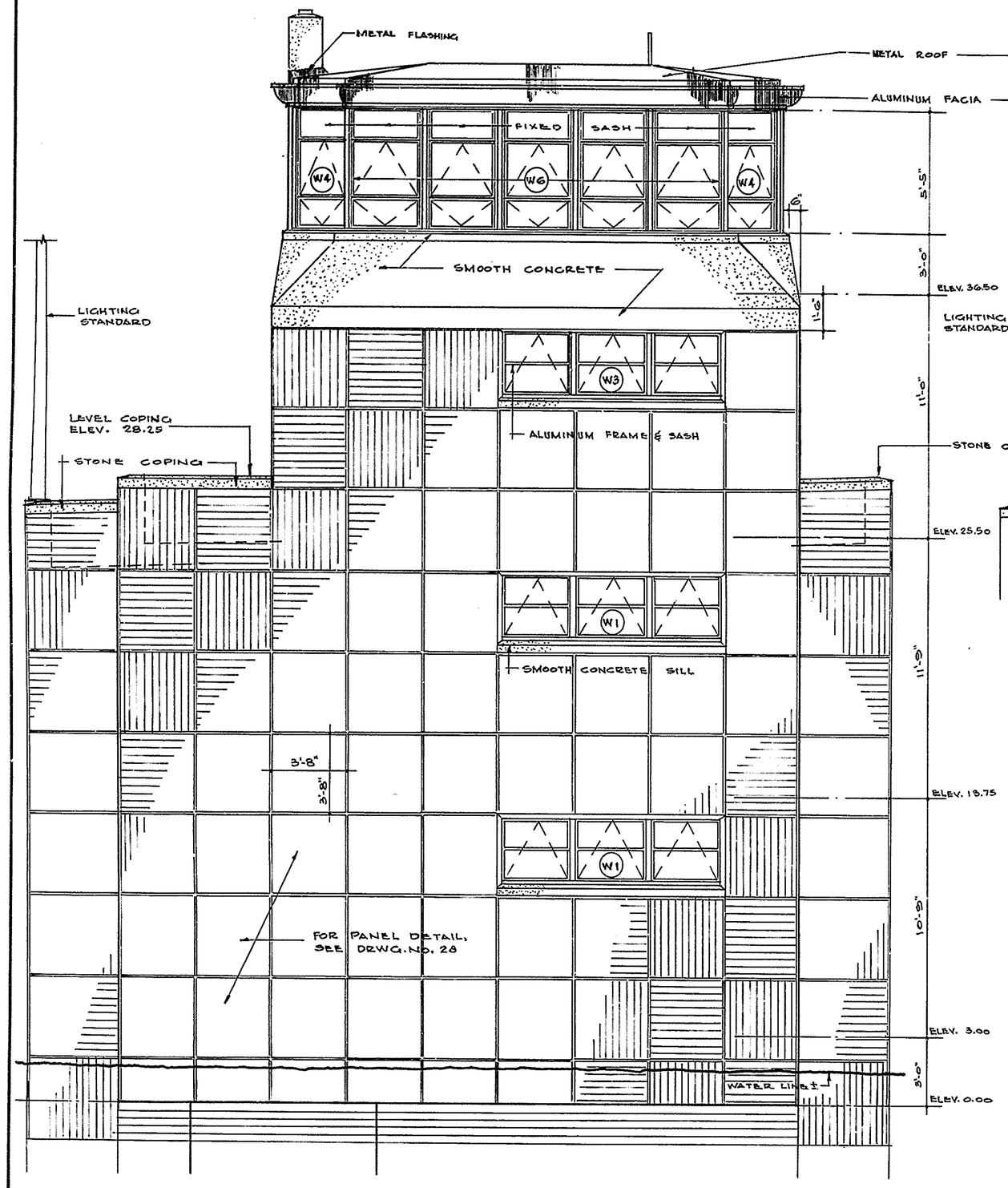

EAST ELEVATION

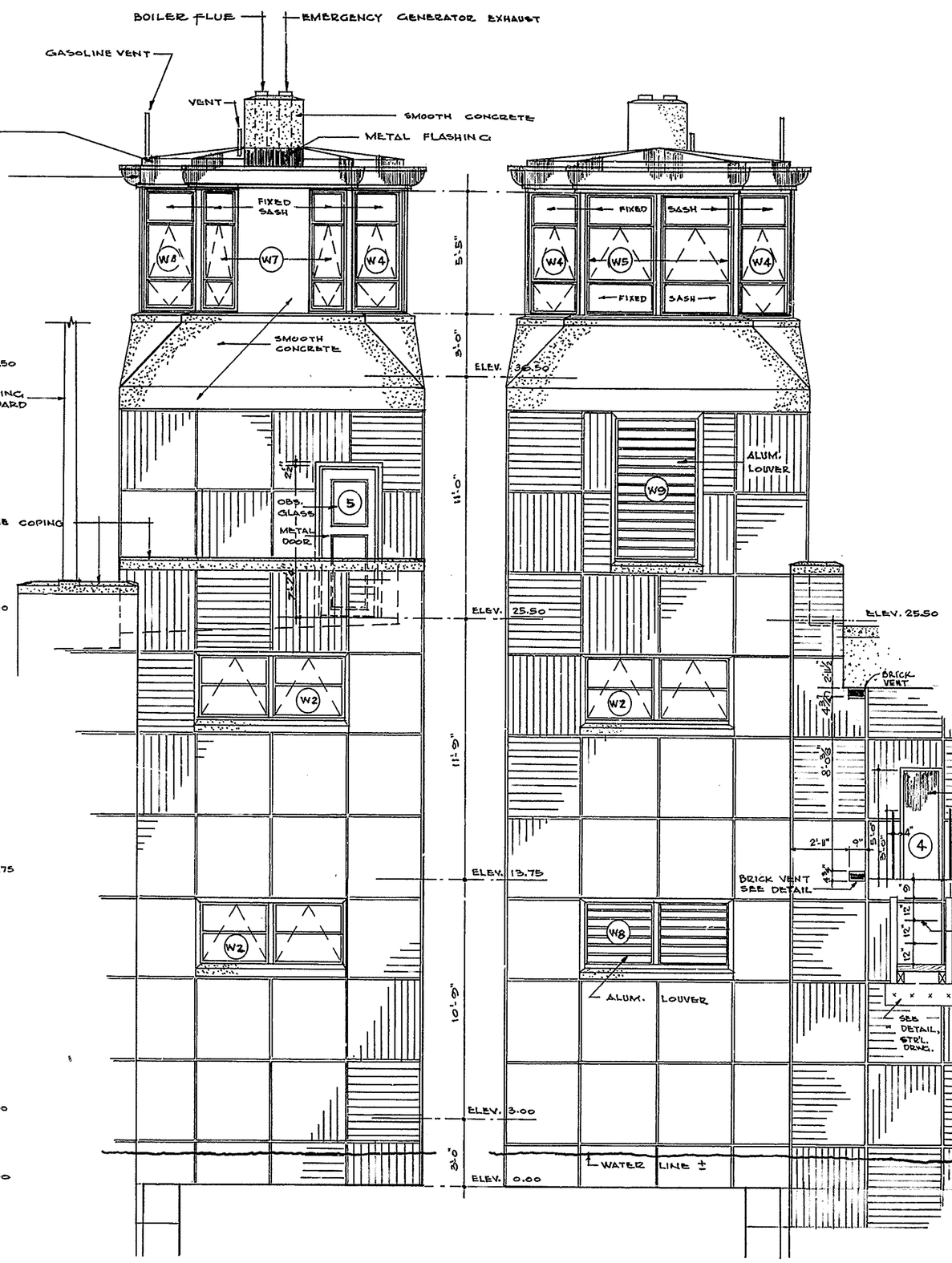

SOUTH ELEV.

NORTH ELEV.

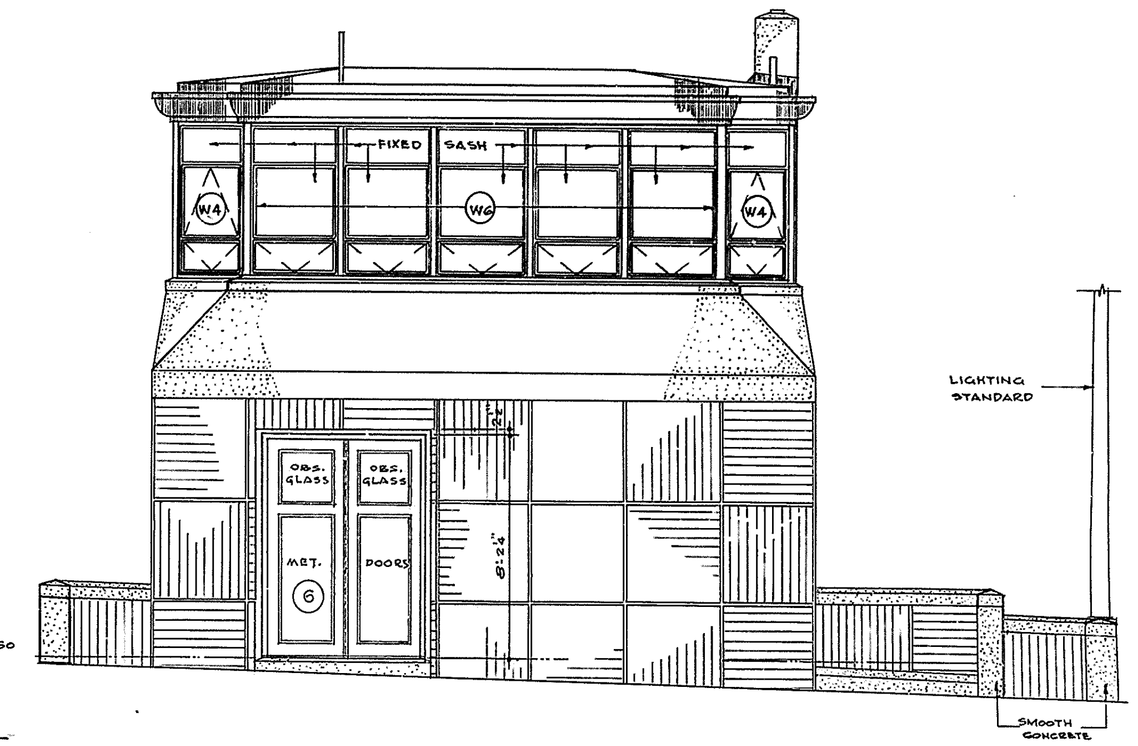

WEST ELEVATION

APPROVED Jose S. Robinson
BRIDGE ENGINEER

MADE BY I.A.P.
TRACED BY A.J.B.
CHECKED BY R.W.N.

STATE OF DELAWARE
STATE HIGHWAY DEPARTMENT

WALNUT STREET BRIDGE
OVER CHRISTINA RIVER
WILMINGTON, DELAWARE

CONTROL HOUSE
ELEVATIONS

SCALE	DATE	SHEET NO.
1/4" = 1'-0"	APRIL 1954	29

PARSONS, BRINCKERHOFF, HALL & MACDONALD
ENGINEERS NEW YORK

COUNTY	CONTRACT	P. R. A. DIV. NO.	STATE	FED. AID PROJECT NO.	FISCAL YEAR	SHEET NO.	TOTAL SHEETS
NEW CASTLE	1224-(4)		DEL.	S.U-1 (10)	1954	30	42

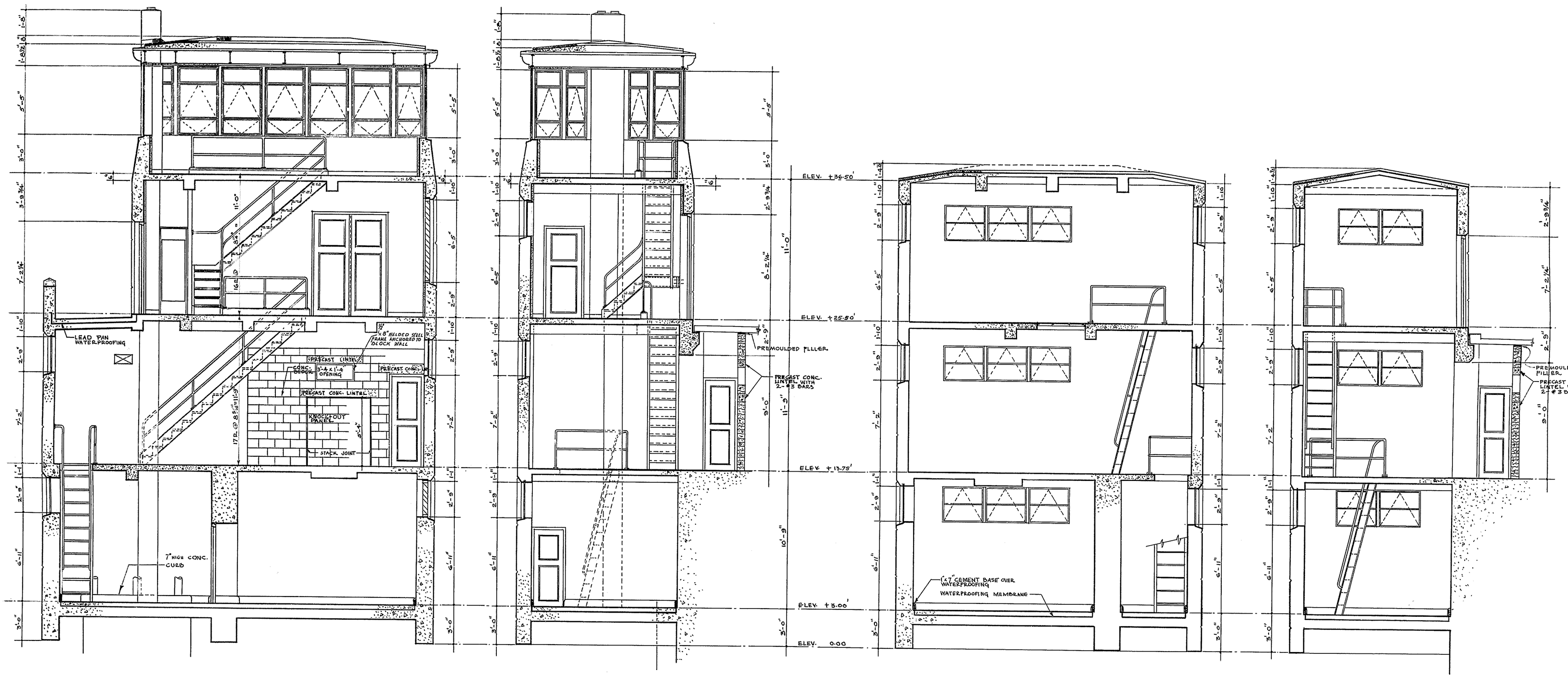

SECTION A-A

SECTION B-B

SECTION C-C

SECTION D-D

APPROVED Jae S. Robinson
BRIDGE ENGINEER

MADE BY I. A. P.
TRACED BY L. G. A.
CHECKED BY R. W. N.

STATE OF DELAWARE
STATE HIGHWAY DEPARTMENT

WALNUT STREET BRIDGE
OVER CHRISTINA RIVER
WILMINGTON, DELAWARE

CROSS SECTIONS OF HOUSES

SCALE	DATE	SHEET NO.
1/4" = 1'-0"	APRIL 1954	30

PARSONS, BRINCKERHOFF, HALL & MACDONALD
ENGINEERS NEW YORK

COUNTY	CONTRACT	P. R. A. DIV. NO.	STATE	FED. AID PROJECT NO.	FISCAL YEAR	SHEET NO.	TOTAL SHEETS
NEW CASTLE	1224-(4)		DEL.	S.U-1 (10)	1954	31	42

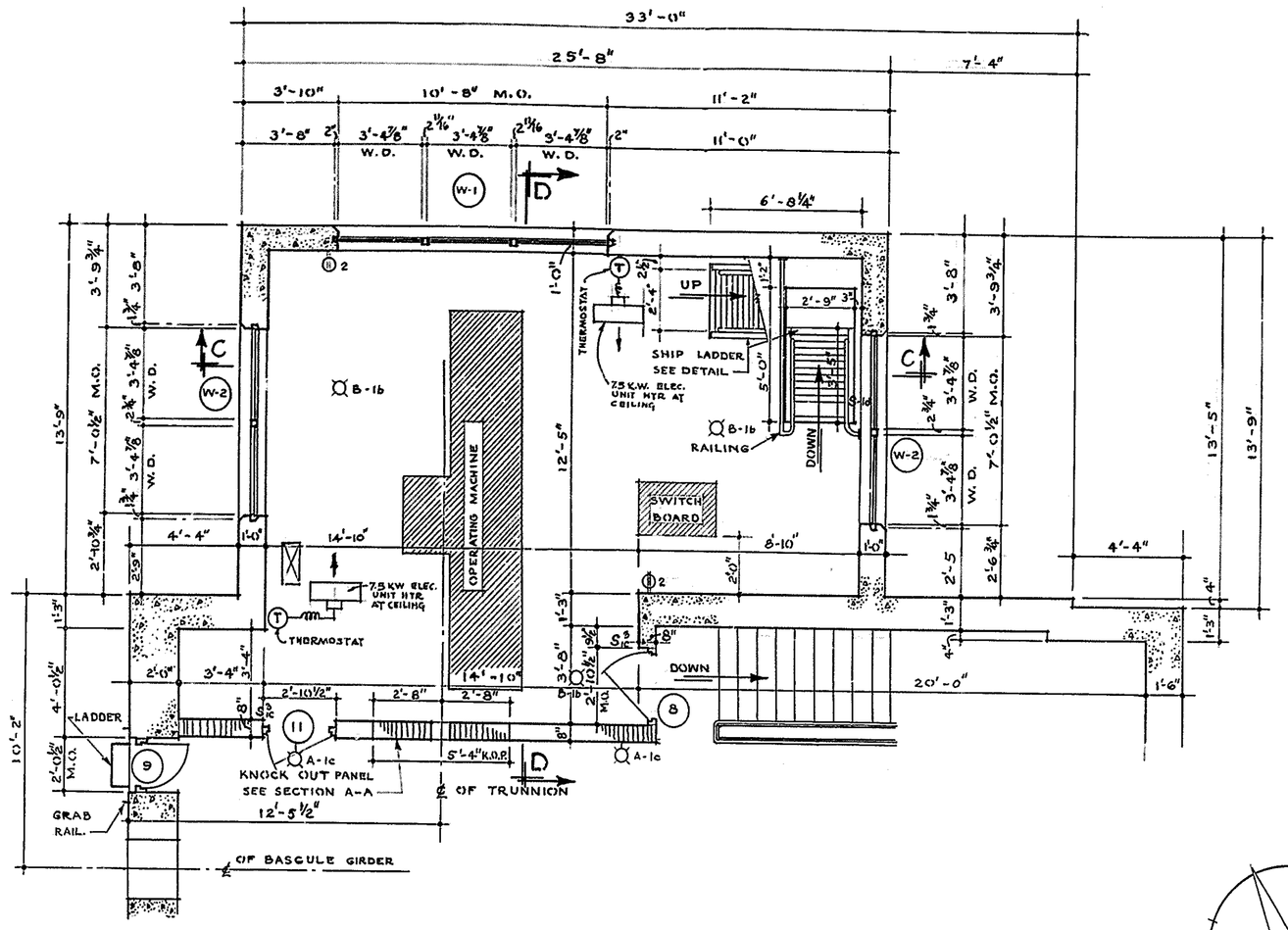

PLAN AT EL. 13.75'

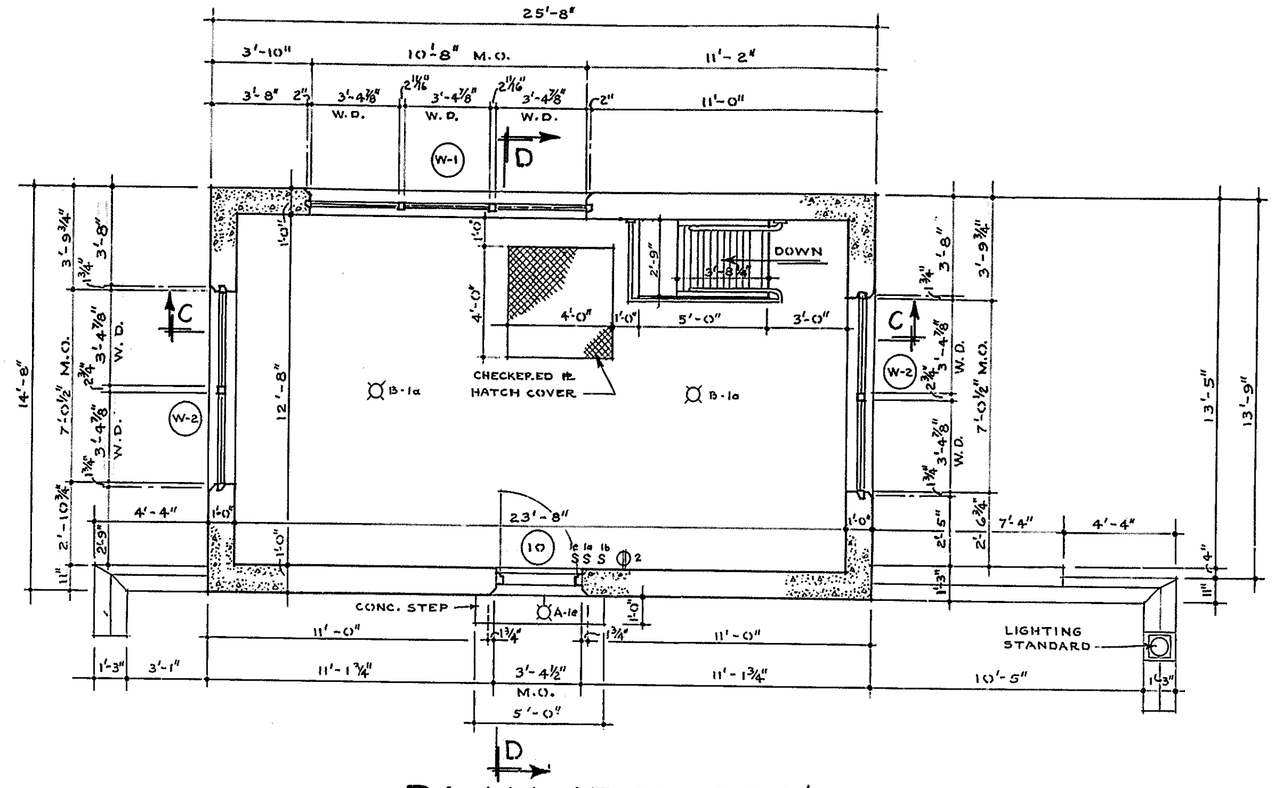

PLAN AT EL. 25.5'

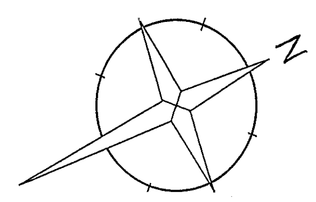

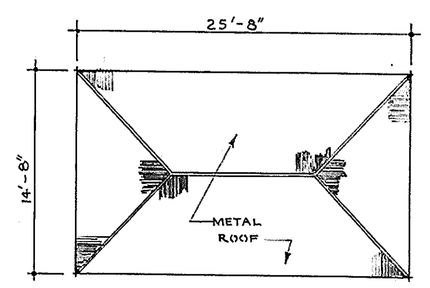

ROOF PLAN
SCALE 1/8" = 1'-0"

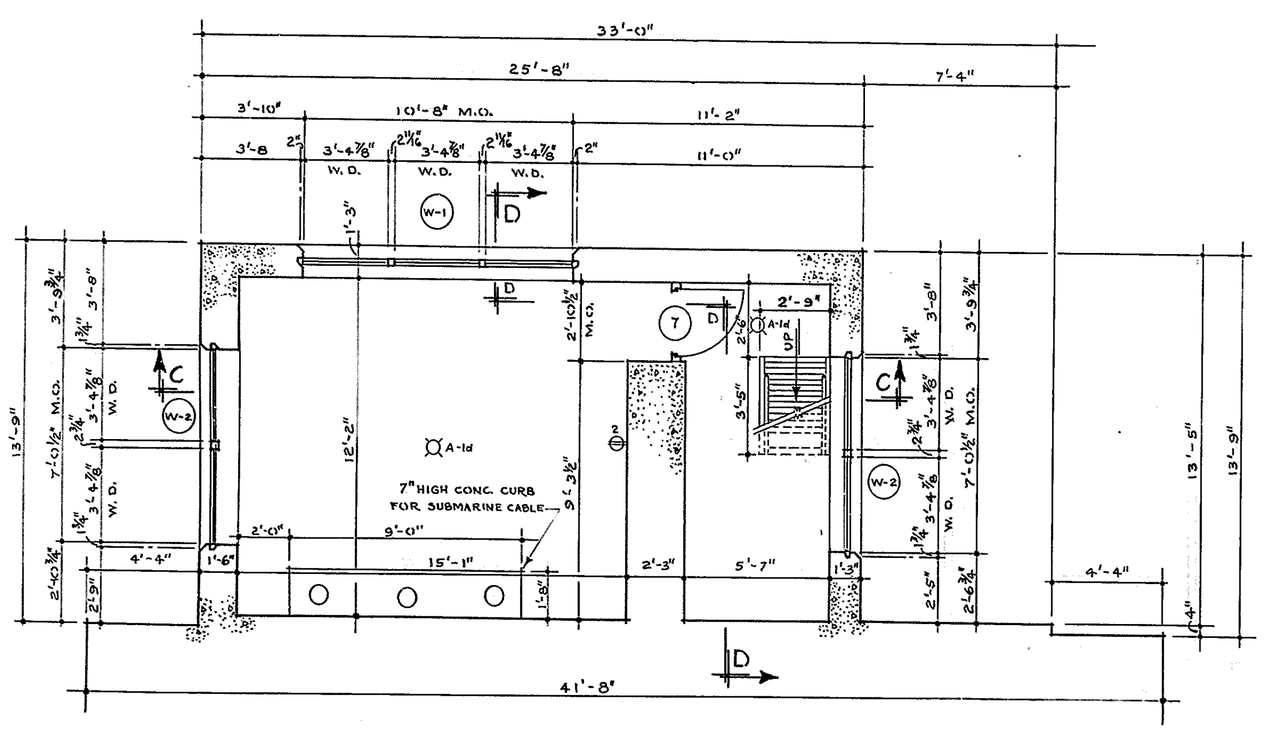

PLAN AT EL. 3.0'

FINISH SCHEDULE

BLDG	LOCATION	FLOOR	BASE	WALL	CEILING
STORAGE HOUSE	PLAN AT EL. 3.0	CONCRETE	7" CEMENT BASE OVER WATER-PROOFING	CONCRETE	CONCRETE
	" " " 13.75	SMOOTH TROWELED CONCRETE PAINTED	PAINTED	SMOOTH CONCRETE & CONC. BLOCK PAINTED	SMOOTH CONCRETE PAINTED
	" " " 25.50	SMOOTH TROWELED CONCRETE PAINTED	PAINTED	SMOOTH CONCRETE PAINTED	SMOOTH CONCRETE PAINTED
CONTROL HOUSE	PLAN AT EL. 3.0	CONCRETE	7" CEMENT BASE OVER WATERPROOFING	CONCRETE	CONCRETE
	" " " 13.75	SMOOTH TROWELED CONCRETE PAINTED	PAINTED	SMOOTH CONCRETE & CONC. BLOCK PAINTED	SMOOTH CONCRETE PAINTED
	" " " 25.50	SMOOTH TROWELED CONCRETE-PAINTED	4" RUBBER TILE	1½" INSUL. + ½" PLASTER, NO INSUL. ¾" PLASTER ALL PAINTED	SMOOTH CONCRETE PAINTED
	" " " 36.50	CONCRETE/WITH RUBBER TILE FINISH.	4" RUBBER TILE	1½" INSUL. + ½" PLASTER NO INSUL. ¾" PLASTER ALL PAINTED	SUSPENDED WIRE LATH & PLASTER PAINTED

NOTE ~
ALL EXTERIOR & INTERIOR DOORS & FRAMES, EXPOSED METAL (EXCEPT ALUMINUM), PIPES, DUCTS SHALL BE PAINTED.

KEY OF MATERIALS

CONCRETE
INSULATION
CONCRETE BLOCK

GENERAL NOTES ~

PROVIDE SLEEVES & FRAME OPENINGS AS REQUIRED FOR MECHANICAL & ELECTRICAL EQUIPMENT.
CAULK ENTIRE PERIMETER OF ALL EXTERIOR WINDOWS, LOUVERS, BRICK VENTS, DOORS, AND INTERIOR DOORS.
EXTERIOR FORMS TO BE OF 4" WIDE ROUGH CIRCULAR SAWN BOARDS IN PATTERN & DETAILS AS SHOWN – WHERE SMOOTH CONCRETE IS CALLED FOR, MASONITE PANELS ARE TO BE USED. (FOR ENTIRE BRIDGE STRUCTURE).
INTERIOR INSULATION TO BE SET IN HOT ASPHALT OVER ASPHALT PRIMING PAINT.
DIMENSIONS SHOWN ON FLOOR PLANS AT EITHER SIDE OF MASONRY OPENINGS ARE TO CENTER OF PANEL JOINTS EXCEPT AT DOORS #2 & #6.
PROVIDE 1½" THICK CORKBOARD INSULATION BETWEN BACK OF THERMOSTAT AND EXTERIOR CONC. WALL.

ELECTRICAL LEGEND ~

A - 75 W RLM REFLECTOR
B - 100 W RLM REFLECTOR

MADE BY W.S.F.
TRACED BY W.S.F.
CHECKED BY R.W.N.

APPROVED Jae S. Robinson
BRIDGE ENGINEER

STATE OF DELAWARE
STATE HIGHWAY DEPARTMENT

WALNUT STREET BRIDGE
OVER CHRISTINA RIVER
WILMINGTON, DELAWARE

STORAGE HOUSE
FLOOR PLANS

SCALE	DATE	SHEET NO.
1/4" = 1'-0" & 1/8" = 1'-0"	APRIL 1954	31

PARSONS, BRINCKERHOFF, HALL & MACDONALD
ENGINEERS NEW YORK

MICROFILMED

COUNTY	CONTRACT	P. R. A. DIV. NO.	STATE	FED. AID PROJECT NO.	FISCAL YEAR	SHEET NO.	TOTAL SHEETS
NEW CASTLE	1224-(4)		DEL.	S.U-1 (10)	1954	32	42

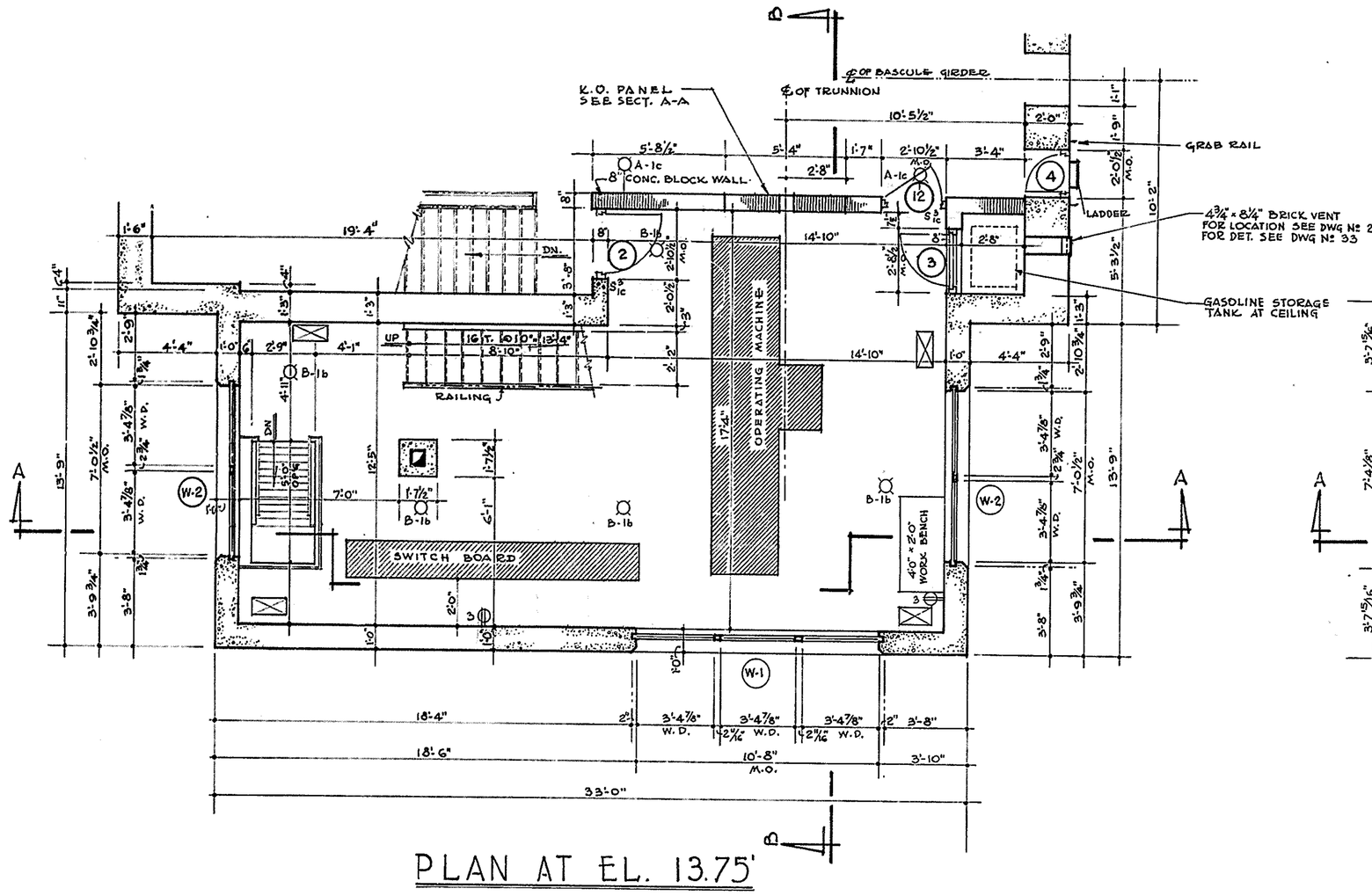

PLAN AT EL. 13.75'

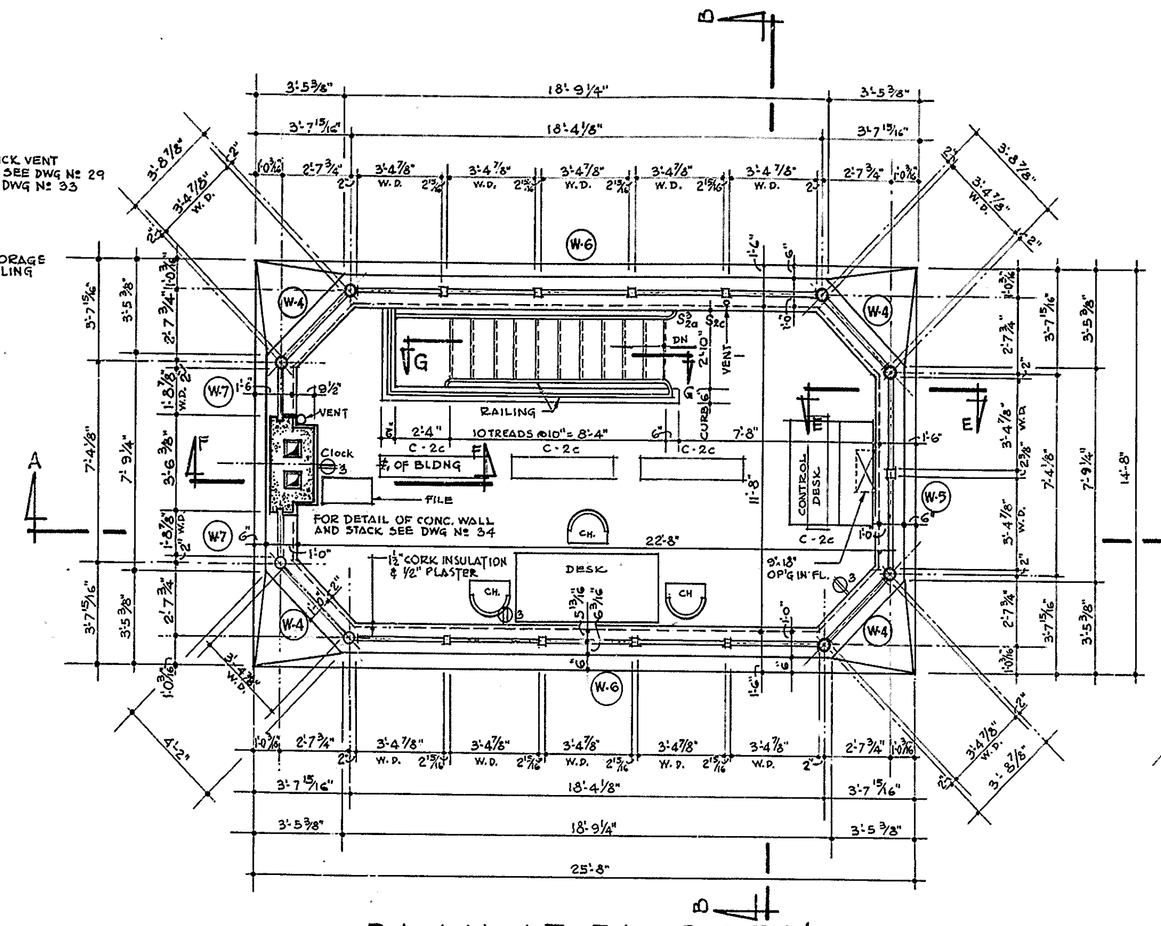

PLAN AT EL. 36.50'

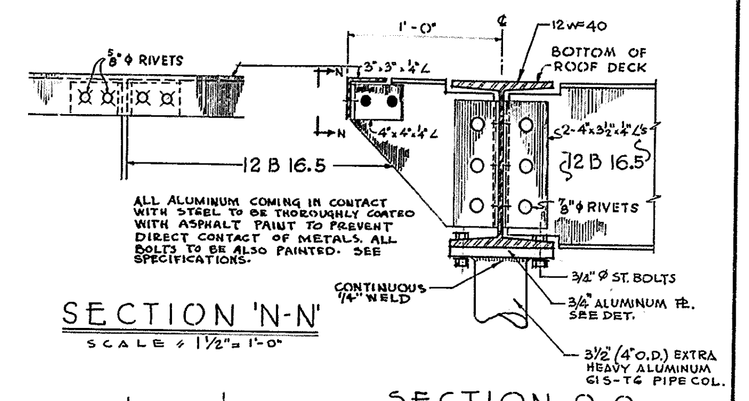

SECTION 'N-N'

SCALE: 1½" = 1'-0"

SECTION O-O

SCALE: 1½" = 1'-0"

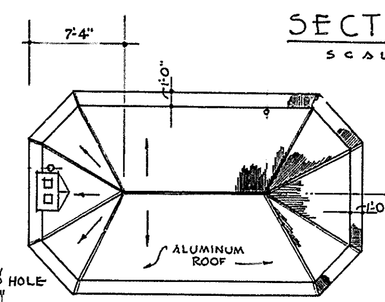

ROOF PLAN

SCALE: 1/8" = 1'-0"

NOTE: FOR ROOF DET. SEE DWG Nº 34

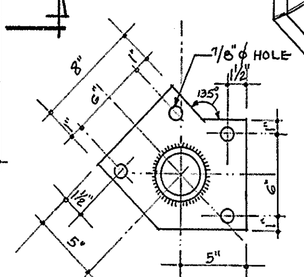

DET. OF BEARING PL.

SCALE: 1½" = 1'-0"

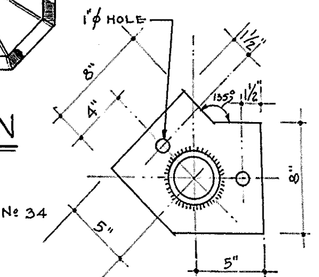

DET. OF BASE PL.

SCALE: 1½" = 1'-0"

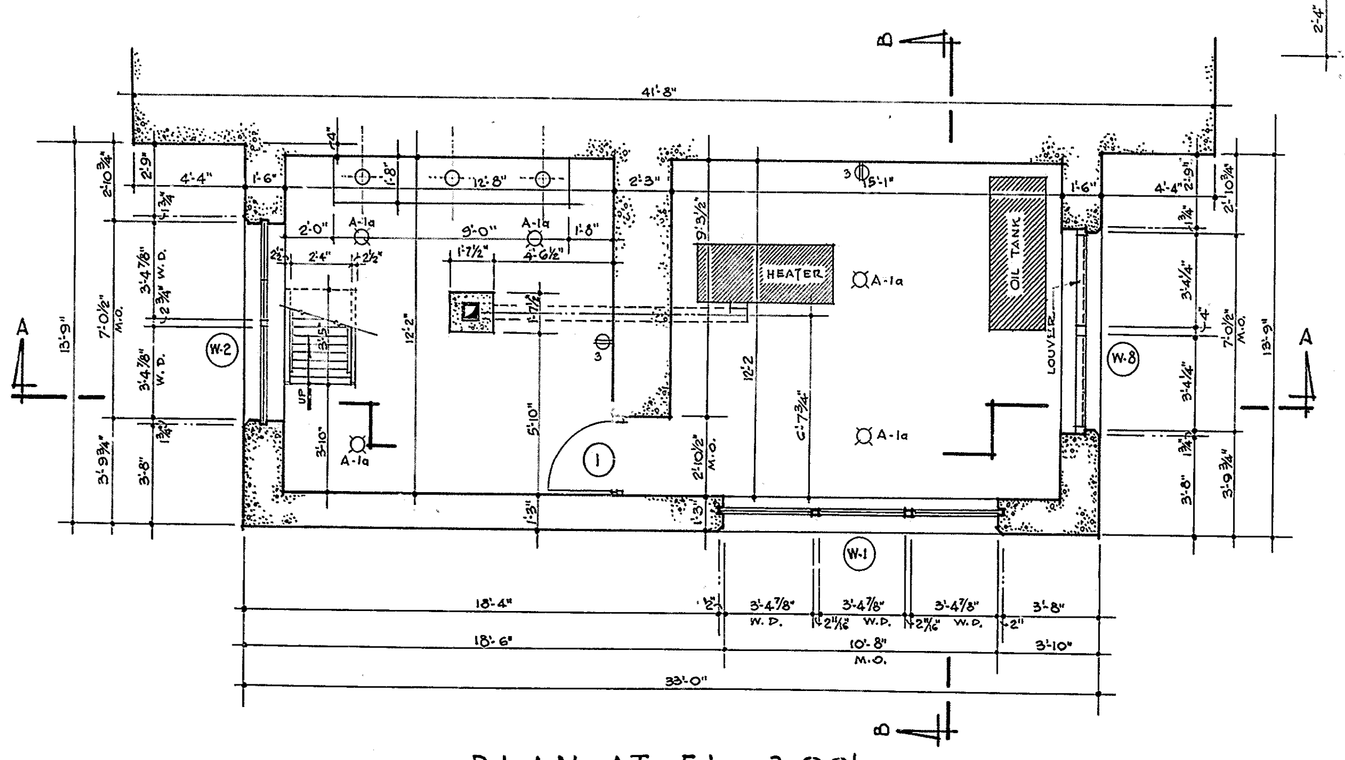

PLAN AT EL. 3.00'

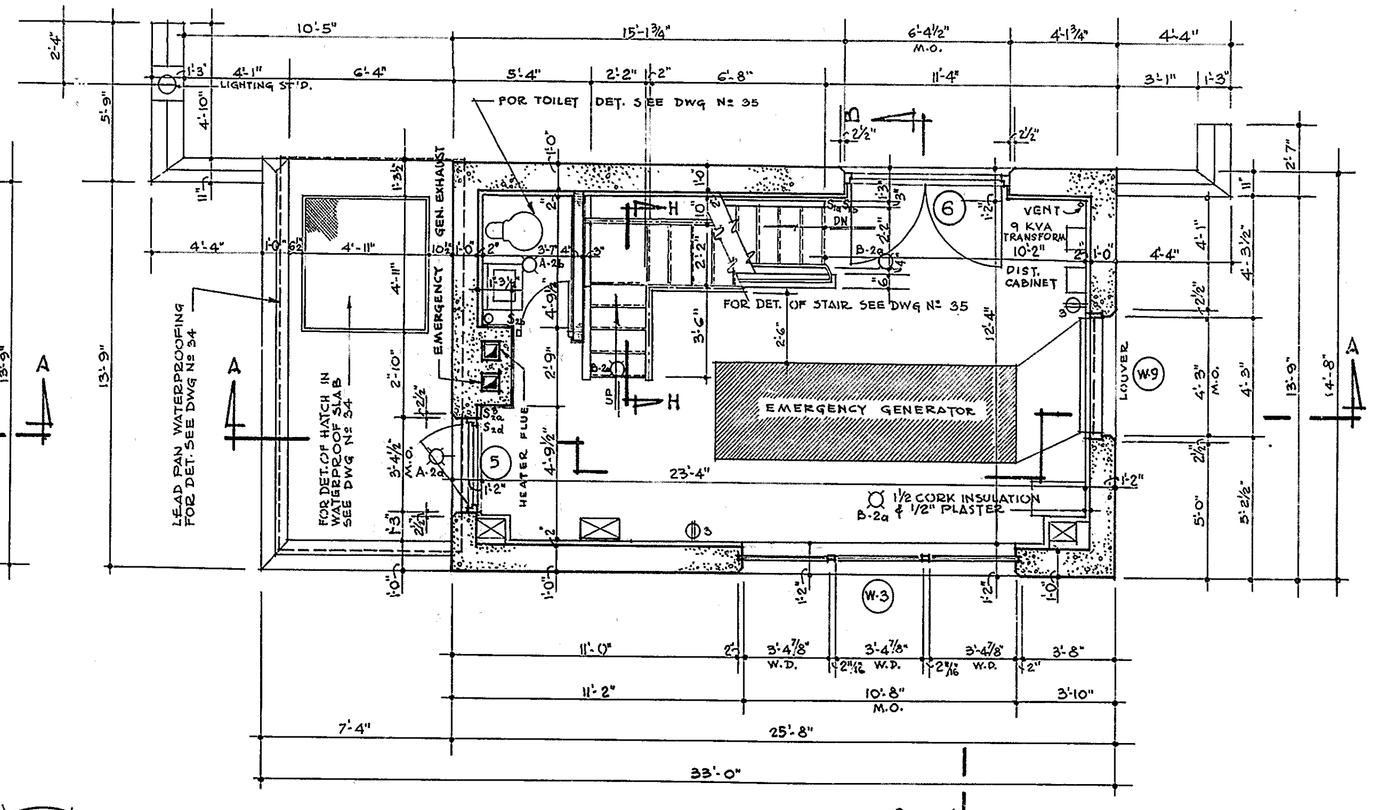

PLAN AT EL. 25.50'

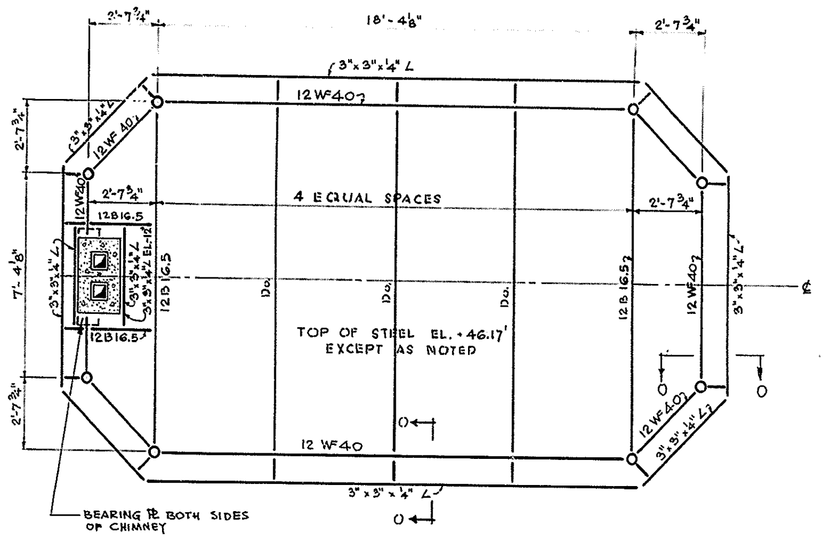

ROOF FRAMING PLAN

ELECTRICAL LEGEND

A - 75 W RLM REFLECTOR
B - 100 W RLM REFLECTOR
C - 2-40W FLOURESCENT

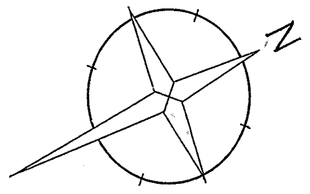

APPROVED Joe S. Robinson
BRIDGE ENGINEER

MADE BY I.A.P.
TRACED BY I.A.P.
CHECKED BY R.W.N.

STATE OF DELAWARE
STATE HIGHWAY DEPARTMENT

WALNUT STREET BRIDGE
OVER CHRISTINA RIVER
WILMINGTON, DELAWARE

CONTROL HOUSE
FLOOR PLANS

SCALE	DATE	SHEET NO.
1/4" = 1'-0" and as shown	APRIL 1954	32

PARSONS, BRINCKERHOFF, HALL & MACDONALD
ENGINEERS NEW YORK

COUNTY	CONTRACT	P. R. A. DIV. NO.	STATE	FED. AID PROJECT NO.	FISCAL YEAR	SHEET NO.	TOTAL SHEETS
NEW CASTLE	1224-(4)		DEL.	S.U-1 (10)	1954	33	42

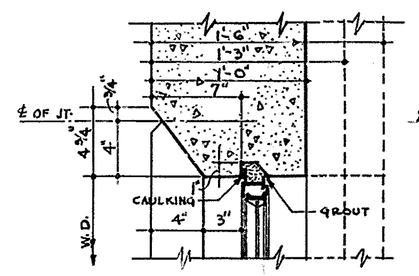

DET. Nº 6

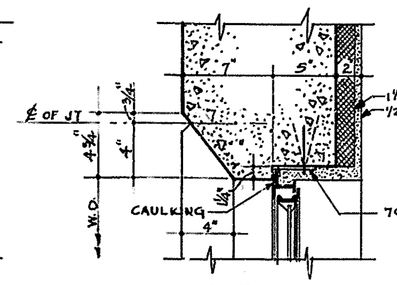

DET. Nº 10

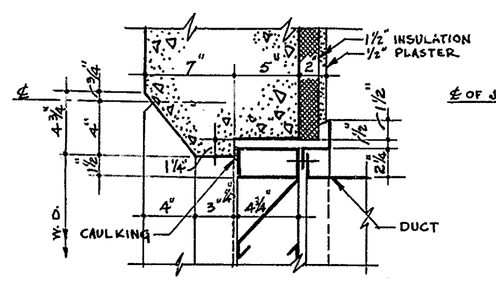

DET. Nº 16

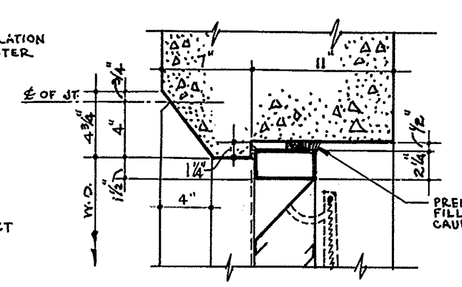

DET. Nº 22

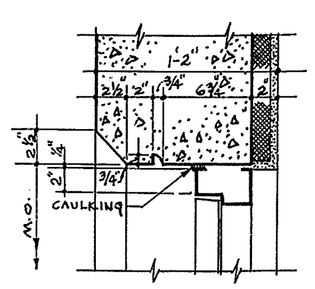

DET. Nº 26

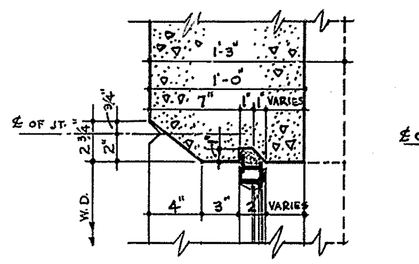

DET. Nº 5

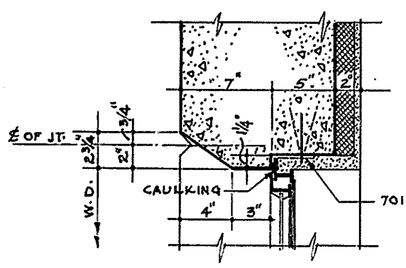

DET. Nº 9

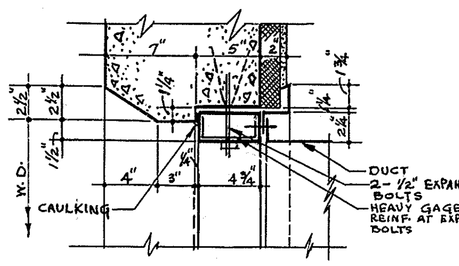

DET. Nº 15

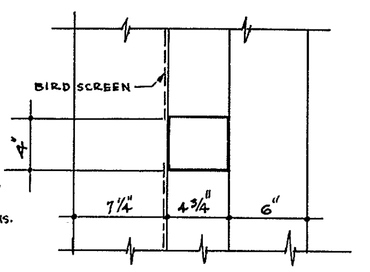

DET. Nº 21

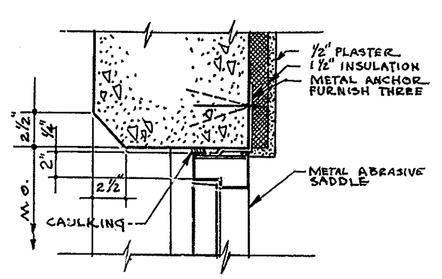

DET. Nº 25

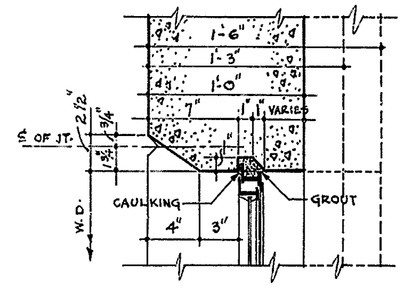

DET. Nº 4

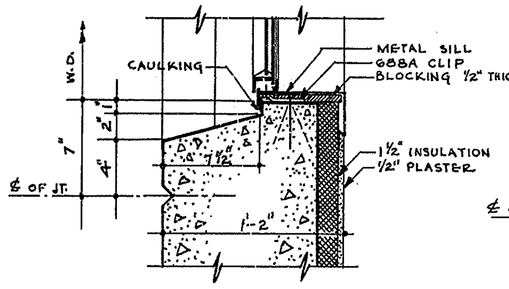

DET. Nº 8

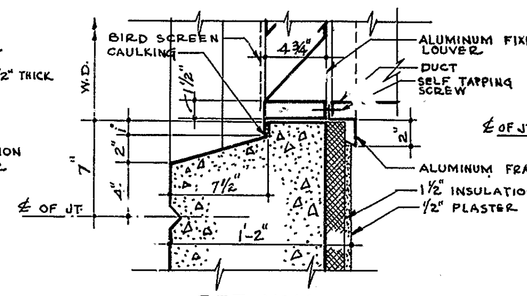

DET. Nº 14

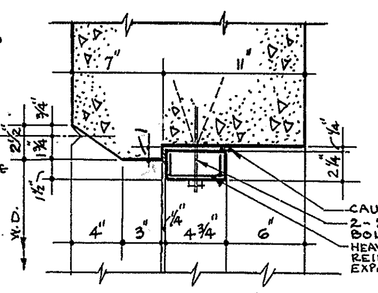

DET. Nº 20

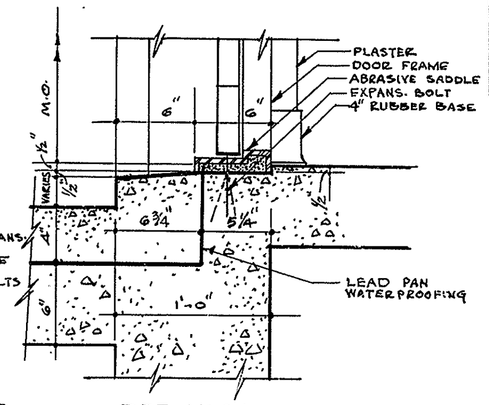

DET. Nº 24

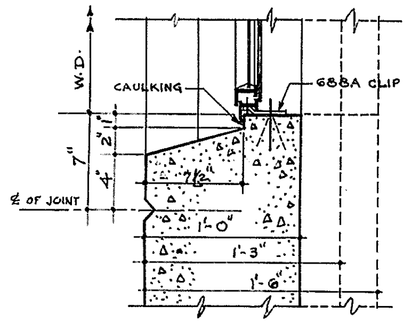

DET. Nº 3

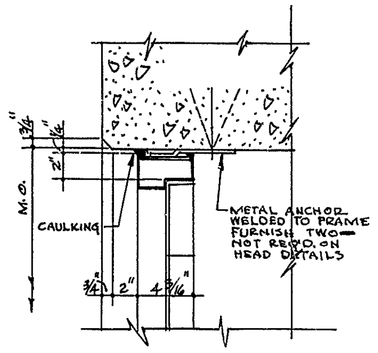

DET. Nº 7

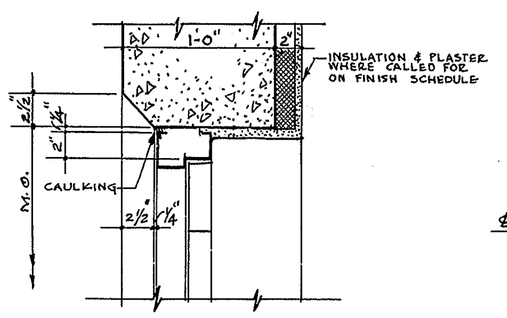

DET. Nº 13

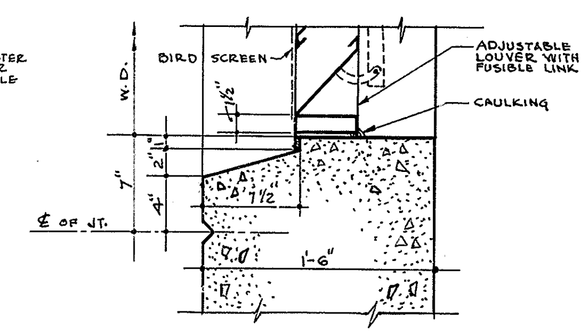

DET. Nº 19

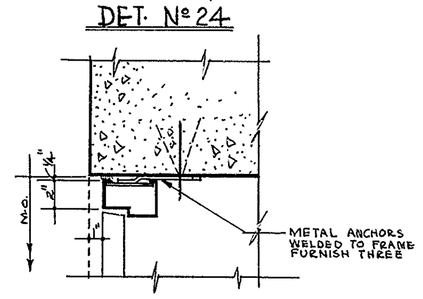

DET. Nº 23

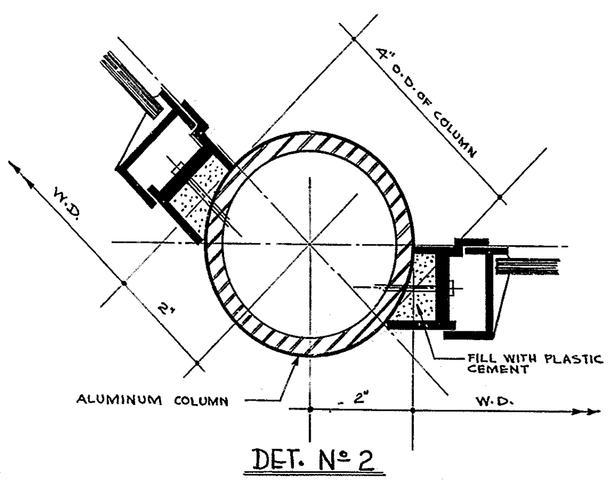

DET. Nº 2

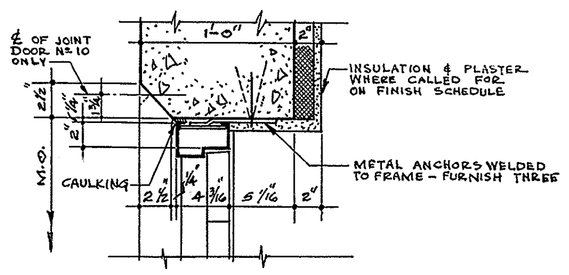

DET. Nº 12

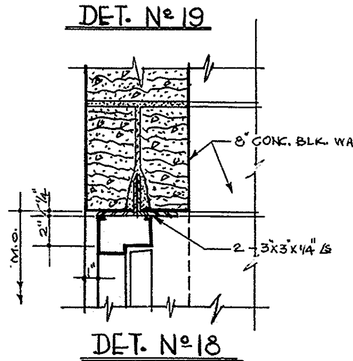

DET. Nº 18

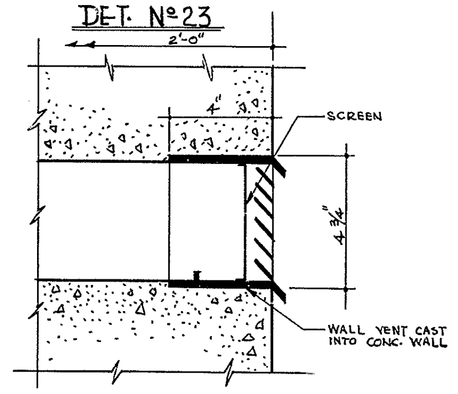

BRICK VENT DETAIL
SCALE 3" = 1'-0"

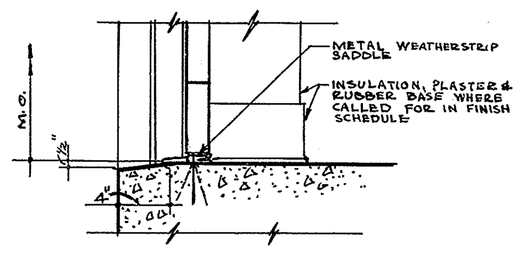

DET. Nº 11

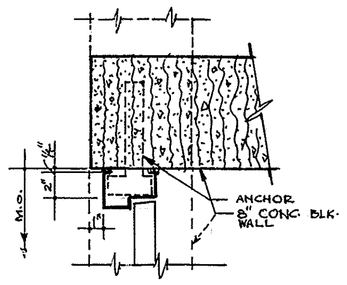

DET. Nº 17

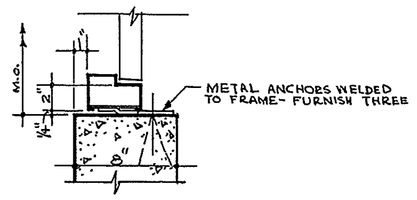

DET. Nº 27

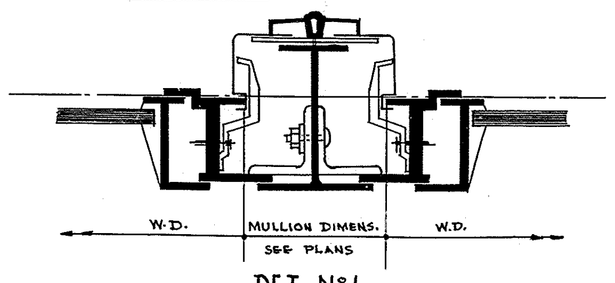

DET. Nº 1

WINDOW SCHEDULE

MARK	NO. OF UNITS	SIZE OF UNITS	MASONRY OPN'G	GLAZING	DETAIL NUMBERS SILL	JAMB	HEAD	MULLION	REMARKS
W-1	5	3'-4⅞" x 2'-9"	10'-8" x 2'-9"	D.S. GLASS	3	5	6	1	THERMOPANE GLAZING CONTROL HOUSE FL. ELEV. 45.75' ONLY
W-2	9	" "	7'-0½" x 2'-9"	↓	3	4	6	1	— DO —
W-3	1	" "	10'-8" x 2'-9"	↓	8	9	10	1	THERMOPANE GLAZING, CONTROL HOUSE ONLY
W-4	4	3'-4⅞" x 5'-5"	—	SOLEX	SEE SECT. E-E SH. NO. 34	2	SEE SECT. E-E SH. NO. 34	1	
W-5	2	" "	—	↓	↓	2	↓	1	
W-6	10	" "	—	↓	↓	2	↓	1	
W-7	2	1'-8⅞" x 5'-5"	—	↓	↓	SEE REMARKS	↓	1	DET. NOS. 2 & 4 - CHAMFER OMITTED FROM DET. NO. 4
W-8	LOUVER	7'-0½" x 2'-9"	7'-0½" x 2'-9"	—	19	20	22	21	INSTALL BIRD SCREEN ON EXT. " INSECT " " INT.
W-9	LOUVER	4'-3" x 6'-5"	4'-3" x 6'-5"	—	14	15	16	—	INSTALL BIRD SCREEN ON EXT.

DOOR SCHEDULE

MARK	TYPE	SIZE	MASONRY OPN'G	SADDLE	DETAIL NUMBERS SILL	JAMB	HEAD	REMARKS
1 & 7	B	2'-6" x 6'-0" x 1¾"	2'-10½" x 6'-2¼"			23	23	ANCHORS OMITTED AT HEAD
2 & 8	B	2'-6" x 7'-0" x 1¾"	2'-10½" x 7'-2¼"			17 & 27	18	
3	D	2'-4" x 4'-4" x 1¾"	2'-8" x 4'-8¼"		17	17	18	SILL 2 COURSES (0'-8") ABOVE FL. DOOR FRAME & SIDES OF OPG. FELT GASKET
4 & 9	C	1'-8" x 5'-0" x 1¾"	2'-0½" x 5'-2¼"	METAL	11	7	7	ANCHORS OMITTED AT HEAD
5	A	3'-0" x 7'-0" x 1¾"	3'-4½" x 7'-2¼"		24	25	26	
6	A	PR.-3'-0" x 8'-0" x 1¾"	6'-4½" x 8'-2¼"		11	12	13	FURNISH METAL ASTRAGAL
10	A	3'-0" x 7'-0" x 1¾"	3'-4½" x 7'-2¼"		11	12	13	NO INSULATION & PLASTER. SEE FINISH SCHEDULE
11 & 12	B	2'-6" x 7'-0" x 1¾"	2'-10½" x 7'-2¼"			17	18	DOOR SWING OPPOSITE HAND FROM SHOWN

WINDOW NOTE: FOR OPERABLE WINDOWS SEE ELEVATIONS - INSTALL INSECT SCREENS ON ALL OPERABLE WINDOWS.

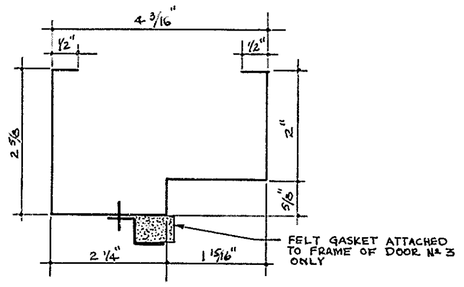

DOOR FRAME DETAIL
SCALE - HALF FULL SIZE

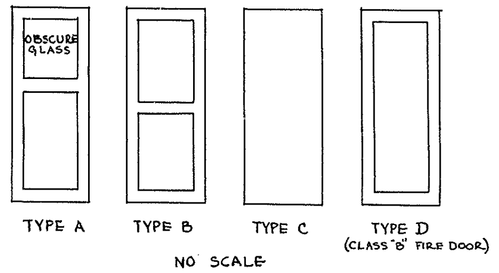

NO SCALE
NOTE: ALL DOORS SHALL BE METAL

APPROVED Jae S. Robinson
BRIDGE ENGINEER

MADE BY L.G.A.
TRACED BY L.G.A.
CHECKED BY R.W.N.

STATE OF DELAWARE
STATE HIGHWAY DEPARTMENT

WALNUT STREET BRIDGE
OVER CHRISTINA RIVER
WILMINGTON, DELAWARE

DOOR AND WINDOW DETAILS AND SCHEDULES

SCALE	DATE	SHEET NO.
1½" = 1'-0" and as shown	APRIL 1954	33

PARSONS, BRINCKERHOFF, HALL & MACDONALD
ENGINEERS NEW YORK

MICROFILMED

COUNTY	CONTRACT	P. R. A. DIV. NO.	STATE	FED. AID PROJECT NO.	FISCAL YEAR	SHEET NO.	TOTAL SHEETS
NEW CASTLE	1224-(4)		DEL.	S.U-1 (10)	1954	34	42

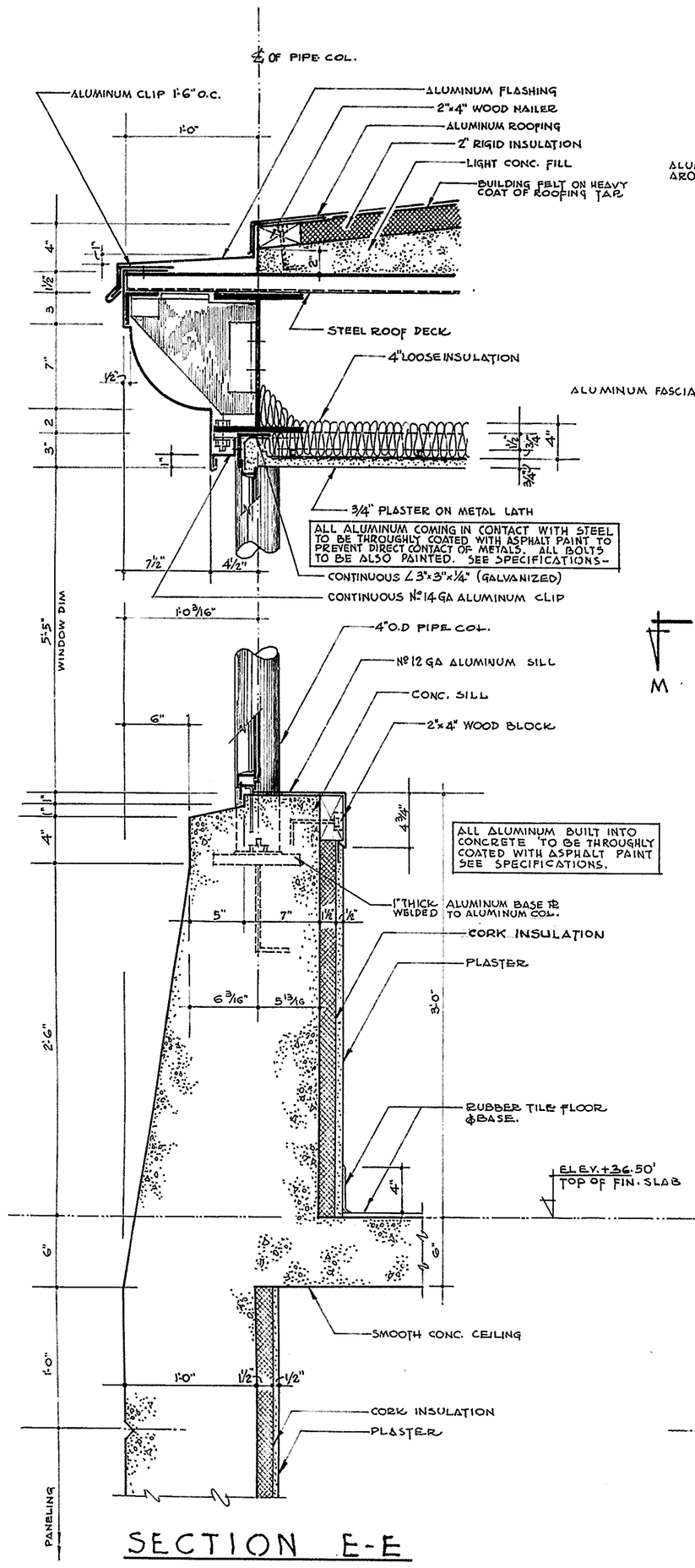

SECTION E-E

NOTE:
FOR DETAILS OF COL. BASE PL & TOP BEARING PL SEE DWG. No 32

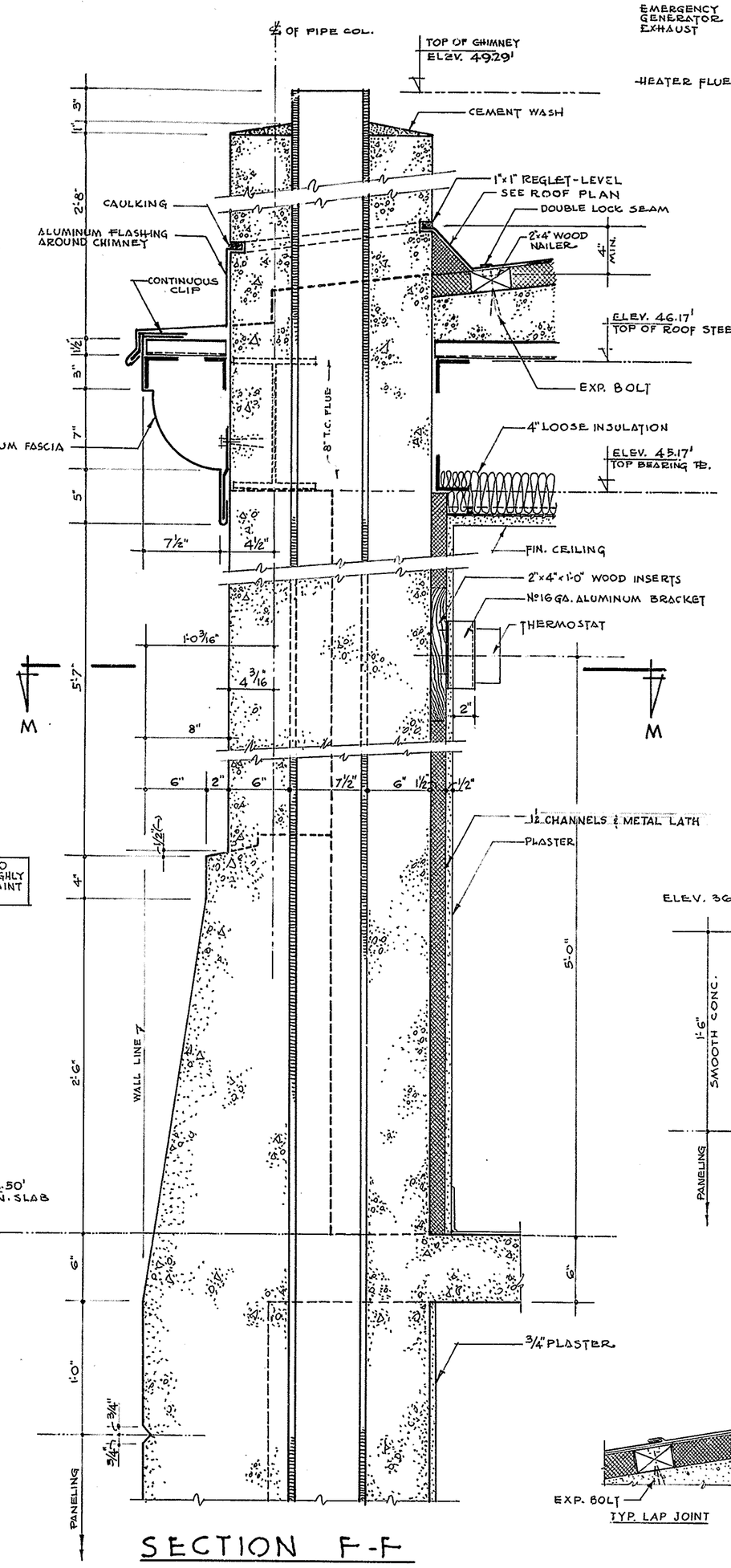

SECTION F-F

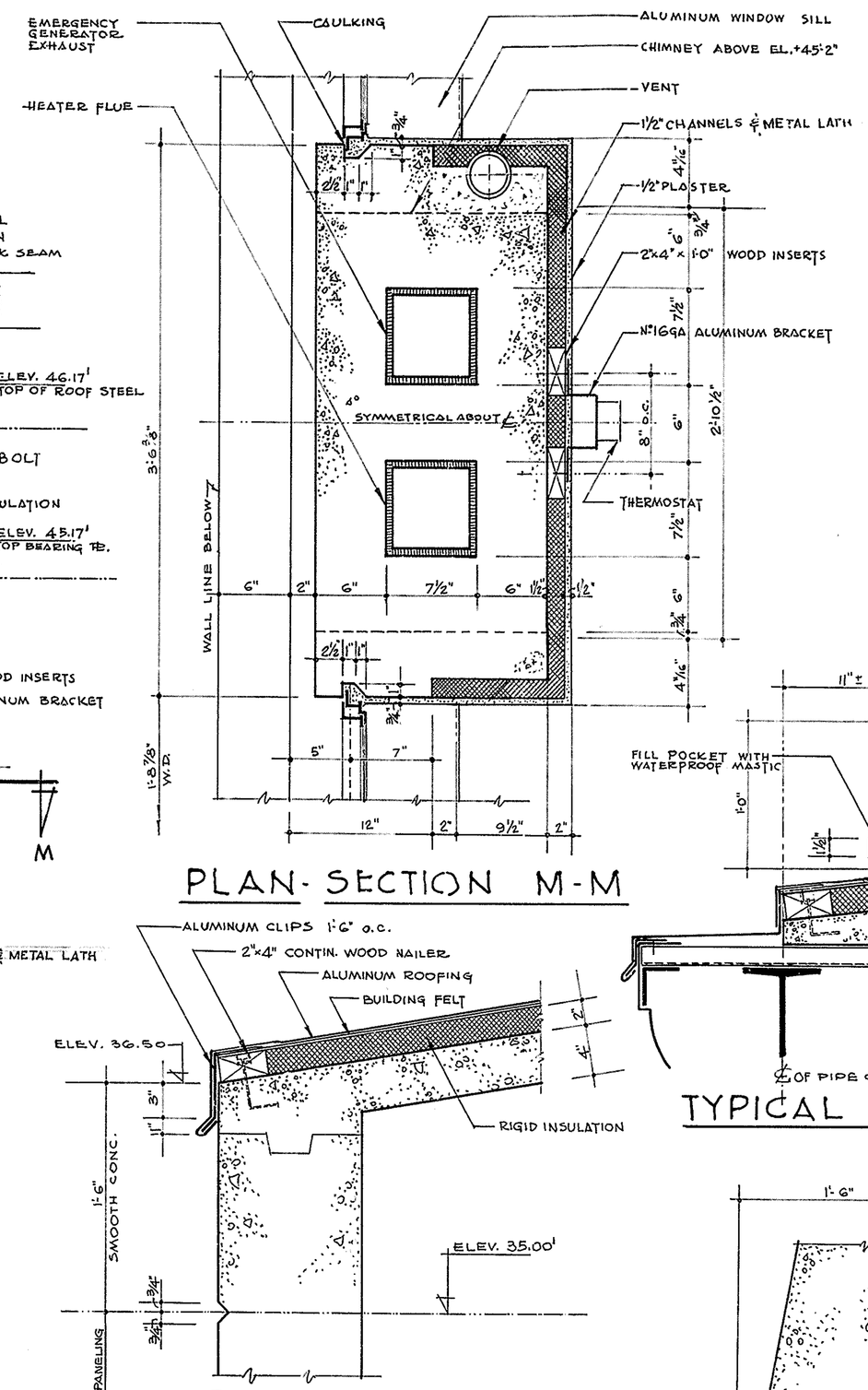

PLAN-SECTION M-M

ROOF DET.
STORAGE HOUSE

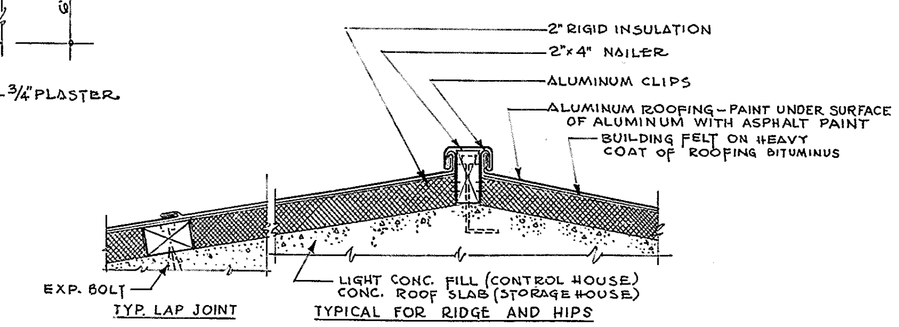

ROOF DETAIL

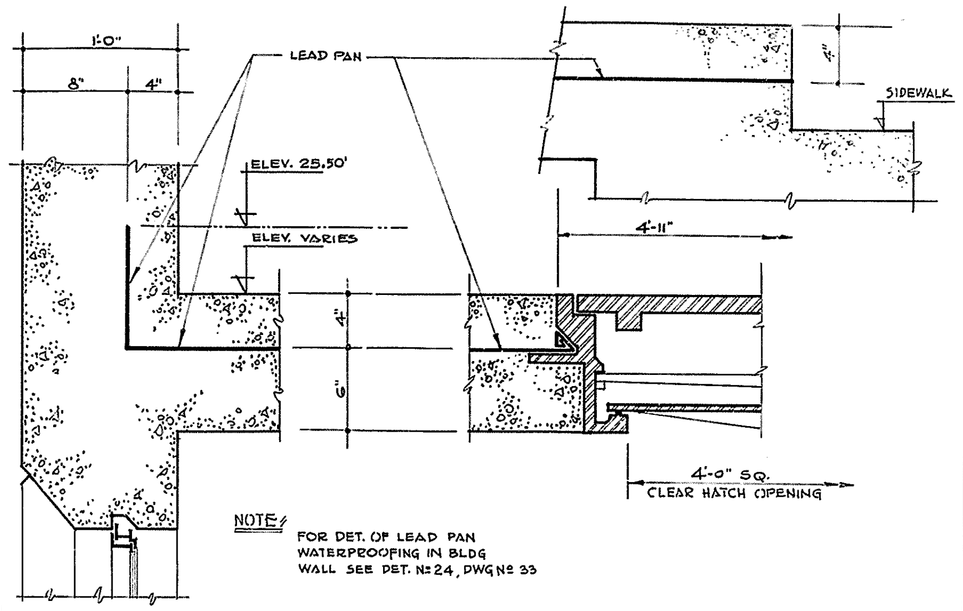

NOTE:
FOR DET. OF LEAD PAN WATERPROOFING IN BLDG WALL SEE DET. No 24, DWG No 33

DET. OF LEAD PAN WATERPROOFING
CONTROL HOUSE

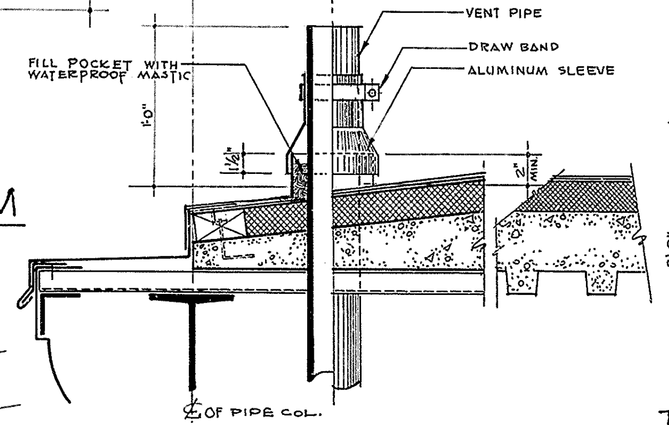

TYPICAL VENT DET.

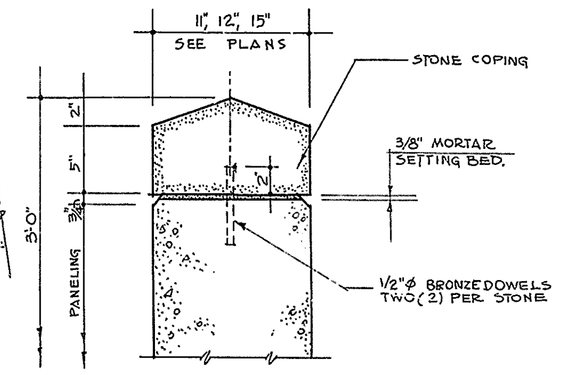

TYPICAL PARAPET COPING DETAIL

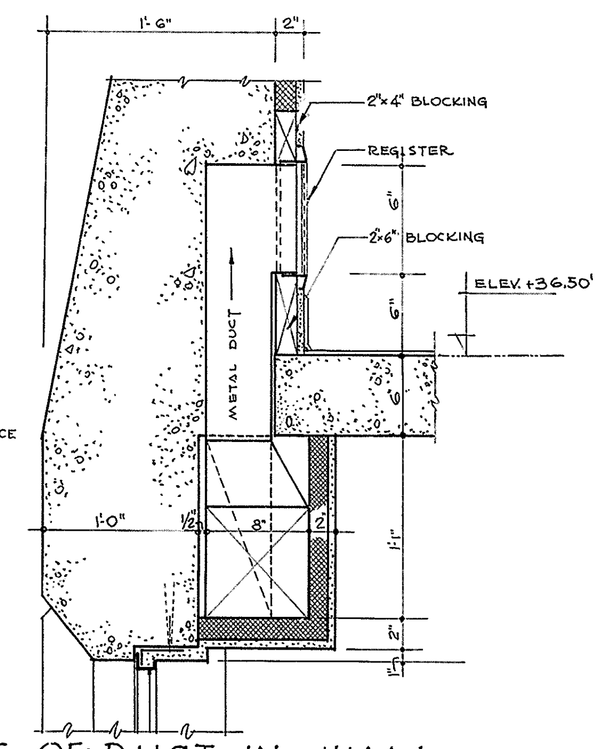

DET. OF DUCT IN WALL

APPROVED Jae S. Robinson
BRIDGE ENGINEER

STATE OF DELAWARE
STATE HIGHWAY DEPARTMENT

WALNUT STREET BRIDGE
OVER CHRISTINA RIVER
WILMINGTON, DELAWARE

HOUSE DETAILS

SCALE	DATE	SHEET NO.
1 1/2" = 1'-0"	APRIL 1954	34

PARSONS, BRINCKERHOFF, HALL & MACDONALD
ENGINEERS NEW YORK

MADE BY I.A.P.
TRACED BY I.A.P.
CHECKED BY R.W.N.

COUNTY	CONTRACT	P. R. A. DIV. NO.	STATE	FED. AID PROJECT NO.	FISCAL YEAR	SHEET NO.	TOTAL SHEETS
NEW CASTLE	1224-(4)		DEL.	S.U-1 (10)	1954	35	42

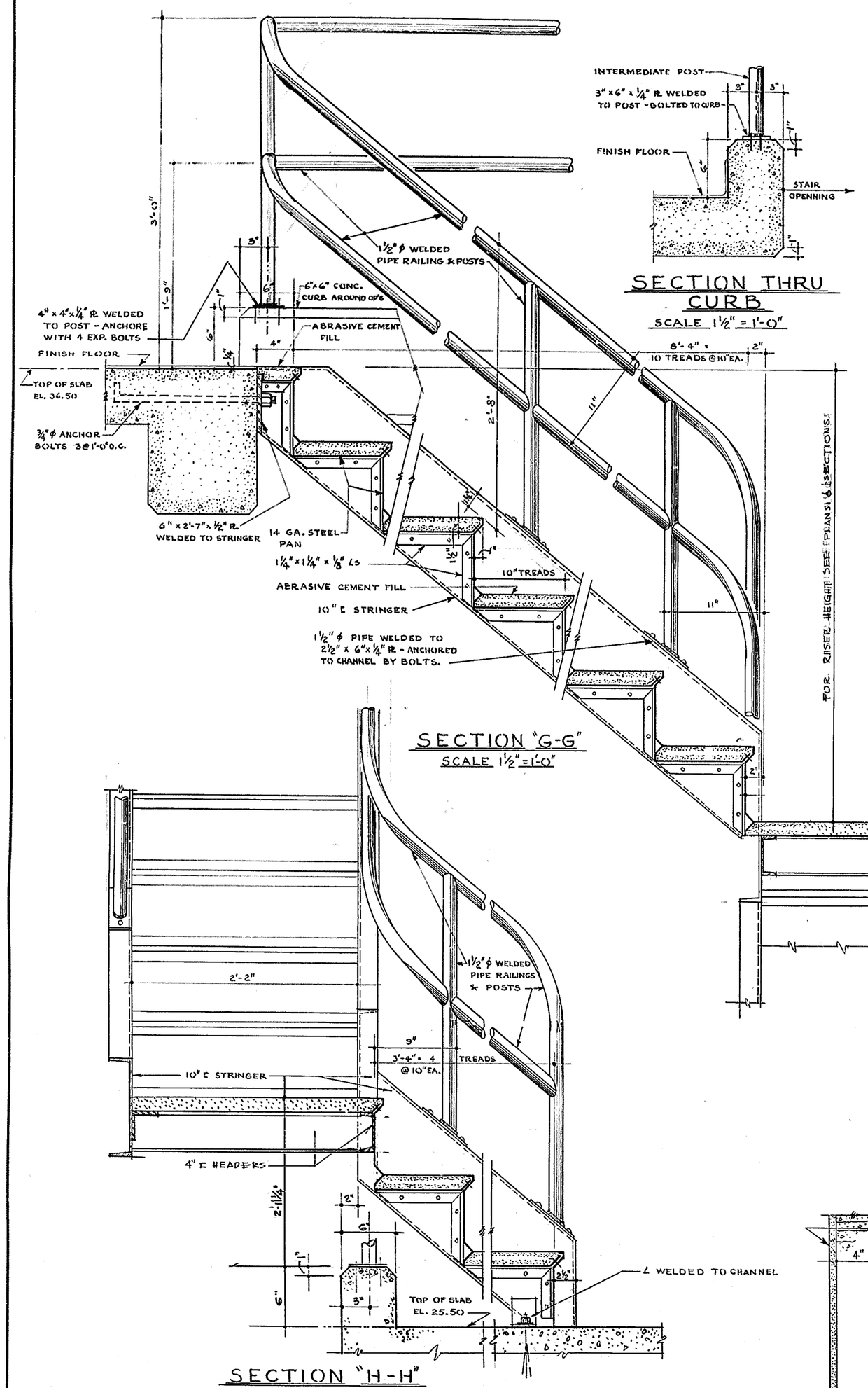

STAIR DETAILS

NOTE: CONTROL HOUSE STAIRWAY FROM ELEV. + 23.50' TO ELEV. + 36.50' SHOWN ABOVE. STAIRWAY FROM ELEV. + 13.75' TO ELEV. + 25.0' SIMILAR. SEE PLANS & SECTIONS

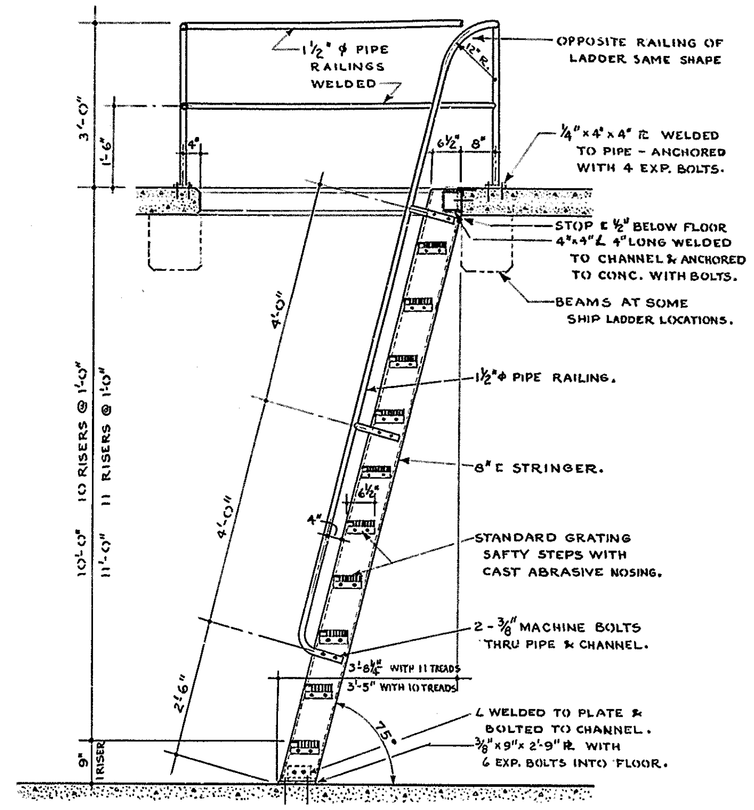

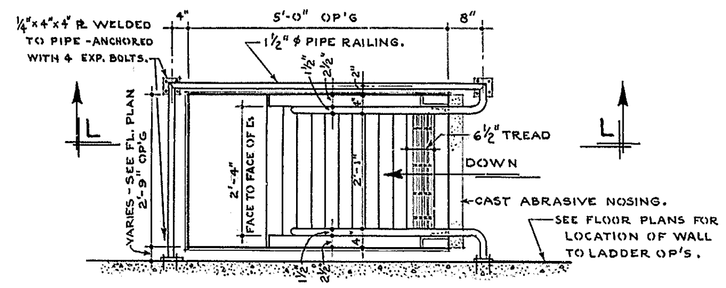

DETAILS OF SHIP LADDERS

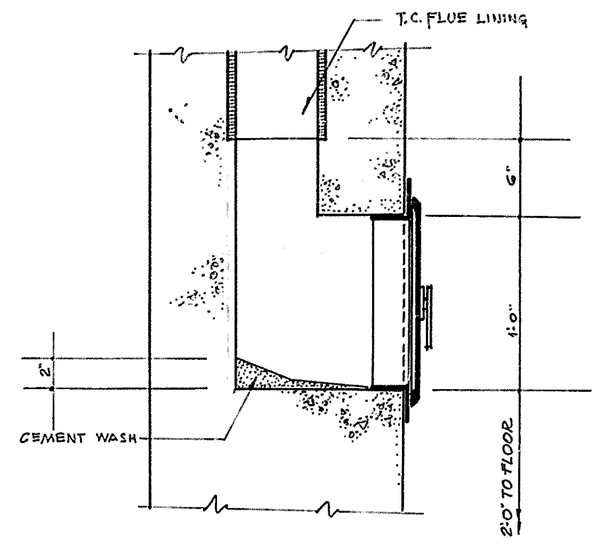

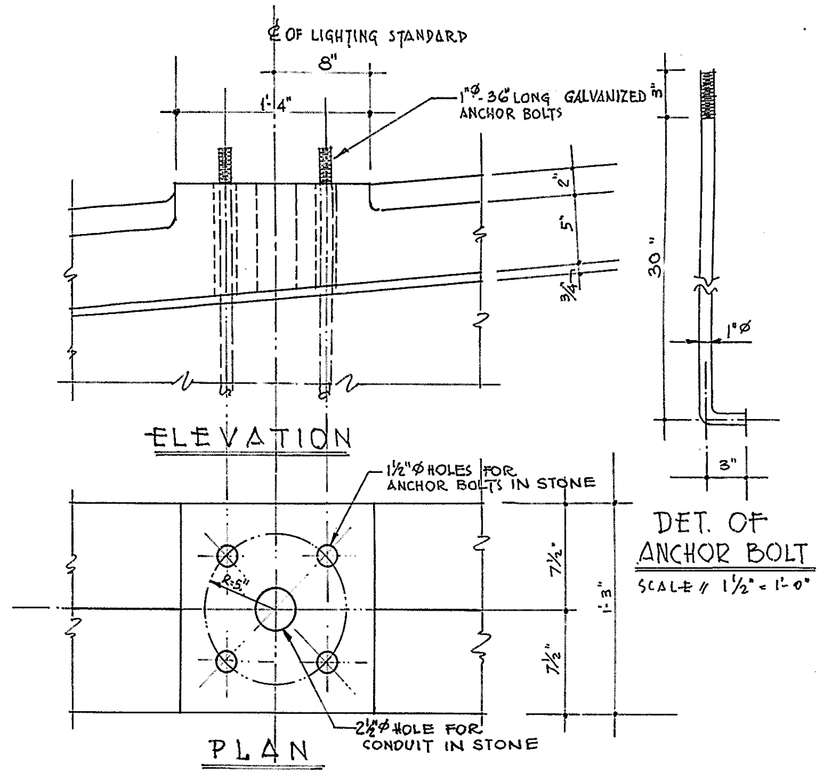

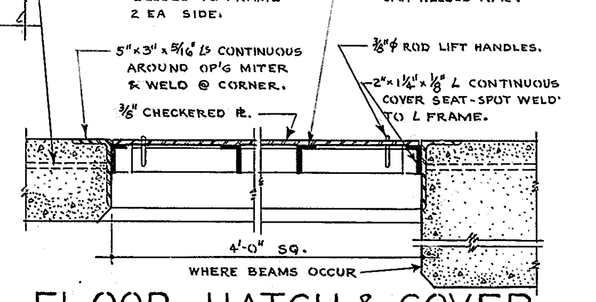

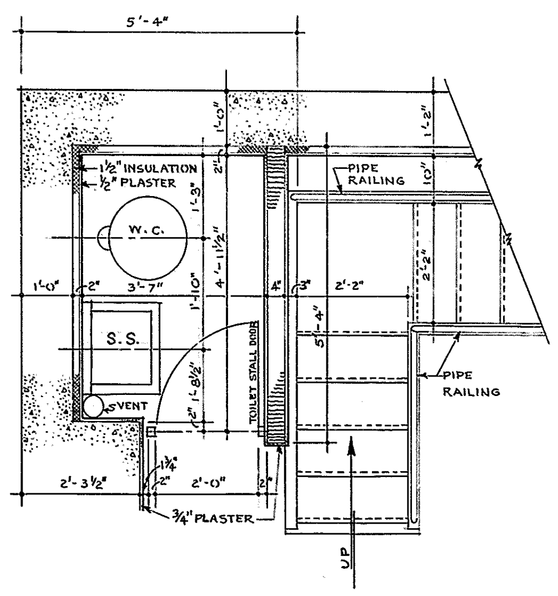

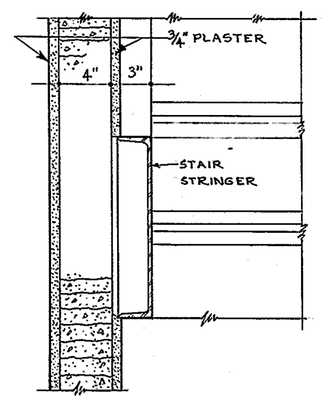

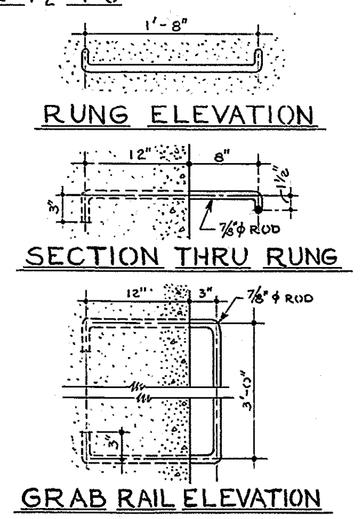

APPROVED Jac S. Robinson
BRIDGE ENGINEER

STATE OF DELAWARE
STATE HIGHWAY DEPARTMENT

WALNUT STREET BRIDGE
OVER CHRISTINA RIVER
WILMINGTON, DELAWARE

LADDERS AND STAIR DETAILS

SCALE	DATE	SHEET NO.
AS SHOWN	APRIL 1954	35

PARSONS, BRINCKERHOFF, HALL & MACDONALD
ENGINEERS NEW YORK

MADE BY W.S.F.
TRACED BY W.S.F.
CHECKED BY R.W.N.

MICROFILMED

COUNTY	CONTRACT	P. B. A. DIV. NO.	STATE	FED. AID PROJECT NO.	FISCAL YEAR	SHEET NO.	TOTAL SHEETS
NEW CASTLE	1224-(4)		DEL.	S.U-1 (10)	1954	36	42

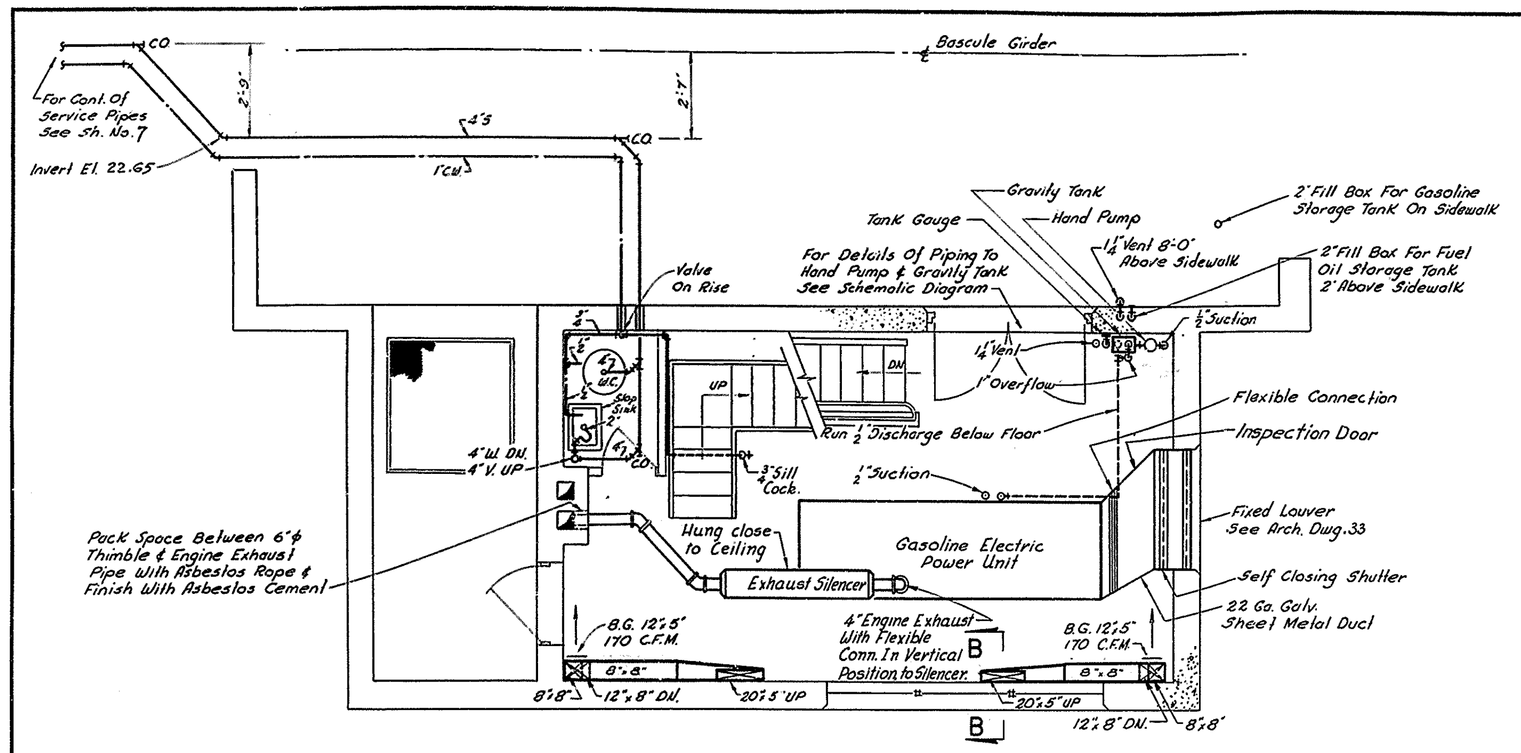

PLAN AT ELEVATION 25.50

Scale: ¼"=1'-0"

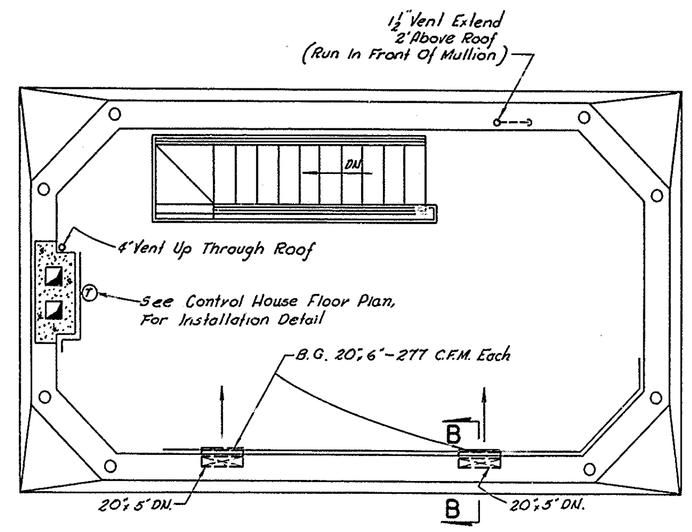

PLAN AT ELEVATION 36.50

Scale: ¼"=1'-0"

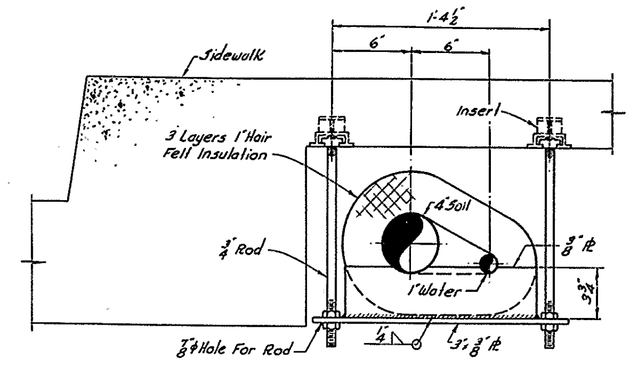

DETAIL "A"
INTERMEDIATE PIPE SUPPORT

Scale: 1½"=1'-0"

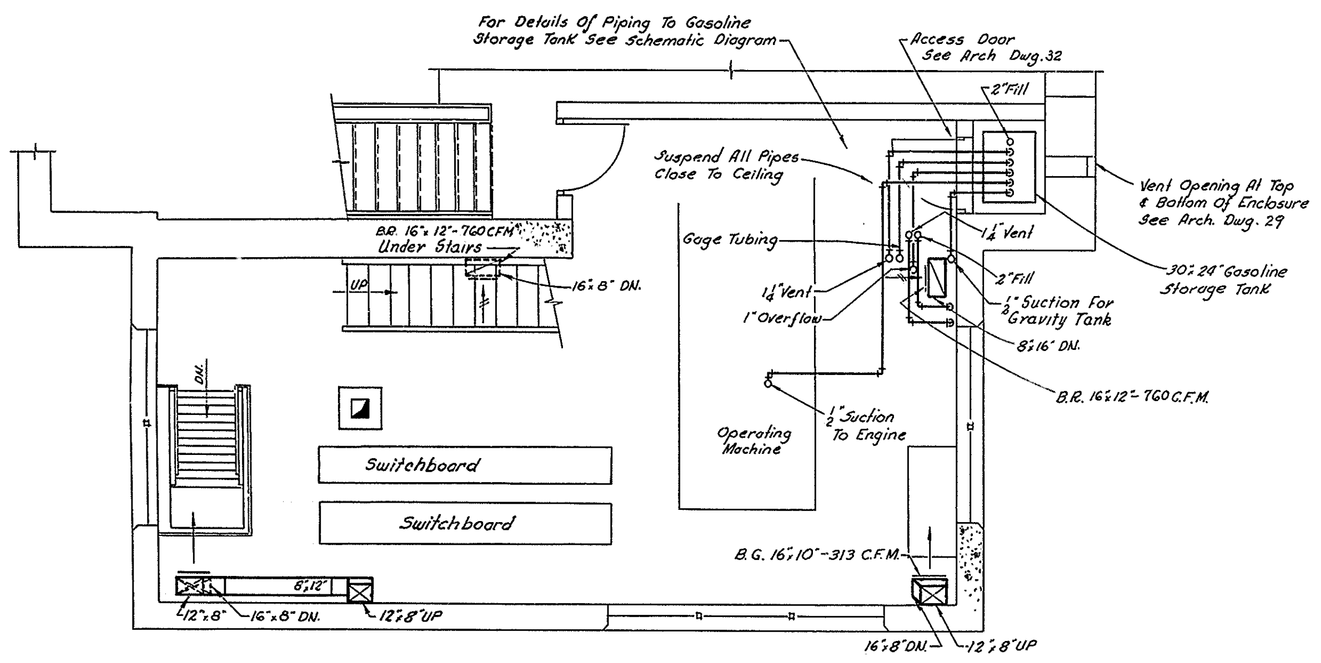

PLAN AT ELEVATION 13.75

Scale: ¼"=1'-0"

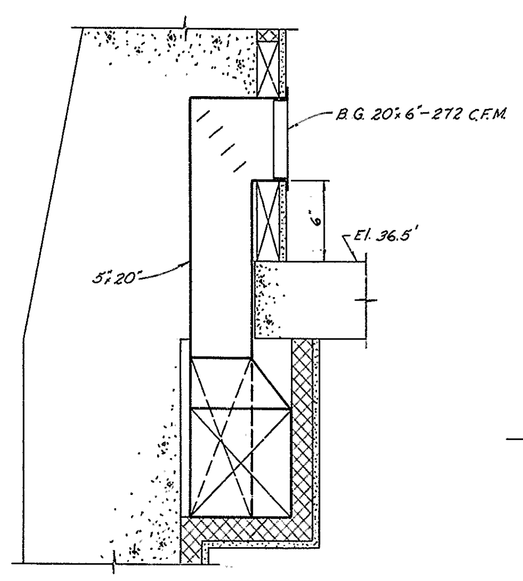

SECTION B-B

Scale 1½"=1'-0"

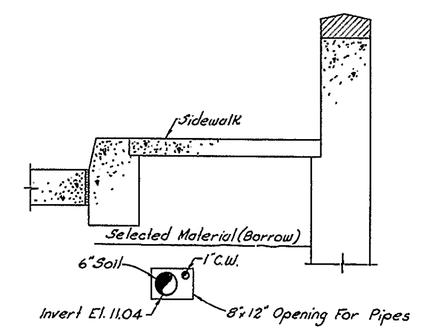

SECTION C-C

Scale: ⅜"=1'-0"

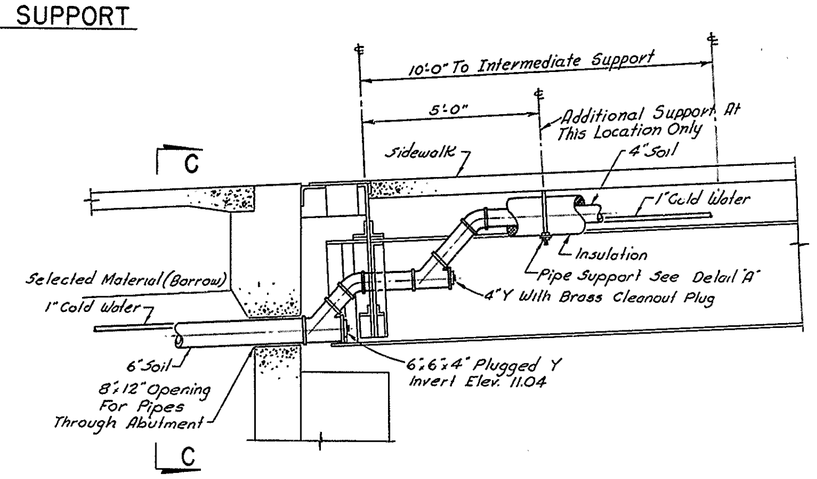

DETAIL "B"
ARRANGEMENT OF SERVICE PIPING AT SOUTH ABUTMENT

Scale: ⅜"=1'-0"

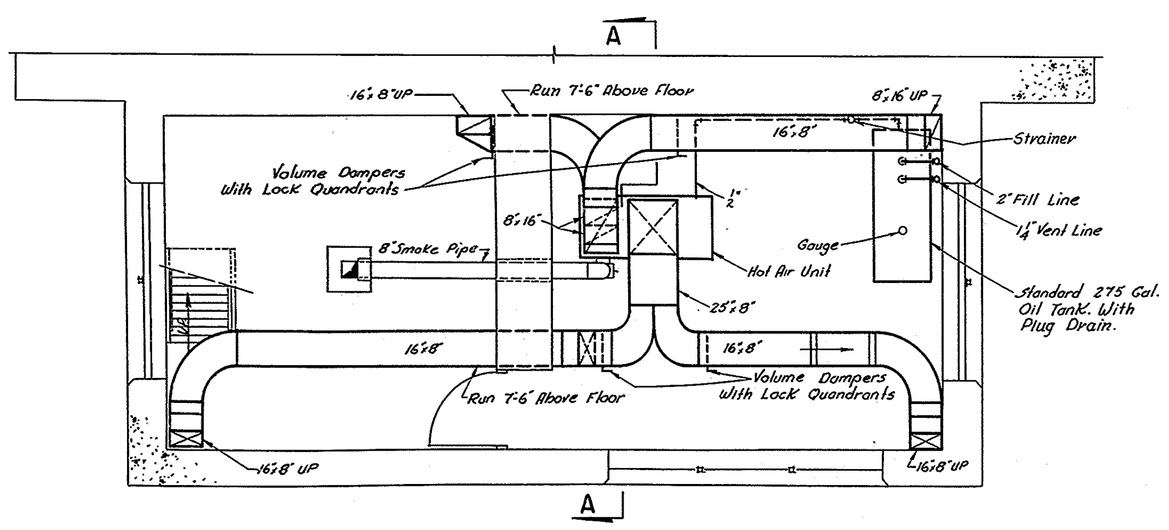

PLAN AT ELEVATION 3.00

Scale: ¼"=1'-0"

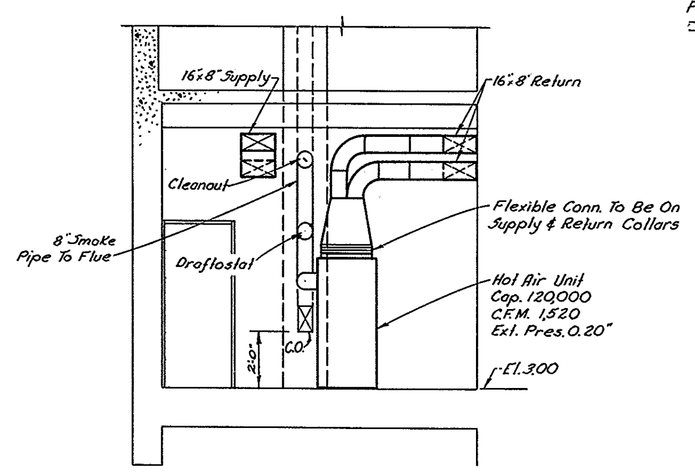

SECTION A-A

Scale: ¼"=1'-0"

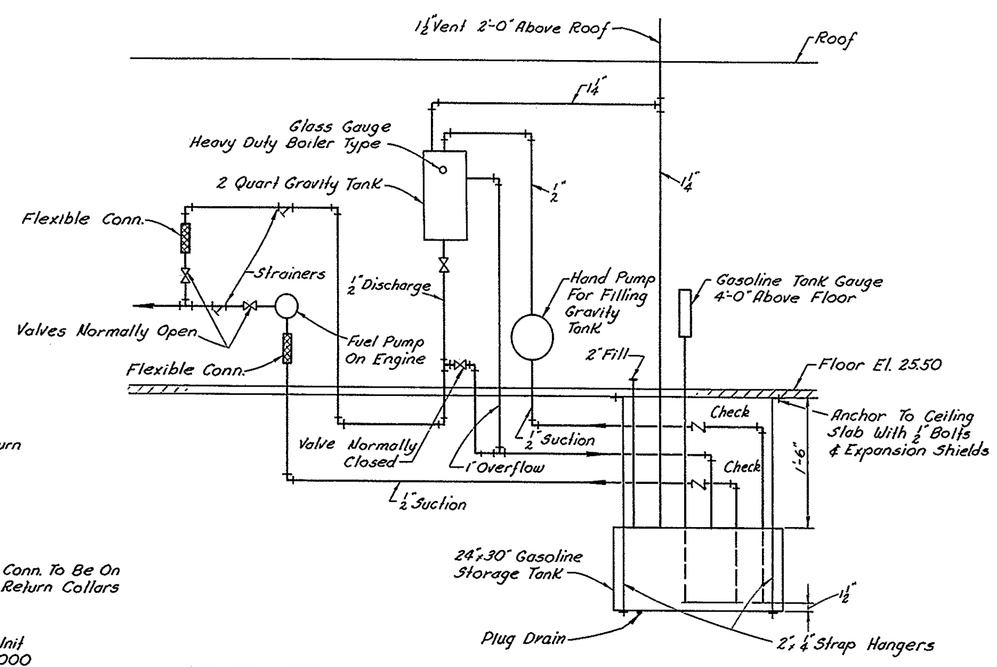

SCHEMATIC DIAGRAM OF GASOLINE PIPING AND DISCHARGE LINES TO ENGINE

No Scale

GENERAL NOTES

1. All Duct Work Shall Be Run Close To Ceiling Except As Otherwise Indicated.
2. All Supply & Return Registers Shall Be Located 6' Above Finished Floor.
3. Intermediate Pipe Supports To Be Located Midway Between Sidewalk Floor Brackets.
4. For Detail Of Pipe Supports At Floor Bracket See Sheet No. 7

APPROVED Jac S. Robinson
BRIDGE ENGINEER

STATE OF DELAWARE
STATE HIGHWAY DEPARTMENT

WALNUT STREET BRIDGE
OVER CHRISTINA RIVER
WILMINGTON, DELAWARE

HEATING AND UTILITY PIPING

SCALE	DATE	SHEET NO.
AS SHOWN	APRIL 1954	36

PARSONS, BRINCKERHOFF, HALL & MACDONALD

MADE BY V.M.-A.C.
TRACED BY V.M.
CHECKED BY S.S.G.

MICROFILMED

COUNTY	CONTRACT	P.R.A. DIV. NO.	STATE	FED. AID PROJECT NO.	FISCAL YEAR	SHEET NO.	TOTAL SHEETS
NEW CASTLE	1224 (4)		DEL.	S.U - 1 (10)	1954	37	42

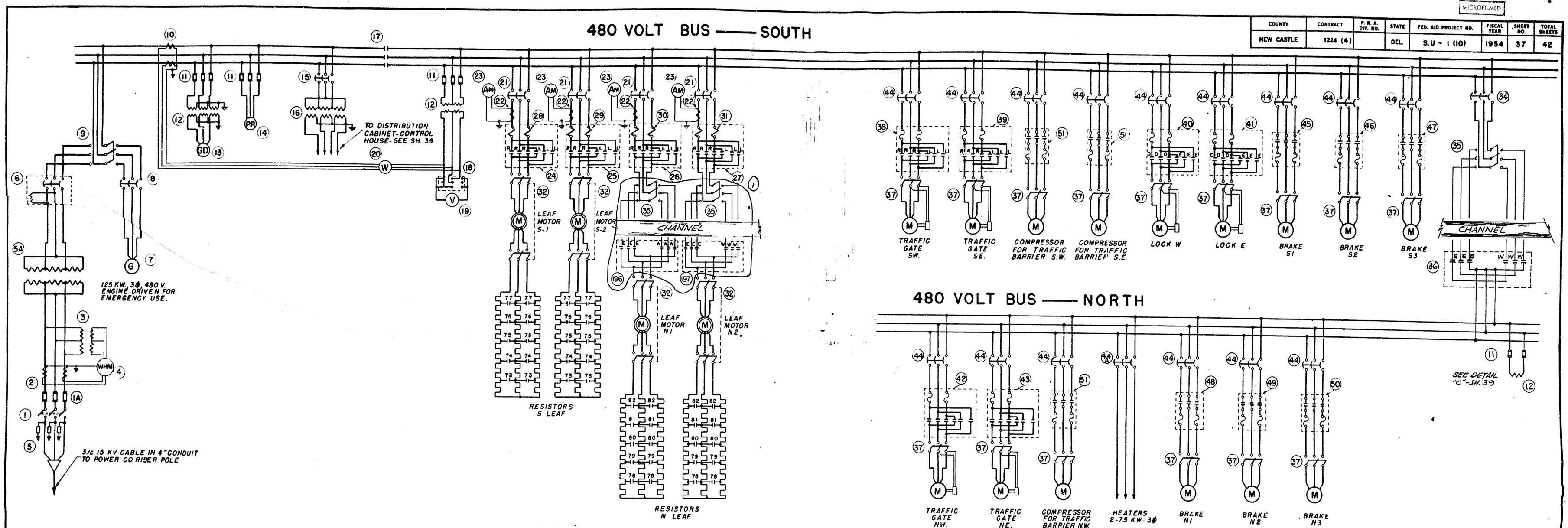

DIAGRAM - POWER DISTRIBUTION

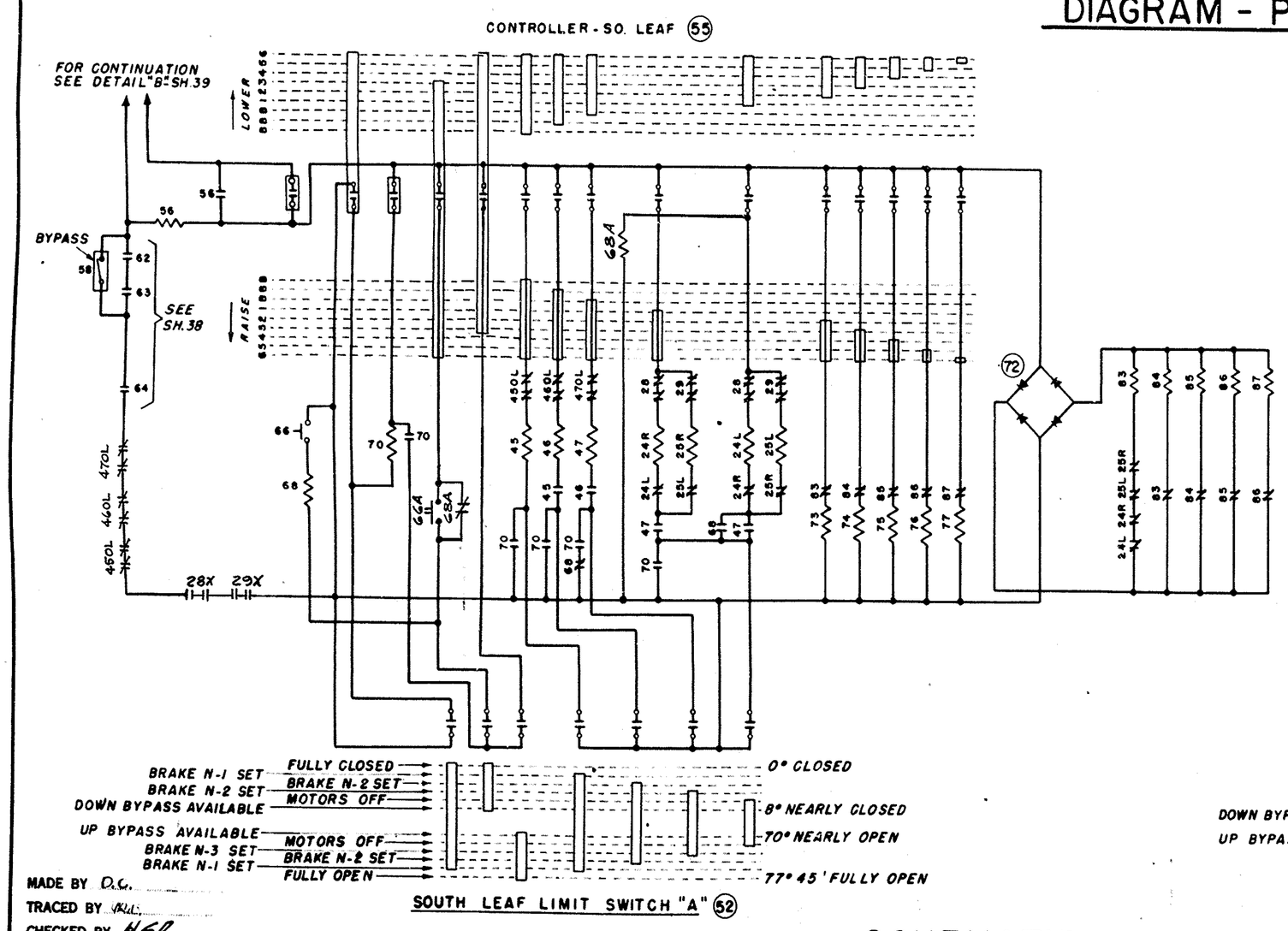

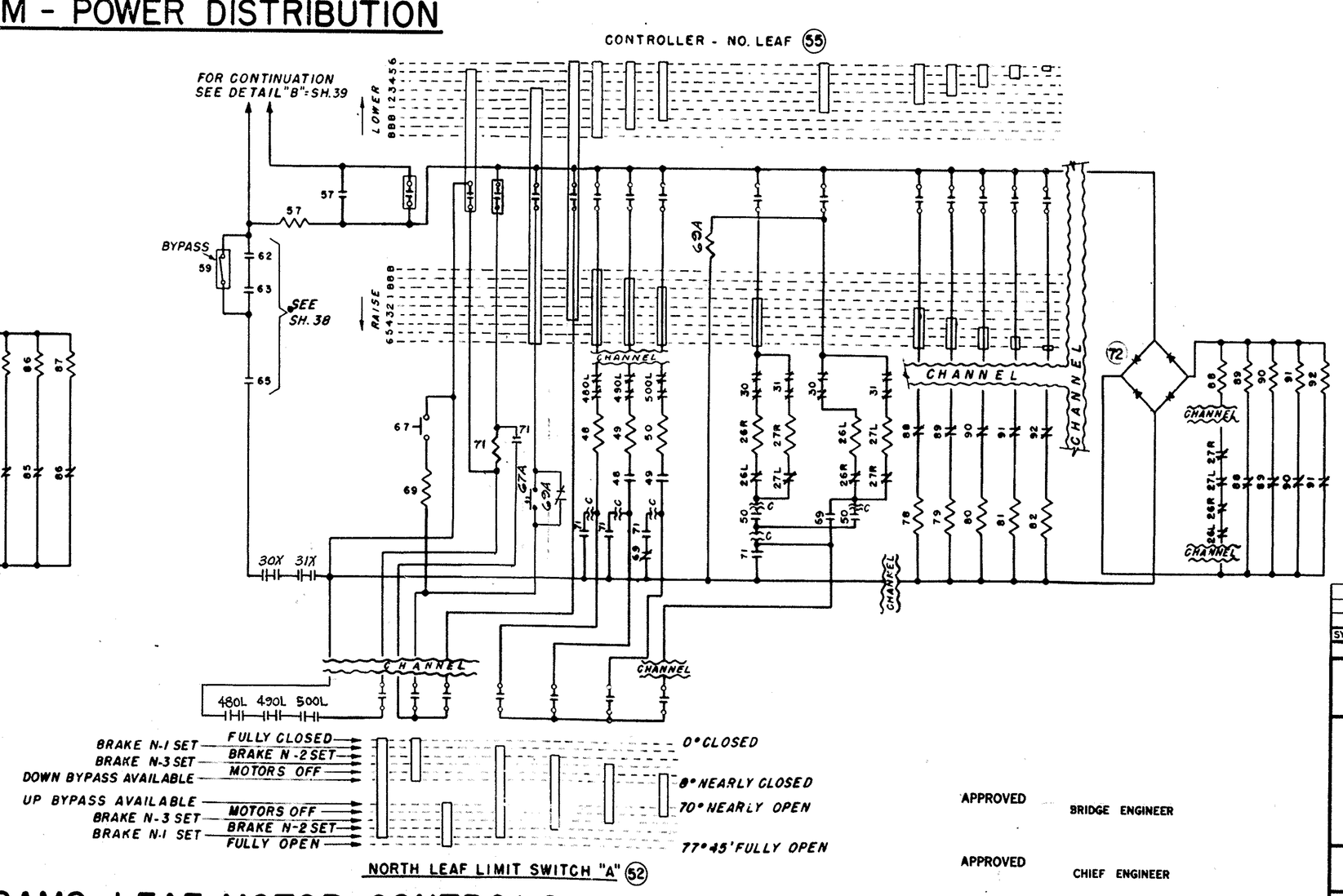

SCHEMATIC DIAGRAMS-LEAF MOTOR CONTROLS

REFERENCE DRAWINGS

(38) WIRING DIAGRAM - TRAFFIC LIGHTS AND INTERLOCKING.
(39) WIRING DIAGRAM - 120/208 VOLT DISTRIBUTION AND DETAILS
(40) ELECTRICAL EQUIPMENT LIST
(41) TRANSFORMER INSTALLATIONS AND DETAILS
(42) CONDUIT DIAGRAMS AND DETAILS

SYMBOL	DESCRIPTION	DATE	APPROVAL
1	ADDED 3 LEAF MOTOR WIRES - EACH SUBMARINE CABLE		

REVISIONS

STATE OF DELAWARE
STATE HIGHWAY DEPARTMENT

WALNUT STREET BRIDGE
OVER CHRISTINA RIVER
WILMINGTON, DELAWARE

WIRING DIAGRAMS
480 V POWER & LEAF MOTORS

SCALE	DATE	SHEET NO.
NONE	APRIL 1954	37

PARSONS, BRINCKERHOFF, HALL & MACDONALD
ENGINEERS NEW YORK

APPROVED BRIDGE ENGINEER

APPROVED CHIEF ENGINEER

MADE BY D.C.
TRACED BY
CHECKED BY H.S.R.

MICROFILMED

COUNTY	CONTRACT	P. R. A. DIV. NO.	STATE	FED. AID PROJECT NO.	FISCAL YEAR	SHEET NO.	TOTAL SHEETS
NEW CASTLE	1224-(4)		DEL.	S.U-1(10)	1954	38	42

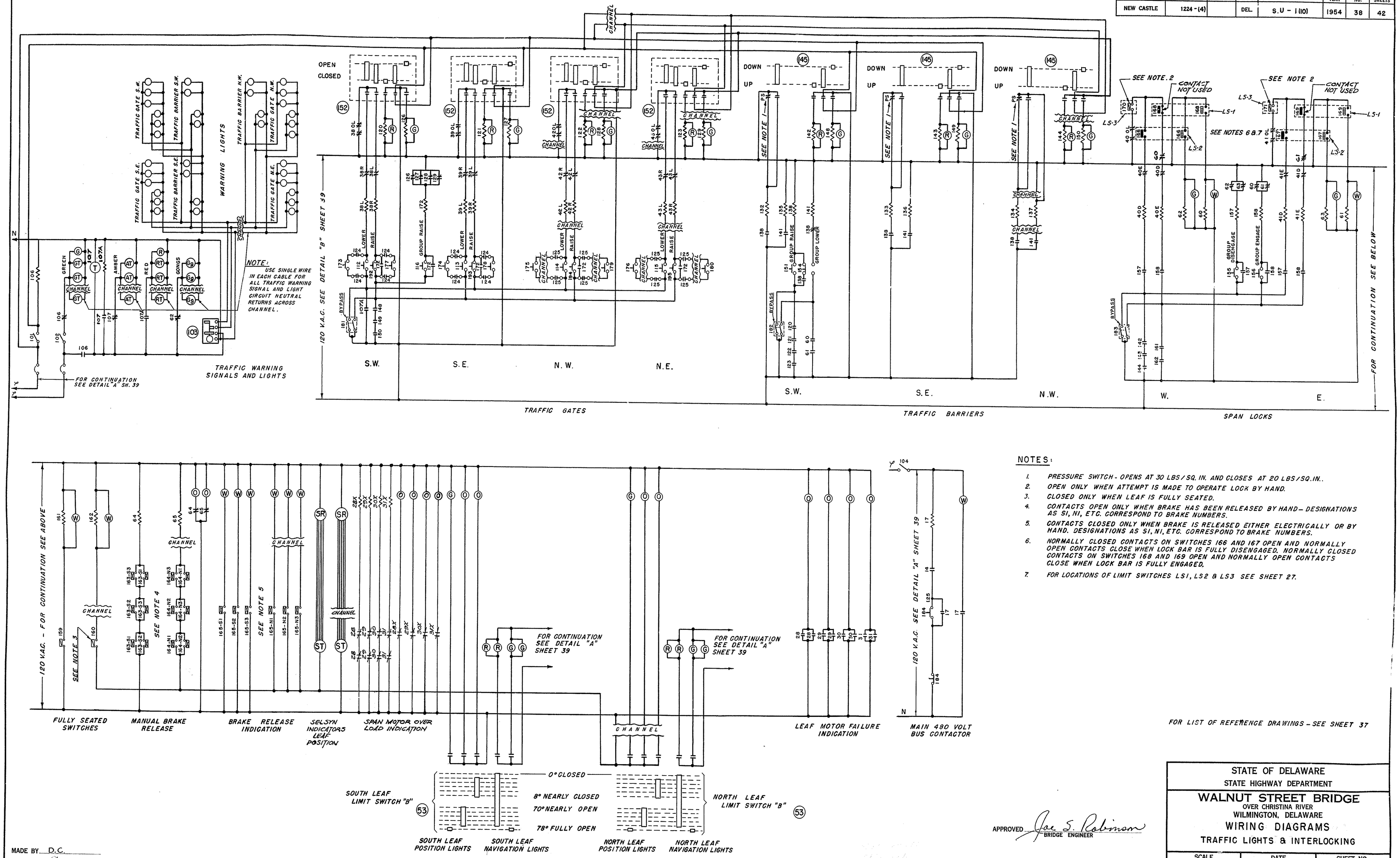

NOTES:

1. PRESSURE SWITCH - OPENS AT 30 LBS/SQ. IN. AND CLOSES AT 20 LBS/SQ. IN..
2. OPEN ONLY WHEN ATTEMPT IS MADE TO OPERATE LOCK BY HAND.
3. CLOSED ONLY WHEN LEAF IS FULLY SEATED.
4. CONTACTS OPEN ONLY WHEN BRAKE HAS BEEN RELEASED BY HAND - DESIGNATIONS AS S1, N1, ETC. CORRESPOND TO BRAKE NUMBERS.
5. CONTACTS CLOSED ONLY WHEN BRAKE IS RELEASED EITHER ELECTRICALLY OR BY HAND. DESIGNATIONS AS S1, N1, ETC. CORRESPOND TO BRAKE NUMBERS.
6. NORMALLY CLOSED CONTACTS ON SWITCHES 166 AND 167 OPEN AND NORMALLY OPEN CONTACTS CLOSE WHEN LOCK BAR IS FULLY DISENGAGED. NORMALLY CLOSED CONTACTS ON SWITCHES 168 AND 169 OPEN AND NORMALLY OPEN CONTACTS CLOSE WHEN LOCK BAR IS FULLY ENGAGED.
7. FOR LOCATIONS OF LIMIT SWITCHES LS1, LS2 & LS3 SEE SHEET 27.

FOR LIST OF REFERENCE DRAWINGS - SEE SHEET 37

MADE BY D.C.
TRACED BY
CHECKED BY

APPROVED Jae S. Robinson
BRIDGE ENGINEER

STATE OF DELAWARE
STATE HIGHWAY DEPARTMENT

WALNUT STREET BRIDGE
OVER CHRISTINA RIVER
WILMINGTON, DELAWARE

WIRING DIAGRAMS
TRAFFIC LIGHTS & INTERLOCKING

SCALE	DATE	SHEET NO.
NONE	APRIL 1954	38

PARSONS, BRINCKERHOFF, HALL & MACDONALD
ENGINEERS
NEW YORK

MICROFILMED

COUNTY	CONTRACT	P. R. A. DIV. NO.	STATE	FED. AID PROJECT NO.	FISCAL YEAR	SHEET NO.	TOTAL SHEETS
NEW CASTLE	1224-(4)		DEL.	S.U - 1 (10)	1954	39	42

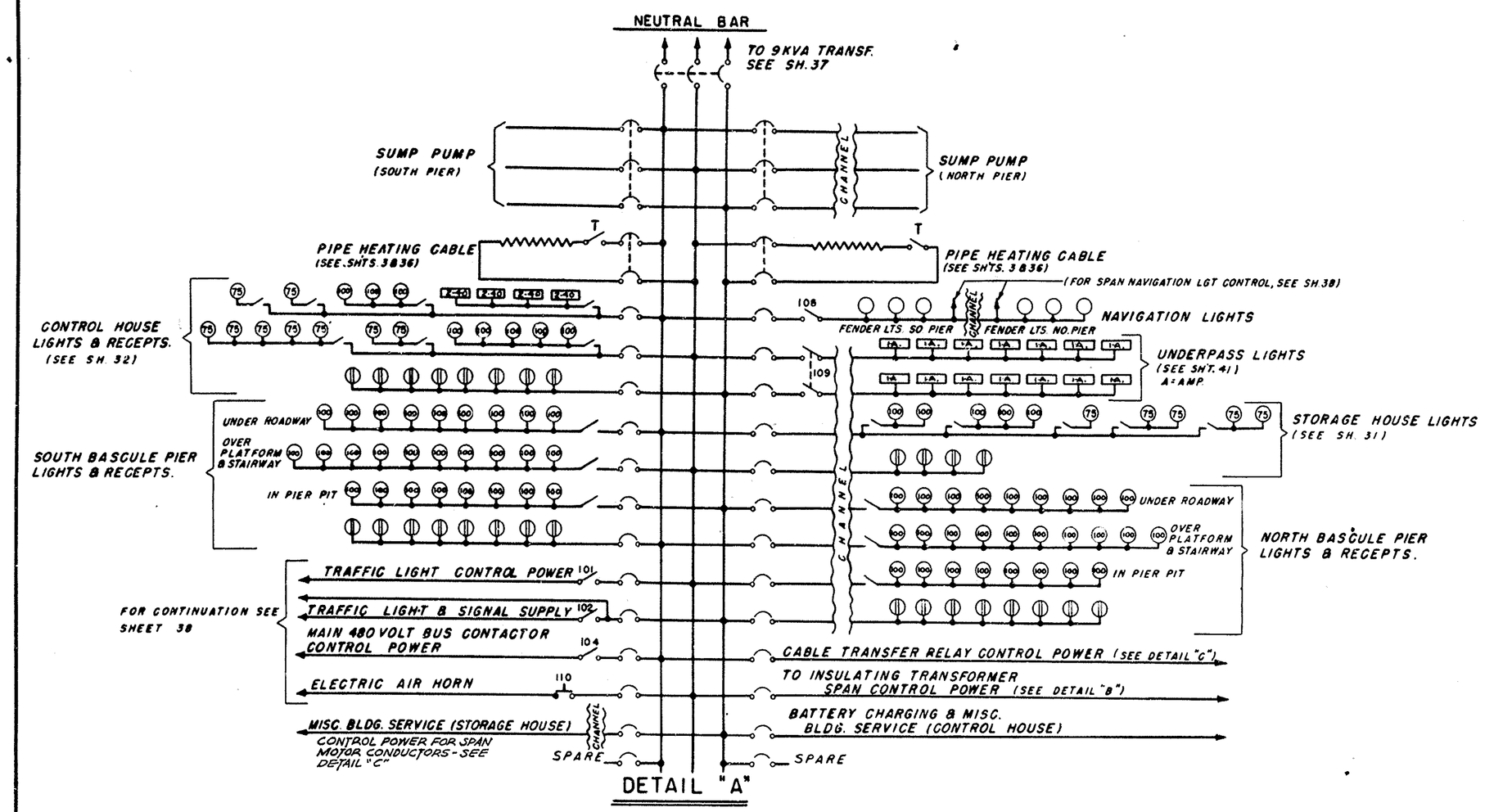

DETAIL "A"

120/208 V DISTRIBUTION - CONTROL HOUSE

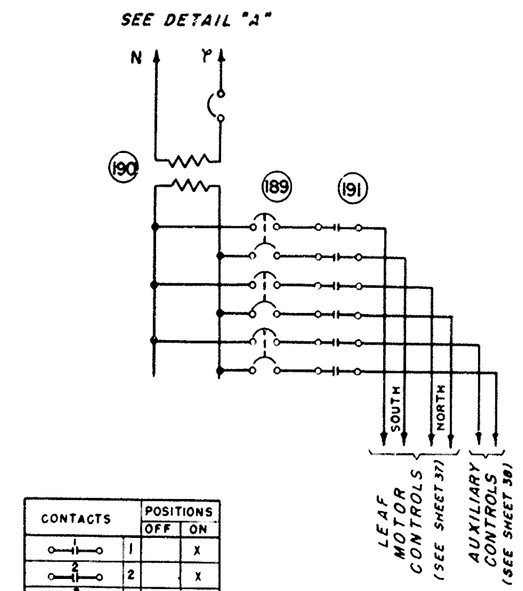

CONTACTS	POSITIONS OFF	POSITIONS ON
1		X
2		X
3		X
4		X
5		X
6		X

DETAIL "B"

SPAN CONTROL POWER SUPPLY

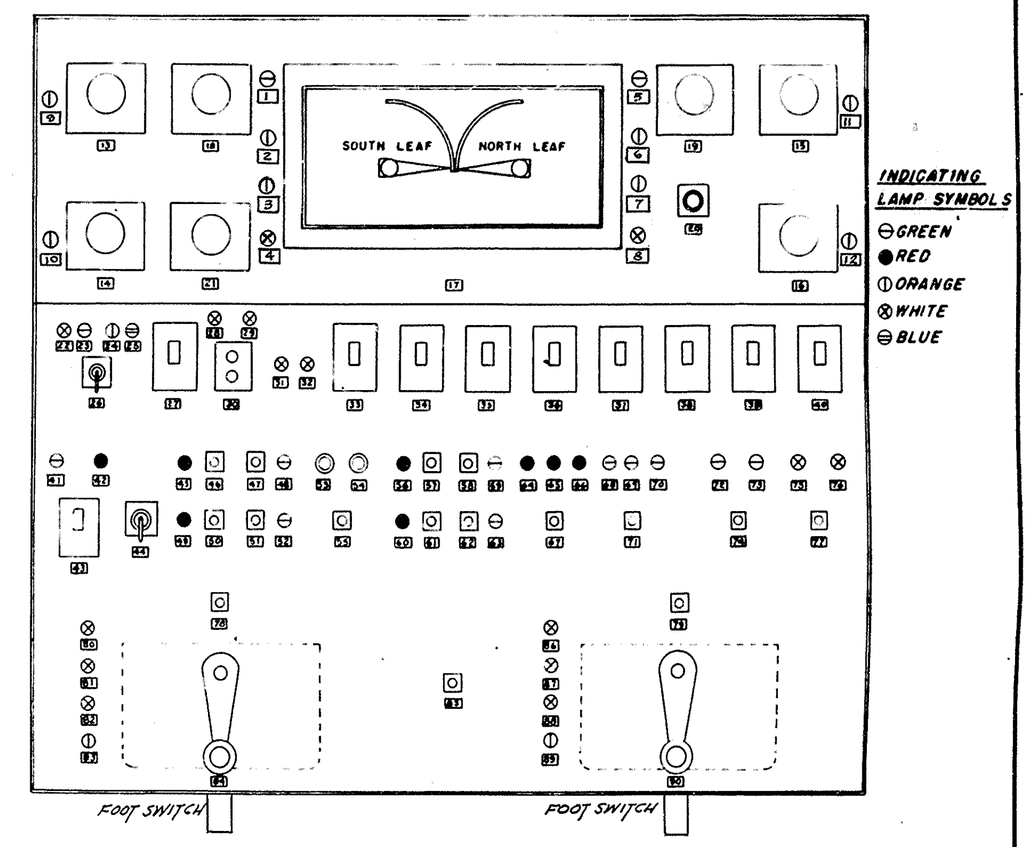

PLAN

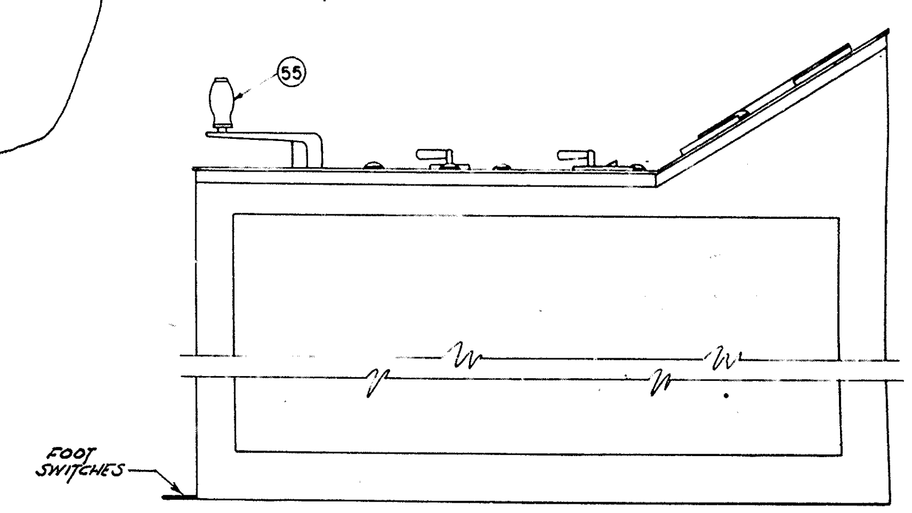

SIDE VIEW

DETAIL "E"

CONTROL BOARD

N.T.S.

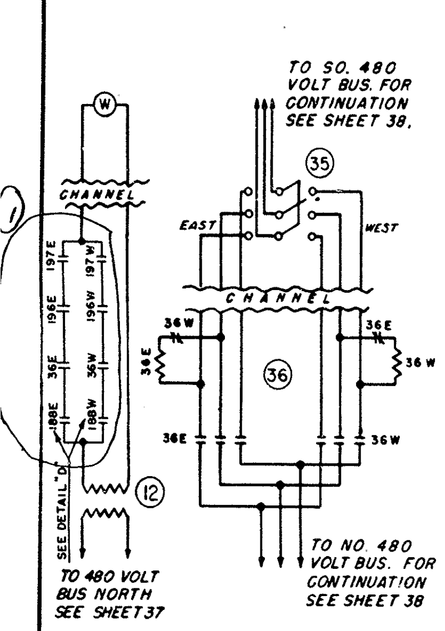

480 VOLT BUS NORTH CONDUCTORS

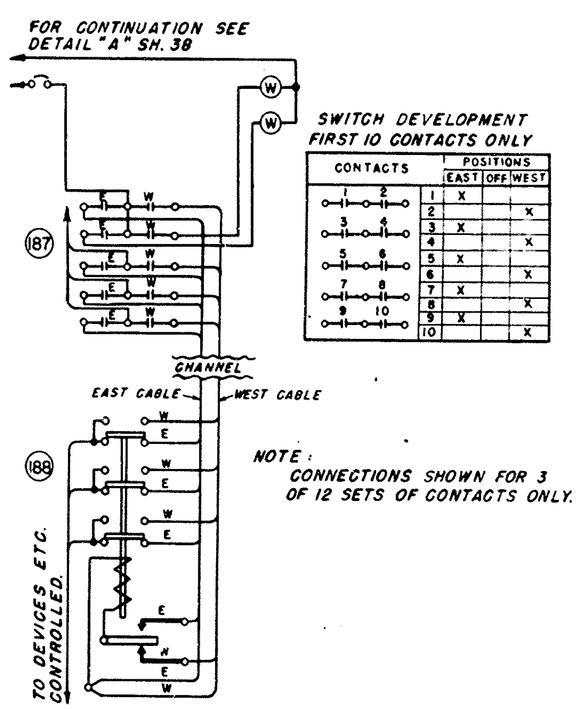

SWITCH DEVELOPMENT FIRST 10 CONTACTS ONLY

CONTACTS	POSITIONS EAST	POSITIONS OFF	POSITIONS WEST
1	X		
2			X
3	X		
4			X
5	X		
6			X
7	X		
8			X
9	X		
10			X

MISCELLANEOUS & CONTROL CONDUCTORS

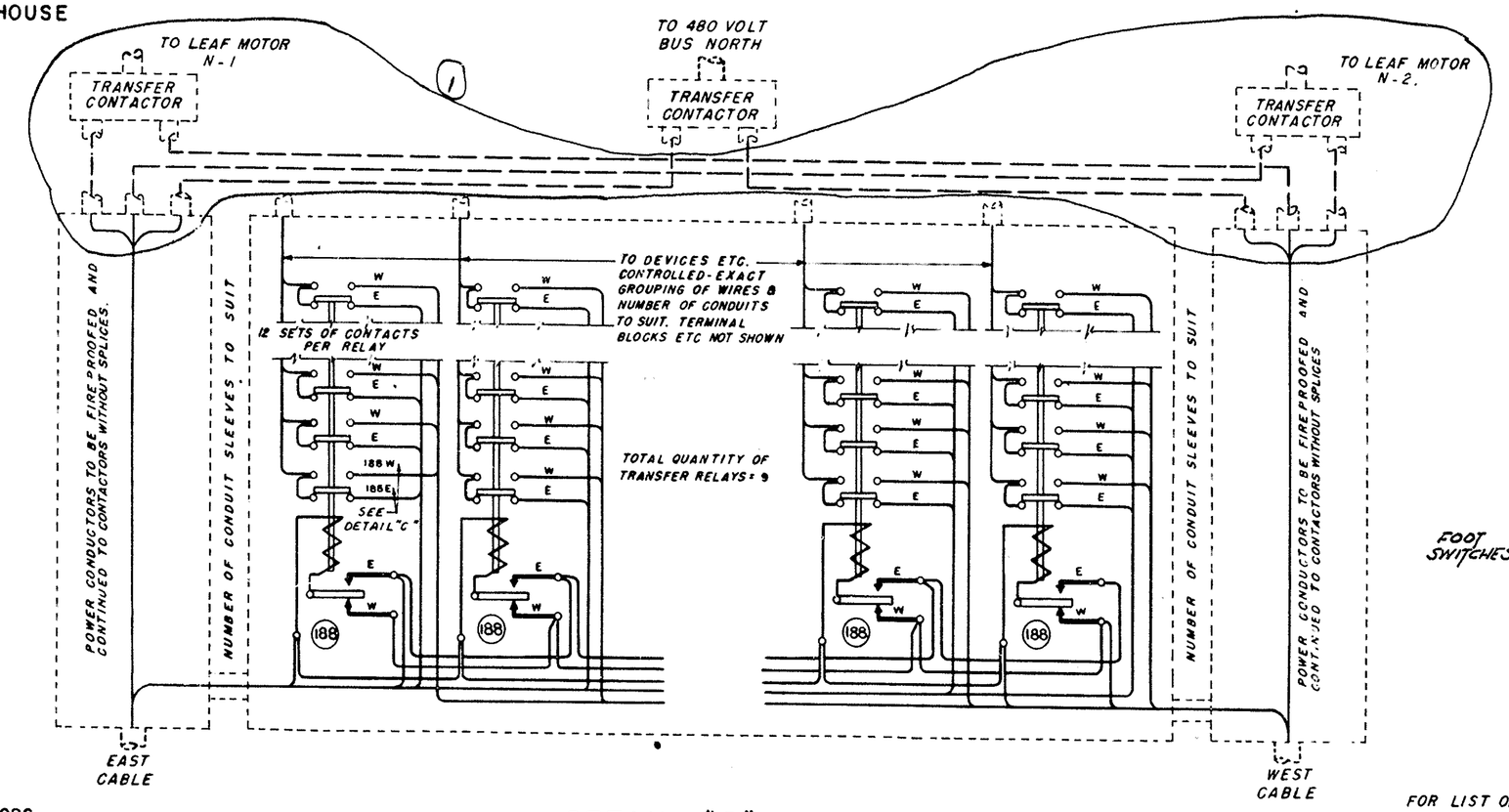

DETAIL "D"

DIAGRAMMATIC ARRANGEMENT - NORTH SUBMARINE CABLE TERMINATION. SOUTH TERMINATION SIMILAR EXCEPT MANUAL DOUBLE THROW SWITCHES REPLACE CONTACTORS AND RELAYS.

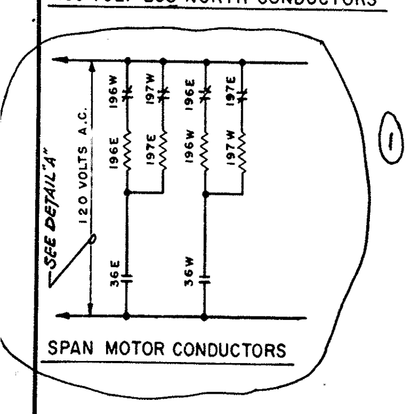

SPAN MOTOR CONDUCTORS

DETAIL "C"

SUBMARINE CABLE TRANSFER CONTROLS

FOR LIST OF REFERENCE DRAWINGS - SEE SHEET 37.

SYMBOL	DESCRIPTION	DATE	APPROVAL
1	REVISED DETAILS "C" & "D" - SEE SHEET 37		

REVISIONS

STATE OF DELAWARE
STATE HIGHWAY DEPARTMENT

WALNUT STREET BRIDGE

OVER CHRISTINA RIVER
WILMINGTON, DELAWARE

WIRING DIAGRAMS

120/208 VOLT DISTRIBUTION & DETAILS

SCALE	DATE	SHEET NO.
NONE	APRIL 1954	39

PARSONS, BRINCKERHOFF, HALL & MACDONALD
ENGINEERS — NEW YORK

MADE BY H.L.R.
TRACED BY W.J.O.
CHECKED BY H.L.R.

APPROVED — BRIDGE ENGINEER

APPROVED — CHIEF ENGINEER

COUNTY	CONTRACT	P. R. A. DIV. NO.	STATE	FED. AID PROJECT NO.	FISCAL YEAR	SHEET NO.	TOTAL SHEETS
NEW CASTLE	1224-(4)		DEL.	S.U-1 (10)	1954	40	42

LIST OF ELECTRICAL APPARATUS

Nº	REQ'D	DESCRIPTION	REMARKS
1	1	3-POLE MANUALLY OPERATED SWITCH, 15 KV, 400 AMP. MINIMUM CONTINUOUS RATING,	
		400 AMP INTERRUPTING RATING	
1A	3	POWER FUSE, 15 KV, 400 AMP CONTINUOUS, 20,000 AMP. MIN. INTERRUPTING	
2	2	CURRENT TRANSFORMER 15 KV 30/5 AMP	FURNISHED BY POWER CO
3	2	POTENTIAL TRANSFORMER 11,500/115 VOLTS	FURNISHED BY POWER CO
4	1	WATT HOUR METER FOR USE WITH INST. TRANSFORMERS	FURNISHED & INSTALLED BY POWER CO.
5	3	LIGHTNING ARRESTER FOR USE ON 12,000 VOLT GROUNDED NEUTRAL SYSTEM	
5A	3	TRANSFORMER, 100 KVA, 12,000/480/240 VOLTS SINGLE PHASE	FURNISHED BY POWER CO
6	1	AIR CIRCUIT BREAKER, 600 V, 3 POLE, 400 AMP TRIP, 25,000 AMP I.C. 120 V AC OPERATED	MOUNTED ON WALL OF GENERATOR
		FURNISHED WITH 480/120 V CONTROL TRANSFORMER, 1 NO & 1 NC AUXILIARY CONTACT	ROOM GENERAL PURPOSE ENC.
		& ADDITIONAL AUXILIARY CONTACT FOR INDICATION BREAKER HAS TRIPPED ON FAULT.	
7	1	ENGINE DRIVEN GENERATOR 480 V, 3 PHASE, 60 CYCLES, 125 KW.	
8	1	AIR CIRCUIT BREAKER, 600 V 3 POLE 225 AMP TRIP, 15,000 AMP I.C MANUAL	MOUNTED ON WALL OF GEN. ROOM
9	1	3 POLE DOUBLE THROW DISCONNECT SWITCH, 600 V, 400 AMP. NEMA 1 ENCL.	MOUNTED ON WALL OF GEN. ROOM.
10	2	CURRENT TRANSFORMER 600 V 400/5 AMP.	
11	11	ENCLOSED CARTRIDGE FUSE, 600 V, 3 AMP. NEC STD.	
12	6	POTENTIAL TRANSFORMER, 480/120 V 100 VA WITH FUSES	
13	1	GROUND DETECTOR	MOUNTED ON CONTROL BOARD
14	1	PHASE FAILURE AND PHASE REVERSAL RELAY	MOUNTED ON PANEL BOARD
15	1	AIR CIRCUIT BREAKER, 600 V, 3 POLE, 40 AMP TRIP 15,000 AMP I.C., MANUAL	
16	1	DRY TYPE TRANSFORMER 480/180/208 Y VOLTS THREE PHASE, 9 KVA.	
17	1	A.C MAGNETIC CONTACTOR, 600 VOLT, THREE POLE, WITHOUT OVERLOAD PROTECTION. SIZE 5.	
18	1	VOLT METER TRANSFER SWITCH, ROTARY TYPE WITH ROUND HANDLE	ON CONTROL BOARD
19	1	VOLTMETER, 0-600 V. SCALE FOR USE WITH 120 V POT. TRANSF.	ON CONTROL BOARD
20	1	WATTMETER FOR USE WITH INST. TRANSF'S.	MOUNTED ON CONTROL BOARD
21	4	AIR CIRCUIT BREAKER, 600 V, 3 POLE, 225 AMP TRIP, 15,000 AMP I.C MANUAL	
22	4	CURRENT TRANSFORMER 200/5 AMP 600 VOLT	
23	4	AMMETER 0-200 AMP SCALE, WITH 5 AMP COIL	
24/27	4	SIZE 4 REVERSING STARTER, 600 V, 3 POLE, WITH 120 VOLT AC OPERATING COILS AND	
		TWO TIME DELAY MAGNETIC OVERLOAD RELAYS, REVERSING STARTER TO BE PROVIDED	
		WITH ELECTRICAL & MECHANICAL INTERLOCKS, AND EACH OVERLOAD RELAY TO BE	
		FURNISHED WITH TWO SETS OF NORMALLY CLOSED CONTACTS AND 1 NORMALLY OPEN	
		CONTACT.	
28/31	6	OVER LOAD RELAY	INCLUDED WITH ITEMS 21/24
32	4	DISCONNECT SWITCH 6-POLE SINGLE THROW 600 V, 200 AMP NEMA 1 ENCL.	MOUNTED CLOSE TO EQUIP. SERVED
34	1	AIR CIRCUIT BREAKER 600 V, 3-POLE 60 AMP. TRIP, 15,000 AMP. I.C MANUAL	
36	3	DISCONNECT SWITCH 3 POLE, DOUBLE THROW, 600 V, 200 AMP NEMA 1 ENCL.	MOUNTED NEAR SUBMARINE CABLE TERMINAL
36	1	AC MAGNETIC TRANSFER CONTACTOR 600 V. 3-POLE WITHOUT OVERLOAD PROTECTION	
		SIZE 3, 480 V. AC OPERATING COIL WITH ELECTRICAL INTERLOCK & WITH 3 N.O. & 1 N.C.	
		AUXILIARY CONTACT	
37	15	DISCONNECT SWITCH, 3-POLE SINGLE THROW 600 V, 60 AMP. WATERTIGHT	MOUNTED CLOSE TO EQUIPMENT SERVED
38/43		SIZE 1 REVERSING STARTER, 600 VOLT 3-POLE, WITH 2 BIMETALLIC OVERLOAD RELAYS.	
		STARTER TO BE ELECTRICALLY AND MECHANICALLY INTERLOCKED AND PROVIDED WITH	
		120 V. AC OPERATING COILS	
44	15	AIR CIRCUIT BREAKER, 600 V, 3 POLE, 30 AMP TRIP, 15,000 AMP. I.C MANUAL	
44A	1	AIR CIRCUIT BREAKER, 600 V, 3 POLE, 60 AMP TRIP, 15,000 AMP. I.C MANUAL	
45/50	6	SIZE 1 NONREVERSING MAGNETIC STARTER, 600 V. 3-POLE WITH 2 BIMETALLIC	
		OVERLOAD RELAYS.	
51	3	SIZE 0 NONREVERSING STARTER 600 V, 3-POLE WITH 2 THERMAL MAGNETIC	MOUNTED NEAR COMPRESSORS
		OVERLOAD RELAYS, 120 VOLT AC OPERATING COIL. PROVIDED WITH AN INDIVIDUAL	
		480/120 VOLT CONTROL TRANSFORMER	
52	2	LIMIT SWITCH - CAM TYPE - 7 CIRCUIT - GE. LS 437	FOR LEAVES
53	2	LIMIT SWITCH - CAM TYPE - 3 CIRCUIT - GE. LS 437	FOR LEAVES
55	2	MASTER CONTROLLER - CAM TYPE HOR. HANDLE	LEAF CONTROL
56/57	2	UNDER VOLTAGE RELAY, 120 V, A.C. WITH 1 N.O. CONTACT	
58/59	2	SEALED TUMBLER SWITCH, SINGLE POLE 250 V, AC 30 AMP	SPAN LOCK RELEASE BYPASS
60/61	2	MAGNETIC RELAY, 120 V, AC. COIL, WITH 1 N.O. & 1 N.C. CONTACT	SPAN LOCK INTERLOCK
62/63	2	MAGNETIC RELAY, 120 V, A.C COIL, WITH 1 N.C. & 2 N.O. CONTACTS	SPAN LOCK INTERLOCK 1 CONTACT ON 63 NOT USED
64/65	2	MAGNETIC RELAY, 120 V, AC COIL, WITH 1 N.O. & 1 N.C. CONTACT	BRAKE HAND RELEASE
66/67	2	MOMENTARY CONTACT PUSH BUTTON	FOR SEATING
68/69	2	MAGNETIC RELAY, 120 V, AC COIL, 1 NC & 1 N.O. CONTACT	FOR SEATING
70/71	2	MAGNETIC RELAY, 120 V, A.C. COIL WITH 5 N.O. CONTACTS	LEAF LIMIT SWITCH BYPASS
72	2	FULL WAVE COPPER OXIDE RECTIFIER 120 V. A.C.	D.C. SUPPLY TO MAGNETIC RELAYS
73/82	10	MAGNETIC CONTACTOR WITH 4 N.O. CONTACTS	ACCELERATING CONTACTS
83/92	10	MAGNETIC TIME DELAY RELAY, DC WITH 2 N.C. CONTACTS	ACCELERATING
100	1	TUMBLER SWITCH, 250 VOLT. 30 AMP SPST	UNDERPASS LT CONTROL - AT CONTROL PANEL
101	1	TUMBLER SWITCH, 250 VOLT, 30 AMP SPST	TRAFFIC & WARNING LIGHT CONTROL
102	1	TUMBLER SWITCH, 250 VOLT, 30 AMP SPST	GREEN TRAFFIC LIGHT
103	1	MOTOR DRIVEN FLASHER, 120 V AC, FOR ALTERNATELY CONNECTING & DISCONNECTING 2 CIRCUITS	WARNING LIGHTS
104	1	TUMBLER SWITCH 250 VOLT, 30 AMP SPST	CONTROL POWER MAIN BUS CONTACTOR
105	1	CONTROL SWITCH, ROTARY TYPE WITH PISTOL GRIP HANDLE	FOR MAIN CIRCUIT BREAKER
106	1	MAGNETIC RELAY WITH 2 N.O. & 1 N.C. CONTACT	AMBER, RED & WARNING LIGHT CONTROL
107	1	SYNCHRONOUS TIMING RELAY, 120 V, WITH 1 NO & 1 NC CONTACT	AMBER & RED TRAFFIC LIGHTS
108	1	TUMBLER SWITCH, 250 VOLT, 30 AMP SPST	NAVIGATION LTS CONTROL AT CONTROL PANEL
109	1	TUMBLER SWITCH, 250 VOLT, 30 AMP DPST	UNDERPASS LIGHTS
110	1	MOMENTARY CONTACT PUSH BUTTON	FOR ELECTRIC AIR HORN
112/115	5	MOMENTARY CONTACT PUSH BUTTON	LOWERING - TRAFFIC GATES
116	1	MOMENTARY CONTACT PUSH BUTTON	GROUP RAISING - TRAFFIC GATES
120/123	4	MAGNETIC RELAY, 120 V AC OPERATING COIL, WITH 1 N.O. CONTACT	TRAFFIC GATE CONTROL
124/125	2	ROTARY SWITCH, SIMILAR TO GE TYPE SB-1, TWO-POSITION PISTOL GRIP HANDLE	PERMISSIVE - LOCAL CONTROL
		8 CONTACTS, ALL CLOSED OR ALL OPEN	OF TRAFFIC GATES
126/129	4	MAGNETIC RELAY, 120 V. AC OPERATING COIL WITH 1 N.C. CONTACT.	GROUP RAISING - GATES
130/134	3	OPERATING SOLENOID - INLET VALVE	FURNISHED BY BARRIER MANUFACTURER
135/137	3	OPERATING SOLENOID - EXHAUST VALVE	FURNISHED BY BARRIER MANUFACTURER
138	1	MAGNETIC RELAY 120 VOLT OPERATING COIL 4 N.O. & 1 N.C. CONTACT	GROUP RAISING - BARRIERS
141	1	MAGNETIC RELAY 120 VOLT OPERATING COIL 3 N.O. CONTACTS	GROUP LOWERING BARRIERS
142/144	3	MAGNETIC RELAY, 120 VOLT OPERATING COIL, 1 N.O. CONTACT	SPAN LOCK INTERLOCK

LIST OF ELECTRICAL APPARATUS (CONT.)

Nº	REQ'D	DESCRIPTION	REMARKS
145	3	LOTS. - INCLUDING 4 LIMIT SWITCHES & 1 PRESSURE SWITCH	FURNISHED BY BARRIER MANUFACTURER
148/150	3	MAGNETIC RELAY, 120 V AC OPERATING COIL WITH 1 N.O. CONTACT	TRAFFIC GATE INTERLOCK
151	4	MOMENTARY CONTACT PUSH BUTTON	GROUP RAISING TRAFFIC BARRIERS
152	4	LOT - LIMIT SWITCHES	FURNISHED WITH TRAFFIC GATES
154	1	MOMENTARY CONTACT PUSH BUTTON, 1 SET NO & 1 SET N.C. CONTACTS.	GROUP LOWERING BARRIERS
155	1	MOMENTARY CONTACT PUSH BUTTON	DISENGAGE SPAN LOCKS
156	1	MOMENTARY CONTACT PUSH BUTTON	ENGAGE - SPAN LOCKS
157/158	2	MAGNETIC RELAY, 120 V AC OPERATING COIL AND 3 N.O. CONTACTS	SPAN LOCK CONTROLS
159	1	PLUNGER SWITCH - 30 LEAF GE - LS 443 P	FULLY SEATED SWITCH
160	1	PLUNGER SWITCH - NO. LEAF GE - LS 443 P	FULLY SEATED SWITCH
161/162	2	MAGNETIC RELAY - 120 V AC OPERATING COIL WITH 1 N.O. CONTACT	PERMISSIVE - SPAN LOCK ENGAGING
163	6	AUXILIARY SWITCH - OPEN ONLY WHEN BRAKE HAS BEEN MANUALLY RELEASED	FURNISHED WITH BRAKES 2 SWITCHES PER BRAKE
164	6	AUXILIARY SWITCH - OPEN ONLY WHEN BRAKE HAS BEEN MANUALLY RELEASED.	FURNISHED WITH BRAKES 2 SWITCHES PER BRAKE
165	6	LIMIT SWITCH - CLOSED ONLY WHEN BRAKE IS RELEASED	FURNISHED WITH BRAKES
168/169	4	LEVER TYPE LIMIT SWITCH WITH 1 N.O. & 1 N.C. CONTACT, G.E. Co CAT. No LS 438 K	USED AT SPAN LOCKS
170/171	2	TRACK TYPE LIMIT SWITCH, PLUNGER OPERATED GE CAT. No CR 9440-D2D	USED AT SPAN LOCKS
172	1	MAGNETIC RELAY, 120 V. AC OPERATING COIL WITH 5 N.O. CONTACTS	GROUP RAISING - TRAFFIC GATES
173/176	4	MOMENTARY CONTACT PUSH BUTTON	LOCATED AT TRAFFIC GATES (FOR LOCAL LOWERING)
177/180	4	MOMENTARY CONTACT PUSH BUTTON	LOCATED AT TRAFFIC GATES (FOR LOCAL RAISING)
181/183	3	SEALED TUMBLER SWITCH, 250 V, 30 AMP. DOUBLE POLE, SINGLE THROW	BYPASSING INTERLOCKS
184	2	MOMENTARY CONTACT PUSH BUTTON STATION 1 N.O. & 1 N.C. CONTACT	MAIN BUS CONTACTOR CONTROL
187	1	GROUP OPERATED ROTARY TYPE CONTROL SWITCH, DOUBLE THROW, 108 SETS OF CONTACTS	CABLE TRANSFER
188	9	MECHANICALLY HELD 12 POLE DOUBLE THROW RELAY AUTOMATIC SWITCH Co # 68524	CABLE TRANSFER - STORAGE HOUSE
189	1	THREE CIRCUIT DISTRIBUTION CABINET, SOLID MAINS, 3-2 POLE 20 AMP	SPAN CONTROL POWER
		CIRCUIT BREAKERS	
190	1	1500 VA TRANSFORMER, 1:1 RATIO, 120/120 VOLTS	SPAN CONTROL POWER
191	1	ROTARY TYPE, 2 POSITION SWITCH WITH PISTOL GRIP HANDLE, 6 CONTACTS	CONTROL - SPAN CONTOL POWER
		- ALL ON OR ALL OFF	
192/195	4	MOMENTARY CONTACT PUSH BUTTON	INDIVIDUAL RAISING TRAFFIC GATES
196/197	2	AC MAGNETIC TRANSFER CONTACTOR, 600 V, 3-POLE WITHOUT OVERLOAD PROTECTION,	
		SIZE 4, 120 VOLT OPERATING COIL WITH ELECTRICAL INTERLOCK	
66A/67A	2	FOOT SWITCH	AT CONTROL DESK
68A/69A	2	MAGNETIC RELAY, 120 V. A.C. OPERATING COIL WITH 1 NC. CONTACT	
107A	1	MAGNETIC RELAY, 120 V. A.C. OPERATING COIL WITH NO. CONTACT	

CONTROL BOARD

Nº	NAME PLATES	REMARKS
1	SOUTH LEAF - FULLY OPEN	
2	SOUTH LEAF - NEARLY OPEN	
3	SOUTH LEAF - NEARLY CLOSED	
4	SOUTH LEAF - FULLY CLOSED	
5	NORTH LEAF - FULLY OPEN	
6	NORTH LEAF - NEARLY OPEN	
7	NORTH LEAF - NEARLY CLOSED	
8	NORTH LEAF - FULLY CLOSED	
9	LEAF MOTOR S1 STARTER TRIPPED	
10	LEAF MOTOR S2 STARTER TRIPPED	
11	LEAF MOTOR N1 STARTER TRIPPED	
12	LEAF MOTOR N2 STARTER TRIPPED	
13	LEAF MOTOR S1 AMMETER	FOR ITEM 23
14	LEAF MOTOR S2 AMMETER	FOR ITEM 23
15	LEAF MOTOR N1 AMMETER	FOR ITEM 23
16	LEAF MOTOR N2 AMMETER	FOR ITEM 23
17	LEAF POSITION INDICATOR	
18	WATTMETER	FOR ITEM 20
19	480-VOLT BUS VOLTAGE	FOR ITEM 19
20	VOLTMETER TRANSFER SWITCH	FOR ITEM 18
21	GROUND DETECTOR	FOR ITEM 13
22	NORMAL POWER AVAILABLE	
23	MAIN 480 VOLT BREAKER OPEN	
24	MAIN 480 VOLT TRIPPED ON FAULT	
25	MAIN 480 VOLT BREAKER CLOSED	
26	MAIN 480 VOLT BREAKER CONTROL SWITCH	FOR ITEM 105
27	BUS CONTACTOR CONTROL POWER	FOR ITEM 104
28	480 V SO. BUS ON	
29	480 V NO. BUS ON	
30	480 VOLT SO BUS CONTACTOR	FOR ITEM 184
31	CONTROLS ON EAST CABLE	
32	CONTROLS ON WEST CABLE	
33	UNDERPASS LIGHTS	FOR ITEM 109
34	NAVIGATION LIGHTS	FOR ITEM 108
35	GREEN TRAFFIC LIGHTS	FOR ITEM 102
36	SPAN LOCK RELEASE BYPASS - SO. LEAF	FOR ITEM 58
37	SPAN LOCK RELEASE BYPASS - NO. LEAF	FOR ITEM 59
38	TRAFFIC GATE CONTROL BYPASS	FOR ITEM 181
39	TRAFFIC BARRIER CONTROL BYPASS	FOR ITEM 182
40	SPAN LOCK CONTROL BYPASS	FOR ITEM 183
41	GREEN TRAFFIC LIGHTS ON	
42	RED TRAFFIC LIGHTS ON	
43	TRAFFIC LIGHT CONTROL	FOR ITEM 101
44	SPAN CONTROL POWER	FOR ITEM 191
45	SW TRAFFIC GATE - CLOSED	

CONTROL BOARD (CONT.)

Nº	NAME PLATES	REMARKS
46	SW TRAFFIC GATE - LOWER	FOR ITEM 112
47	SW TRAFFIC GATE - RAISE	FOR ITEM 166
48	SW TRAFFIC GATE - OPEN	
49	SE TRAFFIC GATE - CLOSED	
50	SE TRAFFIC GATE - LOWER	FOR ITEM 113
51	SE TRAFFIC GATE - RAISE	FOR ITEM 167
52	SE TRAFFIC GATE - OPEN	
53	LOCAL CONTROLS - SOUTH GATES	FOR ITEM 124
54	LOCAL CONTROLS - NORTH GATES	FOR ITEM 125
55	ALL TRAFFIC GATES - GROUP RAISE	FOR ITEM 116
56	NW TRAFFIC GATE CLOSED	
57	NW TRAFFIC GATE - LOWER	FOR ITEM 114
58	NW TRAFFIC GATE - RAISE	FOR ITEM 168
59	NW TRAFFIC GATE - OPEN	
60	NE TRAFFIC GATE - CLOSED	
61	NE TRAFFIC GATE - LOWER	FOR ITEM 115
62	NE TRAFFIC GATE - RAISE	FOR ITEM 169
63	NE. TRAFFIC GATE - OPEN	
64	S.W. TRAFFIC BARRIER - UP	
65	S.E. TRAFFIC BARRIER - UP	
66	N.W. TRAFFIC BARRIER UP	
67	TRAFFIC BARRIERS - RAISE	FOR ITEM 151
68	SW. TRAFFIC BARRIER - DOWN	
69	S.E TRAFFIC BARRIER - DOWN	
70	N.W. TRAFFIC BARRIER - DOWN	
71	TRAFFIC BARRIERS - LOWER	FOR ITEM 154
72	WEST SPAN LOCK - DISENGAGED	
73	EAST SPAN LOCK - DISENGAGED	
74	SPAN LOCKS DISENGAGE	FOR ITEM 155
75	WEST SPAN LOCK - ENGAGED	
76	EAST SPAN LOCK - ENGAGED	
77	SPAN LOCKS ENGAGE	FOR ITEM 156
78	SEATING SWITCH - SO LEAF	FOR ITEM 66
79	SEATING SWITCH - NO. LEAF	FOR ITEM 67
80	BRAKE S-1 RELEASED	
81	BRAKE S-2 RELEASED	
82	BRAKE S-3 RELEASED	
83	TWO BRAKES HAND RELEASED	
84	CONTROLLER - SO. LEAF	FOR ITEM 55
85	HORN	FOR ITEM 110
86	BRAKE N-1 RELEASED	
87	BRAKE N-2 RELEASED	
88	BRAKE N-3 RELEASED	
89	TWO BRAKES HAND RELEASED	
90	CONTROLLER NO. LEAF	FOR ITEM 55

FOR LIST OF REFERENCE DRAWINGS - SEE SHEET 37

MADE BY NSR
TRACED BY [illegible]
CHECKED BY NSR

APPROVED BRIDGE ENGINEER

APPROVED CHIEF ENGINEER

SYMBOL	DESCRIPTION	DATE	APPROVAL
1	ITEM 33 CANCELED, INC ITEM 35, REVISED DESC. ITEM 36, ADDED ITEMS 196/197		

REVISIONS

STATE OF DELAWARE
STATE HIGHWAY DEPARTMENT

WALNUT STREET BRIDGE
OVER CHRISTINA RIVER
WILMINGTON, DELAWARE

ELECTRICAL EQUIPMENT LIST

SCALE	DATE	SHEET NO.
NONE	APRIL 1954	40

PARSONS, BRINCKERHOFF, HALL & MACDONALD
ENGINEERS NEW YORK

MICROFILMED

COUNTY	CONTRACT	P. R. A. DIV. NO.	STATE	FED. AID PROJECT NO.	FISCAL YEAR	SHEET NO.	TOTAL SHEETS
NEW CASTLE	1224-(4)		DEL.	S.U - 1 (10)	1954	41	42

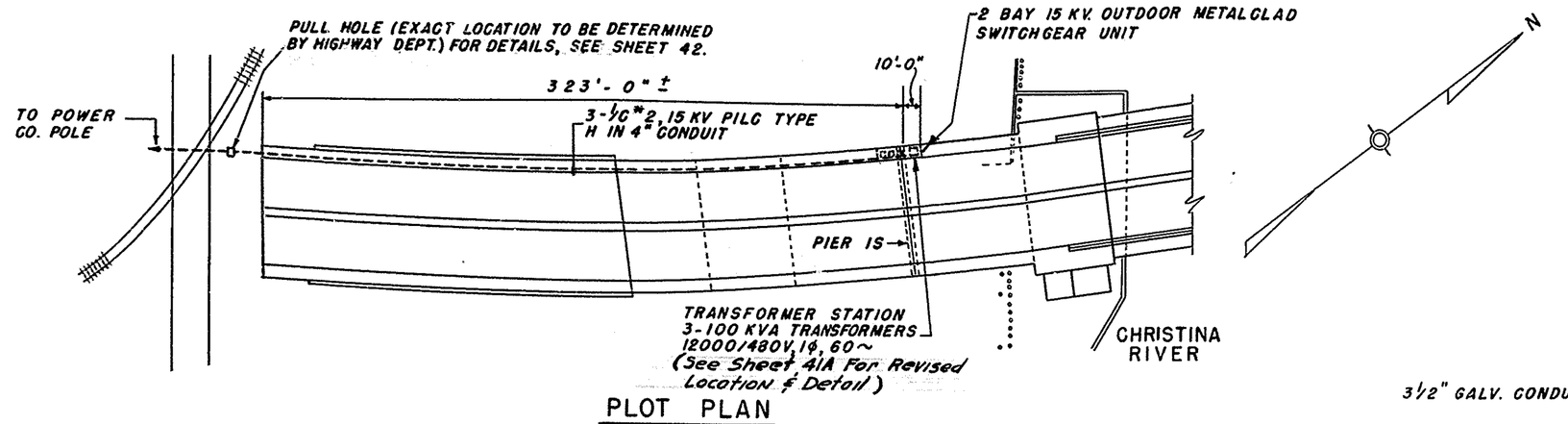

PLOT PLAN

SCALE 1" = 50'-0"

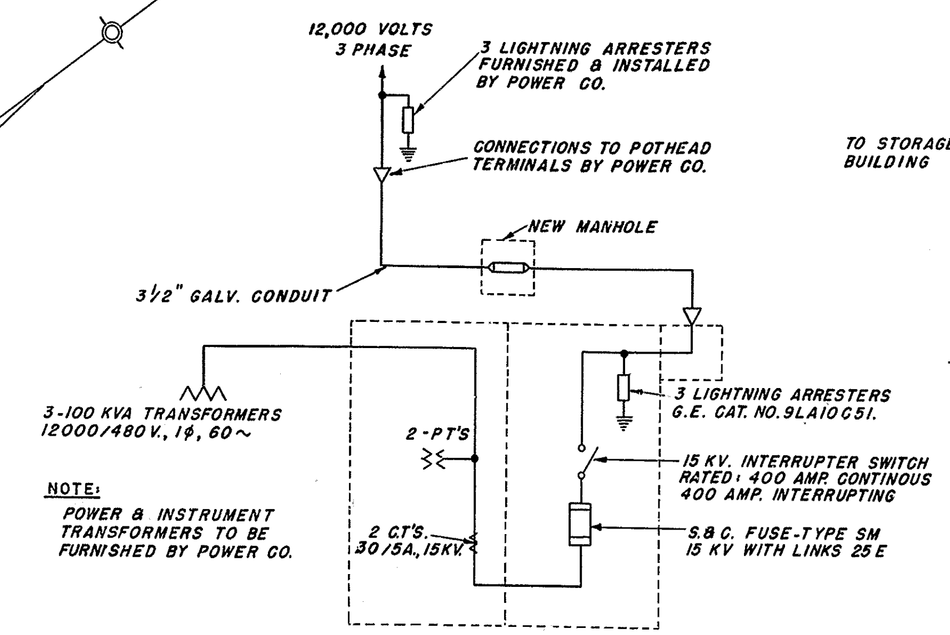

NOTE:

POWER & INSTRUMENT TRANSFORMERS TO BE FURNISHED BY POWER CO.

ONE LINE DIAGRAM

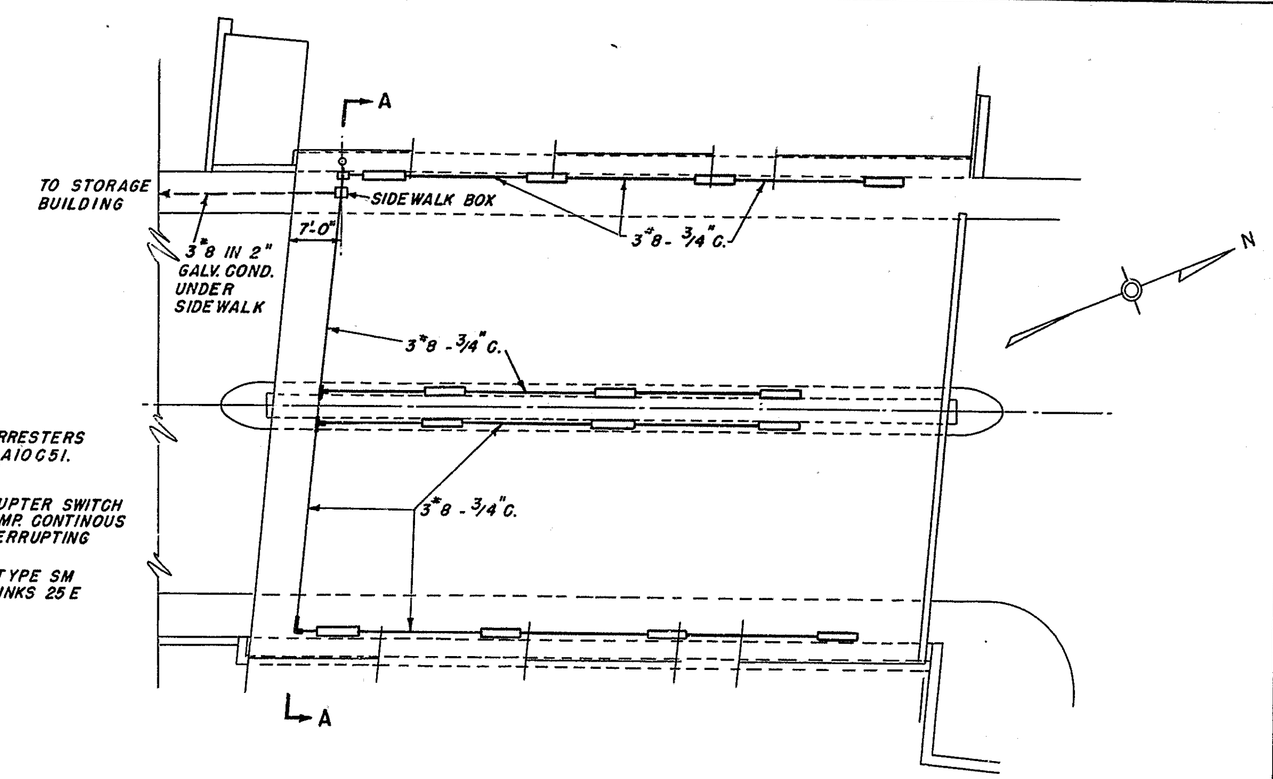

PLAN - UNDERPASS LIGHTS

1/16" = 1'-0"

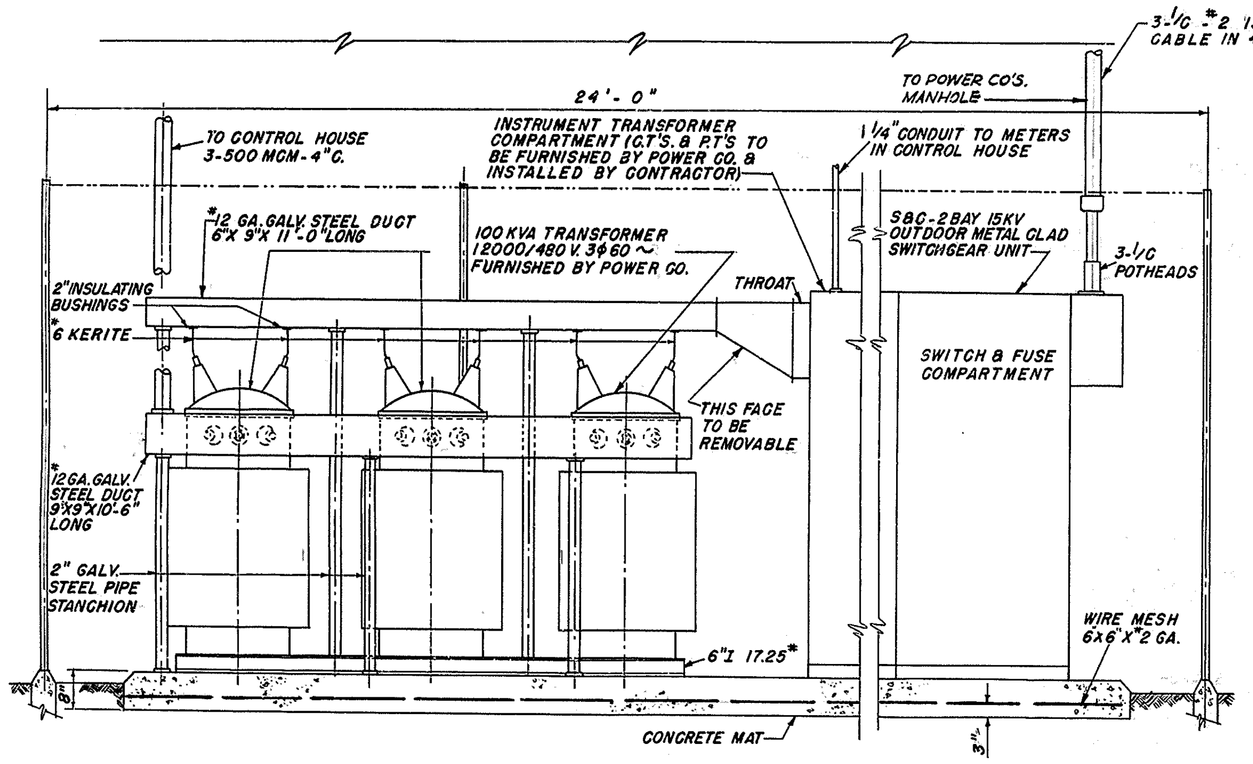

ELEVATION A-A

SCALE 1/2" = 1'-0"

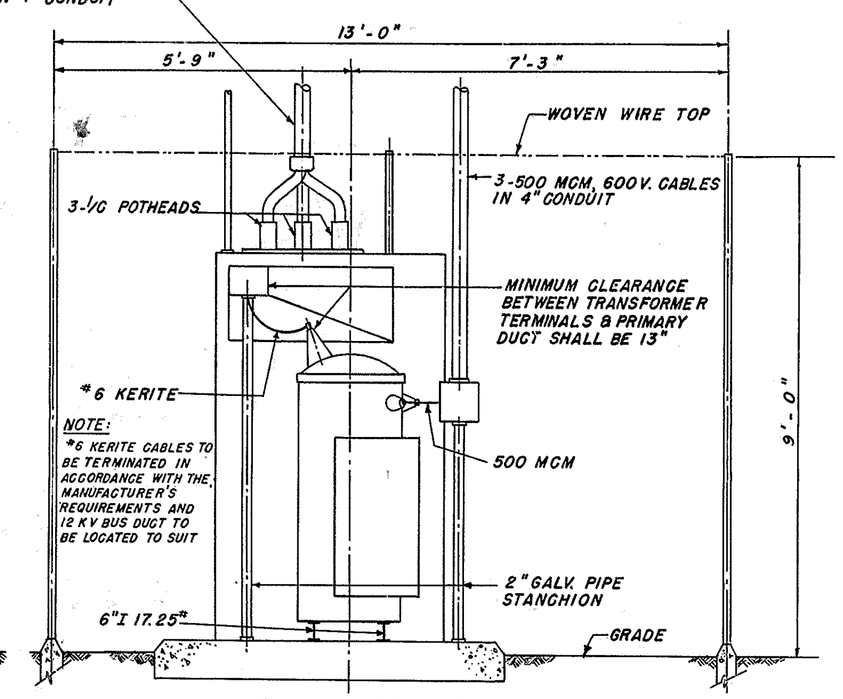

ELEVATION B-B

SCALE 1/2" = 1'-0"

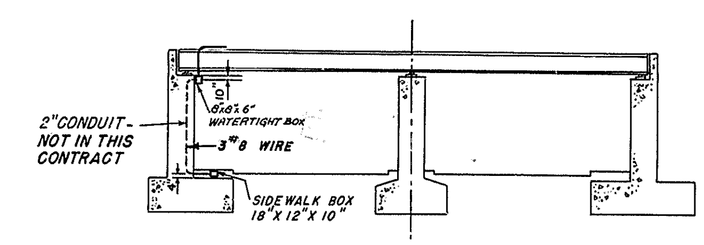

SECTION "A-A"

1/16" = 1'-0

NOTES FOR 12,000 VOLT POWER SERVICE

1. CONTRACTOR TO FURNISH ALL CONDUIT, CABLE AND POTHEADS FOR USE STARTING FROM THE TRANSFORMER INSTALLATION AND ENDING WITH THE POTHEADS AT THE RISER POLE.
2. CONTRACTOR TO FURNISH AND INSTALL NEW PULL HOLE AT A LOCATION SATISFACTORY TO THE HIGHWAY DEPARTMENT.
3. CONTRACTOR TO INSTALL CONDUIT VIA NEW PULL HOLE BETWEEN TRANSFORMER AND A POINT ON RISER POLE APPROXIMATELY 10 FT. ABOVE FINISHED GRADE.
4. AT THE RISER POLE, LIGHTNING ARRESTERS, AND POLE ATTACHMENTS TO BE FURNISHED AND INSTALLED BY POWER CO. AT THEIR EXPENSE. POTHEADS AND REMAINING CONDUIT TO BE INSTALLED AND MADE UP BY POWER CO. AT CONTRACTOR'S EXPENSE.
5. RISER CABLE TO BE PULLED BY CONTRACTOR WITH ASSISTANCE OF POWER CO. AT CONTRACTOR'S EXPENSE.
6. CONTRACTOR TO INSTALL CABLE FROM TRANSFORMER INSTALLATION TO MANHOLE AND MAKE UP SPLICES IN MANHOLE AND POTHEADS AT THE SWITCHGEAR.
7. POWER CO. TO TEST ENTIRE LENGTH OF CABLE, AND INSTALL OPEN WIRE CONNECTIONS AT RISER POLE.
8. MAXIMUM SHORT CIRCUIT CURRENT APPROXIMATES 8700 AMPERES ASYMMETRICAL.
9. Details of transformer station of this sheet are superceded by sheet #41A

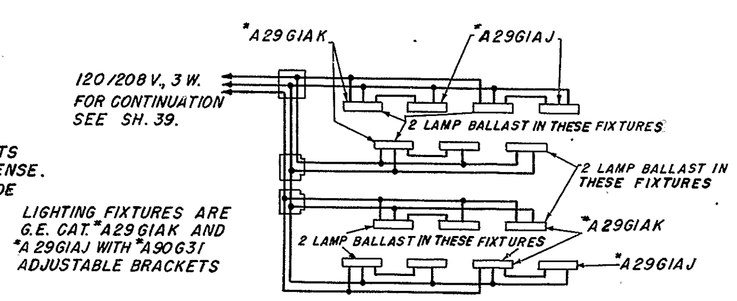

LIGHTING FIXTURES ARE G.E. CAT. #A29G1AK AND #A29G1AJ WITH #A9063J ADJUSTABLE BRACKETS

WIRING DIAGRAM

UNDERPASS LIGHTS

FOR LIST OF REFERENCE DRAWINGS - SEE SHEET 37

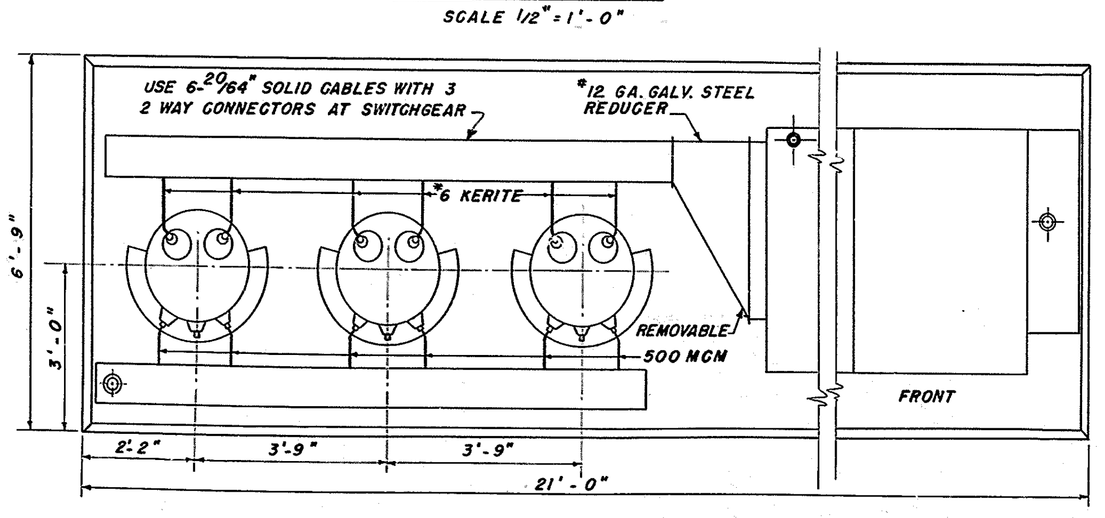

PLAN- TRANSFORMER INSTALLATION

SCALE 1/2" = 1'-0"

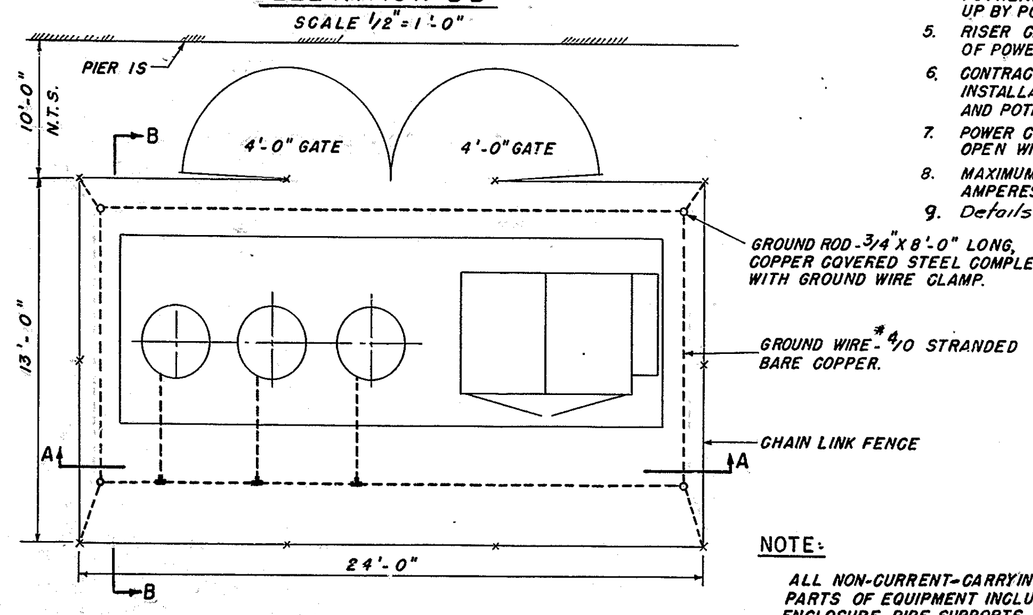

GROUNDING & FENCE ENCLOSURE PLAN

SCALE 1/4" = 1'-0"

NOTE:

ALL NON-CURRENT-CARRYING METALLIC PARTS OF EQUIPMENT INCLUDING FENCE ENCLOSURE, PIPE SUPPORTS, ETC. SHALL BE GROUNDED.

APPROVED Joe S. Robinson BRIDGE ENGINEER

MADE BY G.D.H. & L.J.B.

TRACED BY [illegible]

CHECKED BY [illegible]

STATE OF DELAWARE

STATE HIGHWAY DEPARTMENT

WALNUT STREET BRIDGE

OVER CHRISTINA RIVER

WILMINGTON, DELAWARE

TRANSFORMER INSTALLATION AND DETAILS

SCALE	DATE	SHEET NO.
AS NOTED	APRIL 1954	41

PARSONS, BRINCKERHOFF, HALL & MACDONALD

ENGINEERS NEW YORK

COUNTY	CONTRACT	P. R. A. DIV. NO.	STATE	FED. AID PROJECT NO.	FISCAL YEAR	SHEET NO.	TOTAL SHEETS
NEW CASTLE	1224		DEL.				

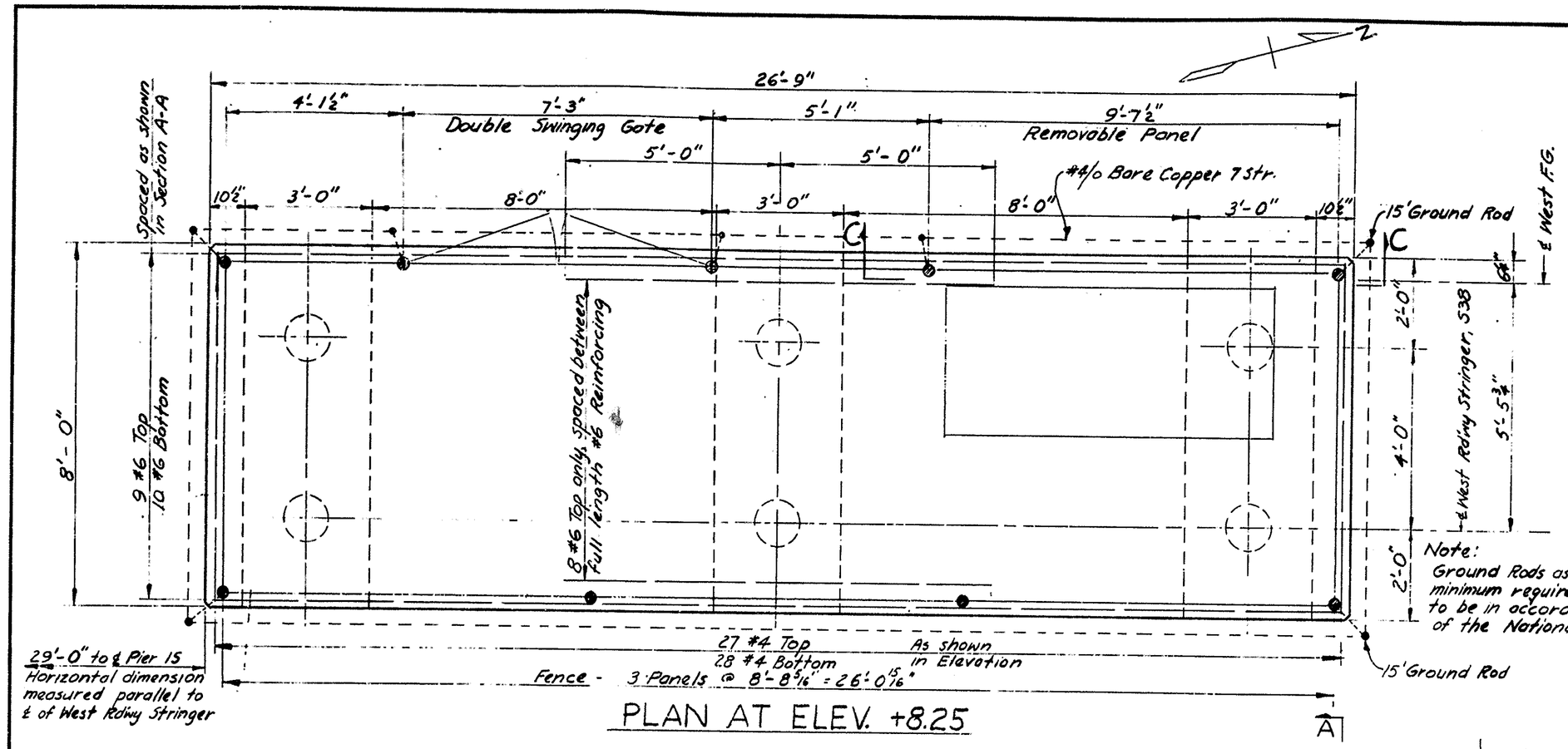

PLAN AT ELEV. +8.25

Note:
Ground Rods as shown represent minimum requirement. Ground Resistance to be in accordance with Specifications of the National Electrical Code.

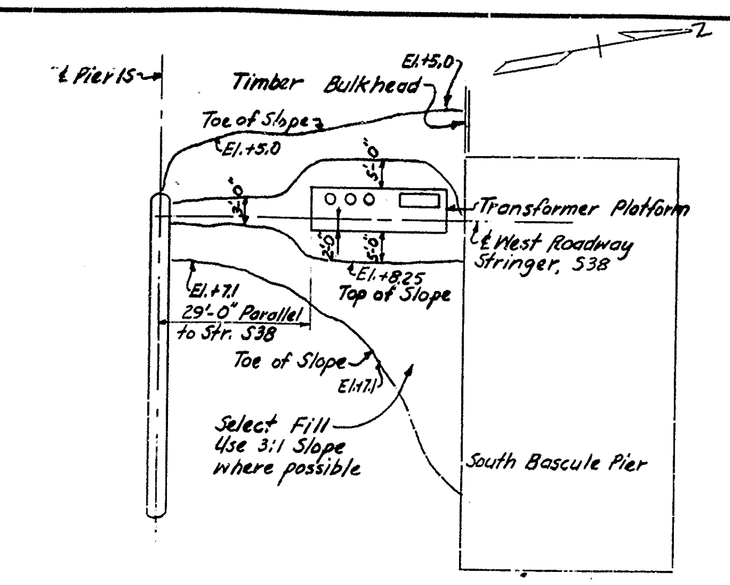

GENERAL PLAN
Scale: 1" = 20'-0"

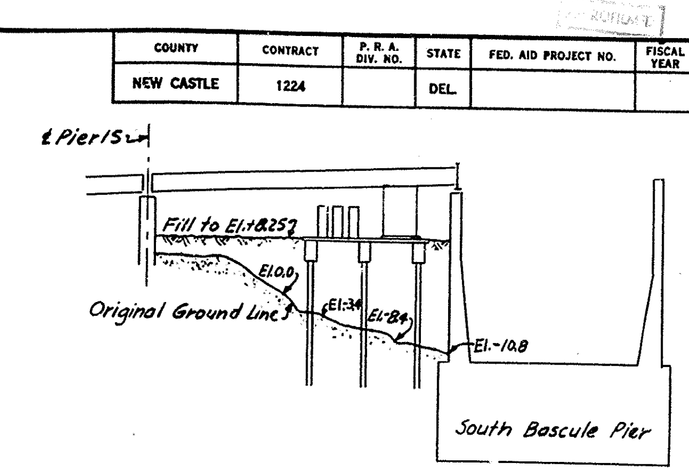

GENERAL ELEVATION
Looking West
Scale: 1" = 20'-0"

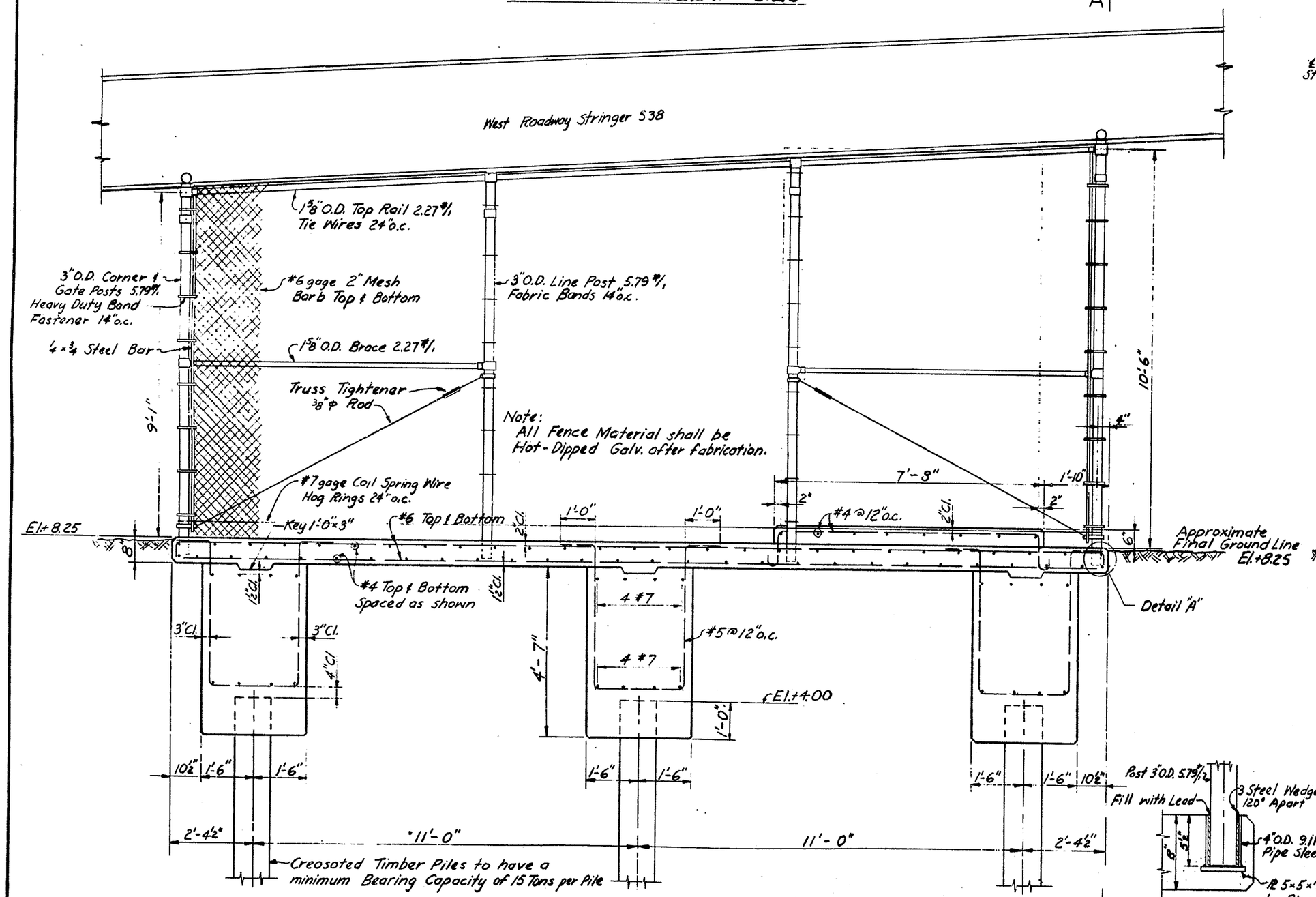

ELEVATION
Looking West

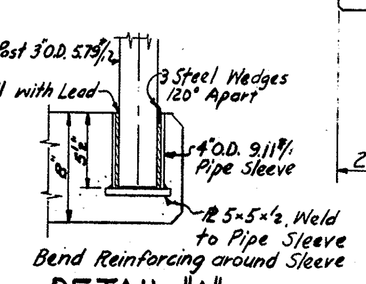

DETAIL "A"
Scale: 1½" = 1'-0"

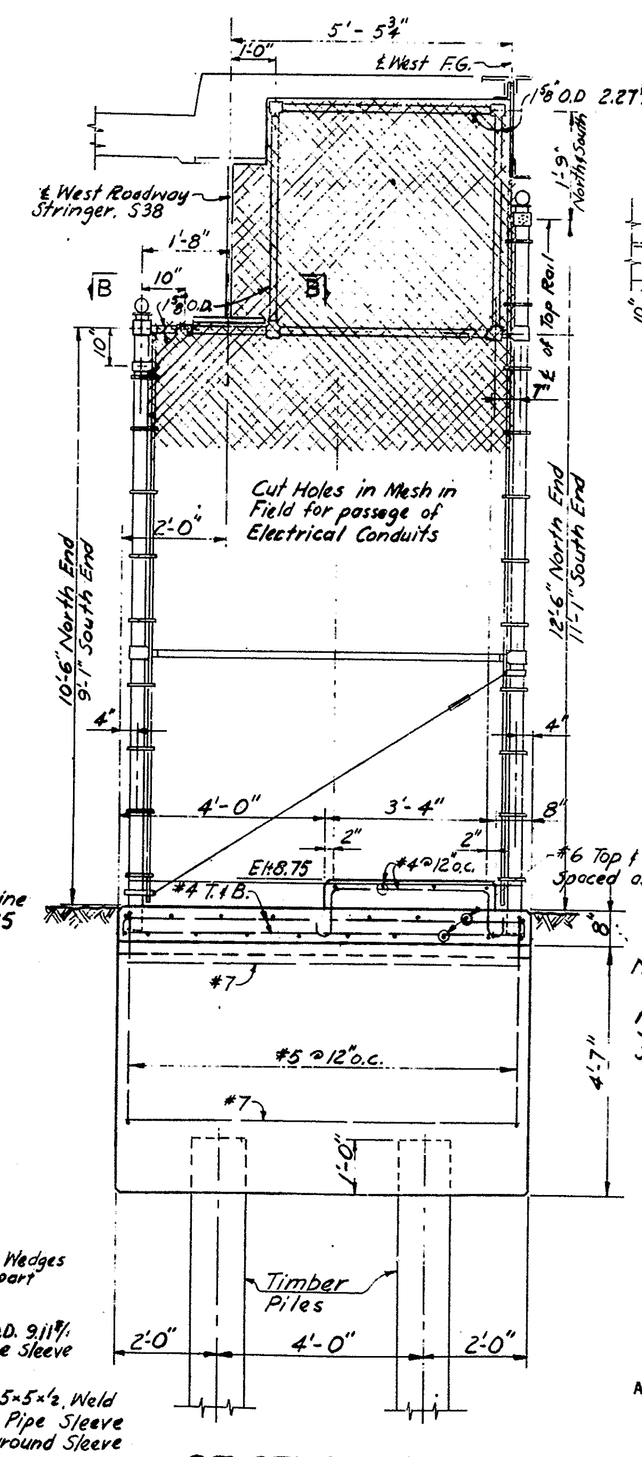

Note:
Electrical Contractor to provide conduits through Slab for supply to Space Heaters in Box.

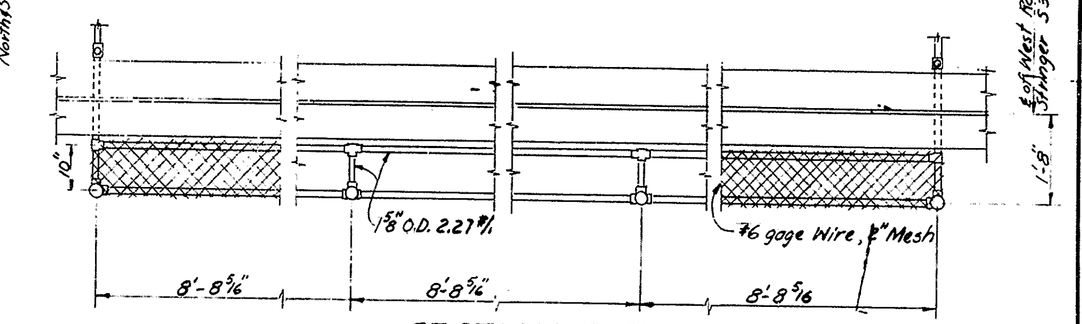

SECTION B-B

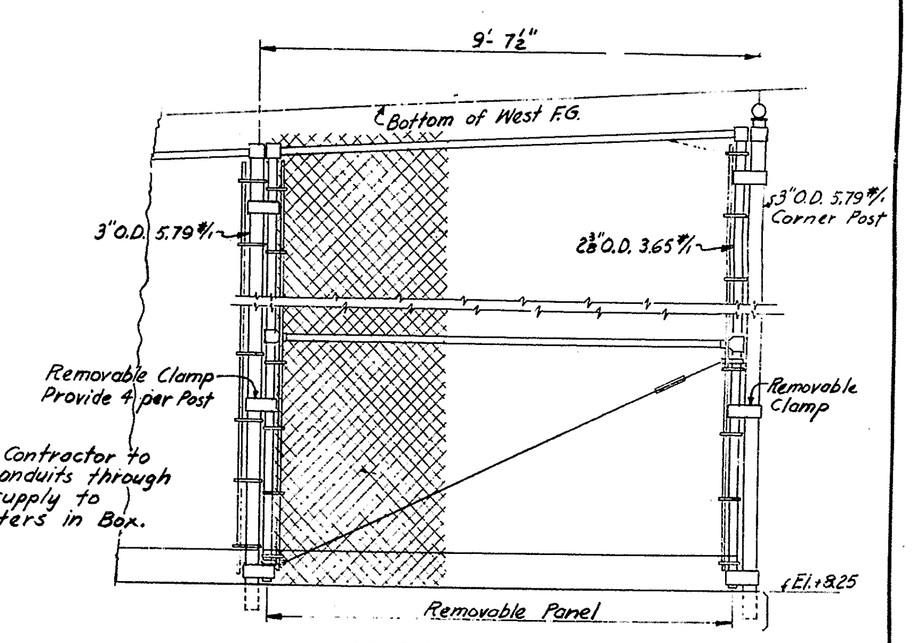

SECTION C-C

SECTION A-A

MADE BY E.F.
TRACED BY
CHECKED BY

APPROVED ..... BRIDGE ENGINEER

APPROVED ..... CHIEF ENGINEER

STATE OF DELAWARE
STATE HIGHWAY DEPARTMENT

WALNUT STREET BRIDGE
OVER CHRISTINA RIVER
WILMINGTON, DELAWARE

TRANSFORMER PLATFORM DETAILS

SCALE	DATE	SHEET NO.
½"=1'-0" Except as Noted	MARCH 1956	41A

PARSONS, BRINCKERHOFF, HALL & MACDONALD
ENGINEERS NEW YORK

E 15-5

MICROFILMED

COUNTY	CONTRACT	P. R. A. DIV. NO.	STATE	FED. AID PROJECT NO.	FISCAL YEAR	SHEET NO.	TOTAL SHEETS
NEW CASTLE	1224-(4)		DEL.	S.U - 1 (10)	1954	42	42

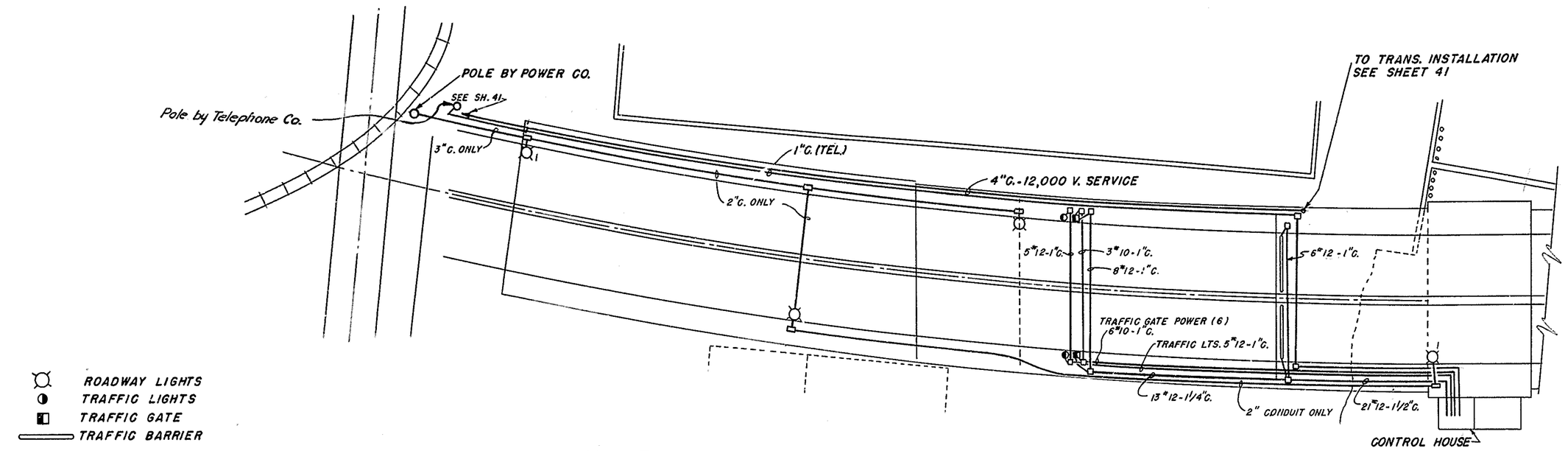

CONDUIT DIAGRAM - SOUTH APPROACH

1" = 30'-0"

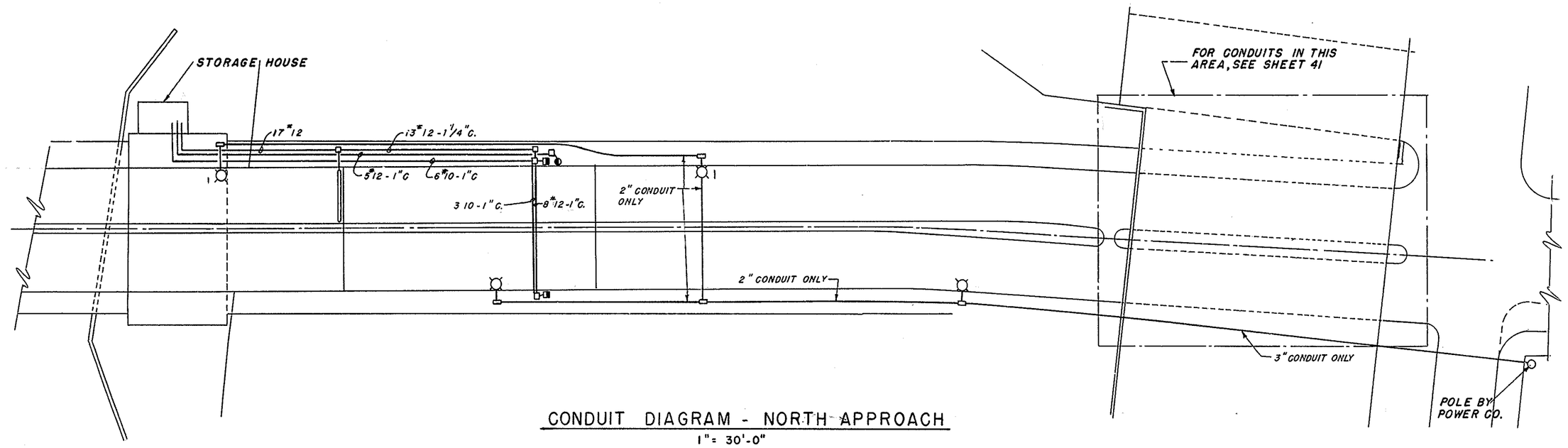

CONDUIT DIAGRAM - NORTH APPROACH

1" = 30'-0"

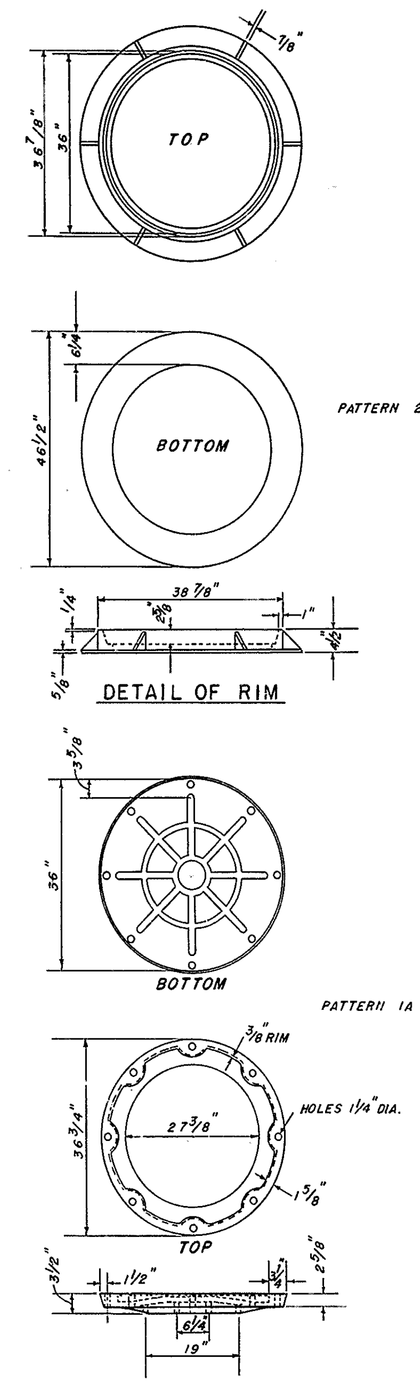

WIRING DIAGRAM SYMBOLS

- CABLE TERMINATOR
- MANUALLY OPERATED LOAD BREAK SWITCH
- CURRENT TRANSFORMER
- FUSE
- LIGHTNING ARRESTER
- GROUND CONNECTION
- COIL OF TRANSFORMER, CONTACTOR OR RELAY
- AIR CIRCUIT BREAKER
- 3 POLE DOUBLE THROW DISCONNECT SWITCH
- INDICATES MECHANICAL CONNECTION WHEN USED WITH SWITCHES
- NORMALLY OPEN CONTACT
- NORMALLY CLOSED CONTACT
- CONTACT ON CAM OR DRUM TYPE SWITCH
- (1) (2) MOMENTARY CONTACT PUSH BUTTONS. (1) NORMALLY OPEN (2) NORMALLY CLOSED
- TUMBLER SWITCH
- SEALED TUMBLER SWITCH
- BIMETALLIC ELEMENT
- MAGNETIC TIME-DELAY RELAY
- LEVER TYPE LIMIT SWITCH CONTACT NORMALLY CLOSED
- LEVER TYPE LIMIT SWITCH CONTACT NORMALLY OPEN
- PLUNGER OPERATED LIMIT SWITCH CONTACT
- AUXILIARY SWITCH CONTACT
- (G) GENERATOR
- (M) MOTOR
- MOTOR WITH BRAKE
- (AM) AMMETER
- (V) VOLTMETER
- (W) WATTMETER
- (WHM) WATTHOUR METER
- (PR) OPEN PHASE AND PHASE REVERSAL RELAY
- (GD) GROUND DETECTOR
- (W) WHITE INDICATING LAMP
- (G) GREEN INDICATING LAMP
- (R) RED INDICATING LAMP
- (O) ORANGE INDICATING LAMP
- (T) SYNCHRONOUS MOTOR DRIVEN TIMING RELAY
- (ST) SELYSN TRANSMITTER
- (SR) SELYSN RECEIVER
- (GT) GREEN TRAFFIC LIGHT
- (AT) AMBER TRAFFIC LIGHT
- (RT) RED TRAFFIC LIGHT
- (Gg) GONG

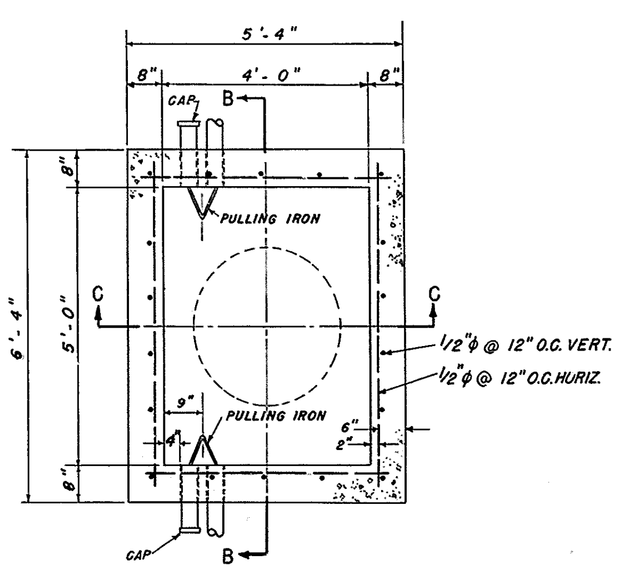

PLAN A-A

SCALE 1/2" = 1'

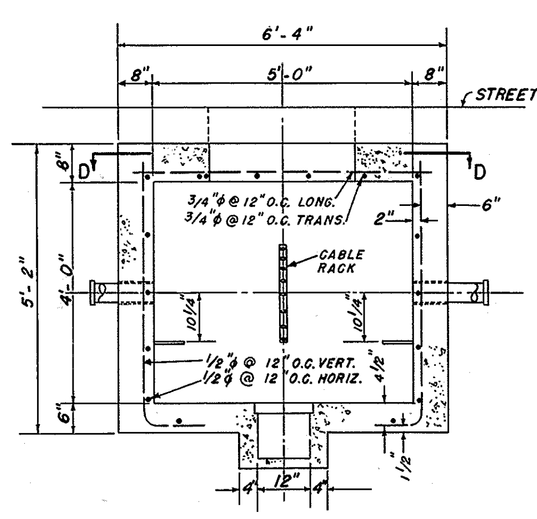

SECTION B-B

SCALE 1/2" = 1'

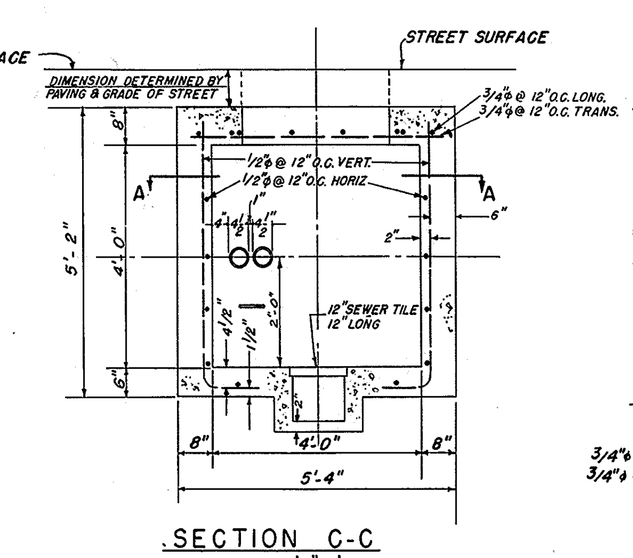

SECTION C-C

SCALE 1/2" = 1'

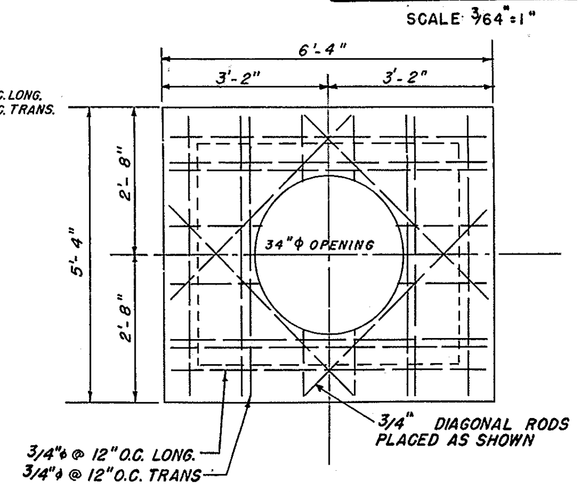

PLAN D-D

SCALE 1/2" = 1'

4'-5' PULL HOLE

1/2" = 1'-0"

FOR LIST OF REFERENCE DRAWINGS - SEE SHEET 37

APPROVED Jae S. Robinson BRIDGE ENGINEER

STATE OF DELAWARE
STATE HIGHWAY DEPARTMENT

WALNUT STREET BRIDGE

OVER CHRISTINA RIVER
WILMINGTON, DELAWARE

CONDUIT DIAGRAMS AND DETAILS

SCALE	DATE	SHEET NO.
AS NOTED	APRIL 1954	42

PARSONS, BRINCKERHOFF, HALL & MACDONALD

MADE BY WJB
TRACED BY WJB
CHECKED BY HLB

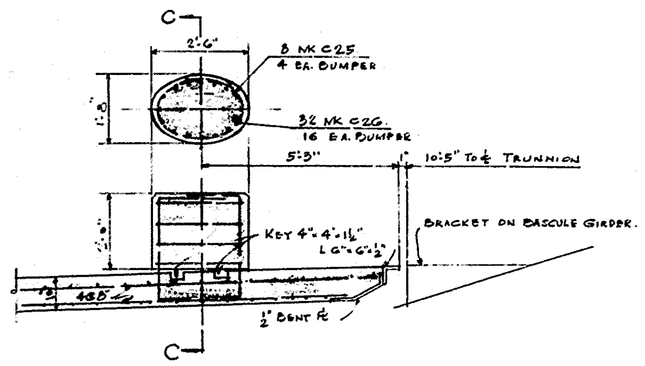

DETAIL FOR CONCRETE BUMPER

2 LIKE THIS - PANEL 1 - SOUTH APPROACH

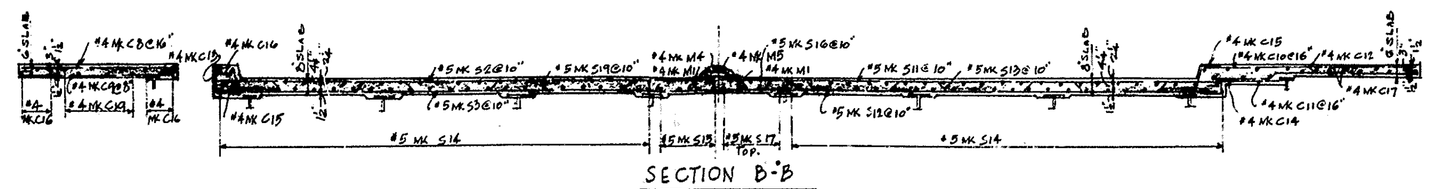

SECTION B-B

SCALE ½"=1'-0"

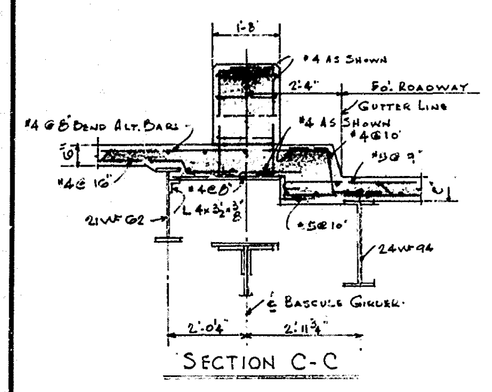

SECTION C-C

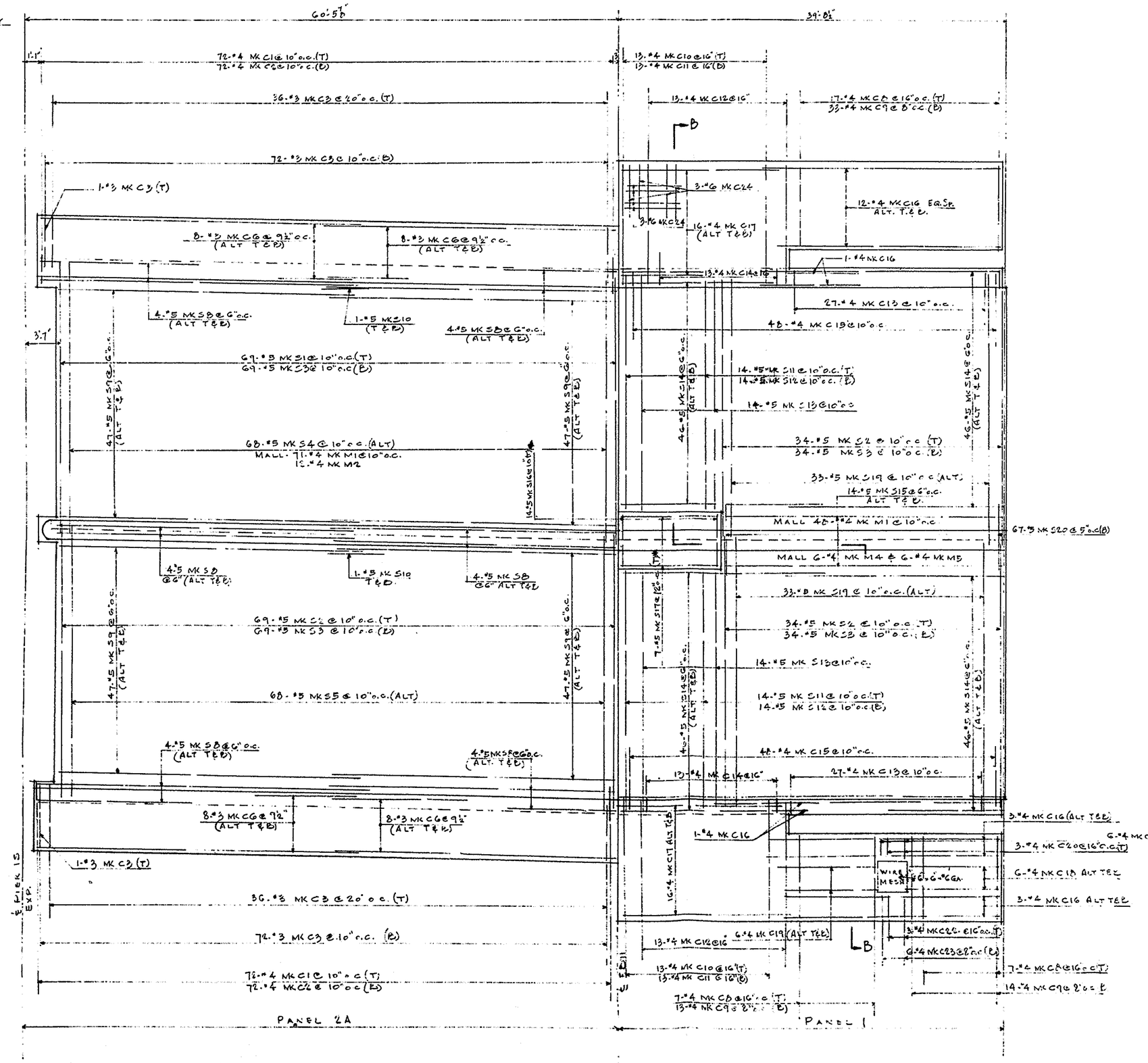

BENDING DETAILS.

No	Size	Length	Mark	Type	A	B	C	D	E	F	G	J	O	H	K
24	6	4-10	C24	1	8	3-6					8				
68	5	30-4	S4	25											
69		29-0	S1	1	7	28-5									
66		28-2½	S19	26											
68		27-11	S5	27											
206		26-8	S3	17		10	25-10								
137		26-7	S2	1	7	26-0									
28		24-8½	S13	28											
28	5	23-10	S11	1	7	22-8					7				
26	4	11-8½	C12	5	6	5-7	4	5-3½						3	3
26		11-5	C11	29											
60		9-0	C9	1	6	8-0					6				
164		4-6	C1	3		1-8	1-2	1-8						1-2	2
119		4-5½	M1	30											
164		4-4	C2	30		1-8	1-0	1-8							
26		4-4	C14	20		4-11	7	10							
96		3-6	C15	3		1-0	1-1	1-3						1-1	2
6		3-6	C23	1	6	2-6					6				
56		3-1	C13	17		1-0	1-1	1-0							
6	4	1-6	C21	1	6	1-0									
8	4	6-6	C25	31	6	10				1-6½				1-5	2-3
32	4	3-11	C26	17		1-0	2-6	5							

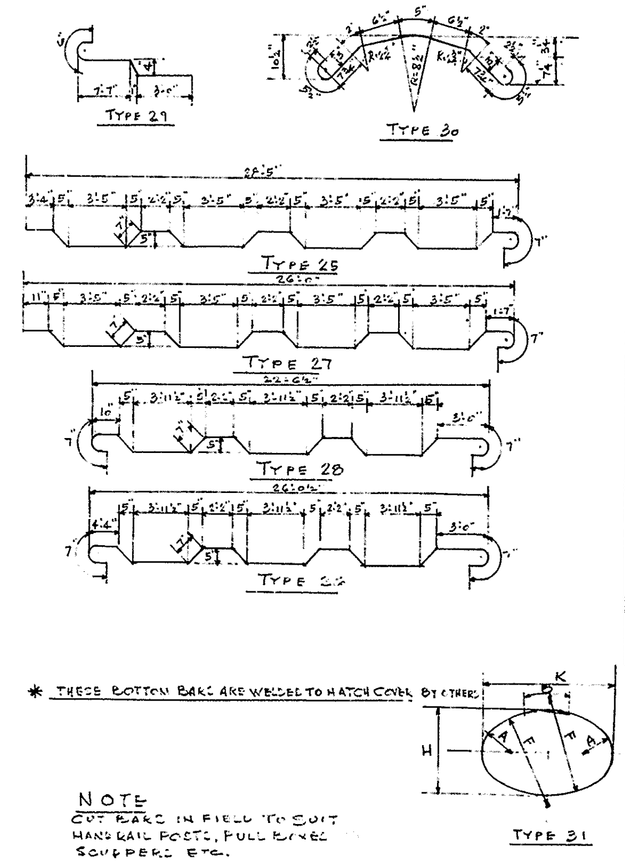

STRAIGHT BARS.

No	Size	Length	Mark
24	5	20-9	S8
182	1	29-6	S9
7		28-0	S15
14		22-8	S12
186		20-10	S14
7		11-1	S17
14		6-10	S16
4	5	2-0	S10
67	5	7-0	S20
12	4	30-9	M2
6		28-0	M4
22		23-10	C16
32		16-11	C17
26		11-1½	C10
6		11-1	M3
6		10-11	C19
6		8-7	C18
31		8-0	C8
3		2-4	C22
3	4	1-0	C20
32	3	30-4	C6
212	3	5-8	C3

* THESE BOTTOM BARS ARE WELDED TO HATCH COVER BY OTHERS.

NOTE

CUT BARS IN FIELD TO SUIT HANDRAIL POSTS, FULL RIVET SCUPPERS ETC.

BETHLEHEM STEEL COMPANY

BUFFALO SALES OFFICE

STRUCTURE	WALNUT STREET BRIDGE
LOCATION	WILMINGTON DELAWARE
ARCHITECT	
ENGINEER	PARSONS, BRINCKERHOFF HALL & MACDONALD
CONTRACTOR	A. S. WIKSTROM INC.
CUSTOMER	

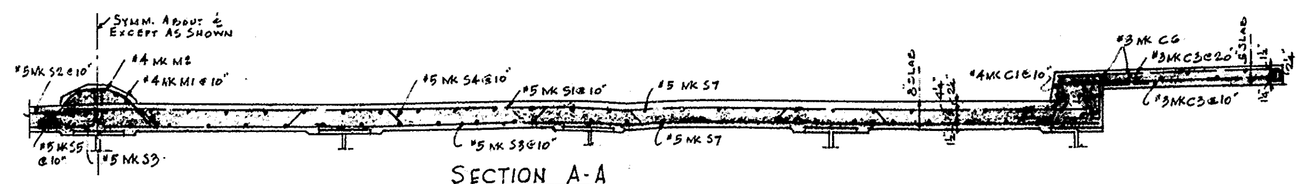

SECTION A-A

SCALE 1/4" = 1'-0"

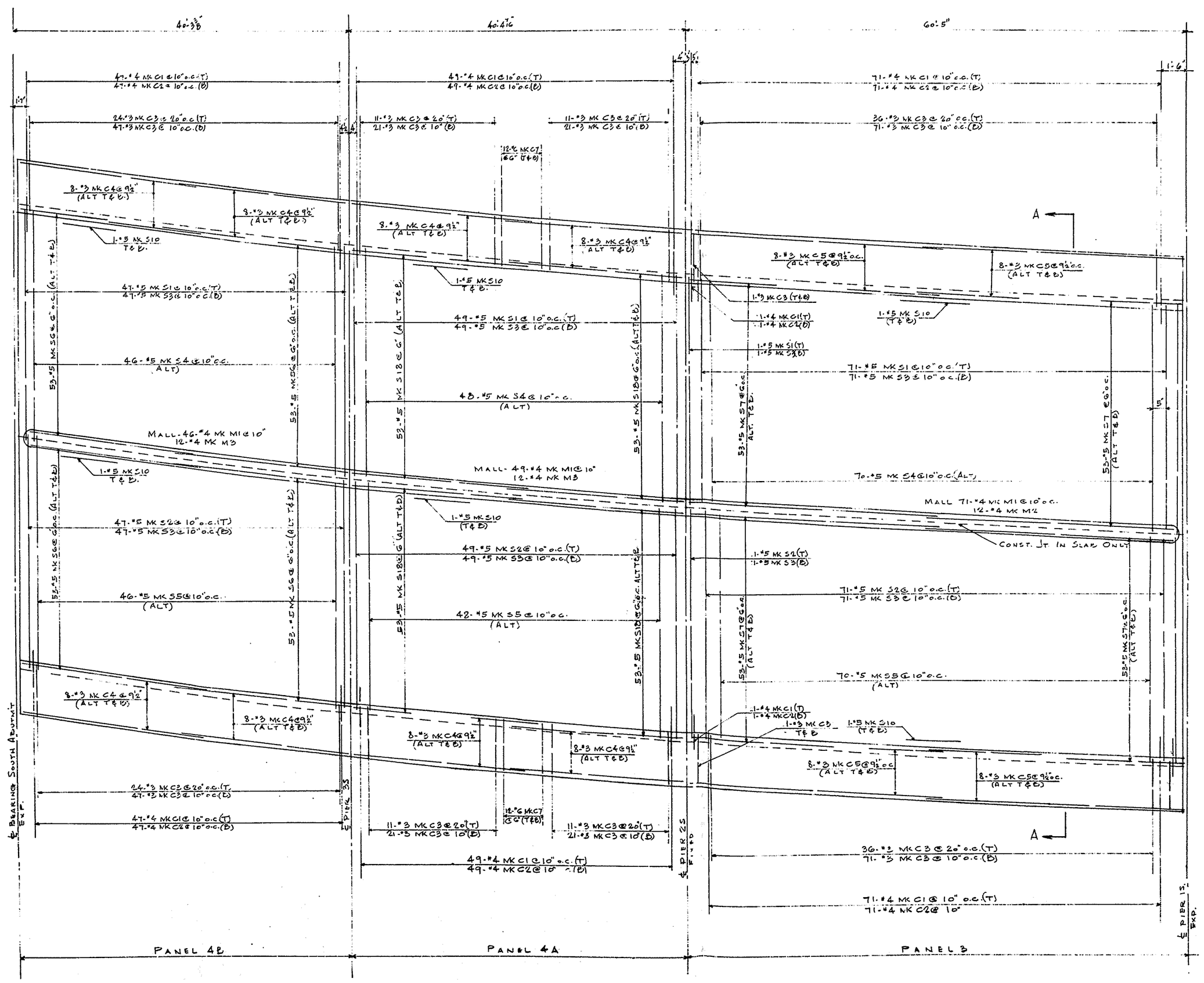

BENDING DETAILS

No	Size	Length	Mark	Type	A	B	C	D	E	F	G	J	O	H	K
164	5	30-4	S4	25											
168	5	24-0	S1	1	7	28-5									
164	5	27-11	S5	27											
336	5	26-8	S3	17		10	25-10								
168	5	26-7	S6	1	7	26-0									
336	4	4-6	C1	3		1-8	1-2	1-8						1-2	2
168	4	4-5½	M1	30											
336	4	4-4	C2	20		1-8	1-0	1-8							

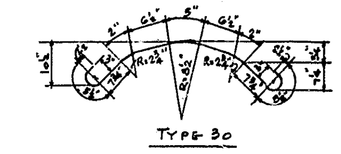

TYPE 30

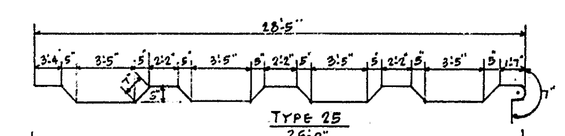

TYPE 25

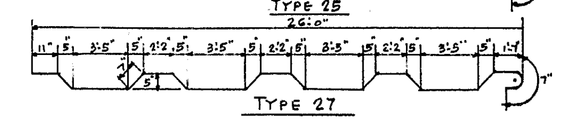

TYPE 27

STRAIGHT BARS

No	Size	Length	Mark
48	6	5-8	C7
212	5	30-9	S7
212	5	21-0	S18
212	5	20-4	S6
12	5	2-0	S10
12	4	30-9	M2
24	4	20-4	M3
32	3	30-2	C5
64	3	20-6	C4
488	3	5-8	C3

BETHLEHEM STEEL COMPANY
BUFFALO SALES OFFICE

STRUCTURE WALNUT STREET BRIDGE
LOCATION WILMINGTON DELAWARE
ARCHITECT
ENGINEER PARSONS, BRINCKERHOFF, HALL & MACDONALD
CONTRACTOR A. SWIKSTROM INC.
CUSTOMER
MADE BY H & T DATE 12-6-55 CONT. NO. H 55715

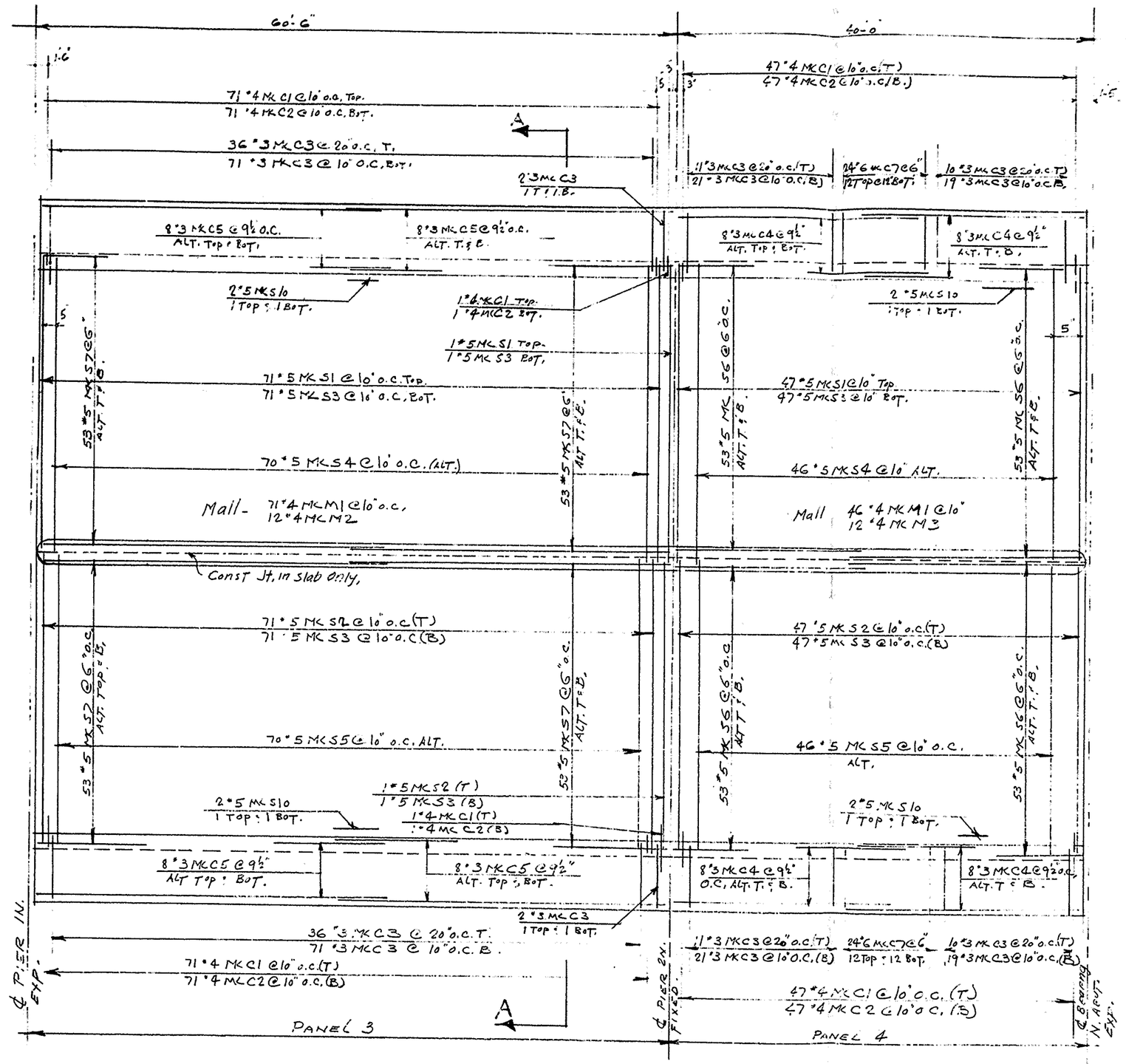

Reinforcing Plan,
Panels 3 & 4.
Scale 3/16" = 1'-0"

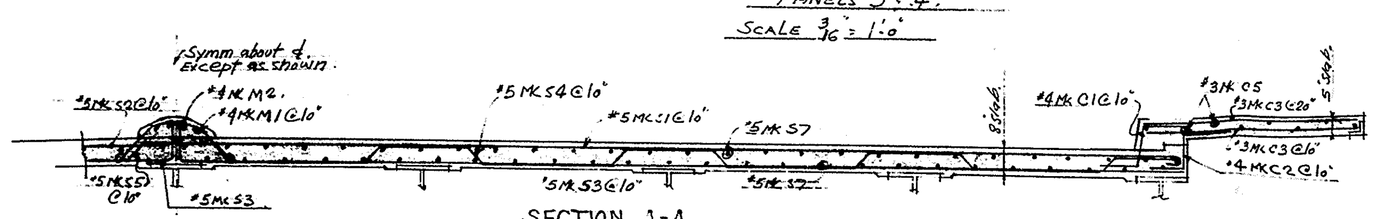

Section A-A
Scale: 3/8" = 1'-0"

Bar Details.

Size	Length	Mark	No. Reqd. Top	No. Reqd. Bot.	A	B	C	D	E	F	G	J	O	H	K
4	4-6	C-1	238	3		1-8	1-2	1-8						1-2	2"
4	4-4	C-2	238	20		1-8	1-0	1-8							
3	5-8	C-3	260	STRAIGHT											
3	20-6	C-4	32	STRAIGHT											
3	30-2	C-5	32	STRAIGHT											
6	5-8	C-7	48	STRAIGHT											
5	29-0	S-1	119	1	7	28-5									
5	26-7	S-2	119	1	7	26-0									
5	26-8	S-3	238	17		10	25-10								
5	30-4	S-4	116	Special											
5	27-11	S-5	116	Special											
5	20-4	S-6	212	STRAIGHT											
5	30-7	S-7	212	STRAIGHT											
5	5-0	S-10	8	STRAIGHT											
4	4-5½	M1	117	Special											
4	30-9	M2	12	STRAIGHT											
4	10-4	M3	12												

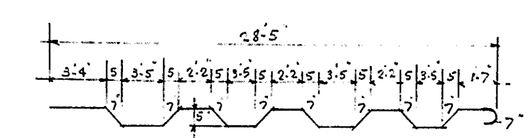

#5 x 30'-4" MK S4

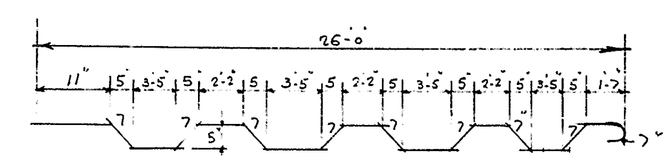

#5 x 27'-11" MK S5.

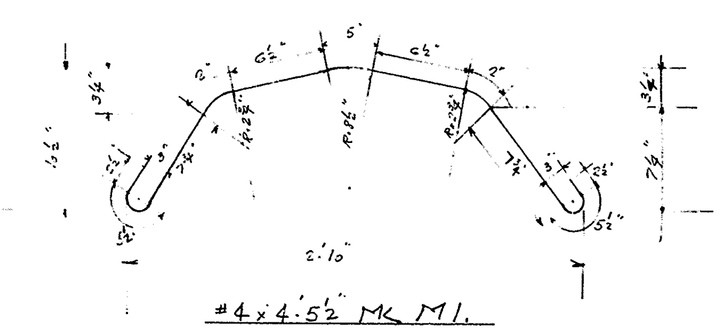

#4 x 4'-5½" MK M1.

NOTE.
Reinforcing Bars Interrupted By Presence of Scuppers, Railing Posts, Traffic Gate Boxes, Etc May Be Cut in Field to Suit Conditions.

BETHLEHEM STEEL COMPANY
Buffalo Sales Office

Structure	Walnut Street Bridge
Location	Wilmington Delaware
Architect	
Engineer	State of Delaware Highway Dept.
Contractor	
Customer	A. S. Wikstrom Inc.
Made By	A.E.W. Date 10/31/55 Cont. No. H 55215

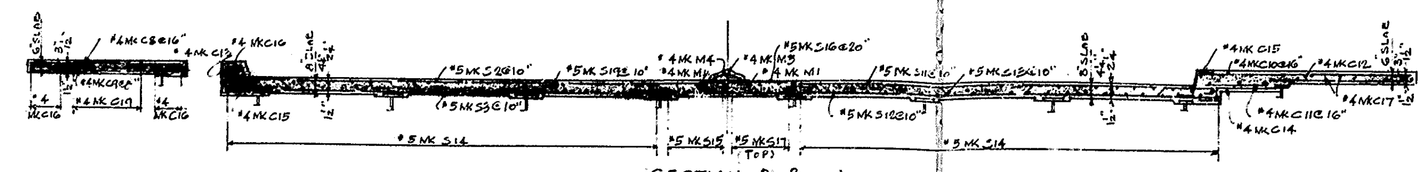

SECTION B-B
SCALE ¼"=1'-0"

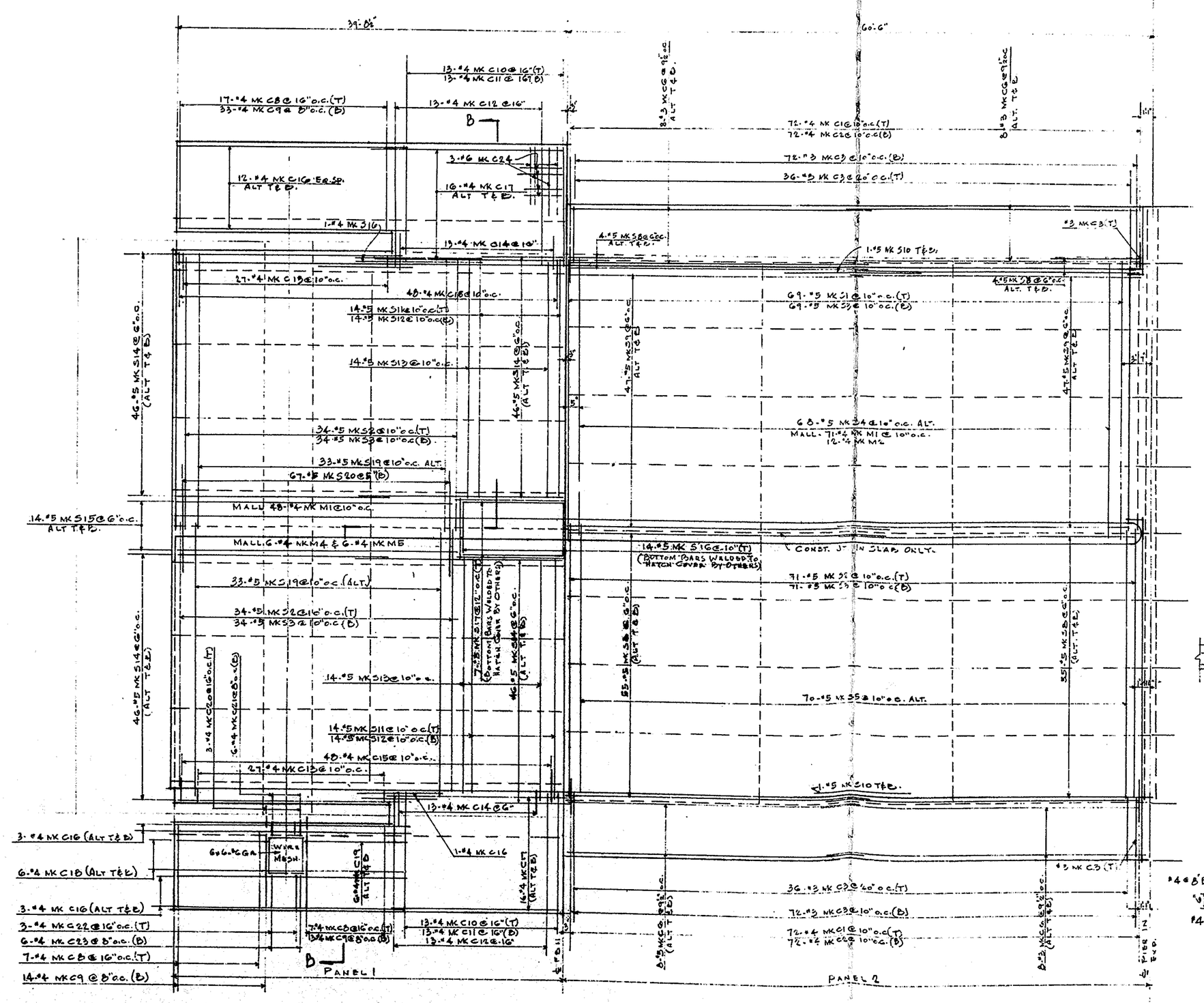

PLAN
PANEL 1 & 2

BENDING DETAILS

No	Size	Length	Mark	Type	A	B	C	D	E	F	G	J	O	H	K
24	6	4-10	C26	1	8	3-6					8				
66	5	31-5	S4	25											
69	1	29-0	S1	1	7	22-5									
66		28-11	S19	26											
70		27-11	S5	27											
208		26-8	S3	17		10	25-10								
139		26-7	S2	1	7	26-0									
40		24-3½	S13	28											
24	5	23-10	S11	1	7	22-8					7				
26	4	11-8½	C12	3	6	5-7	4	5-3½						3	3
26	1	11-5	C11	29											
60	1	9-0	C7	1	6	8-0					6				
146	1	6-6	C1	3		1-8	1-2	1-8						1-2	2
119		4-5½	M1	30											
164		6-4	C4	20		1-8	1-0	1-8							
20		4-6	C16	20		2-11	7	10							
46		3-2	C15	3		1-0	1-1	1-3						1-1	2
55		3-1	C13	17		1-0	1-1	1-0							
6	4	1-6	C21	1	6	1-0									
6	4	3-6	C23	1	6	3-6					6				
8	4	6-6	C25	31	6	10				1-6½				1-5	2-3
32	4	3-11	C26	17		1-0	4-6	5							

8-3 How

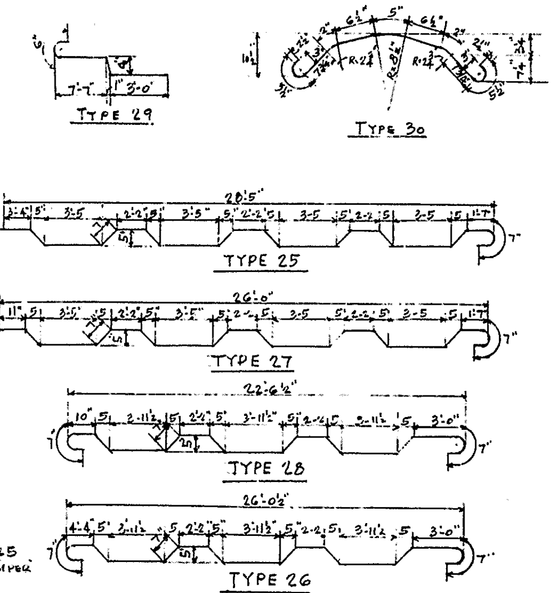

TYPE 29
TYPE 30
TYPE 25
TYPE 27
TYPE 28
TYPE 26

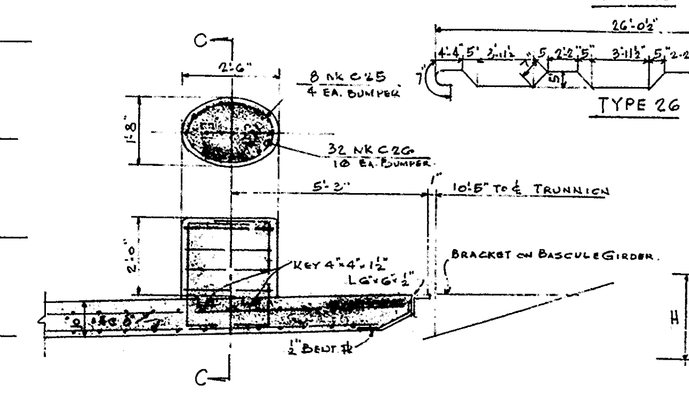

DETAIL FOR CONCRETE BUMPER
2 LIKE THIS - PANEL 1 - NORTH APPROACH

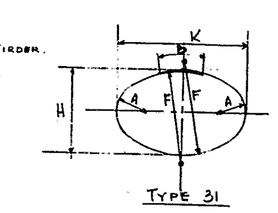

TYPE 31

STRAIGHT BARS

No	Size	Length	Mark
118	5	30-9	S5
94		21-6	S9
14		28-0	S15
28		22-8	S12
184		20-10	S14
7		11-1	S17
14		6-10	S16
4	5	2-0	S10
67	5	7-0	S20
12	4	30-9	M2
6	4	28-0	M4
42		23-10	C16
32		16-11	C17
26		11-1½	C10
6		11-1	M5
6		10-11	C19
6	1	8-7	C18
31		8-0	C8
3	1	2-4	C22
3	4	1-0	C20
32	3	30-4	C6
218	3	5-8	C3

NOTE:
CUT BARS IN FIELD TO SUIT HAND RAIL POSTS, PULL BOXES SCUPPERS, ETC.

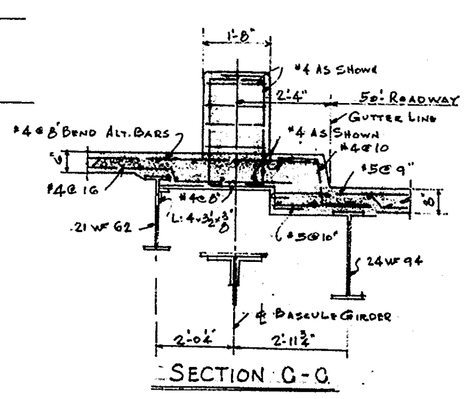

SECTION C-C

2	1-27-56	PEL ENGR CORR	

BETHLEHEM STEEL COMPANY
BUFFALO SALES OFFICE

STRUCTURE WALNUT ST. BRIDGE
LOCATION WILMINGTON DELAWARE
ARCHITECT
ENGINEER PARSONS, BRINCKERHOFF, HALL & MACDONALD
CONTRACTOR A. S. WIKSTROM INC.
CUSTOMER
MADE BY H.D.T. DATE 11-7-55 CONT. NO. H 55 715

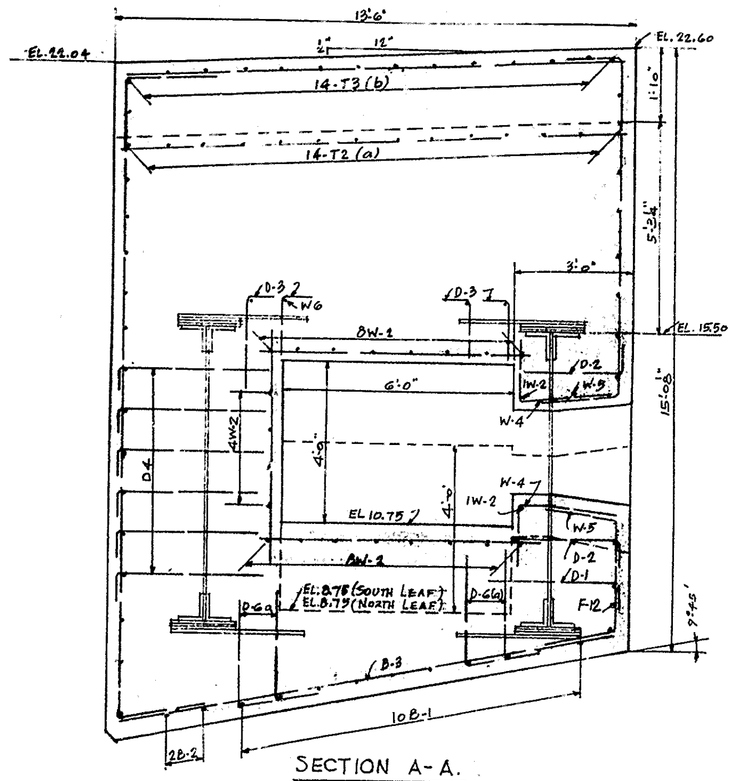

SECTION A-A.

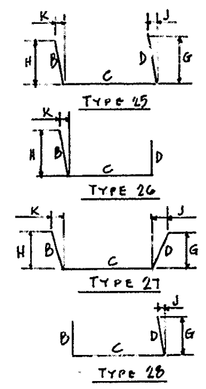

REINFORCING STEEL IN ℄ COUNTERWEIGHTS.

STRAIGHT BARS				BENT BARS															
No	Size	Length	Mark	No	Size	Length	Mark	Type	A	D	C	D	E	F	G	J	O	H	K
8	6	27-0	K1	28	6	25-4	T2(a)	17		2-6	22-0	2							
26		27-9	F1	28		25-0	T2	17		2-6	22-0	6							
40		27-7	D1	72		21-3	K6	25		2-6	16-3	2-6			2-5½	5		2-6	1½
32		24-10	K2	52		19-6	F9	25		2-6	14-6	2-6			2-6	1½		2-5½	5
8		24-10	B2	28		19-2	K5	25		2-6	14-5	2-6			2-5½	5		2-6	1½
16		22-8	W6	28		17-8	F7	25		2-6	12-8	2-6			2-6	1½		2-5½	5
8		22-7	F6	28		15-6	T3(a)	17		2-6	4-9	7-2							
8		22-6½	K3-1	12		15-5	K6	28		2-6	10-5	2-6			1-5½	5			
8		22-6	K3	28		15-3	T3(b)	17		2-6	4-6	7-2							
8		22-6	F6(a)	20		13-6	W7	17		6	12-0	6							
4		17-4	F5	16		13-2	F8	26		2-6	8-2	2-6						2-5½	5
6		13-6	F2	8		13-0	F14	25		1-0	9-6	2-6			2-6	1½		11¾	2
100		13-0	D3	8		12-10	R7	12		2-6	1-6	8-10						8-8½	1-6
182		13-0	T1	10		11-11	B6	20		1-9	10-2							1-7½	8½
176		12-0	W2	12		11-9	F10	25		1-0	8-3	2-6			2-6	1½		11¾	2
8		7-9	F3	56		10-1	T3(a)	17		2-6	5-1	2-6							
256		7-0	W1	56		9-10	T3(b)	17		2-6	4-10	2-6							
8		6-7	F4	12		6-5	F12	27		2-6	2-11	1-0			11¾	2		2-5½	5
272		6-0	W3	8		5-6	F11	27		2-6	1-11	1-0			11¾	2		2-5½	5
4		5-1	F12(a)	40	6	4-10	W4	12		1-6	1-0	1-4						1-3½	2
22		5-0	KB(a)																
16		5-0	W5																
6		4-9	RB(b)																
6		4-9	F12(b)	504	4	4-6	D4	17		9	3-9								
2		4-4½	RB(c)	296		4-0	D1	17		9	3-3								
2		4-4½	F13	48		3-9	D5	25			3-0	9			8¾	1½			
66	6	3-6	T4	308		3-6	DG(a)	25			2-9	9			8¾	1½			
				300		3-3	D2	17		9	2-6								
				376		2-9	D3	17		9	2-0								
				12		2-8	DG(b)	25		1-11	9				9	1½			
				12		2-6	DG(b)	25		1-9	9				9	1½			
				12		2-4	DG(b)	25		1-7	9				9	1½			
				12		2-2	DG(b)	25		1-5	9				9	1½			
				12		2-0	DG(b)	25		1-3	9				9	1½			
				12	4	1-10	DG(b)	25		1-1	9				9	1½			

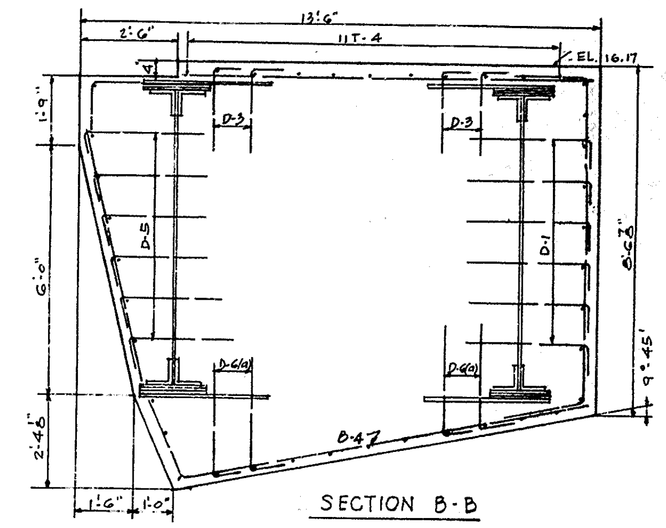

SECTION B-B

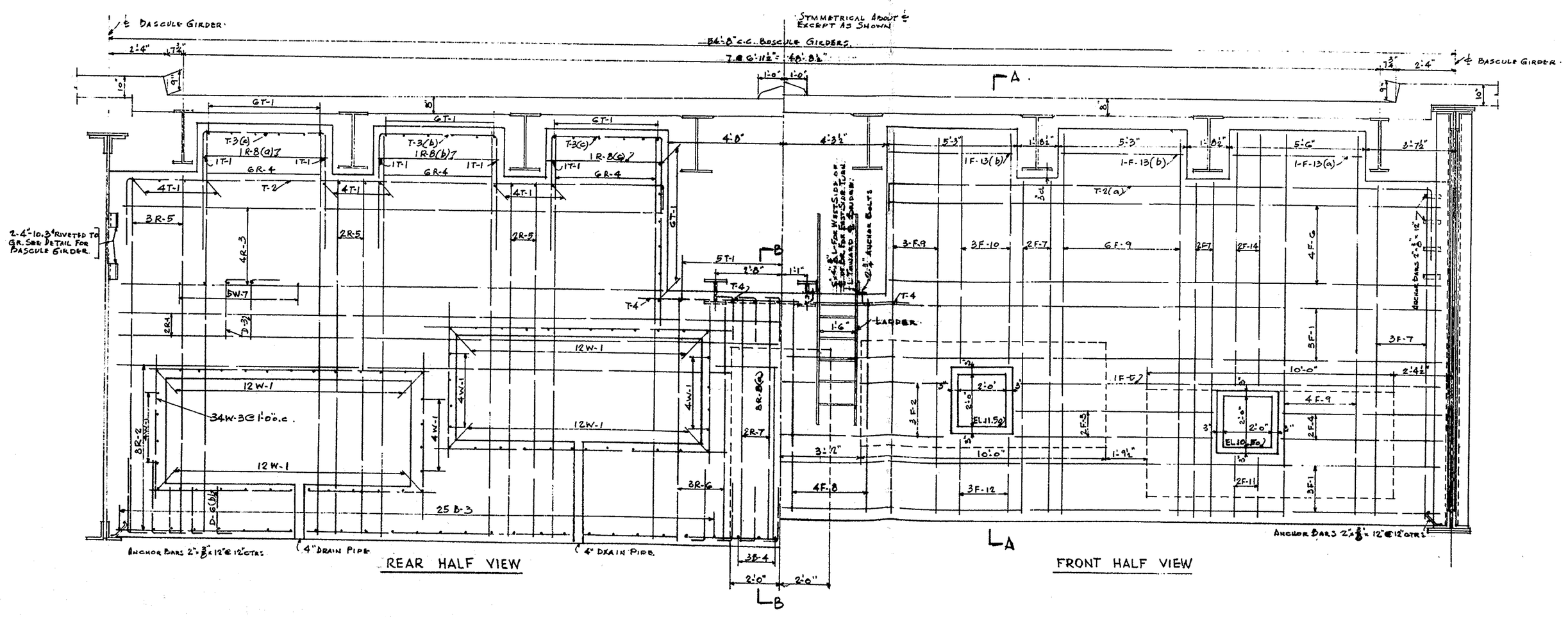

REAR HALF VIEW

FRONT HALF VIEW

BETHLEHEM STEEL COMPANY
BUFFALO SALES OFFICE

STRUCTURE WALNUT ST. BRIDGE
LOCATION WILMINGTON DELAWARE
ARCHITECT
ENGINEER PARSONS, BRINCKERHOFF, HALL & MACDONALD
CONTRACTOR A. S. WIKSTROM INC.
CUSTOMER
MADE BY H.B.T. DATE 11-9-55 CONT. NO. H85715

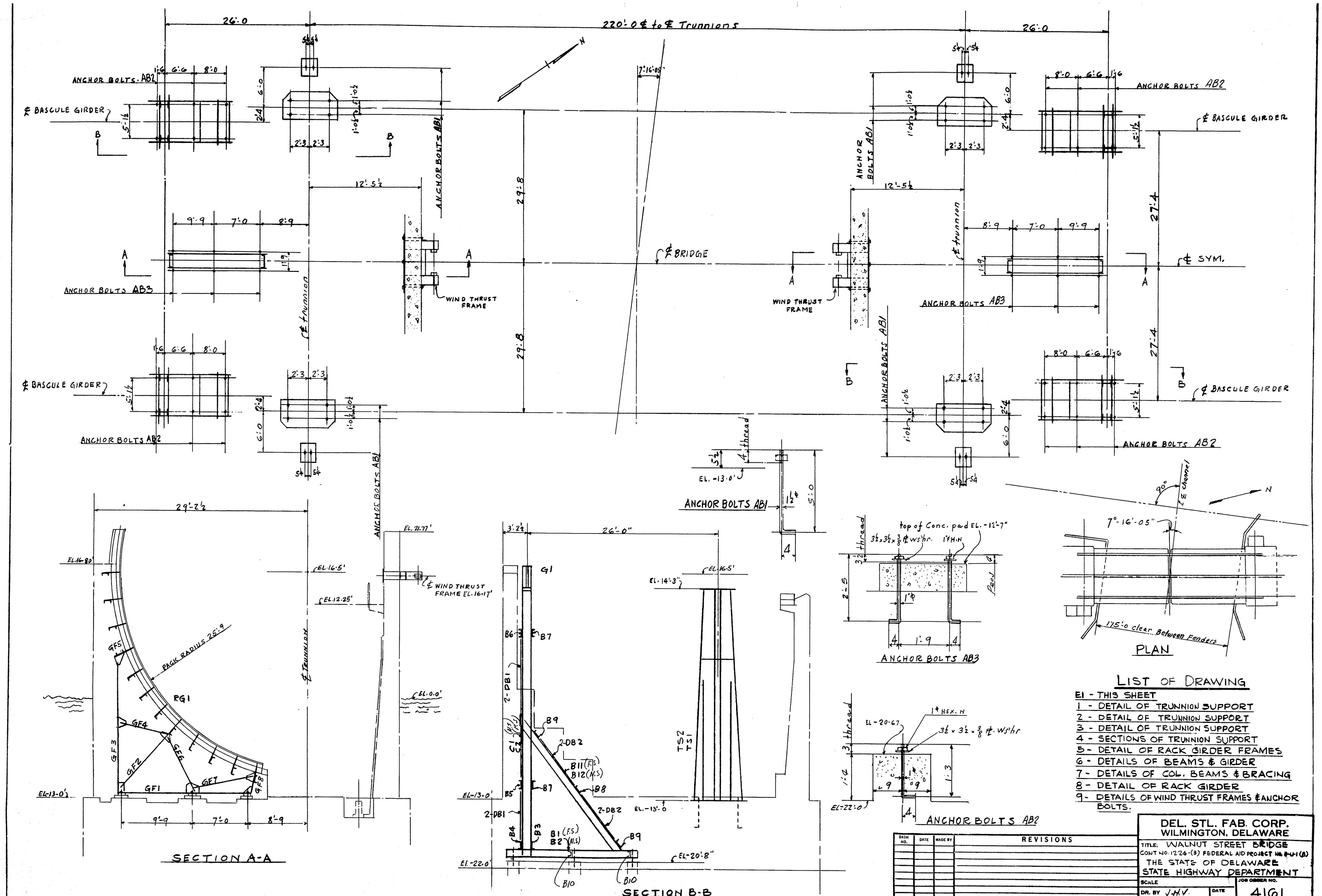

LIST OF DRAWING

E1 - THIS SHEET
1 - DETAIL OF TRUNNION SUPPORT
2 - DETAIL OF TRUNNION SUPPORT
3 - DETAIL OF TRUNNION SUPPORT
4 - SECTIONS OF TRUNNION SUPPORT
5 - DETAIL OF RACK GIRDER FRAMES
6 - DETAILS OF BEAMS & GIRDER
7 - DETAILS OF COL. BEAMS & BRACING
8 - DETAIL OF RACK GIRDER
9 - DETAILS OF WIND THRUST FRAMES & ANCHOR BOLTS.

DASH NO.	DATE	MADE BY	REVISIONS

DEL. STL. FAB. CORP.
WILMINGTON, DELAWARE

TITLE: WALNUT STREET BRIDGE
CONT NO. 1224-(3) FEDERAL AID PROJECT NO. BRH (8)
THE STATE OF DELAWARE
STATE HIGHWAY DEPARTMENT

SCALE		JOB ORDER NO.	4161
DR. BY J.H.V.	DATE		
CHK BY E.C.G.	DATE 10-3-58	DRAWING NO.	E1
APP. BY	DATE		
APP. BY	DATE		

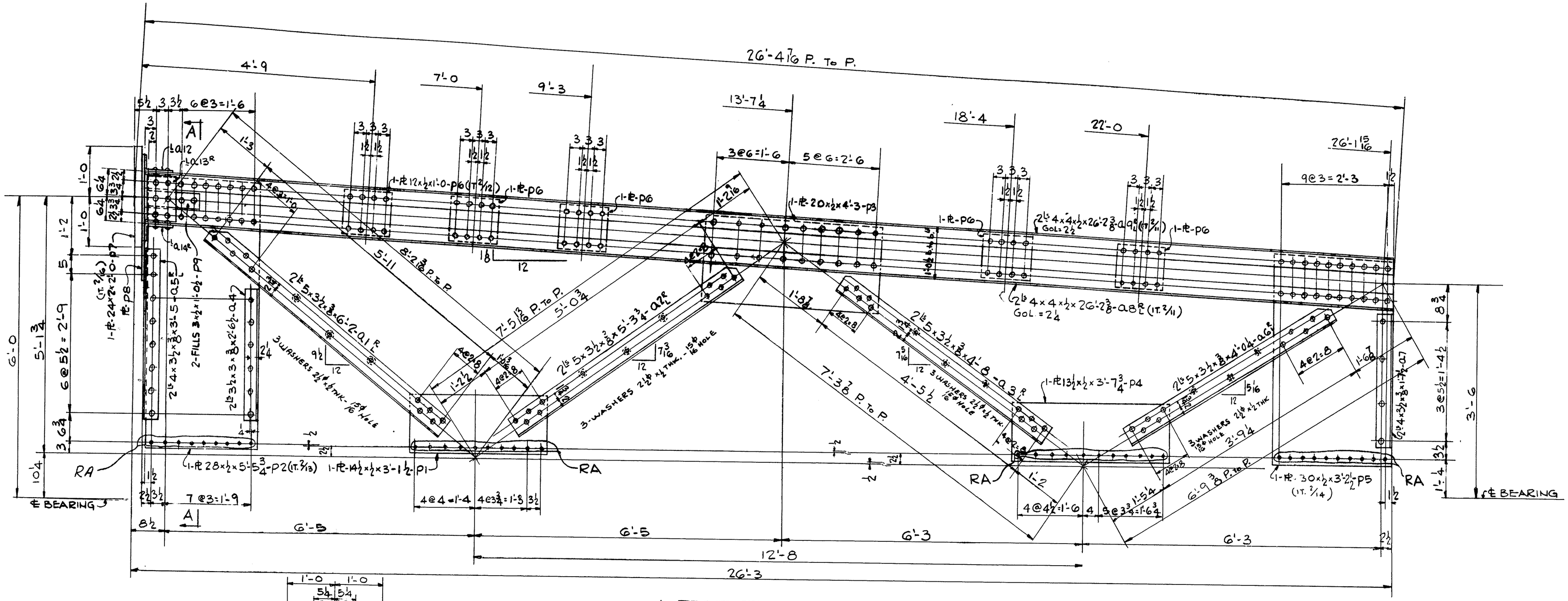

4-REQ'D. TRUNION SUPPORT-TS2

LIFTING WEIGHT = 3600# APPROX.

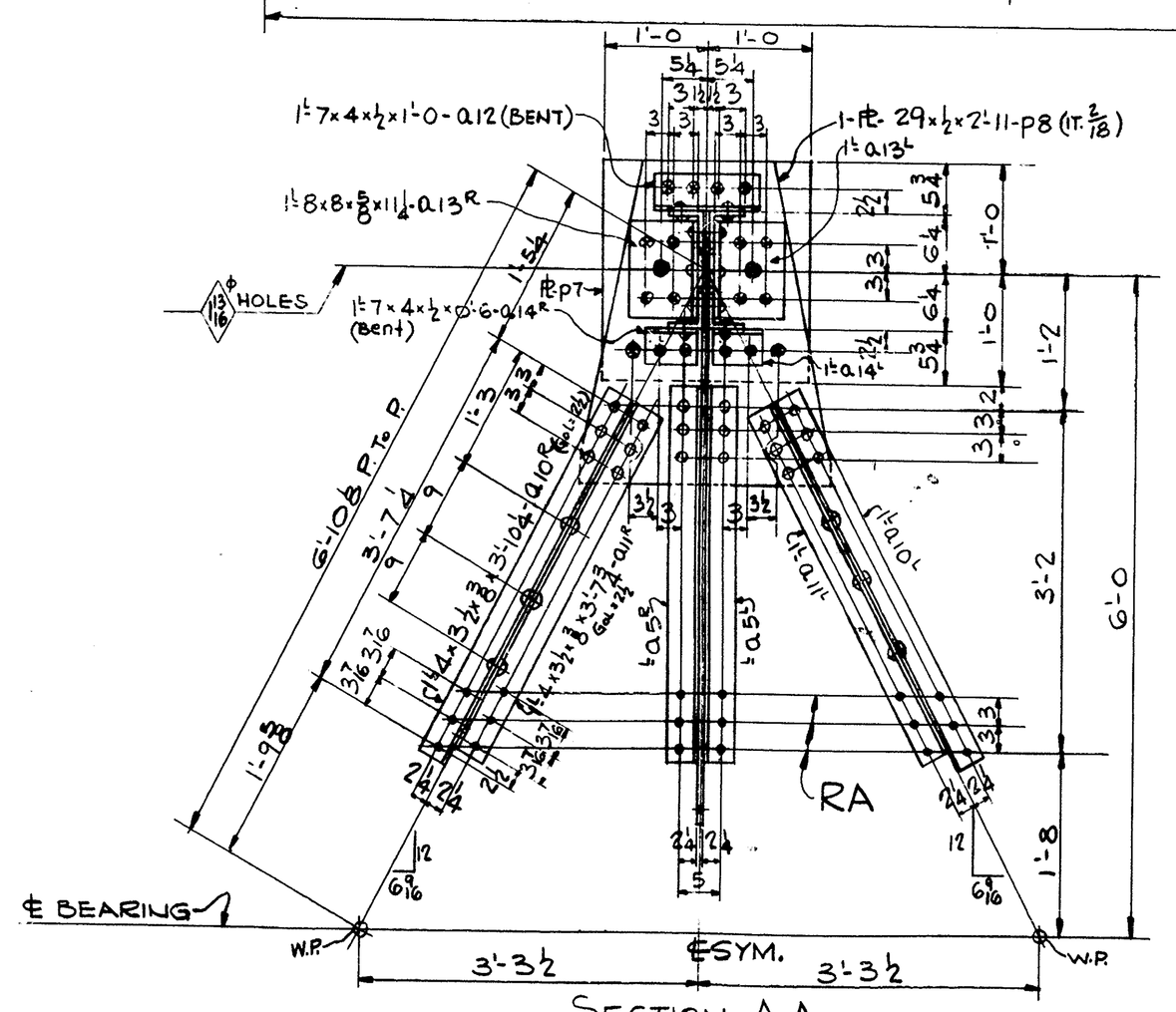

SECTION A-A

GENERAL NOTES

MATERIAL - STRUCTURAL CARBON STEEL A.S.T.M. A7-52T
MANGANESE STEEL A.S.T.M. A242-52T
RIVET STEEL A.S.T.M. A141-52T

REAMING & PUNCHING - MATERIAL FORMING PARTS OF A MEMBER COMPOSED OF NOT MORE THAN 5 THICKNESSES OF METAL MAY BE PUNCHED 1/16" INCH LARGER THAN THE NOMINAL DIAMETER OF THE RIVETS WHENEVER THE THICKNESS OF THE METAL IS NOT GREATER THAN 3/4" INCH FOR STRUCTURAL STEEL. WHEN THERE ARE MORE THAN 5 THICKNESSES OR WHEN ANY OF THE MAIN MATERIAL IS THICKER THAN 3/4" IN CARBON STEEL, ALL THE HOLES SHALL BE SUBPUNCHED OR SUBDRILLED 3/16" INCH SMALLER AND, AFTER ASSEMBLING, REAMED 1/16" INCH LARGER, OR DRILLED FROM THE SOLID TO 1/16" INCH LARGER THAN THE NOMINAL DIAMETER OF THE RIVETS. BURRS RESULTING FROM REAMING SHALL BE REMOVED WITH A TOOL PRODUCING A 1/16" INCH FILLET AROUND EDGE OF HOLE.

HOLES MARKED RT - SHALL BE SUBPUNCHED OR SUBDRILLED 3/16" SMALLER THAN NOMINAL DIAMETER OF THE RIVET THEN REAMED TO SIZE TO METAL TEMPLET 1" THICK

HOLES MARKED RA - SHALL BE SUBPUNCHED OR SUBDRILLED 3/16" SMALLER THAN NOMINAL DIAMETER OF RIVET THEN REAMED 1/16" LARGER OR DRILLED FROM THE SOLID 1/16" LARGER THAN THE NOMINAL DIAMETER OF THE RIVETS, WITH CONNECTED PARTS ASSEMBLED.

SHEARED EDGES - SHEARED EDGES OF PLATES 5/8" INCH THICK IF INDICATED FIE, F2W ETC. SHALL BE PLANNED TO A DEPTH OF 1/4 INCH, OR FLAME CUT TO SIZE PROVIDED A SMOOTH SURFACE IS SECURED BY MEANS OF A MECHANICAL GUIDE.

RE-ENTRANT CUTS - SHALL BE FILLETED TO A RADIUS OF NOT LESS THAN 1/2 INCH.

RIVETS - 7/8 ϕ

OPEN HOLES - 15/16 ϕ UNLESS NOTED

MILLING - AS NOTED

WELDING - NONE

PAINT - ONE COAT RED LEAD.
SHOP CONTACT SURFACES NOT PAINTED

DASH NO.	DATE	MADE BY	REVISIONS

DETAIL OF TRUNION SUPPORT

DEL. STL. FAB. CORP.
WILMINGTON, DELAWARE

TITLE: WALNUT STREET BRIDGE
CONT. NO 1724-(3) FEDERAL AID PROJECT NO. F-U-1(8)
THE STATE OF DELAWARE
STATE HIGHWAY DEPARTMENT

SCALE		JOB ORDER NO. 4161
DR. BY CRISANTI	DATE	
CHK BY E.C.S.	DATE 12-1-56	DRAWING NO. 1
APP. BY	DATE	

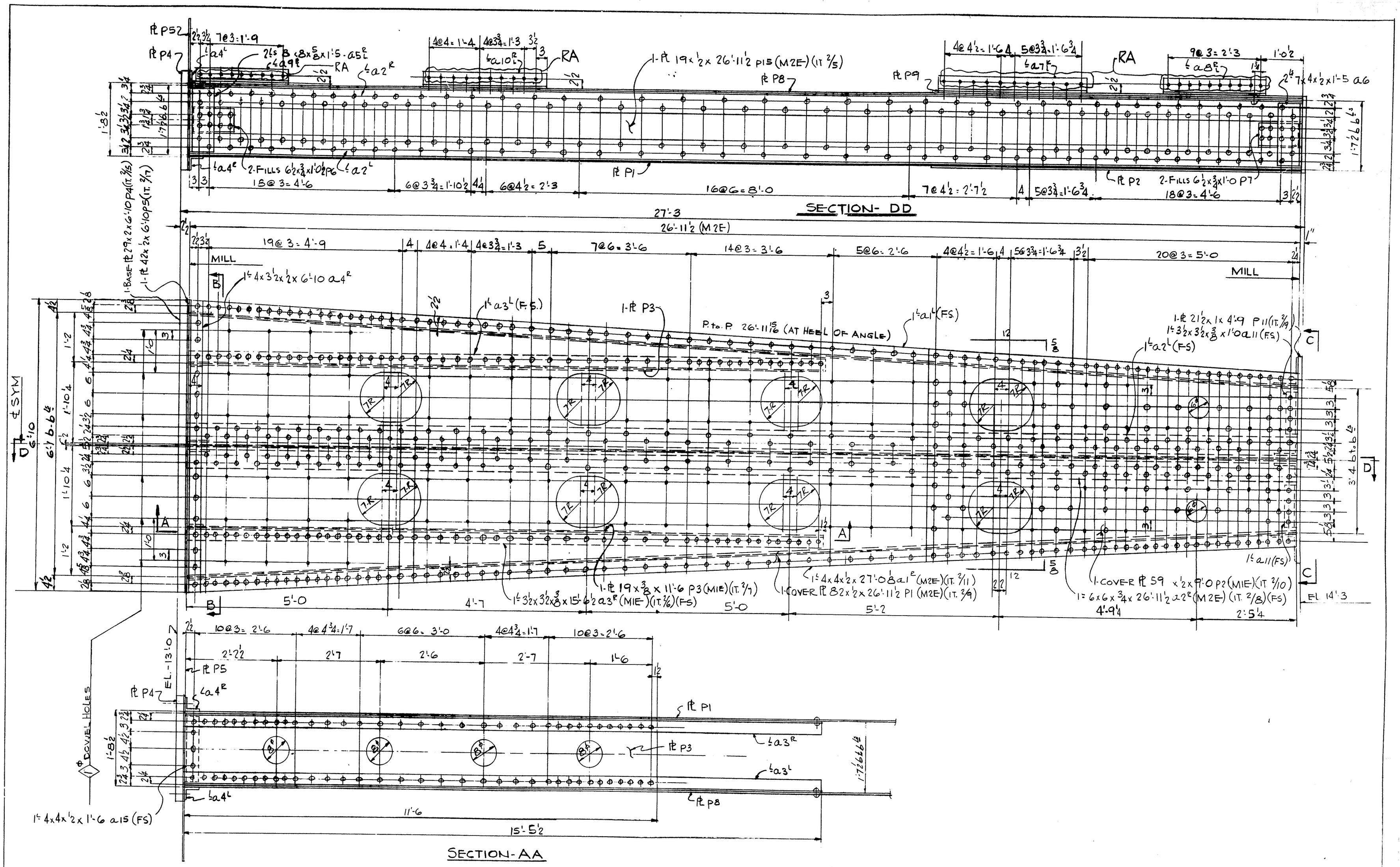

FOR GENERAL NOTES SEE DWG. NO 1
WORK THIS SHEET IN CONJUNCTION WITH DWG'S NO 3 & 4

DR. NO.	DATE	MADE BY	REVISIONS

DETAIL TRUNNION SUPPORT

DEL. STL. FAB. CORP.
WILMINGTON, DELAWARE

TITLE: WALNUT STREET BRIDGE
CONT NO. 1224 (3) FEDERAL AID PROJECTION NO. F.U.-1.(3)
THE STATE OF DELAWARE
STATE HIGHWAY DEPARTMENT

SCALE			JOB ORDER NO. 4161
DR. BY J.M.C.D	DATE		
CHK BY	DATE 7-23-58		DRAWING NO. 2
APP. BY	DATE		

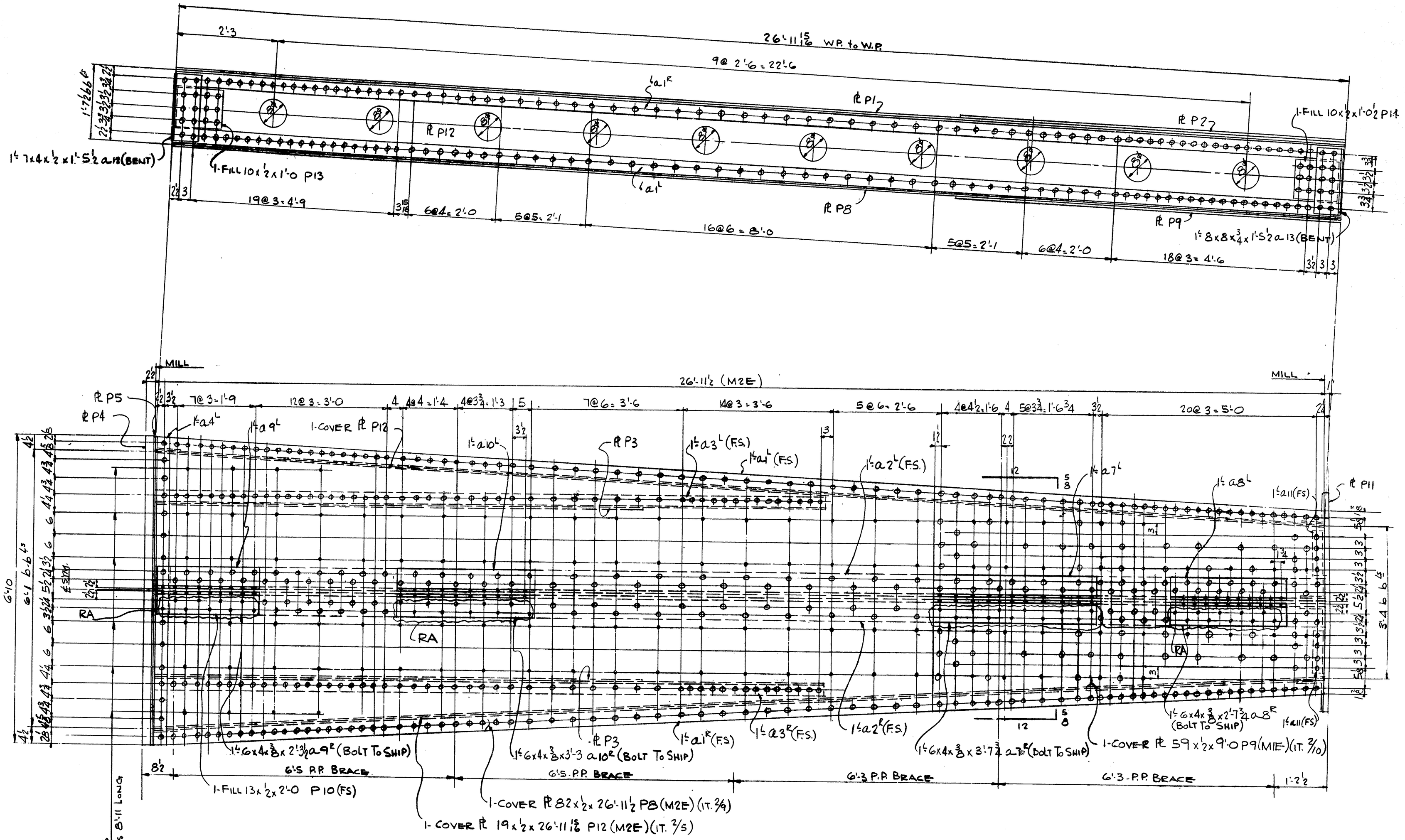

FOR GENERAL NOTES SEE DWG. No 1.
WORK THIS SHEET IN CONJUCTION WITH DWG. No 2 & 4

DASH NO.	DATE	MADE BY	REVISIONS

DETAIL OF TRUNNION SUPPORT

DEL. STL. FAB. CORP.
WILMINGTON, DELAWARE

TITLE: WALNUT STREET BRIDGE
CONT. No 1224-(3) FEDERAL AID PROJECTION No FLH(3)
THE STATE OF DELAWARE
STATE HIGHWAY DEPARTMENT

SCALE		JOB ORDER NO. 4161
DR. BY J.McD	DATE	
CHK BY	DATE	DRAWING NO. 3
APP. BY	DATE	

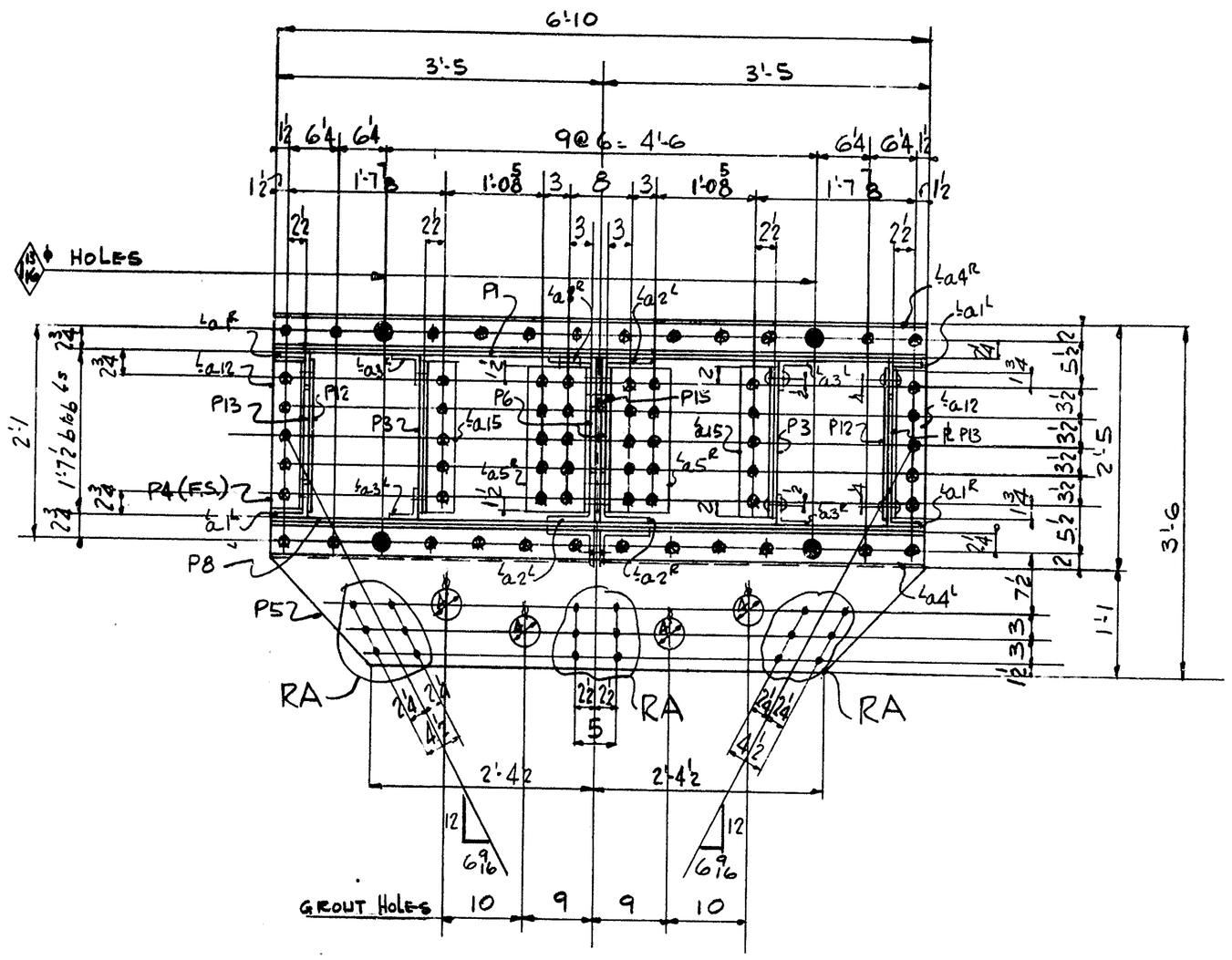

SECTION - BB

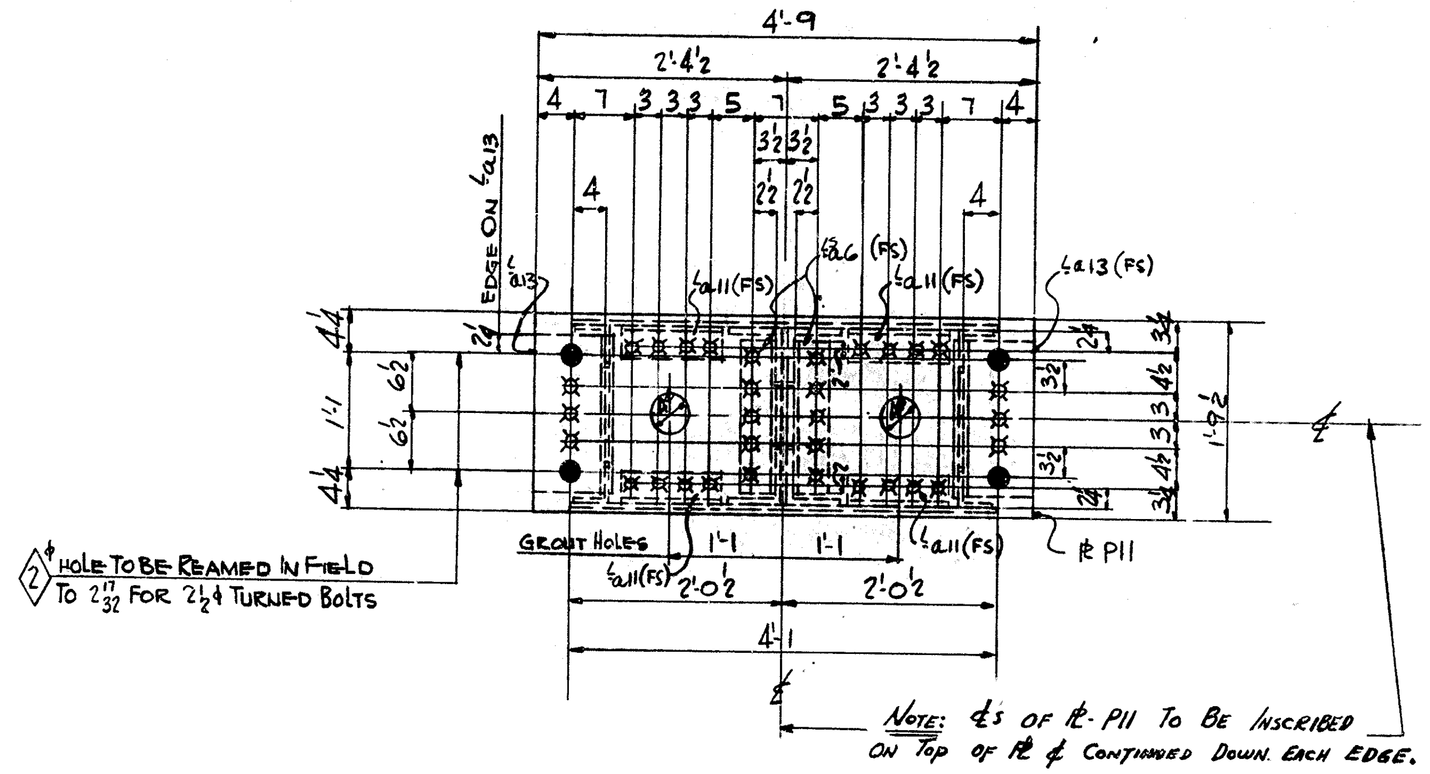

2 ⌀ HOLE TO BE REAMED IN FIELD TO 2 17/32 FOR 2½⌀ TURNED BOLTS

SECTION - CC

FOR GENERAL NOTES SEE DWG. #1

WORK THIS SHEET IN CONJUCTION WITH DWG. Nº 2 & 3

DATH NO.	DATE	MADE BY	REVISIONS

SECTIONS OF TRUNNION SUPPORT

DEL. STL. FAB. CORP.
WILMINGTON, DELAWARE

TITLE: WALNUT STREET BRIDGE
CONT. Nº 1224(3) FEDERAL AID PROJECTION Nº F-U-1 (8)
THE STATE OF DELAWARE
STATE HIGHWAY DEPARTMENT

SCALE		JOB ORDER NO.	4161
DR. BY J.M.D	DATE		
CHK BY E.A.J	DATE 11-21-58	DRAWING NO.	
APP. BY	DATE		

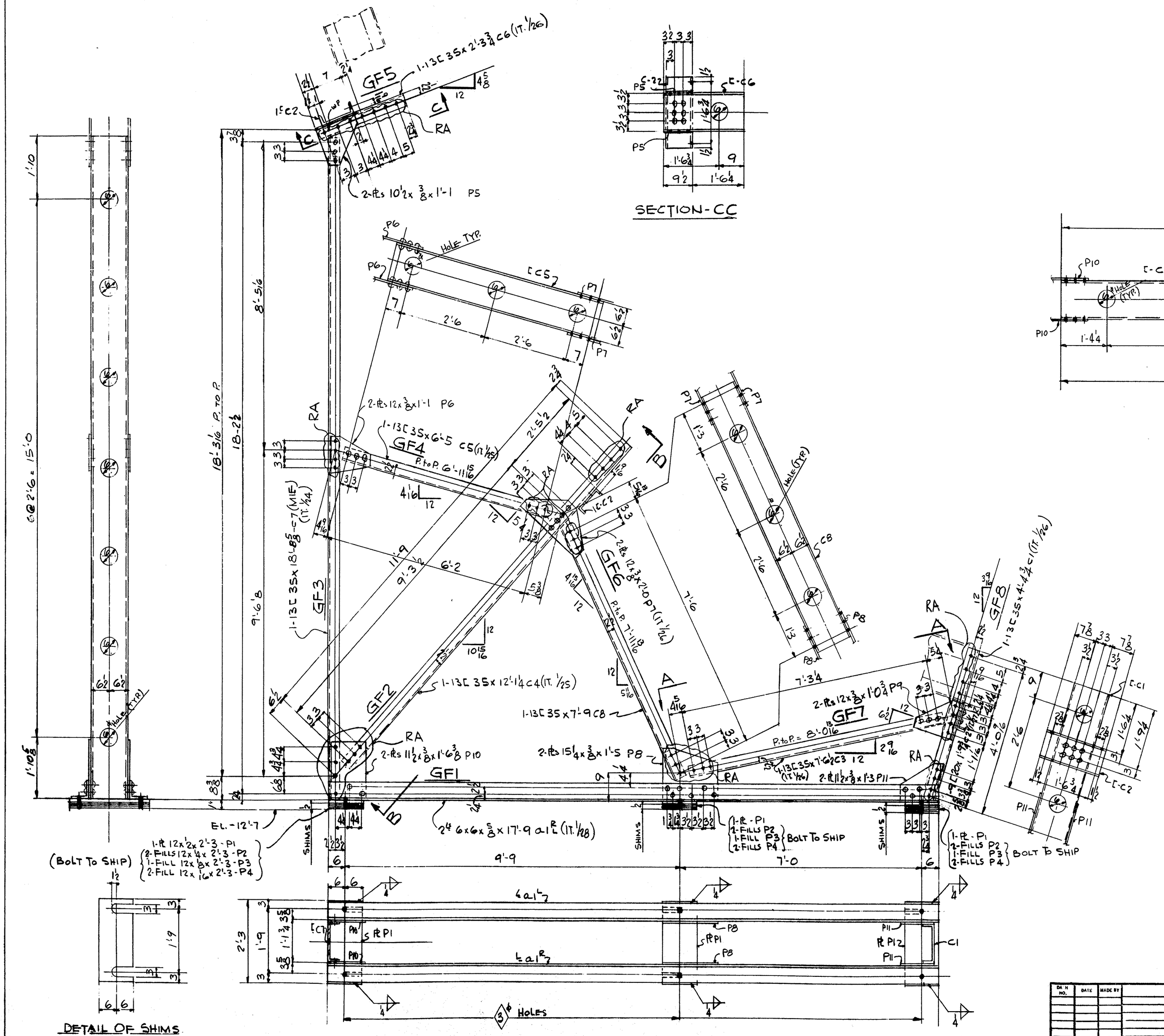

2-REQ'D	RACK	GIRDER	FRAMES	GF1
2-REQ'D	do	do	do	GF2
2-REQ'D	do	do	do	GF3
2-REQ'D	do	do	do	GF4
2-REQ'D	do	do	do	GF5
2-REQ'D	do	do	do	GF6
2-REQ'D	do	do	do	GF7
2-REQ'D	do	do	do	GF8

FOR GENERAL NOTES SEE DWG. #1

DETAIL OF RACK GIRDER FRAMES

DWG NO.	DATE	MADE BY	REVISIONS

DEL. STL. FAB. CORP.
WILMINGTON, DELAWARE

TITLE: WALNUT STREET BRIDGE
CONT. No 1224-(3) FEDERAL AID PROJECT NHF U-1 (6)
THE STATE OF DELAWARE
STATE HIGHWAY DEPARTMENT

SCALE			JOB ORDER NO. 4161
DR. BY	J.McD	DATE	
CHK BY	E.A.J.	DATE 4-28-58	DRAWING NO. 5
APP. BY		DATE	
APP. BY		DATE	

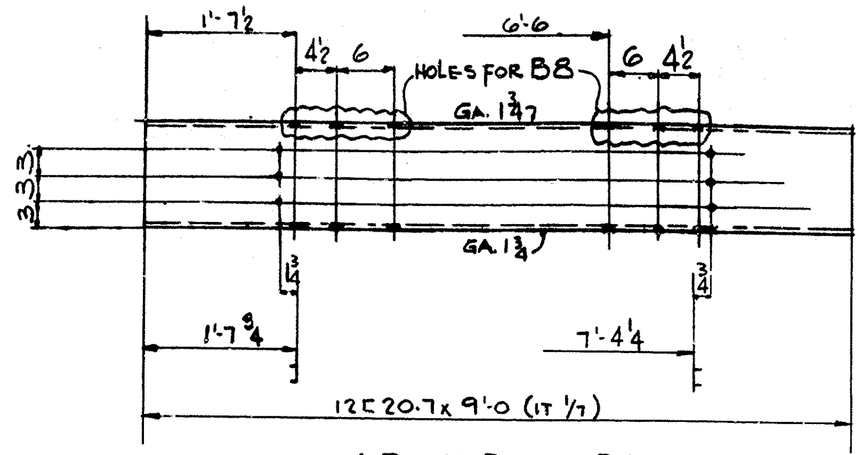

4-REQ'D BEAM-B8
8-REQ'D BEAM-B9

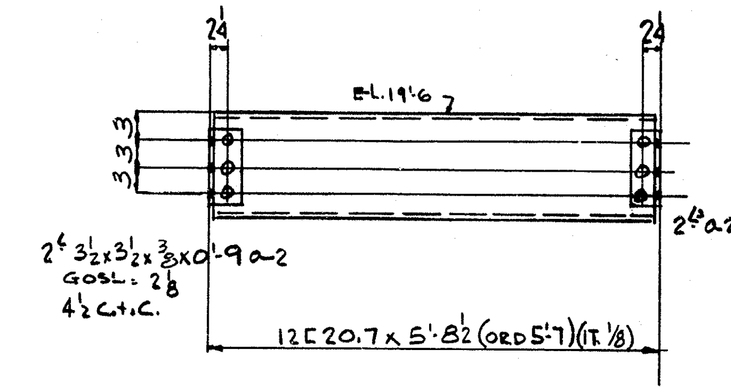

8-REQ'D BEAM-B10

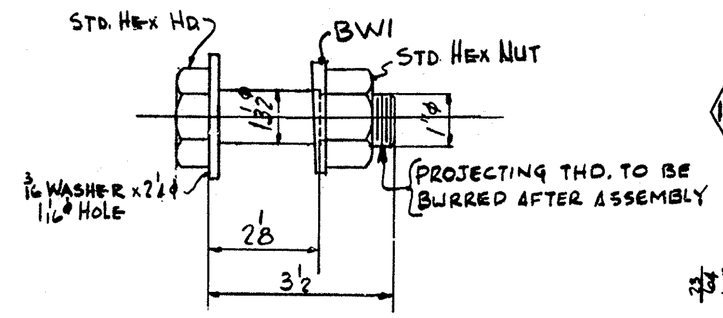

16-REQ'D TURNED BOLT-A

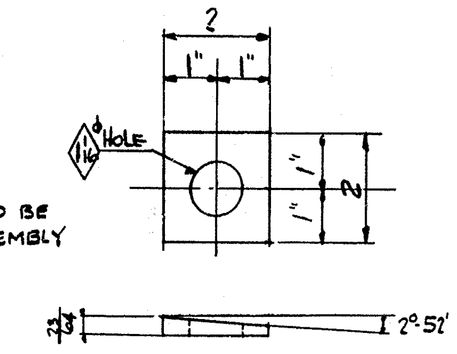

16-REQ'D BEVELED WASHERS BW1

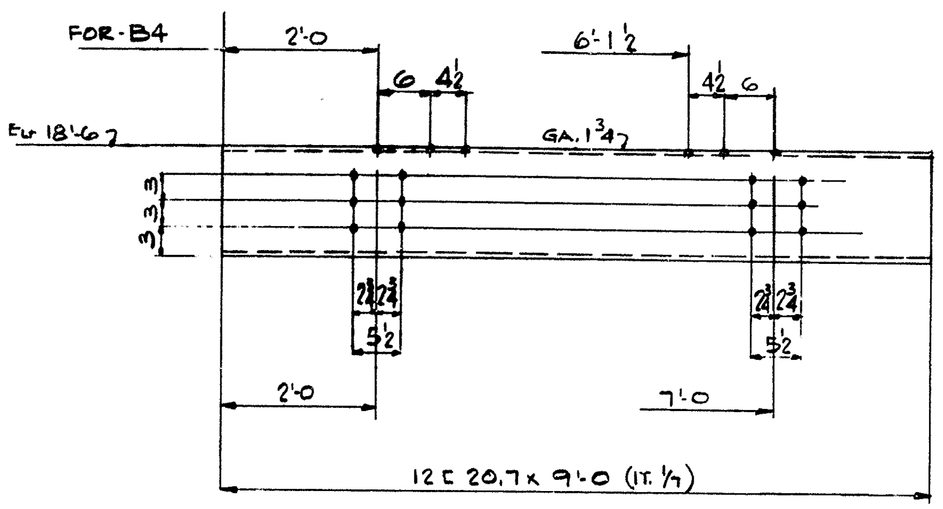

4-REQ'D BEAM-B3
4-REQ'D BEAM-B4

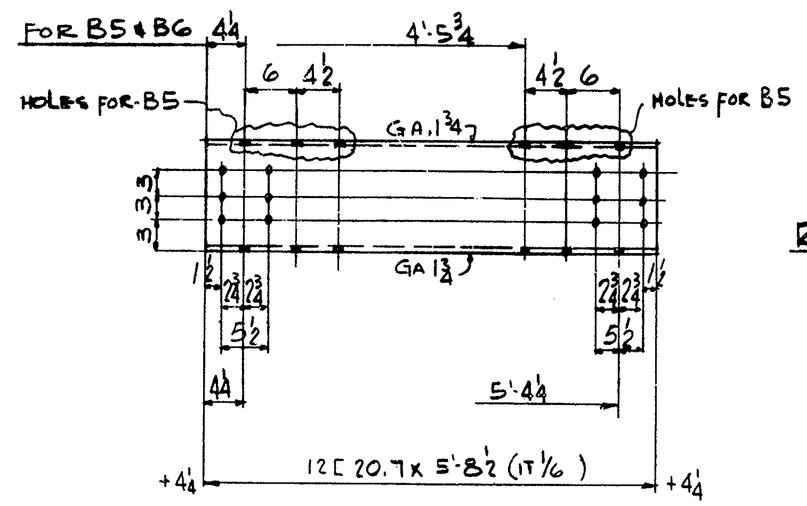

4-REQ'D-BEAM-B5
4-REQ'D- do -B6
8-REQ'D do -B7

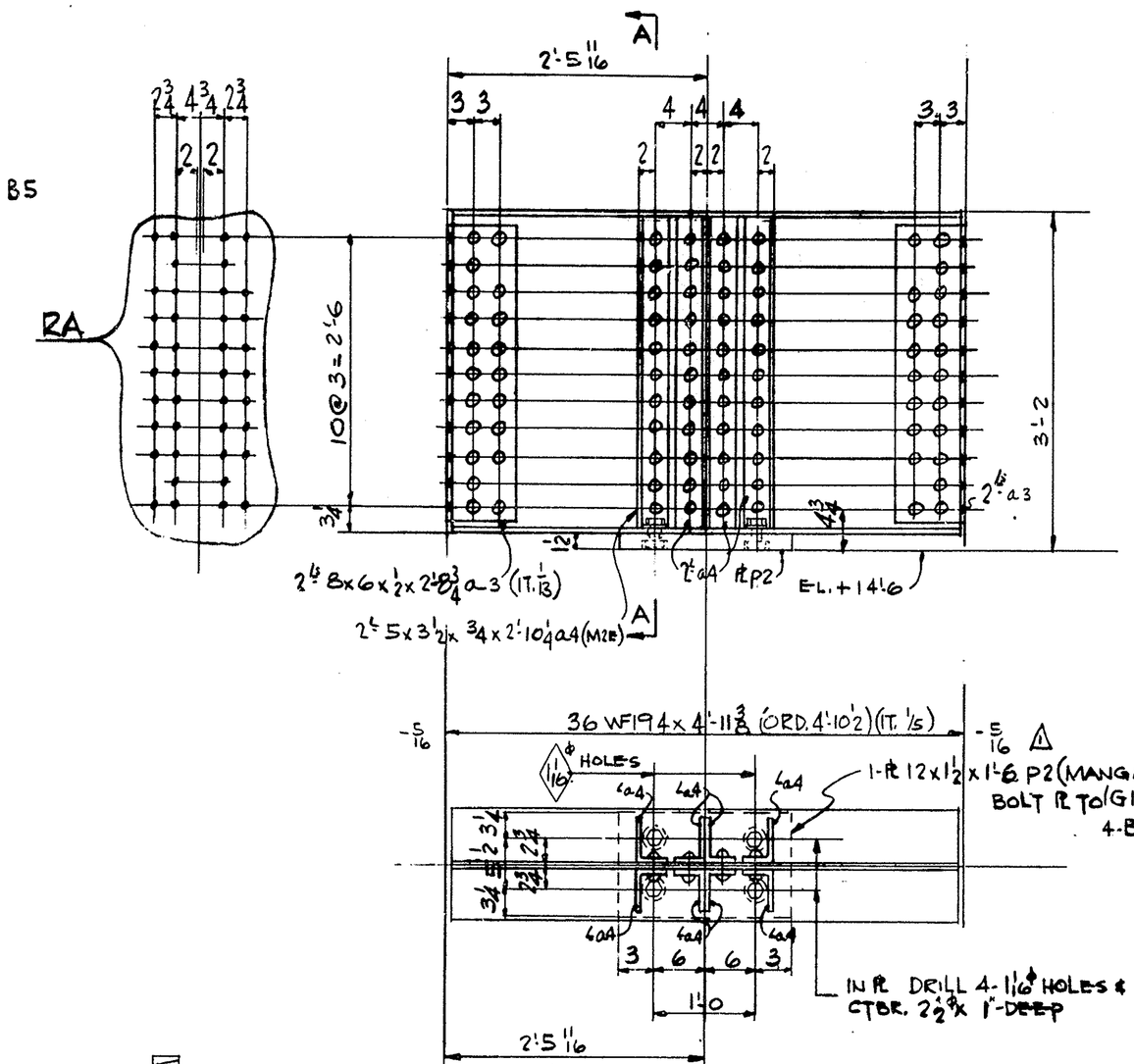

4-REQ'D-GIRDER G1

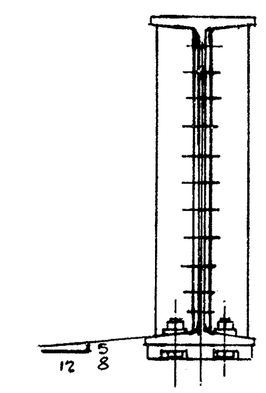

SECTION-AA

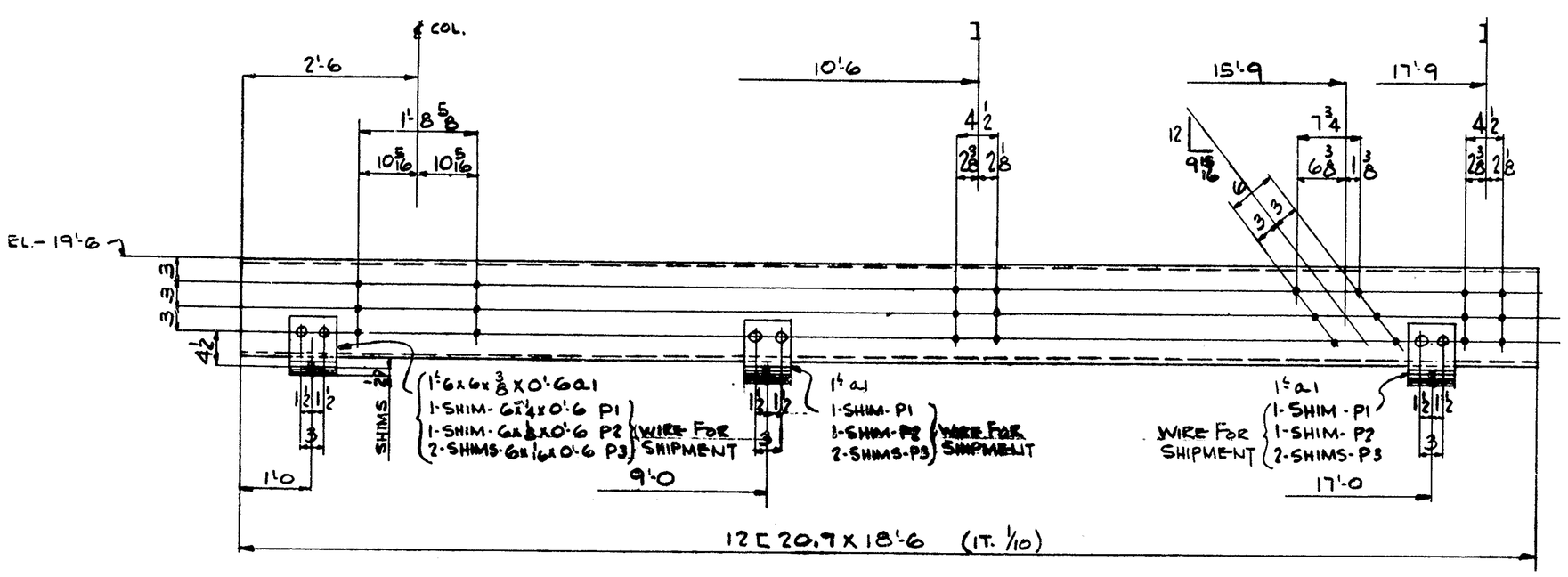

4-REQ'D BEAM-B1 (AS SHOWN)
4-REQ'D BEAM-B2 (OPP. HAND)

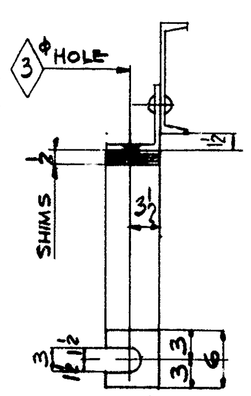

DETAIL OF SHIMS

FOR GENERAL NOTES SEE DWG. #1

DETAILS OF BEAMS & GIRDER

BATCH NO.	DATE	MADE BY	REVISIONS
1	11-11-54	RAB	CHANGED SIZE OF MANGANESE PL FROM 1'-8 TO 1'-6"

DEL. STL. FAB. CORP.
WILMINGTON, DELAWARE

TITLE: WALNUT STREET BRIDGE
CONT. NO. 1224-G) FEDERAL AID PROJECT NO FUH (6)
THE STATE OF DELAWARE
STATE HIGHWAY DEPARTMENT

SCALE			JOB ORDER NO. 4161
DR. BY J.McD	DATE		
CHK BY	DATE 9-23-54		DRAWING NO 6-1
APP. BY	DATE		
APP. BY	DATE		

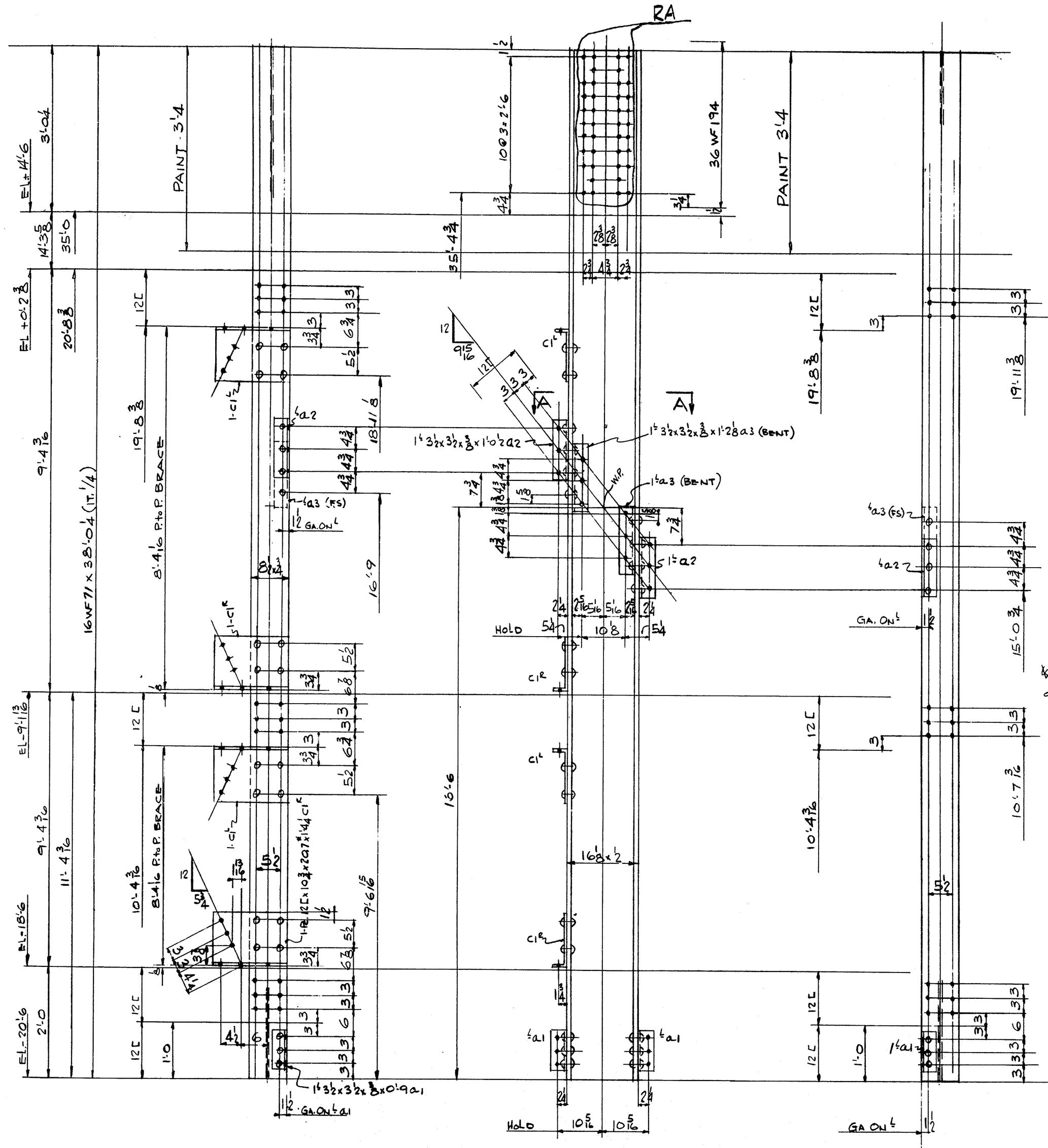

4-REQ'D COLUMN - C1 (AS SHOWN)
4-REQ'D COLUMN - C2 (OPP. HAND)

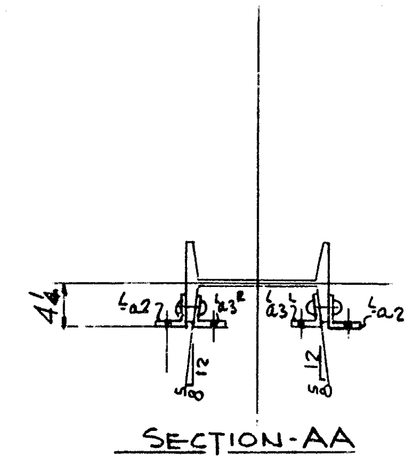

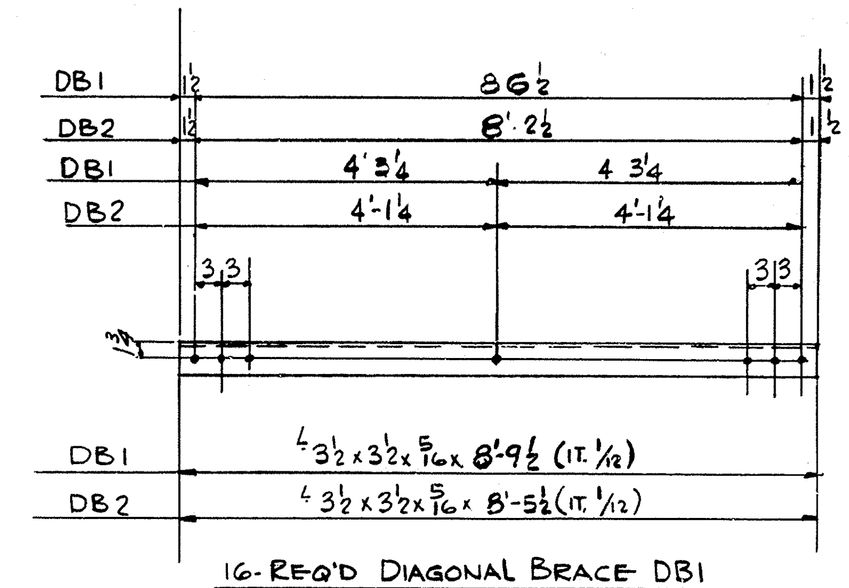

16-REQ'D DIAGONAL BRACE DB1
16-REQ'D DIAGONAL BRACE DB2

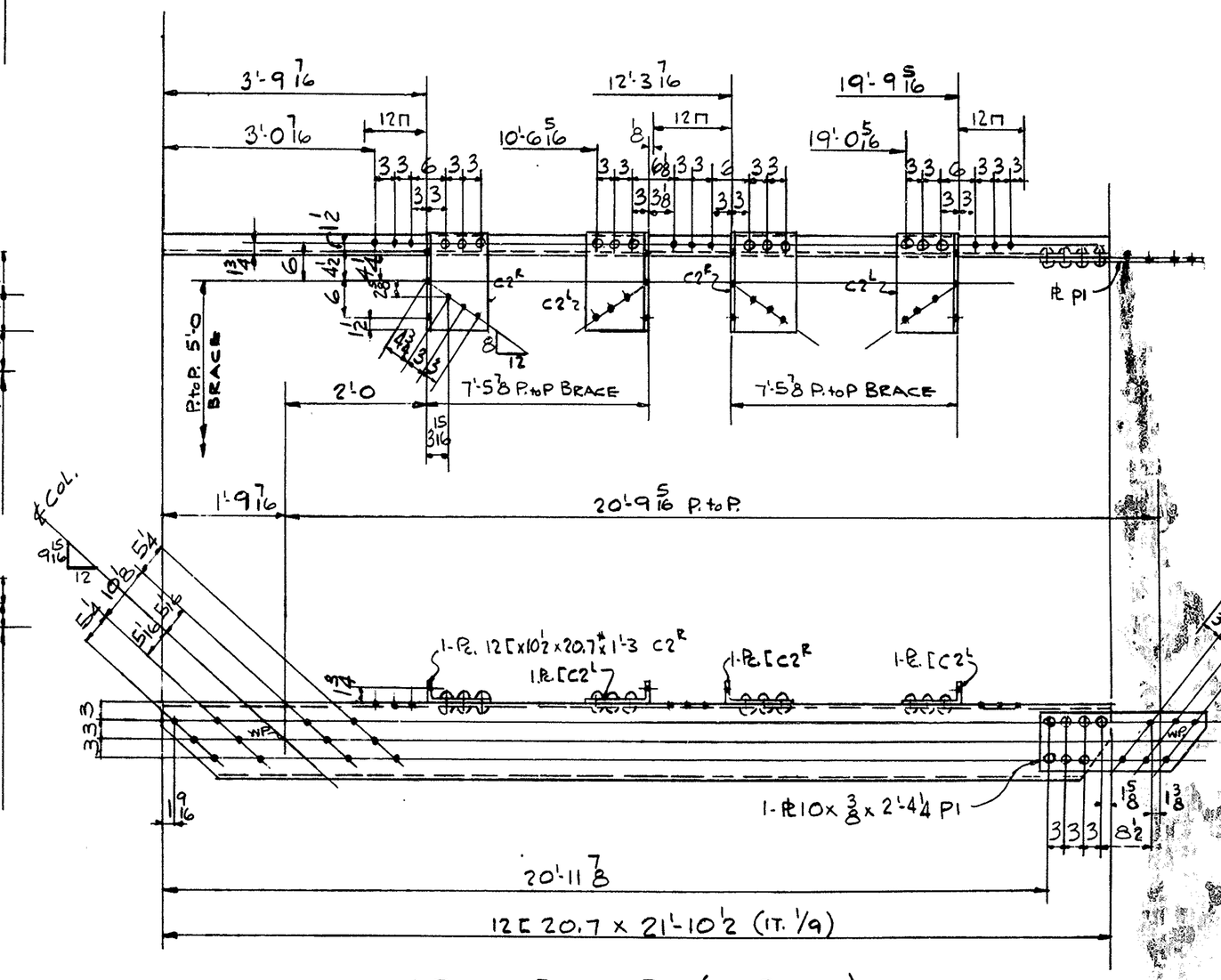

4-REQ'D BEAM-B11 (AS SHOWN)
4-REQ'D. BEAM-B12 (OPP. HAND)

DETAIL OF COLUMNS, BEAMS & BRACING

FOR GENERAL NOTES SEE DWG. No 1

DASH NO.	DATE	MADE BY	REVISIONS

DEL. STL. FAB. CORP.
WILMINGTON, DELAWARE

TITLE: WALNUT STREET BRIDGE
CONT. NO. 1224-(3) FEDERAL AID PROJECT NO. FLH(8)
THE STATE OF DELAWARE
STATE HIGHWAY DEPARTMENT

SCALE			JOB ORDER NO. 4161
DR. BY J.McD	DATE		
CHK BY E.G.J.	DATE 7-27-58		DRAWING NO. 7
APP. BY	DATE		
APP. BY	DATE		

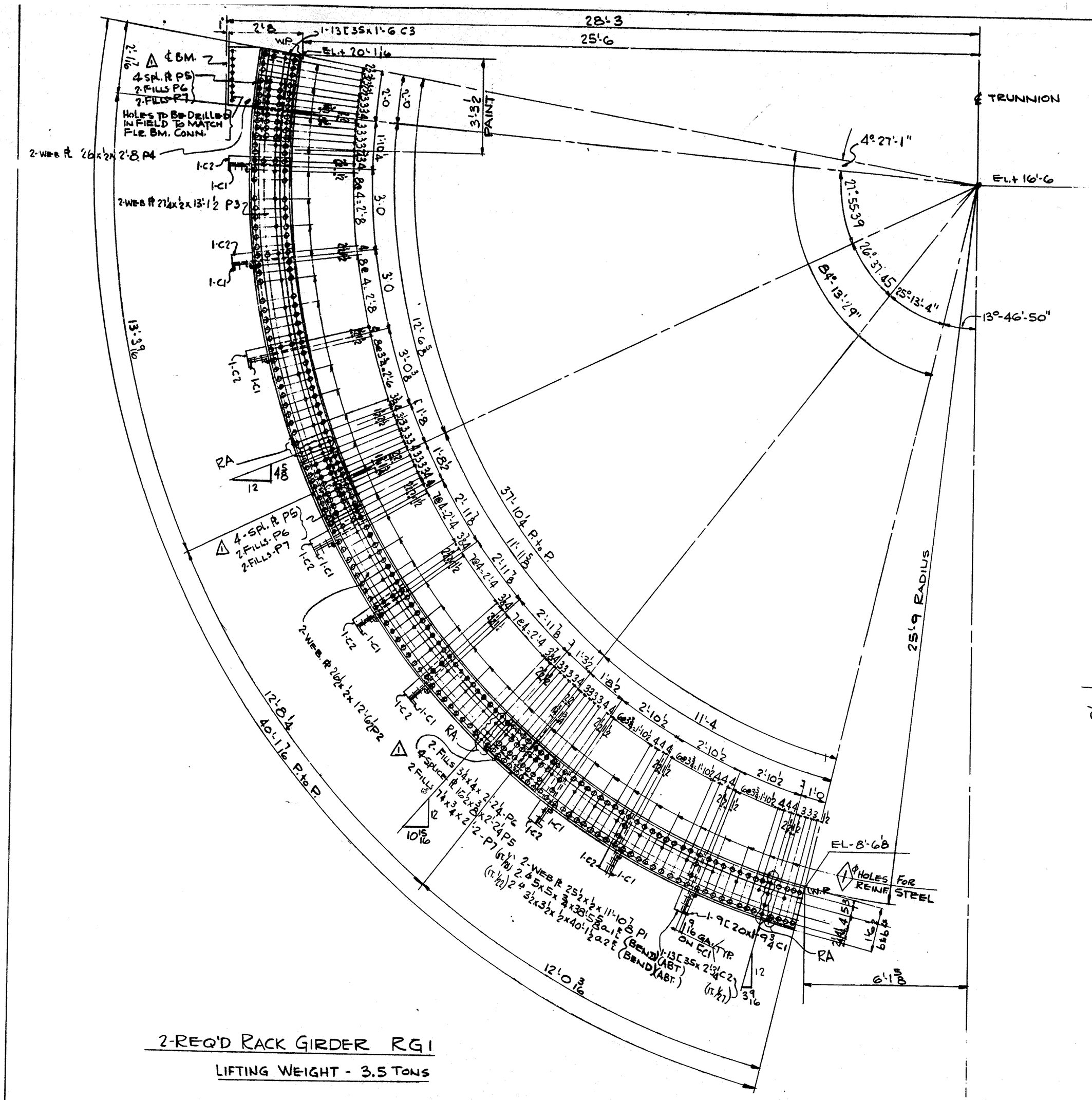

2-REQ'D RACK GIRDER RG1

LIFTING WEIGHT - 3.5 TONS

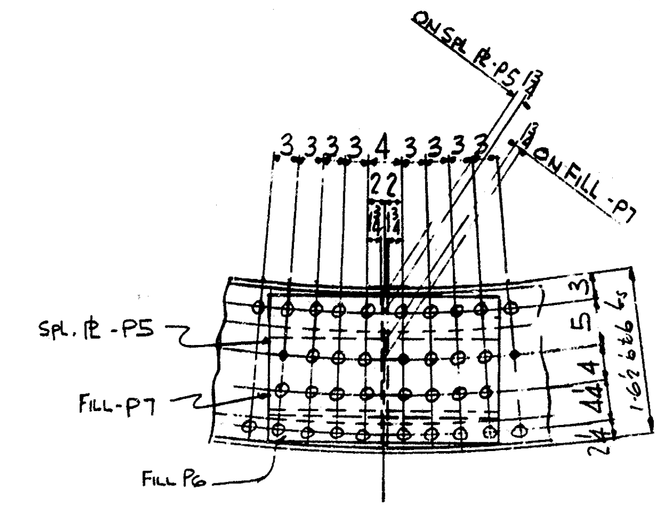

TYPICAL DETAIL OF SPLICE

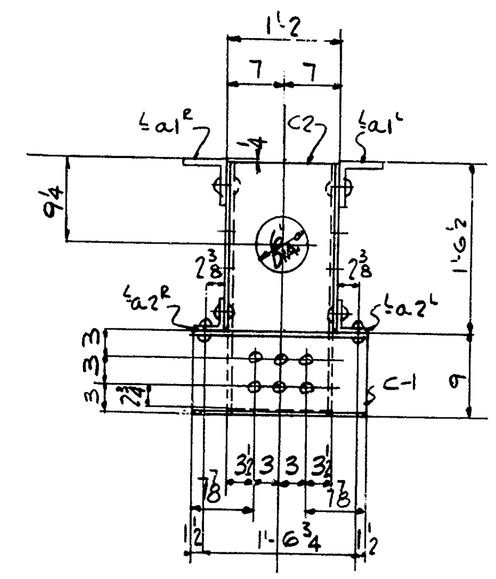

TYPICAL SECTION

FOR GENERAL NOTES SEE DWG. No 1

DETAIL OF RACK GIRDER

DWG. NO.	DATE	MADE BY	REVISIONS
1	11-11-48	GAB.	CHANGED QUANTITY OF SPLICE ℞ FROM 2 TO 4

DEL. STL. FAB. CORP.
WILMINGTON, DELAWARE

TITLE: WALNUT STREET BRIDGE
CONT. No 1224(3) FEDERAL AID PROJECT No FU-11(8)
THE STATE OF DELAWARE
STATE HIGHWAY DEPARTMENT

SCALE		JOB ORDER NO.	4181
DR. BY JMcD	DATE		
CHK BY EWG	DATE 10-28-48	DRAWING NO.	3
APP. BY	DATE		

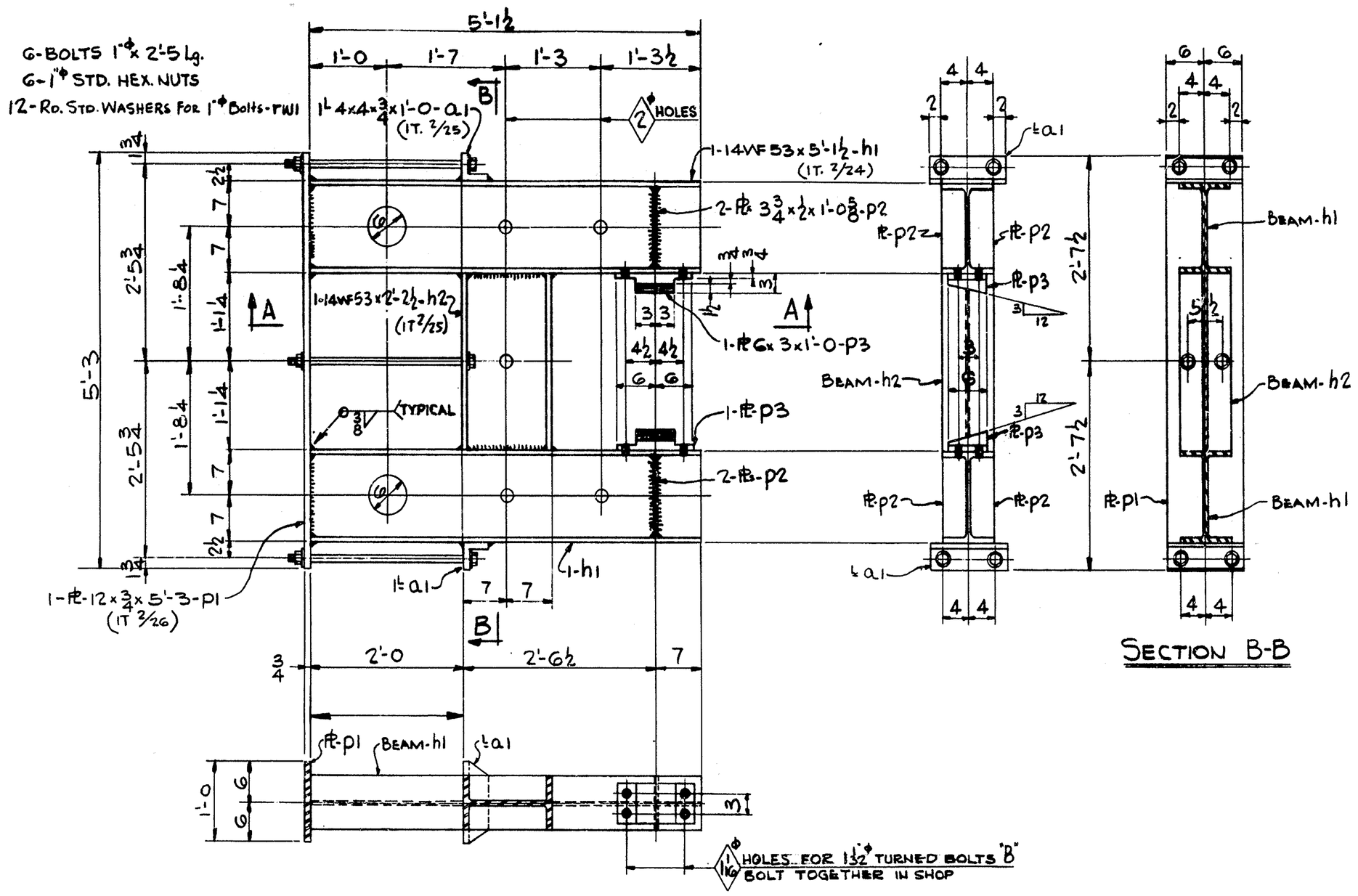

SECTION A-A

SECTION B-B

2-REQ'D. WIND THRUST FRAMES-WTF1

LIFTING WEIGHT = 1100# APPROX.

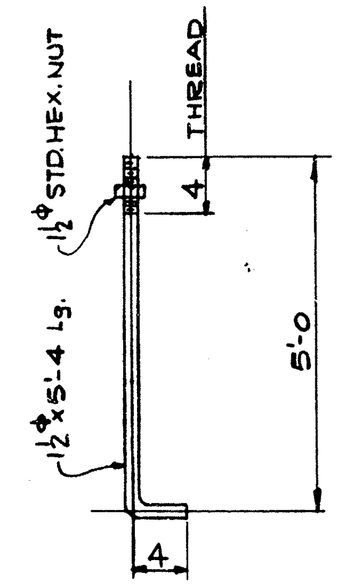

24-REQ'D. ANCHOR BOLTS
AB1

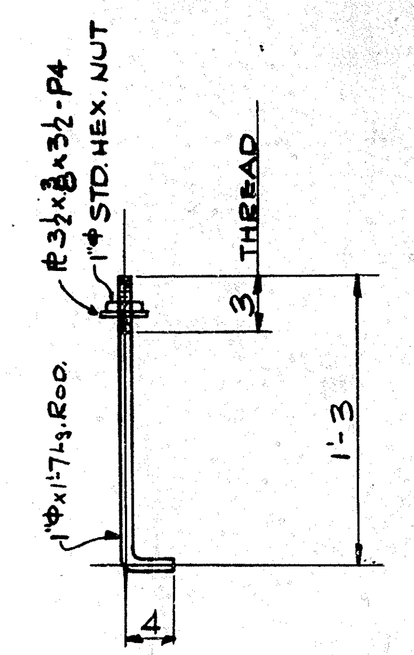

24-REQ'D. ANCHOR BOLTS
AB2

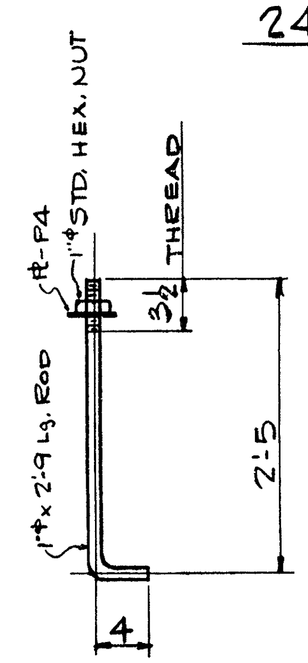

12-REQ'D. ANCHOR BOLTS
AB3

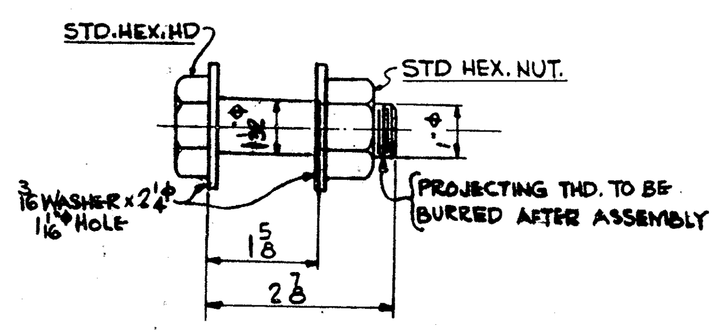

16-REQ'D TURNED BOLT-"B"

FOR GENERAL NOTES SEE DWG. NO. 1

DETAIL OF WIND THRUST FRAMES & ANCHOR BOLTS

DWG. NO.	DATE	MADE BY	REVISIONS

DEL. STL. FAB. CORP.
WILMINGTON, DELAWARE

TITLE: WALNUT STREET BRIDGE
CONT. NO. 1224-(3) FEDERAL AID PROJECT
THE STATE OF DELAWARE
STATE HIGHWAY DEPARTMENT

SCALE
DR. BY CRISANTI
DATE
CHK BY EAJ
DATE 10-2-58
JOB ORDER NO. 4161
DRAWING NO.

MICROFILMED

NOTES-
ANCHOR BOLTS SET & SUPPLIED BY CONTRACTOR.
ELEVATIONS SHOWN ARE TO BOTTOM OF MASONRY PLATES.

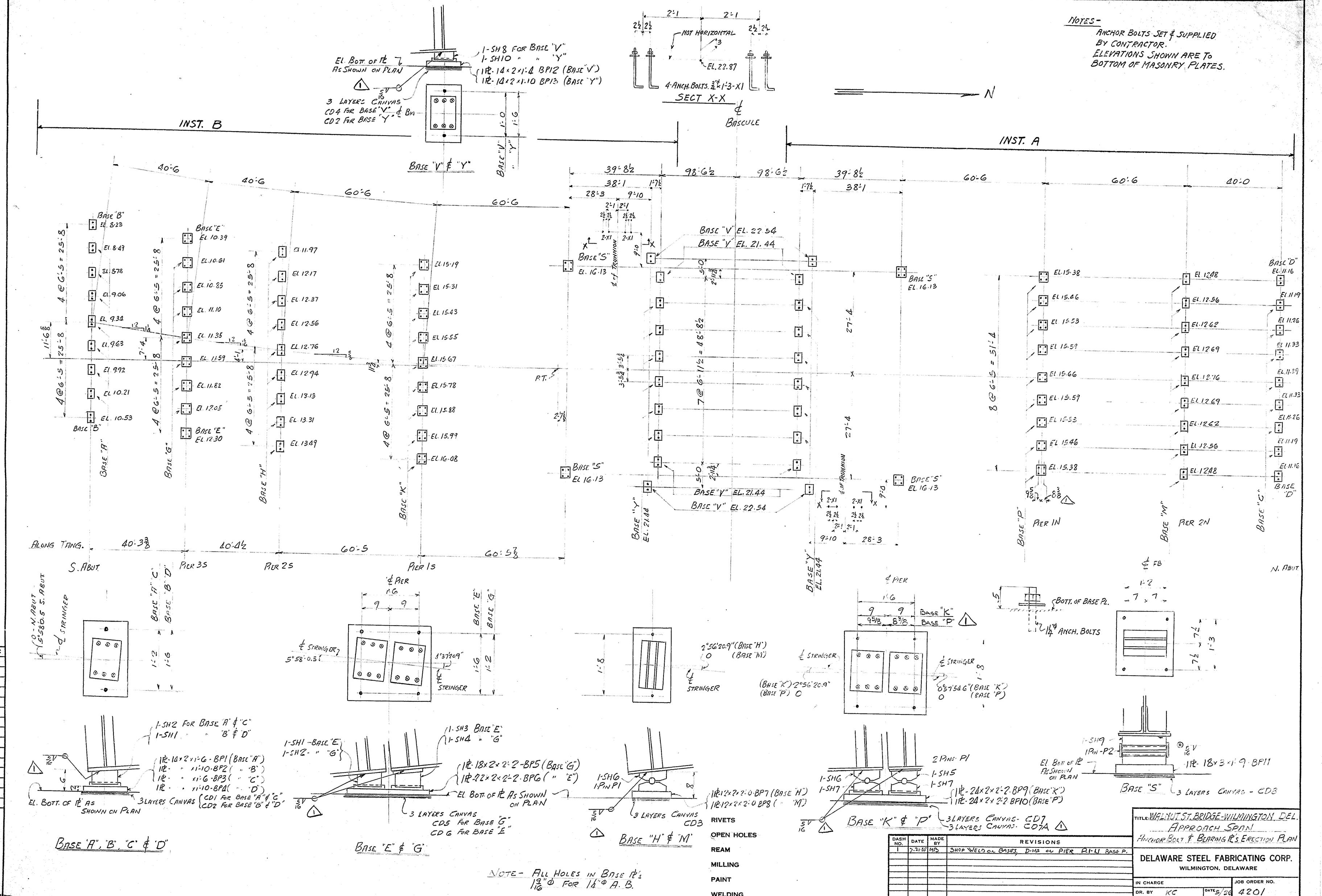

NOTE- ALL HOLES IN BASE PL'S 1 3/16" Φ FOR 1 1/4" Φ A.B.

RIVETS
OPEN HOLES
REAM
MILLING
PAINT
WELDING
SHOP CONTACT SURFACES

DASH NO.	DATE	MADE BY	REVISIONS
1	7-21-55	MB	SHOP WELD ON BASES; DIMS ON PIER P1-4 BASE P.

TITLE: WILMINGTON ST. BRIDGE-WILMINGTON, DEL.
APPROACH SPAN
ANCHOR BOLT & BEARING PL'S ERECTION PLAN

DELAWARE STEEL FABRICATING CORP.
WILMINGTON, DELAWARE

IN CHARGE			JOB ORDER NO. 4201
DR. BY KC	DATE 5/26		
CHK BY C.D.E.	DATE 6/2		DRAWING NO.

687 12-2

MICROFILMED

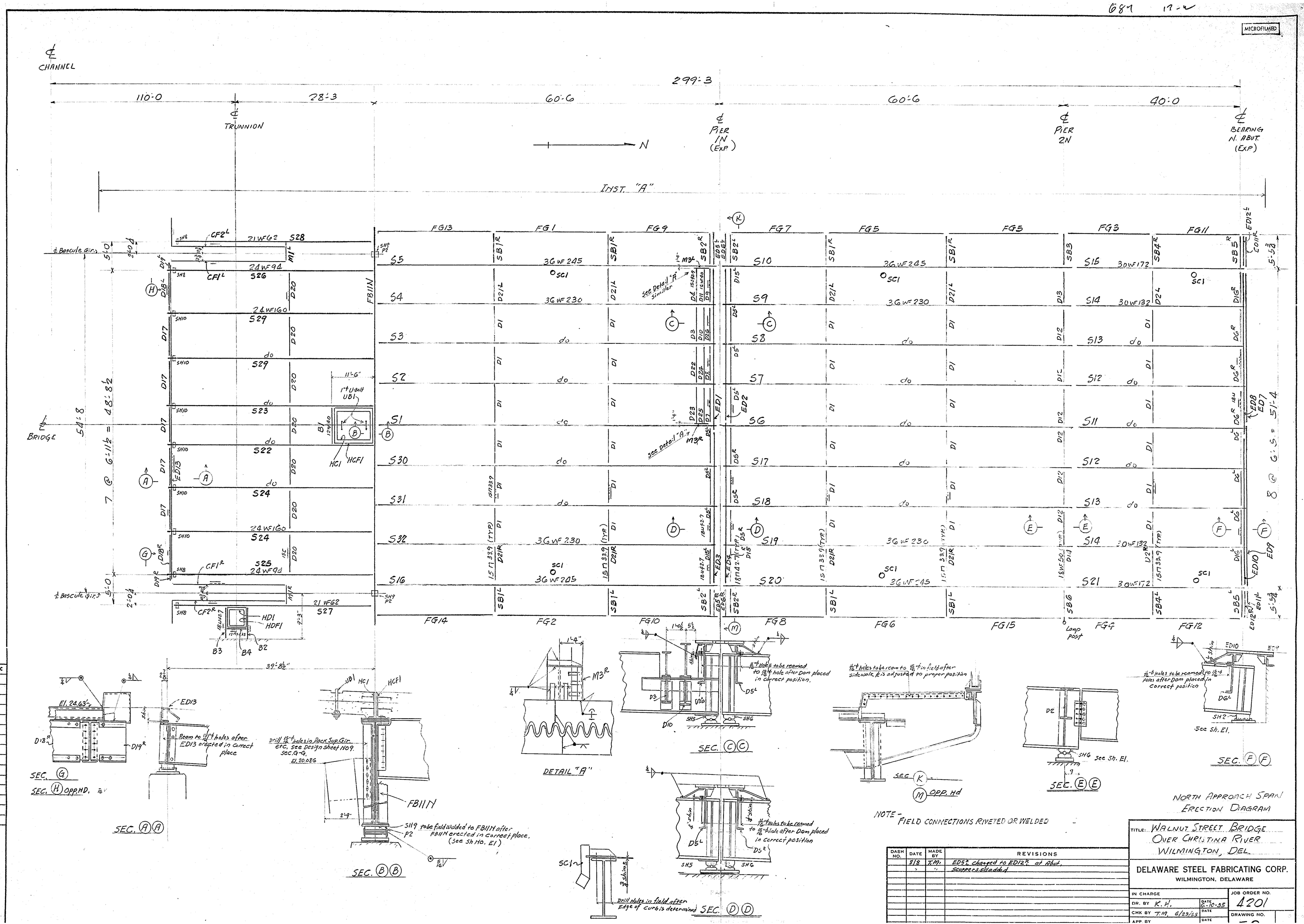

DASH NO.	DATE	MADE BY	REVISIONS
	8/8	T.M.	ED5R changed to ED12R at Abut.
	"	"	Scuppers added

TITLE: WALNUT STREET BRIDGE OVER CHRISTINA RIVER WILMINGTON, DEL.

DELAWARE STEEL FABRICATING CORP.
WILMINGTON, DELAWARE

IN CHARGE			JOB ORDER NO. 4201
DR. BY K.H.	DATE 6-10-35		
CHK BY T.M. 6/29/65	DATE		DRAWING NO.
APP. BY	DATE		

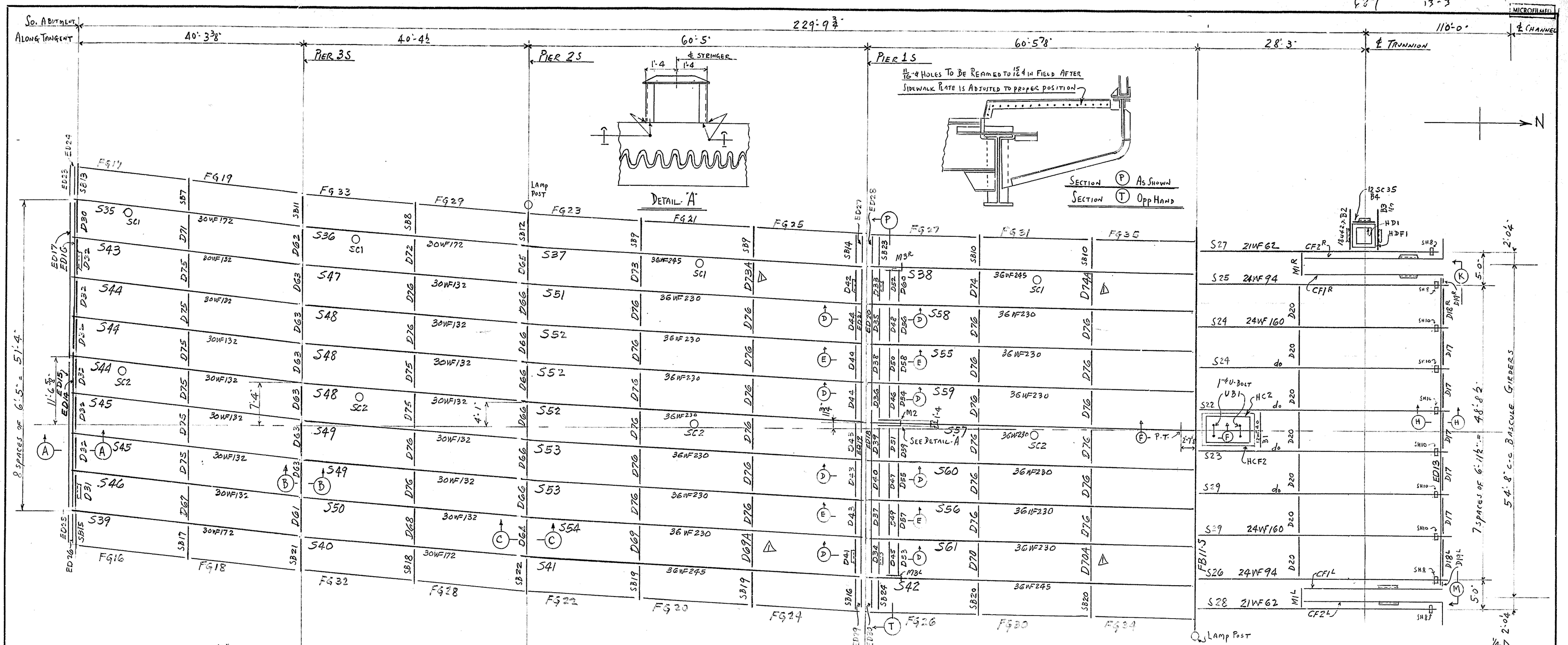

NOTE.

Field Connections Riveted Or Welded.

Installment "B"

South Approach Span Erection Plan

1224-4

DASH NO.	DATE	MADE BY	REVISIONS
1	11/17/58	RFT	Changed mark of one diam D69 to D69A; one diam D70 to D70A; one diam D73 to D73A; one diam D74 to D74A
2	3/15/61	RFT	Revised sect (R)(M) - added mark for ED13

TITLE: Walnut Street Bridge Over Christina River Wilmington - Delaware

DELAWARE STEEL FABRICATING CORP.
WILMINGTON, DELAWARE

IN CHARGE		JOB ORDER NO.	4201
DR. BY GLH	DATE		
CHK BY	DATE	DRAWING NO.	REV
	DATE		

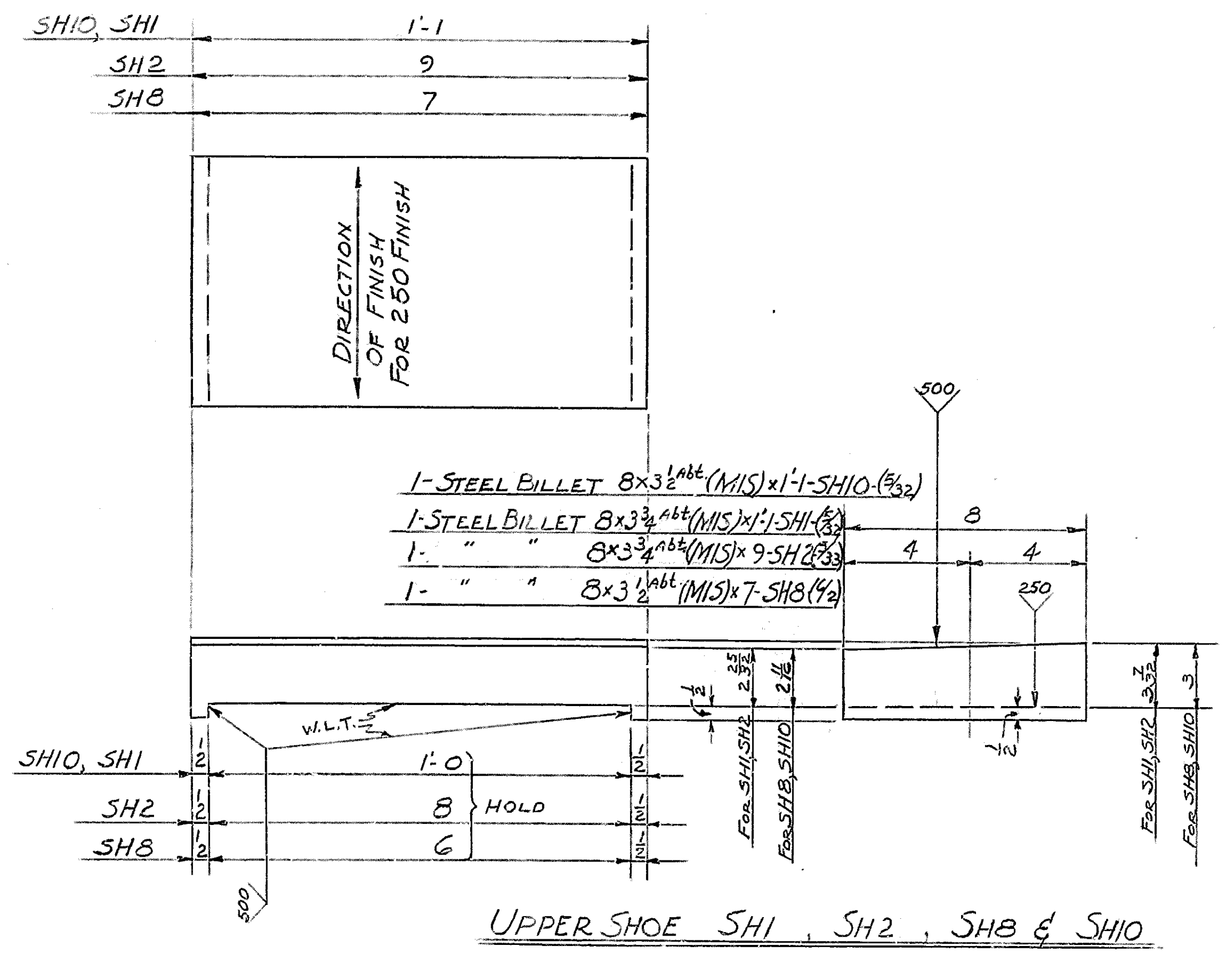

UPPER SHOE SH1, SH2, SH8 & SH10

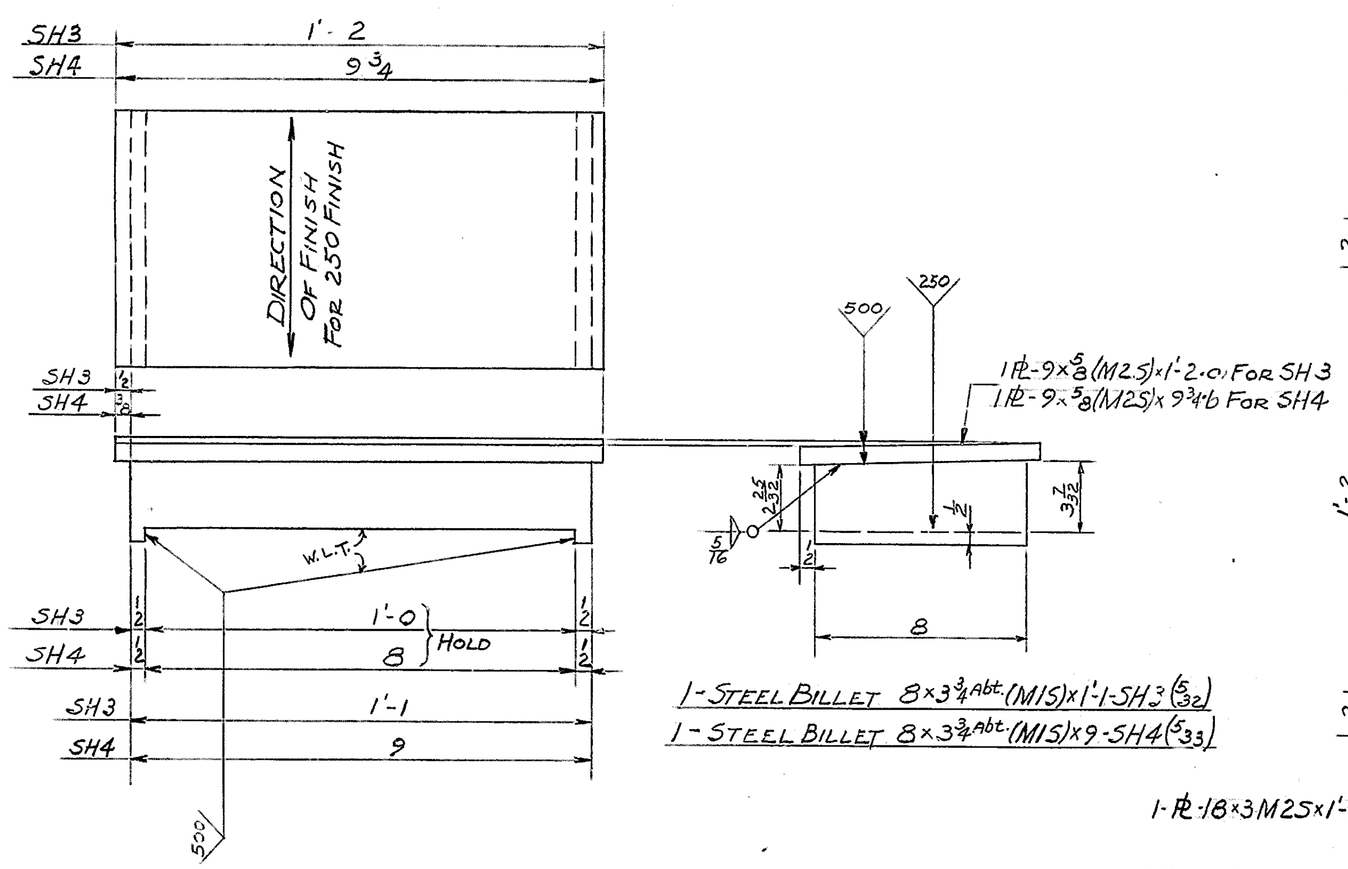

UPPER SHOE SH3 & SH4

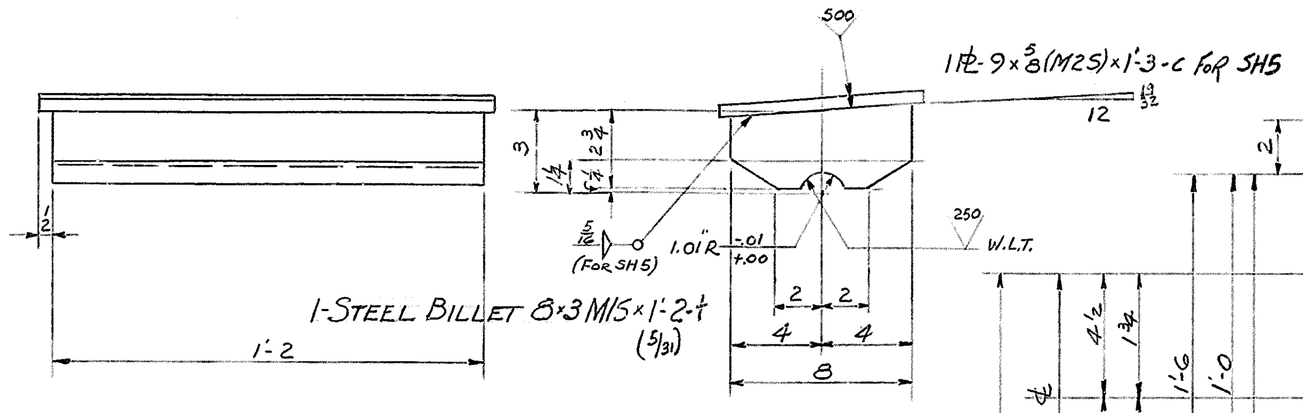

UPPER SHOE SH5 & SH6

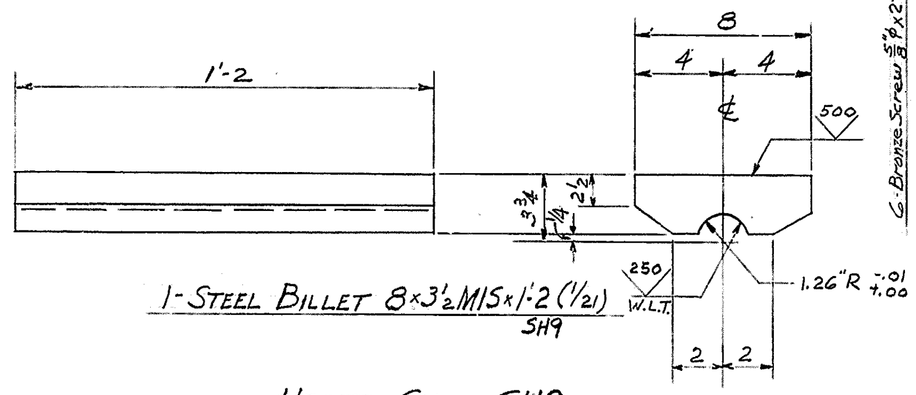

UPPER SHOE SH9

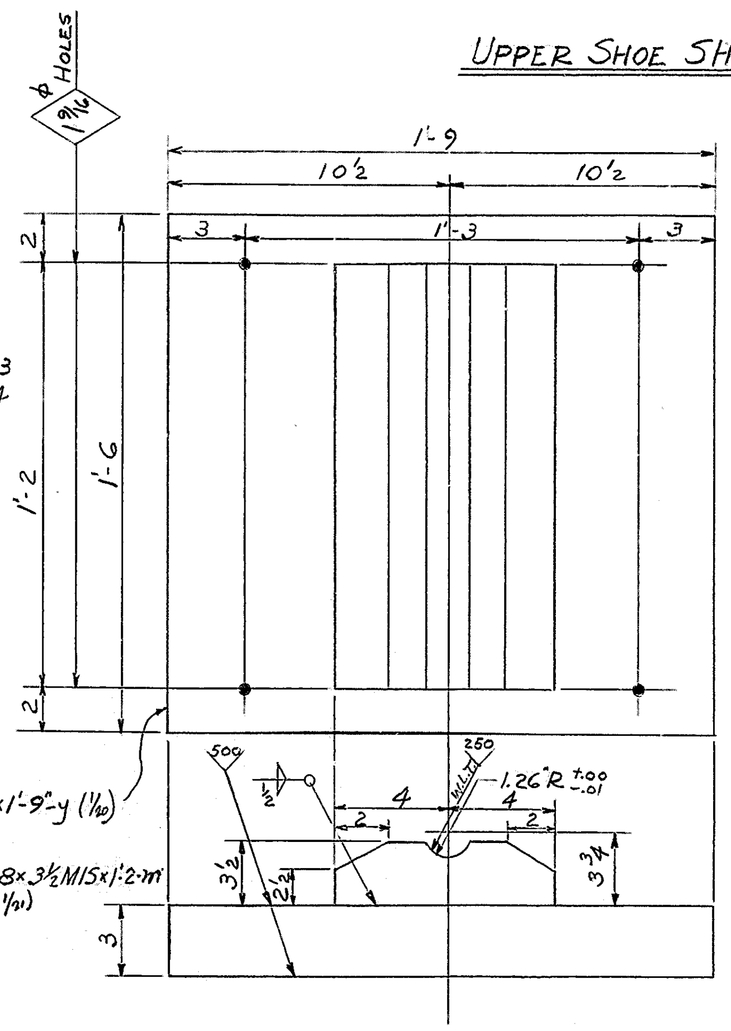

BASE PLATE BP11

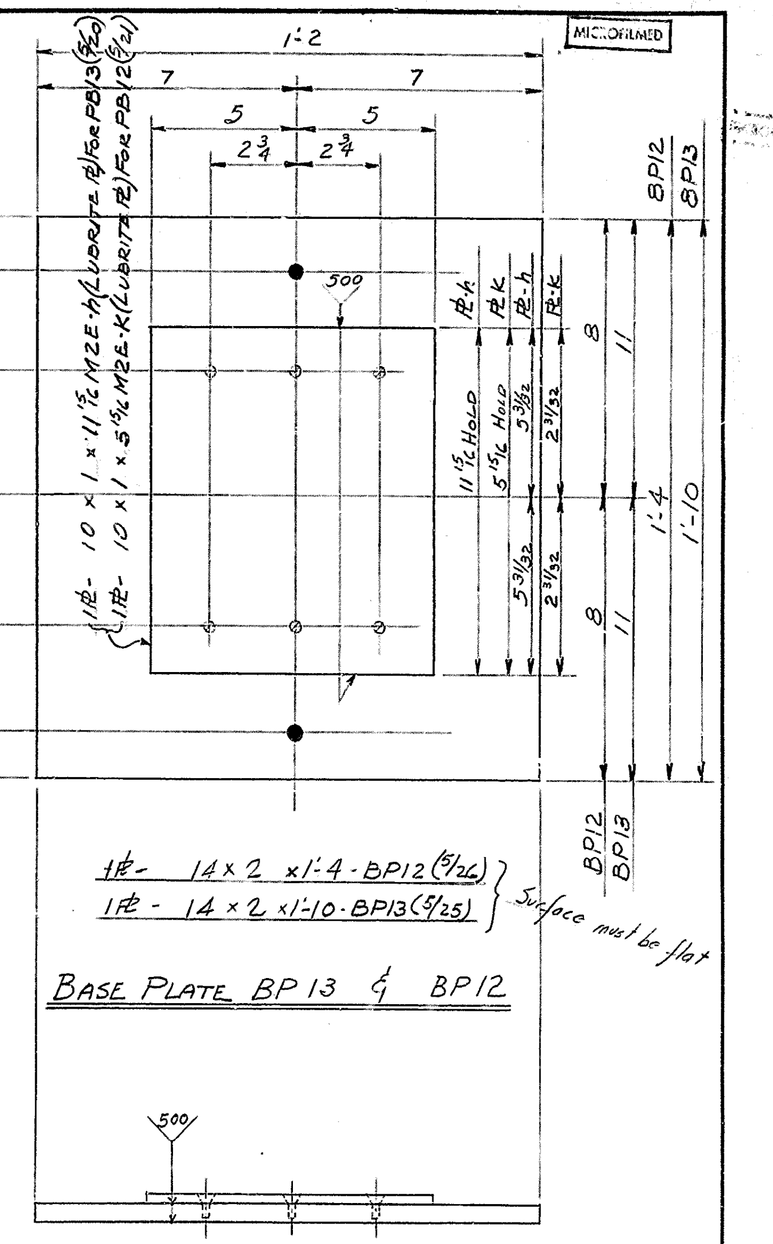

BASE PLATE BP13 & BP12

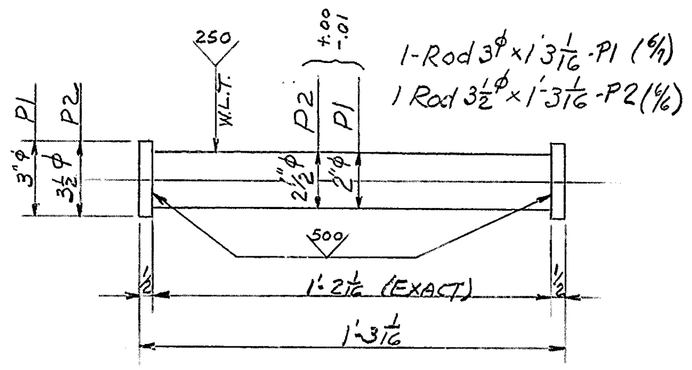

BEARING PIN P1 & P2

	REQUIRED LIST			
INST. A	INST. B	No. REQ'D	MARK	DESCRIPTION	REMARKS
2	4	6	SH1	UPPER SHOE	
7	14	21	SH2		
	2	2	SH3		
	7	7	SH4		
9	9	18	SH5		
18	18	36	SH6		
4	4	8	SH8		
2	2	4	SH9		
2	2	4	BP11	BASE PLATE	
4	4	8	BP12	" "	
6	6	12	BP13	" "	
27	27	54	P1	PIN	
2	2	4	P2	"	
6	6	12	SH10	UPPER SHOE	

NOTE:-
Material Carbon Steel A.S.T.M.
A7-52T Except Bronze Lubrite
Machined Surfaces to be Coated.
With Hot White Lead Tallow
Marked W.L.T.

FOR GENERAL NOTES SEE DWG # 4

RIVETS NONE
OPEN HOLES AS NOTED
REAM
MILLING AS NOTED
PAINT ONE COAT OF RED LEAD ON STEEL EXCEPT W.L.T.
WELDING AS NOTED
SHOP CONTACT SURFACES No

DASH NO.	DATE	MADE BY	REVISIONS

TITLE: WALNUT ST. BRIDGE WILMINGTON, DEL
APPROACH SPANS
UPPER SHOES, BASE PLATES & PINS

DELAWARE STEEL FABRICATING CORP.
WILMINGTON, DELAWARE

IN CHARGE		JOB ORDER NO.	1
DR. BY AY	DATE	4201	
CHK BY CDE	DATE 6/9	DRAWING NO.	REV.
APP. BY	DATE	1	

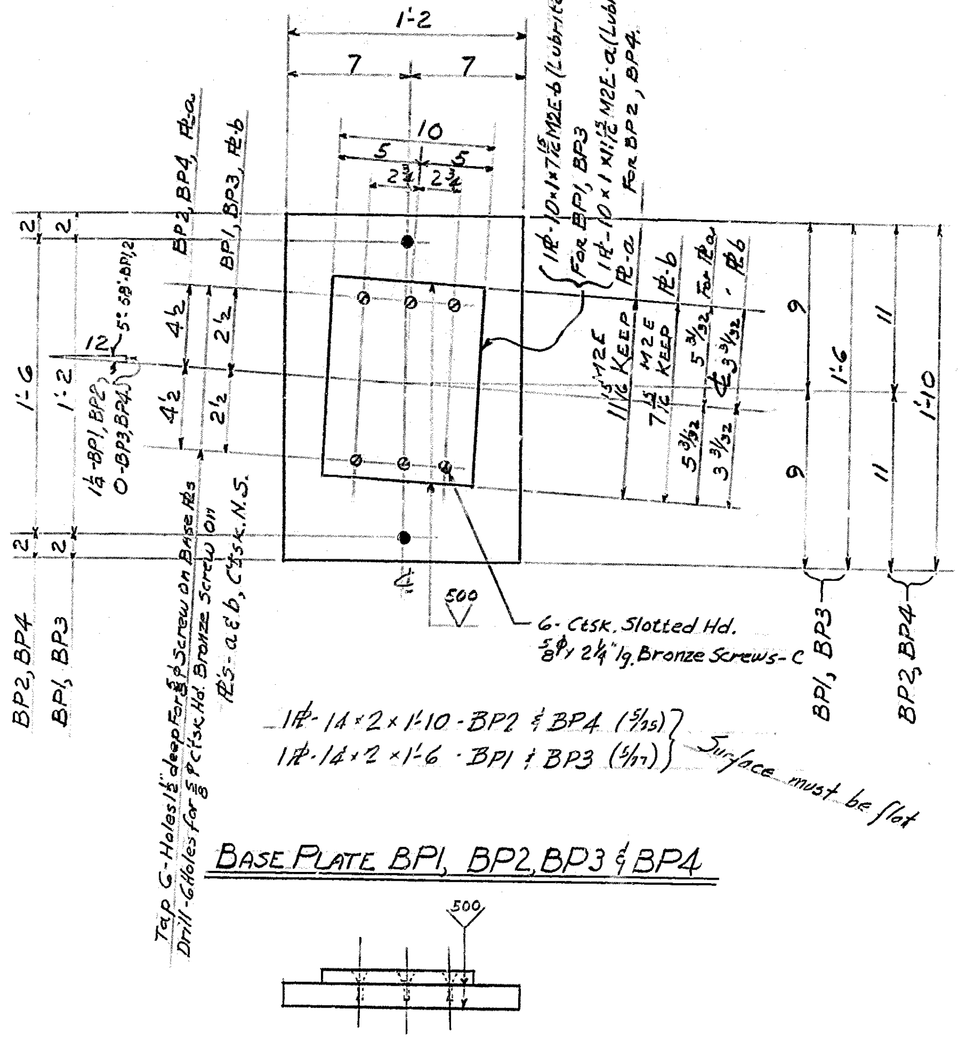

BASE PLATE BP1, BP2, BP3 & BP4

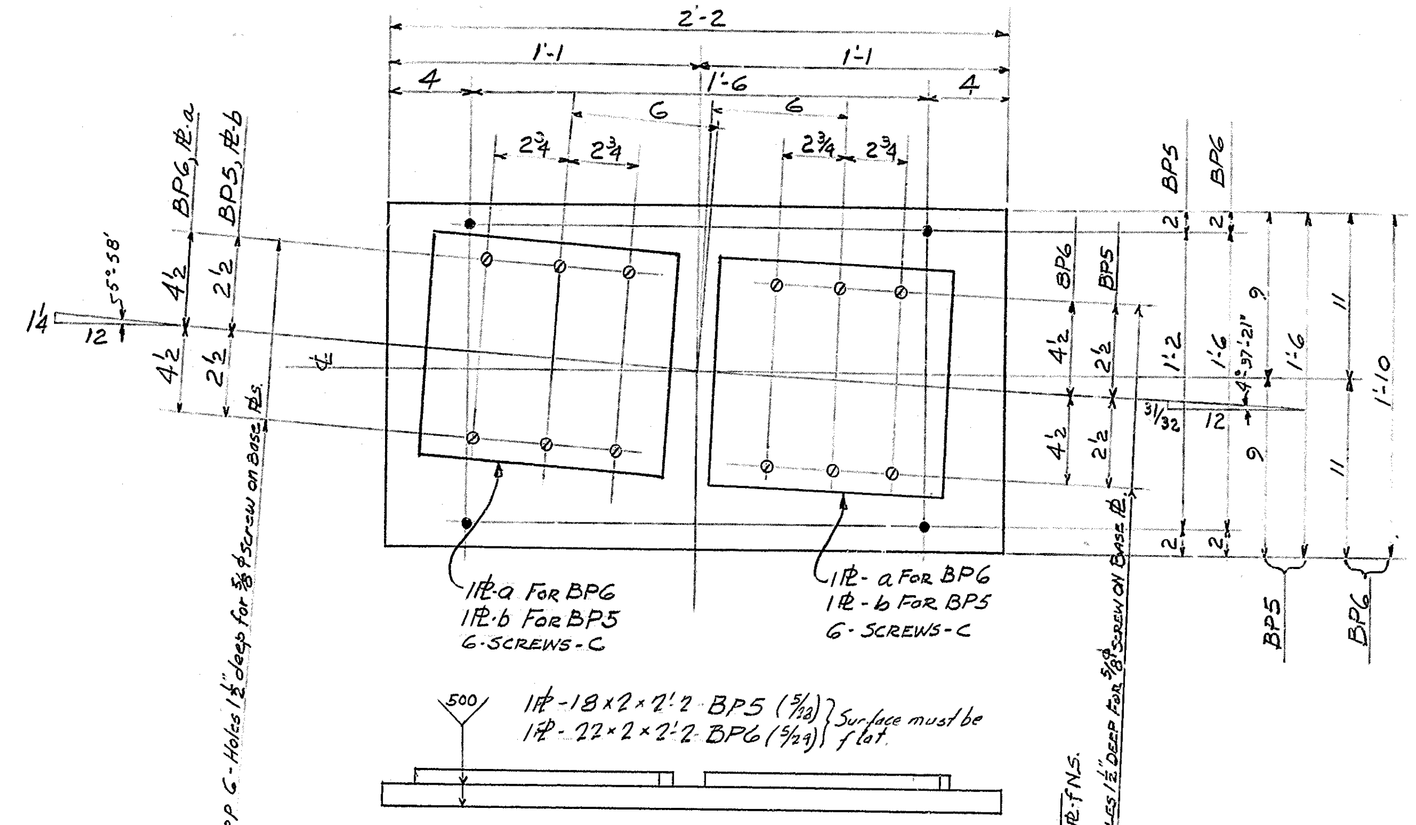

BASE PLATE BP5 & BP6

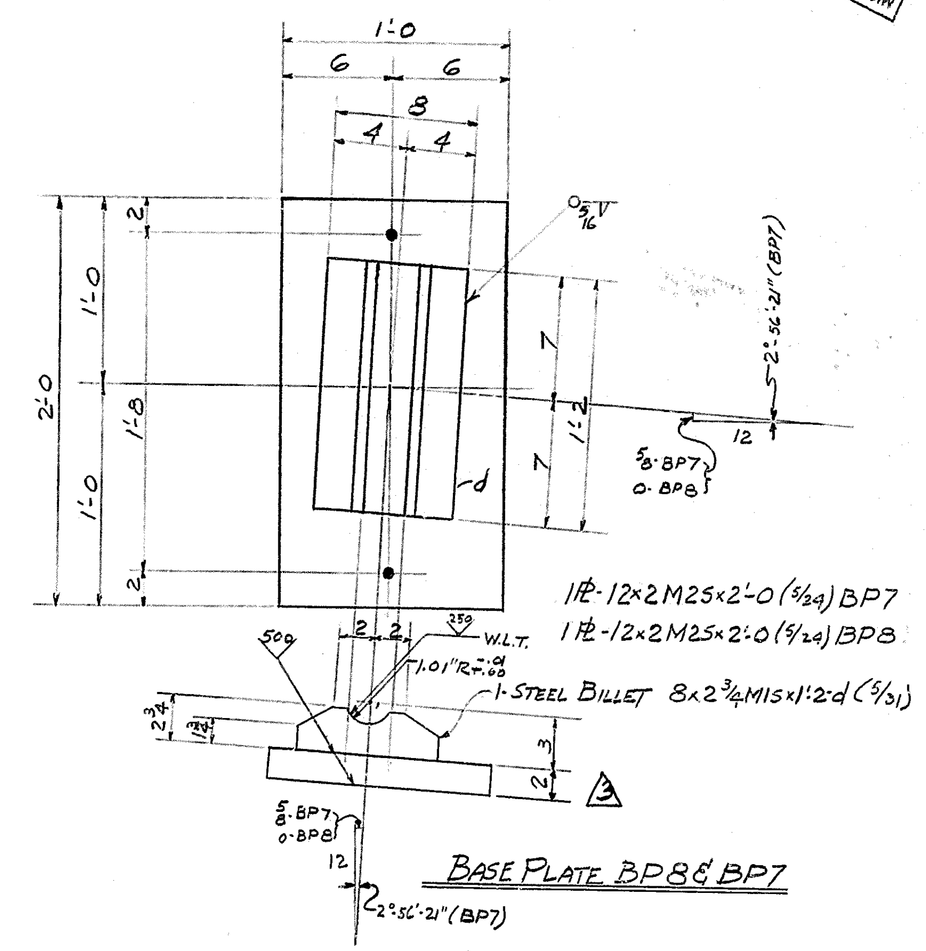

BASE PLATE BP8 & BP7

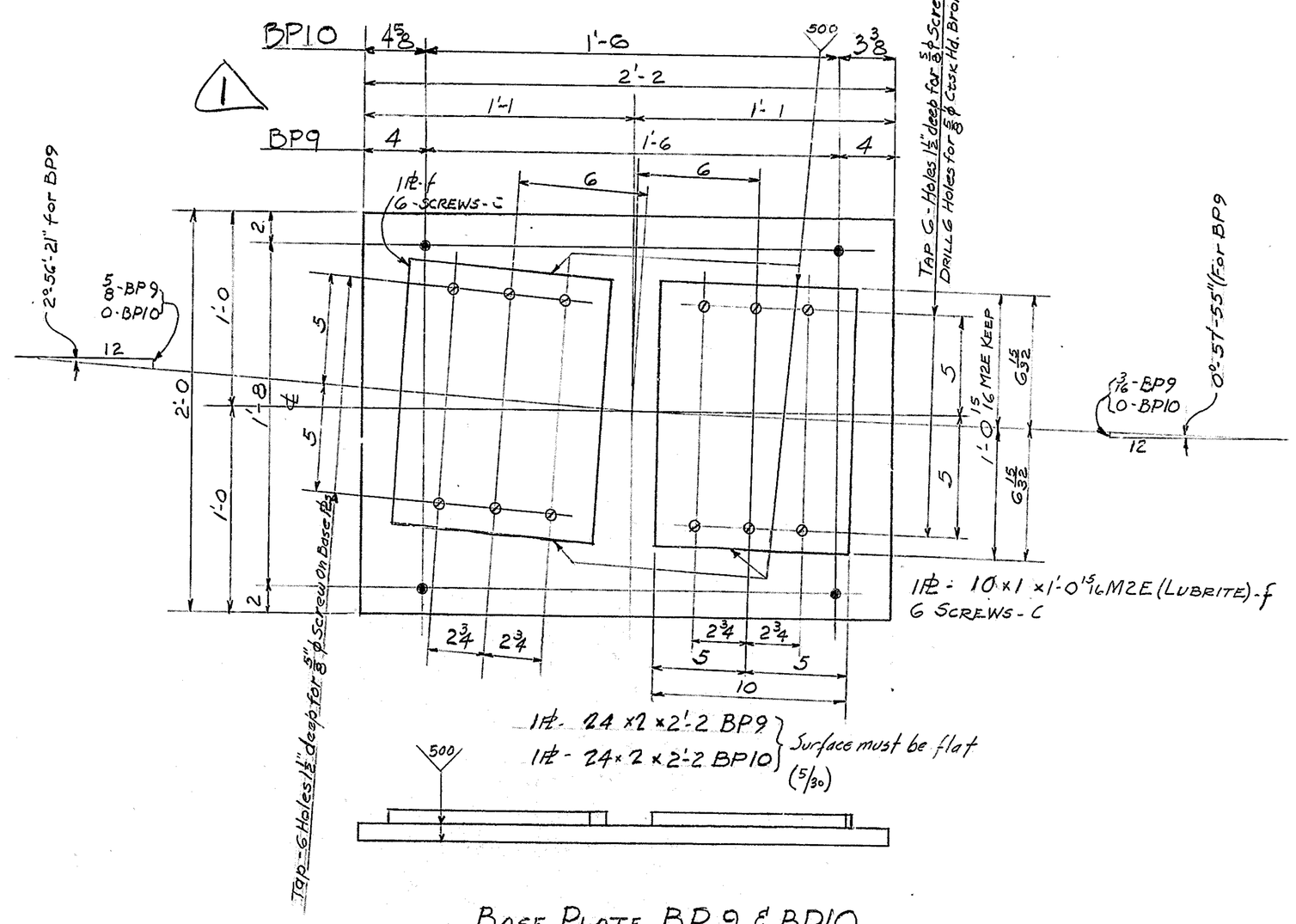

BASE PLATE BP9 & BP10

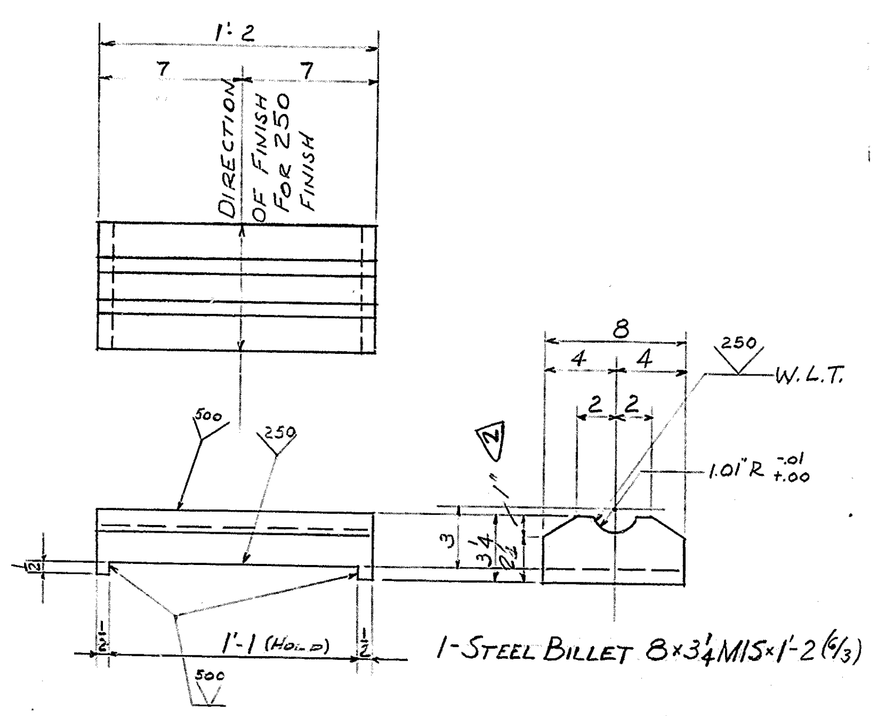

BOTTOM SHOE SH7

REQUIRED LIST					
INST. A	INST. B	No. Reqd	MARK	DESCRIPTION	REMARKS
	7	7	BP1	BASE PLATES	
	2	2	BP2	do	
7		7	BP3	do	
2		2	BP4	do	
	7	7	BP5	do	
	2	2	BP6	do	
	9	9	BP7	do	
9		9	BP8	do	
	9	9	BP9	do	
9		9	BP10	do	
18	18	36	SH7	BOTTOM SHOE	

NOTE:
Material - Carbon Steel ASTM A7-52T
except Bronze Lubrite
Machined Surfaces to be coated
with Hot White Lead Tallow
marked W.L.T.

FOR GENERAL NOTES SEE DWG # 4

RIVETS NONE
OPEN HOLES 9/16" ϕ
REAM
MILLING AS NOTED
PAINT ONE COAT OF RED LEAD ON STEEL EXCEPT W.L.T.
WELDING AS NOTED
SHOP CONTACT SURFACES NO

DASH NO.	DATE	MADE BY	REVISIONS
1	7-21-55	MB	CHANGE BP10
2	9-23-55	MB	ADDED DIM. (PHONE CALL PEPPING MACH.)
3	9-30-55	RPT	ADDED DIM (PHONE CALL RENDONS MACH)

TITLE: WALNUT ST BRIDGE - WILMINGTON, DEL.
APPROACH SPANS
BASE PLATES & BOTTOM SHOE

DELAWARE STEEL FABRICATING CORP.
WILMINGTON, DELAWARE

IN CHARGE
DR. BY A.Y. DATE
CHK BY C.D.E. DATE 6/6
APP. BY DATE
JOB ORDER NO. 4201
DRAWING NO.
REV.

MICROFILMED

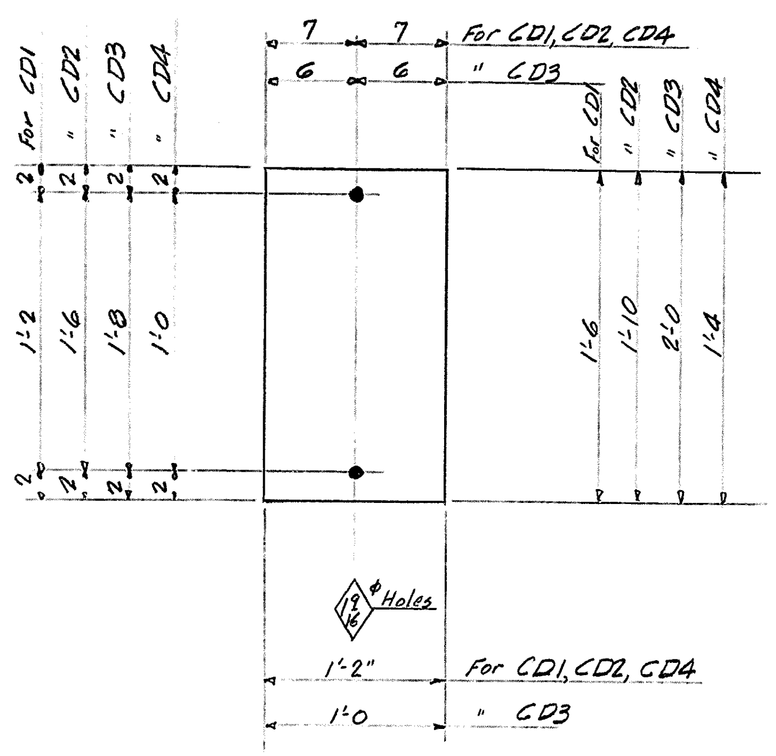

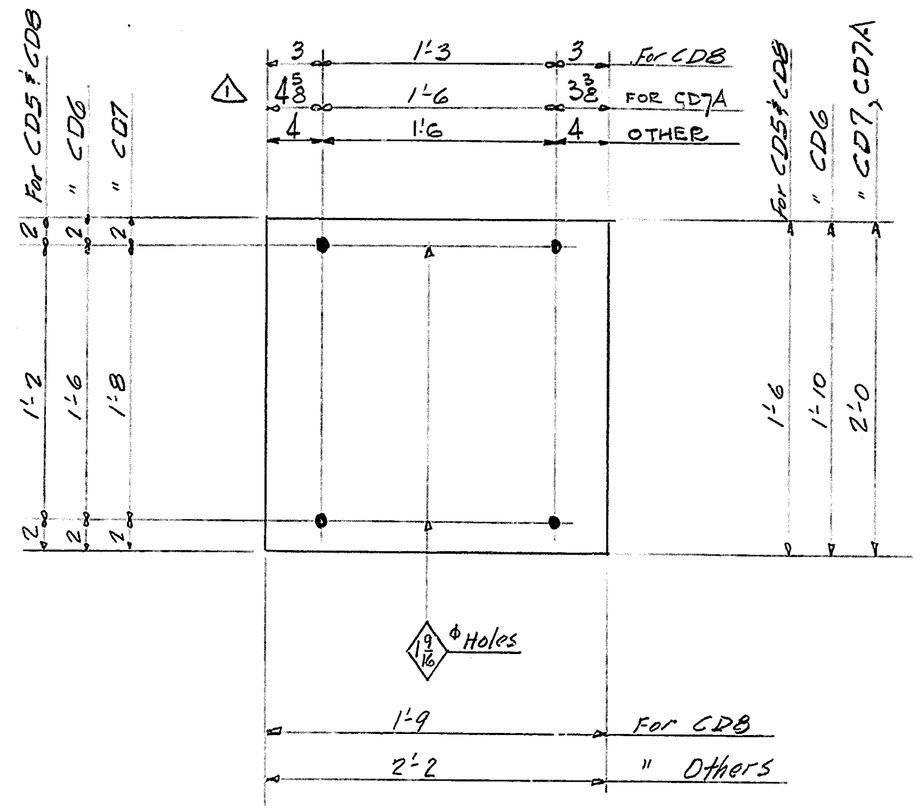

12 oz Canvas Duck - 14" x 1'-6" - CD1
12 oz " " - 14" x 1'-10" - CD2
12 oz " " - 12" x 2'-0" - CD3
12 oz " " - 14" x 1'-4" - CD4

12 oz Canvas Duck - 18" x 2'-2" - CD5
12 oz " " - 22" x 2'-2" - CD6
12 oz " " - 24" x 2'-2" - CD7, CD7A
12 oz " " - 18" x 1'-9" - CD8

REQUIRED LIST

	Inst. A	Inst. B	No. Req'd	Description	Mark	Remarks
	21	21	42	Canvas Duck	CD1	
	24	24	48	do.	CD2	
	27	27	54	do	CD3	
	12	12	24	do	CD4	
		21	21	do	CD5	
		6	6	do	CD6	
1		27	27	do	CD7	
	6	6	12	do.	CD8	
1	27		27	do	CD7A	

FOR GENERAL NOTES SEE DWG #4

RIVETS
OPEN HOLES
REAM
MILLING
PAINT
WELDING
SHOP CONTACT SURFACES

DASH NO.	DATE	MADE BY	REVISIONS
1	7-21-55	MLB	ADDED CD7A

TITLE: WALNUT ST BRIDGE-WILMINGTON, DEL
APPROACH SPANS
CANVAS DUCK,

DELAWARE STEEL FABRICATING CORP.
WILMINGTON, DELAWARE

IN CHARGE		JOB ORDER NO.	4201
DR. BY TM	DATE 5/25/55		
CHK BY	DATE	DRAWING NO.	REV.
APP. BY	DATE	2	1

MICROFILMED

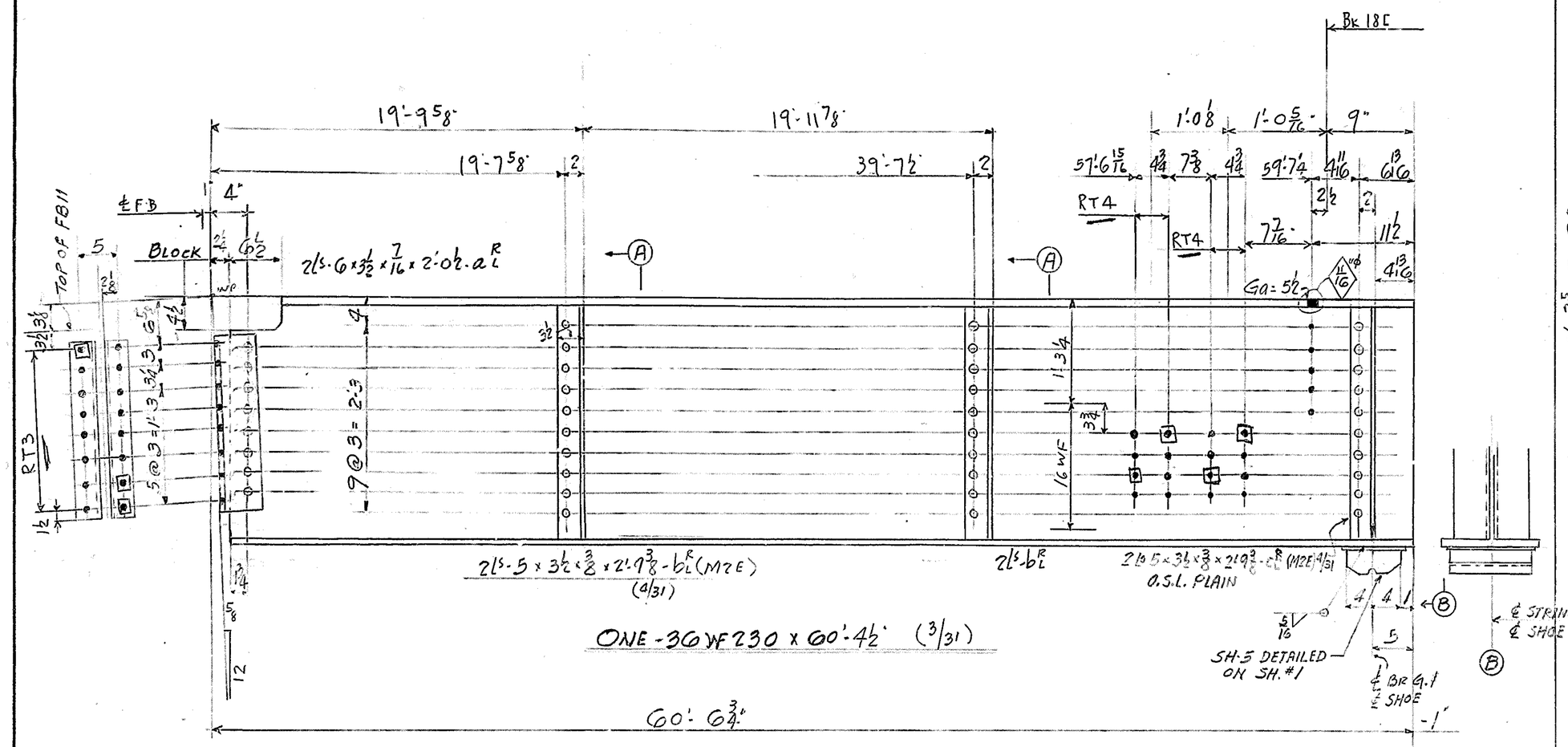

STRINGER - S1 (Lifting Wt. 7.5 Tons)

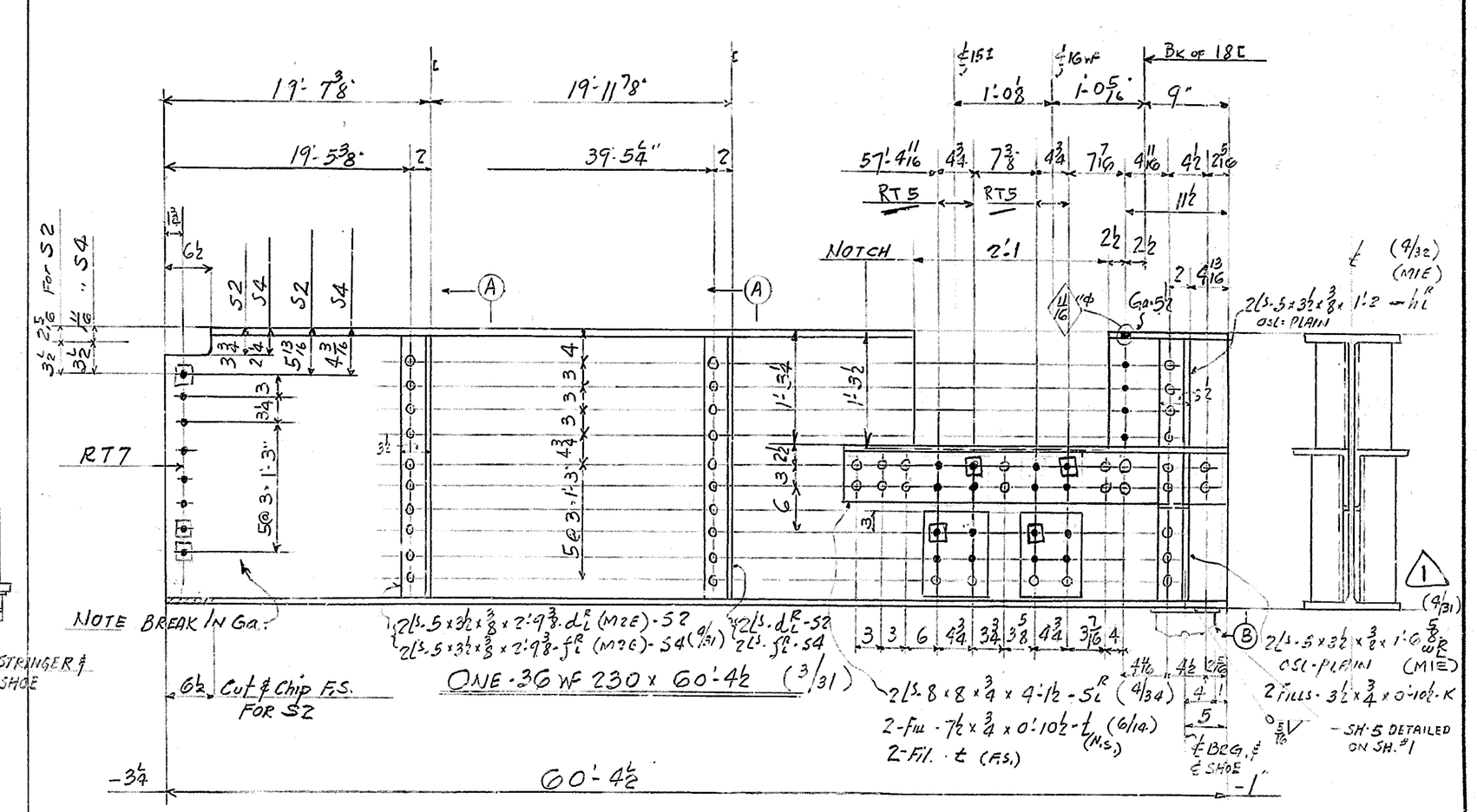

STRINGER - S2 (Lifting Wt 7.5 Tons)

STRINGER - S4 (DO)

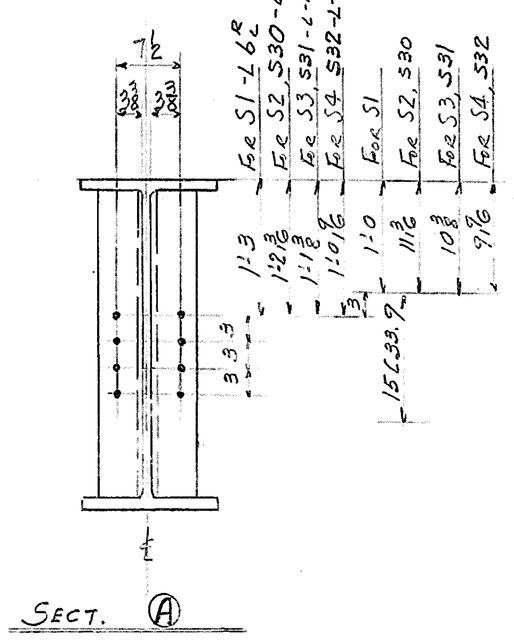

SECT. (A)

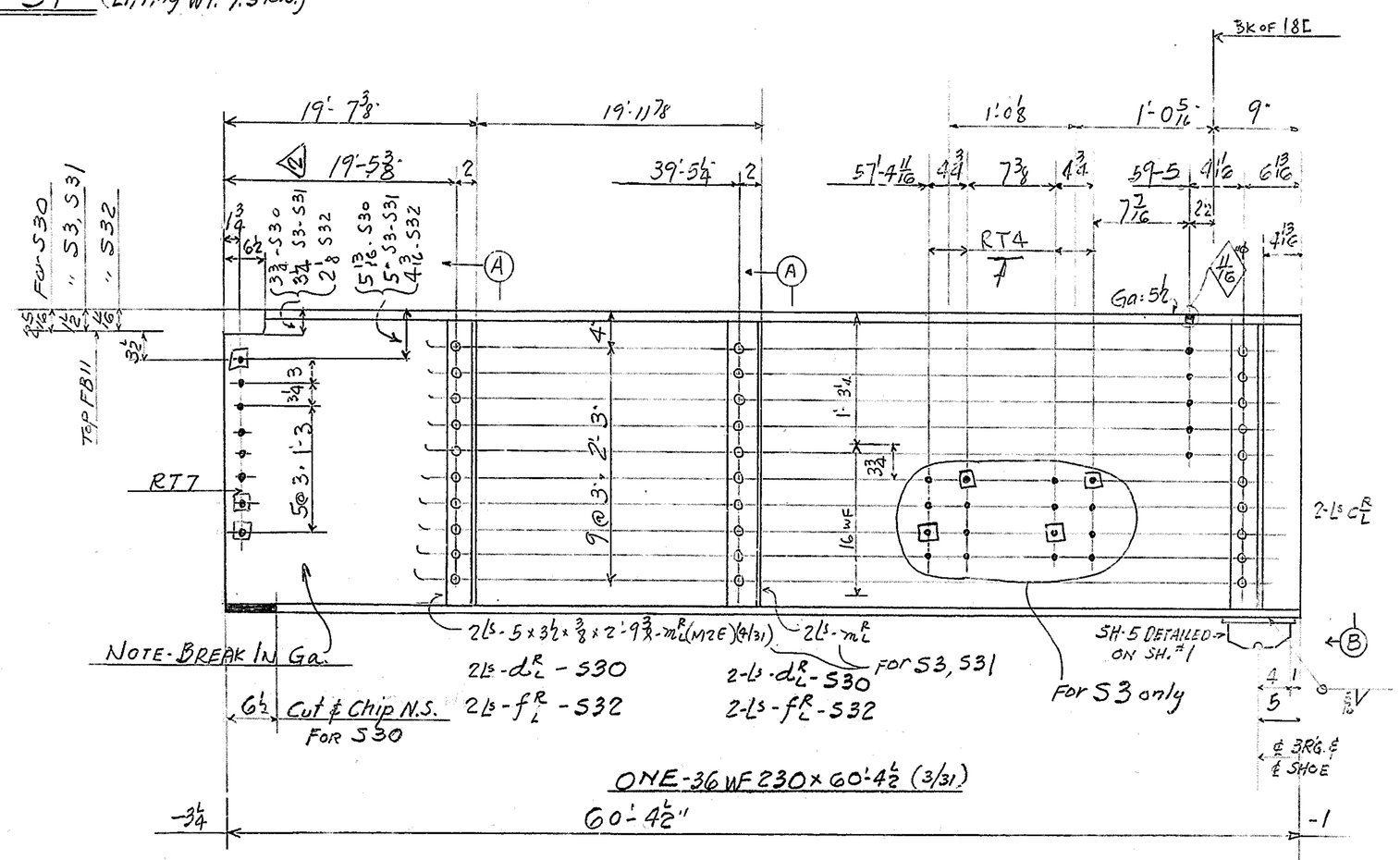

STRINGER - S3 (Lifting Wt. 7.5 Tons)

STRINGER - S30 (DO)

STRINGER - S31 (DO.

STRINGER - S32 (DO.)

RIVETS 7/8

OPEN HOLES 15/16

REAM AS NOTED.

MILLING AS NOTED

PAINT ONE SHOP COAT RED LEAD

WELDING NONE

SHOP CONTACT SURFACES NO PAINT

INSTALLMENT "A"

REQUIRED LIST			
NO.	DESCRIPTION	MARK	REMARKS
1	STRINGER	S1	
1	DO	S2	
1	DO	S3	
1	DO	S4	
1	DO	S30	
1	DO	S31	
1	DO	S32	

TOP

STRINGERS TO BE FABRICATED WITH CROWN OF CAMBER ON TOP

GENERAL NOTES:

SPECIFICATIONS: DEL. STATE HIGHWAY DEPT.

MATERIAL: CARBON STEEL. A.S.T.M. A7-52T UNLESS NOTED.

WORKMANSHIP.

PUNCHING: HOLES IN MATERIAL 3/4" THICK OR LESS MAY BE PUNCHED FULL SIZE UNLESS NOTED.

DRILLING: HOLES IN MATERIAL MORE THAN 3/4" THICK SHALL BE SUBPUNCHED AND REAMED OR DRILLED from solid.

Holes marked R.T.: shall be subpunched 1/4 or subdrilled 1/4 then reamed to size to metal template.

SHEARED EDGES: Sheared edges of material other than 5/8" thick if indicated M1E, M2E etc. shall be planed to a depth of not less than 1/4" or may be flame cut to size provided a smooth surface is obtained by the use of mechanical guide.

DASH NO.	DATE	MADE BY	REVISIONS
	8/8	T.M.	shoes welded to Stringers S1 to S32 Inclusive
1	9-6-55	MB	ADDED DETAIL MARK WR IN PLACE OF RT (S2,4)
2	9-7-55	MBL	REVISED BLOCK FOR S3 + S31

STRINGERS

TITLE: WALNUT STREET BRIDGE OVER CHRISTINA RIVER WILMINGTON, DEL.

DELAWARE STEEL FABRICATING CORP.
WILMINGTON, DELAWARE

IN CHARGE		JOB ORDER NO.	
DR. BY R.H.	DATE 6-2-55	4201	
CHK BY T.M.	DATE 8/26	DRAWING NO.	
APP. BY	DATE	4	2