THE STATE OF DELAWARE
DEPARTMENT OF TRANSPORTATION

U.S. CUSTOMARY UNITS

CONSTRUCTION PLANS FOR:

SR1 / I-95 INTERCHANGE

CONTRACT NUMBER: T200809003
FEDERAL AID PROJECT NUMBER: IM-N056(35)

COUNTY: NEW CASTLE M.R. #: 67

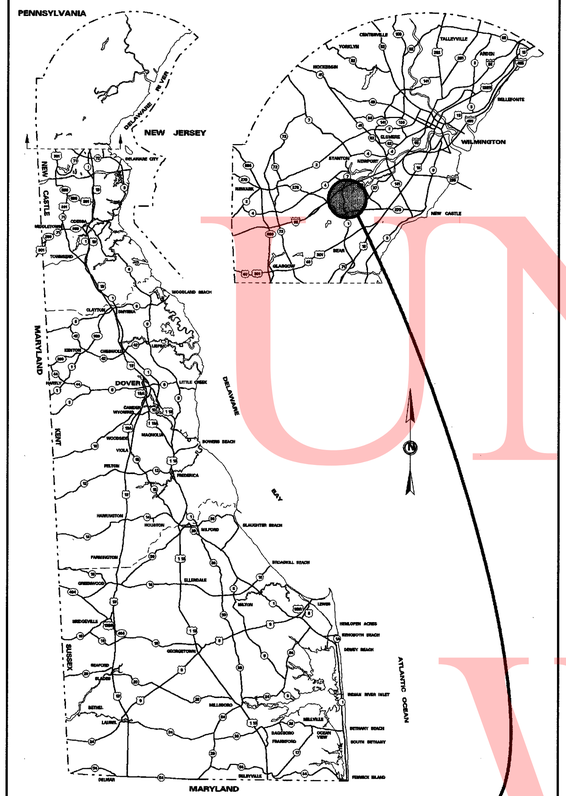

GENERAL LOCATION OF CONTRACT

LIMIT OF CONSTRUCTION CONTRACT T200809003 STATION 2104+00

LIMIT OF CONSTRUCTION CONTRACT T200809003 STATION 565+00

LIMIT OF CONSTRUCTION CONTRACT T200809003 STATION 1101+32.65

LIMIT OF CONSTRUCTION CONTRACT T200809003 STATION 360+75

PREPARED BY
THE CONSULTING FIRM OF
RUMMEL, KLEPPER & KAHL, LLP

DAVID WAYNE WALLACE REGISTERED No. 6581 DELAWARE PROFESSIONAL ENGINEER
SEAL

RECOMMENDED — DATE 9.10.2010

RECOMMENDED

SQUAD MANAGER, CONSTRUCTION — DATE 9/17/10

GROUP ENGINEER, CONSTRUCTION — DATE 9/17/10

ASSISTANT DIRECTOR, TRANSPORTATION SOLUTIONS (CONSTRUCTION) — DATE 9-17-10

DESIGN DESIGNATION

FUNCTIONAL CLASS: URBAN PRINCIPLE ARTERIAL		D.H.V. PROJECTED: 9,410	YEAR: 2030
TYPE OF CONSTRUCTION: RECONSTRUCTION		DESIGN SPEED: VARIES, SEE SHEET 5	
A.A.D.T. CURRENT: 92,700	YEAR: 2008	TRUCKS: 9%	
A.A.D.T. PROJECTED: 126,175	YEAR: 2030	DIRECTION OF DISTRIBUTION: 59%	

INDEX OF SHEETS

SHEET №	TABLE OF CONTENTS
1	TITLE
2	PLAN SHEET INDEX
3	LEGEND
4-5	GENERAL AND PROJECT NOTES
6-48	TYPICAL SECTIONS
49-61	HORIZONTAL AND VERTICAL CONTROL
62-79	CONSTRUCTION PLANS
80-126	PROFILES
127-146	DRAINAGE PLANS
147-177	GRADES AND GEOMETRICS
178-181	GRADING PLANS
182-186	CONSTRUCTION DETAILS - ROADWAY
187-193	CONSTRUCTION DETAILS - DRAINAGE
194	STRUCTURES KEY PLAN
194A	SETTLEMENT MONITORING PLATE DETAIL
195-253	S1 - RAMP A OVER I-95
254-306	S2 - RAMP A OVER SR7
307-348	S3 - RAMP B OVER SR7
349-393	S4 - RAMP C OVER SR7
394-447	S5 - RAMP G1 OVER SR7
448-512	S6 - RAMP B OVER I-95
513-532	S8 - SR7 OVER EAGLE RUN
532A-532B	S9 - ROAD A OVER SR7
533-623	RETAINING WALL PLANS
624-625	STORMWATER MANAGEMENT PLANS AND NOTES
626-634	ENVIRONMENTAL COMPLIANCE PLANS
635-673	CONSTRUCTION PHASING, MOT AND EROSION CONTROL PLANS
674-679A	DETOUR PLANS
680-681	LANDSCAPING PLANS (REFORESTATION AND SWM POND PLANTINGS)
682-704	LIGHTING PLANS AND DETAILS
705-710	UTILITY RELOCATION PLANS
711-741	SIGNING, STRIPING AND CONDUIT PLANS AND DETAILS
742-743	SIGNALIZATION PLANS
744-803	SOIL BORING PLANS

TOTAL SHEETS: 803

APPROVED DESIGN EXCEPTIONS

DESIGN PARAMETER	REQUIRED	PROVIDED	DATE

ADDENDA & REVISIONS

DESCRIPTION	NAME & DATE

ASSOCIATED CONTRACTS

CONTRACT NO.	CONTRACT NAME
25-090-01	DELAWARE TURNPIKE IMPROVEMENTS, I-95 MAINLINE WIDENING
91-071-05	CHURCHMANS ROAD BRIDGE OVER I-95, BRIDGE NO. 1-718
91-101-04	CHURCHMANS ROAD & S.R. 7 INTERCHANGE
T201009004	SR1/I-95 INTERCHANGE - CHRISTIANA MALL ROAD BRIDGE

RECOMMENDED
STORMWATER ENGINEER — DATE 20 OCT 2010
VINCENT W. DAVIS REGISTERED No. 12898 DELAWARE PROFESSIONAL ENGINEER — SEAL

RECOMMENDED
SQUAD MANAGER, TRANSPORTATION SOLUTIONS (PROJECT DEVELOPMENT OR BRIDGE DESIGN) — DATE — SEAL

RECOMMENDED
BRIDGE DESIGN ENGINEER — DATE Oct. 21st, 2010
JITEN K. SONEJI REGISTERED NO. 9207 DELAWARE PROFESSIONAL ENGINEER — SEAL

RECOMMENDED
GROUP ENGINEER, PROJECT DEVELOPMENT — DATE September 14, 2010
DARREN M. O'NEILL REGISTERED No. 10857 DELAWARE PROFESSIONAL ENGINEER — SEAL

RECOMMENDED
ASSISTANT DIRECTOR, TRANSPORTATION SOLUTIONS — DATE 10/21/10
DREW A. BOYCE REGISTERED No. 9870 DELAWARE PROFESSIONAL ENGINEER — SEAL

APPROVED
CHIEF ENGINEER — DATE 10/21/10
NATALIE M. BAUMHART No. 6580 DELAWARE PROFESSIONAL ENGINEER — SEAL

UNOFFICIAL WEBSITE COPY

9/10/2010 10:53:42 AM
M:\PROJECTS\2003\03059_DELTRNPK\SRIMALL\CADD\2809003\PLANS\TC01_SR1.DGN

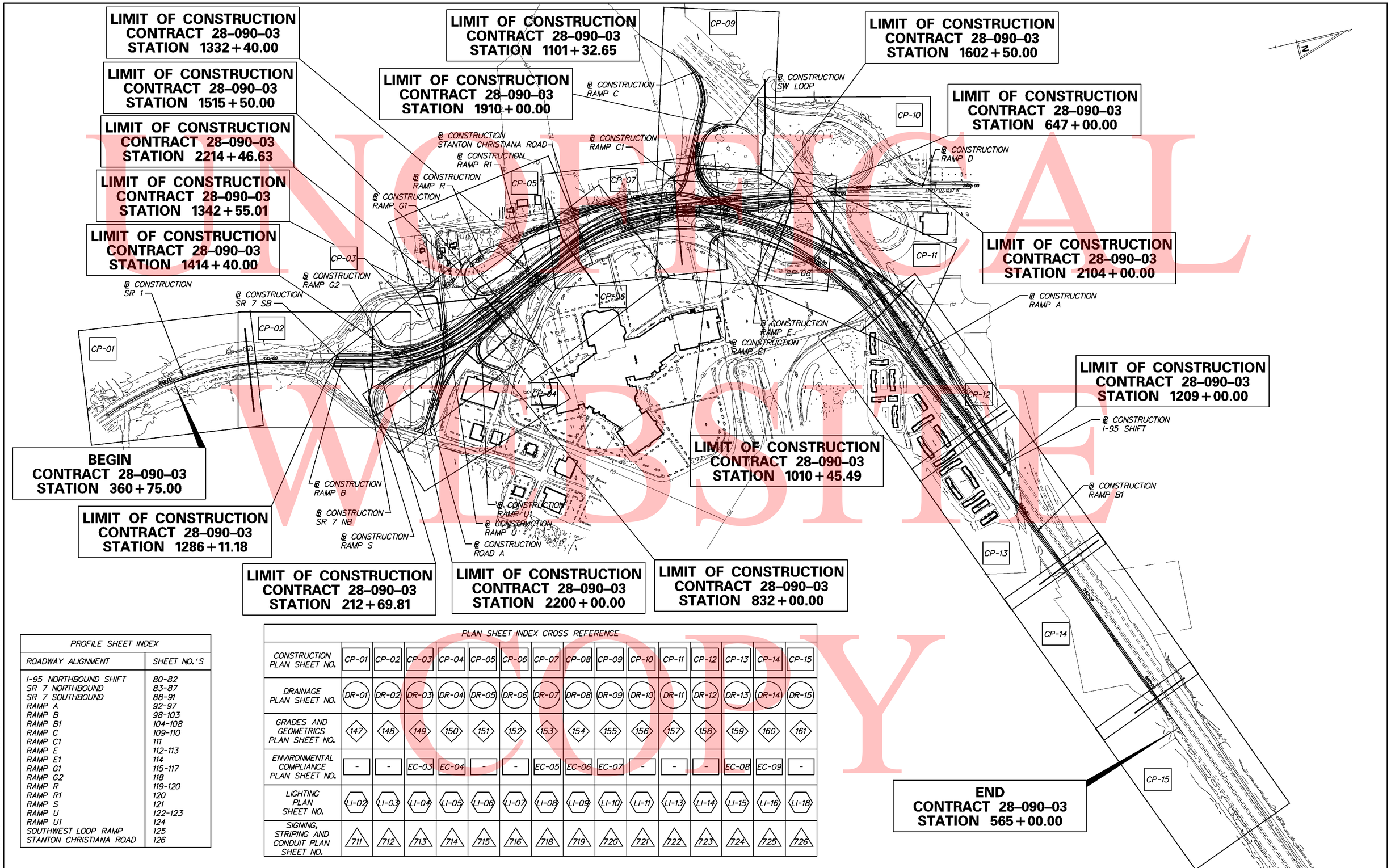

PROFILE SHEET INDEX	
ROADWAY ALIGNMENT	SHEET NO.'S
I-95 NORTHBOUND SHIFT	80-82
SR 7 NORTHBOUND	83-87
SR 7 SOUTHBOUND	88-91
RAMP A	92-97
RAMP B	98-103
RAMP B1	104-108
RAMP C	109-110
RAMP C1	111
RAMP E	112-113
RAMP E1	114
RAMP G1	115-117
RAMP G2	118
RAMP R	119-120
RAMP R1	120
RAMP S	121
RAMP U	122-123
RAMP U1	124
SOUTHWEST LOOP RAMP	125
STANTON CHRISTIANA ROAD	126

PLAN SHEET INDEX CROSS REFERENCE

CONSTRUCTION PLAN SHEET NO.	CP-01	CP-02	CP-03	CP-04	CP-05	CP-06	CP-07	CP-08	CP-09	CP-10	CP-11	CP-12	CP-13	CP-14	CP-15
DRAINAGE PLAN SHEET NO.	DR-01	DR-02	DR-03	DR-04	DR-05	DR-06	DR-07	DR-08	DR-09	DR-10	DR-11	DR-12	DR-13	DR-14	DR-15
GRADES AND GEOMETRICS PLAN SHEET NO.	147	148	149	150	151	152	153	154	155	156	157	158	159	160	161
ENVIRONMENTAL COMPLIANCE PLAN SHEET NO.	-	-	EC-03	EC-04	-	-	EC-05	EC-06	EC-07	-	-	-	EC-08	EC-09	-
LIGHTING PLAN SHEET NO.	LI-02	LI-03	LI-04	LI-05	LI-06	LI-07	LI-08	LI-09	LI-10	LI-11	LI-13	LI-14	LI-15	LI-16	LI-18
SIGNING, STRIPING AND CONDUIT PLAN SHEET NO.	711	712	713	714	715	716	718	719	720	721	722	723	724	725	726

UNOFFICIAL WEBSITE COPY

DELAWARE DEPARTMENT OF TRANSPORTATION

ADDENDUMS / REVISIONS

SCALE 0 400 800 1200 FEET

SR1 / I-95 INTERCHANGE

CONTRACT	BRIDGE NO.
28-090-03	DESIGNED BY:
COUNTY	
NEW CASTLE	CHECKED BY:

PLAN SHEET INDEX

SHEET NO. 2 TOTAL SHTS. 803

7/30/2010 10:10:06 AM
M:\PROJECTS\2003\03059_DELTRNPK\SRIMALL\CADD\2809003\PLANS\IS01_SR1.DGN

EXISTING SYMBOLS

DRAINAGE	
	DITCH OR STREAM CENTERLINE
	DIRECTIONAL STREAM FLOW ARROW
C.B.	DRAINAGE CATCH BASIN
J.B.	DRAINAGE JUNCTION BOX
D	DRAINAGE MANHOLE
SIZE/TYPE LABEL	DRAINAGE PIPE AND FLOW ARROW
	DRAINAGE PIPE HEADWALL
	RIPRAP - AREA FEATURE
	RIPRAP - LINEAR FEATURE

MANMADE ROADSIDE FEATURES	
(TYPE LABEL)	CURB
(TYPE LABEL)	CURB AND GUTTER
	FENCE - CHAINLINK OR STRANDED
	FENCE - STOCKADE OR SPLIT RAIL
FP	FLAG POLE
	GUARDRAIL - STEEL BEAM
	GUARDRAIL - WIRE ROPE
LAMP	LAMP AND POST - RESIDENTIAL
MB	MAILBOX
PM	PARKING METER AND POST
	PAVEMENT - FLEXIBLE
	PAVEMENT - RIGID
	PILE - BRIDGE
	PILLAR OR MISCELLANEOUS POST
	TRAFFIC SIGN AND POST
	WALL - BRICK OR BLOCK
	WALL - STONE

NATURAL ROADSIDE FEATURES	
	GRASS LAWN
	HEDGEROW OR THICKET
	MARSH BOUNDARY LINE
	TREE - CONIFEROUS
	TREE - DECIDUOUS
	TREE STUMP
	SHRUBBERY
WL	DELINEATED WETLAND BOUNDARY LINE
	WOODS LINE BOUNDARY

SURVEY CONTROL & MONUMENTATION	
B.M.	SURVEY BENCHMARK LOCATION
T.P.	SURVEY TIE POINT LOCATION
	SURVEY TRAVERSE POINT
	POINT OF CURVATURE OR TANGENCY
	POINT OF INTERSECTING TANGENTS
C.M.	PROPERTY MARKER - CONCRETE MON.
I.P.	PROPERTY MARKER - IRON PIPE

UTILITY	
	SOIL BORING LOCATION
	UTILITY TEST HOLE LOCATION
TV	CABLE TV DISTRIBUTION BOX
E	ELECTRIC MANHOLE
E	ELECTRIC TRANSFORMER
	POLE MOUNTED LUMINAIRE
G	GAS MANHOLE
G.M.	GAS METER
G.V.	GAS VALVE
G.P.	GAS PUMP - SERVICE STATION
	RAILROAD TRACKS
S	SANITARY SEWER MANHOLE
S.V.	SANITARY SEWER VALVE
VENT	SANITARY SEWER VENT OR CLEANOUT
S.D.F.	SEPTIC DRAIN FIELD
B	TELEPHONE BOOTH
T	TELEPHONE MANHOLE
T	TELEPHONE TEST POINT
J.W.	TRAFFIC - CONDUIT JUNCTION WELL
	TRAFFIC - LIGHT POLE AND BASE
	TRAFFIC - PEDESTRIAN POLE & BASE
	TRAFFIC - SIGNAL CABINET & BASE
	TRAFFIC - SIGNAL POLE AND BASE
U	UTILITY BOX
	UTILITY POLE GUY WIRE ANCHOR
	UTILITY POLE
F.H.	WATER - FIRE HYDRANT
W.M.	WATER METER
W.V.	WATER VALVE
WELL	WELL HEAD

UTILITY COMPANY FACILITIES	
AD-COM	ADESTA COMMUNICATIONS
AW	ARTESIAN WATER
COM	COMCAST
DOT-COMM	DELDOT COMMUNICATIONS & TRAFFIC
DOT-E	DELDOT ELECTRIC
DPE	DELMARVA POWER ELECTRIC
DPG	DELMARVA POWER GAS
NCC	NEW CASTLE COUNTY SANITARY SEWER
UW	UNITED WATER
UNK-E	UNKNOWN ELECTRIC UTILITY
UNK	UNKNOWN UTILITY
VER	VERIZON

PROPOSED SYMBOLS

CONSTRUCTION	
	CONCRETE SAFETY BARRIER - PERMANENT
BFS	BIOFILTRATION SWALE
	BUTT JOINT
100+00	CONSTRUCTION BASELINE
	CURB, TYPE 1 & TYPE 3
	CURB, TYPE 2
	CURB & GUTTER, TYPE 1
	CURB & GUTTER, TYPE 2
	CURB & GUTTER, TYPE 3
	CURB & GUTTER, TYPE 4
CZ	CLEAR ZONE
	DRAINAGE INLET
	DITCH
	FENCE - METAL
	FENCE - WOOD
	FLARED END SECTION
	GUARDRAIL, TYPES 1 & 3
	GUARDRAIL, TYPE 2
	GUARDRAIL END TREATMENT - PARALLEL
	GUARDRAIL END TREATMENT - PARABOLIC
HC	HORIZONTAL CLEARANCE
	JUNCTION BOX - DRAINAGE
LOC	LIMIT OF CONSTRUCTION
	MANHOLE
	PAVEMENT PATCH
	PIPE & DIRECTIONAL FLOW ARROW
	RIPRAP
	P.C.C. SIDEWALK @ 4"
	P.C.C. SIDEWALK @ 6"
	UNDERDRAIN
	UNDERDRAIN OUTLET

CONSTRUCTION PHASING SYMBOLS	
	BARRICADE, TYPE 3
	CONCRETE SAFETY BARRIER - PORTABLE
	CONSTRUCTION WARNING SIGN LOCATION
END ROAD WORK	CONSTRUCTION WARNING SIGN
	CRASH CUSHION ARRAY
	DRUM - TRAFFIC CONTROL
	PHASING TRAFFIC FLOW ARROW

LANDSCAPING	
	SHRUBBERY
	CONIFEROUS TREE
	DECIDUOUS TREE

EROSION & SEDIMENT CONTROL	
DWB	DEWATERING BASIN
	EROSION CONTROL BLANKET
ED	EARTH DIKE
	INLET SEDIMENT CONTROL
	PERIMETER DIKE/SWALE
PST	PORTABLE SEDIMENT TANK
RSF	REINFORCED SILT FENCE
SBD	SANDBAG DIKE
SB	SANDBAG DIVERSION
	STONE CHECK DAM
SCE	STABILIZED CONSTRUCTION ENTRANCE
SF	SILT FENCE
SP-1	SUMP PIT, TYPE 1
SP-2	SUMP PIT, TYPE 2
ST	SEDIMENT TRAP
ST	SEDIMENT TRAP WITH INLET AS OUTLET
ST	SEDIMENT TRAP PIPE OUTLET
SW	STILLING WELL
	TEMPORARY SWALE
TSD	TEMPORARY SLOPE DRAIN

IDENTIFIERS	
A/C	ADJUST BY CONTRACTOR
A/O	ADJUST BY OTHERS
B	CONCRETE SAFETY BARRIER
C	CURB OR CURB & GUTTER
C/JB	CONVERT TO JUNCTION BOX
C/MH	CONVERT TO DRAINAGE MANHOLE
C/O	CURB OPENING
CR	CURB RAMP / TYPE
CR-W	CURB RAMP / TYPE - WITHOUT SIDEWALK SURFACE DETECTABLE WARNING SYSTEM
DI	DRAINAGE INLET
DND	DO NOT DISTURB
FES	FLARED END SECTION
FS	FILTRATION STRUCTURE
GR	GUARDRAIL
JB	JUNCTION BOX
LS	LANDSCAPE PLANTINGS
MH	MANHOLE
M	MONUMENT - RIGHT-OF-WAY
P	PIPE
RL/C	RELOCATE BY CONTRACTOR
RL/O	RELOCATE BY OTHERS
RM/C	REMOVE BY CONTRACTOR
RM/O	REMOVE BY OTHERS
ST	SEDIMENT TRAP
SF	SILT FENCE
UD	UNDERDRAIN

PAVEMENT SECTION(S)	
	OVERLAY PAVEMENT - SEE TYPICAL SECTIONS FOR MATERIALS AND DEPTHS
	RECONSTRUCTED PAVEMENT - SEE TYPICAL SECTIONS FOR MATERIALS AND DEPTHS
	DRIVEWAY AND ENTRANCE PAVEMENT - SEE TYPICAL SECTIONS FOR MATERIALS AND DEPTHS

RIGHT-OF-WAY SYMBOLS	
	PROPOSED RIGHT-OF-WAY MONUMENT
PL	EXISTING PROPERTY LINE
EASEMENT TYPE	EXISTING EASEMENT
	EXISTING RIGHT-OF-WAY
DA	PROPOSED DENIAL OF ACCESS
PE	PROPOSED PERMANENT EASEMENT
R/W	PROPOSED RIGHT-OF-WAY
R/W-DA	PROPOSED R/W & DENIAL OF ACCESS
TCE	TEMPORARY CONSTRUCTION EASEMENT
100+00	PROPOSED RIGHT-OF-WAY BASELINE
100+00	HISTORIC RIGHT-OF-WAY BASELINE

TRAFFIC	
ITMS-CON	ITMS CONDUIT
SIG-CON	SIGNAL CONDUIT
	CONDUIT JUNCTION WELL
	LUMINAIRE
	PAVEMENT MARKINGS
	PAVEMENT STRIPING
	TRAFFIC SIGN

MISCELLANEOUS	
	REMOVAL OF EXISTING PAVEMENT
CSF	CONSTRUCTION SAFETY FENCE
	PORTABLE IMPACT ATTENUATOR
OHW/WL	ORDINARY HIGH WATER / WETLAND
OHW	ORDINARY HIGH WATER
AB	ABANDON BY CONTRACTOR
HW	HEADWALL

UNOFFICIAL WEBSITE COPY

11/9/2010 9:07:29 AM
M:\PROJECTS\2003\03059_DELTRNPK\SR1MALL\CADD\2809003\PLANS\LG01_SR1.DGN

DELAWARE DEPARTMENT OF TRANSPORTATION

ADDENDUMS / REVISIONS

NOT TO SCALE

SR1 / I-95 INTERCHANGE

CONTRACT	BRIDGE NO.	
28-090-03	DESIGNED BY:	
COUNTY		
NEW CASTLE	CHECKED BY:	

LEGEND

SHEET NO.
3
TOTAL SHTS.
803

GENERAL NOTES

1. THIS PROJECT IS TO BE CONSTRUCTED IN ACCORDANCE WITH THE DELAWARE DEPARTMENT OF TRANSPORTATION "STANDARD SPECIFICATIONS", DATED AUGUST 2001 AND THE DELAWARE DEPARTMENT OF TRANSPORTATION "STANDARD CONSTRUCTION DETAILS", DATED 2001, INCLUDING ALL REVISIONS UP TO THE DATE OF ADVERTISEMENT.

2. THE CONTRACTOR SHALL GIVE TWO (2) WEEKS NOTICE TO THE PROPERTY OWNER WHEN ANY FIXTURE, SHRUB OR OTHER OBJECT MUST BE REMOVED FROM THE RIGHT OF WAY OR EASEMENT AREA. IF THE OWNER HAS NOT ATTEMPTED TO SALVAGE THIS PROPERTY, THE CONTRACTOR SHALL REMOVE IT WITHOUT OBLIGATION. COMPENSATION SHALL BE INCIDENTAL TO THE CONTRACT.

3. THE ENDS OF ALL CURBS SHALL BE DEPRESSED FLUSH WITH THE PAVEMENT AT A RATIO OF TWELVE TO ONE (12:1) UNLESS OTHERWISE DIRECTED BY THE ENGINEER.

4. THE CONTRACTOR SHALL PROVIDE AND INSTALL PVC SLEEVES (4" INSIDE MINIMUM DIAMETER, 6" INSIDE MAXIMUM DIAMETER) IN PROPOSED CONCRETE SIDEWALKS, ISLANDS, AND MEDIANS FOR FUTURE TRAFFIC SIGN POSTS AS DIRECTED BY THE ENGINEER. THE LOWER END OF THE SLEEVE SHALL SIT ON THE TOP OF THE SUBBASE MATERIAL. THE COST SHALL BE INCIDENTAL TO THE CONTRACT.

5. STAGING AREAS - PROPER EROSION AND SEDIMENT CONTROL MEASURES AS DETERMINED BY THE ENGINEER SHALL BE INSTALLED IN ALL STAGING AREAS. ALL AREAS USED BY THE CONTRACTOR FOR STAGING OPERATIONS SHALL BE FULLY RESTORED BY THE CONTRACTOR UPON COMPLETION OF THE CONTRACT. IF THE STAGING AREA IS PAVED, IT SHALL BE RESTORED TO ITS ORIGINAL CONDITION. IF THE AREA IS UNPAVED, IT SHALL BE RE-GRADED, TOPSOILED, SEEDED AND MULCHED IN ACCORDANCE WITH DELAWARE STANDARD SPECIFICATIONS 732, 734 AND 735, FOR TOPSOIL, SEED AND MULCH RESPECTIVELY, TO THE SATISFACTION OF THE ENGINEER. THE SEED SHALL ADHERE TO THE SPECIFICATIONS OF SECTION 734 FOR PERMANENT GRASS SEEDING - DRY GROUND. ALL COSTS ASSOCIATED WITH RESTORATION OF THE STAGING AREA SHALL BE AT THE CONTRACTOR'S EXPENSE. IF THE ENGINEER DETERMINES THAT A SATISFACTORY STAND OF GRASS DOES NOT EXIST AT THE TIME OF FINAL INSPECTION, ALL COSTS ASSOCIATED WITH REESTABLISHING A SATISFACTORY STAND OF GRASS SHALL BE AT THE CONTRACTOR'S EXPENSE.

6. SITE REVIEWER - AN EROSION CONTROL SITE REVIEWER SHALL BE A PERSON FROM THE CONTRACTOR'S STAFF ASSIGNED TO EROSION AND SEDIMENT CONTROL IMPLEMENTATION AND MAINTENANCE AND SHALL BE REQUIRED ON SPECIFIC PROJECTS. THE NAME AND DNREC CERTIFICATION NUMBER OF EACH SITE REVIEWER SO REQUIRED SHALL BE SUBMITTED TO THE DEPARTMENT AT THE TIME OF BID. THE NAME OF THE DELAWARE REGISTERED PROFESSIONAL ENGINEER PROVIDING DIRECTION AND SUPERVISION OF THE SITE REVIEWER, AS REQUIRED IN SECTION 12.3 OF THE DELAWARE SEDIMENT AND STORMWATER REGULATIONS, SHALL ALSO BE SUBMITTED TO THE DEPARTMENT AT THE TIME OF BID. THE SITE REVIEWER REQUIREMENTS IN EFFECT ON THIS PROJECT SHALL BE MARKED WITH AN "X" BELOW:

EROSION POTENTIAL FOR THIS PROJECT	SITE REVIEWER REQUIREMENT
( ) INSIGNIFICANT	NONE
( ) MINOR	CONTRACTOR CERTIFICATION COURSE TRAINING ONLY, AS DEFINED IN SECTION 13 OF THE DELAWARE SEDIMENT AND STORMWATER REGULATIONS.
( ) MEDIUM	AT THE TIME OF BID OF THE CONTRACT, EITHER THE SUPERINTENDENT OR A SEPARATE INDIVIDUAL FROM THE CONTRACTOR'S STAFF SHALL BE A CERTIFIED CONSTRUCTION REVIEWER (CCR), AS DEFINED IN SECTION 12 OF THE DELAWARE SEDIMENT AND STORMWATER REGULATIONS.
(X) MAJOR	SUPERINTENDENT AND AN INDIVIDUAL FROM CONTRACTOR'S STAFF SHALL BE CCR. ONE INDIVIDUAL FROM THE CONTRACTOR'S STAFF MUST BE A CCR AT THE TIME OF BID OF THE CONTRACT. THE SUPERINTENDENT MUST BECOME A CCR WITHIN ONE YEAR AFTER THE AWARD OF CONTRACT.

7. ELECTRONIC PROJECT FILES THAT WILL BE MADE AVAILABLE TO THE CONTRACTOR INCLUDE:

( )	NONE
(X)	ASCII DATA FILES WITH COORDINATES AND ELEVATIONS FOR PROPOSED POINTS AS SELECTED BY THE ENGINEER.
(X)	RASTER FILES, IN .CAL FILE FORMAT, FOR ALL PLAN SHEETS.
( )	EXISTING DIGITAL TERRAIN MODEL, IN .DTM FILE FORMAT, COMPATIBLE WITH SOFTWARE CURRENTLY USED BY DELDOT.
( )	PROPOSED DIGITAL TERRAIN MODEL, IN .DTM FILE FORMAT, COMPATIBLE WITH SOFTWARE CURRENTLY USED BY DELDOT.
( )	DESIGN FILE, IN .DGN FILE FORMAT, CONTAINING ONLY THE PROPOSED 3D TRIANGLES OF THE PROPOSED DIGITAL TERRAIN MODEL (DTM).

8. AMERICAN TRAFFIC SAFETY SERVICES ASSOCIATION (ATSSA) CERTIFIED TRAFFIC CONTROL SUPERVISOR REQUIREMENT FOR THIS PROJECT.

( )	THE CONTRACTOR SHALL NOT BE REQUIRED TO HAVE AN ATSSA SUPERVISOR ASSIGNED TO THIS PROJECT.
( )	THE CONTRACTOR SHALL HAVE AN ATSSA SUPERVISOR ASSIGNED TO THIS PROJECT. THE CONTRACTOR'S GENERAL SUPERINTENDENT FOR THIS PROJECT OR ANOTHER ATSSA CERTIFIED MEMBER OF THE CONTRACTOR'S PROJECT STAFF MAY BE THE ATSSA SUPERVISOR.
(X)	THE CONTRACTOR SHALL HAVE AN ATSSA SUPERVISOR ASSIGNED TO THIS PROJECT. THE ATSSA SUPERVISOR'S SOLE JOB SHALL BE SUPERVISION OF THE INSTALLATION, OPERATION AND MAINTENANCE OF TRAFFIC CONTROL DEVICES FOR THIS PROJECT. THE CONTRACTOR'S GENERAL SUPERINTENDENT FOR THIS PROJECT SHALL NOT BE THE ATSSA SUPERVISOR.

9. THE DISTURBED AREA FOR THIS PROJECT IS 105.94 ACRES.

PROJECT NOTES

SECTION 100

1. ANY DAMAGE TO ITEMS NOTED TO BE RELOCATED OR RESET BY THE CONTRACTOR, AT THE DISCRETION OF THE ENGINEER, SHALL BE REPAIRED AND/OR REPLACED IN KIND AT THE CONTRACTOR'S EXPENSE.

2. UNLESS OTHERWISE NOTED ON THE PLANS, THE CONTRACTOR SHALL, AS PART OF HIS PROJECT SCHEDULE, SUBMIT TO THE ENGINEER AN ESTIMATE OF THE MONTHLY PAYMENTS EXPECTED TO BE RECEIVED ON THE CONTRACT. THIS WILL BE REFERENCED AS THE "MONTHLY SPEND PAYMENT CHART".

   A CHART IN MICROSOFT EXCEL, MICROSOFT WORD, OR HAND WRITTEN FORMAT WILL BE ACCEPTABLE FOR THIS PURPOSE. THE CHART SHOULD INCLUDE, AS A MINIMUM, COLUMNS FOR THE MONTH, YEAR AND ESTIMATED MONTHLY PAYMENTS. THE TOTAL OF ALL ESTIMATED MONTHLY PAYMENTS SHOULD EQUAL THE AWARDED CONTRACT TOTAL BID PRICE.

   THE ENGINEER MAY REQUEST AN UPDATED "MONTHLY SPEND PAYMENT CHART" AT HIS DISCRETION, DEPENDING ON THE ACCURACY OF THE INITIAL ESTIMATES AND ACCORDING TO THE OVERALL NEEDS OF THE DEPARTMENT.

   THE "MONTHLY SPEND PAYMENT CHART" WILL NOT BE CONSIDERED A BINDING DOCUMENT BY EITHER THE CONTRACTOR OR THE DEPARTMENT AND IS CONSIDERED SOLELY INFORMATIONAL.

   ON PROJECTS REQUIRING CPM SCHEDULES, THE CONTRACTOR MAY, BUT IS NOT REQUIRED TO, "COST LOAD" THE CPM SCHEDULE IN ORDER TO GENERATE THE MONTHLY PAYMENT ESTIMATES.

   COSTS TO PREPARE AND/OR UPDATE THE "MONTHLY SPEND PAYMENT CHART" ARE ADDRESSED AS FOLLOWS:

   A. ON CONTRACTS REQUIRING CPM SCHEDULES AND UPDATES, PREPARATION OF THE INITIAL CHART SHALL BE INCIDENTAL TO ITEM 763508. UPDATES SHALL BE INCIDENTAL TO ITEM 763509.

   B. ON CONTRACTS NOT REQUIRING CPM SCHEDULES, THE COST TO PREPARE AND UPDATE THE "MONTHLY SPEND PAYMENT CHART" SHALL BE INCLUDED IN ITEM 763000 - INITIAL EXPENSE.

SECTION 200

3. THE ENGINEER MAY REQUIRE THE CONTRACTOR TO EXCAVATE TEST PITS ALONG PROPOSED DRAINAGE RUNS, AT POINTS OF POSSIBLE UTILITY CONFLICTS, TO DETERMINE IF A CONFLICT EXISTS. ANY CONFLICTS SHALL BE COORDINATED BY THE CONTRACTOR, WITH THE ENGINEER AND THE UTILITY COMPANY INVOLVED. THE ENGINEER SHALL ULTIMATELY DETERMINE THE SOLUTION TO THE UTILITY CONFLICT. TEST HOLES SHALL BE MEASURED AND PAID FOR IN ACCORDANCE WITH ITEM 208000 - EXCAVATION AND BACKFILL FOR PIPE TRENCHES, BUT ONLY TO THE ACTUAL DEPTH EXCAVATED.

4. ITEMS TO BE REMOVED UNDER ITEM 211000 - REMOVAL OF STRUCTURES AND OBSTRUCTIONS SHALL INCLUDE, BUT NOT BE LIMITED TO THE FOLLOWING:
   - POLE BASE EXCAVATION BEYOND THE LIMITS OF THE ROADWAY TEMPLATE EXCAVATION
   - BRIDGES
   - OVERHEAD SIGN STRUCTURES
   - CANTILEVER SIGN STRUCTURES
   - BRIDGE MOUNTED SIGN STRUCTURES
   - CONCRETE HEADWALLS
   - DRAINAGE MANHOLES
   - HIGH MAST LIGHTS

5. LIMITS OF REMOVAL SHALL INCLUDE ALL ABOVE GROUND FEATURES AND FOUNDATIONS TO A POINT 3' BELOW FINISHED GRADE, UNLESS OTHERWISE NOTED IN THE PLANS. EXISTING DRAINAGE PIPES SHALL BE REMOVED WHERE SHOWN ON PLANS AND PAYMENT SHALL BE INCIDENTAL TO ITEM 202000, EXCAVATION AND EMBANKMENT. ALL EXISTING OVERHEAD, CANTILEVER, AND BRIDGE MOUNTED SIGN PANELS AND SIGN STRUCTURES SHALL BECOME THE PROPERTY OF THE CONTRACTOR FOLLOWING REMOVAL.

6. THIS PROJECT IS COVERED UNDER AN NPDES GENERAL PERMIT FOR CONSTRUCTION. UNDER THE GENERAL PERMIT, COMPLIANCE WITH DELDOT'S APPROVED SEDIMENT AND STORMWATER MANAGEMENT PLANS WILL CONSTITUTE COMPLIANCE WITH THE NPDES INDUSTRIAL PERMITTING REQUIREMENTS FOR THIS CONSTRUCTION PROJECT. A COPY OF THE NPDES GENERAL PERMIT AND NOI IS KEPT ON FILE IN EACH OF THE CONSTRUCTION OFFICES AND THE DEPARTMENT'S TEAM SUPPORT SECTION. A COPY OF THE GENERAL PERMIT OR THE NOI CAN BE OBTAINED UPON REQUEST FROM EITHER THE DEPARTMENT'S STORMWATER ENGINEER OR THE APPROPRIATE CONSTRUCTION ENGINEER.

7. ALL EXISTING DRAINAGE SYSTEMS SHOWN WITHIN THE RIGHT-OF-WAY ARE TO REMAIN OPERATIONAL UNLESS DENOTED FOR ABANDONMENT AT THE END OF THIS PROJECT'S CONSTRUCTION. ALL EXISTING DRAINAGE STRUCTURES AND PIPES WITHIN THE PROJECT LIMITS SHALL BE CLEANED OF ALL SEDIMENT AND DEBRIS IN COMPLIANCE WITH DNREC GUIDELINES AS DIRECTED BY THE ENGINEER. COST TO BE INCLUDED IN ITEM 250000, SEDIMENT REMOVAL.

SECTION 300

8. A. THE CONTRACTOR MAY ELECT TO USE ANY OF THE FOLLOWING MATERIALS TO MEET THE REQUIREMENTS OF ITEM 302007 - GRADED AGGREGATE BASE COURSE, TYPE 'B':
   a. CRUSHED STONE (PER STANDARD SPECIFICATION 821)
   b. CRUSHED CONCRETE (PER STANDARD SPECIFICATION 821)
   c. HOT-MIX MILLINGS (PER SPECIAL PROVISION 302514 MILLED HOT-MIX BASE COURSE)

   THE CONTRACTOR WILL NOT BE ALLOWED TO MIX DIFFERENT MATERIALS (OR SIMILAR MATERIALS FROM DIFFERENT SOURCES) TO MEET THE REQUIREMENTS OF ITEM 302007 - GRADED AGGREGATE BASE COURSE, TYPE 'B'.

   ALL OF THE ABOVE LISTED MATERIALS ARE PERMITTED FOR USE ON THE JOB, PROVIDED THEY ARE SEPARATED INTO APPROVED AREAS. EACH AREA OF BASE COURSE MUST BE CONSTRUCTED USING MATERIALS FROM A SINGULAR SOURCE, FULL DEPTH, IN ORDER THAT PROPER TESTING MAY BE ACCOMPLISHED. THE CONTRACTOR AND DELDOT'S PROJECT ENGINEER SHALL AGREE ON THE LIMITS OF EACH SOURCE OF MATERIAL PRIOR TO PLACEMENT.

   B. THE QUANTITY USED FOR BASE OF EACH OF THE ABOVE LISTED MATERIALS WILL BE THE CONTRACTOR'S CHOICE, WITH THE TOTAL MEETING THE ADVERTISED QUANTITY OF ITEM 302007 - GRADED AGGREGATE BASE COURSE, TYPE 'B'.

   C. THE CONTRACTOR MAY ALSO ELECT TO RECYCLE MILLINGS FOR USE IN HOT-MIX AS PERMITTED BY THE STANDARD SPECIFICATIONS. THE CHOICE OF THE QUANTITY OF MILLINGS USED FOR THIS PURPOSE, OR FOR BASE COURSE, LIES WITH THE CONTRACTOR. ALL MILLING MATERIAL SHALL BECOME PROPERTY OF THE CONTRACTOR.

   D. HOT-MIX MILLINGS MAY BE GENERATED FROM THE FOLLOWING SOURCES:
   a. MATERIAL MADE AVAILABLE WHEN MILLED ON THIS CONTRACT UNDER ITEM 760507.
   b. MATERIAL MILLED ON THIS CONTRACT AT THE CONTRACTOR'S CHOICE UNDER ITEM 202000.
   c. MILLED MATERIAL FURNISHED ON THE JOB FROM THE CONTRACTOR'S YARD OR OTHER OUTSIDE SOURCE.
   ALL MILLED MATERIALS SHALL MEET THE MATERIAL REQUIREMENTS OF ITEM 302514 - MILLED HOT-MIX BASE COURSE.

   E. PAYMENT CLARIFICATION:
   a. SHOULD THE CONTRACTOR ELECT TO MILL PORTIONS OF HOT-MIX SHOWN ON THE PLANS TO BE REMOVED UNDER ITEM 202000 - EXCAVATION AND EMBANKMENT THE COST OF MILLING THIS HOT-MIX WILL BE PAID AS ITEM 202000 - EXCAVATION AND EMBANKMENT. THE MILLINGS GENERATED MAY BE RECYCLED INTO HOT-MIX, UTILIZED FOR BASE COURSE, OR DISPOSED OF TO AN APPROVED SITE. HAULING COSTS FOR DISPOSAL AND/OR RECYCLING ARE INCIDENTAL TO ITEM 202000 - EXCAVATION AND EMBANKMENT.

   b. MILLINGS GENERATED UNDER ITEM 760507 - PROFILE MILLING, HOT-MIX MAY BE RECYCLED INTO HOT-MIX, UTILIZED FOR BASE COURSE OR DISPOSED OF BY THE CONTRACTOR TO AN APPROVED SITE. NO SEPARATE PAYMENT WILL BE MADE FOR TRANSPORTING MILLINGS ON SITE OR TO AN APPROVED DISPOSAL SITE.

   c. SHOULD THE CONTRACTOR ELECT TO TEMPORARILY STOCKPILE MILLINGS ON THE JOB SITE FOR LATER USE, ALL COSTS FOR STOCKPILING AND SUBSEQUENT REHANDLING SHALL BE INCIDENTAL TO ITEM 202000 - EXCAVATION AND EMBANKMENT.

   d. MILLINGS USED FOR BASE COURSE SHALL BE PLACED IN ACCORDANCE WITH THE REQUIREMENTS OF SPECIAL PROVISION 302514 - MILLED HOT-MIX BASE COURSE. NO SEPARATE PAYMENT WILL BE MADE TO FURNISH MILLINGS FROM AN OUTSIDE SOURCE OR TRANSPORT MILLINGS WITHIN THE PROJECT LIMITS. MILLINGS USED FOR BASE COURSE WILL BE PAID IN PLACE AT THE UNIT BID PRICE FOR ITEM 302007 - GRADED AGGREGATE BASE COUSRE, TYPE 'B'.

   e. ALL COSTS TO UTILIZE MILLINGS IN RECYCLED HOT-MIX WILL BE INCIDENTAL TO THE UNIT PRICE BID FOR THE HOT-MIX ITEM USING THE RECYCLED MATERIAL.

   f. SPECIAL PROVISION 302514 - MILLED HOT-MIX BASE COURSE IS PROVIDED TO SPECIFY THE MEANS OF LAY DOWN AND COMPACTION AS WELL AS THE MATERIAL REQUIREMENTS FOR MILLINGS USED AS BASE COURSE. ALL COSTS TO BRING THE MILLINGS INTO COMPLIANCE WITH THE REQUIREMENTS OF ITEM - 302514 MILLED HOT-MIX BASE COURSE ARE INCIDENTAL TO ITEM 302007 - GRADED AGGREGATE BASE COURSE, TYPE 'B'. NO PAYMENT WILL BE MADE FOR ITEM 302514 - MILLED HOT-MIX BASE COURSE. THE QUANTITY OF MILLINGS USED FOR BASE COURSE WILL BE PAID FOR UNDER ITEM 302007 - GRADED AGGREGATE BASE COURSE.

SECTION 500

9. ALL JOINTS IN THE PCC PAVEMENT SHALL BE INSTALLED PER THE STANDARD CONSTRUCTION DETAILS. THE COST OF DOWEL BARS AND TIE BARS SHALL BE INCLUDED IN ITEM 501006, PCC PAVEMENT 12".

SECTION 600

10. THE DEPARTMENT AND THE CONTRACTOR SHALL INSPECT ALL EXISTING PIPES AND DRAINAGE STRUCTURES TO BE USED IN THE FINAL DRAINAGE SYSTEM AND AGREE ON THE CONDITION PRIOR TO THE START OF CONSTRUCTION. EXISTING PIPES AND DRAINAGE STRUCTURES DAMAGED DUE TO CONTRACTOR OPERATIONS SHALL BE REPAIRED OR REPLACED IN-KIND AT THE CONTRACTOR'S EXPENSE. THE CONTRACTOR IS REQUIRED TO VIDEO INSPECT NEW PIPE RUNS TO CONFIRM CONDITION PRIOR TO ACCEPTANCE. PAYMENT FOR VIDEO INSPECTION OF NEW PIPES WILL BE MADE UNDER ITEM 612529 - VIDEO INSPECTION.

SECTION 700

11. IN AREAS WHERE PROPOSED CURB MEETS EXISTING CURB AND THE TWO CURB TYPES ARE NOT SIMILAR, THE PROPOSED CURB SHALL BE TRANSITIONED IN 10 LINEAR FEET, UNLESS OTHERWISE DIRECTED BY THE ENGINEER. PAYMENT FOR THIS WORK, INCLUDING SAW CUTTING EXISTING CURB SHALL BE INCIDENTAL TO THE PROPOSED CURB ITEM.

12. WHERE PROPOSED CONCRETE SIDEWALK IS CONSTRUCTED TO MEET EXISTING SIDEWALK, THE EXISTING SIDEWALK SHALL BE SAWCUT AT THE TIE-IN POINT OR MEET THE NEAREST EXISTING SIDEWALK JOINT. ALL SAW CUTTING SHALL BE FULL DEPTH, UNLESS OTHERWISE NOTED ON THE PLANS OR DIRECTED BY THE ENGINEER AND SHALL BE PAID FOR UNDER ITEM 762002 - SAWCUTTING, CONCRETE, FULL DEPTH.

13. PORTLAND CEMENT CONCRETE CHANNELIZING ISLANDS THAT ARE LESS THAN 75 SQ FT MAY BE POURED MONOLITHICALLY, OR AS DIRECTED BY THE ENGINEER.

14. STATION AND ELEVATION DATA GIVEN FOR DRAINAGE STRUCTURES ARE TO BE APPLIED TO THE CENTER OF THE GRATE FOR INLETS, AND TO THE CENTER OF THE STRUCTURE FOR JUNCTION BOXES AND MANHOLES.

15. DRAINAGE INLET GRATES ADJACENT TO THE ROAD, WITHIN THE PROJECT LIMITS, WHICH ARE NOT TYPE 1 SHALL BE REPLACED. THE ACTUAL LOCATIONS, THE NEED FOR ANY GRATE MODIFICATIONS OR FOR NEW FRAMES SHALL BE DETERMINED BY THE ENGINEER. ALL REPLACED GRATES/FRAMES SHALL BE DELIVERED TO THE NEAREST DISTRICT MAINTENANCE YARD WITH THE COST OF DELIVERY INCIDENTAL TO ITEM 708500 - REPLACING CATCH BASIN GRATES. FINAL PAYMENT FOR REPLACED GRATES/FRAMES SHALL NOT BE MADE UNTIL RECEIPT OF DELIVERED MATERIALS IS PRODUCED, SIGNED BY A DELDOT MAINTENANCE YARD SUPERVISOR.

16. THE NEW CASTLE COUNTY DEPARTMENT OF PUBLIC WORKS SHALL SUPPLY AND THE STATE'S CONTRACTOR SHALL INSTALL NEW SELF SEALING MANHOLE FRAMES AND COVERS ON ALL COUNTY SEWER MANHOLES, THAT ARE NOT BEING RELOCATED, WITHIN THE PROJECT LIMITS IN ACCORDANCE WITH THE COUNTY'S STANDARD SPECIFICATIONS. THE EXISTING MANHOLE FRAMES AND COVERS THAT ARE REMOVED SHALL BECOME THE PROPERTY OF THE STATE'S CONTRACTOR. PAYMENT SHALL BE INCIDENTAL TO ITEM 710506 - ADJUST AND REPAIR EXISTING SANITARY SEWER MANHOLE.

17. ALL PAVED AREAS TO BE RECONSTRUCTED OR WIDENED SHALL BE SAWCUT AT THE POINT WHERE THE NEW PAVEMENT IS TO TIE INTO THE EXISTING PAVEMENT.

18. ALL HOT-MIX SAW CUTTING SHALL BE FULL DEPTH, UNLESS OTHERWISE NOTED ON THE PLANS, OR AS DIRECTED BY THE ENGINEER.

19. WHERE ADJUSTMENTS ARE REQUIRED TO NEW DRAINAGE STRUCTURES I.E. DRAINAGE INLETS, MANHOLES, JUNCTION BOXES, ETC., FOR STAGED CONSTRUCTION, THE ADJUSTED TOPS SHALL BE CAST-IN-PLACE CONCRETE. ELEVATION ADJUSTMENTS SHALL NOT EXCEED 1'. THIS NOTE SHALL SUPERSEDE ANY REFERENCE TO STANDARD CONSTRUCTION METHODS AS REFERRED TO ON THE STANDARD CONSTRUCTION DETAIL SHEETS. CONTRACTOR SHALL SUBMIT DETAILED PLANS SHOWING SECTIONS, JOINTS, REINFORCEMENT AND OTHER PERTINENT INFORMATION FOR APPROVAL. COST SHALL BE INCIDENTAL TO THE RESPECTIVE DRAINAGE STRUCTURE.

20. ALL COSTS ASSOCIATED WITH CONNECTING PROPOSED CONDUIT TO EXISTING JUNCTION WELLS SHALL BE CONSIDERED INCIDENTAL TO THE COST OF THE CONDUIT BEING INSTALLED.

21. ALL GUARDRAIL POST STAKEOUT SHALL BE COORDINATED WITH EXISTING AND PROPOSED STORM DRAIN SYSTEMS, UNDERDRAIN OUTLET PIPES, AND UTILITIES TO AVOID DISTURBANCE OF THE UNDERGROUND FACILITY. COST SHALL BE INCIDENTAL TO THE GUARDRAIL ITEM BEING INSTALLED. ANY DAMAGE TO THESE SYSTEMS SHALL BE REPAIRED AT CONTRACTOR'S EXPENSE.

22. THE CONTRACTOR SHALL BE RESPONSIBLE FOR STAKING ALL RIGHT OF WAY AND EASEMENT LINES ACQUIRED FOR THE PROJECT'S CONSTRUCTION. COST SHALL BE INCLUDED IN ITEM 763501, CONSTRUCTION ENGINEERING.

UNOFFICIAL WEBSITE COPY

PROJECT NOTES

SECTION 700 CONTINUED

23. THE COST FOR ANY SHEETING USED FOR POLE BASE INSTALLATION SHALL BE INCIDENTAL TO THE RESPECTIVE POLE BASE ITEM.

24. THE CONTRACTOR SHALL MAINTAIN ALL MOWER ACCESSIBLE GRASS WITHIN THE LIMIT OF CONSTRUCTION BEHIND PORTABLE P.C.C. SAFETY BARRIER TO A MAXIMUM HEIGHT OF 6 INCHES UNLESS OTHERWISE DIRECTED BY THE ENGINEER. THE CONTRACTOR SHALL ANTICIPATE, BUT IS NOT LIMITED TO A MINIMUM OF 4 CUTTINGS PER YEAR. ALL COSTS ASSOCIATED WITH MAINTAINING A 6 INCH MAXIMUM GRASS HEIGHT SHALL BE PAID UNDER ITEM 736502, MOWING. MOWING OF THE REFORESTATION AREA SHALL ALSO BE PAID UNDER ITEM 736502, MOWING.

25. WHEN REMOVAL OF AN EXISTING DRAINAGE SYSTEM (PIPE OR STRUCTURE) IS REQUIRED TO INSTALL A PROPOSED DRAINAGE SYSTEM, THE COST OF THE EXISTING DRAINAGE SYSTEM REMOVAL SHALL BE INCLUDED IN THE UNIT COST BID FOR THE RESPECTIVE PROPOSED DRAINAGE PIPE OR STRUCTURE.

MISCELLANEOUS

26. THE CONTRACTOR SHALL CONTACT MICHAEL ELLER, THE CHIEF OF SCHEDULING FOR DART FIRST STATE, 14 DAYS PRIOR TO THE START OF CONSTRUCTION AT 302-576-6061.

27. CROSS SECTIONS USED IN THE PREPARATION OF THIS CONTRACT ARE AVAILABLE FROM THE DEPARTMENT.

28. RIGHT-OF-WAY PLANS FOR RIGHT-OF-WAY OR EASEMENT STAKEOUT PURPOSES ARE AVAILABLE FROM THE DEPARTMENT.

29. DELDOT WILL BE RESPONSIBLE FOR OBTAINING AND MODIFYING THE FOLLOWING PERMITS:
    - ACOE INDIVIDUAL PERMIT
    - DNREC SUBAQUEOUS LANDS PERMIT
    - DNREC WETLANDS PERMIT
    - DNREC WATER QUALITY CERTIFICATION
    - DNREC COASTAL ZONE CONSISTENCY CERTIFICATION
    - NEW CASTLE COUNTY FLOODPLAIN DEVELOPMENT APPROVAL
    - NEW CASTLE COUNTY NOISE ORDINANCE

    THE CONTRACTOR SHALL BE RESPONSIBLE FOR OBTAINING ALL OTHER PERMITS REQUIRED, FOR PURPOSES OF CONSTRUCTION FOR THE PROJECT. DIFFICULTIES IN OBTAINING THE PERMITS OR CHANGES TO PERMITS, EITHER BY DELDOT OR THE CONTRACTOR, WILL NOT JUSTIFY A DELAY IN THE CONSTRUCTION SCHEDULE OR INCREASE IN COST.

30. IT SHALL BE REQUIRED THAT, AT A MINIMUM, A CREW CONSISTING OF THREE PERSONS WITH A BACKHOE BE DEVOTED TO ADDRESSING EROSION AND SEDIMENT CONTROL ITEMS ON THE CONTRACT ON A DAILY BASIS. ADDITIONAL PERSONNEL AND OTHER TOOLS AND/OR MECHANIZED EQUIPMENT MAY BE DEEMED NECESSARY TO ADDRESS THESE ITEMS AND SHALL BE MADE AVAILABLE AS REQUIRED. THE CREW, TOOLS, AND EQUIPMENT MAY BE RELEASED OR REDUCED BY THE ENGINEER ON A DAILY BASIS ONCE IT HAS BEEN DETERMINED THAT ALL EROSION AND SEDIMENT CONTROL ITEMS HAVE BEEN ADEQUATELY ADDRESSED. IF THE NECESSARY CREW, TOOLS AND EQUIPMENT ARE NOT DEVOTED AND ACTIVELY WORKING TO ADDRESS THE NECESSARY EROSION AND SEDIMENT CONTROL ITEMS AND HAVE NOT BEEN RELEASED BY THE ENGINEER, PAYMENT MAY BE DENIED FOR ALL WORK PERFORMED DURING THE TIME PERIOD THAT THE EROSION AND SEDIMENT CONTROL ITEMS HAVE NOT BEEN ADDRESSED TO THE SATISFACTION OF THE ENGINEER. ALL COSTS ASSOCIATED WITH PROVIDING A CREW, TOOLS AND EQUIPMENT SHALL BE INCIDENTAL TO THE APPLICABLE EROSION AND SEDIMENT CONTROL ITEMS.

31. THE BASE TOPOGRAPHY IS FROM AERIAL MAPPING, WHICH HAS BEEN SUPPLEMENTED AND ADJUSTED WITH GROUND SURVEY.

32. SEE ENVIRONMENTAL COMPLIANCE PLAN FOR FURTHER RESTRICTIONS/GUIDANCE ASSOCIATED WITH THIS PROJECT.

33. PRECAST NOTE:

    THE USE OF PRECAST STRUCTURAL ELEMENTS WILL NOT BE ALLOWED BY THE DEPARTMENT FOR THE FOLLOWING STRUCTURAL ELEMENTS: INTEGRAL PIER CAPS, BRIDGE BARRIER, BARRIER ON MOMENT SLABS, BARRIER ON APPROACH SLABS AND BARRIER ON PCC PAVEMENT. FOR OTHER ELEMENTS, AN ALTERNATE PRECAST DESIGN MUST BE EQUIVALENT TO THE DESIGN SHOWN ON THE PLANS AND MEET THE DESIGN CRITERIA SET FORTH BY AASHTO LRFD BRIDGE DESIGN SPECIFICATIONS AND DELDOT BRIDGE DESIGN MANUAL. THE DEPARTMENT WILL REQUIRE THE SUBMISSION OF DESIGN CALCULATIONS AND DRAWINGS PREPARED BY A PROFESSIONAL ENGINEER LICENSED IN THE STATE OF DELAWARE.

    THE DEPARTMENT HAS THE RIGHT TO REJECT THE USE OF A PRECAST ELEMENT IF IT DOES NOT MEET THE REQUIREMENTS OF THE CONTRACT PLANS AND SPECIFICATIONS. THERE WILL BE NO ADDITIONAL COMPENSATION OR EXTENSION OF TIME AND COST FOR THE DEVELOPMENT, APPROVAL, FABRICATION, DELIVERY, INSTALLATION, AND OR REJECTION OF ANY PRECAST ALTERNATIVE. THE CONTRACTOR WILL ASSUME THE RISK ASSOCIATED WITH THE ALTERNATE PRECAST STRUCTURAL ELEMENT.

34. THE CONTRACTOR IS ADVISED THAT OTHER ROADWAY CONTRACTS WILL BE UNDER CONSTRUCTION ADJACENT TO AND AT THE SAME TIME AS THIS PROJECT. THEREFORE, THE CONTRACTOR MUST COORDINATE CONSTRUCTION ACTIVITIES WITH DELDOT AND THESE OTHER CONTRACTORS AS APPLICABLE.

35. THE CONTRACTOR SHALL UTILIZE THE SOIL IN STOCKPILE AREAS A, B, AND C IN THE EMBANKMENTS ON THIS PROJECT, AND REGRADE AND STABILIZE THESE STOCKPILE AREAS IN ACCORDANCE WITH THE CONSTRUCTION PHASING SHEETS. FOLLOWING STABILIZATION, ALL EROSION/SEDIMENT CONTROL AND MAINTENANCE OF TRAFFIC DEVICES SHALL BE REMOVED FROM THE SOIL STOCKPILE AREAS.

EARTHWORK SUMMARY

EXCAVATION	
EXCAVATION FROM CROSS SECTIONS	269,548 C.Y.
EXCAVATION FOR PAVEMENT REMOVAL	1,500 C.Y.
EXCAVATION FROM STOCKPILE	78,769 C.Y.
EXCAVATION FOR STRUCTURES	3,415 C.Y.
MISC. EXCAVATION (DRAINAGE, POLE BASES, MSE WALL LEVELING PADS, ETC.)	20,795 C.Y.
ROCK EXCAVATION FOR ROADWAY AND TRENCHES	0 C.Y.
TOPSOIL STRIPPING	140 C.Y.
TOTAL EXCAVATION	374,167 C.Y.
EXCAVATION AVAILABLE FOR EMBANKMENT	
EXCAVATION MEETING BORROW TYPE 'A'	0 C.Y.
EXCAVATION MEETING BORROW TYPE 'B'	0 C.Y.
EXCAVATION MEETING BORROW TYPE 'F' (COMPACTED)	233,202 C.Y.
EXCAVATION MEETING TOPSOIL	1,821 C.Y.
EMBANKMENT REQUIREMENTS	
BORROW TYPE 'A' REQUIRED (INCLUDING UNDERCUT)	1,475 C.Y.
BORROW TYPE 'B' REQUIRED (INCLUDING UNDERCUT)	1,500 C.Y.
BORROW TYPE 'F' REQUIRED	316,315 C.Y.
TOPSOIL REQUIRED	16,172 C.Y.
MATERIAL BALANCE ("+"= EXCESS, "-"= NEED)	
BORROW TYPE 'A'	-1,475 C.Y.
BORROW TYPE 'B'	-1,500 C.Y.
BORROW TYPE 'F' (INCLUDES COMPACTION)	-103,892 C.Y.
TOPSOIL	-14,351 C.Y.
UNSUITABLE MATERIAL	-48,234 C.Y.

NOTES:
1) THE VALUES LISTED IN THE EARTHWORK SUMMARY ARE APPROXIMATE AND ARE NOT TO BE USED AS A BASIS OF PAYMENT. THE EARTHWORK SUMMARY IS CONSIDERED FOR INFORMATIONAL PURPOSES ONLY.

2) OTHER SOURCES OF EXCAVATION MAY INCLUDE PIPE TRENCH EXCAVATION, STRUCTURE EXCAVATION, UNDERCUT EXCAVATION, ENVIRONMENTAL SITE EXCAVATION, MAINTENANCE OF TRAFFIC EXCAVATION, ETC.

3) UNSUITABLE MATERIALS INCLUDE UNDERCUT SOILS, BITUMINOUS PAVEMENT, ETC.

DESIGN SPEED TABLE

ROADWAY	DESIGN SPEED
SR7/SR1	60 MPH
I-95	60 MPH
RAMP A	55 MPH
RAMP B	55 MPH
RAMP B1	60 MPH
RAMP C	35 MPH
RAMP C1	30 MPH
RAMP E	50 MPH
RAMP E1	20 MPH
RAMP G1	50 MPH
RAMP G2	30 MPH
RAMP R	25 MPH
RAMP R1	30 MPH
RAMP S	25 MPH
RAMP U	50 MPH
RAMP U1	25 MPH
SW LOOP RAMP	30 MPH

UNOFFICIAL WEBSITE COPY

UNOFFICIAL WEBSITE COPY

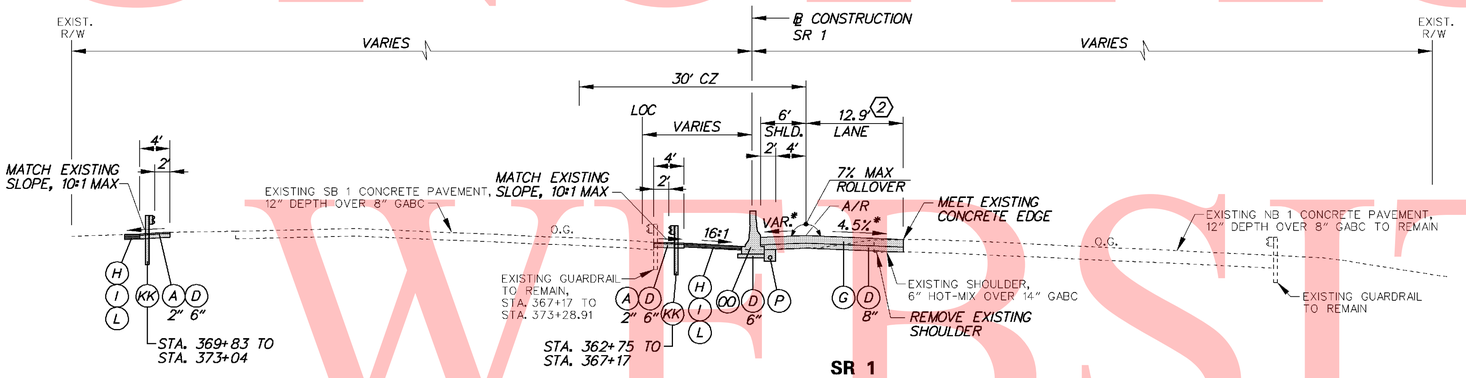

SR 1

STA. 363+00 TO STA. 373+28.91

2 STA. 363+00 TO STA. 363+80 WIDTH TAPERS 9.86' TO 12.9'

*SR 1 CROSS-SLOPES		
STA.	LT. SHLD.	LANE
369+91.69	-2.50%	-4.50%
370+00	-2.60%	-4.40%
370+31.69	-3.00%	-4.00%
370+50	-3.23%	-3.77%
371+00	-3.85%	-3.15%
371+11.69	-4.00%	-3.00%
371+50	-4.00%	-2.52%
371+91.69	-4.00%	-2.00%
372+00	-4.00%	-2.00%
372+35	-4.00%	-2.00%
372+50	-3.00%	-2.00%
372+95	0.00%	-2.00%
373+00	0.33%	-2.00%
373+25	2.00%	-2.00%
373+28.91	2.00%	-2.00%

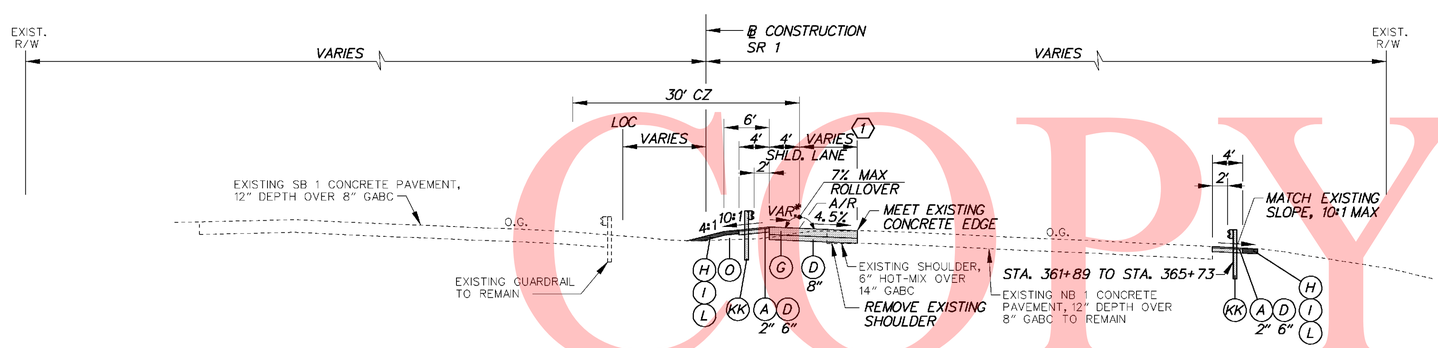

SR 1

STA. 360+75.57 TO STA. 363+00

1 STA. 360+75.57 TO STA. 363+00 WIDTH TAPERS 1.5' TO 9.86'

*SR 1 CROSS-SLOPES		
STA.	LT. SHLD.	LANE
361+15	4.50%	-4.50%
361+50	2.17%	-4.50%
361+82.5	0.00%	-4.50%
362+00	-1.17%	-4.50%
362+20	-2.50%	-4.50%

LEGEND

- (A) ITEM 401708 - SUPERPAVE, TYPE C HOT-MIX, 160 GYRATIONS, PG 70-22 (NON-CARBONATE STONE)
- (B) ITEM 401654 - SUPERPAVE, TYPE B HOT-MIX, 160 GYRATIONS, PG 70-22
- (C) ITEM 401663 - SUPERPAVE, BITUMINOUS CONCRETE BASE COURSE, 160 GYRATIONS, PG 64-22
- (D) ITEM 302007 - GRADED AGGREGATE BASE COURSE, TYPE B
- (E) ITEM 401711 - SUPERPAVE, TYPE C HOT-MIX, 160 GYRATIONS, PG 76-22 (NON-CARBONATE STONE)
- (F) ITEM 401660 - SUPERPAVE, TYPE B HOT-MIX, 160 GYRATIONS, PG 76-22
- (G) ITEM 501006 - PORTLAND CEMENT CONCRETE PAVEMENT, 12"
- (H) ITEM 732002 - TOPSOIL, 6" DEPTH
- (I) ITEM 734013 - PERMANENT GRASS SEEDING, DRY GROUND
- (J) ITEM 602017 - PCC MASONRY, PARAPET, CLASS A
- (K) ITEM 735533 - SOIL RETENTION BLANKET MULCH, TYPE 3
- (L) ITEM 735534 - SOIL RETENTION BLANKET MULCH, TYPE 4
- (M) ITEM 735535 - SOIL RETENTION BLANKET MULCH, TYPE 5, UNLESS OTHERWISE NOTED, SEE DRAINAGE PLANS FOR LIMITS AND TYPE
- (N) ITEM 209001 - BORROW, TYPE A
- (O) ITEM 209006 - BORROW, TYPE F OR APPROVED PROJECT EXCAVATION
- (P) ITEM 715001 - PERFORATED PIPE UNDERDRAINS, 6"
- (Q) ITEM 760504 - RUMBLE STRIPS, HOT-MIX
- (R) ITEM 602772 - MECHANICALLY STABILIZED EARTH WALLS
- (S) ITEM 602773 - PCC MASONRY FOR MECHANICALLY STABILIZED EARTH WALLS
- (T) ITEM 720512 - PCC SAFETY BARRIER PERMANENT, SINGLE FACE
- (U) ITEM 720654 - PCC SAFETY BARRIER PERMANENT, SINGLE FACE, MODIFIED TYPE 1
- (V) ITEM 720587 - PCC SAFETY BARRIER PERMANENT, DOUBLE FACE, MODIFIED
- (W) ITEM 720655 - PCC SAFETY BARRIER PERMANENT, SINGLE FACE, MODIFIED TYPE 2
- (X) ITEM 712005 - RIPRAP, R-4
- (Y) ITEM 401665 - SUPERPAVE, TYPE C HOT-MIX, 160 GYRATIONS, PG 64-22, PATCHING
- (Z) ITEM 401666 - SUPERPAVE, TYPE B HOT-MIX, 160 GYRATIONS, PG 64-22, PATCHING
- (AA) ITEM 401667 - SUPERPAVE, BITUMINOUS CONCRETE BASE COURSE, 160 GYRATIONS, PG 64-22, PATCHING
- (BB) ITEM 302008 - GRADED AGGREGATE BASE COURSE, TYPE B, PATCHING
- (CC) ITEM 755000 - HOT-MIX, HOT LAID, BITUMINOUS CONCRETE CURB
- (DD) ITEM 701010 - PORTLAND CEMENT CONCRETE CURB, TYPE 1
- (EE) ITEM 701011 - PORTLAND CEMENT CONCRETE CURB, TYPE 2
- (FF) ITEM 701020 - INTEGRAL PORTLAND CEMENT CONCRETE CURB AND GUTTER, TYPE 1
- (GG) ITEM 701023 - INTEGRAL PORTLAND CEMENT CONCRETE CURB AND GUTTER, TYPE 4
- (HH) ITEM 701026 - PORTLAND CEMENT CONCRETE MONOLITHIC MEDIAN
- (II) ITEM 701027 - PORTLAND CEMENT CONCRETE CURB, TYPE 1 MODIFIED
- (JJ) ITEM 720658 - PCC SAFETY BARRIER PERMANENT SINGLE FACE, MODIFIED, TYPE 5
- (KK) ITEM 720050 - GALVANIZED STEEL BEAM GUARDRAIL, TYPE 1
- (LL) ITEM 760507 - PROFILE MILLING, HOT-MIX
- (MM) ITEM 720656 - PCC SAFETY BARRIER PERMANENT, SINGLE FACE, MODIFIED, TYPE 3
- (NN) ITEM 720657 - PCC SAFETY BARRIER PERMANENT, SINGLE FACE, MODIFIED, TYPE 4
- (OO) ITEM 720651 - PCC SAFETY BARRIER PERMANENT, DOUBLE FACE, BIFURCATED, TYPE 1
- (PP) ITEM 720652 - PCC SAFETY BARRIER PERMANENT, DOUBLE FACE, BIFURCATED, TYPE 2
- (RR) ITEM 401668 - SUPERPAVE, TYPE C HOT-MIX, 160 GYRATIONS, PG 64-22, WEDGE
- (SS) ITEM 401669 - SUPERPAVE, TYPE B HOT-MIX, 160 GYRATIONS, PG 64-22, WEDGE

PAVEMENT LIFT NOTE:

THE MAXIMUM LIFTS FOR THE INDIVIDUAL PAVING MATERIAL ARE AS FOLLOWS:
SUPERPAVE, TYPE C HOT-MIX - 2"
SUPERPAVE, TYPE B HOT-MIX - 3"
SUPERPAVE, BIT. CONC. BASE COURSE - 6"
GRADED AGGREGATE BASE COURSE - 8"

NOTES:

1) THE PGA IS APPLIED TO THE TOP OF THE FINAL PAVEMENT SURFACE.

10/28/2010 9:39:13 AM
M:\PROJECTS\2003\03059_DELTRNPK\SRIMALL\CADD\2809003\PLANS\TS01_SR1.DGN

DELAWARE DEPARTMENT OF TRANSPORTATION	ADDENDUMS / REVISIONS	NOT TO SCALE	SR1 / I-95 INTERCHANGE	CONTRACT 28-090-03	BRIDGE NO.	TYPICAL SECTIONS	SHEET NO. 6
				COUNTY NEW CASTLE	DESIGNED BY:		TOTAL SHTS. 803
					CHECKED BY:		

*NB 7 CROSS-SLOPES			
STA.	LT. SHLD.	LANES	RT. SHLD.
605+82.01	-6.00%	6.00%	-1.00%
606+00	-6.00%	6.00%	-0.19%
606+04.23	-6.00%	6.00%	0.00%
606+48.70	-6.00%	6.00%	2.00%

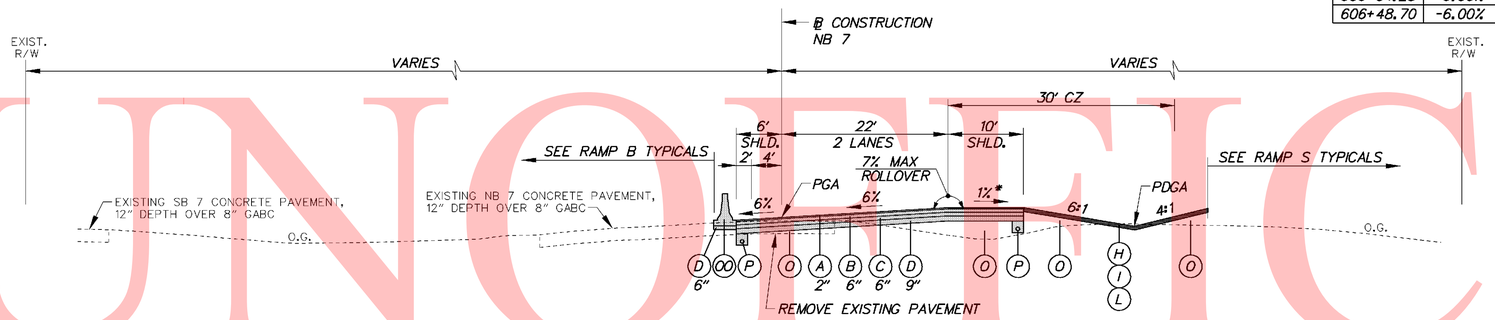

NB 7

STA. 605+69.41 TO STA. 606+48.70

*NB 7 CROSS-SLOPES			
STA.	LT. SHLD.	LANES	RT. SHLD.
603+00	-	3.81%	-3.19%
603+07.70	-	4.00%	-3.00%
603+50	-	5.06%	-1.94%
603+87.70	-	6.00%	-1.00%

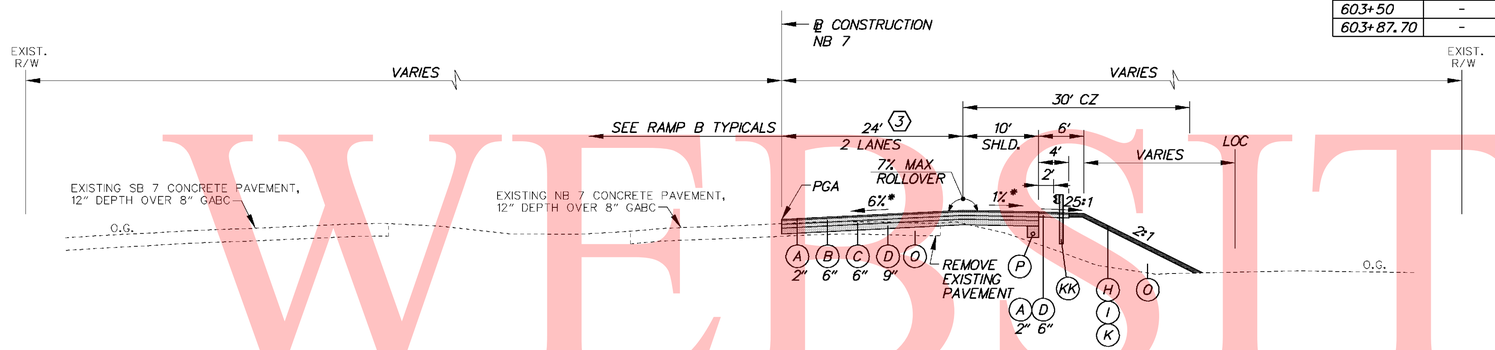

NB 7

STA. 602+83.58 TO STA. 605+69.41

(3) STA. 603+70.97 TO STA. 605+69.41
WIDTH TAPERS 24' TO 22'

*NB 7 CROSS-SLOPES			
STA.	LT. SHLD.	LANES	RT. SHLD.
600+67.70	-	-2.00%	-4.00%
600+97.78	-	-1.25%	-4.00%
601+00	-	-1.19%	-4.00%
601+47.70	-	0.00%	-4.00%
601+50	-	0.06%	-4.00%
602+00	-	1.31%	-4.00%
602+27.70	-	2.00%	-4.00%
602+50	-	2.56%	-4.00%
602+67.70	-	3.00%	-4.00%

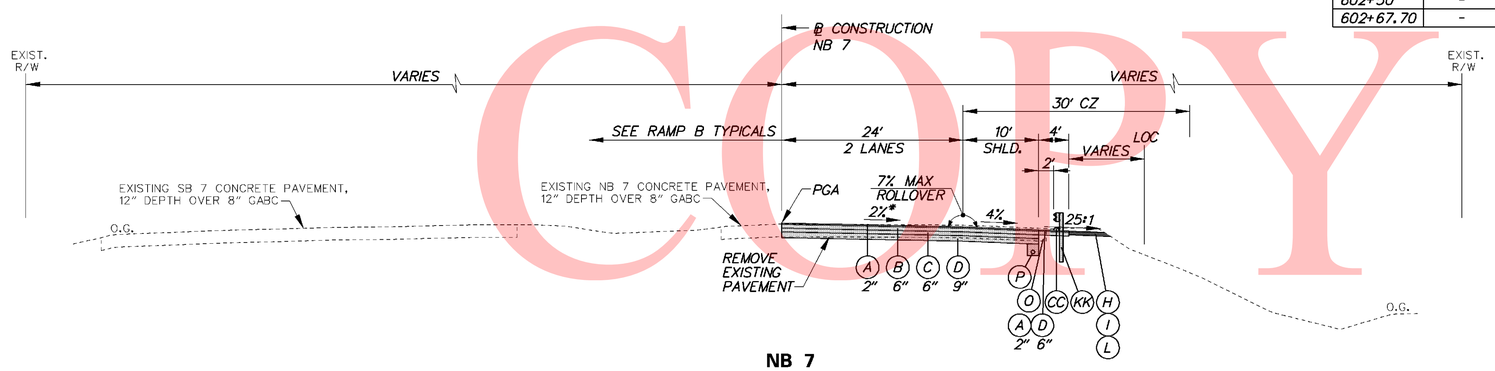

NB 7

STA. 598+63.13 TO STA. 602+83.58

LEGEND

- (A) ITEM 401708 - SUPERPAVE, TYPE C HOT-MIX, 160 GYRATIONS, PG 70-22 (NON-CARBONATE STONE)
- (B) ITEM 401654 - SUPERPAVE, TYPE B HOT-MIX, 160 GYRATIONS, PG 70-22
- (C) ITEM 401663 - SUPERPAVE, BITUMINOUS CONCRETE BASE COURSE, 160 GYRATIONS, PG 64-22
- (D) ITEM 302007 - GRADED AGGREGATE BASE COURSE, TYPE B
- (E) ITEM 401711 - SUPERPAVE, TYPE C HOT-MIX, 160 GYRATIONS, PG 76-22 (NON-CARBONATE STONE)
- (F) ITEM 401660 - SUPERPAVE, TYPE B HOT-MIX, 160 GYRATIONS, PG 76-22
- (G) ITEM 501006 - PORTLAND CEMENT CONCRETE PAVEMENT, 12"
- (H) ITEM 732002 - TOPSOIL, 6" DEPTH
- (I) ITEM 734013 - PERMANENT GRASS SEEDING, DRY GROUND
- (J) ITEM 602017 - PCC MASONRY, PARAPET, CLASS A
- (K) ITEM 735533 - SOIL RETENTION BLANKET MULCH, TYPE 3
- (L) ITEM 735534 - SOIL RETENTION BLANKET MULCH, TYPE 4
- (M) ITEM 735535 - SOIL RETENTION BLANKET MULCH, TYPE 5, UNLESS OTHERWISE NOTED, SEE DRAINAGE PLANS FOR LIMITS AND TYPE
- (N) ITEM 209001 - BORROW, TYPE A
- (O) ITEM 209006 - BORROW, TYPE F OR APPROVED PROJECT EXCAVATION
- (P) ITEM 715001 - PERFORATED PIPE UNDERDRAINS, 6"
- (Q) ITEM 760504 - RUMBLE STRIPS, HOT-MIX
- (R) ITEM 602772 - MECHANICALLY STABILIZED EARTH WALLS
- (S) ITEM 602773 - PCC MASONRY FOR MECHANICALLY STABILIZED EARTH WALLS
- (T) ITEM 720512 - PCC SAFETY BARRIER PERMANENT, SINGLE FACE
- (U) ITEM 720654 - PCC SAFETY BARRIER PERMANENT, SINGLE FACE, MODIFIED TYPE 1
- (V) ITEM 720587 - PCC SAFETY BARRIER PERMANENT, DOUBLE FACE, MODIFIED
- (W) ITEM 720655 - PCC SAFETY BARRIER PERMANENT, SINGLE FACE, MODIFIED TYPE 2
- (X) ITEM 712005 - RIPRAP, R-4
- (Y) ITEM 401665 - SUPERPAVE, TYPE C HOT-MIX, 160 GYRATIONS, PG 64-22, PATCHING
- (Z) ITEM 401666 - SUPERPAVE, TYPE B HOT-MIX, 160 GYRATIONS, PG 64-22, PATCHING
- (AA) ITEM 401667 - SUPERPAVE, BITUMINOUS CONCRETE BASE COURSE, 160 GYRATIONS, PG 64-22, PATCHING
- (BB) ITEM 302008 - GRADED AGGREGATE BASE COURSE, TYPE B, PATCHING
- (CC) ITEM 755000 - HOT-MIX, HOT LAID, BITUMINOUS CONCRETE CURB
- (DD) ITEM 701010 - PORTLAND CEMENT CONCRETE CURB, TYPE 1
- (EE) ITEM 701011 - PORTLAND CEMENT CONCRETE CURB, TYPE 2
- (FF) ITEM 701020 - INTEGRAL PORTLAND CEMENT CONCRETE CURB AND GUTTER, TYPE 1
- (GG) ITEM 701023 - INTEGRAL PORTLAND CEMENT CONCRETE CURB AND GUTTER, TYPE 4
- (HH) ITEM 701026 - PORTLAND CEMENT CONCRETE MONOLITHIC MEDIAN
- (II) ITEM 701027 - PORTLAND CEMENT CONCRETE CURB, TYPE 1 MODIFIED
- (JJ) ITEM 720658 - PCC SAFETY BARRIER PERMANENT SINGLE FACE, MODIFIED, TYPE 5
- (KK) ITEM 720050 - GALVANIZED STEEL BEAM GUARDRAIL, TYPE 1
- (LL) ITEM 760507 - PROFILE MILLING, HOT-MIX
- (MM) ITEM 720656 - PCC SAFETY BARRIER PERMANENT, SINGLE FACE, MODIFIED, TYPE 3
- (NN) ITEM 720657 - PCC SAFETY BARRIER PERMANENT, SINGLE FACE, MODIFIED, TYPE 4
- (OO) ITEM 720651 - PCC SAFETY BARRIER PERMANENT, DOUBLE FACE, BIFURCATED, TYPE 1
- (PP) ITEM 720652 - PCC SAFETY BARRIER PERMANENT, DOUBLE FACE, BIFURCATED, TYPE 2
- (RR) ITEM 401668 - SUPERPAVE, TYPE C HOT-MIX, 160 GYRATIONS, PG 64-22, WEDGE
- (SS) ITEM 401669 - SUPERPAVE, TYPE B HOT-MIX, 160 GYRATIONS, PG 64-22, WEDGE

PAVEMENT LIFT NOTE:

THE MAXIMUM LIFTS FOR THE INDIVIDUAL PAVING MATERIAL ARE AS FOLLOWS:
SUPERPAVE, TYPE C HOT-MIX - 2"
SUPERPAVE, TYPE B HOT-MIX - 3"
SUPERPAVE, BIT. CONC. BASE COURSE - 6"
GRADED AGGREGATE BASE COURSE - 8"

NOTES:

1) THE PGA IS APPLIED TO THE TOP OF THE FINAL PAVEMENT SURFACE.

UNOFFICIAL WEBSITE COPY

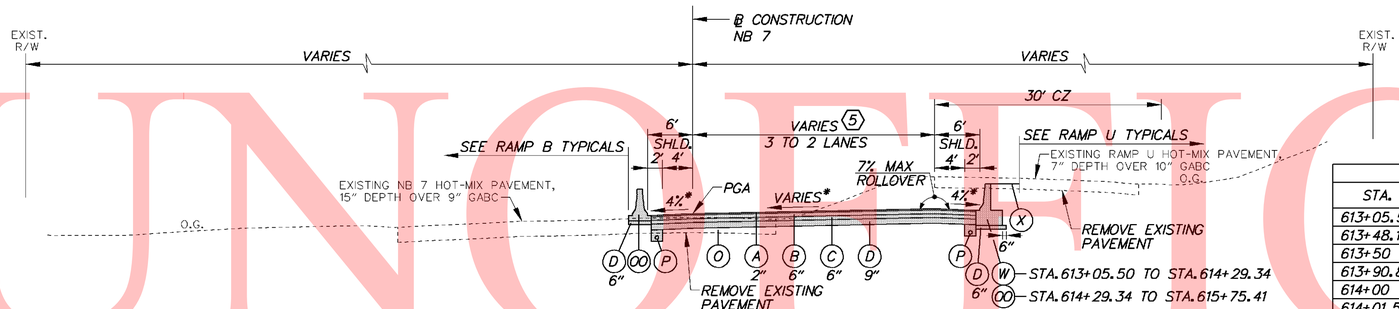

NB 7

STA. 613+05.50 TO STA. 615+75.41

(5) STA. 613+50.00 TO STA. 615+75.41
WIDTH TAPERS 36' TO 26.98'

*NB 7 CROSS-SLOPES			
STA.	LT. SHLD.	LANES	RT. SHLD.
613+05.50	-4.80%	4.80%	-2.20%
613+48.17	-4.00%	4.00%	-3.00%
613+50	-4.00%	3.97%	-3.03%
613+90.83	-4.00%	3.20%	-3.80%
614+00	-4.00%	3.03%	-3.97%
614+01.50	-4.00%	3.00%	-4.00%
614+50	-4.00%	2.09%	-4.00%
614+54.83	-4.00%	2.00%	-4.00%
615+00	-4.00%	1.15%	-4.00%
615+50	-4.00%	0.22%	-4.00%
615+61.5	-4.00%	0.00%	-4.00%

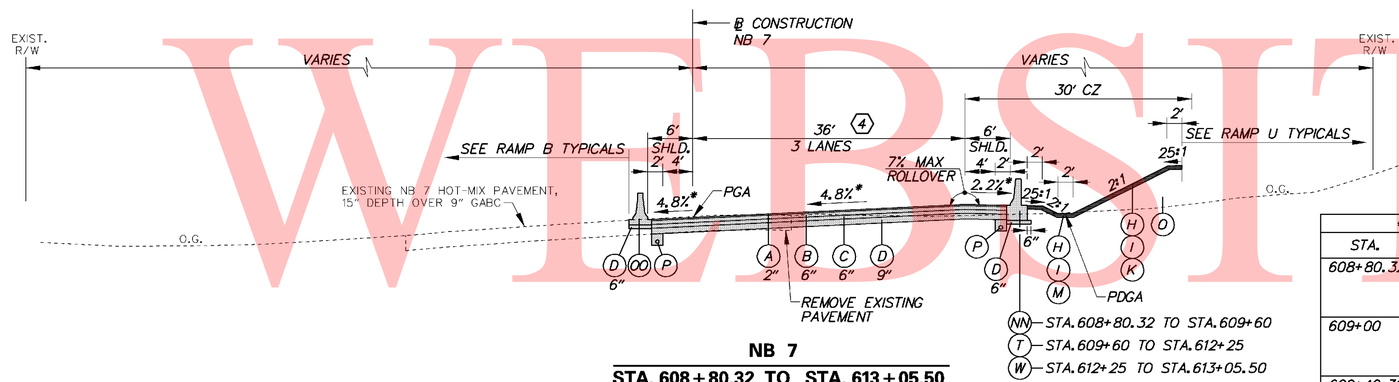

NB 7

STA. 608+80.32 TO STA. 613+05.50

(4) STA. 609+53.44 TO STA. 611+33.44
WIDTH TAPERS 33' TO 36'

*NB 7 CROSS-SLOPES			
STA.	LT. SHLD.	LANES	RT. SHLD.
608+80.32	-6.00%	6.00% (LEFT 2) 4.00% (RIGHT 1)	-3.00%
609+00	-6.00%	6.00% (LEFT 2) 4.66% (RIGHT 1)	-2.34%
609+40.32	-6.00%	6.00%	-1.00%
611+00.94	-6.00%	6.00%	-1.00%
611+33.44	-5.40%	5.40%	-1.60%
611+50	-5.10%	5.10%	-1.90%
611+65.94	-4.80%	4.80%	-2.20%

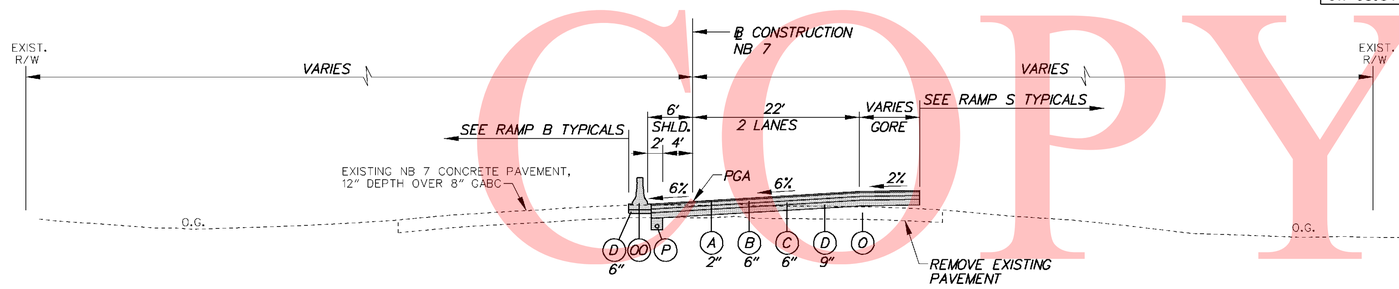

NB 7

STA. 606+48.70 TO STA. 608+80.32

LEGEND

- (A) ITEM 401708 - SUPERPAVE, TYPE C HOT-MIX, 160 GYRATIONS, PG 70-22 (NON-CARBONATE STONE)
- (B) ITEM 401654 - SUPERPAVE, TYPE B HOT-MIX, 160 GYRATIONS, PG 70-22
- (C) ITEM 401663 - SUPERPAVE, BITUMINOUS CONCRETE BASE COURSE, 160 GYRATIONS, PG 64-22
- (D) ITEM 302007 - GRADED AGGREGATE BASE COURSE, TYPE B
- (E) ITEM 401711 - SUPERPAVE, TYPE C HOT-MIX, 160 GYRATIONS, PG 76-22 (NON-CARBONATE STONE)
- (F) ITEM 401660 - SUPERPAVE, TYPE B HOT-MIX, 160 GYRATIONS, PG 76-22
- (G) ITEM 501006 - PORTLAND CEMENT CONCRETE PAVEMENT, 12"
- (H) ITEM 732002 - TOPSOIL, 6" DEPTH
- (I) ITEM 734013 - PERMANENT GRASS SEEDING, DRY GROUND
- (J) ITEM 602017 - PCC MASONRY, PARAPET, CLASS A
- (K) ITEM 735533 - SOIL RETENTION BLANKET MULCH, TYPE 3
- (L) ITEM 735534 - SOIL RETENTION BLANKET MULCH, TYPE 4
- (M) ITEM 735535 - SOIL RETENTION BLANKET MULCH, TYPE 5, UNLESS OTHERWISE NOTED, SEE DRAINAGE PLANS FOR LIMITS AND TYPE
- (N) ITEM 209001 - BORROW, TYPE A
- (O) ITEM 209006 - BORROW, TYPE F OR APPROVED PROJECT EXCAVATION
- (P) ITEM 715001 - PERFORATED PIPE UNDERDRAINS, 6"
- (Q) ITEM 760504 - RUMBLE STRIPS, HOT-MIX
- (R) ITEM 602772 - MECHANICALLY STABILIZED EARTH WALLS
- (S) ITEM 602773 - PCC MASONRY FOR MECHANICALLY STABILIZED EARTH WALLS
- (T) ITEM 720512 - PCC SAFETY BARRIER PERMANENT, SINGLE FACE
- (U) ITEM 720654 - PCC SAFETY BARRIER PERMANENT, SINGLE FACE, MODIFIED TYPE 1
- (V) ITEM 720587 - PCC SAFETY BARRIER PERMANENT, DOUBLE FACE, MODIFIED
- (W) ITEM 720655 - PCC SAFETY BARRIER PERMANENT, SINGLE FACE, MODIFIED TYPE 2
- (X) ITEM 712005 - RIPRAP, R-4
- (Y) ITEM 401665 - SUPERPAVE, TYPE C HOT-MIX, 160 GYRATIONS, PG 64-22, PATCHING
- (Z) ITEM 401666 - SUPERPAVE, TYPE B HOT-MIX, 160 GYRATIONS, PG 64-22, PATCHING
- (AA) ITEM 401667 - SUPERPAVE, BITUMINOUS CONCRETE BASE COURSE, 160 GYRATIONS, PG 64-22, PATCHING
- (BB) ITEM 302008 - GRADED AGGREGATE BASE COURSE, TYPE B, PATCHING
- (CC) ITEM 755000 - HOT-MIX, HOT LAID, BITUMINOUS CONCRETE CURB
- (DD) ITEM 701010 - PORTLAND CEMENT CONCRETE CURB, TYPE 1
- (EE) ITEM 701011 - PORTLAND CEMENT CONCRETE CURB, TYPE 2
- (FF) ITEM 701020 - INTEGRAL PORTLAND CEMENT CONCRETE CURB AND GUTTER, TYPE 1
- (GG) ITEM 701023 - INTEGRAL PORTLAND CEMENT CONCRETE CURB AND GUTTER, TYPE 4
- (HH) ITEM 701026 - PORTLAND CEMENT CONCRETE MONOLITHIC MEDIAN
- (II) ITEM 701027 - PORTLAND CEMENT CONCRETE CURB, TYPE 1 MODIFIED
- (JJ) ITEM 720658 - PCC SAFETY BARRIER PERMANENT SINGLE FACE, MODIFIED, TYPE 5
- (KK) ITEM 720050 - GALVANIZED STEEL BEAM GUARDRAIL, TYPE 1
- (LL) ITEM 760507 - PROFILE MILLING, HOT-MIX
- (MM) ITEM 720656 - PCC SAFETY BARRIER PERMANENT, SINGLE FACE, MODIFIED, TYPE 3
- (NN) ITEM 720657 - PCC SAFETY BARRIER PERMANENT, SINGLE FACE, MODIFIED, TYPE 4
- (OO) ITEM 720651 - PCC SAFETY BARRIER PERMANENT, DOUBLE FACE, BIFURCATED, TYPE 1
- (PP) ITEM 720652 - PCC SAFETY BARRIER PERMANENT, DOUBLE FACE, BIFURCATED, TYPE 2
- (RR) ITEM 401668 - SUPERPAVE, TYPE C HOT-MIX, 160 GYRATIONS, PG 64-22, WEDGE
- (SS) ITEM 401669 - SUPERPAVE, TYPE B HOT-MIX, 160 GYRATIONS, PG 64-22, WEDGE

PAVEMENT LIFT NOTE:

THE MAXIMUM LIFTS FOR THE INDIVIDUAL PAVING MATERIAL ARE AS FOLLOWS:
SUPERPAVE, TYPE C HOT-MIX - 2"
SUPERPAVE, TYPE B HOT-MIX - 3"
SUPERPAVE, BIT. CONC. BASE COURSE - 6"
GRADED AGGREGATE BASE COURSE - 8"

NOTES:

1) THE PGA IS APPLIED TO THE TOP OF THE FINAL PAVEMENT SURFACE.

UNOFFICIAL WEBSITE COPY

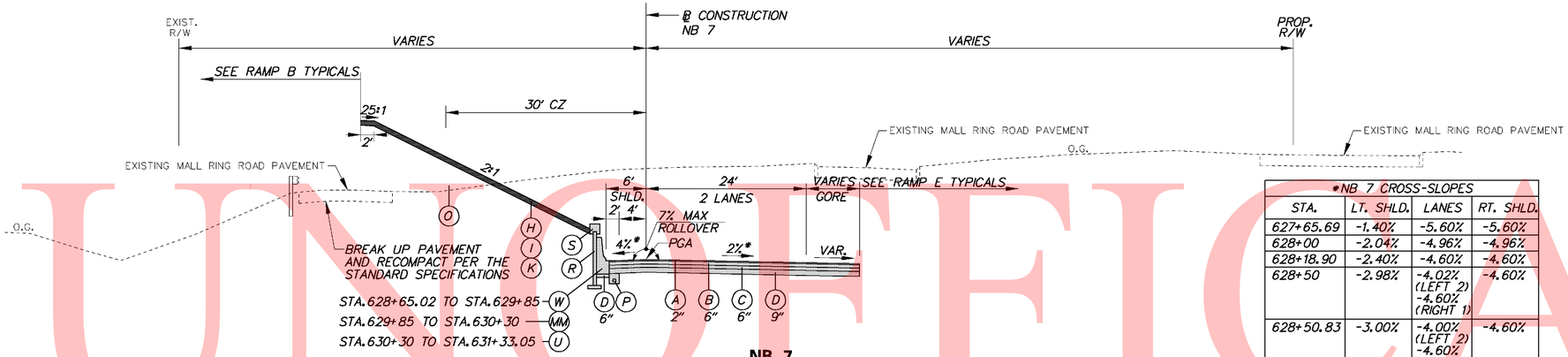

NB 7

STA. 628+65.02 TO STA. 631+33.05

*NB 7 CROSS-SLOPES			
STA.	LT. SHLD.	LANES	RT. SHLD.
627+65.69	-1.40%	-5.60%	-5.60%
628+00	-2.04%	-4.96%	-4.96%
628+18.90	-2.40%	-4.60%	-4.60%
628+50	-2.98%	-4.02% (LEFT 2) -4.60% (RIGHT 1)	-4.60%
628+50.83	-3.00%	-4.00% (LEFT 2) -4.60% (RIGHT 1)	-4.60%
628+65.02	-3.27%	-3.73% (LEFT 2) -4.60% (RIGHT 1)	-4.60%
629+00	-3.92%	-3.08%	-
629+04.05	-4.00%	-3.00%	-
629+50	-4.00%	-2.14%	-
629+57.26	-4.00%	-2.00%	-

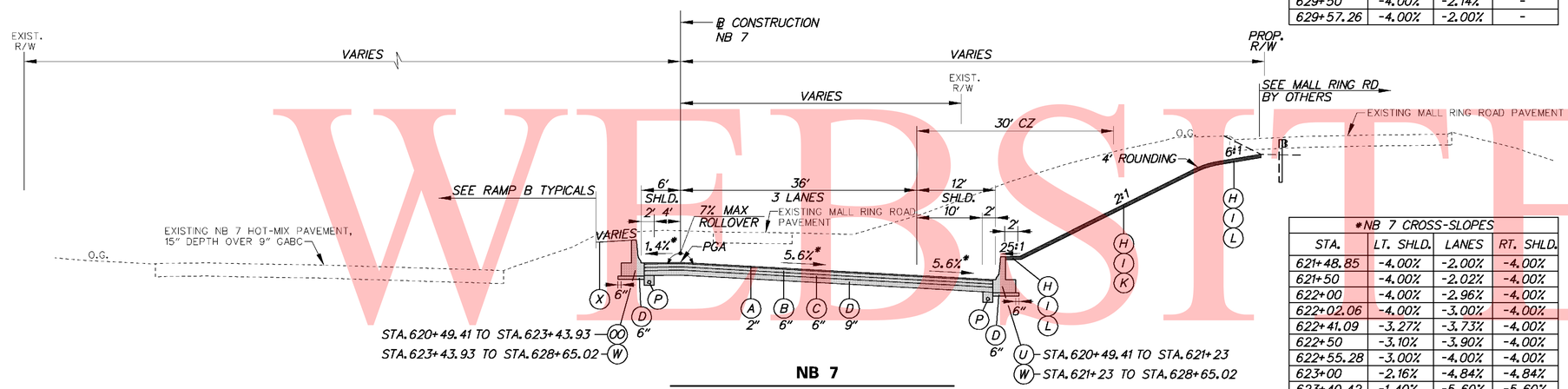

NB 7

STA. 620+49.41 TO STA. 628+65.02

*NB 7 CROSS-SLOPES			
STA.	LT. SHLD.	LANES	RT. SHLD.
621+48.85	-4.00%	-2.00%	-4.00%
621+50	-4.00%	-2.02%	-4.00%
622+00	-4.00%	-2.96%	-4.00%
622+02.06	-4.00%	-3.00%	-4.00%
622+41.09	-3.27%	-3.73%	-4.00%
622+50	-3.10%	-3.90%	-4.00%
622+55.28	-3.00%	-4.00%	-4.00%
623+00	-2.16%	-4.84%	-4.84%
623+40.42	-1.40%	-5.60%	-5.60%

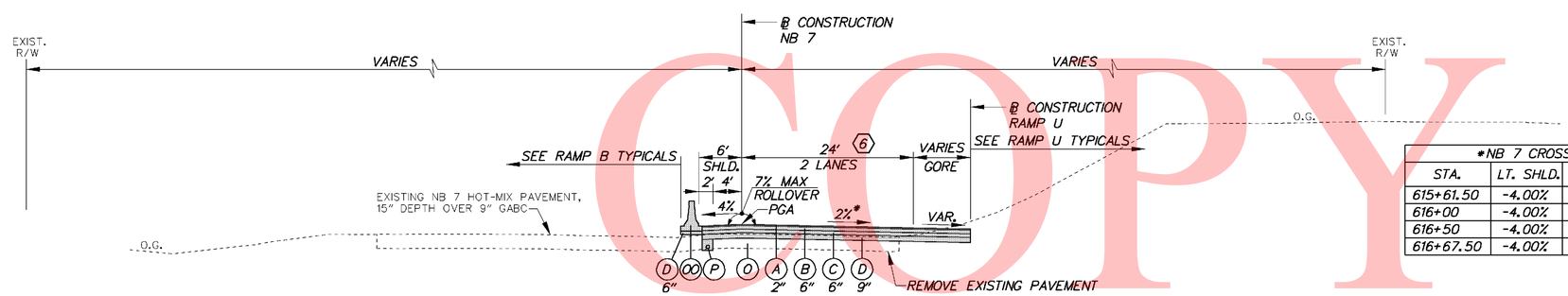

NB 7

STA. 615+75.41 TO STA. 620+49.41

6 STA. 615+75.41 TO STA. 616+50.00
WIDTH TAPERS 26.98' TO 24'

*NB 7 CROSS-SLOPES			
STA.	LT. SHLD.	LANES	RT. SHLD.
615+61.50	-4.00%	0.00%	-4.00%
616+00	-4.00%	-0.73%	-
616+50	-4.00%	-1.67%	-
616+67.50	-4.00%	-2.00%	-

LEGEND

- (A) ITEM 401708 - SUPERPAVE, TYPE C HOT-MIX, 160 GYRATIONS, PG 70-22 (NON-CARBONATE STONE)
- (B) ITEM 401654 - SUPERPAVE, TYPE B HOT-MIX, 160 GYRATIONS, PG 70-22
- (C) ITEM 401663 - SUPERPAVE, BITUMINOUS CONCRETE BASE COURSE, 160 GYRATIONS, PG 64-22
- (D) ITEM 302007 - GRADED AGGREGATE BASE COURSE, TYPE B
- (E) ITEM 401711 - SUPERPAVE, TYPE C HOT-MIX, 160 GYRATIONS, PG 76-22 (NON-CARBONATE STONE)
- (F) ITEM 401660 - SUPERPAVE, TYPE B HOT-MIX, 160 GYRATIONS, PG 76-22
- (G) ITEM 501006 - PORTLAND CEMENT CONCRETE PAVEMENT, 12"
- (H) ITEM 732002 - TOPSOIL, 6" DEPTH
- (I) ITEM 734013 - PERMANENT GRASS SEEDING, DRY GROUND
- (J) ITEM 602017 - PCC MASONRY, PARAPET, CLASS A
- (K) ITEM 735533 - SOIL RETENTION BLANKET MULCH, TYPE 3
- (L) ITEM 735534 - SOIL RETENTION BLANKET MULCH, TYPE 4
- (M) ITEM 735535 - SOIL RETENTION BLANKET MULCH, TYPE 5, UNLESS OTHERWISE NOTED, SEE DRAINAGE PLANS FOR LIMITS AND TYPE
- (N) ITEM 209001 - BORROW, TYPE A
- (O) ITEM 209006 - BORROW, TYPE F OR APPROVED PROJECT EXCAVATION
- (P) ITEM 715001 - PERFORATED PIPE UNDERDRAINS, 6"
- (Q) ITEM 760504 - RUMBLE STRIPS, HOT-MIX
- (R) ITEM 602772 - MECHANICALLY STABILIZED EARTH WALLS
- (S) ITEM 602773 - PCC MASONRY FOR MECHANICALLY STABILIZED EARTH WALLS
- (T) ITEM 720512 - PCC SAFETY BARRIER PERMANENT, SINGLE FACE
- (U) ITEM 720654 - PCC SAFETY BARRIER PERMANENT, SINGLE FACE, MODIFIED TYPE 1
- (V) ITEM 720587 - PCC SAFETY BARRIER PERMANENT, DOUBLE FACE, MODIFIED
- (W) ITEM 720655 - PCC SAFETY BARRIER PERMANENT, SINGLE FACE, MODIFIED TYPE 2
- (X) ITEM 712005 - RIPRAP, R-4
- (Y) ITEM 401665 - SUPERPAVE, TYPE C HOT-MIX, 160 GYRATIONS, PG 64-22, PATCHING
- (Z) ITEM 401666 - SUPERPAVE, TYPE B HOT-MIX, 160 GYRATIONS, PG 64-22, PATCHING
- (AA) ITEM 401667 - SUPERPAVE, BITUMINOUS CONCRETE BASE COURSE, 160 GYRATIONS, PG 64-22, PATCHING
- (BB) ITEM 302008 - GRADED AGGREGATE BASE COURSE, TYPE B, PATCHING
- (CC) ITEM 755000 - HOT-MIX, HOT LAID, BITUMINOUS CONCRETE CURB
- (DD) ITEM 701010 - PORTLAND CEMENT CONCRETE CURB, TYPE 1
- (EE) ITEM 701011 - PORTLAND CEMENT CONCRETE CURB, TYPE 2
- (FF) ITEM 701020 - INTEGRAL PORTLAND CEMENT CONCRETE CURB AND GUTTER, TYPE 1
- (GG) ITEM 701023 - INTEGRAL PORTLAND CEMENT CONCRETE CURB AND GUTTER, TYPE 4
- (HH) ITEM 701026 - PORTLAND CEMENT CONCRETE MONOLITHIC MEDIAN
- (II) ITEM 701027 - PORTLAND CEMENT CONCRETE CURB, TYPE 1 MODIFIED
- (JJ) ITEM 720658 - PCC SAFETY BARRIER PERMANENT SINGLE FACE, MODIFIED, TYPE 5
- (KK) ITEM 720050 - GALVANIZED STEEL BEAM GUARDRAIL, TYPE 1
- (LL) ITEM 760507 - PROFILE MILLING, HOT-MIX
- (MM) ITEM 720656 - PCC SAFETY BARRIER PERMANENT, SINGLE FACE, MODIFIED, TYPE 3
- (NN) ITEM 720657 - PCC SAFETY BARRIER PERMANENT, SINGLE FACE, MODIFIED, TYPE 4
- (OO) ITEM 720651 - PCC SAFETY BARRIER PERMANENT, DOUBLE FACE, BIFURCATED, TYPE 1
- (PP) ITEM 720652 - PCC SAFETY BARRIER PERMANENT, DOUBLE FACE, BIFURCATED, TYPE 2
- (RR) ITEM 401668 - SUPERPAVE, TYPE C HOT-MIX, 160 GYRATIONS, PG 64-22, WEDGE
- (SS) ITEM 401669 - SUPERPAVE, TYPE B HOT-MIX, 160 GYRATIONS, PG 64-22, WEDGE

PAVEMENT LIFT NOTE:

THE MAXIMUM LIFTS FOR THE INDIVIDUAL PAVING MATERIAL ARE AS FOLLOWS:
SUPERPAVE, TYPE C HOT-MIX - 2"
SUPERPAVE, TYPE B HOT-MIX - 3"
SUPERPAVE, BIT. CONC. BASE COURSE - 6"
GRADED AGGREGATE BASE COURSE - 8"

NOTES:

1) THE PGA IS APPLIED TO THE TOP OF THE FINAL PAVEMENT SURFACE.

UNOFFICIAL WEBSITE COPY

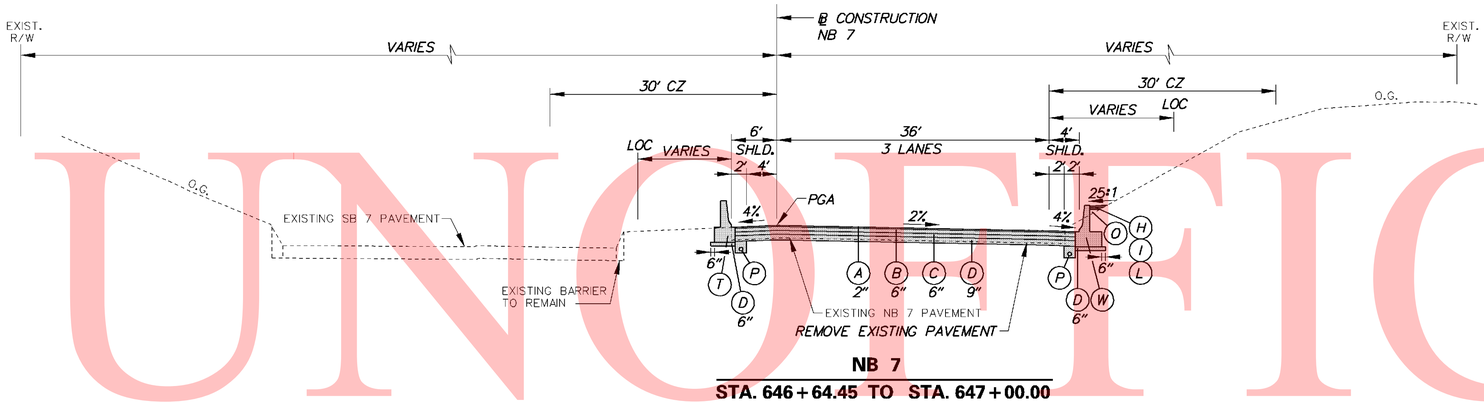

NB 7

STA. 646+64.45 TO STA. 647+00.00

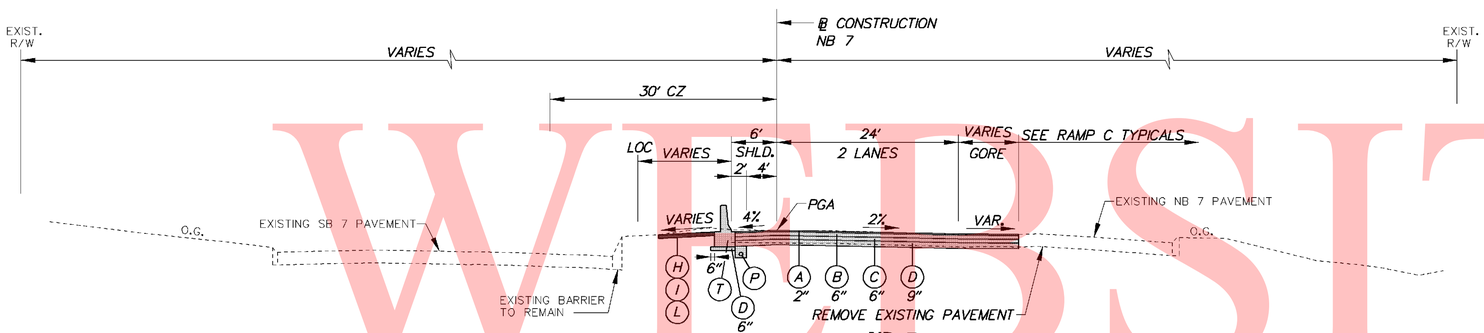

NB 7

STA. 644+74.32 TO STA. 646+64.45

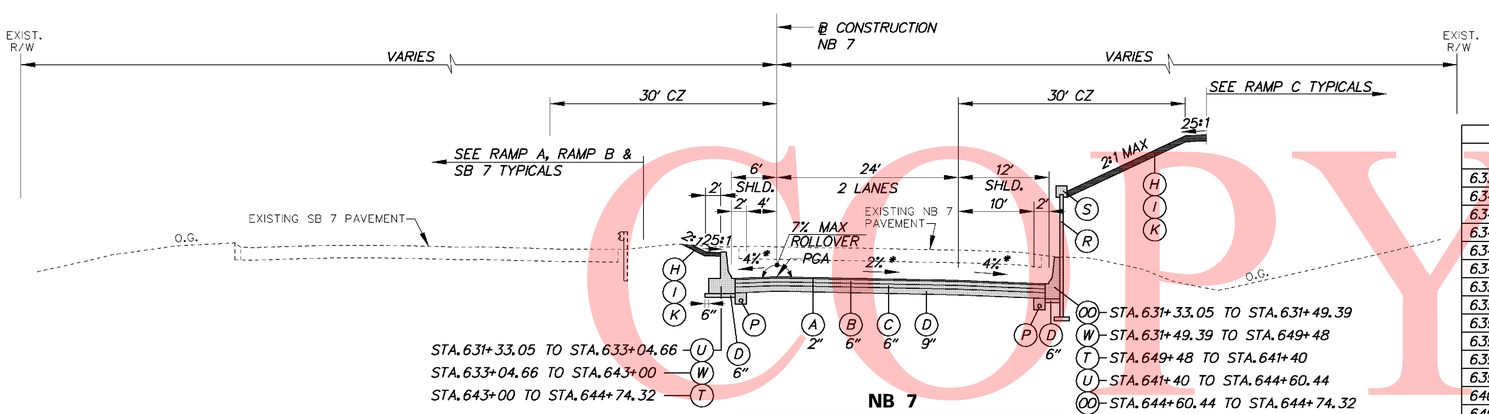

NB 7

STA. 631+33.05 TO STA. 644+74.32

*NB 7 CROSS-SLOPES			
STA.	LT. SHLD.	LANES	RT. SHLD.
633+87.70	-4.00%	-2.00%	-4.00%
634+00	-4.00%	-2.31%	-4.00%
634+27.80	-4.00%	-3.00%	-4.00%
634+46.51	-3.53%	-3.47%	-4.00%
634+50	-3.45%	-3.55%	-4.00%
634+67.90	-3.00%	-4.00%	-4.00%
635+00	-2.20%	-4.80%	-4.80%
635+16.01	-1.80%	-5.20%	-5.20%
639+30.72	-1.80%	-5.20%	-5.20%
639+50	-2.28%	-4.72%	-4.72%
639+78.72	-3.00%	-4.00%	-4.00%
639+94.72	-3.40%	-3.60%	-4.00%
640+00	-3.53%	-3.47%	-4.00%
640+18.72	-4.00%	-3.00%	-4.00%
640+50	-4.00%	-2.22%	-4.00%
640+58.72	-4.00%	-2.00%	-4.00%
643+91.03	-4.00%	-2.00%	-4.00%
644+00	-4.00%	-2.00%	-3.64%
644+50	-4.00%	-2.00%	-1.64%
644+74.28	-4.00%	-2.00%	-0.67%

LEGEND

- (A) ITEM 401708 - SUPERPAVE, TYPE C HOT-MIX, 160 GYRATIONS, PG 70-22 (NON-CARBONATE STONE)
- (B) ITEM 401654 - SUPERPAVE, TYPE B HOT-MIX, 160 GYRATIONS, PG 70-22
- (C) ITEM 401663 - SUPERPAVE, BITUMINOUS CONCRETE BASE COURSE, 160 GYRATIONS, PG 64-22
- (D) ITEM 302007 - GRADED AGGREGATE BASE COURSE, TYPE B
- (E) ITEM 401711 - SUPERPAVE, TYPE C HOT-MIX, 160 GYRATIONS, PG 76-22 (NON-CARBONATE STONE)
- (F) ITEM 401660 - SUPERPAVE, TYPE B HOT-MIX, 160 GYRATIONS, PG 76-22
- (G) ITEM 501006 - PORTLAND CEMENT CONCRETE PAVEMENT, 12"
- (H) ITEM 732002 - TOPSOIL, 6" DEPTH
- (I) ITEM 734013 - PERMANENT GRASS SEEDING, DRY GROUND
- (J) ITEM 602017 - PCC MASONRY, PARAPET, CLASS A
- (K) ITEM 735533 - SOIL RETENTION BLANKET MULCH, TYPE 3
- (L) ITEM 735534 - SOIL RETENTION BLANKET MULCH, TYPE 4
- (M) ITEM 735535 - SOIL RETENTION BLANKET MULCH, TYPE 5, UNLESS OTHERWISE NOTED, SEE DRAINAGE PLANS FOR LIMITS AND TYPE
- (N) ITEM 209001 - BORROW, TYPE A
- (O) ITEM 209006 - BORROW, TYPE F OR APPROVED PROJECT EXCAVATION
- (P) ITEM 715001 - PERFORATED PIPE UNDERDRAINS, 6"
- (Q) ITEM 760504 - RUMBLE STRIPS, HOT-MIX
- (R) ITEM 602772 - MECHANICALLY STABILIZED EARTH WALLS
- (S) ITEM 602773 - PCC MASONRY FOR MECHANICALLY STABILIZED EARTH WALLS
- (T) ITEM 720512 - PCC SAFETY BARRIER PERMANENT, SINGLE FACE
- (U) ITEM 720654 - PCC SAFETY BARRIER PERMANENT, SINGLE FACE, MODIFIED TYPE 1
- (V) ITEM 720587 - PCC SAFETY BARRIER PERMANENT, DOUBLE FACE, MODIFIED
- (W) ITEM 720655 - PCC SAFETY BARRIER PERMANENT, SINGLE FACE, MODIFIED TYPE 2
- (X) ITEM 712005 - RIPRAP, R-4
- (Y) ITEM 401665 - SUPERPAVE, TYPE C HOT-MIX, 160 GYRATIONS, PG 64-22, PATCHING
- (Z) ITEM 401666 - SUPERPAVE, TYPE B HOT-MIX, 160 GYRATIONS, PG 64-22, PATCHING
- (AA) ITEM 401667 - SUPERPAVE, BITUMINOUS CONCRETE BASE COURSE, 160 GYRATIONS, PG 64-22, PATCHING
- (BB) ITEM 302008 - GRADED AGGREGATE BASE COURSE, TYPE B, PATCHING
- (CC) ITEM 755000 - HOT-MIX, HOT LAID, BITUMINOUS CONCRETE CURB
- (DD) ITEM 701010 - PORTLAND CEMENT CONCRETE CURB, TYPE 1
- (EE) ITEM 701011 - PORTLAND CEMENT CONCRETE CURB, TYPE 2
- (FF) ITEM 701020 - INTEGRAL PORTLAND CEMENT CONCRETE CURB AND GUTTER, TYPE 1
- (GG) ITEM 701023 - INTEGRAL PORTLAND CEMENT CONCRETE CURB AND GUTTER, TYPE 4
- (HH) ITEM 701026 - PORTLAND CEMENT CONCRETE MONOLITHIC MEDIAN
- (II) ITEM 701027 - PORTLAND CEMENT CONCRETE CURB, TYPE 1 MODIFIED
- (JJ) ITEM 720658 - PCC SAFETY BARRIER PERMANENT SINGLE FACE, MODIFIED, TYPE 5
- (KK) ITEM 720050 - GALVANIZED STEEL BEAM GUARDRAIL, TYPE 1
- (LL) ITEM 760507 - PROFILE MILLING, HOT-MIX
- (MM) ITEM 720656 - PCC SAFETY BARRIER PERMANENT, SINGLE FACE, MODIFIED, TYPE 3
- (NN) ITEM 720657 - PCC SAFETY BARRIER PERMANENT, SINGLE FACE, MODIFIED, TYPE 4
- (OO) ITEM 720651 - PCC SAFETY BARRIER PERMANENT, DOUBLE FACE, BIFURCATED, TYPE 1
- (PP) ITEM 720652 - PCC SAFETY BARRIER PERMANENT, DOUBLE FACE, BIFURCATED, TYPE 2
- (RR) ITEM 401668 - SUPERPAVE, TYPE C HOT-MIX, 160 GYRATIONS, PG 64-22, WEDGE
- (SS) ITEM 401669 - SUPERPAVE, TYPE B HOT-MIX, 160 GYRATIONS, PG 64-22, WEDGE

PAVEMENT LIFT NOTE:

THE MAXIMUM LIFTS FOR THE INDIVIDUAL PAVING MATERIAL ARE AS FOLLOWS:
SUPERPAVE, TYPE C HOT-MIX - 2"
SUPERPAVE, TYPE B HOT-MIX - 3"
SUPERPAVE, BIT. CONC. BASE COURSE - 6"
GRADED AGGREGATE BASE COURSE - 8"

NOTES:

1) THE PGA IS APPLIED TO THE TOP OF THE FINAL PAVEMENT SURFACE.

UNOFFICIAL WEBSITE COPY

10/28/2010 9:48:22 AM
M:\PROJECTS\2003\03059_DELTRNPK\SRIMALL\CADD\2809003\PLANS\TS05_SR1.DGN

DELAWARE DEPARTMENT OF TRANSPORTATION	ADDENDUMS / REVISIONS	NOT TO SCALE	SR1 / I-95 INTERCHANGE	CONTRACT 28-090-03	BRIDGE NO.	TYPICAL SECTIONS	SHEET NO. 10
				COUNTY NEW CASTLE	DESIGNED BY:		TOTAL SHTS. 803
					CHECKED BY:		

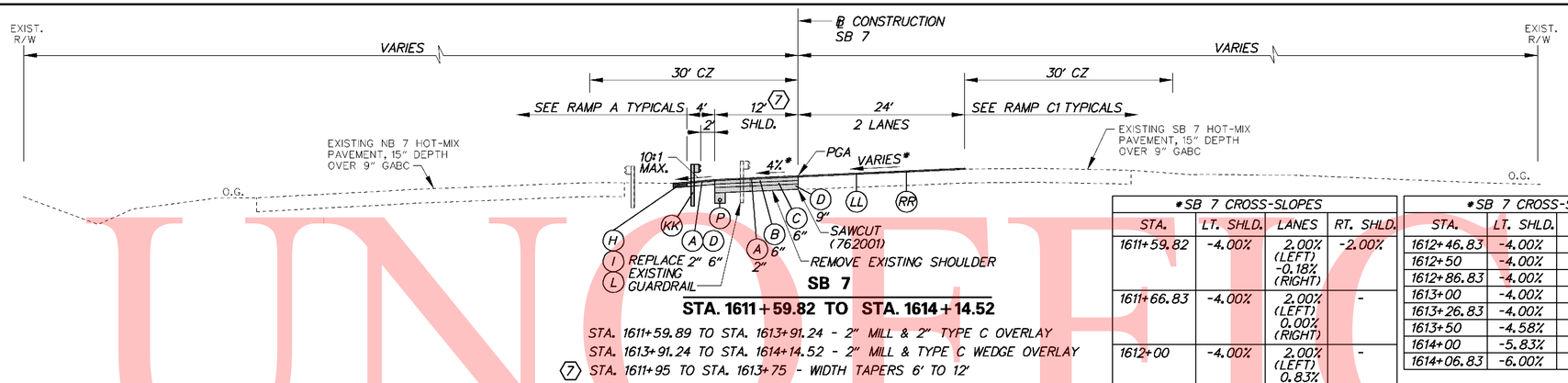

SB 7

STA. 1611+59.82 TO STA. 1614+14.52

STA. 1611+59.89 TO STA. 1613+91.24 - 2" MILL & 2" TYPE C OVERLAY

STA. 1613+91.24 TO STA. 1614+14.52 - 2" MILL & TYPE C WEDGE OVERLAY

(7) STA. 1611+95 TO STA. 1613+75 - WIDTH TAPERS 6' TO 12'

*SB 7 CROSS-SLOPES			
STA.	LT. SHLD.	LANES	RT. SHLD.
1611+59.82	-4.00%	2.00% (LEFT) -0.18% (RIGHT)	-2.00%
1611+66.83	-4.00%	2.00% (LEFT) 0.00% (RIGHT)	-
1612+00	-4.00%	2.00% (LEFT) 0.83% (RIGHT)	-

*SB 7 CROSS-SLOPES			
STA.	LT. SHLD.	LANES	RT. SHLD.
1612+46.83	-4.00%	2.00%	-
1612+50	-4.00%	2.08%	-
1612+86.83	-4.00%	3.00%	-
1613+00	-4.00%	3.33%	-
1613+26.83	-4.00%	4.00%	-
1613+50	-4.58%	4.58%	-
1614+00	-5.83%	5.83%	-
1614+06.83	-6.00%	6.00%	-

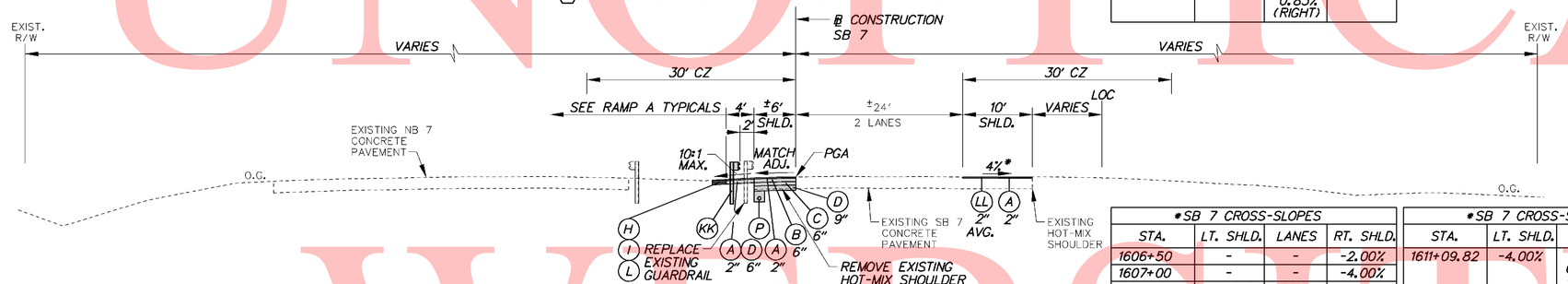

SB 7

STA. 1606+49.40 TO STA. 1611+59.82

*SB 7 CROSS-SLOPES			
STA.	LT. SHLD.	LANES	RT. SHLD.
1606+50	-	-	-2.00%
1607+00	-	-	-4.00%
1610+86.83	-4.00%	2.00% (LEFT) -2.00% (RIGHT)	-4.00%
1611+00	-4.00%	2.00% (LEFT) -1.67% (RIGHT)	-4.00%

*SB 7 CROSS-SLOPES			
STA.	LT. SHLD.	LANES	RT. SHLD.
1611+09.82	-4.00%	2.00% (LEFT) -1.43% (RIGHT)	-4.00%
1611+50	-4.00%	2.00% (LEFT) -0.42% (RIGHT)	-2.39%

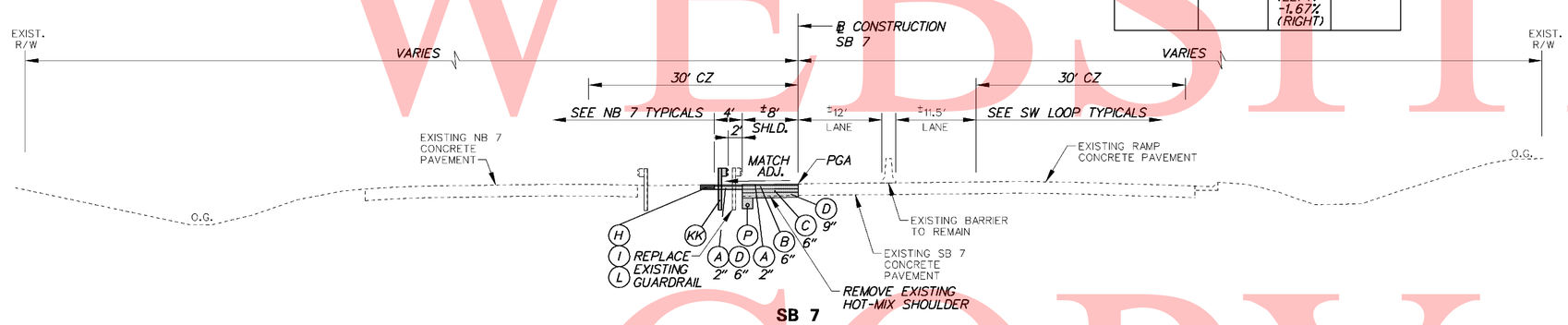

SB 7

STA. 1604+95.95 TO STA. 1606+49.40

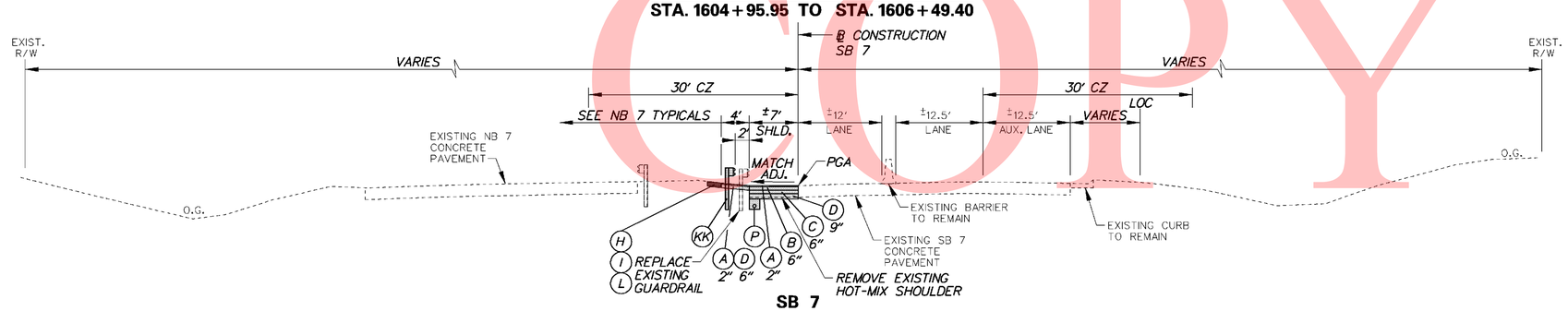

SB 7

STA. 1602+50 TO STA. 1604+95.95

LEGEND

- (A) ITEM 401708 - SUPERPAVE, TYPE C HOT-MIX, 160 GYRATIONS, PG 70-22 (NON-CARBONATE STONE)
- (B) ITEM 401654 - SUPERPAVE, TYPE B HOT-MIX, 160 GYRATIONS, PG 70-22
- (C) ITEM 401663 - SUPERPAVE, BITUMINOUS CONCRETE BASE COURSE, 160 GYRATIONS, PG 64-22
- (D) ITEM 302007 - GRADED AGGREGATE BASE COURSE, TYPE B
- (E) ITEM 401711 - SUPERPAVE, TYPE C HOT-MIX, 160 GYRATIONS, PG 76-22 (NON-CARBONATE STONE)
- (F) ITEM 401660 - SUPERPAVE, TYPE B HOT-MIX, 160 GYRATIONS, PG 76-22
- (G) ITEM 501006 - PORTLAND CEMENT CONCRETE PAVEMENT, 12"
- (H) ITEM 732002 - TOPSOIL, 6" DEPTH
- (I) ITEM 734013 - PERMANENT GRASS SEEDING, DRY GROUND
- (J) ITEM 602017 - PCC MASONRY, PARAPET, CLASS A
- (K) ITEM 735533 - SOIL RETENTION BLANKET MULCH, TYPE 3
- (L) ITEM 735534 - SOIL RETENTION BLANKET MULCH, TYPE 4
- (M) ITEM 735535 - SOIL RETENTION BLANKET MULCH, TYPE 5, UNLESS OTHERWISE NOTED, SEE DRAINAGE PLANS FOR LIMITS AND TYPE
- (N) ITEM 209001 - BORROW, TYPE A
- (O) ITEM 209006 - BORROW, TYPE F OR APPROVED PROJECT EXCAVATION
- (P) ITEM 715001 - PERFORATED PIPE UNDERDRAINS, 6"
- (Q) ITEM 760504 - RUMBLE STRIPS, HOT-MIX
- (R) ITEM 602772 - MECHANICALLY STABILIZED EARTH WALLS
- (S) ITEM 602773 - PCC MASONRY FOR MECHANICALLY STABILIZED EARTH WALLS
- (T) ITEM 720512 - PCC SAFETY BARRIER PERMANENT, SINGLE FACE
- (U) ITEM 720654 - PCC SAFETY BARRIER PERMANENT, SINGLE FACE, MODIFIED TYPE 1
- (V) ITEM 720587 - PCC SAFETY BARRIER PERMANENT, DOUBLE FACE, MODIFIED
- (W) ITEM 720655 - PCC SAFETY BARRIER PERMANENT, SINGLE FACE, MODIFIED TYPE 2
- (X) ITEM 712005 - RIPRAP, R-4
- (Y) ITEM 401665 - SUPERPAVE, TYPE C HOT-MIX, 160 GYRATIONS, PG 64-22, PATCHING
- (Z) ITEM 401666 - SUPERPAVE, TYPE B HOT-MIX, 160 GYRATIONS, PG 64-22, PATCHING
- (AA) ITEM 401667 - SUPERPAVE, BITUMINOUS CONCRETE BASE COURSE, 160 GYRATIONS, PG 64-22, PATCHING
- (BB) ITEM 302008 - GRADED AGGREGATE BASE COURSE, TYPE B, PATCHING
- (CC) ITEM 755000 - HOT-MIX, HOT LAID, BITUMINOUS CONCRETE CURB
- (DD) ITEM 701010 - PORTLAND CEMENT CONCRETE CURB, TYPE 1
- (EE) ITEM 701011 - PORTLAND CEMENT CONCRETE CURB, TYPE 2
- (FF) ITEM 701020 - INTEGRAL PORTLAND CEMENT CONCRETE CURB AND GUTTER, TYPE 1
- (GG) ITEM 701023 - INTEGRAL PORTLAND CEMENT CONCRETE CURB AND GUTTER, TYPE 4
- (HH) ITEM 701026 - PORTLAND CEMENT CONCRETE MONOLITHIC MEDIAN
- (II) ITEM 701027 - PORTLAND CEMENT CONCRETE CURB, TYPE 1 MODIFIED
- (JJ) ITEM 720658 - PCC SAFETY BARRIER PERMANENT SINGLE FACE, MODIFIED, TYPE 5
- (KK) ITEM 720050 - GALVANIZED STEEL BEAM GUARDRAIL, TYPE 1
- (LL) ITEM 760507 - PROFILE MILLING, HOT-MIX
- (MM) ITEM 720656 - PCC SAFETY BARRIER PERMANENT, SINGLE FACE, MODIFIED, TYPE 3
- (NN) ITEM 720657 - PCC SAFETY BARRIER PERMANENT, SINGLE FACE, MODIFIED, TYPE 4
- (OO) ITEM 720651 - PCC SAFETY BARRIER PERMANENT, DOUBLE FACE, BIFURCATED, TYPE 1
- (PP) ITEM 720652 - PCC SAFETY BARRIER PERMANENT, DOUBLE FACE, BIFURCATED, TYPE 2
- (RR) ITEM 401668 - SUPERPAVE, TYPE C HOT-MIX, 160 GYRATIONS, PG 64-22, WEDGE
- (SS) ITEM 401669 - SUPERPAVE, TYPE B HOT-MIX, 160 GYRATIONS, PG 64-22, WEDGE

PAVEMENT LIFT NOTE:

THE MAXIMUM LIFTS FOR THE INDIVIDUAL PAVING MATERIAL ARE AS FOLLOWS:
SUPERPAVE, TYPE C HOT-MIX - 2"
SUPERPAVE, TYPE B HOT-MIX - 3"
SUPERPAVE, BIT. CONC. BASE COURSE - 6"
GRADED AGGREGATE BASE COURSE - 8"

NOTES:

1) THE PGA IS APPLIED TO THE TOP OF THE FINAL PAVEMENT SURFACE.

UNOFFICIAL WEBSITE COPY

10/28/2010 9:51:34 AM
M:\PROJECTS\2003\03059_DELTRNPK\SRMALL\CADD\2809003\PLANS\TS06_SR1.DGN

DELAWARE DEPARTMENT OF TRANSPORTATION	ADDENDUMS / REVISIONS	NOT TO SCALE	SR1 / I-95 INTERCHANGE	CONTRACT 28-090-03	BRIDGE NO.	TYPICAL SECTIONS	SHEET NO. 11
				COUNTY NEW CASTLE	DESIGNED BY:		TOTAL SHTS. 803
					CHECKED BY:		

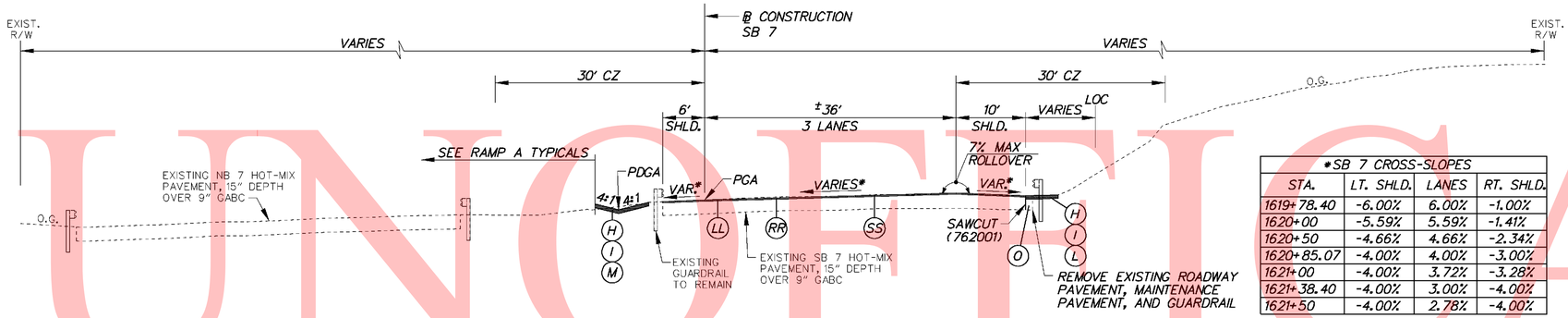

*SB 7 CROSS-SLOPES			
STA.	LT. SHLD.	LANES	RT. SHLD.
1619+78.40	-6.00%	6.00%	-1.00%
1620+00	-5.59%	5.59%	-1.41%
1620+50	-4.66%	4.66%	-2.34%
1620+85.07	-4.00%	4.00%	-3.00%
1621+00	-4.00%	3.72%	-3.28%
1621+38.40	-4.00%	3.00%	-4.00%
1621+50	-4.00%	2.78%	-4.00%

SB 7

STA. 1618+04.98 TO STA. 1621+62.18

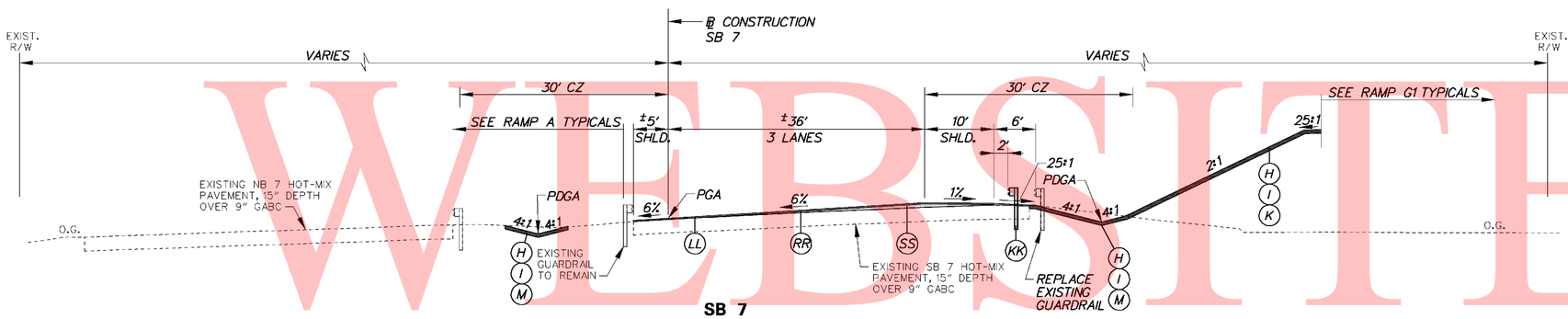

SB 7

STA. 1617+25.75 TO STA. 1618+04.98

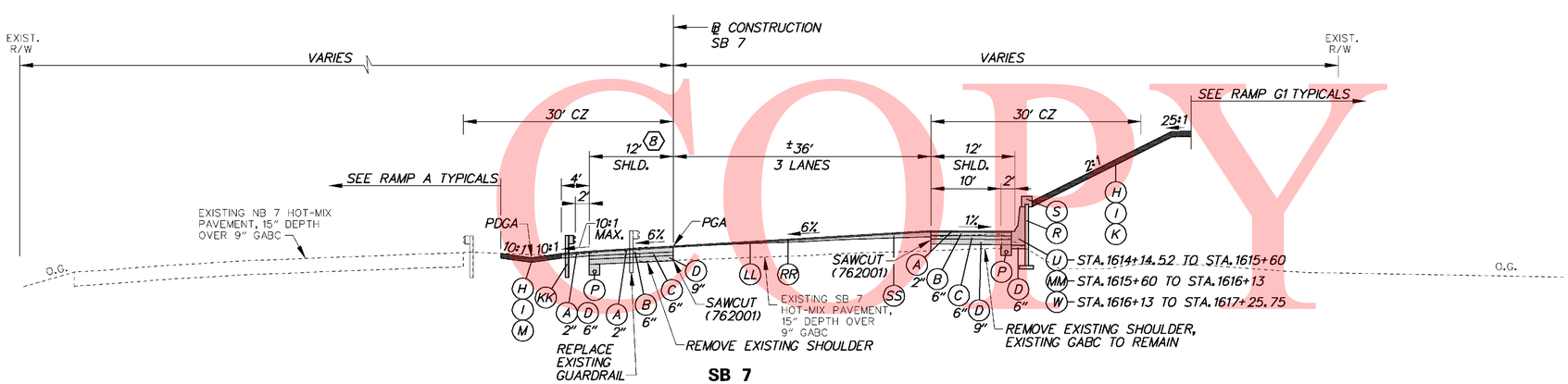

SB 7

STA. 1614+14.52 TO STA. 1617+25.75

B STA. 1614+50 TO STA. 1616+30 - WIDTH TAPERS 12' TO 6'

LEGEND

- (A) ITEM 401708 - SUPERPAVE, TYPE C HOT-MIX, 160 GYRATIONS, PG 70-22 (NON-CARBONATE STONE)
- (B) ITEM 401654 - SUPERPAVE, TYPE B HOT-MIX, 160 GYRATIONS, PG 70-22
- (C) ITEM 401663 - SUPERPAVE, BITUMINOUS CONCRETE BASE COURSE, 160 GYRATIONS, PG 64-22
- (D) ITEM 302007 - GRADED AGGREGATE BASE COURSE, TYPE B
- (E) ITEM 401711 - SUPERPAVE, TYPE C HOT-MIX, 160 GYRATIONS, PG 76-22 (NON-CARBONATE STONE)
- (F) ITEM 401660 - SUPERPAVE, TYPE B HOT-MIX, 160 GYRATIONS, PG 76-22
- (G) ITEM 501006 - PORTLAND CEMENT CONCRETE PAVEMENT, 12"
- (H) ITEM 732002 - TOPSOIL, 6" DEPTH
- (I) ITEM 734013 - PERMANENT GRASS SEEDING, DRY GROUND
- (J) ITEM 602017 - PCC MASONRY, PARAPET, CLASS A
- (K) ITEM 735533 - SOIL RETENTION BLANKET MULCH, TYPE 3
- (L) ITEM 735534 - SOIL RETENTION BLANKET MULCH, TYPE 4
- (M) ITEM 735535 - SOIL RETENTION BLANKET MULCH, TYPE 5, UNLESS OTHERWISE NOTED, SEE DRAINAGE PLANS FOR LIMITS AND TYPE
- (N) ITEM 209001 - BORROW, TYPE A
- (O) ITEM 209006 - BORROW, TYPE F OR APPROVED PROJECT EXCAVATION
- (P) ITEM 715001 - PERFORATED PIPE UNDERDRAINS, 6"
- (Q) ITEM 760504 - RUMBLE STRIPS, HOT-MIX
- (R) ITEM 602772 - MECHANICALLY STABILIZED EARTH WALLS
- (S) ITEM 602773 - PCC MASONRY FOR MECHANICALLY STABILIZED EARTH WALLS
- (T) ITEM 720512 - PCC SAFETY BARRIER PERMANENT, SINGLE FACE
- (U) ITEM 720654 - PCC SAFETY BARRIER PERMANENT, SINGLE FACE, MODIFIED TYPE 1
- (V) ITEM 720587 - PCC SAFETY BARRIER PERMANENT, DOUBLE FACE, MODIFIED
- (W) ITEM 720655 - PCC SAFETY BARRIER PERMANENT, SINGLE FACE, MODIFIED TYPE 2
- (X) ITEM 712005 - RIPRAP, R-4
- (Y) ITEM 401665 - SUPERPAVE, TYPE C HOT-MIX, 160 GYRATIONS, PG 64-22, PATCHING
- (Z) ITEM 401666 - SUPERPAVE, TYPE B HOT-MIX, 160 GYRATIONS, PG 64-22, PATCHING
- (AA) ITEM 401667 - SUPERPAVE, BITUMINOUS CONCRETE BASE COURSE, 160 GYRATIONS, PG 64-22, PATCHING
- (BB) ITEM 302008 - GRADED AGGREGATE BASE COURSE, TYPE B, PATCHING
- (CC) ITEM 755000 - HOT-MIX, HOT LAID, BITUMINOUS CONCRETE CURB
- (DD) ITEM 701010 - PORTLAND CEMENT CONCRETE CURB, TYPE 1
- (EE) ITEM 701011 - PORTLAND CEMENT CONCRETE CURB, TYPE 2
- (FF) ITEM 701020 - INTEGRAL PORTLAND CEMENT CONCRETE CURB AND GUTTER, TYPE 1
- (GG) ITEM 701023 - INTEGRAL PORTLAND CEMENT CONCRETE CURB AND GUTTER, TYPE 4
- (HH) ITEM 701026 - PORTLAND CEMENT CONCRETE MONOLITHIC MEDIAN
- (II) ITEM 701027 - PORTLAND CEMENT CONCRETE CURB, TYPE 1 MODIFIED
- (JJ) ITEM 720658 - PCC SAFETY BARRIER PERMANENT SINGLE FACE, MODIFIED, TYPE 5
- (KK) ITEM 720050 - GALVANIZED STEEL BEAM GUARDRAIL, TYPE 1
- (LL) ITEM 760507 - PROFILE MILLING, HOT-MIX
- (MM) ITEM 720656 - PCC SAFETY BARRIER PERMANENT, SINGLE FACE, MODIFIED, TYPE 3
- (NN) ITEM 720657 - PCC SAFETY BARRIER PERMANENT, SINGLE FACE, MODIFIED, TYPE 4
- (OO) ITEM 720651 - PCC SAFETY BARRIER PERMANENT, DOUBLE FACE, BIFURCATED, TYPE 1
- (PP) ITEM 720652 - PCC SAFETY BARRIER PERMANENT, DOUBLE FACE, BIFURCATED, TYPE 2
- (RR) ITEM 401668 - SUPERPAVE, TYPE C HOT-MIX, 160 GYRATIONS, PG 64-22, WEDGE
- (SS) ITEM 401669 - SUPERPAVE, TYPE B HOT-MIX, 160 GYRATIONS, PG 64-22, WEDGE

PAVEMENT LIFT NOTE:

THE MAXIMUM LIFTS FOR THE INDIVIDUAL PAVING MATERIAL ARE AS FOLLOWS:
SUPERPAVE, TYPE C HOT-MIX - 2"
SUPERPAVE, TYPE B HOT-MIX - 3"
SUPERPAVE, BIT. CONC. BASE COURSE - 6"
GRADED AGGREGATE BASE COURSE - 8"

NOTES:

1) THE PGA IS APPLIED TO THE TOP OF THE FINAL PAVEMENT SURFACE.

UNOFFICIAL WEBSITE COPY

11/10/2010 10:40:23 AM
M:\PROJECTS\2003\03059_DELTRNPK\SRIMALL\CADD\2809003\PLANS\TS07_SR1.DGN

DELAWARE DEPARTMENT OF TRANSPORTATION	ADDENDUMS / REVISIONS	NOT TO SCALE	SR1 / I-95 INTERCHANGE	CONTRACT 28-090-03	BRIDGE NO.	TYPICAL SECTIONS	SHEET NO. 12
				COUNTY NEW CASTLE	DESIGNED BY:		TOTAL SHTS. 803
					CHECKED BY:		

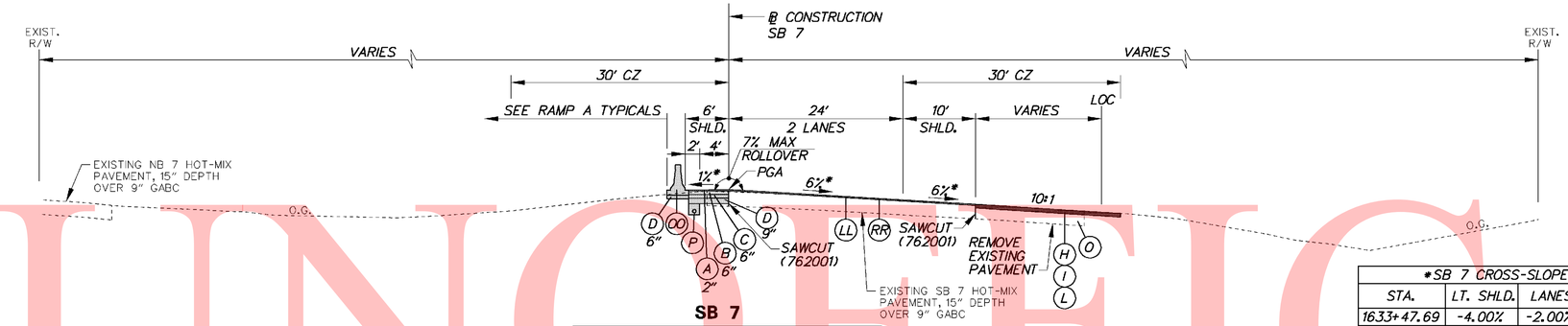

SB 7

STA. 1630+19.94 TO STA. 1637+00

STA. 1630+19.94 TO STA. 1632+70.54 - 2" MILL & 2" TYPE C OVERLAY
STA. 1632+70.54 TO STA. 1633+20.54 - 2" MILL & TYPE C WEDGE OVERLAY
STA. 1633+20.54 TO STA. 1634+20.54 - 2" MILL & TYPE B/C WEDGE OVERLAY
STA. 1634+20.54 TO STA. 1634+69.20 - 2" MILL & TYPE C WEDGE OVERLAY
STA. 1634+69.20 TO STA. 1637+00 - 2" MILL & 2" TYPE C OVERLAY

*SB 7 CROSS-SLOPES			
STA.	LT. SHLD.	LANES	RT. SHLD.
1633+47.69	-4.00%	-2.00%	-4.00%
1633+50	-4.00%	-2.06%	-4.00%
1633+87.69	-4.00%	-3.00%	-4.00%
1634+00	-3.69%	-3.31%	-4.00%
1634+27.69	-3.00%	-4.00%	-4.00%
1634+50	-2.44%	-4.56%	-4.56%
1635+00	-1.19%	-5.81%	-5.81%
1635+07.69	-1.00%	-6.00%	-6.00%

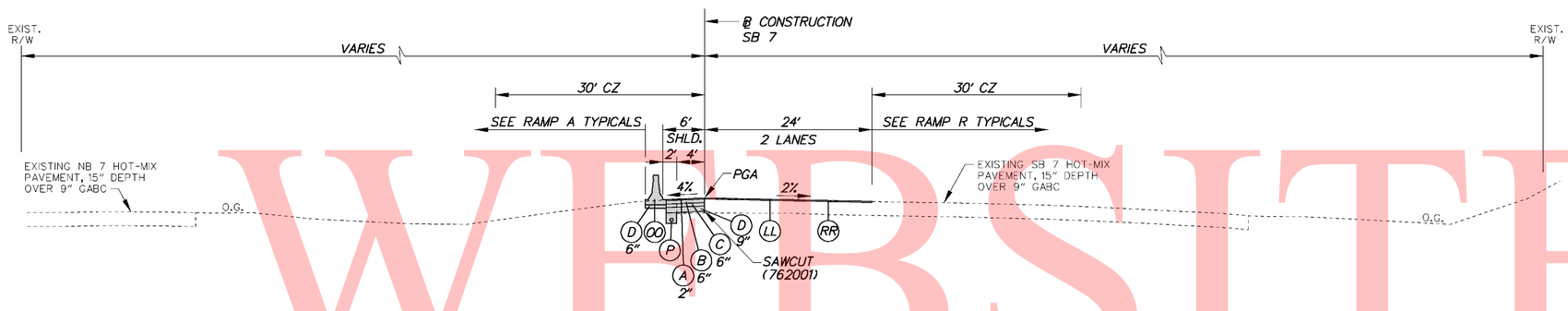

SB 7

STA. 1626+02.15 TO STA. 1630+19.94

STA. 1626+02.15 TO STA. 1627+20.54 - 2" MILL & TYPE C WEDGE OVERLAY
STA. 1627+20.54 TO STA. 1629+70.54 - 2" MILL & 2" TYPE C OVERLAY
STA. 1629+70.54 TO STA. 1630+19.94 - 2" MILL & TYPE C WEDGE OVERLAY

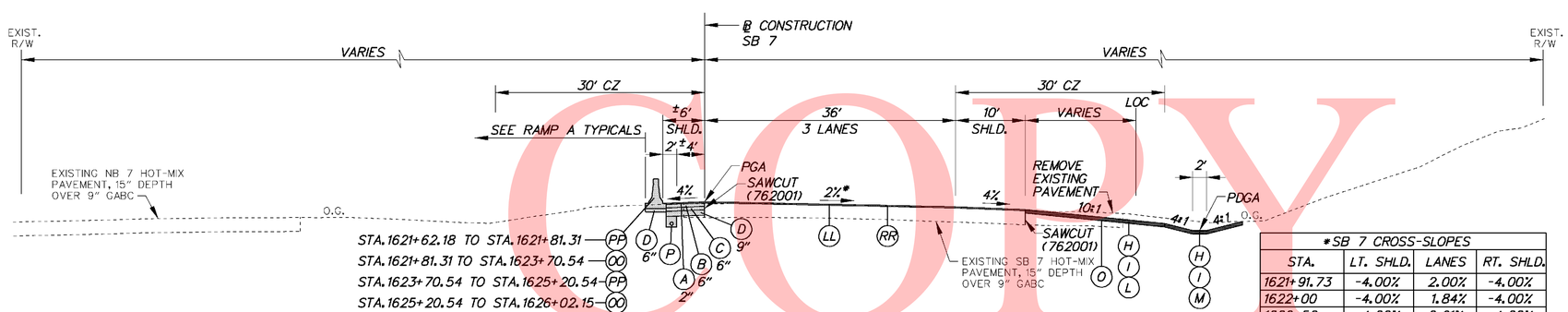

SB 7

STA. 1621+62.18 TO STA. 1626+02.15

STA. 1621+68.35 TO STA. 1623+70.54 - 2" MILL & 2" TYPE C OVERLAY
STA. 1623+70.54 TO STA. 1625+20.54 - 2" MILL & TYPE C WEDGE OVERLAY
STA. 1625+20.54 TO STA. 1625+29.52 - 2" MILL & 2" TYPE C OVERLAY
STA. 1625+29.52 TO STA. 1626+02.15 - 2" MILL & TYPE C WEDGE OVERLAY

*SB 7 CROSS-SLOPES			
STA.	LT. SHLD.	LANES	RT. SHLD.
1621+91.73	-4.00%	2.00%	-4.00%
1622+00	-4.00%	1.84%	-4.00%
1622+50	-4.00%	0.91%	-4.00%
1622+98.40	-4.00%	0.00%	-4.00%
1623+00	-4.00%	-0.03%	-4.00%
1623+50	-4.00%	-0.97%	-4.00%
1624+00	-4.00%	-1.92%	-4.00%
1624+04.40	-4.00%	-2.00%	-4.00%

LEGEND

- (A) ITEM 401708 - SUPERPAVE, TYPE C HOT-MIX, 160 GYRATIONS, PG 70-22 (NON-CARBONATE STONE)
- (B) ITEM 401654 - SUPERPAVE, TYPE B HOT-MIX, 160 GYRATIONS, PG 70-22
- (C) ITEM 401663 - SUPERPAVE, BITUMINOUS CONCRETE BASE COURSE, 160 GYRATIONS, PG 64-22
- (D) ITEM 302007 - GRADED AGGREGATE BASE COURSE, TYPE B
- (E) ITEM 401711 - SUPERPAVE, TYPE C HOT-MIX, 160 GYRATIONS, PG 76-22 (NON-CARBONATE STONE)
- (F) ITEM 401660 - SUPERPAVE, TYPE B HOT-MIX, 160 GYRATIONS, PG 76-22
- (G) ITEM 501006 - PORTLAND CEMENT CONCRETE PAVEMENT, 12"
- (H) ITEM 732002 - TOPSOIL, 6" DEPTH
- (I) ITEM 734013 - PERMANENT GRASS SEEDING, DRY GROUND
- (J) ITEM 602017 - PCC MASONRY, PARAPET, CLASS A
- (K) ITEM 735533 - SOIL RETENTION BLANKET MULCH, TYPE 3
- (L) ITEM 735534 - SOIL RETENTION BLANKET MULCH, TYPE 4
- (M) ITEM 735535 - SOIL RETENTION BLANKET MULCH, TYPE 5, UNLESS OTHERWISE NOTED, SEE DRAINAGE PLANS FOR LIMITS AND TYPE
- (N) ITEM 209001 - BORROW, TYPE A
- (O) ITEM 209006 - BORROW, TYPE F OR APPROVED PROJECT EXCAVATION
- (P) ITEM 715001 - PERFORATED PIPE UNDERDRAINS, 6"
- (Q) ITEM 760504 - RUMBLE STRIPS, HOT-MIX
- (R) ITEM 602772 - MECHANICALLY STABILIZED EARTH WALLS
- (S) ITEM 602773 - PCC MASONRY FOR MECHANICALLY STABILIZED EARTH WALLS
- (T) ITEM 720512 - PCC SAFETY BARRIER PERMANENT, SINGLE FACE
- (U) ITEM 720654 - PCC SAFETY BARRIER PERMANENT, SINGLE FACE, MODIFIED TYPE 1
- (V) ITEM 720587 - PCC SAFETY BARRIER PERMANENT, DOUBLE FACE, MODIFIED
- (W) ITEM 720655 - PCC SAFETY BARRIER PERMANENT, SINGLE FACE, MODIFIED TYPE 2
- (X) ITEM 712005 - RIPRAP, R-4
- (Y) ITEM 401665 - SUPERPAVE, TYPE C HOT-MIX, 160 GYRATIONS, PG 64-22, PATCHING
- (Z) ITEM 401666 - SUPERPAVE, TYPE B HOT-MIX, 160 GYRATIONS, PG 64-22, PATCHING
- (AA) ITEM 401667 - SUPERPAVE, BITUMINOUS CONCRETE BASE COURSE, 160 GYRATIONS, PG 64-22, PATCHING
- (BB) ITEM 302008 - GRADED AGGREGATE BASE COURSE, TYPE B, PATCHING
- (CC) ITEM 755000 - HOT-MIX, HOT LAID, BITUMINOUS CONCRETE CURB
- (DD) ITEM 701010 - PORTLAND CEMENT CONCRETE CURB, TYPE 1
- (EE) ITEM 701011 - PORTLAND CEMENT CONCRETE CURB, TYPE 2
- (FF) ITEM 701020 - INTEGRAL PORTLAND CEMENT CONCRETE CURB AND GUTTER, TYPE 1
- (GG) ITEM 701023 - INTEGRAL PORTLAND CEMENT CONCRETE CURB AND GUTTER, TYPE 4
- (HH) ITEM 701026 - PORTLAND CEMENT CONCRETE MONOLITHIC MEDIAN
- (II) ITEM 701027 - PORTLAND CEMENT CONCRETE CURB, TYPE 1 MODIFIED
- (JJ) ITEM 720658 - PCC SAFETY BARRIER PERMANENT SINGLE FACE, MODIFIED, TYPE 5
- (KK) ITEM 720050 - GALVANIZED STEEL BEAM GUARDRAIL, TYPE 1
- (LL) ITEM 760507 - PROFILE MILLING, HOT-MIX
- (MM) ITEM 720656 - PCC SAFETY BARRIER PERMANENT, SINGLE FACE, MODIFIED, TYPE 3
- (NN) ITEM 720657 - PCC SAFETY BARRIER PERMANENT, SINGLE FACE, MODIFIED, TYPE 4
- (OO) ITEM 720651 - PCC SAFETY BARRIER PERMANENT, DOUBLE FACE, BIFURCATED, TYPE 1
- (PP) ITEM 720652 - PCC SAFETY BARRIER PERMANENT, DOUBLE FACE, BIFURCATED, TYPE 2
- (RR) ITEM 401668 - SUPERPAVE, TYPE C HOT-MIX, 160 GYRATIONS, PG 64-22, WEDGE
- (SS) ITEM 401669 - SUPERPAVE, TYPE B HOT-MIX, 160 GYRATIONS, PG 64-22, WEDGE

PAVEMENT LIFT NOTE:

THE MAXIMUM LIFTS FOR THE INDIVIDUAL PAVING MATERIAL ARE AS FOLLOWS:
SUPERPAVE, TYPE C HOT-MIX - 2"
SUPERPAVE, TYPE B HOT-MIX - 3"
SUPERPAVE, BIT. CONC. BASE COURSE - 6"
GRADED AGGREGATE BASE COURSE - 8"

NOTES:

1) THE PGA IS APPLIED TO THE TOP OF THE FINAL PAVEMENT SURFACE.

UNOFFICIAL WEBSITE COPY

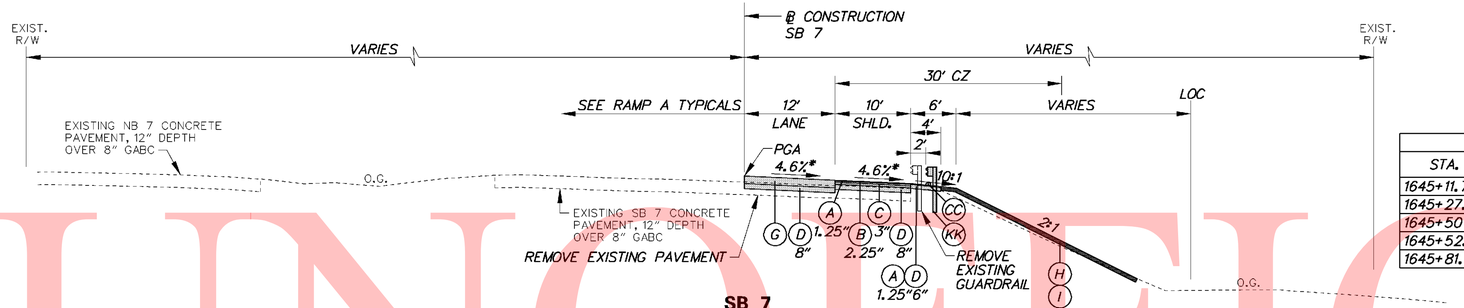

SB 7

STA. 1641+39.41 TO STA. 1646+69.18

*SB 7 CROSS-SLOPES			
STA.	LT. SHLD.	LANES	RT. SHLD.
1645+11.75	-	-4.60%	-4.60%
1645+27.90	-	-4.00%	-4.00%
1645+50	-	-3.18%	-4.00%
1645+52.75	-	-3.08%	-4.00%
1645+81.75	-	-2.00%	-4.00%

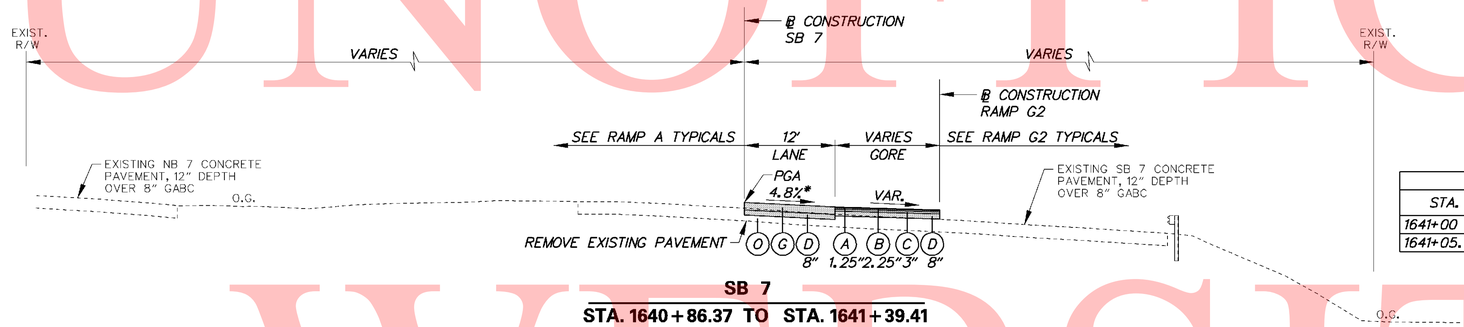

SB 7

STA. 1640+86.37 TO STA. 1641+39.41

*SB 7 CROSS-SLOPES			
STA.	LT. SHLD.	LANES	RT. SHLD.
1641+00	-	-4.80%	-
1641+05.37	-	-4.60%	-

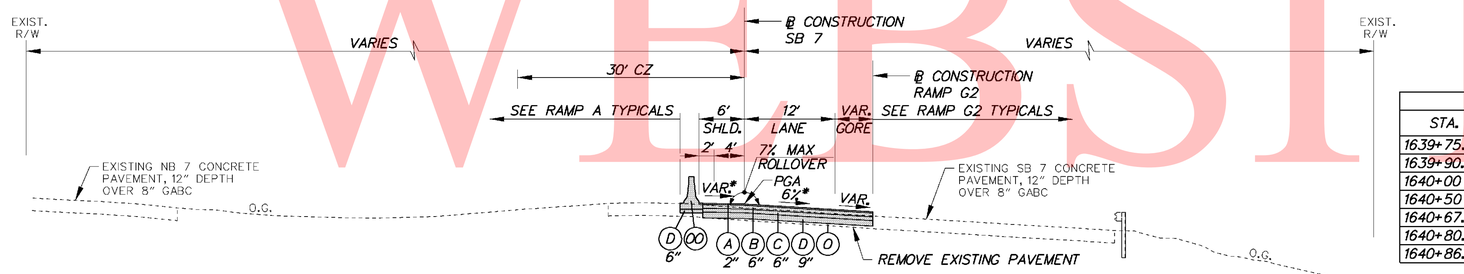

SB 7

STA. 1638+40.46 TO STA. 1640+86.37

*SB 7 CROSS-SLOPES			
STA.	LT. SHLD.	LANES	RT. SHLD.
1639+75.00	-1.00%	-6.00%	-
1639+90.00	0.00%	-6.00%	-
1640+00	0.67%	-6.00%	-
1640+50	4.00%	-6.00%	-
1640+67.37	5.16%	-6.00%	-
1640+80.00	6.00%	-5.53%	-
1640+86.37	6.00%	-5.30%	-

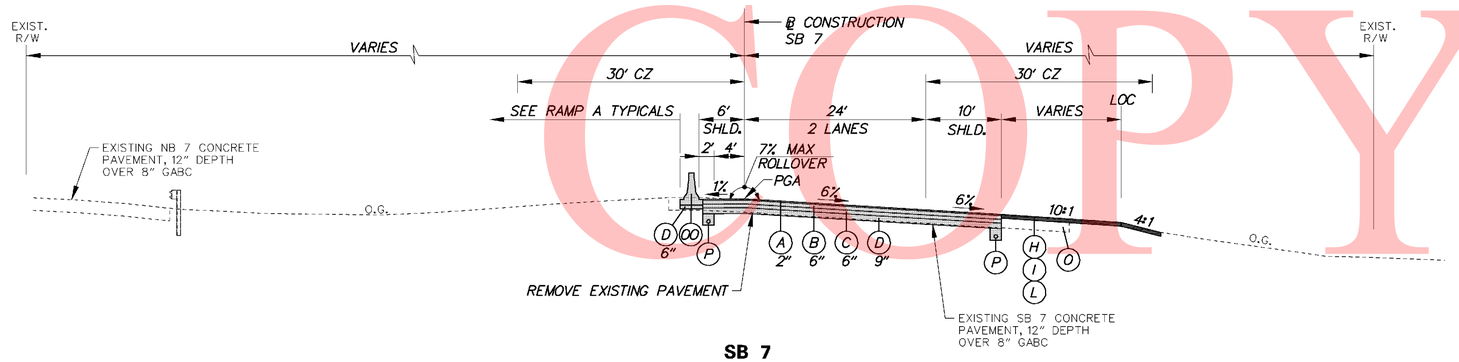

SB 7

STA. 1637+00 TO STA. 1638+40.46

LEGEND

- (A) ITEM 401708 - SUPERPAVE, TYPE C HOT-MIX, 160 GYRATIONS, PG 70-22 (NON-CARBONATE STONE)
- (B) ITEM 401654 - SUPERPAVE, TYPE B HOT-MIX, 160 GYRATIONS, PG 70-22
- (C) ITEM 401663 - SUPERPAVE, BITUMINOUS CONCRETE BASE COURSE, 160 GYRATIONS, PG 64-22
- (D) ITEM 302007 - GRADED AGGREGATE BASE COURSE, TYPE B
- (E) ITEM 401711 - SUPERPAVE, TYPE C HOT-MIX, 160 GYRATIONS, PG 76-22 (NON-CARBONATE STONE)
- (F) ITEM 401660 - SUPERPAVE, TYPE B HOT-MIX, 160 GYRATIONS, PG 76-22
- (G) ITEM 501006 - PORTLAND CEMENT CONCRETE PAVEMENT, 12"
- (H) ITEM 732002 - TOPSOIL, 6" DEPTH
- (I) ITEM 734013 - PERMANENT GRASS SEEDING, DRY GROUND
- (J) ITEM 602017 - PCC MASONRY, PARAPET, CLASS A
- (K) ITEM 735533 - SOIL RETENTION BLANKET MULCH, TYPE 3
- (L) ITEM 735534 - SOIL RETENTION BLANKET MULCH, TYPE 4
- (M) ITEM 735535 - SOIL RETENTION BLANKET MULCH, TYPE 5, UNLESS OTHERWISE NOTED, SEE DRAINAGE PLANS FOR LIMITS AND TYPE
- (N) ITEM 209001 - BORROW, TYPE A
- (O) ITEM 209006 - BORROW, TYPE F OR APPROVED PROJECT EXCAVATION
- (P) ITEM 715001 - PERFORATED PIPE UNDERDRAINS, 6"
- (Q) ITEM 760504 - RUMBLE STRIPS, HOT-MIX
- (R) ITEM 602772 - MECHANICALLY STABILIZED EARTH WALLS
- (S) ITEM 602773 - PCC MASONRY FOR MECHANICALLY STABILIZED EARTH WALLS
- (T) ITEM 720512 - PCC SAFETY BARRIER PERMANENT, SINGLE FACE
- (U) ITEM 720654 - PCC SAFETY BARRIER PERMANENT, SINGLE FACE, MODIFIED TYPE 1
- (V) ITEM 720587 - PCC SAFETY BARRIER PERMANENT, DOUBLE FACE, MODIFIED
- (W) ITEM 720655 - PCC SAFETY BARRIER PERMANENT, SINGLE FACE, MODIFIED TYPE 2
- (X) ITEM 712005 - RIPRAP, R-4
- (Y) ITEM 401665 - SUPERPAVE, TYPE C HOT-MIX, 160 GYRATIONS, PG 64-22, PATCHING
- (Z) ITEM 401666 - SUPERPAVE, TYPE B HOT-MIX, 160 GYRATIONS, PG 64-22, PATCHING
- (AA) ITEM 401667 - SUPERPAVE, BITUMINOUS CONCRETE BASE COURSE, 160 GYRATIONS, PG 64-22, PATCHING
- (BB) ITEM 302008 - GRADED AGGREGATE BASE COURSE, TYPE B, PATCHING
- (CC) ITEM 755000 - HOT-MIX, HOT LAID, BITUMINOUS CONCRETE CURB
- (DD) ITEM 701010 - PORTLAND CEMENT CONCRETE CURB, TYPE 1
- (EE) ITEM 701011 - PORTLAND CEMENT CONCRETE CURB, TYPE 2
- (FF) ITEM 701020 - INTEGRAL PORTLAND CEMENT CONCRETE CURB AND GUTTER, TYPE 1
- (GG) ITEM 701023 - INTEGRAL PORTLAND CEMENT CONCRETE CURB AND GUTTER, TYPE 4
- (HH) ITEM 701026 - PORTLAND CEMENT CONCRETE MONOLITHIC MEDIAN
- (II) ITEM 701027 - PORTLAND CEMENT CONCRETE CURB, TYPE 1 MODIFIED
- (JJ) ITEM 720658 - PCC SAFETY BARRIER PERMANENT SINGLE FACE, MODIFIED, TYPE 5
- (KK) ITEM 720050 - GALVANIZED STEEL BEAM GUARDRAIL, TYPE 1
- (LL) ITEM 760507 - PROFILE MILLING, HOT-MIX
- (MM) ITEM 720656 - PCC SAFETY BARRIER PERMANENT, SINGLE FACE, MODIFIED, TYPE 3
- (NN) ITEM 720657 - PCC SAFETY BARRIER PERMANENT, SINGLE FACE, MODIFIED, TYPE 4
- (OO) ITEM 720651 - PCC SAFETY BARRIER PERMANENT, DOUBLE FACE, BIFURCATED, TYPE 1
- (PP) ITEM 720652 - PCC SAFETY BARRIER PERMANENT, DOUBLE FACE, BIFURCATED, TYPE 2
- (RR) ITEM 401668 - SUPERPAVE, TYPE C HOT-MIX, 160 GYRATIONS, PG 64-22, WEDGE
- (SS) ITEM 401669 - SUPERPAVE, TYPE B HOT-MIX, 160 GYRATIONS, PG 64-22, WEDGE

PAVEMENT LIFT NOTE:

THE MAXIMUM LIFTS FOR THE INDIVIDUAL PAVING MATERIAL ARE AS FOLLOWS:
SUPERPAVE, TYPE C HOT-MIX - 2"
SUPERPAVE, TYPE B HOT-MIX - 3"
SUPERPAVE, BIT. CONC. BASE COURSE - 6"
GRADED AGGREGATE BASE COURSE - 8"

NOTES:

1) THE PGA IS APPLIED TO THE TOP OF THE FINAL PAVEMENT SURFACE.

UNOFFICIAL WEBSITE COPY

10/28/2010 11:04:05 AM
M:\PROJECTS\2003\03059_DELTRNPK\SRIMALL\CADD\2809003\PLANS\TS09_SR1.DGN

DELAWARE DEPARTMENT OF TRANSPORTATION	ADDENDUMS / REVISIONS	NOT TO SCALE	SR1 / I-95 INTERCHANGE	CONTRACT 28-090-03	BRIDGE NO.	TYPICAL SECTIONS	SHEET NO. 14
				COUNTY NEW CASTLE	DESIGNED BY:		TOTAL SHTS. 803
					CHECKED BY:		

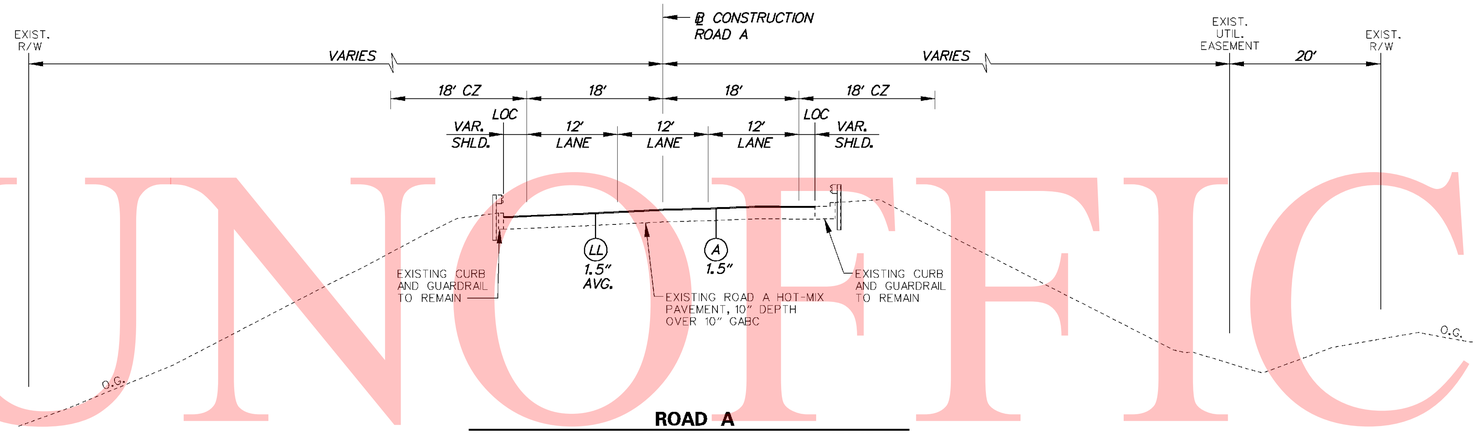

ROAD A

STA. 2204+66.02 TO STA. 2207+46.01 (BRIDGE)

STA. 2209+94.47 (BRIDGE) TO STA. 2214+46.63

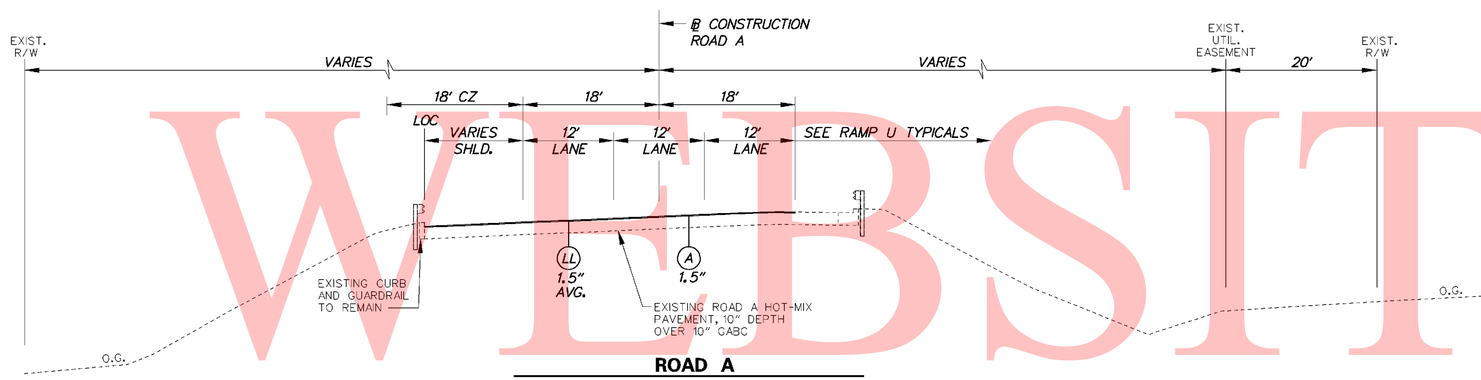

ROAD A

STA. 2202+80.09 TO STA. 2204+66.02

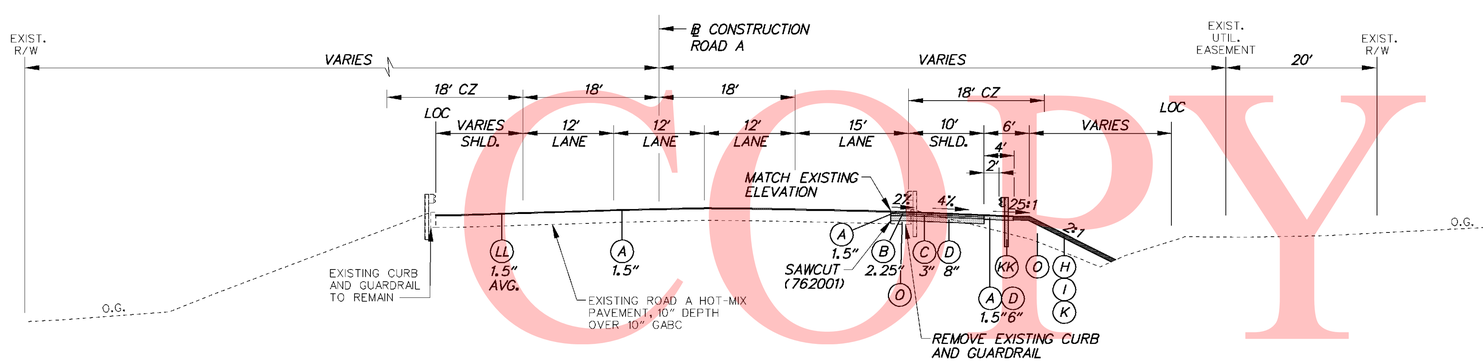

ROAD A

STA. 2200+60.43 TO STA. 2202+80.09

LEGEND

- (A) ITEM 401708 - SUPERPAVE, TYPE C HOT-MIX, 160 GYRATIONS, PG 70-22 (NON-CARBONATE STONE)
- (B) ITEM 401654 - SUPERPAVE, TYPE B HOT-MIX, 160 GYRATIONS, PG 70-22
- (C) ITEM 401663 - SUPERPAVE, BITUMINOUS CONCRETE BASE COURSE, 160 GYRATIONS, PG 64-22
- (D) ITEM 302007 - GRADED AGGREGATE BASE COURSE, TYPE B
- (E) ITEM 401711 - SUPERPAVE, TYPE C HOT-MIX, 160 GYRATIONS, PG 76-22 (NON-CARBONATE STONE)
- (F) ITEM 401660 - SUPERPAVE, TYPE B HOT-MIX, 160 GYRATIONS, PG 76-22
- (G) ITEM 501006 - PORTLAND CEMENT CONCRETE PAVEMENT, 12"
- (H) ITEM 732002 - TOPSOIL, 6" DEPTH
- (I) ITEM 734013 - PERMANENT GRASS SEEDING, DRY GROUND
- (J) ITEM 602017 - PCC MASONRY, PARAPET, CLASS A
- (K) ITEM 735533 - SOIL RETENTION BLANKET MULCH, TYPE 3
- (L) ITEM 735534 - SOIL RETENTION BLANKET MULCH, TYPE 4
- (M) ITEM 735535 - SOIL RETENTION BLANKET MULCH, TYPE 5, UNLESS OTHERWISE NOTED, SEE DRAINAGE PLANS FOR LIMITS AND TYPE
- (N) ITEM 209001 - BORROW, TYPE A
- (O) ITEM 209006 - BORROW, TYPE F OR APPROVED PROJECT EXCAVATION
- (P) ITEM 715001 - PERFORATED PIPE UNDERDRAINS, 6"
- (Q) ITEM 760504 - RUMBLE STRIPS, HOT-MIX
- (R) ITEM 602772 - MECHANICALLY STABILIZED EARTH WALLS
- (S) ITEM 602773 - PCC MASONRY FOR MECHANICALLY STABILIZED EARTH WALLS
- (T) ITEM 720512 - PCC SAFETY BARRIER PERMANENT, SINGLE FACE
- (U) ITEM 720654 - PCC SAFETY BARRIER PERMANENT, SINGLE FACE, MODIFIED TYPE 1
- (V) ITEM 720587 - PCC SAFETY BARRIER PERMANENT, DOUBLE FACE, MODIFIED
- (W) ITEM 720655 - PCC SAFETY BARRIER PERMANENT, SINGLE FACE, MODIFIED TYPE 2
- (X) ITEM 712005 - RIPRAP, R-4
- (Y) ITEM 401665 - SUPERPAVE, TYPE C HOT-MIX, 160 GYRATIONS, PG 64-22, PATCHING
- (Z) ITEM 401666 - SUPERPAVE, TYPE B HOT-MIX, 160 GYRATIONS, PG 64-22, PATCHING
- (AA) ITEM 401667 - SUPERPAVE, BITUMINOUS CONCRETE BASE COURSE, 160 GYRATIONS, PG 64-22, PATCHING
- (BB) ITEM 302008 - GRADED AGGREGATE BASE COURSE, TYPE B, PATCHING
- (CC) ITEM 755000 - HOT-MIX, HOT LAID, BITUMINOUS CONCRETE CURB
- (DD) ITEM 701010 - PORTLAND CEMENT CONCRETE CURB, TYPE 1
- (EE) ITEM 701011 - PORTLAND CEMENT CONCRETE CURB, TYPE 2
- (FF) ITEM 701020 - INTEGRAL PORTLAND CEMENT CONCRETE CURB AND GUTTER, TYPE 1
- (GG) ITEM 701023 - INTEGRAL PORTLAND CEMENT CONCRETE CURB AND GUTTER, TYPE 4
- (HH) ITEM 701026 - PORTLAND CEMENT CONCRETE MONOLITHIC MEDIAN
- (II) ITEM 701027 - PORTLAND CEMENT CONCRETE CURB, TYPE 1 MODIFIED
- (JJ) ITEM 720658 - PCC SAFETY BARRIER PERMANENT SINGLE FACE, MODIFIED, TYPE 5
- (KK) ITEM 720050 - GALVANIZED STEEL BEAM GUARDRAIL, TYPE 1
- (LL) ITEM 760507 - PROFILE MILLING, HOT-MIX
- (MM) ITEM 720656 - PCC SAFETY BARRIER PERMANENT, SINGLE FACE, MODIFIED, TYPE 3
- (NN) ITEM 720657 - PCC SAFETY BARRIER PERMANENT, SINGLE FACE, MODIFIED, TYPE 4
- (OO) ITEM 720651 - PCC SAFETY BARRIER PERMANENT, DOUBLE FACE, BIFURCATED, TYPE 1
- (PP) ITEM 720652 - PCC SAFETY BARRIER PERMANENT, DOUBLE FACE, BIFURCATED, TYPE 2
- (RR) ITEM 401668 - SUPERPAVE, TYPE C HOT-MIX, 160 GYRATIONS, PG 64-22, WEDGE
- (SS) ITEM 401669 - SUPERPAVE, TYPE B HOT-MIX, 160 GYRATIONS, PG 64-22, WEDGE

PAVEMENT LIFT NOTE:

THE MAXIMUM LIFTS FOR THE INDIVIDUAL PAVING MATERIAL ARE AS FOLLOWS:
SUPERPAVE, TYPE C HOT-MIX - 2"
SUPERPAVE, TYPE B HOT-MIX - 3"
SUPERPAVE, BIT. CONC. BASE COURSE - 6"
GRADED AGGREGATE BASE COURSE - 8"

NOTES:

1) THE PGA IS APPLIED TO THE TOP OF THE FINAL PAVEMENT SURFACE.

UNOFFICIAL WEBSITE COPY

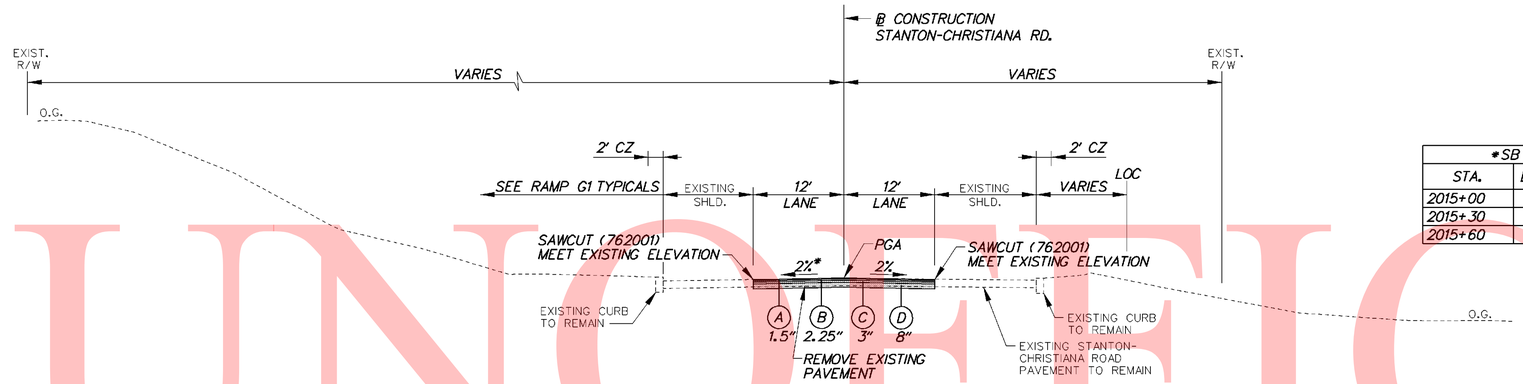

STANTON–CHRISTIANA ROAD

STA. 2015+59.83 TO STA. 2015+80

*SB 7 CROSS-SLOPES			
STA.	LT. SHLD.	LANES	RT. SHLD.
2015+00	2.00%	-2.00%	-2.00%
2015+30	-	-2.00%	-2.00%
2015+60	2.00%	-2.00%	-2.00%

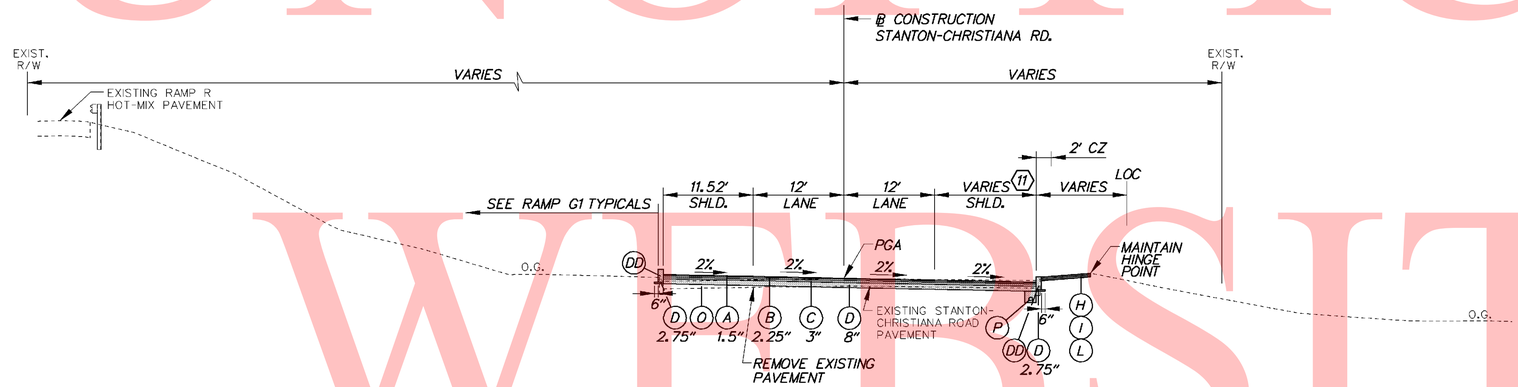

STANTON–CHRISTIANA ROAD

STA. 2014+99.76 TO STA. 2015+59.83

11 STA. 2014+99.76 TO STA. 2015+59.83
SHOULDER TAPERS 10.7' TO 13.67'

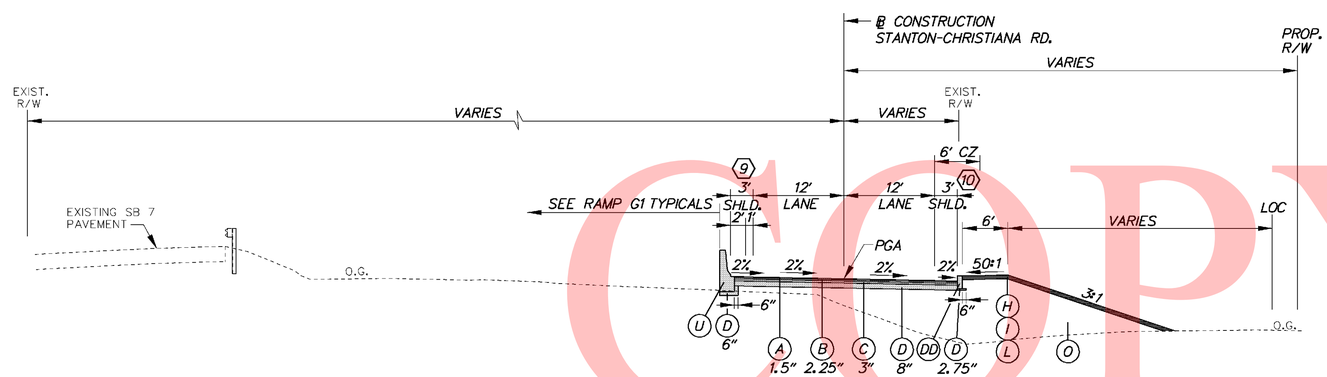

STANTON–CHRISTIANA ROAD

STA. 2010+00 TO STA. 2014+99.76

9 STA. 2013+69.09 TO STA. 2014+99.76
SHOULDER TAPERS 3' TO 11.52'

10 STA. 2013+69.09 TO STA. 2014+99.76
SHOULDER TAPERS 3' TO 10.7'

LEGEND

- A ITEM 401708 - SUPERPAVE, TYPE C HOT-MIX, 160 GYRATIONS, PG 70-22 (NON-CARBONATE STONE)
- B ITEM 401654 - SUPERPAVE, TYPE B HOT-MIX, 160 GYRATIONS, PG 70-22
- C ITEM 401663 - SUPERPAVE, BITUMINOUS CONCRETE BASE COURSE, 160 GYRATIONS, PG 64-22
- D ITEM 302007 - GRADED AGGREGATE BASE COURSE, TYPE B
- E ITEM 401711 - SUPERPAVE, TYPE C HOT-MIX, 160 GYRATIONS, PG 76-22 (NON-CARBONATE STONE)
- F ITEM 401660 - SUPERPAVE, TYPE B HOT-MIX, 160 GYRATIONS, PG 76-22
- G ITEM 501006 - PORTLAND CEMENT CONCRETE PAVEMENT, 12"
- H ITEM 732002 - TOPSOIL, 6" DEPTH
- I ITEM 734013 - PERMANENT GRASS SEEDING, DRY GROUND
- J ITEM 602017 - PCC MASONRY, PARAPET, CLASS A
- K ITEM 735533 - SOIL RETENTION BLANKET MULCH, TYPE 3
- L ITEM 735534 - SOIL RETENTION BLANKET MULCH, TYPE 4
- M ITEM 735535 - SOIL RETENTION BLANKET MULCH, TYPE 5, UNLESS OTHERWISE NOTED, SEE DRAINAGE PLANS FOR LIMITS AND TYPE
- N ITEM 209001 - BORROW, TYPE A
- O ITEM 209006 - BORROW, TYPE F OR APPROVED PROJECT EXCAVATION
- P ITEM 715001 - PERFORATED PIPE UNDERDRAINS, 6"
- Q ITEM 760504 - RUMBLE STRIPS, HOT-MIX
- R ITEM 602772 - MECHANICALLY STABILIZED EARTH WALLS
- S ITEM 602773 - PCC MASONRY FOR MECHANICALLY STABILIZED EARTH WALLS
- T ITEM 720512 - PCC SAFETY BARRIER PERMANENT, SINGLE FACE
- U ITEM 720654 - PCC SAFETY BARRIER PERMANENT, SINGLE FACE, MODIFIED TYPE 1
- V ITEM 720587 - PCC SAFETY BARRIER PERMANENT, DOUBLE FACE, MODIFIED
- W ITEM 720655 - PCC SAFETY BARRIER PERMANENT, SINGLE FACE, MODIFIED TYPE 2
- X ITEM 712005 - RIPRAP, R-4
- Y ITEM 401665 - SUPERPAVE, TYPE C HOT-MIX, 160 GYRATIONS, PG 64-22, PATCHING
- Z ITEM 401666 - SUPERPAVE, TYPE B HOT-MIX, 160 GYRATIONS, PG 64-22, PATCHING
- AA ITEM 401667 - SUPERPAVE, BITUMINOUS CONCRETE BASE COURSE, 160 GYRATIONS, PG 64-22, PATCHING
- BB ITEM 302008 - GRADED AGGREGATE BASE COURSE, TYPE B, PATCHING
- CC ITEM 755000 - HOT-MIX, HOT LAID, BITUMINOUS CONCRETE CURB
- DD ITEM 701010 - PORTLAND CEMENT CONCRETE CURB, TYPE 1
- EE ITEM 701011 - PORTLAND CEMENT CONCRETE CURB, TYPE 2
- FF ITEM 701020 - INTEGRAL PORTLAND CEMENT CONCRETE CURB AND GUTTER, TYPE 1
- GG ITEM 701023 - INTEGRAL PORTLAND CEMENT CONCRETE CURB AND GUTTER, TYPE 4
- HH ITEM 701026 - PORTLAND CEMENT CONCRETE MONOLITHIC MEDIAN
- II ITEM 701027 - PORTLAND CEMENT CONCRETE CURB, TYPE 1 MODIFIED
- JJ ITEM 720658 - PCC SAFETY BARRIER PERMANENT SINGLE FACE, MODIFIED, TYPE 5
- KK ITEM 720050 - GALVANIZED STEEL BEAM GUARDRAIL, TYPE 1
- LL ITEM 760507 - PROFILE MILLING, HOT-MIX
- MM ITEM 720656 - PCC SAFETY BARRIER PERMANENT, SINGLE FACE, MODIFIED, TYPE 3
- NN ITEM 720657 - PCC SAFETY BARRIER PERMANENT, SINGLE FACE, MODIFIED, TYPE 4
- OO ITEM 720651 - PCC SAFETY BARRIER PERMANENT, DOUBLE FACE, BIFURCATED, TYPE 1
- PP ITEM 720652 - PCC SAFETY BARRIER PERMANENT, DOUBLE FACE, BIFURCATED, TYPE 2
- RR ITEM 401668 - SUPERPAVE, TYPE C HOT-MIX, 160 GYRATIONS, PG 64-22, WEDGE
- SS ITEM 401669 - SUPERPAVE, TYPE B HOT-MIX, 160 GYRATIONS, PG 64-22, WEDGE

PAVEMENT LIFT NOTE:

THE MAXIMUM LIFTS FOR THE INDIVIDUAL PAVING MATERIAL ARE AS FOLLOWS:
SUPERPAVE, TYPE C HOT-MIX - 2"
SUPERPAVE, TYPE B HOT-MIX - 3"
SUPERPAVE, BIT. CONC. BASE COURSE - 6"
GRADED AGGREGATE BASE COURSE - 8"

NOTES:

1) THE PGA IS APPLIED TO THE TOP OF THE FINAL PAVEMENT SURFACE.

UNOFFICIAL WEBSITE COPY

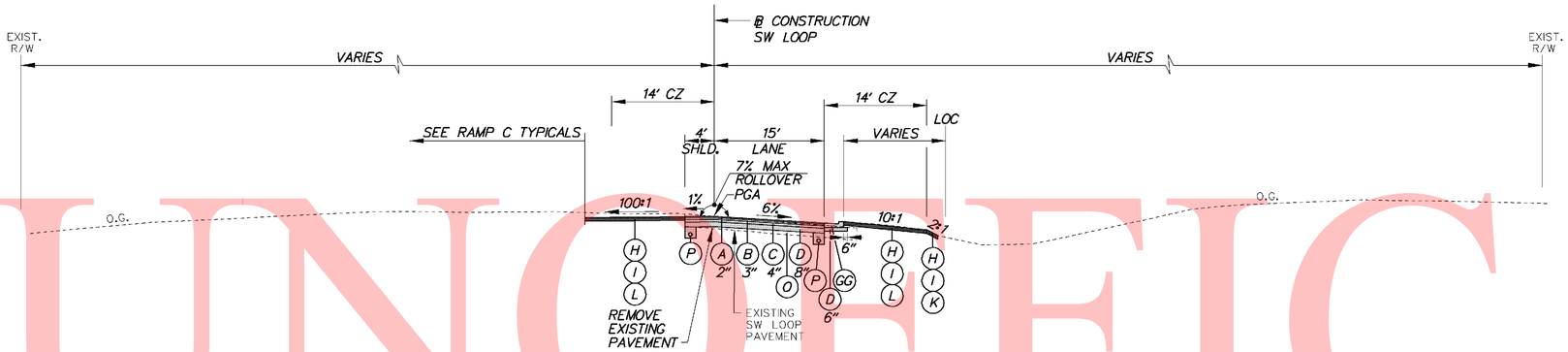

SW LOOP

STA. 1902+48.03 TO STA. 1903+11.14

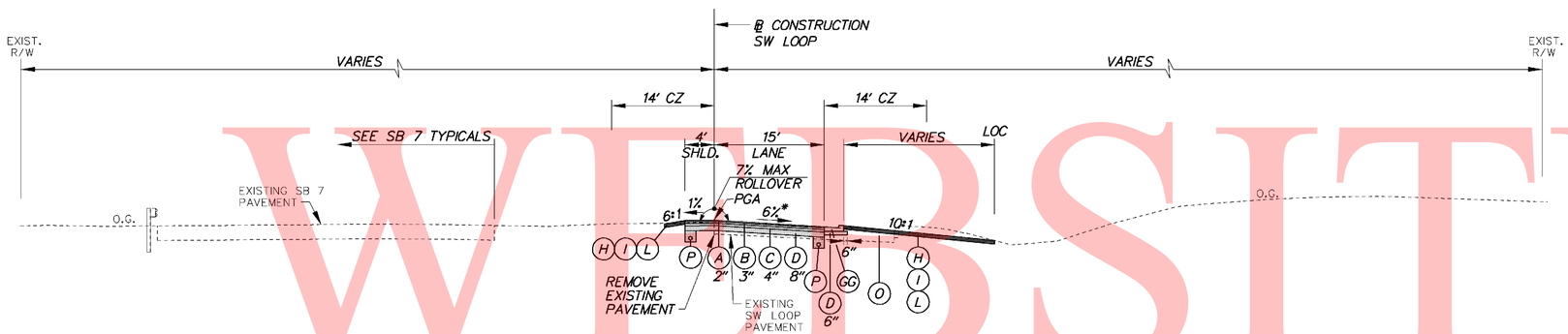

SW LOOP

STA. 1901+54.52 TO STA. 1902+48.03

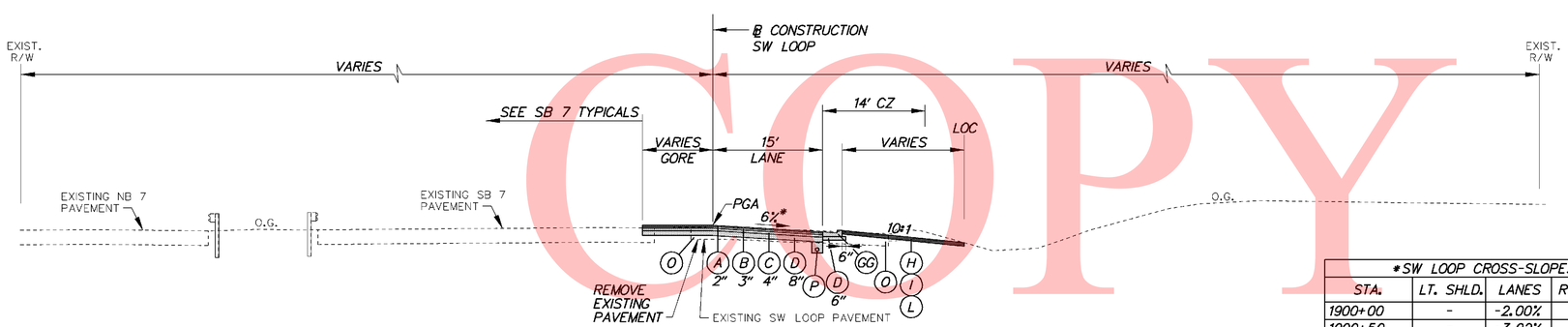

SW LOOP

STA. 1900+00 TO STA. 1901+54.52

*SW LOOP CROSS-SLOPES			
STA.	LT. SHLD.	LANES	RT. OF CURB
1900+00	-	-2.00%	-
1900+50	-	-3.92%	-
1901+00	-	-5.85%	-
1901+04.00	-	-6.00%	-
1901+50	-	-6.00%	-
1901+54.52	-1.00%	-6.00%	-

LEGEND

- (A) ITEM 401708 - SUPERPAVE, TYPE C HOT-MIX, 160 GYRATIONS, PG 70-22 (NON-CARBONATE STONE)
- (B) ITEM 401654 - SUPERPAVE, TYPE B HOT-MIX, 160 GYRATIONS, PG 70-22
- (C) ITEM 401663 - SUPERPAVE, BITUMINOUS CONCRETE BASE COURSE, 160 GYRATIONS, PG 64-22
- (D) ITEM 302007 - GRADED AGGREGATE BASE COURSE, TYPE B
- (E) ITEM 401711 - SUPERPAVE, TYPE C HOT-MIX, 160 GYRATIONS, PG 76-22 (NON-CARBONATE STONE)
- (F) ITEM 401660 - SUPERPAVE, TYPE B HOT-MIX, 160 GYRATIONS, PG 76-22
- (G) ITEM 501006 - PORTLAND CEMENT CONCRETE PAVEMENT, 12"
- (H) ITEM 732002 - TOPSOIL, 6" DEPTH
- (I) ITEM 734013 - PERMANENT GRASS SEEDING, DRY GROUND
- (J) ITEM 602017 - PCC MASONRY, PARAPET, CLASS A
- (K) ITEM 735533 - SOIL RETENTION BLANKET MULCH, TYPE 3
- (L) ITEM 735534 - SOIL RETENTION BLANKET MULCH, TYPE 4
- (M) ITEM 735535 - SOIL RETENTION BLANKET MULCH, TYPE 5, UNLESS OTHERWISE NOTED, SEE DRAINAGE PLANS FOR LIMITS AND TYPE
- (N) ITEM 209001 - BORROW, TYPE A
- (O) ITEM 209006 - BORROW, TYPE F OR APPROVED PROJECT EXCAVATION
- (P) ITEM 715001 - PERFORATED PIPE UNDERDRAINS, 6"
- (Q) ITEM 760504 - RUMBLE STRIPS, HOT-MIX
- (R) ITEM 602772 - MECHANICALLY STABILIZED EARTH WALLS
- (S) ITEM 602773 - PCC MASONRY FOR MECHANICALLY STABILIZED EARTH WALLS
- (T) ITEM 720512 - PCC SAFETY BARRIER PERMANENT, SINGLE FACE
- (U) ITEM 720654 - PCC SAFETY BARRIER PERMANENT, SINGLE FACE, MODIFIED TYPE 1
- (V) ITEM 720587 - PCC SAFETY BARRIER PERMANENT, DOUBLE FACE, MODIFIED
- (W) ITEM 720655 - PCC SAFETY BARRIER PERMANENT, SINGLE FACE, MODIFIED TYPE 2
- (X) ITEM 712005 - RIPRAP, R-4
- (Y) ITEM 401665 - SUPERPAVE, TYPE C HOT-MIX, 160 GYRATIONS, PG 64-22, PATCHING
- (Z) ITEM 401666 - SUPERPAVE, TYPE B HOT-MIX, 160 GYRATIONS, PG 64-22, PATCHING
- (AA) ITEM 401667 - SUPERPAVE, BITUMINOUS CONCRETE BASE COURSE, 160 GYRATIONS, PG 64-22, PATCHING
- (BB) ITEM 302008 - GRADED AGGREGATE BASE COURSE, TYPE B, PATCHING
- (CC) ITEM 755000 - HOT-MIX, HOT LAID, BITUMINOUS CONCRETE CURB
- (DD) ITEM 701010 - PORTLAND CEMENT CONCRETE CURB, TYPE 1
- (EE) ITEM 701011 - PORTLAND CEMENT CONCRETE CURB, TYPE 2
- (FF) ITEM 701020 - INTEGRAL PORTLAND CEMENT CONCRETE CURB AND GUTTER, TYPE 1
- (GG) ITEM 701023 - INTEGRAL PORTLAND CEMENT CONCRETE CURB AND GUTTER, TYPE 4
- (HH) ITEM 701026 - PORTLAND CEMENT CONCRETE MONOLITHIC MEDIAN
- (II) ITEM 701027 - PORTLAND CEMENT CONCRETE CURB, TYPE 1 MODIFIED
- (JJ) ITEM 720658 - PCC SAFETY BARRIER PERMANENT SINGLE FACE, MODIFIED, TYPE 5
- (KK) ITEM 720050 - GALVANIZED STEEL BEAM GUARDRAIL, TYPE 1
- (LL) ITEM 760507 - PROFILE MILLING, HOT-MIX
- (MM) ITEM 720656 - PCC SAFETY BARRIER PERMANENT, SINGLE FACE, MODIFIED, TYPE 3
- (NN) ITEM 720657 - PCC SAFETY BARRIER PERMANENT, SINGLE FACE, MODIFIED, TYPE 4
- (OO) ITEM 720651 - PCC SAFETY BARRIER PERMANENT, DOUBLE FACE, BIFURCATED, TYPE 1
- (PP) ITEM 720652 - PCC SAFETY BARRIER PERMANENT, DOUBLE FACE, BIFURCATED, TYPE 2
- (RR) ITEM 401668 - SUPERPAVE, TYPE C HOT-MIX, 160 GYRATIONS, PG 64-22, WEDGE
- (SS) ITEM 401669 - SUPERPAVE, TYPE B HOT-MIX, 160 GYRATIONS, PG 64-22, WEDGE

PAVEMENT LIFT NOTE:

THE MAXIMUM LIFTS FOR THE INDIVIDUAL PAVING MATERIAL ARE AS FOLLOWS:
SUPERPAVE, TYPE C HOT-MIX - 2"
SUPERPAVE, TYPE B HOT-MIX - 3"
SUPERPAVE, BIT. CONC. BASE COURSE - 6"
GRADED AGGREGATE BASE COURSE - 8"

NOTES:

1) THE PGA IS APPLIED TO THE TOP OF THE FINAL PAVEMENT SURFACE.

UNOFFICIAL WEBSITE COPY

10/28/2010 11:15:13 AM
M:\PROJECTS\2003\03059_DELTRNPK\SRMALL\CADD\2809003\PLANS\TS12_SR1.DGN

DELAWARE DEPARTMENT OF TRANSPORTATION	ADDENDUMS / REVISIONS	NOT TO SCALE	SR1 / I-95 INTERCHANGE	CONTRACT 28-090-03	BRIDGE NO.	TYPICAL SECTIONS
				COUNTY NEW CASTLE	DESIGNED BY:	SHEET NO. 17
					CHECKED BY:	TOTAL SHTS. 803

UNOFFICIAL WEBSITE COPY

*SW LOOP CROSS-SLOPES		
STA.	LT. SHLD.	LANES
1905+69.99	-1.00%	-6.00%
1906+00	-2.30%	-4.70%
1906+15.99	-3.00%	-4.00%
1906+38.99	-4.00%	-3.00%
1907+25.20	-4.00%	-3.00%
1907+48.20	-3.00%	-4.00%
1907+50	-2.92%	-4.08%
1907+94.20	-1.00%	-6.00%

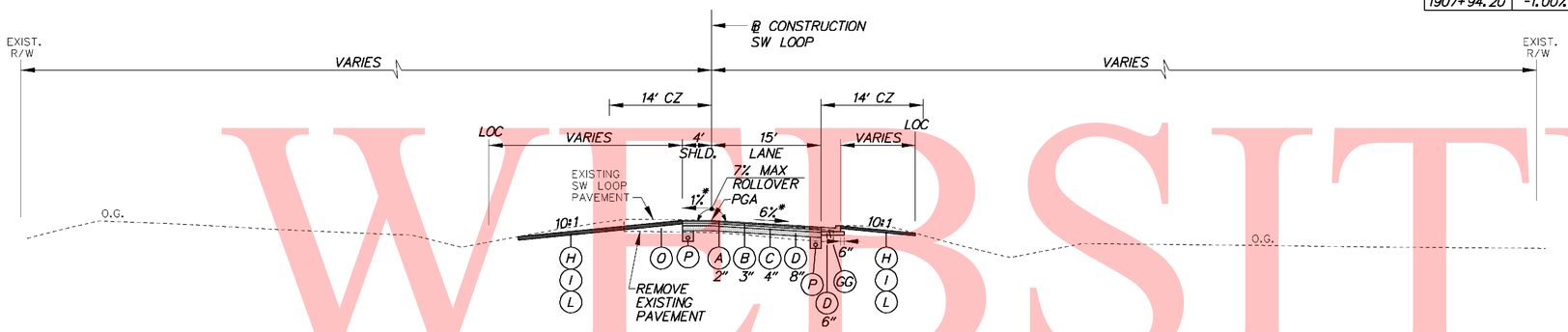

SW LOOP

STA. 1905+50 TO STA. 1910+00

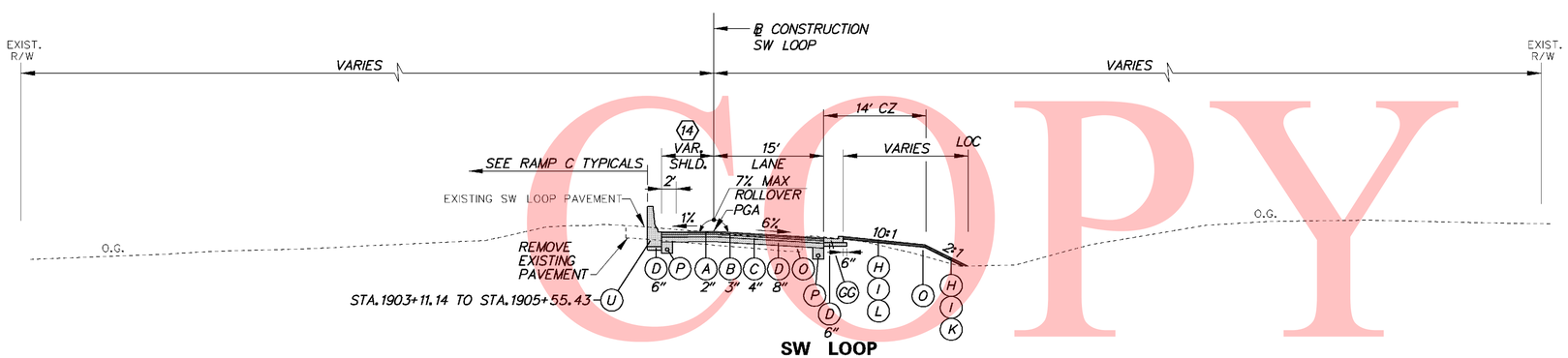

SW LOOP

STA. 1903+11.14 TO STA. 1905+50

(14) STA. 1903+23.95 TO STA. 1904+33.31
SHOULDER TAPERS 12.25' TO 4.25'
STA. 1904+33.31 TO STA. 1905+42.66
SHOULDER TAPERS 4.25' TO 12.25'

LEGEND

- (A) ITEM 401708 - SUPERPAVE, TYPE C HOT-MIX, 160 GYRATIONS, PG 70-22 (NON-CARBONATE STONE)
- (B) ITEM 401654 - SUPERPAVE, TYPE B HOT-MIX, 160 GYRATIONS, PG 70-22
- (C) ITEM 401663 - SUPERPAVE, BITUMINOUS CONCRETE BASE COURSE, 160 GYRATIONS, PG 64-22
- (D) ITEM 302007 - GRADED AGGREGATE BASE COURSE, TYPE B
- (E) ITEM 401711 - SUPERPAVE, TYPE C HOT-MIX, 160 GYRATIONS, PG 76-22 (NON-CARBONATE STONE)
- (F) ITEM 401660 - SUPERPAVE, TYPE B HOT-MIX, 160 GYRATIONS, PG 76-22
- (G) ITEM 501006 - PORTLAND CEMENT CONCRETE PAVEMENT, 12"
- (H) ITEM 732002 - TOPSOIL, 6" DEPTH
- (I) ITEM 734013 - PERMANENT GRASS SEEDING, DRY GROUND
- (J) ITEM 602017 - PCC MASONRY, PARAPET, CLASS A
- (K) ITEM 735533 - SOIL RETENTION BLANKET MULCH, TYPE 3
- (L) ITEM 735534 - SOIL RETENTION BLANKET MULCH, TYPE 4
- (M) ITEM 735535 - SOIL RETENTION BLANKET MULCH, TYPE 5, UNLESS OTHERWISE NOTED, SEE DRAINAGE PLANS FOR LIMITS AND TYPE
- (N) ITEM 209001 - BORROW, TYPE A
- (O) ITEM 209006 - BORROW, TYPE F OR APPROVED PROJECT EXCAVATION
- (P) ITEM 715001 - PERFORATED PIPE UNDERDRAINS, 6"
- (Q) ITEM 760504 - RUMBLE STRIPS, HOT-MIX
- (R) ITEM 602772 - MECHANICALLY STABILIZED EARTH WALLS
- (S) ITEM 602773 - PCC MASONRY FOR MECHANICALLY STABILIZED EARTH WALLS
- (T) ITEM 720512 - PCC SAFETY BARRIER PERMANENT, SINGLE FACE
- (U) ITEM 720654 - PCC SAFETY BARRIER PERMANENT, SINGLE FACE, MODIFIED TYPE 1
- (V) ITEM 720587 - PCC SAFETY BARRIER PERMANENT, DOUBLE FACE, MODIFIED
- (W) ITEM 720655 - PCC SAFETY BARRIER PERMANENT, SINGLE FACE, MODIFIED TYPE 2
- (X) ITEM 712005 - RIPRAP, R-4
- (Y) ITEM 401665 - SUPERPAVE, TYPE C HOT-MIX, 160 GYRATIONS, PG 64-22, PATCHING
- (Z) ITEM 401666 - SUPERPAVE, TYPE B HOT-MIX, 160 GYRATIONS, PG 64-22, PATCHING
- (AA) ITEM 401667 - SUPERPAVE, BITUMINOUS CONCRETE BASE COURSE, 160 GYRATIONS, PG 64-22, PATCHING
- (BB) ITEM 302008 - GRADED AGGREGATE BASE COURSE, TYPE B, PATCHING
- (CC) ITEM 755000 - HOT-MIX, HOT LAID, BITUMINOUS CONCRETE CURB
- (DD) ITEM 701010 - PORTLAND CEMENT CONCRETE CURB, TYPE 1
- (EE) ITEM 701011 - PORTLAND CEMENT CONCRETE CURB, TYPE 2
- (FF) ITEM 701020 - INTEGRAL PORTLAND CEMENT CONCRETE CURB AND GUTTER, TYPE 1
- (GG) ITEM 701023 - INTEGRAL PORTLAND CEMENT CONCRETE CURB AND GUTTER, TYPE 4
- (HH) ITEM 701026 - PORTLAND CEMENT CONCRETE MONOLITHIC MEDIAN
- (II) ITEM 701027 - PORTLAND CEMENT CONCRETE CURB, TYPE 1 MODIFIED
- (JJ) ITEM 720658 - PCC SAFETY BARRIER PERMANENT SINGLE FACE, MODIFIED, TYPE 5
- (KK) ITEM 720050 - GALVANIZED STEEL BEAM GUARDRAIL, TYPE 1
- (LL) ITEM 760507 - PROFILE MILLING, HOT-MIX
- (MM) ITEM 720656 - PCC SAFETY BARRIER PERMANENT, SINGLE FACE, MODIFIED, TYPE 3
- (NN) ITEM 720657 - PCC SAFETY BARRIER PERMANENT, SINGLE FACE, MODIFIED, TYPE 4
- (OO) ITEM 720651 - PCC SAFETY BARRIER PERMANENT, DOUBLE FACE, BIFURCATED, TYPE 1
- (PP) ITEM 720652 - PCC SAFETY BARRIER PERMANENT, DOUBLE FACE, BIFURCATED, TYPE 2
- (RR) ITEM 401668 - SUPERPAVE, TYPE C HOT-MIX, 160 GYRATIONS, PG 64-22, WEDGE
- (SS) ITEM 401669 - SUPERPAVE, TYPE B HOT-MIX, 160 GYRATIONS, PG 64-22, WEDGE

PAVEMENT LIFT NOTE:

THE MAXIMUM LIFTS FOR THE INDIVIDUAL PAVING MATERIAL ARE AS FOLLOWS:
SUPERPAVE, TYPE C HOT-MIX - 2"
SUPERPAVE, TYPE B HOT-MIX - 3"
SUPERPAVE, BIT. CONC. BASE COURSE - 6"
GRADED AGGREGATE BASE COURSE - 8"

NOTES:

1) THE PGA IS APPLIED TO THE TOP OF THE FINAL PAVEMENT SURFACE.

10/28/2010 11:15:57 AM
M:\PROJECTS\2003\03059_DELTRNPK\SRIMALL\CADD\2809003\PLANS\TS13_SR1.DGN

DELAWARE DEPARTMENT OF TRANSPORTATION	ADDENDUMS / REVISIONS	NOT TO SCALE	SR1 / I-95 INTERCHANGE	CONTRACT 28-090-03	BRIDGE NO.	TYPICAL SECTIONS	SHEET NO. 18
				COUNTY NEW CASTLE	DESIGNED BY:		TOTAL SHTS. 803
					CHECKED BY:		

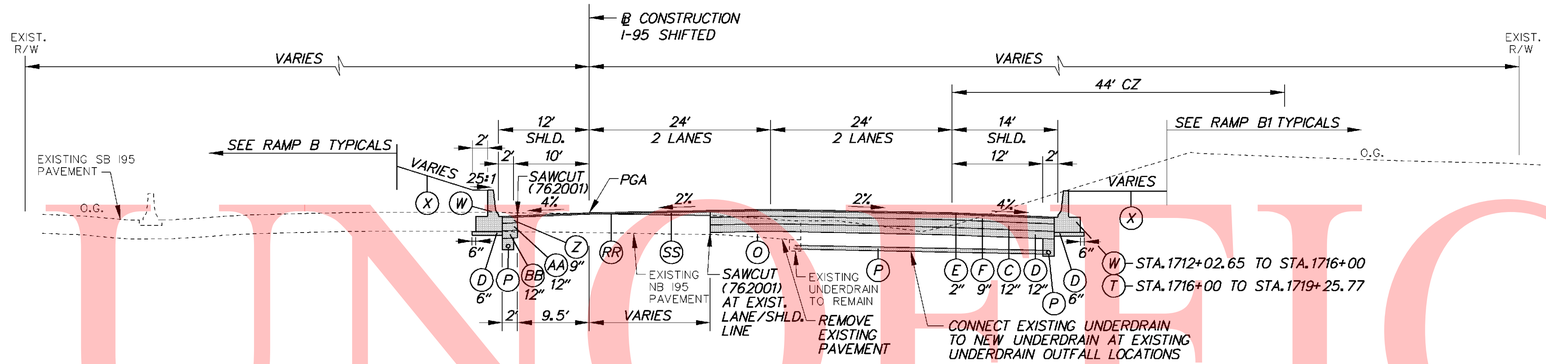

I-95 SHIFTED

STA. 1712+02.65 TO STA. 1719+25.77

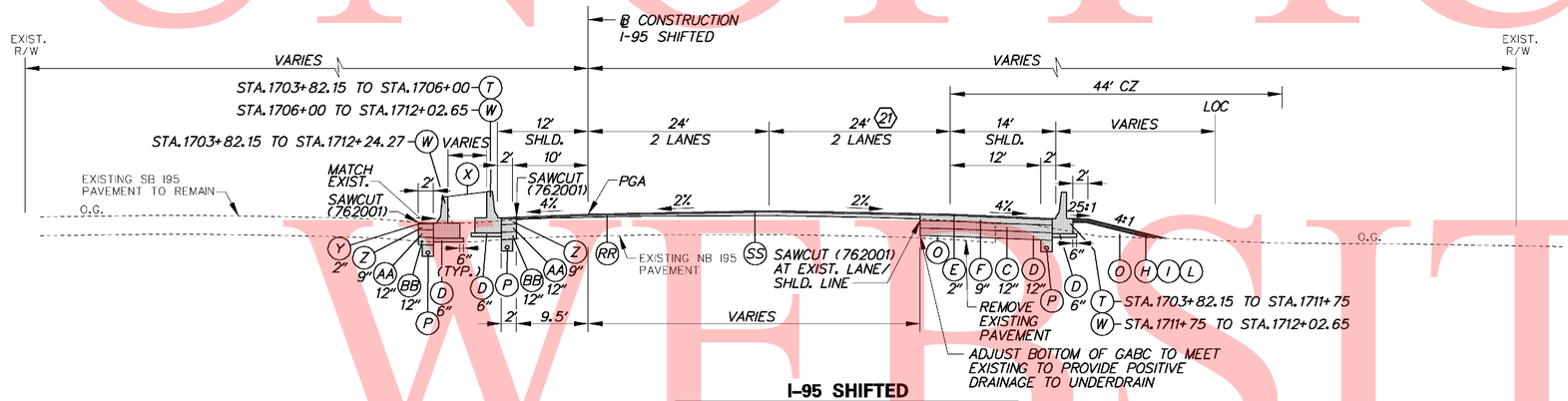

I-95 SHIFTED

STA. 1703+82.15 TO STA. 1712+02.65

(21) STA.1703+82.15 TO STA.1704+75
WIDTH TAPERS 28.38' TO 24'

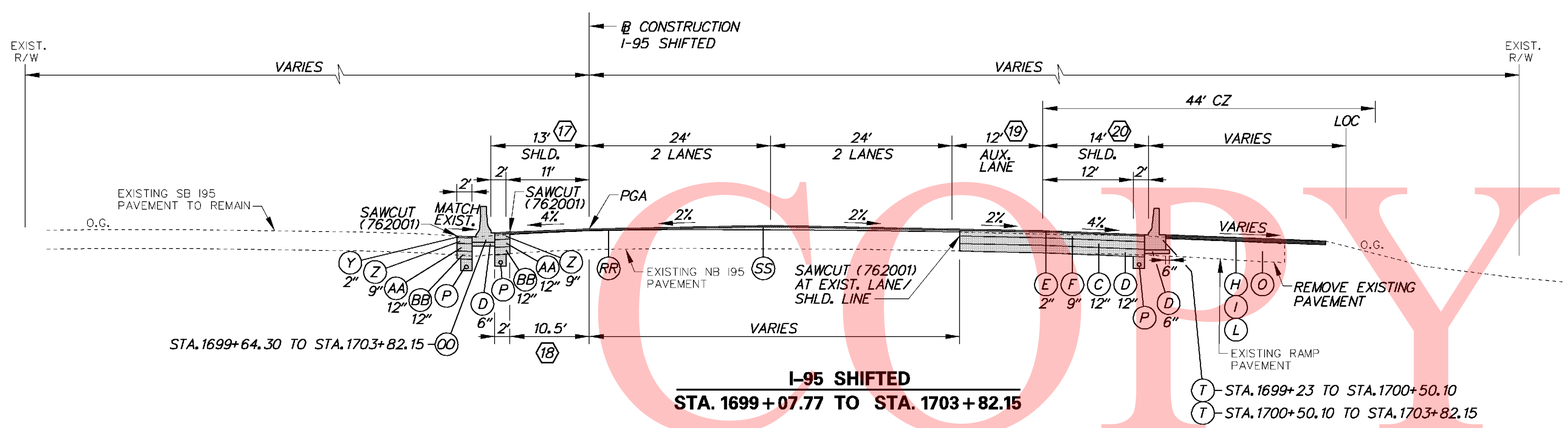

I-95 SHIFTED

STA. 1699+07.77 TO STA. 1703+82.15

(17) STA.1701+50 TO STA.1703+12.15
SHOULDER TAPERS 13' TO 14'
STA. 1703+12.15 TO STA. 1703+82.15
SHOULDER TAPERS 14' TO 12'

(18) STA.1701+50 TO STA.1703+12.15
WIDTH TAPERS 10.5' TO 11.5'
STA. 1703+12.15 TO STA. 1703+82.15
WIDTH TAPERS 11.5' TO 9.5'

(19) STA.1701+75 TO STA.1703+82.15
WIDTH TAPERS 12' TO 4.38'

(20) STA.1699+23.11 TO STA.1699+83.11
SHOULDER TAPERS 12' TO 14'

LEGEND

- (A) ITEM 401708 - SUPERPAVE, TYPE C HOT-MIX, 160 GYRATIONS, PG 70-22 (NON-CARBONATE STONE)
- (B) ITEM 401654 - SUPERPAVE, TYPE B HOT-MIX, 160 GYRATIONS, PG 70-22
- (C) ITEM 401663 - SUPERPAVE, BITUMINOUS CONCRETE BASE COURSE, 160 GYRATIONS, PG 64-22
- (D) ITEM 302007 - GRADED AGGREGATE BASE COURSE, TYPE B
- (E) ITEM 401711 - SUPERPAVE, TYPE C HOT-MIX, 160 GYRATIONS, PG 76-22 (NON-CARBONATE STONE)
- (F) ITEM 401660 - SUPERPAVE, TYPE B HOT-MIX, 160 GYRATIONS, PG 76-22
- (G) ITEM 501006 - PORTLAND CEMENT CONCRETE PAVEMENT, 12"
- (H) ITEM 732002 - TOPSOIL, 6" DEPTH
- (I) ITEM 734013 - PERMANENT GRASS SEEDING, DRY GROUND
- (J) ITEM 602017 - PCC MASONRY, PARAPET, CLASS A
- (K) ITEM 735533 - SOIL RETENTION BLANKET MULCH, TYPE 3
- (L) ITEM 735534 - SOIL RETENTION BLANKET MULCH, TYPE 4
- (M) ITEM 735535 - SOIL RETENTION BLANKET MULCH, TYPE 5, UNLESS OTHERWISE NOTED, SEE DRAINAGE PLANS FOR LIMITS AND TYPE
- (N) ITEM 209001 - BORROW, TYPE A
- (O) ITEM 209006 - BORROW, TYPE F OR APPROVED PROJECT EXCAVATION
- (P) ITEM 715001 - PERFORATED PIPE UNDERDRAINS, 6"
- (Q) ITEM 760504 - RUMBLE STRIPS, HOT-MIX
- (R) ITEM 602772 - MECHANICALLY STABILIZED EARTH WALLS
- (S) ITEM 602773 - PCC MASONRY FOR MECHANICALLY STABILIZED EARTH WALLS
- (T) ITEM 720512 - PCC SAFETY BARRIER PERMANENT, SINGLE FACE
- (U) ITEM 720654 - PCC SAFETY BARRIER PERMANENT, SINGLE FACE, MODIFIED TYPE 1
- (V) ITEM 720587 - PCC SAFETY BARRIER PERMANENT, DOUBLE FACE, MODIFIED
- (W) ITEM 720655 - PCC SAFETY BARRIER PERMANENT, SINGLE FACE, MODIFIED TYPE 2
- (X) ITEM 712005 - RIPRAP, R-4
- (Y) ITEM 401665 - SUPERPAVE, TYPE C HOT-MIX, 160 GYRATIONS, PG 64-22, PATCHING
- (Z) ITEM 401666 - SUPERPAVE, TYPE B HOT-MIX, 160 GYRATIONS, PG 64-22, PATCHING
- (AA) ITEM 401667 - SUPERPAVE, BITUMINOUS CONCRETE BASE COURSE, 160 GYRATIONS, PG 64-22, PATCHING
- (BB) ITEM 302008 - GRADED AGGREGATE BASE COURSE, TYPE B, PATCHING
- (CC) ITEM 755000 - HOT-MIX, HOT LAID, BITUMINOUS CONCRETE CURB
- (DD) ITEM 701010 - PORTLAND CEMENT CONCRETE CURB, TYPE 1
- (EE) ITEM 701011 - PORTLAND CEMENT CONCRETE CURB, TYPE 2
- (FF) ITEM 701020 - INTEGRAL PORTLAND CEMENT CONCRETE CURB AND GUTTER, TYPE 1
- (GG) ITEM 701023 - INTEGRAL PORTLAND CEMENT CONCRETE CURB AND GUTTER, TYPE 4
- (HH) ITEM 701026 - PORTLAND CEMENT CONCRETE MONOLITHIC MEDIAN
- (II) ITEM 701027 - PORTLAND CEMENT CONCRETE CURB, TYPE 1 MODIFIED
- (JJ) ITEM 720658 - PCC SAFETY BARRIER PERMANENT SINGLE FACE, MODIFIED, TYPE 5
- (KK) ITEM 720050 - GALVANIZED STEEL BEAM GUARDRAIL, TYPE 1
- (LL) ITEM 760507 - PROFILE MILLING, HOT-MIX
- (MM) ITEM 720656 - PCC SAFETY BARRIER PERMANENT, SINGLE FACE, MODIFIED, TYPE 3
- (NN) ITEM 720657 - PCC SAFETY BARRIER PERMANENT, SINGLE FACE, MODIFIED, TYPE 4
- (OO) ITEM 720651 - PCC SAFETY BARRIER PERMANENT, DOUBLE FACE, BIFURCATED, TYPE 1
- (PP) ITEM 720652 - PCC SAFETY BARRIER PERMANENT, DOUBLE FACE, BIFURCATED, TYPE 2
- (RR) ITEM 401668 - SUPERPAVE, TYPE C HOT-MIX, 160 GYRATIONS, PG 64-22, WEDGE
- (SS) ITEM 401669 - SUPERPAVE, TYPE B HOT-MIX, 160 GYRATIONS, PG 64-22, WEDGE

PAVEMENT LIFT NOTE:

THE MAXIMUM LIFTS FOR THE INDIVIDUAL PAVING MATERIAL ARE AS FOLLOWS:
SUPERPAVE, TYPE C HOT-MIX - 2"
SUPERPAVE, TYPE B HOT-MIX - 3"
SUPERPAVE, BIT. CONC. BASE COURSE - 6"
GRADED AGGREGATE BASE COURSE - 8"

NOTES:

1) THE PGA IS APPLIED TO THE TOP OF THE FINAL PAVEMENT SURFACE.

UNOFFICIAL WEBSITE COPY

10/28/2010 11:16:52 AM
M:\PROJECTS\2003\03059_DELTRNPK\SRIMALL\CADD\2809003\PLANS\TS14_SR1.DGN

DELAWARE DEPARTMENT OF TRANSPORTATION	ADDENDUMS / REVISIONS	NOT TO SCALE	SR1 / I-95 INTERCHANGE	CONTRACT 28-090-03	BRIDGE NO.	TYPICAL SECTIONS	SHEET NO. 19
				COUNTY NEW CASTLE	DESIGNED BY:		TOTAL SHTS. 803
					CHECKED BY:		

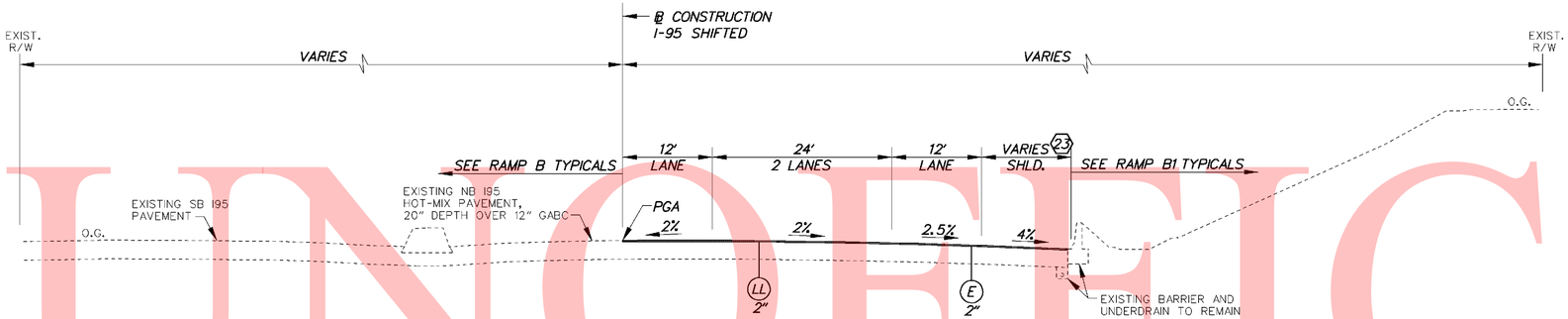

I-95 SHIFTED

STA. 1729+61.87 TO STA. 1730+10.51

(23) STA.1729+61.87 TO STA.1730+10.51
SHOULDER TAPERS 12.98' TO 17.36'

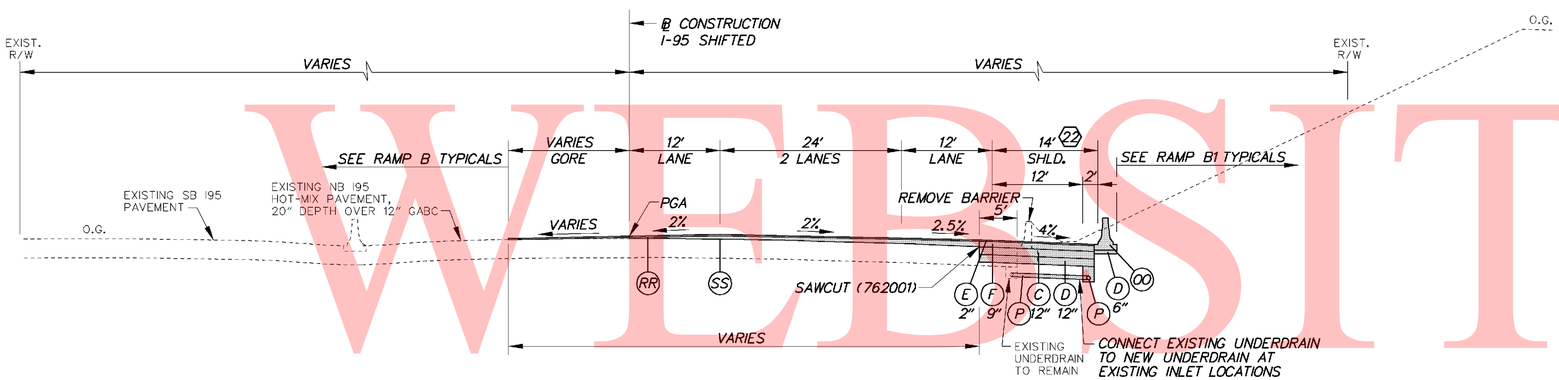

I-95 SHIFTED

STA. 1724+47.59 TO STA. 1729+61.87

(22) STA.1729+11.62 TO STA.1729+61.87
SHOULDER TAPERS 14' TO 12.98'

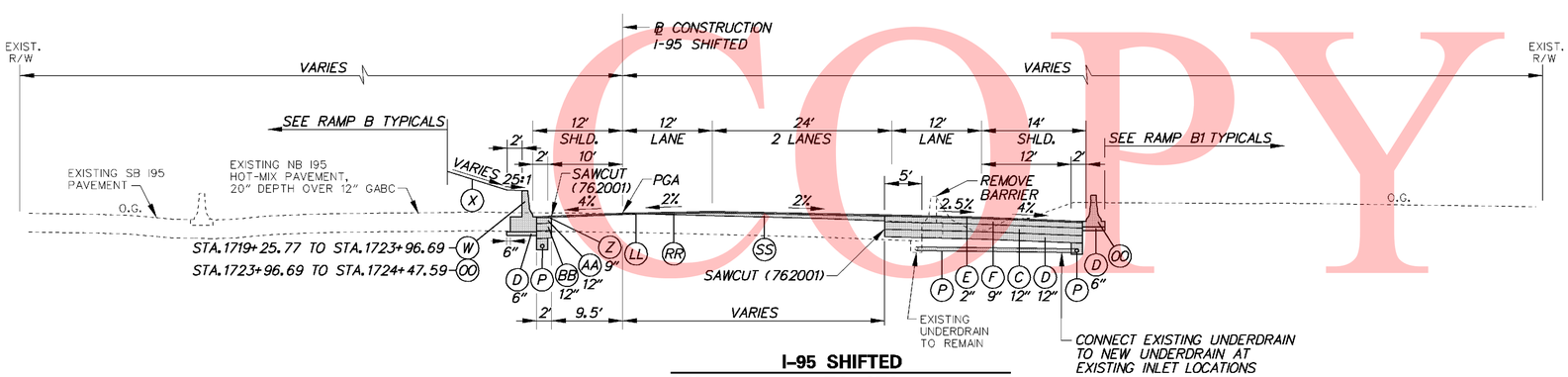

I-95 SHIFTED

STA. 1719+25.77 TO STA. 1724+47.59

LEGEND

- (A) ITEM 401708 - SUPERPAVE, TYPE C HOT-MIX, 160 GYRATIONS, PG 70-22 (NON-CARBONATE STONE)
- (B) ITEM 401654 - SUPERPAVE, TYPE B HOT-MIX, 160 GYRATIONS, PG 70-22
- (C) ITEM 401663 - SUPERPAVE, BITUMINOUS CONCRETE BASE COURSE, 160 GYRATIONS, PG 64-22
- (D) ITEM 302007 - GRADED AGGREGATE BASE COURSE, TYPE B
- (E) ITEM 401711 - SUPERPAVE, TYPE C HOT-MIX, 160 GYRATIONS, PG 76-22 (NON-CARBONATE STONE)
- (F) ITEM 401660 - SUPERPAVE, TYPE B HOT-MIX, 160 GYRATIONS, PG 76-22
- (G) ITEM 501006 - PORTLAND CEMENT CONCRETE PAVEMENT, 12"
- (H) ITEM 732002 - TOPSOIL, 6" DEPTH
- (I) ITEM 734013 - PERMANENT GRASS SEEDING, DRY GROUND
- (J) ITEM 602017 - PCC MASONRY, PARAPET, CLASS A
- (K) ITEM 735533 - SOIL RETENTION BLANKET MULCH, TYPE 3
- (L) ITEM 735534 - SOIL RETENTION BLANKET MULCH, TYPE 4
- (M) ITEM 735535 - SOIL RETENTION BLANKET MULCH, TYPE 5, UNLESS OTHERWISE NOTED, SEE DRAINAGE PLANS FOR LIMITS AND TYPE
- (N) ITEM 209001 - BORROW, TYPE A
- (O) ITEM 209006 - BORROW, TYPE F OR APPROVED PROJECT EXCAVATION
- (P) ITEM 715001 - PERFORATED PIPE UNDERDRAINS, 6"
- (Q) ITEM 760504 - RUMBLE STRIPS, HOT-MIX
- (R) ITEM 602772 - MECHANICALLY STABILIZED EARTH WALLS
- (S) ITEM 602773 - PCC MASONRY FOR MECHANICALLY STABILIZED EARTH WALLS
- (T) ITEM 720512 - PCC SAFETY BARRIER PERMANENT, SINGLE FACE
- (U) ITEM 720654 - PCC SAFETY BARRIER PERMANENT, SINGLE FACE, MODIFIED TYPE 1
- (V) ITEM 720587 - PCC SAFETY BARRIER PERMANENT, DOUBLE FACE, MODIFIED
- (W) ITEM 720655 - PCC SAFETY BARRIER PERMANENT, SINGLE FACE, MODIFIED TYPE 2
- (X) ITEM 712005 - RIPRAP, R-4
- (Y) ITEM 401665 - SUPERPAVE, TYPE C HOT-MIX, 160 GYRATIONS, PG 64-22, PATCHING
- (Z) ITEM 401666 - SUPERPAVE, TYPE B HOT-MIX, 160 GYRATIONS, PG 64-22, PATCHING
- (AA) ITEM 401667 - SUPERPAVE, BITUMINOUS CONCRETE BASE COURSE, 160 GYRATIONS, PG 64-22, PATCHING
- (BB) ITEM 302008 - GRADED AGGREGATE BASE COURSE, TYPE B, PATCHING
- (CC) ITEM 755000 - HOT-MIX, HOT LAID, BITUMINOUS CONCRETE CURB
- (DD) ITEM 701010 - PORTLAND CEMENT CONCRETE CURB, TYPE 1
- (EE) ITEM 701011 - PORTLAND CEMENT CONCRETE CURB, TYPE 2
- (FF) ITEM 701020 - INTEGRAL PORTLAND CEMENT CONCRETE CURB AND GUTTER, TYPE 1
- (GG) ITEM 701023 - INTEGRAL PORTLAND CEMENT CONCRETE CURB AND GUTTER, TYPE 4
- (HH) ITEM 701026 - PORTLAND CEMENT CONCRETE MONOLITHIC MEDIAN
- (II) ITEM 701027 - PORTLAND CEMENT CONCRETE CURB, TYPE 1 MODIFIED
- (JJ) ITEM 720658 - PCC SAFETY BARRIER PERMANENT SINGLE FACE, MODIFIED, TYPE 5
- (KK) ITEM 720050 - GALVANIZED STEEL BEAM GUARDRAIL, TYPE 1
- (LL) ITEM 760507 - PROFILE MILLING, HOT-MIX
- (MM) ITEM 720656 - PCC SAFETY BARRIER PERMANENT, SINGLE FACE, MODIFIED, TYPE 3
- (NN) ITEM 720657 - PCC SAFETY BARRIER PERMANENT, SINGLE FACE, MODIFIED, TYPE 4
- (OO) ITEM 720651 - PCC SAFETY BARRIER PERMANENT, DOUBLE FACE, BIFURCATED, TYPE 1
- (PP) ITEM 720652 - PCC SAFETY BARRIER PERMANENT, DOUBLE FACE, BIFURCATED, TYPE 2
- (RR) ITEM 401668 - SUPERPAVE, TYPE C HOT-MIX, 160 GYRATIONS, PG 64-22, WEDGE
- (SS) ITEM 401669 - SUPERPAVE, TYPE B HOT-MIX, 160 GYRATIONS, PG 64-22, WEDGE

PAVEMENT LIFT NOTE:

THE MAXIMUM LIFTS FOR THE INDIVIDUAL PAVING MATERIAL ARE AS FOLLOWS:
SUPERPAVE, TYPE C HOT-MIX - 2"
SUPERPAVE, TYPE B HOT-MIX - 3"
SUPERPAVE, BIT. CONC. BASE COURSE - 6"
GRADED AGGREGATE BASE COURSE - 8"

NOTES:

1) THE PGA IS APPLIED TO THE TOP OF THE FINAL PAVEMENT SURFACE.

UNOFFICIAL WEBSITE COPY

10/28/2010 11:18:44 AM
M:\PROJECTS\2003\03059_DELTRNPK\SRIMALL\CADD\2809003\PLANS\TS15_SR1.DGN

DELAWARE DEPARTMENT OF TRANSPORTATION	ADDENDUMS / REVISIONS	NOT TO SCALE	SR1 / I-95 INTERCHANGE	CONTRACT 28-090-03	BRIDGE NO.	TYPICAL SECTIONS	SHEET NO. 20
				COUNTY NEW CASTLE	DESIGNED BY:		TOTAL SHTS. 803
					CHECKED BY:		

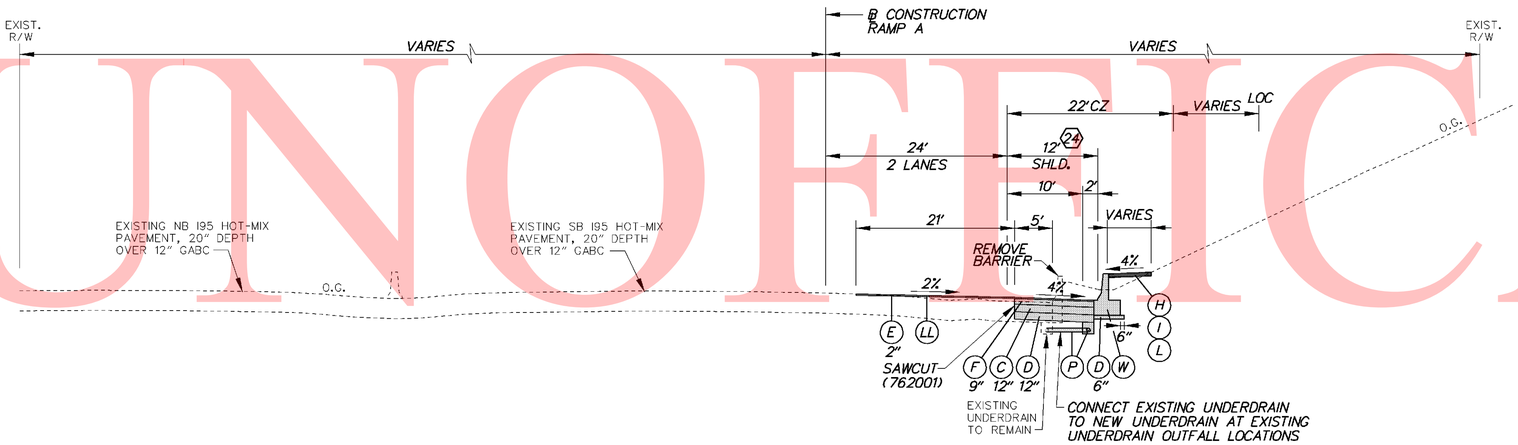

RAMP A

STA. 1210+01.73 TO STA. 1214+42.31

(24) STA. 1210+01.73 TO STA. 1211+82.01 SHOULDER TAPERS 14' TO 12'

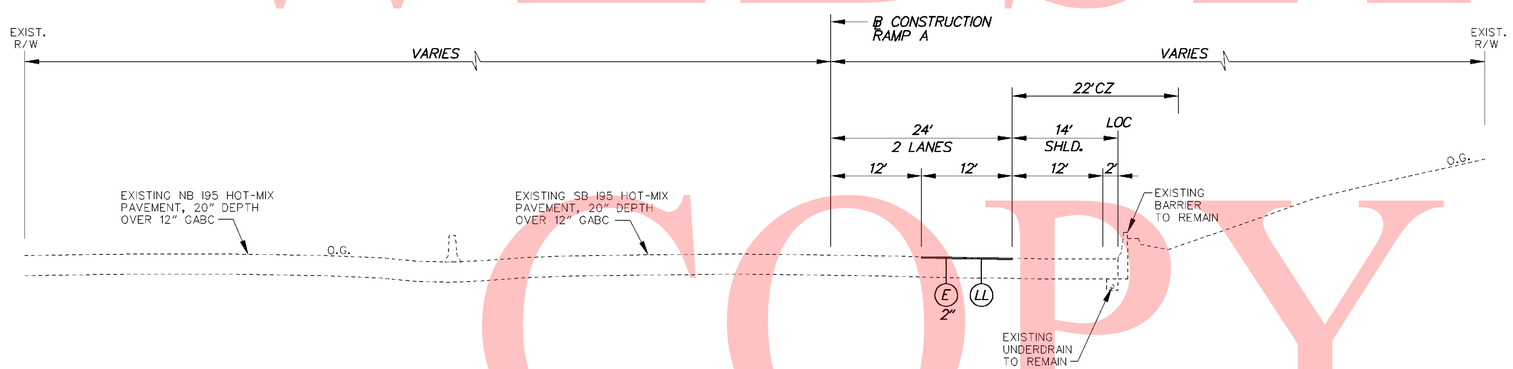

RAMP A

STA. 1209+00 TO STA. 1210+01.73

LEGEND

- (A) ITEM 401708 - SUPERPAVE, TYPE C HOT-MIX, 160 GYRATIONS, PG 70-22 (NON-CARBONATE STONE)
- (B) ITEM 401654 - SUPERPAVE, TYPE B HOT-MIX, 160 GYRATIONS, PG 70-22
- (C) ITEM 401663 - SUPERPAVE, BITUMINOUS CONCRETE BASE COURSE, 160 GYRATIONS, PG 64-22
- (D) ITEM 302007 - GRADED AGGREGATE BASE COURSE, TYPE B
- (E) ITEM 401711 - SUPERPAVE, TYPE C HOT-MIX, 160 GYRATIONS, PG 76-22 (NON-CARBONATE STONE)
- (F) ITEM 401660 - SUPERPAVE, TYPE B HOT-MIX, 160 GYRATIONS, PG 76-22
- (G) ITEM 501006 - PORTLAND CEMENT CONCRETE PAVEMENT, 12"
- (H) ITEM 732002 - TOPSOIL, 6" DEPTH
- (I) ITEM 734013 - PERMANENT GRASS SEEDING, DRY GROUND
- (J) ITEM 602017 - PCC MASONRY, PARAPET, CLASS A
- (K) ITEM 735533 - SOIL RETENTION BLANKET MULCH, TYPE 3
- (L) ITEM 735534 - SOIL RETENTION BLANKET MULCH, TYPE 4
- (M) ITEM 735535 - SOIL RETENTION BLANKET MULCH, TYPE 5, UNLESS OTHERWISE NOTED, SEE DRAINAGE PLANS FOR LIMITS AND TYPE
- (N) ITEM 209001 - BORROW, TYPE A
- (O) ITEM 209006 - BORROW, TYPE F OR APPROVED PROJECT EXCAVATION
- (P) ITEM 715001 - PERFORATED PIPE UNDERDRAINS, 6"
- (Q) ITEM 760504 - RUMBLE STRIPS, HOT-MIX
- (R) ITEM 602772 - MECHANICALLY STABILIZED EARTH WALLS
- (S) ITEM 602773 - PCC MASONRY FOR MECHANICALLY STABILIZED EARTH WALLS
- (T) ITEM 720512 - PCC SAFETY BARRIER PERMANENT, SINGLE FACE
- (U) ITEM 720654 - PCC SAFETY BARRIER PERMANENT, SINGLE FACE, MODIFIED TYPE 1
- (V) ITEM 720587 - PCC SAFETY BARRIER PERMANENT, DOUBLE FACE, MODIFIED
- (W) ITEM 720655 - PCC SAFETY BARRIER PERMANENT, SINGLE FACE, MODIFIED TYPE 2
- (X) ITEM 712005 - RIPRAP, R-4
- (Y) ITEM 401665 - SUPERPAVE, TYPE C HOT-MIX, 160 GYRATIONS, PG 64-22, PATCHING
- (Z) ITEM 401666 - SUPERPAVE, TYPE B HOT-MIX, 160 GYRATIONS, PG 64-22, PATCHING
- (AA) ITEM 401667 - SUPERPAVE, BITUMINOUS CONCRETE BASE COURSE, 160 GYRATIONS, PG 64-22, PATCHING
- (BB) ITEM 302008 - GRADED AGGREGATE BASE COURSE, TYPE B, PATCHING
- (CC) ITEM 755000 - HOT-MIX, HOT LAID, BITUMINOUS CONCRETE CURB
- (DD) ITEM 701010 - PORTLAND CEMENT CONCRETE CURB, TYPE 1
- (EE) ITEM 701011 - PORTLAND CEMENT CONCRETE CURB, TYPE 2
- (FF) ITEM 701020 - INTEGRAL PORTLAND CEMENT CONCRETE CURB AND GUTTER, TYPE 1
- (GG) ITEM 701023 - INTEGRAL PORTLAND CEMENT CONCRETE CURB AND GUTTER, TYPE 4
- (HH) ITEM 701026 - PORTLAND CEMENT CONCRETE MONOLITHIC MEDIAN
- (II) ITEM 701027 - PORTLAND CEMENT CONCRETE CURB, TYPE 1 MODIFIED
- (JJ) ITEM 720658 - PCC SAFETY BARRIER PERMANENT SINGLE FACE, MODIFIED, TYPE 5
- (KK) ITEM 720050 - GALVANIZED STEEL BEAM GUARDRAIL, TYPE 1
- (LL) ITEM 760507 - PROFILE MILLING, HOT-MIX
- (MM) ITEM 720656 - PCC SAFETY BARRIER PERMANENT, SINGLE FACE, MODIFIED, TYPE 3
- (NN) ITEM 720657 - PCC SAFETY BARRIER PERMANENT, SINGLE FACE, MODIFIED, TYPE 4
- (OO) ITEM 720651 - PCC SAFETY BARRIER PERMANENT, DOUBLE FACE, BIFURCATED, TYPE 1
- (PP) ITEM 720652 - PCC SAFETY BARRIER PERMANENT, DOUBLE FACE, BIFURCATED, TYPE 2
- (RR) ITEM 401668 - SUPERPAVE, TYPE C HOT-MIX, 160 GYRATIONS, PG 64-22, WEDGE
- (SS) ITEM 401669 - SUPERPAVE, TYPE B HOT-MIX, 160 GYRATIONS, PG 64-22, WEDGE

PAVEMENT LIFT NOTE:

THE MAXIMUM LIFTS FOR THE INDIVIDUAL PAVING MATERIAL ARE AS FOLLOWS:
SUPERPAVE, TYPE C HOT-MIX - 2"
SUPERPAVE, TYPE B HOT-MIX - 3"
SUPERPAVE, BIT. CONC. BASE COURSE - 6"
GRADED AGGREGATE BASE COURSE - 8"

NOTES:

1) THE PGA IS APPLIED TO THE TOP OF THE FINAL PAVEMENT SURFACE.

UNOFFICIAL WEBSITE COPY

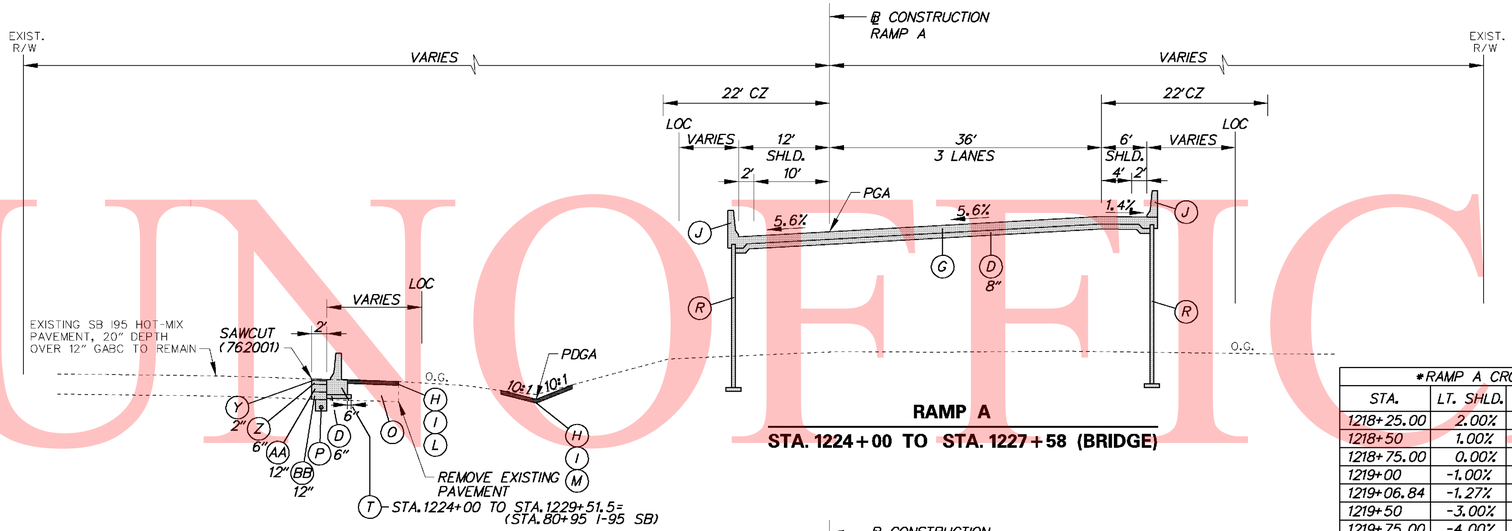

RAMP A

STA. 1224+00 TO STA. 1227+58 (BRIDGE)

*RAMP A CROSS-SLOPES			
STA.	LT. SHLD.	LANES	RT. SHLD.
1218+25.00	2.00%	-2.00%	-4.00%
1218+50	1.00%	-2.00%	-4.00%
1218+75.00	0.00%	-2.00%	-4.00%
1219+00	-1.00%	-2.00%	-4.00%
1219+06.84	-1.27%	-2.00%	-4.00%
1219+50	-3.00%	-1.19%	-4.00%
1219+75.00	-4.00%	-0.71%	-4.00%
1220+00	-4.00%	-0.24%	-4.00%
1220+12.84	-4.00%	0.00%	-4.00%
1220+50	-4.00%	0.70%	-4.00%
1221+00	-4.00%	1.64%	-4.00%
1221+19.27	-4.00%	2.00%	-4.00%
1221+50	-4.00%	2.58%	-4.00%
1221+72.48	-4.00%	3.00%	-4.00%
1222+00	-4.00%	3.52%	-3.48%
1222+11.51	-4.00%	3.73%	-3.27%
1222+25.7	-4.00%	4.00%	-3.00%
1222+50	-4.46%	4.46%	-2.54%
1223+00	-5.40%	5.40%	-1.60%
1223+10.84	-5.60%	5.60%	-1.40%

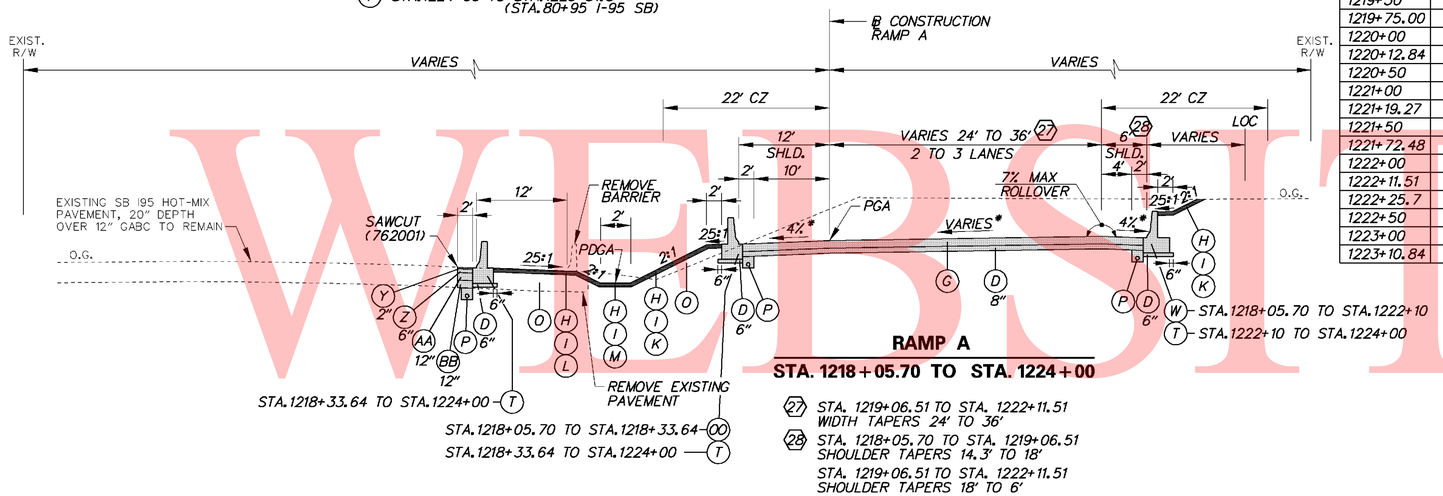

RAMP A

STA. 1218+05.70 TO STA. 1224+00

(27) STA. 1219+06.51 TO STA. 1222+11.51
WIDTH TAPERS 24' TO 36'

(28) STA. 1218+05.70 TO STA. 1219+06.51
SHOULDER TAPERS 14.3' TO 18'
STA. 1219+06.51 TO STA. 1222+11.51
SHOULDER TAPERS 18' TO 6'

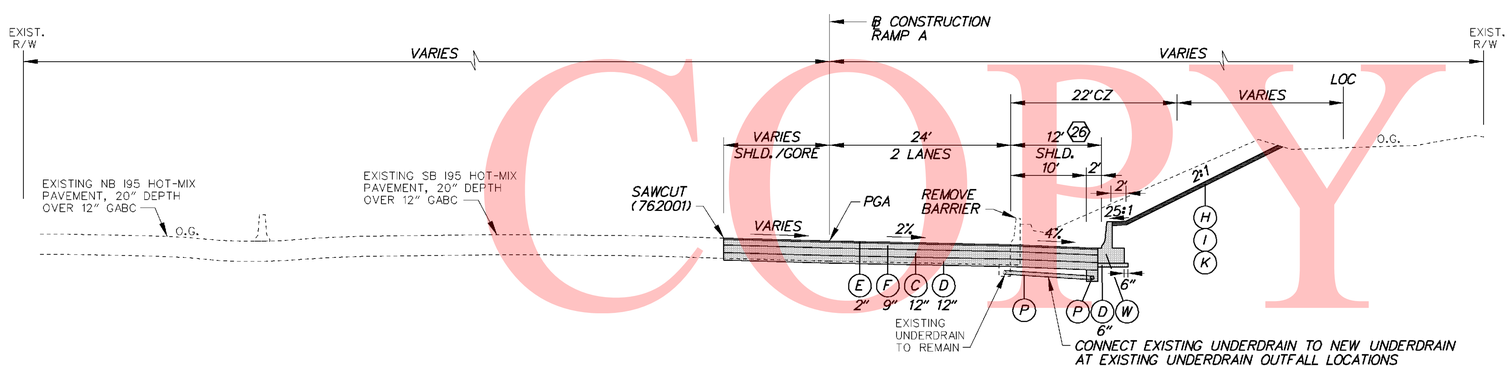

RAMP A

STA. 1214+42.31 TO STA. 1218+05.70

(26) STA. 1217+55.84 TO STA. 1218+05.70
SHOULDER TAPERS 12' TO 14.3'

LEGEND

- (A) ITEM 401708 - SUPERPAVE, TYPE C HOT-MIX, 160 GYRATIONS, PG 70-22 (NON-CARBONATE STONE)
- (B) ITEM 401654 - SUPERPAVE, TYPE B HOT-MIX, 160 GYRATIONS, PG 70-22
- (C) ITEM 401663 - SUPERPAVE, BITUMINOUS CONCRETE BASE COURSE, 160 GYRATIONS, PG 64-22
- (D) ITEM 302007 - GRADED AGGREGATE BASE COURSE, TYPE B
- (E) ITEM 401711 - SUPERPAVE, TYPE C HOT-MIX, 160 GYRATIONS, PG 76-22 (NON-CARBONATE STONE)
- (F) ITEM 401660 - SUPERPAVE, TYPE B HOT-MIX, 160 GYRATIONS, PG 76-22
- (G) ITEM 501006 - PORTLAND CEMENT CONCRETE PAVEMENT, 12"
- (H) ITEM 732002 - TOPSOIL, 6" DEPTH
- (I) ITEM 734013 - PERMANENT GRASS SEEDING, DRY GROUND
- (J) ITEM 602017 - PCC MASONRY, PARAPET, CLASS A
- (K) ITEM 735533 - SOIL RETENTION BLANKET MULCH, TYPE 3
- (L) ITEM 735534 - SOIL RETENTION BLANKET MULCH, TYPE 4
- (M) ITEM 735535 - SOIL RETENTION BLANKET MULCH, TYPE 5, UNLESS OTHERWISE NOTED, SEE DRAINAGE PLANS FOR LIMITS AND TYPE
- (N) ITEM 209001 - BORROW, TYPE A
- (O) ITEM 209006 - BORROW, TYPE F OR APPROVED PROJECT EXCAVATION
- (P) ITEM 715001 - PERFORATED PIPE UNDERDRAINS, 6"
- (Q) ITEM 760504 - RUMBLE STRIPS, HOT-MIX
- (R) ITEM 602772 - MECHANICALLY STABILIZED EARTH WALLS
- (S) ITEM 602773 - PCC MASONRY FOR MECHANICALLY STABILIZED EARTH WALLS
- (T) ITEM 720512 - PCC SAFETY BARRIER PERMANENT, SINGLE FACE
- (U) ITEM 720654 - PCC SAFETY BARRIER PERMANENT, SINGLE FACE, MODIFIED TYPE 1
- (V) ITEM 720587 - PCC SAFETY BARRIER PERMANENT, DOUBLE FACE, MODIFIED
- (W) ITEM 720655 - PCC SAFETY BARRIER PERMANENT, SINGLE FACE, MODIFIED TYPE 2
- (X) ITEM 712005 - RIPRAP, R-4
- (Y) ITEM 401665 - SUPERPAVE, TYPE C HOT-MIX, 160 GYRATIONS, PG 64-22, PATCHING
- (Z) ITEM 401666 - SUPERPAVE, TYPE B HOT-MIX, 160 GYRATIONS, PG 64-22, PATCHING
- (AA) ITEM 401667 - SUPERPAVE, BITUMINOUS CONCRETE BASE COURSE, 160 GYRATIONS, PG 64-22, PATCHING
- (BB) ITEM 302008 - GRADED AGGREGATE BASE COURSE, TYPE B, PATCHING
- (CC) ITEM 755000 - HOT-MIX, HOT LAID, BITUMINOUS CONCRETE CURB
- (DD) ITEM 701010 - PORTLAND CEMENT CONCRETE CURB, TYPE 1
- (EE) ITEM 701011 - PORTLAND CEMENT CONCRETE CURB, TYPE 2
- (FF) ITEM 701020 - INTEGRAL PORTLAND CEMENT CONCRETE CURB AND GUTTER, TYPE 1
- (GG) ITEM 701023 - INTEGRAL PORTLAND CEMENT CONCRETE CURB AND GUTTER, TYPE 4
- (HH) ITEM 701026 - PORTLAND CEMENT CONCRETE MONOLITHIC MEDIAN
- (II) ITEM 701027 - PORTLAND CEMENT CONCRETE CURB, TYPE 1 MODIFIED
- (JJ) ITEM 720658 - PCC SAFETY BARRIER PERMANENT SINGLE FACE, MODIFIED, TYPE 5
- (KK) ITEM 720050 - GALVANIZED STEEL BEAM GUARDRAIL, TYPE 1
- (LL) ITEM 760507 - PROFILE MILLING, HOT-MIX
- (MM) ITEM 720656 - PCC SAFETY BARRIER PERMANENT, SINGLE FACE, MODIFIED, TYPE 3
- (NN) ITEM 720657 - PCC SAFETY BARRIER PERMANENT, SINGLE FACE, MODIFIED, TYPE 4
- (OO) ITEM 720651 - PCC SAFETY BARRIER PERMANENT, DOUBLE FACE, BIFURCATED, TYPE 1
- (PP) ITEM 720652 - PCC SAFETY BARRIER PERMANENT, DOUBLE FACE, BIFURCATED, TYPE 2
- (RR) ITEM 401668 - SUPERPAVE, TYPE C HOT-MIX, 160 GYRATIONS, PG 64-22, WEDGE
- (SS) ITEM 401669 - SUPERPAVE, TYPE B HOT-MIX, 160 GYRATIONS, PG 64-22, WEDGE

PAVEMENT LIFT NOTE:

THE MAXIMUM LIFTS FOR THE INDIVIDUAL PAVING MATERIAL ARE AS FOLLOWS:
SUPERPAVE, TYPE C HOT-MIX - 2"
SUPERPAVE, TYPE B HOT-MIX - 3"
SUPERPAVE, BIT. CONC. BASE COURSE - 6"
GRADED AGGREGATE BASE COURSE - 8"

NOTES:

1) THE PGA IS APPLIED TO THE TOP OF THE FINAL PAVEMENT SURFACE.

UNOFFICIAL WEBSITE COPY

11/10/2010 10:38:48 AM
M:\PROJECTS\2003\03059_DELTRNPK\SRTMALL\CADD\2809003\PLANS\TS16_SR1.DGN

DELAWARE DEPARTMENT OF TRANSPORTATION	ADDENDUMS / REVISIONS	NOT TO SCALE	SR1 / I-95 INTERCHANGE	CONTRACT 28-090-03	BRIDGE NO.	TYPICAL SECTIONS	SHEET NO. 22
				COUNTY NEW CASTLE	DESIGNED BY:		TOTAL SHTS. 803
					CHECKED BY:		

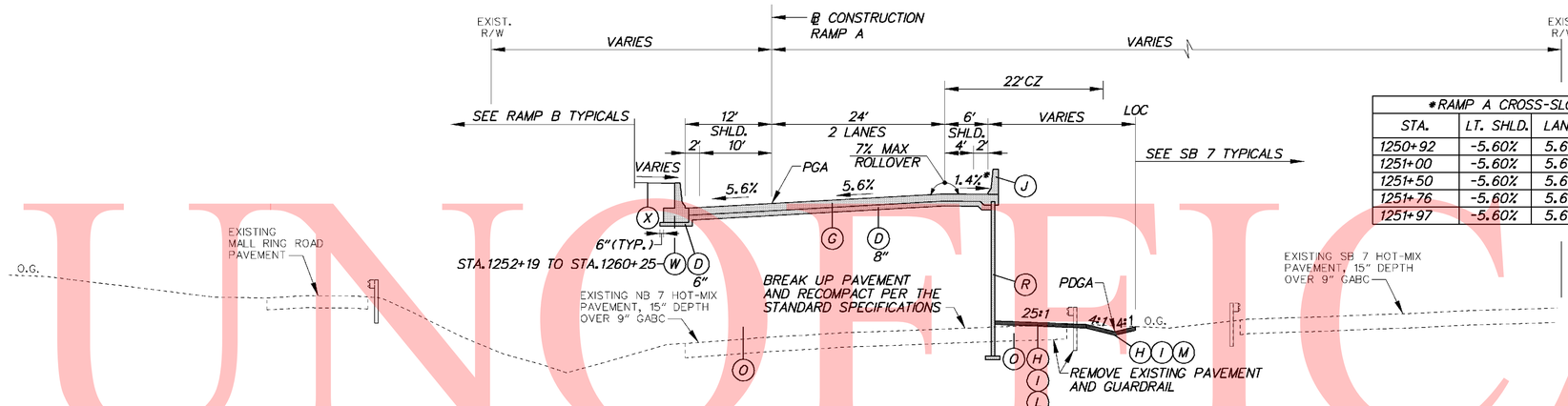

RAMP A

STA. 1250+85 (BRIDGE) TO STA. 1260+25

*RAMP A CROSS-SLOPES			
STA.	LT. SHLD.	LANES	RT. SHLD.
1250+92	-5.60%	5.60%	5.60%
1251+00	-5.60%	5.60%	5.07%
1251+50	-5.60%	5.60%	1.73%
1251+76	-5.60%	5.60%	0.00%
1251+97	-5.60%	5.60%	-1.40%

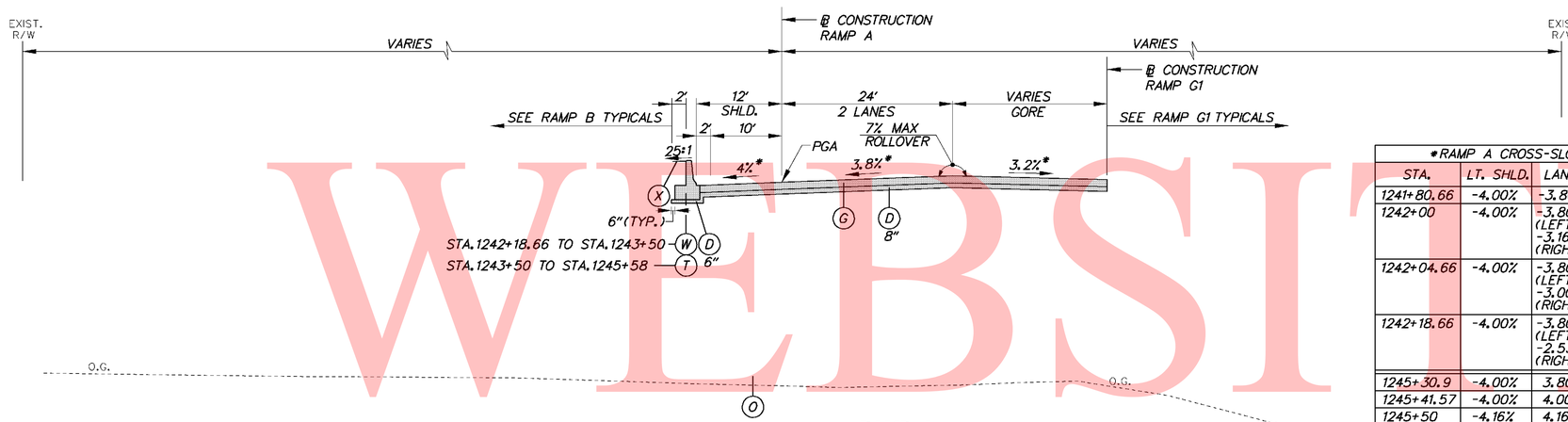

RAMP A

STA. 1242+18.66 TO STA. 1245+58 (BRIDGE)

*RAMP A CROSS-SLOPES			
STA.	LT. SHLD.	LANES	RT. SHLD.
1241+80.66	-4.00%	-3.80%	-3.20%
1242+00	-4.00%	-3.80% (LEFT 2) -3.16% (RIGHT 1)	-3.84%
1242+04.66	-4.00%	-3.80% (LEFT 2) -3.00% (RIGHT 1)	-4.00%
1242+18.66	-4.00%	-3.80% (LEFT 2) -2.53% (RIGHT 1)	-4.00%
1245+30.9	-4.00%	3.80%	3.00%
1245+41.57	-4.00%	4.00%	4.00%
1245+50	-4.16%	4.16%	4.16%

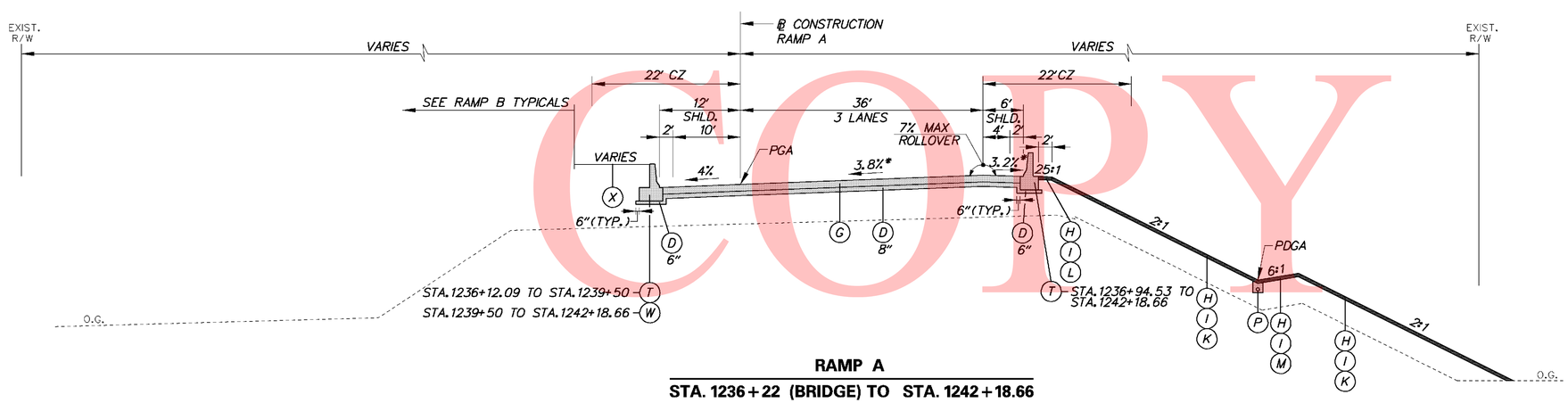

RAMP A

STA. 1236+22 (BRIDGE) TO STA. 1242+18.66

LEGEND

- (A) ITEM 401708 - SUPERPAVE, TYPE C HOT-MIX, 160 GYRATIONS, PG 70-22 (NON-CARBONATE STONE)
- (B) ITEM 401654 - SUPERPAVE, TYPE B HOT-MIX, 160 GYRATIONS, PG 70-22
- (C) ITEM 401663 - SUPERPAVE, BITUMINOUS CONCRETE BASE COURSE, 160 GYRATIONS, PG 64-22
- (D) ITEM 302007 - GRADED AGGREGATE BASE COURSE, TYPE B
- (E) ITEM 401711 - SUPERPAVE, TYPE C HOT-MIX, 160 GYRATIONS, PG 76-22 (NON-CARBONATE STONE)
- (F) ITEM 401660 - SUPERPAVE, TYPE B HOT-MIX, 160 GYRATIONS, PG 76-22
- (G) ITEM 501006 - PORTLAND CEMENT CONCRETE PAVEMENT, 12"
- (H) ITEM 732002 - TOPSOIL, 6" DEPTH
- (I) ITEM 734013 - PERMANENT GRASS SEEDING, DRY GROUND
- (J) ITEM 602017 - PCC MASONRY, PARAPET, CLASS A
- (K) ITEM 735533 - SOIL RETENTION BLANKET MULCH, TYPE 3
- (L) ITEM 735534 - SOIL RETENTION BLANKET MULCH, TYPE 4
- (M) ITEM 735535 - SOIL RETENTION BLANKET MULCH, TYPE 5, UNLESS OTHERWISE NOTED, SEE DRAINAGE PLANS FOR LIMITS AND TYPE
- (N) ITEM 209001 - BORROW, TYPE A
- (O) ITEM 209006 - BORROW, TYPE F OR APPROVED PROJECT EXCAVATION
- (P) ITEM 715001 - PERFORATED PIPE UNDERDRAINS, 6"
- (Q) ITEM 760504 - RUMBLE STRIPS, HOT-MIX
- (R) ITEM 602772 - MECHANICALLY STABILIZED EARTH WALLS
- (S) ITEM 602773 - PCC MASONRY FOR MECHANICALLY STABILIZED EARTH WALLS
- (T) ITEM 720512 - PCC SAFETY BARRIER PERMANENT, SINGLE FACE
- (U) ITEM 720654 - PCC SAFETY BARRIER PERMANENT, SINGLE FACE, MODIFIED TYPE 1
- (V) ITEM 720587 - PCC SAFETY BARRIER PERMANENT, DOUBLE FACE, MODIFIED
- (W) ITEM 720655 - PCC SAFETY BARRIER PERMANENT, SINGLE FACE, MODIFIED TYPE 2
- (X) ITEM 712005 - RIPRAP, R-4
- (Y) ITEM 401665 - SUPERPAVE, TYPE C HOT-MIX, 160 GYRATIONS, PG 64-22, PATCHING
- (Z) ITEM 401666 - SUPERPAVE, TYPE B HOT-MIX, 160 GYRATIONS, PG 64-22, PATCHING
- (AA) ITEM 401667 - SUPERPAVE, BITUMINOUS CONCRETE BASE COURSE, 160 GYRATIONS, PG 64-22, PATCHING
- (BB) ITEM 302008 - GRADED AGGREGATE BASE COURSE, TYPE B, PATCHING
- (CC) ITEM 755000 - HOT-MIX, HOT LAID, BITUMINOUS CONCRETE CURB
- (DD) ITEM 701010 - PORTLAND CEMENT CONCRETE CURB, TYPE 1
- (EE) ITEM 701011 - PORTLAND CEMENT CONCRETE CURB, TYPE 2
- (FF) ITEM 701020 - INTEGRAL PORTLAND CEMENT CONCRETE CURB AND GUTTER, TYPE 1
- (GG) ITEM 701023 - INTEGRAL PORTLAND CEMENT CONCRETE CURB AND GUTTER, TYPE 4
- (HH) ITEM 701026 - PORTLAND CEMENT CONCRETE MONOLITHIC MEDIAN
- (II) ITEM 701027 - PORTLAND CEMENT CONCRETE CURB, TYPE 1 MODIFIED
- (JJ) ITEM 720658 - PCC SAFETY BARRIER PERMANENT SINGLE FACE, MODIFIED, TYPE 5
- (KK) ITEM 720050 - GALVANIZED STEEL BEAM GUARDRAIL, TYPE 1
- (LL) ITEM 760507 - PROFILE MILLING, HOT-MIX
- (MM) ITEM 720656 - PCC SAFETY BARRIER PERMANENT, SINGLE FACE, MODIFIED, TYPE 3
- (NN) ITEM 720657 - PCC SAFETY BARRIER PERMANENT, SINGLE FACE, MODIFIED, TYPE 4
- (OO) ITEM 720651 - PCC SAFETY BARRIER PERMANENT, DOUBLE FACE, BIFURCATED, TYPE 1
- (PP) ITEM 720652 - PCC SAFETY BARRIER PERMANENT, DOUBLE FACE, BIFURCATED, TYPE 2
- (RR) ITEM 401668 - SUPERPAVE, TYPE C HOT-MIX, 160 GYRATIONS, PG 64-22, WEDGE
- (SS) ITEM 401669 - SUPERPAVE, TYPE B HOT-MIX, 160 GYRATIONS, PG 64-22, WEDGE

PAVEMENT LIFT NOTE:

THE MAXIMUM LIFTS FOR THE INDIVIDUAL PAVING MATERIAL ARE AS FOLLOWS:
SUPERPAVE, TYPE C HOT-MIX - 2"
SUPERPAVE, TYPE B HOT-MIX - 3"
SUPERPAVE, BIT. CONC. BASE COURSE - 6"
GRADED AGGREGATE BASE COURSE - 8"

NOTES:

1) THE PGA IS APPLIED TO THE TOP OF THE FINAL PAVEMENT SURFACE.

UNOFFICIAL WEBSITE COPY

10/29/2010 11:40:16 AM
M:\PROJECTS\2003\03059_DELTRNPK\SRIMALL\CADD\2809003\PLANS\TS17_SR1.DGN

DELAWARE DEPARTMENT OF TRANSPORTATION	ADDENDUMS / REVISIONS	NOT TO SCALE	SR1 / I-95 INTERCHANGE	CONTRACT 28-090-03	BRIDGE NO.	TYPICAL SECTIONS	SHEET NO. 23
				COUNTY NEW CASTLE	DESIGNED BY:		TOTAL SHTS. 803
					CHECKED BY:		

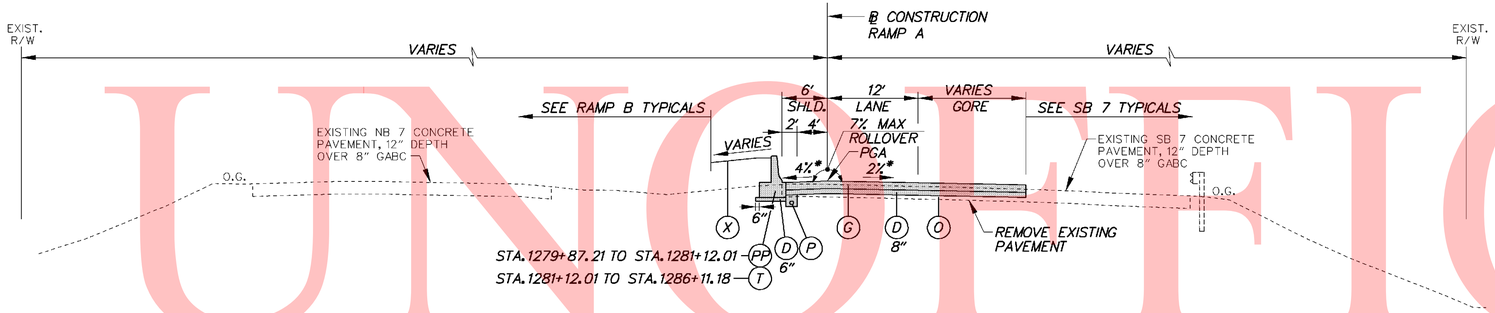

*RAMP A CROSS-SLOPES			
STA.	LT. SHLD.	LANES	RT. SHLD.
1281+49.03	-1.00%	-6.00%	-
1281+50	-1.02%	-5.98%	-
1282+00	-2.27%	-4.73%	-
1282+29.03	-3.00%	-4.00%	-
1282+50	-3.52%	-3.48%	-
1282+69.03	-4.00%	-3.00%	-
1283+00	-4.00%	-2.23%	-
1283+09.03	-4.00%	-2.00%	-

RAMP A

STA. 1279+87.21 TO STA. 1286+06.63

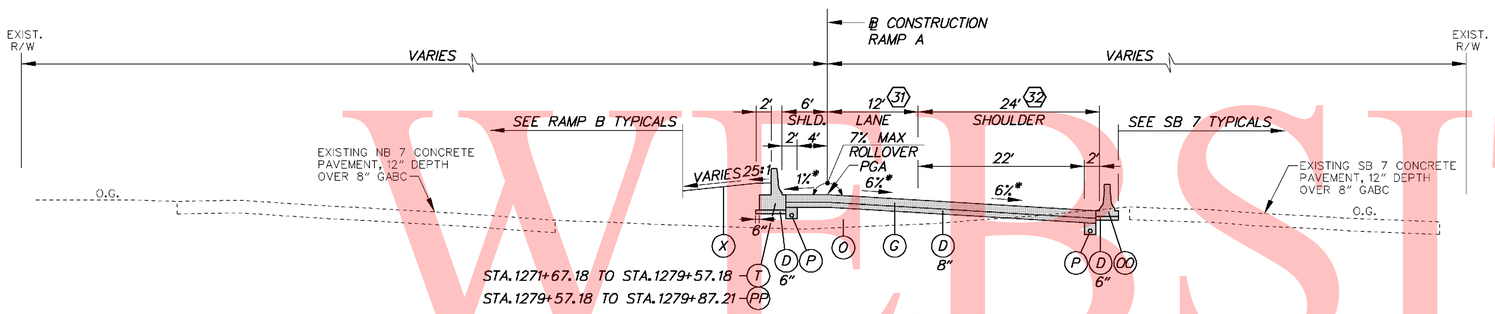

*RAMP A CROSS-SLOPES			
STA.	LT. SHLD.	LANES	RT. SHLD.
1272+00	-4.00%	-2.00%	-4.00%
1272+27.15	-4.00%	-2.00%	-4.00%
1272+50	-4.00%	-2.57%	-4.00%
1272+67.15	-4.00%	-3.00%	-4.00%
1273+00	-3.18%	-3.82%	-4.00%
1273+07.15	-3.00%	-4.00%	-4.00%
1273+50	-1.93%	-5.07%	-5.07%
1273+87.15	-1.00%	-6.00%	-6.00%

RAMP A

STA. 1271+67.18 TO STA. 1279+87.21

(31) STA. 1271+67.18 TO STA. 1278+87.18
WIDTH TAPERS 24' TO 12'

(32) STA. 1271+67.18 TO STA. 1278+87.18
SHOULDER TAPERS 12' TO 24'

*RAMP A CROSS-SLOPES			
STA.	LT. SHLD.	LANES	RT. SHLD.
1260+50	-5.60%	5.60%	-1.40%
1260+64.59	-5.60%	5.60%	-1.40%
1261+00	-4.71%	4.71%	-2.29%
1261+28.59	-4.00%	4.00%	-3.00%
1261+39.26	-4.00%	3.73%	-3.27%
1261+50	-4.00%	3.46%	-3.54%
1261+68.59	-4.00%	3.00%	-4.00%
1262+00	-4.00%	2.21%	-4.00%
1262+08.59	-4.00%	2.00%	-4.00%
1262+50	-4.00%	0.96%	-4.00%
1262+88.59	-4.00%	0.00%	-4.00%
1263+00	-4.00%	-0.29%	-4.00%
1263+50	-4.00%	-1.54%	-4.00%
1263+68.59	-4.00%	-2.00%	-4.00%

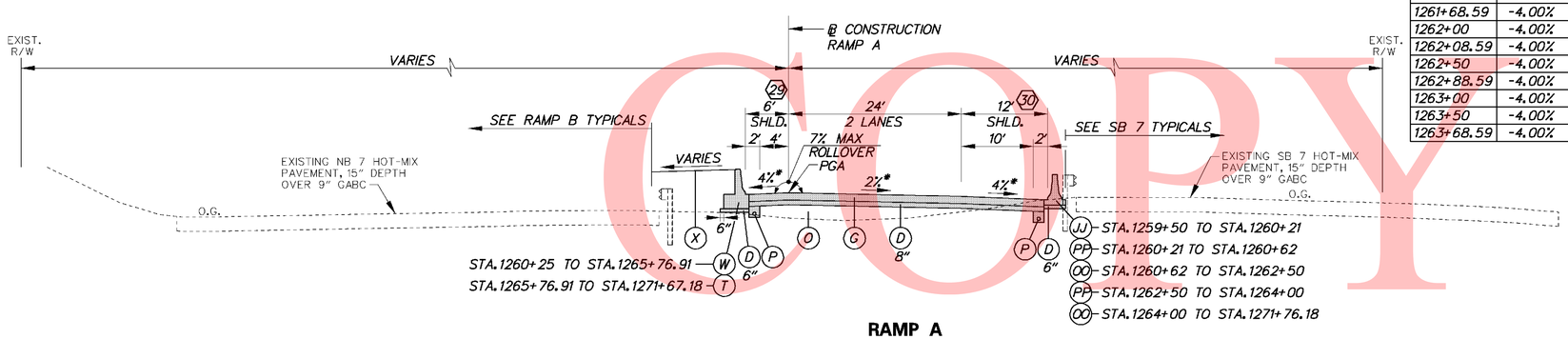

RAMP A

STA. 1260+25 TO STA. 1271+67.18

(29) STA. 1262+59.27 TO STA. 1264+39.27
SHOULDER TAPERS 12' TO 6'

(30) STA. 1261+39.22 TO STA. 126.3+19.26
SHOULDER TAPERS 6' TO 12'

LEGEND

- (A) ITEM 401708 - SUPERPAVE, TYPE C HOT-MIX, 160 GYRATIONS, PG 70-22 (NON-CARBONATE STONE)
- (B) ITEM 401654 - SUPERPAVE, TYPE B HOT-MIX, 160 GYRATIONS, PG 70-22
- (C) ITEM 401663 - SUPERPAVE, BITUMINOUS CONCRETE BASE COURSE, 160 GYRATIONS, PG 64-22
- (D) ITEM 302007 - GRADED AGGREGATE BASE COURSE, TYPE B
- (E) ITEM 401711 - SUPERPAVE, TYPE C HOT-MIX, 160 GYRATIONS, PG 76-22 (NON-CARBONATE STONE)
- (F) ITEM 401660 - SUPERPAVE, TYPE B HOT-MIX, 160 GYRATIONS, PG 76-22
- (G) ITEM 501006 - PORTLAND CEMENT CONCRETE PAVEMENT, 12"
- (H) ITEM 732002 - TOPSOIL, 6" DEPTH
- (I) ITEM 734013 - PERMANENT GRASS SEEDING, DRY GROUND
- (J) ITEM 602017 - PCC MASONRY, PARAPET, CLASS A
- (K) ITEM 735533 - SOIL RETENTION BLANKET MULCH, TYPE 3
- (L) ITEM 735534 - SOIL RETENTION BLANKET MULCH, TYPE 4
- (M) ITEM 735535 - SOIL RETENTION BLANKET MULCH, TYPE 5, UNLESS OTHERWISE NOTED, SEE DRAINAGE PLANS FOR LIMITS AND TYPE
- (N) ITEM 209001 - BORROW, TYPE A
- (O) ITEM 209006 - BORROW, TYPE F OR APPROVED PROJECT EXCAVATION
- (P) ITEM 715001 - PERFORATED PIPE UNDERDRAINS, 6"
- (Q) ITEM 760504 - RUMBLE STRIPS, HOT-MIX
- (R) ITEM 602772 - MECHANICALLY STABILIZED EARTH WALLS
- (S) ITEM 602773 - PCC MASONRY FOR MECHANICALLY STABILIZED EARTH WALLS
- (T) ITEM 720512 - PCC SAFETY BARRIER PERMANENT, SINGLE FACE
- (U) ITEM 720654 - PCC SAFETY BARRIER PERMANENT, SINGLE FACE, MODIFIED TYPE 1
- (V) ITEM 720587 - PCC SAFETY BARRIER PERMANENT, DOUBLE FACE, MODIFIED
- (W) ITEM 720655 - PCC SAFETY BARRIER PERMANENT, SINGLE FACE, MODIFIED TYPE 2
- (X) ITEM 712005 - RIPRAP, R-4
- (Y) ITEM 401665 - SUPERPAVE, TYPE C HOT-MIX, 160 GYRATIONS, PG 64-22, PATCHING
- (Z) ITEM 401666 - SUPERPAVE, TYPE B HOT-MIX, 160 GYRATIONS, PG 64-22, PATCHING
- (AA) ITEM 401667 - SUPERPAVE, BITUMINOUS CONCRETE BASE COURSE, 160 GYRATIONS, PG 64-22, PATCHING
- (BB) ITEM 302008 - GRADED AGGREGATE BASE COURSE, TYPE B, PATCHING
- (CC) ITEM 755000 - HOT-MIX, HOT LAID, BITUMINOUS CONCRETE CURB
- (DD) ITEM 701010 - PORTLAND CEMENT CONCRETE CURB, TYPE 1
- (EE) ITEM 701011 - PORTLAND CEMENT CONCRETE CURB, TYPE 2
- (FF) ITEM 701020 - INTEGRAL PORTLAND CEMENT CONCRETE CURB AND GUTTER, TYPE 1
- (GG) ITEM 701023 - INTEGRAL PORTLAND CEMENT CONCRETE CURB AND GUTTER, TYPE 4
- (HH) ITEM 701026 - PORTLAND CEMENT CONCRETE MONOLITHIC MEDIAN
- (II) ITEM 701027 - PORTLAND CEMENT CONCRETE CURB, TYPE 1 MODIFIED
- (JJ) ITEM 720658 - PCC SAFETY BARRIER PERMANENT SINGLE FACE, MODIFIED, TYPE 5
- (KK) ITEM 720050 - GALVANIZED STEEL BEAM GUARDRAIL, TYPE 1
- (LL) ITEM 760507 - PROFILE MILLING, HOT-MIX
- (MM) ITEM 720656 - PCC SAFETY BARRIER PERMANENT, SINGLE FACE, MODIFIED, TYPE 3
- (NN) ITEM 720657 - PCC SAFETY BARRIER PERMANENT, SINGLE FACE, MODIFIED, TYPE 4
- (OO) ITEM 720651 - PCC SAFETY BARRIER PERMANENT, DOUBLE FACE, BIFURCATED, TYPE 1
- (PP) ITEM 720652 - PCC SAFETY BARRIER PERMANENT, DOUBLE FACE, BIFURCATED, TYPE 2
- (RR) ITEM 401668 - SUPERPAVE, TYPE C HOT-MIX, 160 GYRATIONS, PG 64-22, WEDGE
- (SS) ITEM 401669 - SUPERPAVE, TYPE B HOT-MIX, 160 GYRATIONS, PG 64-22, WEDGE

PAVEMENT LIFT NOTE:

THE MAXIMUM LIFTS FOR THE INDIVIDUAL PAVING MATERIAL ARE AS FOLLOWS:
SUPERPAVE, TYPE C HOT-MIX - 2"
SUPERPAVE, TYPE B HOT-MIX - 3"
SUPERPAVE, BIT. CONC. BASE COURSE - 6"
GRADED AGGREGATE BASE COURSE - 8"

NOTES:

1) THE PGA IS APPLIED TO THE TOP OF THE FINAL PAVEMENT SURFACE.

UNOFFICIAL WEBSITE COPY

10/28/2010 2:45:21 PM
M:\PROJECTS\2003\03059_DELTRNPK\SRIMALL\CADD\2809003\PLANS\TS18_SR1.DGN

DELAWARE DEPARTMENT OF TRANSPORTATION	ADDENDUMS / REVISIONS	NOT TO SCALE	SR1 / I-95 INTERCHANGE	CONTRACT 28-090-03	BRIDGE NO.	TYPICAL SECTIONS	SHEET NO. 24
				COUNTY NEW CASTLE	DESIGNED BY:		TOTAL SHTS. 803
					CHECKED BY:		

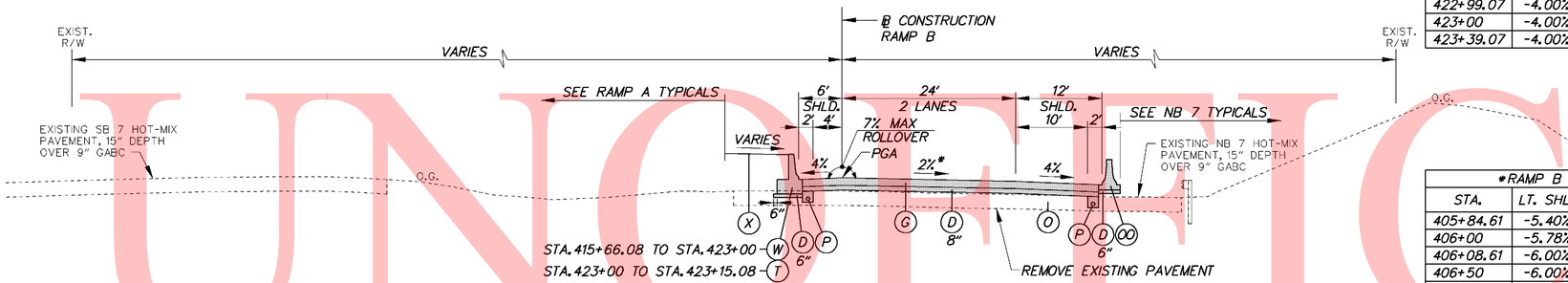

RAMP B

STA. 415+66.08 TO STA. 423+15.08

*RAMP B CROSS-SLOPES			
STA.	LT. SHLD.	LANES	RT. SHLD.
422+99.07	-4.00%	-2.00%	-4.00%
423+00	-4.00%	-2.02%	-4.00%
423+39.07	-4.00%	-3.00%	-4.00%

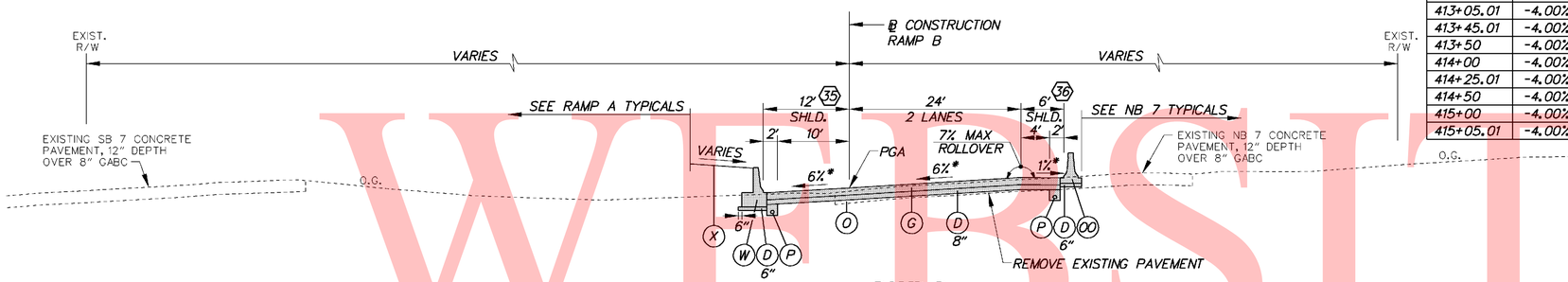

RAMP B

STA. 405+84.60 TO STA. 415+66.08

35 STA. 413+86.10 TO STA. 415+66.08
SHOULDER TAPERS 12' TO 6'

36 STA. 411+33.06 TO STA. 413+86.10
SHOULDER TAPERS 6' TO 12'

*RAMP B CROSS-SLOPES			
STA.	LT. SHLD.	LANES	RT. SHLD.
405+84.61	-5.40%	5.40%	6.00%
406+00	-5.78%	5.78%	5.67%
406+08.61	-6.00%	6.00%	5.09%
406+50	-6.00%	6.00%	2.33%
406+85.00	-6.00%	6.00%	0.00%
407+00	-6.00%	6.00%	-1.00%
411+85.01	-6.00%	6.00%	-1.00%
412+00	-5.63%	5.63%	-1.37%
412+50	-4.38%	4.38%	-2.62%
412+65.01	-4.00%	4.00%	-3.00%
413+00	-4.00%	3.13%	-3.87%
413+05.01	-4.00%	3.00%	-4.00%
413+45.01	-4.00%	2.00%	-4.00%
413+50	-4.00%	1.88%	-4.00%
414+00	-4.00%	0.63%	-4.00%
414+25.01	-4.00%	0.00%	-4.00%
414+50	-4.00%	-0.62%	-4.00%
415+00	-4.00%	-1.87%	-4.00%
415+05.01	-4.00%	-2.00%	-4.00%

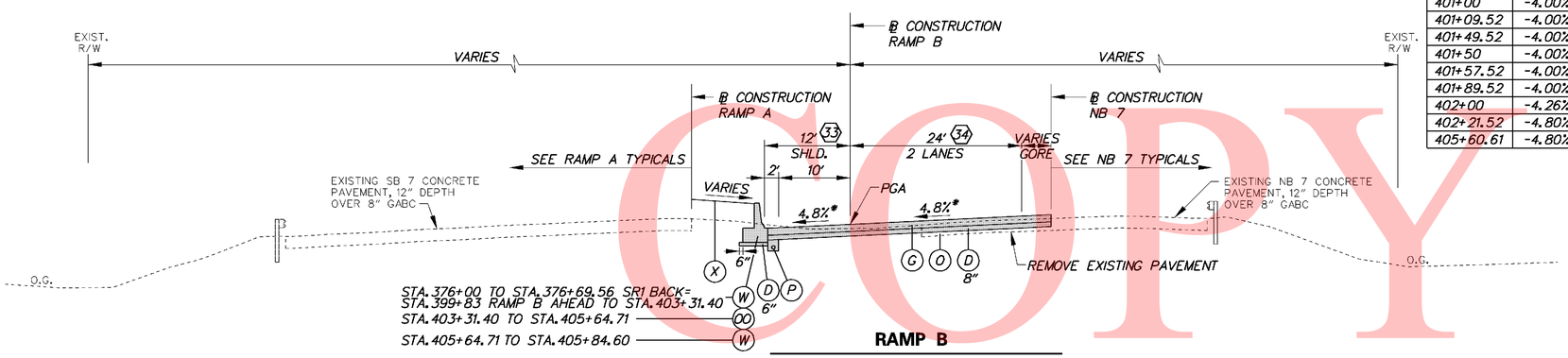

RAMP B

STA. 399+83 TO STA. 405+84.60

33 STA. 399+83 TO STA. 400+13.44
SHOULDER TAPERS 10.17' TO 12'

34 STA. 399+83 TO STA. 403+02.84
WIDTH TAPERS 12.55' TO 24'

*RAMP B CROSS-SLOPES			
STA.	LT. SHLD.	LANES	RT. SHLD.
399+83	-4.00%	-1.16%	-
400+00	-4.00%	-0.74%	-
400+29.52	-4.00%	0.00%	-
400+50	-4.00%	0.51%	-
401+00	-4.00%	1.76%	-
401+09.52	-4.00%	2.00%	-
401+49.52	-4.00%	3.00%	-
401+50	-4.00%	3.01%	-
401+57.52	-4.00%	3.20%	-
401+89.52	-4.00%	4.00%	-
402+00	-4.26%	4.26%	-
402+21.52	-4.80%	4.80%	-
405+60.61	-4.80%	4.80%	-

LEGEND

- A ITEM 401708 - SUPERPAVE, TYPE C HOT-MIX, 160 GYRATIONS, PG 70-22 (NON-CARBONATE STONE)
- B ITEM 401654 - SUPERPAVE, TYPE B HOT-MIX, 160 GYRATIONS, PG 70-22
- C ITEM 401663 - SUPERPAVE, BITUMINOUS CONCRETE BASE COURSE, 160 GYRATIONS, PG 64-22
- D ITEM 302007 - GRADED AGGREGATE BASE COURSE, TYPE B
- E ITEM 401711 - SUPERPAVE, TYPE C HOT-MIX, 160 GYRATIONS, PG 76-22 (NON-CARBONATE STONE)
- F ITEM 401660 - SUPERPAVE, TYPE B HOT-MIX, 160 GYRATIONS, PG 76-22
- G ITEM 501006 - PORTLAND CEMENT CONCRETE PAVEMENT, 12"
- H ITEM 732002 - TOPSOIL, 6" DEPTH
- I ITEM 734013 - PERMANENT GRASS SEEDING, DRY GROUND
- J ITEM 602017 - PCC MASONRY, PARAPET, CLASS A
- K ITEM 735533 - SOIL RETENTION BLANKET MULCH, TYPE 3
- L ITEM 735534 - SOIL RETENTION BLANKET MULCH, TYPE 4
- M ITEM 735535 - SOIL RETENTION BLANKET MULCH, TYPE 5, UNLESS OTHERWISE NOTED, SEE DRAINAGE PLANS FOR LIMITS AND TYPE
- N ITEM 209001 - BORROW, TYPE A
- O ITEM 209006 - BORROW, TYPE F OR APPROVED PROJECT EXCAVATION
- P ITEM 715001 - PERFORATED PIPE UNDERDRAINS, 6"
- Q ITEM 760504 - RUMBLE STRIPS, HOT-MIX
- R ITEM 602772 - MECHANICALLY STABILIZED EARTH WALLS
- S ITEM 602773 - PCC MASONRY FOR MECHANICALLY STABILIZED EARTH WALLS
- T ITEM 720512 - PCC SAFETY BARRIER PERMANENT, SINGLE FACE
- U ITEM 720654 - PCC SAFETY BARRIER PERMANENT, SINGLE FACE, MODIFIED TYPE 1
- V ITEM 720587 - PCC SAFETY BARRIER PERMANENT, DOUBLE FACE, MODIFIED
- W ITEM 720655 - PCC SAFETY BARRIER PERMANENT, SINGLE FACE, MODIFIED TYPE 2
- X ITEM 712005 - RIPRAP, R-4
- Y ITEM 401665 - SUPERPAVE, TYPE C HOT-MIX, 160 GYRATIONS, PG 64-22, PATCHING
- Z ITEM 401666 - SUPERPAVE, TYPE B HOT-MIX, 160 GYRATIONS, PG 64-22, PATCHING
- AA ITEM 401667 - SUPERPAVE, BITUMINOUS CONCRETE BASE COURSE, 160 GYRATIONS, PG 64-22, PATCHING
- BB ITEM 302008 - GRADED AGGREGATE BASE COURSE, TYPE B, PATCHING
- CC ITEM 755000 - HOT-MIX, HOT LAID, BITUMINOUS CONCRETE CURB
- DD ITEM 701010 - PORTLAND CEMENT CONCRETE CURB, TYPE 1
- EE ITEM 701011 - PORTLAND CEMENT CONCRETE CURB, TYPE 2
- FF ITEM 701020 - INTEGRAL PORTLAND CEMENT CONCRETE CURB AND GUTTER, TYPE 1
- GG ITEM 701023 - INTEGRAL PORTLAND CEMENT CONCRETE CURB AND GUTTER, TYPE 4
- HH ITEM 701026 - PORTLAND CEMENT CONCRETE MONOLITHIC MEDIAN
- II ITEM 701027 - PORTLAND CEMENT CONCRETE CURB, TYPE 1 MODIFIED
- JJ ITEM 720658 - PCC SAFETY BARRIER PERMANENT SINGLE FACE, MODIFIED, TYPE 5
- KK ITEM 720050 - GALVANIZED STEEL BEAM GUARDRAIL, TYPE 1
- LL ITEM 760507 - PROFILE MILLING, HOT-MIX
- MM ITEM 720656 - PCC SAFETY BARRIER PERMANENT, SINGLE FACE, MODIFIED, TYPE 3
- NN ITEM 720657 - PCC SAFETY BARRIER PERMANENT, SINGLE FACE, MODIFIED, TYPE 4
- OO ITEM 720651 - PCC SAFETY BARRIER PERMANENT, DOUBLE FACE, BIFURCATED, TYPE 1
- PP ITEM 720652 - PCC SAFETY BARRIER PERMANENT, DOUBLE FACE, BIFURCATED, TYPE 2
- RR ITEM 401668 - SUPERPAVE, TYPE C HOT-MIX, 160 GYRATIONS, PG 64-22, WEDGE
- SS ITEM 401669 - SUPERPAVE, TYPE B HOT-MIX, 160 GYRATIONS, PG 64-22, WEDGE

PAVEMENT LIFT NOTE:

THE MAXIMUM LIFTS FOR THE INDIVIDUAL PAVING MATERIAL ARE AS FOLLOWS:
SUPERPAVE, TYPE C HOT-MIX - 2"
SUPERPAVE, TYPE B HOT-MIX - 3"
SUPERPAVE, BIT. CONC. BASE COURSE - 6"
GRADED AGGREGATE BASE COURSE - 8"

NOTES:

1) THE PGA IS APPLIED TO THE TOP OF THE FINAL PAVEMENT SURFACE.

UNOFFICIAL WEBSITE COPY

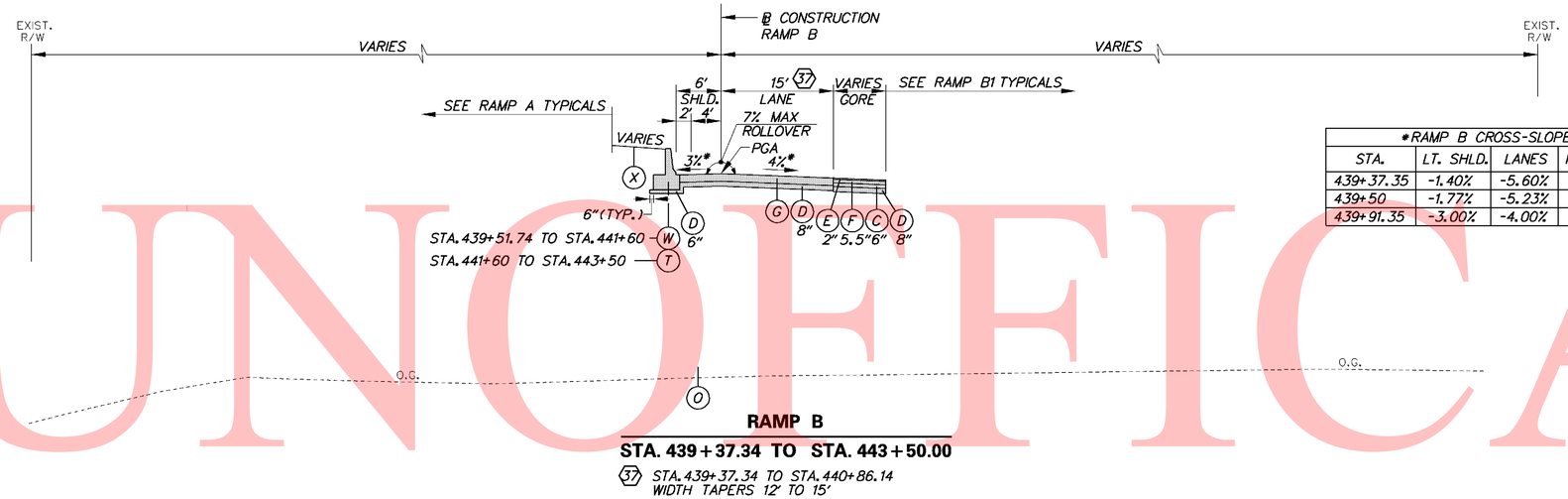

*RAMP B CROSS-SLOPES			
STA.	LT. SHLD.	LANES	RT. SHLD.
439+37.35	-1.40%	-5.60%	-
439+50	-1.77%	-5.23%	-
439+91.35	-3.00%	-4.00%	-

RAMP B

STA. 439+37.34 TO STA. 443+50.00

(37) STA. 439+37.34 TO STA. 440+86.14
WIDTH TAPERS 12' TO 15'

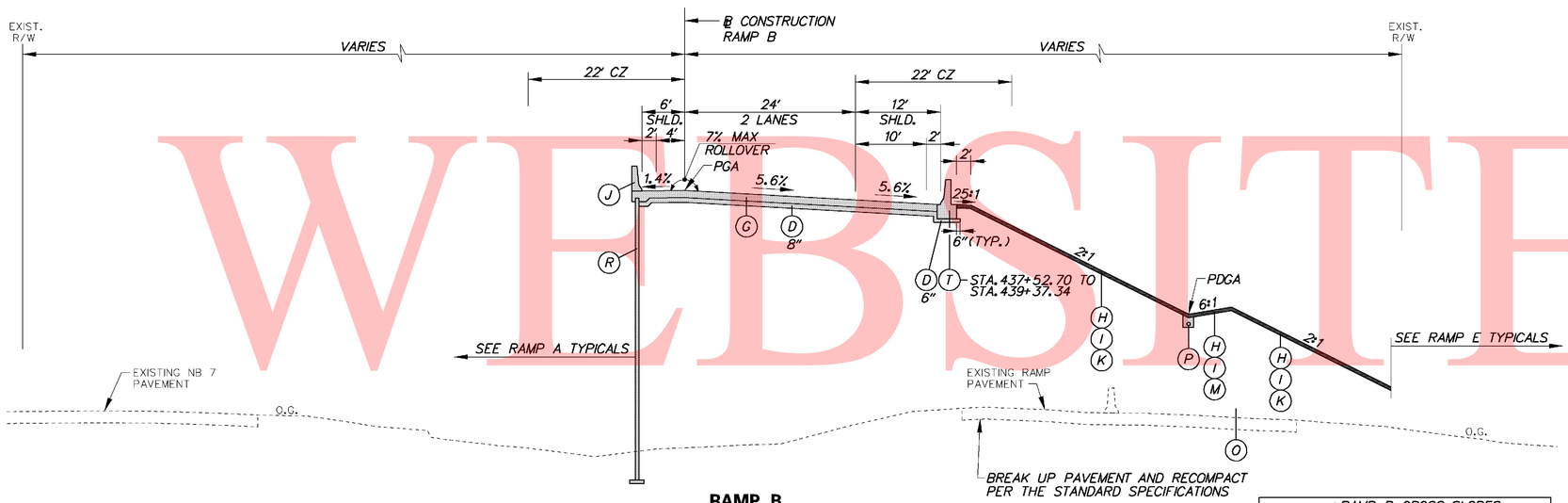

RAMP B

STA. 437+15.86 (BRIDGE) TO STA. 439+37.34

*RAMP B CROSS-SLOPES			
STA.	LT. SHLD.	LANES	RT. SHLD.
422+99.07	-4.00%	-2.00%	-4.00%
423+00	-4.00%	-2.02%	-4.00%
423+39.07	-4.00%	-3.00%	-4.00%
423+50	-3.73%	-3.27%	-4.00%
423+68.57	-3.26%	-3.74%	-4.00%
423+79.07	-3.00%	-4.00%	-4.00%
424+00	-2.48%	-4.52%	-4.52%
424+43.07	-1.40%	-5.60%	-5.60%

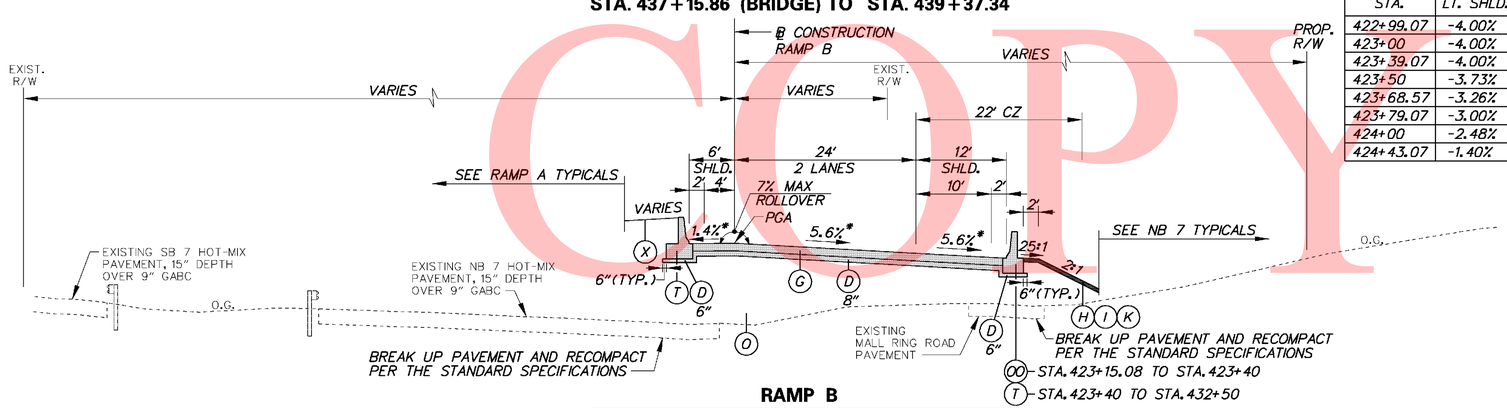

RAMP B

STA. 423+15.08 TO STA. 433+05.25 (BRIDGE)

LEGEND

- (A) ITEM 401708 - SUPERPAVE, TYPE C HOT-MIX, 160 GYRATIONS, PG 70-22 (NON-CARBONATE STONE)
- (B) ITEM 401654 - SUPERPAVE, TYPE B HOT-MIX, 160 GYRATIONS, PG 70-22
- (C) ITEM 401663 - SUPERPAVE, BITUMINOUS CONCRETE BASE COURSE, 160 GYRATIONS, PG 64-22
- (D) ITEM 302007 - GRADED AGGREGATE BASE COURSE, TYPE B
- (E) ITEM 401711 - SUPERPAVE, TYPE C HOT-MIX, 160 GYRATIONS, PG 76-22 (NON-CARBONATE STONE)
- (F) ITEM 401660 - SUPERPAVE, TYPE B HOT-MIX, 160 GYRATIONS, PG 76-22
- (G) ITEM 501006 - PORTLAND CEMENT CONCRETE PAVEMENT, 12"
- (H) ITEM 732002 - TOPSOIL, 6" DEPTH
- (I) ITEM 734013 - PERMANENT GRASS SEEDING, DRY GROUND
- (J) ITEM 602017 - PCC MASONRY, PARAPET, CLASS A
- (K) ITEM 735533 - SOIL RETENTION BLANKET MULCH, TYPE 3
- (L) ITEM 735534 - SOIL RETENTION BLANKET MULCH, TYPE 4
- (M) ITEM 735535 - SOIL RETENTION BLANKET MULCH, TYPE 5, UNLESS OTHERWISE NOTED, SEE DRAINAGE PLANS FOR LIMITS AND TYPE
- (N) ITEM 209001 - BORROW, TYPE A
- (O) ITEM 209006 - BORROW, TYPE F OR APPROVED PROJECT EXCAVATION
- (P) ITEM 715001 - PERFORATED PIPE UNDERDRAINS, 6"
- (Q) ITEM 760504 - RUMBLE STRIPS, HOT-MIX
- (R) ITEM 602772 - MECHANICALLY STABILIZED EARTH WALLS
- (S) ITEM 602773 - PCC MASONRY FOR MECHANICALLY STABILIZED EARTH WALLS
- (T) ITEM 720512 - PCC SAFETY BARRIER PERMANENT, SINGLE FACE
- (U) ITEM 720654 - PCC SAFETY BARRIER PERMANENT, SINGLE FACE, MODIFIED TYPE 1
- (V) ITEM 720587 - PCC SAFETY BARRIER PERMANENT, DOUBLE FACE, MODIFIED
- (W) ITEM 720655 - PCC SAFETY BARRIER PERMANENT, SINGLE FACE, MODIFIED TYPE 2
- (X) ITEM 712005 - RIPRAP, R-4
- (Y) ITEM 401665 - SUPERPAVE, TYPE C HOT-MIX, 160 GYRATIONS, PG 64-22, PATCHING
- (Z) ITEM 401666 - SUPERPAVE, TYPE B HOT-MIX, 160 GYRATIONS, PG 64-22, PATCHING
- (AA) ITEM 401667 - SUPERPAVE, BITUMINOUS CONCRETE BASE COURSE, 160 GYRATIONS, PG 64-22, PATCHING
- (BB) ITEM 302008 - GRADED AGGREGATE BASE COURSE, TYPE B, PATCHING
- (CC) ITEM 755000 - HOT-MIX, HOT LAID, BITUMINOUS CONCRETE CURB
- (DD) ITEM 701010 - PORTLAND CEMENT CONCRETE CURB, TYPE 1
- (EE) ITEM 701011 - PORTLAND CEMENT CONCRETE CURB, TYPE 2
- (FF) ITEM 701020 - INTEGRAL PORTLAND CEMENT CONCRETE CURB AND GUTTER, TYPE 1
- (GG) ITEM 701023 - INTEGRAL PORTLAND CEMENT CONCRETE CURB AND GUTTER, TYPE 4
- (HH) ITEM 701026 - PORTLAND CEMENT CONCRETE MONOLITHIC MEDIAN
- (II) ITEM 701027 - PORTLAND CEMENT CONCRETE CURB, TYPE 1 MODIFIED
- (JJ) ITEM 720658 - PCC SAFETY BARRIER PERMANENT SINGLE FACE, MODIFIED, TYPE 5
- (KK) ITEM 720050 - GALVANIZED STEEL BEAM GUARDRAIL, TYPE 1
- (LL) ITEM 760507 - PROFILE MILLING, HOT-MIX
- (MM) ITEM 720656 - PCC SAFETY BARRIER PERMANENT, SINGLE FACE, MODIFIED, TYPE 3
- (NN) ITEM 720657 - PCC SAFETY BARRIER PERMANENT, SINGLE FACE, MODIFIED, TYPE 4
- (OO) ITEM 720651 - PCC SAFETY BARRIER PERMANENT, DOUBLE FACE, BIFURCATED, TYPE 1
- (PP) ITEM 720652 - PCC SAFETY BARRIER PERMANENT, DOUBLE FACE, BIFURCATED, TYPE 2
- (RR) ITEM 401668 - SUPERPAVE, TYPE C HOT-MIX, 160 GYRATIONS, PG 64-22, WEDGE
- (SS) ITEM 401669 - SUPERPAVE, TYPE B HOT-MIX, 160 GYRATIONS, PG 64-22, WEDGE

PAVEMENT LIFT NOTE:

THE MAXIMUM LIFTS FOR THE INDIVIDUAL PAVING MATERIAL ARE AS FOLLOWS:
SUPERPAVE, TYPE C HOT-MIX - 2"
SUPERPAVE, TYPE B HOT-MIX - 3"
SUPERPAVE, BIT. CONC. BASE COURSE - 6"
GRADED AGGREGATE BASE COURSE - 8"

NOTES:

1) THE PGA IS APPLIED TO THE TOP OF THE FINAL PAVEMENT SURFACE.

UNOFFICIAL WEBSITE COPY

10/28/2010 2:58:27 PM
M:\PROJECTS\2003\03059_DELTRNPK\SRIMALL\CADD\2809003\PLANS\TS20_SR1.DGN

DELAWARE DEPARTMENT OF TRANSPORTATION	ADDENDUMS / REVISIONS	NOT TO SCALE	SR1 / I-95 INTERCHANGE	CONTRACT 28-090-03	BRIDGE NO.	TYPICAL SECTIONS	SHEET NO. 26
				COUNTY NEW CASTLE	DESIGNED BY:		TOTAL SHTS. 803
					CHECKED BY:		

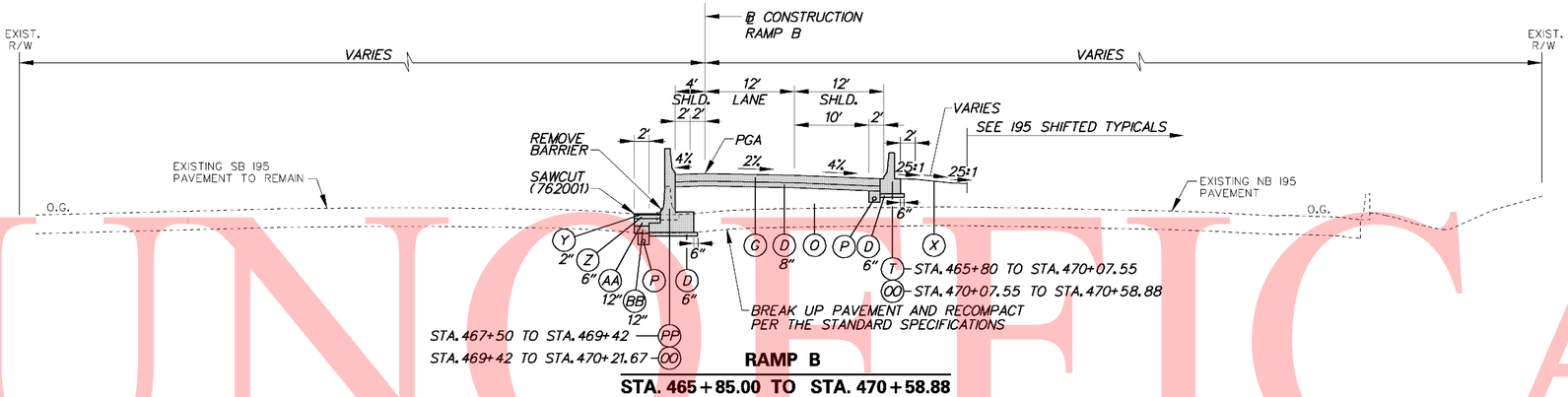

RAMP B

STA. 465+85.00 TO STA. 470+58.88

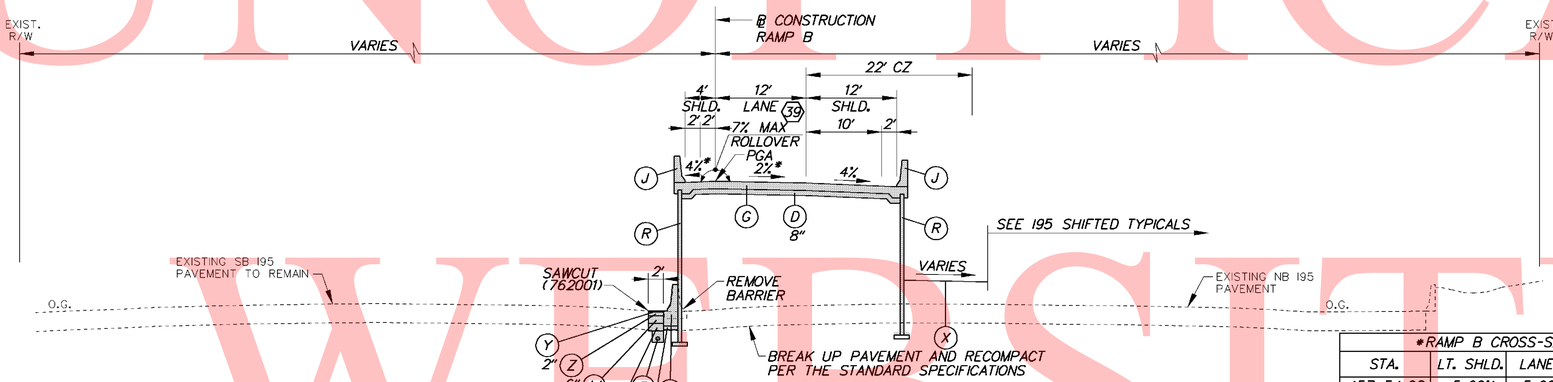

RAMP B

STA. 458+38.80 (BRIDGE) TO STA. 465+85.00

(39) STA. 459+16.30 TO STA. 462+16.30
WIDTH TAPERS 15' TO 12'

*RAMP B CROSS-SLOPES			
STA.	LT. SHLD.	LANES	RT. SHLD.
457+54.08	5.60%	-5.60%	-5.60%
458+00	4.22%	-4.22%	-4.22%
458+07.42	4.00%	-4.00%	-4.00%
458+16.30	3.73%	-3.73%	-4.00%
458+40.75	3.00%	-3.00%	-4.00%
458+50	2.50%	-2.72%	-4.00%
458+74.08	0.09%	-2.00%	-4.00%
458+75.00	0.00%	-2.00%	-4.00%
459+00	-2.50%	-2.00%	-4.00%
459+15.00	-4.00%	-2.00%	-4.00%

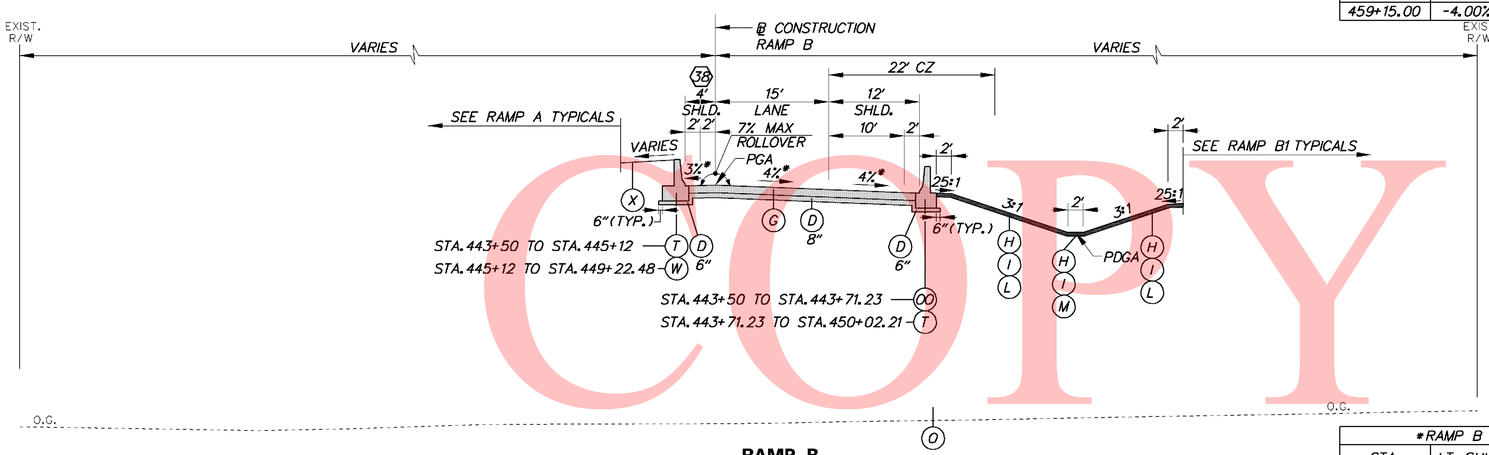

RAMP B

STA. 443+50.00 TO STA. 450+42.60 (BRIDGE)

(38) STA. 443+50.00 TO STA. 444+70.00
SHOULDER TAPERS 6' TO 4'

*RAMP B CROSS-SLOPES			
STA.	LT. SHLD.	LANES	RT. SHLD.
447+97.34	-3.00%	-4.00%	-4.00%
448+00	-2.92%	-4.08%	-4.08%
448+24.34	-2.20%	-4.80%	-4.80%
448+50	-1.44%	-5.56%	-5.56%
448+51.34	-1.40%	-5.60%	-5.60%

LEGEND

- (A) ITEM 401708 - SUPERPAVE, TYPE C HOT-MIX, 160 GYRATIONS, PG 70-22 (NON-CARBONATE STONE)
- (B) ITEM 401654 - SUPERPAVE, TYPE B HOT-MIX, 160 GYRATIONS, PG 70-22
- (C) ITEM 401663 - SUPERPAVE, BITUMINOUS CONCRETE BASE COURSE, 160 GYRATIONS, PG 64-22
- (D) ITEM 302007 - GRADED AGGREGATE BASE COURSE, TYPE B
- (E) ITEM 401711 - SUPERPAVE, TYPE C HOT-MIX, 160 GYRATIONS, PG 76-22 (NON-CARBONATE STONE)
- (F) ITEM 401660 - SUPERPAVE, TYPE B HOT-MIX, 160 GYRATIONS, PG 76-22
- (G) ITEM 501006 - PORTLAND CEMENT CONCRETE PAVEMENT, 12"
- (H) ITEM 732002 - TOPSOIL, 6" DEPTH
- (I) ITEM 734013 - PERMANENT GRASS SEEDING, DRY GROUND
- (J) ITEM 602017 - PCC MASONRY, PARAPET, CLASS A
- (K) ITEM 735533 - SOIL RETENTION BLANKET MULCH, TYPE 3
- (L) ITEM 735534 - SOIL RETENTION BLANKET MULCH, TYPE 4
- (M) ITEM 735535 - SOIL RETENTION BLANKET MULCH, TYPE 5, UNLESS OTHERWISE NOTED, SEE DRAINAGE PLANS FOR LIMITS AND TYPE
- (N) ITEM 209001 - BORROW, TYPE A
- (O) ITEM 209006 - BORROW, TYPE F OR APPROVED PROJECT EXCAVATION
- (P) ITEM 715001 - PERFORATED PIPE UNDERDRAINS, 6"
- (Q) ITEM 760504 - RUMBLE STRIPS, HOT-MIX
- (R) ITEM 602772 - MECHANICALLY STABILIZED EARTH WALLS
- (S) ITEM 602773 - PCC MASONRY FOR MECHANICALLY STABILIZED EARTH WALLS
- (T) ITEM 720512 - PCC SAFETY BARRIER PERMANENT, SINGLE FACE
- (U) ITEM 720654 - PCC SAFETY BARRIER PERMANENT, SINGLE FACE, MODIFIED TYPE 1
- (V) ITEM 720587 - PCC SAFETY BARRIER PERMANENT, DOUBLE FACE, MODIFIED
- (W) ITEM 720655 - PCC SAFETY BARRIER PERMANENT, SINGLE FACE, MODIFIED TYPE 2
- (X) ITEM 712005 - RIPRAP, R-4
- (Y) ITEM 401665 - SUPERPAVE, TYPE C HOT-MIX, 160 GYRATIONS, PG 64-22, PATCHING
- (Z) ITEM 401666 - SUPERPAVE, TYPE B HOT-MIX, 160 GYRATIONS, PG 64-22, PATCHING
- (AA) ITEM 401667 - SUPERPAVE, BITUMINOUS CONCRETE BASE COURSE, 160 GYRATIONS, PG 64-22, PATCHING
- (BB) ITEM 302008 - GRADED AGGREGATE BASE COURSE, TYPE B, PATCHING
- (CC) ITEM 755000 - HOT-MIX, HOT LAID, BITUMINOUS CONCRETE CURB
- (DD) ITEM 701010 - PORTLAND CEMENT CONCRETE CURB, TYPE 1
- (EE) ITEM 701011 - PORTLAND CEMENT CONCRETE CURB, TYPE 2
- (FF) ITEM 701020 - INTEGRAL PORTLAND CEMENT CONCRETE CURB AND GUTTER, TYPE 1
- (GG) ITEM 701023 - INTEGRAL PORTLAND CEMENT CONCRETE CURB AND GUTTER, TYPE 4
- (HH) ITEM 701026 - PORTLAND CEMENT CONCRETE MONOLITHIC MEDIAN
- (II) ITEM 701027 - PORTLAND CEMENT CONCRETE CURB, TYPE 1 MODIFIED
- (JJ) ITEM 720658 - PCC SAFETY BARRIER PERMANENT SINGLE FACE, MODIFIED, TYPE 5
- (KK) ITEM 720050 - GALVANIZED STEEL BEAM GUARDRAIL, TYPE 1
- (LL) ITEM 760507 - PROFILE MILLING, HOT-MIX
- (MM) ITEM 720656 - PCC SAFETY BARRIER PERMANENT, SINGLE FACE, MODIFIED, TYPE 3
- (NN) ITEM 720657 - PCC SAFETY BARRIER PERMANENT, SINGLE FACE, MODIFIED, TYPE 4
- (OO) ITEM 720651 - PCC SAFETY BARRIER PERMANENT, DOUBLE FACE, BIFURCATED, TYPE 1
- (PP) ITEM 720652 - PCC SAFETY BARRIER PERMANENT, DOUBLE FACE, BIFURCATED, TYPE 2
- (RR) ITEM 401668 - SUPERPAVE, TYPE C HOT-MIX, 160 GYRATIONS, PG 64-22, WEDGE
- (SS) ITEM 401669 - SUPERPAVE, TYPE B HOT-MIX, 160 GYRATIONS, PG 64-22, WEDGE

PAVEMENT LIFT NOTE:

THE MAXIMUM LIFTS FOR THE INDIVIDUAL PAVING MATERIAL ARE AS FOLLOWS:
SUPERPAVE, TYPE C HOT-MIX - 2"
SUPERPAVE, TYPE B HOT-MIX - 3"
SUPERPAVE, BIT. CONC. BASE COURSE - 6"
GRADED AGGREGATE BASE COURSE - 8"

NOTES:

1) THE PGA IS APPLIED TO THE TOP OF THE FINAL PAVEMENT SURFACE.

UNOFFICIAL WEBSITE COPY

UNOFFICIAL WEBSITE COPY

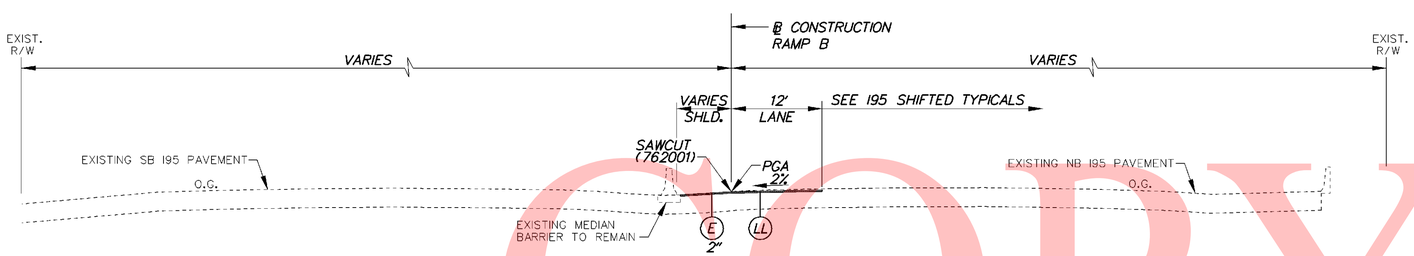

RAMP B

STA. 470+58.88 TO STA. 476+21.70

LEGEND

- (A) ITEM 401708 - SUPERPAVE, TYPE C HOT-MIX, 160 GYRATIONS, PG 70-22 (NON-CARBONATE STONE)
- (B) ITEM 401654 - SUPERPAVE, TYPE B HOT-MIX, 160 GYRATIONS, PG 70-22
- (C) ITEM 401663 - SUPERPAVE, BITUMINOUS CONCRETE BASE COURSE, 160 GYRATIONS, PG 64-22
- (D) ITEM 302007 - GRADED AGGREGATE BASE COURSE, TYPE B
- (E) ITEM 401711 - SUPERPAVE, TYPE C HOT-MIX, 160 GYRATIONS, PG 76-22 (NON-CARBONATE STONE)
- (F) ITEM 401660 - SUPERPAVE, TYPE B HOT-MIX, 160 GYRATIONS, PG 76-22
- (G) ITEM 501006 - PORTLAND CEMENT CONCRETE PAVEMENT, 12"
- (H) ITEM 732002 - TOPSOIL, 6" DEPTH
- (I) ITEM 734013 - PERMANENT GRASS SEEDING, DRY GROUND
- (J) ITEM 602017 - PCC MASONRY, PARAPET, CLASS A
- (K) ITEM 735533 - SOIL RETENTION BLANKET MULCH, TYPE 3
- (L) ITEM 735534 - SOIL RETENTION BLANKET MULCH, TYPE 4
- (M) ITEM 735535 - SOIL RETENTION BLANKET MULCH, TYPE 5, UNLESS OTHERWISE NOTED, SEE DRAINAGE PLANS FOR LIMITS AND TYPE
- (N) ITEM 209001 - BORROW, TYPE A
- (O) ITEM 209006 - BORROW, TYPE F OR APPROVED PROJECT EXCAVATION
- (P) ITEM 715001 - PERFORATED PIPE UNDERDRAINS, 6"
- (Q) ITEM 760504 - RUMBLE STRIPS, HOT-MIX
- (R) ITEM 602772 - MECHANICALLY STABILIZED EARTH WALLS
- (S) ITEM 602773 - PCC MASONRY FOR MECHANICALLY STABILIZED EARTH WALLS
- (T) ITEM 720512 - PCC SAFETY BARRIER PERMANENT, SINGLE FACE
- (U) ITEM 720654 - PCC SAFETY BARRIER PERMANENT, SINGLE FACE, MODIFIED TYPE 1
- (V) ITEM 720587 - PCC SAFETY BARRIER PERMANENT, DOUBLE FACE, MODIFIED
- (W) ITEM 720655 - PCC SAFETY BARRIER PERMANENT, SINGLE FACE, MODIFIED TYPE 2
- (X) ITEM 712005 - RIPRAP, R-4
- (Y) ITEM 401665 - SUPERPAVE, TYPE C HOT-MIX, 160 GYRATIONS, PG 64-22, PATCHING
- (Z) ITEM 401666 - SUPERPAVE, TYPE B HOT-MIX, 160 GYRATIONS, PG 64-22, PATCHING
- (AA) ITEM 401667 - SUPERPAVE, BITUMINOUS CONCRETE BASE COURSE, 160 GYRATIONS, PG 64-22, PATCHING
- (BB) ITEM 302008 - GRADED AGGREGATE BASE COURSE, TYPE B, PATCHING
- (CC) ITEM 755000 - HOT-MIX, HOT LAID, BITUMINOUS CONCRETE CURB
- (DD) ITEM 701010 - PORTLAND CEMENT CONCRETE CURB, TYPE 1
- (EE) ITEM 701011 - PORTLAND CEMENT CONCRETE CURB, TYPE 2
- (FF) ITEM 701020 - INTEGRAL PORTLAND CEMENT CONCRETE CURB AND GUTTER, TYPE 1
- (GG) ITEM 701023 - INTEGRAL PORTLAND CEMENT CONCRETE CURB AND GUTTER, TYPE 4
- (HH) ITEM 701026 - PORTLAND CEMENT CONCRETE MONOLITHIC MEDIAN
- (II) ITEM 701027 - PORTLAND CEMENT CONCRETE CURB, TYPE 1 MODIFIED
- (JJ) ITEM 720658 - PCC SAFETY BARRIER PERMANENT SINGLE FACE, MODIFIED, TYPE 5
- (KK) ITEM 720050 - GALVANIZED STEEL BEAM GUARDRAIL, TYPE 1
- (LL) ITEM 760507 - PROFILE MILLING, HOT-MIX
- (MM) ITEM 720656 - PCC SAFETY BARRIER PERMANENT, SINGLE FACE, MODIFIED, TYPE 3
- (NN) ITEM 720657 - PCC SAFETY BARRIER PERMANENT, SINGLE FACE, MODIFIED, TYPE 4
- (OO) ITEM 720651 - PCC SAFETY BARRIER PERMANENT, DOUBLE FACE, BIFURCATED, TYPE 1
- (PP) ITEM 720652 - PCC SAFETY BARRIER PERMANENT, DOUBLE FACE, BIFURCATED, TYPE 2
- (RR) ITEM 401668 - SUPERPAVE, TYPE C HOT-MIX, 160 GYRATIONS, PG 64-22, WEDGE
- (SS) ITEM 401669 - SUPERPAVE, TYPE B HOT-MIX, 160 GYRATIONS, PG 64-22, WEDGE

PAVEMENT LIFT NOTE:

THE MAXIMUM LIFTS FOR THE INDIVIDUAL PAVING MATERIAL ARE AS FOLLOWS:
SUPERPAVE, TYPE C HOT-MIX - 2"
SUPERPAVE, TYPE B HOT-MIX - 3"
SUPERPAVE, BIT. CONC. BASE COURSE - 6"
GRADED AGGREGATE BASE COURSE - 8"

NOTES:

1) THE PGA IS APPLIED TO THE TOP OF THE FINAL PAVEMENT SURFACE.

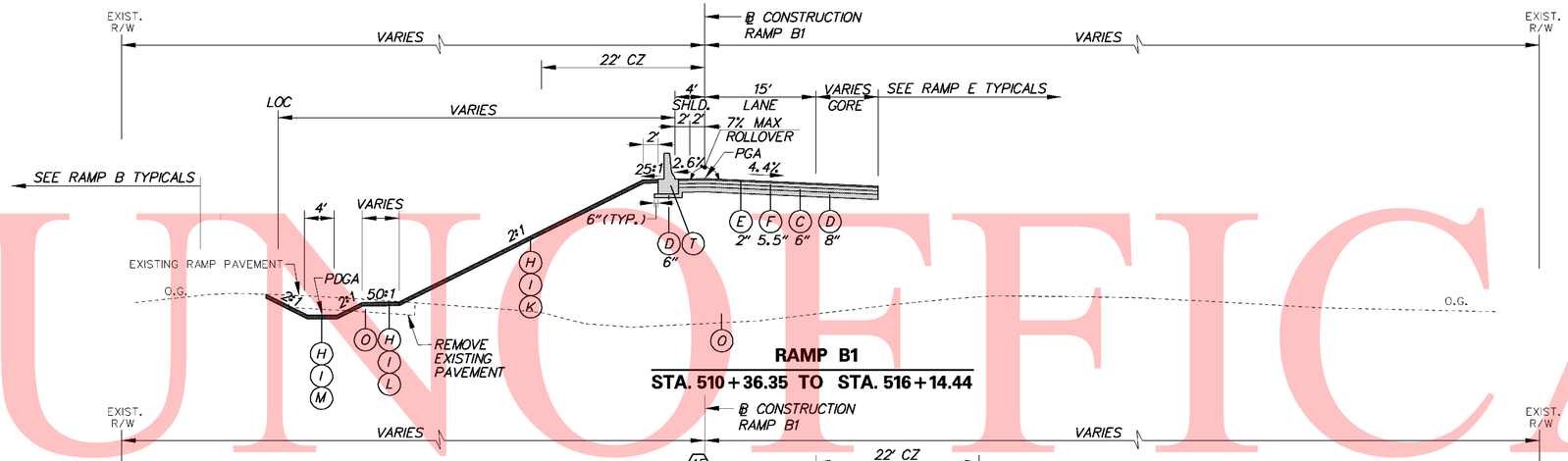

RAMP B1

STA. 510+36.35 TO STA. 516+14.44

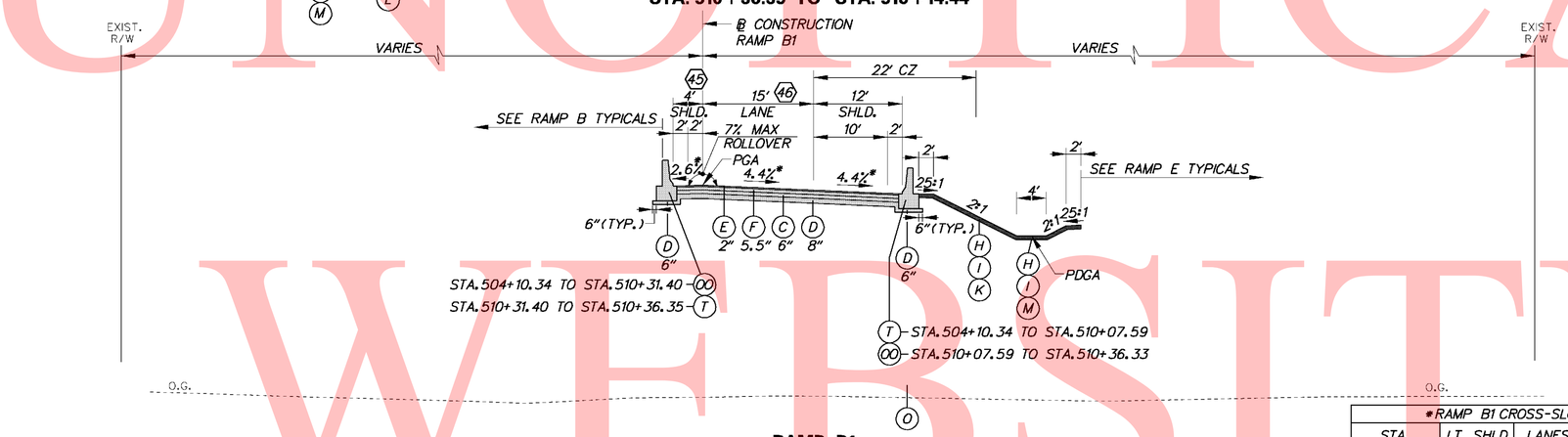

RAMP B1

STA. 504+10.34 TO STA. 510+36.35

45 STA. 504+10.34 TO STA. 505+10.34 SHOULDER TAPERS 6' TO 4'

46 STA. 504+10.34 TO STA. 504+98.19 WIDTH TAPERS 14.47' TO 15'

*RAMP B1 CROSS-SLOPES			
STA.	LT. SHLD.	LANES	RT. SHLD.
504+10.34	4.00%	-5.60%	-5.60%
504+50	1.38%	-5.60%	-5.60%
504+70.95	0.00%	-5.60%	-5.60%
504+78.19	-0.48%	-5.60%	-5.60%
504+98.19	-1.80%	-5.00%	-5.00%
505+00	-1.92%	-4.95%	-4.95%
505+10.34	-2.60%	-4.64%	-4.64%
505+18.19	-2.60%	-4.40%	-4.40%

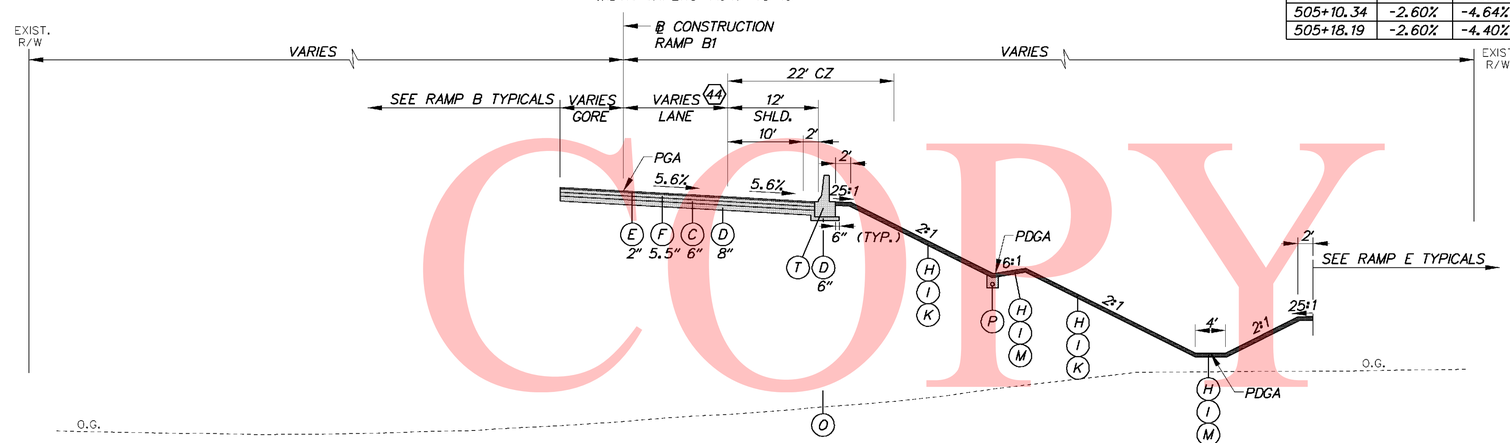

RAMP B1

STA. 500+00 TO STA. 504+10.34

44 STA. 500+00 TO STA. 504+10.34 WIDTH TAPERS 12' TO 14.47'

LEGEND

- A ITEM 401708 - SUPERPAVE, TYPE C HOT-MIX, 160 GYRATIONS, PG 70-22 (NON-CARBONATE STONE)
- B ITEM 401654 - SUPERPAVE, TYPE B HOT-MIX, 160 GYRATIONS, PG 70-22
- C ITEM 401663 - SUPERPAVE, BITUMINOUS CONCRETE BASE COURSE, 160 GYRATIONS, PG 64-22
- D ITEM 302007 - GRADED AGGREGATE BASE COURSE, TYPE B
- E ITEM 401711 - SUPERPAVE, TYPE C HOT-MIX, 160 GYRATIONS, PG 76-22 (NON-CARBONATE STONE)
- F ITEM 401660 - SUPERPAVE, TYPE B HOT-MIX, 160 GYRATIONS, PG 76-22
- G ITEM 501006 - PORTLAND CEMENT CONCRETE PAVEMENT, 12"
- H ITEM 732002 - TOPSOIL, 6" DEPTH
- I ITEM 734013 - PERMANENT GRASS SEEDING, DRY GROUND
- J ITEM 602017 - PCC MASONRY, PARAPET, CLASS A
- K ITEM 735533 - SOIL RETENTION BLANKET MULCH, TYPE 3
- L ITEM 735534 - SOIL RETENTION BLANKET MULCH, TYPE 4
- M ITEM 735535 - SOIL RETENTION BLANKET MULCH, TYPE 5, UNLESS OTHERWISE NOTED, SEE DRAINAGE PLANS FOR LIMITS AND TYPE
- N ITEM 209001 - BORROW, TYPE A
- O ITEM 209006 - BORROW, TYPE F OR APPROVED PROJECT EXCAVATION
- P ITEM 715001 - PERFORATED PIPE UNDERDRAINS, 6"
- Q ITEM 760504 - RUMBLE STRIPS, HOT-MIX
- R ITEM 602772 - MECHANICALLY STABILIZED EARTH WALLS
- S ITEM 602773 - PCC MASONRY FOR MECHANICALLY STABILIZED EARTH WALLS
- T ITEM 720512 - PCC SAFETY BARRIER PERMANENT, SINGLE FACE
- U ITEM 720654 - PCC SAFETY BARRIER PERMANENT, SINGLE FACE, MODIFIED TYPE 1
- V ITEM 720587 - PCC SAFETY BARRIER PERMANENT, DOUBLE FACE, MODIFIED
- W ITEM 720655 - PCC SAFETY BARRIER PERMANENT, SINGLE FACE, MODIFIED TYPE 2
- X ITEM 712005 - RIPRAP, R-4
- Y ITEM 401665 - SUPERPAVE, TYPE C HOT-MIX, 160 GYRATIONS, PG 64-22, PATCHING
- Z ITEM 401666 - SUPERPAVE, TYPE B HOT-MIX, 160 GYRATIONS, PG 64-22, PATCHING
- AA ITEM 401667 - SUPERPAVE, BITUMINOUS CONCRETE BASE COURSE, 160 GYRATIONS, PG 64-22, PATCHING
- BB ITEM 302008 - GRADED AGGREGATE BASE COURSE, TYPE B, PATCHING
- CC ITEM 755000 - HOT-MIX, HOT LAID, BITUMINOUS CONCRETE CURB
- DD ITEM 701010 - PORTLAND CEMENT CONCRETE CURB, TYPE 1
- EE ITEM 701011 - PORTLAND CEMENT CONCRETE CURB, TYPE 2
- FF ITEM 701020 - INTEGRAL PORTLAND CEMENT CONCRETE CURB AND GUTTER, TYPE 1
- GG ITEM 701023 - INTEGRAL PORTLAND CEMENT CONCRETE CURB AND GUTTER, TYPE 4
- HH ITEM 701026 - PORTLAND CEMENT CONCRETE MONOLITHIC MEDIAN
- II ITEM 701027 - PORTLAND CEMENT CONCRETE CURB, TYPE 1 MODIFIED
- JJ ITEM 720658 - PCC SAFETY BARRIER PERMANENT SINGLE FACE, MODIFIED, TYPE 5
- KK ITEM 720050 - GALVANIZED STEEL BEAM GUARDRAIL, TYPE 1
- LL ITEM 760507 - PROFILE MILLING, HOT-MIX
- MM ITEM 720656 - PCC SAFETY BARRIER PERMANENT, SINGLE FACE, MODIFIED, TYPE 3
- NN ITEM 720657 - PCC SAFETY BARRIER PERMANENT, SINGLE FACE, MODIFIED, TYPE 4
- OO ITEM 720651 - PCC SAFETY BARRIER PERMANENT, DOUBLE FACE, BIFURCATED, TYPE 1
- PP ITEM 720652 - PCC SAFETY BARRIER PERMANENT, DOUBLE FACE, BIFURCATED, TYPE 2
- RR ITEM 401668 - SUPERPAVE, TYPE C HOT-MIX, 160 GYRATIONS, PG 64-22, WEDGE
- SS ITEM 401669 - SUPERPAVE, TYPE B HOT-MIX, 160 GYRATIONS, PG 64-22, WEDGE

PAVEMENT LIFT NOTE:

THE MAXIMUM LIFTS FOR THE INDIVIDUAL PAVING MATERIAL ARE AS FOLLOWS:
SUPERPAVE, TYPE C HOT-MIX - 2"
SUPERPAVE, TYPE B HOT-MIX - 3"
SUPERPAVE, BIT. CONC. BASE COURSE - 6"
GRADED AGGREGATE BASE COURSE - 8"

NOTES:

1) THE PGA IS APPLIED TO THE TOP OF THE FINAL PAVEMENT SURFACE.

UNOFFICIAL WEBSITE COPY

10/28/2010 3:31:12 PM
M:\PROJECTS\2003\03059_DELTRNPK\SRIMALL\CADD\2809003\PLANS\TS23_SR1.DGN

DELAWARE DEPARTMENT OF TRANSPORTATION	ADDENDUMS / REVISIONS	NOT TO SCALE	SR1 / I-95 INTERCHANGE	CONTRACT 28-090-03	BRIDGE NO.	TYPICAL SECTIONS	SHEET NO. 29
				COUNTY NEW CASTLE	DESIGNED BY:		TOTAL SHTS. 803
					CHECKED BY:		

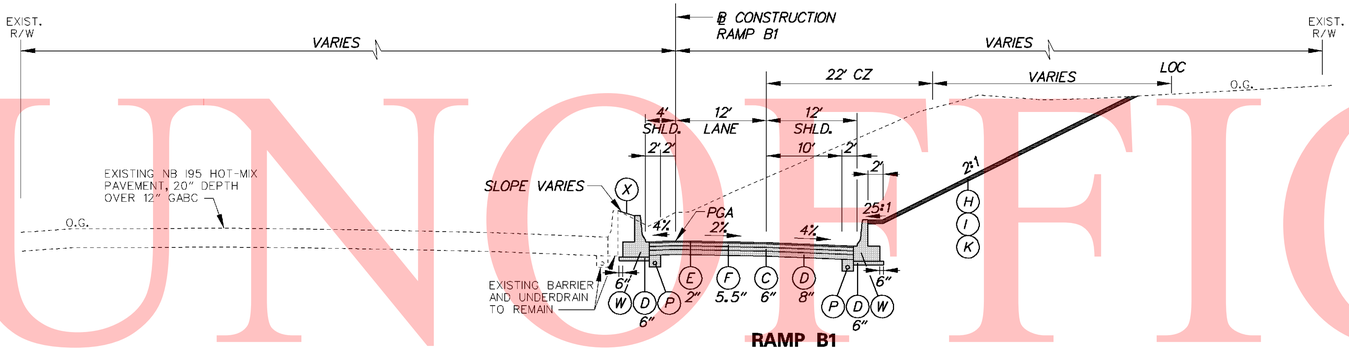

RAMP B1

STA. 536+08.93 TO STA. 541+44.20

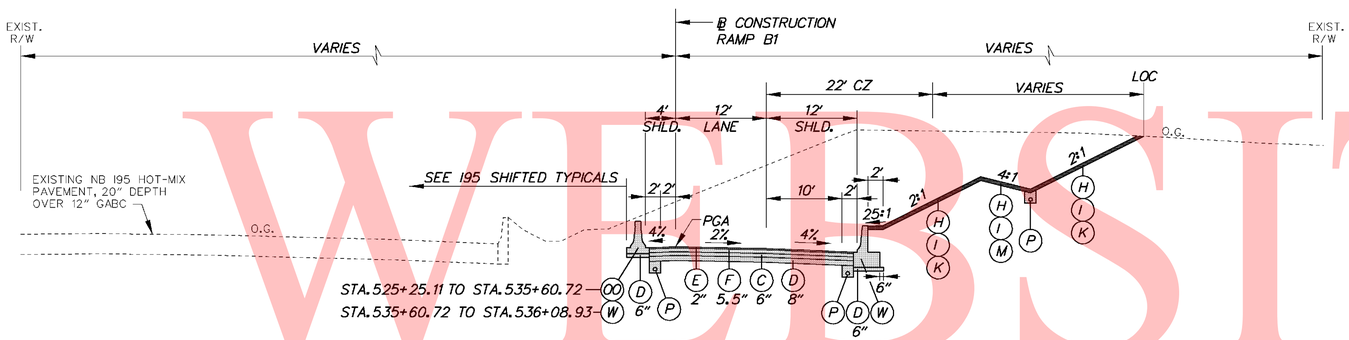

RAMP B1

STA. 525+25.11 TO STA. 536+08.93

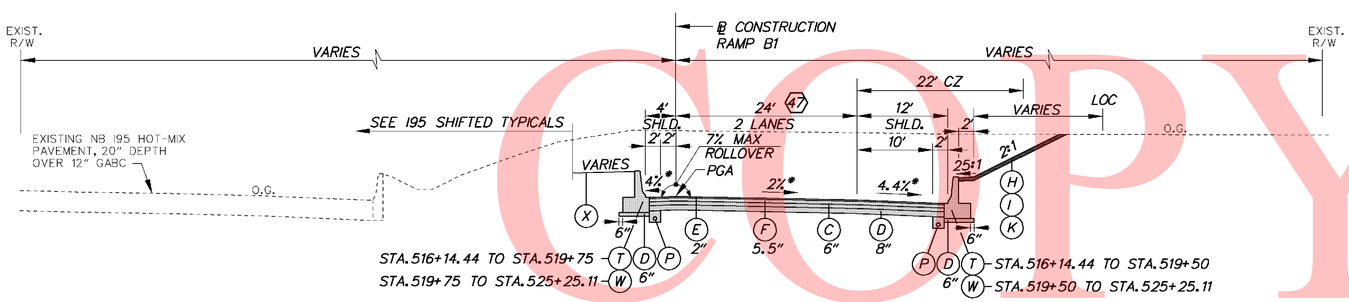

RAMP B1

STA. 516+14.44 TO STA. 525+25.11

47 STA. 516+14.44 TO STA. 520+26.72
WIDTH TAPERS 30' TO 24'

STA. 524+18.83 TO STA. 527+18.83
WIDTH TAPERS 24' TO 12'

*RAMP B1 CROSS-SLOPES			
STA.	LT. SHLD.	LANES	RT. SHLD.
518+13.79	-2.60%	-4.40%	-4.40%
518+33.79	-3.00%	-4.00%	-4.00%
518+50	-3.32%	-3.68%	-4.00%
518+83.79	-4.00%	-3.00%	-4.00%
518+87.12	-4.00%	-2.93%	-4.00%
519+00	-4.00%	-2.68%	-4.00%
519+33.79	-4.00%	-2.00%	-4.00%

LEGEND

- A ITEM 401708 - SUPERPAVE, TYPE C HOT-MIX, 160 GYRATIONS, PG 70-22 (NON-CARBONATE STONE)
- B ITEM 401654 - SUPERPAVE, TYPE B HOT-MIX, 160 GYRATIONS, PG 70-22
- C ITEM 401663 - SUPERPAVE, BITUMINOUS CONCRETE BASE COURSE, 160 GYRATIONS, PG 64-22
- D ITEM 302007 - GRADED AGGREGATE BASE COURSE, TYPE B
- E ITEM 401711 - SUPERPAVE, TYPE C HOT-MIX, 160 GYRATIONS, PG 76-22 (NON-CARBONATE STONE)
- F ITEM 401660 - SUPERPAVE, TYPE B HOT-MIX, 160 GYRATIONS, PG 76-22
- G ITEM 501006 - PORTLAND CEMENT CONCRETE PAVEMENT, 12"
- H ITEM 732002 - TOPSOIL, 6" DEPTH
- I ITEM 734013 - PERMANENT GRASS SEEDING, DRY GROUND
- J ITEM 602017 - PCC MASONRY, PARAPET, CLASS A
- K ITEM 735533 - SOIL RETENTION BLANKET MULCH, TYPE 3
- L ITEM 735534 - SOIL RETENTION BLANKET MULCH, TYPE 4
- M ITEM 735535 - SOIL RETENTION BLANKET MULCH, TYPE 5, UNLESS OTHERWISE NOTED, SEE DRAINAGE PLANS FOR LIMITS AND TYPE
- N ITEM 209001 - BORROW, TYPE A
- O ITEM 209006 - BORROW, TYPE F OR APPROVED PROJECT EXCAVATION
- P ITEM 715001 - PERFORATED PIPE UNDERDRAINS, 6"
- Q ITEM 760504 - RUMBLE STRIPS, HOT-MIX
- R ITEM 602772 - MECHANICALLY STABILIZED EARTH WALLS
- S ITEM 602773 - PCC MASONRY FOR MECHANICALLY STABILIZED EARTH WALLS
- T ITEM 720512 - PCC SAFETY BARRIER PERMANENT, SINGLE FACE
- U ITEM 720654 - PCC SAFETY BARRIER PERMANENT, SINGLE FACE, MODIFIED TYPE 1
- V ITEM 720587 - PCC SAFETY BARRIER PERMANENT, DOUBLE FACE, MODIFIED
- W ITEM 720655 - PCC SAFETY BARRIER PERMANENT, SINGLE FACE, MODIFIED TYPE 2
- X ITEM 712005 - RIPRAP, R-4
- Y ITEM 401665 - SUPERPAVE, TYPE C HOT-MIX, 160 GYRATIONS, PG 64-22, PATCHING
- Z ITEM 401666 - SUPERPAVE, TYPE B HOT-MIX, 160 GYRATIONS, PG 64-22, PATCHING
- AA ITEM 401667 - SUPERPAVE, BITUMINOUS CONCRETE BASE COURSE, 160 GYRATIONS, PG 64-22, PATCHING
- BB ITEM 302008 - GRADED AGGREGATE BASE COURSE, TYPE B, PATCHING
- CC ITEM 755000 - HOT-MIX, HOT LAID, BITUMINOUS CONCRETE CURB
- DD ITEM 701010 - PORTLAND CEMENT CONCRETE CURB, TYPE 1
- EE ITEM 701011 - PORTLAND CEMENT CONCRETE CURB, TYPE 2
- FF ITEM 701020 - INTEGRAL PORTLAND CEMENT CONCRETE CURB AND GUTTER, TYPE 1
- GG ITEM 701023 - INTEGRAL PORTLAND CEMENT CONCRETE CURB AND GUTTER, TYPE 4
- HH ITEM 701026 - PORTLAND CEMENT CONCRETE MONOLITHIC MEDIAN
- II ITEM 701027 - PORTLAND CEMENT CONCRETE CURB, TYPE 1 MODIFIED
- JJ ITEM 720658 - PCC SAFETY BARRIER PERMANENT SINGLE FACE, MODIFIED, TYPE 5
- KK ITEM 720050 - GALVANIZED STEEL BEAM GUARDRAIL, TYPE 1
- LL ITEM 760507 - PROFILE MILLING, HOT-MIX
- MM ITEM 720656 - PCC SAFETY BARRIER PERMANENT, SINGLE FACE, MODIFIED, TYPE 3
- NN ITEM 720657 - PCC SAFETY BARRIER PERMANENT, SINGLE FACE, MODIFIED, TYPE 4
- OO ITEM 720651 - PCC SAFETY BARRIER PERMANENT, DOUBLE FACE, BIFURCATED, TYPE 1
- PP ITEM 720652 - PCC SAFETY BARRIER PERMANENT, DOUBLE FACE, BIFURCATED, TYPE 2
- RR ITEM 401668 - SUPERPAVE, TYPE C HOT-MIX, 160 GYRATIONS, PG 64-22, WEDGE
- SS ITEM 401669 - SUPERPAVE, TYPE B HOT-MIX, 160 GYRATIONS, PG 64-22, WEDGE

PAVEMENT LIFT NOTE:

THE MAXIMUM LIFTS FOR THE INDIVIDUAL PAVING MATERIAL ARE AS FOLLOWS:
SUPERPAVE, TYPE C HOT-MIX - 2"
SUPERPAVE, TYPE B HOT-MIX - 3"
SUPERPAVE, BIT. CONC. BASE COURSE - 6"
GRADED AGGREGATE BASE COURSE - 8"

NOTES:

1) THE PGA IS APPLIED TO THE TOP OF THE FINAL PAVEMENT SURFACE.

UNOFFICIAL WEBSITE COPY

10/28/2010 4:15:29 PM
M:\PROJECTS\2003\03059_DELTRNPK\SRIMALL\CADD\2809003\PLANS\TS24_SR1.DGN

DELAWARE DEPARTMENT OF TRANSPORTATION	ADDENDUMS / REVISIONS	NOT TO SCALE	SR1 / I-95 INTERCHANGE	CONTRACT 28-090-03	BRIDGE NO.	TYPICAL SECTIONS	SHEET NO. 30
				COUNTY NEW CASTLE	DESIGNED BY:		TOTAL SHTS. 803
					CHECKED BY:		

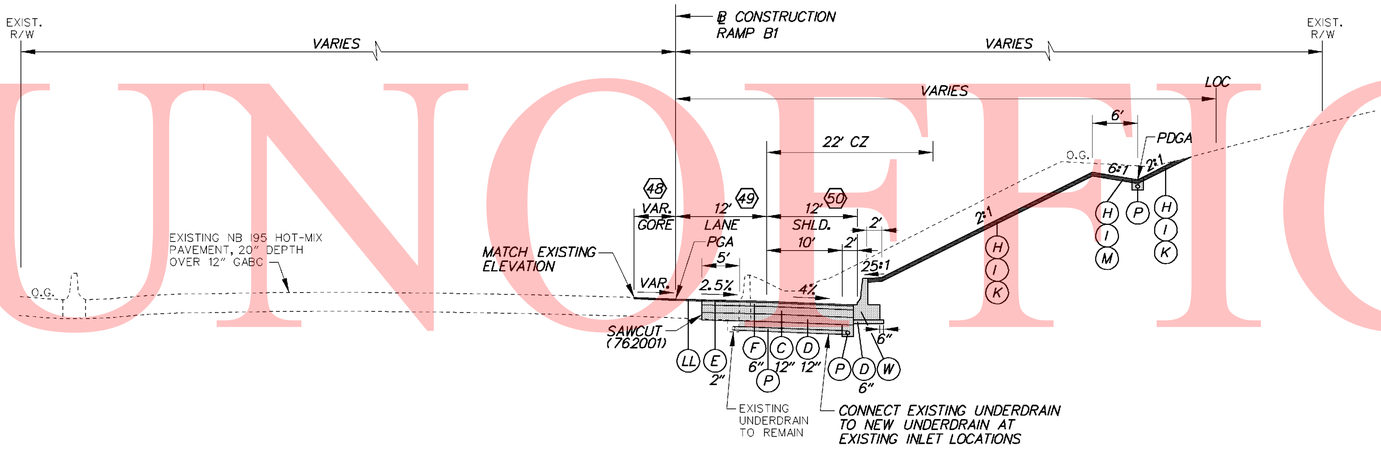

RAMP B1

STA. 542+54.46 TO STA. 562+34.22

(48) STA.542+54.46 TO STA.549+00.02
WIDTH TAPERS 20' TO 0'

(49) STA.559+34.22 TO STA.562+34.22
WIDTH TAPERS 12' TO 0'

(50) STA.547+19.75 TO STA.549+00.00
SHOULDER TAPERS 12' TO 14'

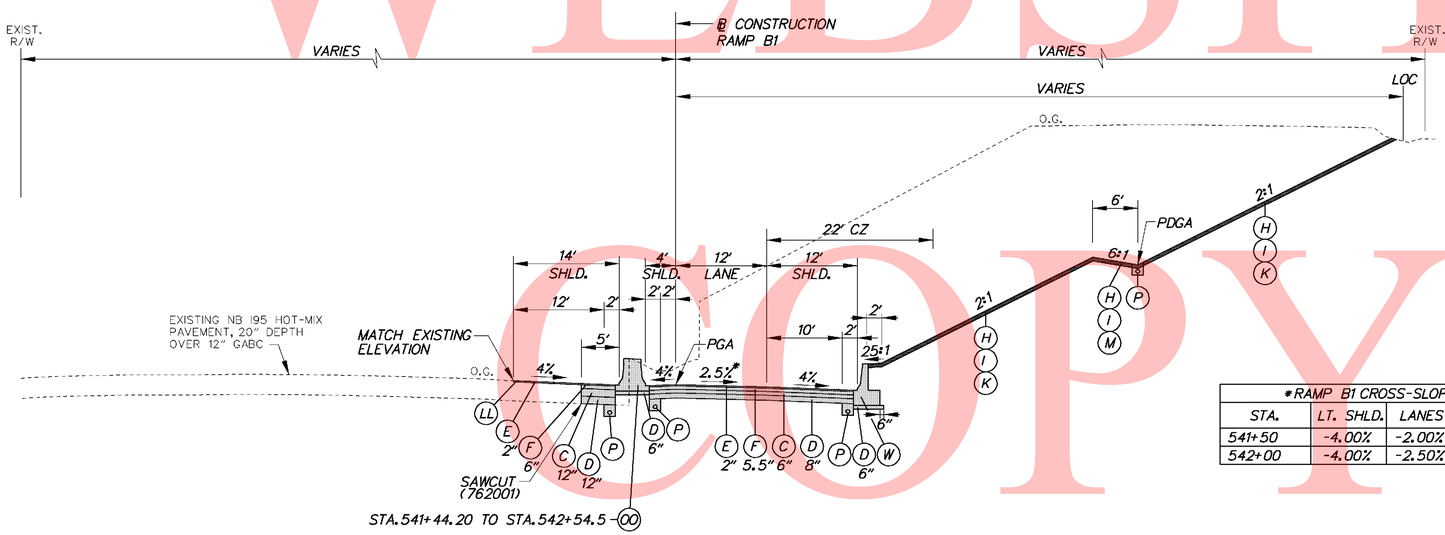

RAMP B1

STA. 541+44.20 TO STA. 542+59.46

*RAMP B1 CROSS-SLOPES			
STA.	LT. SHLD.	LANES	RT. SHLD.
541+50	-4.00%	-2.00%	-4.00%
542+00	-4.00%	-2.50%	-4.00%

LEGEND

- (A) ITEM 401708 - SUPERPAVE, TYPE C HOT-MIX, 160 GYRATIONS, PG 70-22 (NON-CARBONATE STONE)
- (B) ITEM 401654 - SUPERPAVE, TYPE B HOT-MIX, 160 GYRATIONS, PG 70-22
- (C) ITEM 401663 - SUPERPAVE, BITUMINOUS CONCRETE BASE COURSE, 160 GYRATIONS, PG 64-22
- (D) ITEM 302007 - GRADED AGGREGATE BASE COURSE, TYPE B
- (E) ITEM 401711 - SUPERPAVE, TYPE C HOT-MIX, 160 GYRATIONS, PG 76-22 (NON-CARBONATE STONE)
- (F) ITEM 401660 - SUPERPAVE, TYPE B HOT-MIX, 160 GYRATIONS, PG 76-22
- (G) ITEM 501006 - PORTLAND CEMENT CONCRETE PAVEMENT, 12"
- (H) ITEM 732002 - TOPSOIL, 6" DEPTH
- (I) ITEM 734013 - PERMANENT GRASS SEEDING, DRY GROUND
- (J) ITEM 602017 - PCC MASONRY, PARAPET, CLASS A
- (K) ITEM 735533 - SOIL RETENTION BLANKET MULCH, TYPE 3
- (L) ITEM 735534 - SOIL RETENTION BLANKET MULCH, TYPE 4
- (M) ITEM 735535 - SOIL RETENTION BLANKET MULCH, TYPE 5, UNLESS OTHERWISE NOTED, SEE DRAINAGE PLANS FOR LIMITS AND TYPE
- (N) ITEM 209001 - BORROW, TYPE A
- (O) ITEM 209006 - BORROW, TYPE F OR APPROVED PROJECT EXCAVATION
- (P) ITEM 715001 - PERFORATED PIPE UNDERDRAINS, 6"
- (Q) ITEM 760504 - RUMBLE STRIPS, HOT-MIX
- (R) ITEM 602772 - MECHANICALLY STABILIZED EARTH WALLS
- (S) ITEM 602773 - PCC MASONRY FOR MECHANICALLY STABILIZED EARTH WALLS
- (T) ITEM 720512 - PCC SAFETY BARRIER PERMANENT, SINGLE FACE
- (U) ITEM 720654 - PCC SAFETY BARRIER PERMANENT, SINGLE FACE, MODIFIED TYPE 1
- (V) ITEM 720587 - PCC SAFETY BARRIER PERMANENT, DOUBLE FACE, MODIFIED
- (W) ITEM 720655 - PCC SAFETY BARRIER PERMANENT, SINGLE FACE, MODIFIED TYPE 2
- (X) ITEM 712005 - RIPRAP, R-4
- (Y) ITEM 401665 - SUPERPAVE, TYPE C HOT-MIX, 160 GYRATIONS, PG 64-22, PATCHING
- (Z) ITEM 401666 - SUPERPAVE, TYPE B HOT-MIX, 160 GYRATIONS, PG 64-22, PATCHING
- (AA) ITEM 401667 - SUPERPAVE, BITUMINOUS CONCRETE BASE COURSE, 160 GYRATIONS, PG 64-22, PATCHING
- (BB) ITEM 302008 - GRADED AGGREGATE BASE COURSE, TYPE B, PATCHING
- (CC) ITEM 755000 - HOT-MIX, HOT LAID, BITUMINOUS CONCRETE CURB
- (DD) ITEM 701010 - PORTLAND CEMENT CONCRETE CURB, TYPE 1
- (EE) ITEM 701011 - PORTLAND CEMENT CONCRETE CURB, TYPE 2
- (FF) ITEM 701020 - INTEGRAL PORTLAND CEMENT CONCRETE CURB AND GUTTER, TYPE 1
- (GG) ITEM 701023 - INTEGRAL PORTLAND CEMENT CONCRETE CURB AND GUTTER, TYPE 4
- (HH) ITEM 701026 - PORTLAND CEMENT CONCRETE MONOLITHIC MEDIAN
- (II) ITEM 701027 - PORTLAND CEMENT CONCRETE CURB, TYPE 1 MODIFIED
- (JJ) ITEM 720658 - PCC SAFETY BARRIER PERMANENT SINGLE FACE, MODIFIED, TYPE 5
- (KK) ITEM 720050 - GALVANIZED STEEL BEAM GUARDRAIL, TYPE 1
- (LL) ITEM 760507 - PROFILE MILLING, HOT-MIX
- (MM) ITEM 720656 - PCC SAFETY BARRIER PERMANENT, SINGLE FACE, MODIFIED, TYPE 3
- (NN) ITEM 720657 - PCC SAFETY BARRIER PERMANENT, SINGLE FACE, MODIFIED, TYPE 4
- (OO) ITEM 720651 - PCC SAFETY BARRIER PERMANENT, DOUBLE FACE, BIFURCATED, TYPE 1
- (PP) ITEM 720652 - PCC SAFETY BARRIER PERMANENT, DOUBLE FACE, BIFURCATED, TYPE 2
- (RR) ITEM 401668 - SUPERPAVE, TYPE C HOT-MIX, 160 GYRATIONS, PG 64-22, WEDGE
- (SS) ITEM 401669 - SUPERPAVE, TYPE B HOT-MIX, 160 GYRATIONS, PG 64-22, WEDGE

PAVEMENT LIFT NOTE:

THE MAXIMUM LIFTS FOR THE INDIVIDUAL PAVING MATERIAL ARE AS FOLLOWS:
SUPERPAVE, TYPE C HOT-MIX - 2"
SUPERPAVE, TYPE B HOT-MIX - 3"
SUPERPAVE, BIT. CONC. BASE COURSE - 6"
GRADED AGGREGATE BASE COURSE - 8"

NOTES:

1) THE PGA IS APPLIED TO THE TOP OF THE FINAL PAVEMENT SURFACE.

UNOFFICIAL WEBSITE COPY

10/29/2010 2:31:47 PM
M:\PROJECTS\2003\03059_DELTRNPK\SRIMALL\CADD\2809003\PLANS\TS24A_SR1.DGN

DELAWARE DEPARTMENT OF TRANSPORTATION	ADDENDUMS / REVISIONS	NOT TO SCALE	SR1 / I-95 INTERCHANGE	CONTRACT 28-090-03	BRIDGE NO.	TYPICAL SECTIONS	SHEET NO. 31
				COUNTY NEW CASTLE	DESIGNED BY:		TOTAL SHTS. 803
					CHECKED BY:		

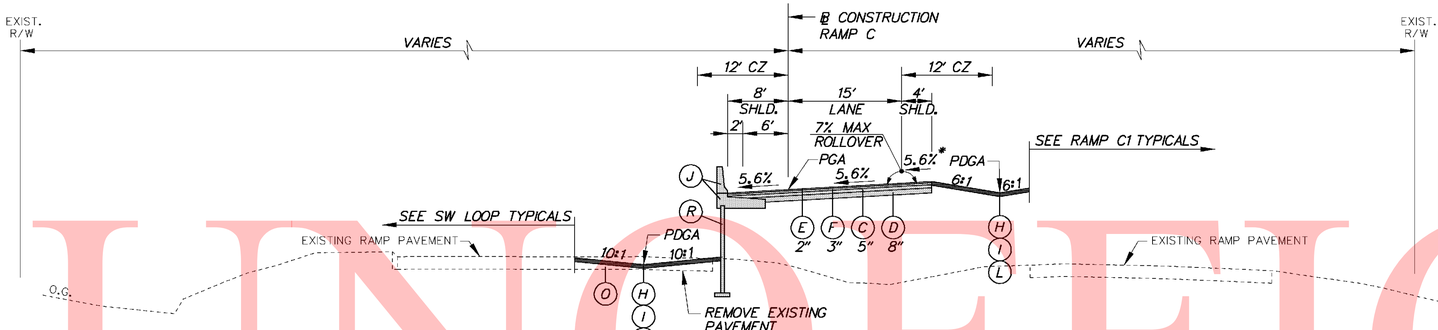

RAMP C

STA. 1110+69.17 TO STA. 1111+09.70

*RAMP C CROSS-SLOPES			
STA.	LT. SHLD.	LANES	RT. SHLD.
1111+00	-5.60%	5.60%	3.47%
1111+26.67	-5.60%	5.60%	5.60%

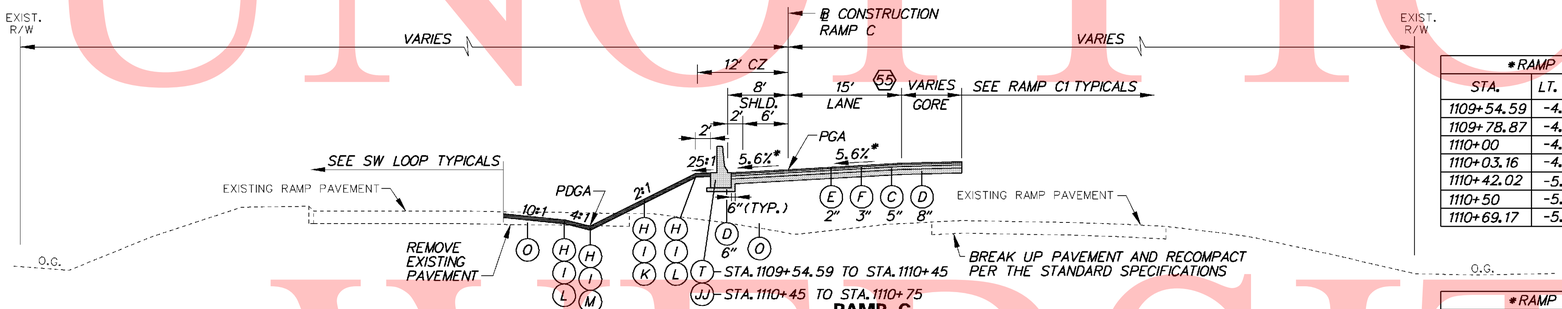

STA. 1109+54.59 TO STA. 1110+45

STA. 1110+45 TO STA. 1110+75

RAMP C

STA. 1109+54.59 TO STA. 1110+69.17

(55) STA. 1109+54.59 TO STA. 1110+51.63
WIDTH TAPERS 13' TO 15'

*RAMP C CROSS-SLOPES			
STA.	LT. SHLD.	LANES	RT. SHLD.
1109+54.59	-4.00%	2.00%	-
1109+78.87	-4.00%	3.00%	-
1110+00	-4.00%	3.87%	-
1110+03.16	-4.00%	4.00%	-
1110+42.02	-5.60%	5.60%	-
1110+50	-5.60%	5.60%	-
1110+69.17	-5.60%	5.60%	1.00%

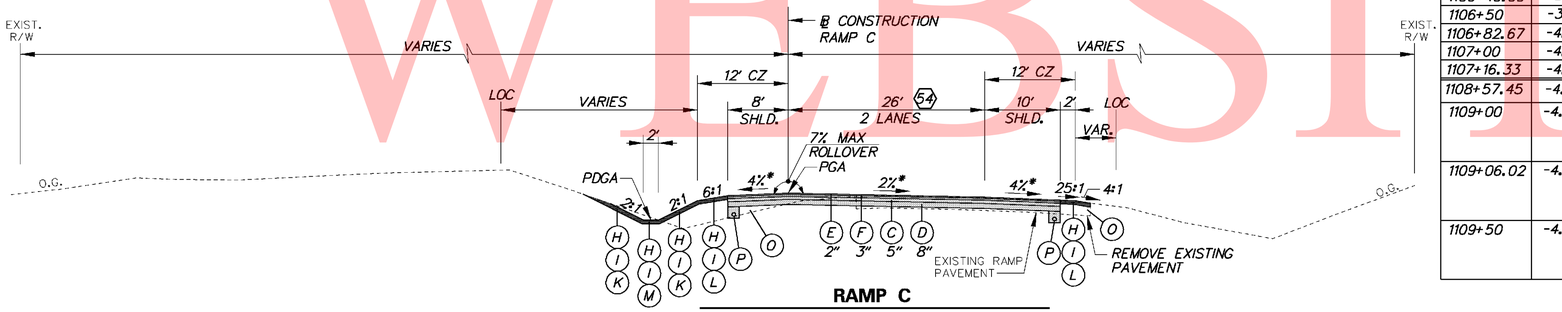

RAMP C

STA. 1103+01.81 TO STA. 1109+54.59

(54) STA. 1103+88.60 TO STA. 1106+49.00
WIDTH TAPERS 15' TO 26'

*RAMP C CROSS-SLOPES			
STA.	LT. SHLD.	LANES	RT. SHLD.
1105+81.67	-1.00%	-6.00%	-6.00%
1106+00	-1.54%	-5.46%	-5.46%
1106+49.00	-3.00%	-4.00%	-4.00%
1106+50	-3.03%	-3.97%	-4.00%
1106+82.67	-4.00%	-3.00%	-4.00%
1107+00	-4.00%	-2.48%	-4.00%
1107+16.33	-4.00%	-2.00%	-4.00%
1108+57.45	-4.00%	-2.00%	-4.00%
1109+00	-4.00%	-0.25% (LEFT) -2.00% (RIGHT)	-4.00%
1109+06.02	-4.00%	0.00% (LEFT) -2.00% (RIGHT)	-4.00%
1109+50	-4.00%	1.81% (LEFT) -2.00% (RIGHT)	-4.00%

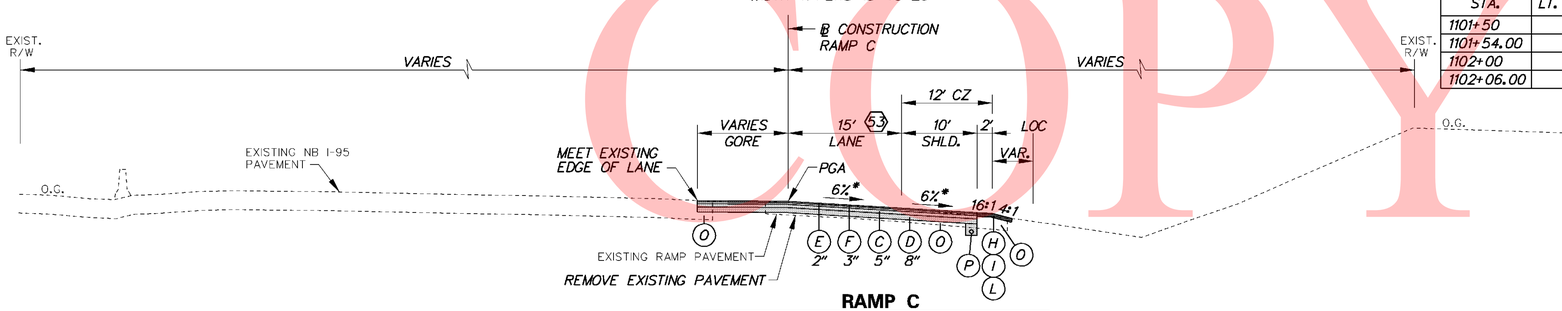

RAMP C

STA. 1101+32.66 TO STA. 1103+01.81

(53) STA. 1101+50.00 TO STA. 1103+00.00
WIDTH TAPERS 12' TO 15'

*RAMP C CROSS-SLOPES			
STA.	LT. SHLD.	LANES	RT. SHLD.
1101+50	-	-3.85%	-4.00%
1101+54.00	-	-4.00%	-4.00%
1102+00	-	-5.77%	-5.77%
1102+06.00	-	-6.00%	-6.00%

LEGEND

- (A) ITEM 401708 - SUPERPAVE, TYPE C HOT-MIX, 160 GYRATIONS, PG 70-22 (NON-CARBONATE STONE)
- (B) ITEM 401654 - SUPERPAVE, TYPE B HOT-MIX, 160 GYRATIONS, PG 70-22
- (C) ITEM 401663 - SUPERPAVE, BITUMINOUS CONCRETE BASE COURSE, 160 GYRATIONS, PG 64-22
- (D) ITEM 302007 - GRADED AGGREGATE BASE COURSE, TYPE B
- (E) ITEM 401711 - SUPERPAVE, TYPE C HOT-MIX, 160 GYRATIONS, PG 76-22 (NON-CARBONATE STONE)
- (F) ITEM 401660 - SUPERPAVE, TYPE B HOT-MIX, 160 GYRATIONS, PG 76-22
- (G) ITEM 501006 - PORTLAND CEMENT CONCRETE PAVEMENT, 12"
- (H) ITEM 732002 - TOPSOIL, 6" DEPTH
- (I) ITEM 734013 - PERMANENT GRASS SEEDING, DRY GROUND
- (J) ITEM 602017 - PCC MASONRY, PARAPET, CLASS A
- (K) ITEM 735533 - SOIL RETENTION BLANKET MULCH, TYPE 3
- (L) ITEM 735534 - SOIL RETENTION BLANKET MULCH, TYPE 4
- (M) ITEM 735535 - SOIL RETENTION BLANKET MULCH, TYPE 5, UNLESS OTHERWISE NOTED, SEE DRAINAGE PLANS FOR LIMITS AND TYPE
- (N) ITEM 209001 - BORROW, TYPE A
- (O) ITEM 209006 - BORROW, TYPE F OR APPROVED PROJECT EXCAVATION
- (P) ITEM 715001 - PERFORATED PIPE UNDERDRAINS, 6"
- (Q) ITEM 760504 - RUMBLE STRIPS, HOT-MIX
- (R) ITEM 602772 - MECHANICALLY STABILIZED EARTH WALLS
- (S) ITEM 602773 - PCC MASONRY FOR MECHANICALLY STABILIZED EARTH WALLS
- (T) ITEM 720512 - PCC SAFETY BARRIER PERMANENT, SINGLE FACE
- (U) ITEM 720654 - PCC SAFETY BARRIER PERMANENT, SINGLE FACE, MODIFIED TYPE 1
- (V) ITEM 720587 - PCC SAFETY BARRIER PERMANENT, DOUBLE FACE, MODIFIED
- (W) ITEM 720655 - PCC SAFETY BARRIER PERMANENT, SINGLE FACE, MODIFIED TYPE 2
- (X) ITEM 712005 - RIPRAP, R-4
- (Y) ITEM 401665 - SUPERPAVE, TYPE C HOT-MIX, 160 GYRATIONS, PG 64-22, PATCHING
- (Z) ITEM 401666 - SUPERPAVE, TYPE B HOT-MIX, 160 GYRATIONS, PG 64-22, PATCHING
- (AA) ITEM 401667 - SUPERPAVE, BITUMINOUS CONCRETE BASE COURSE, 160 GYRATIONS, PG 64-22, PATCHING
- (BB) ITEM 302008 - GRADED AGGREGATE BASE COURSE, TYPE B, PATCHING
- (CC) ITEM 755000 - HOT-MIX, HOT LAID, BITUMINOUS CONCRETE CURB
- (DD) ITEM 701010 - PORTLAND CEMENT CONCRETE CURB, TYPE 1
- (EE) ITEM 701011 - PORTLAND CEMENT CONCRETE CURB, TYPE 2
- (FF) ITEM 701020 - INTEGRAL PORTLAND CEMENT CONCRETE CURB AND GUTTER, TYPE 1
- (GG) ITEM 701023 - INTEGRAL PORTLAND CEMENT CONCRETE CURB AND GUTTER, TYPE 4
- (HH) ITEM 701026 - PORTLAND CEMENT CONCRETE MONOLITHIC MEDIAN
- (II) ITEM 701027 - PORTLAND CEMENT CONCRETE CURB, TYPE 1 MODIFIED
- (JJ) ITEM 720658 - PCC SAFETY BARRIER PERMANENT SINGLE FACE, MODIFIED, TYPE 5
- (KK) ITEM 720050 - GALVANIZED STEEL BEAM GUARDRAIL, TYPE 1
- (LL) ITEM 760507 - PROFILE MILLING, HOT-MIX
- (MM) ITEM 720656 - PCC SAFETY BARRIER PERMANENT, SINGLE FACE, MODIFIED, TYPE 3
- (NN) ITEM 720657 - PCC SAFETY BARRIER PERMANENT, SINGLE FACE, MODIFIED, TYPE 4
- (OO) ITEM 720651 - PCC SAFETY BARRIER PERMANENT, DOUBLE FACE, BIFURCATED, TYPE 1
- (PP) ITEM 720652 - PCC SAFETY BARRIER PERMANENT, DOUBLE FACE, BIFURCATED, TYPE 2
- (RR) ITEM 401668 - SUPERPAVE, TYPE C HOT-MIX, 160 GYRATIONS, PG 64-22, WEDGE
- (SS) ITEM 401669 - SUPERPAVE, TYPE B HOT-MIX, 160 GYRATIONS, PG 64-22, WEDGE

PAVEMENT LIFT NOTE:

THE MAXIMUM LIFTS FOR THE INDIVIDUAL PAVING MATERIAL ARE AS FOLLOWS:
SUPERPAVE, TYPE C HOT-MIX - 2"
SUPERPAVE, TYPE B HOT-MIX - 3"
SUPERPAVE, BIT. CONC. BASE COURSE - 6"
GRADED AGGREGATE BASE COURSE - 8"

NOTES:

1) THE PGA IS APPLIED TO THE TOP OF THE FINAL PAVEMENT SURFACE.

UNOFFICIAL WEBSITE COPY

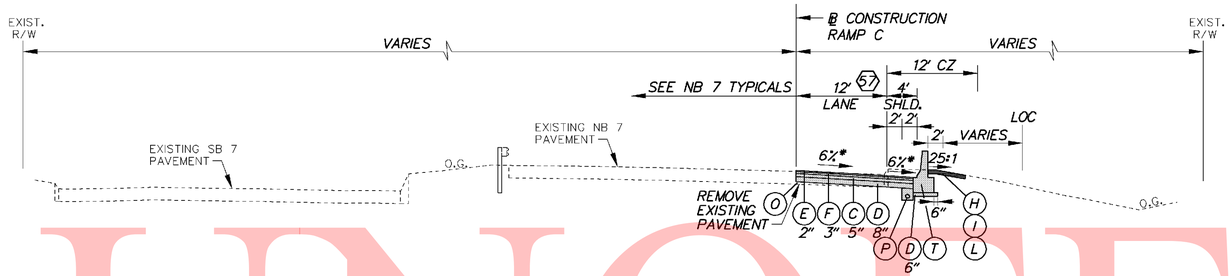

RAMP C

STA. 1121+62.88 TO STA. 1123+52.53

57 STA. 1121+62.88 TO STA. 1121+87.76
WIDTH TAPERS 12.47' TO 12'

*RAMP C CROSS-SLOPES			
STA.	LT. SHLD.	LANES	RT. SHLD.
1121+75.03	-	-3.00%	-4.00%
1121+87.76	-	-3.57%	-4.00%
1121+97.53	-	-4.00%	-4.00%
1122+00	-	-4.11%	-4.11%
1122+42.53	-	-6.00%	-6.00%
1123+07.53	-	-6.00%	-6.00%
1123+50	-	-4.11%	-4.11%
1123+52.53	-	-4.00%	-4.00%

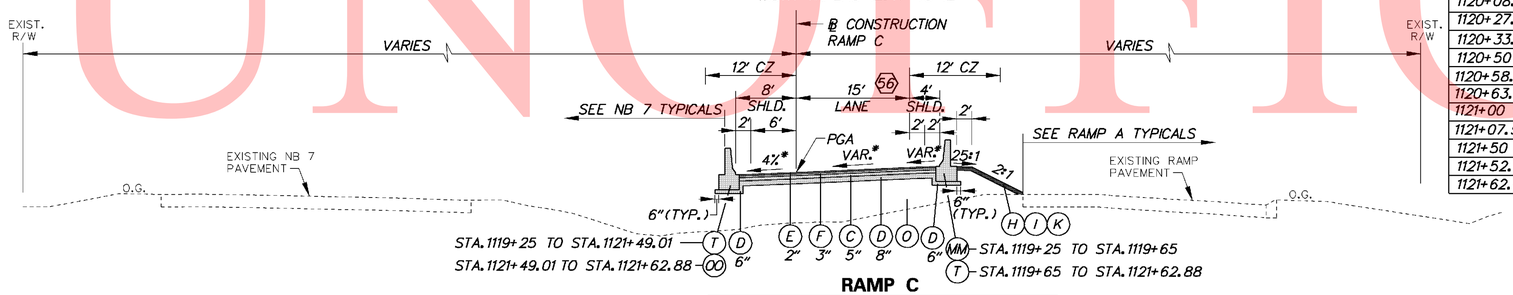

RAMP C

STA. 1119+25.00 TO STA. 1121+62.88

56 STA. 1120+27.32 TO STA. 1121+62.88
WIDTH TAPERS 15' TO 12.47'

*RAMP C CROSS-SLOPES			
STA.	LT. SHLD.	LANES	RT. SHLD.
1119+69.53	-5.60%	5.60%	5.60%
1120+00	-4.36%	4.36%	4.36%
1120+08.96	-4.00%	4.00%	4.00%
1120+27.31	-4.00%	3.26%	3.26%
1120+33.60	-4.00%	3.00%	2.69%
1120+50	-4.00%	2.33%	1.21%
1120+58.24	-4.00%	2.00%	0.46%
1120+63.33	-4.00%	1.79%	0.00%
1121+00	-4.00%	0.31%	-3.32%
1121+07.53	-4.00%	0.00%	-4.00%
1121+50	-0.93%	-1.89%	-4.00%
1121+52.53	-0.75%	-2.00%	-4.00%
1121+62.88	0.00%	-2.46%	-4.00%

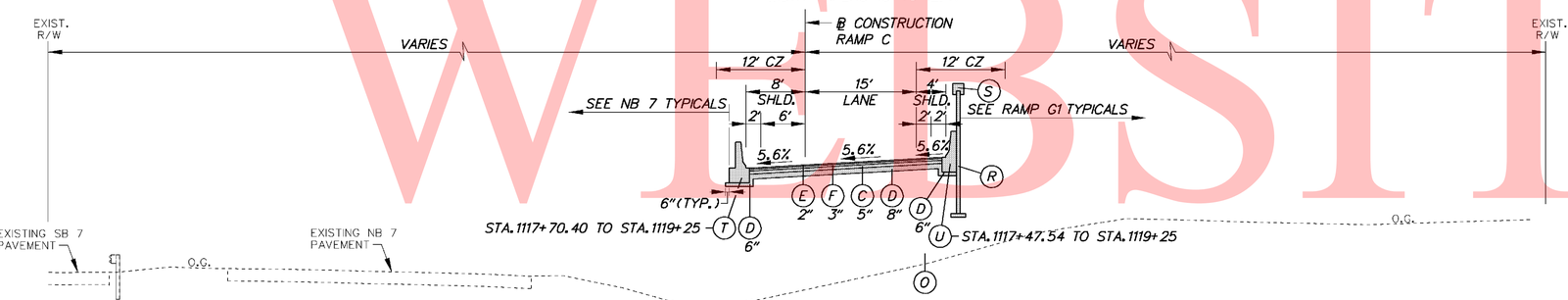

RAMP C

STA. 1117+54.25 (BRIDGE) TO STA. 1119+25.00

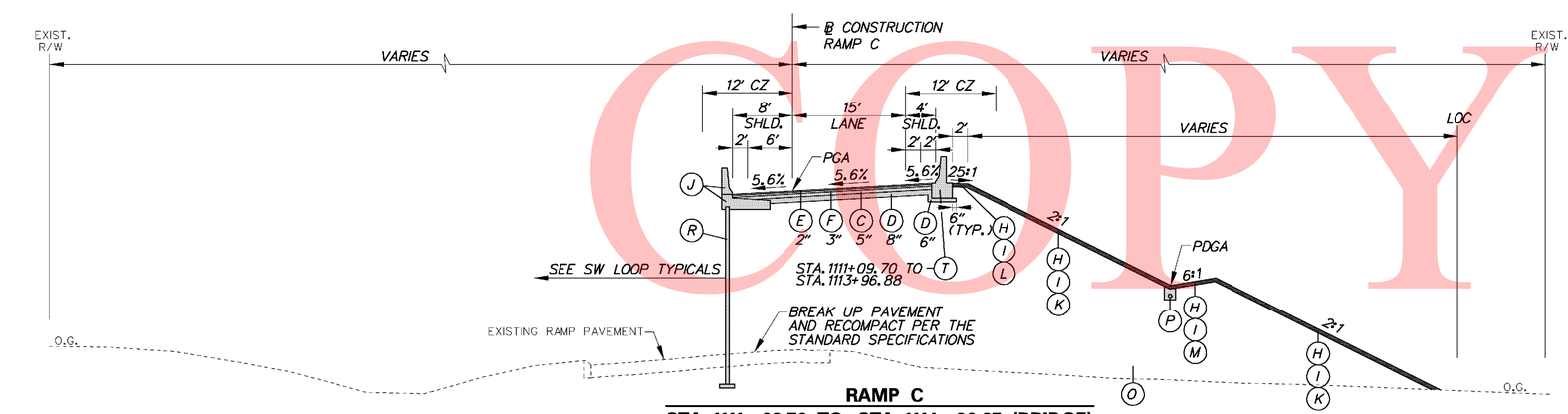

RAMP C

STA. 1111+09.70 TO STA. 1114+36.25 (BRIDGE)

LEGEND

- (A) ITEM 401708 - SUPERPAVE, TYPE C HOT-MIX, 160 GYRATIONS, PG 70-22 (NON-CARBONATE STONE)
- (B) ITEM 401654 - SUPERPAVE, TYPE B HOT-MIX, 160 GYRATIONS, PG 70-22
- (C) ITEM 401663 - SUPERPAVE, BITUMINOUS CONCRETE BASE COURSE, 160 GYRATIONS, PG 64-22
- (D) ITEM 302007 - GRADED AGGREGATE BASE COURSE, TYPE B
- (E) ITEM 401711 - SUPERPAVE, TYPE C HOT-MIX, 160 GYRATIONS, PG 76-22 (NON-CARBONATE STONE)
- (F) ITEM 401660 - SUPERPAVE, TYPE B HOT-MIX, 160 GYRATIONS, PG 76-22
- (G) ITEM 501006 - PORTLAND CEMENT CONCRETE PAVEMENT, 12"
- (H) ITEM 732002 - TOPSOIL, 6" DEPTH
- (I) ITEM 734013 - PERMANENT GRASS SEEDING, DRY GROUND
- (J) ITEM 602017 - PCC MASONRY, PARAPET, CLASS A
- (K) ITEM 735533 - SOIL RETENTION BLANKET MULCH, TYPE 3
- (L) ITEM 735534 - SOIL RETENTION BLANKET MULCH, TYPE 4
- (M) ITEM 735535 - SOIL RETENTION BLANKET MULCH, TYPE 5, UNLESS OTHERWISE NOTED, SEE DRAINAGE PLANS FOR LIMITS AND TYPE
- (N) ITEM 209001 - BORROW, TYPE A
- (O) ITEM 209006 - BORROW, TYPE F OR APPROVED PROJECT EXCAVATION
- (P) ITEM 715001 - PERFORATED PIPE UNDERDRAINS, 6"
- (Q) ITEM 760504 - RUMBLE STRIPS, HOT-MIX
- (R) ITEM 602772 - MECHANICALLY STABILIZED EARTH WALLS
- (S) ITEM 602773 - PCC MASONRY FOR MECHANICALLY STABILIZED EARTH WALLS
- (T) ITEM 720512 - PCC SAFETY BARRIER PERMANENT, SINGLE FACE
- (U) ITEM 720654 - PCC SAFETY BARRIER PERMANENT, SINGLE FACE, MODIFIED TYPE 1
- (V) ITEM 720587 - PCC SAFETY BARRIER PERMANENT, DOUBLE FACE, MODIFIED
- (W) ITEM 720655 - PCC SAFETY BARRIER PERMANENT, SINGLE FACE, MODIFIED TYPE 2
- (X) ITEM 712005 - RIPRAP, R-4
- (Y) ITEM 401665 - SUPERPAVE, TYPE C HOT-MIX, 160 GYRATIONS, PG 64-22, PATCHING
- (Z) ITEM 401666 - SUPERPAVE, TYPE B HOT-MIX, 160 GYRATIONS, PG 64-22, PATCHING
- (AA) ITEM 401667 - SUPERPAVE, BITUMINOUS CONCRETE BASE COURSE, 160 GYRATIONS, PG 64-22, PATCHING
- (BB) ITEM 302008 - GRADED AGGREGATE BASE COURSE, TYPE B, PATCHING
- (CC) ITEM 755000 - HOT-MIX, HOT LAID, BITUMINOUS CONCRETE CURB
- (DD) ITEM 701010 - PORTLAND CEMENT CONCRETE CURB, TYPE 1
- (EE) ITEM 701011 - PORTLAND CEMENT CONCRETE CURB, TYPE 2
- (FF) ITEM 701020 - INTEGRAL PORTLAND CEMENT CONCRETE CURB AND GUTTER, TYPE 1
- (GG) ITEM 701023 - INTEGRAL PORTLAND CEMENT CONCRETE CURB AND GUTTER, TYPE 4
- (HH) ITEM 701026 - PORTLAND CEMENT CONCRETE MONOLITHIC MEDIAN
- (II) ITEM 701027 - PORTLAND CEMENT CONCRETE CURB, TYPE 1 MODIFIED
- (JJ) ITEM 720658 - PCC SAFETY BARRIER PERMANENT SINGLE FACE, MODIFIED, TYPE 5
- (KK) ITEM 720050 - GALVANIZED STEEL BEAM GUARDRAIL, TYPE 1
- (LL) ITEM 760507 - PROFILE MILLING, HOT-MIX
- (MM) ITEM 720656 - PCC SAFETY BARRIER PERMANENT, SINGLE FACE, MODIFIED, TYPE 3
- (NN) ITEM 720657 - PCC SAFETY BARRIER PERMANENT, SINGLE FACE, MODIFIED, TYPE 4
- (OO) ITEM 720651 - PCC SAFETY BARRIER PERMANENT, DOUBLE FACE, BIFURCATED, TYPE 1
- (PP) ITEM 720652 - PCC SAFETY BARRIER PERMANENT, DOUBLE FACE, BIFURCATED, TYPE 2
- (RR) ITEM 401668 - SUPERPAVE, TYPE C HOT-MIX, 160 GYRATIONS, PG 64-22, WEDGE
- (SS) ITEM 401669 - SUPERPAVE, TYPE B HOT-MIX, 160 GYRATIONS, PG 64-22, WEDGE

PAVEMENT LIFT NOTE:

THE MAXIMUM LIFTS FOR THE INDIVIDUAL PAVING MATERIAL ARE AS FOLLOWS:
SUPERPAVE, TYPE C HOT-MIX - 2"
SUPERPAVE, TYPE B HOT-MIX - 3"
SUPERPAVE, BIT. CONC. BASE COURSE - 6"
GRADED AGGREGATE BASE COURSE - 8"

NOTES:

1) THE PGA IS APPLIED TO THE TOP OF THE FINAL PAVEMENT SURFACE.

UNOFFICIAL WEBSITE COPY

10/28/2010 4:37:40 PM
M:\PROJECTS\2003\03059_DELTRNPK\SR1MALL\CADD\2809003\PLANS\TS26_SR1.DGN

DELAWARE DEPARTMENT OF TRANSPORTATION	ADDENDUMS / REVISIONS	NOT TO SCALE	SR1 / I-95 INTERCHANGE	CONTRACT 28-090-03	BRIDGE NO.	TYPICAL SECTIONS	SHEET NO. 33
				COUNTY NEW CASTLE	DESIGNED BY:		TOTAL SHTS. 803
					CHECKED BY:		

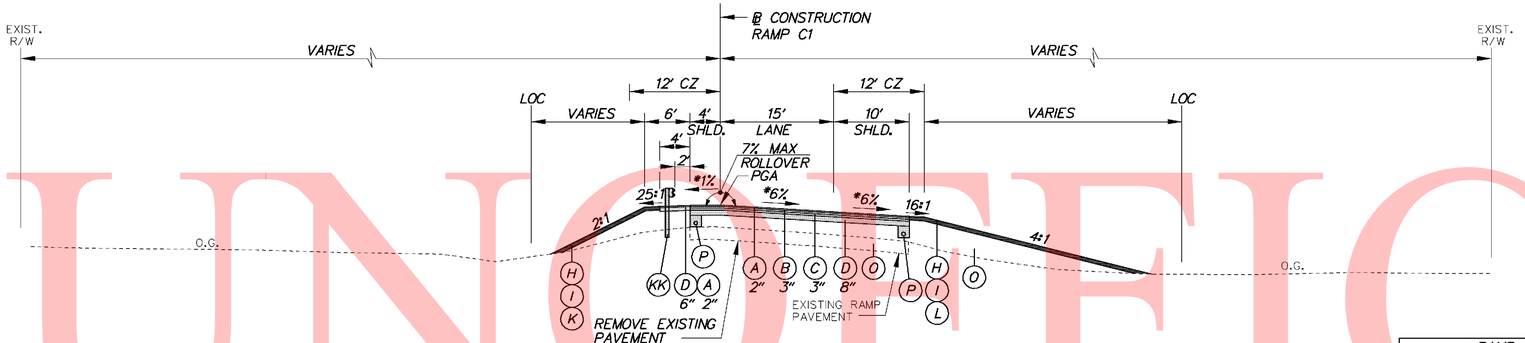

RAMP C1

STA. 1813 + 00.00 TO STA. 1814 + 74.42

*RAMP C1 CROSS-SLOPES			
STA.	LT. SHLD.	LANES	RT. SHLD.
1813+00	-1.73%	-5.27%	-5.27%
1813+17.82	-1.00%	-6.00%	-6.00%

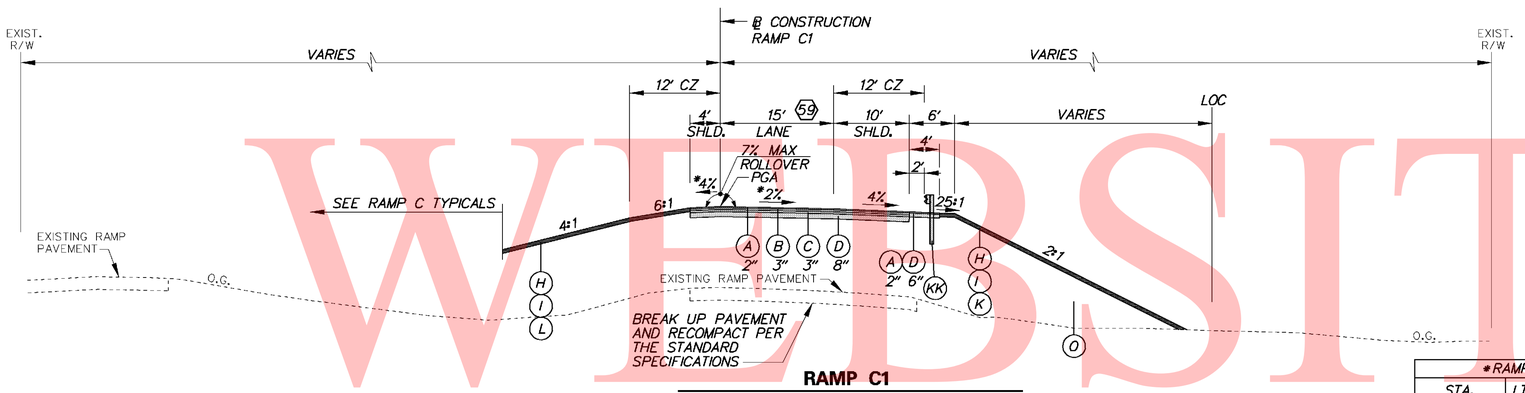

RAMP C1

STA. 1810 + 72.56 TO STA. 1813 + 00.00

(59) STA. 1810+72.56 TO STA. 1810+76.79
WIDTH TAPERS 14.93' TO 15'

*RAMP C1 CROSS-SLOPES			
STA.	LT. SHLD.	LANES	RT. SHLD.
1810+72.56	0.00%	-2.00%	-4.00%
1811+00	-1.83%	-2.00%	-4.00%
1811+32.56	-4.00%	-2.00%	-4.00%
1812+19.82	-4.00%	-2.00%	-4.00%
1812+44.32	-4.00%	-3.00%	-4.00%
1812+50	-3.77%	-3.23%	-4.00%
1812+68.82	-3.00%	-4.00%	-4.00%

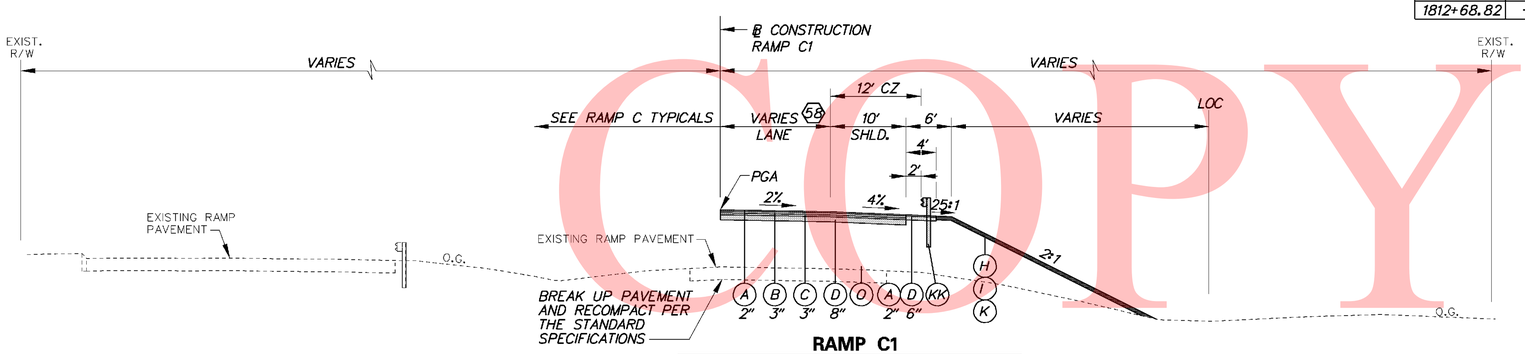

RAMP C1

STA.1809 + 54.59 TO STA. 1810 + 72.56

(58) STA. 1809+54.59 TO STA. 1810+72.56
WIDTH TAPERS 13' TO 14.93'

LEGEND

- (A) ITEM 401708 - SUPERPAVE, TYPE C HOT-MIX, 160 GYRATIONS, PG 70-22 (NON-CARBONATE STONE)
- (B) ITEM 401654 - SUPERPAVE, TYPE B HOT-MIX, 160 GYRATIONS, PG 70-22
- (C) ITEM 401663 - SUPERPAVE, BITUMINOUS CONCRETE BASE COURSE, 160 GYRATIONS, PG 64-22
- (D) ITEM 302007 - GRADED AGGREGATE BASE COURSE, TYPE B
- (E) ITEM 401711 - SUPERPAVE, TYPE C HOT-MIX, 160 GYRATIONS, PG 76-22 (NON-CARBONATE STONE)
- (F) ITEM 401660 - SUPERPAVE, TYPE B HOT-MIX, 160 GYRATIONS, PG 76-22
- (G) ITEM 501006 - PORTLAND CEMENT CONCRETE PAVEMENT, 12"
- (H) ITEM 732002 - TOPSOIL, 6" DEPTH
- (I) ITEM 734013 - PERMANENT GRASS SEEDING, DRY GROUND
- (J) ITEM 602017 - PCC MASONRY, PARAPET, CLASS A
- (K) ITEM 735533 - SOIL RETENTION BLANKET MULCH, TYPE 3
- (L) ITEM 735534 - SOIL RETENTION BLANKET MULCH, TYPE 4
- (M) ITEM 735535 - SOIL RETENTION BLANKET MULCH, TYPE 5, UNLESS OTHERWISE NOTED, SEE DRAINAGE PLANS FOR LIMITS AND TYPE
- (N) ITEM 209001 - BORROW, TYPE A
- (O) ITEM 209006 - BORROW, TYPE F OR APPROVED PROJECT EXCAVATION
- (P) ITEM 715001 - PERFORATED PIPE UNDERDRAINS, 6"
- (Q) ITEM 760504 - RUMBLE STRIPS, HOT-MIX
- (R) ITEM 602772 - MECHANICALLY STABILIZED EARTH WALLS
- (S) ITEM 602773 - PCC MASONRY FOR MECHANICALLY STABILIZED EARTH WALLS
- (T) ITEM 720512 - PCC SAFETY BARRIER PERMANENT, SINGLE FACE
- (U) ITEM 720654 - PCC SAFETY BARRIER PERMANENT, SINGLE FACE, MODIFIED TYPE 1
- (V) ITEM 720587 - PCC SAFETY BARRIER PERMANENT, DOUBLE FACE, MODIFIED
- (W) ITEM 720655 - PCC SAFETY BARRIER PERMANENT, SINGLE FACE, MODIFIED TYPE 2
- (X) ITEM 712005 - RIPRAP, R-4
- (Y) ITEM 401665 - SUPERPAVE, TYPE C HOT-MIX, 160 GYRATIONS, PG 64-22, PATCHING
- (Z) ITEM 401666 - SUPERPAVE, TYPE B HOT-MIX, 160 GYRATIONS, PG 64-22, PATCHING
- (AA) ITEM 401667 - SUPERPAVE, BITUMINOUS CONCRETE BASE COURSE, 160 GYRATIONS, PG 64-22, PATCHING
- (BB) ITEM 302008 - GRADED AGGREGATE BASE COURSE, TYPE B, PATCHING
- (CC) ITEM 755000 - HOT-MIX, HOT LAID, BITUMINOUS CONCRETE CURB
- (DD) ITEM 701010 - PORTLAND CEMENT CONCRETE CURB, TYPE 1
- (EE) ITEM 701011 - PORTLAND CEMENT CONCRETE CURB, TYPE 2
- (FF) ITEM 701020 - INTEGRAL PORTLAND CEMENT CONCRETE CURB AND GUTTER, TYPE 1
- (GG) ITEM 701023 - INTEGRAL PORTLAND CEMENT CONCRETE CURB AND GUTTER, TYPE 4
- (HH) ITEM 701026 - PORTLAND CEMENT CONCRETE MONOLITHIC MEDIAN
- (II) ITEM 701027 - PORTLAND CEMENT CONCRETE CURB, TYPE 1 MODIFIED
- (JJ) ITEM 720658 - PCC SAFETY BARRIER PERMANENT SINGLE FACE, MODIFIED, TYPE 5
- (KK) ITEM 720050 - GALVANIZED STEEL BEAM GUARDRAIL, TYPE 1
- (LL) ITEM 760507 - PROFILE MILLING, HOT-MIX
- (MM) ITEM 720656 - PCC SAFETY BARRIER PERMANENT, SINGLE FACE, MODIFIED, TYPE 3
- (NN) ITEM 720657 - PCC SAFETY BARRIER PERMANENT, SINGLE FACE, MODIFIED, TYPE 4
- (OO) ITEM 720651 - PCC SAFETY BARRIER PERMANENT, DOUBLE FACE, BIFURCATED, TYPE 1
- (PP) ITEM 720652 - PCC SAFETY BARRIER PERMANENT, DOUBLE FACE, BIFURCATED, TYPE 2
- (RR) ITEM 401668 - SUPERPAVE, TYPE C HOT-MIX, 160 GYRATIONS, PG 64-22, WEDGE
- (SS) ITEM 401669 - SUPERPAVE, TYPE B HOT-MIX, 160 GYRATIONS, PG 64-22, WEDGE

PAVEMENT LIFT NOTE:

THE MAXIMUM LIFTS FOR THE INDIVIDUAL PAVING MATERIAL ARE AS FOLLOWS:
SUPERPAVE, TYPE C HOT-MIX - 2"
SUPERPAVE, TYPE B HOT-MIX - 3"
SUPERPAVE, BIT. CONC. BASE COURSE - 6"
GRADED AGGREGATE BASE COURSE - 8"

NOTES:

1) THE PGA IS APPLIED TO THE TOP OF THE FINAL PAVEMENT SURFACE.

UNOFFICIAL WEBSITE COPY

*RAMP C1 CROSS-SLOPES			
STA.	LT. SHLD.	LANES	RT. SHLD.
1815+53.41	2.00%	-6.00%	-6.00%
1815+62.90	-	-6.00%	-6.00%
1816+00	-	-4.39%	-4.39%
1816+08.90	-	-4.00%	-4.00%
1816+31.90	-	-3.00%	-4.00%
1816+50	-	-2.21%	-4.00%
1816+54.90	-	-2.00%	-4.00%
1817+00	-	-0.04%	-4.00%
1817+00.90	-	0.00%	-4.00%
1817+50	-	1.80%	-4.00%
1817+55.34	-	2.00%	-4.00%
1817+82.56	-	3.00%	-4.00%
1818+00	-	3.64%	-3.36%
1818+09.79	-	4.00%	-3.00%

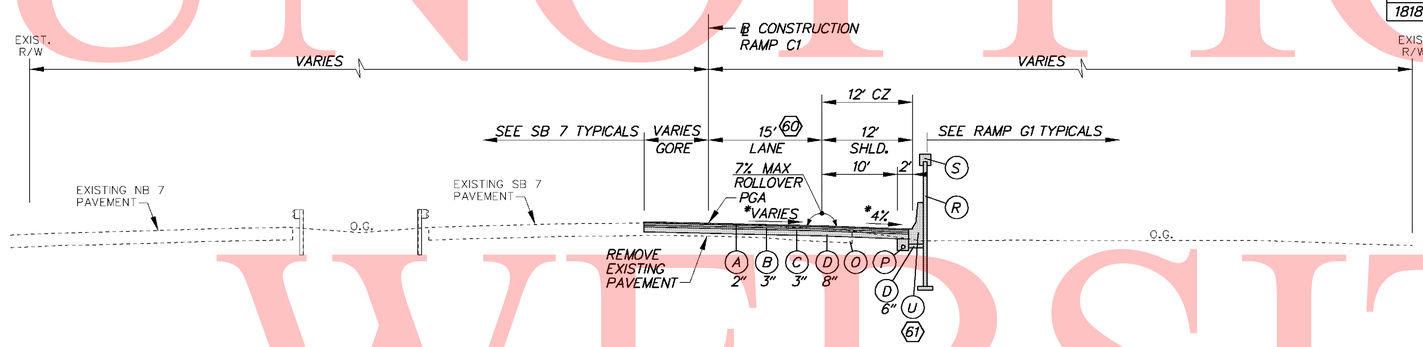

RAMP C1

STA. 1815+53.41 TO STA. 1818+09.79

(60) STA.1816+59.79 TO STA.1818+09.79 WIDTH TAPERS 15' TO 12'

(61) FROM STA.1815+53.41 TO STA.1815+85.06 THERE IS NO BARRIER.

*RAMP C1 CROSS-SLOPES			
STA.	LT. SHLD.	LANES	RT. SHLD.
1815+08.41	-1.00%	-6.00%	-6.00%
1815+23.41	0.00%	-6.00%	-6.00%
1815+50	1.77%	-6.00%	-6.00%

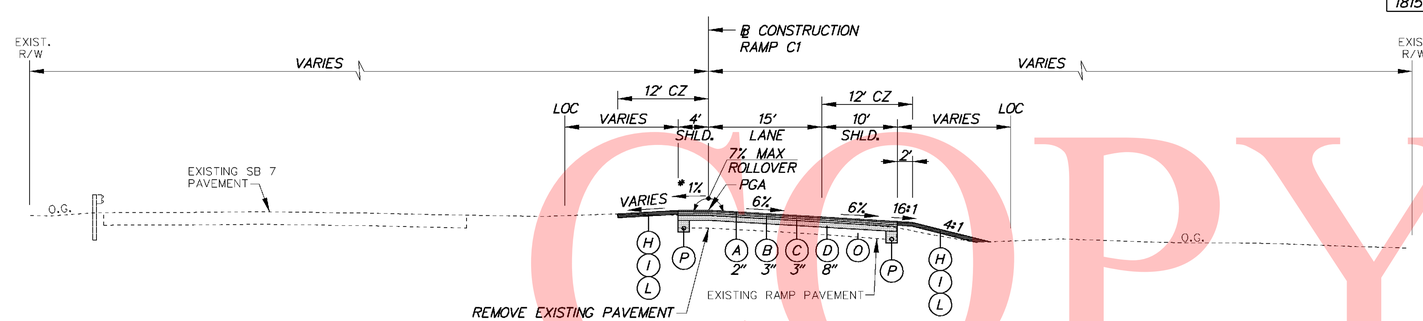

RAMP C1

STA. 1814+74.42 TO STA. 1815+53.41

LEGEND

- (A) ITEM 401708 - SUPERPAVE, TYPE C HOT-MIX, 160 GYRATIONS, PG 70-22 (NON-CARBONATE STONE)
- (B) ITEM 401654 - SUPERPAVE, TYPE B HOT-MIX, 160 GYRATIONS, PG 70-22
- (C) ITEM 401663 - SUPERPAVE, BITUMINOUS CONCRETE BASE COURSE, 160 GYRATIONS, PG 64-22
- (D) ITEM 302007 - GRADED AGGREGATE BASE COURSE, TYPE B
- (E) ITEM 401711 - SUPERPAVE, TYPE C HOT-MIX, 160 GYRATIONS, PG 76-22 (NON-CARBONATE STONE)
- (F) ITEM 401660 - SUPERPAVE, TYPE B HOT-MIX, 160 GYRATIONS, PG 76-22
- (G) ITEM 501006 - PORTLAND CEMENT CONCRETE PAVEMENT, 12"
- (H) ITEM 732002 - TOPSOIL, 6" DEPTH
- (I) ITEM 734013 - PERMANENT GRASS SEEDING, DRY GROUND
- (J) ITEM 602017 - PCC MASONRY, PARAPET, CLASS A
- (K) ITEM 735533 - SOIL RETENTION BLANKET MULCH, TYPE 3
- (L) ITEM 735534 - SOIL RETENTION BLANKET MULCH, TYPE 4
- (M) ITEM 735535 - SOIL RETENTION BLANKET MULCH, TYPE 5, UNLESS OTHERWISE NOTED, SEE DRAINAGE PLANS FOR LIMITS AND TYPE
- (N) ITEM 209001 - BORROW, TYPE A
- (O) ITEM 209006 - BORROW, TYPE F OR APPROVED PROJECT EXCAVATION
- (P) ITEM 715001 - PERFORATED PIPE UNDERDRAINS, 6"
- (Q) ITEM 760504 - RUMBLE STRIPS, HOT-MIX
- (R) ITEM 602772 - MECHANICALLY STABILIZED EARTH WALLS
- (S) ITEM 602773 - PCC MASONRY FOR MECHANICALLY STABILIZED EARTH WALLS
- (T) ITEM 720512 - PCC SAFETY BARRIER PERMANENT, SINGLE FACE
- (U) ITEM 720654 - PCC SAFETY BARRIER PERMANENT, SINGLE FACE, MODIFIED TYPE 1
- (V) ITEM 720587 - PCC SAFETY BARRIER PERMANENT, DOUBLE FACE, MODIFIED
- (W) ITEM 720655 - PCC SAFETY BARRIER PERMANENT, SINGLE FACE, MODIFIED TYPE 2
- (X) ITEM 712005 - RIPRAP, R-4
- (Y) ITEM 401665 - SUPERPAVE, TYPE C HOT-MIX, 160 GYRATIONS, PG 64-22, PATCHING
- (Z) ITEM 401666 - SUPERPAVE, TYPE B HOT-MIX, 160 GYRATIONS, PG 64-22, PATCHING
- (AA) ITEM 401667 - SUPERPAVE, BITUMINOUS CONCRETE BASE COURSE, 160 GYRATIONS, PG 64-22, PATCHING
- (BB) ITEM 302008 - GRADED AGGREGATE BASE COURSE, TYPE B, PATCHING
- (CC) ITEM 755000 - HOT-MIX, HOT LAID, BITUMINOUS CONCRETE CURB
- (DD) ITEM 701010 - PORTLAND CEMENT CONCRETE CURB, TYPE 1
- (EE) ITEM 701011 - PORTLAND CEMENT CONCRETE CURB, TYPE 2
- (FF) ITEM 701020 - INTEGRAL PORTLAND CEMENT CONCRETE CURB AND GUTTER, TYPE 1
- (GG) ITEM 701023 - INTEGRAL PORTLAND CEMENT CONCRETE CURB AND GUTTER, TYPE 4
- (HH) ITEM 701026 - PORTLAND CEMENT CONCRETE MONOLITHIC MEDIAN
- (II) ITEM 701027 - PORTLAND CEMENT CONCRETE CURB, TYPE 1 MODIFIED
- (JJ) ITEM 720658 - PCC SAFETY BARRIER PERMANENT SINGLE FACE, MODIFIED, TYPE 5
- (KK) ITEM 720050 - GALVANIZED STEEL BEAM GUARDRAIL, TYPE 1
- (LL) ITEM 760507 - PROFILE MILLING, HOT-MIX
- (MM) ITEM 720656 - PCC SAFETY BARRIER PERMANENT, SINGLE FACE, MODIFIED, TYPE 3
- (NN) ITEM 720657 - PCC SAFETY BARRIER PERMANENT, SINGLE FACE, MODIFIED, TYPE 4
- (OO) ITEM 720651 - PCC SAFETY BARRIER PERMANENT, DOUBLE FACE, BIFURCATED, TYPE 1
- (PP) ITEM 720652 - PCC SAFETY BARRIER PERMANENT, DOUBLE FACE, BIFURCATED, TYPE 2
- (RR) ITEM 401668 - SUPERPAVE, TYPE C HOT-MIX, 160 GYRATIONS, PG 64-22, WEDGE
- (SS) ITEM 401669 - SUPERPAVE, TYPE B HOT-MIX, 160 GYRATIONS, PG 64-22, WEDGE

PAVEMENT LIFT NOTE:

THE MAXIMUM LIFTS FOR THE INDIVIDUAL PAVING MATERIAL ARE AS FOLLOWS:
SUPERPAVE, TYPE C HOT-MIX - 2"
SUPERPAVE, TYPE B HOT-MIX - 3"
SUPERPAVE, BIT. CONC. BASE COURSE - 6"
GRADED AGGREGATE BASE COURSE - 8"

NOTES:

1) THE PGA IS APPLIED TO THE TOP OF THE FINAL PAVEMENT SURFACE.

UNOFFICIAL WEBSITE COPY

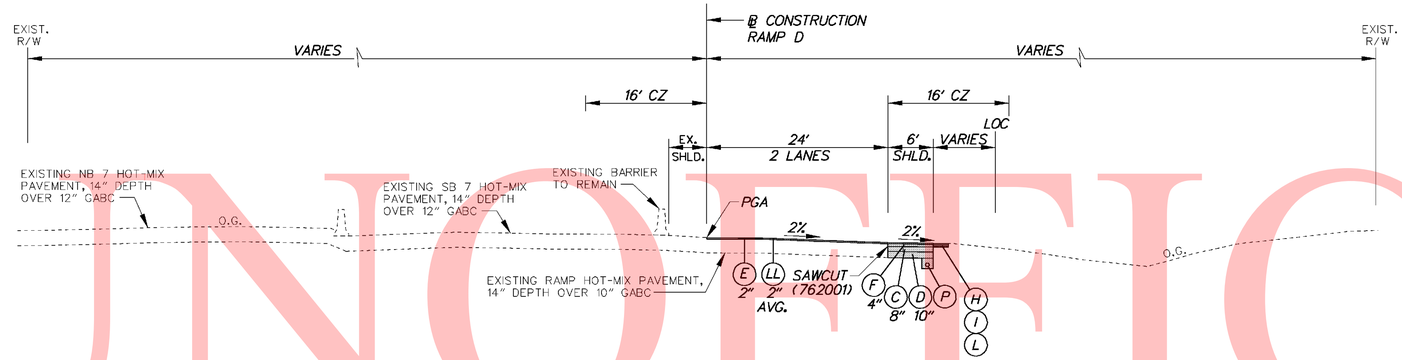

RAMP D

STA. 2105+60.16 TO STA. 2113+30.23

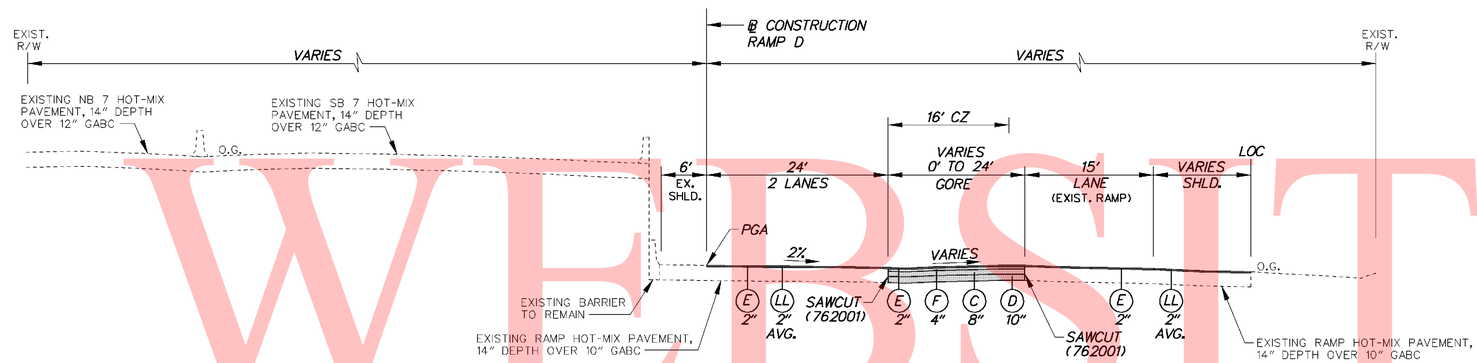

RAMP D

STA. 2105+01.48 TO STA. 2105+60.16

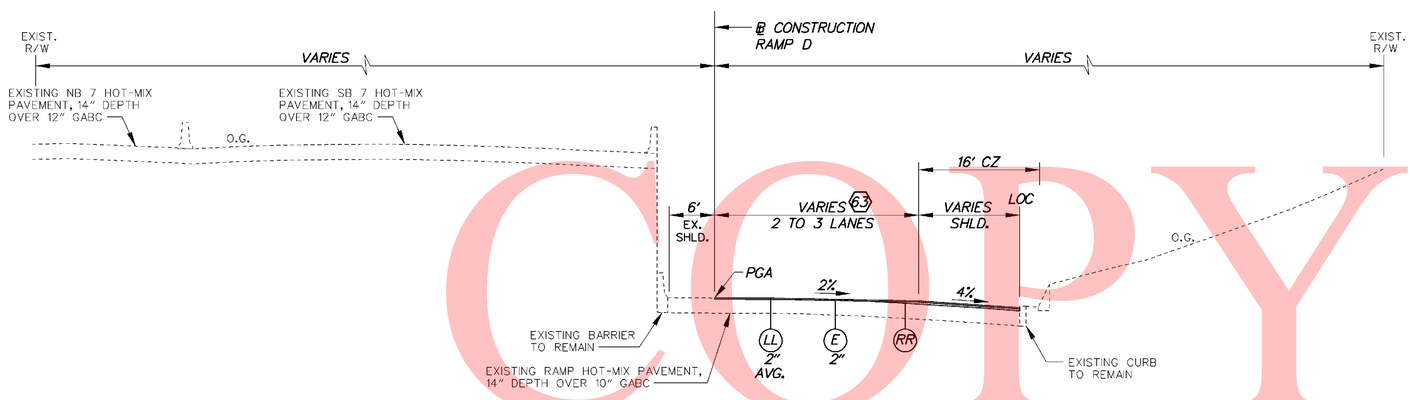

RAMP D

STA. 2103+25 TO STA. 2105+01.48

6.3 STA. 2103+25 TO STA. 2105+01.48
WIDTH TAPERS 24' TO 39.67'

LEGEND

- (A) ITEM 401708 - SUPERPAVE, TYPE C HOT-MIX, 160 GYRATIONS, PG 70-22 (NON-CARBONATE STONE)
- (B) ITEM 401654 - SUPERPAVE, TYPE B HOT-MIX, 160 GYRATIONS, PG 70-22
- (C) ITEM 401663 - SUPERPAVE, BITUMINOUS CONCRETE BASE COURSE, 160 GYRATIONS, PG 64-22
- (D) ITEM 302007 - GRADED AGGREGATE BASE COURSE, TYPE B
- (E) ITEM 401711 - SUPERPAVE, TYPE C HOT-MIX, 160 GYRATIONS, PG 76-22 (NON-CARBONATE STONE)
- (F) ITEM 401660 - SUPERPAVE, TYPE B HOT-MIX, 160 GYRATIONS, PG 76-22
- (G) ITEM 501006 - PORTLAND CEMENT CONCRETE PAVEMENT, 12"
- (H) ITEM 732002 - TOPSOIL, 6" DEPTH
- (I) ITEM 734013 - PERMANENT GRASS SEEDING, DRY GROUND
- (J) ITEM 602017 - PCC MASONRY, PARAPET, CLASS A
- (K) ITEM 735533 - SOIL RETENTION BLANKET MULCH, TYPE 3
- (L) ITEM 735534 - SOIL RETENTION BLANKET MULCH, TYPE 4
- (M) ITEM 735535 - SOIL RETENTION BLANKET MULCH, TYPE 5, UNLESS OTHERWISE NOTED, SEE DRAINAGE PLANS FOR LIMITS AND TYPE
- (N) ITEM 209001 - BORROW, TYPE A
- (O) ITEM 209006 - BORROW, TYPE F OR APPROVED PROJECT EXCAVATION
- (P) ITEM 715001 - PERFORATED PIPE UNDERDRAINS, 6"
- (Q) ITEM 760504 - RUMBLE STRIPS, HOT-MIX
- (R) ITEM 602772 - MECHANICALLY STABILIZED EARTH WALLS
- (S) ITEM 602773 - PCC MASONRY FOR MECHANICALLY STABILIZED EARTH WALLS
- (T) ITEM 720512 - PCC SAFETY BARRIER PERMANENT, SINGLE FACE
- (U) ITEM 720654 - PCC SAFETY BARRIER PERMANENT, SINGLE FACE, MODIFIED TYPE 1
- (V) ITEM 720587 - PCC SAFETY BARRIER PERMANENT, DOUBLE FACE, MODIFIED
- (W) ITEM 720655 - PCC SAFETY BARRIER PERMANENT, SINGLE FACE, MODIFIED TYPE 2
- (X) ITEM 712005 - RIPRAP, R-4
- (Y) ITEM 401665 - SUPERPAVE, TYPE C HOT-MIX, 160 GYRATIONS, PG 64-22, PATCHING
- (Z) ITEM 401666 - SUPERPAVE, TYPE B HOT-MIX, 160 GYRATIONS, PG 64-22, PATCHING
- (AA) ITEM 401667 - SUPERPAVE, BITUMINOUS CONCRETE BASE COURSE, 160 GYRATIONS, PG 64-22, PATCHING
- (BB) ITEM 302008 - GRADED AGGREGATE BASE COURSE, TYPE B, PATCHING
- (CC) ITEM 755000 - HOT-MIX, HOT LAID, BITUMINOUS CONCRETE CURB
- (DD) ITEM 701010 - PORTLAND CEMENT CONCRETE CURB, TYPE 1
- (EE) ITEM 701011 - PORTLAND CEMENT CONCRETE CURB, TYPE 2
- (FF) ITEM 701020 - INTEGRAL PORTLAND CEMENT CONCRETE CURB AND GUTTER, TYPE 1
- (GG) ITEM 701023 - INTEGRAL PORTLAND CEMENT CONCRETE CURB AND GUTTER, TYPE 4
- (HH) ITEM 701026 - PORTLAND CEMENT CONCRETE MONOLITHIC MEDIAN
- (II) ITEM 701027 - PORTLAND CEMENT CONCRETE CURB, TYPE 1 MODIFIED
- (JJ) ITEM 720658 - PCC SAFETY BARRIER PERMANENT SINGLE FACE, MODIFIED, TYPE 5
- (KK) ITEM 720050 - GALVANIZED STEEL BEAM GUARDRAIL, TYPE 1
- (LL) ITEM 760507 - PROFILE MILLING, HOT-MIX
- (MM) ITEM 720656 - PCC SAFETY BARRIER PERMANENT, SINGLE FACE, MODIFIED, TYPE 3
- (NN) ITEM 720657 - PCC SAFETY BARRIER PERMANENT, SINGLE FACE, MODIFIED, TYPE 4
- (OO) ITEM 720651 - PCC SAFETY BARRIER PERMANENT, DOUBLE FACE, BIFURCATED, TYPE 1
- (PP) ITEM 720652 - PCC SAFETY BARRIER PERMANENT, DOUBLE FACE, BIFURCATED, TYPE 2
- (RR) ITEM 401668 - SUPERPAVE, TYPE C HOT-MIX, 160 GYRATIONS, PG 64-22, WEDGE
- (SS) ITEM 401669 - SUPERPAVE, TYPE B HOT-MIX, 160 GYRATIONS, PG 64-22, WEDGE

PAVEMENT LIFT NOTE:

THE MAXIMUM LIFTS FOR THE INDIVIDUAL PAVING MATERIAL ARE AS FOLLOWS:
SUPERPAVE, TYPE C HOT-MIX - 2"
SUPERPAVE, TYPE B HOT-MIX - 3"
SUPERPAVE, BIT. CONC. BASE COURSE - 6"
GRADED AGGREGATE BASE COURSE - 8"

NOTES:

1) THE PGA IS APPLIED TO THE TOP OF THE FINAL PAVEMENT SURFACE.

UNOFFICIAL WEBSITE COPY

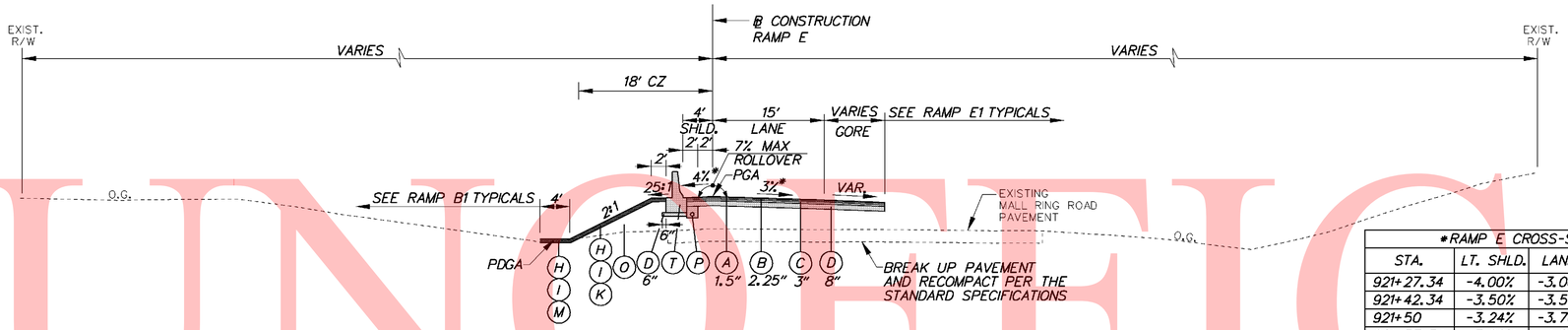

*RAMP E CROSS-SLOPES			
STA.	LT. SHLD.	LANES	RT. SHLD.
921+27.34	-4.00%	-3.00%	-
921+42.34	-3.50%	-3.50%	-
921+50	-3.24%	-3.76%	-
921+57.34	-3.00%	-4.00%	-

RAMP E

STA. 920+76.58 TO STA. 921+62.20

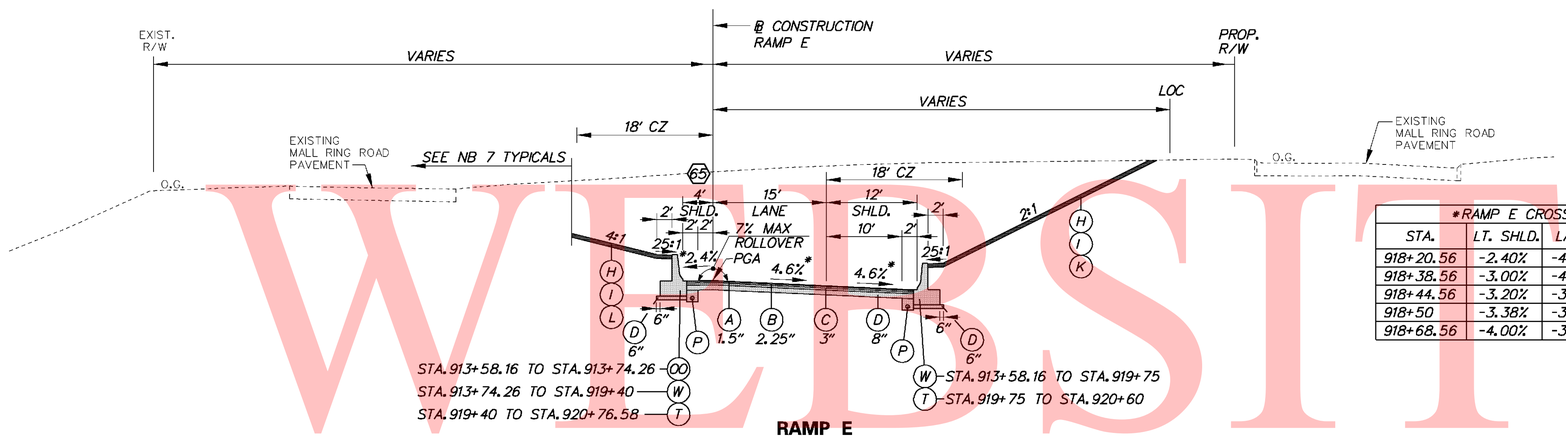

RAMP E

STA. 913+58.16 TO STA. 920+76.58

65 STA. 913+58.16 TO STA. 914+58.16
SHOULDER TAPERS 6' TO 4'

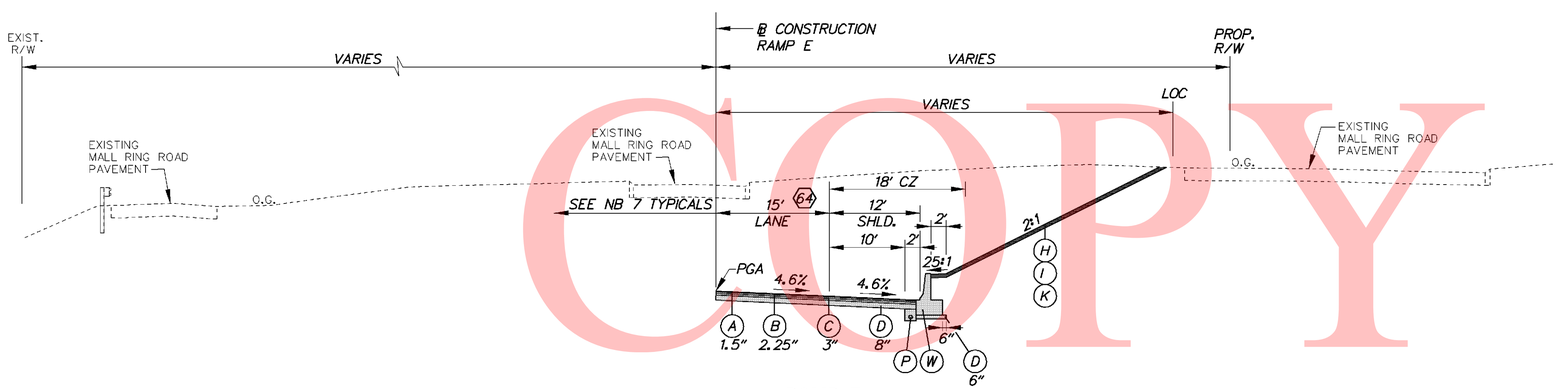

RAMP E

STA. 910+90.03 TO STA. 913+58.16

64 STA. 910+90.03 TO STA. 912+41.18
WIDTH TAPERS 12' TO 15'

LEGEND

- (A) ITEM 401708 - SUPERPAVE, TYPE C HOT-MIX, 160 GYRATIONS, PG 70-22 (NON-CARBONATE STONE)
- (B) ITEM 401654 - SUPERPAVE, TYPE B HOT-MIX, 160 GYRATIONS, PG 70-22
- (C) ITEM 401663 - SUPERPAVE, BITUMINOUS CONCRETE BASE COURSE, 160 GYRATIONS, PG 64-22
- (D) ITEM 302007 - GRADED AGGREGATE BASE COURSE, TYPE B
- (E) ITEM 401711 - SUPERPAVE, TYPE C HOT-MIX, 160 GYRATIONS, PG 76-22 (NON-CARBONATE STONE)
- (F) ITEM 401660 - SUPERPAVE, TYPE B HOT-MIX, 160 GYRATIONS, PG 76-22
- (G) ITEM 501006 - PORTLAND CEMENT CONCRETE PAVEMENT, 12"
- (H) ITEM 732002 - TOPSOIL, 6" DEPTH
- (I) ITEM 734013 - PERMANENT GRASS SEEDING, DRY GROUND
- (J) ITEM 602017 - PCC MASONRY, PARAPET, CLASS A
- (K) ITEM 735533 - SOIL RETENTION BLANKET MULCH, TYPE 3
- (L) ITEM 735534 - SOIL RETENTION BLANKET MULCH, TYPE 4
- (M) ITEM 735535 - SOIL RETENTION BLANKET MULCH, TYPE 5, UNLESS OTHERWISE NOTED, SEE DRAINAGE PLANS FOR LIMITS AND TYPE
- (N) ITEM 209001 - BORROW, TYPE A
- (O) ITEM 209006 - BORROW, TYPE F OR APPROVED PROJECT EXCAVATION
- (P) ITEM 715001 - PERFORATED PIPE UNDERDRAINS, 6"
- (Q) ITEM 760504 - RUMBLE STRIPS, HOT-MIX
- (R) ITEM 602772 - MECHANICALLY STABILIZED EARTH WALLS
- (S) ITEM 602773 - PCC MASONRY FOR MECHANICALLY STABILIZED EARTH WALLS
- (T) ITEM 720512 - PCC SAFETY BARRIER PERMANENT, SINGLE FACE
- (U) ITEM 720654 - PCC SAFETY BARRIER PERMANENT, SINGLE FACE, MODIFIED TYPE 1
- (V) ITEM 720587 - PCC SAFETY BARRIER PERMANENT, DOUBLE FACE, MODIFIED
- (W) ITEM 720655 - PCC SAFETY BARRIER PERMANENT, SINGLE FACE, MODIFIED TYPE 2
- (X) ITEM 712005 - RIPRAP, R-4
- (Y) ITEM 401665 - SUPERPAVE, TYPE C HOT-MIX, 160 GYRATIONS, PG 64-22, PATCHING
- (Z) ITEM 401666 - SUPERPAVE, TYPE B HOT-MIX, 160 GYRATIONS, PG 64-22, PATCHING
- (AA) ITEM 401667 - SUPERPAVE, BITUMINOUS CONCRETE BASE COURSE, 160 GYRATIONS, PG 64-22, PATCHING
- (BB) ITEM 302008 - GRADED AGGREGATE BASE COURSE, TYPE B, PATCHING
- (CC) ITEM 755000 - HOT-MIX, HOT LAID, BITUMINOUS CONCRETE CURB
- (DD) ITEM 701010 - PORTLAND CEMENT CONCRETE CURB, TYPE 1
- (EE) ITEM 701011 - PORTLAND CEMENT CONCRETE CURB, TYPE 2
- (FF) ITEM 701020 - INTEGRAL PORTLAND CEMENT CONCRETE CURB AND GUTTER, TYPE 1
- (GG) ITEM 701023 - INTEGRAL PORTLAND CEMENT CONCRETE CURB AND GUTTER, TYPE 4
- (HH) ITEM 701026 - PORTLAND CEMENT CONCRETE MONOLITHIC MEDIAN
- (II) ITEM 701027 - PORTLAND CEMENT CONCRETE CURB, TYPE 1 MODIFIED
- (JJ) ITEM 720658 - PCC SAFETY BARRIER PERMANENT SINGLE FACE, MODIFIED, TYPE 5
- (KK) ITEM 720050 - GALVANIZED STEEL BEAM GUARDRAIL, TYPE 1
- (LL) ITEM 760507 - PROFILE MILLING, HOT-MIX
- (MM) ITEM 720656 - PCC SAFETY BARRIER PERMANENT, SINGLE FACE, MODIFIED, TYPE 3
- (NN) ITEM 720657 - PCC SAFETY BARRIER PERMANENT, SINGLE FACE, MODIFIED, TYPE 4
- (OO) ITEM 720651 - PCC SAFETY BARRIER PERMANENT, DOUBLE FACE, BIFURCATED, TYPE 1
- (PP) ITEM 720652 - PCC SAFETY BARRIER PERMANENT, DOUBLE FACE, BIFURCATED, TYPE 2
- (RR) ITEM 401668 - SUPERPAVE, TYPE C HOT-MIX, 160 GYRATIONS, PG 64-22, WEDGE
- (SS) ITEM 401669 - SUPERPAVE, TYPE B HOT-MIX, 160 GYRATIONS, PG 64-22, WEDGE

PAVEMENT LIFT NOTE:

THE MAXIMUM LIFTS FOR THE INDIVIDUAL PAVING MATERIAL ARE AS FOLLOWS:
SUPERPAVE, TYPE C HOT-MIX - 2"
SUPERPAVE, TYPE B HOT-MIX - 3"
SUPERPAVE, BIT. CONC. BASE COURSE - 6"
GRADED AGGREGATE BASE COURSE - 8"

NOTES:

1) THE PGA IS APPLIED TO THE TOP OF THE FINAL PAVEMENT SURFACE.

UNOFFICIAL WEBSITE COPY

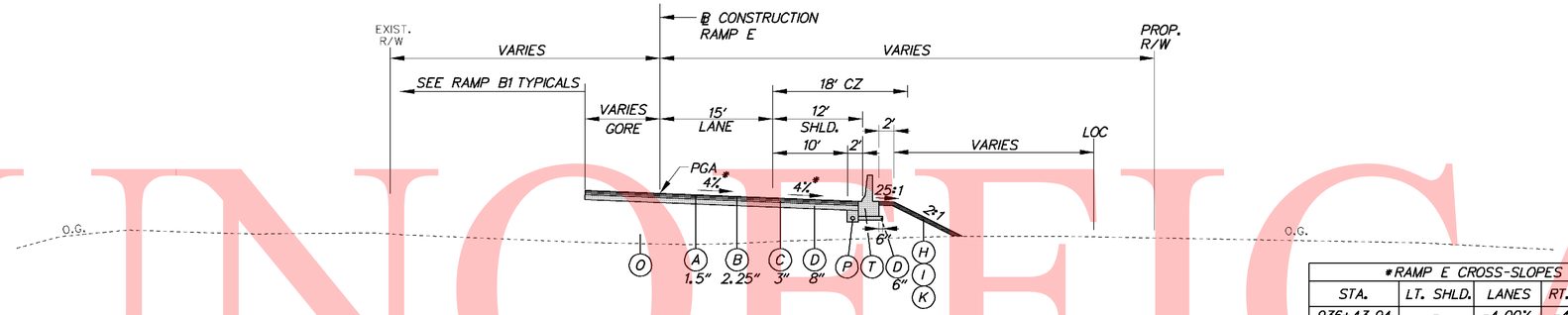

RAMP E

STA. 935+00.00 TO STA. 936+55.94

*RAMP E CROSS-SLOPES			
STA.	LT. SHLD.	LANES	RT. SHLD.
936+43.94	-	-4.00%	-4.00%
936+50	-	-4.20%	-4.20%
936+55.94	-	-4.40%	-4.40%

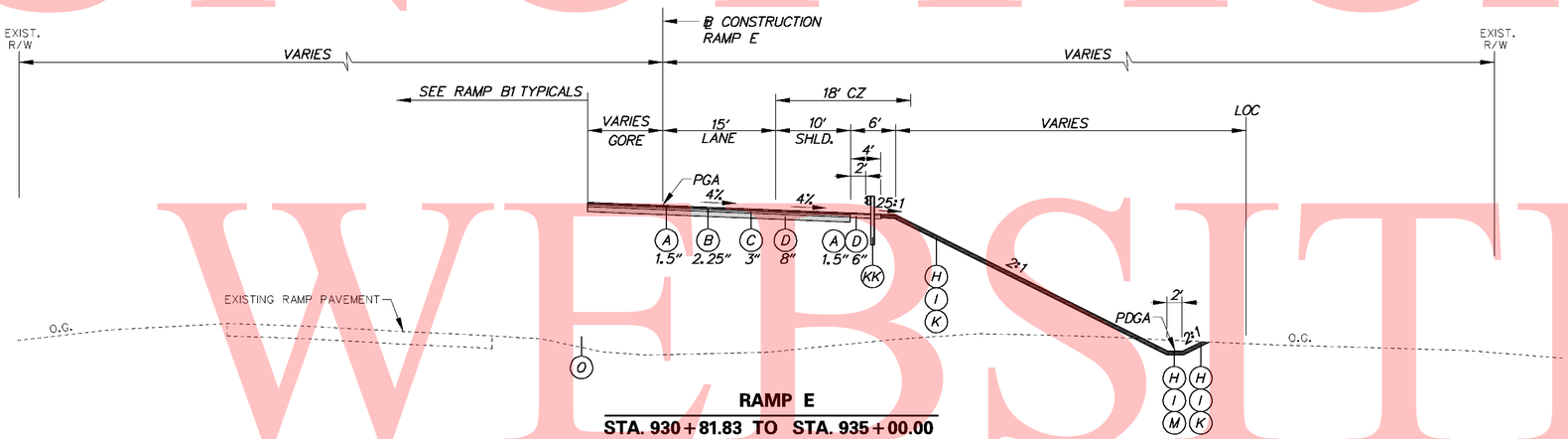

RAMP E

STA. 930+81.83 TO STA. 935+00.00

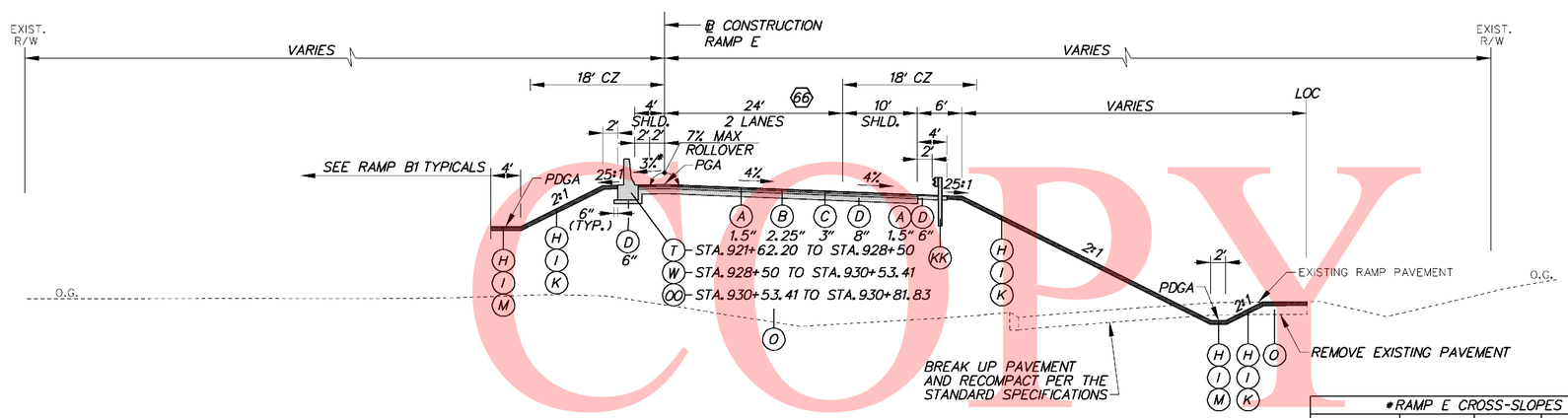

RAMP E

STA. 921+62.20 TO STA. 930+81.83

66 STA. 921+62.20 TO STA. 924+62.20
WIDTH TAPERS 30' TO 24'

STA. 927+12.20 TO STA. 930+12.20
WIDTH TAPERS 24' TO 15'

*RAMP E CROSS-SLOPES			
STA.	LT. SHLD.	LANES	RT. SHLD.
930+30.77	-3.00%	-4.00%	-4.00%
930+50	-0.60%	-4.00%	-4.00%
930+54.77	0.00%	-4.00%	-4.00%
930+70.77	2.00%	-4.00%	-4.00%
930+81.89	3.40%	-4.00%	-4.00%

LEGEND

- (A) ITEM 401708 - SUPERPAVE, TYPE C HOT-MIX, 160 GYRATIONS, PG 70-22 (NON-CARBONATE STONE)
- (B) ITEM 401654 - SUPERPAVE, TYPE B HOT-MIX, 160 GYRATIONS, PG 70-22
- (C) ITEM 401663 - SUPERPAVE, BITUMINOUS CONCRETE BASE COURSE, 160 GYRATIONS, PG 64-22
- (D) ITEM 302007 - GRADED AGGREGATE BASE COURSE, TYPE B
- (E) ITEM 401711 - SUPERPAVE, TYPE C HOT-MIX, 160 GYRATIONS, PG 76-22 (NON-CARBONATE STONE)
- (F) ITEM 401660 - SUPERPAVE, TYPE B HOT-MIX, 160 GYRATIONS, PG 76-22
- (G) ITEM 501006 - PORTLAND CEMENT CONCRETE PAVEMENT, 12"
- (H) ITEM 732002 - TOPSOIL, 6" DEPTH
- (I) ITEM 734013 - PERMANENT GRASS SEEDING, DRY GROUND
- (J) ITEM 602017 - PCC MASONRY, PARAPET, CLASS A
- (K) ITEM 735533 - SOIL RETENTION BLANKET MULCH, TYPE 3
- (L) ITEM 735534 - SOIL RETENTION BLANKET MULCH, TYPE 4
- (M) ITEM 735535 - SOIL RETENTION BLANKET MULCH, TYPE 5, UNLESS OTHERWISE NOTED, SEE DRAINAGE PLANS FOR LIMITS AND TYPE
- (N) ITEM 209001 - BORROW, TYPE A
- (O) ITEM 209006 - BORROW, TYPE F OR APPROVED PROJECT EXCAVATION
- (P) ITEM 715001 - PERFORATED PIPE UNDERDRAINS, 6"
- (Q) ITEM 760504 - RUMBLE STRIPS, HOT-MIX
- (R) ITEM 602772 - MECHANICALLY STABILIZED EARTH WALLS
- (S) ITEM 602773 - PCC MASONRY FOR MECHANICALLY STABILIZED EARTH WALLS
- (T) ITEM 720512 - PCC SAFETY BARRIER PERMANENT, SINGLE FACE
- (U) ITEM 720654 - PCC SAFETY BARRIER PERMANENT, SINGLE FACE, MODIFIED TYPE 1
- (V) ITEM 720587 - PCC SAFETY BARRIER PERMANENT, DOUBLE FACE, MODIFIED
- (W) ITEM 720655 - PCC SAFETY BARRIER PERMANENT, SINGLE FACE, MODIFIED TYPE 2
- (X) ITEM 712005 - RIPRAP, R-4
- (Y) ITEM 401665 - SUPERPAVE, TYPE C HOT-MIX, 160 GYRATIONS, PG 64-22, PATCHING
- (Z) ITEM 401666 - SUPERPAVE, TYPE B HOT-MIX, 160 GYRATIONS, PG 64-22, PATCHING
- (AA) ITEM 401667 - SUPERPAVE, BITUMINOUS CONCRETE BASE COURSE, 160 GYRATIONS, PG 64-22, PATCHING
- (BB) ITEM 302008 - GRADED AGGREGATE BASE COURSE, TYPE B, PATCHING
- (CC) ITEM 755000 - HOT-MIX, HOT LAID, BITUMINOUS CONCRETE CURB
- (DD) ITEM 701010 - PORTLAND CEMENT CONCRETE CURB, TYPE 1
- (EE) ITEM 701011 - PORTLAND CEMENT CONCRETE CURB, TYPE 2
- (FF) ITEM 701020 - INTEGRAL PORTLAND CEMENT CONCRETE CURB AND GUTTER, TYPE 1
- (GG) ITEM 701023 - INTEGRAL PORTLAND CEMENT CONCRETE CURB AND GUTTER, TYPE 4
- (HH) ITEM 701026 - PORTLAND CEMENT CONCRETE MONOLITHIC MEDIAN
- (II) ITEM 701027 - PORTLAND CEMENT CONCRETE CURB, TYPE 1 MODIFIED
- (JJ) ITEM 720658 - PCC SAFETY BARRIER PERMANENT SINGLE FACE, MODIFIED, TYPE 5
- (KK) ITEM 720050 - GALVANIZED STEEL BEAM GUARDRAIL, TYPE 1
- (LL) ITEM 760507 - PROFILE MILLING, HOT-MIX
- (MM) ITEM 720656 - PCC SAFETY BARRIER PERMANENT, SINGLE FACE, MODIFIED, TYPE 3
- (NN) ITEM 720657 - PCC SAFETY BARRIER PERMANENT, SINGLE FACE, MODIFIED, TYPE 4
- (OO) ITEM 720651 - PCC SAFETY BARRIER PERMANENT, DOUBLE FACE, BIFURCATED, TYPE 1
- (PP) ITEM 720652 - PCC SAFETY BARRIER PERMANENT, DOUBLE FACE, BIFURCATED, TYPE 2
- (RR) ITEM 401668 - SUPERPAVE, TYPE C HOT-MIX, 160 GYRATIONS, PG 64-22, WEDGE
- (SS) ITEM 401669 - SUPERPAVE, TYPE B HOT-MIX, 160 GYRATIONS, PG 64-22, WEDGE

PAVEMENT LIFT NOTE:

THE MAXIMUM LIFTS FOR THE INDIVIDUAL PAVING MATERIAL ARE AS FOLLOWS:
SUPERPAVE, TYPE C HOT-MIX - 2"
SUPERPAVE, TYPE B HOT-MIX - 3"
SUPERPAVE, BIT. CONC. BASE COURSE - 6"
GRADED AGGREGATE BASE COURSE - 8"

NOTES:

1) THE PGA IS APPLIED TO THE TOP OF THE FINAL PAVEMENT SURFACE.

UNOFFICIAL WEBSITE COPY

DELAWARE DEPARTMENT OF TRANSPORTATION	ADDENDUMS / REVISIONS	NOT TO SCALE	SR1 / I-95 INTERCHANGE	CONTRACT 28-090-03	BRIDGE NO.	TYPICAL SECTIONS	SHEET NO. 38
				COUNTY NEW CASTLE	DESIGNED BY:		TOTAL SHTS. 803
					CHECKED BY:		

10/28/2010 5:04:44 PM
M:\PROJECTS\2003\03059_DELTRNPK\SRIMALL\CADD\2809003\PLANS\TS31_SR1.DGN

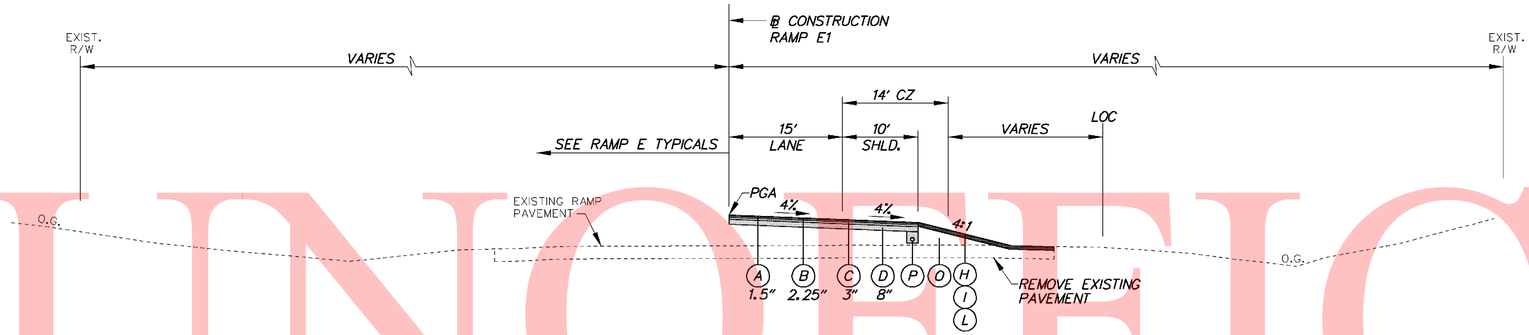

RAMP E1

STA. 1011+64.66 TO STA. 1012+51.50

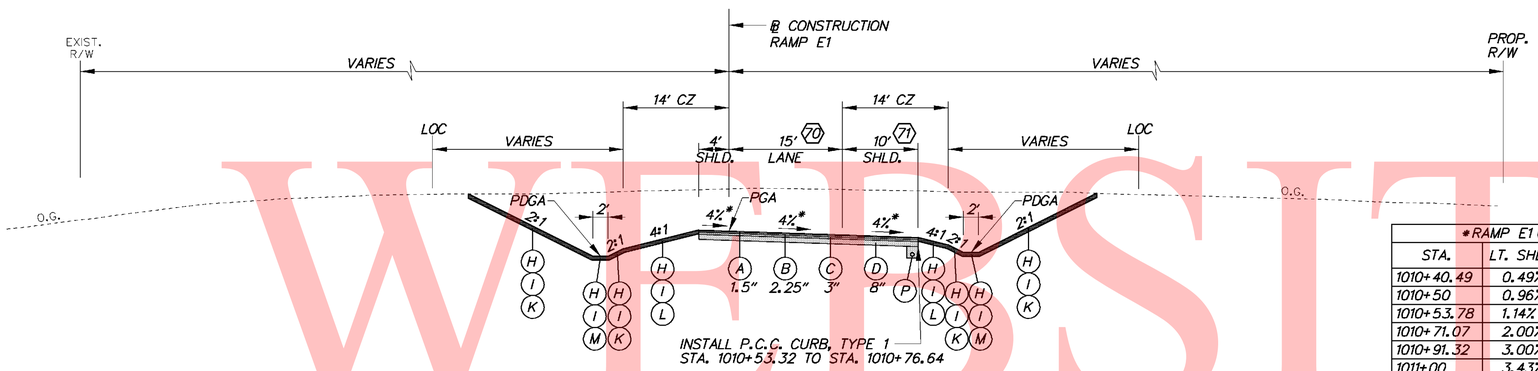

RAMP E1

STA. 1010+53.32 TO STA. 1011+64.66

70 STA. 1010+53.32 TO STA. 1010+74.02
WIDTH TAPERS 21.32' TO 15'

71 STA. 1010+53.32 TO STA. 1010+76.64
SHOULDER TAPERS 10.56' TO 10'

*RAMP E1 CROSS-SLOPES			
STA.	LT. SHLD.	LANES	RT. SHLD.
1010+40.49	0.49%	-0.49%	-0.49%
1010+50	0.96%	-0.96%	-0.96%
1010+53.78	1.14%	-1.14%	-1.14%
1010+71.07	2.00%	-2.00%	-2.00%
1010+91.32	3.00%	-3.00%	-3.00%
1011+00	3.43%	-3.43%	-3.43%
1011+11.58	4.00%	-4.00%	-4.00%

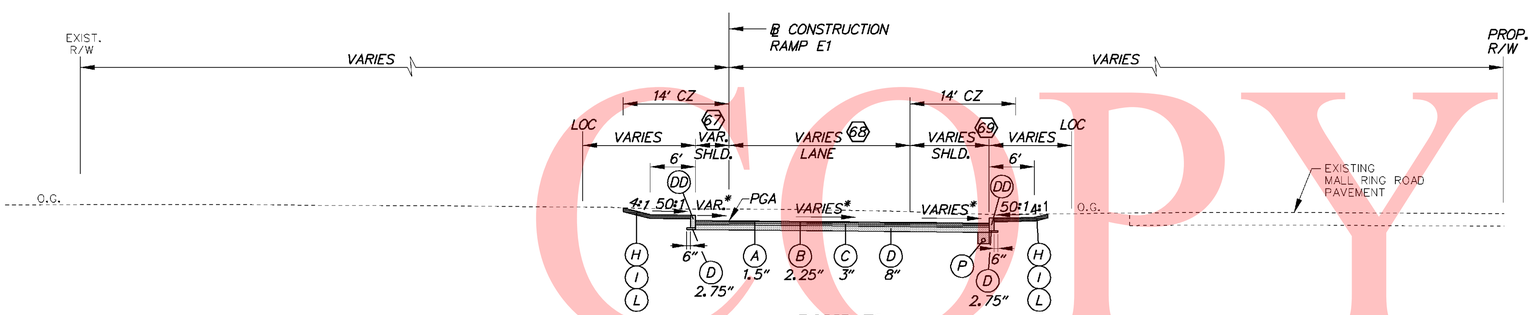

RAMP E1

STA. 1010+45.48 TO STA. 1010+53.32

67 STA. 1010+45.48 TO STA. 1010+53.32
SHOULDER TAPERS 3.98' TO 4'

68 STA. 1010+45.48 TO STA. 1010+53.32
WIDTH TAPERS 30.16' TO 21.32'

69 STA. 1010+45.48 TO STA. 1010+53.32
SHOULDER TAPERS 9.93' TO 10.56'

LEGEND

- A ITEM 401708 - SUPERPAVE, TYPE C HOT-MIX, 160 GYRATIONS, PG 70-22 (NON-CARBONATE STONE)
- B ITEM 401654 - SUPERPAVE, TYPE B HOT-MIX, 160 GYRATIONS, PG 70-22
- C ITEM 401663 - SUPERPAVE, BITUMINOUS CONCRETE BASE COURSE, 160 GYRATIONS, PG 64-22
- D ITEM 302007 - GRADED AGGREGATE BASE COURSE, TYPE B
- E ITEM 401711 - SUPERPAVE, TYPE C HOT-MIX, 160 GYRATIONS, PG 76-22 (NON-CARBONATE STONE)
- F ITEM 401660 - SUPERPAVE, TYPE B HOT-MIX, 160 GYRATIONS, PG 76-22
- G ITEM 501006 - PORTLAND CEMENT CONCRETE PAVEMENT, 12"
- H ITEM 732002 - TOPSOIL, 6" DEPTH
- I ITEM 734013 - PERMANENT GRASS SEEDING, DRY GROUND
- J ITEM 602017 - PCC MASONRY, PARAPET, CLASS A
- K ITEM 735533 - SOIL RETENTION BLANKET MULCH, TYPE 3
- L ITEM 735534 - SOIL RETENTION BLANKET MULCH, TYPE 4
- M ITEM 735535 - SOIL RETENTION BLANKET MULCH, TYPE 5, UNLESS OTHERWISE NOTED, SEE DRAINAGE PLANS FOR LIMITS AND TYPE
- N ITEM 209001 - BORROW, TYPE A
- O ITEM 209006 - BORROW, TYPE F OR APPROVED PROJECT EXCAVATION
- P ITEM 715001 - PERFORATED PIPE UNDERDRAINS, 6"
- Q ITEM 760504 - RUMBLE STRIPS, HOT-MIX
- R ITEM 602772 - MECHANICALLY STABILIZED EARTH WALLS
- S ITEM 602773 - PCC MASONRY FOR MECHANICALLY STABILIZED EARTH WALLS
- T ITEM 720512 - PCC SAFETY BARRIER PERMANENT, SINGLE FACE
- U ITEM 720654 - PCC SAFETY BARRIER PERMANENT, SINGLE FACE, MODIFIED TYPE 1
- V ITEM 720587 - PCC SAFETY BARRIER PERMANENT, DOUBLE FACE, MODIFIED
- W ITEM 720655 - PCC SAFETY BARRIER PERMANENT, SINGLE FACE, MODIFIED TYPE 2
- X ITEM 712005 - RIPRAP, R-4
- Y ITEM 401665 - SUPERPAVE, TYPE C HOT-MIX, 160 GYRATIONS, PG 64-22, PATCHING
- Z ITEM 401666 - SUPERPAVE, TYPE B HOT-MIX, 160 GYRATIONS, PG 64-22, PATCHING
- AA ITEM 401667 - SUPERPAVE, BITUMINOUS CONCRETE BASE COURSE, 160 GYRATIONS, PG 64-22, PATCHING
- BB ITEM 302008 - GRADED AGGREGATE BASE COURSE, TYPE B, PATCHING
- CC ITEM 755000 - HOT-MIX, HOT LAID, BITUMINOUS CONCRETE CURB
- DD ITEM 701010 - PORTLAND CEMENT CONCRETE CURB, TYPE 1
- EE ITEM 701011 - PORTLAND CEMENT CONCRETE CURB, TYPE 2
- FF ITEM 701020 - INTEGRAL PORTLAND CEMENT CONCRETE CURB AND GUTTER, TYPE 1
- GG ITEM 701023 - INTEGRAL PORTLAND CEMENT CONCRETE CURB AND GUTTER, TYPE 4
- HH ITEM 701026 - PORTLAND CEMENT CONCRETE MONOLITHIC MEDIAN
- II ITEM 701027 - PORTLAND CEMENT CONCRETE CURB, TYPE 1 MODIFIED
- JJ ITEM 720658 - PCC SAFETY BARRIER PERMANENT SINGLE FACE, MODIFIED, TYPE 5
- KK ITEM 720050 - GALVANIZED STEEL BEAM GUARDRAIL, TYPE 1
- LL ITEM 760507 - PROFILE MILLING, HOT-MIX
- MM ITEM 720656 - PCC SAFETY BARRIER PERMANENT, SINGLE FACE, MODIFIED, TYPE 3
- NN ITEM 720657 - PCC SAFETY BARRIER PERMANENT, SINGLE FACE, MODIFIED, TYPE 4
- OO ITEM 720651 - PCC SAFETY BARRIER PERMANENT, DOUBLE FACE, BIFURCATED, TYPE 1
- PP ITEM 720652 - PCC SAFETY BARRIER PERMANENT, DOUBLE FACE, BIFURCATED, TYPE 2
- RR ITEM 401668 - SUPERPAVE, TYPE C HOT-MIX, 160 GYRATIONS, PG 64-22, WEDGE
- SS ITEM 401669 - SUPERPAVE, TYPE B HOT-MIX, 160 GYRATIONS, PG 64-22, WEDGE

PAVEMENT LIFT NOTE:

THE MAXIMUM LIFTS FOR THE INDIVIDUAL PAVING MATERIAL ARE AS FOLLOWS:
SUPERPAVE, TYPE C HOT-MIX - 2"
SUPERPAVE, TYPE B HOT-MIX - 3"
SUPERPAVE, BIT. CONC. BASE COURSE - 6"
GRADED AGGREGATE BASE COURSE - 8"

NOTES:

1) THE PGA IS APPLIED TO THE TOP OF THE FINAL PAVEMENT SURFACE.

UNOFFICIAL WEBSITE COPY

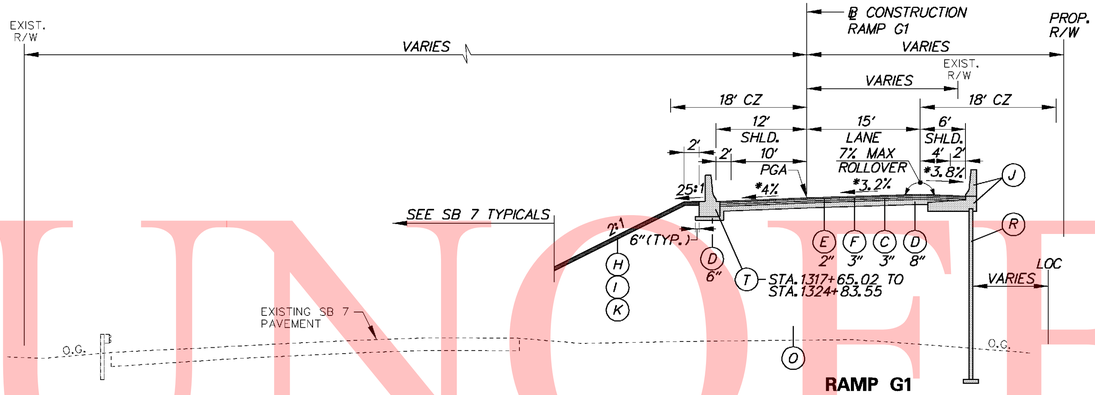

RAMP G1

STA. 1317 + 60.21 (BRIDGE) TO STA. 1324 + 83.55

*RAMP G1 CROSS-SLOPES			
STA.	LT. SHLD.	LANES	RT. SHLD.
1317+50.80	-6.00%	6.00%	6.00%
1317+92.80	-4.60%	4.60%	3.20%
1318+00	-4.36%	4.36%	2.72%
1318+10.80	-4.00%	4.00%	2.00%
1318+34.80	-4.00%	3.20%	0.40%
1318+40.80	-4.00%	3.20%	0.00%
1318+50	-4.00%	3.20%	-0.61%
1318+97.80	-4.00%	3.20%	-3.80%
1324+51.55	-4.00%	3.20%	-3.80%
1324+57.55	-4.00%	3.00%	-4.00%
1324+83.55	-4.00%	2.13%	-4.00%

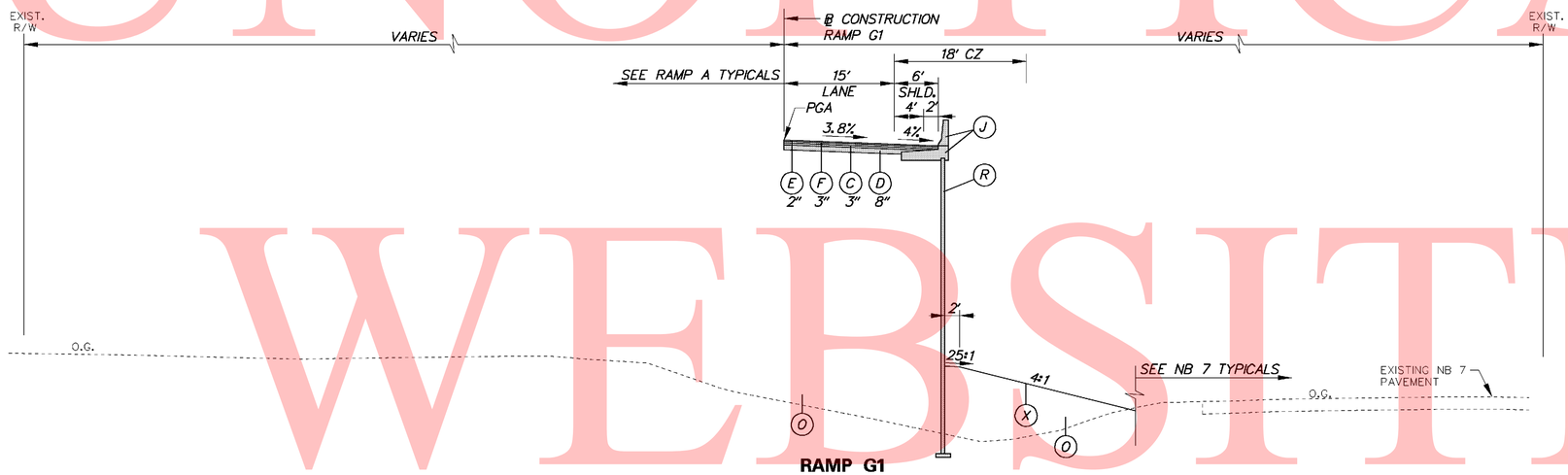

RAMP G1

STA. 1310 + 64.89 TO STA. 1311 + 30.11 (BRIDGE)

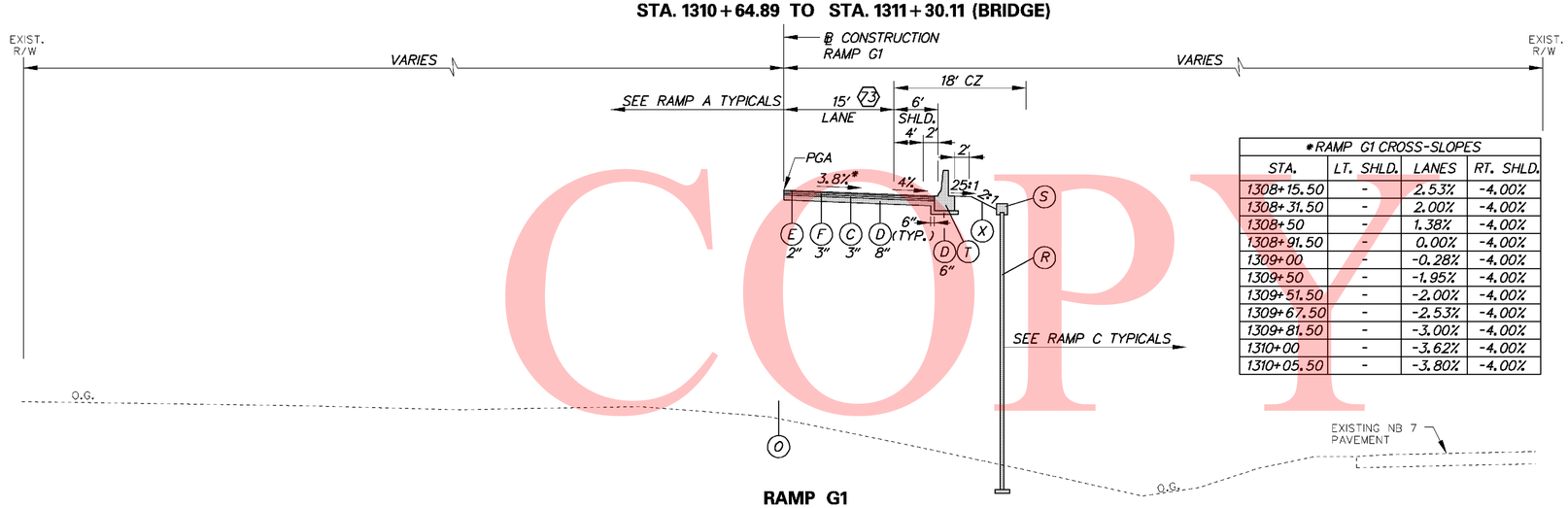

*RAMP G1 CROSS-SLOPES			
STA.	LT. SHLD.	LANES	RT. SHLD.
1308+15.50	-	2.53%	-4.00%
1308+31.50	-	2.00%	-4.00%
1308+50	-	1.38%	-4.00%
1308+91.50	-	0.00%	-4.00%
1309+00	-	-0.28%	-4.00%
1309+50	-	-1.95%	-4.00%
1309+51.50	-	-2.00%	-4.00%
1309+67.50	-	-2.53%	-4.00%
1309+81.50	-	-3.00%	-4.00%
1310+00	-	-3.62%	-4.00%
1310+05.50	-	-3.80%	-4.00%

RAMP G1

STA. 1308 + 15.50 TO STA. 1310 + 64.89

73 STA. 1308+15.50 TO STA. 1309+67.49
WIDTH TAPERS 12' TO 15'

LEGEND

- (A) ITEM 401708 - SUPERPAVE, TYPE C HOT-MIX, 160 GYRATIONS, PG 70-22 (NON-CARBONATE STONE)
- (B) ITEM 401654 - SUPERPAVE, TYPE B HOT-MIX, 160 GYRATIONS, PG 70-22
- (C) ITEM 401663 - SUPERPAVE, BITUMINOUS CONCRETE BASE COURSE, 160 GYRATIONS, PG 64-22
- (D) ITEM 302007 - GRADED AGGREGATE BASE COURSE, TYPE B
- (E) ITEM 401711 - SUPERPAVE, TYPE C HOT-MIX, 160 GYRATIONS, PG 76-22 (NON-CARBONATE STONE)
- (F) ITEM 401660 - SUPERPAVE, TYPE B HOT-MIX, 160 GYRATIONS, PG 76-22
- (G) ITEM 501006 - PORTLAND CEMENT CONCRETE PAVEMENT, 12"
- (H) ITEM 732002 - TOPSOIL, 6" DEPTH
- (I) ITEM 734013 - PERMANENT GRASS SEEDING, DRY GROUND
- (J) ITEM 602017 - PCC MASONRY, PARAPET, CLASS A
- (K) ITEM 735533 - SOIL RETENTION BLANKET MULCH, TYPE 3
- (L) ITEM 735534 - SOIL RETENTION BLANKET MULCH, TYPE 4
- (M) ITEM 735535 - SOIL RETENTION BLANKET MULCH, TYPE 5, UNLESS OTHERWISE NOTED, SEE DRAINAGE PLANS FOR LIMITS AND TYPE
- (N) ITEM 209001 - BORROW, TYPE A
- (O) ITEM 209006 - BORROW, TYPE F OR APPROVED PROJECT EXCAVATION
- (P) ITEM 715001 - PERFORATED PIPE UNDERDRAINS, 6"
- (Q) ITEM 760504 - RUMBLE STRIPS, HOT-MIX
- (R) ITEM 602772 - MECHANICALLY STABILIZED EARTH WALLS
- (S) ITEM 602773 - PCC MASONRY FOR MECHANICALLY STABILIZED EARTH WALLS
- (T) ITEM 720512 - PCC SAFETY BARRIER PERMANENT, SINGLE FACE
- (U) ITEM 720654 - PCC SAFETY BARRIER PERMANENT, SINGLE FACE, MODIFIED TYPE 1
- (V) ITEM 720587 - PCC SAFETY BARRIER PERMANENT, DOUBLE FACE, MODIFIED
- (W) ITEM 720655 - PCC SAFETY BARRIER PERMANENT, SINGLE FACE, MODIFIED TYPE 2
- (X) ITEM 712005 - RIPRAP, R-4
- (Y) ITEM 401665 - SUPERPAVE, TYPE C HOT-MIX, 160 GYRATIONS, PG 64-22, PATCHING
- (Z) ITEM 401666 - SUPERPAVE, TYPE B HOT-MIX, 160 GYRATIONS, PG 64-22, PATCHING
- (AA) ITEM 401667 - SUPERPAVE, BITUMINOUS CONCRETE BASE COURSE, 160 GYRATIONS, PG 64-22, PATCHING
- (BB) ITEM 302008 - GRADED AGGREGATE BASE COURSE, TYPE B, PATCHING
- (CC) ITEM 755000 - HOT-MIX, HOT LAID, BITUMINOUS CONCRETE CURB
- (DD) ITEM 701010 - PORTLAND CEMENT CONCRETE CURB, TYPE 1
- (EE) ITEM 701011 - PORTLAND CEMENT CONCRETE CURB, TYPE 2
- (FF) ITEM 701020 - INTEGRAL PORTLAND CEMENT CONCRETE CURB AND GUTTER, TYPE 1
- (GG) ITEM 701023 - INTEGRAL PORTLAND CEMENT CONCRETE CURB AND GUTTER, TYPE 4
- (HH) ITEM 701026 - PORTLAND CEMENT CONCRETE MONOLITHIC MEDIAN
- (II) ITEM 701027 - PORTLAND CEMENT CONCRETE CURB, TYPE 1 MODIFIED
- (JJ) ITEM 720658 - PCC SAFETY BARRIER PERMANENT SINGLE FACE, MODIFIED, TYPE 5
- (KK) ITEM 720050 - GALVANIZED STEEL BEAM GUARDRAIL, TYPE 1
- (LL) ITEM 760507 - PROFILE MILLING, HOT-MIX
- (MM) ITEM 720656 - PCC SAFETY BARRIER PERMANENT, SINGLE FACE, MODIFIED, TYPE 3
- (NN) ITEM 720657 - PCC SAFETY BARRIER PERMANENT, SINGLE FACE, MODIFIED, TYPE 4
- (OO) ITEM 720651 - PCC SAFETY BARRIER PERMANENT, DOUBLE FACE, BIFURCATED, TYPE 1
- (PP) ITEM 720652 - PCC SAFETY BARRIER PERMANENT, DOUBLE FACE, BIFURCATED, TYPE 2
- (RR) ITEM 401668 - SUPERPAVE, TYPE C HOT-MIX, 160 GYRATIONS, PG 64-22, WEDGE
- (SS) ITEM 401669 - SUPERPAVE, TYPE B HOT-MIX, 160 GYRATIONS, PG 64-22, WEDGE

PAVEMENT LIFT NOTE:

THE MAXIMUM LIFTS FOR THE INDIVIDUAL PAVING MATERIAL ARE AS FOLLOWS:
SUPERPAVE, TYPE C HOT-MIX - 2"
SUPERPAVE, TYPE B HOT-MIX - 3"
SUPERPAVE, BIT. CONC. BASE COURSE - 6"
GRADED AGGREGATE BASE COURSE - 8"

NOTES:

1) THE PGA IS APPLIED TO THE TOP OF THE FINAL PAVEMENT SURFACE.

UNOFFICIAL WEBSITE COPY

10/28/2010 5:15:35 PM
M:\PROJECTS\2003\03059_DELTRNPK\SR1MALL\CADD\2809003\PLANS\TS33_SR1.DGN

DELAWARE DEPARTMENT OF TRANSPORTATION	ADDENDUMS / REVISIONS	NOT TO SCALE	SR1 / I-95 INTERCHANGE	CONTRACT 28-090-03	BRIDGE NO.	TYPICAL SECTIONS	SHEET NO. 40
				COUNTY NEW CASTLE	DESIGNED BY:		TOTAL SHTS. 803
					CHECKED BY:		

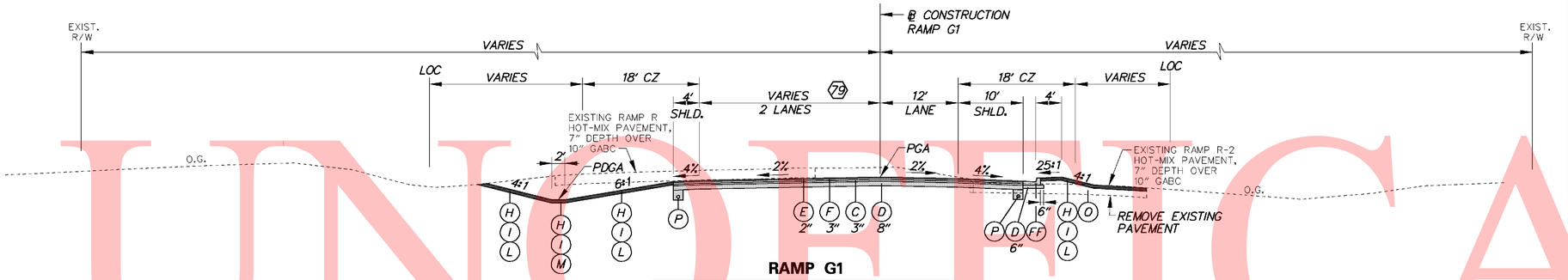

RAMP G1

STA. 1330+75.00 TO STA. 1331+75.12

79 STA.1330+75.00 TO STA.1331+75.12
WIDTH TAPERS 25.57' TO 28'

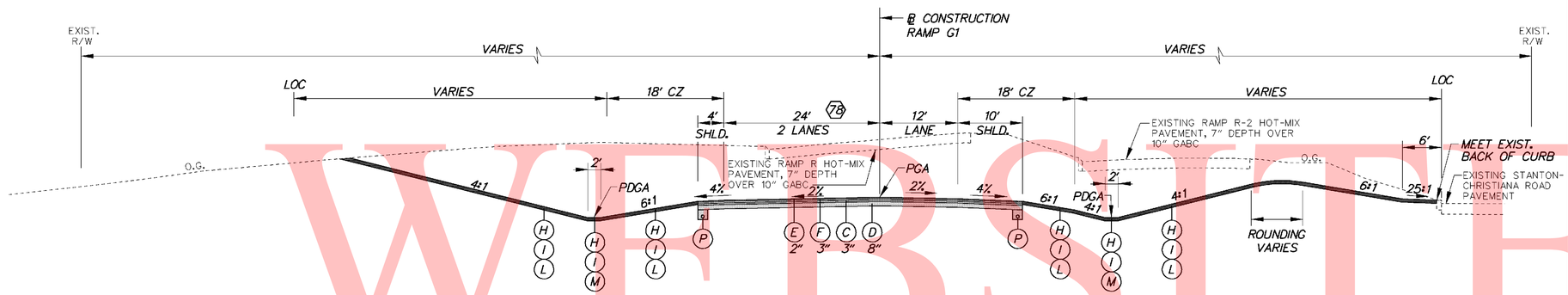

RAMP G1

STA. 1327+10.00 TO STA. 1330+75.00

78 STA.1329+96.28 TO STA.1330+75.00
WIDTH TAPERS 24' TO 25.57'

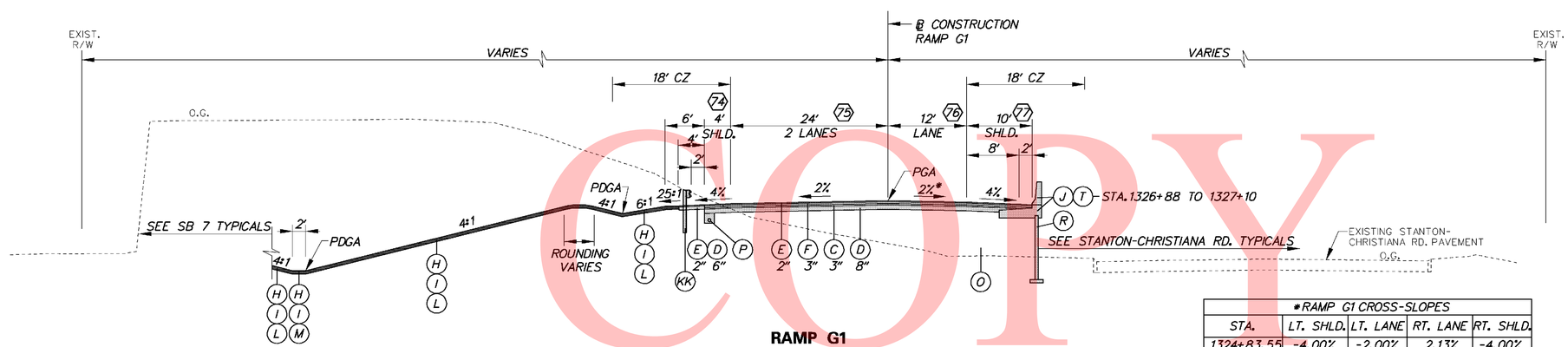

RAMP G1

STA. 1324+83.55 TO STA. 1327+10.00

74 STA.1325+00.00 TO STA.1325+50.00
SHOULDER TAPERS 12' TO 4'

75 STA.1325+00.00 TO STA.1326+50.00
WIDTH TAPERS 0' TO 24'

76 STA.1325+00.00 TO STA.1326+50.00
WIDTH TAPERS 15' TO 12'

77 STA.1325+00.00 TO STA.1326+50.00
SHOULDER TAPERS 6' TO 10'

*RAMP G1 CROSS-SLOPES				
STA.	LT. SHLD.	LT. LANE	RT. LANE	RT. SHLD.
1324+83.55	-4.00%	-2.00%	2.13%	-4.00%
1325+00	-4.00%	-2.00%	1.59%	-4.00%
1325+47.55	-4.00%	-2.00%	0.00%	-4.00%
1325+50	-4.00%	-2.00%	-0.08%	-4.00%
1326+00	-4.00%	-2.00%	-1.75%	-4.00%
1326+07.55	-4.00%	-2.00%	-2.00%	-4.00%

LEGEND

- (A) ITEM 401708 - SUPERPAVE, TYPE C HOT-MIX, 160 GYRATIONS, PG 70-22 (NON-CARBONATE STONE)
- (B) ITEM 401654 - SUPERPAVE, TYPE B HOT-MIX, 160 GYRATIONS, PG 70-22
- (C) ITEM 401663 - SUPERPAVE, BITUMINOUS CONCRETE BASE COURSE, 160 GYRATIONS, PG 64-22
- (D) ITEM 302007 - GRADED AGGREGATE BASE COURSE, TYPE B
- (E) ITEM 401711 - SUPERPAVE, TYPE C HOT-MIX, 160 GYRATIONS, PG 76-22 (NON-CARBONATE STONE)
- (F) ITEM 401660 - SUPERPAVE, TYPE B HOT-MIX, 160 GYRATIONS, PG 76-22
- (G) ITEM 501006 - PORTLAND CEMENT CONCRETE PAVEMENT, 12"
- (H) ITEM 732002 - TOPSOIL, 6" DEPTH
- (I) ITEM 734013 - PERMANENT GRASS SEEDING, DRY GROUND
- (J) ITEM 602017 - PCC MASONRY, PARAPET, CLASS A
- (K) ITEM 735533 - SOIL RETENTION BLANKET MULCH, TYPE 3
- (L) ITEM 735534 - SOIL RETENTION BLANKET MULCH, TYPE 4
- (M) ITEM 735535 - SOIL RETENTION BLANKET MULCH, TYPE 5, UNLESS OTHERWISE NOTED, SEE DRAINAGE PLANS FOR LIMITS AND TYPE
- (N) ITEM 209001 - BORROW, TYPE A
- (O) ITEM 209006 - BORROW, TYPE F OR APPROVED PROJECT EXCAVATION
- (P) ITEM 715001 - PERFORATED PIPE UNDERDRAINS, 6"
- (Q) ITEM 760504 - RUMBLE STRIPS, HOT-MIX
- (R) ITEM 602772 - MECHANICALLY STABILIZED EARTH WALLS
- (S) ITEM 602773 - PCC MASONRY FOR MECHANICALLY STABILIZED EARTH WALLS
- (T) ITEM 720512 - PCC SAFETY BARRIER PERMANENT, SINGLE FACE
- (U) ITEM 720654 - PCC SAFETY BARRIER PERMANENT, SINGLE FACE, MODIFIED TYPE 1
- (V) ITEM 720587 - PCC SAFETY BARRIER PERMANENT, DOUBLE FACE, MODIFIED
- (W) ITEM 720655 - PCC SAFETY BARRIER PERMANENT, SINGLE FACE, MODIFIED TYPE 2
- (X) ITEM 712005 - RIPRAP, R-4
- (Y) ITEM 401665 - SUPERPAVE, TYPE C HOT-MIX, 160 GYRATIONS, PG 64-22, PATCHING
- (Z) ITEM 401666 - SUPERPAVE, TYPE B HOT-MIX, 160 GYRATIONS, PG 64-22, PATCHING
- (AA) ITEM 401667 - SUPERPAVE, BITUMINOUS CONCRETE BASE COURSE, 160 GYRATIONS, PG 64-22, PATCHING
- (BB) ITEM 302008 - GRADED AGGREGATE BASE COURSE, TYPE B, PATCHING
- (CC) ITEM 755000 - HOT-MIX, HOT LAID, BITUMINOUS CONCRETE CURB
- (DD) ITEM 701010 - PORTLAND CEMENT CONCRETE CURB, TYPE 1
- (EE) ITEM 701011 - PORTLAND CEMENT CONCRETE CURB, TYPE 2
- (FF) ITEM 701020 - INTEGRAL PORTLAND CEMENT CONCRETE CURB AND GUTTER, TYPE 1
- (GG) ITEM 701023 - INTEGRAL PORTLAND CEMENT CONCRETE CURB AND GUTTER, TYPE 4
- (HH) ITEM 701026 - PORTLAND CEMENT CONCRETE MONOLITHIC MEDIAN
- (II) ITEM 701027 - PORTLAND CEMENT CONCRETE CURB, TYPE 1 MODIFIED
- (JJ) ITEM 720658 - PCC SAFETY BARRIER PERMANENT SINGLE FACE, MODIFIED, TYPE 5
- (KK) ITEM 720050 - GALVANIZED STEEL BEAM GUARDRAIL, TYPE 1
- (LL) ITEM 760507 - PROFILE MILLING, HOT-MIX
- (MM) ITEM 720656 - PCC SAFETY BARRIER PERMANENT, SINGLE FACE, MODIFIED, TYPE 3
- (NN) ITEM 720657 - PCC SAFETY BARRIER PERMANENT, SINGLE FACE, MODIFIED, TYPE 4
- (OO) ITEM 720651 - PCC SAFETY BARRIER PERMANENT, DOUBLE FACE, BIFURCATED, TYPE 1
- (PP) ITEM 720652 - PCC SAFETY BARRIER PERMANENT, DOUBLE FACE, BIFURCATED, TYPE 2
- (RR) ITEM 401668 - SUPERPAVE, TYPE C HOT-MIX, 160 GYRATIONS, PG 64-22, WEDGE
- (SS) ITEM 401669 - SUPERPAVE, TYPE B HOT-MIX, 160 GYRATIONS, PG 64-22, WEDGE

PAVEMENT LIFT NOTE:

THE MAXIMUM LIFTS FOR THE INDIVIDUAL PAVING MATERIAL ARE AS FOLLOWS:
SUPERPAVE, TYPE C HOT-MIX - 2"
SUPERPAVE, TYPE B HOT-MIX - 3"
SUPERPAVE, BIT. CONC. BASE COURSE - 6"
GRADED AGGREGATE BASE COURSE - 8"

NOTES:

1) THE PGA IS APPLIED TO THE TOP OF THE FINAL PAVEMENT SURFACE.

UNOFFICIAL WEBSITE COPY

10/28/2010 5:24:05 PM
M:\PROJECTS\2003\03059_DELTRNPK\SRIMALL\CADD\2809003\PLANS\TS34_SR1.DGN

DELAWARE DEPARTMENT OF TRANSPORTATION	ADDENDUMS / REVISIONS	NOT TO SCALE	SR1 / I-95 INTERCHANGE	CONTRACT 28-090-03	BRIDGE NO.	TYPICAL SECTIONS	SHEET NO. 41
				COUNTY NEW CASTLE	DESIGNED BY:		TOTAL SHTS. 803
					CHECKED BY:		

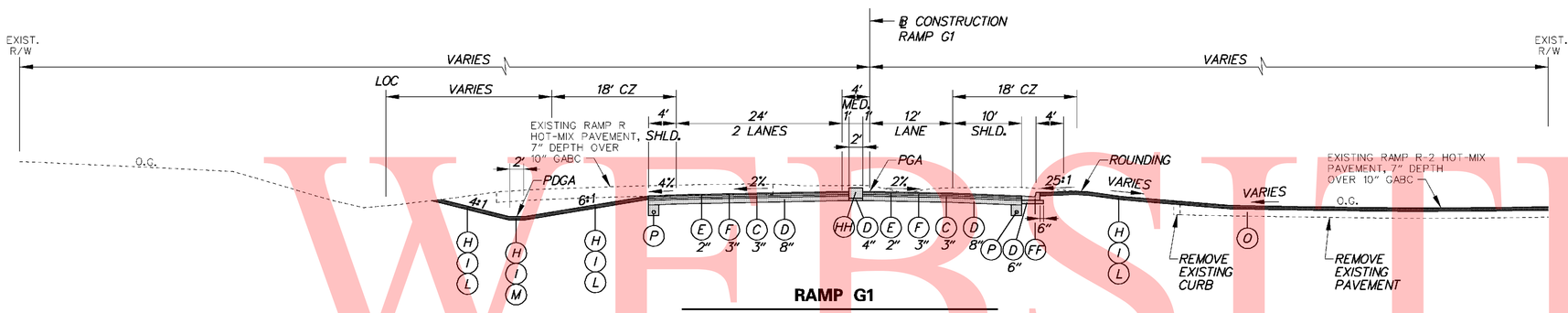

RAMP G1

STA. 1331+75.12 TO STA. 1332+40.00

LEGEND

- (A) ITEM 401708 - SUPERPAVE, TYPE C HOT-MIX, 160 GYRATIONS, PG 70-22 (NON-CARBONATE STONE)
- (B) ITEM 401654 - SUPERPAVE, TYPE B HOT-MIX, 160 GYRATIONS, PG 70-22
- (C) ITEM 401663 - SUPERPAVE, BITUMINOUS CONCRETE BASE COURSE, 160 GYRATIONS, PG 64-22
- (D) ITEM 302007 - GRADED AGGREGATE BASE COURSE, TYPE B
- (E) ITEM 401711 - SUPERPAVE, TYPE C HOT-MIX, 160 GYRATIONS, PG 76-22 (NON-CARBONATE STONE)
- (F) ITEM 401660 - SUPERPAVE, TYPE B HOT-MIX, 160 GYRATIONS, PG 76-22
- (G) ITEM 501006 - PORTLAND CEMENT CONCRETE PAVEMENT, 12"
- (H) ITEM 732002 - TOPSOIL, 6" DEPTH
- (I) ITEM 734013 - PERMANENT GRASS SEEDING, DRY GROUND
- (J) ITEM 602017 - PCC MASONRY, PARAPET, CLASS A
- (K) ITEM 735533 - SOIL RETENTION BLANKET MULCH, TYPE 3
- (L) ITEM 735534 - SOIL RETENTION BLANKET MULCH, TYPE 4
- (M) ITEM 735535 - SOIL RETENTION BLANKET MULCH, TYPE 5, UNLESS OTHERWISE NOTED, SEE DRAINAGE PLANS FOR LIMITS AND TYPE
- (N) ITEM 209001 - BORROW, TYPE A
- (O) ITEM 209006 - BORROW, TYPE F OR APPROVED PROJECT EXCAVATION
- (P) ITEM 715001 - PERFORATED PIPE UNDERDRAINS, 6"
- (Q) ITEM 760504 - RUMBLE STRIPS, HOT-MIX
- (R) ITEM 602772 - MECHANICALLY STABILIZED EARTH WALLS
- (S) ITEM 602773 - PCC MASONRY FOR MECHANICALLY STABILIZED EARTH WALLS
- (T) ITEM 720512 - PCC SAFETY BARRIER PERMANENT, SINGLE FACE
- (U) ITEM 720654 - PCC SAFETY BARRIER PERMANENT, SINGLE FACE, MODIFIED TYPE 1
- (V) ITEM 720587 - PCC SAFETY BARRIER PERMANENT, DOUBLE FACE, MODIFIED
- (W) ITEM 720655 - PCC SAFETY BARRIER PERMANENT, SINGLE FACE, MODIFIED TYPE 2
- (X) ITEM 712005 - RIPRAP, R-4
- (Y) ITEM 401665 - SUPERPAVE, TYPE C HOT-MIX, 160 GYRATIONS, PG 64-22, PATCHING
- (Z) ITEM 401666 - SUPERPAVE, TYPE B HOT-MIX, 160 GYRATIONS, PG 64-22, PATCHING
- (AA) ITEM 401667 - SUPERPAVE, BITUMINOUS CONCRETE BASE COURSE, 160 GYRATIONS, PG 64-22, PATCHING
- (BB) ITEM 302008 - GRADED AGGREGATE BASE COURSE, TYPE B, PATCHING
- (CC) ITEM 755000 - HOT-MIX, HOT LAID, BITUMINOUS CONCRETE CURB
- (DD) ITEM 701010 - PORTLAND CEMENT CONCRETE CURB, TYPE 1
- (EE) ITEM 701011 - PORTLAND CEMENT CONCRETE CURB, TYPE 2
- (FF) ITEM 701020 - INTEGRAL PORTLAND CEMENT CONCRETE CURB AND GUTTER, TYPE 1
- (GG) ITEM 701023 - INTEGRAL PORTLAND CEMENT CONCRETE CURB AND GUTTER, TYPE 4
- (HH) ITEM 701026 - PORTLAND CEMENT CONCRETE MONOLITHIC MEDIAN
- (II) ITEM 701027 - PORTLAND CEMENT CONCRETE CURB, TYPE 1 MODIFIED
- (JJ) ITEM 720658 - PCC SAFETY BARRIER PERMANENT SINGLE FACE, MODIFIED, TYPE 5
- (KK) ITEM 720050 - GALVANIZED STEEL BEAM GUARDRAIL, TYPE 1
- (LL) ITEM 760507 - PROFILE MILLING, HOT-MIX
- (MM) ITEM 720656 - PCC SAFETY BARRIER PERMANENT, SINGLE FACE, MODIFIED, TYPE 3
- (NN) ITEM 720657 - PCC SAFETY BARRIER PERMANENT, SINGLE FACE, MODIFIED, TYPE 4
- (OO) ITEM 720651 - PCC SAFETY BARRIER PERMANENT, DOUBLE FACE, BIFURCATED, TYPE 1
- (PP) ITEM 720652 - PCC SAFETY BARRIER PERMANENT, DOUBLE FACE, BIFURCATED, TYPE 2
- (RR) ITEM 401668 - SUPERPAVE, TYPE C HOT-MIX, 160 GYRATIONS, PG 64-22, WEDGE
- (SS) ITEM 401669 - SUPERPAVE, TYPE B HOT-MIX, 160 GYRATIONS, PG 64-22, WEDGE

PAVEMENT LIFT NOTE:

THE MAXIMUM LIFTS FOR THE INDIVIDUAL PAVING MATERIAL ARE AS FOLLOWS:
SUPERPAVE, TYPE C HOT-MIX - 2"
SUPERPAVE, TYPE B HOT-MIX - 3"
SUPERPAVE, BIT. CONC. BASE COURSE - 6"
GRADED AGGREGATE BASE COURSE - 8"

NOTES:

1) THE PGA IS APPLIED TO THE TOP OF THE FINAL PAVEMENT SURFACE.

UNOFFICIAL WEBSITE COPY

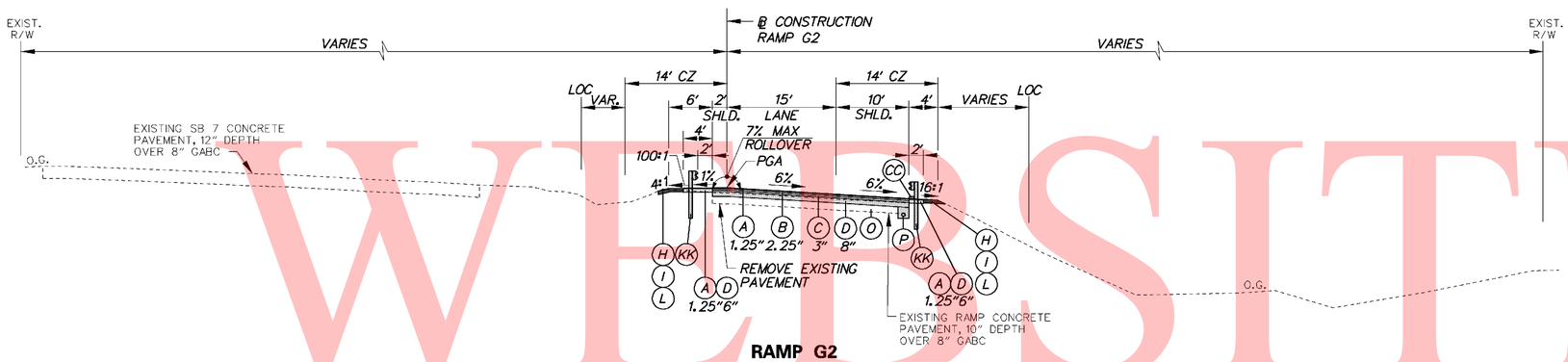

RAMP G2

STA. 1412+96.81 TO STA. 1414+40

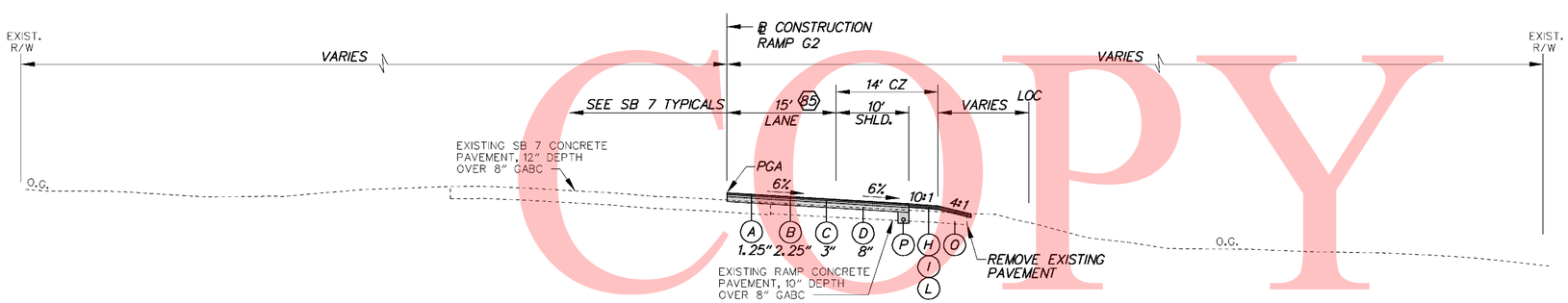

RAMP G2

STA. 1410+00 TO STA. 1412+96.81

85 STA.1410+00 TO STA.1411+53.83
WIDTH TAPERS 12' TO 15'

LEGEND

- (A) ITEM 401708 - SUPERPAVE, TYPE C HOT-MIX, 160 GYRATIONS, PG 70-22 (NON-CARBONATE STONE)
- (B) ITEM 401654 - SUPERPAVE, TYPE B HOT-MIX, 160 GYRATIONS, PG 70-22
- (C) ITEM 401663 - SUPERPAVE, BITUMINOUS CONCRETE BASE COURSE, 160 GYRATIONS, PG 64-22
- (D) ITEM 302007 - GRADED AGGREGATE BASE COURSE, TYPE B
- (E) ITEM 401711 - SUPERPAVE, TYPE C HOT-MIX, 160 GYRATIONS, PG 76-22 (NON-CARBONATE STONE)
- (F) ITEM 401660 - SUPERPAVE, TYPE B HOT-MIX, 160 GYRATIONS, PG 76-22
- (G) ITEM 501006 - PORTLAND CEMENT CONCRETE PAVEMENT, 12"
- (H) ITEM 732002 - TOPSOIL, 6" DEPTH
- (I) ITEM 734013 - PERMANENT GRASS SEEDING, DRY GROUND
- (J) ITEM 602017 - PCC MASONRY, PARAPET, CLASS A
- (K) ITEM 735533 - SOIL RETENTION BLANKET MULCH, TYPE 3
- (L) ITEM 735534 - SOIL RETENTION BLANKET MULCH, TYPE 4
- (M) ITEM 735535 - SOIL RETENTION BLANKET MULCH, TYPE 5, UNLESS OTHERWISE NOTED, SEE DRAINAGE PLANS FOR LIMITS AND TYPE
- (N) ITEM 209001 - BORROW, TYPE A
- (O) ITEM 209006 - BORROW, TYPE F OR APPROVED PROJECT EXCAVATION
- (P) ITEM 715001 - PERFORATED PIPE UNDERDRAINS, 6"
- (Q) ITEM 760504 - RUMBLE STRIPS, HOT-MIX
- (R) ITEM 602772 - MECHANICALLY STABILIZED EARTH WALLS
- (S) ITEM 602773 - PCC MASONRY FOR MECHANICALLY STABILIZED EARTH WALLS
- (T) ITEM 720512 - PCC SAFETY BARRIER PERMANENT, SINGLE FACE
- (U) ITEM 720654 - PCC SAFETY BARRIER PERMANENT, SINGLE FACE, MODIFIED TYPE 1
- (V) ITEM 720587 - PCC SAFETY BARRIER PERMANENT, DOUBLE FACE, MODIFIED
- (W) ITEM 720655 - PCC SAFETY BARRIER PERMANENT, SINGLE FACE, MODIFIED TYPE 2
- (X) ITEM 712005 - RIPRAP, R-4
- (Y) ITEM 401665 - SUPERPAVE, TYPE C HOT-MIX, 160 GYRATIONS, PG 64-22, PATCHING
- (Z) ITEM 401666 - SUPERPAVE, TYPE B HOT-MIX, 160 GYRATIONS, PG 64-22, PATCHING
- (AA) ITEM 401667 - SUPERPAVE, BITUMINOUS CONCRETE BASE COURSE, 160 GYRATIONS, PG 64-22, PATCHING
- (BB) ITEM 302008 - GRADED AGGREGATE BASE COURSE, TYPE B, PATCHING
- (CC) ITEM 755000 - HOT-MIX, HOT LAID, BITUMINOUS CONCRETE CURB
- (DD) ITEM 701010 - PORTLAND CEMENT CONCRETE CURB, TYPE 1
- (EE) ITEM 701011 - PORTLAND CEMENT CONCRETE CURB, TYPE 2
- (FF) ITEM 701020 - INTEGRAL PORTLAND CEMENT CONCRETE CURB AND GUTTER, TYPE 1
- (GG) ITEM 701023 - INTEGRAL PORTLAND CEMENT CONCRETE CURB AND GUTTER, TYPE 4
- (HH) ITEM 701026 - PORTLAND CEMENT CONCRETE MONOLITHIC MEDIAN
- (II) ITEM 701027 - PORTLAND CEMENT CONCRETE CURB, TYPE 1 MODIFIED
- (JJ) ITEM 720658 - PCC SAFETY BARRIER PERMANENT SINGLE FACE, MODIFIED, TYPE 5
- (KK) ITEM 720050 - GALVANIZED STEEL BEAM GUARDRAIL, TYPE 1
- (LL) ITEM 760507 - PROFILE MILLING, HOT-MIX
- (MM) ITEM 720656 - PCC SAFETY BARRIER PERMANENT, SINGLE FACE, MODIFIED, TYPE 3
- (NN) ITEM 720657 - PCC SAFETY BARRIER PERMANENT, SINGLE FACE, MODIFIED, TYPE 4
- (OO) ITEM 720651 - PCC SAFETY BARRIER PERMANENT, DOUBLE FACE, BIFURCATED, TYPE 1
- (PP) ITEM 720652 - PCC SAFETY BARRIER PERMANENT, DOUBLE FACE, BIFURCATED, TYPE 2
- (RR) ITEM 401668 - SUPERPAVE, TYPE C HOT-MIX, 160 GYRATIONS, PG 64-22, WEDGE
- (SS) ITEM 401669 - SUPERPAVE, TYPE B HOT-MIX, 160 GYRATIONS, PG 64-22, WEDGE

PAVEMENT LIFT NOTE:

THE MAXIMUM LIFTS FOR THE INDIVIDUAL PAVING MATERIAL ARE AS FOLLOWS:
SUPERPAVE, TYPE C HOT-MIX - 2"
SUPERPAVE, TYPE B HOT-MIX - 3"
SUPERPAVE, BIT. CONC. BASE COURSE - 6"
GRADED AGGREGATE BASE COURSE - 8"

NOTES:

1) THE PGA IS APPLIED TO THE TOP OF THE FINAL PAVEMENT SURFACE.

UNOFFICIAL WEBSITE COPY

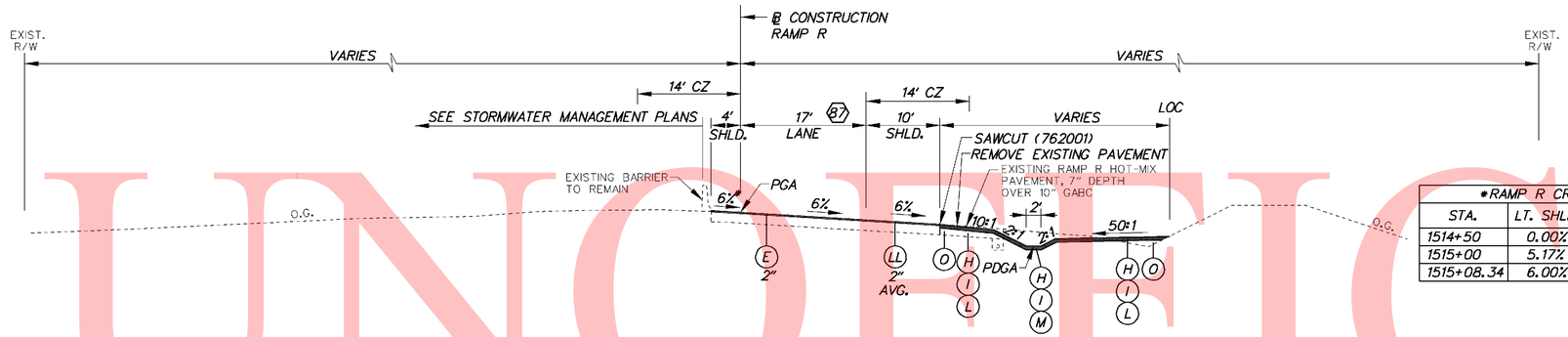

RAMP R

STA. 1514+18.76 TO STA. 1515+50.00

87 STA.1514+18.76 TO STA.1515+08.34
WIDTH TAPERS 15.34' TO 17'

*RAMP R CROSS-SLOPES			
STA.	LT. SHLD.	LANES	RT. SHLD.
1514+50	0.00%	-6.00%	-6.00%
1515+00	5.17%	-6.00%	-6.00%
1515+08.34	6.00%	-6.00%	-6.00%

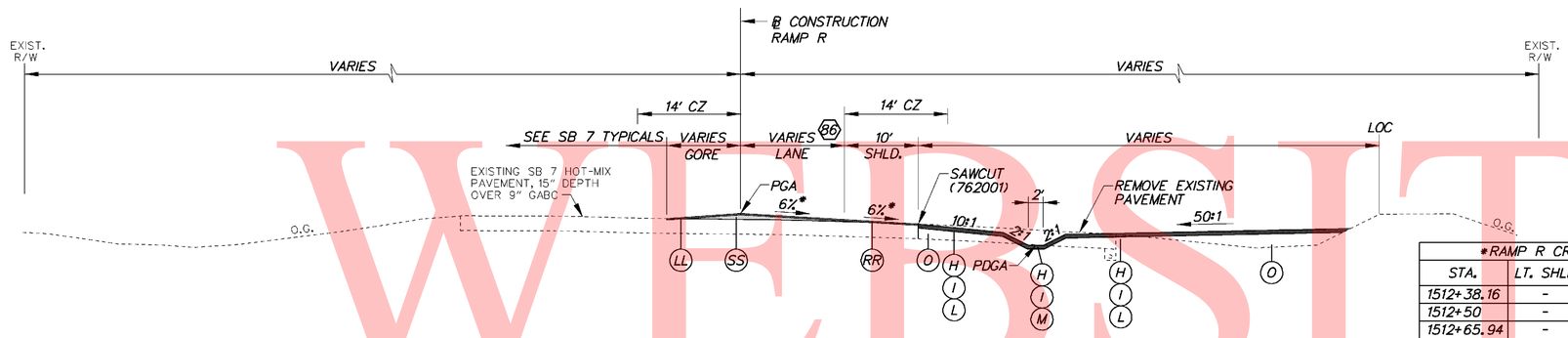

RAMP R

STA. 1512+38.16 TO STA. 1514+18.76

86 STA.1512+38.16 TO STA.1514+18.76
WIDTH TAPERS 12' TO 15.34'

*RAMP R CROSS-SLOPES			
STA.	LT. SHLD.	LANES	RT. SHLD.
1512+38.16	-	-2.00%	-4.00%
1512+50	-	-2.43%	-4.00%
1512+65.94	-	-3.00%	-4.00%
1512+93.72	-	-4.00%	-4.00%
1513+00	-	-4.23%	-4.23%
1513+49.27	-	-6.00%	-6.00%

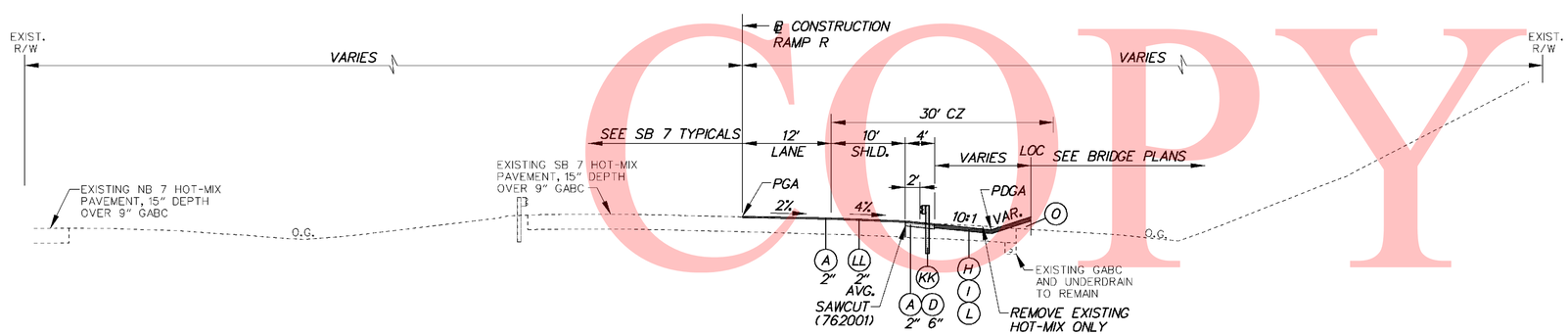

RAMP R

STA. 1510+00.00 TO STA. 1512+38.16

LEGEND

- (A) ITEM 401708 - SUPERPAVE, TYPE C HOT-MIX, 160 GYRATIONS, PG 70-22 (NON-CARBONATE STONE)
- (B) ITEM 401654 - SUPERPAVE, TYPE B HOT-MIX, 160 GYRATIONS, PG 70-22
- (C) ITEM 401663 - SUPERPAVE, BITUMINOUS CONCRETE BASE COURSE, 160 GYRATIONS, PG 64-22
- (D) ITEM 302007 - GRADED AGGREGATE BASE COURSE, TYPE B
- (E) ITEM 401711 - SUPERPAVE, TYPE C HOT-MIX, 160 GYRATIONS, PG 76-22 (NON-CARBONATE STONE)
- (F) ITEM 401660 - SUPERPAVE, TYPE B HOT-MIX, 160 GYRATIONS, PG 76-22
- (G) ITEM 501006 - PORTLAND CEMENT CONCRETE PAVEMENT, 12"
- (H) ITEM 732002 - TOPSOIL, 6" DEPTH
- (I) ITEM 734013 - PERMANENT GRASS SEEDING, DRY GROUND
- (J) ITEM 602017 - PCC MASONRY, PARAPET, CLASS A
- (K) ITEM 735533 - SOIL RETENTION BLANKET MULCH, TYPE 3
- (L) ITEM 735534 - SOIL RETENTION BLANKET MULCH, TYPE 4
- (M) ITEM 735535 - SOIL RETENTION BLANKET MULCH, TYPE 5, UNLESS OTHERWISE NOTED, SEE DRAINAGE PLANS FOR LIMITS AND TYPE
- (N) ITEM 209001 - BORROW, TYPE A
- (O) ITEM 209006 - BORROW, TYPE F OR APPROVED PROJECT EXCAVATION
- (P) ITEM 715001 - PERFORATED PIPE UNDERDRAINS, 6"
- (Q) ITEM 760504 - RUMBLE STRIPS, HOT-MIX
- (R) ITEM 602772 - MECHANICALLY STABILIZED EARTH WALLS
- (S) ITEM 602773 - PCC MASONRY FOR MECHANICALLY STABILIZED EARTH WALLS
- (T) ITEM 720512 - PCC SAFETY BARRIER PERMANENT, SINGLE FACE
- (U) ITEM 720654 - PCC SAFETY BARRIER PERMANENT, SINGLE FACE, MODIFIED TYPE 1
- (V) ITEM 720587 - PCC SAFETY BARRIER PERMANENT, DOUBLE FACE, MODIFIED
- (W) ITEM 720655 - PCC SAFETY BARRIER PERMANENT, SINGLE FACE, MODIFIED TYPE 2
- (X) ITEM 712005 - RIPRAP, R-4
- (Y) ITEM 401665 - SUPERPAVE, TYPE C HOT-MIX, 160 GYRATIONS, PG 64-22, PATCHING
- (Z) ITEM 401666 - SUPERPAVE, TYPE B HOT-MIX, 160 GYRATIONS, PG 64-22, PATCHING
- (AA) ITEM 401667 - SUPERPAVE, BITUMINOUS CONCRETE BASE COURSE, 160 GYRATIONS, PG 64-22, PATCHING
- (BB) ITEM 302008 - GRADED AGGREGATE BASE COURSE, TYPE B, PATCHING
- (CC) ITEM 755000 - HOT-MIX, HOT LAID, BITUMINOUS CONCRETE CURB
- (DD) ITEM 701010 - PORTLAND CEMENT CONCRETE CURB, TYPE 1
- (EE) ITEM 701011 - PORTLAND CEMENT CONCRETE CURB, TYPE 2
- (FF) ITEM 701020 - INTEGRAL PORTLAND CEMENT CONCRETE CURB AND GUTTER, TYPE 1
- (GG) ITEM 701023 - INTEGRAL PORTLAND CEMENT CONCRETE CURB AND GUTTER, TYPE 4
- (HH) ITEM 701026 - PORTLAND CEMENT CONCRETE MONOLITHIC MEDIAN
- (II) ITEM 701027 - PORTLAND CEMENT CONCRETE CURB, TYPE 1 MODIFIED
- (JJ) ITEM 720658 - PCC SAFETY BARRIER PERMANENT SINGLE FACE, MODIFIED, TYPE 5
- (KK) ITEM 720050 - GALVANIZED STEEL BEAM GUARDRAIL, TYPE 1
- (LL) ITEM 760507 - PROFILE MILLING, HOT-MIX
- (MM) ITEM 720656 - PCC SAFETY BARRIER PERMANENT, SINGLE FACE, MODIFIED, TYPE 3
- (NN) ITEM 720657 - PCC SAFETY BARRIER PERMANENT, SINGLE FACE, MODIFIED, TYPE 4
- (OO) ITEM 720651 - PCC SAFETY BARRIER PERMANENT, DOUBLE FACE, BIFURCATED, TYPE 1
- (PP) ITEM 720652 - PCC SAFETY BARRIER PERMANENT, DOUBLE FACE, BIFURCATED, TYPE 2
- (RR) ITEM 401668 - SUPERPAVE, TYPE C HOT-MIX, 160 GYRATIONS, PG 64-22, WEDGE
- (SS) ITEM 401669 - SUPERPAVE, TYPE B HOT-MIX, 160 GYRATIONS, PG 64-22, WEDGE

PAVEMENT LIFT NOTE:

THE MAXIMUM LIFTS FOR THE INDIVIDUAL PAVING MATERIAL ARE AS FOLLOWS:
SUPERPAVE, TYPE C HOT-MIX - 2"
SUPERPAVE, TYPE B HOT-MIX - 3"
SUPERPAVE, BIT. CONC. BASE COURSE - 6"
GRADED AGGREGATE BASE COURSE - 8"

NOTES:

1) THE PGA IS APPLIED TO THE TOP OF THE FINAL PAVEMENT SURFACE.

UNOFFICIAL WEBSITE COPY

10/29/2010 9:17:31 AM
M:\PROJECTS\2003\03059_DELTRNPK\SRIMALL\CADD\2809003\PLANS\TS38_SR1.DGN

DELAWARE DEPARTMENT OF TRANSPORTATION	ADDENDUMS / REVISIONS	NOT TO SCALE	SR1 / I-95 INTERCHANGE	CONTRACT 28-090-03	BRIDGE NO.	TYPICAL SECTIONS	SHEET NO. 44
				COUNTY NEW CASTLE	DESIGNED BY:		TOTAL SHTS. 803
					CHECKED BY:		

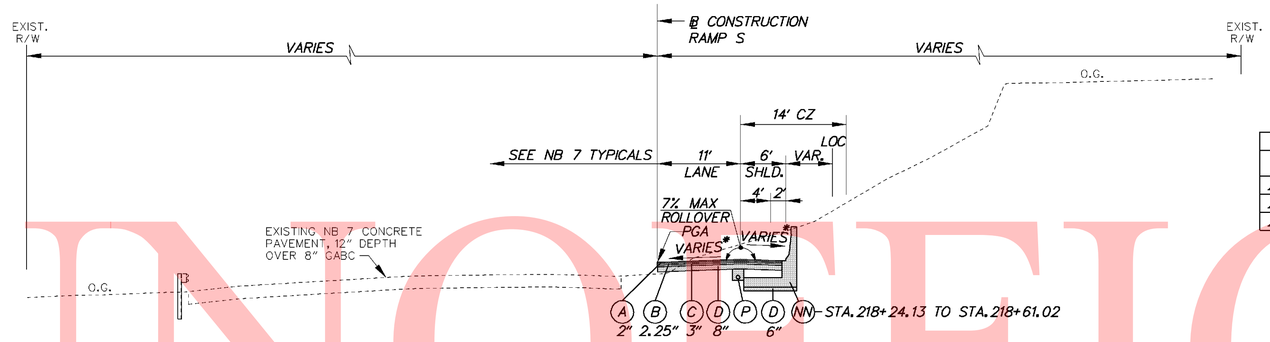

RAMP S

STA. 218+24.13 TO STA. 218+61.02

*RAMP S CROSS-SLOPES			
STA.	LT. SHLD.	LANES	RT. SHLD.
218+31.02	-	3.00%	-4.00%
218+50	-	3.63%	-3.37%
218+61.02	-	4.00%	-3.00%

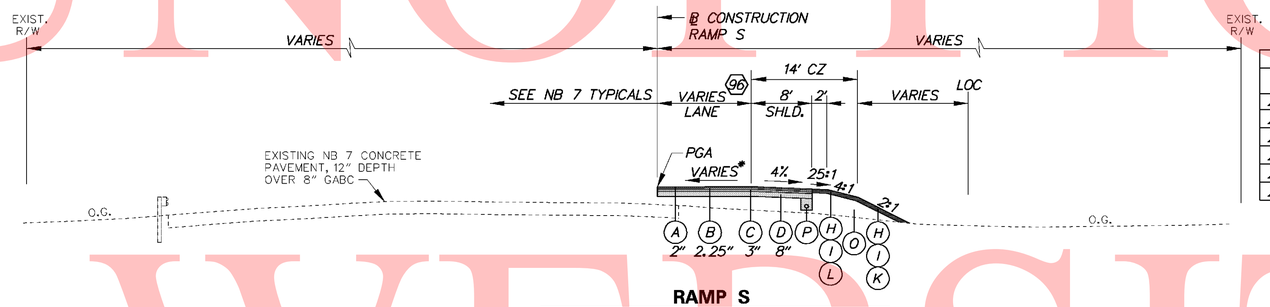

RAMP S

STA. 216+24.13 TO STA. 218+24.13

96 STA. 216+24.13 TO STA. 218+24.13
WIDTH TAPERS 15' TO 11'

*RAMP S CROSS-SLOPES			
STA.	LT. SHLD.	LANES	RT. SHLD.
216+81.02	-	-2.00%	-4.00%
217+00	-	-1.37%	-4.00%
217+41.02	-	0.00%	-4.00%
217+50	-	0.30%	-4.00%
218+00	-	1.97%	-4.00%
218+01.02	-	2.00%	-4.00%

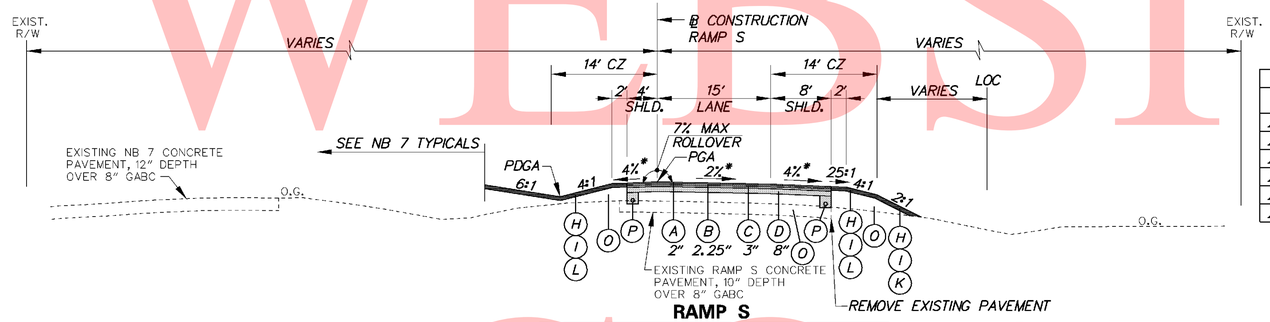

RAMP S

STA. 214+50.00 TO STA. 216+24.13

*RAMP S CROSS-SLOPES			
STA.	LT. SHLD.	LANES	RT. SHLD.
213+94.11	-1.00%	-6.00%	-6.00%
214+00	-1.24%	-5.76%	-5.76%
214+42.78	-3.00%	-4.00%	-4.00%
214+50	-3.30%	-3.70%	-4.00%
214+67.12	-4.00%	-3.00%	-4.00%
214+91.45	-4.00%	-2.00%	-4.00%

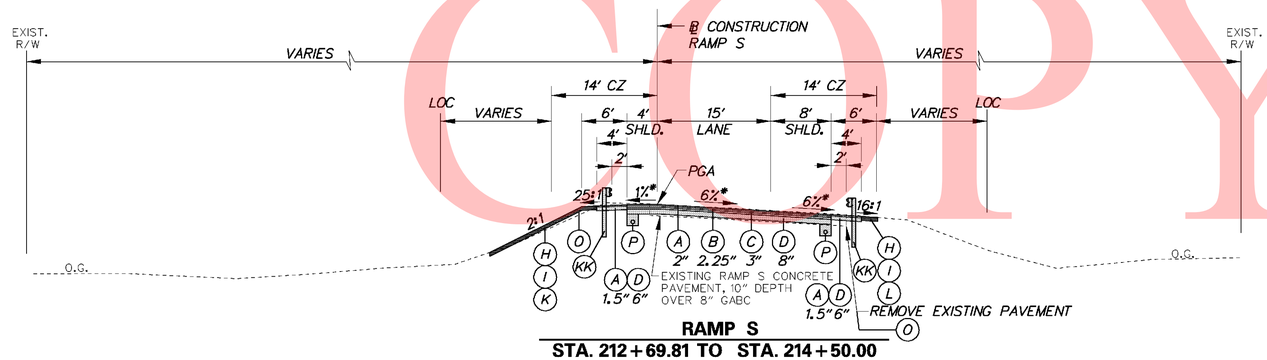

RAMP S

STA. 212+69.81 TO STA. 214+50.00

LEGEND

- (A) ITEM 401708 - SUPERPAVE, TYPE C HOT-MIX, 160 GYRATIONS, PG 70-22 (NON-CARBONATE STONE)
- (B) ITEM 401654 - SUPERPAVE, TYPE B HOT-MIX, 160 GYRATIONS, PG 70-22
- (C) ITEM 401663 - SUPERPAVE, BITUMINOUS CONCRETE BASE COURSE, 160 GYRATIONS, PG 64-22
- (D) ITEM 302007 - GRADED AGGREGATE BASE COURSE, TYPE B
- (E) ITEM 401711 - SUPERPAVE, TYPE C HOT-MIX, 160 GYRATIONS, PG 76-22 (NON-CARBONATE STONE)
- (F) ITEM 401660 - SUPERPAVE, TYPE B HOT-MIX, 160 GYRATIONS, PG 76-22
- (G) ITEM 501006 - PORTLAND CEMENT CONCRETE PAVEMENT, 12"
- (H) ITEM 732002 - TOPSOIL, 6" DEPTH
- (I) ITEM 734013 - PERMANENT GRASS SEEDING, DRY GROUND
- (J) ITEM 602017 - PCC MASONRY, PARAPET, CLASS A
- (K) ITEM 735533 - SOIL RETENTION BLANKET MULCH, TYPE 3
- (L) ITEM 735534 - SOIL RETENTION BLANKET MULCH, TYPE 4
- (M) ITEM 735535 - SOIL RETENTION BLANKET MULCH, TYPE 5, UNLESS OTHERWISE NOTED, SEE DRAINAGE PLANS FOR LIMITS AND TYPE
- (N) ITEM 209001 - BORROW, TYPE A
- (O) ITEM 209006 - BORROW, TYPE F OR APPROVED PROJECT EXCAVATION
- (P) ITEM 715001 - PERFORATED PIPE UNDERDRAINS, 6"
- (Q) ITEM 760504 - RUMBLE STRIPS, HOT-MIX
- (R) ITEM 602772 - MECHANICALLY STABILIZED EARTH WALLS
- (S) ITEM 602773 - PCC MASONRY FOR MECHANICALLY STABILIZED EARTH WALLS
- (T) ITEM 720512 - PCC SAFETY BARRIER PERMANENT, SINGLE FACE
- (U) ITEM 720654 - PCC SAFETY BARRIER PERMANENT, SINGLE FACE, MODIFIED TYPE 1
- (V) ITEM 720587 - PCC SAFETY BARRIER PERMANENT, DOUBLE FACE, MODIFIED
- (W) ITEM 720655 - PCC SAFETY BARRIER PERMANENT, SINGLE FACE, MODIFIED TYPE 2
- (X) ITEM 712005 - RIPRAP, R-4
- (Y) ITEM 401665 - SUPERPAVE, TYPE C HOT-MIX, 160 GYRATIONS, PG 64-22, PATCHING
- (Z) ITEM 401666 - SUPERPAVE, TYPE B HOT-MIX, 160 GYRATIONS, PG 64-22, PATCHING
- (AA) ITEM 401667 - SUPERPAVE, BITUMINOUS CONCRETE BASE COURSE, 160 GYRATIONS, PG 64-22, PATCHING
- (BB) ITEM 302008 - GRADED AGGREGATE BASE COURSE, TYPE B, PATCHING
- (CC) ITEM 755000 - HOT-MIX, HOT LAID, BITUMINOUS CONCRETE CURB
- (DD) ITEM 701010 - PORTLAND CEMENT CONCRETE CURB, TYPE 1
- (EE) ITEM 701011 - PORTLAND CEMENT CONCRETE CURB, TYPE 2
- (FF) ITEM 701020 - INTEGRAL PORTLAND CEMENT CONCRETE CURB AND GUTTER, TYPE 1
- (GG) ITEM 701023 - INTEGRAL PORTLAND CEMENT CONCRETE CURB AND GUTTER, TYPE 4
- (HH) ITEM 701026 - PORTLAND CEMENT CONCRETE MONOLITHIC MEDIAN
- (II) ITEM 701027 - PORTLAND CEMENT CONCRETE CURB, TYPE 1 MODIFIED
- (JJ) ITEM 720658 - PCC SAFETY BARRIER PERMANENT SINGLE FACE, MODIFIED, TYPE 5
- (KK) ITEM 720050 - GALVANIZED STEEL BEAM GUARDRAIL, TYPE 1
- (LL) ITEM 760507 - PROFILE MILLING, HOT-MIX
- (MM) ITEM 720656 - PCC SAFETY BARRIER PERMANENT, SINGLE FACE, MODIFIED, TYPE 3
- (NN) ITEM 720657 - PCC SAFETY BARRIER PERMANENT, SINGLE FACE, MODIFIED, TYPE 4
- (OO) ITEM 720651 - PCC SAFETY BARRIER PERMANENT, DOUBLE FACE, BIFURCATED, TYPE 1
- (PP) ITEM 720652 - PCC SAFETY BARRIER PERMANENT, DOUBLE FACE, BIFURCATED, TYPE 2
- (RR) ITEM 401668 - SUPERPAVE, TYPE C HOT-MIX, 160 GYRATIONS, PG 64-22, WEDGE
- (SS) ITEM 401669 - SUPERPAVE, TYPE B HOT-MIX, 160 GYRATIONS, PG 64-22, WEDGE

PAVEMENT LIFT NOTE:

THE MAXIMUM LIFTS FOR THE INDIVIDUAL PAVING MATERIAL ARE AS FOLLOWS:
SUPERPAVE, TYPE C HOT-MIX - 2"
SUPERPAVE, TYPE B HOT-MIX - 3"
SUPERPAVE, BIT. CONC. BASE COURSE - 6"
GRADED AGGREGATE BASE COURSE - 8"

NOTES:

1) THE PGA IS APPLIED TO THE TOP OF THE FINAL PAVEMENT SURFACE.

UNOFFICIAL WEBSITE COPY

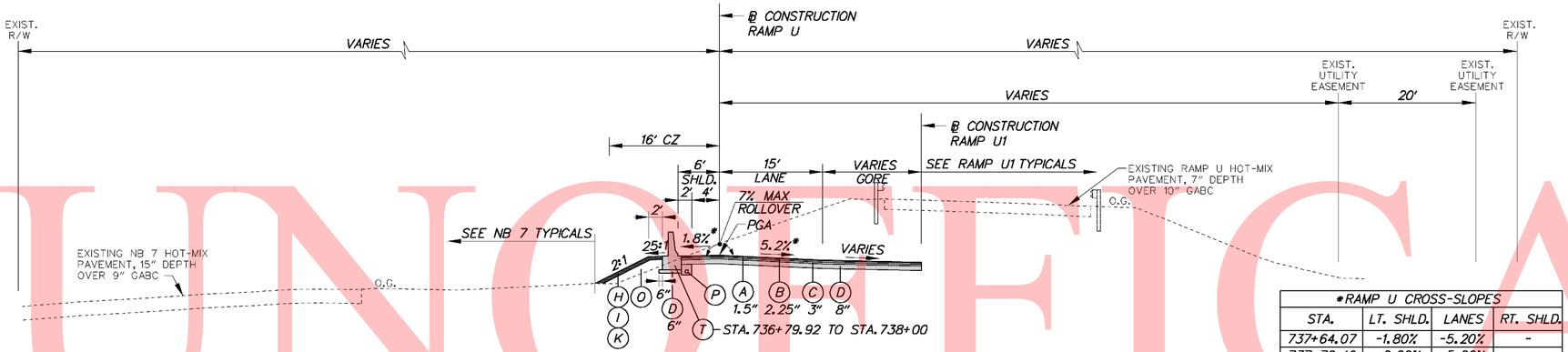

RAMP U

STA. 737+16.46 TO STA. 738+00

*RAMP U CROSS-SLOPES			
STA.	LT. SHLD.	LANES	RT. SHLD.
737+64.07	-1.80%	-5.20%	-
737+70.49	-2.00%	-5.00%	-
738+00	-3.00%	-4.00%	-

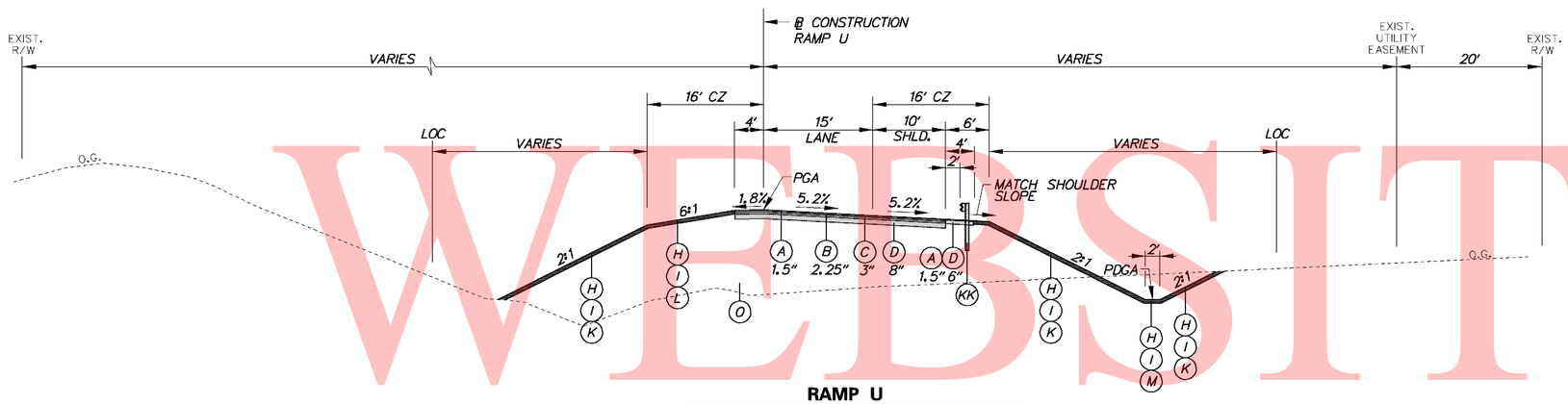

RAMP U

STA. 731+86.70 TO STA. 737+16.46

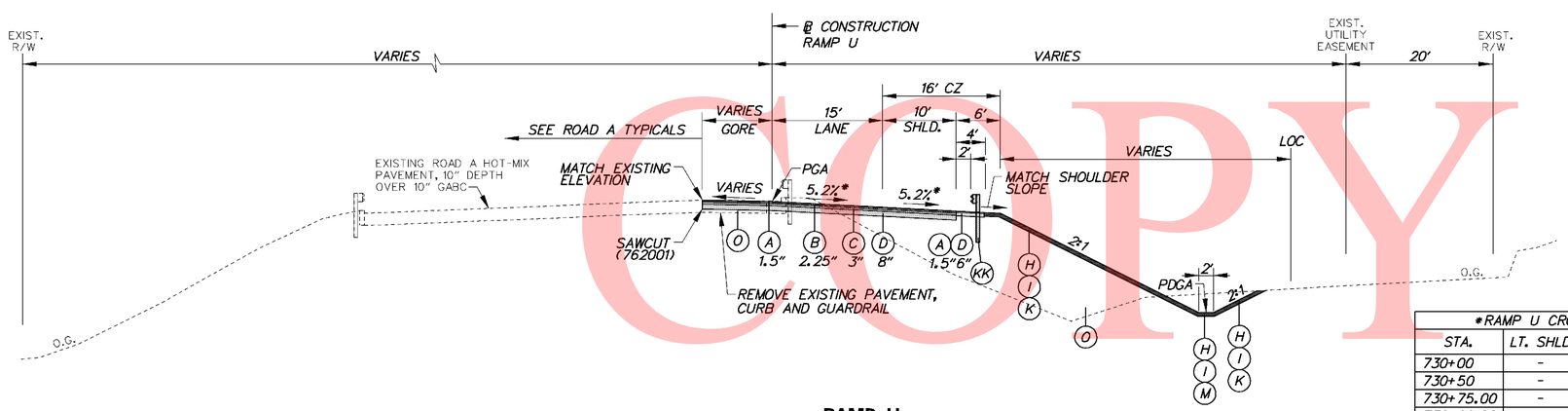

RAMP U

STA. 730+00 TO STA. 731+86.70

*RAMP U CROSS-SLOPES			
STA.	LT. SHLD.	LANES	RT. SHLD.
730+00	-	-2.00%	-4.00%
730+50	-	-3.67%	-4.00%
730+75.00	-	-4.50%	-4.00%
730+96.00	-	-5.20%	-5.20%

LEGEND

- (A) ITEM 401708 - SUPERPAVE, TYPE C HOT-MIX, 160 GYRATIONS, PG 70-22 (NON-CARBONATE STONE)
- (B) ITEM 401654 - SUPERPAVE, TYPE B HOT-MIX, 160 GYRATIONS, PG 70-22
- (C) ITEM 401663 - SUPERPAVE, BITUMINOUS CONCRETE BASE COURSE, 160 GYRATIONS, PG 64-22
- (D) ITEM 302007 - GRADED AGGREGATE BASE COURSE, TYPE B
- (E) ITEM 401711 - SUPERPAVE, TYPE C HOT-MIX, 160 GYRATIONS, PG 76-22 (NON-CARBONATE STONE)
- (F) ITEM 401660 - SUPERPAVE, TYPE B HOT-MIX, 160 GYRATIONS, PG 76-22
- (G) ITEM 501006 - PORTLAND CEMENT CONCRETE PAVEMENT, 12"
- (H) ITEM 732002 - TOPSOIL, 6" DEPTH
- (I) ITEM 734013 - PERMANENT GRASS SEEDING, DRY GROUND
- (J) ITEM 602017 - PCC MASONRY, PARAPET, CLASS A
- (K) ITEM 735533 - SOIL RETENTION BLANKET MULCH, TYPE 3
- (L) ITEM 735534 - SOIL RETENTION BLANKET MULCH, TYPE 4
- (M) ITEM 735535 - SOIL RETENTION BLANKET MULCH, TYPE 5, UNLESS OTHERWISE NOTED, SEE DRAINAGE PLANS FOR LIMITS AND TYPE
- (N) ITEM 209001 - BORROW, TYPE A
- (O) ITEM 209006 - BORROW, TYPE F OR APPROVED PROJECT EXCAVATION
- (P) ITEM 715001 - PERFORATED PIPE UNDERDRAINS, 6"
- (Q) ITEM 760504 - RUMBLE STRIPS, HOT-MIX
- (R) ITEM 602772 - MECHANICALLY STABILIZED EARTH WALLS
- (S) ITEM 602773 - PCC MASONRY FOR MECHANICALLY STABILIZED EARTH WALLS
- (T) ITEM 720512 - PCC SAFETY BARRIER PERMANENT, SINGLE FACE
- (U) ITEM 720654 - PCC SAFETY BARRIER PERMANENT, SINGLE FACE, MODIFIED TYPE 1
- (V) ITEM 720587 - PCC SAFETY BARRIER PERMANENT, DOUBLE FACE, MODIFIED
- (W) ITEM 720655 - PCC SAFETY BARRIER PERMANENT, SINGLE FACE, MODIFIED TYPE 2
- (X) ITEM 712005 - RIPRAP, R-4
- (Y) ITEM 401665 - SUPERPAVE, TYPE C HOT-MIX, 160 GYRATIONS, PG 64-22, PATCHING
- (Z) ITEM 401666 - SUPERPAVE, TYPE B HOT-MIX, 160 GYRATIONS, PG 64-22, PATCHING
- (AA) ITEM 401667 - SUPERPAVE, BITUMINOUS CONCRETE BASE COURSE, 160 GYRATIONS, PG 64-22, PATCHING
- (BB) ITEM 302008 - GRADED AGGREGATE BASE COURSE, TYPE B, PATCHING
- (CC) ITEM 755000 - HOT-MIX, HOT LAID, BITUMINOUS CONCRETE CURB
- (DD) ITEM 701010 - PORTLAND CEMENT CONCRETE CURB, TYPE 1
- (EE) ITEM 701011 - PORTLAND CEMENT CONCRETE CURB, TYPE 2
- (FF) ITEM 701020 - INTEGRAL PORTLAND CEMENT CONCRETE CURB AND GUTTER, TYPE 1
- (GG) ITEM 701023 - INTEGRAL PORTLAND CEMENT CONCRETE CURB AND GUTTER, TYPE 4
- (HH) ITEM 701026 - PORTLAND CEMENT CONCRETE MONOLITHIC MEDIAN
- (II) ITEM 701027 - PORTLAND CEMENT CONCRETE CURB, TYPE 1 MODIFIED
- (JJ) ITEM 720658 - PCC SAFETY BARRIER PERMANENT SINGLE FACE, MODIFIED, TYPE 5
- (KK) ITEM 720050 - GALVANIZED STEEL BEAM GUARDRAIL, TYPE 1
- (LL) ITEM 760507 - PROFILE MILLING, HOT-MIX
- (MM) ITEM 720656 - PCC SAFETY BARRIER PERMANENT, SINGLE FACE, MODIFIED, TYPE 3
- (NN) ITEM 720657 - PCC SAFETY BARRIER PERMANENT, SINGLE FACE, MODIFIED, TYPE 4
- (OO) ITEM 720651 - PCC SAFETY BARRIER PERMANENT, DOUBLE FACE, BIFURCATED, TYPE 1
- (PP) ITEM 720652 - PCC SAFETY BARRIER PERMANENT, DOUBLE FACE, BIFURCATED, TYPE 2
- (RR) ITEM 401668 - SUPERPAVE, TYPE C HOT-MIX, 160 GYRATIONS, PG 64-22, WEDGE
- (SS) ITEM 401669 - SUPERPAVE, TYPE B HOT-MIX, 160 GYRATIONS, PG 64-22, WEDGE

PAVEMENT LIFT NOTE:

THE MAXIMUM LIFTS FOR THE INDIVIDUAL PAVING MATERIAL ARE AS FOLLOWS:
SUPERPAVE, TYPE C HOT-MIX - 2"
SUPERPAVE, TYPE B HOT-MIX - 3"
SUPERPAVE, BIT. CONC. BASE COURSE - 6"
GRADED AGGREGATE BASE COURSE - 8"

NOTES:

1) THE PGA IS APPLIED TO THE TOP OF THE FINAL PAVEMENT SURFACE.

UNOFFICIAL WEBSITE COPY

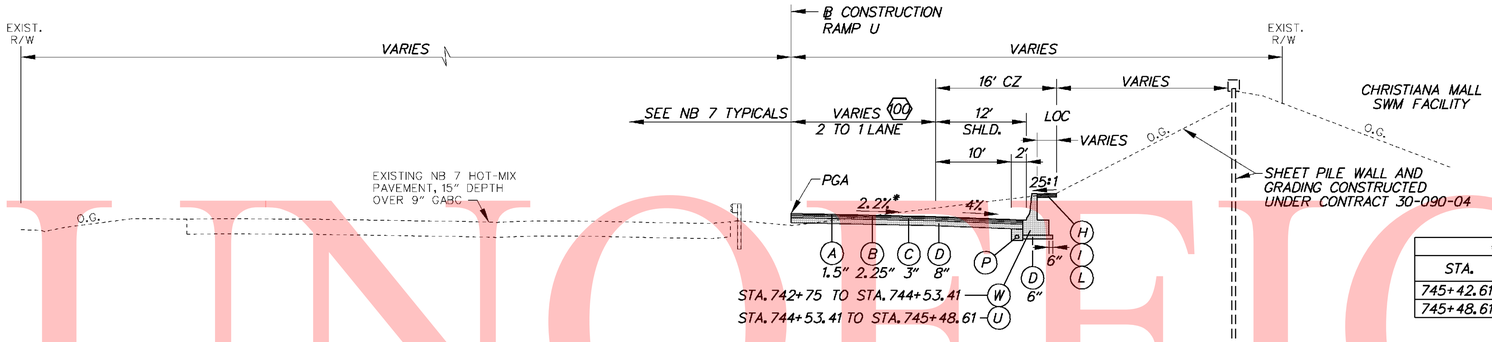

RAMP U

STA. 742+86.30 TO STA. 745+48.61

100 STA. 742+86.30 TO STA. 745+48.61
WIDTH TAPERS 20.53' TO 12'

*RAMP U CROSS-SLOPES			
STA.	LT. SHLD.	LANES	RT. SHLD.
745+42.61	-	-2.20%	-4.00%
745+48.61	-	-2.00%	-4.00%

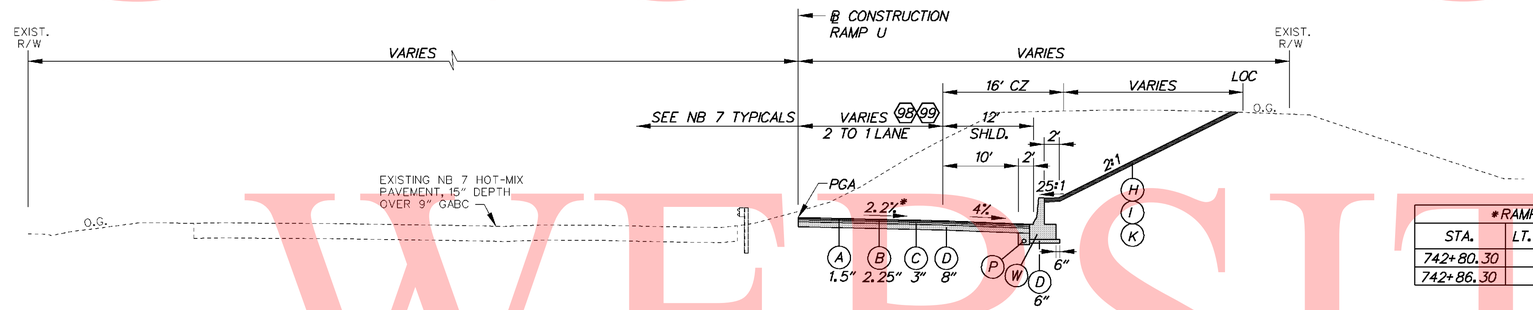

RAMP U

STA. 740+74.68 TO STA. 742+86.30

98 STA. 740+74.68 TO STA. 741+79.92
WIDTH TAPERS 25.66' TO 24'

99 STA. 741+79.92 TO STA. 742+86.30
WIDTH TAPERS 24' TO 20.53'

*RAMP U CROSS-SLOPES			
STA.	LT. SHLD.	LANES	RT. SHLD.
742+80.30	-	-2.00%	-4.00%
742+86.30	-	-2.20%	-4.00%

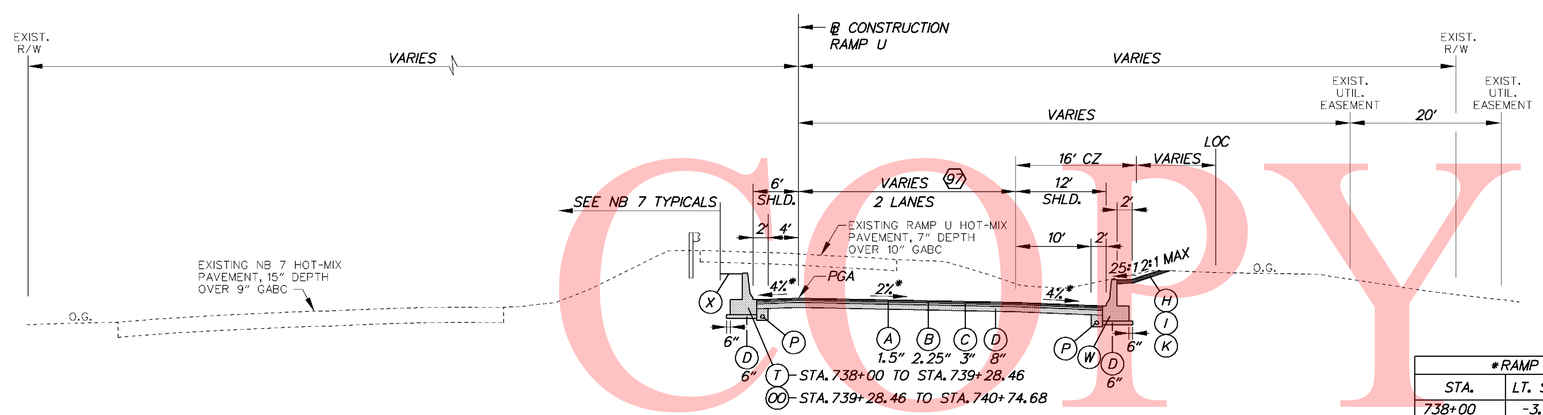

RAMP U

STA. 738+00 TO STA. 740+74.68

97 STA. 738+00 TO STA. 740+74.68
WIDTH TAPERS 30' TO 25.66'

*RAMP U CROSS-SLOPES			
STA.	LT. SHLD.	LANES	RT. SHLD.
738+00	-3.00%	-4.00%	-
738+00.07	-3.00%	-4.00%	-4.00%
738+30.07	-4.00%	-3.00%	-4.00%
738+50	-4.00%	-2.34%	-4.00%
738+60.07	-4.00%	-2.00%	-4.00%

LEGEND

- A ITEM 401708 - SUPERPAVE, TYPE C HOT-MIX, 160 GYRATIONS, PG 70-22 (NON-CARBONATE STONE)
- B ITEM 401654 - SUPERPAVE, TYPE B HOT-MIX, 160 GYRATIONS, PG 70-22
- C ITEM 401663 - SUPERPAVE, BITUMINOUS CONCRETE BASE COURSE, 160 GYRATIONS, PG 64-22
- D ITEM 302007 - GRADED AGGREGATE BASE COURSE, TYPE B
- E ITEM 401711 - SUPERPAVE, TYPE C HOT-MIX, 160 GYRATIONS, PG 76-22 (NON-CARBONATE STONE)
- F ITEM 401660 - SUPERPAVE, TYPE B HOT-MIX, 160 GYRATIONS, PG 76-22
- G ITEM 501006 - PORTLAND CEMENT CONCRETE PAVEMENT, 12"
- H ITEM 732002 - TOPSOIL, 6" DEPTH
- I ITEM 734013 - PERMANENT GRASS SEEDING, DRY GROUND
- J ITEM 602017 - PCC MASONRY, PARAPET, CLASS A
- K ITEM 735533 - SOIL RETENTION BLANKET MULCH, TYPE 3
- L ITEM 735534 - SOIL RETENTION BLANKET MULCH, TYPE 4
- M ITEM 735535 - SOIL RETENTION BLANKET MULCH, TYPE 5, UNLESS OTHERWISE NOTED, SEE DRAINAGE PLANS FOR LIMITS AND TYPE
- N ITEM 209001 - BORROW, TYPE A
- O ITEM 209006 - BORROW, TYPE F OR APPROVED PROJECT EXCAVATION
- P ITEM 715001 - PERFORATED PIPE UNDERDRAINS, 6"
- Q ITEM 760504 - RUMBLE STRIPS, HOT-MIX
- R ITEM 602772 - MECHANICALLY STABILIZED EARTH WALLS
- S ITEM 602773 - PCC MASONRY FOR MECHANICALLY STABILIZED EARTH WALLS
- T ITEM 720512 - PCC SAFETY BARRIER PERMANENT, SINGLE FACE
- U ITEM 720654 - PCC SAFETY BARRIER PERMANENT, SINGLE FACE, MODIFIED TYPE 1
- V ITEM 720587 - PCC SAFETY BARRIER PERMANENT, DOUBLE FACE, MODIFIED
- W ITEM 720655 - PCC SAFETY BARRIER PERMANENT, SINGLE FACE, MODIFIED TYPE 2
- X ITEM 712005 - RIPRAP, R-4
- Y ITEM 401665 - SUPERPAVE, TYPE C HOT-MIX, 160 GYRATIONS, PG 64-22, PATCHING
- Z ITEM 401666 - SUPERPAVE, TYPE B HOT-MIX, 160 GYRATIONS, PG 64-22, PATCHING
- AA ITEM 401667 - SUPERPAVE, BITUMINOUS CONCRETE BASE COURSE, 160 GYRATIONS, PG 64-22, PATCHING
- BB ITEM 302008 - GRADED AGGREGATE BASE COURSE, TYPE B, PATCHING
- CC ITEM 755000 - HOT-MIX, HOT LAID, BITUMINOUS CONCRETE CURB
- DD ITEM 701010 - PORTLAND CEMENT CONCRETE CURB, TYPE 1
- EE ITEM 701011 - PORTLAND CEMENT CONCRETE CURB, TYPE 2
- FF ITEM 701020 - INTEGRAL PORTLAND CEMENT CONCRETE CURB AND GUTTER, TYPE 1
- GG ITEM 701023 - INTEGRAL PORTLAND CEMENT CONCRETE CURB AND GUTTER, TYPE 4
- HH ITEM 701026 - PORTLAND CEMENT CONCRETE MONOLITHIC MEDIAN
- II ITEM 701027 - PORTLAND CEMENT CONCRETE CURB, TYPE 1 MODIFIED
- JJ ITEM 720658 - PCC SAFETY BARRIER PERMANENT SINGLE FACE, MODIFIED, TYPE 5
- KK ITEM 720050 - GALVANIZED STEEL BEAM GUARDRAIL, TYPE 1
- LL ITEM 760507 - PROFILE MILLING, HOT-MIX
- MM ITEM 720656 - PCC SAFETY BARRIER PERMANENT, SINGLE FACE, MODIFIED, TYPE 3
- NN ITEM 720657 - PCC SAFETY BARRIER PERMANENT, SINGLE FACE, MODIFIED, TYPE 4
- OO ITEM 720651 - PCC SAFETY BARRIER PERMANENT, DOUBLE FACE, BIFURCATED, TYPE 1
- PP ITEM 720652 - PCC SAFETY BARRIER PERMANENT, DOUBLE FACE, BIFURCATED, TYPE 2
- RR ITEM 401668 - SUPERPAVE, TYPE C HOT-MIX, 160 GYRATIONS, PG 64-22, WEDGE
- SS ITEM 401669 - SUPERPAVE, TYPE B HOT-MIX, 160 GYRATIONS, PG 64-22, WEDGE

PAVEMENT LIFT NOTE:

THE MAXIMUM LIFTS FOR THE INDIVIDUAL PAVING MATERIAL ARE AS FOLLOWS:
SUPERPAVE, TYPE C HOT-MIX - 2"
SUPERPAVE, TYPE B HOT-MIX - 3"
SUPERPAVE, BIT. CONC. BASE COURSE - 6"
GRADED AGGREGATE BASE COURSE - 8"

NOTES:

1) THE PGA IS APPLIED TO THE TOP OF THE FINAL PAVEMENT SURFACE.

UNOFFICIAL WEBSITE COPY

10/29/2010 9:53:44 AM
M:\PROJECTS\2003\03059_DELTRNPK\SRIMALL\CADD\2809003\PLANS\TS43_SR1.DGN

DELAWARE DEPARTMENT OF TRANSPORTATION	ADDENDUMS / REVISIONS	NOT TO SCALE	SR1 / I-95 INTERCHANGE	CONTRACT 28-090-03	BRIDGE NO.	TYPICAL SECTIONS	SHEET NO. 47
				COUNTY NEW CASTLE	DESIGNED BY:		TOTAL SHTS. 803
					CHECKED BY:		

UNOFFICIAL WEBSITE COPY

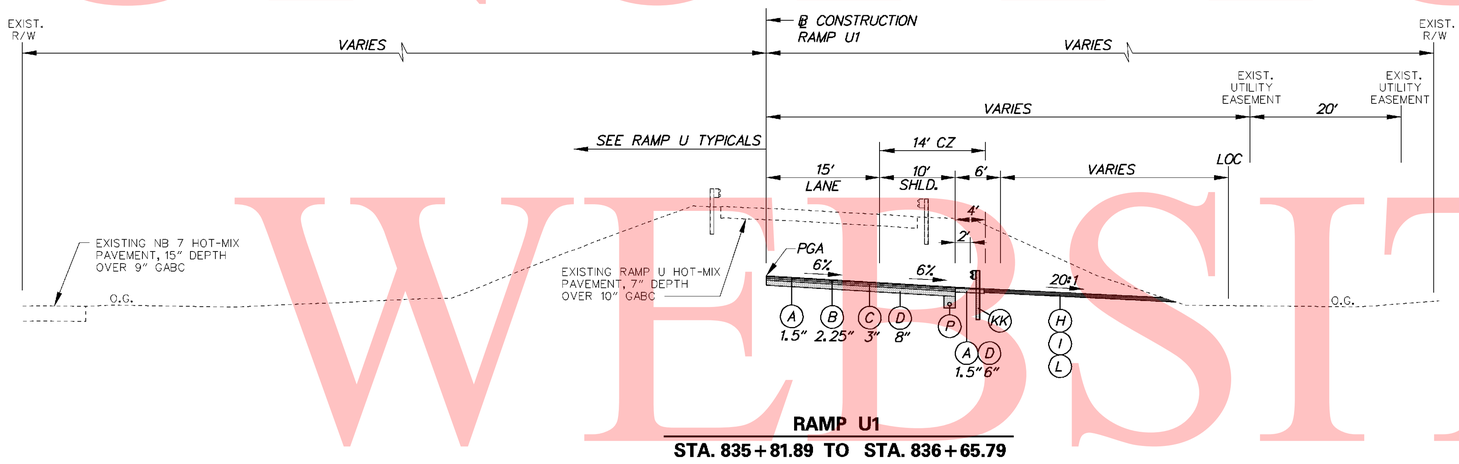

RAMP U1

STA. 835+81.89 TO STA. 836+65.79

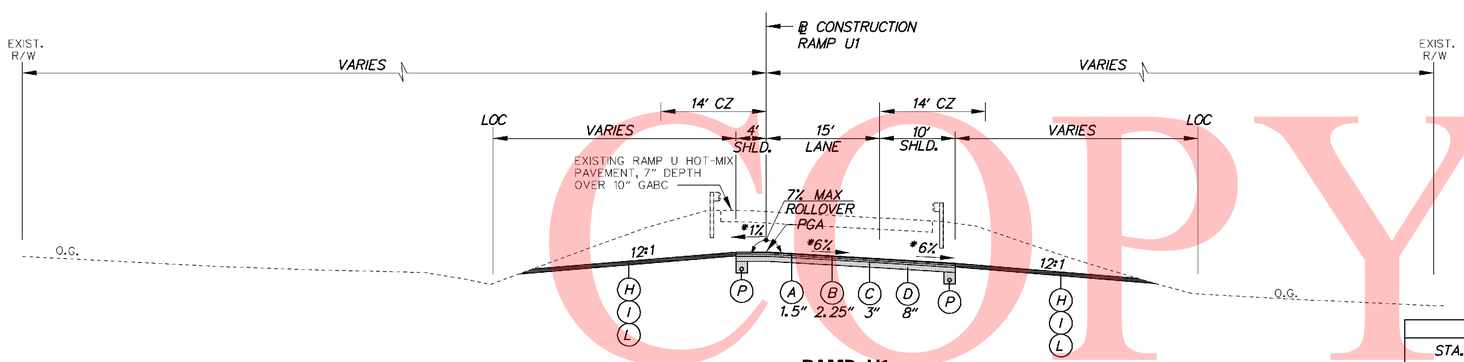

RAMP U1

STA. 832+00.00 TO STA. 835+81.89

*RAMP U1 CROSS-SLOPES			
STA.	LT. SHLD.	LANES	RT. SHLD.
832+69.18	-4.00%	-2.00%	-4.00%
832+90.68	-4.00%	-3.00%	-4.00%
833+00	-3.57%	-3.43%	-4.00%
833+12.18	-3.00%	-4.00%	-4.00%
833+50	-1.24%	-5.76%	-5.76%
833+55.18	-1.00%	-6.00%	-6.00%
835+57.89	-1.00%	-6.00%	-6.00%
835+81.89	2.00%	-6.00%	-6.00%

LEGEND

- (A) ITEM 401708 - SUPERPAVE, TYPE C HOT-MIX, 160 GYRATIONS, PG 70-22 (NON-CARBONATE STONE)
- (B) ITEM 401654 - SUPERPAVE, TYPE B HOT-MIX, 160 GYRATIONS, PG 70-22
- (C) ITEM 401663 - SUPERPAVE, BITUMINOUS CONCRETE BASE COURSE, 160 GYRATIONS, PG 64-22
- (D) ITEM 302007 - GRADED AGGREGATE BASE COURSE, TYPE B
- (E) ITEM 401711 - SUPERPAVE, TYPE C HOT-MIX, 160 GYRATIONS, PG 76-22 (NON-CARBONATE STONE)
- (F) ITEM 401660 - SUPERPAVE, TYPE B HOT-MIX, 160 GYRATIONS, PG 76-22
- (G) ITEM 501006 - PORTLAND CEMENT CONCRETE PAVEMENT, 12"
- (H) ITEM 732002 - TOPSOIL, 6" DEPTH
- (I) ITEM 734013 - PERMANENT GRASS SEEDING, DRY GROUND
- (J) ITEM 602017 - PCC MASONRY, PARAPET, CLASS A
- (K) ITEM 735533 - SOIL RETENTION BLANKET MULCH, TYPE 3
- (L) ITEM 735534 - SOIL RETENTION BLANKET MULCH, TYPE 4
- (M) ITEM 735535 - SOIL RETENTION BLANKET MULCH, TYPE 5, UNLESS OTHERWISE NOTED, SEE DRAINAGE PLANS FOR LIMITS AND TYPE
- (N) ITEM 209001 - BORROW, TYPE A
- (O) ITEM 209006 - BORROW, TYPE F OR APPROVED PROJECT EXCAVATION
- (P) ITEM 715001 - PERFORATED PIPE UNDERDRAINS, 6"
- (Q) ITEM 760504 - RUMBLE STRIPS, HOT-MIX
- (R) ITEM 602772 - MECHANICALLY STABILIZED EARTH WALLS
- (S) ITEM 602773 - PCC MASONRY FOR MECHANICALLY STABILIZED EARTH WALLS
- (T) ITEM 720512 - PCC SAFETY BARRIER PERMANENT, SINGLE FACE
- (U) ITEM 720654 - PCC SAFETY BARRIER PERMANENT, SINGLE FACE, MODIFIED TYPE 1
- (V) ITEM 720587 - PCC SAFETY BARRIER PERMANENT, DOUBLE FACE, MODIFIED
- (W) ITEM 720655 - PCC SAFETY BARRIER PERMANENT, SINGLE FACE, MODIFIED TYPE 2
- (X) ITEM 712005 - RIPRAP, R-4
- (Y) ITEM 401665 - SUPERPAVE, TYPE C HOT-MIX, 160 GYRATIONS, PG 64-22, PATCHING
- (Z) ITEM 401666 - SUPERPAVE, TYPE B HOT-MIX, 160 GYRATIONS, PG 64-22, PATCHING
- (AA) ITEM 401667 - SUPERPAVE, BITUMINOUS CONCRETE BASE COURSE, 160 GYRATIONS, PG 64-22, PATCHING
- (BB) ITEM 302008 - GRADED AGGREGATE BASE COURSE, TYPE B, PATCHING
- (CC) ITEM 755000 - HOT-MIX, HOT LAID, BITUMINOUS CONCRETE CURB
- (DD) ITEM 701010 - PORTLAND CEMENT CONCRETE CURB, TYPE 1
- (EE) ITEM 701011 - PORTLAND CEMENT CONCRETE CURB, TYPE 2
- (FF) ITEM 701020 - INTEGRAL PORTLAND CEMENT CONCRETE CURB AND GUTTER, TYPE 1
- (GG) ITEM 701023 - INTEGRAL PORTLAND CEMENT CONCRETE CURB AND GUTTER, TYPE 4
- (HH) ITEM 701026 - PORTLAND CEMENT CONCRETE MONOLITHIC MEDIAN
- (II) ITEM 701027 - PORTLAND CEMENT CONCRETE CURB, TYPE 1 MODIFIED
- (JJ) ITEM 720658 - PCC SAFETY BARRIER PERMANENT SINGLE FACE, MODIFIED, TYPE 5
- (KK) ITEM 720050 - GALVANIZED STEEL BEAM GUARDRAIL, TYPE 1
- (LL) ITEM 760507 - PROFILE MILLING, HOT-MIX
- (MM) ITEM 720656 - PCC SAFETY BARRIER PERMANENT, SINGLE FACE, MODIFIED, TYPE 3
- (NN) ITEM 720657 - PCC SAFETY BARRIER PERMANENT, SINGLE FACE, MODIFIED, TYPE 4
- (OO) ITEM 720651 - PCC SAFETY BARRIER PERMANENT, DOUBLE FACE, BIFURCATED, TYPE 1
- (PP) ITEM 720652 - PCC SAFETY BARRIER PERMANENT, DOUBLE FACE, BIFURCATED, TYPE 2
- (RR) ITEM 401668 - SUPERPAVE, TYPE C HOT-MIX, 160 GYRATIONS, PG 64-22, WEDGE
- (SS) ITEM 401669 - SUPERPAVE, TYPE B HOT-MIX, 160 GYRATIONS, PG 64-22, WEDGE

PAVEMENT LIFT NOTE:

THE MAXIMUM LIFTS FOR THE INDIVIDUAL PAVING MATERIAL ARE AS FOLLOWS:
SUPERPAVE, TYPE C HOT-MIX - 2"
SUPERPAVE, TYPE B HOT-MIX - 3"
SUPERPAVE, BIT. CONC. BASE COURSE - 6"
GRADED AGGREGATE BASE COURSE - 8"

NOTES:

1) THE PGA IS APPLIED TO THE TOP OF THE FINAL PAVEMENT SURFACE.

10/29/2010 9:58:59 AM
M:\PROJECTS\2003\03059_DELTRNPK\SRIMALL\CADD\2809003\PLANS\TS44_SR1.DGN

DELAWARE DEPARTMENT OF TRANSPORTATION	ADDENDUMS / REVISIONS	NOT TO SCALE	SR1 / I-95 INTERCHANGE	CONTRACT 28-090-03	BRIDGE NO.	TYPICAL SECTIONS	SHEET NO. 48
				COUNTY NEW CASTLE	DESIGNED BY:		TOTAL SHTS. 803
					CHECKED BY:		

UNOFFICIAL WEBSITE COPY

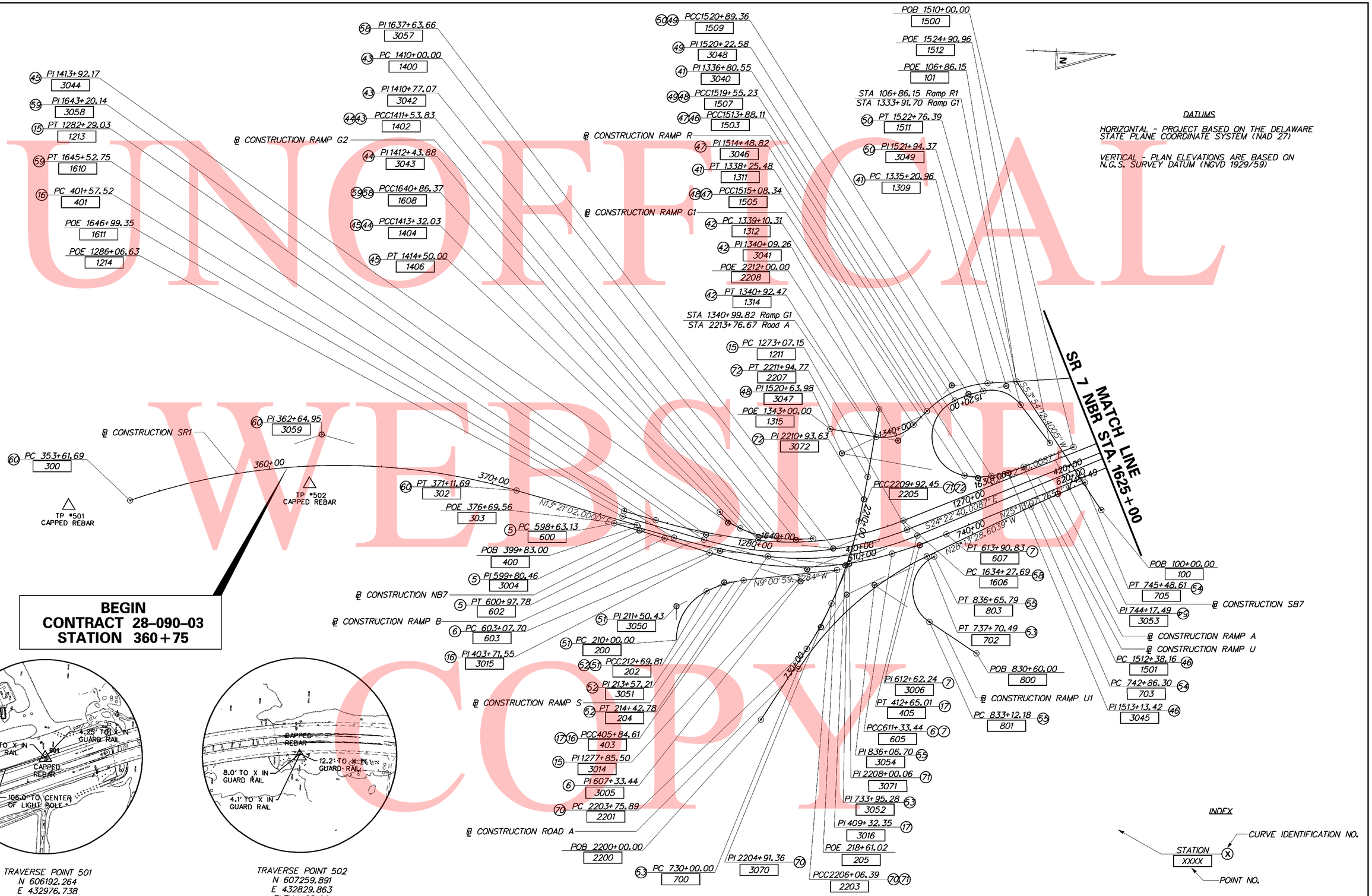

7/30/2010 10:04:36 AM
M:\PROJECTS\2003\03059_DELTRNPK\SRIMALL\CADD\2809003\PLANS\HV01_SR1.DGN

DELAWARE DEPARTMENT OF TRANSPORTATION

ADDENDUMS / REVISIONS

SCALE 0 200 400 600 FEET

SR1 / I-95 INTERCHANGE

CONTRACT	BRIDGE NO.	
28-090-03	DESIGNED BY:	
COUNTY		
NEW CASTLE	CHECKED BY:	

HORIZONTAL AND VERTICAL CONTROL PLAN

SHEET NO.
49
TOTAL SHTS.
803

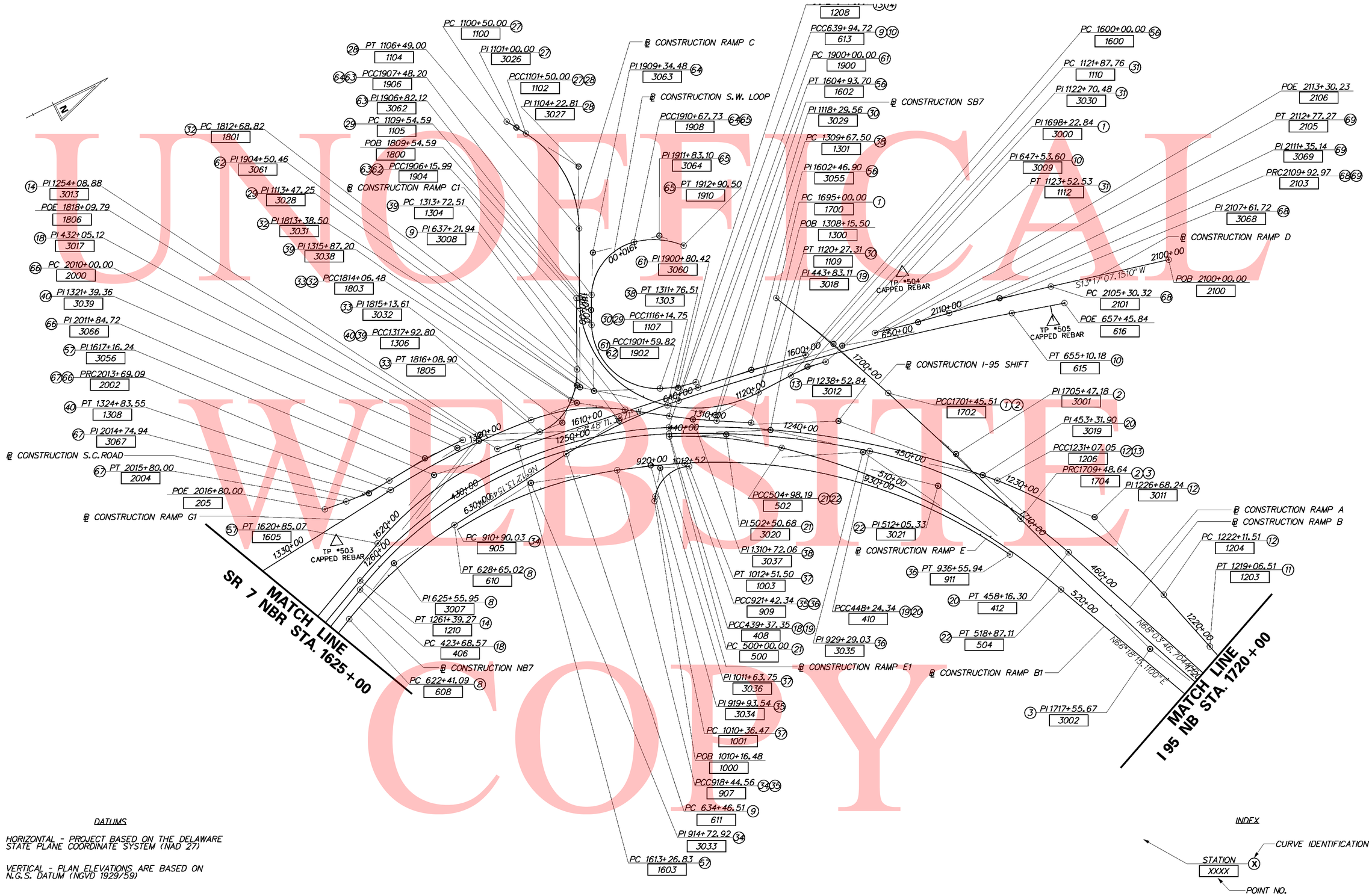

UNOFFICIAL WEBSITE COPY

DATUMS

HORIZONTAL - PROJECT BASED ON THE DELAWARE STATE PLANE COORDINATE SYSTEM (NAD 27)

VERTICAL - PLAN ELEVATIONS ARE BASED ON N.G.S. DATUM (NGVD 1929/59)

INDEX

STATION XXXX — POINT NO.

X — CURVE IDENTIFICATION NO.

7/30/2010 9:39:55 AM
M:\PROJECTS\2003\03059_DELTRNPK\SR1MALL\CADD\2809003\PLANS\HV02_SR1.DGN

DELAWARE DEPARTMENT OF TRANSPORTATION	ADDENDUMS / REVISIONS	SCALE 0 200 400 600 FEET	SR1 / I-95 INTERCHANGE	CONTRACT 28-090-03	BRIDGE NO.	HORIZONTAL AND VERTICAL CONTROL PLAN	SHEET NO. 50
				COUNTY NEW CASTLE	DESIGNED BY:		TOTAL SHTS. 803
					CHECKED BY:		

UNOFFICIAL WEBSITE COPY

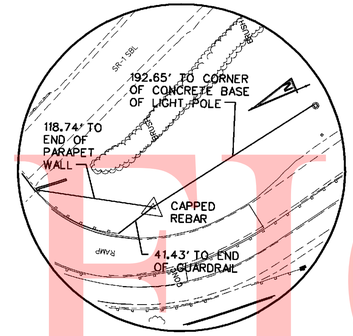

TRAVERSE POINT 503
N 610,979.518
E 432,227.386
ELEV. 75.92

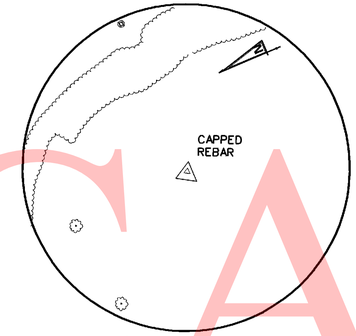

TRAVERSE POINT 504
N 613,733.117
E 432,262.043
ELEV. 103.94

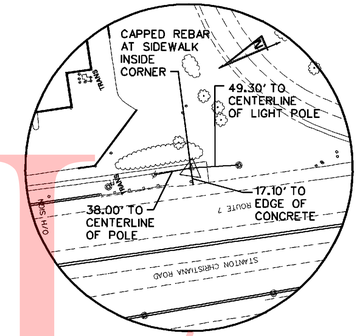

TRAVERSE POINT 505
N 614,232.842
E 432,747.330
ELEV. 78.54

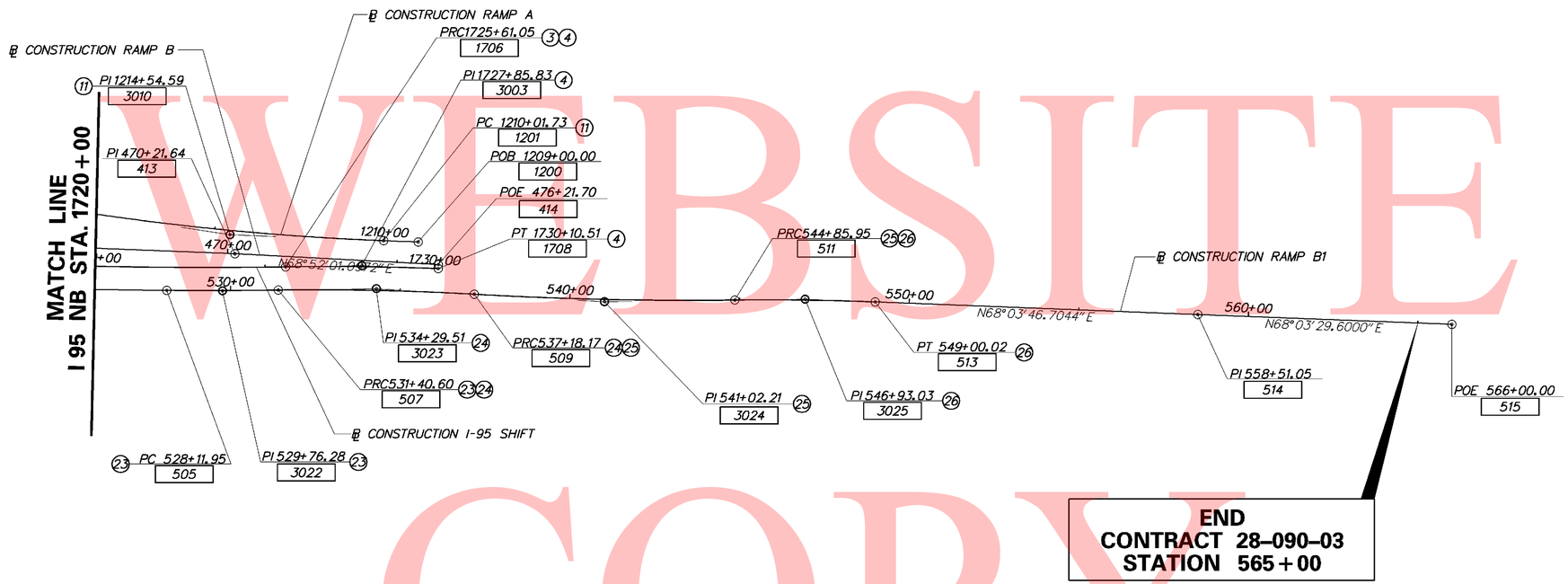

DATUMS

HORIZONTAL - PROJECT BASED ON THE DELAWARE STATE PLANE COORDINATE SYSTEM (NAD 27)

VERTICAL - PLAN ELEVATIONS ARE BASED ON N.G.S. SURVEY DATUM (NGVD 1929/59)

INDEX

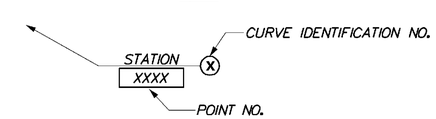

11/10/2010 3:32:06 PM
M:\PROJECTS\2003\03059_DELTRNPK\SR1MALL\CADD\2809003\PLANS\HV03_SR1.DGN

DELAWARE DEPARTMENT OF TRANSPORTATION	ADDENDUMS / REVISIONS	SCALE 0 200 400 600 FEET	SR1 / I-95 INTERCHANGE	CONTRACT 28-090-03	BRIDGE NO.	HORIZONTAL AND VERTICAL CONTROL PLAN	SHEET NO. 51
				COUNTY NEW CASTLE	DESIGNED BY:		TOTAL SHTS. 803
					CHECKED BY:		

I-95 SHIFT

CIRCULAR CURVE NO. 1

	STATION	NORTHING	EASTING
Element: Circular			
PC (1700)	1695+00.00	613183.2463	432122.3027
PI (3000)	1698+22.84	613320.3068	432414.6058
CC (1701)		602854.6700	436965.3617
PCC (1702)	1701+45.51	613440.6167	432714.1925

Radius: 11407.6600
Delta: 3°14'31.6445" Right
Degree of Curvature(Arc): 0°30'08.1255"
Length: 645.8415
Tangent: 322.8415
Chord: 645.4246
Middle Ordinate: 4.5655
External: 4.5674
Tangent Direction: N 64°52'41.4015" E
Radial Direction: S 25°07'18.5985" E
Chord Direction: N 66°29'57.2238" E
Radial Direction: S 21°52'46.9540" E
Tangent Direction: N 68°07'13.0460" E

CIRCULAR CURVE NO. 2

	STATION	NORTHING	EASTING
Element: Circular			
PCC (1702)	1701+45.51	613440.6167	432714.1925
PI (3001)	1705+47.18	613590.3013	433086.9259
CC (1703)		599985.0766	438117.7505
PRC (1704)	1709+48.64	613719.1218	433467.3741

Radius: 14500.0000
Delta: 3°10'24.6066" Right
Degree of Curvature(Arc): 0°23'42.5159"
Length: 803.1268
Tangent: 401.6661
Chord: 803.0241
Middle Ordinate: 5.5601
External: 5.5622
Tangent Direction: N 68°07'13.0460" E
Radial Direction: S 21°52'46.9540" E
Chord Direction: N 69°42'25.3493" E
Radial Direction: S 18°42'22.3474" E
Tangent Direction: N 71°17'37.6526" E

CIRCULAR CURVE NO. 3

	STATION	NORTHING	EASTING
Element: Circular			
PRC (1704)	1709+48.64	613719.1218	433467.3741
PI (3002)	1717+55.67	613977.9512	434231.7797
CC (1705)		627453.1671	428816.9978
PRC (1706)	1725+61.05	614320.0092	434962.7413

Radius: 14500.0000
Delta: 6°22'16.7904" Left
Degree of Curvature(Arc): 0°23'42.5159"
Length: 1612.4101
Tangent: 807.0369
Chord: 1611.5795
Middle Ordinate: 22.4069
External: 22.4415
Tangent Direction: N 71°17'37.6526" E
Radial Direction: S 18°42'22.3474" E
Chord Direction: N 68°06'29.2574" E
Radial Direction: S 25°04'39.1378" E
Tangent Direction: N 64°55'20.8622" E

CIRCULAR CURVE NO. 4

	STATION	NORTHING	EASTING
Element: Circular			
PRC (1706)	1725+61.05	614320.0092	434962.7413
PI (3003)	1727+85.83	614415.2837	435166.3384
CC (1707)		606892.9820	438438.2652
PT (1708)	1730+10.51	614499.2611	435374.8493

Radius: 8200.0000
Delta: 3°08'25.8422" Right
Degree of Curvature(Arc): 0°41'55.4245"
Length: 449.4606
Tangent: 224.7866
Chord: 449.4043
Middle Ordinate: 3.0793
External: 3.0805
Tangent Direction: N 64°55'20.8622" E
Radial Direction: S 25°04'39.1378" E
Chord Direction: N 66°29'33.7833" E
Radial Direction: S 21°56'13.2956" E
Tangent Direction: N 68°03'46.7044" E

NB SR7

CIRCULAR CURVE NO. 5

	STATION	NORTHING	EASTING
Element: Circular			
PC (600)	598+63.13	608625.6820	432945.8818
PI (3004)	599+80.46	608739.8411	432972.9743
CC (601)		606547.5069	441702.6614
PT (602)	600+97.78	608853.2552	433003.0335

Radius: 9000.0000
Delta: 1°29'37.7017" Right
Degree of Curvature(Arc): 0°38'11.8312"
Length: 234.6465
Tangent: 117.3299
Chord: 234.6399
Middle Ordinate: 0.7647
External: 0.7648
Tangent Direction: N 13°21'02.0000" E
Radial Direction: S 76°38'58.0000" E
Chord Direction: N 14°05'50.8508" E
Radial Direction: S 75°09'20.2983" E
Tangent Direction: N 14°50'39.7017" E

CIRCULAR CURVE NO. 6

	STATION	NORTHING	EASTING
Element: Circular			
PC (603)	603+07.70	609056.1688	433056.8137
PI (3005)	607+33.44	609467.7051	433165.8872
CC (604)		609408.4359	431727.7039
PCC (605)	611+33.44	609868.8711	433023.3213

Radius: 1375.0000
Delta: 34°24'30.6161" Left
Degree of Curvature(Arc): 4°10'01.0768"
Length: 825.7448
Tangent: 425.7454
Chord: 813.3921
Middle Ordinate: 61.5224
External: 64.4041
Tangent Direction: N 14°50'39.6964" E
Radial Direction: S 75°09'20.3036" E
Chord Direction: N 2°21'35.6117" W
Radial Direction: N 70°26'09.0803" E
Tangent Direction: N 19°33'50.9197" W

CIRCULAR CURVE NO. 7

	STATION	NORTHING	EASTING
Element: Circular			
PCC (605)	611+33.44	609868.8711	433023.3213
PI (3006)	612+62.24	609990.2351	432980.1911
CC (606)		608995.5511	430565.8885
PT (607)	613+90.83	610106.7587	432925.3125

Radius: 2608.0000
Delta: 5°39'16.8476" Left
Degree of Curvature(Arc): 2°11'48.9266"
Length: 257.3908
Tangent: 128.8000
Chord: 257.2863
Middle Ordinate: 3.1747
External: 3.1786
Tangent Direction: N 19°33'50.9197" W
Radial Direction: N 70°26'09.0803" E
Chord Direction: N 22°23'29.3435" W
Radial Direction: N 64°46'52.2327" E
Tangent Direction: N 25°13'07.7673" W

CIRCULAR CURVE NO. 8

	STATION	NORTHING	EASTING
Element: Circular			
PC (608)	622+41.09	610875.9756	432563.0378
PI (3007)	625+55.95	611160.8253	432428.8833
CC (609)		611676.9995	434263.8495
PT (610)	628+65.02	611473.8415	432394.8587

Radius: 1880.0000
Delta: 19°00'54.6106" Right
Degree of Curvature(Arc): 3°02'51.5322"
Length: 623.9294
Tangent: 314.8600
Chord: 621.0699
Middle Ordinate: 25.8242
External: 26.1838
Tangent Direction: N 25°13'07.7656" W
Radial Direction: N 64°46'52.2344" E
Chord Direction: N 15°42'40.4603" W
Radial Direction: N 83°47'46.8451" E
Tangent Direction: N 6°12'13.1549" W

NB7 SR7

CIRCULAR CURVE NO. 9

	STATION	NORTHING	EASTING
Element: Circular			
PC (611)	634+46.51	612051.9273	432332.0212
PI (3008)	637+21.94	612325.7472	432302.2571
CC (612)		612298.3104	434598.6696
PCC (613)	639+94.72	612598.7778	432338.5547

Radius: 2280.0000
Delta: 13°46'34.8447" Right
Degree of Curvature(Arc): 2°30'46.7020"
Length: 548.2091
Tangent: 275.4328
Chord: 546.8895
Middle Ordinate: 16.4568
External: 16.5764
Tangent Direction: N 6°12'13.1549" W
Radial Direction: N 83°47'46.8451" E
Chord Direction: N 0°41'04.2674" E
Radial Direction: S 82°25'38.3103" E
Tangent Direction: N 7°34'21.6897" E

CIRCULAR CURVE NO. 10

	STATION	NORTHING	EASTING
Element: Circular			
PCC (613)	639+94.72	612598.7778	432338.5547
PI (3009)	647+53.60	613351.0371	432438.5627
CC (614)		611116.2085	443490.4375
PT (615)	655+10.18	614083.0503	432638.6934

Radius: 11250.0000
Delta: 7°43'05.4272" Right
Degree of Curvature(Arc): 0°30'33.4649"
Length: 1515.4600
Tangent: 758.8779
Chord: 1514.3144
Middle Ordinate: 25.5083
External: 25.5663
Tangent Direction: N 7°34'21.6897" E
Radial Direction: S 82°25'38.3103" E
Chord Direction: N 11°25'54.4033" E
Radial Direction: S 74°42'32.8830" E
Tangent Direction: N 15°17'27.1170" E

RAMP A

CIRCULAR CURVE NO. 11

	STATION	NORTHING	EASTING
Element: Circular			
PC (1201)	1210+01.73	614508.6081	435194.6243
PI (3010)	1214+54.59	614339.4204	434774.5497
CC (1202)		622007.2651	432174.4919
PT (1203)	1219+06.51	614218.2091	434338.2069

Radius: 8084.0000
Delta: 6°24'45.7702" Right
Degree of Curvature(Arc): 0°42'31.5191"
Length: 904.7853
Tangent: 452.8655
Chord: 904.3131
Middle Ordinate: 12.6550
External: 12.6748
Tangent Direction: S 68°03'45.2577" W
Radial Direction: N 21°56'14.7423" W
Chord Direction: S 71°16'08.1429" W
Radial Direction: N 15°31'28.9720" W
Tangent Direction: S 74°28'31.0280" W

HORIZONTAL / VERTICAL CONTROL DATA

POINT	STATION	OFFSET	NORTHING	EASTING	ELEVATION
501	X	X	606192.264	432976.738	41.78
502	361+74.08	74.37'	607259.891	432829.863	28.80
503	624+48.22	-272.59'	610979.518	432227.386	75.92
504	650+83.79	-279.31'	613733.117	432262.043	103.94
505	656+83.32	65.29'	614232.842	432747.330	78.54

DATUMS

HORIZONTAL - PROJECT BASED ON THE DELAWARE STATE PLANE COORDINATE SYSTEM (NAD 27)

VERTICAL - PLAN ELEVATIONS ARE BASED ON N.G.S. SURVEY DATUM (NGVD 1929/59)

UNOFFICIAL WEBSITE COPY

RAMP A

CIRCULAR CURVE NO. 12

Element: Circular

		STATION	NORTHING	EASTING
PC	(1204)	1222+11.51	614136.5746	434044.3348
PI	(3011)	1226+68.24	614014.3309	433604.2753
CC	(1205)		612354.0717	434539.4947
PCC	(1206)	1231+07.05	613701.3330	433271.6671

Radius: 1850.0000
Delta: 27° 44' 07.6362" Left
Degree of Curvature(Arc): 3° 05' 49.4490"
Length: 895.5388
Tangent: 456.7230
Chord: 886.8206
Middle Ordinate: 53.9245
External: 55.5435
Tangent Direction: S 74° 28' 31.0280" W
Radial Direction: N 15° 31' 28.9720" W
Chord Direction: S 60° 36' 27.2099" W
Radial Direction: N 43° 15' 36.6082" W
Tangent Direction: S 46° 44' 23.3918" W

CIRCULAR CURVE NO. 13

Element: Circular

		STATION	NORTHING	EASTING
PCC	(1206)	1231+07.05	613701.3330	433271.6671
PI	(3012)	1238+52.84	613190.2361	432728.5482
CC	(1207)		611006.8104	435807.3224
PCC	(1208)	1245+78.91	612508.6491	432425.8315

Radius: 3700.0000
Delta: 22° 47' 31.7249" Left
Degree of Curvature(Arc): 1° 32' 54.7245"
Length: 1471.8526
Tangent: 745.7870
Chord: 1462.1671
Middle Ordinate: 72.9465
External: 74.4136
Tangent Direction: S 46° 44' 23.3918" W
Radial Direction: N 43° 15' 36.6082" W
Chord Direction: S 35° 20' 37.5293" W
Radial Direction: N 66° 03' 08.3331" W
Tangent Direction: S 23° 56' 51.6669" W

CIRCULAR CURVE NO. 14

Element: Circular

		STATION	NORTHING	EASTING
PCC	(1208)	1245+78.91	612508.6491	432425.8315
PI	(3013)	1254+08.88	611750.1194	432088.9419
CC	(1209)		611757.7298	434116.5770
PT	(1210)	1261+39.27	610994.1400	432431.5159

Radius: 1850.0000
Delta: 48° 19' 31.6756" Left
Degree of Curvature(Arc): 3° 05' 49.4490"
Length: 1560.3612
Tangent: 829.9770
Chord: 1514.5198
Middle Ordinate: 162.0849
External: 177.6494
Tangent Direction: S 23° 56' 51.6669" W
Radial Direction: N 66° 03' 08.3331" W
Chord Direction: S 0° 12' 54.1709" E
Radial Direction: S 65° 37' 19.9913" W
Tangent Direction: S 24° 22' 40.0087" E

CIRCULAR CURVE NO. 15

Element: Circular

		STATION	NORTHING	EASTING
PC	(1211)	1273+07.15	609930.3772	432913.5628
PI	(3014)	1277+85.50	609494.6758	433111.0020
CC	(1212)		609352.5254	431638.3815
PT	(1213)	1282+29.03	609029.2538	433000.5472

Radius: 1400.0000
Delta: 37° 43' 42.0087" Right
Degree of Curvature(Arc): 4° 05' 33.2004"
Length: 921.8772
Tangent: 478.3492
Chord: 905.3119
Middle Ordinate: 75.1972
External: 79.4654
Tangent Direction: S 24° 22' 40.0087" E
Radial Direction: S 65° 37' 19.9913" W
Chord Direction: S 5° 30' 49.0043" E
Radial Direction: N 76° 38' 58.0000" W
Tangent Direction: S 13° 21' 02.0000" W

RAMP B

CIRCULAR CURVE NO. 16

Element: Circular

		STATION	NORTHING	EASTING
PC	(401)	401+57.52	608894.8310	432997.4235
PI	(3015)	403+71.55	609103.0743	433046.8441
CC	(402)		609495.1927	430467.6871
PCC	(403)	405+84.61	609316.5960	433061.5459

Radius: 2600.0000
Delta: 9° 24' 42.2899" Left
Degree of Curvature(Arc): 2° 12' 13.2618"
Length: 427.0915
Tangent: 214.0273
Chord: 426.6115
Middle Ordinate: 8.7646
External: 8.7943
Tangent Direction: N 13° 21' 02.0000" E
Radial Direction: S 76° 38' 58.0000" E
Chord Direction: N 8° 38' 40.8551" E
Radial Direction: S 86° 03' 40.2899" E
Tangent Direction: N 3° 56' 19.7101" E

CIRCULAR CURVE NO. 17

Element: Circular

		STATION	NORTHING	EASTING
PCC	(403)	405+84.61	609316.5960	433061.5459
PI	(3016)	409+32.35	609663.5092	433085.4321
CC	(404)		609408.4359	431727.7039
PT	(405)	412+65.01	609978.1002	432937.2706

Radius: 1337.0000
Delta: 29° 09' 27.4757" Left
Degree of Curvature(Arc): 4° 17' 07.4350"
Length: 680.3949
Tangent: 347.7346
Chord: 673.0767
Middle Ordinate: 43.0483
External: 44.4805
Tangent Direction: N 3° 56' 19.7101" E
Radial Direction: S 86° 03' 40.2899" E
Chord Direction: N 10° 38' 24.0277" W
Radial Direction: N 64° 46' 52.2344" E
Tangent Direction: N 25° 13' 07.7656" W

CIRCULAR CURVE NO. 18

Element: Circular

		STATION	NORTHING	EASTING
PC	(406)	423+68.57	610976.4808	432467.0676
PI	(3017)	432+05.12	611733.2957	432110.6339
CC	(407)		611754.0705	434118.1216
PCC	(408)	439+37.35	612497.3248	432451.3289

Radius: 1825.0000
Delta: 49° 15' 06.5419" Right
Degree of Curvature(Arc): 3° 08' 22.1812"
Length: 1568.7816
Tangent: 836.5487
Chord: 1520.9254
Middle Ordinate: 165.9878
External: 182.5952
Tangent Direction: N 25° 13' 07.7656" W
Radial Direction: N 64° 46' 52.2344" E
Chord Direction: N 0° 35' 34.4946" W
Radial Direction: S 65° 58' 01.2236" E
Tangent Direction: N 24° 01' 58.7764" E

CIRCULAR CURVE NO. 19

Element: Circular

		STATION	NORTHING	EASTING
PCC	(408)	439+37.35	612497.3248	432451.3289
PI	(3018)	443+83.11	612904.4348	432632.8669
CC	(409)		611031.1794	435739.2488
PCC	(410)	448+24.34	613254.9729	432908.2168

Radius: 3600.0000
Delta: 14° 07' 00.7116" Right
Degree of Curvature(Arc): 1° 35' 29.5780"
Length: 886.9887
Tangent: 445.7516
Chord: 884.7469
Middle Ordinate: 27.2831
External: 27.4915
Tangent Direction: N 24° 01' 58.7764" E
Radial Direction: S 65° 58' 01.2236" E
Chord Direction: N 31° 05' 29.1321" E
Radial Direction: S 51° 51' 00.5121" E
Tangent Direction: N 38° 08' 59.4879" E

RAMP B

CIRCULAR CURVE NO. 20

Element: Circular

		STATION	NORTHING	EASTING
PCC	(410)	448+24.34	613254.9729	432908.2168
PI	(3019)	453+31.90	613654.1167	433221.7468
CC	(411)		612081.3041	434402.3726
PT	(412)	458+16.30	613843.7346	433692.5567

Radius: 1900.0000
Delta: 29° 54' 47.2141" Right
Degree of Curvature(Arc): 3° 00' 56.0424"
Length: 991.9565
Tangent: 507.5597
Chord: 980.7290
Middle Ordinate: 64.3686
External: 66.6258
Tangent Direction: N 38° 08' 59.4879" E
Radial Direction: S 51° 51' 00.5121" E
Chord Direction: N 53° 06' 23.0950" E
Radial Direction: S 21° 56' 13.2980" E
Tangent Direction: N 68° 03' 46.7020" E

RAMP B1

CIRCULAR CURVE NO. 21

Element: Circular

		STATION	NORTHING	EASTING
PC	(500)	500+00.00	612492.4540	432462.2959
PI	(3020)	502+50.68	612721.3977	432564.3889
CC	(501)		611754.0705	434118.1216
PCC	(502)	504+98.19	612914.0496	432724.7740

Radius: 1813.0000
Delta: 15° 44' 39.2687" Right
Degree of Curvature(Arc): 3° 09' 36.9888"
Length: 498.1922
Tangent: 250.6754
Chord: 496.6262
Middle Ordinate: 17.0853
External: 17.2478
Tangent Direction: N 24° 02' 00.8000" E
Radial Direction: S 65° 57' 59.1900" E
Chord Direction: N 31° 54' 20.4400" E
Radial Direction: S 50° 13' 19.9200" E
Tangent Direction: N 39° 46' 40.0700" E

CIRCULAR CURVE NO. 22

Element: Circular

		STATION	NORTHING	EASTING
PCC	(502)	504+98.19	612914.0496	432724.7740
PI	(3021)	512+05.33	613457.5056	433177.2079
CC	(503)		610994.6138	435030.3685
PT	(504)	518+87.11	613741.6898	433824.7264

Radius: 3000.0000
Delta: 26° 31' 35.0335" Right
Degree of Curvature(Arc): 1° 54' 35.4935"
Length: 1388.9190
Tangent: 707.1357
Chord: 1376.5477
Middle Ordinate: 80.0207
External: 82.2136
Tangent Direction: N 39° 46' 40.0700" E
Radial Direction: S 50° 13' 19.9200" E
Chord Direction: N 53° 02' 27.5900" E
Radial Direction: S 23° 41' 44.8900" E
Tangent Direction: N 66° 18' 15.1100" E

DATUMS

HORIZONTAL - PROJECT BASED ON THE DELAWARE STATE PLANE COORDINATE SYSTEM (NAD 27)

VERTICAL - PLAN ELEVATIONS ARE BASED ON N.G.S. SURVEY DATUM (NGVD 1929/59)

UNOFFICIAL WEBSITE COPY

RAMP B1

CIRCULAR CURVE NO. 23

Element: Circular

	STATION	NORTHING	EASTING
PC (505)	528+11.95	614113.3656	434671.5959
PI (3022)	529+76.28	614179.4061	434822.0703
CC (506)		627453.1671	428816.9978
PRC (507)	531+40.60	614248.8241	434971.0167

Radius: 14568.0000
Delta: 1°17'33.1806" Left
Degree of Curvature(Arc): 0°23'35.8759"
Length: 328.6432
Tangent: 164.3286
Chord: 328.6363
Middle Ordinate: 0.9267
External: 0.9268
Tangent Direction: N 66°18'15.1100" E
Radial Direction: S 23°41'44.8900" E
Chord Direction: N 65°39'28.5200" E
Radial Direction: S 24°59'18.0700" E
Tangent Direction: N 65°00'41.9200" E

CIRCULAR CURVE NO. 24

Element: Circular

	STATION	NORTHING	EASTING
PRC (507)	531+40.60	614248.8241	434971.0167
PI (3023)	534+29.51	614370.8695	435232.8830
CC (508)		606907.0355	438392.7327
PRC (509)	537+18.17	614473.9482	435502.7790

Radius: 8100.0000
Delta: 4°05'07.8352" Right
Degree of Curvature(Arc): 0°42'26.4791"
Length: 577.5753
Tangent: 288.9101
Chord: 577.4530
Middle Ordinate: 5.1475
External: 5.1508
Tangent Direction: N 65°00'41.9200" E
Radial Direction: S 24°59'18.0800" E
Chord Direction: N 67°03'15.8400" E
Radial Direction: S 20°54'10.2500" E
Tangent Direction: N 69°05'49.7500" E

CIRCULAR CURVE NO. 25

Element: Circular

	STATION	NORTHING	EASTING
PRC (509)	537+18.17	614473.9482	435502.7790
PI (3024)	541+02.21	614610.9686	435861.5465
CC (510)		624843.4211	431542.4720
PRC (511)	544+85.95	614772.4573	436209.9861

Radius: 11100.0000
Delta: 3°57'47.1888" Left
Degree of Curvature(Arc): 0°30'58.2415"
Length: 767.7790
Tangent: 384.0427
Chord: 767.6260
Middle Ordinate: 6.6377
External: 6.6417
Tangent Direction: N 69°05'49.7500" E
Radial Direction: S 20°54'10.2500" E
Chord Direction: N 67°06'56.1600" E
Radial Direction: S 24°51'57.4400" E
Tangent Direction: N 65°08'02.5600" E

CIRCULAR CURVE NO. 26

Element: Circular

	STATION	NORTHING	EASTING
PRC (511)	544+85.95	614772.4573	436209.9861
PI (3025)	546+93.03	614859.5333	436397.8676
CC (512)		607423.3756	439616.0099
PT (513)	549+00.02	614936.8953	436589.9528

Radius: 8100.0000
Delta: 2°55'44.1481" Right
Degree of Curvature(Arc): 0°42'26.4791"
Length: 414.0677
Tangent: 207.0790
Chord: 414.0226
Middle Ordinate: 2.6457
External: 2.6466
Tangent Direction: N 65°08'02.5600" E
Radial Direction: S 24°51'57.4400" E
Chord Direction: N 66°35'54.6400" E
Radial Direction: S 21°56'13.2900" E
Tangent Direction: N 68°03'46.7100" E

RAMP C

CIRCULAR CURVE NO. 27

Element: Circular

	STATION	NORTHING	EASTING
PC (1100)	1100+50.00	612461.8361	430903.6594
PI (3026)	1101+00.00	612488.5175	430945.9465
CC (1101)		602854.6700	436965.3617
PCC (1102)	1101+50.00	612514.8255	430988.4669

Radius: 11359.6600
Delta: 0°30'15.7891" Right
Degree of Curvature(Arc): 0°30'15.7657"
Length: 100.0013
Tangent: 50.0010
Chord: 100.0010
Middle Ordinate: 0.1100
External: 0.1100
Tangent Direction: N 57°44'59.5103" E
Radial Direction: S 32°15'00.4897" E
Chord Direction: N 58°00'07.4049" E
Radial Direction: S 31°44'44.7006" E
Tangent Direction: N 58°15'15.2994" E

CIRCULAR CURVE NO. 28

Element: Circular

	STATION	NORTHING	EASTING
PCC (1102)	1101+50.00	612514.8255	430988.4669
PI (3027)	1104+22.81	612658.3650	431220.4626
CC (1103)		612092.1811	431249.9639
PT (1104)	1106+49.00	612539.7139	431466.1198

Radius: 497.0000
Delta: 57°31'33.7474" Right
Degree of Curvature(Arc): 11°31'41.9731"
Length: 498.9974
Tangent: 272.8105
Chord: 478.3009
Middle Ordinate: 61.3211
External: 69.9520
Tangent Direction: N 58°15'15.2994" E
Radial Direction: S 31°44'44.7006" E
Chord Direction: N 87°01'02.1731" E
Radial Direction: S 25°46'49.0469" W
Tangent Direction: S 64°13'10.9531" E

CIRCULAR CURVE NO. 29

Element: Circular

	STATION	NORTHING	EASTING
PC (1105)	1109+54.59	612406.8037	431741.2992
PI (3028)	1113+47.25	612236.0284	432094.8753
CC (1106)		612843.5309	431952.2361
PCC (1107)	1116+14.75	612546.3195	432335.4988

Radius: 485.0000
Delta: 77°59'15.1390" Left
Degree of Curvature(Arc): 11°48'48.8260"
Length: 660.1526
Tangent: 392.6579
Chord: 610.3588
Middle Ordinate: 108.0510
External: 139.0234
Tangent Direction: S 64°13'10.9531" E
Radial Direction: S 25°46'49.0469" W
Chord Direction: N 76°47'11.4773" E
Radial Direction: S 52°12'26.0922" E
Tangent Direction: N 37°47'33.9078" E

CIRCULAR CURVE NO. 30

Element: Circular

	STATION	NORTHING	EASTING
PCC (1107)	1116+14.75	612546.3195	432335.4988
PI (3029)	1118+29.56	612716.0700	432467.1364
CC (1108)		612914.0037	431861.3593
PT (1109)	1120+27.31	612930.7966	432461.1243

Radius: 600.0000
Delta: 39°23'47.6365" Left
Degree of Curvature(Arc): 9°32'57.4677"
Length: 412.5599
Tangent: 214.8108
Chord: 404.4805
Middle Ordinate: 35.116
External: 37.2940
Tangent Direction: N 37°47'33.9078" E
Radial Direction: S 52°12'26.0922" E
Chord Direction: N 18°05'40.0896" E
Radial Direction: N 88°23'46.2713" E
Tangent Direction: N 1°36'13.7287" W

RAMP C

CIRCULAR CURVE NO. 31

Element: Circular

	STATION	NORTHING	EASTING
PC (1110)	1121+87.76	613091.1900	432456.6334
PI (3030)	1122+70.48	613173.8751	432454.3183
CC (1111)		613112.1811	433206.3396
PT (1112)	1123+52.53	613255.0774	432470.0783

Radius: 750.0000
Delta: 12°35'14.7595" Right
Degree of Curvature(Arc): 7°38'21.9742"
Length: 164.7691
Tangent: 82.7175
Chord: 164.4380
Middle Ordinate: 4.5203
External: 4.5477
Tangent Direction: N 1°36'13.7287" W
Radial Direction: N 88°23'46.2713" E
Chord Direction: N 4°41'23.6510" E
Radial Direction: S 79°00'58.9692" E
Tangent Direction: N 10°59'01.0308" E

RAMP C1

CIRCULAR CURVE NO. 32

Element: Circular

	STATION	NORTHING	EASTING
PC (1801)	1812+68.82	612258.4311	432018.6018
PI (3031)	1813+38.50	612228.1268	432081.3444
CC (1802)		611934.2625	431862.0301
PCC (1803)	1814+06.48	612176.6004	432128.2487

Radius: 360.0000
Delta: 21°54'29.6042" Right
Degree of Curvature(Arc): 15°54'55.7795"
Length: 137.6534
Tangent: 69.6777
Chord: 136.8164
Middle Ordinate: 6.5593
External: 6.6810
Tangent Direction: S 64°13'10.9531" E
Radial Direction: S 25°46'49.0469" W
Chord Direction: S 53°15'56.1510" E
Radial Direction: S 47°41'18.6511" W
Tangent Direction: S 42°18'41.3489" E

CIRCULAR CURVE NO. 33

Element: Circular

	STATION	NORTHING	EASTING
PCC (1803)	1814+06.48	612176.6004	432128.2487
PI (3032)	1815+13.61	612097.3767	432200.3658
CC (1804)		612008.3102	431943.3747
PT (1805)	1816+08.90	611990.5165	432192.7407

Radius: 250.0000
Delta: 46°23'34.6274" Right
Degree of Curvature(Arc): 22°55'05.9225"
Length: 202.4274
Tangent: 107.1319
Chord: 196.9427
Middle Ordinate: 20.2101
External: 21.9876
Tangent Direction: S 42°18'41.3489" E
Radial Direction: S 47°41'18.6511" W
Chord Direction: S 19°06'54.0352" E
Radial Direction: N 85°55'06.7215" W
Tangent Direction: S 4°04'53.2785" W

DATUMS

HORIZONTAL - PROJECT BASED ON THE DELAWARE STATE PLANE COORDINATE SYSTEM (NAD 27)

VERTICAL - PLAN ELEVATIONS ARE BASED ON N.G.S. SURVEY DATUM (NGVD 1929/59)

UNOFFICIAL WEBSITE COPY

RAMP E

CIRCULAR CURVE NO. 34

Element: Circular

	STATION	NORTHING	EASTING
PC (905)	910+90.03	611476.4350	432418.7181
PI (3033)	914+72.92	611857.0829	432377.3420
CC (906)		611670.9479	434208.1775
PCC (907)	918+44.56	612221.6153	432494.4781

Radius: 1800.0000
Delta: 24°01'03.2046" Right
Degree of Curvature(Arc): 3°10'59.1559"
Length: 754.5338
Tangent: 382.8901
Chord: 749.0216
Middle Ordinate: 39.3917
External: 40.2730
Tangent Direction: N 6°12'13.1549" W
Radial Direction: N 83°47'46.8451" E
Chord Direction: N 5°48'18.4473" E
Radial Direction: S 72°11'09.9504" E
Tangent Direction: N 17°48'50.0496" E

CIRCULAR CURVE NO. 35

Element: Circular

	STATION	NORTHING	EASTING
PCC (907)	918+44.56	612221.6153	432494.4781
PI (3034)	919+93.54	612363.4455	432540.0528
CC (908)		611120.2806	435921.8768
PCC (909)	921+42.34	612501.0254	432597.1898

Radius: 3600.0000
Delta: 4°44'21.2769" Right
Degree of Curvature(Arc): 1°35'29.5780"
Length: 297.7755
Tangent: 148.9727
Chord: 297.6906
Middle Ordinate: 3.0784
External: 3.0810
Tangent Direction: N 17°48'50.0496" E
Radial Direction: S 72°11'09.9504" E
Chord Direction: N 20°11'00.6881" E
Radial Direction: S 67°26'48.6734" E
Tangent Direction: N 22°33'11.3266" E

CIRCULAR CURVE NO. 36

Element: Circular

	STATION	NORTHING	EASTING
PCC (909)	921+42.34	612501.0254	432597.1898
PI (3035)	929+29.03	613227.5575	432898.9191
CC (910)		611638.0599	434675.1192
PT (911)	936+55.94	613607.7929	433587.6212

Radius: 2250.0000
Delta: 38°32'36.8838" Right
Degree of Curvature(Arc): 2°32'47.3247"
Length: 1513.6028
Tangent: 786.6953
Chord: 1485.2235
Middle Ordinate: 126.0820
External: 133.5666
Tangent Direction: N 22°33'11.3266" E
Radial Direction: S 67°26'48.6734" E
Chord Direction: N 41°49'29.7685" E
Radial Direction: S 28°54'11.7896" E
Tangent Direction: N 61°05'48.2104" E

RAMP E1

CIRCULAR CURVE NO. 37

Element: Circular

	STATION	NORTHING	EASTING
PC (1001)	1010+36.47	612321.4400	432671.7308
PI (3036)	1011+63.75	612396.3522	432568.8390
CC (1002)		612450.7888	432765.9056
PT (1003)	1012+51.50	612513.4571	432618.6891

Radius: 160.0000
Delta: 77°00'06.1297" Right
Degree of Curvature(Arc): 35°48'35.5039"
Length: 215.0293
Tangent: 127.2736
Chord: 199.2084
Middle Ordinate: 34.7842
External: 44.4470
Tangent Direction: N 53°56'34.2240" W
Radial Direction: N 36°03'25.7760" E
Chord Direction: N 15°26'31.1592" W
Radial Direction: S 66°56'28.0943" E
Tangent Direction: N 23°03'31.9057" E

RAMP G1

CIRCULAR CURVE NO. 38

Element: Circular

	STATION	NORTHING	EASTING
PC (1301)	1309+67.50	612709.8159	432492.0468
PI (3037)	1310+72.06	612618.8315	432440.5154
CC (1302)		613941.8684	430316.7200
PT (1303)	1311+76.51	6125 32.4681	432381.5664

Radius: 2500.0000
Delta: 4°47'24.2524" Right
Degree of Curvature(Arc): 2°17'30.5922"
Length: 209.0062
Tangent: 104.5640
Chord: 208.9454
Middle Ordinate: 2.1839
External: 2.1858
Tangent Direction: S 29°31'34.1984" W
Radial Direction: N 60°28'25.8016" W
Chord Direction: S 31°55'16.3246" W
Radial Direction: N 55°41'01.5493" W
Tangent Direction: S 34°18'58.4507" W

CIRCULAR CURVE NO. 39

Element: Circular

	STATION	NORTHING	EASTING
PC (1304)	1313+72.51	612370.5841	432271.0694
PI (3038)	1315+87.20	612193.2580	432150.0321
CC (1305)		611899.8444	432960.7281
PCC (1306)	1317+92.80	611979.5416	432129.5402

Radius: 835.0000
Delta: 28°50'21.3225" Left
Degree of Curvature(Arc): 6°51'42.3720"
Length: 420.2889
Tangent: 214.6965
Chord: 415.8662
Middle Ordinate: 26.3042
External: 27.1598
Tangent Direction: S 34°18'58.4507" W
Radial Direction: N 55°41'01.5493" W
Chord Direction: S 19°53'47.7895" W
Radial Direction: N 84°31'22.8717" W
Tangent Direction: S 5°28'37.1283" W

RAMP G1

CIRCULAR CURVE NO. 40

Element: Circular

	STATION	NORTHING	EASTING
PCC (1306)	1317+92.80	611979.5416	432129.5402
PI (3039)	1321+39.36	611716.5582	432096.4620
CC (1307)		611654.7395	435517.0042
PT (1308)	1324+83.55	611289.9890	432133.6086

Radius: 3403.0000
Delta: 11°37'48.1726" Left
Degree of Curvature(Arc): 1°41'01.2638"
Length: 690.7499
Tangent: 346.5657
Chord: 689.5647
Middle Ordinate: 17.5112
External: 17.6018
Tangent Direction: S 5°28'37.1283" W
Radial Direction: N 84°31'22.8717" W
Chord Direction: S 0°20'16.9580" E
Radial Direction: S 83°50'48.9557" W
Tangent Direction: S 6°09'11.0443" E

CIRCULAR CURVE NO. 41

Element: Circular

	STATION	NORTHING	EASTING
PC (1309)	1335+20.96	610258.5482	432244.8042
PI (3040)	1336+80.55	610099.8783	432261.9098
CC (1310)		610302.7084	432654.4307
PT (1311)	1338+25.48	609994.1335	432381.4371

Radius: 412.0000
Delta: 42°20'52.8975" Left
Degree of Curvature(Arc): 13°54'24.2734"
Length: 304.5144
Tangent: 159.5893
Chord: 297.6302
Middle Ordinate: 27.8151
External: 29.8289
Tangent Direction: S 6°09'11.0491" E
Radial Direction: S 83°50'48.9509" W
Chord Direction: S 27°19'37.4979" E
Radial Direction: S 41°29'56.0534" W
Tangent Direction: S 48°30'03.9466" E

CIRCULAR CURVE NO. 42

Element: Circular

	STATION	NORTHING	EASTING
PC (1312)	1339+10.31	609937.9206	432444.9767
PI (3041)	1340+09.26	609872.3599	432519.0824
CC (1313)		609797.1145	432320.4068
PT (1314)	1340+92.47	609774.1568	432506.9998

Radius: 188.0000
Delta: 55°30'55.1324" Right
Degree of Curvature(Arc): 30°28'35.3225"
Length: 182.1579
Tangent: 98.9437
Chord: 175.1155
Middle Ordinate: 21.6340
External: 24.4473
Tangent Direction: S 48°30'03.9466" E
Radial Direction: S 41°29'56.0534" W
Chord Direction: S 20°44'36.3804" E
Radial Direction: N 82°59'08.8142" W
Tangent Direction: S 7°00'51.1858" W

DATUMS

HORIZONTAL - PROJECT BASED ON THE DELAWARE STATE PLANE COORDINATE SYSTEM (NAD 27)

VERTICAL - PLAN ELEVATIONS ARE BASED ON N.G.S. SURVEY DATUM (NGVD 1929/59)

UNOFFICIAL WEBSITE COPY

RAMP G2

CIRCULAR CURVE NO. 43

Element: Circular

		STATION	NORTHING	EASTING
PC	(1400)	1410+00.00	609514.8525	432972.5426
PI	(3042)	1410+77.07	609438.3506	432981.8506
CC	(1401)		609394.0734	431979.8632
PCC	(1402)	1411+53.83	609361.3258	432979.3269

Radius: 1000.0000
Delta: 8°48'49.3198" Right
Degree of Curvature(Arc): 5°43'46.4806"
Length: 153.8281
Tangent: 77.0661
Chord: 153.6765
Middle Ordinate: 2.9564
External: 2.9652
Tangent Direction: S 6°56'13.4353" E
Radial Direction: S 83°03'46.5647" W
Chord Direction: S 2°31'48.7754" E
Radial Direction: N 88°07'24.1155" W
Tangent Direction: S 1°52'35.8845" W

CIRCULAR CURVE NO. 44

Element: Circular

		STATION	NORTHING	EASTING
PCC	(1402)	1411+53.83	609361.3258	432979.3269
PI	(3043)	1412+43.88	609271.3173	432976.3777
CC	(1403)		609377.6996	432479.5950
PCC	(1404)	1413+32.03	609187.9942	432942.2092

Radius: 500.0000
Delta: 20°25'14.0251" Right
Degree of Curvature(Arc): 11°27'32.9612"
Length: 178.2030
Tangent: 90.0568
Chord: 177.2613
Middle Ordinate: 7.9181
External: 8.0455
Tangent Direction: S 1°52'35.8845" W
Radial Direction: N 88°07'24.1155" W
Chord Direction: S 12°05'12.8970" W
Radial Direction: N 67°42'10.0904" W
Tangent Direction: S 22°17'49.9096" W

CIRCULAR CURVE NO. 45

Element: Circular

		STATION	NORTHING	EASTING
PCC	(1404)	1413+32.03	609187.9942	432942.2092
PI	(3044)	1413+92.17	609132.3496	432919.3909
CC	(1405)		609281.3293	432714.6030
PT	(1406)	1414+50.00	609093.5095	432873.4732

Radius: 246.0000
Delta: 27°28'33.9445" Right
Degree of Curvature(Arc): 23°17'27.4822"
Length: 117.9689
Tangent: 60.1414
Chord: 116.8418
Middle Ordinate: 7.0377
External: 7.2449
Tangent Direction: S 22°17'49.9096" W
Radial Direction: N 67°42'10.0904" W
Chord Direction: S 36°02'06.8819" W
Radial Direction: N 40°13'36.1459" W
Tangent Direction: S 49°46'23.8541" W

RAMP R

CIRCULAR CURVE NO. 46

Element: Circular

		STATION	NORTHING	EASTING
PC	(1501)	1512+38.16	610437.3244	432609.1823
PI	(3045)	1513+13.42	610368.7702	432640.2478
CC	(1502)		610148.3985	431971.5917
PCC	(1503)	1513+88.11	610295.1790	432656.0298

Radius: 700.0000
Delta: 12°16'25.7082" Right
Degree of Curvature(Arc): 8°11'06.4009"
Length: 149.9529
Tangent: 75.2645
Chord: 149.6663
Middle Ordinate: 4.0115
External: 4.0346
Tangent Direction: S 24°22'40.0087" E
Radial Direction: S 65°37'19.9913" W
Chord Direction: S 18°14'27.1546" E
Radial Direction: S 77°53'45.6995" W
Tangent Direction: S 12°06'14.3005" E

CIRCULAR CURVE NO. 47

Element: Circular

		STATION	NORTHING	EASTING
PCC	(1503)	1513+88.11	610295.1790	432656.0298
PI	(3046)	1514+48.82	610235.8150	432668.7606
CC	(1504)		610221.7887	432313.8107
PCC	(1505)	1515+08.34	610175.6316	432660.7538

Radius: 350.0000
Delta: 19°40'55.4747" Right
Degree of Curvature(Arc): 16°22'12.8015"
Length: 120.2310
Tangent: 60.7137
Chord: 119.6407
Middle Ordinate: 5.1500
External: 5.2269
Tangent Direction: S 12°06'14.3005" E
Radial Direction: S 77°53'45.6995" W
Chord Direction: S 2°15'46.5631" E
Radial Direction: N 82°25'18.8258" W
Tangent Direction: S 7°34'41.1742" W

CIRCULAR CURVE NO. 48

Element: Circular

		STATION	NORTHING	EASTING
PCC	(1505)	1515+08.34	610175.6316	432660.7538
PI	(3047)	1520+63.98	609624.8417	432587.4770
CC	(1506)		610198.9739	432485.2997
PCC	(1507)	1519+55.23	610116.5316	432328.6720

Radius: 177.0000
Delta: 144°39'41.2123" Right
Degree of Curvature(Arc): 32°22'13.7889"
Length: 446.8929
Tangent: 555.6428
Chord: 337.2998
Middle Ordinate: 123.2766
External: 406.1535
Tangent Direction: S 7°34'41.1742" W
Radial Direction: N 82°25'18.8258" W
Chord Direction: S 79°54'31.7804" W
Radial Direction: N 62°14'22.3865" E
Tangent Direction: N 27°45'37.6135" W

CIRCULAR CURVE NO. 49

Element: Circular

		STATION	NORTHING	EASTING
PCC	(1507)	1519+55.23	610116.5316	432328.6720
PI	(3048)	1520+22.58	610176.1252	432297.3044
CC	(1508)		610395.9971	432859.6136
PCC	(1509)	1520+89.36	610241.1897	432279.9286

Radius: 600.0000
Delta: 12°48'29.8713" Right
Degree of Curvature(Arc): 9°32'57.4676"
Length: 134.1282
Tangent: 67.3448
Chord: 133.8491
Middle Ordinate: 3.7441
External: 3.7676
Tangent Direction: N 27°45'37.6135" W
Radial Direction: N 62°14'22.3865" E
Chord Direction: N 21°21'22.6778" W
Radial Direction: N 75°02'52.2579" E
Tangent Direction: N 14°57'07.7421" W

RAMP R

CIRCULAR CURVE NO. 50

Element: Circular

		STATION	NORTHING	EASTING
PCC	(1509)	1520+89.36	610241.1897	432279.9286
PI	(3049)	1521+94.37	610342.6393	432252.8361
CC	(1510)		610283.7618	432439.3420
PT	(1511)	1522+76.39	610410.1455	432333.2658

Radius: 165.0000
Delta: 64°56'41.2264" Right
Degree of Curvature(Arc): 34°43'28.9735"
Length: 187.0276
Tangent: 105.0049
Chord: 177.1747
Middle Ordinate: 25.7977
External: 30.5787
Tangent Direction: N 14°57'07.7421" W
Radial Direction: N 75°02'52.2579" E
Chord Direction: N 17°31'12.8711" E
Radial Direction: S 40°00'26.5157" E
Tangent Direction: N 49°59'33.4843" E

RAMP S

CIRCULAR CURVE NO. 51

Element: Circular

		STATION	NORTHING	EASTING
PC	(200)	210+00.00	608926.6122	433453.1568
PI	(3050)	211+50.43	608920.4704	433302.8558
CC	(201)		609171.4079	433443.1538
PCC	(202)	212+69.81	609051.7281	433229.3741

Radius: 245.0000
Delta: 63°05'55.1263" Right
Degree of Curvature(Arc): 23°23'09.7168"
Length: 269.8134
Tangent: 150.4265
Chord: 256.3839
Middle Ordinate: 36.2134
External: 42.4946
Tangent Direction: S 87°39'36.1387" W
Radial Direction: N 2°20'23.8613" W
Chord Direction: N 60°47'26.2982" W
Radial Direction: N 60°45'31.2649" E
Tangent Direction: N 29°14'28.7351" W

CIRCULAR CURVE NO. 52

Element: Circular

		STATION	NORTHING	EASTING
PCC	(202)	212+69.81	609051.7281	433229.3741
PI	(3051)	213+57.21	609127.9836	433186.6842
CC	(203)		609291.0877	433656.9335
PT	(204)	214+42.78	609214.2956	433172.9882

Radius: 490.0000
Delta: 20°13'29.4077" Right
Degree of Curvature(Arc): 11°41'34.8584"
Length: 172.9651
Tangent: 87.3919
Chord: 172.0685
Middle Ordinate: 7.6121
External: 7.7322
Tangent Direction: N 29°14'28.7351" W
Radial Direction: N 60°45'31.2649" E
Chord Direction: N 19°07'44.0312" W
Radial Direction: N 80°59'00.6727" E
Tangent Direction: N 9°00'59.3273" W

DATUMS

HORIZONTAL - PROJECT BASED ON THE DELAWARE STATE PLANE COORDINATE SYSTEM (NAD 27)

VERTICAL - PLAN ELEVATIONS ARE BASED ON N.G.S. SURVEY DATUM (NGVD 1929/59)

UNOFFICIAL WEBSITE COPY

RAMP U

CIRCULAR CURVE NO. 53

Element: Circular

	STATION	NORTHING	EASTING
PC (700)	730+00.00	609476.6832	433556.7129
PI (305.2)	733+95+28	609675.7676	433215.2341
CC (701)		610686.1456	434261.8375
PT (702)	737+70.49	610024.0446	433028.2970

Radius: 1400.0000
Delta: 31°31'58.5064" Right
Degree of Curvature(Arc): 4°05'33.2004"
Length: 770.4945
Tangent: 395.2750
Chord: 760.8074
Middle Ordinate: 52.6719
External: 54.7310
Tangent Direction: N 59°45'27.1119" W
Radial Direction: N 30°14'32.8881" E
Chord Direction: N 43°59'27.8587" W
Radial Direction: N 61°46'31.3945" E
Tangent Direction: N 28°13'28.6039" W

CIRCULAR CURVE NO. 54

Element: Circular

	STATION	NORTHING	EASTING
PC (703)	742+86.30	610478.5246	432784.3555
PI (305.3)	744+17.49	610594.1094	432722.3156
CC (704)		612843.1711	437189.8574
PT (705)	745+48.61	610712.7883	432666.4219

Radius: 5000.0000
Delta: 3°00'20.8346" Right
Degree of Curvature(Arc): 1°08'45.2961"
Length: 262.3044
Tangent: 131.1823
Chord: 262.2744
Middle Ordinate: 1.7200
External: 1.7206
Tangent Direction: N 28°13'28.6039" W
Radial Direction: N 61°46'31.3961" E
Chord Direction: N 26°43'18.1866" W
Radial Direction: N 64°46'52.2308" E
Tangent Direction: N 25°13'07.7692" W

RAMP U1

CIRCULAR CURVE NO. 55

Element: Circular

	STATION	NORTHING	EASTING
PC (801)	833+12.18	610049.6727	433319.2848
PI (3054)	836+06.70	609797.7005	433166.8110
CC (802)		610136.6487	433175.5517
PT (803)	836+65.79	610057.1966	433027.5269

Radius: 168.0000
Delta: 120°35'46.8971" Right
Degree of Curvature(Arc): 34°06'16.6704"
Length: 353.6070
Tangent: 294.5136
Chord: 291.8549
Middle Ordinate: 84.7583
External: 171.0609
Tangent Direction: S 31°10'44.4990" W
Radial Direction: N 58°49'15.5010" W
Chord Direction: N 88°31'22.0524" W
Radial Direction: N 61°46'31.3961" E
Tangent Direction: N 28°13'28.6039" W

SB SR7

CIRCULAR CURVE NO. 56

Element: Circular

	STATION	NORTHING	EASTING
PC (1600)	1600+00.00	613188.2903	432403.8481
PI (3055)	1602+46.90	612945.6670	432358.0948
CC (1601)		611365.7530	442068.5045
PT (1602)	1604+93.70	612701.0536	432324.5732

Radius: 9835.0000
Delta: 2°52'34.0434" Left
Degree of Curvature(Arc): 0°34'57.2527"
Length: 493.6956
Tangent: 246.8996
Chord: 493.6437
Middle Ordinate: 3.0976
External: 3.0986
Tangent Direction: S 10°40'45.4305" W
Radial Direction: N 79°19'14.5695" W
Chord Direction: S 9°14'28.4088" W
Radial Direction: N 82°11'48.6129" W
Tangent Direction: S 7°48'11.3871" W

CIRCULAR CURVE NO. 57

Element: Circular

	STATION	NORTHING	EASTING
PC (1603)	1613+26.83	611875.6347	432211.4584
PI (3056)	1617+16.24	611489.8262	432158.5876
CC (1604)		611692.3448	433548.9579
PT (1605)	1620+85.07	611135.1307	432319.3188

Radius: 1350.0000
Delta: 32°10'51.3958" Left
Degree of Curvature(Arc): 4°14'38.8745"
Length: 758.2456
Tangent: 389.4143
Chord: 748.3182
Middle Ordinate: 52.8859
External: 55.0422
Tangent Direction: S 7°48'11.3871" W
Radial Direction: N 82°11'48.6129" W
Chord Direction: S 8°17'14.3108" E
Radial Direction: S 65°37'19.9913" W
Tangent Direction: S 24°22'40.0087" E

CIRCULAR CURVE NO. 58

Element: Circular

	STATION	NORTHING	EASTING
PC (1606)	1634+27.69	609912.2161	432873.4857
PI (3057)	1637+63.66	609606.1975	433012.1588
CC (1607)		609352.5254	431638.3815
PCC (1608)	1640+86.37	609270.8351	432991.9186

Radius: 1356.0000
Delta: 27°49'53.6763" Right
Degree of Curvature(Arc): 4°13'31.2689"
Length: 658.6806
Tangent: 335.9726
Chord: 652.2239
Middle Ordinate: 39.7983
External: 41.0017
Tangent Direction: S 24°22'40.0087" E
Radial Direction: S 65°37'19.9913" W
Chord Direction: S 10°27'43.1705" E
Radial Direction: N 86°32'46.3324" W
Tangent Direction: S 3°327'13.6676" W

CIRCULAR CURVE NO. 59

Element: Circular

	STATION	NORTHING	EASTING
PCC (1608)	1640+86.37	609270.8351	432991.9186
PI (3058)	1643+20.14	609037.4913	432977.8355
CC (1609)		609433.4929	430296.8226
PT (1610)	1645+52.75	608810.0403	432923.8565

Radius: 2700.0000
Delta: 9°53'48.3324" Right
Degree of Curvature(Arc): 2°07'19.4373"
Length: 466.3738
Tangent: 233.7684
Chord: 465.7942
Middle Ordinate: 10.0634
External: 10.1010
Tangent Direction: S 3°27'13.6676" W
Radial Direction: N 86°32'46.3324" W
Chord Direction: S 8°24'07.8338" W
Radial Direction: N 76°38'58.0000" W
Tangent Direction: S 13°21'02.0000" W

SR1

CIRCULAR CURVE NO. 60

Element: Circular

	STATION	NORTHING	EASTING
PC (300)	353+61.69	606465.6770	432945.1914
PI (3059)	362+64.95	607305.2241	432611.9528
CC (301)		607522.5747	435607.8947
PT (302)	371+11.69	608184.0786	432820.5242

Radius: 2864.7900
Delta: 35°00'00.0000" Right
Degree of Curvature(Arc): 1°59'59.9974"
Length: 1750.0006
Tangent: 903.2648
Chord: 1722.9179
Middle Ordinate: 132.5912
External: 139.0258
Tangent Direction: N 21°38'58.0000" W
Radial Direction: N 68°21'02.0000" E
Chord Direction: N 4°08'58.0000" W
Radial Direction: S 76°38'58.0000" E
Tangent Direction: N 13°21'02.0000" E

SW LOOP

CIRCULAR CURVE NO. 61

Element: Circular

	STATION	NORTHING	EASTING
PC (1900)	1900+00.00	612702.3785	432298.8394
PI (3060)	1900+80.42	612622.7795	432287.3981
CC (1901)		612784.8981	431724.7397
PCC (1902)	1901+59.82	612549.2960	432254.7319

Radius: 580.0000
Delta: 15°47'14.9205" Right
Degree of Curvature(Arc): 9°52'42.8976"
Length: 159.8152
Tangent: 80.4171
Chord: 159.3101
Middle Ordinate: 5.4958
External: 5.5484
Tangent Direction: S 8°10'46.2809" W
Radial Direction: N 81°49'13.7191" W
Chord Direction: S 16°04'23.7412" W
Radial Direction: N 66°01'58.7986" W
Tangent Direction: S 23°58'01.2014" W

CIRCULAR CURVE NO. 62

Element: Circular

	STATION	NORTHING	EASTING
PCC (1902)	1901+59.82	612549.2960	432254.7319
PI (3061)	1904+50.46	612283.7147	432136.6707
CC (1903)		612667.0970	431989.7358
PCC (1904)	1906+15.99	612402.3615	431871.3504

Radius: 290.0000
Delta: 90°07'35.0534" Right
Degree of Curvature(Arc): 19°45'25.7953"
Length: 456.1707
Tangent: 290.6405
Chord: 410.5741
Middle Ordinate: 85.1654
External: 120.5751
Tangent Direction: S 23°58'01.2014" W
Radial Direction: N 66°01'58.7986" W
Chord Direction: S 69°01'48.7281" W
Radial Direction: N 24°05'36.2548" E
Tangent Direction: N 65°54'23.7452" W

DATUMS

HORIZONTAL - PROJECT BASED ON THE DELAWARE STATE PLANE COORDINATE SYSTEM (NAD 27)

VERTICAL - PLAN ELEVATIONS ARE BASED ON N.G.S. SURVEY DATUM (NGVD 1929/59)

UNOFFICIAL WEBSITE COPY

SW LOOP

CIRCULAR CURVE NO. 63

Element: Circular

	STATION	NORTHING	EASTING
PCC (1904)	1906+15.99	612402.3615	431871.3504
PI (3062)	1906+82.12	612429.3586	431810.9789
CC (1905)		614183.3926	432667.7983
PCC (1906)	1907+48.20	612460.3819	431752.5742

Radius: 1951.0000
Delta: 3°52'58.1330" Right
Degree of Curvature(Arc): 2°56'12.2607"
Length: 132.2152
Tangent: 66.1329
Chord: 132.1899
Middle Ordinate: 1.1199
External: 1.1205
Tangent Direction: N 65°54'23.7267" W
Radial Direction: N 24°05'36.2733" E
Chord Direction: N 63°57'54.6602" W
Radial Direction: N 27°58'34.4063" E
Tangent Direction: N 62°01'25.5937" W

CIRCULAR CURVE NO. 64

Element: Circular

	STATION	NORTHING	EASTING
PCC (1906)	1907+48.20	612460.3819	431752.5742
PI (3063)	1909+34.48	612547.7640	431588.0677
CC (1907)		612679.4012	431868.9123
PCC (1908)	1910+67.73	612730.1036	431626.1505

Radius: 248.0000
Delta: 73°49'14.8243" Right
Degree of Curvature(Arc): 23°06'11.2928"
Length: 319.5271
Tangent: 186.2740
Chord: 297.8804
Middle Ordinate: 49.7052
External: 62.1645
Tangent Direction: N 62°01'25.5937" W
Radial Direction: N 27°58'34.4063" E
Chord Direction: N 25°06'48.1816" W
Radial Direction: S 78°12'10.7694" E
Tangent Direction: N 11°47'49.2306" E

CIRCULAR CURVE NO. 65

Element: Circular

	STATION	NORTHING	EASTING
PCC (1908)	1910+67.73	612730.1036	431626.1505
PI (3064)	1911+83.10	612843.0410	431649.7382
CC (1909)		612659.1612	431965.8212
PT (1910)	1912+90.50	612919.3696	431736.2552

Radius: 347.0000
Delta: 36°46'58.7913" Right
Degree of Curvature(Arc): 16°30'42.3073"
Length: 222.7686
Tangent: 115.3744
Chord: 218.9627
Middle Ordinate: 17.7238
External: 18.6778
Tangent Direction: N 11°47'49.2306" E
Radial Direction: S 78°12'10.7694" E
Chord Direction: N 30°11'18.6262" E
Radial Direction: S 41°25'11.9781" E
Tangent Direction: N 48°34'48.0219" E

STANTON CHRISTIANA (S.C.) ROAD

CIRCULAR CURVE NO. 66

Element: Circular

	STATION	NORTHING	EASTING
PC (2000)	2010+00.00	611671.2560	432075.6689
PI (3066)	2011+84.72	611486.5336	432074.7823
CC (2001)		611654.7395	435517.0042
PRC (2002)	2013+69.09	611302.7777	432093.6747

Radius: 3441.3750
Delta: 6°08'42.3402" Left
Degree of Curvature(Arc): 1°39'53.6742"
Length: 369.0948
Tangent: 184.7245
Chord: 368.9179
Middle Ordinate: 4.9471
External: 4.9542
Tangent Direction: S 0°16'29.9480" W
Radial Direction: N 89°43'30.0520" W
Chord Direction: S 2°47'51.2222" E
Radial Direction: S 84°07'47.6077" W
Tangent Direction: S 5°52'12.3923" E

CIRCULAR CURVE NO. 67

Element: Circular

	STATION	NORTHING	EASTING
PRC (2002)	2013+69.09	611302.7777	432093.6747
PI (3067)	2014+74.94	611197.4875	432104.4999
CC (2003)		611200.5042	431098.9184
PT (2004)	2015+80.00	611092.2642	432093.0432

Radius: 1000.0000
Delta: 12°05'02.3209" Right
Degree of Curvature(Arc): 5°43'46.4806"
Length: 210.9052
Tangent: 105.8452
Chord: 210.5145
Middle Ordinate: 5.5550
External: 5.5860
Tangent Direction: S 5°52'12.3923" E
Radial Direction: S 84°07'47.6077" W
Chord Direction: S 0°10'18.7682" W
Radial Direction: N 83°47'10.0714" W
Tangent Direction: S 6°12'49.9286" W

RAMP D

CIRCULAR CURVE NO. 68

Element: Circular

	STATION	NORTHING	EASTING
PC (2101)	2105+30.32	614289.2080	432609.2771
PI (3068)	2107+61.72	614063.9993	432556.1009
CC (2102)		612565.7051	439908.5605
PRC (2103)	2109+92.97	613835.9409	432516.9097

Radius: 7500.0000
Delta: 3°32'03.9565" Left
Degree of Curvature(Arc): 0°45'50.1974"
Length: 462.6561
Tangent: 231.4014
Chord: 462.5828
Middle Ordinate: 3.5672
External: 3.5689
Tangent Direction: S 13°14'07.1510" W
Radial Direction: N 76°42'52.8490" W
Chord Direction: S 11°31'05.1728" W
Radial Direction: N 80°14'56.8055" W
Tangent Direction: S 9°45'03.1945" W

CIRCULAR CURVE NO. 69

Element: Circular

	STATION	NORTHING	EASTING
PRC (2103)	2109+92.97	613835.9409	432516.9097
PI (3069)	2111+35.14	613695.8246	432492.8311
CC (2104)		614953.7483	426012.2570
PT (2105)	2112+77.27	613556.8752	432462.7411

Radius: 6600.0000
Delta: 2°28'04.8972" Right
Degree of Curvature(Arc): 0°52'05.2243"
Length: 284.2963
Tangent: 142.1701
Chord: 284.2743
Middle Ordinate: 1.5307
External: 1.5311
Tangent Direction: S 9°45'03.1945" W
Radial Direction: N 80°14'56.8055" W
Chord Direction: S 10°59'05.6431" W
Radial Direction: N 77°46'51.9083" W
Tangent Direction: S 12°13'08.0917" W

UNOFFICIAL WEBSITE COPY

DATUMS

HORIZONTAL - PROJECT BASED ON THE DELAWARE STATE PLANE COORDINATE SYSTEM (NAD 27)

VERTICAL - PLAN ELEVATIONS ARE BASED ON N.G.S. SURVEY DATUM (NGVD 1929/59)

ROAD A

CIRCULAR CURVE NO. 70

	STATION	NORTHING	EASTING
Element: Circular			
PC (2201)	2203+75.89	609509.3882	433464.8775
PI (3070)	2204+91.36	609567.5495	433365.1165
CC (2202)		608213.5356	432709.3869
PCC (2203)	2206+06.39	609609.7558	433257.6287
Radius:	1500.0000		
Delta:	8°48'16.0180" Left		
Degree of Curvature(Arc):	3°49'10.9871"		
Length:	230.4999		
Tangent:	115.4773		
Chord:	230.2732		
Middle Ordinate:	4.4253		
External:	4.4384		
Tangent Direction:	N 59°45'27.1119" W		
Radial Direction:	N 30°14'32.8881" E		
Chord Direction:	N 64°09'35.1209" W		
Radial Direction:	N 21°26'16.8701" E		
Tangent Direction:	N 68°33'43.1299" W		

CIRCULAR CURVE NO. 71

	STATION	NORTHING	EASTING
Element: Circular			
PCC (2203)	2206+06.39	609609.7558	433257.6287
PI (3071)	2208+00.06	609680.5415	433077.3572
CC (2204)		607801.1852	432547.4728
PCC (2205)	2209+92.45	609714.3504	432886.6602
Radius:	1943.0000		
Delta:	11°23'04.0133" Left		
Degree of Curvature(Arc):	2°56'55.7903"		
Length:	386.0665		
Tangent:	193.6709		
Chord:	385.4318		
Middle Ordinate:	9.5809		
External:	9.6283		
Tangent Direction:	N 68°33'43.1299" W		
Radial Direction:	N 21°26'16.8701" E		
Chord Direction:	N 74°15'15.1365" W		
Radial Direction:	N 10°03'12.8568" E		
Tangent Direction:	N 79°56'47.1432" W		

CIRCULAR CURVE NO. 72

	STATION	NORTHING	EASTING
Element: Circular			
PCC (2205)	2209+92.45	609714.3504	432886.6602
PI (3072)	2210+93.63	609732.0133	432787.0333
CC (2206)		605888.0200	432208.2855
PT (2207)	2211+94.77	609744.4679	432686.6223
Radius:	3886.0000		
Delta:	2°58'58.6835" Left		
Degree of Curvature(Arc):	1°28'27.8952"		
Length:	202.3153		
Tangent:	101.1805		
Chord:	202.2924		
Middle Ordinate:	1.3166		
External:	1.3170		
Tangent Direction:	N 79°56'47.1432" W		
Radial Direction:	N 10°03'12.8568" E		
Chord Direction:	N 81°26'16.4850" W		
Radial Direction:	N 7°04'14.1733" E		
Tangent Direction:	N 82°55'45.8267" W		

UNOFFICAL WEBSITE COPY

DATUMS

HORIZONTAL - PROJECT BASED ON THE DELAWARE STATE PLANE COORDINATE SYSTEM (NAD 27)

VERTICAL - PLAN ELEVATIONS ARE BASED ON N.G.S. SURVEY DATUM (NGVD 1929/59)

I-95 SHIFT

CONSTRUCTION ALIGNMENT CONTROL				
POINT	STATION	OFFSET	NORTHING	EASTING
1700	1695+00.00	0	613183.2463	432122.3027
3000	1698+22.76	-4.5674	613320.3068	432414.6058
1702	1701+45.51	0	613440.6167	432714.1925
3001	1705+47.07	-5.5622	613590.3012	433086.9257
1704	1709+48.64	0	613719.1218	433467.3741
3002	1717+54.84	22.4415	613977.9511	434231.7796
1706	1725+61.05	0	614320.0092	434962.7413
3003	1727+85.78	-3.0805	614415.2837	435166.3384
1708	1730+10.51	0	614499.2611	435374.8493

NB SR7

CONSTRUCTION ALIGNMENT CONTROL				
POINT	STATION	OFFSET	NORTHING	EASTING
600	598+63.13	0	608625.6820	432945.8818
3004	599+80.45	-0.7648	608739.8411	432972.9743
602	600+97.78	0	608853.2552	433003.0335
603	603+07.70	0	609056.1688	433056.8137
3005	607+20.57	64.4041	609467.7051	433165.8872
605	611+33.44	0	609868.8711	433023.3213
3006	612+62.14	3.1786	609990.2351	432980.1911
607	613+90.83	0	610106.7587	432925.3125
608	622+41.09	0	610875.9756	432563.0378
3007	625+53.05	-26.1838	611160.8253	432428.8833
610	628+65.02	0	611473.8415	432394.8587
611	634+46.51	0	612051.9273	432332.0212
3008	637+20.61	-16.5764	612325.7472	432302.2571
613	639+94.72	0	612598.7778	432338.5547
3009	647+52.45	-25.5663	613351.0371	432438.5627
615	655+10.18	0	614083.0503	432638.6934
616	657+45.84	0	614310.3665	432700.8411

RAMP A

CONSTRUCTION ALIGNMENT CONTROL				
POINT	STATION	OFFSET	NORTHING	EASTING
1200	1209+00.00	0	614546.6127	435288.9873
1201	1210+01.73	0	614508.6081	435194.6243
3010	1214+54.12	-12.6748	614339.4204	434774.5497
1203	1219+06.51	0	614218.2091	434338.2069
1204	1222+11.51	0	614136.5746	434044.3348
3011	1226+59.28	55.5435	614014.3309	433604.2753
1206	1231+07.05	0	613701.3330	433271.6671
3012	1238+42.98	74.4136	613190.2361	432728.5482
1208	1245+78.91	0	612508.6491	432425.8315
3013	1253+59.09	177.6494	611750.1194	432088.9419
1210	1261+39.27	0	610994.1400	432431.5159
1211	1273+07.15	0	609930.3772	432913.5628
3014	1277+68.09	-79.4654	609494.6758	433111.0020
1213	1282+29.03	0	609029.2538	433000.5472
1214	1286+06.63	0	608661.8591	432913.3564

RAMP B

CONSTRUCTION ALIGNMENT CONTROL				
POINT	STATION	OFFSET	NORTHING	EASTING
400	399+83.00	0	608725.0250	432957.1248
401	401+57.52	0	608894.8310	432997.4235
3015	403+71.07	8.7943	609103.0743	433046.8441
403	405+84.61	0	609316.5960	433061.5459
3016	409+24.81	44.4805	609663.5092	433085.4321
405	412+65.01	0	609978.1002	432937.2706
406	423+68.57	0	610976.4808	432467.0676
3017	431+52.96	-182.5952	611733.2957	432110.6339
408	439+37.35	0	612497.3248	432451.3289
3018	443+80.85	-27.4915	612904.4348	432632.8669
410	448+24.34	0	613254.9729	432908.2168
3019	453+20.32	-66.6258	613654.1167	433221.7468
412	458+16.30	0	613843.7346	433692.5567
413	470+21.64	0	614294.0353	434810.6265
414	476+21.70	0	614510.3773	435370.3291

RAMP B1

CONSTRUCTION ALIGNMENT CONTROL				
POINT	STATION	OFFSET	NORTHING	EASTING
500	500+00.00	0	612492.4540	432462.2959
3020	502+49.10	-17.2478	612721.3977	432564.3889
502	504+98.19	0	612914.0496	432724.7740
3021	511+92.65	-82.2136	613457.5056	433177.2079
504	518+87.11	0	613741.6898	433824.7264
505	528+11.95	0	614113.3656	434671.5959
3022	529+76.27	0.9268	614179.4061	434822.0703
507	531+40.60	0	614248.8241	434971.0167
3023	534+29.38	-5.1508	614370.8695	435232.8830
509	537+18.17	0	614473.9482	435502.7790
3024	541+02.06	6.6417	614610.9686	435861.5465
511	544+85.95	0	614772.4573	436209.9861
3025	546+92.98	-2.6466	614859.5333	436397.8676
513	549+00.02	0	614936.8953	436589.9528
514	558+51.05	0	615292.1874	437472.1220
515	566+00.00	0	615572.0454	438166.8264

RAMP C

CONSTRUCTION ALIGNMENT CONTROL				
POINT	STATION	OFFSET	NORTHING	EASTING
1100	1100+50.00	0	612461.8361	430903.6594
3026	1011+00.00	-0.1100	612488.5175	430945.9465
1102	1101+50.00	0	612514.8255	430988.4669
3027	1103+99.50	-69.9520	612658.3650	431220.4626
1104	1106+49.00	0	612539.7139	431466.1198
1105	1109+54.59	0	612406.8037	431741.2992
3028	1112+84.67	139.0234	612236.0284	432094.8753
1107	1116+14.75	0	612546.3195	432335.4988
3029	1118+21.03	37.2940	612716.0700	432467.1364
1109	1120+27.31	0	612930.7966	432461.1243
1110	1121+87.76	0	613091.1900	432456.6334
3030	1122+70.15	-4.5477	613173.8751	432454.3138
1112	1123+52.53	0	613255.0774	432470.0783

RAMP C1

CONSTRUCTION ALIGNMENT CONTROL				
POINT	STATION	OFFSET	NORTHING	EASTING
1800	1809+54.59	0	612395.0976	431735.6452
1801	1812+68.82	0	612258.4311	432018.6018
3031	1813+37.65	-6.6810	612228.1268	432081.3444
1803	1814+06.48	0	612176.6004	432128.2487
3032	1815+07.69	-21.9876	612097.3767	432200.3658
1805	1816+08.90	0	611990.5165	432192.7407
1806	1818+09.79	0	611790.1390	432178.4426

RAMP E

CONSTRUCTION ALIGNMENT CONTROL				
POINT	STATION	OFFSET	NORTHING	EASTING
905	910+90.03	0	611476.4350	432418.7181
3033	914+67.30	-40.2730	611857.0829	432377.3420
907	918+44.56	0	612221.6153	432494.4781
3034	919+93.45	-3.0810	612363.4455	432540.0528
909	921+42.34	0	612501.0254	432597.1898
3035	928+99.14	-133.5666	613227.5575	432898.9191
911	936+55.94	0	613607.7929	433587.6212

RAMP E1

CONSTRUCTION ALIGNMENT CONTROL				
POINT	STATION	OFFSET	NORTHING	EASTING
1000	1010+16.48	0	612309.6718	432687.8945
1001	1010+36.47	0	612321.4400	432671.7308
3036	1011+43.99	-44.4470	612396.3522	432568.8390
1003	1012+51.50	0	612513.4571	432618.6891

DATUMS

HORIZONTAL - PROJECT BASED ON THE DELAWARE STATE PLANE COORDINATE SYSTEM (NAD 27)

VERTICAL - PLAN ELEVATIONS ARE BASED ON N.G.S. SURVEY DATUM (NGVD 1929/59)

RAMP G1

CONSTRUCTION ALIGNMENT CONTROL				
POINT	STATION	OFFSET	NORTHING	EASTING
1300	1308+15.50	0	612842.0758	432566.9556
1301	1309+67.50	0	612709.8159	432492.0468
3037	1310+72.00	-2.1858	612618.8315	432440.5154
1303	1311+76.51	0	612532.4681	432381.5664
1304	1313+72.51	0	612370.5841	432271.0694
3038	1315+82.65	27.1598	612193.2580	432150.0321
1306	1317+92.80	0	611979.5416	432129.5402
3039	1321+38.17	17.6018	611634.5582	432096.4620
1308	1324+83.55	0	611289.9890	432133.6086
1309	1335+20.96	0	610258.5482	432244.8042
3040	1336+73.22	29.8289	610099.8783	432261.9098
1311	1338+25.48	0	609994.1335	432381.4371
1312	1339+10.31	0	609937.9206	432444.9767
3041	1340+01.39	-24.4473	609872.3599	432519.0824
1314	1340+92.47	0	609774.1568	432506.9998
1315	1343+00.00	0	609568.1791	432481.6571

RAMP G2

CONSTRUCTION ALIGNMENT CONTROL				
POINT	STATION	OFFSET	NORTHING	EASTING
1400	1410+00.00	0	609514.8525	432972.5426
3042	1410+76.91	-2.9652	609438.3506	432981.8506
1402	1411+53.83	0	609361.3258	432979.3269
3043	1412+42.93	-8.0455	609271.3173	432976.3777
1404	1413+32.03	0	609187.9942	432942.2092
3044	1413+91.02	-7.2449	609132.3496	432919.3909
1406	1414+50.00	0	609093.5095	432873.4732

RAMP R

CONSTRUCTION ALIGNMENT CONTROL				
POINT	STATION	OFFSET	NORTHING	EASTING
1500	1510+00.00	0	610654.2486	432510.8826
1501	1512+38.16	0	610437.3244	432609.1823
3045	1513+13.13	-4.0346	610368.7702	432640.2478
1503	1513+88.11	0	610295.1790	432656.0298
3046	1514+48.23	-5.2269	610235.8150	432668.7606
1505	1515+08.34	0	610175.6316	432660.7538
3047	1517+31.79	-406.1535	609624.8417	432587.4770
1507	1519+55.23	0	610116.5316	432328.6720
3048	1520+22.30	-3.7676	610176.1252	432297.3044
1509	1520+89.36	0	610241.1897	432279.9286
3049	1521+82.88	-30.5787	610342.6393	432252.8361
1511	1522+76.39	0	610410.1455	432333.2658
1512	1524+90.96	0	610548.0904	432497.6192

RAMP S

CONSTRUCTION ALIGNMENT CONTROL				
POINT	STATION	OFFSET	NORTHING	EASTING
200	210+00.00	0	608926.6122	433453.1568
3050	211+34.91	-42.4946	608920.4704	433302.8558
202	212+69.81	0	609051.7281	433229.3741
3051	213+56.30	-7.7322	609127.9836	433186.6842
204	214+42.78	0	609214.2956	433172.9882
205	218+61.02	0	609627.3717	433107.4416

RAMP U

CONSTRUCTION ALIGNMENT CONTROL				
POINT	STATION	OFFSET	NORTHING	EASTING
700	730+00.00	0	609476.6832	433556.7129
3052	733+85.25	-54.7310	609675.7676	433215.2341
702	737+70.49	0	610024.0446	433028.2970
703	742+86.30	0	610478.5246	432784.3555
3053	744+17.46	-1.7206	610594.1094	432722.3156
705	745+48.61	0	610712.7883	432666.4219

UNOFFICIAL WEBSITE COPY

RAMP U1

CONSTRUCTION ALIGNMENT CONTROL				
POINT	STATION	OFFSET	NORTHING	EASTING
800	830+60.00	0	610265.4278	433449.8428
801	833+12.18	0	610049.6727	433319.2848
3054	834+88.99	-171.0609	609797.7005	433166.8110
803	836+65.79	0	610057.1966	433027.5269

SB SR7

CONSTRUCTION ALIGNMENT CONTROL				
POINT	STATION	OFFSET	NORTHING	EASTING
1600	1600+00.00	0	613188.2903	432403.8481
3055	1602+46.85	3.0986	612945.6670	432358.0948
1602	1604+93.70	0	612701.0536	432324.5732
1603	1613+26.83	0	611875.6347	432211.4584
3056	1617+05.95	55.0422	611489.8262	432158.5876
1605	1620+85.07	0	611135.1307	432319.3188
1606	1634+27.69	0	609912.2161	432873.4857
3057	1637+57.03	-41.0017	609606.1975	433012.1588
1608	1640+86.37	0	609270.8351	432991.9186
3058	1643+19.56	-10.1010	609037.4913	432977.8355
1610	1645+52.75	0	608810.0403	432923.8565
1611	1646+99.35	0	608667.4008	432890.0050

SR1 NB

CONSTRUCTION ALIGNMENT CONTROL				
POINT	STATION	OFFSET	NORTHING	EASTING
300	353+61.69	0	606465.6770	432945.1914
3059	362+36.69	-139.0258	607305.2241	432611.9528
302	371+11.69	0	608184.0786	432820.5242
303	376+69.56	0	608726.8723	432949.3410

SW LOOP

CONSTRUCTION ALIGNMENT CONTROL				
POINT	STATION	OFFSET	NORTHING	EASTING
1900	1900+00.00	0	612702.3785	432298.8394
3060	1900+79.91	-5.5484	612622.7795	432287.3981
1902	1901+59.82	0	612549.2960	432254.7319
3061	1903+87.90	-120.5751	612283.7147	432136.6707
1904	1906+15.99	0	612402.3615	431871.3504
3062	1906+82.09	-1.1205	612429.3586	431810.9789
1906	1907+48.20	0	612460.3819	431752.5742
3063	1909+07.96	-62.1645	612547.7640	431588.0677
1908	1910+67.73	0	612730.1036	431626.1505
3064	1911+79.11	-18.6778	612843.0410	431649.7382
1910	1912+90.50	0	612919.3696	431736.2552

STANTON CHRISTIANA (S.C.) ROAD

CONSTRUCTION ALIGNMENT CONTROL				
POINT	STATION	OFFSET	NORTHING	EASTING
2000	2010+00.00	0	611671.2560	432075.6689
3066	2011+84.55	4.9542	611486.5336	432074.7823
2002	2013+69.09	0	611302.7777	432093.6747
3067	2014+74.55	-5.5860	611197.4875	432104.4999
2004	2015+80.00	0	611092.2642	432093.0432
2005	2016+80.00	0	610992.8518	432082.2192

RAMP R1

CONSTRUCTION ALIGNMENT CONTROL				
POINT	STATION	OFFSET	NORTHING	EASTING
100	100+00.00	0	610791.3127	432785.3734
101	106+86.15	0	610387.0703	432230.9487

RAMP D

CONSTRUCTION ALIGNMENT CONTROL				
POINT	STATION	OFFSET	NORTHING	EASTING
2100	2100+00.00	0	614805.3320	432731.1440
2101	2105+30.32	0	614289.2080	432609.2771
3068	2107+61.64	3.5689	614063.9993	432556.1009
2103	2109+92.97	0	613835.9409	432516.9097
3069	2111+35.12	-1.5311	613695.8246	432492.8311
2105	2112+77.27	0	613556.8752	432462.7411
2106	2113+30.23	0	613505.1172	432451.5328

ROAD A

CONSTRUCTION ALIGNMENT CONTROL				
POINT	STATION	OFFSET	NORTHING	EASTING
2200	2200+00.00	0	609320.0691	433789.6064
2201	2203+75.89	0	609509.3882	433464.8775
3070	2204+91.14	4.4384	609567.5495	433365.1165
2203	2206+06.39	0	609609.7558	433257.6287
3071	2207+99.42	9.6283	609680.5415	433077.3572
2205	2209+92.45	0	609714.3504	432886.6602
3072	2210+93.61	1.3170	609732.0133	432787.0333
2207	2211+94.77	0	609744.4679	432686.6223
2208	2215+00.00	0	609782.0398	432383.7098

UNOFFICAL WEBSITE COPY

DATUMS

HORIZONTAL - PROJECT BASED ON THE DELAWARE STATE PLANE COORDINATE SYSTEM (NAD 27)

VERTICAL - PLAN ELEVATIONS ARE BASED ON N.G.S. SURVEY DATUM (NGVD 1929/59)

GUARDRAIL SCHEDULE

NO.	ITEM DESCRIPTION / TYPE	BEGIN STA.	OFFSET	LENGTH
1	GUARDRAIL TO BARRIER CONNECTION (EXIT TYPE)	361+01.32	VARIES	1 EA.
	GALVANIZED STEEL BEAM GUARDRAIL, TYPE 1	361+15.57	VARIES	175.00'
	END ANCHORAGE	362+90.57	VARIES	1 EA.
	MAINTENANCE PAVEMENT			83 S.Y.
2	GALVANIZED STEEL BEAM GUARDRAIL, TYPE 1	362+75.35	-12.00'	450.00'
	MAINTENANCE PAVEMENT			200 S.Y.
3	GALVANIZED STEEL BEAM GUARDRAIL, TYPE 1	361+88.18	69.00'	237.50'
	END ANCHORAGE	364+81.93	69.00'	1 EA.
	MAINTENANCE PAVEMENT			106 S.Y.
39	TREATED WOOD BLOCK	361+00	RT.	15 EA.
40	TREATED WOOD BLOCK	361+00	LT.	29 EA.

NOTES: ALL BEGINNING STATIONS ARE APPROXIMATE. EXACT LOCATIONS ARE TO BE DETERMINED BY THE ENGINEER IN THE FIELD.
A = OFFSET ATTENUATORS AS PER STANDARD DETAILS.

NOTES:
1. SEE LIGHTING PLANS FOR EXISTING LIGHTS AND JUNCTION WELLS TO BE REMOVED.
2. SEE DRAINAGE PLANS FOR PIPE AND DRAINAGE STRUCTURE SCHEDULES AND DITCH GRADING.

BARRIER SCHEDULE

NO.	ITEM DESCRIPTION / TYPE	LENGTH
1	DOUBLE FACE, BIFURCATED TYPE 1 (720651)	500'

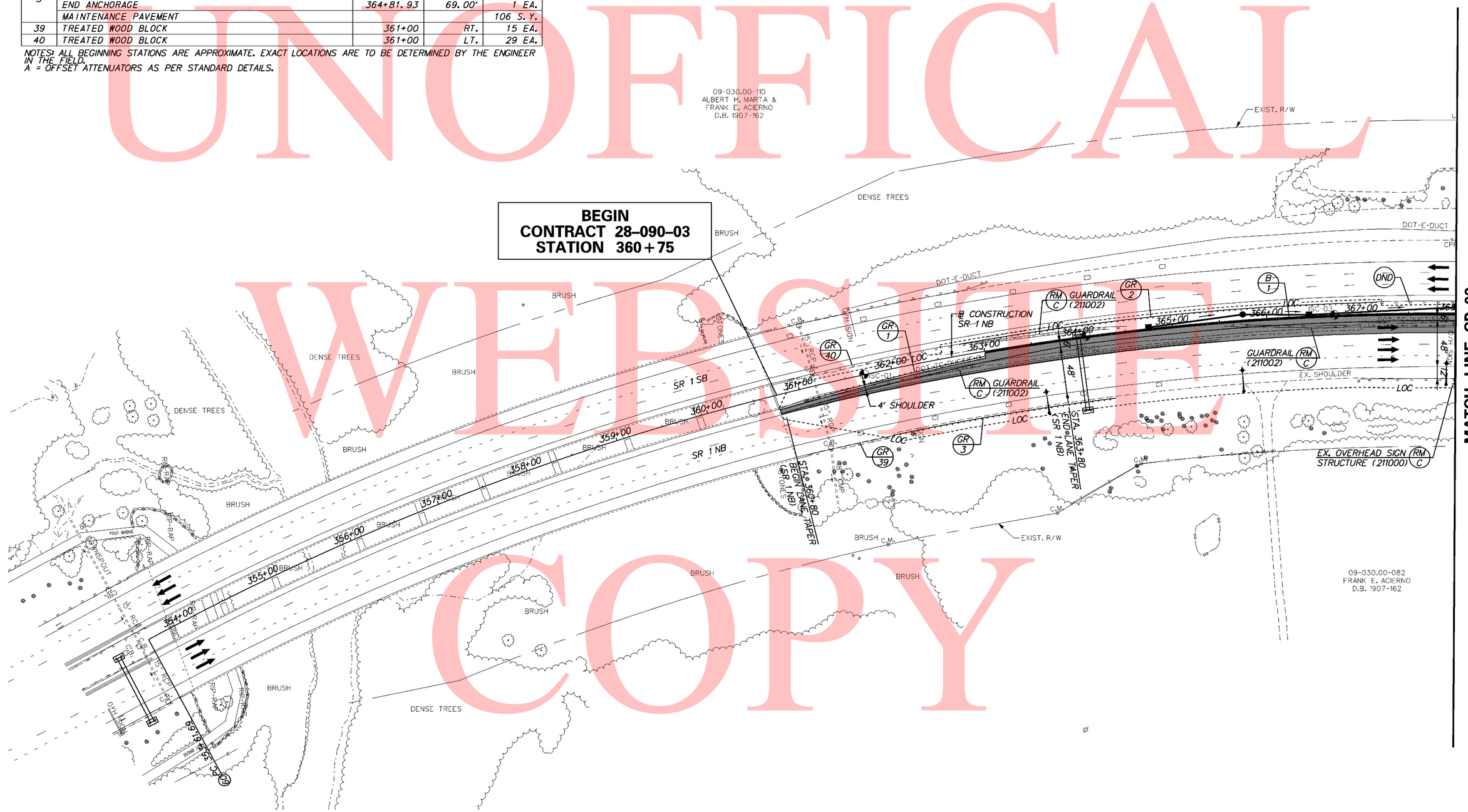

UNOFFICAL WEBSITE COPY

DELAWARE DEPARTMENT OF TRANSPORTATION	ADDENDUMS / REVISIONS	SCALE 0 50 100 150 FEET	SR1 / I-95 INTERCHANGE	CONTRACT 28-090-03	BRIDGE NO.	CONSTRUCTION PLAN	CP-01
				COUNTY NEW CASTLE	DESIGNED BY:		SHEET NO. 62
					CHECKED BY:		TOTAL SHTS. 803

11/1/2010 9:45:27 AM
M:\PROJECTS\2003\03059_DELTRNPK\SR1MALL\CADD\2809003\PLANS\CP01_SR1.DGN

GUARDRAIL SCHEDULE

NO.	ITEM DESCRIPTION / TYPE	BEGIN STA.	OFFSET	LENGTH
4	GALVANIZED STEEL BEAM GUARDRAIL, TYPE 1	373+03.70	-79.00'	337.50'
	END ANCHORAGE	369+70.13	-79.00'	1 EA.
	MAINTENANCE PAVEMENT			150 S.Y.
5	GUARDRAIL TO BARRIER CONNECTION (EXIT TYPE)	598+95.64	36.00'	1 EA.
	GALVANIZED STEEL BEAM GUARDRAIL, TYPE 1	599+09.89	36.00'	512.50'
	END ANCHORAGE	604+22.39	36.00'	1 EA.
	MAINTENANCE PAVEMENT			232 S.Y.
41	TREATED WOOD BLOCK	367+00	RT.	95 EA.
42	TREATED WOOD BLOCK	373+00	LT.	9 EA.
43	TREATED WOOD BLOCK	1284+50	RT.	18 EA.

NOTES: ALL BEGINNING STATIONS ARE APPROXIMATE. EXACT LOCATIONS ARE TO BE DETERMINED BY THE ENGINEER IN THE FIELD.
A = OFFSET ATTENUATORS AS PER STANDARD DETAILS.

BARRIER SCHEDULE

NO.	ITEM DESCRIPTION / TYPE	LENGTH
2	DOUBLE FACE, BIFURCATED TYPE 1 (720651)	566'
3	SINGLE FACE (720512)	399'
4	SINGLE FACE, MODIFIED TYPE 2 (720655)	374'

NOTES:

1. SEE LIGHTING PLANS FOR EXISTING LIGHTS AND JUNCTION WELLS TO BE REMOVED.
2. SEE DRAINAGE PLANS FOR PROPOSED PIPE AND DRAINAGE STRUCTURE SCHEDULES AND DITCH GRADING.

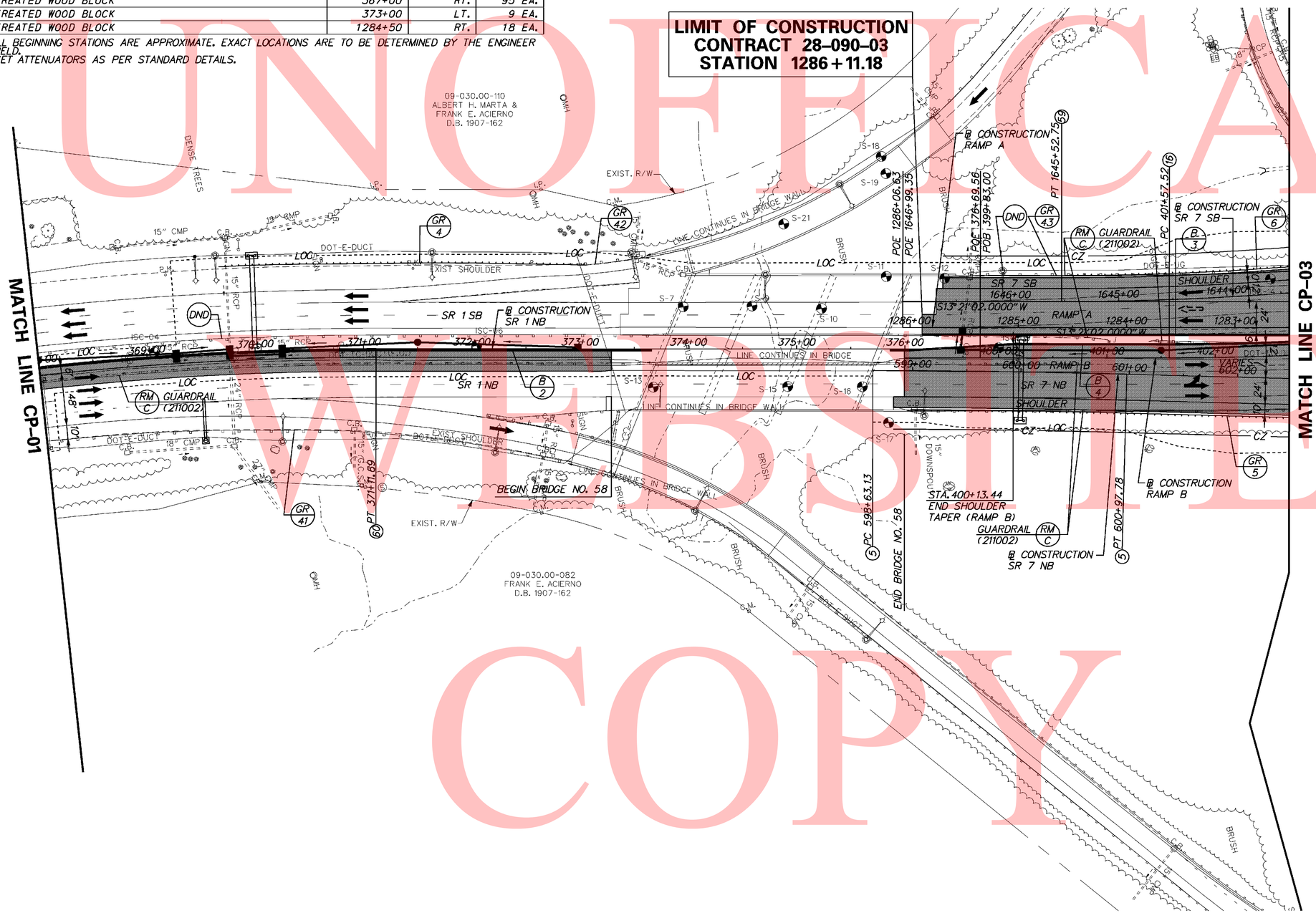

UNOFFICIAL WEBSITE COPY

11/1/2010 9:45:47 AM
M:\PROJECTS\2003\03059_DELTRNPK\SRIMALL\CADD\2809003\PLANS\CP02_SR1.DGN

DELAWARE DEPARTMENT OF TRANSPORTATION	ADDENDUMS / REVISIONS	SCALE 0 50 100 150 FEET	SR1 / I-95 INTERCHANGE	CONTRACT 28-090-03 / COUNTY NEW CASTLE / BRIDGE NO. / DESIGNED BY: / CHECKED BY:	CONSTRUCTION PLAN

CP-02
SHEET NO. 63
TOTAL SHTS. 803

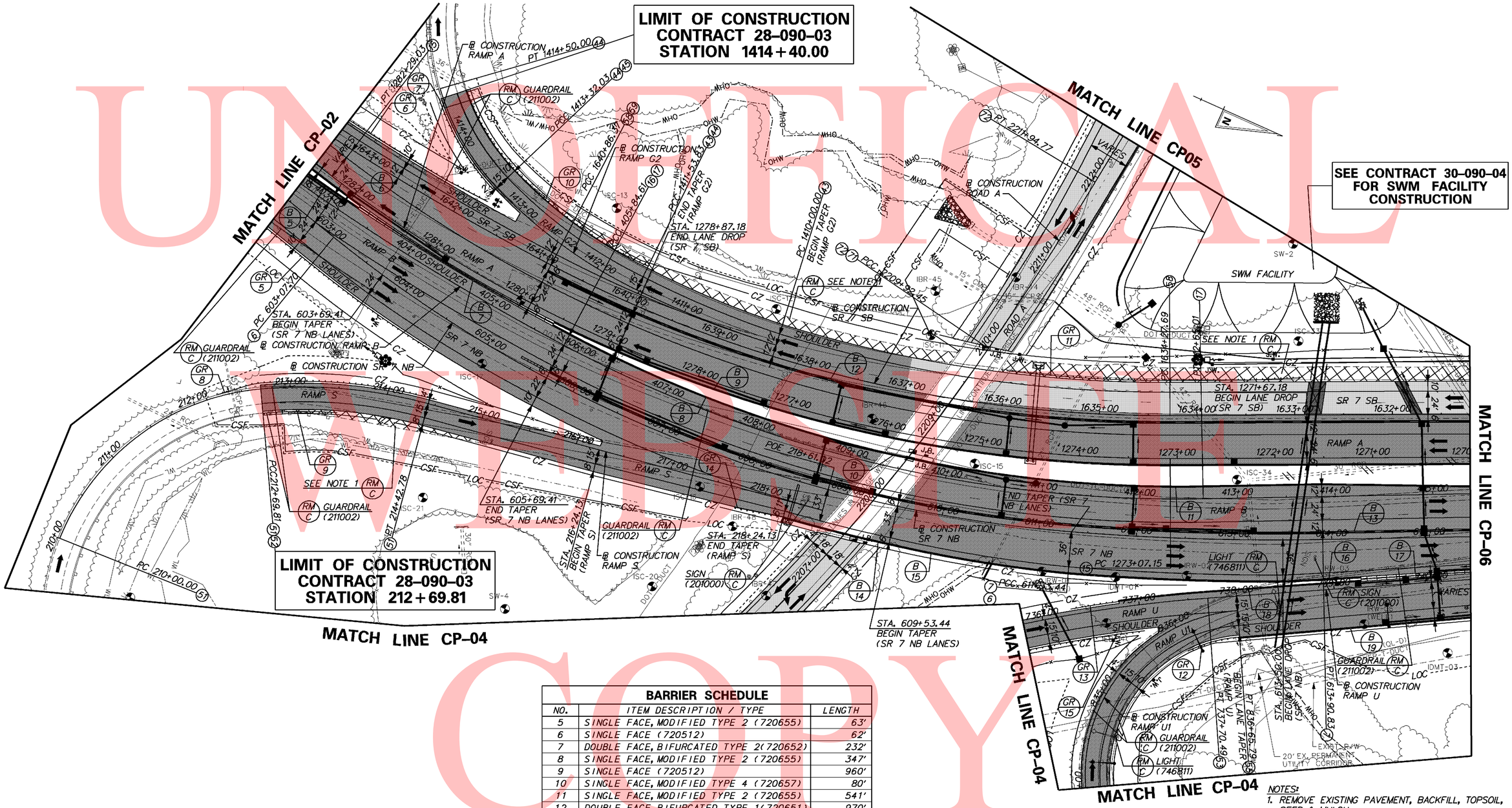

BARRIER SCHEDULE		
NO.	ITEM DESCRIPTION / TYPE	LENGTH
5	SINGLE FACE, MODIFIED TYPE 2 (720655)	63'
6	SINGLE FACE (720512)	62'
7	DOUBLE FACE, BIFURCATED TYPE 2(720652)	232'
8	SINGLE FACE, MODIFIED TYPE 2 (720655)	347'
9	SINGLE FACE (720512)	960'
10	SINGLE FACE, MODIFIED TYPE 4 (720657)	80'
11	SINGLE FACE, MODIFIED TYPE 2 (720655)	541'
12	DOUBLE FACE, BIFURCATED TYPE 1(720651)	970'
13	DOUBLE FACE, BIFURCATED TYPE 1(720655)	970'
14	SINGLE FACE, MODIFIED TYPE 4 (720657)	119'
15	SINGLE FACE (720512)	272'
16	SINGLE FACE, MODIFIED TYPE 2 (720655)	207'
17	DOUBLE FACE, BIFURCATED TYPE 1(720651)	113'
18	SINGLE FACE (720512)	250'
19	SINGLE FACE, MODIFIED TYPE 2 (720655)	238'

NOTES:

1. REMOVE EXISTING PAVEMENT, BACKFILL, TOPSOIL, SEED & MULCH.
2. REMOVE EXISTING BRIDGE MOUNTED SIGN STRUCTURES ON THE ROAD A BRIDGE, (211000). SEE SIGNING AND STRUCTURAL PLANS FOR MORE DETAILS.
3. SEE LIGHTING PLANS FOR EXISTING LIGHTS AND JUNCTION WELLS TO BE REMOVED.
4. SEE DRAINAGE PLANS FOR PIPE AND DRAINAGE SCHEDULES AND DITCH GRADING.

UNOFFICIAL WORKING COPY

DELAWARE DEPARTMENT OF TRANSPORTATION

ADDENDUMS / REVISIONS

SCALE 0 50 100 150 FEET

SR1 / I-95 INTERCHANGE

CONTRACT	BRIDGE NO.	
28-090-03	DESIGNED BY:	
COUNTY	CHECKED BY:	
NEW CASTLE		

CONSTRUCTION PLAN

CP-03
SHEET NO.
64
TOTAL SHTS.
803

11/10/2010 11:26:13 AM
M:\PROJECTS\2003\03059_DELTRNPK\SRIMALL\CADD\2809003\PLANS\CP03_SR1.DGN

GUARDRAIL SCHEDULE

NO.	ITEM DESCRIPTION / TYPE	BEGIN STA.	OFFSET	LENGTH
6	GUARDRAIL END TREATMENT ATTENUATOR, TYPE 1	1641+75.00	A	1 EA.
	GALVANIZED STEEL BEAM GUARDRAIL, TYPE 1	1642+25.00	24.00'	312.50'
	END ANCHORAGE	1645+37.50	24.00'	1 EA.
	MAINTENANCE PAVEMENT			139 S.Y.
7	GUARDRAIL END TREATMENT ATTENUATOR, TYPE 1	1413+27.50	A	1 EA.
	GALVANIZED STEEL BEAM GUARDRAIL, TYPE 1	1413+77.50	-4.00'	62.50'
	MAINTENANCE PAVEMENT			28 S.Y.
8	GALVANIZED STEEL BEAM GUARDRAIL, TYPE 1	212+25.09	-6.00'	212.50'
	END ANCHORAGE	214+37.59	-6.00'	1 EA.
	MAINTENANCE PAVEMENT			95 S.Y.
9	GALVANIZED STEEL BEAM GUARDRAIL, TYPE 1	212+69.81	25.00'	62.50'
	END ANCHORAGE	213+32.31	25.00'	1 EA.
	MAINTENANCE PAVEMENT			28 S.Y.
10	GUARDRAIL END TREATMENT ATTENUATOR, TYPE 1	1411+65.00	A	1 EA.
	GALVANIZED STEEL BEAM GUARDRAIL, TYPE 1	1412+15.00	25.00'	225.00'
	MAINTENANCE PAVEMENT			100 S.Y.
11	GUARDRAIL END TREATMENT ATTENUATOR, TYPE 1	1632+95.00	A	1 EA.
	GALVANIZED STEEL BEAM GUARDRAIL, TYPE 1	1633+45.00	36.00'	250.00'
	END ANCHORAGE	1635+99.60	36.00'	1 EA.
	MAINTENANCE PAVEMENT			111 S.Y.
12	GUARDRAIL END TREATMENT ATTENUATOR, TYPE 1	835+95.93	A	1 EA.
	GUARDRAIL TO BARRIER CONNECTION (EXIT TYPE)	836+45.93	27.00'	1 EA.
	MAINTENANCE PAVEMENT			5 S.Y.
13	GUARDRAIL END TREATMENT ATTENUATOR, TYPE 1	736+87.30	A	1 EA.
	GUARDRAIL TO BARRIER CONNECTION (EXIT TYPE)	736+60.30	6.00'	1 EA.
	MAINTENANCE PAVEMENT			5 S.Y.
14	GUARDRAIL END TREATMENT ATTENUATOR, TYPE 1	217+54.27	A	1 EA.
	GUARDRAIL TO BARRIER CONNECTION, APPROACH TYPE 1	218+04.27	17.00'	1 EA.
	MAINTENANCE PAVEMENT			9 S.Y.

NOTES: ALL BEGINNING STATIONS ARE APPROXIMATE. EXACT LOCATIONS ARE TO BE DETERMINED BY THE ENGINEER IN THE FIELD.
A = OFFSET ATTENUATORS AS PER STANDARD DETAILS.

UNOFFICAL WEBSITE COPY

GUARDRAIL SCHEDULE

NO.	ITEM DESCRIPTION / TYPE	BEGIN STA.	OFFSET	LENGTH
15	GUARDRAIL END TREATMENT ATTENUATOR, TYPE 1	2200+60.43	A	1 EA.
	GALVANIZED STEEL BEAM GUARDRAIL, TYPE 1	2201+10.43	45.00'	850.00'
	END ANCHORAGE	736+50.41	27.00'	1 EA.
	MAINTENANCE PAVEMENT			378 S.Y.
16	GUARDRAIL END TREATMENT ATTENUATOR, TYPE 1	2205+03.59	A	1 EA.
44	TREATED WOOD BLOCK	2205+53	RT.	25 EA.
45	TREATED WOOD BLOCK	2207+00	LT.	100 EA.

NOTES: ALL BEGINNING STATIONS ARE APPROXIMATE. EXACT LOCATIONS ARE TO BE DETERMINED BY THE ENGINEER IN THE FIELD.
A = OFFSET ATTENUATORS AS PER STANDARD DETAILS.

CURB SCHEDULE

NO.	ITEM DESCRIPTION / TYPE	LENGTH
1	PCC CURB, TYPE 1 (701010)	36'

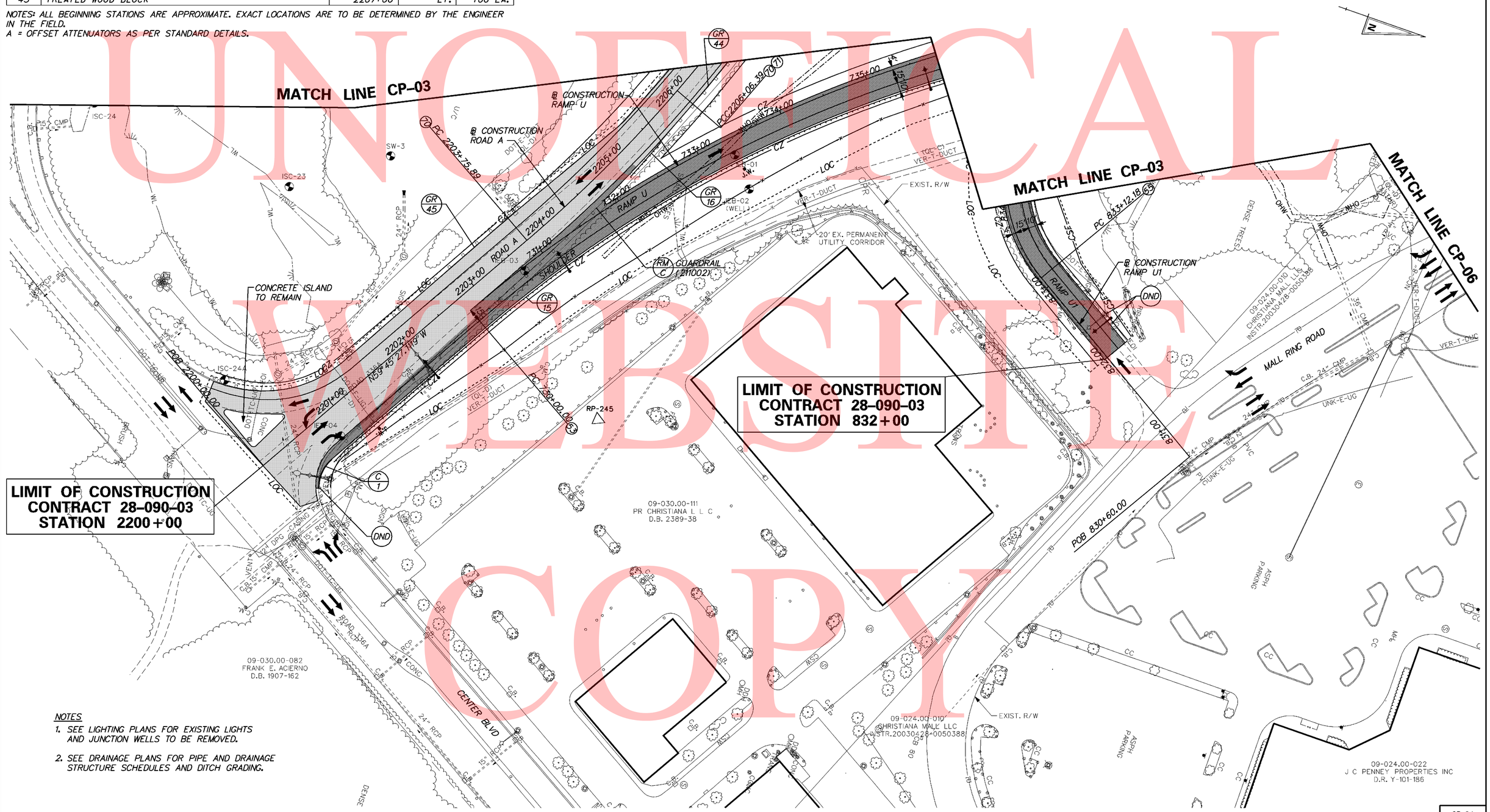

NOTES

1. SEE LIGHTING PLANS FOR EXISTING LIGHTS AND JUNCTION WELLS TO BE REMOVED.
2. SEE DRAINAGE PLANS FOR PIPE AND DRAINAGE STRUCTURE SCHEDULES AND DITCH GRADING.

UNOFFICIAL WEBSITE COPY

DELAWARE DEPARTMENT OF TRANSPORTATION

ADDENDUMS / REVISIONS

SCALE 0 50 100 150 FEET

SR1 / I-95 INTERCHANGE

CONTRACT	BRIDGE NO.
28-090-03	DESIGNED BY:
COUNTY	CHECKED BY:
NEW CASTLE	

CONSTRUCTION PLAN

CP-04
SHEET NO. 66
TOTAL SHTS. 803

11/1/2010 10:00:31 AM
M:\PROJECTS\2003\03059_DELTRNPK\SRIMALL\CADD\2809003\PLANS\CP04_SR1.DGN

CURB SCHEDULE		
NO.	ITEM DESCRIPTION / TYPE	LENGTH
3	INT. PCC CURB AND GUTTER, TYPE 1 (701020)	440'
4	PCC MONOLITHIC MEDIAN	65'

RIGHT-OF-WAY MONUMENT SCHEDULE				
NO.	STATION	OFFSET	NORTHING	EASTING
4100	1340+09.21	71.55	609833.8000	432430.9311
4102	1339+10.31	54.00	609897.4781	432409.1939
4104	1338+25.48	54.00	609953.6869	432345.6589
4108	1335+20.96	54.00	610252.7625	432191.1150
4110	1332+44.70	54.00	610527.4359	432161.5036

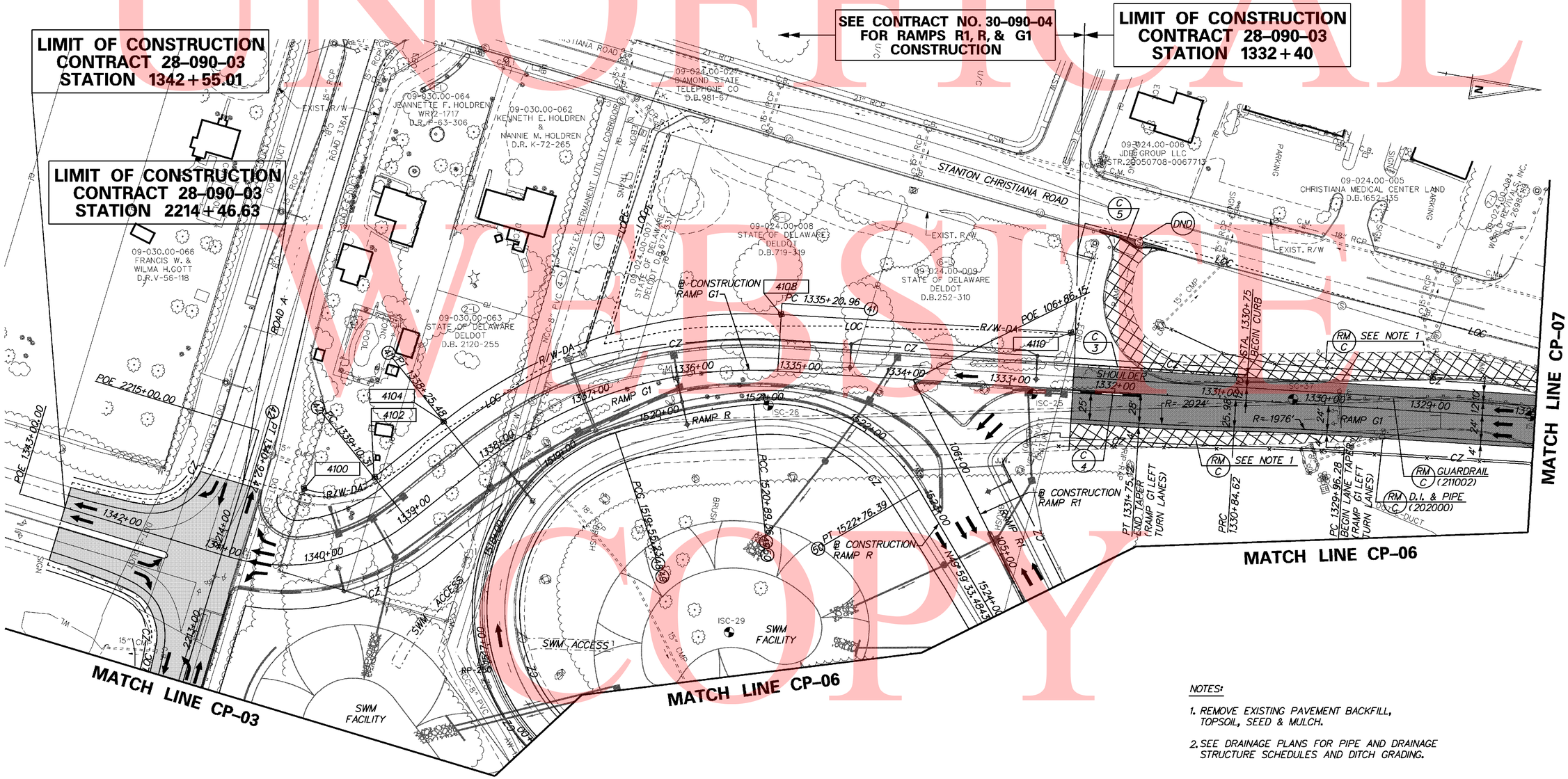

NOTES:

1. REMOVE EXISTING PAVEMENT BACKFILL, TOPSOIL, SEED & MULCH.
2. SEE DRAINAGE PLANS FOR PIPE AND DRAINAGE STRUCTURE SCHEDULES AND DITCH GRADING.

UNOFFICIAL WEBSITE COPY

11/1/2010 10:05:18 AM
M:\PROJECTS\2003\03059_DELTRNPK\SRIMALL\CADD\2809003\PLANS\CP05_SR1.DGN

DELAWARE
DEPARTMENT OF TRANSPORTATION

ADDENDUMS / REVISIONS

SCALE
0 50 100 150
FEET

SR1 / I-95 INTERCHANGE

CONTRACT	BRIDGE NO.
28-090-03	DESIGNED BY:
COUNTY	CHECKED BY:
NEW CASTLE	

CONSTRUCTION PLAN

CP-05
SHEET NO.
67
TOTAL SHTS.
803

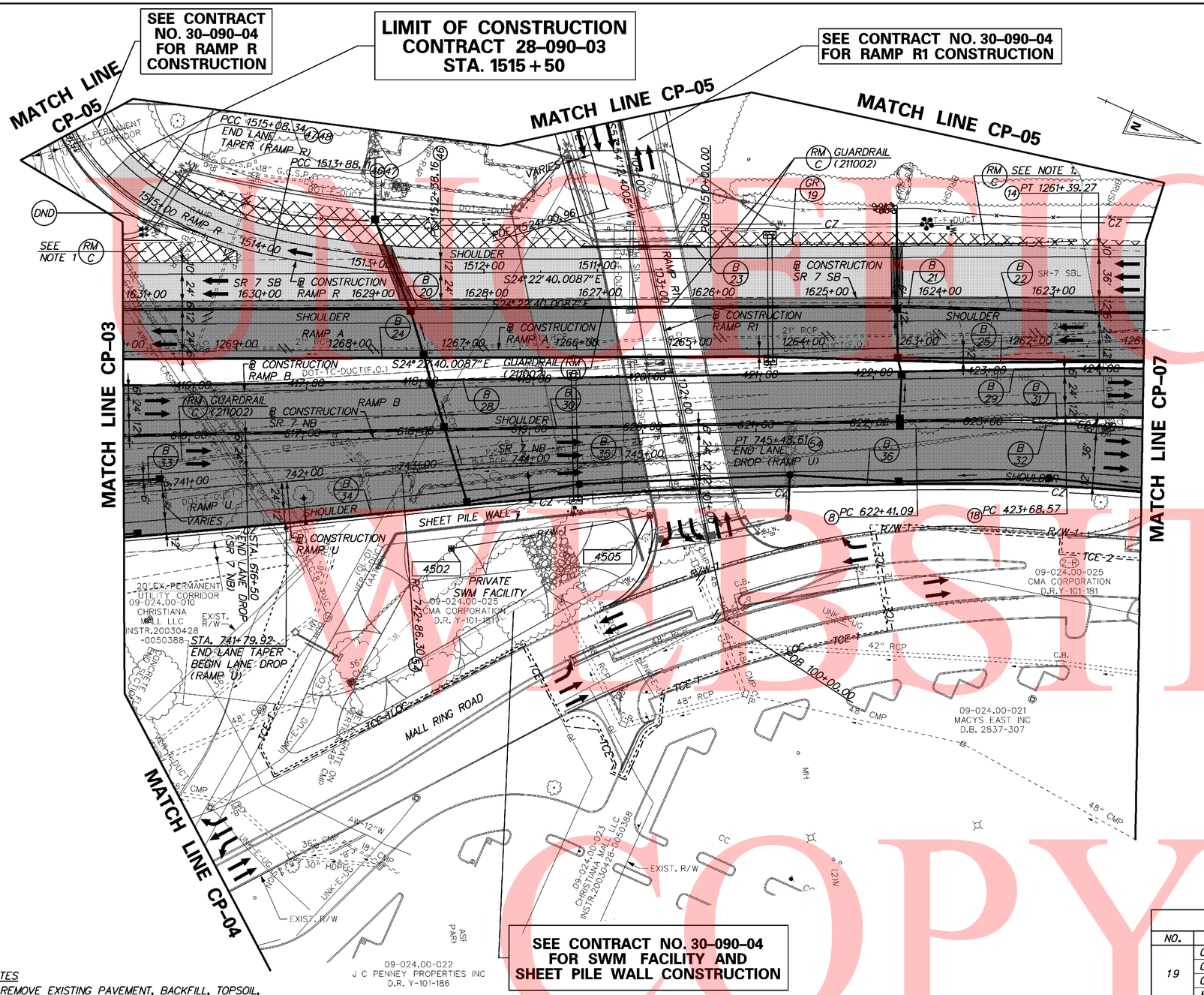

RIGHT-OF-WAY MONUMENT SCHEDULE				
NO.	STATION	OFFSET	NORTHING	EASTING
4502	1267+11.35	-175.04	610545.3096	432827.0739
4505	1265+36.18	-146.35	610693.0197	432728.6404

BARRIER SCHEDULE		
NO.	ITEM DESCRIPTION / TYPE	LENGTH
20	DOUBLE FACE, BIFURCATED TYPE 1 (720651)	600'
21	DOUBLE FACE, BIFURCATED TYPE 2 (720652)	150'
22	DOUBLE FACE, BIFURCATED TYPE 1 (720651)	152'
23	SINGLE FACE, MODIFIED TYPE 1 (720654)	104'
24	SINGLE FACE (720512)	423'
25	SINGLE FACE, MODIFIED TYPE 2 (720655)	478'
28	SINGLE FACE, MODIFIED TYPE 2 (720655)	762'
29	SINGLE FACE (720512)	139'
30	DOUBLE FACE, BIFURCATED TYPE 1 (720651)	802'
31	SINGLE FACE (720512)	98'
32	SINGLE FACE, MODIFIED TYPE 2 (720655)	98'
33	DOUBLE FACE, BIFURCATED TYPE 1 (720651)	34'
34	SINGLE FACE, MODIFIED TYPE 2 (720655)	415'
35	SINGLE FACE, MODIFIED TYPE 1 (720654)	169'
36	SINGLE FACE, MODIFIED TYPE 2 (720655)	318'

GUARDRAIL SCHEDULE				
NO.	ITEM DESCRIPTION / TYPE	BEGIN STA.	OFFSET	LENGTH
19	GUARDRAIL END TREATMENT ATTENUATOR, TYPE 1	1622+79.25	A	1 EA.
	GALVANIZED STEEL BEAM GUARDRAIL, TYPE 1	1623+29.25	48.00'	287.50'
	GUARDRAIL TO BARRIER CONNECTION, APPROACH TYPE 1	1626+16.75	48.00'	1 EA.
	MAINTENANCE PAVEMENT			128 S.Y.

NOTES: ALL BEGINNING STATIONS ARE APPROXIMATE. EXACT LOCATIONS ARE TO BE DETERMINED BY THE ENGINEER IN THE FIELD.
A = OFFSET ATTENUATORS AS PER STANDARD DETAILS.

NOTES

1. REMOVE EXISTING PAVEMENT, BACKFILL, TOPSOIL, SEED & MULCH.
2. REMOVE GUARDRAIL, CONSTRUCTED BY MALL RING ROAD CONSTRUCTION, AS REQUIRED TO CONSTRUCT NEW GUARDRAIL. (211002)
3. SEE LIGHTING PLANS FOR EXISTING LIGHTS AND JUNCTION WELLS TO BE REMOVED.
4. REMOVE EXISTING GUARDRAIL AS REQUIRED AND CONSTRUCT GUARDRAIL TO BARRIER CONNECTIONS.
5. SEE DRAINAGE PLANS FOR PIPE & DRAINAGE STRUCTURE SCHEDULES AND DITCH GRADING.
6. THE 2 EXISTING O.H. SIGNS RT. & LT. OF STA. 1265+50 TO BE REMOVED UNDER CONTRACT 30-090-04.

UNOFFICIAL WEBSITE COPY

11/10/2010 11:11:56 AM
M:\PROJECTS\2003\03059_DELTRNPK\SRTMALL\CADD\2809003\PLANS\CP06_SR1.DGN

DELAWARE DEPARTMENT OF TRANSPORTATION

ADDENDUMS / REVISIONS

SCALE 0 50 100 150 FEET

SR1 / I-95 INTERCHANGE

CONTRACT 28-090-03
COUNTY NEW CASTLE
BRIDGE NO.
DESIGNED BY:
CHECKED BY:

CONSTRUCTION PLAN

CP-06
SHEET NO. 68
TOTAL SHTS. 803

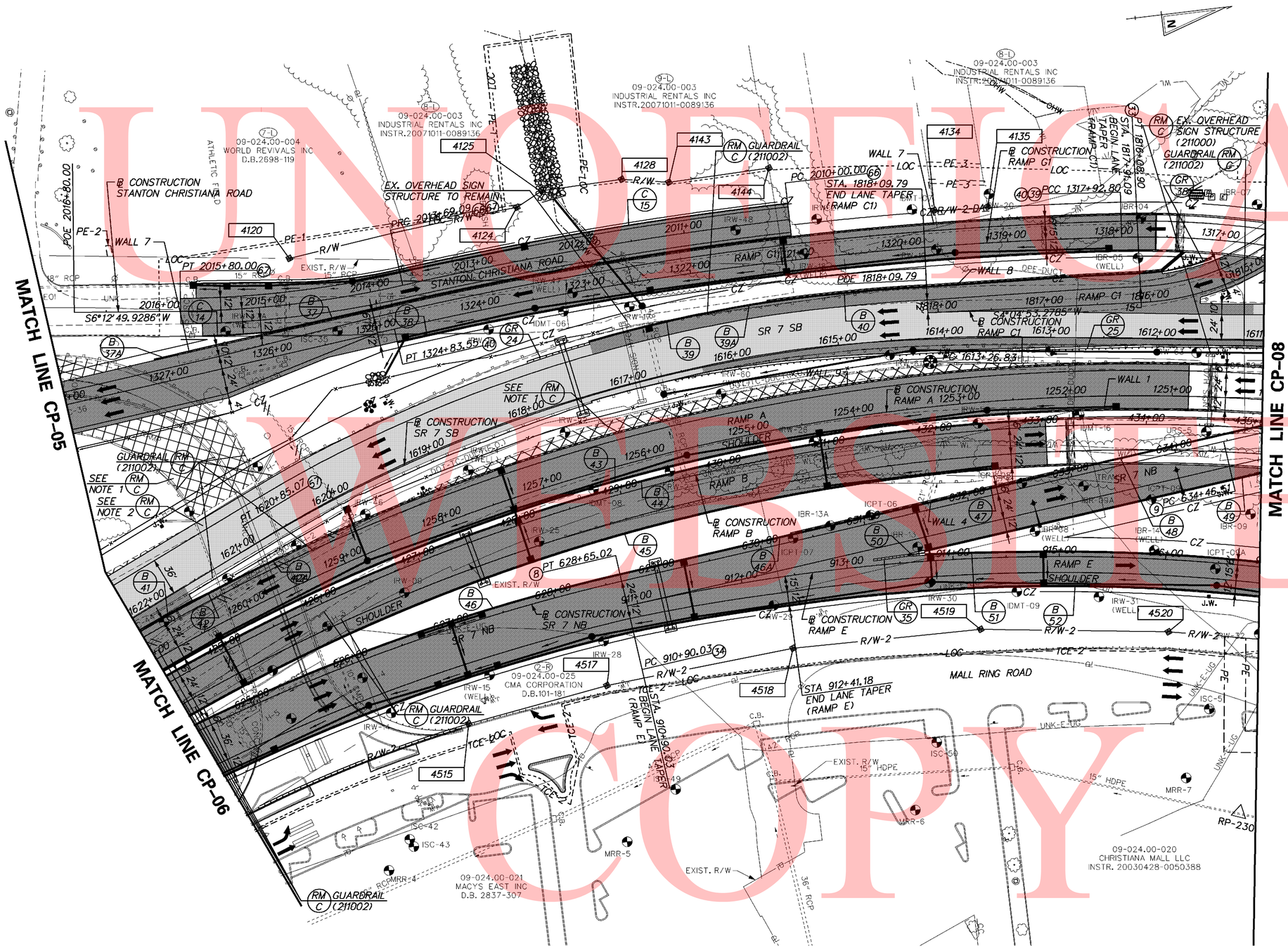

NOTES:

1. REMOVE EXISTING PAVEMENT, BACKFILL, TOPSOIL, SEED & MULCH.
2. REMOVE EXISTING BRIDGE AND SUBSTRUCTURE, (211000).
3. SEE DRAINAGE PLANS FOR PIPE AND DRAINAGE STRUCTURE SCHEDULES AND DITCH GRADING.

BARRIER SCHEDULE

NO.	ITEM DESCRIPTION / TYPE	LENGTH
37	SINGLE FACE, MODIFIED TYPE 1 (720654)	500'
37A	SINGLE FACE (720512)	22'
38	SINGLE FACE (720512)	716'
39	SINGLE FACE, MODIFIED TYPE 2 (720655)	117'
39A	SINGLE FACE, MODIFIED TYPE 3 (720656)	55'
40	SINGLE FACE, MODIFIED TYPE 1 (720654)	399'
41	DOUBLE FACE, BIFURCATED TYPE 1(720651)	38'
42	DOUBLE FACE, BIFURCATED TYPE 2(720652)	42'
42A	SINGLE FACE, MODIFIED TYPE 5 (720658)	72'
43	SINGLE FACE, MODIFIED TYPE 2 (720655)	875'
44	SINGLE FACE (720512)	870'
45	SINGLE FACE (720512)	795'
46	SINGLE FACE, MODIFIED TYPE 2 (720655)	545'
46A	SINGLE FACE, MODIFIED TYPE 3 (720656)	45'
47	SINGLE FACE, MODIFIED TYPE 1 (720654)	278'
48	SINGLE FACE, MODIFIED TYPE 2 (720655)	180'
49	SINGLE FACE, MODIFIED TYPE 2 (720655)	325'
50	DOUBLE FACE, BIFURCATED TYPE 1(720651)	17'
51	SINGLE FACE, MODIFIED TYPE 2 (720655)	315'
52	SINGLE FACE, MODIFIED TYPE 2 (720655)	1,001'

CURB SCHEDULE

NO.	ITEM DESCRIPTION / TYPE	LENGTH
14	PCC CURB, TYPE 1 (701010)	62.5'
15	PCC CURB, TYPE 1 (701010)	563'

RIGHT-OF-WAY MONUMENT SCHEDULE

NO.	STATION	OFFSET	NORTHING	EASTING
4120	1258+41.30	284.94	611199.7824	432055.8351
4124	1256+51.21	260.43	611418.0454	432033.6617
4125	1256+29.00	269.29	611441.7574	432020.9708
4128	1255+61.82	260.86	611519.0016	432019.2620
4134	1253+06.52	183.78	611807.8786	432083.4176
4135	1252+60.83	183.03	611858.0353	432086.0219
4143	1255+24.27	248.34	611562.7727	432027.3089
4144	1254+40.33	243.72	611657.9586	432025.2379
4515	1258+50.00	-184.45	611314.9004	432510.9746
4517	1257+00.00	-195.00	611448.3687	432490.7477
4518	1255+00.00	-205.00	611626.3963	432476.8280
4519	1253+00.00	-213.00	611803.8626	432480.2271
4520	1251+00.00	-222.00	611978.9287	432503.6743

UNOFFICIAL WEBSITE COPY

11/1/2010 10:08:45 AM
M:\PROJECTS\2003\03059_DELTRNPK\SRIMALL\CADD\2809003\PLANS\CP07_SR1.DGN

DELAWARE DEPARTMENT OF TRANSPORTATION

ADDENDUMS / REVISIONS

SCALE 0 50 100 150 FEET

SR1 / I-95 INTERCHANGE

CONTRACT	BRIDGE NO.
28-090-03	DESIGNED BY:
COUNTY	
NEW CASTLE	CHECKED BY:

CONSTRUCTION PLAN

CP-07
SHEET NO.
69
TOTAL SHTS.
803

GUARDRAIL SCHEDULE

NO.	ITEM DESCRIPTION / TYPE	BEGIN STA.	OFFSET	LENGTH
24	GUARDRAIL TO BARRIER CONNECTION (EXIT TYPE)	1617+24.79	49.00'	1 EA.
	GALVANIZED STEEL BEAM GUARDRAIL, TYPE 1	1617+36.85	49.00'	50.00'
	END ANCHORAGE	1617+85.10	49.00'	1 EA.
	MAINTENANCE PAVEMENT			27 S.Y.
35	IMPACT ATTENUATOR, SPECIAL	B	36.00'	1 EA.
38	GUARDRAIL END TREATMENT ATTENUATOR, TYPE 1	1815+06.60	A	1 EA.
	GUARDRAIL TO BARRIER CONNECTION, APPROACH TYPE 1	1815+63.70	14.00'	1 EA.
	MAINTENANCE PAVEMENT			9 S.Y.

NOTES: ALL BEGINNING STATIONS ARE APPROXIMATE. EXACT LOCATIONS ARE TO BE DETERMINED BY THE ENGINEER IN THE FIELD.
A = OFFSET ATTENUATORS AS PER STANDARD DETAILS.
B = ATTACH TO P.C.C. BARRIER.

UNOFFICAL WEBSITE COPY

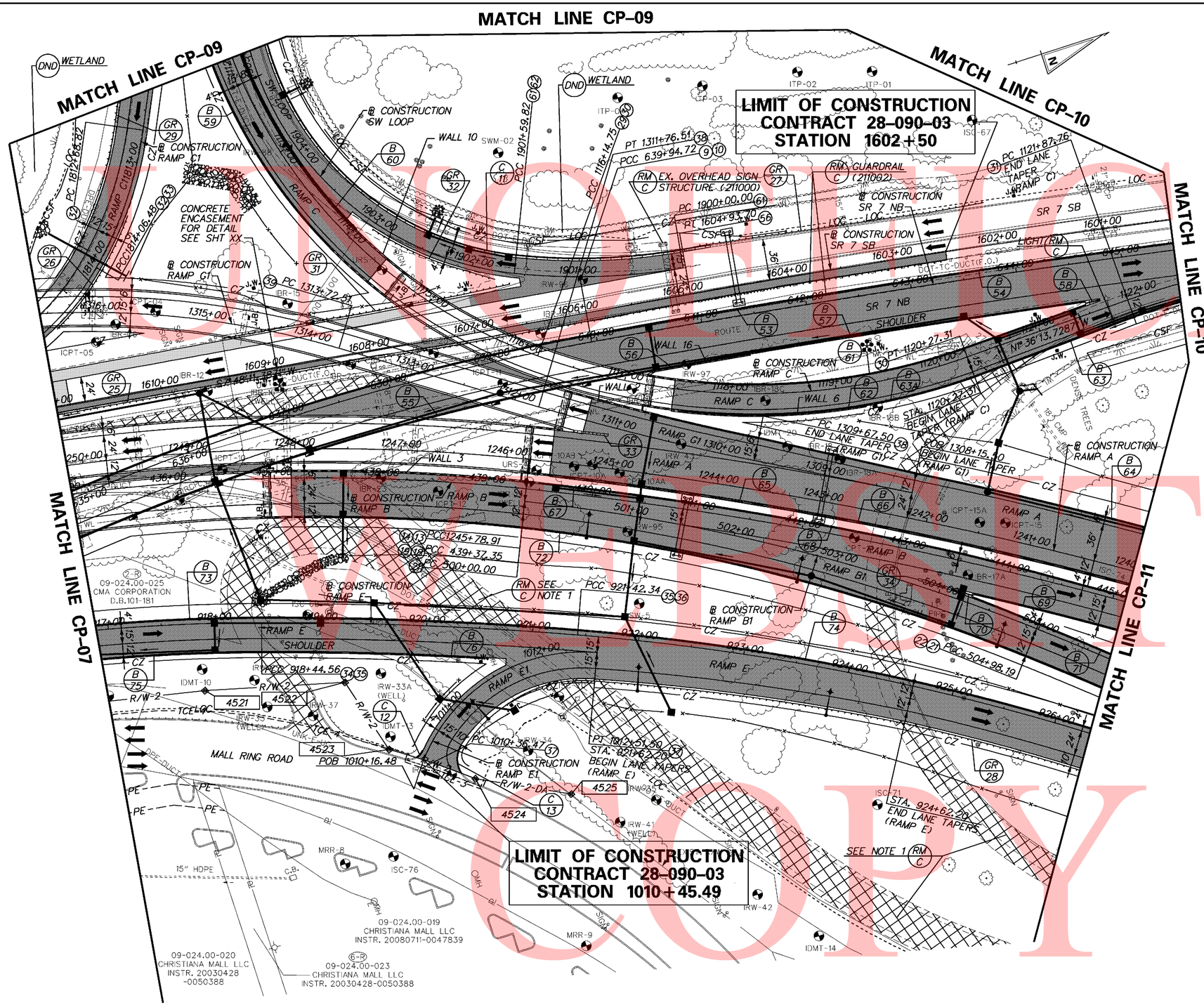

RIGHT-OF-WAY MONUMENT SCHEDULE

NO.	STATION	OFFSET	NORTHING	EASTING
4521	1249+00.00	-224.00	612151.1818	432538.8978
4522	1247+50.00	-220.00	612278.9481	432572.1575
4523	1247+00.00	-282.14	612299.0397	432645.1257
4524	1246+01.54	-304.30	612367.8029	432696.3659
4525	1245+02.18	-308.50	612447.3999	432736.9828

CURB SCHEDULE

NO.	ITEM DESCRIPTION / TYPE	LENGTH
11	INT. PCC CURB AND GUTTER, TYPE 4(701023)	1,029'
12	PCC CURB, TYPE 1 (701010)	10'
13	PCC CURB, TYPE 1 (701010)	29'

BARRIER SCHEDULE

NO.	ITEM DESCRIPTION / TYPE	LENGTH
53	SINGLE FACE, MODIFIED TYPE 2 (720655)	817'
54	SINGLE FACE (720512)	250'
55	SINGLE FACE, MODIFIED TYPE 2 (720655)	565'
56	SINGLE FACE, MODIFIED TYPE 1 (720654)	92'
57	SINGLE FACE, MODIFIED TYPE 2 (720655)	320'
58	DOUBLE FACE, BIFURCATED TYPE 1(720651)	14'
59	SINGLE FACE (720512)	205'
60	SINGLE FACE, MODIFIED TYPE 1 (720654)	200'
61	SINGLE FACE (720512)	375'
62	SINGLE FACE, MODIFIED TYPE 1 (720654)	184'
63	SINGLE FACE (720512)	274'
63A	SINGLE FACE, MODIFIED TYPE 3 (720656)	40'
64	SINGLE FACE (720512)	470'
65	SINGLE FACE (720512)	208'
66	SINGLE FACE, MODIFIED TYPE 2 (720655)	349'
67	SINGLE FACE, MODIFIED TYPE 2 (720655)	208'
68	SINGLE FACE (720512)	353'
69	SINGLE FACE (720512)	140'
70	DOUBLE FACE, BIFURCATED TYPE 1(720651)	21'
71	SINGLE FACE (720512)	141'
72	SINGLE FACE (720512)	750'
73	SINGLE FACE, MODIFIED TYPE 2 (720655)	252'
74	SINGLE FACE (720512)	696'
75	SINGLE FACE, MODIFIED TYPE 2 (720655)	281'
76	SINGLE FACE (720512)	84'

NOTES

1. REMOVE EXISTING PAVEMENT BACKFILL, TOPSOIL, SEED & MULCH.
2. SEE LIGHTING PLANS FOR EXISTING LIGHTS AND JUNCTION WELLS TO BE REMOVED.
3. SEE DRAINAGE PLANS FOR PIPE AND DRAINAGE STRUCTURE SCHEDULES AND DITCH GRADING.

UNOFFICIAL WEBSITE COPY

11/9/2010 9:44:07 AM
M:\PROJECTS\2003\03059_DELTRNPK\SR1MALL\CADD\2809003\PLANS\CP08_SR1.DGN

DELAWARE
DEPARTMENT OF TRANSPORTATION

ADDENDUMS / REVISIONS

SCALE
0 50 100 150
FEET

SR1 / I-95 INTERCHANGE

CONTRACT	BRIDGE NO.
28-090-03	DESIGNED BY:
COUNTY	CHECKED BY:
NEW CASTLE	

CONSTRUCTION PLAN

CP-08
SHEET NO.
71
TOTAL SHTS.
803

GUARDRAIL SCHEDULE

NO.	ITEM DESCRIPTION / TYPE	BEGIN STA.	OFFSET	LENGTH
25	GALVANIZED STEEL BEAM GUARDRAIL, TYPE 1	1602+50.00	VARIES	162.50'
	GALVANIZED STEEL BEAM GUARDRAIL, TYPE 2	1604+12.48	VARIES	75.00'
	GALVANIZED STEEL BEAM GUARDRAIL, TYPE 1	1604+87.54	VARIES	1175.00'
	MAINTENANCE PAVEMENT			628 S.Y.
26	GUARDRAIL END TREATMENT ATTENUATOR, TYPE 1	1813+50.00	A	1 EA.
	GALVANIZED STEEL BEAM GUARDRAIL, TYPE 1	1814+00.00	-6.00'	75.00'
	END ANCHORAGE	1814+75.00	-6.00'	1 EA.
	MAINTENANCE PAVEMENT			33 S.Y.
27	GUARDRAIL END TREATMENT ATTENUATOR, TYPE 1	1602+07.86	A	1 EA.
	GALVANIZED STEEL BEAM GUARDRAIL, TYPE 1	1602+57.86	VARIES	225.00'
	END ANCHORAGE	1604+82.86	17.67'	1 EA.
	MAINTENANCE PAVEMENT			100 S.Y.
28	GUARDRAIL END TREATMENT ATTENUATOR, TYPE 1	921+55.23	A	1 EA.
	GALVANIZED STEEL BEAM GUARDRAIL, TYPE 1	922+05.23	VARIES	1275.00'
	GUARDRAIL TO BARRIER CONNECTION, APPROACH TYPE 1	934+80.23	VARIES	1 EA.
	MAINTENANCE PAVEMENT			576 S.Y.
31	GUARDRAIL END TREATMENT ATTENUATOR, TYPE 1	1606+59.50	A	1 EA.
	GALVANIZED STEEL BEAM GUARDRAIL, TYPE 1	1607+09.50	VARIES	175.00'
	GALVANIZED STEEL BEAM GUARDRAIL, TYPE 2	1608+84.50	VARIES	50.00'
	END ANCHORAGE	1609+34.50	36.50'	1 EA.
	MAINTENANCE PAVEMENT			100 S.Y.
32	GUARDRAIL END TREATMENT ATTENUATOR, TYPE 1	1901+77.00	A	1 EA.
	GALVANIZED STEEL BEAM GUARDRAIL, TYPE 1	1902+27.00	-6.00'	75.00'
	END ANCHORAGE	1903+02.00	-6.00'	1 EA.
	MAINTENANCE PAVEMENT			33 S.Y.
33	IMPACT ATTENUATOR, SPECIAL	B	30.00'	1 EA.
34	IMPACT ATTENUATOR, SPECIAL	B	27.00'	1 EA.

NOTES: ALL BEGINNING STATIONS ARE APPROXIMATE. EXACT LOCATIONS ARE TO BE DETERMINED BY THE ENGINEER IN THE FIELD.
A = OFFSET ATTENUATORS AS PER STANDARD DETAILS.
B = ATTACH TO P.C.C. BARRIER

UNOFFICAL WEBSITE COPY

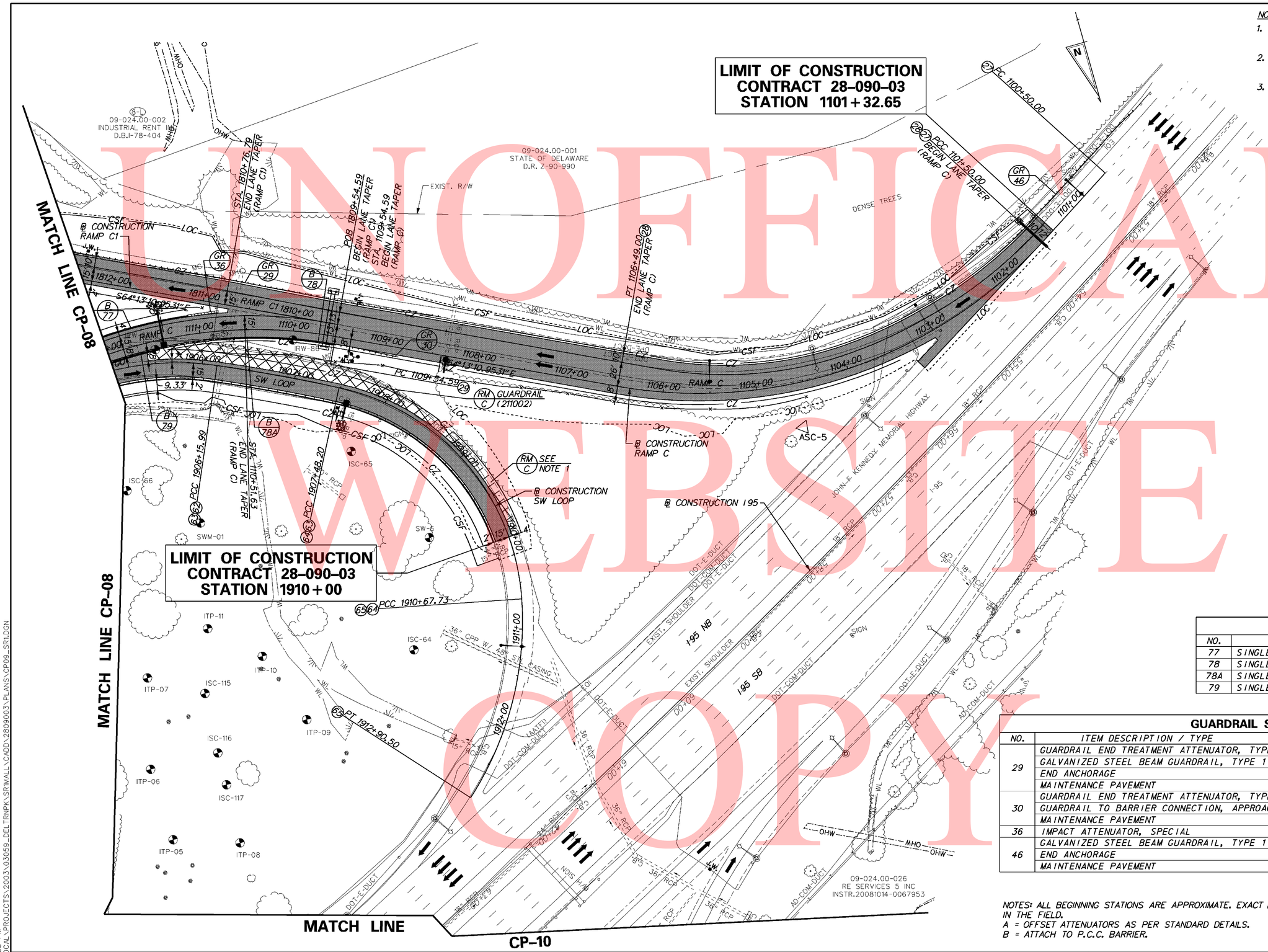

NOTES:

1. REMOVE EXISTING PAVEMENT, BACKFILL, TOPSOIL, SEED & MULCH.
2. SEE LIGHTING PLANS FOR EXISTING LIGHTS AND JUNCTION WELLS TO BE REMOVED.
3. SEE DRAINAGE PLANS FOR PIPE AND DRAINAGE STRUCTURE SCHEDULES AND DITCH GRADING.

BARRIER SCHEDULE

NO.	ITEM DESCRIPTION / TYPE	LENGTH
77	SINGLE FACE (720512)	95'
78	SINGLE FACE (720512)	90'
78A	SINGLE FACE, MODIFIED TYPE 5 (720658)	30'
79	SINGLE FACE, MODIFIED TYPE 1 (720654)	53'

GUARDRAIL SCHEDULE

NO.	ITEM DESCRIPTION / TYPE	BEGIN STA.	OFFSET	LENGTH
29	GUARDRAIL END TREATMENT ATTENUATOR, TYPE1	1108+50.00	A	1 EA.
	GALVANIZED STEEL BEAM GUARDRAIL, TYPE 1	1109+00.00	38.00'	437.50'
	END ANCHORAGE	1813+43.08	VARIES	1 EA.
	MAINTENANCE PAVEMENT			195 S.Y.
30	GUARDRAIL END TREATMENT ATTENUATOR, TYPE 1	1108+84.84	A	1 EA.
	GUARDRAIL TO BARRIER CONNECTION, APPROACH TYPE 1	1109+34.84	VARIES	1 EA.
	MAINTENANCE PAVEMENT			9 S.Y.
36	IMPACT ATTENUATOR, SPECIAL	B	19.00'	1 EA.
46	GALVANIZED STEEL BEAM GUARDRAIL, TYPE 1	52+08.32	VARIES	200.00'
	END ANCHORAGE	1101+81.81	24'	1 EA.
	MAINTENANCE PAVEMENT			89 S.Y.

NOTES: ALL BEGINNING STATIONS ARE APPROXIMATE. EXACT LOCATIONS ARE TO BE DETERMINED BY THE ENGINEER IN THE FIELD.
A = OFFSET ATTENUATORS AS PER STANDARD DETAILS.
B = ATTACH TO P.C.C. BARRIER.

UNOFFICAL WEBSITE COPY

11/9/2010 2:08:33 PM
C:\PROJECTS-LOCAL\PROJECTS\2003\03059_DELTRNPK\SR1MAL\CADD\2809003\PLANS\CP09_SR1.DGN

DELAWARE DEPARTMENT OF TRANSPORTATION

ADDENDUMS / REVISIONS

SCALE 0 50 100 150 FEET

SR1 / I-95 INTERCHANGE

CONTRACT	BRIDGE NO.
28-090-03	DESIGNED BY:
COUNTY	
NEW CASTLE	CHECKED BY:

CONSTRUCTION PLAN

CP-09
SHEET NO. 73
TOTAL SHTS. 803

BARRIER SCHEDULE		
NO.	ITEM DESCRIPTION / TYPE	LENGTH
80	SINGLE FACE (720512)	150'
81	SINGLE FACE (720512)	115'
82	SINGLE FACE, MODIFIED TYPE 2 (720655)	35'

GUARDRAIL SCHEDULE				
NO.	ITEM DESCRIPTION / TYPE	BEGIN STA.	OFFSET	LENGTH
47	GUARDRAIL TO BARRIER CONNECTION, EXIT TYPE	647+00	-6.00'	1 EA.
	MAINTENANCE PAVEMENT			5 S.Y.
	TREATED WOOD BLOCKS			89 EA.

NOTES: ALL BEGINNING STATIONS ARE APPROXIMATE. EXACT LOCATIONS ARE TO BE DETERMINED BY THE ENGINEER IN THE FIELD.
A = OFFSET ATTENUATORS AS PER STANDARD DETAILS.
B = ATTACH TO P.C.C. BARRIER.

NOTES:

1. REMOVE EXISTING PAVEMENT, SEE REFORESTATION PLAN.
2. SEE LIGHTING PLANS FOR EXISTING LIGHTS AND JUNCTION WELLS TO BE REMOVED.
3. SEE DRAINAGE PLANS FOR PIPE AND DRAINAGE STRUCTURES AND DITCH GRADING.

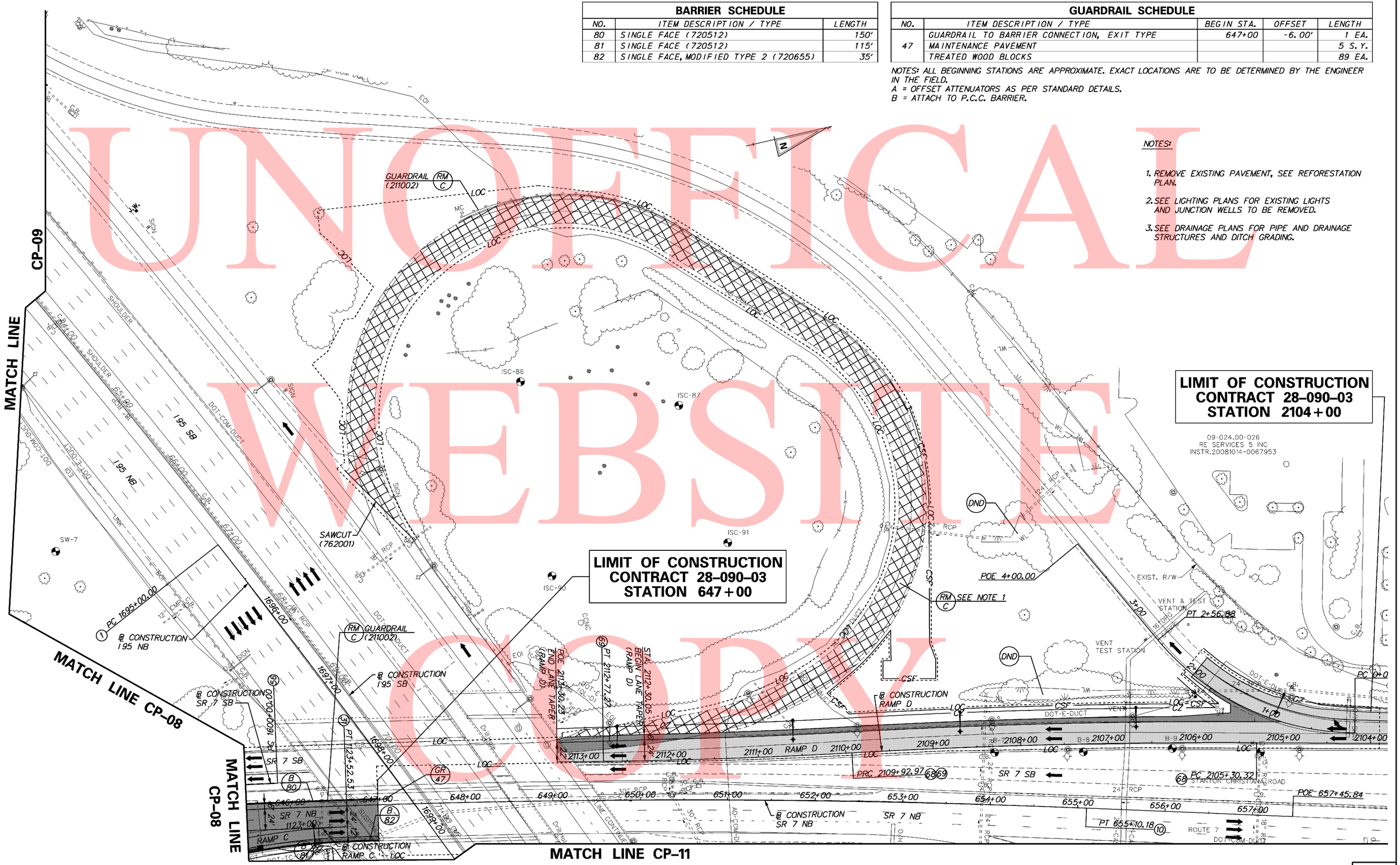

UNOFFICAL WEBSITE COPY

11/1/2010 10:17:48 AM
M:\PROJECTS\2003\03059_DELTRNPK\SR1MAIL\CADD\2809003\PLANS\CP10_SR1.DGN

DELAWARE DEPARTMENT OF TRANSPORTATION

ADDENDUMS / REVISIONS

SCALE 0 50 100 150 FEET

SR1 / I-95 INTERCHANGE

CONTRACT	BRIDGE NO.
28-090-03	DESIGNED BY:
COUNTY	
NEW CASTLE	CHECKED BY:

CONSTRUCTION PLAN

CP-10
SHEET NO.
74
TOTAL SHTS.
803

RIGHT-OF-WAY MONUMENT SCHEDULE				
NO.	STATION	OFFSET	NORTHING	EASTING
4550	511+89.40	111.79	613300.5981	433291.3473
4551	514+00.00	85.00	613439.3678	433442.7909
4552	516+82.88	85.00	613577.9815	433680.0219

BARRIER SCHEDULE		
NO.	ITEM DESCRIPTION / TYPE	LENGTH
83	DOUBLE FACE, BIFURCATED TYPE 1 (720651)	418'
84	SINGLE FACE, MODIFIED TYPE 2 (720655)	742'
85	SINGLE FACE (720512)	218'
86	SINGLE FACE, MODIFIED TYPE 2 (720655)	531'
87	SINGLE FACE (720512)	215'
88	SINGLE FACE (720512)	126'
89	SINGLE FACE (720512)	1,095'
90	SINGLE FACE (720512)	309'
91	SINGLE FACE, MODIFIED TYPE 2 (720655)	50'
92	SINGLE FACE (720512)	337'
93	SINGLE FACE, MODIFIED TYPE 2 (720655)	410'
94	SINGLE FACE (720512)	485'
95	SINGLE FACE (720512)	1,180'
96	SINGLE FACE (720512)	427'
97	DOUBLE FACE, BIFURCATED TYPE 1 (720651)	29'
98	SINGLE FACE (720512)	216'
99	SINGLE FACE, MODIFIED TYPE 2 (720655)	204'
100	SINGLE FACE (720512)	288'

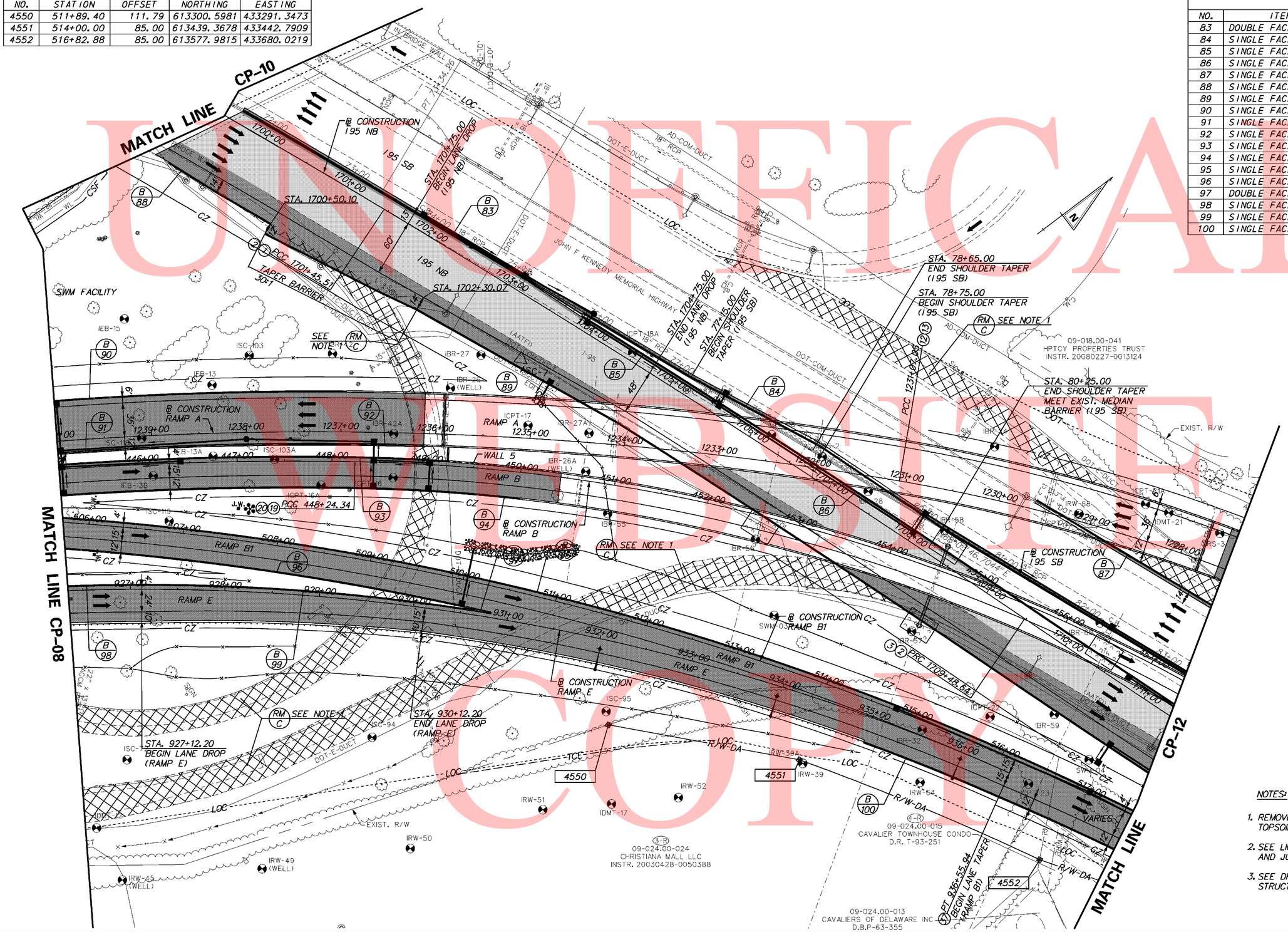

NOTES:

1. REMOVE EXISTING PAVEMENT, BACKFILL, TOPSOIL, SEED & MULCH.
2. SEE LIGHTING PLANS FOR EXISTING LIGHTS AND JUNCTION WELLS TO BE REMOVED.
3. SEE DRAINAGE PLANS FOR PIPE AND DRAINAGE STRUCTURE SCHEDULES AND DITCH GRADING.

UNOFFICIAL WEBSITE COPY

11/1/2010 10:19:58 AM
M:\projects\2003\03059_deltrnpk\SR1Mall\Cadd\2809003\Plans\cp11_sr1.dgn

DELAWARE DEPARTMENT OF TRANSPORTATION

ADDENDUMS / REVISIONS

SCALE 0 50 100 150 FEET

SR1 / I-95 INTERCHANGE

CONTRACT	BRIDGE NO.
28-090-03	DESIGNED BY:
COUNTY	
NEW CASTLE	CHECKED BY:

CONSTRUCTION PLAN

CP-11
SHEET NO. 75
TOTAL SHTS. 803

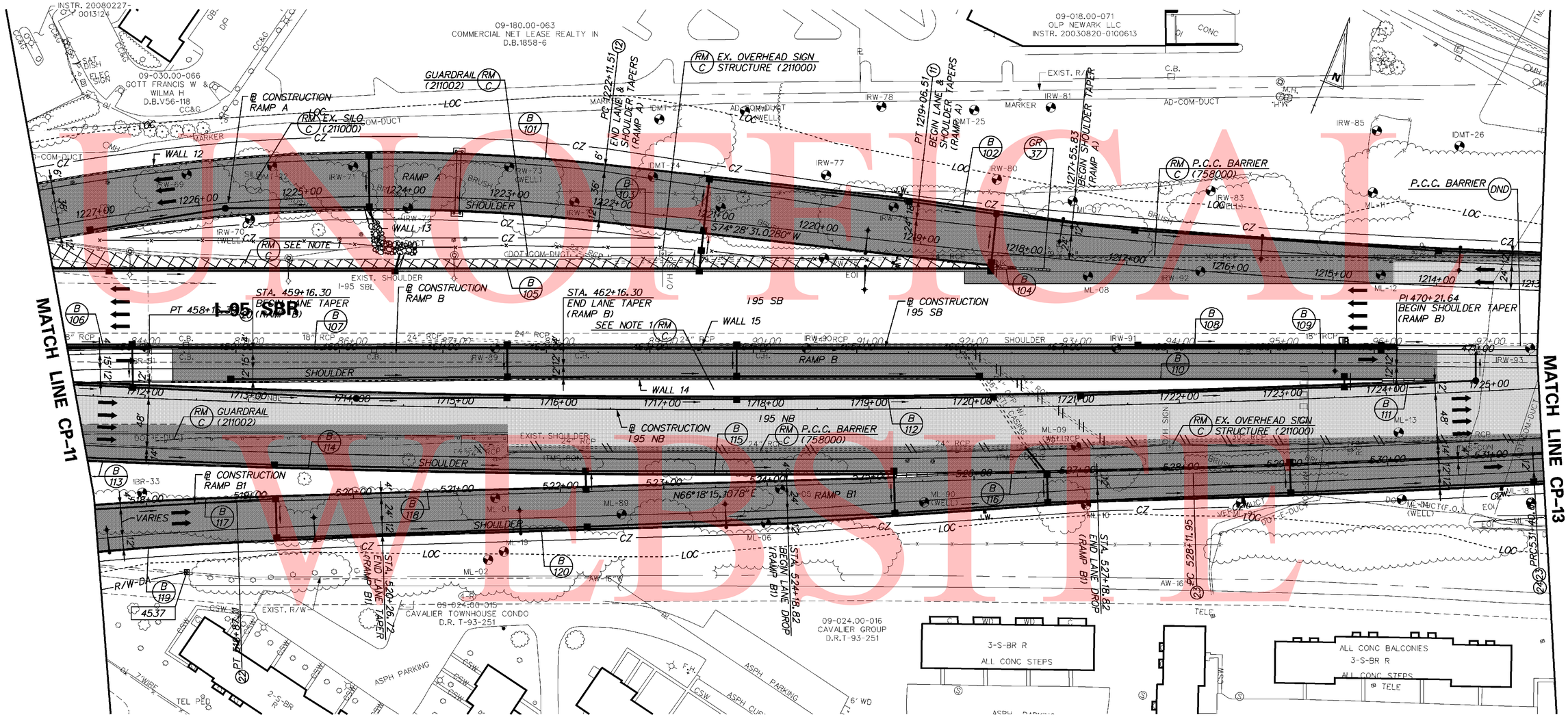

BARRIER SCHEDULE

NO.	ITEM DESCRIPTION / TYPE	LENGTH
101	SINGLE FACE (720512)	194'
102	SINGLE FACE, MODIFIED TYPE 2 (720655)	907'
103	SINGLE FACE (720512)	565'
104	DOUBLE FACE, BIFURCATED TYPE 1(720651)	28'
105	SINGLE FACE (720512)	903'
106	SINGLE FACE, MODIFIED TYPE 2 (720655)	101'
107	SINGLE FACE, MODIFIED TYPE 1 (720654)	912'
108	DOUBLE FACE, BIFURCATED TYPE 2(720652)	192'
109	DOUBLE FACE, BIFURCATED TYPE 1(720651)	80'
110	SINGLE FACE (720512)	428'
111	DOUBLE FACE, BIFURCATED TYPE 1(720651)	51'
112	SINGLE FACE, MODIFIED TYPE 2 (720655)	1,265'
113	SINGLE FACE (720512)	28'
114	SINGLE FACE, MODIFIED TYPE 2 (720655)	427'
115	SINGLE FACE (720512)	327'
116	DOUBLE FACE, BIFURCATED TYPE 1(720651)	625'
117	SINGLE FACE (720512)	225'
118	SINGLE FACE, MODIFIED TYPE 2 (720655)	550'
119	SINGLE FACE (720512)	199'
120	SINGLE FACE, MODIFIED TYPE 2 (720655)	1,201'

RIGHT-OF-WAY MONUMENT SCHEDULE

NO.	STATION	OFFSET	NORTHING	EASTING
4537	518+35.57	65.56	613661.0002	433805.0814

GUARDRAIL SCHEDULE

NO.	ITEM DESCRIPTION / TYPE	BEGIN STA.	OFFSET	LENGTH
37	IMPACT ATTENUATOR, SPECIAL	B	-12.00'	1 EACH

NOTES: ALL BEGINNING STATIONS ARE APPROXIMATE. EXACT LOCATIONS ARE TO BE DETERMINED BY THE ENGINEER IN THE FIELD.
A = OFFSET ATTENUATORS AS PER STANDARD DETAILS.
B = ATTACH TO P.C.C. BARRIER.

NOTES:

1. REMOVE EXISTING PAVEMENT, BACKFILL, TOPSOIL, SEED & MULCH.
2. SEE LIGHTING PLANS FOR EXISTING LIGHTS AND JUNCTION WELLS TO BE REMOVED.
3. SEE DRAINAGE PLANS FOR PIPE AND DRAINAGE STRUCTURE SCHEDULES AND DITCH GRADING.

UNOFFICIAL WEBSITE COPY

11/1/2010 10:25:45 AM
M:\PROJECTS\2003\03059_DELTRNPK\SRIMALL\CADD\2809003\PLANS\CP12_SR1.DGN

DELAWARE DEPARTMENT OF TRANSPORTATION

ADDENDUMS / REVISIONS

SCALE 0 50 100 150 FEET

SR1 / I-95 INTERCHANGE

CONTRACT	BRIDGE NO.
28-090-03	DESIGNED BY:
COUNTY	CHECKED BY:
NEW CASTLE	

CONSTRUCTION PLAN

CP-12
SHEET NO.
76
TOTAL SHTS.
803

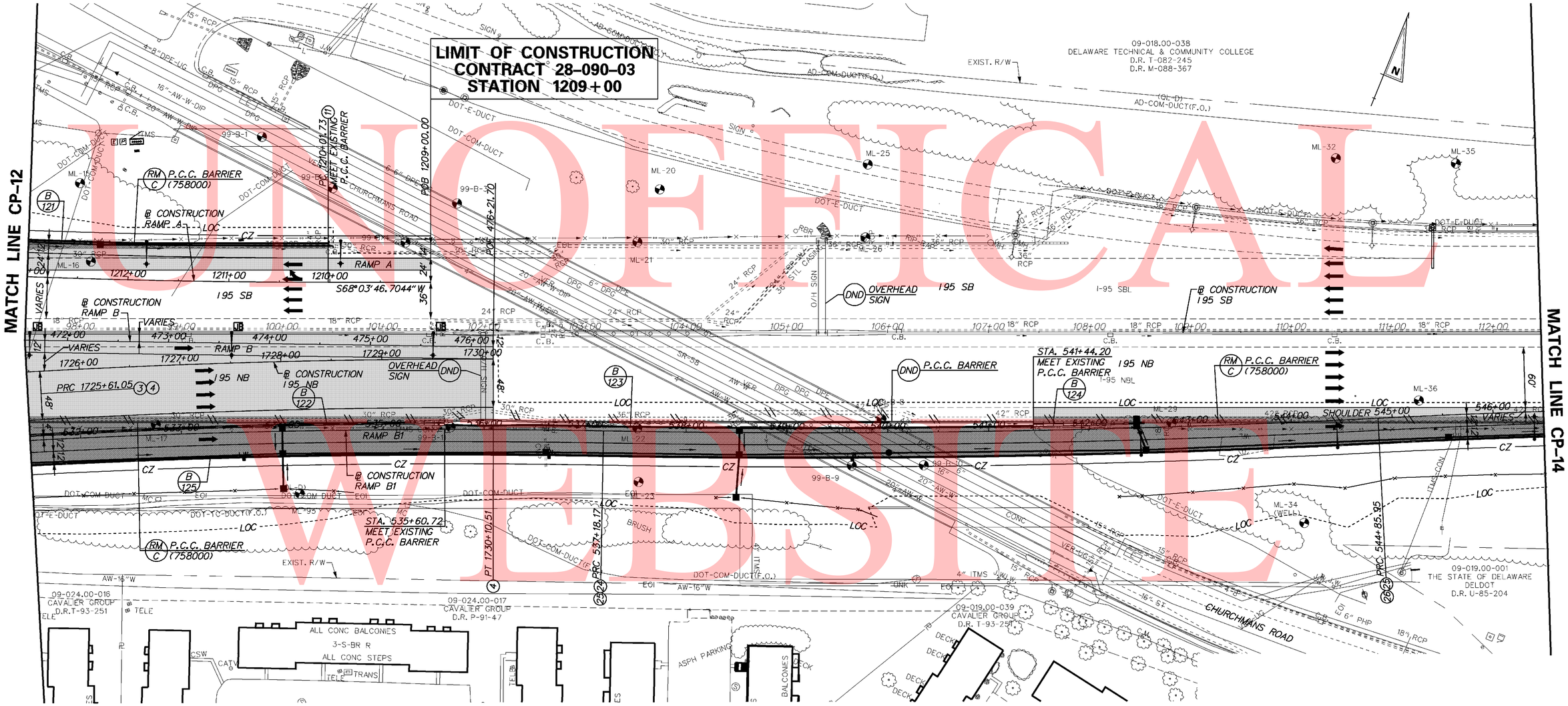

UNOFFICAL WEBSITE COPY

BARRIER SCHEDULE		
NO.	ITEM DESCRIPTION / TYPE	LENGTH
121	SINGLE FACE, MODIFIED TYPE 2 (720655)	297'
122	DOUBLE FACE, BIFURCATED TYPE 1 (720651)	411'
123	SINGLE FACE, MODIFIED TYPE 2 (720655)	584'
124	DOUBLE FACE, BIFURCATED TYPE 1 (720651)	110'
125	SINGLE FACE, MODIFIED TYPE 2 (720655)	1,500'

NOTES:

1. SEE LIGHTING PLANS FOR EXISTING LIGHTS AND JUNCTION WELLS TO BE REMOVED.
2. SEE DRAINAGE PLANS FOR PIPE AND DRAINAGE STRUCTURE SCHEDULES AND DITCH GRADING.

11/1/2010 10:28:05 AM
M:\PROJECTS\2003\03059_DELTRNPK\SRIMALL\CADD\2809003\PLANS\CP13_SR1.DGN

DELAWARE DEPARTMENT OF TRANSPORTATION

ADDENDUMS / REVISIONS

SCALE 0 50 100 150 FEET

SR1 / I-95 INTERCHANGE

CONTRACT 28-090-03
COUNTY NEW CASTLE
BRIDGE NO.
DESIGNED BY:
CHECKED BY:

CONSTRUCTION PLAN

CP-13
SHEET NO. 77
TOTAL SHTS. 803

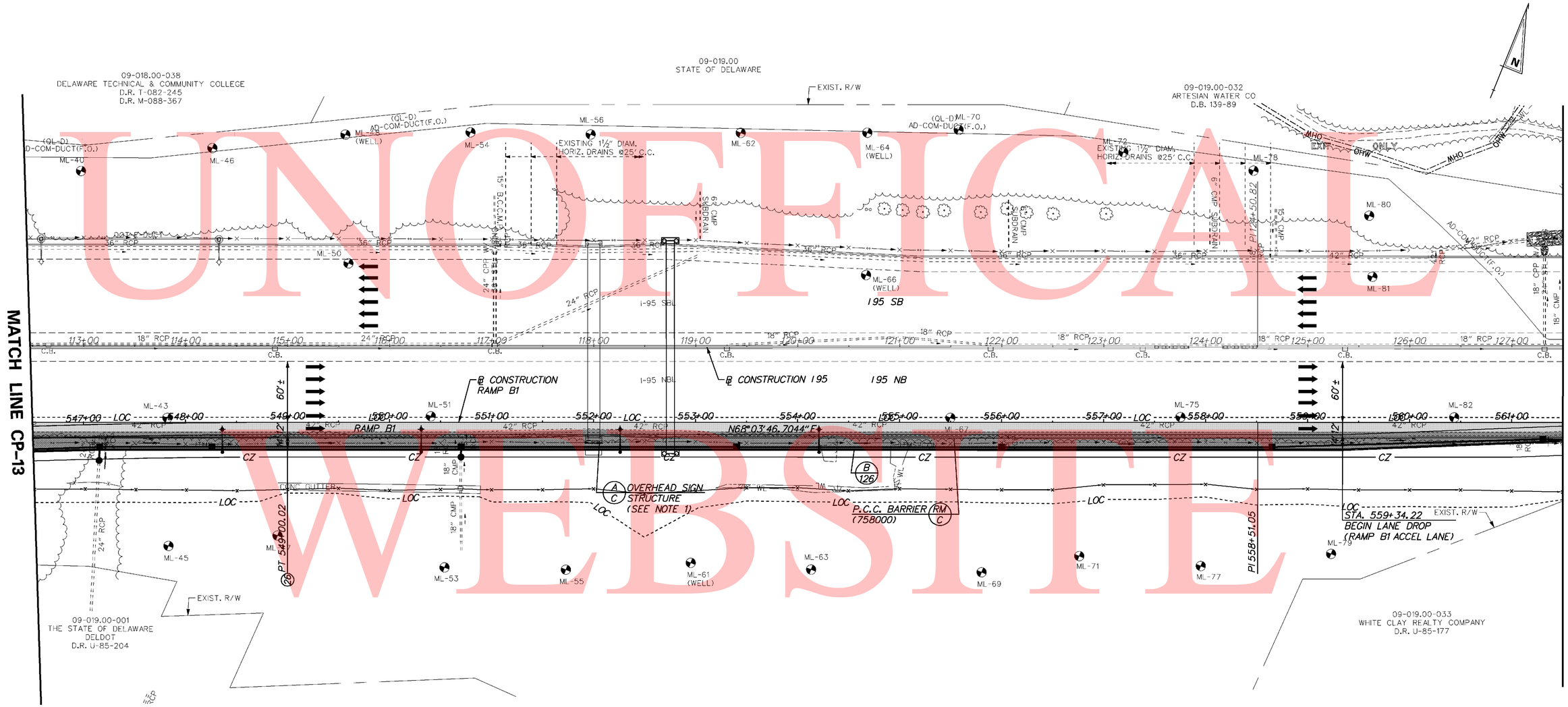

UNOFFICIAL WEBSITE COPY

NOTES

1. MODIFY EXISTING OVERHEAD SIGN STRUCTURE. SEE DETAIL SHEET XX.
2. SEE LIGHTING PLANS FOR EXISTING LIGHTS AND JUNCTION WELLS TO BE REMOVED.
3. SEE DRAINAGE PLANS FOR PIPE AND DRAINAGE STRUCTURE SCHEDULES AND DITCH GRADING.

BARRIER SCHEDULE

NO.	ITEM DESCRIPTION / TYPE	LENGTH
126	SINGLE FACE, MODIFIED TYPE 2 (720655)	1,500'

DELAWARE DEPARTMENT OF TRANSPORTATION

ADDENDUMS / REVISIONS

SCALE 0 50 100 150 FEET

SR1 / I-95 INTERCHANGE

CONTRACT	BRIDGE NO.
28-090-03	DESIGNED BY:
COUNTY	
NEW CASTLE	CHECKED BY:

CONSTRUCTION PLAN

CP-14
SHEET NO.
78
TOTAL SHTS.
803

11/1/2010 11:08:01 AM
C:\PROJECTS-LOCAL\PROJECTS\2003\03059_DELTRNPK\SRIWALL\CADD\2809003\PLANS\CP14_SR1.DGN

UNOFFICAL WEBSITE COPY

NOTE:

1. SEE DRAINAGE PLANS FOR PIPE AND DRAINAGE STRUCTURE SCHEDULES AND DITCH GRADING.

BARRIER SCHEDULE

NO.	ITEM DESCRIPTION / TYPE	LENGTH
127	SINGLE FACE, MODIFIED TYPE 2 (720655)	85

11/1/2010 10:33:21 AM
M:\PROJECTS\2003\03059_DELTRNPK\SRIMALL\CADD\2809003\PLANS\CP15_SR1.DGN

DELAWARE DEPARTMENT OF TRANSPORTATION

ADDENDUMS / REVISIONS

SCALE 0 50 100 150 FEET

SR1 / I-95 INTERCHANGE

CONTRACT	BRIDGE NO.
28-090-03	DESIGNED BY:
COUNTY	
NEW CASTLE	CHECKED BY:

CONSTRUCTION PLAN

	CP-15
SHEET NO.	79
TOTAL SHTS.	803

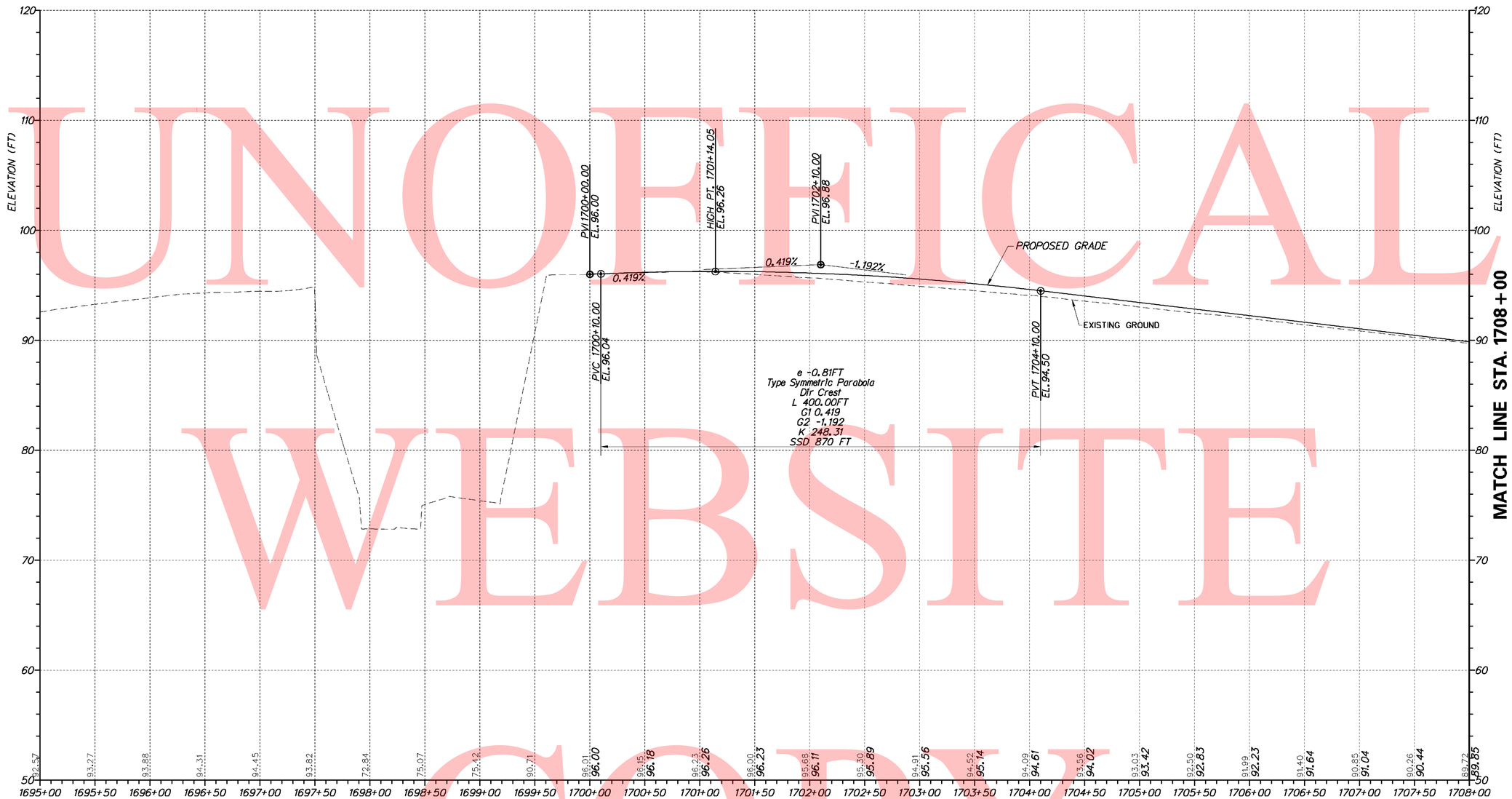

I 95 NORTHBOUND SHIFT

UNOFFICAL WEBSITE COPY

VERTICAL SCALE FEET 15 10 5 0

7/28/2010 2:38:14 PM
M:\PROJECTS\2003\03059_DELTRNPK\SR1MAL\CADD\2809003\PLANS\PF01_NB95_SR1.DGN

DELAWARE DEPARTMENT OF TRANSPORTATION	ADDENDUMS / REVISIONS	SCALE 0 50 100 150 FEET	SR1 / I-95 INTERCHANGE	CONTRACT 28-090-03	BRIDGE NO.	PROFILES	SHEET NO. 80
				COUNTY NEW CASTLE	DESIGNED BY:		TOTAL SHTS. 803
					CHECKED BY:		

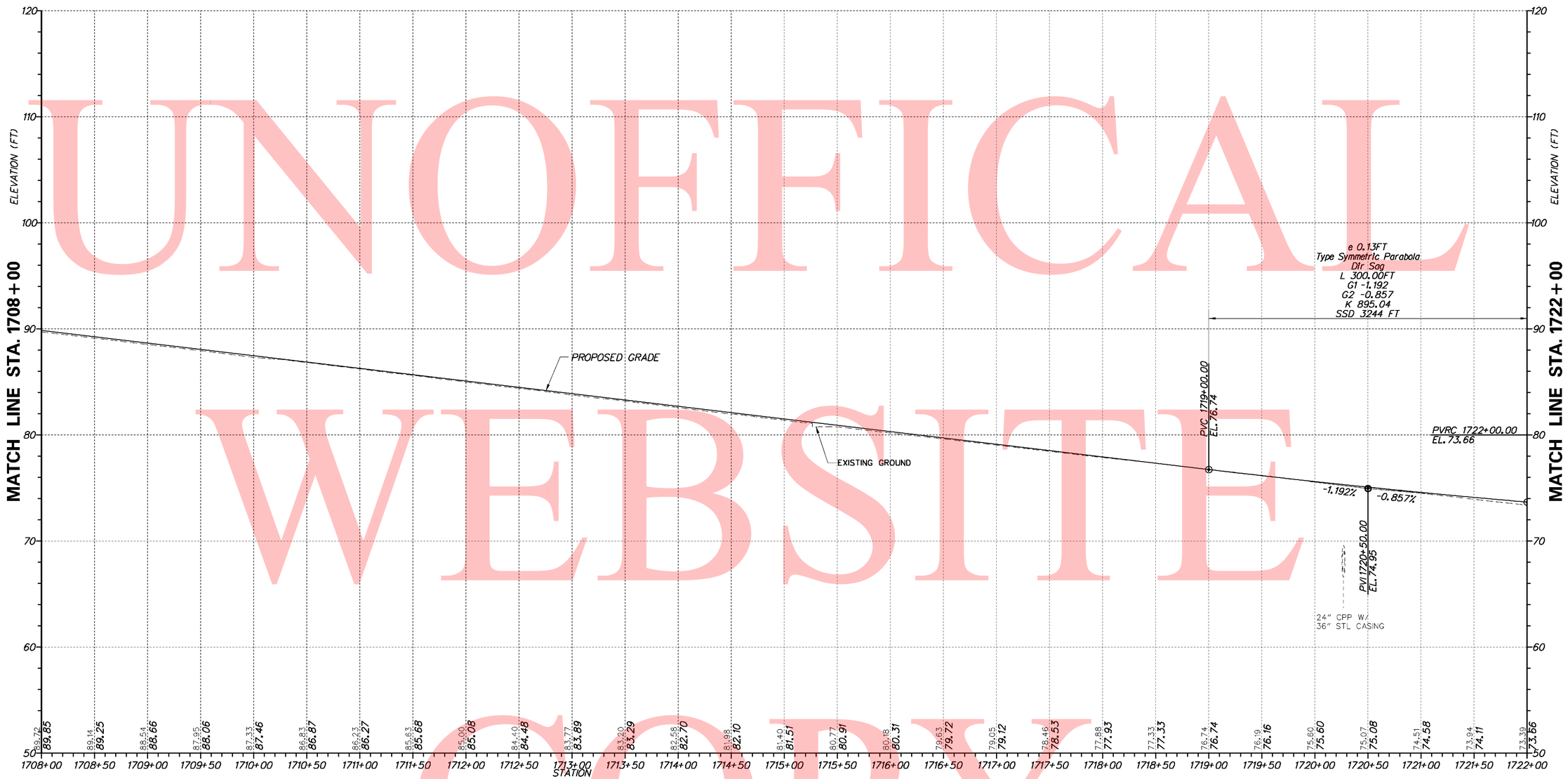

I-95 NORTHBOUND SHIFT

UNOFFICAL WEBSITE COPY

VERTICAL SCALE FEET 15 10 5 0

7/27/2010 4:22:30 PM
M:\PROJECTS\2003\03059_DELTRNPK\SR1MAL\CADD\2809003\PLANS\PF02_NB95_SR1.DGN

DELAWARE DEPARTMENT OF TRANSPORTATION	ADDENDUMS / REVISIONS	SCALE 0 50 100 150 FEET	SR1 / I-95 INTERCHANGE	CONTRACT 28-090-03	BRIDGE NO.	PROFILES	SHEET NO. 81
				COUNTY NEW CASTLE	DESIGNED BY:		TOTAL SHTS. 803
					CHECKED BY:		

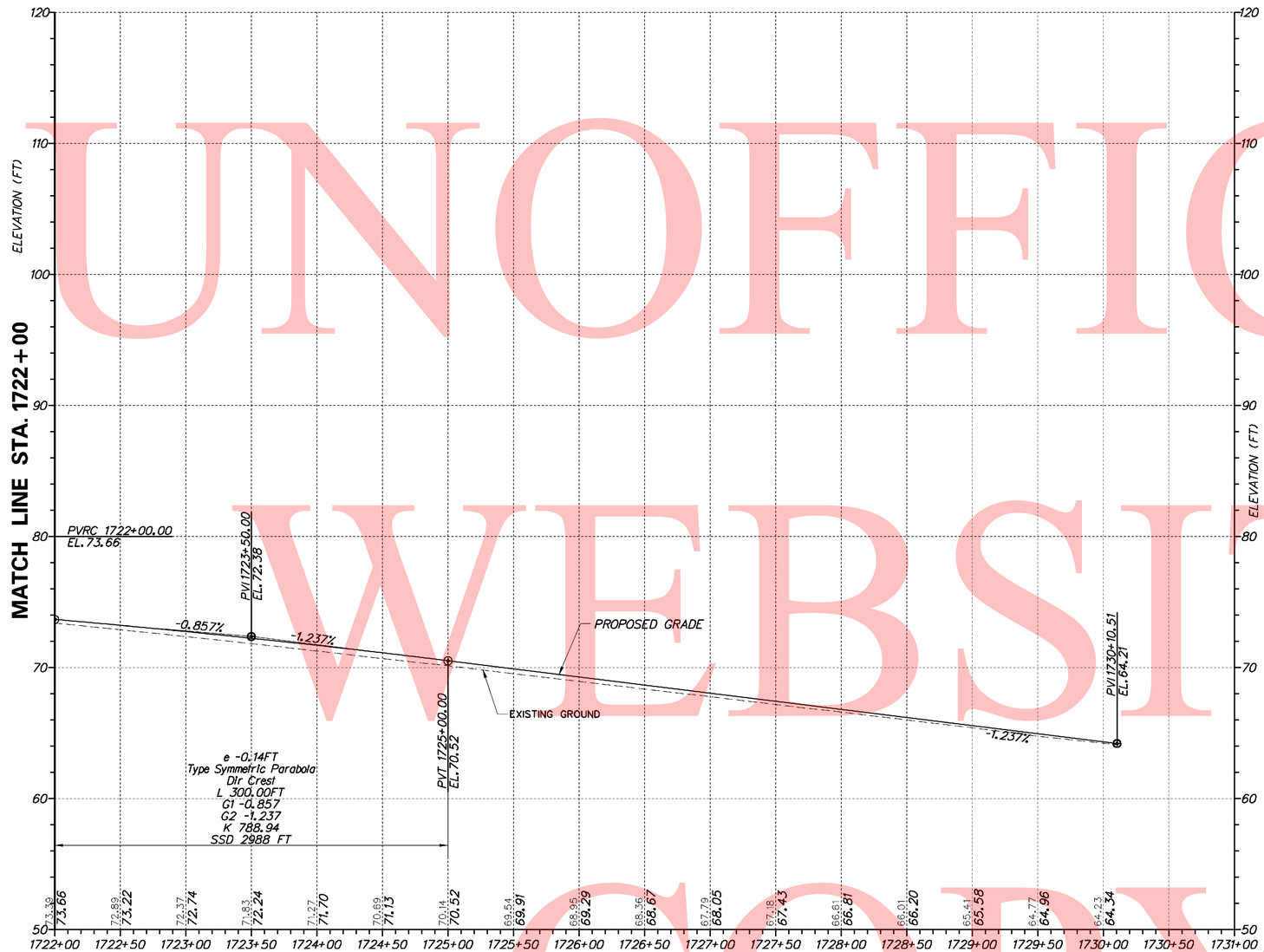

I-95 NORTHBOUND SHIFT

UNOFFICAL WEBSITE COPY

VERTICAL SCALE FEET 15 10 5 0

7/27/2010 4:30:24 PM
M:\PROJECTS\2003\03059_DELTRNPK\SRIMALL\CADD\2809003\PLANS\PF03_NB95_SR1.DGN

DELAWARE DEPARTMENT OF TRANSPORTATION	ADDENDUMS / REVISIONS	SCALE 0 50 100 150 FEET	SR1 / I-95 INTERCHANGE	CONTRACT 28-090-03	BRIDGE NO.	PROFILES	SHEET NO. 82
				COUNTY NEW CASTLE	DESIGNED BY:		TOTAL SHTS. 803
					CHECKED BY:		

UNOFEICAL WEBSITE COPY

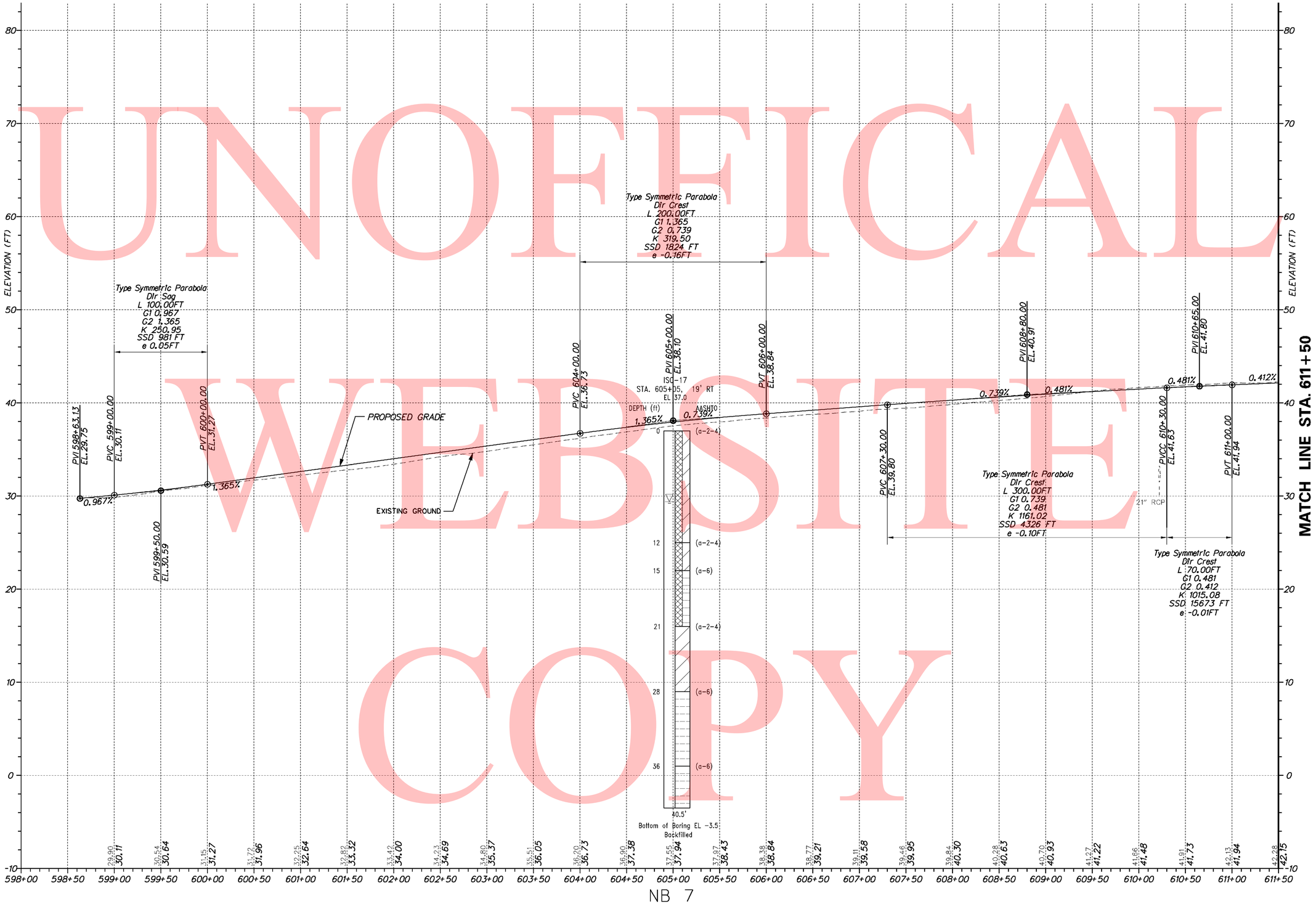

DELAWARE DEPARTMENT OF TRANSPORTATION	ADDENDUMS / REVISIONS	SCALE 0 50 100 150 FEET	SR1 / I-95 INTERCHANGE	CONTRACT 28-090-03 / COUNTY NEW CASTLE	BRIDGE NO. / DESIGNED BY: / CHECKED BY:	PROFILES	SHEET NO. 83 / TOTAL SHTS. 803

7/28/2010 3:32:27 PM
M:\PROJECTS\2003\03059_DELTRNPK\SRTMALL\CADD\2809003\PLANS\PF04_NB7_SR1.DGN

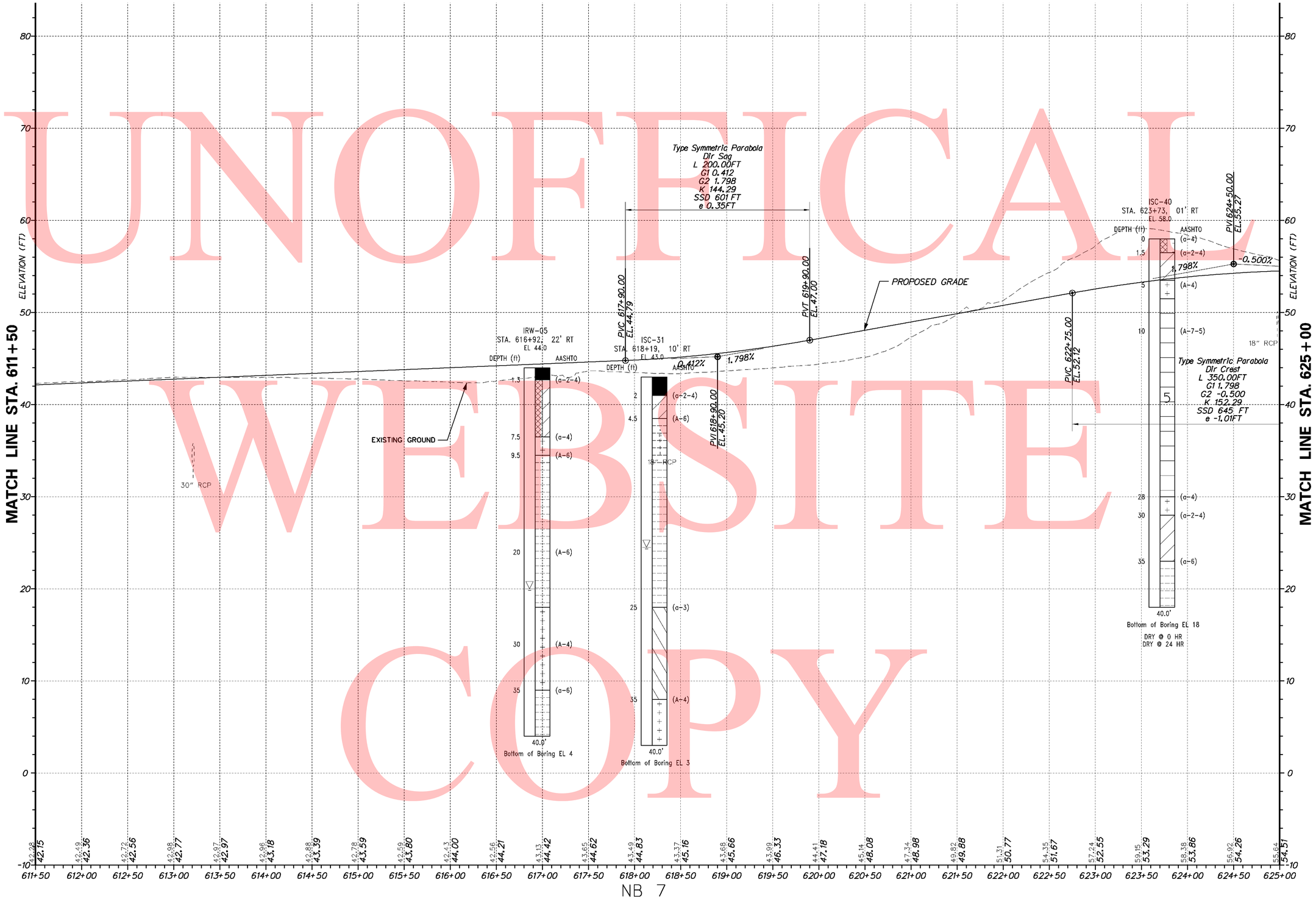

UNOFFICAL WEBSITE COPY

7/28/2010 3:34:52 PM
M:\PROJECTS\2003\03059_DELTRNPK\SRIMALL\CADD\2809003\PLANS\PF05_NB7_SR1.DGN

DELAWARE DEPARTMENT OF TRANSPORTATION

ADDENDUMS / REVISIONS

SCALE 0 50 100 150 FEET

SR1 / I-95 INTERCHANGE

CONTRACT	BRIDGE NO.
28-090-03	DESIGNED BY:
COUNTY	
NEW CASTLE	CHECKED BY:

PROFILES

SHEET NO.
84
TOTAL SHTS.
803

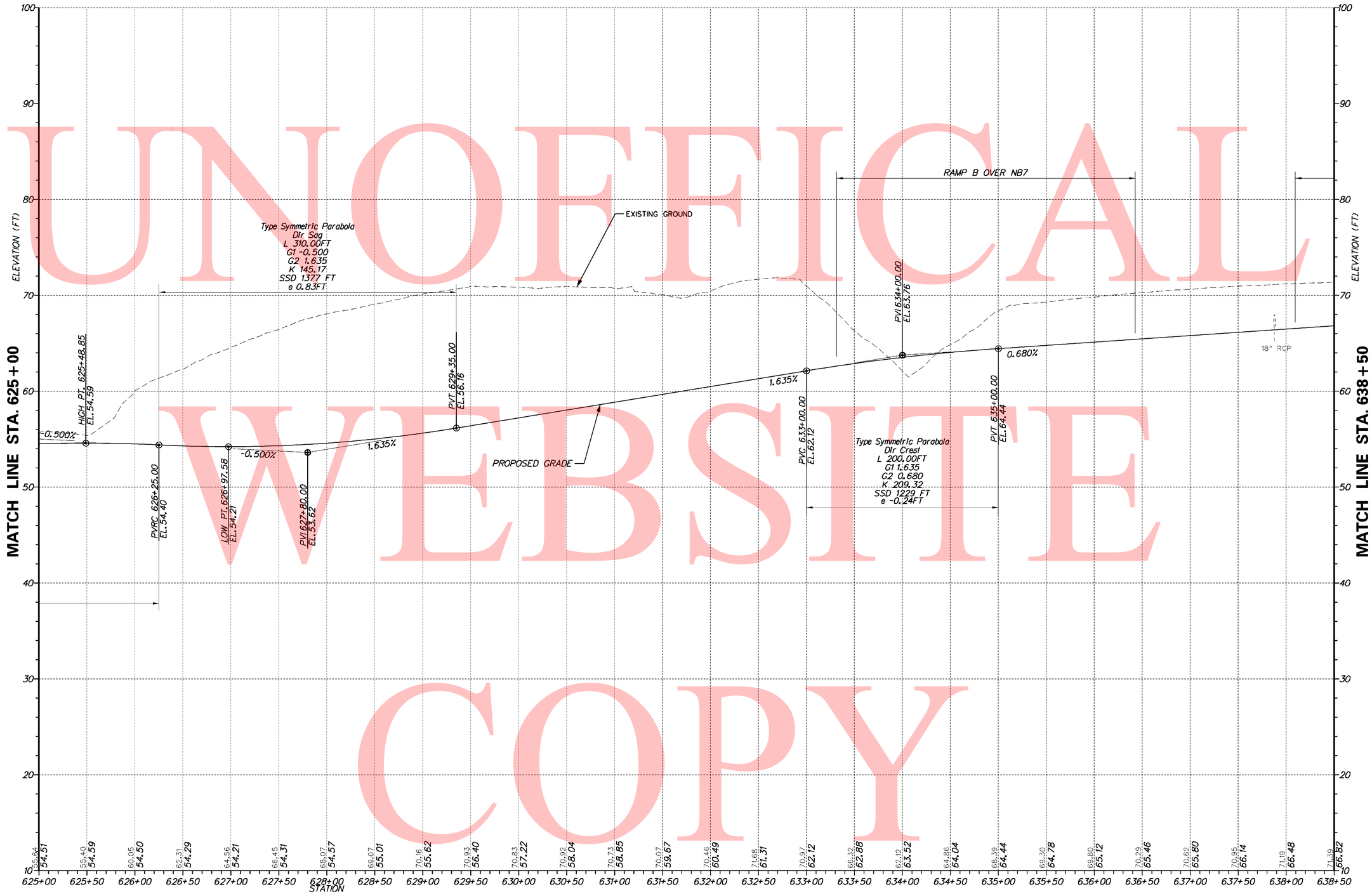

NB 7

UNOFFICAL WEBSITE COPY

7/28/2010 3:44:18 PM
M:\PROJECTS\2003\03059_DELTRNPK\SRIMALL\CADD\2809003\PLANS\PF06_NB7_SR1.DGN

DELAWARE DEPARTMENT OF TRANSPORTATION

ADDENDUMS / REVISIONS

SCALE 0 50 100 150 FEET

SR1 / I-95 INTERCHANGE

CONTRACT	BRIDGE NO.
28-090-03	DESIGNED BY:
COUNTY	
NEW CASTLE	CHECKED BY:

PROFILES

SHEET NO.
85
TOTAL SHTS.
803

UNOFFICAL WEBSITE COPY

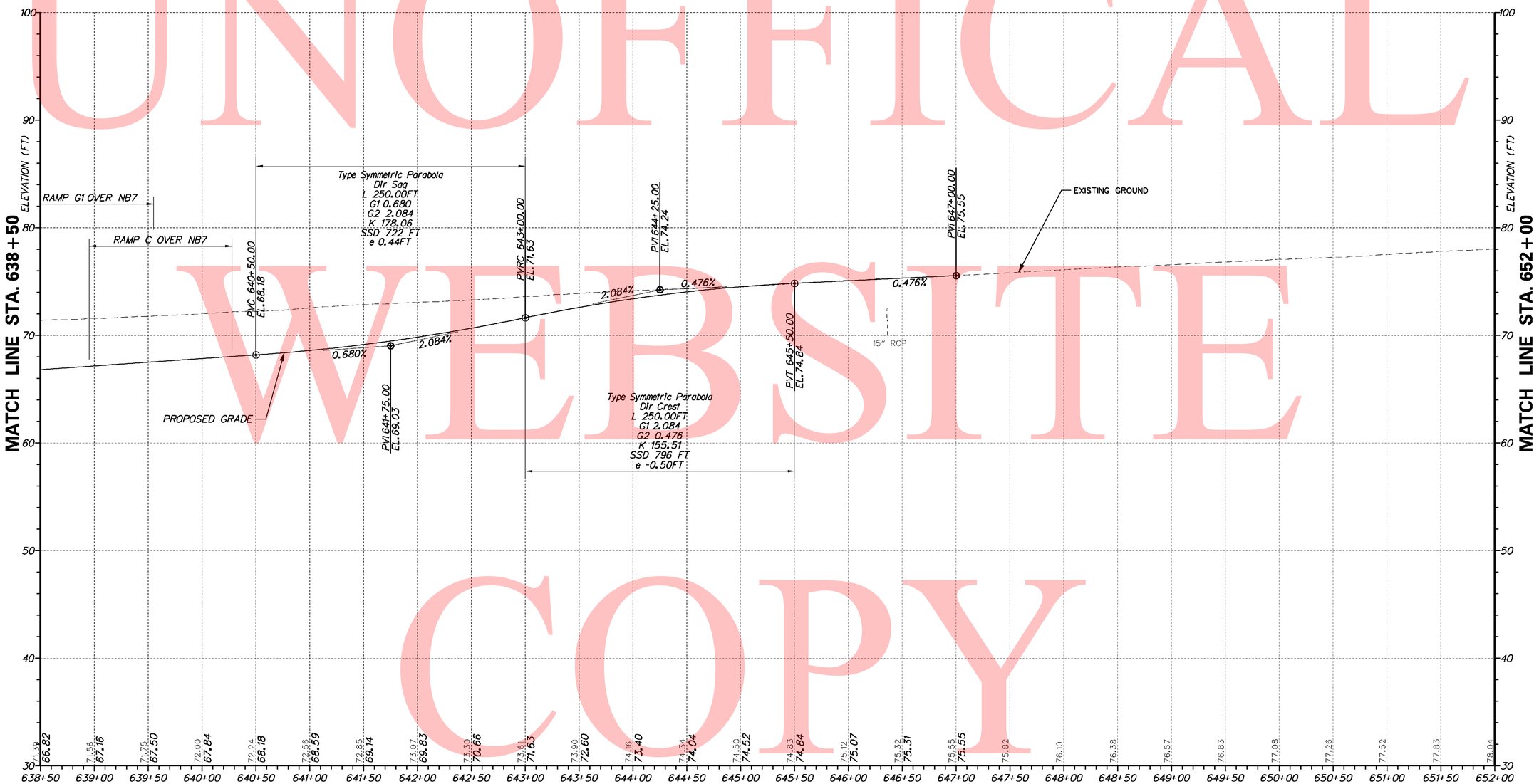

NB 7

VERTICAL SCALE FEET 0 5 10 15

DELAWARE DEPARTMENT OF TRANSPORTATION	ADDENDUMS / REVISIONS	SCALE 0 50 100 150 FEET	SR1 / I-95 INTERCHANGE	CONTRACT 28-090-03	BRIDGE NO.	PROFILES	SHEET NO. 86
				COUNTY NEW CASTLE	DESIGNED BY:		TOTAL SHTS. 803
					CHECKED BY:		

7/28/2010 3:46:51 PM
M:\PROJECTS\2003\03059_DELTRNPK\SRIMALL\CADD\2809003\PLANS\PF07_NB7_SR1.DGN

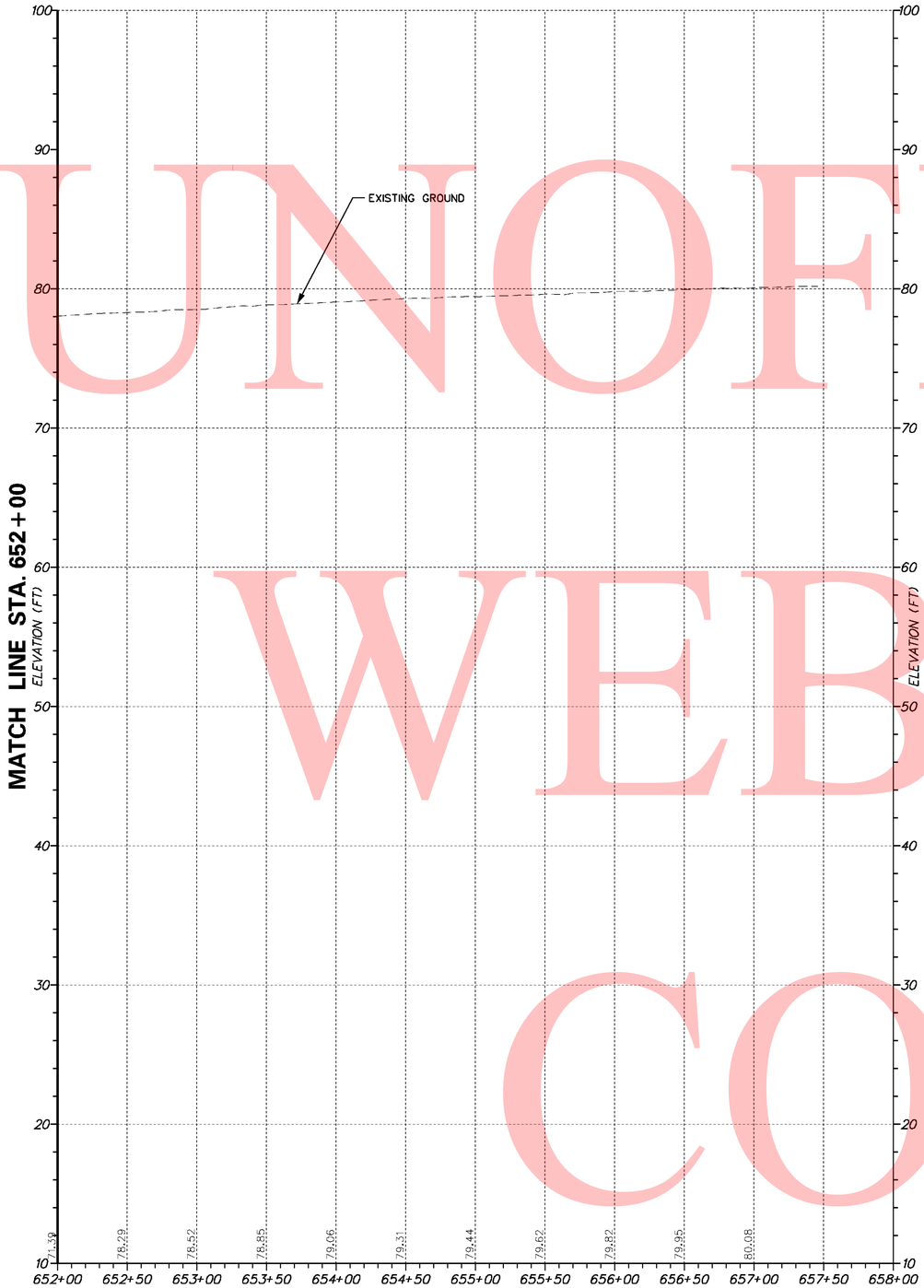

UNOFFICAL WEBSITE COPY

VERTICAL SCALE FEET 0 5 10 15

7/28/2010 3:50:29 PM
M:\PROJECTS\2003\03059_DELTRNPK\SRIMALL\CADD\2809003\PLANS\PF08_NB7_SR1.DGN

DELAWARE DEPARTMENT OF TRANSPORTATION	ADDENDUMS / REVISIONS	SCALE 0 50 100 150 FEET	SR1 / I-95 INTERCHANGE	CONTRACT 28-090-03	BRIDGE NO.	PROFILES	SHEET NO. 87
				COUNTY NEW CASTLE	DESIGNED BY:		TOTAL SHTS. 803
					CHECKED BY:		

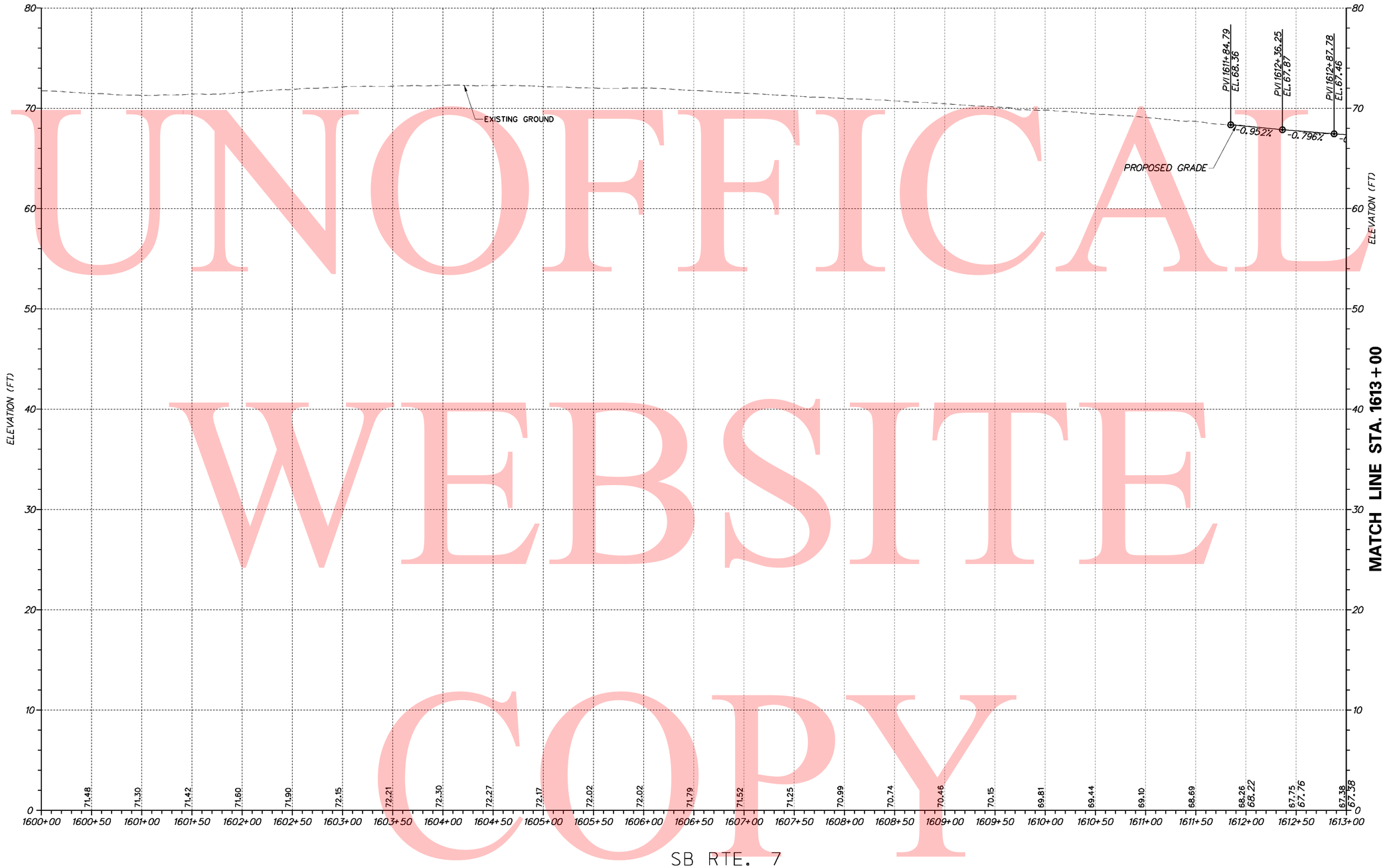

UNOFFICAL WEBSITE COPY

VERTICAL SCALE FEET 0 5 10 15

7/28/2010 3:52:42 PM
M:\PROJECTS\2003\03059_DELTRNPK\SRIMALL\CADD\2809003\PLANS\PF09_SB7_SR1.DGN

DELAWARE DEPARTMENT OF TRANSPORTATION	ADDENDUMS / REVISIONS	SCALE 0 50 100 150 FEET	SR1 / I-95 INTERCHANGE	CONTRACT 28-090-03	BRIDGE NO.	PROFILES	SHEET NO. 88
				COUNTY NEW CASTLE	DESIGNED BY:		TOTAL SHTS. 803
					CHECKED BY:		

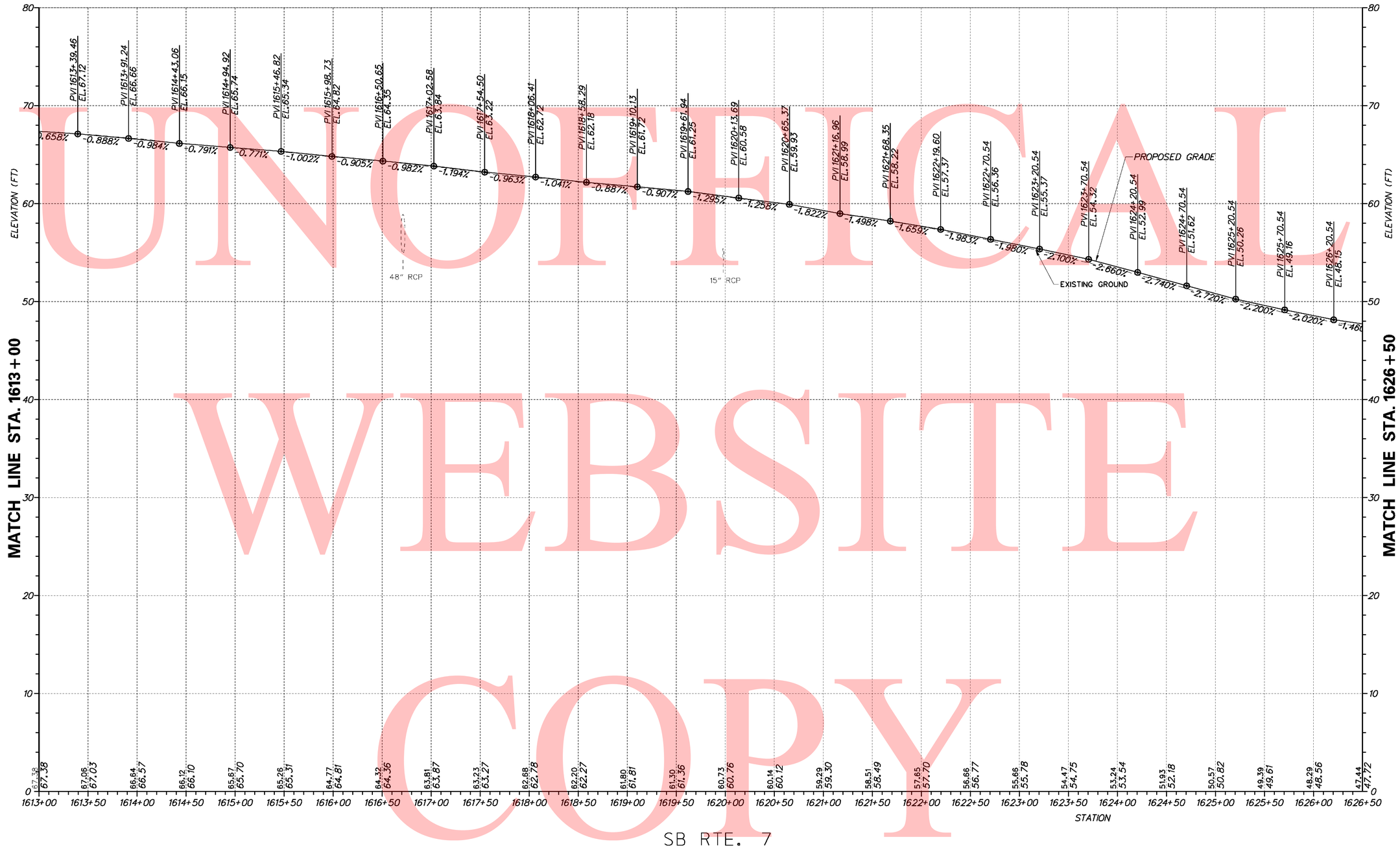

UNOFFICIAL WEBSITE COPY

7/28/2010 4:02:50 PM
M:\PROJECTS\2003\03059_DELTRNPK\SR1MAL\CADD\2809003\PLANS\PF10_SB7_SR1.DGN

DELAWARE DEPARTMENT OF TRANSPORTATION

ADDENDUMS / REVISIONS

SCALE 0 50 100 150 FEET

SR1 / I-95 INTERCHANGE

CONTRACT	BRIDGE NO.
28-090-03	DESIGNED BY:
COUNTY	
NEW CASTLE	CHECKED BY:

PROFILES

SHEET NO.
89
TOTAL SHTS.
803

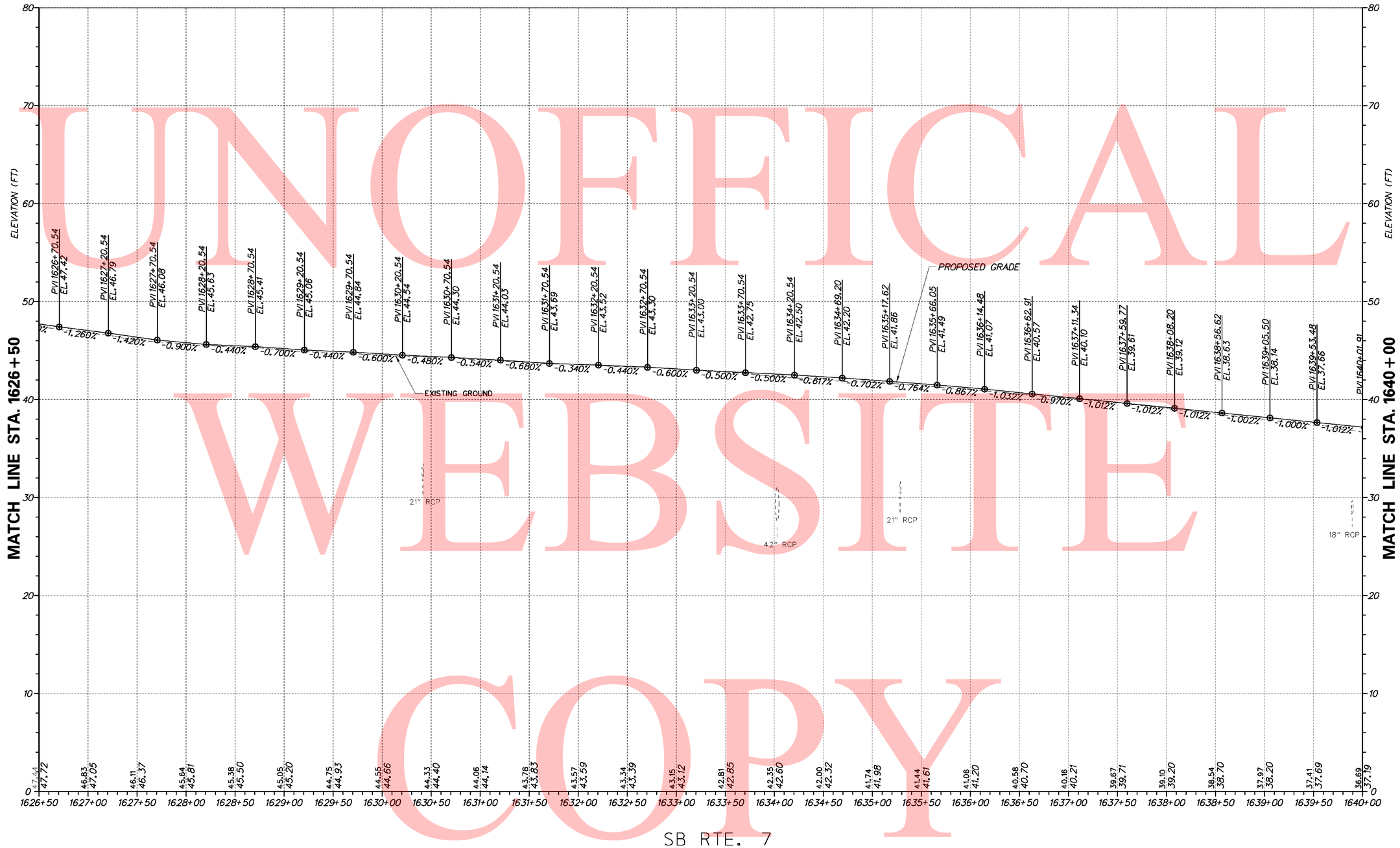

UNOFFICAL WEBSITE COPY

7/28/2010 4:09:33 PM
M:\PROJECTS\2003\03059_DELTRNPK\SR1MAL\CADD\2809003\PLANS\PF11_SB7_SR1.DGN

DELAWARE DEPARTMENT OF TRANSPORTATION

ADDENDUMS / REVISIONS

SCALE 0 50 100 150 FEET

SR1 / I-95 INTERCHANGE

CONTRACT	BRIDGE NO.
28-090-03	DESIGNED BY:
COUNTY	
NEW CASTLE	CHECKED BY:

PROFILES

SHEET NO.
90
TOTAL SHTS.
803

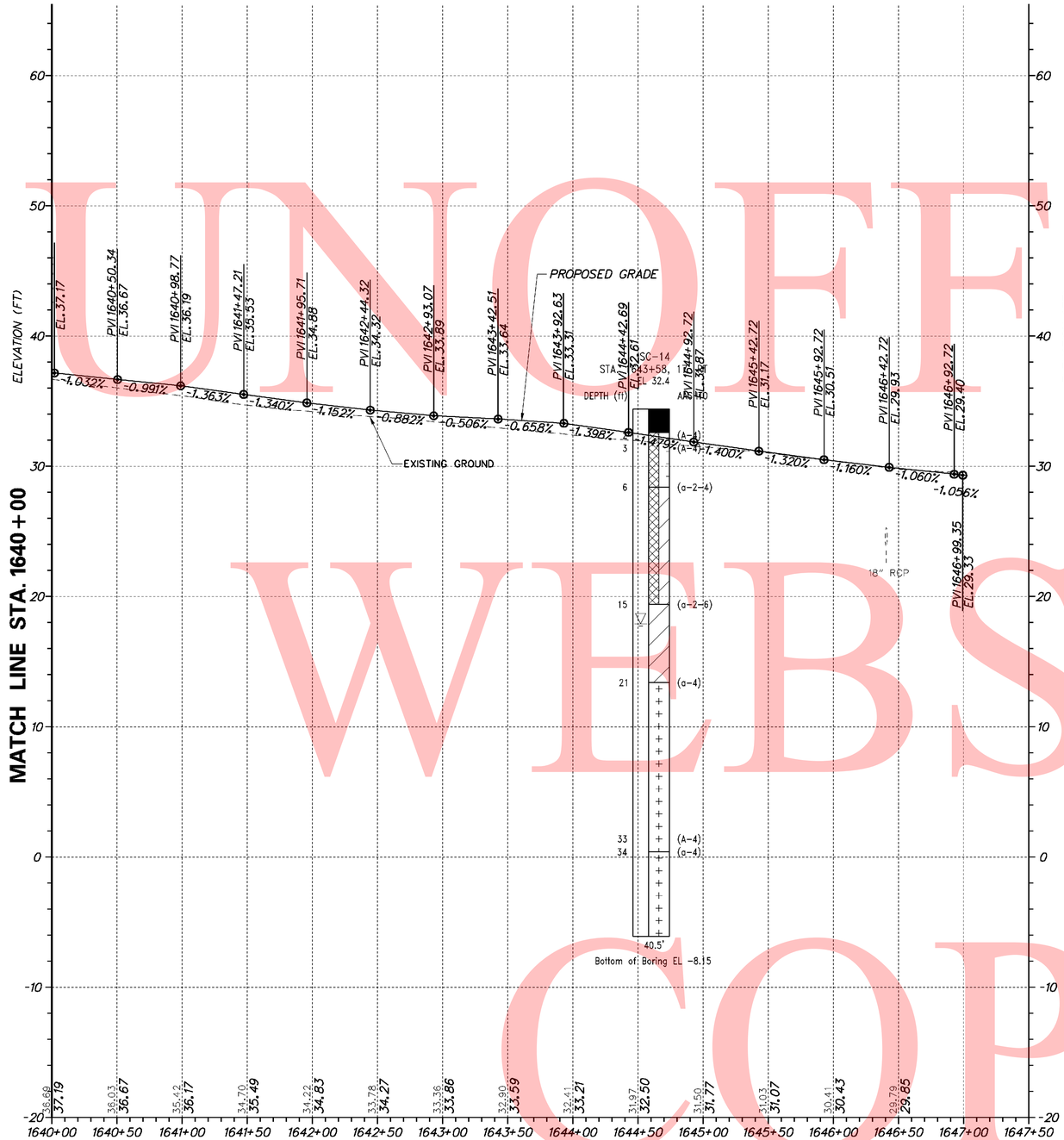

SB RTE. 7

UNOFFICAL WEBSITE COPY

VERTICAL SCALE FEET 0 5 10 15

7/28/2010 4:14:55 PM
M:\PROJECTS\2003\03059_DELTRNPK\SRIMALL\CADD\2809003\PLANS\PT12_SB7_SR1.DGN

DELAWARE DEPARTMENT OF TRANSPORTATION	ADDENDUMS / REVISIONS	SCALE 0 50 100 150 FEET	SR1 / I-95 INTERCHANGE	CONTRACT 28-090-03	BRIDGE NO.	PROFILES	SHEET NO. 91
				COUNTY NEW CASTLE	DESIGNED BY:		TOTAL SHTS. 803
					CHECKED BY:		

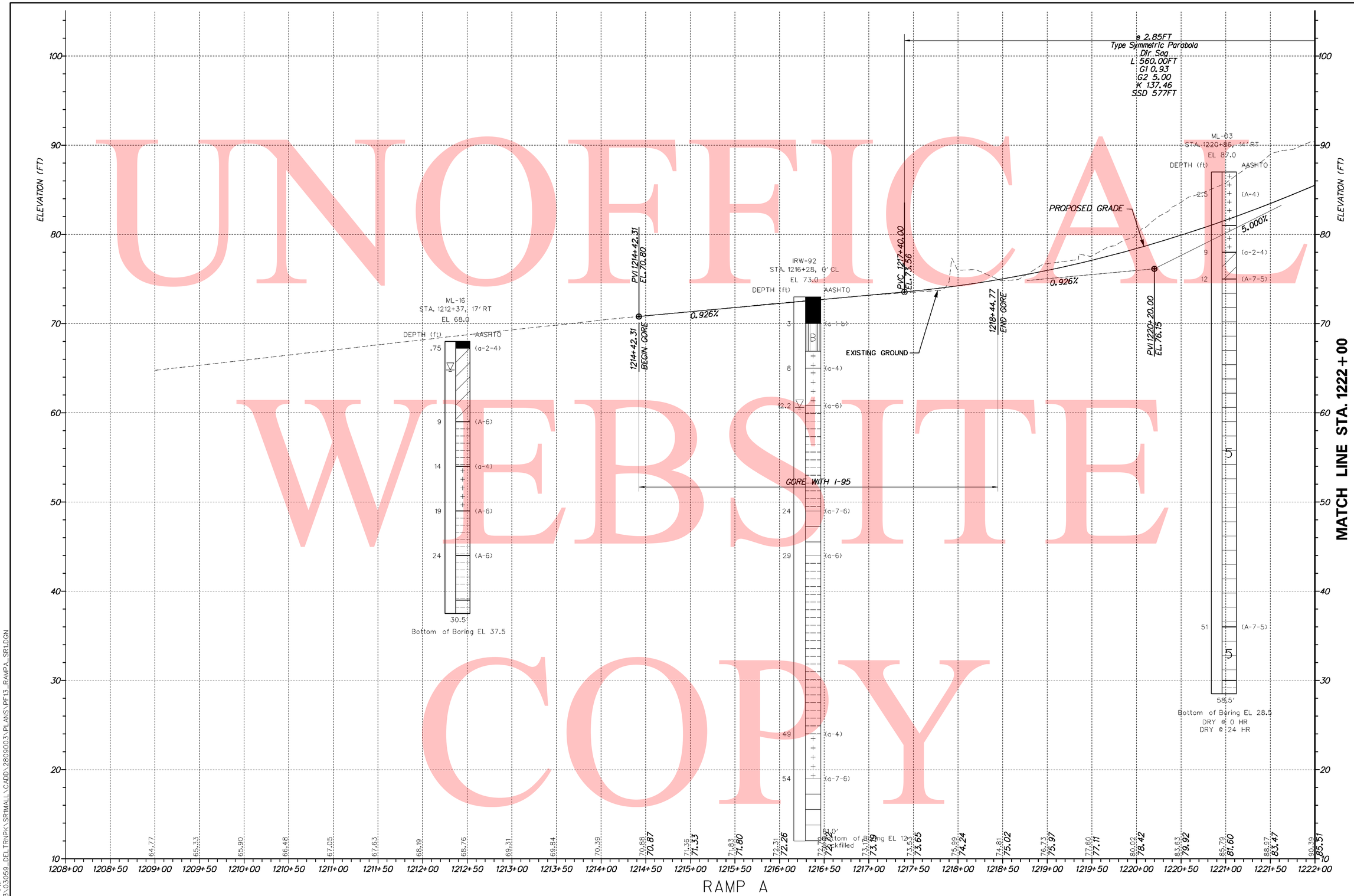

UNOFFICIAL WEBSITE COPY

7/28/2010 4:18:30 PM
M:\PROJECTS\2003\03059_DELTRNPK\SR1MALL\CADD\2809003\PLANS\PF13_RAMPA_SR1.DGN

DELAWARE DEPARTMENT OF TRANSPORTATION

ADDENDUMS / REVISIONS

SCALE 0 50 100 150 FEET

SR1 / I-95 INTERCHANGE

CONTRACT	BRIDGE NO.
28-090-03	DESIGNED BY:
COUNTY	CHECKED BY:
NEW CASTLE	

PROFILES

SHEET NO.
92
TOTAL SHTS.
803

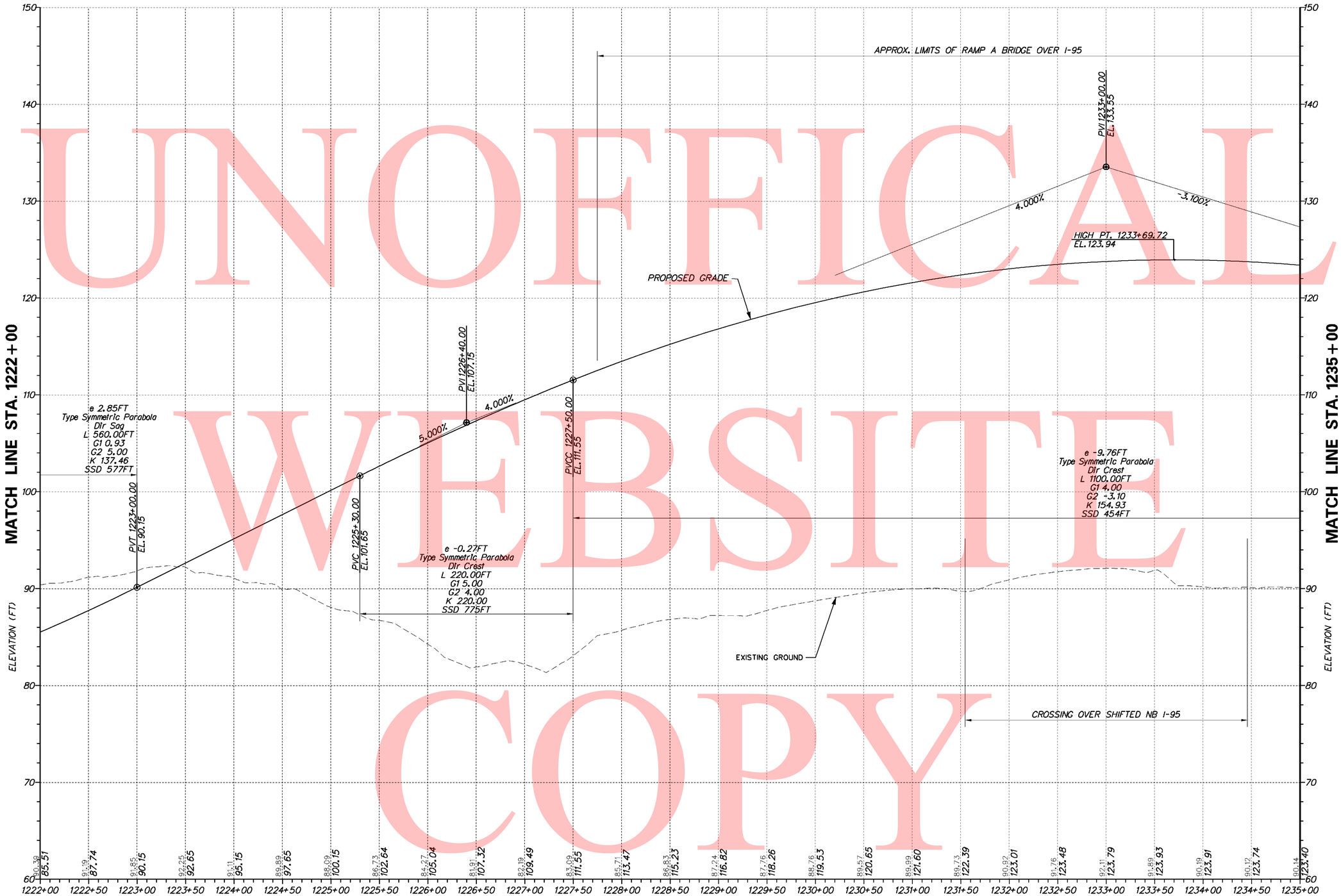

RAMP A

VERTICAL SCALE FEET 0 5 10 15

UNOFFICAL WEBSITE COPY

7/28/2010 4:43:14 PM
M:\PROJECTS\2003\03059_DELTRNPK\SRIMALL\CADD\2809003\PLANS\PF14_RAMPA_SR1.DGN

DELAWARE DEPARTMENT OF TRANSPORTATION	ADDENDUMS / REVISIONS	SCALE 0 50 100 150 FEET	SR1 / I-95 INTERCHANGE	CONTRACT 28-090-03	BRIDGE NO.	PROFILES
				COUNTY NEW CASTLE	DESIGNED BY:	
					CHECKED BY:	

SHEET NO. 93
TOTAL SHTS. 803

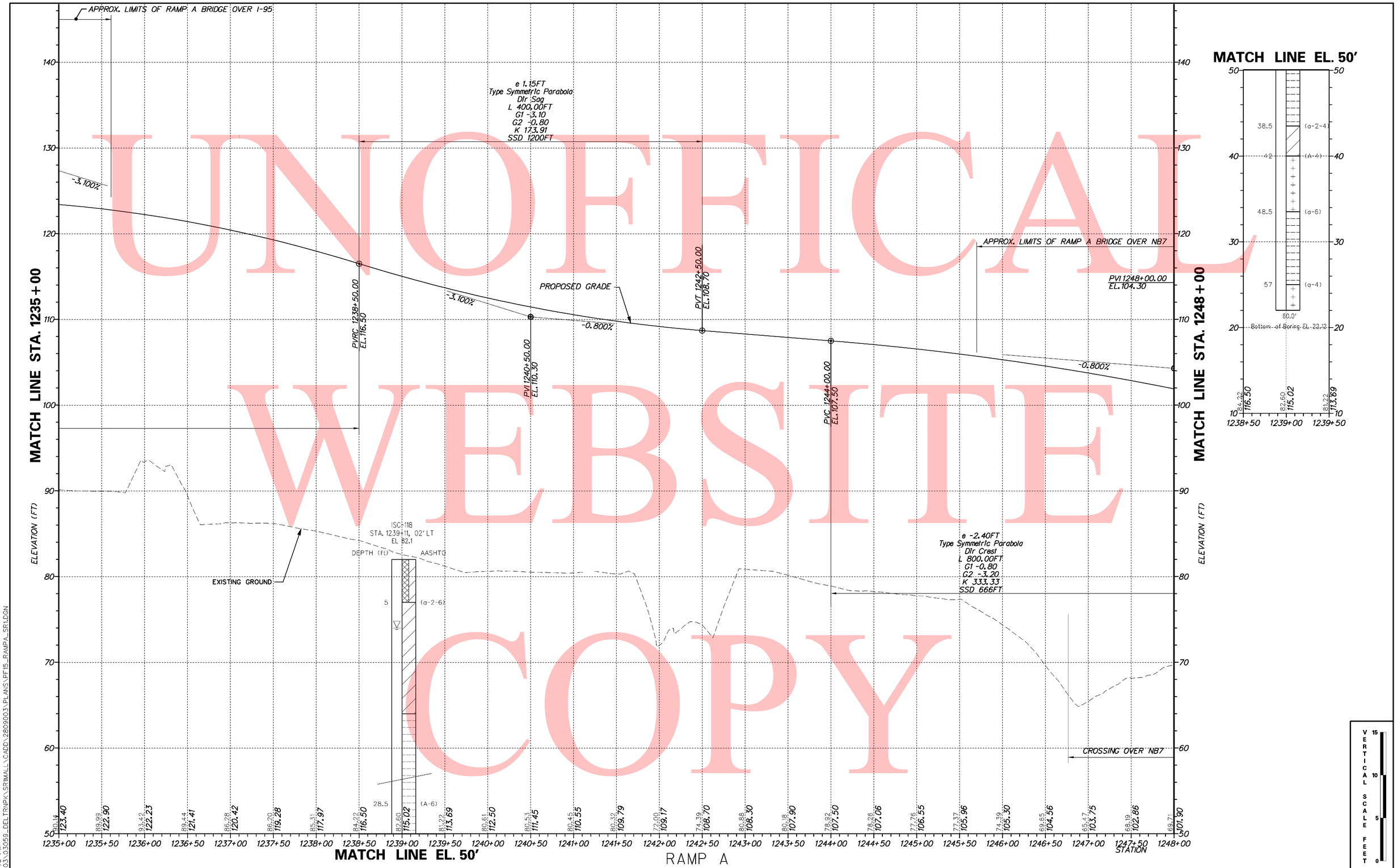

UNOFICAL WEBSITE COPY

7/28/2010 4:58:45 PM
M:\PROJECTS\2003\03059_DELTRNPK\SRMALL\CADD\2809003\PLANS\PF15_RAMPA_SR1.DGN

DELAWARE DEPARTMENT OF TRANSPORTATION	ADDENDUMS / REVISIONS	SCALE 0 50 100 150 FEET	SR1 / I-95 INTERCHANGE	CONTRACT 28-090-03	BRIDGE NO.	PROFILES	SHEET NO. 94
				COUNTY NEW CASTLE	DESIGNED BY:		TOTAL SHTS. 803
					CHECKED BY:		

UNOFFICAL WEBSITE COPY

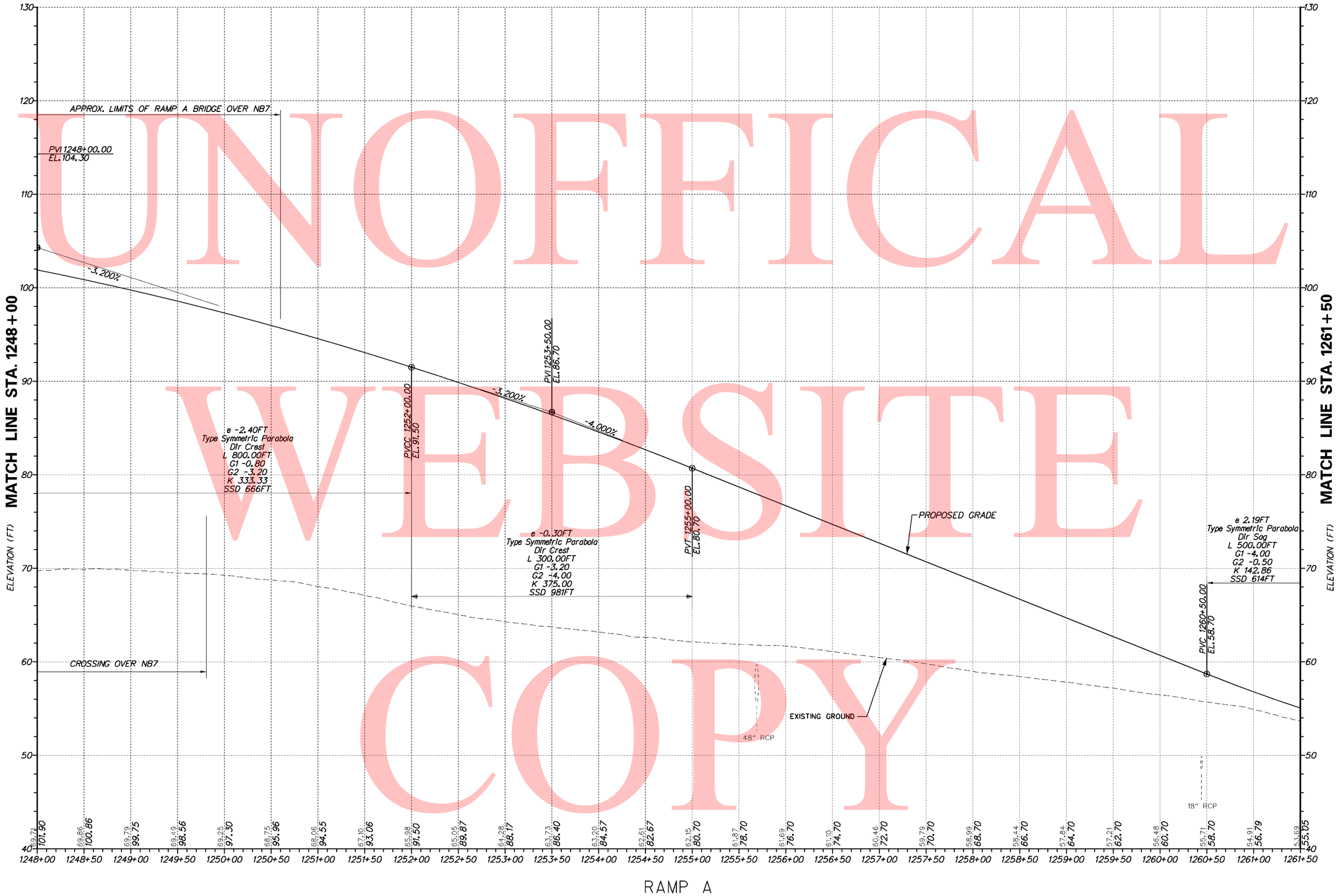

VERTICAL SCALE FEET 0 5 10 15

DELAWARE DEPARTMENT OF TRANSPORTATION	ADDENDUMS / REVISIONS	SCALE 0 50 100 150 FEET	SR1 / I-95 INTERCHANGE	CONTRACT 28-090-03	BRIDGE NO.	PROFILES
				COUNTY NEW CASTLE	DESIGNED BY:	SHEET NO. 95
					CHECKED BY:	TOTAL SHTS. 803

7/28/2010 5:03:49 PM
M:\PROJECTS\2003\03059_DELTRNPK\SRIMALL\CADD\2809003\PLANS\PF16_RAMPA_SR1.DGN

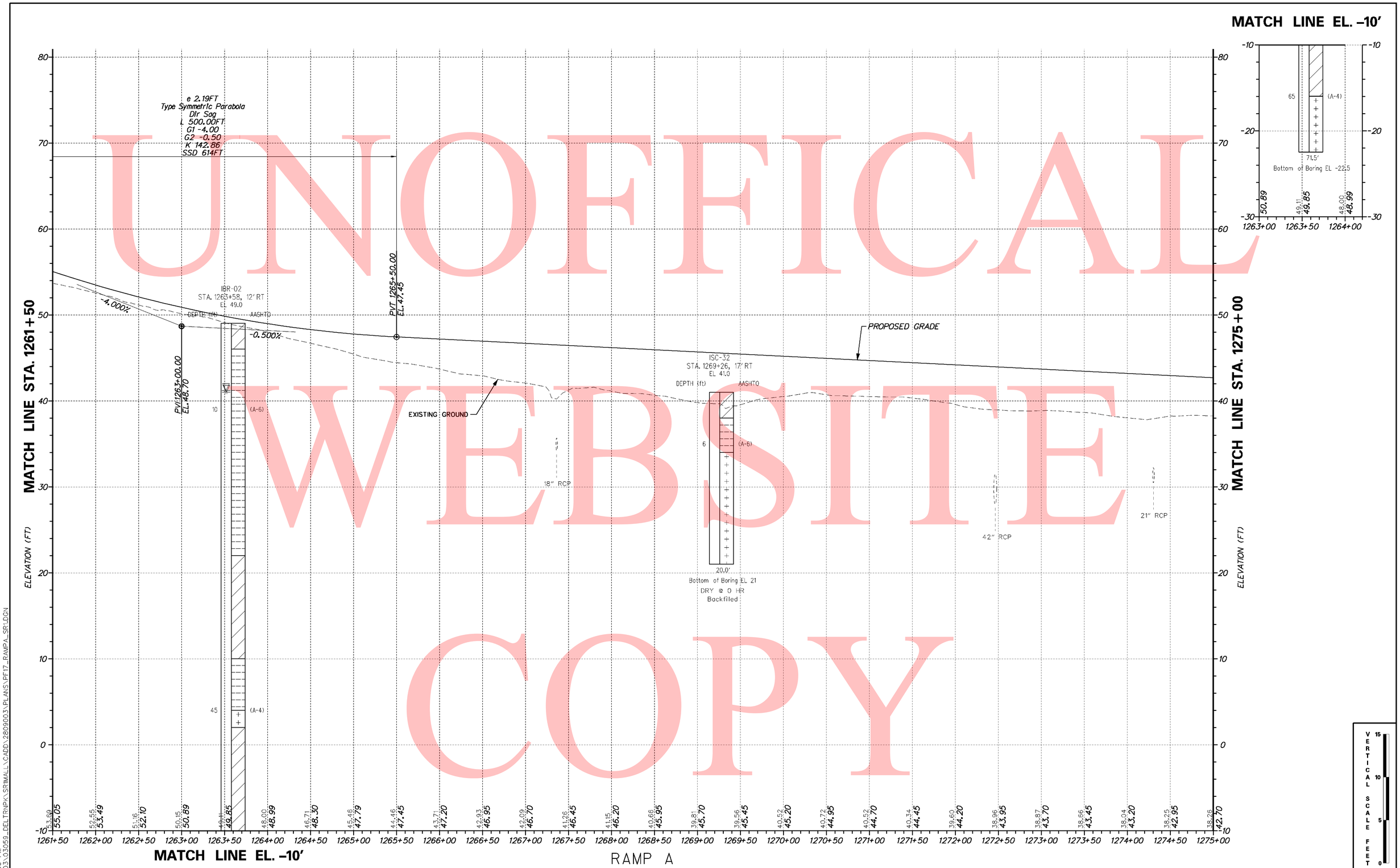

UNOFFICAL WEBSITE COPY

7/28/2010 5:09:05 PM
M:\PROJECTS\2003\03059_DELTRNPK\SRIMALL\CADD\2809003\PLANS\PF17_RAMPA_SR1.DGN

DELAWARE DEPARTMENT OF TRANSPORTATION	ADDENDUMS / REVISIONS	SCALE 0 50 100 150 FEET	SR1 / I-95 INTERCHANGE	CONTRACT 28-090-03	BRIDGE NO.	PROFILES
				COUNTY NEW CASTLE	DESIGNED BY:	SHEET NO. 96
					CHECKED BY:	TOTAL SHTS. 803

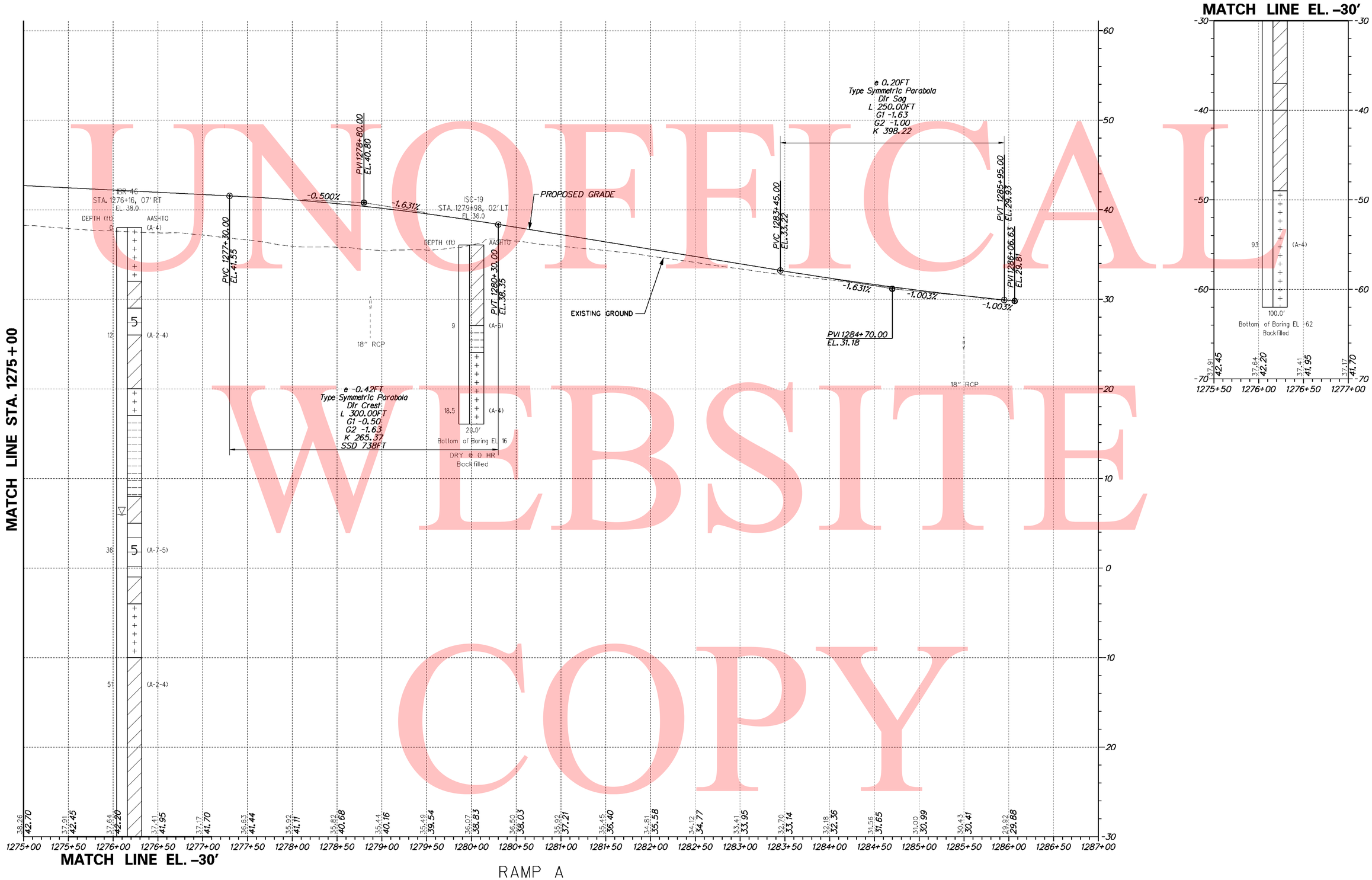

RAMP A

UNOFFICIAL WEBSITE COPY

DELAWARE DEPARTMENT OF TRANSPORTATION	ADDENDUMS / REVISIONS	SCALE 0 50 100 150 FEET	SR1 / I-95 INTERCHANGE	CONTRACT 28-090-03	BRIDGE NO.	PROFILES	SHEET NO. 97
				COUNTY NEW CASTLE	DESIGNED BY:		TOTAL SHTS. 803
					CHECKED BY:		

7/28/2010 5:10:02 PM
M:\PROJECTS\2003\03059_DELTRNPK\SR1MAL\CADD\2809003\PLANS\PF18_RAMPA_SR1.DGN

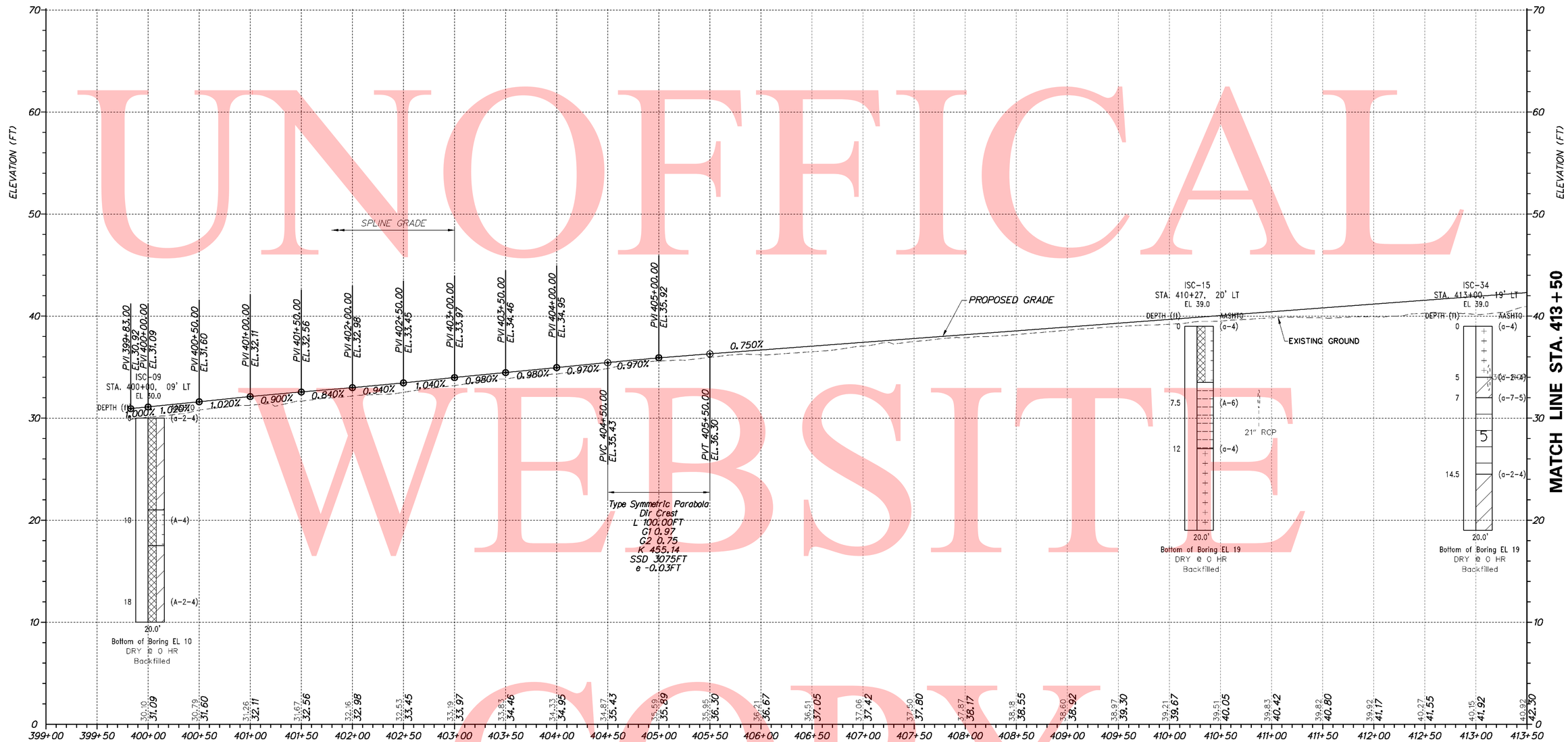

RAMP B

UNOFFICAL WEBSITE COPY

VERTICAL SCALE FEET 0 5 10 15

7/28/2010 5:12:04 PM
M:\PROJECTS\2003\03059_DELTRNPK\SRIMALL\CADD\2809003\PLANS\PF19_RAMPB_SR1.DGN

DELAWARE DEPARTMENT OF TRANSPORTATION	ADDENDUMS / REVISIONS	SCALE 0 50 100 150 FEET	SR1 / I-95 INTERCHANGE	CONTRACT 28-090-03	BRIDGE NO.	PROFILES
				COUNTY NEW CASTLE	DESIGNED BY:	
					CHECKED BY:	

SHEET NO. 98
TOTAL SHTS. 803

UNOFFICAL WEBSITE COPY

7/28/2010 5:16:18 PM
M:\PROJECTS\2003\03059_DELTRNPK\SRTMALL\CADD\2809003\PLANS\PF20_RAMPB_SR1.DGN

DELAWARE DEPARTMENT OF TRANSPORTATION

ADDENDUMS / REVISIONS

SCALE 0 50 100 150 FEET

SR1 / I-95 INTERCHANGE

CONTRACT	BRIDGE NO.
28-090-03	DESIGNED BY:
COUNTY	
NEW CASTLE	CHECKED BY:

PROFILES

SHEET NO.
99
TOTAL SHTS.
803

UNOFFICIAL WEBSITE COPY

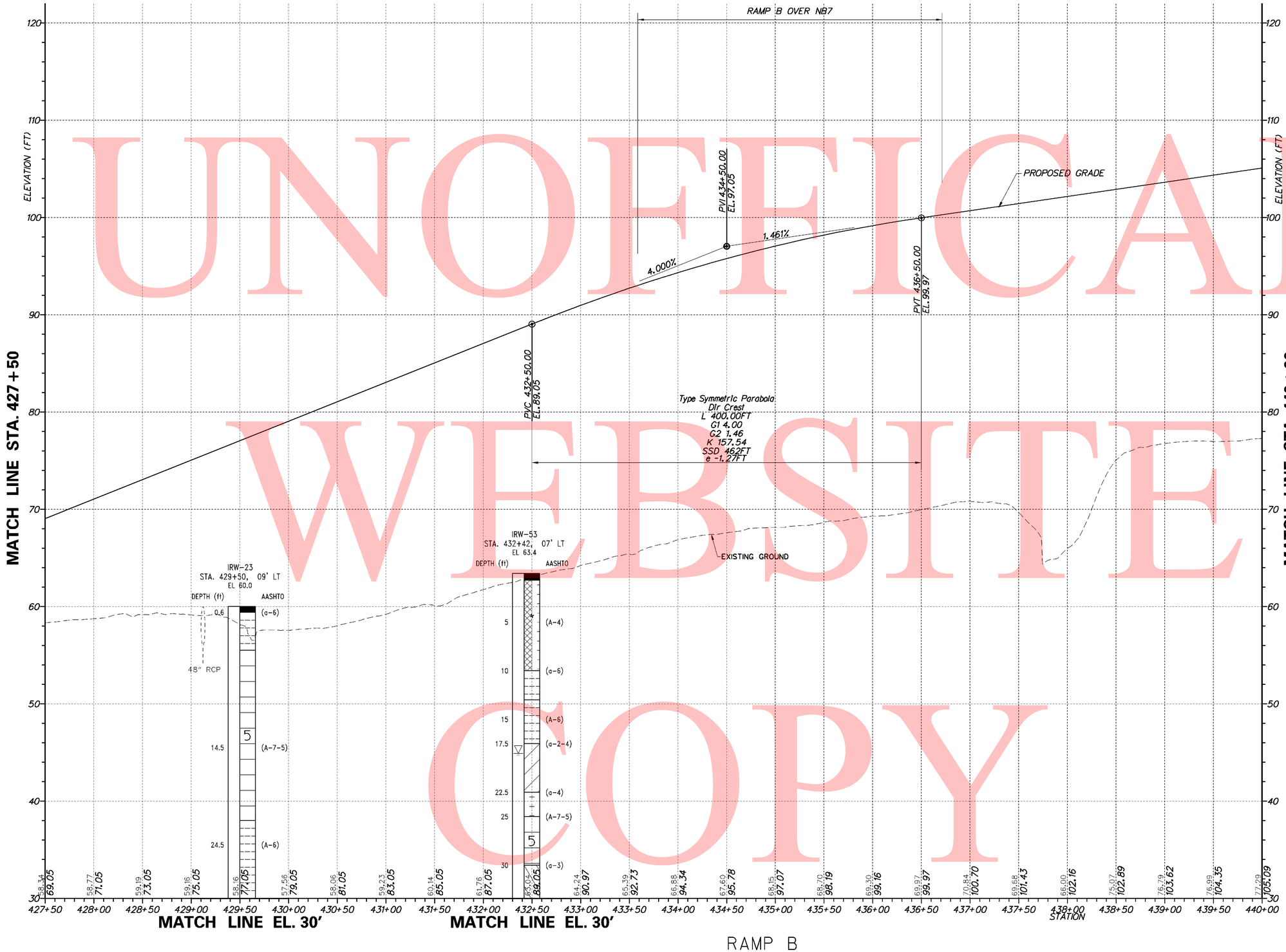

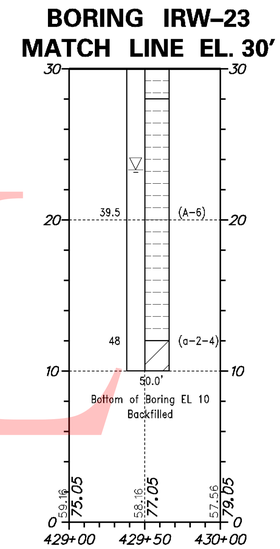

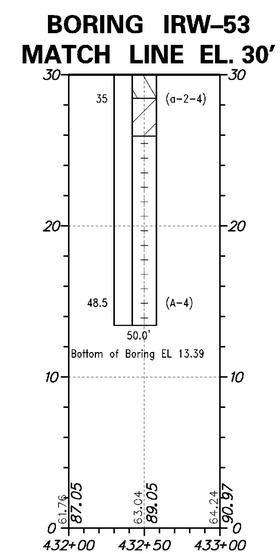

VERTICAL SCALE FEET

DELAWARE DEPARTMENT OF TRANSPORTATION	ADDENDUMS / REVISIONS	SCALE 0 50 100 150 FEET	SR1 / I-95 INTERCHANGE	CONTRACT 28-090-03 / COUNTY NEW CASTLE	BRIDGE NO. / DESIGNED BY: / CHECKED BY:	PROFILES	SHEET NO. 100 / TOTAL SHTS. 803

7/28/2010 5:22:40 PM
M:\PROJECTS\2003\03059_DELTRNPK\SRIMALL\CADD\2809003\PLANS\PF21_RAMPB_SR1.DGN

UNOFFICIAL WEBSITE COPY

7/28/2010 5:24:30 PM
M:\PROJECTS\2003\03059_DELTRNPK\SRIMALL\CADD\2809003\PLANS\PF22_RAMPB_SR1.DGN

DELAWARE DEPARTMENT OF TRANSPORTATION

ADDENDUMS / REVISIONS

SCALE 0 50 100 150 FEET

SR1 / I-95 INTERCHANGE

CONTRACT	BRIDGE NO.
28-090-03	DESIGNED BY:
COUNTY	CHECKED BY:
NEW CASTLE	

PROFILES

SHEET NO.
101
TOTAL SHTS.
803

UNOFFICAL WEBSITE COPY

7/28/2010 5:28:24 PM
M:\PROJECTS\2003\03059_DELTRNPK\SRIMALL\CADD\2809003\PLANS\PF23_RAMPB_SR1.DGN

DELAWARE DEPARTMENT OF TRANSPORTATION	ADDENDUMS / REVISIONS	SCALE 0 50 100 150 FEET	**SR1 / I-95 INTERCHANGE**	CONTRACT 28-090-03 / COUNTY NEW CASTLE	BRIDGE NO. / DESIGNED BY: / CHECKED BY:	**PROFILES**

SHEET NO. 102
TOTAL SHTS. 803

UNOFFICAL WEBSITE COPY

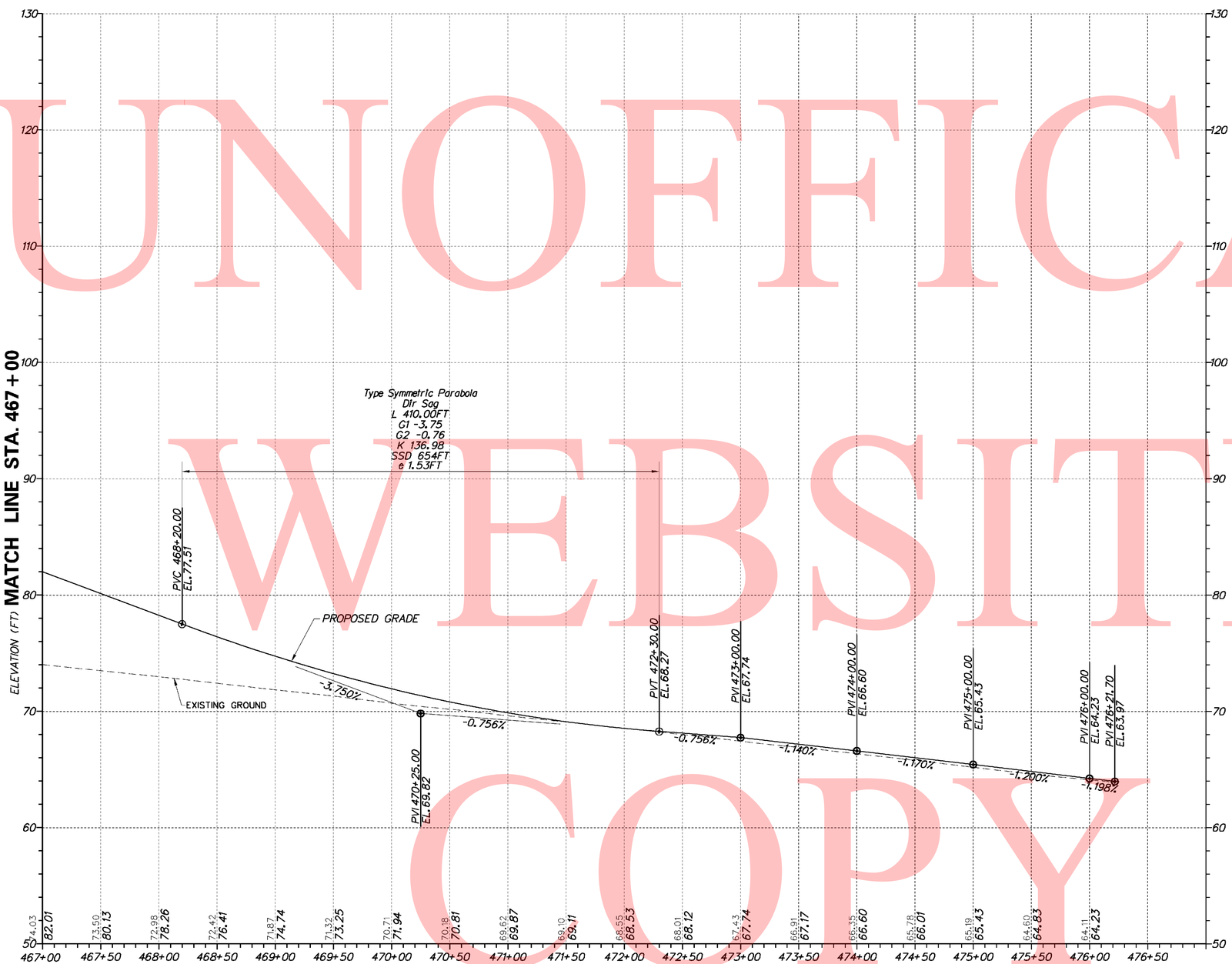

RAMP B

VERTICAL SCALE FEET 15 10 5 0

DELAWARE DEPARTMENT OF TRANSPORTATION	ADDENDUMS / REVISIONS	SCALE 0 50 100 150 FEET	SR1 / I-95 INTERCHANGE	CONTRACT 28-090-03	BRIDGE NO.	PROFILES
				COUNTY NEW CASTLE	DESIGNED BY:	SHEET NO. 103
					CHECKED BY:	TOTAL SHTS. 803

7/28/2010 5:29:22 PM
M:\PROJECTS\2003\03059_DELTRNPK\SRTMALL\CADD\2809003\PLANS\PF24_RAMPB_SR1.DGN

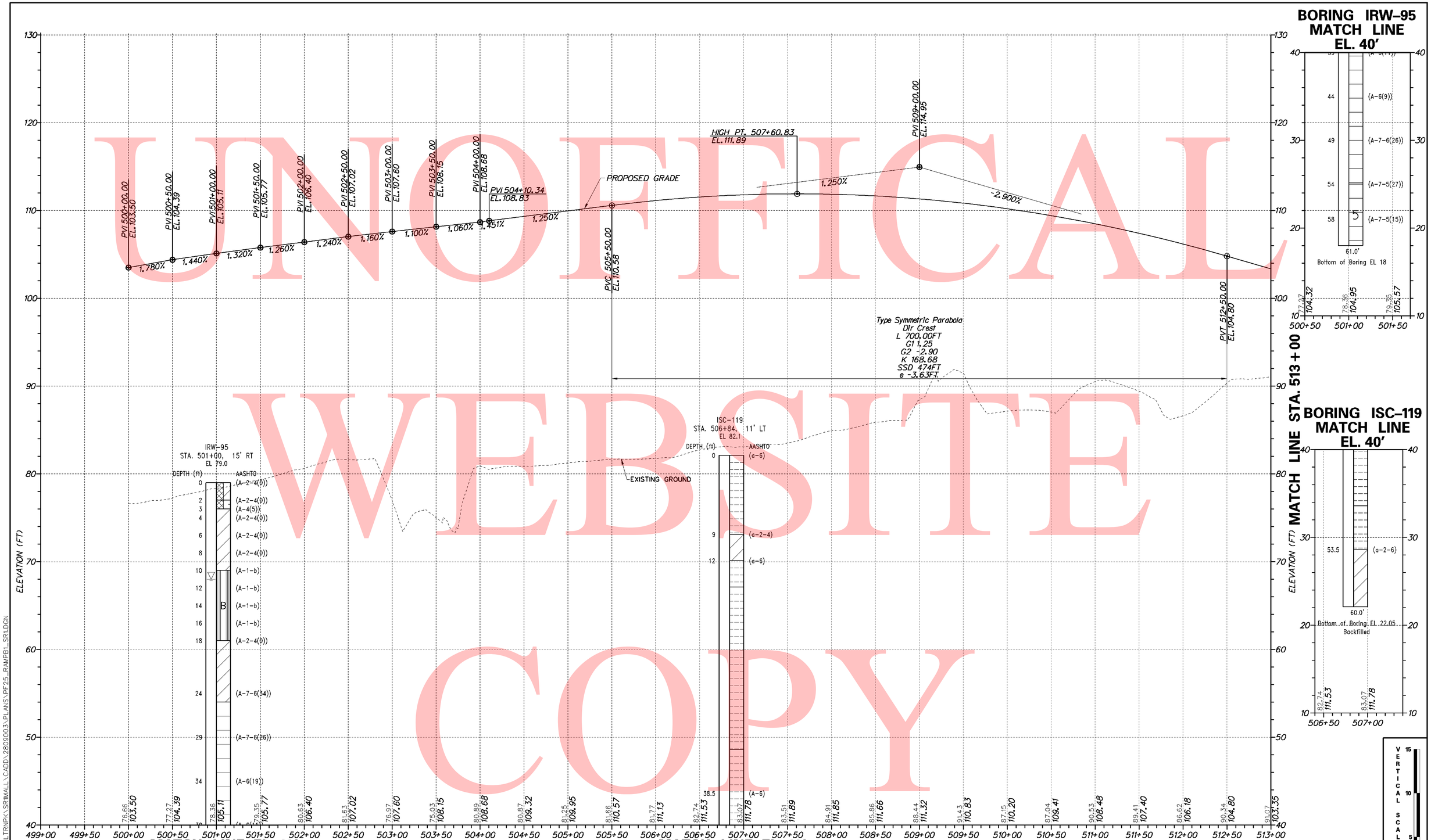

RAMP B1

UNOFFICAL WEBSITE COPY

DELAWARE DEPARTMENT OF TRANSPORTATION	ADDENDUMS / REVISIONS	SCALE 0 50 100 150 FEET	SR1 / I-95 INTERCHANGE	CONTRACT 28-090-03	BRIDGE NO.	PROFILES	SHEET NO. 104
				COUNTY NEW CASTLE	DESIGNED BY:		TOTAL SHTS. 803
					CHECKED BY:		

7/28/2010 5:35:32 PM
M:\PROJECTS\2003\03059_DELTRNPK\SRTMALL\CADD\2809003\PLANS\PF25_RAMPB1_SR1.DGN

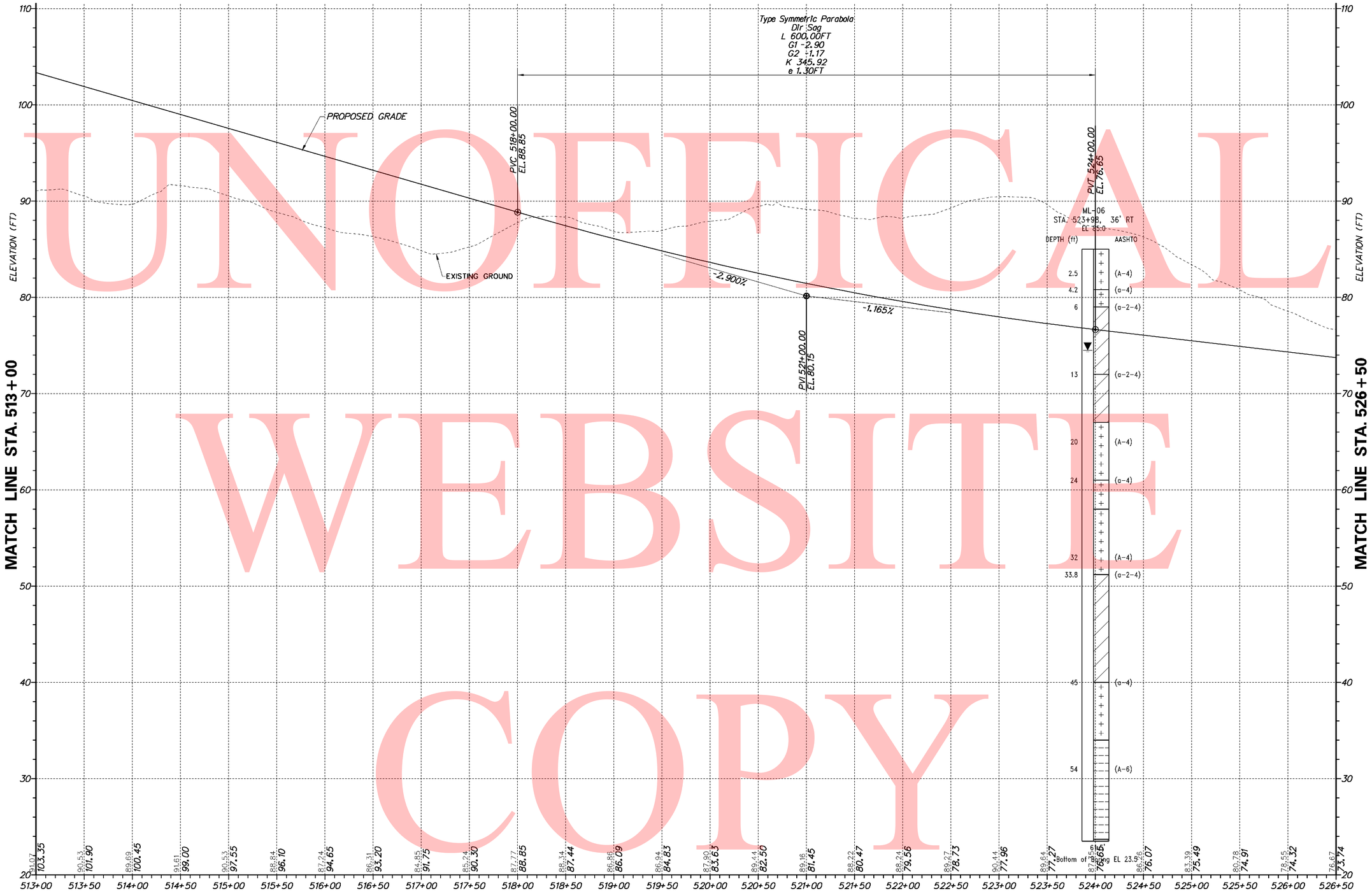

RAMP B1

UNOFFICAL WEBSITE COPY

7/28/2010 5:43:17 PM
M:\PROJECTS\2003\03059_DELTRNPK\SRTMALL\CADD\2809003\PLANS\PF28_RAMPB1_SR1.DGN

DELAWARE DEPARTMENT OF TRANSPORTATION	ADDENDUMS / REVISIONS	SCALE 0 50 100 150 FEET	SR1 / I-95 INTERCHANGE	CONTRACT 28-090-03	BRIDGE NO.	PROFILES
				COUNTY NEW CASTLE	DESIGNED BY:	SHEET NO. 105
					CHECKED BY:	TOTAL SHTS. 803

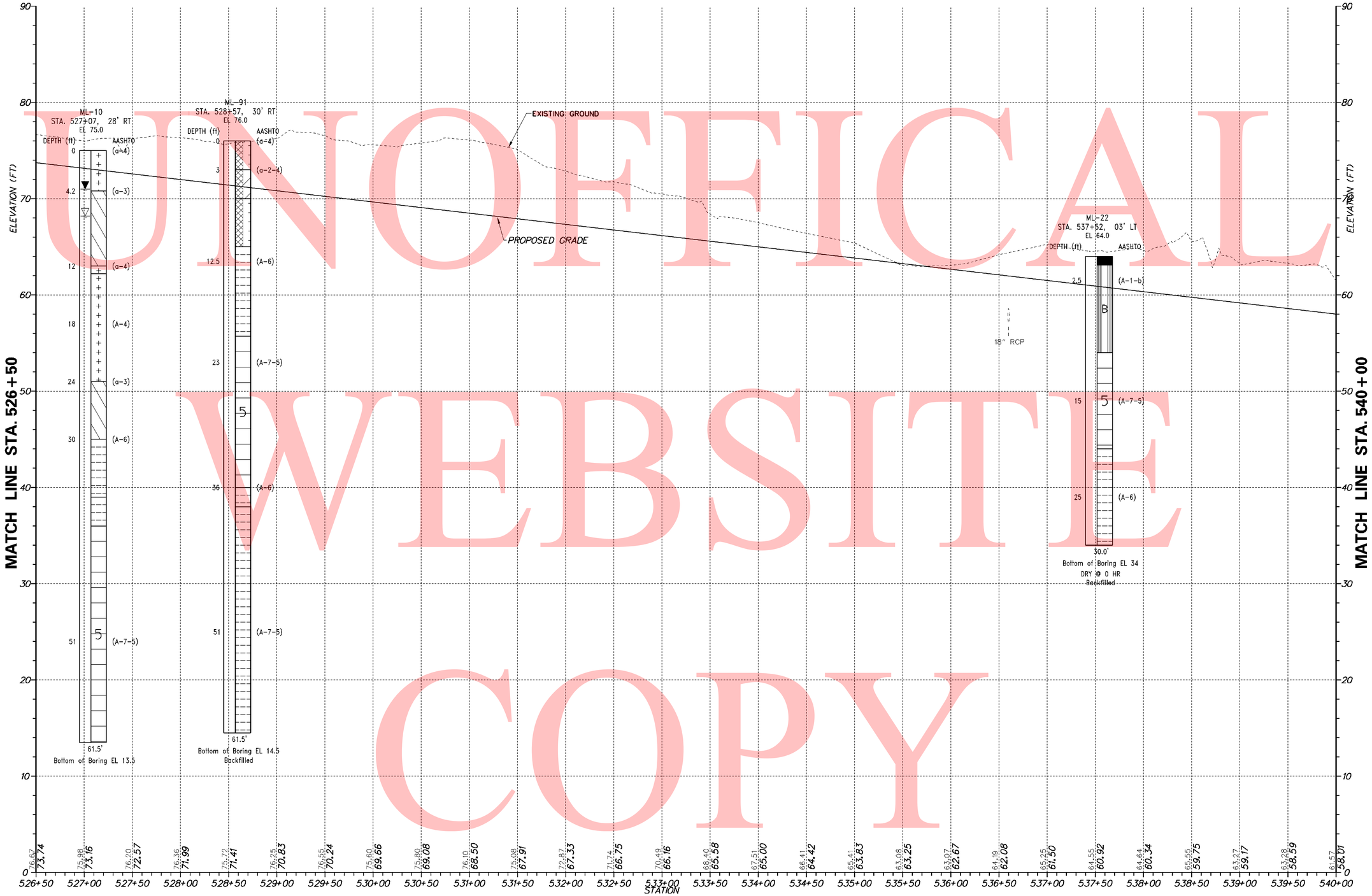

RAMP B1

UNOFFICAL WEBSITE COPY

7/28/2010 5:45:26 PM
M:\PROJECTS\2003\03059_DELTRNPK\SRIMALL\CADD\2809003\PLANS\PF27_RAMPB1_SR1.DGN

DELAWARE DEPARTMENT OF TRANSPORTATION	ADDENDUMS / REVISIONS	SCALE 0 50 100 150 FEET	SR1 / I-95 INTERCHANGE	CONTRACT 28-090-03	BRIDGE NO.	PROFILES
				COUNTY NEW CASTLE	DESIGNED BY:	SHEET NO. 106
					CHECKED BY:	TOTAL SHTS. 803

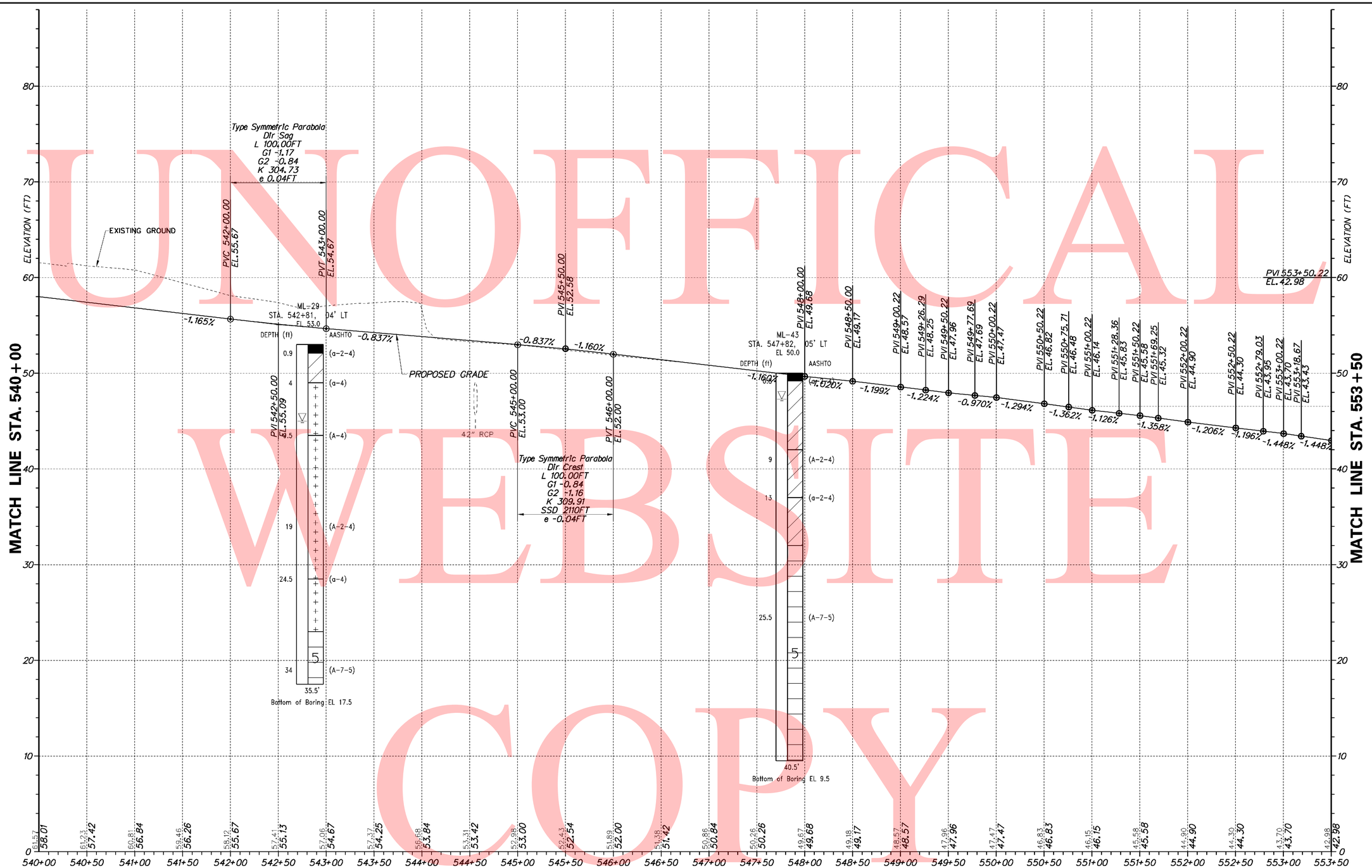

RAMP B1

UNOFFICAL WEBSITE COPY

7/28/2010 6:01:27 PM
M:\PROJECTS\2003\03059_DELTRNPK\SRTMALL\CADD\2809003\PLANS\PF28_RAMPB1_SR1.DGN

DELAWARE DEPARTMENT OF TRANSPORTATION	ADDENDUMS / REVISIONS	SCALE 0 50 100 150 FEET	SR1 / I-95 INTERCHANGE	CONTRACT 28-090-03	BRIDGE NO.	PROFILES
				COUNTY NEW CASTLE	DESIGNED BY:	SHEET NO. 107
					CHECKED BY:	TOTAL SHTS. 803

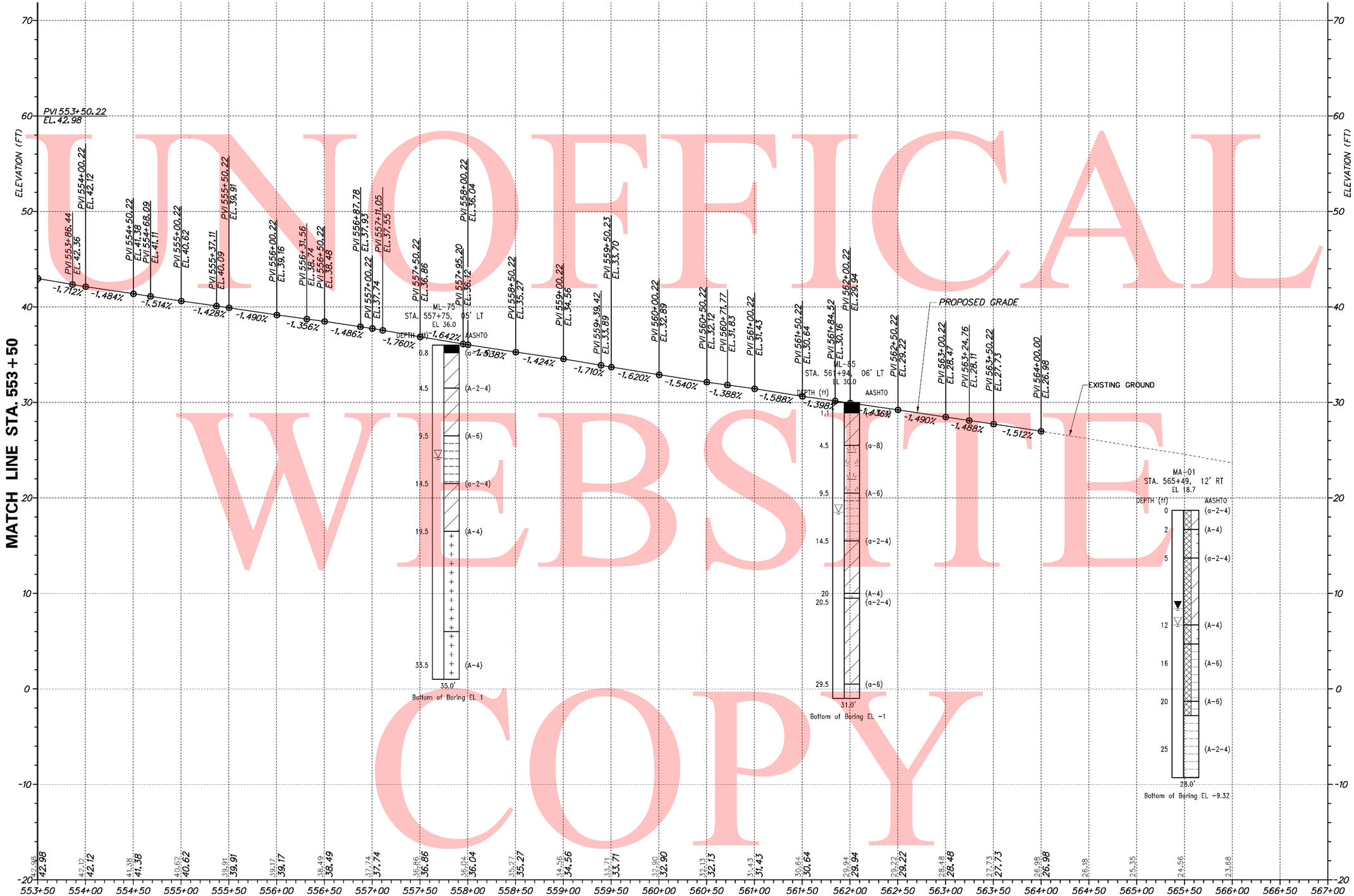

RAMP B1

UNOFICAL WEBSITE COPY

7/28/2010 6:12:10 PM
M:\PROJECTS\2003\03059_DELTRNPK\SRIMALL\CADD\2809003\PLANS\PF29_RAMPB1_SR1.DGN

DELAWARE DEPARTMENT OF TRANSPORTATION	ADDENDUMS / REVISIONS	SCALE 0 50 100 150 FEET	SR1 / I-95 INTERCHANGE	CONTRACT 28-090-03	BRIDGE NO.	PROFILES	SHEET NO. 108
				COUNTY NEW CASTLE	DESIGNED BY:		TOTAL SHTS. 803
					CHECKED BY:		

UNOFFICAL WEBSITE COPY

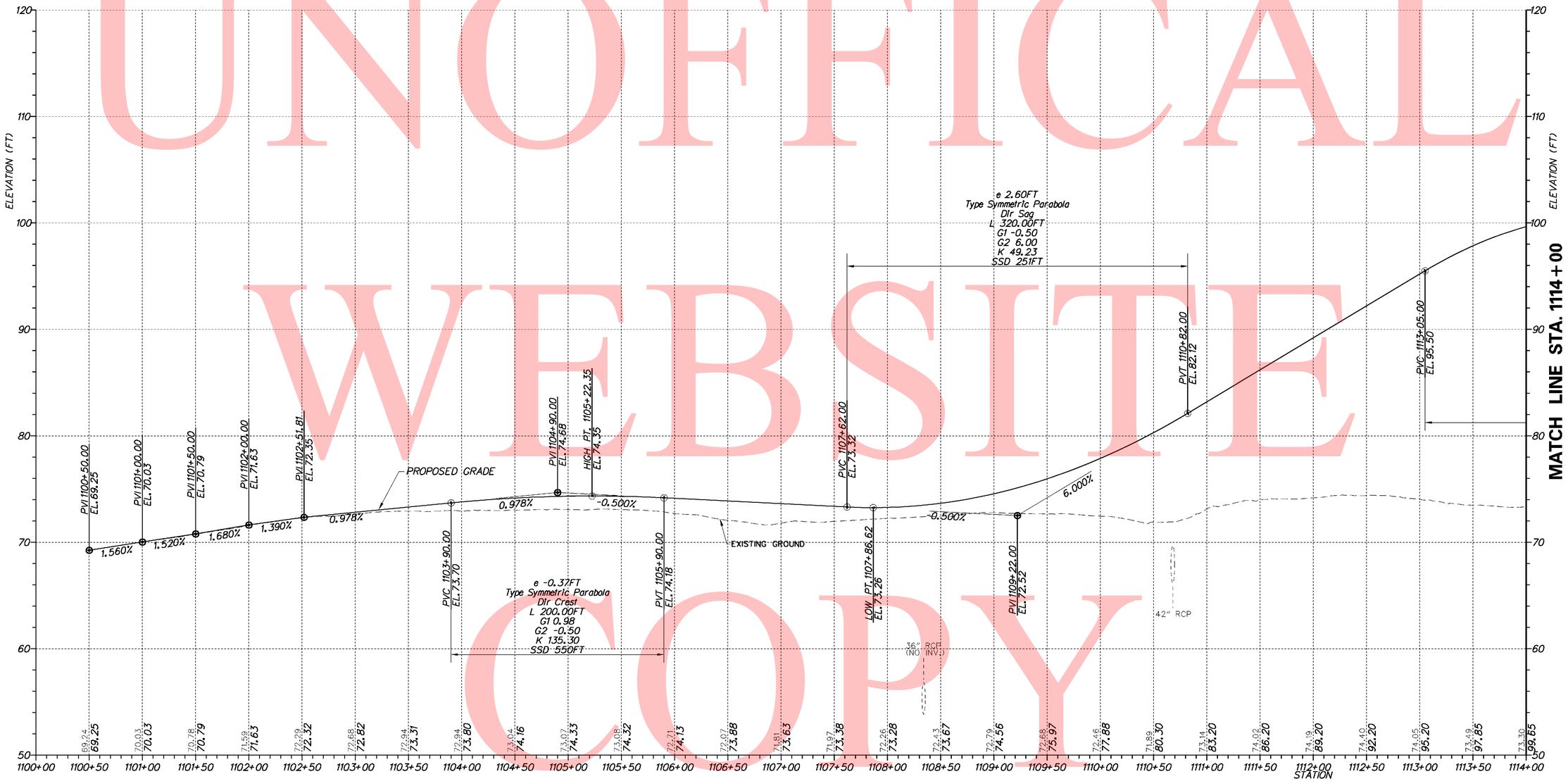

RAMP C

VERTICAL SCALE FEET 0 5 10 15

DELAWARE DEPARTMENT OF TRANSPORTATION	ADDENDUMS / REVISIONS	SCALE 0 50 100 150 FEET	SR1 / I-95 INTERCHANGE	CONTRACT 28-090-03	BRIDGE NO.	PROFILES
				COUNTY NEW CASTLE	DESIGNED BY:	SHEET NO. 109
					CHECKED BY:	TOTAL SHTS. 803

7/28/2010 6:16:04 PM
M:\PROJECTS\2003\03059_DELTRNPK\SRIMALL\CADD\2809003\PLANS\PF30_RAMPC_SR1.DGN

UNOFFICAL WEBSITE COPY

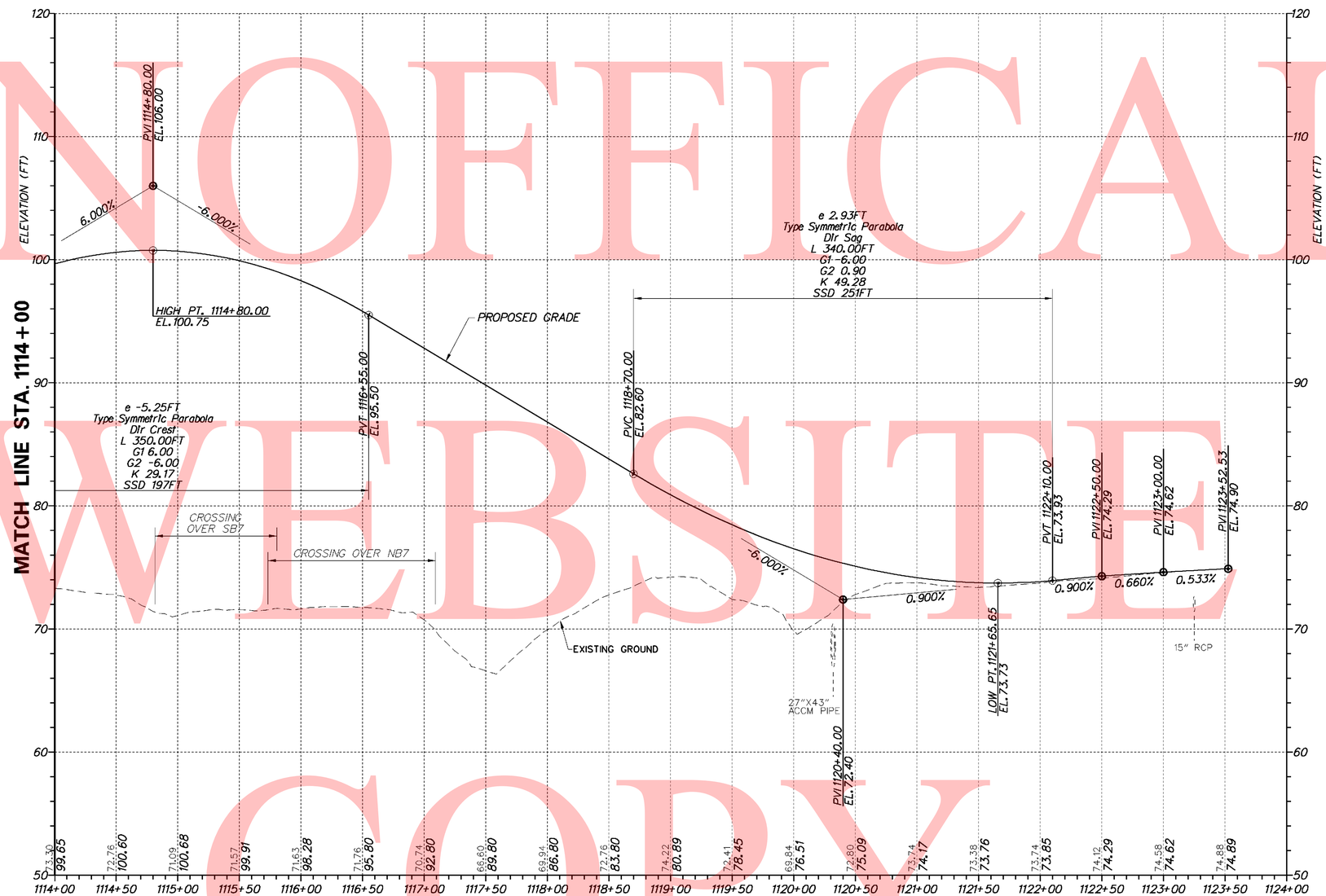

RAMP C

VERTICAL SCALE FEET 0 5 10 15

7/28/2010 6:19:52 PM
M:\PROJECTS\2003\03059_DELTRNPK\SRIMALL\CADD\2809003\PLANS\PF31_RAMPC_SR1.DGN

DELAWARE DEPARTMENT OF TRANSPORTATION	ADDENDUMS / REVISIONS	SCALE 0 50 100 150 FEET	SR1 / I-95 INTERCHANGE	CONTRACT 28-090-03	BRIDGE NO.	PROFILES	SHEET NO. 110
				COUNTY NEW CASTLE	DESIGNED BY:		TOTAL SHTS. 803
					CHECKED BY:		

UNOFFICAL WEBSITE COPY

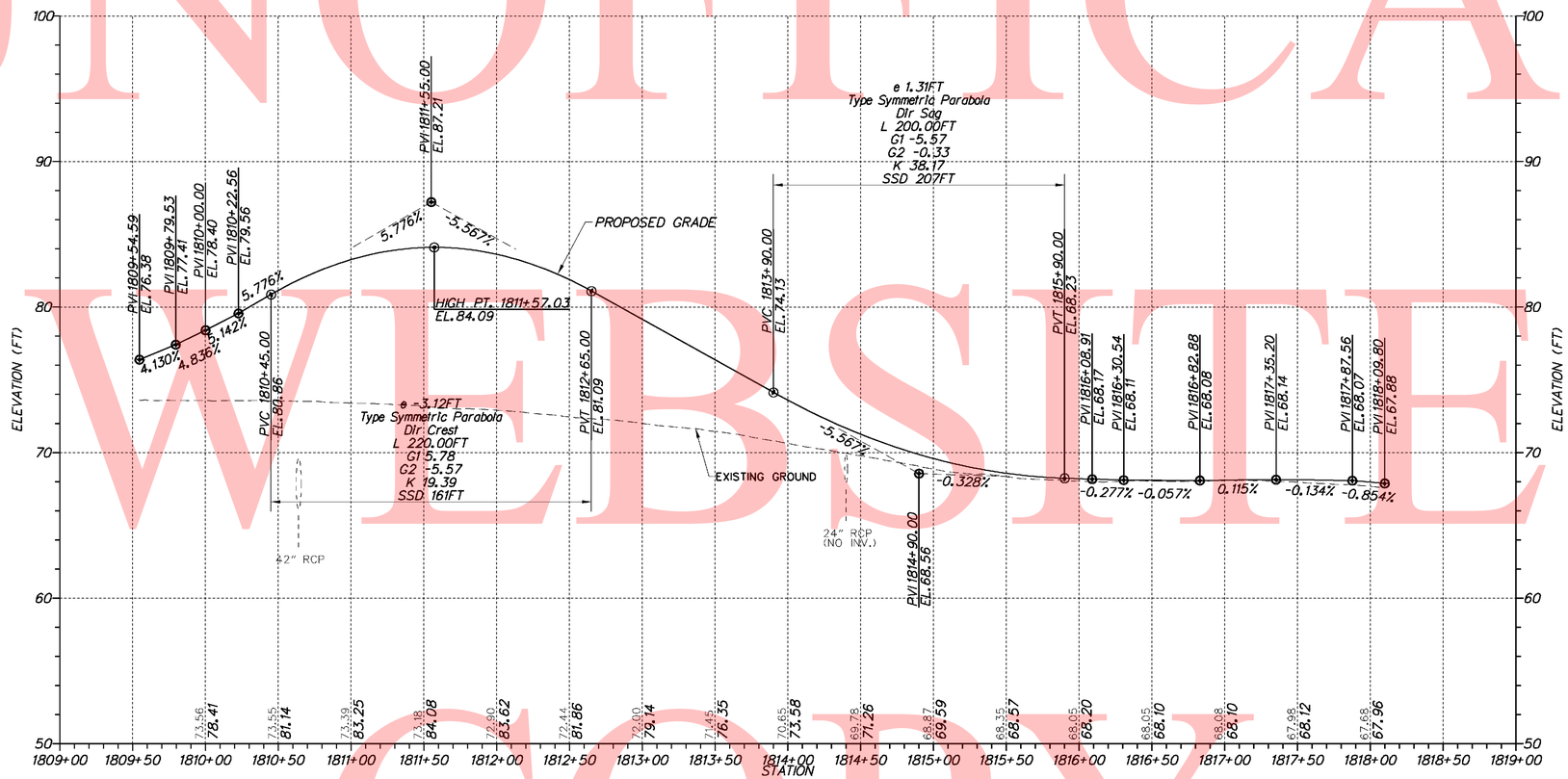

RAMP C1

VERTICAL SCALE FEET 0 5 10 15

7/28/2010 6:21:18 PM
M:\PROJECTS\2003\03059_DELTRNPK\SRIMALL\CADD\2809003\PLANS\PF32_RAMPC1_SR1.DGN

DELAWARE DEPARTMENT OF TRANSPORTATION	ADDENDUMS / REVISIONS	SCALE 0 50 100 150 FEET	SR1 / I-95 INTERCHANGE	CONTRACT 28-090-03	BRIDGE NO.	PROFILES	SHEET NO. 111
				COUNTY NEW CASTLE	DESIGNED BY:		TOTAL SHTS. 803
					CHECKED BY:		

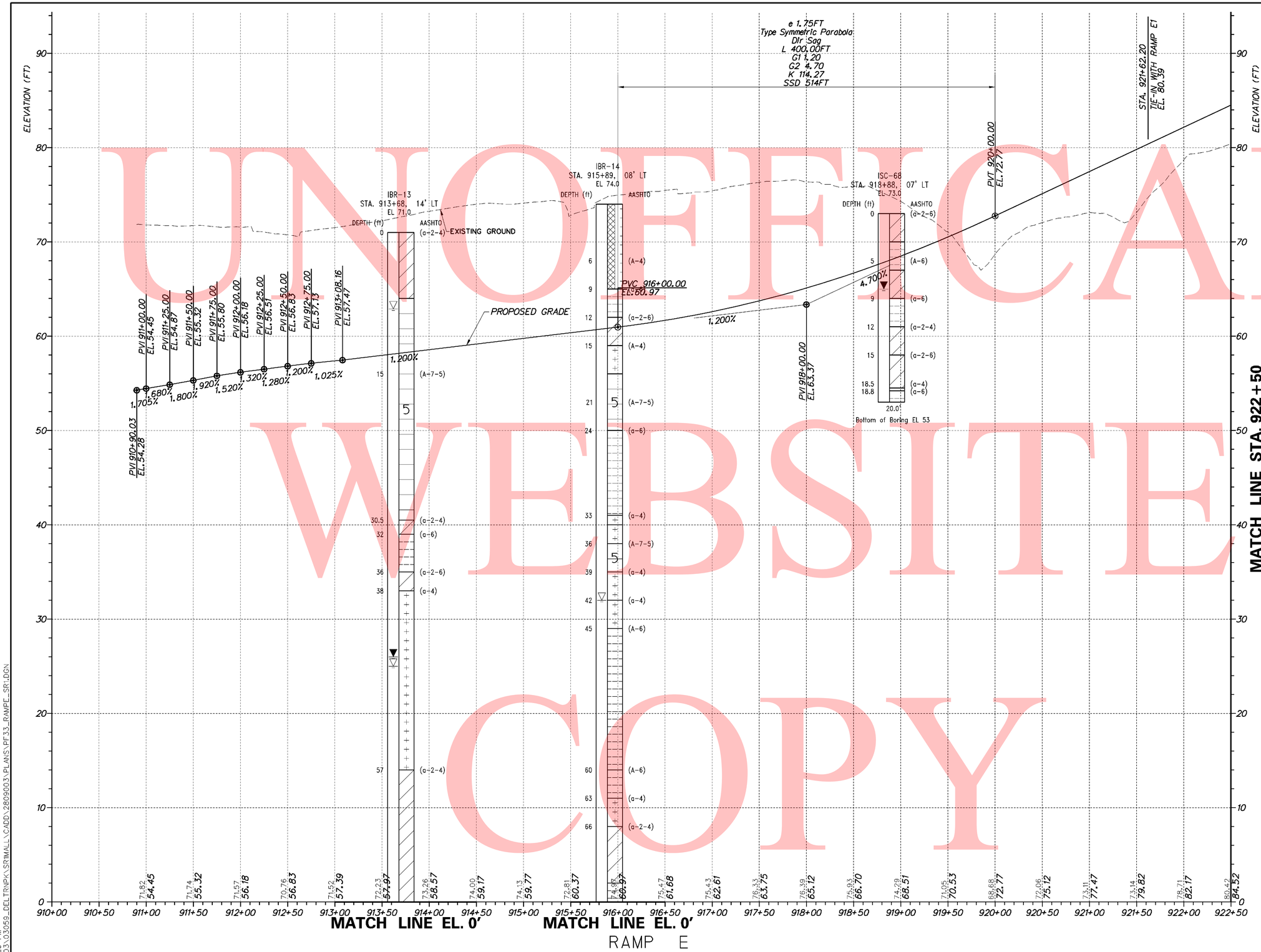

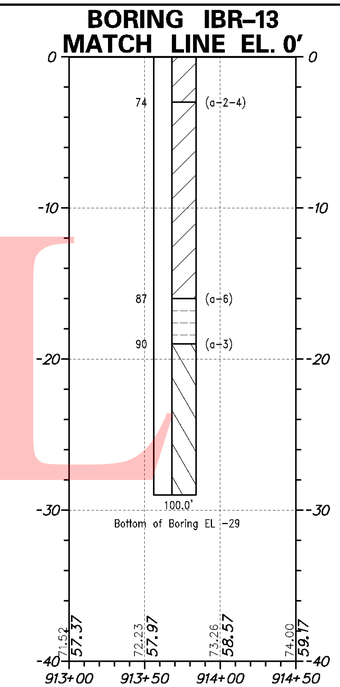

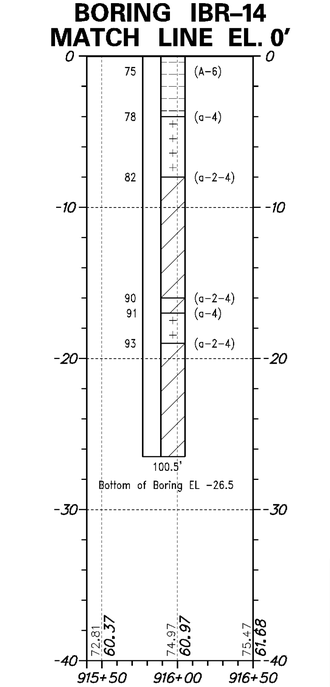

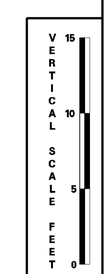

UNOFFICIAL WEBSITE COPY

7/28/2010 6:22:20 PM
M:\PROJECTS\2003\03059_DELTRNPK\SRTMALL\CADD\2809003\PLANS\PF33_RAMPE_SR1.DGN

DELAWARE DEPARTMENT OF TRANSPORTATION

ADDENDUMS / REVISIONS

SCALE 0 50 100 150 FEET

SR1 / I-95 INTERCHANGE

CONTRACT	BRIDGE NO.
28-090-03	DESIGNED BY:
COUNTY	
NEW CASTLE	CHECKED BY:

PROFILES

SHEET NO.
112
TOTAL SHTS.
803

UNOFFICAL WEBSITE COPY

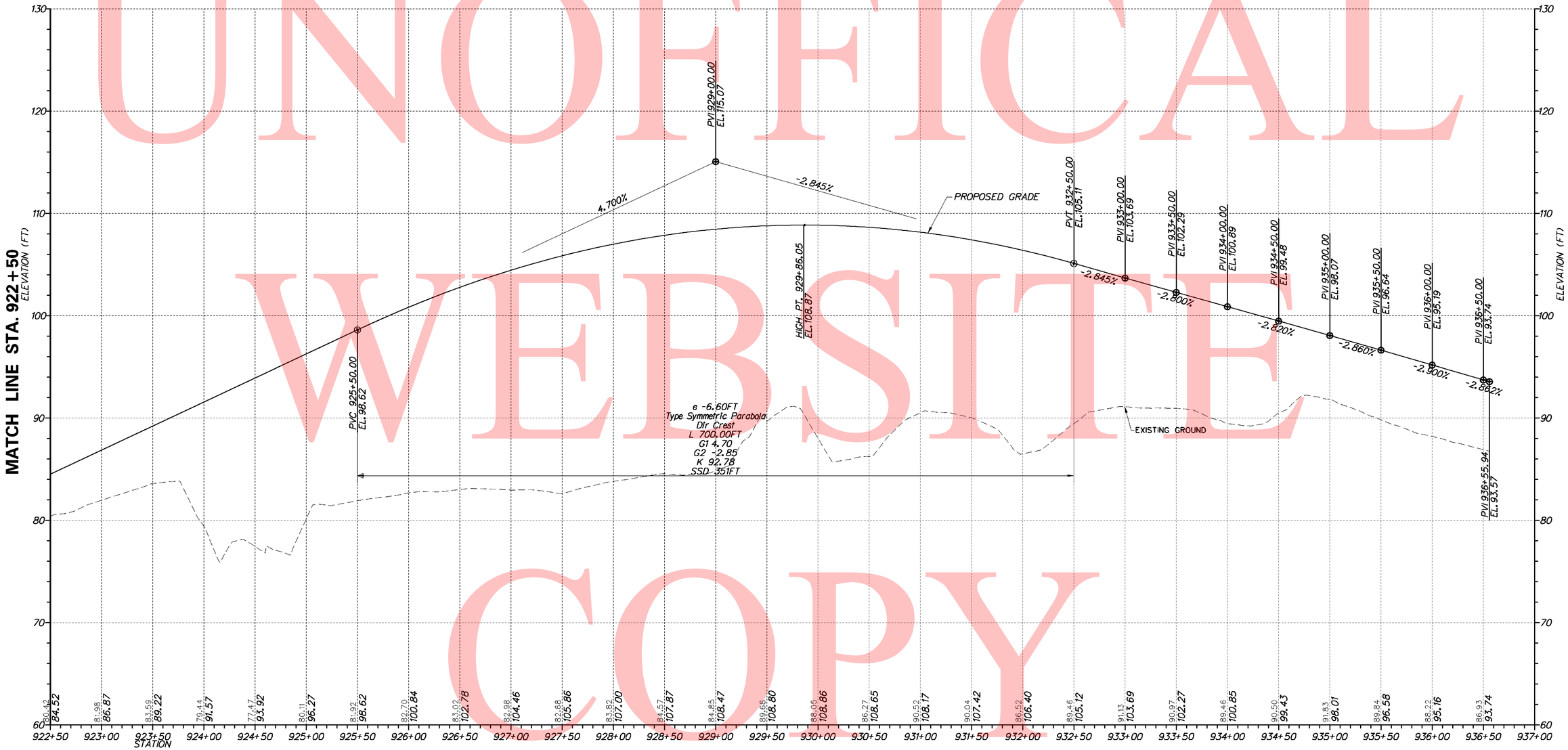

RAMP E

DELAWARE DEPARTMENT OF TRANSPORTATION	ADDENDUMS / REVISIONS	SCALE 0 50 100 150 FEET	SR1 / I-95 INTERCHANGE	CONTRACT 28-090-03	BRIDGE NO.	PROFILES	SHEET NO. 113
				COUNTY NEW CASTLE	DESIGNED BY:		TOTAL SHTS. 803
					CHECKED BY:		

7/28/2010 6:24:00 PM
M:\PROJECTS\2003\03059_DELTRNPK\SRIMALL\CADD\2809003\PLANS\PF34_RAMPE_SR1.DGN

UNOFFICAL WEBSITE COPY

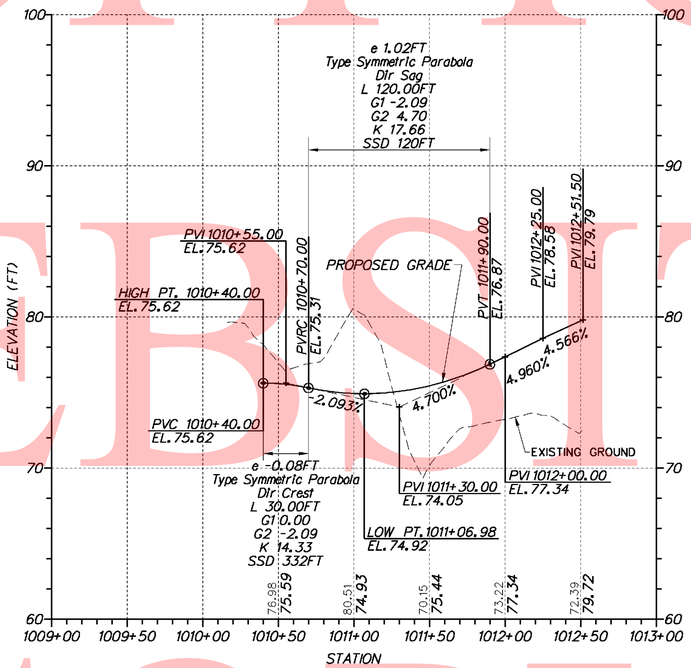

RAMP E1

VERTICAL SCALE FEET 15 10 5 0

7/28/2010 6:24:35 PM
M:\PROJECTS\2003\03059_DELTRNPK\SRIMALL\CADD\2809003\PLANS\PF35_RAMPE1_SR1.DGN

DELAWARE DEPARTMENT OF TRANSPORTATION	ADDENDUMS / REVISIONS	SCALE 0 50 100 150 FEET	SR1 / I-95 INTERCHANGE	CONTRACT 28-090-03	BRIDGE NO.	PROFILES	SHEET NO. 114
				COUNTY NEW CASTLE	DESIGNED BY:		TOTAL SHTS. 803
					CHECKED BY:		

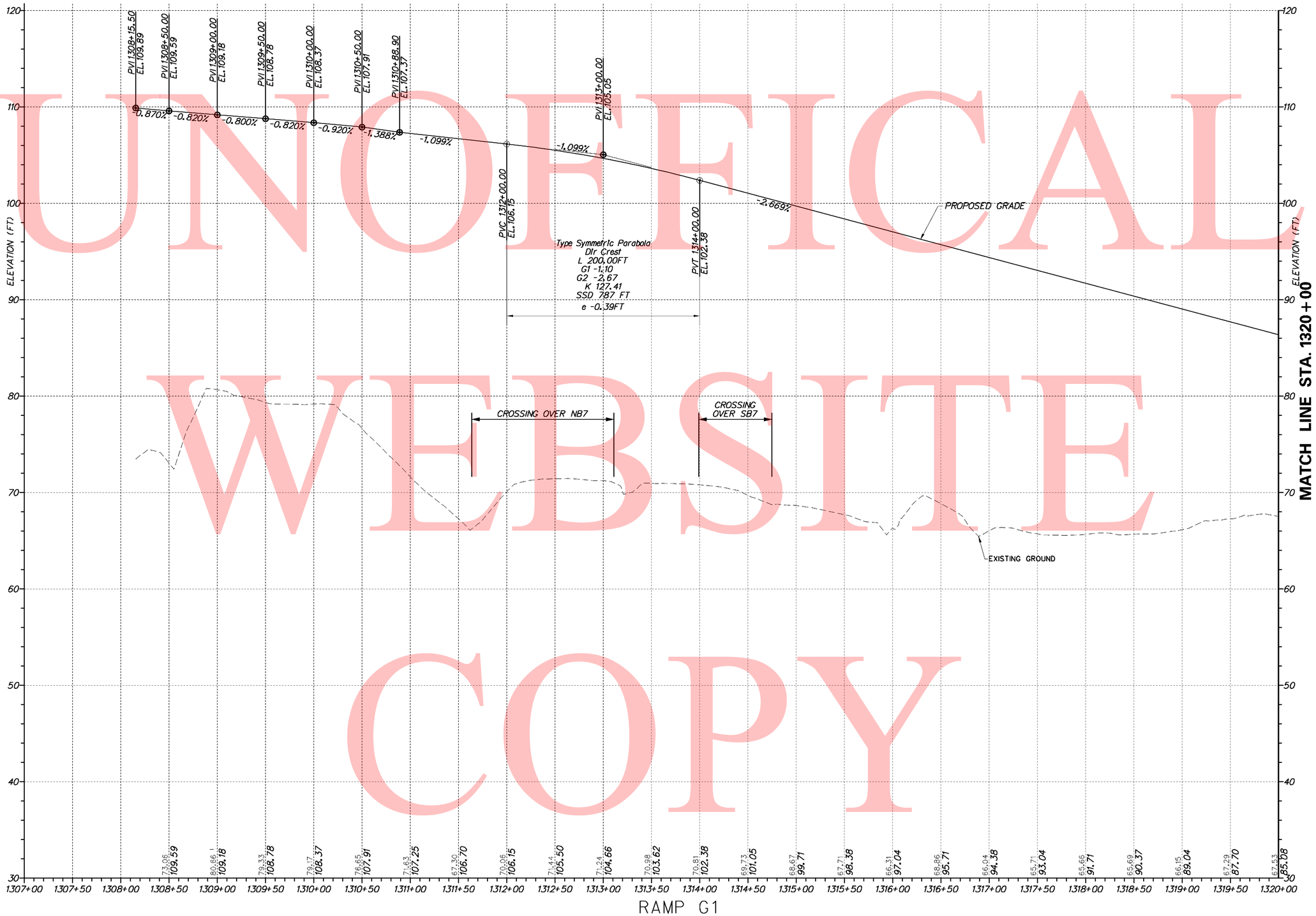

UNOFFICAL WEBSITE COPY

7/28/2010 6:25:11 PM
M:\PROJECTS\2003\03059_DELTRNPK\SR1MALL\CADD\2809003\PLANS\PF36_RAMPG1_SR1.DGN

DELAWARE DEPARTMENT OF TRANSPORTATION

ADDENDUMS / REVISIONS

SCALE 0 50 100 150 FEET

SR1 / I-95 INTERCHANGE

CONTRACT	BRIDGE NO.
28-090-03	DESIGNED BY:
COUNTY	
NEW CASTLE	CHECKED BY:

PROFILES

SHEET NO.
115
TOTAL SHTS.
803

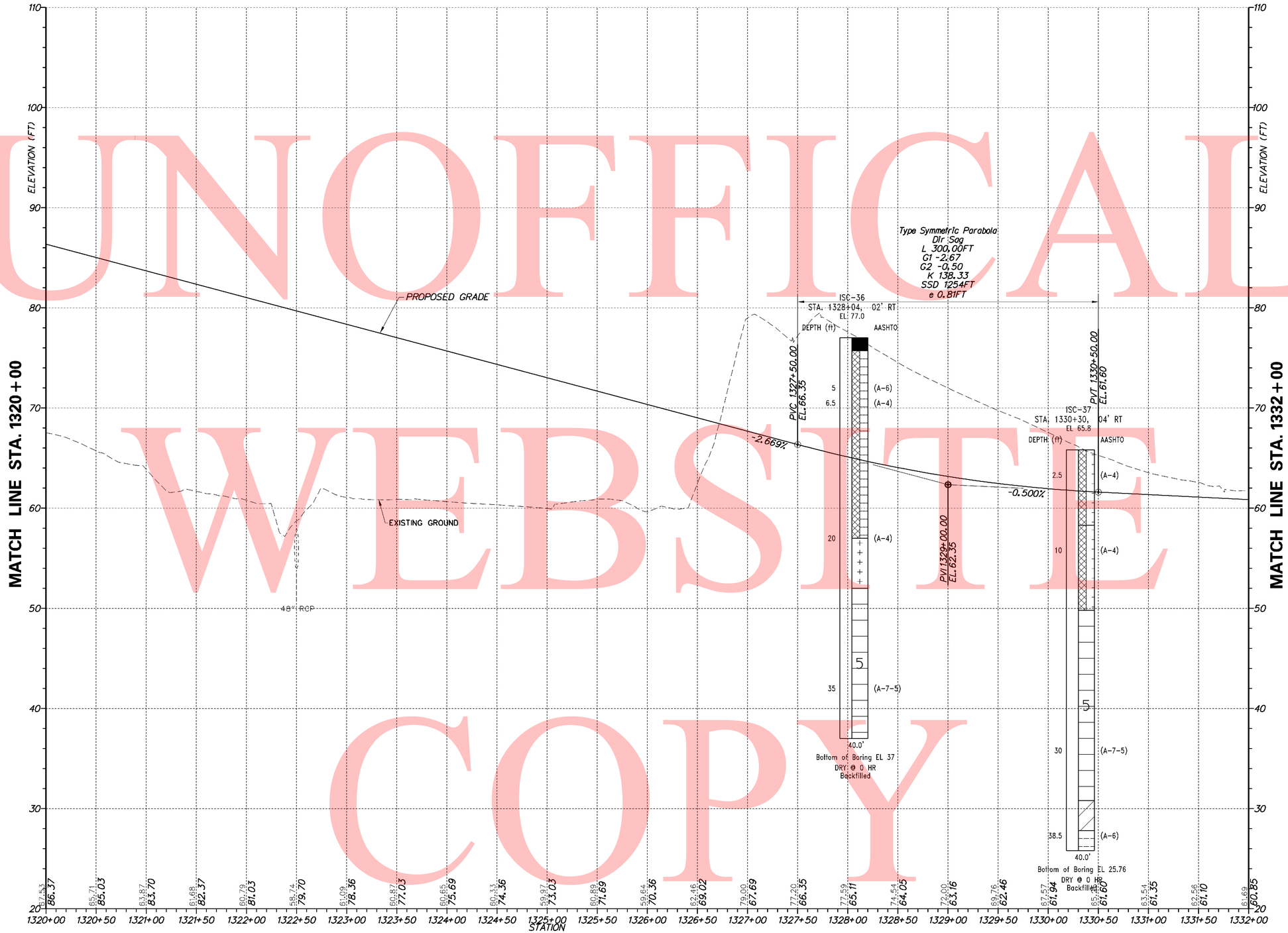

UNOFFICAL WEBSITE COPY

7/28/2010 6:25:46 PM
M:\PROJECTS\2003\03059_DELTRNPK\SRIMALL\CADD\2809003\PLANS\PF37_RAMPG1_SR1.DGN

DELAWARE DEPARTMENT OF TRANSPORTATION	ADDENDUMS / REVISIONS	SCALE 0 50 100 150 FEET	SR1 / I-95 INTERCHANGE	CONTRACT 28-090-03	BRIDGE NO.	PROFILES	SHEET NO. 116
				COUNTY NEW CASTLE	DESIGNED BY:		TOTAL SHTS. 803
					CHECKED BY:		

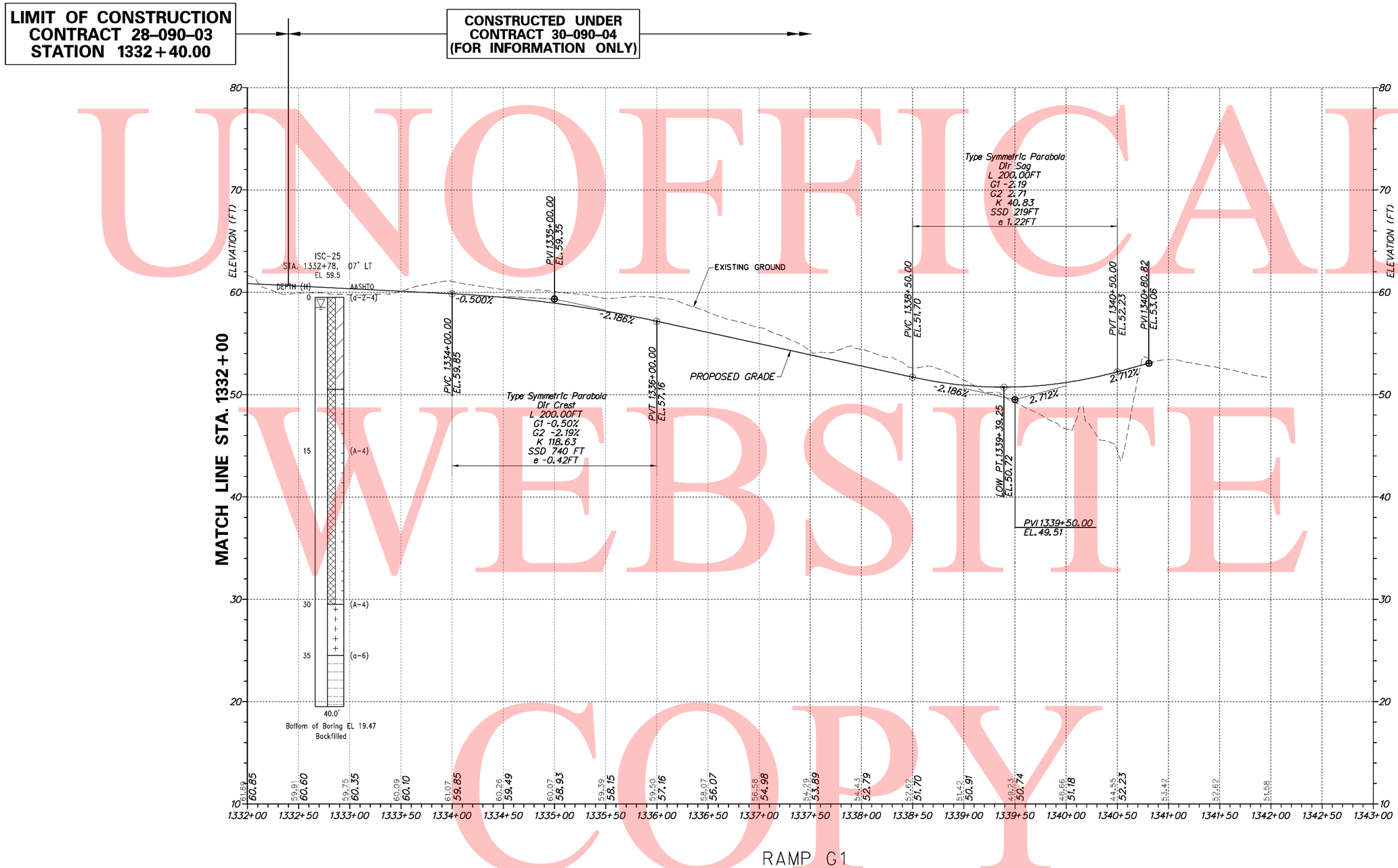

UNOFICAL WEBSITE COPY

VERTICAL SCALE FEET 0 5 10 15

7/30/2010 9:50:58 AM
M:\PROJECTS\2003\03059_DELTRNPK\SR1MAL\CADD\2809003\PLANS\PF38_RAMPG1_SR1.DGN

DELAWARE DEPARTMENT OF TRANSPORTATION	ADDENDUMS / REVISIONS	SCALE 0 50 100 150 FEET	SR1 / I-95 INTERCHANGE	CONTRACT 28-090-03	BRIDGE NO.	PROFILES	SHEET NO. 117
				COUNTY NEW CASTLE	DESIGNED BY:		TOTAL SHTS. 803
					CHECKED BY:		

UNOFFICAL WEBSITE COPY

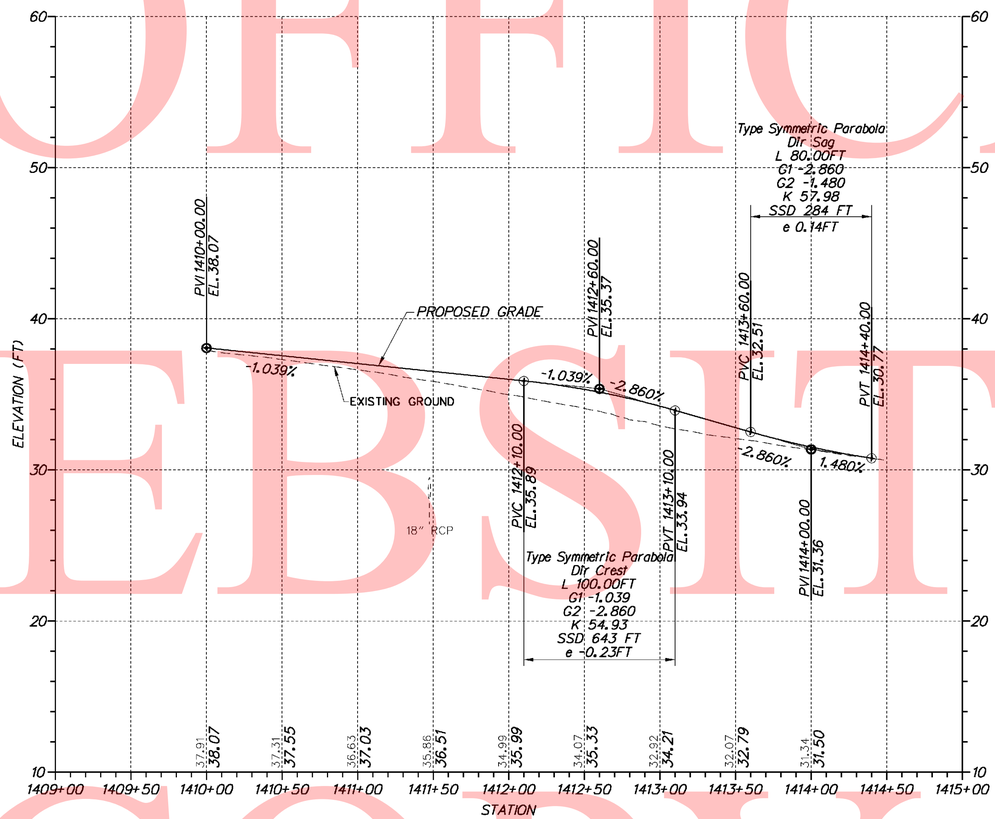

RAMP G2

VERTICAL SCALE FEET 15 10 5 0

7/28/2010 6:36:46 PM
M:\PROJECTS\2003\03059_DELTRNPK\SRIMALL\CADD\2809003\PLANS\PF39_RAMPG2_SR1.DGN

DELAWARE DEPARTMENT OF TRANSPORTATION	ADDENDUMS / REVISIONS	SCALE 0 50 100 150 FEET	SR1 / I-95 INTERCHANGE	CONTRACT 28-090-03	BRIDGE NO.	PROFILES	SHEET NO. 118
				COUNTY NEW CASTLE	DESIGNED BY:		TOTAL SHTS. 803
					CHECKED BY:		

UNOFFICAL WEBSITE COPY

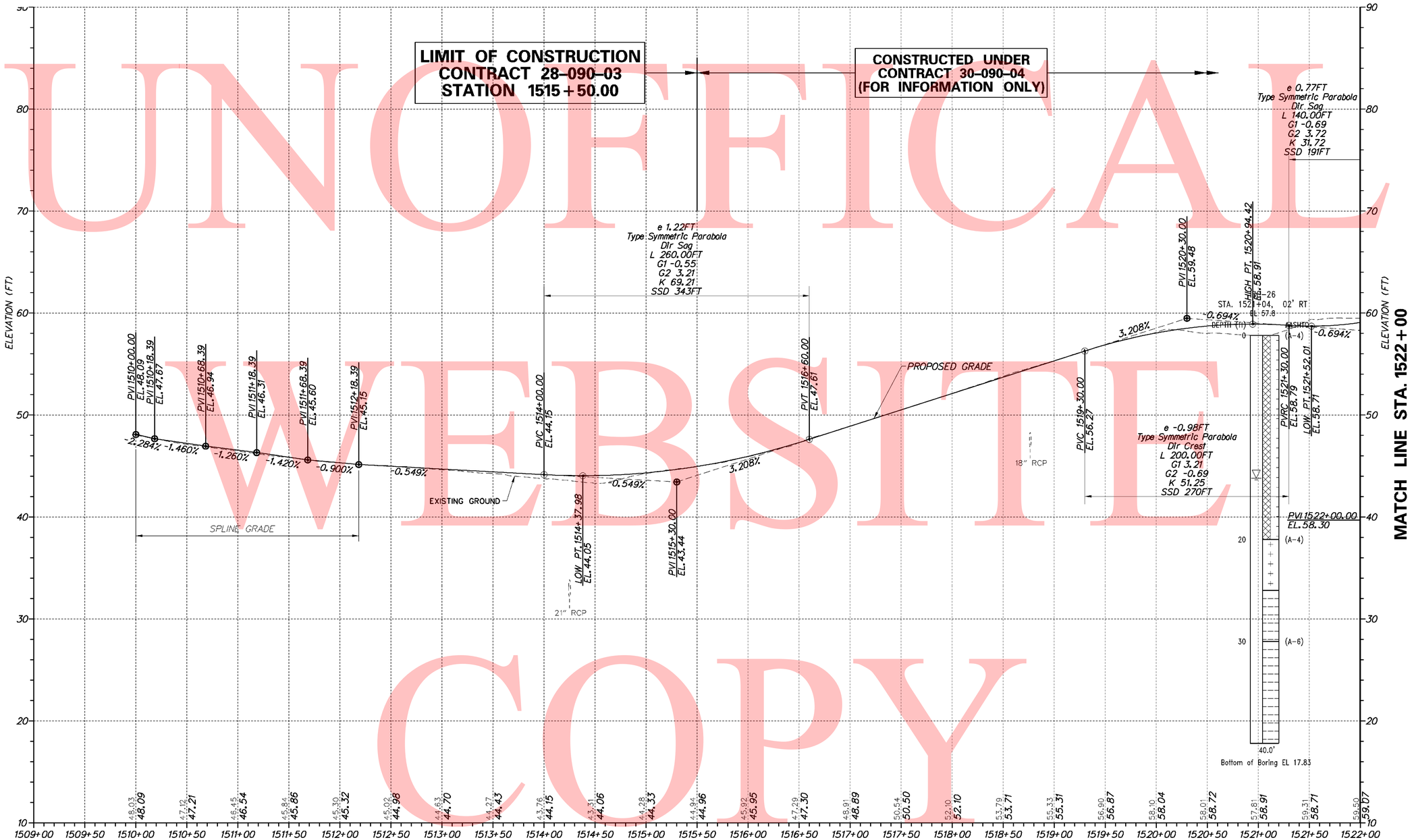

RAMP R

VERTICAL SCALE FEET

DELAWARE DEPARTMENT OF TRANSPORTATION	ADDENDUMS / REVISIONS	SCALE 0 50 100 150 FEET	SR1 / I-95 INTERCHANGE	CONTRACT 28-090-03	BRIDGE NO.	PROFILES	SHEET NO. 119
				COUNTY NEW CASTLE	DESIGNED BY:		TOTAL SHTS. 803
					CHECKED BY:		

7/29/2010 11:36:53 AM
M:\PROJECTS\2003\03059_DELTRNPK\SRIMALL\CADD\2809003\PLANS\PF40_RAMPR_SR1.DGN

UNOFFICAL WEBSITE COPY

CONSTRUCTED UNDER CONTRACT 30-090-04 (FOR INFORMATION ONLY)

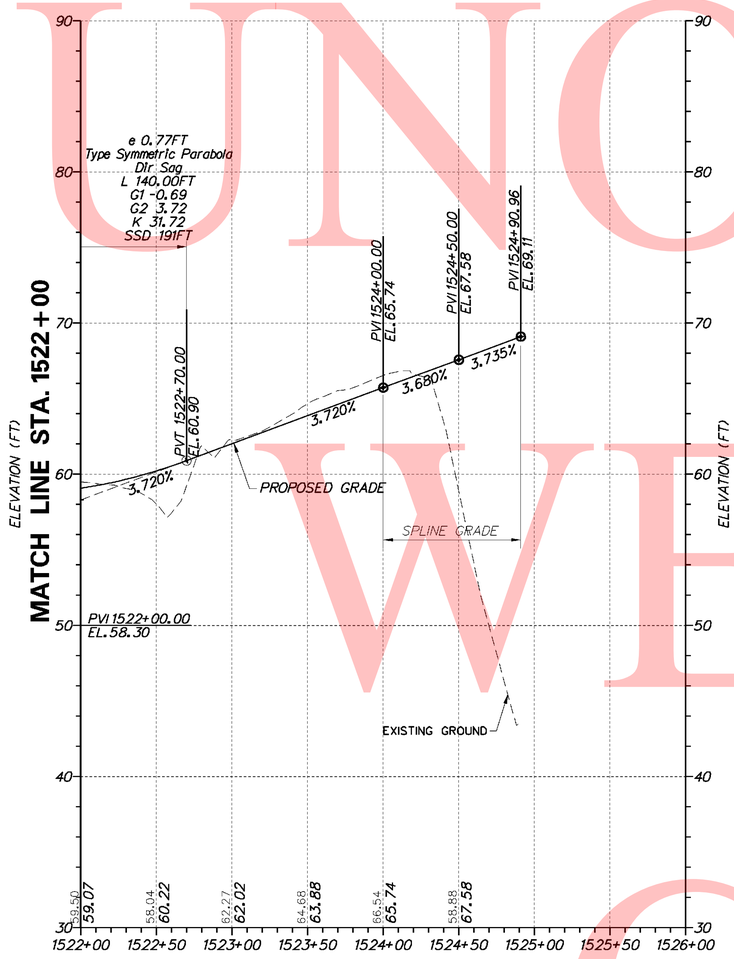

RAMP R

CONSTRUCTED UNDER CONTRACT 30-090-04 (FOR INFORMATION ONLY)

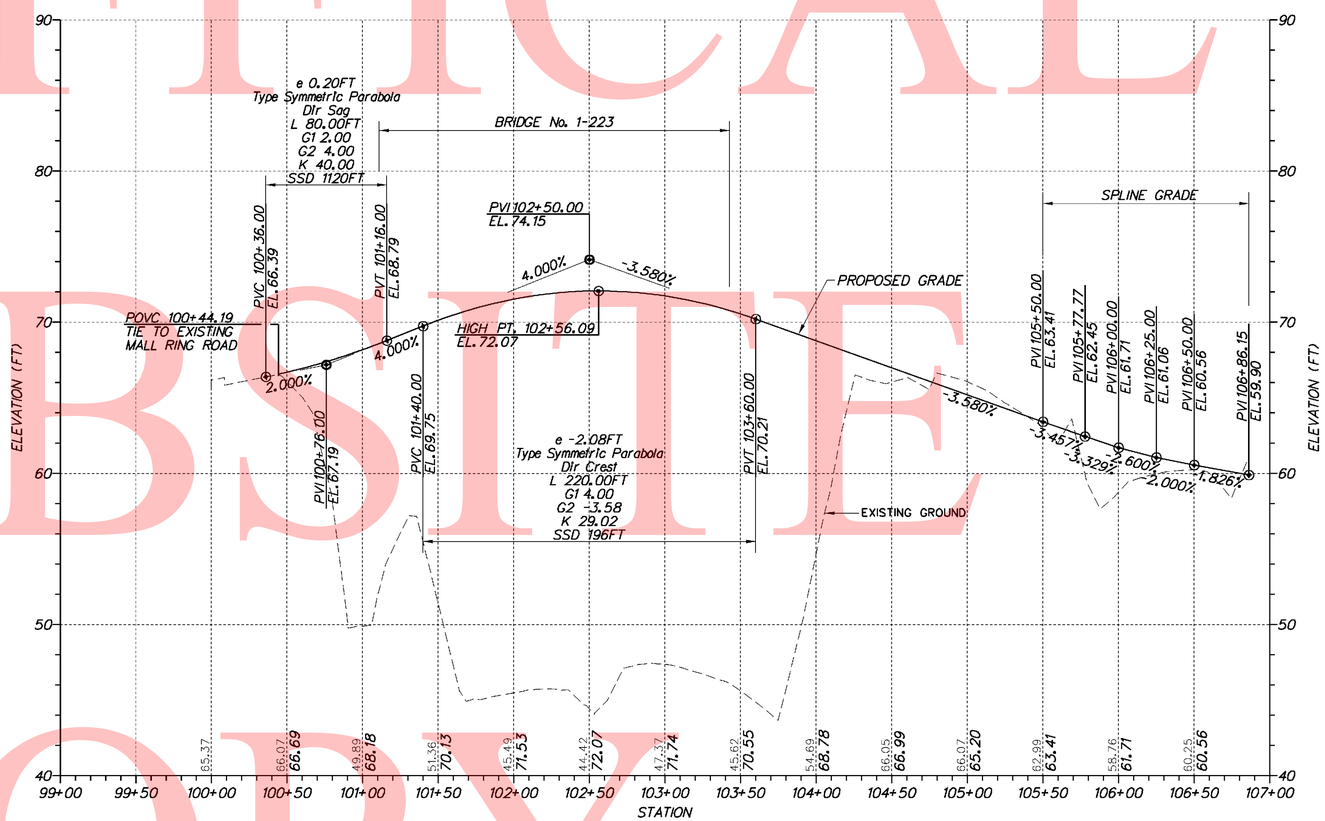

RAMP R1

VERTICAL SCALE FEET 0 5 10 15

DELAWARE DEPARTMENT OF TRANSPORTATION	ADDENDUMS / REVISIONS	SCALE 0 50 100 150 FEET	SR1 / I-95 INTERCHANGE	CONTRACT 28-090-03	BRIDGE NO.	PROFILES
				COUNTY NEW CASTLE	DESIGNED BY:	SHEET NO. 120
					CHECKED BY:	TOTAL SHTS. 803

9/10/2010 9:32:27 AM
M:\PROJECTS\2003\03059_DELTRNPK\SRMALL\CADD\2809003\PLANS\PF41_RAMPR_SR1.DGN

UNOFFICAL WEBSITE COPY

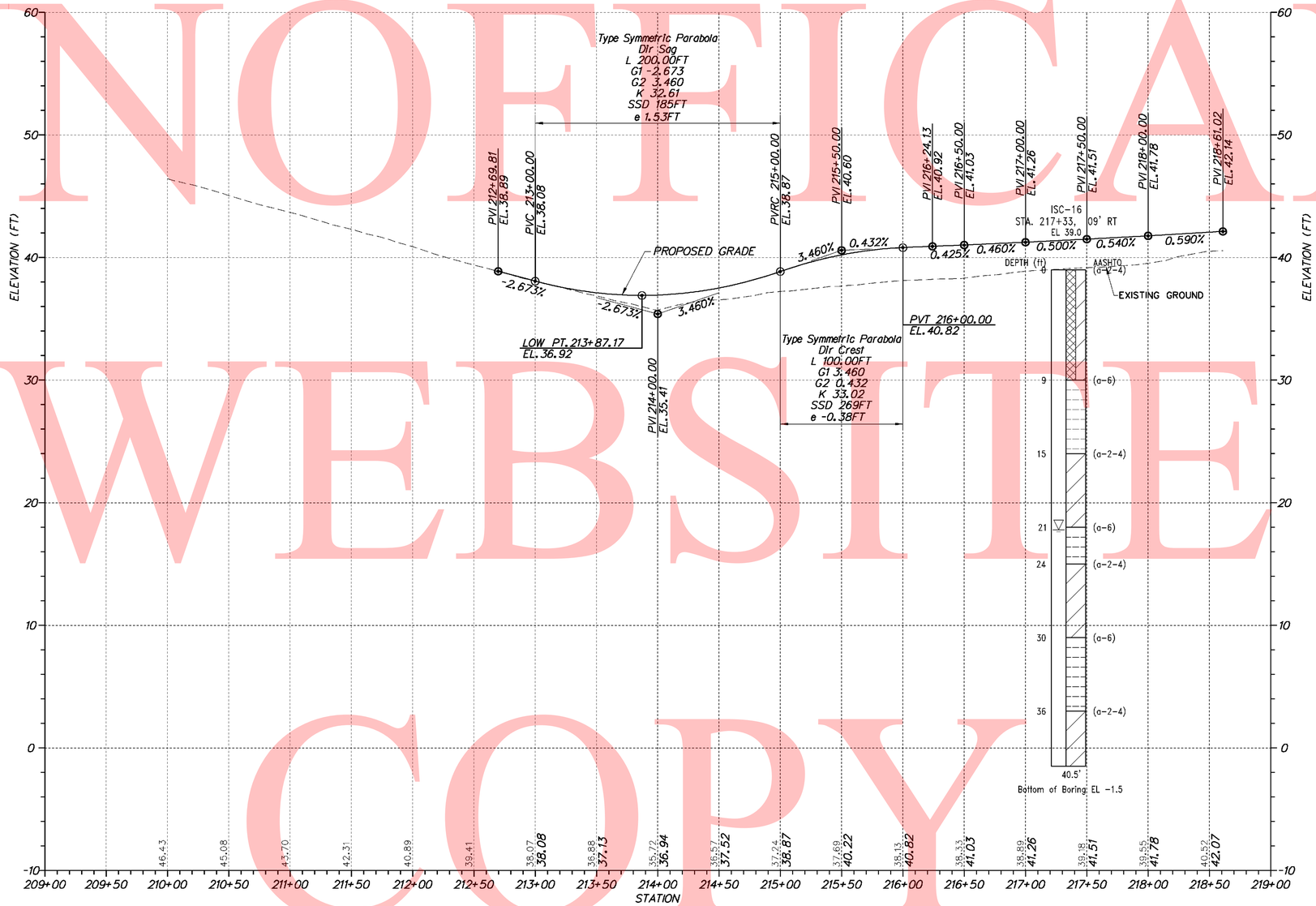

RAMP S

VERTICAL SCALE FEET 0 5 10 15

7/28/2010 8:42:06 AM
M:\PROJECTS\2003\03059_DELTRNPK\SRIMALL\CADD\2809003\PLANS\PF43_RAMPS_SR1.DGN

DELAWARE DEPARTMENT OF TRANSPORTATION	ADDENDUMS / REVISIONS	SCALE 0 50 100 150 FEET	SR1 / I-95 INTERCHANGE	CONTRACT 28-090-03	BRIDGE NO.	PROFILES	SHEET NO. 121
				COUNTY NEW CASTLE	DESIGNED BY:		TOTAL SHTS. 803
					CHECKED BY:		

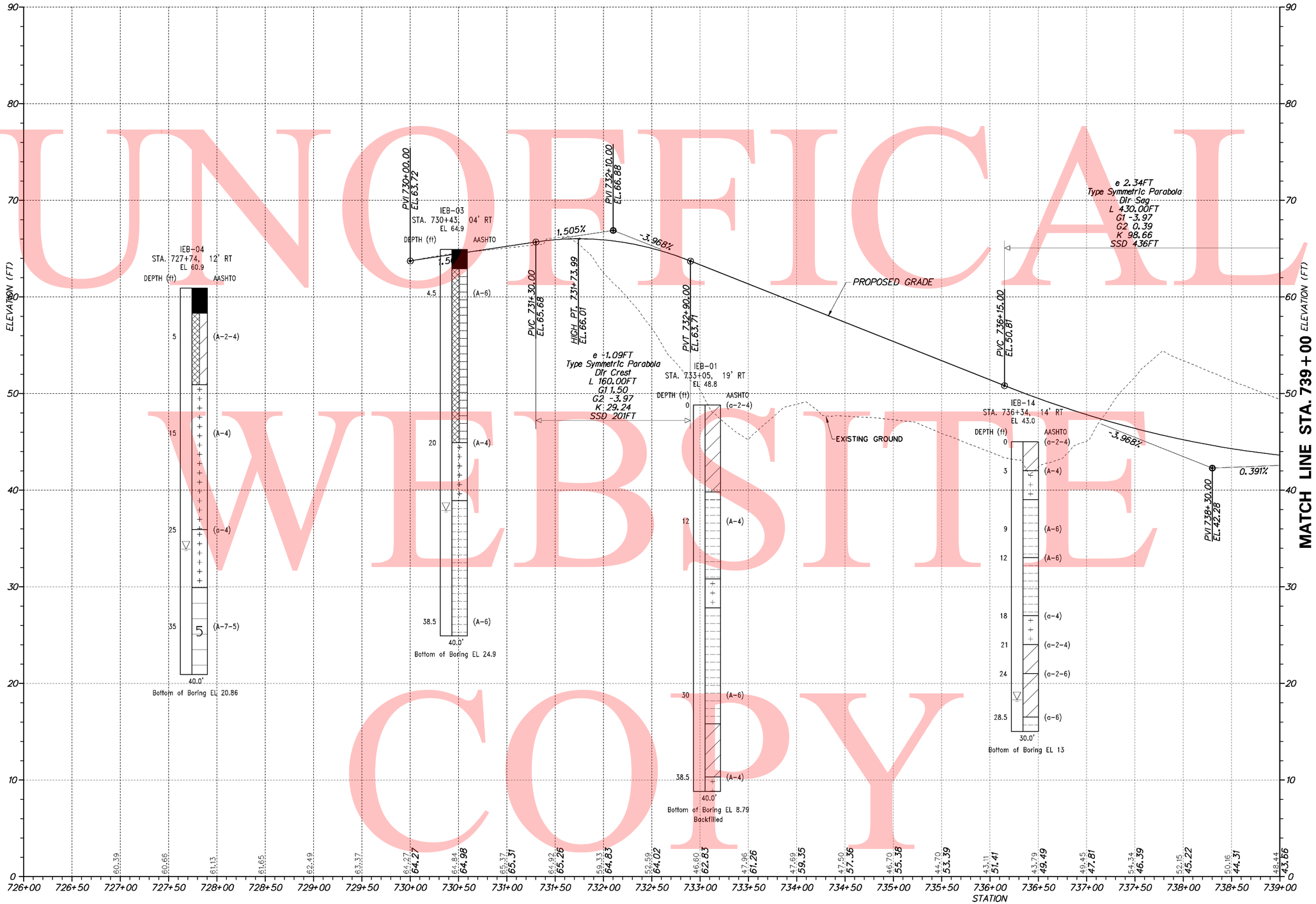

RAMP U

UNOFFICAL WEBSITE COPY

DELAWARE DEPARTMENT OF TRANSPORTATION	ADDENDUMS / REVISIONS	SCALE 0 50 100 150 FEET	SR1 / I-95 INTERCHANGE	CONTRACT 28-090-03	BRIDGE NO.	PROFILES	SHEET NO. 122
				COUNTY NEW CASTLE	DESIGNED BY:		TOTAL SHTS. 803
					CHECKED BY:		

7/28/2010 6:39:36 PM
M:\PROJECTS\2003\03059_DELTRNPK\SRMALL\CADD\2809003\PLANS\PF44_RAMPU_SR1.DGN

UNOFFICAL WEBSITE COPY

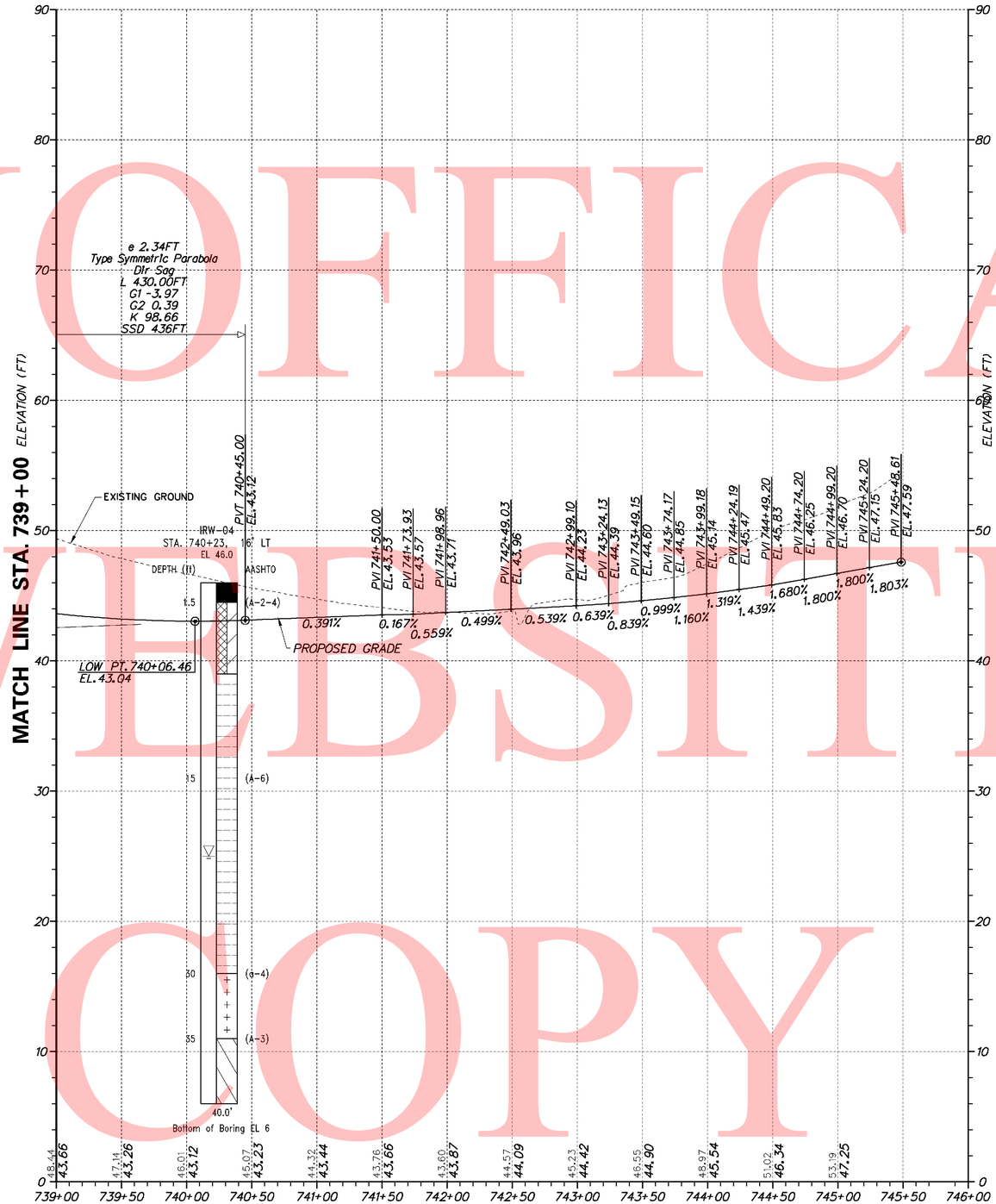

VERTICAL SCALE FEET 0 5 10 15

DELAWARE DEPARTMENT OF TRANSPORTATION	ADDENDUMS / REVISIONS	SCALE 0 50 100 150 FEET	SR1 / I-95 INTERCHANGE	CONTRACT 28-090-03	BRIDGE NO.	PROFILES	SHEET NO. 123
				COUNTY NEW CASTLE	DESIGNED BY:		TOTAL SHTS. 803
					CHECKED BY:		

7/28/2010 6:40:11 PM
M:\PROJECTS\2003\03059_DELTRNPK\SRTMALL\CADD\2809003\PLANS\PF45_RAMPU_SR1.DGN

UNOFFICAL WEBSITE COPY

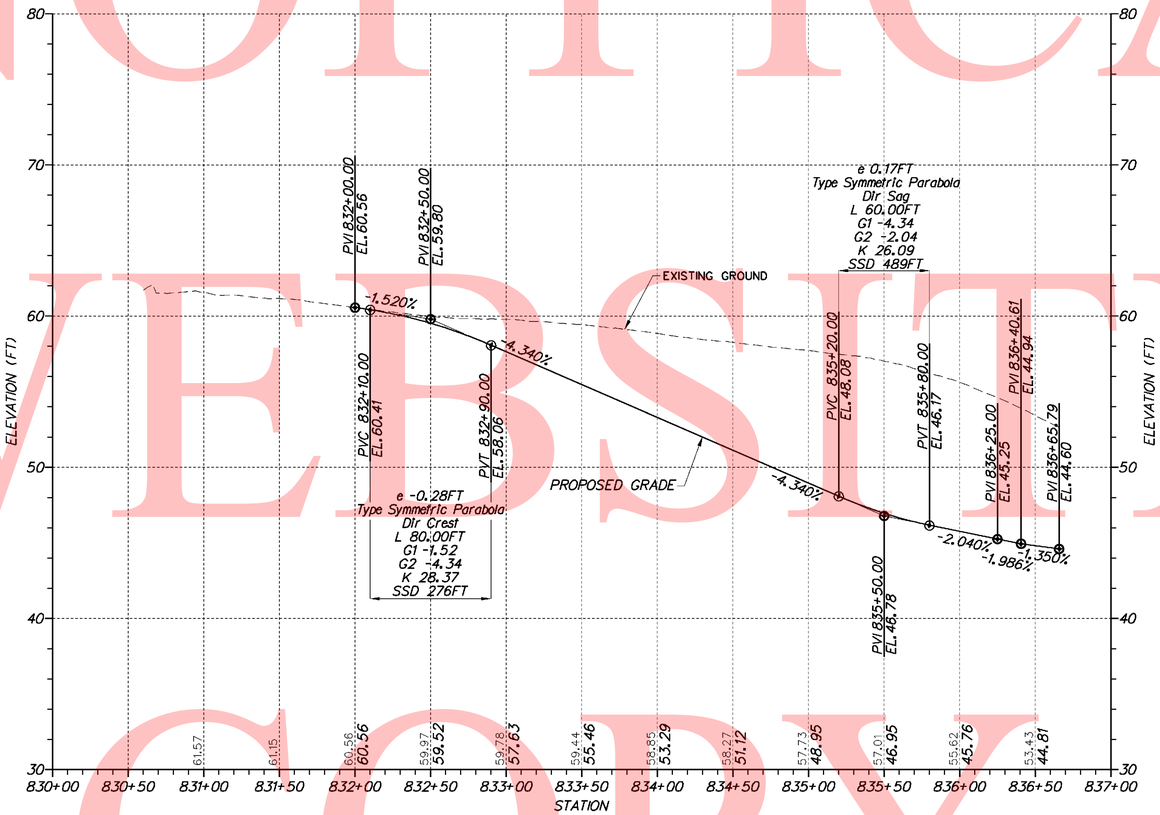

RAMP U1

VERTICAL SCALE FEET 0 5 10 15

DELAWARE DEPARTMENT OF TRANSPORTATION	ADDENDUMS / REVISIONS	SCALE 0 50 100 150 FEET	SR1 / I-95 INTERCHANGE	CONTRACT 28-090-03	BRIDGE NO.	PROFILES	SHEET NO. 124
				COUNTY NEW CASTLE	DESIGNED BY:		TOTAL SHTS. 803
					CHECKED BY:		

7/27/2010 5:00:37 PM
M:\PROJECTS\2003\03059_DELTRNPK\SRIMALL\CADD\2809003\PLANS\PF46_RAMPU1_SR1.DGN

UNOFFICAL WEBSITE COPY

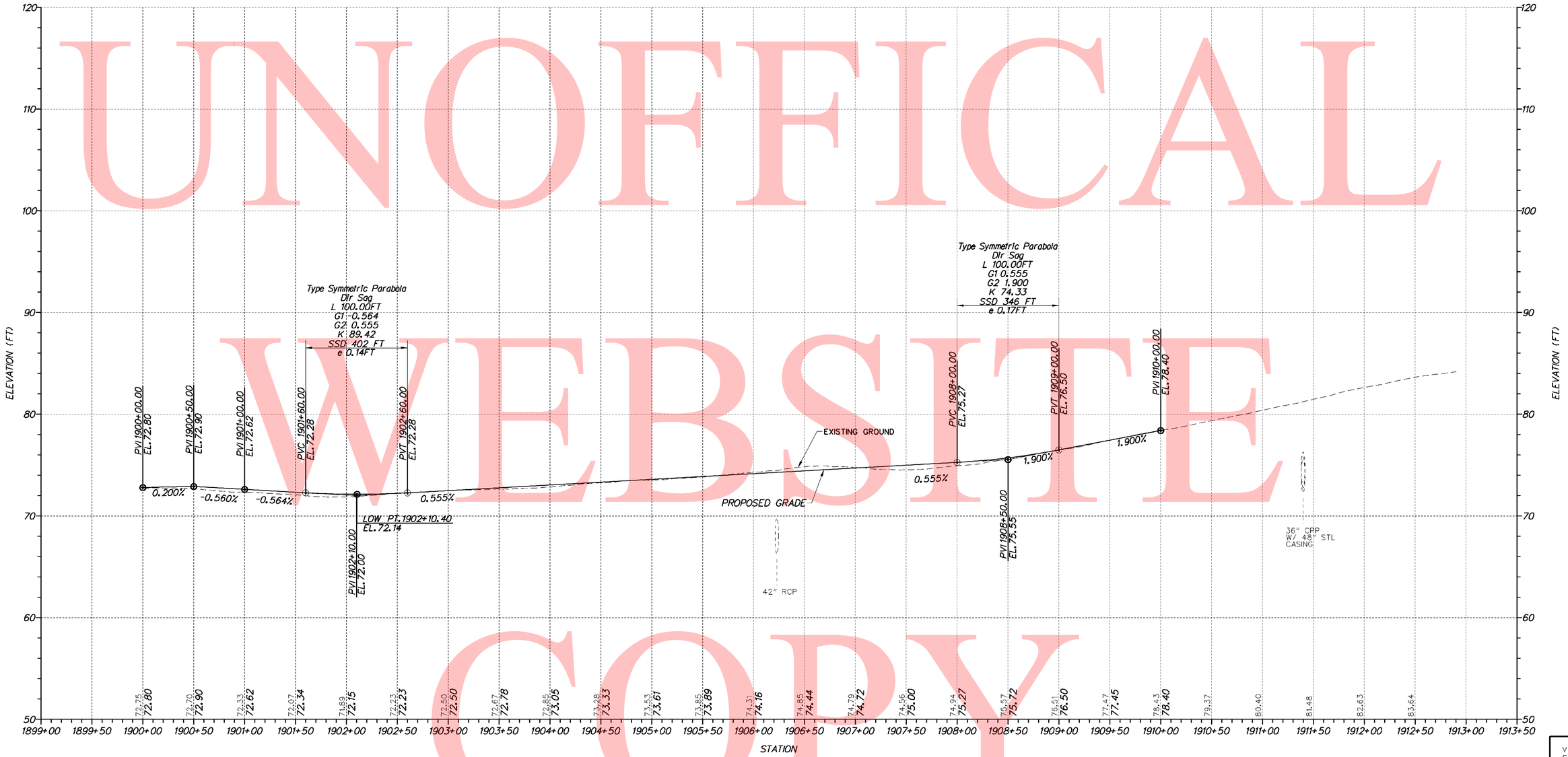

SOUTHWEST LOOP RAMP

VERTICAL SCALE FEET 15 10 5 0

7/27/2010 4:59:04 PM
M:\PROJECTS\2003\03059_DELTRNPK\SRIMALL\CADD\2809003\PLANS\PF47_SWL_SR1.DGN

DELAWARE DEPARTMENT OF TRANSPORTATION	ADDENDUMS / REVISIONS	SCALE 0 50 100 150 FEET	SR1 / I-95 INTERCHANGE	CONTRACT 28-090-03	BRIDGE NO.	PROFILES	SHEET NO. 125
				COUNTY NEW CASTLE	DESIGNED BY:		TOTAL SHTS. 803
					CHECKED BY:		

UNOFFICAL WEBSITE COPY

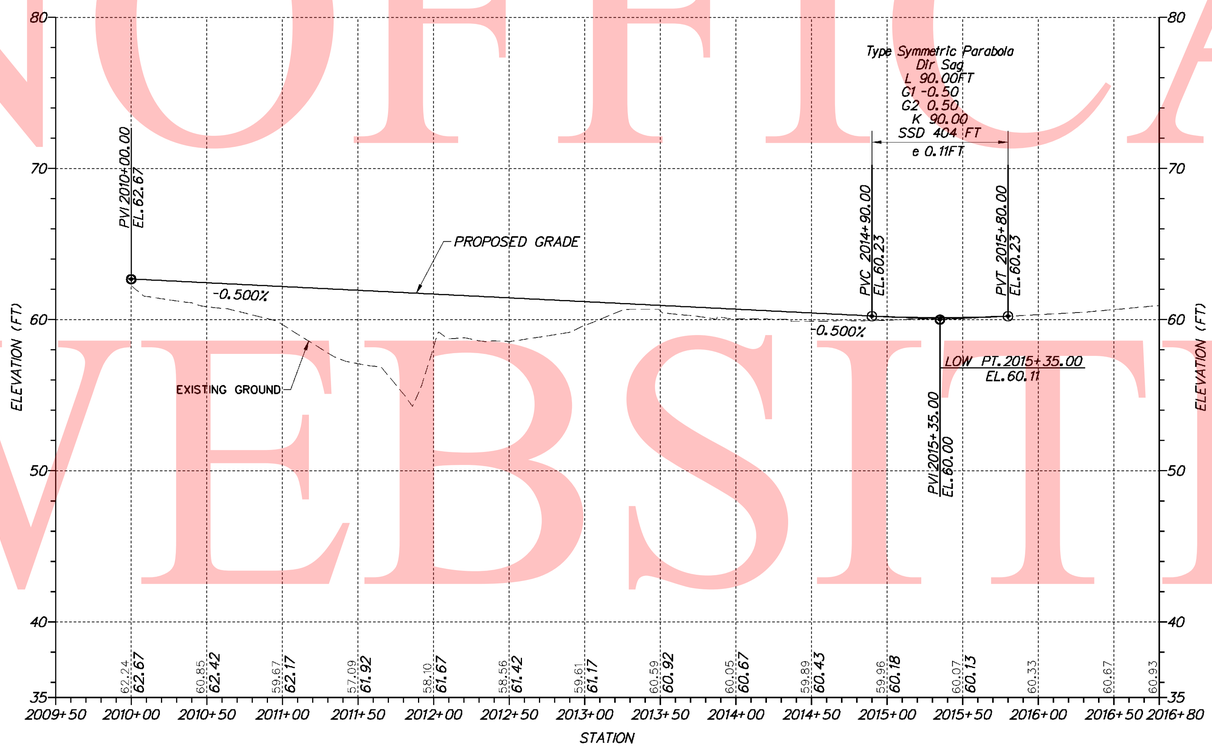

STANTON CHRISTIANA ROAD

VERTICAL SCALE FEET 0 5 10 15

7/27/2010 4:51:52 PM
M:\PROJECTS\2003\03059_DELTRNPK\SR1MALL\CADD\2809003\PLANS\PF48_SCR_SR1.DGN

DELAWARE DEPARTMENT OF TRANSPORTATION	ADDENDUMS / REVISIONS	SCALE 0 50 100 150 FEET	SR1 / I-95 INTERCHANGE	CONTRACT 28-090-03	BRIDGE NO.	PROFILES	SHEET NO. 126
				COUNTY NEW CASTLE	DESIGNED BY:		TOTAL SHTS. 803
					CHECKED BY:		

DRAINAGE INLET SCHEDULE						
NO.	STATION	OFFSET	BOX SIZE / TOP	GRATE	T.G. EL.	INV. EL.
316	366+45.00	***	72" x 24" TYPE A MOD.	1	**	21.70
319	364+75.00	***	72" x 24" TYPE A MOD.	1	**	23.50

DRAINAGE PIPE SCHEDULE						
NO.	SIZE / TYPE	CLASS	LENGTH	SLOPE	INT. EL.	DIS. EL.
305	15" RCP	IV	64.20	0.0110	22.80	22.10
316	15" RCP	IV	149.30	0.0070	21.70	20.60
319	15" RCP	IV	94.20	0.0050	23.50	23.00

MANHOLE SCHEDULE					
NO.	STATION	OFFSET	SIZE / TYPE	T.C. EL.	INV. EL.
305	365+75.00	-6.00	48" x 30"	27.12	22.80

UNDERDRAIN SCHEDULE				
NO.	SIZE / TYPE	LENGTH	DIS. TYPE	DIS. EL.
1	6" PERFORATED	627.00	DI-315	23.44

** MATCH FLOWLINE OF PROPOSED CURB AND GUTTER.
*** MATCH PROPOSED CURB LINE.

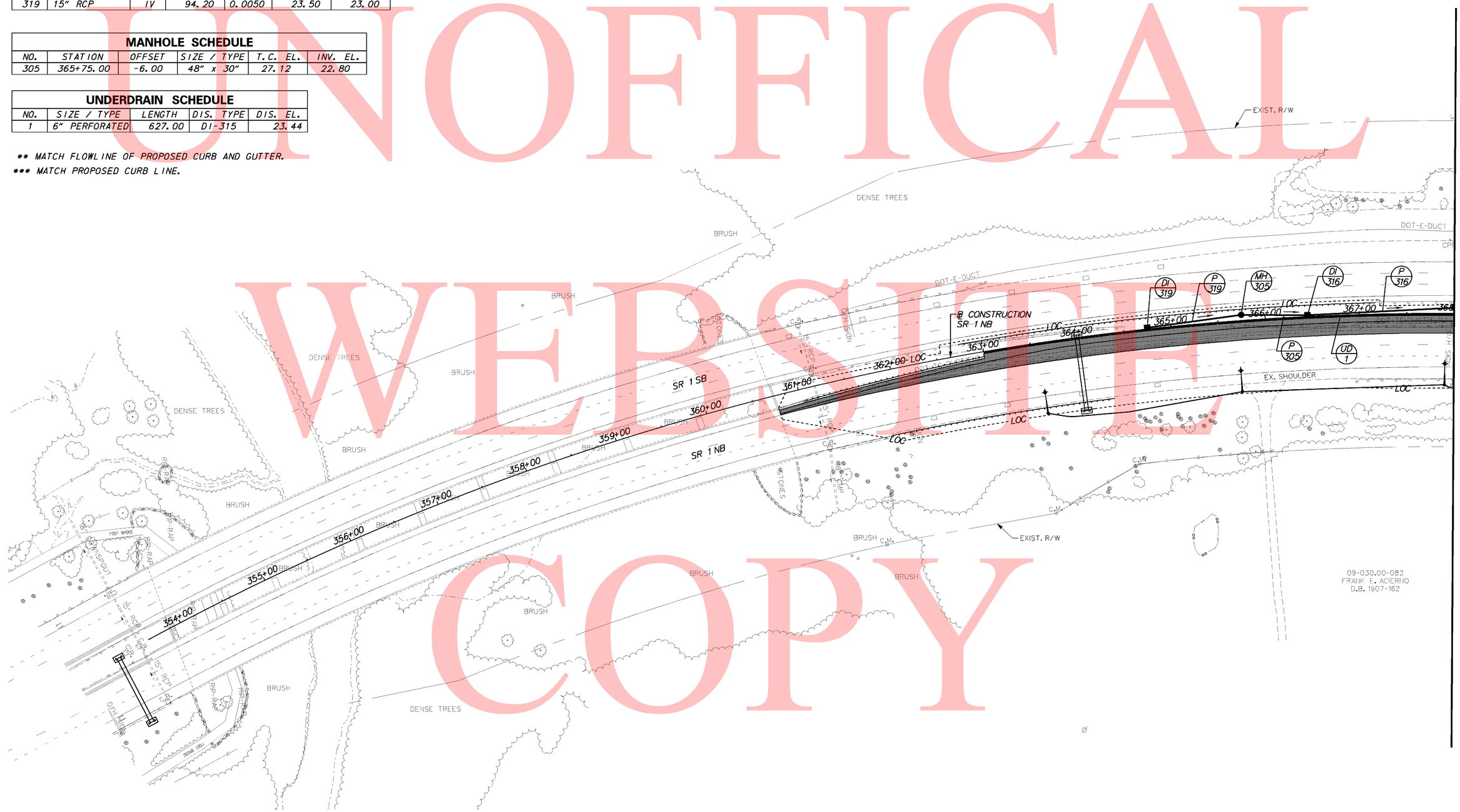

UNOFFICAL WEBSITE COPY

9/24/2010 8:54:52 AM
M:\PROJECTS\2003\03059_DELTRNPK\SRIMALL\CADD\2809003\PLANS\DR01_SR1.DGN

DELAWARE DEPARTMENT OF TRANSPORTATION

ADDENDUMS / REVISIONS

SCALE 0 50 100 150 FEET

SR1 / I-95 INTERCHANGE

CONTRACT	BRIDGE NO.
28-090-03	DESIGNED BY:
COUNTY	CHECKED BY:
NEW CASTLE	

DRAINAGE PLAN

DR-01
SHEET NO.
127
TOTAL SHTS.
803

DRAINAGE INLET SCHEDULE

NO.	STATION	OFFSET	BOX SIZE / TOP	GRATE	T.G. EL.	INV. EL.
309	599+44.00	***	72" x 24" TYPE A MOD.	1	**	24.80
310	1285+53.0	***	72" x 24" TYPE A MOD.	1	**	24.40*
311	372+98.00	***	34" x 24" TYPE A MOD.	1	**	21.55
312	369+76.50	***	SPECIAL II, TYPE A MOD.	1	**	17.84*
314	370+25.00	***	SPECIAL II, TYPE A MOD.	1	**	18.55
315	369+27.00	***	SPECIAL II, TYPE A MOD.	1	**	19.20

DRAINAGE PIPE SCHEDULE

NO.	SIZE / TYPE	CLASS	LENGTH	SLOPE	INT. EL.	DIS. EL.
10	15" RCP	IV	179.10	0.0090	27.60	26.00
300	15" RCP	IV	121.30	0.0050	20.30	19.70
308	15" RCP	IV	158.50	0.0070	28.90	27.80
309	18" RCP	IV	13.00	0.0080	24.80	24.70
311	15" RCP	IV	143.70	0.0100	21.55	20.15
313	15" RCP	IV	119.20	0.0100	19.95	18.75
314	15" RCP	IV	41.50	0.0120	18.55	18.04
315	15" RCP	IV	42.50	0.0090	19.20	18.80

MANHOLE SCHEDULE

NO.	STATION	OFFSET	SIZE / TYPE	T.C. EL.	INV. EL.
10	401+50.00	-7.00	48" x 30"	32.28	27.60
300	368+00.00	-6.00	48" x 30"	25.70	20.30
313	371+50.00	-6.00	48" x 30"	25.91	19.95

* TO BE VERIFIED BY ENGINEER IN THE FIELD.
** MATCH FLOWLINE OF PROPOSED CURB AND GUTTER.
*** MATCH PROPOSED CURB LINE.

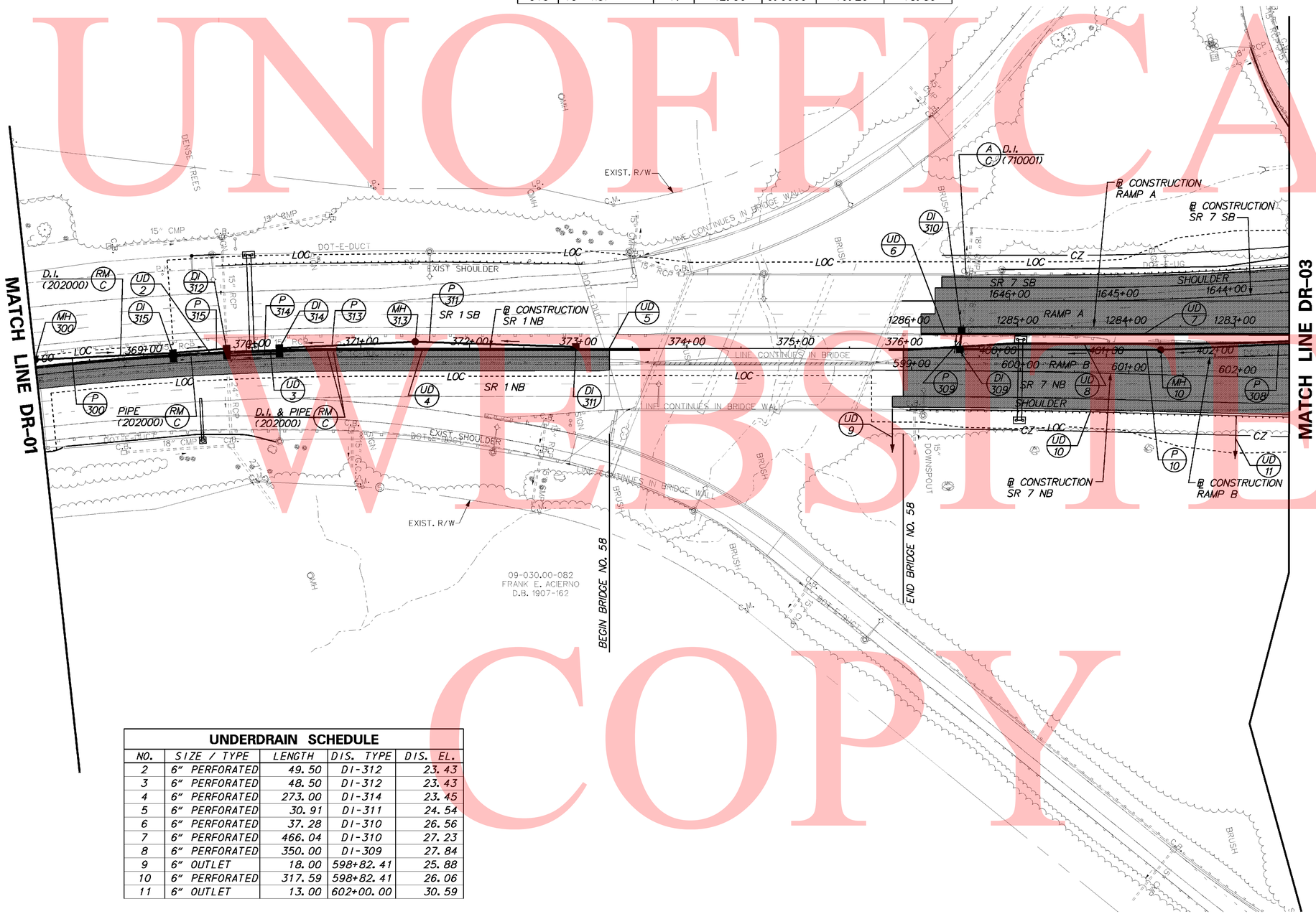

UNDERDRAIN SCHEDULE

NO.	SIZE / TYPE	LENGTH	DIS. TYPE	DIS. EL.
2	6" PERFORATED	49.50	DI-312	23.43
3	6" PERFORATED	48.50	DI-312	23.43
4	6" PERFORATED	273.00	DI-314	23.45
5	6" PERFORATED	30.91	DI-311	24.54
6	6" PERFORATED	37.28	DI-310	26.56
7	6" PERFORATED	466.04	DI-310	27.23
8	6" PERFORATED	350.00	DI-309	27.84
9	6" OUTLET	18.00	598+82.41	25.88
10	6" PERFORATED	317.59	598+82.41	26.06
11	6" OUTLET	13.00	602+00.00	30.59

UNOFFICAL WEBSITE COPY

9/24/2010 8:16:54 AM
M:\PROJECTS\2003\03059_DELTRNPK\SRIMALL\CADD\2809003\PLANS\DR02_SR1.DGN

DELAWARE DEPARTMENT OF TRANSPORTATION

ADDENDUMS / REVISIONS

SCALE 0 50 100 150 FEET

SR1 / I-95 INTERCHANGE

CONTRACT	BRIDGE NO.
28-090-03	DESIGNED BY:
COUNTY	
NEW CASTLE	CHECKED BY:

DRAINAGE PLAN

	DR-02
SHEET NO.	128
TOTAL SHTS.	803

SOIL RETENTION BLANKET MULCH NOTES

1. RAMP S STA. 214+00 LT. TO STA. 216+12 LT.: INSTALL ONE ROLL WIDTH (6.6') SOIL RETENTION BLANKET MULCH, TYPE 5 (735535). QUANTITY = 158 S.Y.

2. SR 7 NB STA. 610+32 RT. TO STA. 612+53 RT.: INSTALL ONE ROLL WIDTH (6.6') SOIL RETENTION BLANKET MULCH, TYPE 5 (735535). QUANTITY = 168 S.Y.

3. RAMP U STA. 735+80 RT. TO STA. 737+00 RT.: INSTALL ONE ROLL WIDTH (6.6') SOIL RETENTION BLANKET MULCH, TYPE 5 (735535). QUANTITY = 87 S.Y.

RIPRAP NOTES:

1. RAMP U STA. 736+09, 35' RT.: INSTALL R-5 RIPRAP DITCH OUTFALL TO CONFORM TO PROPOSED DITCH SEE CONSTRUCTION DETAILS QUANTITY OF RIPRAP R-5 (712006) = 25 S.Y.

NOTES:

1. SEE SHEET 130 FOR INLET, PIPE AND MANHOLE SCHEDULES FOR THIS PLAN SHEET.

2. SEE SHEET 184 FOR HEADWALL HW-502 DETAIL.

3. THE CONTRACTOR SHALL EXTEND EXISTING 21" RCP TO STRUCTURE HW-502 USING A CONSTRUCTION METHOD PREVIOUSLY APPROVED BY THE ENGINEER. ALL COSTS ASSOCIATED WITH EXTENDING THE PIPE, INCLUDING OBTAINING ENGINEER APPROVAL ON THE CONSTRUCTION METHOD, SHALL BE INCIDENTAL TO THE NEW 21' RCP BEING INSTALLED.

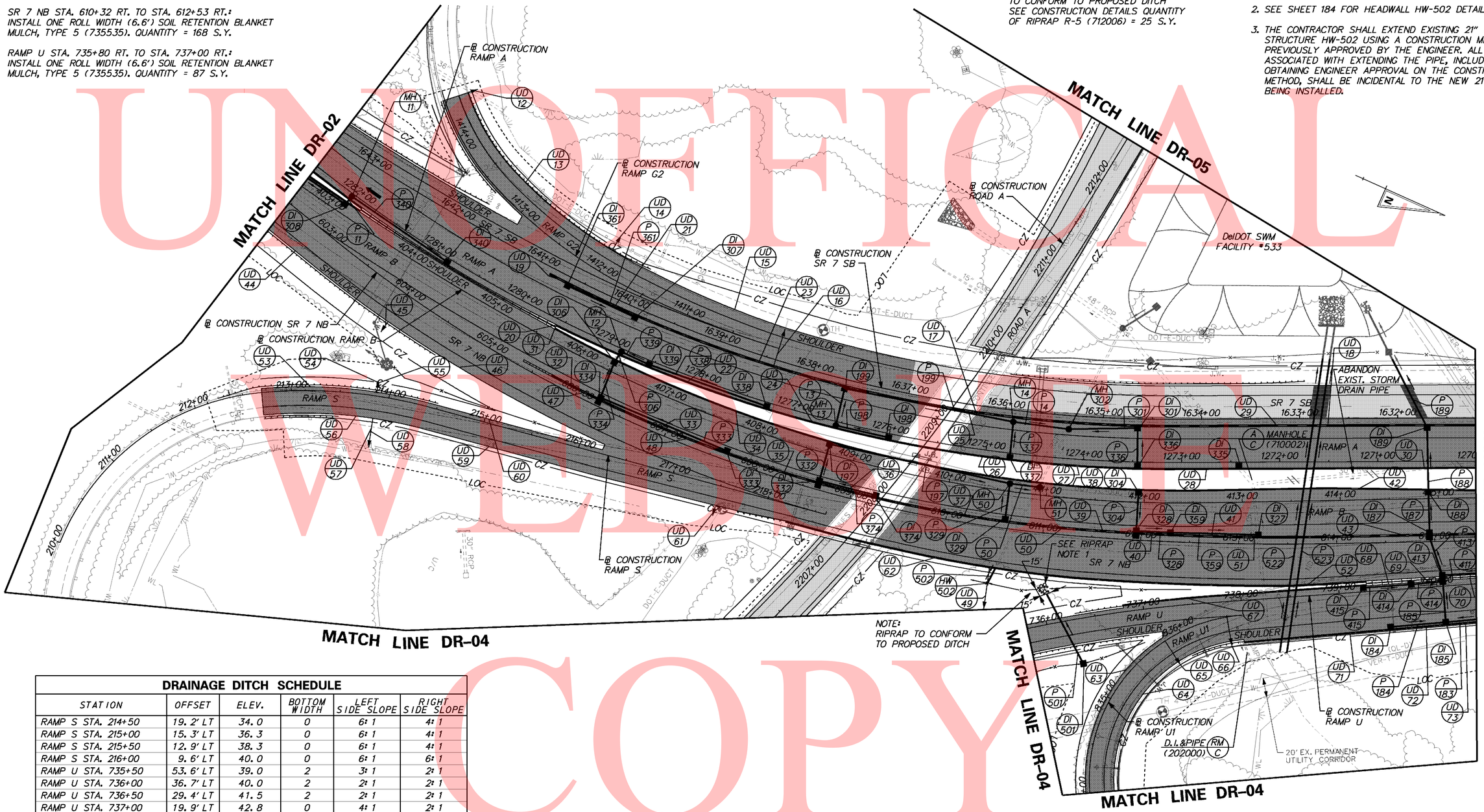

DRAINAGE DITCH SCHEDULE					
STATION	OFFSET	ELEV.	BOTTOM WIDTH	LEFT SIDE SLOPE	RIGHT SIDE SLOPE
RAMP S STA. 214+50	19.2' LT	34.0	0	6:1	4:1
RAMP S STA. 215+00	15.3' LT	36.3	0	6:1	4:1
RAMP S STA. 215+50	12.9' LT	38.3	0	6:1	4:1
RAMP S STA. 216+00	9.6' LT	40.0	0	6:1	6:1
RAMP U STA. 735+50	53.6' LT	39.0	2	3:1	2:1
RAMP U STA. 736+00	36.7' LT	40.0	2	2:1	2:1
RAMP U STA. 736+50	29.4' LT	41.5	2	2:1	2:1
RAMP U STA. 737+00	19.9' LT	42.8	0	4:1	2:1
RAMP U STA. 737+50	15.1' LT	43.7	0	4:1	2:1
RAMP U STA. 736+00	43.8' RT	44.1	2	2:1	2:1
RAMP U STA. 736+50	43.7' RT	44.0	2	3:1	4:1
RAMP U STA. 737+00	33.1' RT	45.4	0	6:1	6:1

UNOFFICIAL WEBSITE COPY

10/13/2010 11:52:40 AM
M:\PROJECTS\2003\03059_DELTRNPK\SRIMALL\CADD\2809003\PLANS\DR03_SR1.DGN

DELAWARE DEPARTMENT OF TRANSPORTATION

ADDENDUMS / REVISIONS

SCALE 0 50 100 150 FEET

SR1 / I-95 INTERCHANGE

CONTRACT	BRIDGE NO.
28-090-03	DESIGNED BY:
COUNTY	
NEW CASTLE	CHECKED BY:

DRAINAGE PLAN

DR-03
SHEET NO.
129
TOTAL SHTS.
803

DRAINAGE PIPE SCHEDULE

NO.	SIZE / TYPE	CLASS	LENGTH	SLOPE	INT. EL.	DIS. EL.
11	15" RCP	IV	6.70	0.0150	29.20	29.10
13	18" RCP	IV	33.30	0.0660	37.18	35.00
14	18" RCP	IV	52.10	0.0080	32.92	32.50
50	18" RCP	IV	24.20	0.0160	31.50	31.12
183	15" RCP	IV	38.10	0.0050	38.00	37.80
184	15" RCP	IV	52.70	0.0080	38.20	37.80
185	18" RCP	IV	39.10	0.0050	37.60	37.40
187	18" RCP	IV	38.90	0.0080	36.20	35.90
188	24" RCP	IV	62.50	0.0040	35.70	35.45
189	24" RCP	IV	82.80	0.0080	35.25	34.60
197	18" RCP	IV	182.20	0.0070	33.00	31.70
198	15" RCP	IV	49.20	0.0100	37.85	37.38
199	18" RCP	IV	170.30	0.0100	34.80	33.12
301	18" RCP	IV	64.20	0.0080	37.00	36.50
304	18" RCP	IV	37.00	0.0140	36.00	35.50
306	18" RCP	IV	9.10	0.0330	31.40	31.10
328	18" RCP	IV	27.70	0.0110	35.30	35.00
329	18" RCP	IV	33.30	0.0300	36.00	35.00
332	18" RCP	IV	34.40	0.0130	33.70	33.25
333	15" RCP	IV	132.70	0.0190	35.30	32.80
334	18" RCP	IV	36.50	0.0270	32.60	31.60
336	18" RCP	IV	34.00	0.0530	39.00	37.20
337	18" RCP	IV	33.30	0.0600	37.00	35.00
338	15" RCP	IV	120.30	0.0170	37.20	35.20
339	15" RCP	IV	25.10	0.0160	35.00	34.60
340	15" RCP	IV	112.00	0.0190	33.20	31.10
359	18" RCP	IV	82.40	0.0100	34.80	34.00
361	15" RCP	IV	70.70	0.0360	31.10	28.55
374	15" RCP	IV	52.40	0.0270	35.70	34.30
411	15" RCP	IV	62.50	0.0250	39.15	37.60
413	18" RCP	IV	38.40	0.0050	36.60	36.40
414	15" RCP	IV	28.40	0.0180	38.30	37.80
415	15" RCP	IV	45.20	0.0150	39.20	38.50
501	18" RCP	IV	79.10	0.0100	40.29	39.50
502	21" RCP	IV	17.00*	0.0120*	32.20	32.00*
522	36" RCP	IV	303.80	0.0060	37.00	35.21
523	36" RCP	IV	303.80	0.0060	37.00	35.21

MANHOLE SCHEDULE

NO.	STATION	OFFSET	SIZE / TYPE	T.C. EL.	INV. EL.
11	1282+04.50	-1.48	48" x 30"	35.47	29.20
12	1278+86.00	-3.00	48" x 30"	40.28	28.80*
13	1276+55.00	-4.00	48" x 30"	41.88	37.18
14	1274+76.00	32.00	48" x 30"	40.90	32.92
50	410+61.50	-8.00	48" x 30"	39.65	31.50
51	410+92.50	-8.00	48" x 30"	39.89	30.92*
302	1274+17.50	30.00	48" x 30"	41.31	30.09*

* TO BE VERIFIED BY ENGINEER IN THE FIELD.

** MATCH FLOWLINE OF PROPOSED CURB AND GUTTER.

*** MATCH PROPOSED CURB LINE.

DRAINAGE INLET SCHEDULE

NO.	STATION	OFFSET	BOX SIZE / TOP	GRATE	T.G. EL.	INV. EL.
184	739+50.00	***	34" x 24" TYPE A MOD.	1	**	38.20
185	740+06.47	***	34" x 24" TYPE A MOD.	1	**	37.60
187	414+90.50	***	SPECIAL II, TYPE A MOD.	1	**	36.20
188	414+90.00	***	72" x 24" TYPE A MOD.	1	**	35.70
189	1270+49.50	***	72" x 24" TYPE A MOD.	1	**	35.25
197	408+72.00	***	72" x 48" TYPE A MOD.	1	**	33.00
198	1276+00.00	***	72" x 24" TYPE A MOD.	1	**	37.85
199	1276+55.50	***	48" x 30" TYPE A MOD.	1	**	34.80
301	1273+45.50	***	72" x 48" TYPE A MOD.	1	**	37.00
304	411+94.00	***	72" x 24" TYPE A MOD.	1	**	36.00
306	406+35.00	***	34" x 24" TYPE A MOD.	1	**	31.40
307	1278+87.00	***	34" x 24" TYPE A MOD.	1	**	28.25*
308	403+15.00	***	72" x 24" TYPE A MOD.	1	**	28.90
327	413+16.00	***	72" x 48" TYPE A MOD.	1	**	33.25*
328	411+93.00	***	SPECIAL II, TYPE A MOD.	1	**	35.30
329	410+61.50	***	72" x 24" TYPE A MOD.	1	**	36.00
332	408+72.00	***	SPECIAL II, TYPE A MOD.	1	**	33.70
333	407+75.00	***	72" x 24" TYPE A MOD.	1	**	35.30
334	406+38.00	***	SPECIAL IV, TYPE A MOD.	1	**	32.60
335	1272+40.00	***	SPECIAL VII, TYPE A MOD.	1	**	27.96*
336	1273+45.00	***	72" x 24" TYPE A MOD.	1	**	39.00
337	1274+75.00	***	72" x 24" TYPE A MOD.	1	**	37.00
338	1277+28.00	***	72" x 24" TYPE A MOD.	1	**	37.20
339	1278+55.00	***	72" x 24" TYPE A MOD.	1	**	35.00
340	1280+85.50	***	72" x 24" TYPE A MOD.	1	**	33.20
359	412+27.00	***	72" x 48" TYPE A MOD.	1	**	34.80
361	1279+65.00	***	72" x 24" TYPE A MOD.	1	**	31.10
374	409+30.50	***	72" x 24" TYPE A MOD.	1	**	35.70
413	740+06.47	***	SPECIAL I, TYPE A MOD.	1	**	36.60
414	739+75.00	***	34" x 24" TYPE A MOD.	1	**	38.30
415	739+25.00	***	34" x 24" TYPE A MOD.	1	**	39.20
501	736+30.00	46.00	34" x 24" TYPE A	1	43.70	40.29

UNDERDRAIN SCHEDULE

NO.	SIZE / TYPE	LENGTH	DIS. TYPE	DIS. EL.
12	6" OUTLET	10.50	1414+40.00 RT	26.77
13	6" PERFORATED	240	1414+40.00 RT	26.87
14	6" OUTLET	17.50	1412+00.00 RT	31.86
15	6" PERFORATED	340.46	1412+00.00 RT	32.03
16	6" OUTLET	38.50	1638+40.46 RT	34.34
17	6" PERFORATED	375.46	1638+40.46 RT	35.57
18	6" PERFORATED	295.00	D1-301	38.51
19	6" PERFORATED	22.05	D1-361	34.03
20	6" PERFORATED	230.49	D1-340	34.47
21	6" PERFORATED	78.01	D1-361	34.25
22	6" PERFORATED	126.99	D1-339	37.65
23	6" PERFORATED	231.74	D1-307	35.22
24	6" PERFORATED	128.00	D1-338	38.58
25	6" PERFORATED	309.73	D1-199	36.84
26	6" PERFORATED	125.02	D1-198	39.22
27	6" PERFORATED	129.98	D1-337	39.85
28	6" PERFORATED	103.40	D1-336	40.43
29	6" PERFORATED	296.22	D1-301	38.76
30	6" PERFORATED	506.61	D1-335	40.83
31	6" PERFORATED	320.00	D1-308	30.62
32	6" PERFORATED	53.39	D1-334	34.75
33	6" PERFORATED	137.00	D1-334	35.66
34	6" PERFORATED	237.00	D1-306	33.29
35	6" PERFORATED	97.00	D1-333	36.44
36	6" PERFORATED	58.50	D1-332	37.17
37	6" PERFORATED	131.00	D1-374	37.61
38	6" PERFORATED	322.00	D1-197	35.07
39	6" PERFORATED	131.50	D1-329	38.59
40	6" PERFORATED	34.00	D1-328	39.51
41	6" PERFORATED	89.00	D1-359	39.48
42	6" PERFORATED	296.00	D1-304	37.51
43	6" PERFORATED	174.50	D1-327	39.24
44	6" PERFORATED	200.00	602+00.00 RT	30.72
45	6" OUTLET	13.00	604+00.00 RT	34.81
46	6" PERFORATED	248.70	604+00.00 RT	34.94
47	6" PERFORATED	54.77	D1-334	34.72
48	6" PERFORATED	210.68	D1-334	35.49
49	6" OUTLET	457.41	610+51.00 RT	40.58
50	6" PERFORATED	330.00	D1-332	37.19
51	6" PERFORATED	300.00	D1-328	38.88
52	6" OUTLET	15.50	D1-502	36.02
53	6" PERFORATED	117.11	213+86.92 LT	35.52
54	6" OUTLET	12.00	213+86.92 LT	34.25
55	6" OULET	12.00	213+87.42 LT	34.25
56	6" PERFORATED	117.11	213+86.92 RT	34.18
57	6" OUTLET	30.00	213+86.92 RT	32.95
58	6" OUTLET	30.00	213+87.42 RT	32.95
59	6" PERFORATED	363.83	213+87.42 RT	38.23
60	6" PERFORATED	236.71	213+87.45 LT	38.13
61	6" OUTLET	10.00	217+50.00 RT	38.61
62	6" PERFORATED	330.07	217+50.00 RT	38.71
63	6" PERFORATED	181.56	835+81.86 RT	43.73
64	6" PERFORATED	250.00	836+50.00 RT	41.15
65	6" OUTLET	29.00	835+81.86 RT	42.15
66	6" OUTLET	29.50	836+50.00 RT	41.00
67	6" PERFORATED	245.08	D1-415	36.97
68	6" PERFORATED	50.00	D1-414	35.82
69	6" PERFORATED	31.47	D1-414	35.82
70	6" PERFORATED	68.21	D1-413	34.12
71	6" PERFORATED	163.35	D1-184	35.72
72	6" PERFORATED	56.47	D1-185	35.12
73	6" PERFORATED	43.53	D1-185	35.12

UNOFFICIAL WEBSITE COPY

SOIL RETENTION BLANKET MULCH NOTES

1. RAMP A STA. 2200+67 LT. TO RAMP U STA. 735+80 RT.: INSTALL ONE ROLL WIDTH (6.6') SOIL RETENTION BLANKET MULCH, TYPE 5 (735535). QUANTITY = 566 S.Y.

UNDERDRAIN SCHEDULE

NO.	SIZE / TYPE	LENGTH	DIS. TYPE	DIS. EL.
74	6" OUTLET	30.00	834+00.00 LT	50.47
75	6" PERFORATED	200.00	834+00.00 LT	50.77
76	6" OUTLET	28.50	834+00.00 RT	49.03
77	6" PERFORATED	200.00	834+00.00 RT	49.31

DRAINAGE DITCH SCHEDULE

STATION	OFFSET	ELEV.	BOTTOM WIDTH	LEFT SIDE SLOPE	RIGHT SIDE SLOPE
ROAD A STA. 2202+00	64.5' RT	53.6	0	2:1	EX. GR.
ROAD A STA. 2202+50	70.9' RT	51.7	2	2:1	2:1
RAMP U STA. 730+00	56.3' RT	50.6	2	2:1	2:1
RAMP U STA. 730+50	57.9' RT	50.3	2	2:1	2:1
RAMP U STA. 731+00	59.0' RT	50.1	2	2:1	2:1
RAMP U STA. 731+50	61.4' RT	49.6	2	2:1	2:1
RAMP U STA. 732+00	62.8' RT	48.9	2	2:1	2:1
RAMP U STA. 732+50	62.0' RT	48.4	2	2:1	2:1
RAMP U STA. 733+00	59.5' RT	47.8	2	2:1	2:1
RAMP U STA. 733+50	56.8' RT	47.3	2	2:1	2:1
RAMP U STA. 734+00	53.5' RT	47.0	2	2:1	2:1
RAMP U STA. 734+50	49.9' RT	46.8	2	2:1	2:1
RAMP U STA. 735+00	46.3' RT	46.6	2	2:1	2:1
RAMP U STA. 735+50	45.9' RT	44.8	2	2:1	2:1

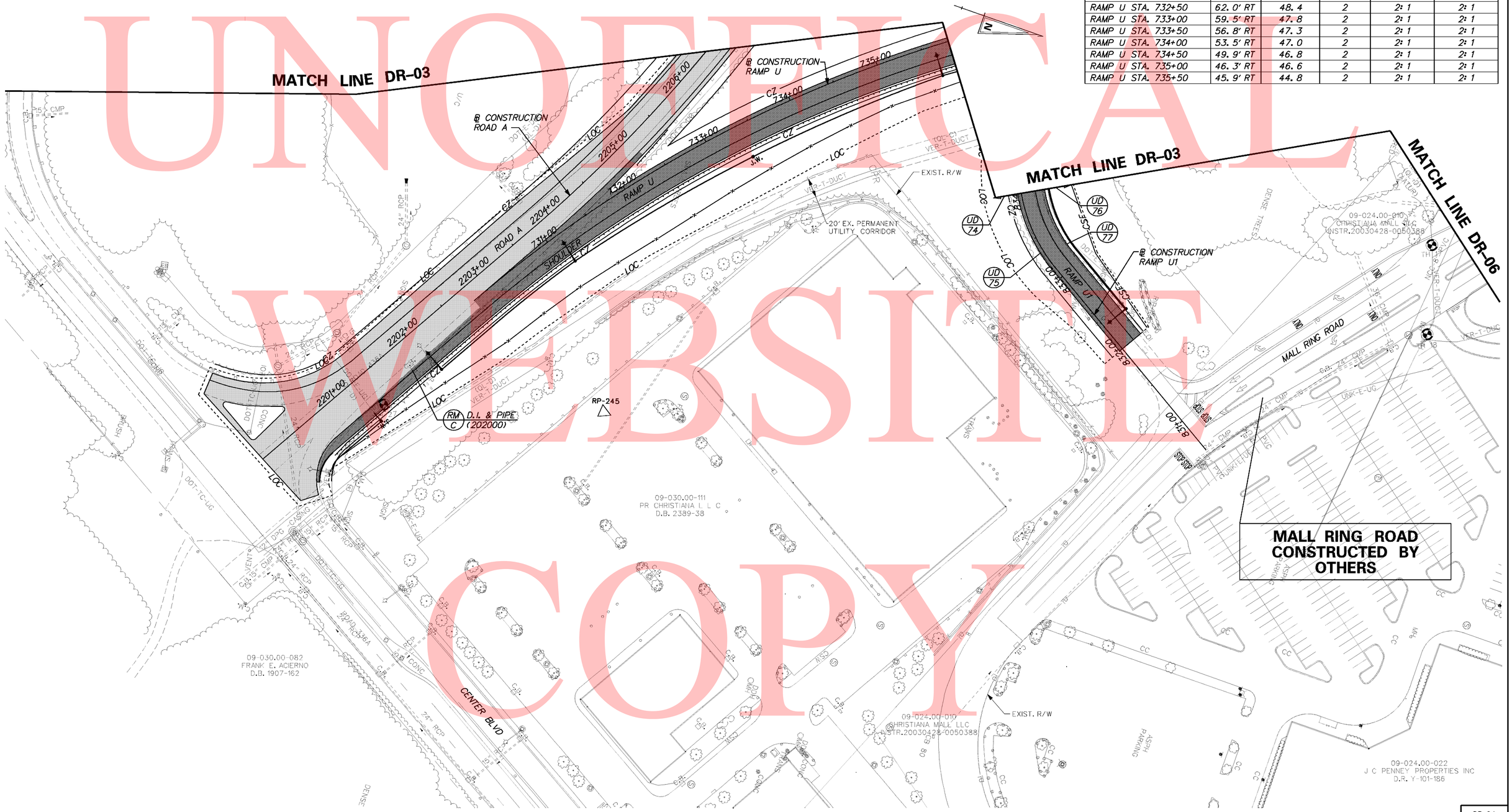

UNOFFICIAL WEBSITE COPY

10/14/2010 10:23:30 AM
M:\PROJECTS\2003\03059_DELTRNPK\SRMALL\CADD\2809003\PLANS\DR04_SR1.DGN

DELAWARE DEPARTMENT OF TRANSPORTATION

ADDENDUMS / REVISIONS

SCALE 0 50 100 150 FEET

SR1 / I-95 INTERCHANGE

CONTRACT	BRIDGE NO.
28-090-03	DESIGNED BY:
COUNTY	CHECKED BY:
NEW CASTLE	

DRAINAGE PLAN

DR-04
SHEET NO.
131
TOTAL SHTS.
803

SOIL RETENTION BLANKET MULCH NOTES

1. RAMP G1 STA. 1328+00 LT. TO STA. 1332+56 LT.:
   INSTALL TWO ROLLS WIDTH (13.2') SOIL RETENTION BLANKET MULCH, TYPE 5 (735535). QUANTITY = 660 S.Y.

2. RAMP G1 STA. 1328+00 RT. TO STA. 1331+56 RT.:
   INSTALL ONE ROLL WIDTH (6.6') SOIL RETENTION BLANKET MULCH, TYPE 5 (735535). QUANTITY = 265 S.Y.

UNDERDRAIN SCHEDULE

NO.	SIZE / TYPE	LENGTH	DIS. TYPE	DIS. EL.
78	6" PERFORATED	140.00	CONNECT TO EX.	CONNECT TO EX.
79	6" OUTLET	20.50	1331+00.00 RT	57.92
80	6" PERFORATED	390.00	1331+00.00 RT	58.13
81	6" OUTLET	18.00	1332+40.00 LT	57.65
82	6" PERFORATED	640.00	1332+40.00 LT	57.83

DRAINAGE DITCH SCHEDULE

STATION	OFFSET	ELEV.	BOTTOM WIDTH	LEFT SIDE SLOPE	RIGHT SIDE SLOPE
RAMP G1 STA. 1328+50	44.0' LT	60.9	2	4:1	6:1
RAMP G1 STA. 1329+00	44.0' LT	60.0	2	4:1	6:1
RAMP G1 STA. 1329+50	44.0' LT	59.3	2	4:1	6:1
RAMP G1 STA. 1330+00	44.0' LT	58.8	2	4:1	6:1
RAMP G1 STA. 1330+50	45.0' LT	58.4	2	4:1	6:1
RAMP G1 STA. 1331+00	47.6' LT	58.0	2	4:1	6:1
RAMP G1 STA. 1331+50	49.5' LT	57.6	2	4:1	6:1
RAMP G1 STA. 1332+00	51.1' LT	57.2	2	4:1	6:1
RAMP G1 STA. 1332+50	54.7' LT	56.8	2	4:1	6:1
RAMP G1 STA. 1328+00	35.7' RT	62.0	2	4:1	6:1
RAMP G1 STA. 1328+50	35.7' RT	60.9	2	4:1	6:1
RAMP G1 STA. 1329+00	35.7' RT	60.0	2	4:1	4:1
RAMP G1 STA. 1329+50	35.7' RT	59.3	2	4:1	4:1
RAMP G1 STA. 1330+00	35.7' RT	58.8	2	4:1	4:1
RAMP G1 STA. 1330+50	36.3' RT	58.3	2	4:1	4:1
RAMP G1 STA. 1331+00	44.7' RT	57.4	2	4:1	4:1
RAMP G1 STA. 1331+50	63.0' RT	56.5	2	4:1	4:1

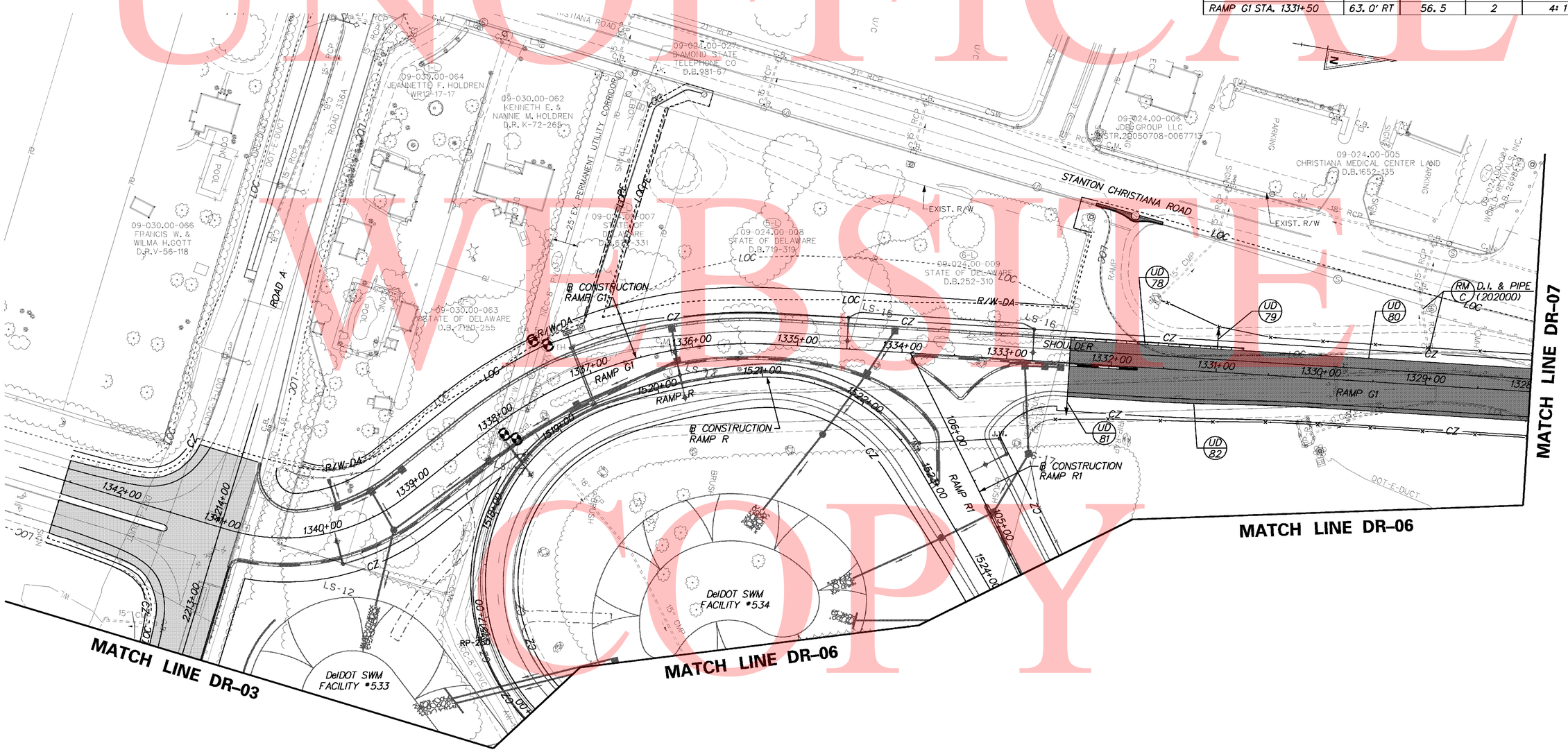

UNOFFICIAL WEBSITE COPY

10/13/2010 12:22:43 PM
M:\PROJECTS\2003\03059_DELTRNPK\SRIMALL\CADD\2809003\PLANS\DR05_SR1.DGN

DELAWARE DEPARTMENT OF TRANSPORTATION	ADDENDUMS / REVISIONS	SCALE 0 50 100 150 FEET	SR1 / I-95 INTERCHANGE	CONTRACT 28-090-03	BRIDGE NO.	DRAINAGE PLAN	DR-05
				COUNTY NEW CASTLE	DESIGNED BY:		SHEET NO. 132
					CHECKED BY:		TOTAL SHTS. 803

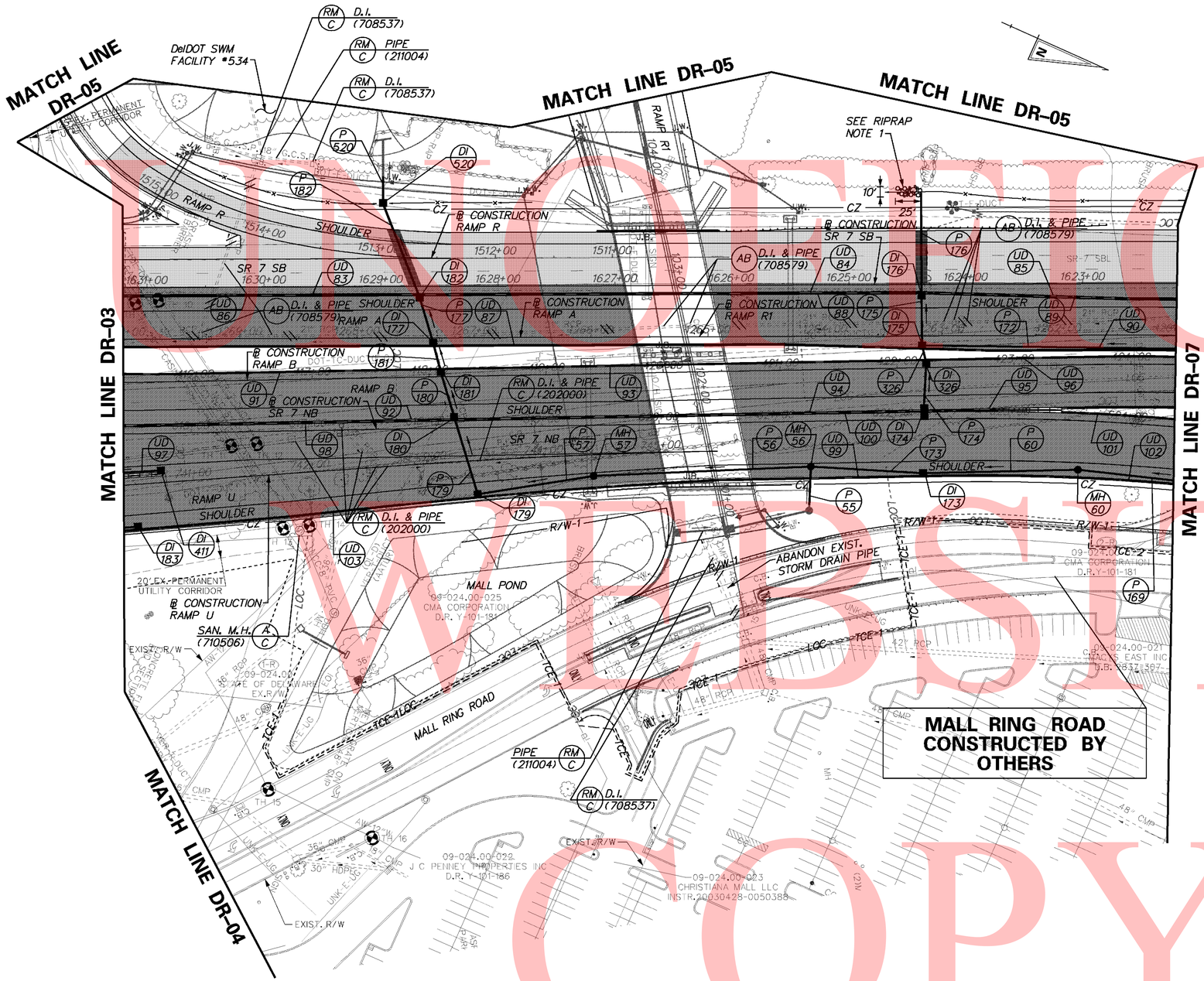

DRAINAGE PIPE SCHEDULE

NO.	SIZE / TYPE	CLASS	LENGTH	SLOPE	INT. EL.	DIS. EL.
55	18" CMP	-	SEE DOWNSPOUT DETAIL SHEET 193 OF 803			
56	24" RCP	IV	182.30	0.0030	41.30	40.70
57	24" RCP	IV	95.20	0.0050	39.30	38.85
60	24" RCP	IV	127.30	0.0040	42.50	42.00
169	24" RCP	IV	131.70	0.0040	43.30	42.80
172	30" RCP	IV	272.40	0.0200	49.50	44.10
173	24" RCP	IV	92.00	0.0030	41.80	41.50
174	24" RCP	IV	35.90	0.0060	44.60	44.40
175	36" RCP	IV	39.50	0.0050	43.90	43.70
176	36" RCP	IV	79.20	0.0060	43.50	43.00
177	30" RCP	IV	37.80	0.0080	37.62	37.30
179	30" RCP	IV	64.60	0.0030	38.65	38.45
180	30" RCP	IV	37.60	0.0040	38.25	38.10
181	30" RCP	IV	22.00	0.0040	37.90	37.82
182	30" RCP	IV	83.50	0.0080	37.10	36.40
326	36" RCP	IV	11.40	0.0080	44.20	44.10
520	30" RCP	IV	17.70	0.0040	36.20	36.13

DRAINAGE INLET SCHEDULE

NO.	STATION	OFFSET	BOX SIZE / TOP	GRATE	T.G. EL.	INV. EL.
173	622+25.00	***	48" x 48" TYPE A MOD.	1	**	41.80
174	422+22.50	***	SPECIAL TI, TYPE A MOD.	1	**	44.60
175	1263+17.00	***	72" x 24" TYPE A MOD.	1	**	43.90
176	1263+17.50	***	48" x 30" TYPE A MOD.	1	**	43.50
177	1267+35.00	***	72" x 24" TYPE A MOD.	1	**	37.62
179	743+42.00	***	72" x 48" TYPE A MOD.	1	**	38.65
180	418+20.50	***	72" x 24" TYPE A MOD.	1	**	38.25
181	418+10.00	***	72" x 24" TYPE A MOD.	1	**	37.90
182	1267+46.50	***	72" x 24" TYPE A MOD.	1	**	37.10
183	740+50.00	***	72" x 24" TYPE A MOD.	1	**	38.00
326	422+25.00	***	48" x 30" TYPE A MOD.	1	**	44.20
411	615+72.27	***	34" x 24" TYPE A MOD.	1	**	39.15
520	1513+00.00	45.00	48" x 30" TYPE A	1	41.00	36.20

* TO BE VERIFIED BY ENGINEER IN THE FIELD.
** MATCH FLOWLINE OF PROPOSED CURB AND GUTTER.
*** MATCH PROPOSED CURB LINE.

DRAINAGE DITCH SCHEDULE

STATION	OFFSET	ELEV.	BOTTOM WIDTH	LEFT SIDE SLOPE	RIGHT SIDE SLOPE
SR 7 SB STA. 1622+50	71.0' RT	53.6	2	4:1	4:1
SR 7 SB STA. 1623+00	71.0' RT	52.2	2	4:1	4:1
SR 7 SB STA. 1623+50	73.2' RT	49.3	2	3:1	3:1
SR 7 SB STA. 1624+00	77.4' RT	45.3	2	2:1	2:1
RAMP R STA. 1512+00	47.3' RT	41.6	2	2:1	2:1
RAMP R STA. 1512+50	48.0' RT	41.1	2	2:1	2:1
RAMP R STA. 1513+00	46.0' RT	39.2	2	2:1	2:1
RAMP R STA. 1513+50	40.0' RT	39.5	2	2:1	2:1
RAMP R STA. 1514+00	39.0' RT	39.8	2	2:1	2:1
RAMP R STA. 1514+50	39.0' RT	40.1	2	2:1	2:1
RAMP R STA. 1515+00	38.0' RT	40.8	2	2:1	2:1

UNDERDRAIN SCHEDULE

NO.	SIZE / TYPE	LENGTH	DIS. TYPE	DIS. EL.
83	6" PERFORATED	303.00	DI-189	40.25
84	6" PERFORATED	429.00	DI-182	41.98
85	6" PERFORATED	275.82	DI-176	46.94
86	6" PERFORATED	303.00	DI-189	41.07
87	6" PERFORATED	417.89	DI-177	43.37
88	6" PERFORATED	429.11	DI-182	42.59
89	6" PERFORATED	367.35	DI-176	46.94
90	6" PERFORATED	279.92	DI-175	47.19
91	6" PERFORATED	320.00	DI-188	40.09
92	6" PERFORATED	330.00	DI-187	39.56
93	6" PERFORATED	415.00	DI-181	42.59
94	6" PERFORATED	402.00	DI-180	41.95
95	6" PERFORATED	92.58	DI-174	46.37
96	6" PERFORATED	90.08	DI-326	47.15
97	6" PERFORATED	68.30	DI-413	40.52
98	6" PERFORATED	330.17	DI-187	40.16
99	6" PERFORATED	382.26	DI-179	36.17
100	6" PERFORATED	401.59	DI-180	41.95
101	6" PERFORATED	322.26	DI-174	46.37
102	6" PERFORATED	275.00	DI-173	46.36
103	6" PERFORATED	292.00	DI-183	35.52

MANHOLE SCHEDULE

NO.	STATION	OFFSET	SIZE / TYPE	T.C. EL.	INV. EL.
56	621+29.00	38.67	48" x 30"	48.67	41.30
57	744+42.00	18.14	48" x 30"	45.27	39.30
60	623+60.00	42.00	48" ROUND	50.70	42.50

RIPRAP NOTES:

1. SR 7 NB STA. 1624+35, 71' RT.:
   INSTALL R-5 RIPRAP DITCH OUTFALL
   SEE CONSTRUCTION DETAILS
   QUANTITY OF RIPRAP R-5 (712006) = 28 S.Y.

SOIL RETENTION BLANKET MULCH NOTES

1. RAMP R STA. 1511+68 RT. TO STA. 1515+00 RT.:
   INSTALL ONE ROLL WIDTH (6.6') SOIL RETENTION BLANKET
   MULCH, TYPE 5 (735535). QUANTITY = 228 S.Y.

2. SR 7 SB STA. 1622+12 RT. TO STA. 1624+70 RT.:
   INSTALL TWO ROLLS WIDTH (13.2') SOIL RETENTION BLANKET
   MULCH, TYPE 5 (735535). QUANTITY = 381 S.Y.

UNOFFICIAL WEBSITE COPY

10/28/2010 2:07:49 PM
M:\PROJECTS\2003\03059_DELTRNPK\SRIMALL\CADD\2809003\PLANS\DR06_SR1.DGN

DELAWARE DEPARTMENT OF TRANSPORTATION

ADDENDUMS / REVISIONS

SCALE 0 50 100 150 FEET

SR1 / I-95 INTERCHANGE

CONTRACT	BRIDGE NO.
28-090-03	DESIGNED BY:
COUNTY	
NEW CASTLE	CHECKED BY:

DRAINAGE PLAN

DR-06
SHEET NO.
133
TOTAL SHTS.
803

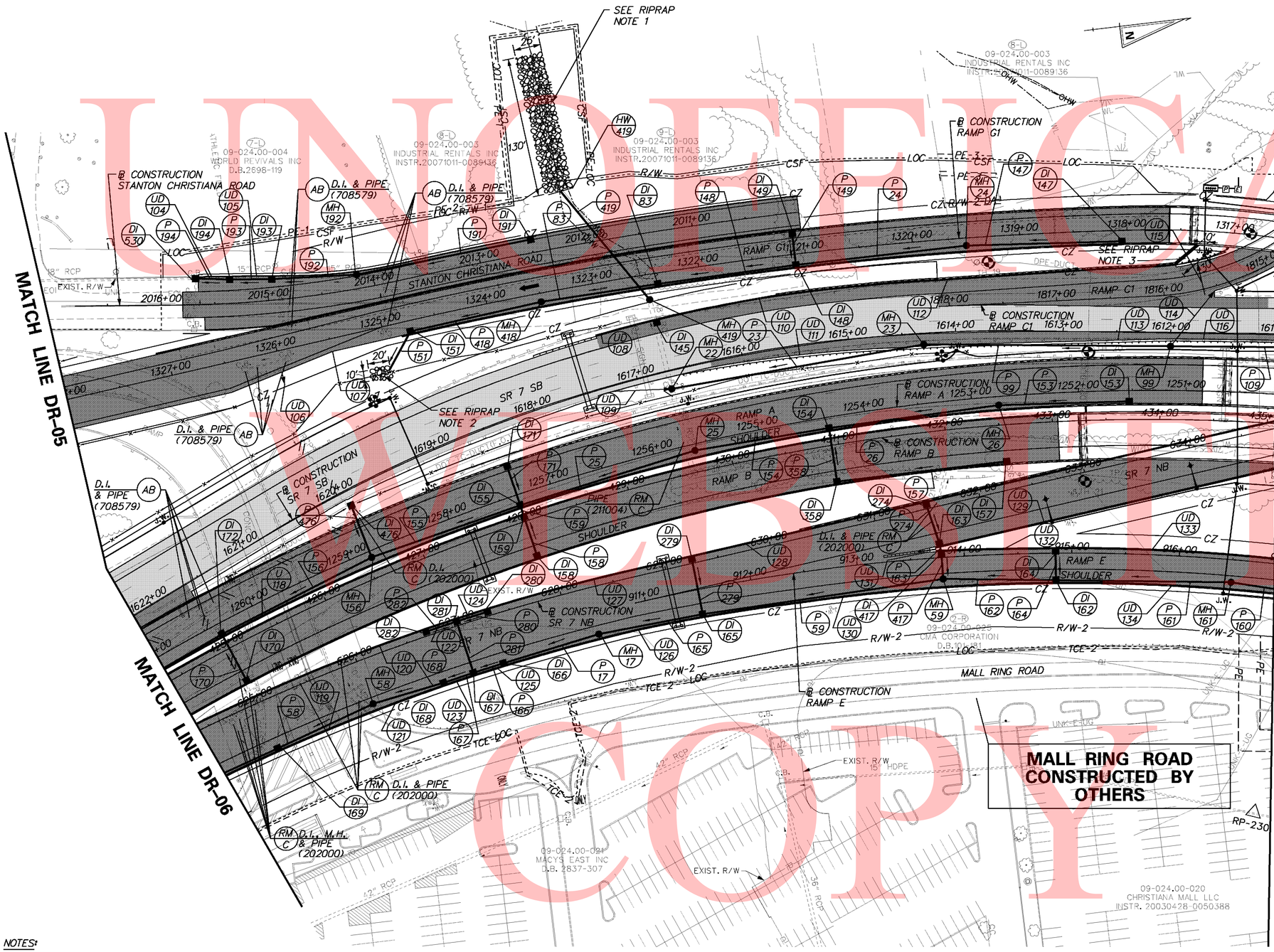

STREAM RESTORATION NOTES:

1. ALL RIPRAP IN THE CHANNEL BOTTOM SHALL BE RECESSED ONE FOOT BELOW STREAMBED ELEVATION AND CHOKED WITH BORROW TYPE B (209002) SO THAT ALL OF THE VOIDS IN THE RIPRAP ARE FILLED WITH MATERIAL. THE RIPRAP SHALL THEN BE COVERED WITH 12" CHANNEL BED FILL (712531) TO MATCH EXISTING ELEVATIONS.

2. ALL RIPRAP ON THE STREAM BANK, ABOVE THE CHANNEL BED, SHALL BE CHOKED WITH DE #57 STONE, FILLED WITH TOPSOIL, SEEDED AND MULCHED WITH SOIL RETENTION BLANKET MULCH, TYPE 3 (735533). PLACE JUST ENOUGH CHOKE MATERIAL TO PREVENT THE LOSS OF TOPSOIL THROUGH THE RIPRAP, AND THEN FINISH FILLING THE VOIDS WITH TOPSOIL SO THAT THE RIPRAP PEAKS ARE BARELY VISIBLE. AN ADDITIONAL 4-INCH TOPSOIL LAYER SHALL BE PLACED ON TOP OF THE RIPRAP. SEEDING SHALL BE PERMANENT GRASS SEEDING WET GROUND (734015) FROM THE CHANNEL BOTTOM 2-FEET UP THE SLOPE AND PERMANENT GRASS SEEDING DRY GROUND (734013) ON THE REMAINING SLOPE. ALL WORK, STARTING WITH THE INITIAL CHOKING WITH TOPSOIL THROUGH THE SEEDING AND MULCHING, SHALL BE COMPLETED PRIOR TO ANY RAIN EVENT. PAYMENT FOR ALL MATERIALS SHALL BE PAID FOR UNDER THEIR RESPECTIVE ITEMS.

3. OTHER AREAS OF THE CHANNEL BOTTOM AFFECTED BY CONSTRUCTION (INCLUDING, BUT NOT LIMITED TO, THE LOCATION OF SUMP PITS, STABILIZED OUTFALLS, TEMPORARY PIPES AND/OR SANDBAG DIKES AND DIVERSIONS) SHALL BE RESTORED TO EXISTING CONDITIONS. ANY CAVITIES OR SCOUR HOLES RESULTING FROM CONSTRUCTION ACTIVITIES SHALL BE FILLED WITH CHANNEL BED FILL (712531).

4. WHEN ALL EROSION AND SEDIMENT CONTROL MEASURES ARE REMOVED AND THE STREAM RETURNS TO ITS NATURAL FLOW CONDITIONS, THE FLOW MUST REMAIN ABOVE GROUND AND ABOVE THE RIPRAP (I.E. THE FLOW CANNOT BE "LOST" IN THE RIPRAP). IF THIS IS NOT ACHIEVED, THE CONTRACTOR WILL BE REQUIRED TO TAKE CORRECTIVE ACTION AT THE CONTRACTOR'S EXPENSE.

SOIL RETENTION BLANKET MULCH NOTES

1. RAMP A STA. 1253+00 RT. TO STA. 1260+00 RT.:
   INSTALL ONE ROLL WIDTH (6.6') SOIL RETENTION BLANKET MULCH, TYPE 5 (735535). QUANTITY = 527 S.Y.

2. RAMP G1 STA. 1326+50 LT. TO STA. 1328+00 LT.:
   INSTALL ONE ROLL WIDTH (6.6') SOIL RETENTION BLANKET MULCH, TYPE 5 (735535). QUANTITY = 110 S.Y.

3. RAMP G1 STA. 1322+81 LT. TO STA. 1325+00 LT.:
   INSTALL ONE ROLL WIDTH (6.6') SOIL RETENTION BLANKET MULCH, TYPE 5 (735535). QUANTITY = 160 S.Y.

4. SR 7 SB STA. 1619+07 RT. TO STA. 1622+12 RT.:
   INSTALL TWO ROLL WIDTHS (13.2') SOIL RETENTION BLANKET MULCH, TYPE 5 (735535). QUANTITY = 472 S.Y.

RIPRAP NOTES:

1. RAMP G1 STA. 1323+15, 90' RT. TO 1323+15, 220' RT.:
   INSTALL DEPRESSED R-6 RIPRAP DITCH LINING
   SEE STREAM RESTORATION NOTES THIS SHEET
   AND CONSTRUCTION DETAILS
   QUANTITY OF RIPRAP R-6 (712007) = 376 S.Y.

2. RAMP G1 STA. 1325+00, 42' LT.:
   INSTALL R-5 RIPRAP DITCH OUTFALL
   SEE CONSTRUCTION DETAILS
   QUANTITY OF RIPRAP R-5 (712006) = 22 S.Y.

3. RAMP C1 STA. 1815+80, RT
   INSTALL R-5 RIPRAP TO CONFORM
   WITH PROPOSED SLOPE.
   QUANTITY OF RIPRAP R-5 (712006) = 22 S.Y.

NOTES:

1. SEE SHEET 135 FOR INLET, PIPE AND MANHOLE SCHEDULES FOR THIS PLAN SHEET.

2. SEE SHEET 184 FOR HEADWALL HW-419 DETAIL.

UNOFFICIAL WEBSITE COPY

10/13/2010 12:37:47 PM
M:\PROJECTS\2003\03059_DELTRNPK\SRIMALL\CADD\2809003\PLANS\DR07_SR1.DGN

DELAWARE DEPARTMENT OF TRANSPORTATION	ADDENDUMS / REVISIONS	SCALE 0 50 100 150 FEET	SR1 / I-95 INTERCHANGE	CONTRACT 28-090-03	BRIDGE NO.	DRAINAGE PLAN
				COUNTY NEW CASTLE	DESIGNED BY:	
					CHECKED BY:	

DR-07
SHEET NO. 134
TOTAL SHTS. 803

DRAINAGE PIPE SCHEDULE

NO.	SIZE / TYPE	CLASS	LENGTH	SLOPE	INT. EL.	DIS. EL.
17	18" RCP	IV	86.70	0.0050	46.60	46.20
23	42" RCP	IV	233.10	0.0020	55.40	55.03*
24	15" RCP	IV	153.60	0.0280	82.70	78.45
25	18" RCP	IV	164.30	0.0360	68.30	62.40
26	18" RCP	IV	153.20	0.0370	82.30	76.60
58	24" RCP	IV	92.70	0.0040	44.00	43.60
59	18" RCP	IV	220.00	0.0100	51.60	49.40
83	18" RCP	IV	103.80	0.0220	74.00	71.70
99	42" RCP	IV	225.90	0.0020	56.00	55.60
109	42" RCP	IV	230.40	0.0030	56.80	56.20
147	15" RCP	IV	140.30	0.0260	86.60	82.90
148	18" RCP	IV	122.50	0.0290	78.00	74.50
149	18" RCP	IV	25.90	0.0190	78.70	78.20
151	18" RCP	IV	37.30	0.0110	61.70	61.30
153	18" RCP	IV	115.40	0.0420	87.80	83.00
154	18" RCP	IV	120.50	0.0320	73.00	69.20
155	18" RCP	IV	140.20	0.0470	60.80	54.20
156	30" RCP	IV	150.30	0.0150	52.90	50.60
157	18" RCP	IV	151.90	0.0430	82.70	76.20
158	18" RCP	IV	36.00	0.0140	64.30	63.80
159	18" RCP	IV	7.80	0.0060	63.60	63.55
160	18" RCP	IV	143.10	0.0210	58.75	55.80
161	18" RCP	IV	157.90	0.0050	54.10	53.35
162	18" RCP	IV	99.80	0.0040	52.50	52.10
163	18" RCP	IV	5.60	0.0180	52.30	52.20
164	18" RCP	IV	24.50	0.0310	54.00	53.25
165	18" RCP	IV	92.40	0.0080	47.90	47.20
166	18" RCP	IV	23.30	0.0090	45.80	45.60
167	24" RCP	IV	24.30	0.0080	45.20	45.00
168	24" RCP	IV	63.50	0.0060	44.60	44.25
170	18" RCP	IV	46.10	0.0200	52.50	51.60
171	18" RCP	IV	34.00	0.0470	67.80	66.20
191	15" RCP	IV	158.80	0.0050	56.90	56.10
192	15" RCP	IV	73.20	0.0070	55.90	55.40
193	15" RCP	IV	33.70	0.0120	55.20	54.80
194	15" RCP	IV	26.30	0.0180	54.60	54.14
274	18" RCP	IV	36.20	0.0140	53.00	52.50
279	18" RCP	IV	48.20	0.0120	48.70	48.10
280	15" RCP	IV	23.10	0.0170	46.40	46.00
281	18" RCP	IV	46.00	0.0090	45.80	45.40
282	15" RCP	IV	24.60	0.0200	46.50	46.00
358	18" RCP	IV	45.40	0.0290	75.50	74.20
417	18" RCP	IV	20.80	0.0100	52.00	51.80
418	18" RCP	IV	118.70	0.0230	71.20	68.50
419	48" RCP	IV	129.50	0.0230	53.96*	51.00
476	24" RCP	IV	47.70	0.0040	53.30	53.10

DRAINAGE INLET SCHEDULE

NO.	STATION	OFFSET	BOX SIZE / TOP	GRATE	T.G. EL.	INV. EL.
83	1322+50.00	***	72" x 48" TYPE A MOD.	1	**	74.00
145	1616+70.00	***	SPECIAL VII, TYPE A MOD.	1	**	54.21*
147	1318+05.00	***	34" x 24" TYPE A MOD.	1	**	86.60
148	1321+10.00	***	72" x 48" TYPE A MOD.	1	**	78.00
149	1321+10.00	***	34" x 24" TYPE A MOD.	1	**	78.70
151	1324+75.00	***	72" x 48" TYPE A MOD.	1	**	61.70
153	1251+53.00	***	72" x 48" TYPE A MOD.	1	**	87.80
154	1254+35.00	***	72" x 48" TYPE A MOD.	1	**	73.00
155	1257+33.00	***	72" x 48" TYPE A MOD.	1	**	60.80
157	432+55.00	***	72" x 48" TYPE A MOD.	1	**	82.70
158	428+00.00	***	72" x 24" TYPE A MOD.	1	**	64.30
159	428+00.00	***	72" x 24" TYPE A MOD.	1	**	63.60
162	914+85.00	***	48" x 30" TYPE A MOD.	1	**	52.50
163	631+53.50	***	72" x 24" TYPE A MOD.	1	**	52.30
164	914+85.00	***	34" x 24" TYPE A MOD.	1	**	54.00
165	911+50.00	***	72" x 48" TYPE A MOD.	1	**	47.90
166	627+30.00	***	72" x 48" TYPE A MOD.	1	**	45.80
167	627+00.00	***	48" x 48" TYPE A MOD.	1	**	45.20
168	626+70.00	***	48" x 48" TYPE A MOD.	1	**	44.60
169	625+00.00	***	48" x 48" TYPE A MOD.	1	**	43.30
170	425+00.00	***	72" x 24" TYPE A MOD.	1	**	52.50
171	1257+33.00	***	72" x 24" TYPE A MOD.	1	**	67.80
172	1260+37.00	***	72" x 48" TYPE A MOD.	1	**	49.50
191	2012+50.00	***	72" x 24" TYPE B	1	**	56.90
193	2014+95.00	***	72" x 24" TYPE B	1	**	55.20
194	2015+32.00	***	34" x 24" TYPE B	1	**	54.60
274	631+50.00	***	72" x 24" TYPE A MOD.	1	**	53.00
279	629+26.00	***	34" x 24" TYPE A MOD.	1	**	48.70
280	627+30.00	***	72" x 24" TYPE A MOD.	1	**	46.40
281	627+00.00	***	72" x 24" TYPE A MOD.	1	**	45.80
282	626+70.00	***	34" x 24" TYPE A MOD.	1	**	46.50
358	430+93.00	***	72" x 48" TYPE A MOD.	1	**	75.50
417	913+78.94	***	72" x 24" TYPE A MOD.	1	**	52.00
476	1619+92.50	-13.76	34" x 24" TYPE A	1	57.40	53.30
530	2015+67.50	***	72" x 48" TYPE B	1	**	53.94*

DRAINAGE DITCH SCHEDULE

STATION	OFFSET	ELEV.	BOTTOM WIDTH	LEFT SIDE SLOPE	RIGHT SIDE SLOPE
SR 7 SB STA. 1620+00	73.5' RT	60.0	2	4:1	4:1
SR 7 SB STA. 1620+50	70.7' RT	58.5	2	4:1	4:1
SR 7 SB STA. 1621+00	70.8' RT	57.2	2	4:1	4:1
SR 7 SB STA. 1621+50	70.9' RT	56.0	2	4:1	4:1
SR 7 SB STA. 1622+00	71.0' RT	54.9	2	4:1	4:1
RAMP A STA. 1253+00	44.1' RT	65.3	0	10:1	10:1
RAMP A STA. 1253+50	47.1' RT	64.7	0	10:1	10:1
RAMP A STA. 1254+00	45.8' RT	63.0	0	4:1	4:1
RAMP A STA. 1254+50	48.6' RT	62.5	0	4:1	4:1
RAMP A STA. 1255+00	51.3' RT	62.0	0	4:1	4:1
RAMP A STA. 1255+50	49.0' RT	61.5	0	4:1	6:1
RAMP A STA. 1256+00	49.2' RT	61.0	0	4:1	6:1
RAMP A STA. 1256+50	49.9' RT	60.5	0	4:1	4:1
RAMP A STA. 1257+00	49.3' RT	60.0	0	4:1	4:1
RAMP A STA. 1257+50	47.4' RT	59.5	0	4:1	4:1
RAMP A STA. 1258+00	46.3' RT	59.0	0	4:1	4:1
RAMP A STA. 1258+50	45.6' RT	58.0	0	4:1	2:1
RAMP A STA. 1259+00	43.1' RT	57.5	0	4:1	2:1
RAMP A STA. 1259+50	38.1' RT	57.7	0	4:1	3:1
RAMP A STA. 1260+00	34.5' RT	58.0	0	10:1	10:1
RAMP G1 STA. 1323+00	40.9' LT	65.4	0	4:1	2:1
RAMP G1 STA. 1323+50	41.8' LT	64.0	0	EX. GR.	2:1
RAMP G1 STA. 1324+00	44.4' LT	62.1	0	4:1	4:1
RAMP G1 STA. 1324+50	42.5' LT	61.7	0	4:1	4:1
RAMP G1 STA. 1325+00	43.2' LT	61.3	2	4:1	4:1
RAMP G1 STA. 1325+50	42.5' LT	60.7	2	4:1	4:1
RAMP G1 STA. 1326+50	42.0' LT	66.8	0	4:1	6:1
RAMP G1 STA. 1327+00	44.0' LT	64.6	2	4:1	6:1
RAMP G1 STA. 1327+50	44.0' LT	63.2	2	4:1	6:1
RAMP G1 STA. 1328+00	44.0' LT	62.0	2	4:1	6:1

MANHOLE SCHEDULE

NO.	STATION	OFFSET	SIZE / TYPE	T.C. EL.	INV. EL.
17	628+25.00	44.00	48" x 30"	52.80	46.60
22	1616+71.00	-16.50	66" x 66"	61.00	55.03*
23	1614+29.36	-9.78	66" x 30"	65.00	55.40
24	1319+50.00	-7.00	48" x 30"	87.42	82.70
25	1255+62.00	-6.00	48" x 30"	77.88	68.30
26	1252+75.00	8.00	48" x 30"	88.58	82.30
58	626+00.00	42.00	48" ROUND	52.15	44.00
59	913+80.29	20.00	48" x 30"	57.42	51.60
99	1612+00.00	-12.30	66" x 30"	66.80	56.00
156	1258+80.00	-6.00	SPECIAL I	65.16	52.90
161	916+50.00	21.00	48" x 30"	60.71	54.10
192	2014+15.00	13.00	48" x 30"	60.34	55.90
418	1323+50.00	-8.00	48" x 30"	76.71	71.20
419	1616+70.00	69.00	SPECIAL II	69.50	53.96*

* TO BE VERIFIED BY ENGINEER IN THE FIELD.
** MATCH FLOWLINE OF PROPOSED CURB AND GUTTER.
*** MATCH PROPOSED CURB LINE.

UNDERDRAIN SCHEDULE

NO.	SIZE / TYPE	LENGTH	DIS. TYPE	DIS. EL.
104	6" PERFORATED	35.50	DI-194	57.14
105	6" PERFORATED	37.00	DI-194	57.14
106	6" OUTLET	12.00	1326+00.00 LT	67.17
107	6" PERFORATED	116.45	1326+00.00 LT	67.29
108	6" PERFORATED	55.77	DI-145	62.53
109	6" OUTLET	55.50	MH-22	59.55
110	6" PERFORATED	255.50	DI-145	63.08
111	6" PERFORATED	240.64	1617+25.75 LT	60.11
112	6" PERFORATED	246.89	XXXXXXX	XX.XX
113	6" PERFORATED	229.36	MH-23	62.40
114	6" PERFORATED	66.00	XXXXXXX	XX.XX
115	6" PERFORATED	30.40	XXXXXXX	XX.XX
116	6" OUTLET	4.00	MH-99	64.80
117	6" PERFORATED	234.65	1612+00.00 LT	64.84
118	6" PERFORATED	87.19	DI-172	55.62
119	6" PERFORATED	43.30	DI-169	48.65
120	6" PERFORATED	121.15	DI-282	47.99
121	6" PERFORATED	121.15	DI-168	48.38
122	6" PERFORATED	30.00	DI-281	50.96
123	6" PERFORATED	30.00	DI-167	48.36
124	6" PERFORATED	30.00	DI-281	50.96
125	6" PERFORATED	30.00	DI-167	48.36
126	6" PERFORATED	194.24	DI-166	48.39
127	6" PERFORATED	320.00	DI-280	48.00
128	6" PERFORATED	194.00	DI-279	52.60
129	6" PERFORATED	461.50	DI-163	55.52
130	6" PERFORATED	335.00	DI-165	51.68
131	6" PERFORATED	20.78	DI-417	55.63
132	6" PERFORATED	106.06	DI-417	56.00
133	6" PERFORATED	315.00	DI-164	57.02
134	6" PERFORATED	315.00	DI-162	55.87

UNOFFICIAL WEBSITE COPY

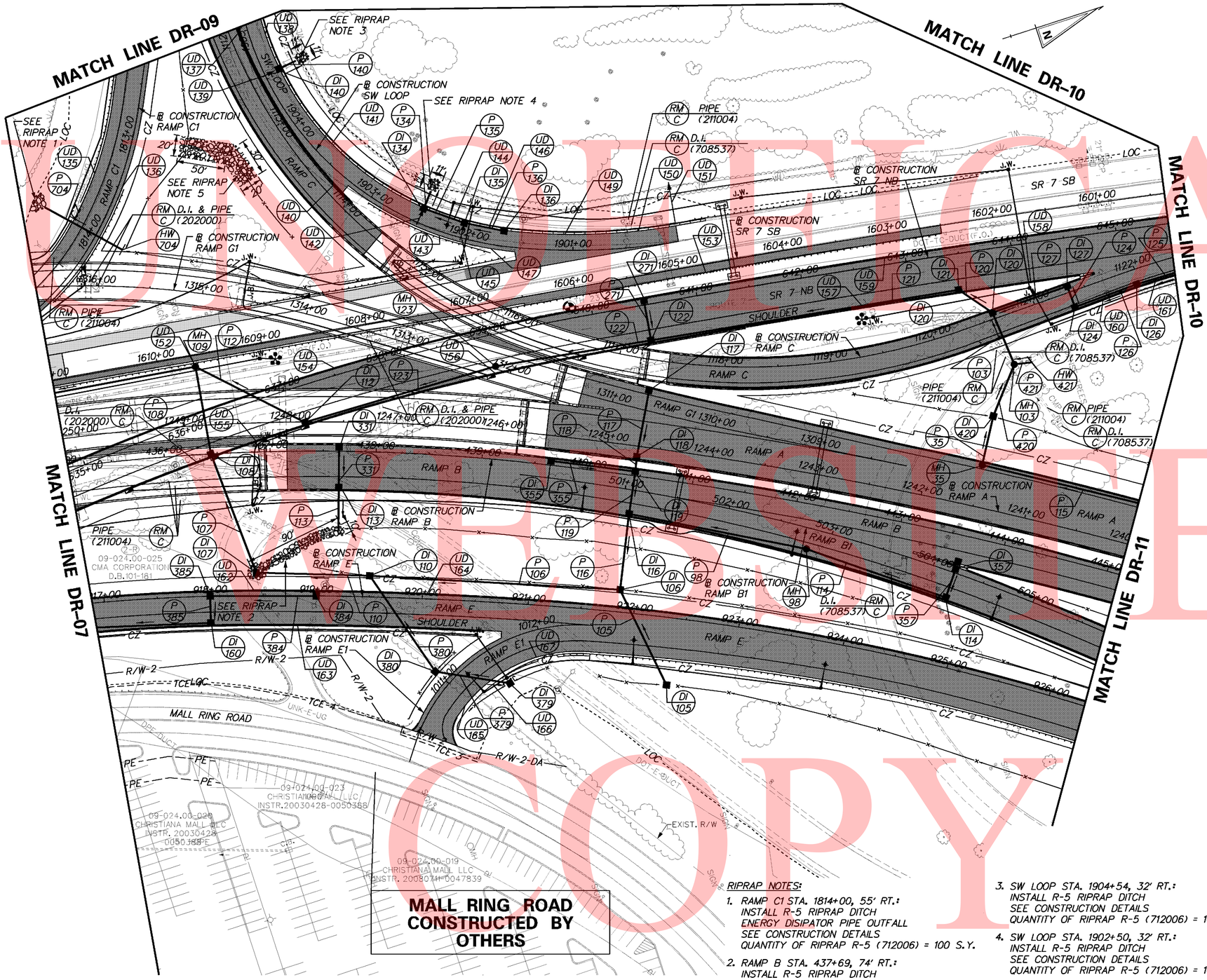

UNDERDRAIN SCHEDULE

NO.	SIZE / TYPE	LENGTH	DIS. TYPE	DIS. EL.
135	6" PERFORATED	262.90	XXXXXXX	XXXX.XX
136	6" PERFORATED	253.41	XXXXXXX	XXXX.XX
137	6" PERFORATED	306.00	1904+50.00 RT	70.62
138	6" PERFORATED	306.00	DI-140	69.76
139	6" PERFORATED	19.00	DI-140	69.76
140	6" PERFORATED	204.00	1902+50.00 RT	69.52
141	6" PERFORATED	204.00	DI-134	68.66
142	6" PERFORATED	19.00	DI-134	68.66
143	6" PERFORATED	43.00	1902+07.00 RT	69.43
144	6" PERFORATED	43.00	DI-135	68.57
145	6" PERFORATED	19.00	DI-135	68.57
146	6" PERFORATED	40.00	DI-135	68.57
147	6" PERFORATED	52.48	1902+07.00 RT	69.43
149	6" PERFORATED	117.00	DI-136	68.68
150	6" PERFORATED	50.00	1900+00.00 RT	69.83
151	6" OUTLET	29.00	1900+00.00 RT	69.54
152	6" OUTLET	4.00	MH-109	66.63
153	6" PERFORATED	715.35	1609+65.35 LT	66.67
154	6" PERFORATED	900.00	DI-274	56.26
155	6" PERFORATED	95.00	DI-108	60.19
156	6" PERFORATED	340.00	DI-112	60.83
157	6" PERFORATED	295.00	DI-122	64.00
158	6" PERFORATED	129.32	DI-121	68.38
159	6" PERFORATED	650.00	DI-271	64.77
160	6" PERFORATED	34.66	DI-126	70.44
161	6" PERFORATED	52.48	DI-126	70.44
162	6" PERFORATED	100.00	DI-385	62.54
163	6" PERFORATED	276.58	DI-160	61.40
164	6" PERFORATED	176.58	DI-384	65.87
165	6" PERFORATED	79.52	1011+25.00 RT	71.53
166	6" PERFORATED	23.50	DI-379	70.12
167	6" PERFORATED	126.50	1011+25.00 RT	71.53

SOIL RETENTION BLANKET MULCH NOTES

1. RAMP A STA. 1240+00 RT. TO STA. 1242+80 RT.:
   INSTALL ONE ROLL WIDTH (6.6') SOIL RETENTION BLANKET MULCH, TYPE 5 (735535). QUANTITY = 120 S.Y.
2. RAMP B STA. 437+70 RT. TO STA. 503+60 RT.:
   INSTALL ONE ROLL WIDTH (6.6') SOIL RETENTION BLANKET MULCH, TYPE 5 (735535). QUANTITY = 375 S.Y.
3. RAMP B1 STA. 505+22 LT. TO STA. 505+70 LT.:
   INSTALL ONE ROLL WIDTH (6.6') SOIL RETENTION BLANKET MULCH, TYPE 5 (735535). QUANTITY = 36 S.Y.
4. RAMP C STA. 1113+27 RT. TO STA. 1114+00 RT.:
   INSTALL ONE ROLL WIDTH (6.6') SOIL RETENTION BLANKET MULCH, TYPE 5 (735535). QUANTITY = 60 S.Y.
5. RAMP C1 STA. 1812+14 LT. TO STA. 1814+00 LT.:
   INSTALL ONE ROLL WIDTH (6.6') SOIL RETENTION BLANKET MULCH, TYPE 5 (735535). QUANTITY = 208 S.Y.
6. RAMP E STA. 919+00 LT. TO STA. 926+34 LT.:
   INSTALL ONE ROLL WIDTH (6.6') SOIL RETENTION BLANKET MULCH, TYPE 5 (735535). QUANTITY = 544 S.Y.
7. RAMP E1 STA. 1010+77 LT. TO STA. 1011+23 LT.:
   INSTALL ONE ROLL WIDTH (6.6') SOIL RETENTION BLANKET MULCH, TYPE 5 (735535). QUANTITY = 37 S.Y.
8. RAMP E1 STA. 1010+91 RT. TO STA. 1012+00 RT.:
   INSTALL ONE ROLL WIDTH (6.6') SOIL RETENTION BLANKET MULCH, TYPE 5 (735535). QUANTITY = 63 S.Y.
9. RAMP E STA. 921+73 RT. TO STA. 922+50 RT.:
   INSTALL ONE ROLL WIDTH (6.6') SOIL RETENTION BLANKET MULCH, TYPE 5 (735535). QUANTITY = 55 S.Y.
10. RAMP E STA. 922+50 RT. TO STA. 924+50 RT.:
    INSTALL TWO ROLLS WIDTH (6.6') SOIL RETENTION BLANKET MULCH, TYPE 6 (735536). QUANTITY = 143 S.Y.
11. RAMP E STA. 924+50 RT. TO STA. 926+38 RT.:
    INSTALL ONE ROLL WIDTH (13.2') SOIL RETENTION BLANKET MULCH, TYPE 5 (735535). QUANTITY = 267 S.Y.
12. SR 7 SB STA. 1607+26 RT. TO STA. 1610+12 RT.:
    INSTALL ONE ROLL WIDTH (6.6') SOIL RETENTIONS BLANKET MULCH, TYPE 5 (735535). QUANTITY = 220 S.Y.

RIPRAP NOTES:

1. RAMP C1 STA. 1814+00, 55' RT.:
   INSTALL R-5 RIPRAP DITCH
   ENERGY DISIPATOR PIPE OUTFALL
   SEE CONSTRUCTION DETAILS
   QUANTITY OF RIPRAP R-5 (712006) = 100 S.Y.
2. RAMP B STA. 437+69, 74' RT.:
   INSTALL R-5 RIPRAP DITCH
   DOWN TO INLET DI-107
   SEE CONSTRUCTION DETAILS
   QUANTITY OF RIPRAP R-5 (712006) = 128 S.Y.
3. SW LOOP STA. 1904+54, 32' RT.:
   INSTALL R-5 RIPRAP DITCH
   SEE CONSTRUCTION DETAILS
   QUANTITY OF RIPRAP R-5 (712006) = 14 S.Y.
4. SW LOOP STA. 1902+50, 32' RT.:
   INSTALL R-5 RIPRAP DITCH
   SEE CONSTRUCTION DETAILS
   QUANTITY OF RIPRAP R-5 (712006) = 14 S.Y.
5. RAMP C STA. 1112+75, RT.
   TO STA. 1113+25, RT. INSTALL
   R-5 RIPRAP TO CONFORM TO
   PROPOSED SLOPE.
   QUANTITY OF RIPRAP R-5 (712006) = 178 S.Y.

NOTES

1. SEE SHEET 137 FOR INLET, PIPE AND MANHOLE SCHEDULES FOR THIS PLAN SHEET.
2. SEE SHEET 184 FOR HEADWALLS HW-421 & HW-704 DETAILS.

UNOFFICIAL WEBSITE COPY

DRAINAGE PIPE SCHEDULE

NO.	SIZE / TYPE	CLASS	LENGTH	SLOPE	INT. EL.	DIS. EL.
35	18" CMP	-	SEE DOWNSPOUT DETAIL SHEET 193 OF 803			
98	18" RCP	IV	164.40	0.0130	101.40	99.30
103	30" RCP	IV	47.30	0.0100	65.15	64.70
105	24" RCP	IV	97.30	0.0041	67.90	67.50
106	30" RCP	IV	232.50	0.0077	64.00	62.20
107	30" RCP	IV	115.20	0.0050	58.10	57.55
108	30" RCP	IV	79.40	0.0040	57.35	57.00
110	30" RCP	IV	102.90	0.0080	60.80	60.00
112	30" RCP	IV	111.00	0.0090	57.90	56.90
113	18" CMP	-	SEE DOWNSPOUT DETAIL SHEET 193 OF 803			
114	18" RCP	IV	133.30	0.0100	102.90	101.60
115	18" RCP	IV	148.90	0.0070	105.50	104.50
116	18" CMP	-	SEE DOWNSPOUT DETAIL SHEET 193 OF 803			
117	18" RCP	IV	61.80	0.0050	101.80	101.50
118	18" RCP	IV	10.00	0.0100	101.30	101.20
119	18" RCP	IV	37.70	0.0080	98.30	98.00
120	30" RCP	IV	33.30	0.0090	64.50	64.20
121	30" RCP	IV	288.10	0.0090	64.00	61.40
122	30" RCP	IV	143.60	0.0090	61.20	59.90
123	30" RCP	IV	181.30	0.0090	59.70	58.10
124	18" RCP	IV	17.00	0.0060	67.80	67.70
125	15" RCP	IV	47.70	0.0090	69.05	68.60
126	15" RCP	IV	58.50	0.0070	68.40	68.00
127	18" RCP	IV	68.00	0.0050	67.50	67.15
134	15" RCP	IV	17.00	0.0060	68.40	68.30
135	15" RCP	IV	37.00	0.0030	68.50	68.40
136	15" RCP	IV	34.20	0.0030	68.60	68.50
140	15" RCP	IV	17.00	0.0120	68.20	68.00
271	18" RCP	IV	34.00	0.0090	61.70	61.40
331	18" RCP	IV	36.00	0.0560	97.00	95.00
355	15" RCP	IV	74.00	0.0220	100.10	98.50
357	18" RCP	IV	24.70	0.0530	104.40	103.10
379	18" RCP	IV	67.90	0.0060	62.10	61.70
380	18" RCP	IV	105.60	0.0050	61.50	60.95
384	15" RCP	IV	96.20	0.0060	60.10	59.50
385	18" RCP	IV	24.50	0.0080	59.30	59.10
420	18" CMP	-	SEE DOWNSPOUT DETAIL SHEET 193 OF 803			
421	24" RCP	IV	14.80	0.0100	65.50	65.35
704	24" RCP	IV	84.00	0.0060	65.00	64.50

DRAINAGE INLET SCHEDULE

NO.	STATION	OFFSET	BOX SIZE / TOP	GRATE	T.G. EL.	INV. EL.
105	922+39.00	63.47	48" x 30" TYPE A	1	73.80	67.90
106	921+85.00	-21.11	SPECIAL VI, TYPE A	1	76.30	64.00
107	918+43.50	-21.67	48" x 48" TYPE A	1	68.50	58.10
108	636+15.00	***	34" x 24" TYPE A MOD.	1	**	57.35
110	919+50.00	-20.00	48" x 48" TYPE A	1	66.80	60.80
112	637+10.00	***	72" x 48" TYPE A	1	**	57.90
113	437+65.00	***	72" x 24" TYPE A MOD.	1	**	94.50
114	504+21.00	***	72" x 48" TYPE A MOD.	1	**	102.90
116	501+07.50	***	72" x 24" TYPE A MOD.	1	**	97.80
117	1310+69.00	***	34" x 24" TYPE A MOD.	1	**	101.80
118	1244+71.00	***	72" x 24" TYPE A MOD.	1	**	101.30
119	440+45.00	***	48" x 30" TYPE A MOD.	1	**	98.30
120	1120+60.00	***	72" x 48" TYPE A MOD.	1	**	64.50
121	643+45.00	***	72" x 48" TYPE A MOD.	1	**	64.00
122	640+50.00	***	48" x 48" TYPE A MOD.	1	**	61.20
124	1121+35.00	***	34" x 24" TYPE A MOD.	1	**	67.80
126	1121+97.53	***	34" x 24" TYPE A MOD.	1	**	68.40
127	1121+35.00	***	72" x 48" TYPE A MOD.	1	**	67.50
134	1902+50.00	***	34" x 24" TYPE C	1	**	68.40
135	1902+07.00	***	34" x 24" TYPE C	1	**	68.50
136	1901+67.00	***	34" x 24" TYPE C	1	**	68.60
140	1904+54.00	***	34" x 24" TYPE C	1	**	68.20
160	918+00.00	***	48" x 30" TYPE A MOD.	1	**	58.75
271	640+50.00	***	72" x 24" TYPE A MOD.	1	**	61.70
331	437+65.00	***	72" x 24" TYPE A MOD.	1	**	97.00
355	439+65.00	***	72" x 48" TYPE A MOD.	1	**	100.10
357	504+21.00	***	SPECIAL IV, TYPE A MOD.	1	**	104.40
379	1011+50.00	37.50	48" x 30" TYPE A	1	70.50	62.10
380	1011+00.00	-16.60	48" x 30" TYPE A	1	71.60	61.50
384	919+00.00	***	34" x 24" TYPE A	1	**	60.10
385	918+00.00	***	34" x 24" TYPE A	1	**	59.30
420	1241+50.00	87.00	34" x 24" TYPE A	1	90.60	85.00

MANHOLE SCHEDULE

NO.	STATION	OFFSET	SIZE / TYPE	T.C. EL.	INV. EL.
35	1241+50.00	39.72	48" x 30"	111.04	104.30
98	502+80.00	19.68	48" x 30"	106.10	101.40
103	1120+63.12	46.80	48" x 48"	71.50	65.15
109	1609+65.35	-10.53	SPECIAL III	70.00	56.80
123	639+00.00	30.00	48" ROUND	65.60	59.70

* TO BE VERIFIED BY ENGINEER IN THE FIELD.
** MATCH FLOWLINE OF PROPOSED CURB AND GUTTER.
*** MATCH PROPOSED CURB LINE.

DRAINAGE DITCH SCHEDULE

STATION	OFFSET	ELEV.	BOTTOM WIDTH	LEFT SIDE SLOPE	RIGHT SIDE SLOPE
RAMP E STA. 919+00	26.8' LT	69.0	0	2:1	2:1
RAMP E STA. 919+50	20.0' LT	66.8	4	2:1	2:1
RAMP E STA. 920+00	20.1' LT	67.8	4	2:1	2:1
RAMP E STA. 920+50	20.7' LT	69.6	4	2:1	2:1
RAMP E STA. 921+00	21.0' LT	71.7	4	2:1	2:1
RAMP E STA. 921+50	21.2' LT	74.0	4	2:1	2:1
RAMP E STA. 922+00	21.2' LT	76.4	4	2:1	2:1
RAMP E STA. 922+50	20.9' LT	78.9	4	2:1	2:1
RAMP E STA. 923+00	20.5' LT	81.5	4	2:1	2:1
RAMP E STA. 923+50	19.9' LT	84.1	4	2:1	2:1
RAMP E STA. 924+00	21.1' LT	85.9	4	2:1	2:1
RAMP E STA. 924+50	22.0' LT	87.8	4	2:1	2:1
RAMP E STA. 925+00	20.8' LT	90.7	4	2:1	2:1
RAMP E STA. 925+50	19.4' LT	93.7	4	2:1	2:1
RAMP E STA. 926+00	17.8' LT	96.8	4	2:1	2:1
RAMP E STA. 926+50	16.3' LT	99.4	4	2:1	2:1
RAMP E STA. 918+50	25.5' LT	68.6	2	2:1	6:1
RAMP E STA. 919+00	56.0' LT	79.6	2	2:1	2:1
RAMP E STA. 919+24	63.5' LT	83.1	0	2:1	2:1
RAMP E STA. 919+50	64.9' LT	84.2	0	2:1	6:1
RAMP E STA. 920+00	66.2' LT	85.8	0	2:1	6:1
RAMP E STA. 920+50	65.2' LT	86.8	0	2:1	6:1
RAMP E STA. 921+00	63.4' LT	87.9	0	2:1	6:1
RAMP E STA. 921+50	63.9' LT	90.3	0	2:1	6:1
RAMP E STA. 922+00	61.3' LT	91.5	0	2:1	6:1
RAMP E STA. 922+50	58.2' LT	92.5	0	2:1	6:1
RAMP E STA. 923+00	54.6' LT	93.5	0	2:1	6:1
RAMP E STA. 923+50	50.5' LT	94.5	0	2:1	6:1
RAMP E STA. 924+00	45.7' LT	95.1	0	2:1	6:1
RAMP E STA. 922+00	64.3' RT	73.5	2	2:1	2:1
RAMP E STA. 922+50	63.2' RT	73.8	2	2:1	2:1
RAMP E STA. 923+00	62.5' RT	76.0	2	2:1	2:1
RAMP E STA. 923+50	65.3' RT	76.5	2	2:1	2:1
RAMP E STA. 924+00	68.1' RT	77.0	2	2:1	2:1
RAMP E STA. 924+50	70.8' RT	77.5	2	2:1	2:1
RAMP E STA. 925+00	74.3' RT	78.0	2	2:1	2:1
RAMP E STA. 925+50	78.0' RT	78.5	2	2:1	2:1
RAMP E STA. 926+00	79.9' RT	79.7	2	2:1	2:1
RAMP E STA. 926+50	81.4' RT	81.0	2	2:1	2:1
RAMP A STA. 1240+00	78.6' RT	97.4	0	2:1	6:1
RAMP A STA. 1240+50	78.9' RT	96.2	0	2:1	6:1
RAMP A STA. 1241+00	83.8' RT	92.8	0	2:1	6:1
RAMP A STA. 1241+50	87.1' RT	90.6	0	2:1	6:1
RAMP A STA. 1242+00	82.8' RT	91.9	0	2:1	6:1
RAMP A STA. 1242+50	81.5' RT	92.3	0	2:1	6:1
RAMP C1 STA. 1812+50	39.4' LT	73.5	0	VARIES	4:1
RAMP C1 STA. 1813+00	50.9' LT	68.0	0	VARIES	4:1
RAMP C1 STA. 1813+50	30.5' LT	66.0	0	4:1	2:1
RAMP C1 STA. 1814+00	31.2' LT	65.0	0	4:1	4:1
RAMP C STA. 1113+00	50.2' RT	82.7	0	2:1	6:1
RAMP C STA. 1113+50	52.3' RT	84.3	0	2:1	6:1
RAMP C STA. 1113+87.4	53.3' RT	86.0	0	2:1	6:1
RAMP E1 STA. 1011+00	17.0' LT	71.6	2	2:1	2:1
RAMP E1 STA. 1011+50	13.5' LT	73.9	0	6:1	6:1
RAMP E1 STA. 1011+00	32.0' RT	72.1	2	2:1	2:1
RAMP E1 STA. 1011+50	35.9' RT	70.5	2	2:1	2:1
RAMP E1 STA. 1012+00	37.3' RT	73.3	0	4:1	EX. GR.
RAMP B1 STA. 505+25	11.8' LT	109.1	0	4:1	4:1
RAMP B1 STA. 505+50	13.7' LT	108.8	4	3:1	3:1

UNOFFICIAL WEBSITE COPY

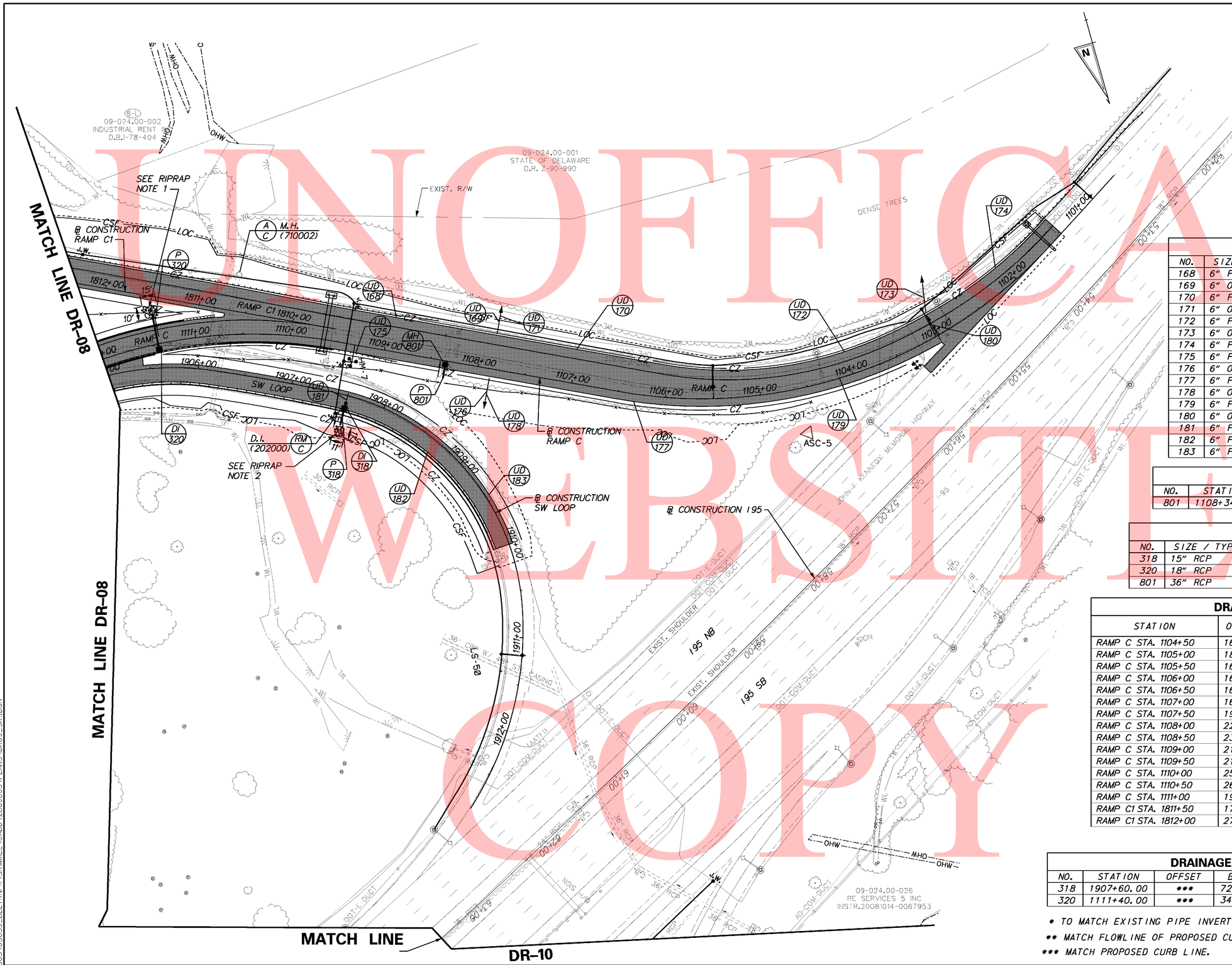

UNOFFICIAL WEBSITE COPY

RIPRAP NOTES:

1. RAMP C STA. 1111+34, 32' RT.:
   INSTALL R-5 RIPRAP DITCH OUTFALL
   SEE CONSTRUCTION DETAILS
   QUANTITY OF RIPRAP R-5 (712006) = 17 S.Y.

2. SW LOOP STA. 1907+58, 32' RT.:
   INSTALL R-5 RIPRAP DITCH
   SEE CONSTRUCTION DETAILS
   QUANTITY OF RIPRAP R-5 (712006) = 14 S.Y.

SOIL RETENTION BLANKET MULCH NOTES

1. RAMP C STA. 1104+50 LT. TO STA. 1110+00 LT.:
   INSTALL ONE ROLL WIDTH (6.6') SOIL RETENTION BLANKET MULCH, TYPE 5 (735535). QUANTITY = 478 S.Y.

2. RAMP C1 STA. 1811+00 LT. TO STA. 1812+14 LT.:
   INSTALL ONE ROLL WIDTH (6.6') SOIL RETENTION BLANKET MULCH, TYPE 5 (735535). QUANTITY = 85 S.Y.

UNDERDRAIN SCHEDULE

NO.	SIZE / TYPE	LENGTH	DIS. TYPE	DIS. EL.
168	6" PERFORATED	167.97	1107+86.87 RT	69.59
169	6" OUTLET	20.00	1107+86.87 RT	69.39
170	6" PERFORATED	264.27	1107+86.37 RT	69.59
171	6" OUTLET	20.00	1107+86.37 RT	69.39
172	6" PERFORATED	222.35	1103+00.00 RT	68.57
173	6" OUTLET	19.50	1103+00.00 RT	68.47
174	6" PERFORATED	150.00	CONNECT TO EX.	CONNECT TO EX.
175	6" PERFORATED	167.97	1107+86.87 LT	70.19
176	6" OUTLET	9.50	1107+86.87 LT	70.10
177	6" PERFORATED	264.27	1107+86.37 LT	70.19
178	6" OUTLET	9.50	1107+86.37 LT	70.10
179	6" PERFORATED	220.35	1103+00.00 RT	70.07
180	6" OUTLET	33.00	1103+00.00 RT	68.57
181	6" PERFORATED	19.00	DI-318	71.71
182	6" PERFORATED	240.00	DI-318	71.71
183	6" PERFORATED	240.00	1907+60.00 RT	72.28

MANHOLE SCHEDULE

NO.	STATION	OFFSET	SIZE / TYPE	T.C. EL.	INV. EL.
801	1108+34.50	-4.00	48" x 30"	73.33	*

DRAINAGE PIPE SCHEDULE

NO.	SIZE / TYPE	CLASS	LENGTH	SLOPE	INT. EL.	DIS. EL.
318	15" RCP	IV	19.50	0.0100	71.20	71.00
320	18" RCP	IV	37.60	0.0110	80.90	80.50
801	36" RCP	IV	12.00	*	68.20	*

DRAINAGE DITCH SCHEDULE

STATION	OFFSET	ELEV.	BOTTOM WIDTH	LEFT SIDE SLOPE	RIGHT SIDE SLOPE
RAMP C STA. 1104+50	16.5' LT	72.3	0	EX. GR.	4:1
RAMP C STA. 1105+00	18.3' LT	72.0	0	EX. GR.	4:1
RAMP C STA. 1105+50	16.7' LT	71.7	0	EX. GR.	3:1
RAMP C STA. 1106+00	16.9' LT	71.4	2'	2:1	2:1
RAMP C STA. 1106+50	16.7' LT	71.1	2'	2:1	2:1
RAMP C STA. 1107+00	16.7' LT	70.8	2'	2:1	2:1
RAMP C STA. 1107+50	19.2' LT	69.8	2'	2:1	2:1
RAMP C STA. 1108+00	22.4' LT	69.0	2'	2:1	2:1
RAMP C STA. 1108+50	23.8' LT	68.2	0	2:1	2:1
RAMP C STA. 1109+00	21.7' LT	71.4	0	EX. GR.	3:1
RAMP C STA. 1109+50	21.8' LT	71.9	0	3:1	3:1
RAMP C STA. 1110+00	25.4' LT	72.4	0	4:1	2.5:1
RAMP C STA. 1110+50	26.6' LT	72.9	0	4:1	4:1
RAMP C STA. 1111+00	19.2' LT	73.3	0	10:1	10:0
RAMP C1 STA. 1811+50	17.2' LT	81.3	0	VARIES	4:1
RAMP C1 STA. 1812+00	27.1' LT	78.2	0	VARIES	4:1

DRAINAGE INLET SCHEDULE

NO.	STATION	OFFSET	BOX SIZE / TOP	GRATE	T.G. EL.	INV. EL.
318	1907+60.00	***	72" x 24" TYPE C	1	**	71.20
320	1111+40.00	***	34" x 24" TYPE A MOD.	1	**	80.90

* TO MATCH EXISTING PIPE INVERT ELEVATION.

** MATCH FLOWLINE OF PROPOSED CURB AND GUTTER.

*** MATCH PROPOSED CURB LINE.

10/13/2010 2:44:03 PM
M:\PROJECTS\2003\03059_DELTRNPK\SRIMALL\CADD\2809003\PLANS\DR09_SR1.DGN

DELAWARE DEPARTMENT OF TRANSPORTATION

ADDENDUMS / REVISIONS

SCALE 0 50 100 150 FEET

SR1 / I-95 INTERCHANGE

CONTRACT	BRIDGE NO.
28-090-03	DESIGNED BY:
COUNTY	
NEW CASTLE	CHECKED BY:

DRAINAGE PLAN

DR-09
SHEET NO.
138
TOTAL SHTS.
803

DRAINAGE INLET SCHEDULE

NO.	STATION	OFFSET	BOX SIZE / TOP	GRATE	T.G. EL.	INV. EL.
125	1122+50.00	***	34" x 24" TYPE A MOD.	1	**	69.05

** MATCH FLOWLINE OF PROPOSED CURB AND GUTTER.
*** MATCH PROPOSED CURB LINE.

UNDERDRAIN SCHEDULE

NO.	SIZE / TYPE	LENGTH	DIS. TYPE	DIS. EL.
184	6" PERFORATED	138.06	DI-125	70.58
185	6" PERFORATED	330.23	CONNECT TO EX.	CONNECT TO EX.
186	6" PERFORATED	350.00	2106+50.00 RT	66.48
187	6" OUTLET	23.00	2106+50.00 RT	66.25
188	6" PERFORATED	XX.XX	XXXXXXX	XX.XX

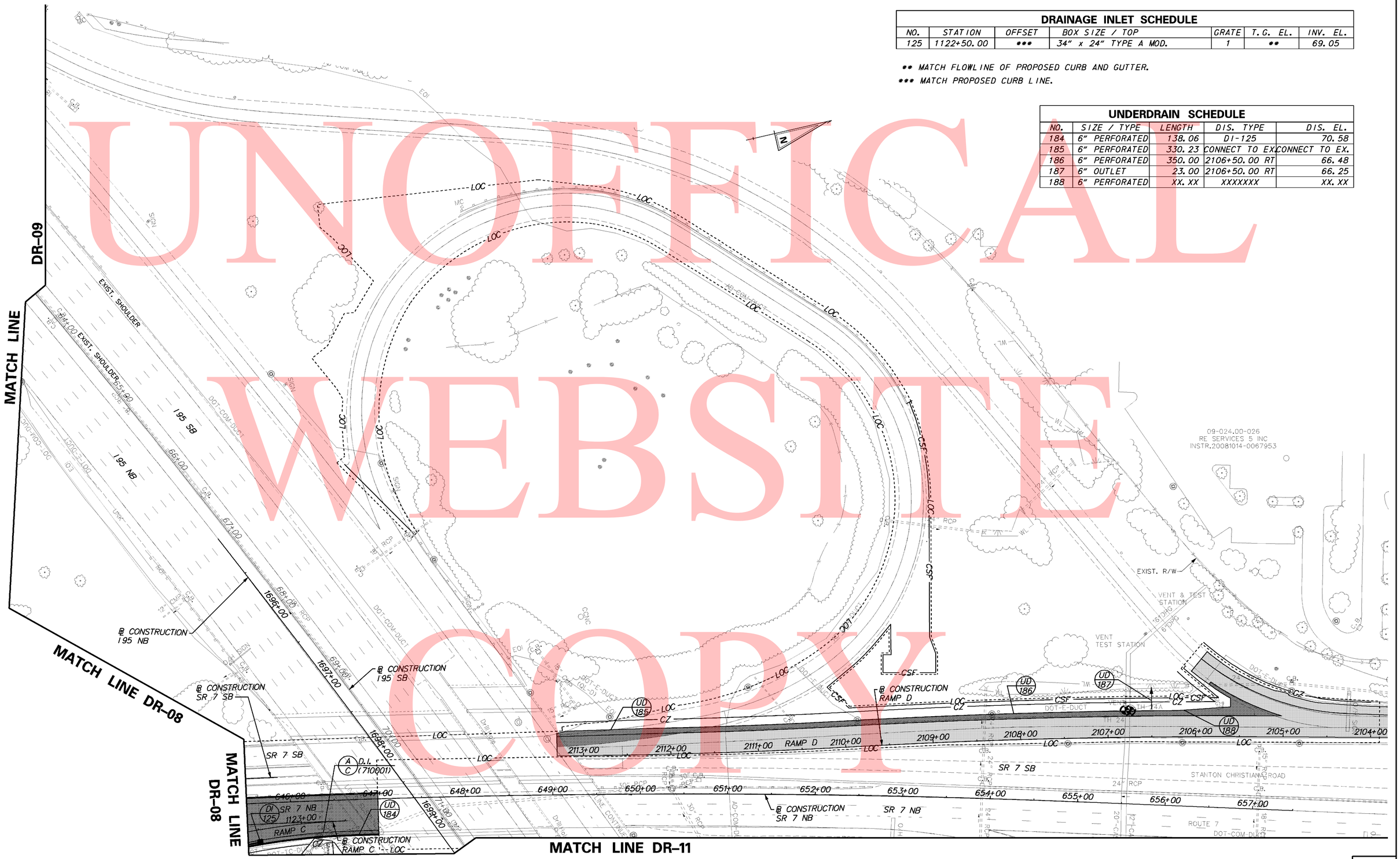

UNOFFICAL WEBSITE COPY

10/13/2010 2:50:37 PM
M:\PROJECTS\2003\03059_DELTRNPK\SRIMALL\CADD\2809003\PLANS\DR10_SR1.DGN

DELAWARE DEPARTMENT OF TRANSPORTATION

ADDENDUMS / REVISIONS

SCALE 0 50 100 150 FEET

SR1 / I-95 INTERCHANGE

CONTRACT	BRIDGE NO.
28-090-03	DESIGNED BY:
COUNTY	CHECKED BY:
NEW CASTLE	

DRAINAGE PLAN

DR-10
SHEET NO.
139
TOTAL SHTS.
803

NOTES:

1. SEE SHEET 141 FOR INLET, PIPE, AND MANHOLE SCHEDULES FOR THIS PLAN SHEET.

RIPRAP NOTES:

1. RAMP B1 STA. 509+93 TO STA. 511+10, LT.:
   INSTALL R-6 RIPRAP DITCH. SEE CONSTRUCTION DETAILS
   QUANTITY OF RIPRAP R-6 (712007) = 119 S.Y.
2. NB I-95 STA. 1703+92, RT.:
   INSTALL R-5 RIPRAP DITCH. SEE CONSTRUCTION DETAILS
   QUANTITY OF RIPRAP R-6 (712006) = 14 S.Y.

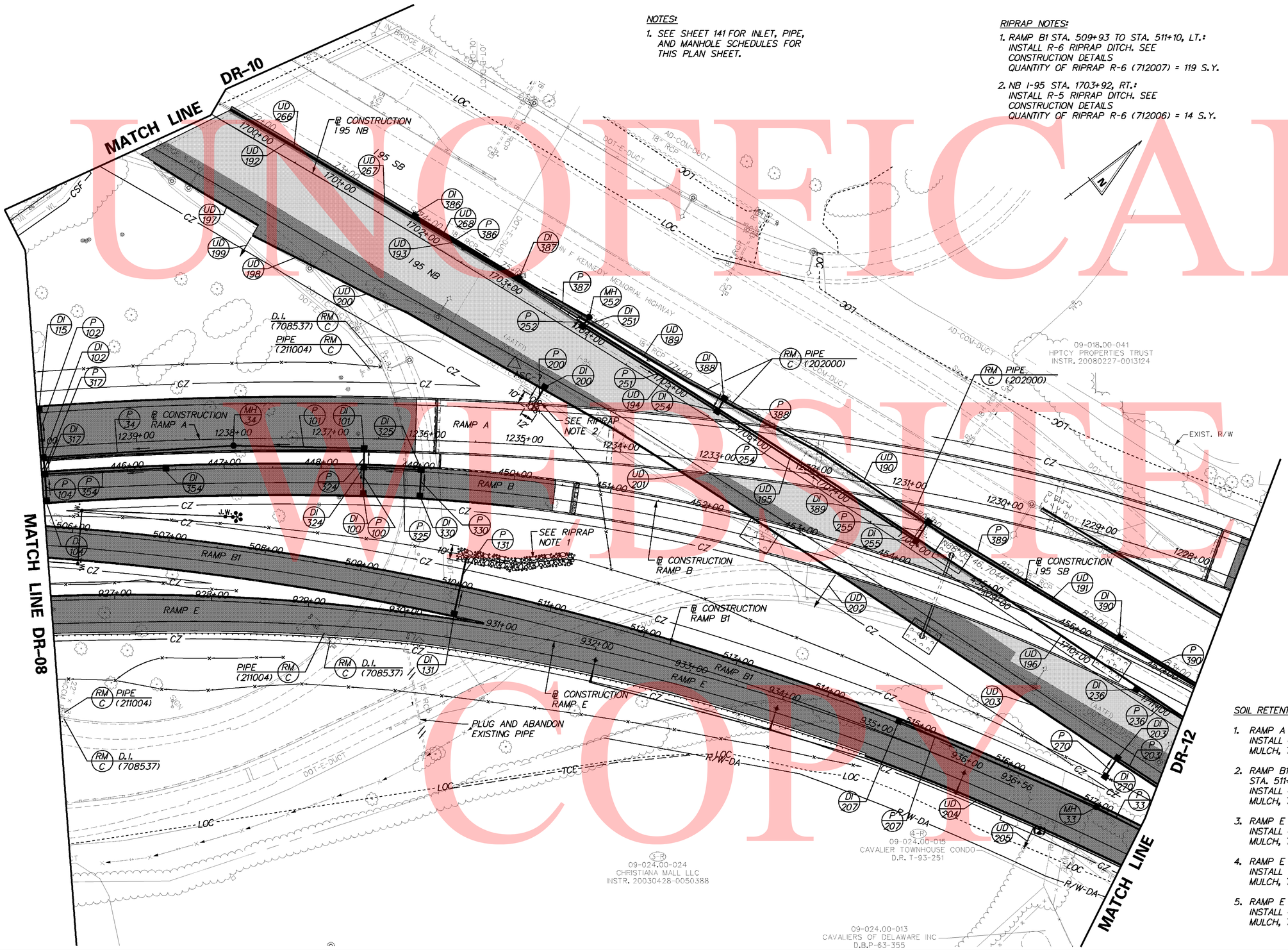

SOIL RETENTION BLANKET MULCH NOTES

1. RAMP A STA. 1236+50 RT. TO STA. 1240+00 RT.:
   INSTALL ONE ROLL WIDTH (6.6') SOIL RETENTION BLANKET MULCH, TYPE 5 (735535). QUANTITY = 264 S.Y.
2. RAMP B1 STA. 505+70 LT. TO STA. 509+93 LT. AND STA. 511+10 LT. TO STA. 517+48 LT.:
   INSTALL ONE ROLL WIDTH (6.6') SOIL RETENTION BLANKET MULCH, TYPE 5 (735535). QUANTITY = 789 S.Y.
3. RAMP E STA. 926+34 LT. TO STA. 928+25 LT.:
   INSTALL ONE ROLL WIDTH (6.6') SOIL RETENTION BLANKET MULCH, TYPE 5 (735535). QUANTITY = 142 S.Y.
4. RAMP E STA. 926+38 RT. TO STA. 935+00 RT.:
   INSTALL TWO ROLL WIDTHS (13.2') SOIL RETENTION BLANKET MULCH, TYPE 5 (735535). QUANTITY = 1,230 S.Y.
5. RAMP E STA. 927+00 RT. TO STA. 928+78 RT.:
   INSTALL ONE ROLL WIDTH (6.6') SOIL RETENTION BLANKET MULCH, TYPE 5 (735535). QUANTITY = 130 S.Y.

UNOFFICAL WEBSITE COPY

DELAWARE DEPARTMENT OF TRANSPORTATION	ADDENDUMS / REVISIONS	SCALE 0 50 100 150 FEET	SR1 / I-95 INTERCHANGE	CONTRACT 28-090-03 / COUNTY NEW CASTLE	BRIDGE NO. / DESIGNED BY: / CHECKED BY:	DRAINAGE PLAN	DR-11 / SHEET NO. 140 / TOTAL SHTS. 803

9/10/2010 10:58:58 AM
M:\PROJECTS\2003\03059_DELTRNPK\SRIMALL\CADD\2809003\PLANS\DR11_SR1.DGN

DRAINAGE PIPE SCHEDULE

NO.	SIZE / TYPE	CLASS	LENGTH	SLOPE	INT. EL.	DIS. EL.
33	15" RCP	IV	220.40	0.0290	87.10	80.80
34	18" RCP	IV	192.10	0.0110	109.80	107.60
100	18" RCP	IV	24.50	0.0080	111.40	111.20
101	18" RCP	IV	125.40	0.0050	110.70	110.10
102	18" RCP	IV	47.00	0.0090	106.40	106.00
104	18" RCP	IV	25.00	0.0080	107.10	106.90
131	18" RCP	IV	61.40	0.0610	104.75	101.00
200	15" RCP	IV	15.00	0.0130	90.30	90.10
203	24" RCP	IV	223.50	0.0040	74.00	73.20
207	15" RCP	IV	217.70	0.0300	93.75	87.30
236	24" RCP	IV	106.40	0.0170	80.20	78.40
251	18" RCP	IV	158.70	0.0060	87.00	86.00
252	18" RCP	IV	7.80	0.0130	87.30	87.20
254	18" RCP	IV	239.90	0.0090	85.50	83.30
255	18" RCP	IV	19.60	0.0050	82.70	82.60
270	18" RCP	IV	20.00	0.0050	74.30	74.20
317	18" RCP	IV	13.70	0.0070	106.70	106.60
324	18" RCP	IV	15.30	0.0070	111.00	110.90
325	18" RCP	IV	53.60	0.0070	111.80	111.40
330	18" RCP	IV	23.00	0.0090	112.20	112.00
354	15" RCP	IV	119.60	0.0180	109.80	107.70
386	18" RCP	IV	119.00	0.0100	89.30	88.10
387	18" RCP	IV	78.50	0.0050	87.90	87.50
388	18" RCP	IV	11.20	0.0090	86.10	86.00
389	18" RCP	IV	223.40	0.0110	82.40	80.00
390	18" RCP	IV	149.20	0.0100	79.50	78.00

DRAINAGE INLET SCHEDULE

NO.	STATION	OFFSET	BOX SIZE / TOP	GRATE	T.G. EL.	INV. EL.
100	448+45.00	***	34" x 24" TYPE A MOD.	1	**	111.40
101	1236+65.00	***	72" x 48" TYPE A MOD.	1	**	110.70
102	1239+97.00	***	48" x 30" TYPE A MOD.	1	**	106.40
104	445+15.00	***	34" x 24" TYPE A MOD.	1	**	107.10
115	1239+97.00	***	48" x 30" TYPE A MOD.	1	**	105.50
131	510+02.00	***	34" x 24" TYPE A MOD.	1	**	104.75
200	1703+92.00	***	72" x 24" TYPE A MOD.	1	**	90.30
203	1710+98.00	***	SPECIAL VIII, TYPE A MOD.	1	**	74.00
207	514+78.00	***	34" x 24" TYPE A MOD.	1	**	93.75
236	1710+74.56	***	72" x 48" TYPE A MOD.	1	**	80.20
251	1703+92.00	***	72" x 48" TYPE A MOD.	1	**	87.00
254	1705+55.50	***	48" x 48" TYPE A MOD.	1	**	85.50
255	1708+00.00	***	48" x 48" TYPE A MOD.	1	**	82.70
270	1710+98.00	83.00	34" x 24" TYPE A	1	80.00	74.30
317	445+15.00	***	34" x 24" TYPE A MOD.	1	**	106.70
324	448+45.00	***	48" x 30" TYPE A MOD.	1	**	111.00
325	449+00.00	***	72" x 48" TYPE A MOD.	1	**	111.80
330	449+00.00	***	72" x 24" TYPE A MOD.	1	**	112.20
354	446+40.00	***	72" x 24" TYPE A MOD.	1	**	109.80
386	1701+84.00	***	72" x 48" TYPE A MOD.	1	**	89.30
387	1703+08.50	***	48" x 30" TYPE A MOD.	1	**	87.90
388	1705+54.50	***	72" x 24" TYPE A MOD.	1	**	86.10
389	1708+00.00	***	72" x 48" TYPE A MOD.	1	**	82.40
390	1710+30.00	***	72" x 48" TYPE A MOD.	1	**	79.50

MANHOLE SCHEDULE

NO.	STATION	OFFSET	SIZE / TYPE	T.C. EL.	INV. EL.
33	517+00.00	2.00	48" x 30"	91.70	87.10
34	1238+00.00	-7.00	48" x 30"	117.69	109.80
252	1703+92.00	-21.50	48" x 30"	93.61	87.30

* TO BE VERIFIED BY ENGINEER IN THE FIELD.

** MATCH FLOWLINE OF PROPOSED CURB AND GUTTER.

*** MATCH PROPOSED CURB LINE.

UNDERDRAIN SCHEDULE

NO.	SIZE / TYPE	LENGTH	DIS. TYPE	DIS. EL.
189	6" PERFORATED	246.00	DI-388	87.35
190	6" PERFORATED	245.50	DI-389	84.44
191	6" PERFORATED	230.00	DI-390	81.81
192	6" PERFORATED	149.73	CONNECT EX.	CONNECT EX.
193	6" PERFORATED	277.95	DI-251	90.05
194	6" PERFORATED	163.50	DI-254	88.18
195	6" PERFORATED	244.50	DI-255	85.20
196	6" PERFORATED	274.56	DI-236	81.93
197	6" PERFORATED	126.89	CONNECT EX.	CONNECT EX.
198	6" PERFORATED	51.05	1700+50.00 RT	91.21
199	6" OUTLET	25.00	1700+50.00 RT	90.96
200	6" PERFORATED	277.95	DI-200	89.90
201	6" PERFORATED	358.00	1707+50.00 RT	85.72
202	6" OUTLET	75.50	1707+50.00 RT	84.96
203	6" PERFORATED	348.00	DI-203	81.57
204	6" PERFORATED	191.25	516+50.00 RT	88.33
205	6" OUTLET	11.50	516+50.00 RT	88.22
266	6" PERFORATED	149.73	CONNECT EX.	CONNECT EX.
267	6" PERFORATED	69.95	DI-386	90.71
268	6" PERFORATED	124.50	DI-387	89.92

DRAINAGE DITCH SCHEDULE

STATION	OFFSET	ELEV.	BOTTOM WIDTH	LEFT SIDE SLOPE	RIGHT SIDE SLOPE
RAMP E STA. 926+50	16.3' LT	99.4	4	2:1	2:1
RAMP E STA. 927+00	17.2' LT	101.8	4	2:1	2:1
RAMP E STA. 927+50	16.9' LT	103.9	4	2:1	2:1
RAMP E STA. 928+00	12.1' LT	105.5	4	2:1	2:1
RAMP E STA. 928+25	11.5' LT	106.1	4	2:1	2:1
RAMP E STA. 926+50	81.4' RT	81.0	2	2:1	2:1
RAMP E STA. 927+00	83.7' RT	81.5	2	2:1	2:1
RAMP E STA. 927+50	92.5' RT	82.0	2	2:1	2:1
RAMP E STA. 928+00	92.4' RT	82.5	2	2:1	2:1
RAMP E STA. 928+50	86.1' RT	84.5	2	2:1	2:1
RAMP E STA. 929+00	80.0' RT	84.8	2	2:1	2:1
RAMP E STA. 929+50	78.6' RT	85.1	2	2:1	2:1
RAMP E STA. 930+00	76.8' RT	85.4	2	2:1	2:1
RAMP E STA. 930+50	75.4' RT	85.7	2	2:1	2:1
RAMP E STA. 931+00	73.8' RT	86.0	2	2:1	2:1
RAMP E STA. 931+50	71.4' RT	86.5	2	2:1	2:1
RAMP E STA. 932+00	68.3' RT	87.0	2	2:1	2:1
RAMP E STA. 932+50	64.7' RT	87.5	2	2:1	2:1
RAMP E STA. 933+00	60.9' RT	88.0	2	2:1	2:1
RAMP E STA. 933+50	57.1' RT	88.5	2	2:1	2:1
RAMP E STA. 934+00	51.2' RT	90.0	2	2:1	2:1
RAMP E STA. 934+50	46.4' RT	91.0	2	2:1	2:1
RAMP E STA. 927+50	60.0' RT	93.7	0	2:1	6:1
RAMP E STA. 928+00	59.7' RT	94.3	0	2:1	6:1
RAMP E STA. 928+50	56.1' RT	96.3	0	2:1	6:1
RAMP B1 STA. 506+00	17.0' LT	108.4	4	3:1	3:1
RAMP B1 STA. 506+50	20.1' LT	108.0	4	3:1	3:1
RAMP B1 STA. 507+00	22.9' LT	107.2	4	3:1	3:1
RAMP B1 STA. 507+50	25.7' LT	106.4	4	3:1	3:1
RAMP B1 STA. 508+00	28.2' LT	105.5	4	3:1	3:1
RAMP B1 STA. 508+50	30.7' LT	104.4	4	3:1	3:1
RAMP B1 STA. 509+00	33.3' LT	103.2	4	3:1	3:1
RAMP B1 STA. 509+50	35.2' LT	102.1	4	3:1	3:1
RAMP B1 STA. 510+00	36.5' LT	101.0	4	3:1	3:1
RAMP B1 STA. 510+50	37.9' LT	100.0	4	3:1	3:1
RAMP B1 STA. 511+00	55.1' LT	86.5	4	3:1	3:1
RAMP B1 STA. 511+50	57.9' LT	85.5	4	2:1	2:1
RAMP B1 STA. 512+00	57.0' LT	85.0	4	2:1	2:1
RAMP B1 STA. 512+50	55.2' LT	84.5	4	2:1	2:1
RAMP B1 STA. 513+00	48.5' LT	84.0	4	2:1	2:1
RAMP B1 STA. 513+50	46.6' LT	83.5	4	2:1	2:1
RAMP B1 STA. 514+00	44.7' LT	83.0	4	2:1	2:1
RAMP B1 STA. 514+50	42.8' LT	82.5	4	2:1	2:1
RAMP B1 STA. 515+00	40.9' LT	82.0	4	2:1	2:1
RAMP B1 STA. 515+50	39.0' LT	81.5	4	2:1	2:1
RAMP B1 STA. 516+00	37.1' LT	81.0	4	2:1	2:1
RAMP B1 STA. 516+50	35.2' LT	80.5	4	2:1	2:1
RAMP B1 STA. 517+00	34.0' LT	80.0	4	2:1	2:1
RAMP B1 STA. 517+50	32.3' LT	83.8	4	2:1	2:1
RAMP A STA. 1236+50	74.4' RT	108.4	0	2:1	6:1
RAMP A STA. 1237+00	78.2' RT	105.5	0	2:1	6:1
RAMP A STA. 1237+50	78.4' RT	104.3	0	2:1	6:1
RAMP A STA. 1238+00	78.0' RT	103.2	0	2:1	6:1
RAMP A STA. 1238+50	78.3' RT	101.6	0	2:1	6:1
RAMP A STA. 1239+00	78.6' RT	99.9	0	2:1	6:1
RAMP A STA. 1239+50	78.6' RT	98.6	0	2:1	6:1
RAMP A STA. 1240+00	78.5' RT	97.4	0	2:1	6:1
I-95 NB STA. 1704+00	88.2' RT	90.1	2	2:1	2:1
I-95 NB STA. 1704+50	101.3' RT	88.8	2	2:1	2:1
I-95 NB STA. 1704+85.8	111.5' RT	87.9	2	2:1	2:1
I-95 NB STA. 1705+00	127.2' RT	87.4	2	2:1	2:1
I-95 NB STA. 1705+50	185.0' RT	85.5	2	2:1	2:1

UNOFFICIAL WEBSITE COPY

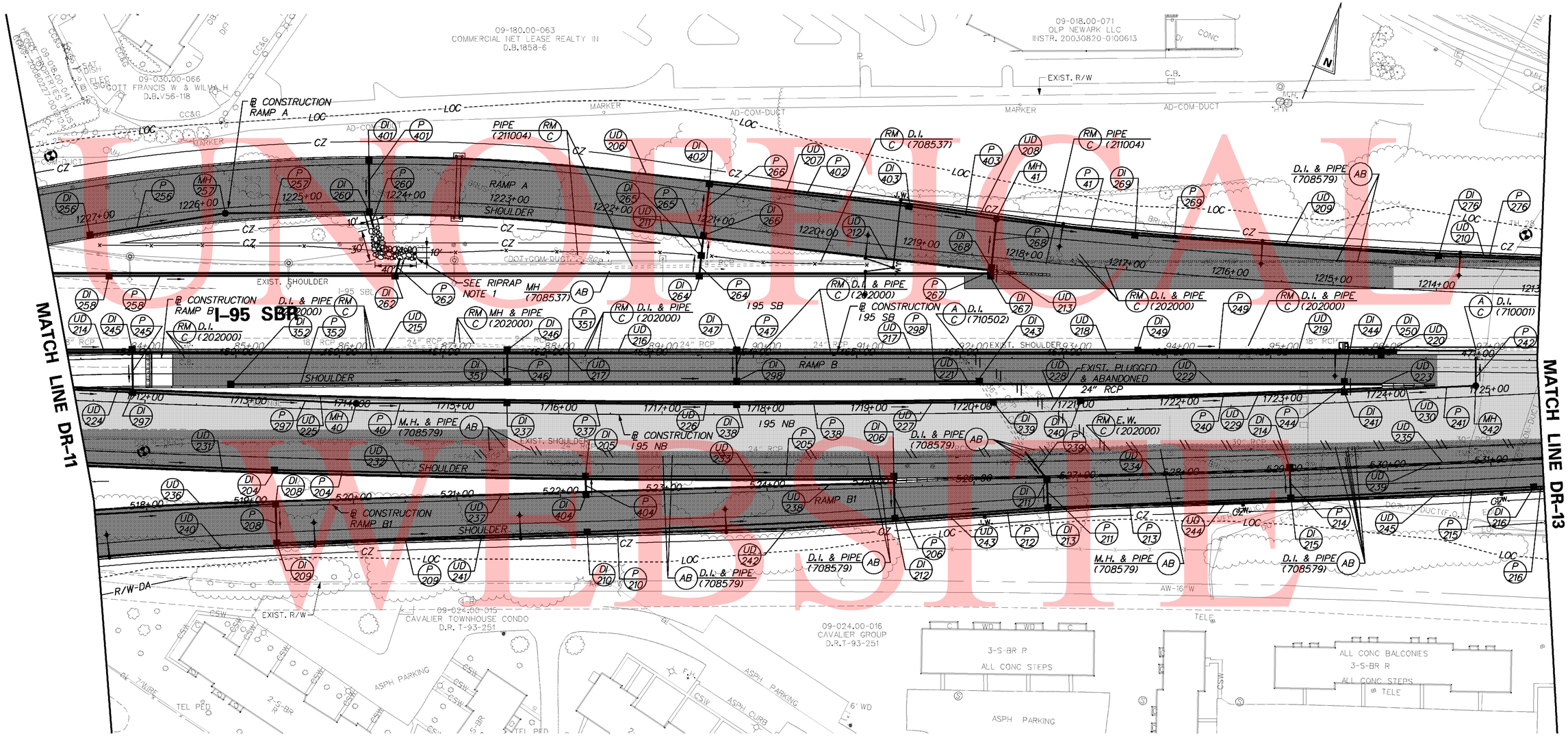

DRAINAGE DITCH SCHEDULE

STATION	OFFSET	ELEV.	BOTTOM WIDTH	LEFT SIDE SLOPE	RIGHT SIDE SLOPE
RAMP A STA. 1219+50	20. 7' LT	77. 0	0	10: 1	10: 1
RAMP A STA. 1220+00	25. 2' LT	76. 5	0	6: 1	6: 1
RAMP A STA. 1220+50	29. 4' LT	76. 3	2	4: 1	4: 1
RAMP A STA. 1221+00	29. 0' LT	76. 0	2	2: 1	2: 1
RAMP A STA. 1221+50	31. 0' LT	76. 3	2	2: 1	2: 1
RAMP A STA. 1222+00	36. 5' LT	76. 5	2	2: 1	2: 1
RAMP A STA. 1222+50	41. 0' LT	76. 75	2	2: 1	2: 1
RAMP A STA. 1223+00	43. 5' LT	77. 0	2	2: 1	2: 1
RAMP A STA. 1223+50	48. 0' LT	77. 25	2	2: 1	2: 1
RAMP A STA. 1224+00	49. 5' LT	77. 5	2	2: 1	2: 1
RAMP A STA. 1224+50	46. 0' LT	79. 2	0	2: 1	2: 1
RAMP A STA. 1225+00	41. 4' LT	80. 7	0	EX. GR.	EX. GR.
RAMP A STA. 1225+50	38. 8' LT	81. 1	0	EX. GR.	EX. GR.
RAMP A STA. 1226+00	33. 7' LT	81. 3	0	EX. GR.	EX. GR.
RAMP A STA. 1226+50	28. 5' LT	81. 5	0	4: 1	10: 1
RAMP A STA. 1227+00	21. 2' LT	83. 2	0	10: 1	10: 1
RAMP B1 STA. 531+00	57. 7' RT	82. 5	0	6: 1	6: 1

NOTES:

1. SEE SHEET 143 FOR INLET, PIPE, & MANHOLE SCHEDULES FOR THIS PLAN SHEET.
2. THE CONTRACTOR SHALL EXTEND EXISTING 24" CPP TO STRUCTURES DI-211 AND DI-248 USING A CONSTRUCTION METHOD AS APPROVED BY THE ENGINEER. ALL COSTS ASSOCIATED WITH EXTENDING THE PIPE, INCLUDING OBTAINING ENGINEER APPROVAL ON THE CONSTRUCTION METHOD, SHALL BE INCIDENTAL TO THE NEW 24" RCP BEING INSTALLED.
3. THE RIGHT INLET OPENING IN THE COVERSLAB OF THE EXISTING INLET AT STA. 466+02.5 SHALL BE SEALED IN ACCORDANCE WITH THE DETAIL SHOWN ON SHEET 189.

SOIL RETENTION BLANKET MULCH NOTES

1. RAMP A STA. 1219+50 LT. TO STA. 1223+90 LT. AND STA. 1224+30 LT. TO STA. 1227+00 LT.:
   INSTALL ONE ROLL WIDTH (6.6') SOIL RETENTION BLANKET MULCH, TYPE 5 (735535). QUANTITY = 516 S.Y.
2. RAMP B1 STA. 517+48 LT. TO STA. 517+65 LT.:
   INSTALL ONE ROLL WIDTH (6.6') SOIL RETENTION BLANKET MULCH, TYPE 5 (735535). QUANTITY = 13 S.Y.
3. RAMP B1 STA. 531+00 RT. TO STA. 531+50 RT.:
   INSTALL ONE ROLL WIDTH (6.6') SOIL RETENTION BLANKET MULCH, TYPE 5 (735535). QUANTITY = 52 S.Y.

RIPRAP NOTES:

RAMP A STA. 1224+31, 25' LT.:
INSTALL R-5 RIPRAP DITCH FROM OUTLET OF P-260 DOWN THE SLOPE TO 18' BEYOND THE OUTLET OF P-262. RAMP A STA. 1224+06, 53' RT. SEE CONSTRUCTION DETAILS
QUANTITY OF RIPRAP R-5 (712006) = 78 S.Y.

UNOFFICIAL WEBSITE COPY

DELAWARE DEPARTMENT OF TRANSPORTATION

ADDENDUMS / REVISIONS

SCALE 0 50 100 150 FEET

SR1 / I-95 INTERCHANGE

CONTRACT	BRIDGE NO.
28-090-03	DESIGNED BY:
COUNTY	CHECKED BY:
NEW CASTLE	

DRAINAGE PLAN

DR-12
SHEET NO.
142
TOTAL SHTS.
803

10/28/2010 10:01:45 AM
M:\PROJECTS\2003\03059_DELTRNPK\SRIMALL\CADD\2809003\PLANS\DR12_SR1.DGN

DRAINAGE PIPE SCHEDULE

NO.	SIZE / TYPE	CLASS	LENGTH	SLOPE	INT. EL.	DIS. EL.
40	24" RCP	IV	139.80	0.0050	75.10	74.40
41	24" RCP	IV	129.50	0.0060	68.00	67.20
204	24" RCP	IV	293.80	0.0020	72.80	72.10
205	24" RCP	IV	291.00	0.0040	71.90	70.70
206	24" RCP	IV	35.70	0.0200	70.30	69.60
208	18" RCP	IV	33.50	0.0150	80.60	80.10
209	18" RCP	IV	293.00	0.0200	79.60	73.75
210	18" RCP	IV	290.80	0.0130	73.30	69.60
211	30" RCP	IV	22.10	0.0090	66.10	65.90
212	24" RCP	IV	141.10	0.0120	68.60	66.90
213	36" RCP	IV	228.00	0.0070	65.70	64.00
214	18" RCP	IV	25.00	0.0080	64.90	64.70
215	36" RCP	IV	228.00	0.0080	63.10	61.25
216	36" RCP	IV	252.20	0.0100	60.70	58.20
237	24" RCP	IV	215.00	0.0090	74.00	72.10
238	24" RCP	IV	241.00	0.0100	71.70	69.25
239	24" RCP	IV	32.40*	0.0090*	66.79*	66.60
240	15" RCP	IV	249.60	0.0060	68.00	66.60
241	18" RCP	IV	121.10	0.0030	66.40	66.00
242	18" RCP	IV	31.00*	0.0050*	65.80	65.63*
244	18" RCP	IV	6.40	0.0160	66.70	66.60
245	18" RCP	IV	37.60	0.0050	77.40	77.20
246	18" RCP	V	26.40	0.0060	75.90	75.75
247	18" RCP	V	24.40	0.0060	73.15	73.00
249	18" RCP	IV	229.00	0.0090	68.80	66.70
256	15" RCP	IV	126.30	0.0570	104.40	97.20
257	15" RCP	IV	133.20	0.0410	97.00	91.50
258	18" RCP	IV	269.30	0.0040	79.00	77.90
260	18" RCP	IV	13.20	0.0380	86.00	85.50
262	18" RCP	IV	16.10	0.0120	77.70	77.50
264	18" RCP	IV	15.50	0.0100	71.30	71.15
265	24" RCP	IV	17.10	0.0060	70.95	70.85
266	24" RCP	IV	45.70	0.0050	70.65	70.40
267	18" RCP	IV	4.50	0.0110	68.55	68.50
268	18" RCP	IV	43.50	0.0070	68.50	68.20
269	24" RCP	IV	287.30	0.0080	66.70	64.40
276	30" RCP	IV	163.20	0.0130	63.80	61.75
297	24" RCP	IV	210.00	0.0070	77.00	75.50
298	18" RCP	V	226.70	0.0100	72.60	70.40
351	18" RCP	V	214.50	0.0120	75.55	73.00
352	18" RCP	IV	260.70	0.0380	106.94	96.92
401	18" RCP	IV	48.00	0.0630	94.50	91.50
402	24" RCP	IV	188.10	0.0070	70.20	68.80
403	24" RCP	IV	80.00	0.0050	68.60	68.20
404	18" RCP	IV	13.80	0.0140	73.50	73.30

DRAINAGE INLET SCHEDULE

NO.	STATION	OFFSET	BOX SIZE / TOP	GRATE	T.G. EL.	INV. EL.
204	1713+27.00	***	72" x 48" TYPE A MOD.	1	**	72.80
205	1716+27.00	***	72" x 48" TYPE A MOD.	1	**	71.90
206	1719+23.50	***	72" x 48" TYPE A MOD.	1	**	70.30
208	519+25.00	***	34" x 24" TYPE A MOD.	1	**	80.60
209	519+25.00	***	72" x 48" TYPE A MOD.	1	**	79.60
210	522+25.00	***	72" x 48" TYPE A MOD.	1	**	73.30
211	526+72.00	***	48" x 48" TYPE A MOD.	1	**	66.10
212	525+23.00	***	72" x 48" TYPE A MOD.	1	**	68.60
213	526+72.00	***	72" x 48" TYPE A MOD.	1	**	65.70
214	1723+04.00	***	72" x 24" TYPE A MOD.	1	**	64.90
215	529+05.00	***	72" x 48" TYPE A MOD.	1	**	63.10
216	531+42.00	***	72" x 48" TYPE A MOD.	1	**	60.70
237	1715+50.00	***	72" x 48" TYPE A MOD.	1	**	74.00
238	1717+72.00	***	72" x 48" TYPE A MOD.	1	**	71.70
239	1720+20.00	***	72" x 48" TYPE A MOD.	1	**	67.13*
240	1721+05.00	***	34" x 24" TYPE A MOD.	1	**	68.00
241	1723+60.00	***	72" x 48" TYPE A MOD.	1	**	66.40
243	466+18.00	***	SPECIAL X, TYPE A MOD.	1	**	67.28*
244	469+72.00	***	72" x 24" TYPE A MOD.	1	**	66.70
245	458+00.00	***	72" x 48" TYPE A MOD.	1	**	77.40
246	461+63.00	***	72" x 24" TYPE A MOD.	1	**	75.90
247	463+84.00	***	72" x 24" TYPE A MOD.	1	**	73.15
249	467+71.50	***	48" x 30" TYPE A MOD.	1	**	68.80
250	470+06.50	***	SPECIAL II, TYPE A MOD.	1	**	66.46*
256	1227+08.00	***	72" x 24" TYPE A MOD.	1	**	104.40
258	83+65.00	***	72" x 48" TYPE A MOD.	1	**	79.00
260	1224+35.00	***	72" x 24" TYPE A MOD.	1	**	86.00
262	86+41.00	***	72" x 48" TYPE A MOD.	1	**	77.70
264	89+35.00	***	72" x 24" TYPE A MOD.	1	**	71.30
265	1221+10.00	-29.50	72" x 24" TYPE A	1	76.00	70.95
266	1221+10.00	***	72" x 24" TYPE A MOD.	1	**	70.65
267	92+17.00	***	72" x 24" TYPE A MOD.	1	**	68.55
268	1218+30.00	***	72" x 24" TYPE A MOD.	1	**	68.50
269	1216+95.00	***	72" x 48" TYPE A MOD.	1	**	66.70
276	1213+99.00	***	72" x 48" TYPE A MOD.	1	**	63.80
297	1711+88.00	***	72" x 48" TYPE A MOD.	1	**	77.00
298	463+84.00	***	SPECIAL X, TYPE A MOD.	1	**	72.60
351	461+63.00	***	SPECIAL XI, TYPE A MOD.	1	**	75.55
352	458+94.00	***	72" x 24" TYPE A MOD.	1	**	106.94
401	1224+35.00	***	72" x 24" TYPE A MOD.	1	**	94.50
402	1221+10.00	***	SPECIAL VI, TYPE A MOD.	1	**	70.20
403	1219+16.00	***	72" x 48" TYPE A MOD.	1	**	68.60
404	522+25.00	***	34" x 24" TYPE A MOD.	1	**	73.50

MANHOLE SCHEDULE

NO.	STATION	OFFSET	SIZE / TYPE	T.C. EL.	INV. EL.
40	1714+03.00	-6.00	48" ROUND	82.42	75.10
41	1218+30.00	37.00	48" x 30"	73.69	68.00
242	1724+84.00	-10.46	48" x 30"	70.38	65.80
257	1225+75.00	-5.00	48" x 30"	103.57	97.00

* TO BE VERIFIED BY ENGINEER IN THE FIELD.

** MATCH FLOWLINE OF PROPOSED CURB AND GUTTER.

*** MATCH PROPOSED CURB LINE.

UNDERDRAIN SCHEDULE

NO.	SIZE / TYPE	LENGTH	DIS. TYPE	DIS. EL.
206	6" PERFORATED	290.00	DI-402	79.23
207	6" PERFORATED	194.00	DI-403	72.24
208	6" PERFORATED	221.00	DI-269	68.01
209	6" PERFORATED	296.00	DI-276	65.25
210	6" PERFORATED	170.50	DI-275	63.39
211	6" PERFORATED	290.00	DI-266	78.56
212	6" PERFORATED	280.00	DI-268	71.98
213	6" PERFORATED	24.30	DI-268	71.74
214	6" PERFORATED	155.62	DI-245	80.12
215	6" PERFORATED	363.00	DI-246	76.34
216	6" PERFORATED	221.00	DI-247	73.74
217	6" PERFORATED	218.50	DI-248	71.50
218	6" PERFORATED	169.00	DI-249	69.30
219	6" PERFORATED	235.00	DI-250	66.66
220	6" PERFORATED	15.00	XXXXXXX	XX.XX
221	6" PERFORATED	38.00	DI-243	81.44
222	6" PERFORATED	354.00	DI-244	69.35
223	6" PERFORATED	86.88	DI-244	67.18
224	6" PERFORATED	113.44	DI-297	80.57
225	6" PERFORATED	362.00	DI-237	76.26
226	6" PERFORATED	222.00	DI-238	73.61
227	6" PERFORATED	248.00	DI-239	70.74
228	6" PERFORATED	85.00	DI-240	69.88
229	6" PERFORATED	255.00	DI-241	67.48
230	6" PERFORATED	87.59	DI-241	66.51
231	6" PERFORATED	229.00	DI-201	78.84
232	6" PERFORATED	300.00	DI-205	75.26
233	6" PERFORATED	296.50	DI-206	71.73
234	6" PERFORATED	380.50	DI-214	67.44
235	6" PERFORATED	495.72	DI-218	61.55
236	6" PERFORATED	310.55	DI-208	82.25
237	6" PERFORATED	300.00	DI-404	75.94
238	6" PERFORATED	447.00	DI-211	70.26
239	6" PERFORATED	728.00	DI-218	61.76
240	6" PERFORATED	310.55	DI-209	81.38
241	6" PERFORATED	300.00	DI-210	75.14
242	6" PERFORATED	298.00	DI-212	71.30
243	6" PERFORATED	149.00	DI-213	69.69
244	6" PERFORATED	233.00	DI-215	63.10
245	6" PERFORATED	237.00	DI-216	64.25

UNOFFICIAL WEB SITE COPY

SOIL RETENTION BLANKET MULCH NOTES

1. RAMP B1 STA. 531+50 RT. TO STA. 534+70 RT.: INSTALL ONE ROLL WIDTH (6.6') SOIL RETENTION BLANKET MULCH, TYPE 5 (735535). QUANTITY = 233 S.Y.
2. RAMP B1 STA. 538+30 RT. TO STA. 539+91 RT.: INSTALL ONE ROLL WIDTH (6.6') SOIL RETENTION BLANKET MULCH, TYPE 5 (735535). QUANTITY = 120 S.Y.
3. RAMP B1 STA. 542+28 RT. TO STA. 546+50 RT.: INSTALL ONE ROLL WIDTH (6.6') SOIL RETENTION BLANKET MULCH, TYPE 5 (735535). QUANTITY = 311 S.Y.

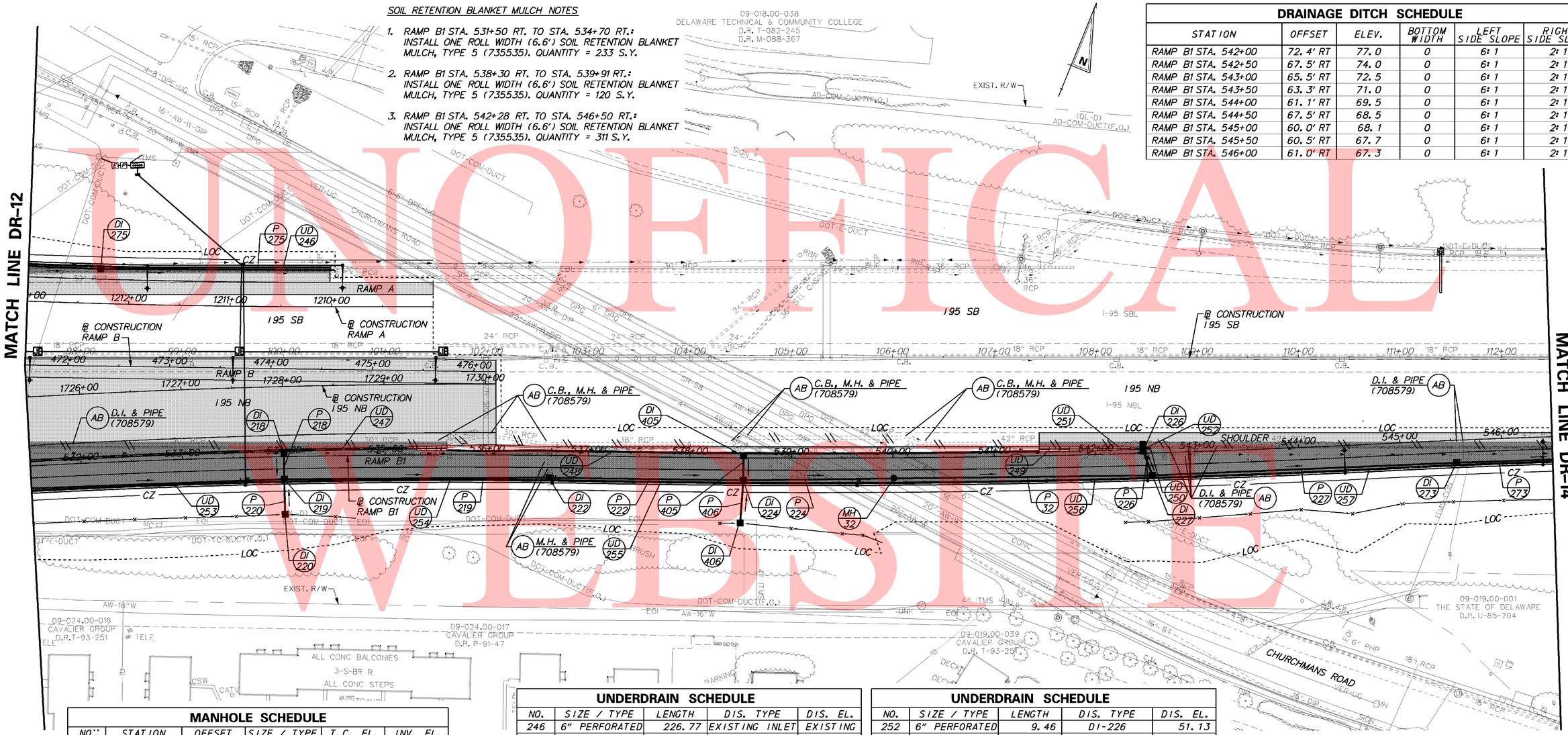

DRAINAGE DITCH SCHEDULE

STATION	OFFSET	ELEV.	BOTTOM WIDTH	LEFT SIDE SLOPE	RIGHT SIDE SLOPE
RAMP B1 STA. 542+00	72.4' RT	77.0	0	6:1	2:1
RAMP B1 STA. 542+50	67.5' RT	74.0	0	6:1	2:1
RAMP B1 STA. 543+00	65.5' RT	72.5	0	6:1	2:1
RAMP B1 STA. 543+50	63.3' RT	71.0	0	6:1	2:1
RAMP B1 STA. 544+00	61.1' RT	69.5	0	6:1	2:1
RAMP B1 STA. 544+50	67.5' RT	68.5	0	6:1	2:1
RAMP B1 STA. 545+00	60.0' RT	68.1	0	6:1	2:1
RAMP B1 STA. 545+50	60.5' RT	67.7	0	6:1	2:1
RAMP B1 STA. 546+00	61.0' RT	67.3	0	6:1	2:1

MANHOLE SCHEDULE

NO.*	STATION	OFFSET	SIZE / TYPE	T.C. EL.	INV. EL.
32	540+00.00	22.00	66" x 30"	57.37	49.50

* TO BE VERIFIED BY ENGINEER IN THE FIELD.

** MATCH FLOWLINE OF PROPOSED CURB AND GUTTER.

*** MATCH PROPOSED CURB LINE.

UNDERDRAIN SCHEDULE

NO.	SIZE / TYPE	LENGTH	DIS. TYPE	DIS. EL.
246	6" PERFORATED	226.77	EXISTING INLET	EXISTING
247	6" PERFORATED	151.00	DI-EXISTING	59.71
248	6" PERFORATED	450.00	DI-405	56.55
249	6" PERFORATED	400.00	DI-226	52.17
250	6" PERFORATED	105.80	DI-226	52.08
251	6" PERFORATED	9.46	DI-226	51.36

UNDERDRAIN SCHEDULE

NO.	SIZE / TYPE	LENGTH	DIS. TYPE	DIS. EL.
252	6" PERFORATED	9.46	DI-226	51.13
253	6" PERFORATED	258.00	DI-219	61.24
254	6" PERFORATED	260.00	DI-222	58.21
255	6" PERFORATED	190.00	DI-224	55.99
256	6" PERFORATED	408.00	DI-227	50.52
257	6" PERFORATED	297.00	DI-273	47.96

DRAINAGE PIPE SCHEDULE

NO.	SIZE / TYPE	CLASS	LENGTH	SLOPE	INT. EL.	DIS. EL.
32	42" RCP	IV	249.60	0.0090	49.50	47.20
218	18" RCP	IV	21.10	0.0380	59.00	58.20
219	36" RCP	IV	253.60	0.0080	57.20	55.20
220	18" CMP	-	SEE DOWNSPOUT DETAIL SHEET 193 OF 803			
222	36" RCP	IV	184.80	0.0090	54.10	52.45
224	42" RCP	IV	143.10	0.0050	51.50	50.80
226	42" RCP	IV	20.00	0.0350	47.90	47.20
227	42" RCP	IV	293.00	0.0130	46.00	42.20
273	42" RCP	IV	152.80	0.0100	41.50	40.00
275	30" RCP	IV	224.20*	0.0160*	60.80	57.16*
405	18" RCP	IV	18.00	0.0280	54.50	54.00
406	18" CMP	-	SEE DOWNSPOUT DETAIL SHEET 193 OF 803			

DRAINAGE INLET SCHEDULE

NO.	STATION	OFFSET	BOX SIZE / TOP	GRATE	T.G. EL.	INV. EL.
218	534+00.00	***	34" x 24" TYPE A MOD.	1	**	59.00
219	534+00.00	***	72" x 48" TYPE A MOD.	1	**	57.20
220	534+00.00	56.90	34" x 24" TYPE A	1	78.60	73.00
222	536+60.00	***	72" x 48" TYPE A MOD.	1	**	54.10
224	538+50.00	***	72" x 72" TYPE A MOD.	1	**	51.50
226	542+50.00	***	SPECIAL V, TYPE A MOD.	1	**	47.90
227	542+58.00	***	72" x 72" TYPE A MOD.	1	**	46.00
273	545+55.00	***	72" x 72" TYPE A MOD.	1	**	41.50
275	1212+28.50	***	72" x 48" TYPE A MOD.	1	**	60.80
405	538+50.00	***	34" x 24" TYPE A MOD.	1	**	54.50
406	538+50.00	64.20	34" x 24" TYPE A	1	77.00	71.50

DRAINAGE DITCH SCHEDULE

STATION	OFFSET	ELEV.	BOTTOM WIDTH	LEFT SIDE SLOPE	RIGHT SIDE SLOPE
RAMP B1 STA. 531+50	57.1' RT	81.6	0	6:1	2:1
RAMP B1 STA. 532+00	57.2' RT	81.1	0	6:1	2:1
RAMP B1 STA. 532+50	57.4' RT	80.6	0	6:1	2:1
RAMP B1 STA. 533+00	57.5' RT	80.1	0	6:1	2:1
RAMP B1 STA. 533+50	57.7' RT	79.6	0	6:1	2:1
RAMP B1 STA. 534+00	56.9' RT	78.6	0	6:1	2:1
RAMP B1 STA. 534+50	60.1' RT	79.6	0	6:1	2:1
RAMP B1 STA. 538+50	64.2' RT	77.0	0	6:1	2:1
RAMP B1 STA. 539+00	69.4' RT	79.0	0	6:1	2:1
RAMP B1 STA. 539+50	74.5' RT	81.0	0	6:1	2:1

UNOFFICIAL WEBSITE COPY

10/28/2010 10:22:36 AM
M:\PROJECTS\2003\03059_DELTRNPK\SRIMALL\CADD\2809003\PLANS\DR13_SR1.DGN

DELAWARE DEPARTMENT OF TRANSPORTATION

ADDENDUMS / REVISIONS

SCALE 0 50 100 150 FEET

SR1 / I-95 INTERCHANGE

CONTRACT	BRIDGE NO.
28-090-03	DESIGNED BY:
COUNTY	
NEW CASTLE	CHECKED BY:

DRAINAGE PLAN

DR-13
SHEET NO.
144
TOTAL SHTS.
803

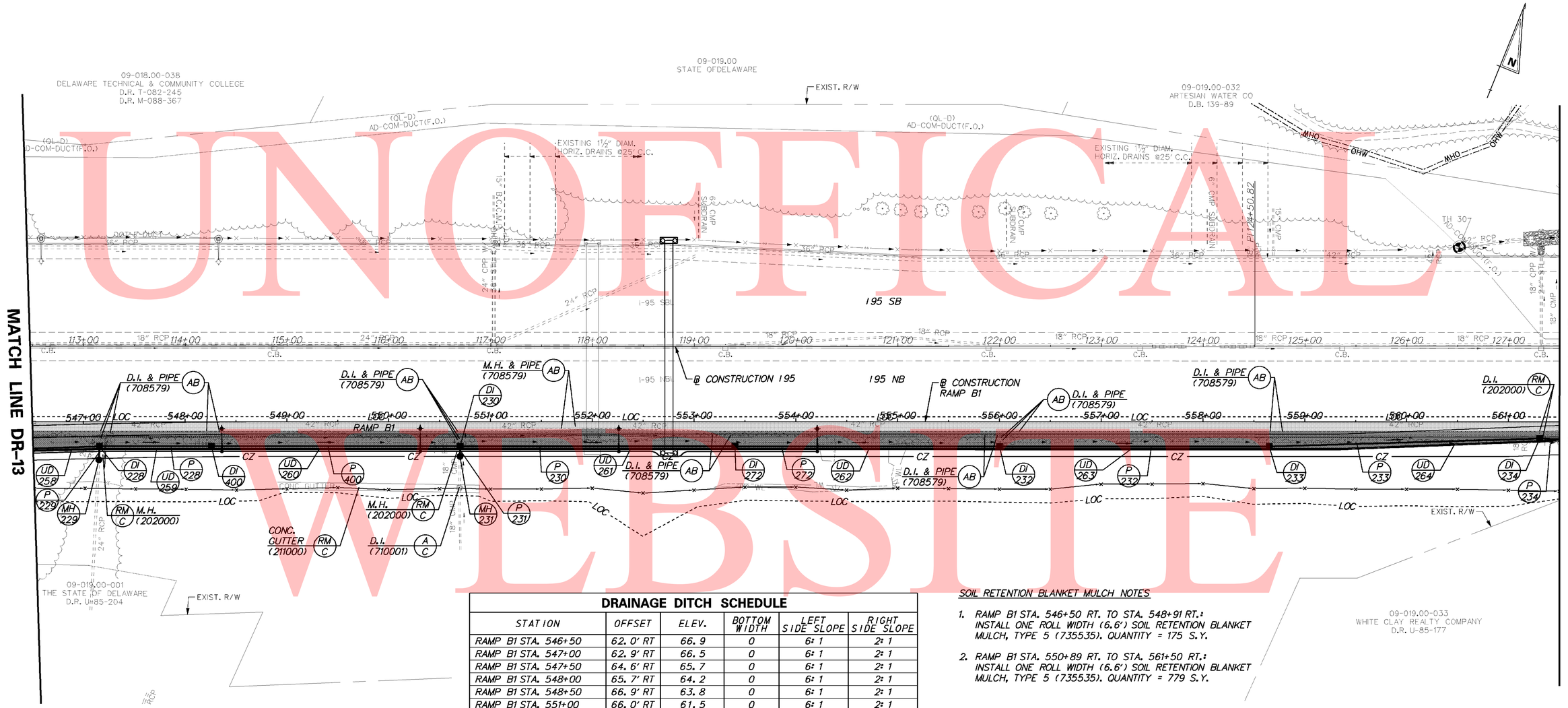

MANHOLE SCHEDULE

NO.	STATION	OFFSET	SIZE / TYPE	T.C. EL.	INV. EL.
229	547+15.00	35.26	48" x 30"	49.00	43.60
231	550+70.00	34.00	48" x 30"	48.00	39.50

** MATCH FLOWLINE OF PROPOSED CURB AND GUTTER.

*** MATCH PROPOSED CURB LINE.

DRAINAGE PIPE SCHEDULE

NO.	SIZE / TYPE	CLASS	LENGTH	SLOPE	INT. EL.	DIS. EL.
228	42" RCP	IV	103.00	0.0060	39.00	38.40
229	24" RCP	IV	9.50	0.0210	43.60	43.40
230	42" RCP	IV	262.70	0.0100	34.00	31.50
231	18" RCP	IV	6.30	0.0160	39.50	39.40
232	42" RCP	IV	258.00	0.0100	27.00	24.40
233	42" RCP	IV	258.70	0.0130	24.20	20.80
234	48" RCP	IV	157.90	0.0130	20.60	18.50
272	42" RCP	IV	252.80	0.0100	30.50	28.00
400	42" RCP	IV	237.20	0.0100	37.50	35.10

DRAINAGE DITCH SCHEDULE

STATION	OFFSET	ELEV.	BOTTOM WIDTH	LEFT SIDE SLOPE	RIGHT SIDE SLOPE
RAMP B1 STA. 546+50	62.0' RT	66.9	0	6:1	2:1
RAMP B1 STA. 547+00	62.9' RT	66.5	0	6:1	2:1
RAMP B1 STA. 547+50	64.6' RT	65.7	0	6:1	2:1
RAMP B1 STA. 548+00	65.7' RT	64.2	0	6:1	2:1
RAMP B1 STA. 548+50	66.9' RT	63.8	0	6:1	2:1
RAMP B1 STA. 551+00	66.0' RT	61.5	0	6:1	2:1
RAMP B1 STA. 551+50	66.0' RT	61.0	0	6:1	2:1
RAMP B1 STA. 552+00	65.0' RT	60.1	0	6:1	2:1
RAMP B1 STA. 552+50	70.0' RT	59.1	0	6:1	2:1
RAMP B1 STA. 553+00	67.0' RT	58.6	0	6:1	2:1
RAMP B1 STA. 553+50	64.0' RT	58.1	0	6:1	2:1
RAMP B1 STA. 554+00	64.0' RT	57.6	0	6:1	2:1
RAMP B1 STA. 554+50	67.0' RT	56.9	0	6:1	2:1
RAMP B1 STA. 555+00	65.0' RT	56.0	0	6:1	2:1
RAMP B1 STA. 555+50	65.5' RT	55.0	0	6:1	2:1
RAMP B1 STA. 556+00	66.0' RT	54.0	0	6:1	2:1
RAMP B1 STA. 556+50	66.0' RT	53.0	0	6:1	2:1
RAMP B1 STA. 557+00	61.0' RT	51.6	0	6:1	2:1
RAMP B1 STA. 557+50	61.0' RT	50.2	0	6:1	2:1
RAMP B1 STA. 558+00	60.5' RT	49.7	0	6:1	2:1
RAMP B1 STA. 558+50	65.5' RT	49.2	0	6:1	2:1
RAMP B1 STA. 559+00	65.0' RT	48.7	0	6:1	2:1
RAMP B1 STA. 559+50	66.0' RT	47.2	0	6:1	2:1
RAMP B1 STA. 560+00	66.0' RT	46.7	0	6:1	2:1
RAMP B1 STA. 560+50	66.0' RT	46.2	0	6:1	2:1
RAMP B1 STA. 561+00	67.0' RT	45.7	0	6:1	2:1
RAMP B1 STA. 561+50	68.0' RT	44.0	0	6:1	2:1

SOIL RETENTION BLANKET MULCH NOTES

1. RAMP B1 STA. 546+50 RT. TO STA. 548+91 RT.: INSTALL ONE ROLL WIDTH (6.6') SOIL RETENTION BLANKET MULCH, TYPE 5 (735535). QUANTITY = 175 S.Y.

2. RAMP B1 STA. 550+89 RT. TO STA. 561+50 RT.: INSTALL ONE ROLL WIDTH (6.6') SOIL RETENTION BLANKET MULCH, TYPE 5 (735535). QUANTITY = 779 S.Y.

UNDERDRAIN SCHEDULE

NO.	SIZE / TYPE	LENGTH	DIS. TYPE	DIS. EL.
258	6" PERFORATED	160.00	DI-228	46.14
259	6" PERFORATED	110.00	DI-400	44.83
260	6" PERFORATED	245.00	DI-230	41.94
261	6" PERFORATED	270.00	DI-272	38.51
262	6" PERFORATED	260.00	DI-232	35.06
263	6" PERFORATED	268.00	DI-233	30.41
264	6" PERFORATED	264.00	DI-234	26.51

DRAINAGE INLET SCHEDULE

NO.	STATION	OFFSET	BOX SIZE / TOP	GRATE	T.G. EL.	INV. EL.
228	547+15.00	***	72" x 72" TYPE A MOD.	1	**	39.00
230	550+70.00	***	SPECIAL IX, TYPE A MOD.	1	**	34.00
232	556+00.00	***	72" x 72" TYPE A MOD.	1	**	27.00
233	558+68.00	***	72" x 72" TYPE A MOD.	1	**	24.20
234	561+32.00	***	72" x 72" TYPE A MOD.	1	**	20.60
272	553+40.00	***	SPECIAL IX, TYPE A MOD.	1	**	30.50
400	548+25.00	***	72" x 72" TYPE A MOD.	1	**	37.50

UNOFFICAL WEBSITE COPY

9/10/2010 4:34:21 PM
M:\PROJECTS\2003\03059_DELTRNPK\SRMALL\CADD\2809003\PLANS\DR14_SR1.DGN

DELAWARE DEPARTMENT OF TRANSPORTATION

ADDENDUMS / REVISIONS

SCALE 0 50 100 150 FEET

SR1 / I-95 INTERCHANGE

CONTRACT	BRIDGE NO.
28-090-03	DESIGNED BY:
COUNTY	CHECKED BY:
NEW CASTLE	

DRAINAGE PLAN

DR-14
SHEET NO.
145
TOTAL SHTS.
803

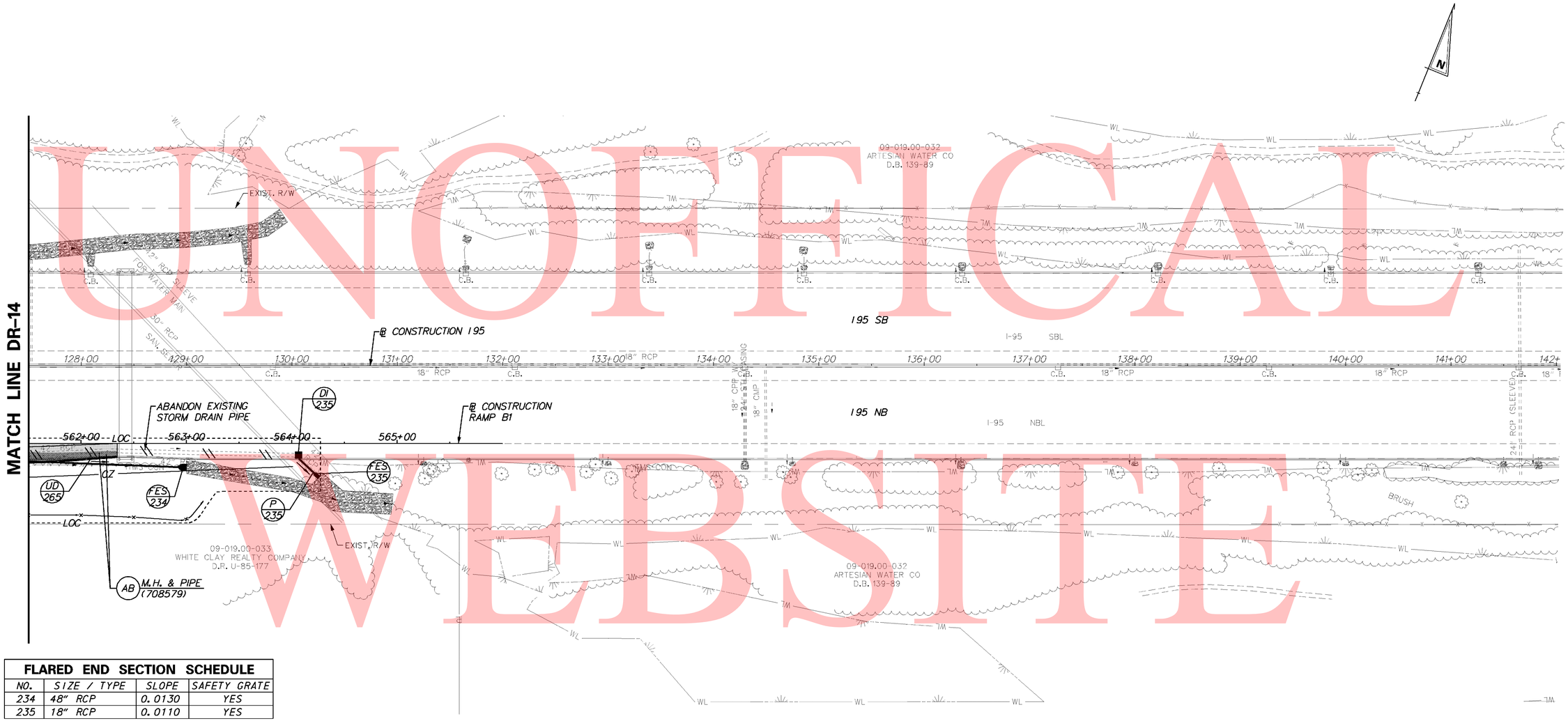

FLARED END SECTION SCHEDULE			
NO.	SIZE / TYPE	SLOPE	SAFETY GRATE
234	48" RCP	0.0130	YES
235	18" RCP	0.0110	YES

UNDERDRAIN SCHEDULE				
NO.	SIZE / TYPE	LENGTH	DIS. TYPE	DIS. EL.
265	6" PERFORATED	102.22	EXISTING	25.22

DRAINAGE PIPE SCHEDULE						
NO.	SIZE / TYPE	CLASS	LENGTH	SLOPE	INT. EL.	DIS. EL.
235	18" RCP	IV	18.90	0.0110	18.30	18.10

DRAINAGE DITCH SCHEDULE					
STATION	OFFSET	ELEV.	BOTTOM WIDTH	LEFT SIDE SLOPE	RIGHT SIDE SLOPE
RAMP B1 STA. 562+00	68.0' RT	42.0	0	6:1	2:1
RAMP B1 STA. 562+50	70.0' RT	40.0	0	6:1	2:1
RAMP B1 STA. 563+00	71.8' RT	34.0	0	4:1	4:1

DRAINAGE INLET SCHEDULE						
NO.	STATION	OFFSET	BOX SIZE / TOP	GRATE	T.G. EL.	INV. EL.
235	564+06.50	***	72" x 24" TYPE A MOD.	1	26.30*	18.30

* TO BE VERIFIED BY ENGINEER IN THE FIELD.

*** MATCH PROPOSED CURB LINE.

SOIL RETENTION BLANKET MULCH NOTES

1. RAMP B1 STA. 561+50 RT. TO STA. 563+05 RT.: INSTALL ONE ROLL WIDTH (6.6') SOIL RETENTION BLANKET MULCH, TYPE 5 (735535). QUANTITY = 115 S.Y.

UNOFFICAL WEBSITE COPY

10/28/2010 2:12:32 PM
M:\PROJECTS\2003\03059_DELTRNPK\SRIMALL\CADD\2809003\PLANS\DR15_SR1.DGN

DELAWARE DEPARTMENT OF TRANSPORTATION

ADDENDUMS / REVISIONS

SCALE 0 50 100 150 FEET

SR1 / I-95 INTERCHANGE

CONTRACT	BRIDGE NO.
28-090-03	DESIGNED BY:
COUNTY	
NEW CASTLE	CHECKED BY:

DRAINAGE PLAN

DR-15
SHEET NO.
146
TOTAL SHTS.
803

COORDINATE LIST				
POINT NO.	STATION	OFFSET	NORTHING	EASTING

NOTES:

1. XXXXXXXXXXXXXXXXXXX

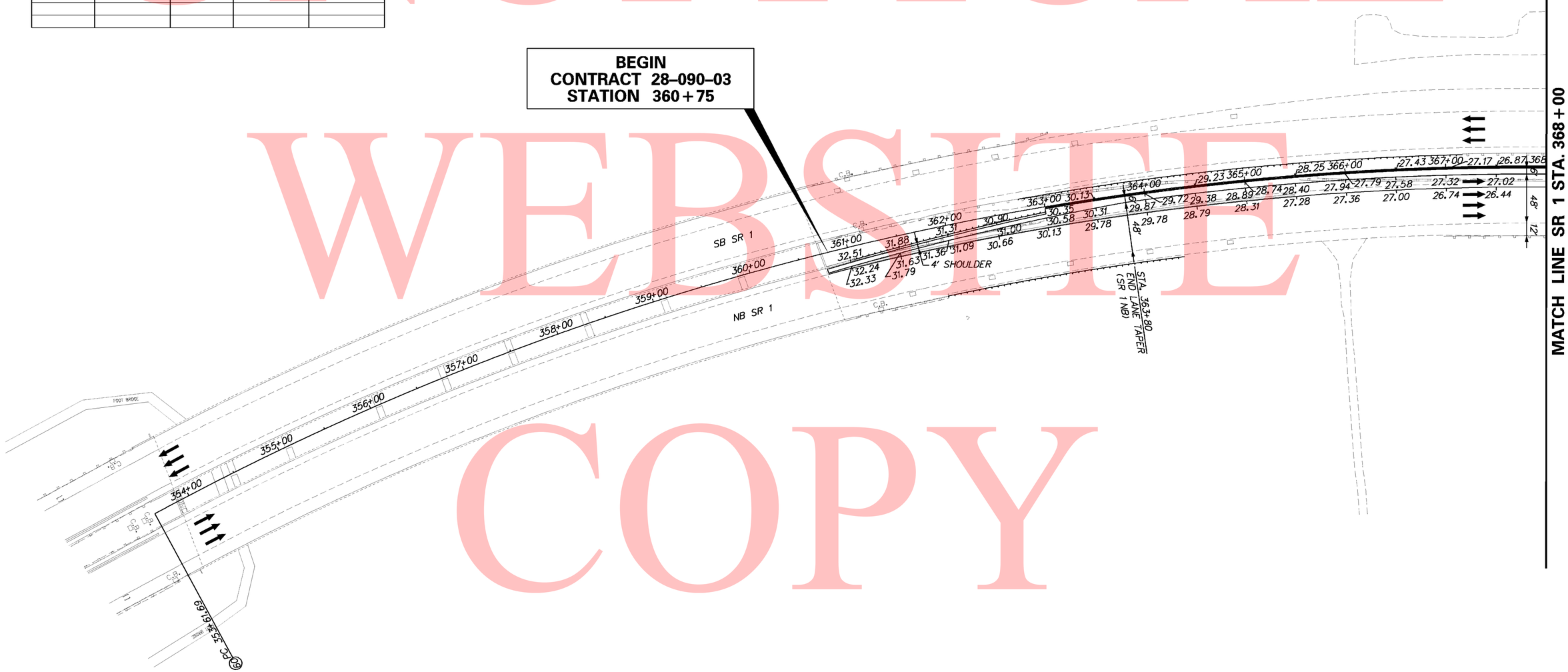

UNOFFICAL WEBSITE COPY

9/10/2010 4:48:50 PM
M:\PROJECTS\2003\03059_DELTRNPK\SRIMALL\CADD\2809003\PLANS\CP16_GG_SR1.DGN

DELAWARE DEPARTMENT OF TRANSPORTATION	ADDENDUMS / REVISIONS	SCALE 0 50 100 150 FEET	SR1 / I-95 INTERCHANGE	CONTRACT 28-090-03	BRIDGE NO.	GRADES & GEOMETRICS	SHEET NO. 147
				COUNTY NEW CASTLE	DESIGNED BY:		TOTAL SHTS. 803
					CHECKED BY:		

COORDINATE LIST				
POINT NO.	STATION	OFFSET	NORTHING	EASTING

NOTES:
1. FOR FINISHED GRADE ELEVATIONS ON BRIDGES SEE "FINISHED BRIDGE DECK ELEVATIONS" SHEETS INCLUDED IN THE BRIDGE PLANS.

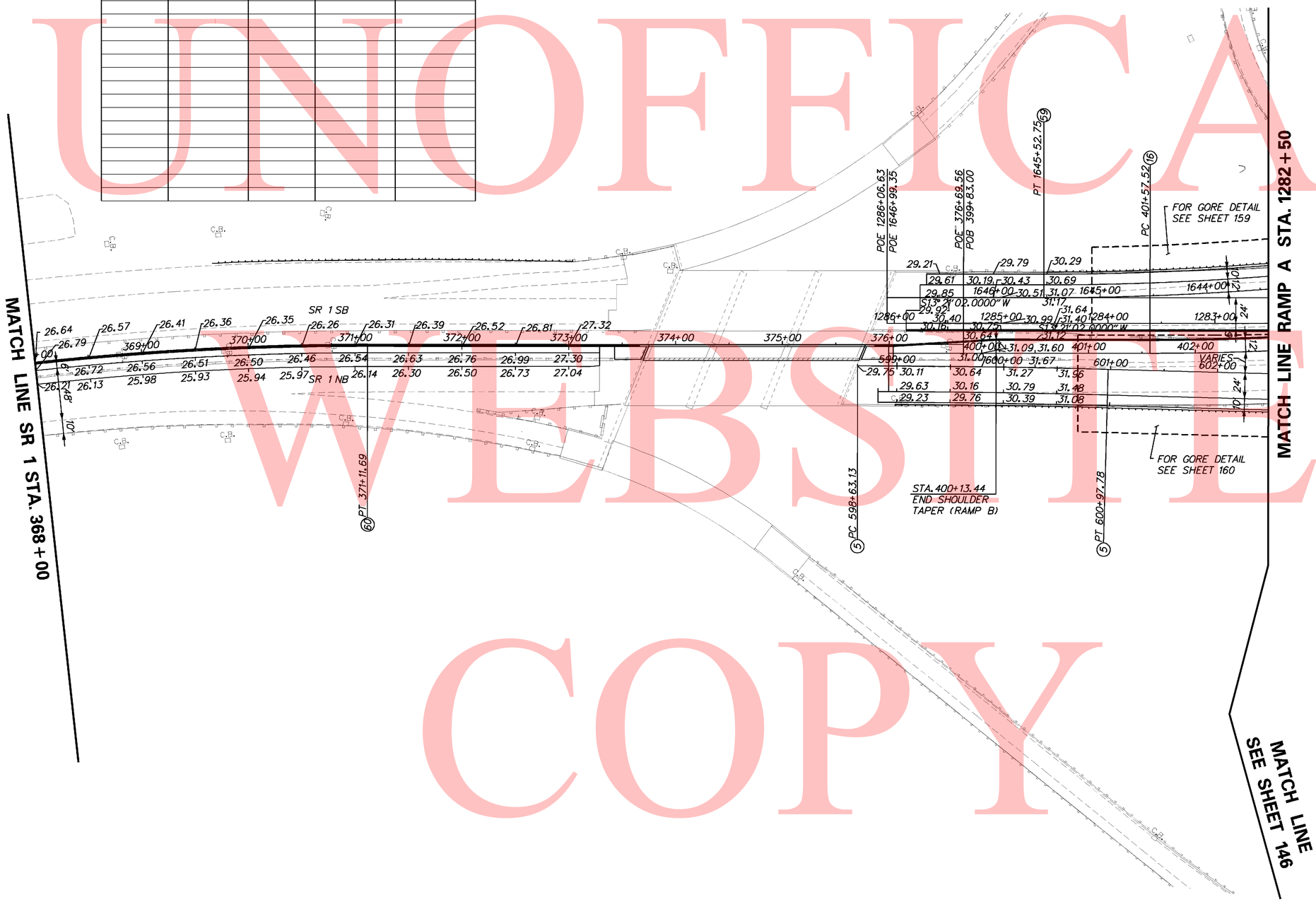

UNOFFICAL WEBSITE COPY

9/10/2010 4:50:59 PM
M:\PROJECTS\2003\03059_DELTRNPK\SRIMALL\CADD\2809003\PLANS\CP17_GG_SR1.DGN

DELAWARE DEPARTMENT OF TRANSPORTATION	ADDENDUMS / REVISIONS	SCALE 0 50 100 150 FEET	SR1 / I-95 INTERCHANGE	CONTRACT 28-090-03	BRIDGE NO.	GRADES & GEOMETRICS	SHEET NO. 148
				COUNTY NEW CASTLE	DESIGNED BY:		TOTAL SHTS. 803
					CHECKED BY:		

NOTES:

1. XXXXXXXXXXXXXXXXXXXX

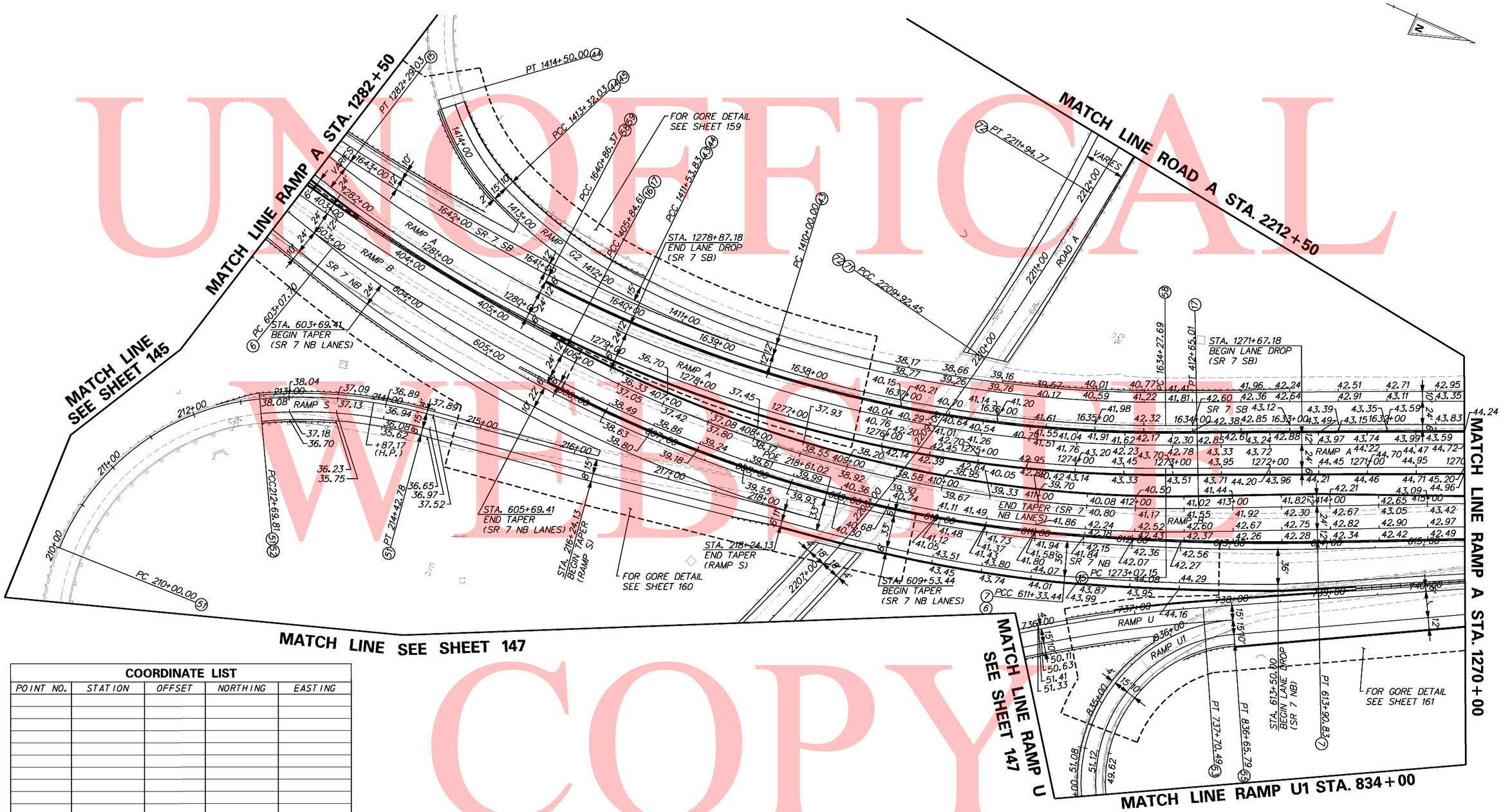

COORDINATE LIST				
POINT NO.	STATION	OFFSET	NORTHING	EASTING

UNOFFICIAL WEBSITE COPY

9/10/2010 5:44:53 PM
M:\PROJECTS\2003\03059_DELTRNPK\SRTMALL\CADD\2809003\PLANS\CP18_GG_SR1.DGN

DELAWARE DEPARTMENT OF TRANSPORTATION	ADDENDUMS / REVISIONS	SCALE 0 50 100 150 FEET	SR1 / I-95 INTERCHANGE	CONTRACT 28-090-03	BRIDGE NO.	GRADES & GEOMETRICS	SHEET NO. 149
				COUNTY NEW CASTLE	DESIGNED BY:		TOTAL SHTS. 803
					CHECKED BY:		

NOTES:

1. XXXXXXXXXXXXXXXXXXX

COORDINATE LIST				
POINT NO.	STATION	OFFSET	NORTHING	EASTING

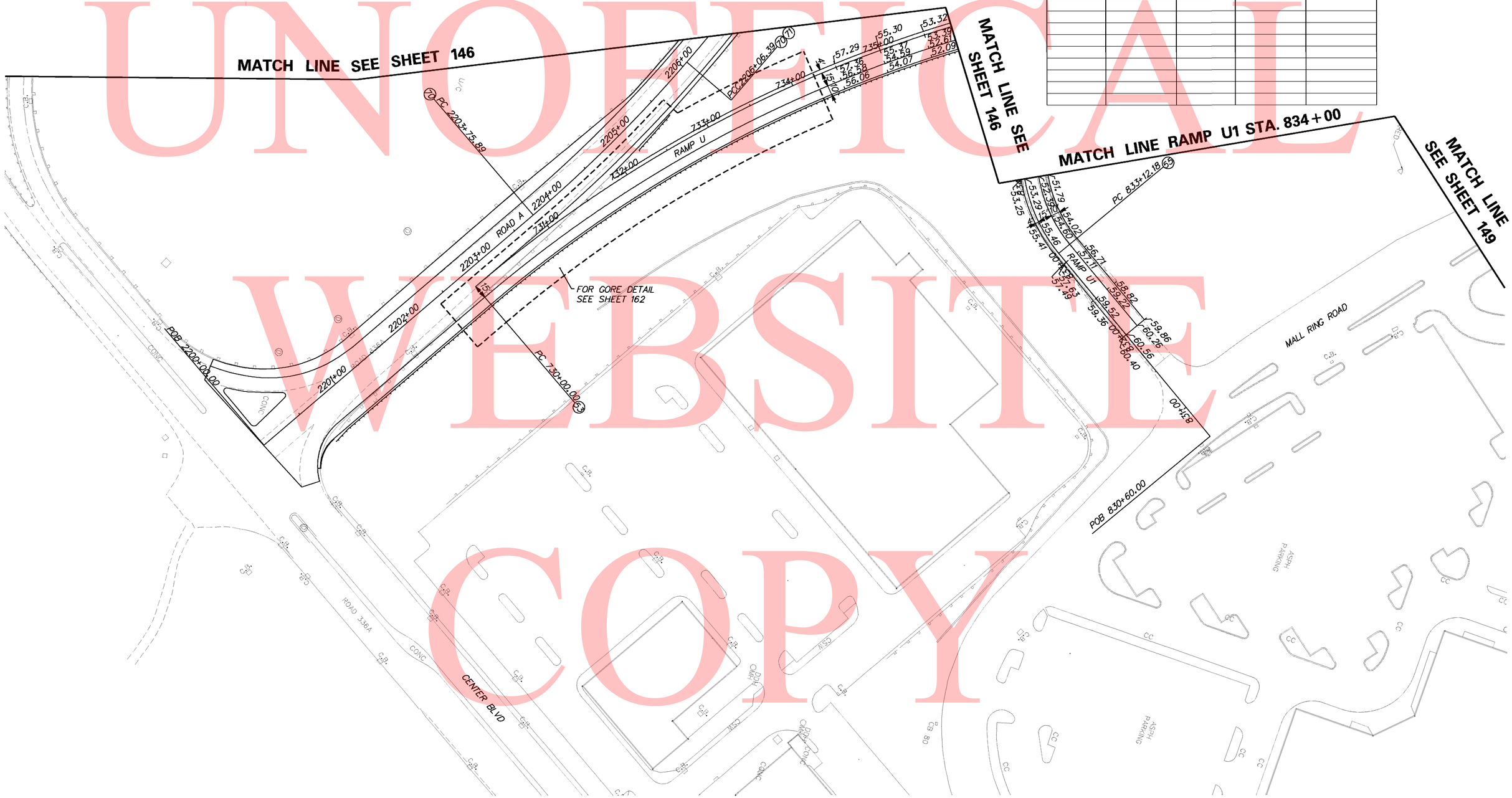

UNOFFICIAL WEBSITE COPY

9/10/2010 4:59:02 PM
M:\PROJECTS\2003\03059_DELTRNPK\SRMALL\CADD\2809003\PLANS\CP19_GG_SR1.DGN

DELAWARE DEPARTMENT OF TRANSPORTATION	ADDENDUMS / REVISIONS	SCALE 0 50 100 150 FEET	SR1 / I-95 INTERCHANGE	CONTRACT 28-090-03	BRIDGE NO.	GRADES & GEOMETRICS	SHEET NO. 150
				COUNTY NEW CASTLE	DESIGNED BY:		TOTAL SHTS. 803
					CHECKED BY:		

NOTES:

1. XXXXXXXXXXXXXXXXXXX

COORDINATE LIST				
POINT NO.	STATION	OFFSET	NORTHING	EASTING

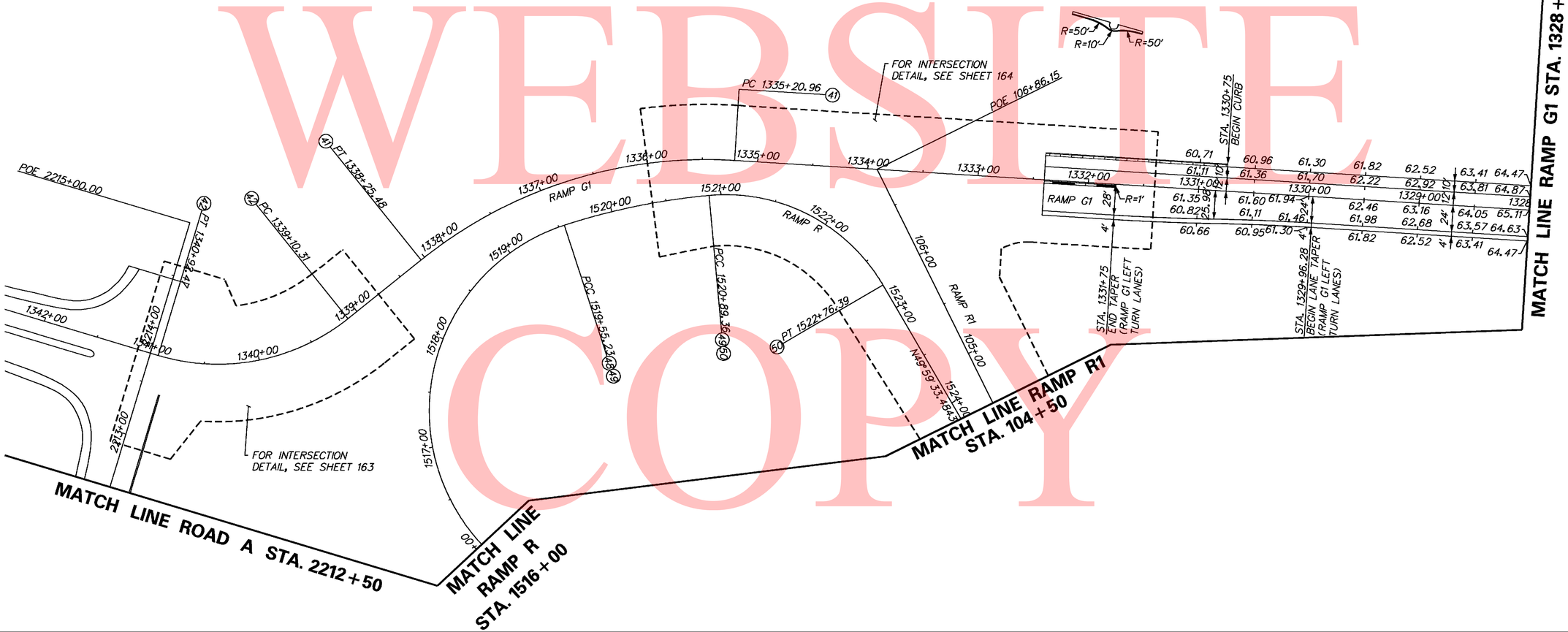

UNOFFICIAL WEBSITE COPY

9/10/2010 5:00:19 PM
M:\PROJECTS\2003\03059_DELTRNPK\SRIMALL\CADD\2809003\PLANS\CP20_GG_SR1.DGN

DELAWARE DEPARTMENT OF TRANSPORTATION	ADDENDUMS / REVISIONS	SCALE 0 50 100 150 FEET	SR1 / I-95 INTERCHANGE	CONTRACT 28-090-03	BRIDGE NO.	GRADES & GEOMETRICS	SHEET NO. 151
				COUNTY NEW CASTLE	DESIGNED BY:		TOTAL SHTS. 803
					CHECKED BY:		

NOTES:

1. FOR FINISHED GRADE ELEVATIONS ON BRIDGES SEE "FINISHED BRIDGE DECK ELEVATIONS" SHEETS INCLUDED IN THE BRIDGE PLANS.

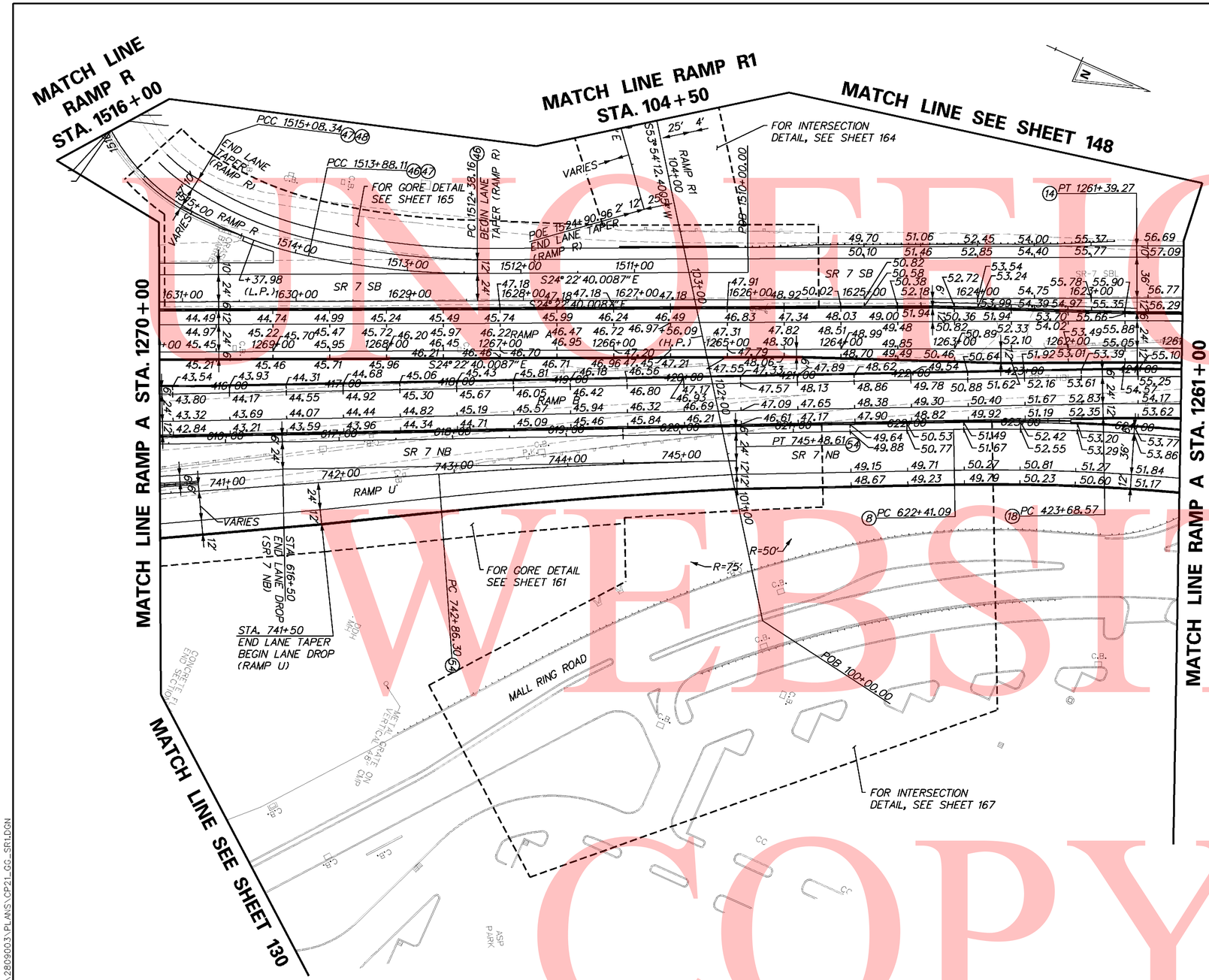

COORDINATE LIST				
POINT NO.	STATION	OFFSET	NORTHING	EASTING

UNOFFICIAL WEBSITE COPY

9/10/2010 5:03:42 PM
M:\PROJECTS\2003\03059_DELTRNPK\SRIMALL\CADD\2809003\PLANS\CP21_GG_SR1.DGN

DELAWARE DEPARTMENT OF TRANSPORTATION	ADDENDUMS / REVISIONS	SCALE 0 50 100 150 FEET	SR1 / I-95 INTERCHANGE	CONTRACT 28-090-03	BRIDGE NO.	GRADES & GEOMETRICS	SHEET NO. 152
				COUNTY NEW CASTLE	DESIGNED BY:		TOTAL SHTS. 803
					CHECKED BY:		

NOTES:

1. FOR FINISHED GRADE ELEVATIONS ON BRIDGES SEE "FINISHED BRIDGE DECK ELEVATIONS" SHEETS INCLUDED IN THE BRIDGE PLANS.

COORDINATE LIST				
POINT NO.	STATION	OFFSET	NORTHING	EASTING

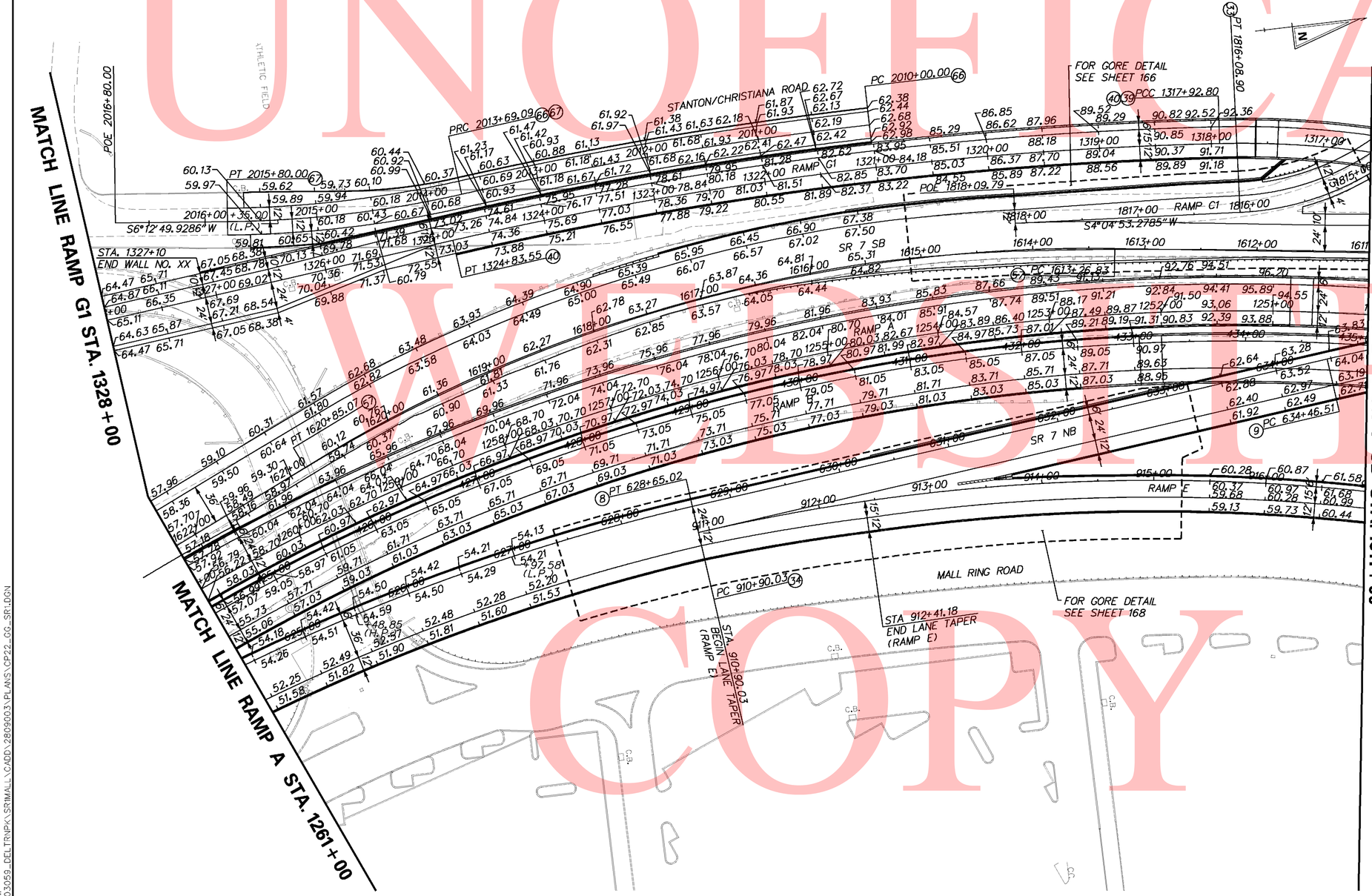

UNOFFICIAL WEB SITE COPY

9/10/2010 5:05:12 PM
M:\PROJECTS\2003\03059_DELTRNPK\SRIMALL\CADD\2809003\PLANS\CP22_GG_SR1.DGN

DELAWARE DEPARTMENT OF TRANSPORTATION	ADDENDUMS / REVISIONS	SCALE 0 50 100 150 FEET	SR1 / I-95 INTERCHANGE	CONTRACT 28-090-03	BRIDGE NO.	GRADES & GEOMETRICS	SHEET NO. 153
				COUNTY NEW CASTLE	DESIGNED BY:		TOTAL SHTS. 803
					CHECKED BY:		

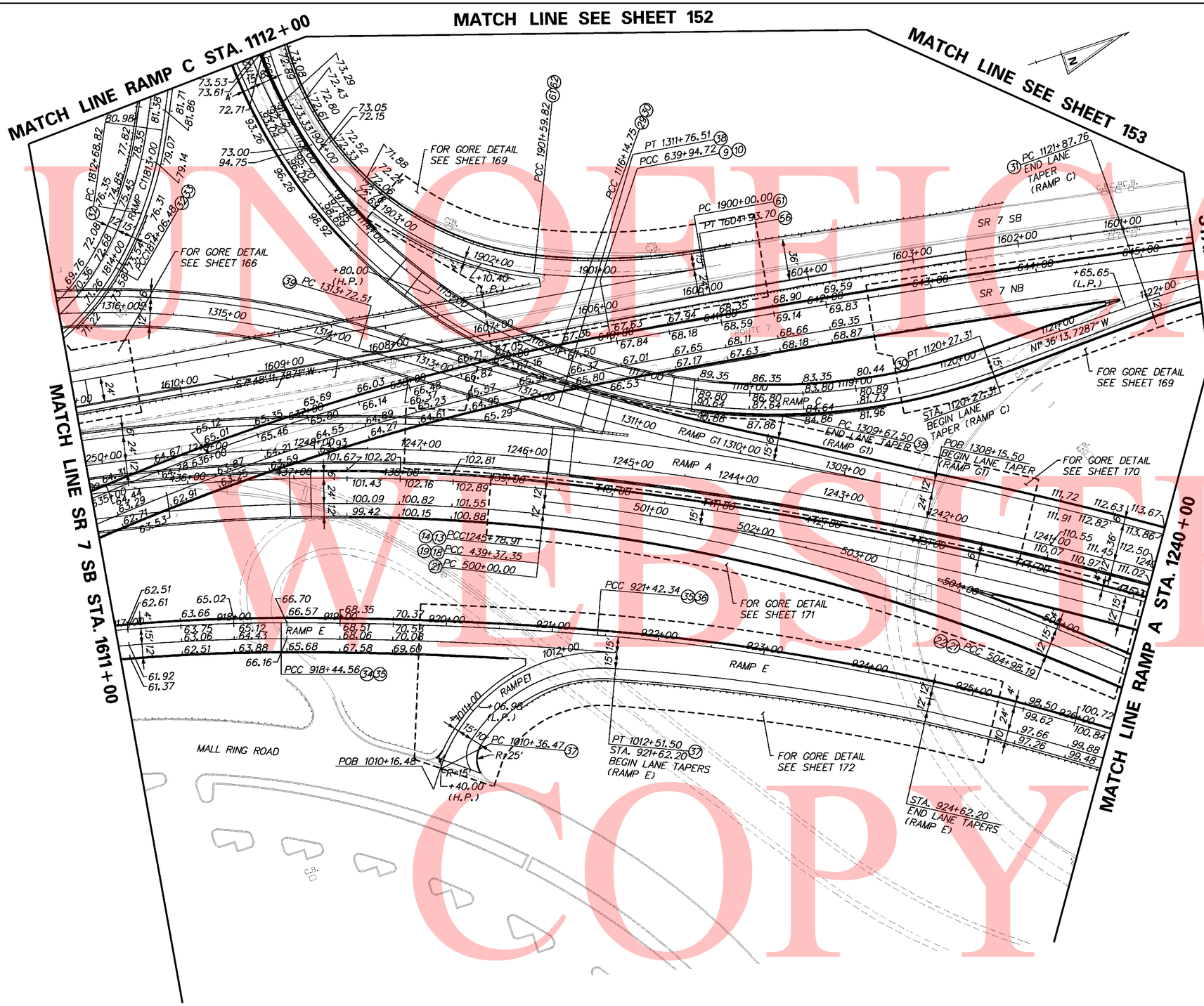

NOTES:

1. FOR FINISHED GRADE ELEVATIONS ON BRIDGES SEE "FINISHED BRIDGE DECK ELEVATIONS" SHEETS INCLUDED IN THE BRIDGE PLANS.

COORDINATE LIST

POINT NO.	STATION	OFFSET	NORTHING	EASTING

UNOFFICIAL WEBSITE COPY

9/10/2010 5:06:20 PM
M:\projects\2003\03059_deltrnak\SR1Mall\Cadd\2809003\Plans\ca23_gg_sr1.dgn

DELAWARE DEPARTMENT OF TRANSPORTATION

ADDENDUMS / REVISIONS

SCALE 0 50 100 150 FEET

SR1 / I-95 INTERCHANGE

CONTRACT	BRIDGE NO.	
28-090-03	DESIGNED BY:	
COUNTY	CHECKED BY:	
NEW CASTLE		

GRADES & GEOMETRICS

SHEET NO.
154
TOTAL SHTS.
803

UNOFFICAL WEBSITE COPY

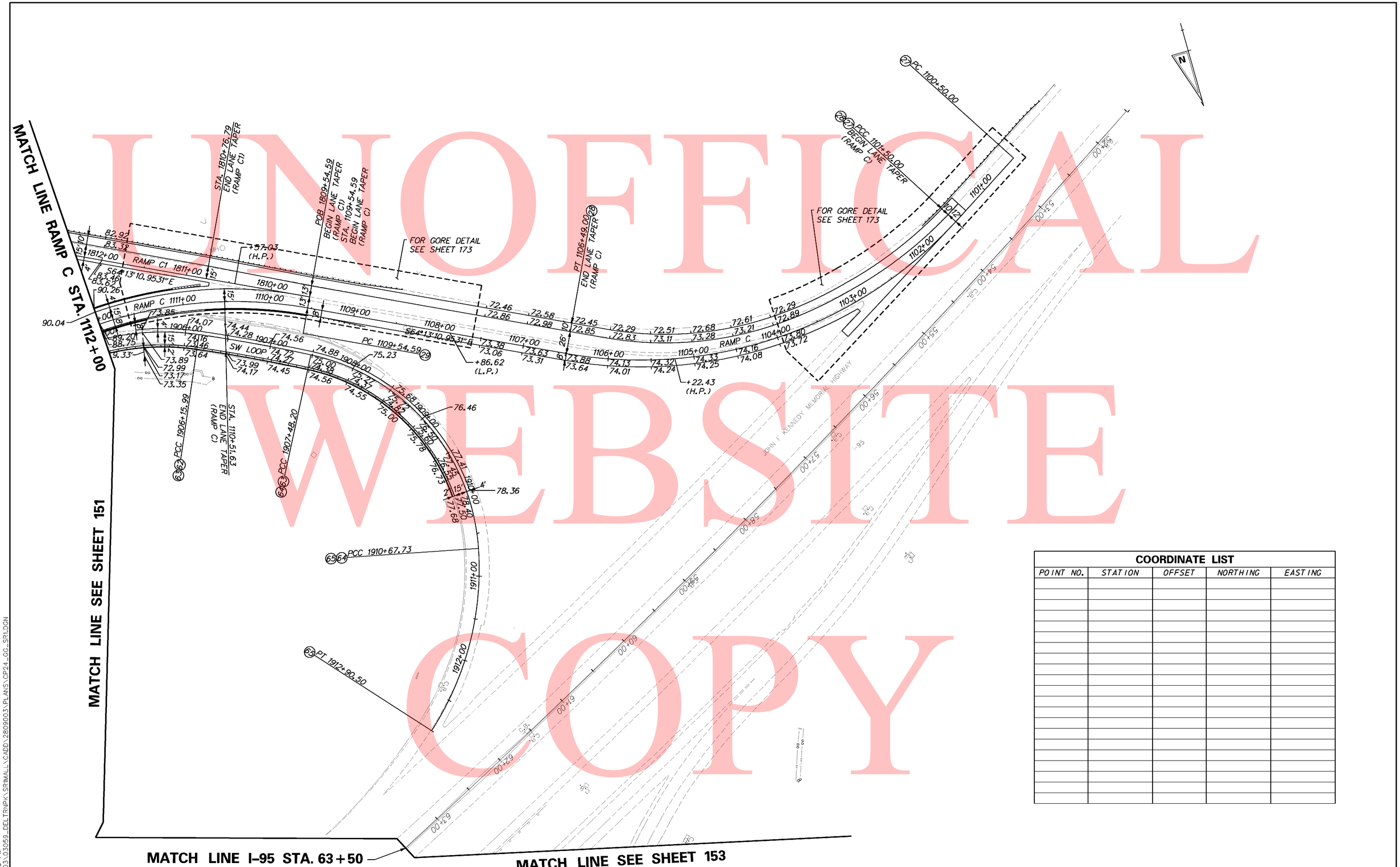

COORDINATE LIST				
POINT NO.	STATION	OFFSET	NORTHING	EASTING

9/10/2010 5:07:33 PM
M:\PROJECTS\2003\03059_DELTRNPK\SR1MALL\CADD\2809003\PLANS\CP21_GG_SR1.DGN

DELAWARE DEPARTMENT OF TRANSPORTATION	ADDENDUMS / REVISIONS	SCALE 0 50 100 150 FEET	SR1 / I-95 INTERCHANGE	CONTRACT 28-090-03	BRIDGE NO.	GRADES & GEOMETRICS	SHEET NO. 155
				COUNTY NEW CASTLE	DESIGNED BY:		TOTAL SHTS. 803
					CHECKED BY:		

NOTES:

1. XXXXXXXXXXXX

COORDINATE LIST				
POINT NO.	STATION	OFFSET	NORTHING	EASTING

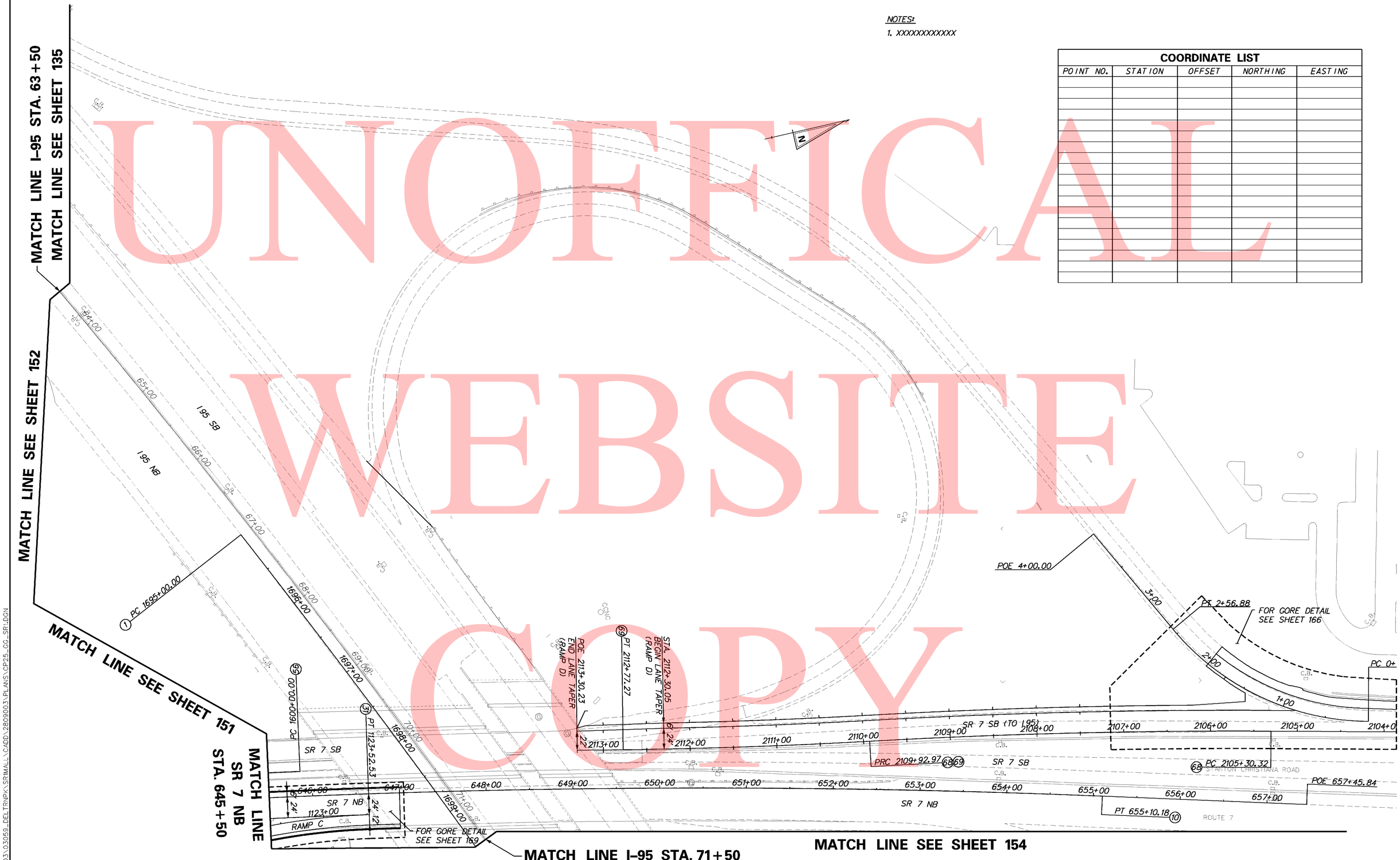

UNOFFICAL WEBSITE COPY

9/10/2010 5:08:33 PM
M:\PROJECTS\2003\03059_DELTRNPK\SRIMALL\CADD\2809003\PLANS\CP25_GG_SR1.DGN

DELAWARE DEPARTMENT OF TRANSPORTATION	ADDENDUMS / REVISIONS	SCALE 0 50 100 150 FEET	SR1 / I-95 INTERCHANGE	CONTRACT 28-090-03	BRIDGE NO.	GRADES & GEOMETRICS	SHEET NO. 156
				COUNTY NEW CASTLE	DESIGNED BY:		TOTAL SHTS. 803
					CHECKED BY:		

NOTES:

1. FOR FINISHED GRADE ELEVATIONS ON BRIDGES SEE "FINISHED BRIDGE DECK ELEVATIONS" SHEETS INCLUDED IN THE BRIDGE PLANS.

COORDINATE LIST				
POINT NO.	STATION	OFFSET	NORTHING	EASTING

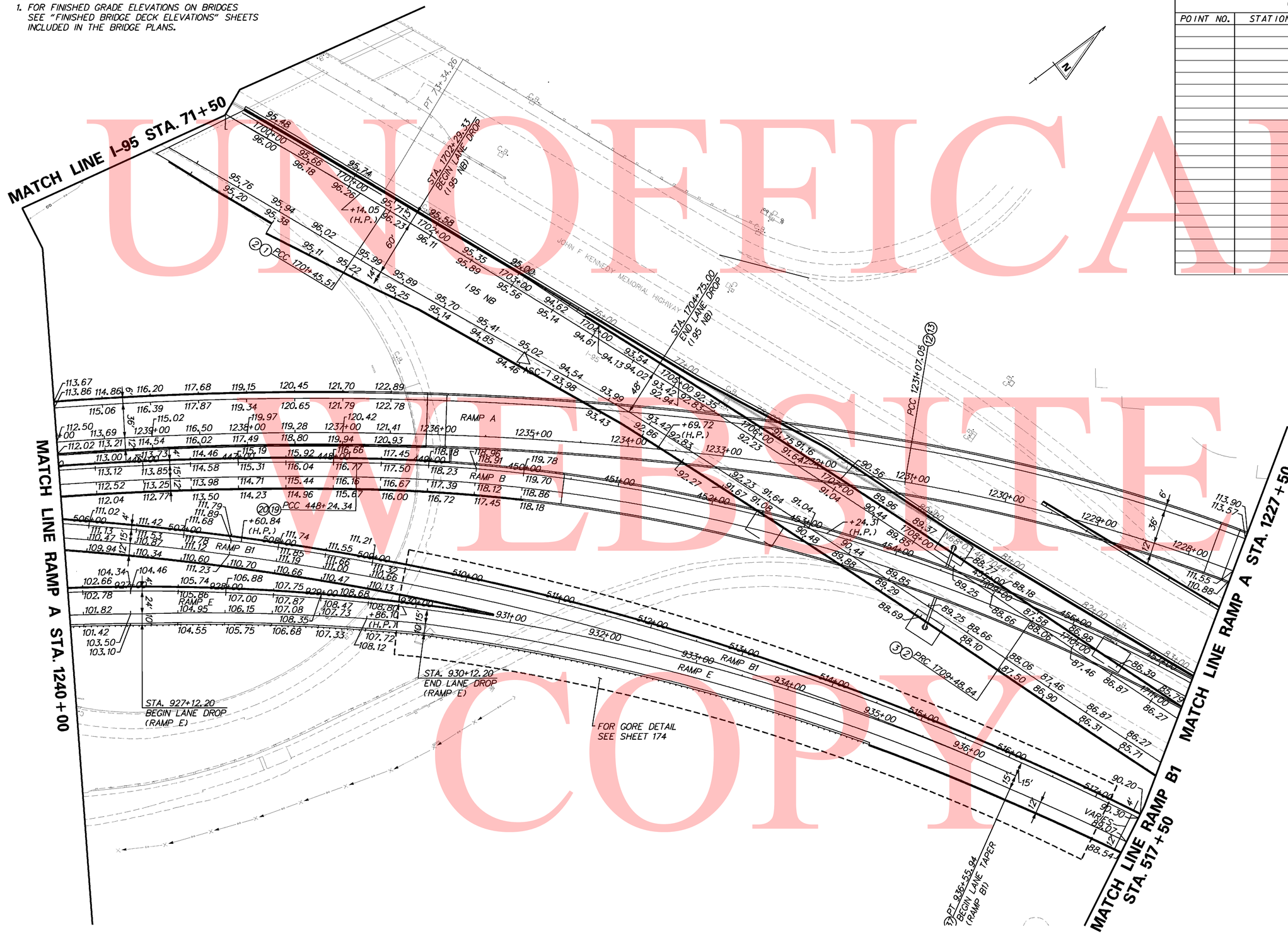

UNOFFICAL WEBSITE COPY

DELAWARE DEPARTMENT OF TRANSPORTATION	ADDENDUMS / REVISIONS	SCALE 0 50 100 150 FEET	SR1 / I-95 INTERCHANGE	CONTRACT 28-090-03	BRIDGE NO.	GRADES & GEOMETRICS	SHEET NO. 157
				COUNTY NEW CASTLE	DESIGNED BY:		TOTAL SHTS. 803
					CHECKED BY:		

12/3/2008 4:57:28 PM
M:\PROJECTS\2003\03059_DELTRNPK\SR1MALL\CADD\2809003\PLANS\CP26_GG_SR1.DGN

UNOFFICIAL WEBSITE COPY

COORDINATE LIST				
POINT NO.	STATION	OFFSET	NORTHING	EASTING

NOTES:

1. FOR FINISHED GRADE ELEVATIONS ON BRIDGES SEE "FINISHED BRIDGE DECK ELEVATIONS" SHEETS INCLUDED IN THE BRIDGE PLANS.

9/10/2010 5:10:18 PM
M:\PROJECTS\2003\03059_DELTRNPK\SRMALL\CADD\2809003\PLANS\CP27_GG_SR1.DGN

DELAWARE DEPARTMENT OF TRANSPORTATION

ADDENDUMS / REVISIONS

SCALE 0 50 100 150 FEET

SR1 / I-95 INTERCHANGE

CONTRACT	BRIDGE NO.		GRADES & GEOMETRICS	SHEET NO.
28-090-03	DESIGNED BY:			158
COUNTY				TOTAL SHTS.
NEW CASTLE	CHECKED BY:			803

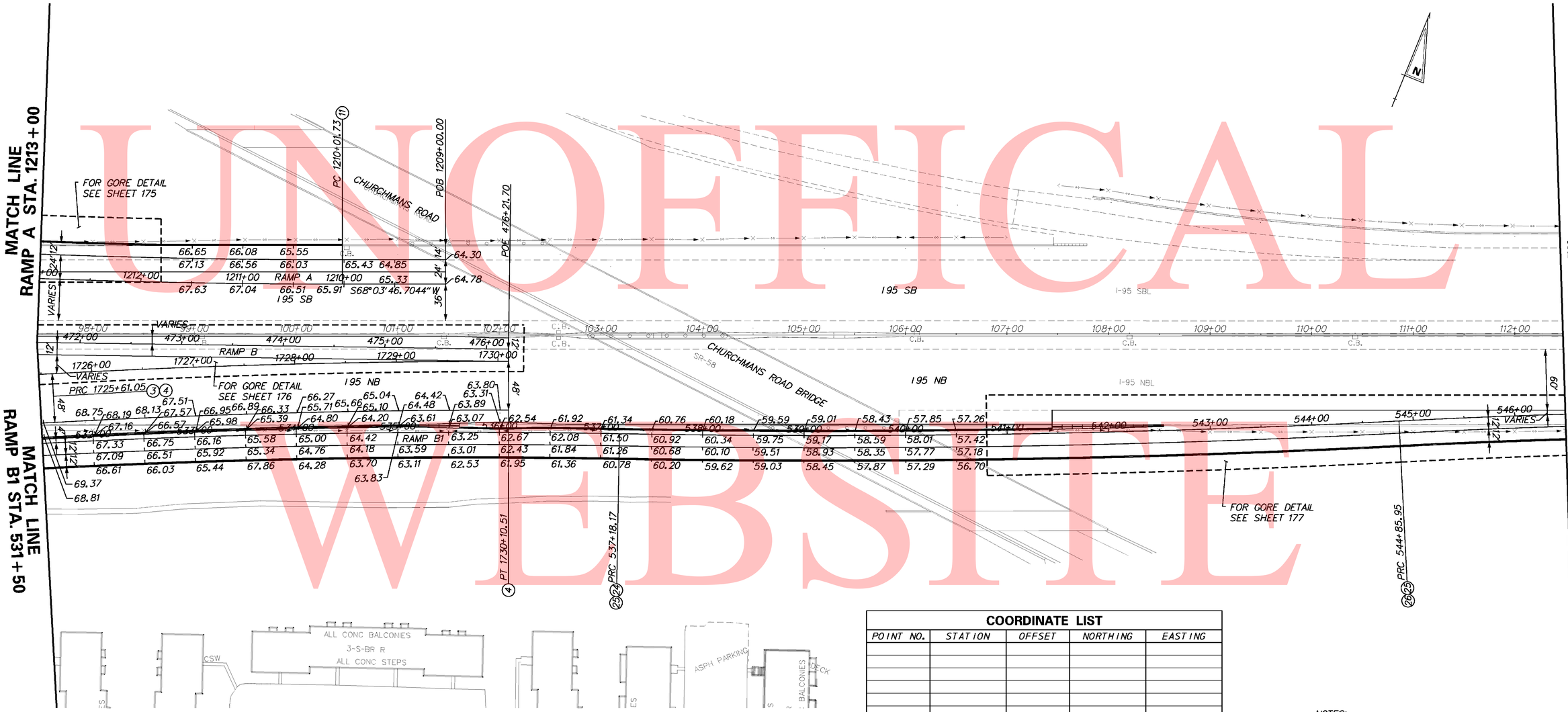

COORDINATE LIST

POINT NO.	STATION	OFFSET	NORTHING	EASTING

NOTES:

1. XXXXXXXX

UNOFFICAL WEBSITE COPY

9/10/2010 5:11:35 PM
M:\PROJECTS\2003\03059_DELTRNPK\SRIMALL\CADD\2809003\PLANS\CP28_GG_SR1.DGN

DELAWARE DEPARTMENT OF TRANSPORTATION

ADDENDUMS / REVISIONS

SCALE 0 50 100 150 FEET

SR1 / I-95 INTERCHANGE

CONTRACT	BRIDGE NO.	
28-090-03	DESIGNED BY:	
COUNTY	CHECKED BY:	
NEW CASTLE		

GRADES & GEOMETRICS

SHEET NO.
159
TOTAL SHTS.
803

COORDINATE LIST				
POINT NO.	STATION	OFFSET	NORTHING	EASTING

NOTES

1. XXXXXXXX

UNOFFICAL WEBSITE COPY

9/10/2010 5:13:40 PM
M:\PROJECTS\2003\03059_DELTRNPK\SRIMALL\CADD\2809003\PLANS\GP29_GG_SR1.DGN

DELAWARE DEPARTMENT OF TRANSPORTATION

ADDENDUMS / REVISIONS

SCALE 0 50 100 150 FEET

SR1 / I-95 INTERCHANGE

CONTRACT	BRIDGE NO.	GRADES & GEOMETRICS	SHEET NO.
28-090-03	DESIGNED BY:		160
COUNTY			TOTAL SHTS.
NEW CASTLE	CHECKED BY:		803

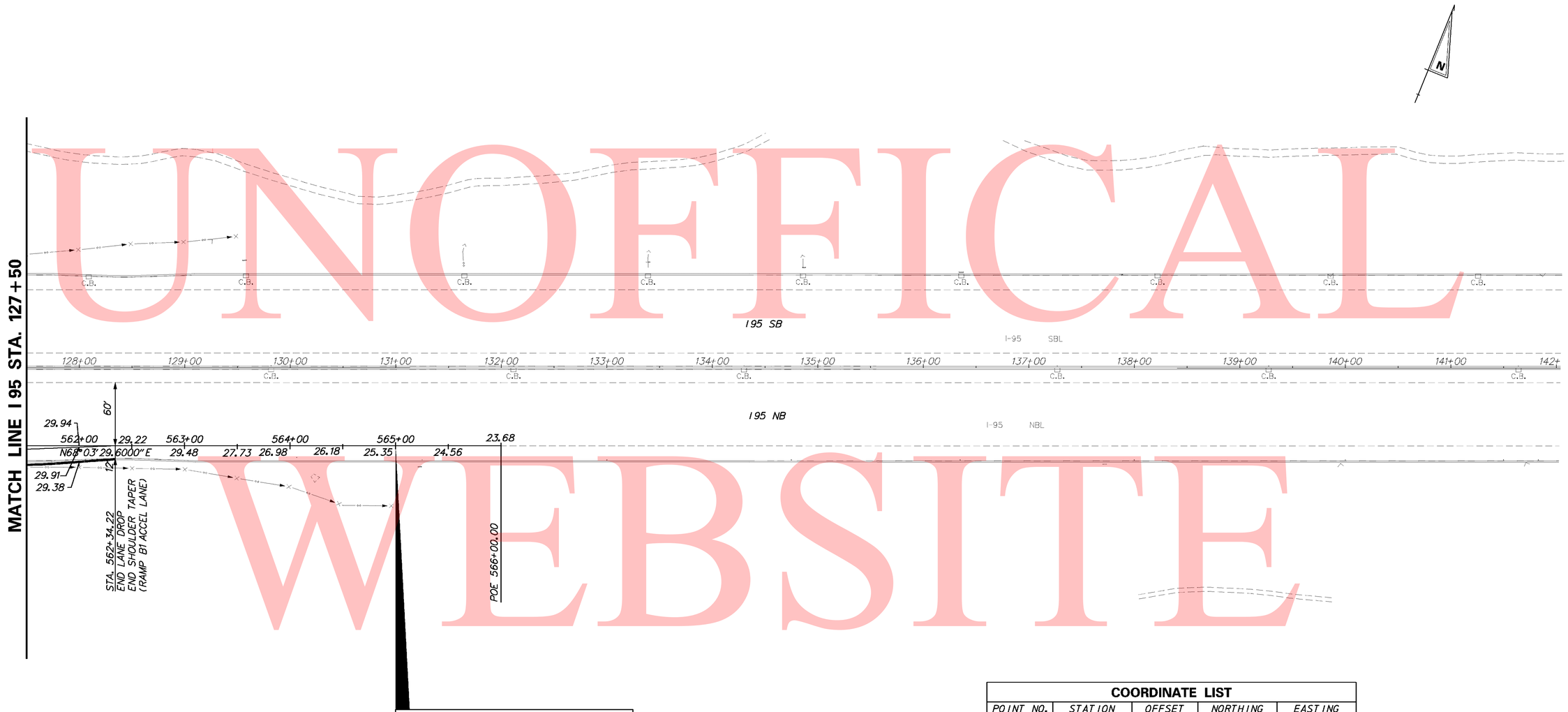

LIMIT OF CONSTRUCTION
CONTRACT 28-090-03
STATION 565+00

COORDINATE LIST				
POINT NO.	STATION	OFFSET	NORTHING	EASTING

UNOFFICAL WEBSITE COPY

9/10/2010 5:13:53 PM
M:\PROJECTS\2003\03059_DELTRNPK\SRIMALL\CADD\2809003\PLANS\CP30_GG_SR1.DGN

DELAWARE DEPARTMENT OF TRANSPORTATION	ADDENDUMS / REVISIONS	SCALE 0 50 100 150 FEET	SR1 / I-95 INTERCHANGE	CONTRACT 28-090-03	BRIDGE NO.	GRADES & GEOMETRICS	SHEET NO. 161
				COUNTY NEW CASTLE	DESIGNED BY:		TOTAL SHTS. 803
					CHECKED BY:		

UNOFFICIAL WEBSITE COPY

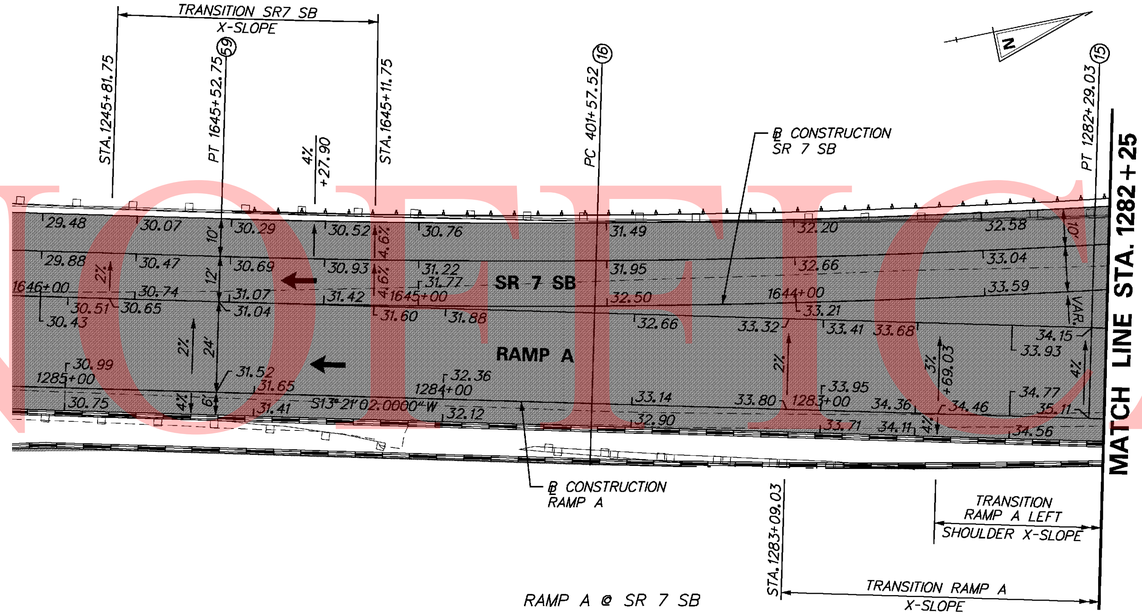

RAMP A @ SR 7 SB

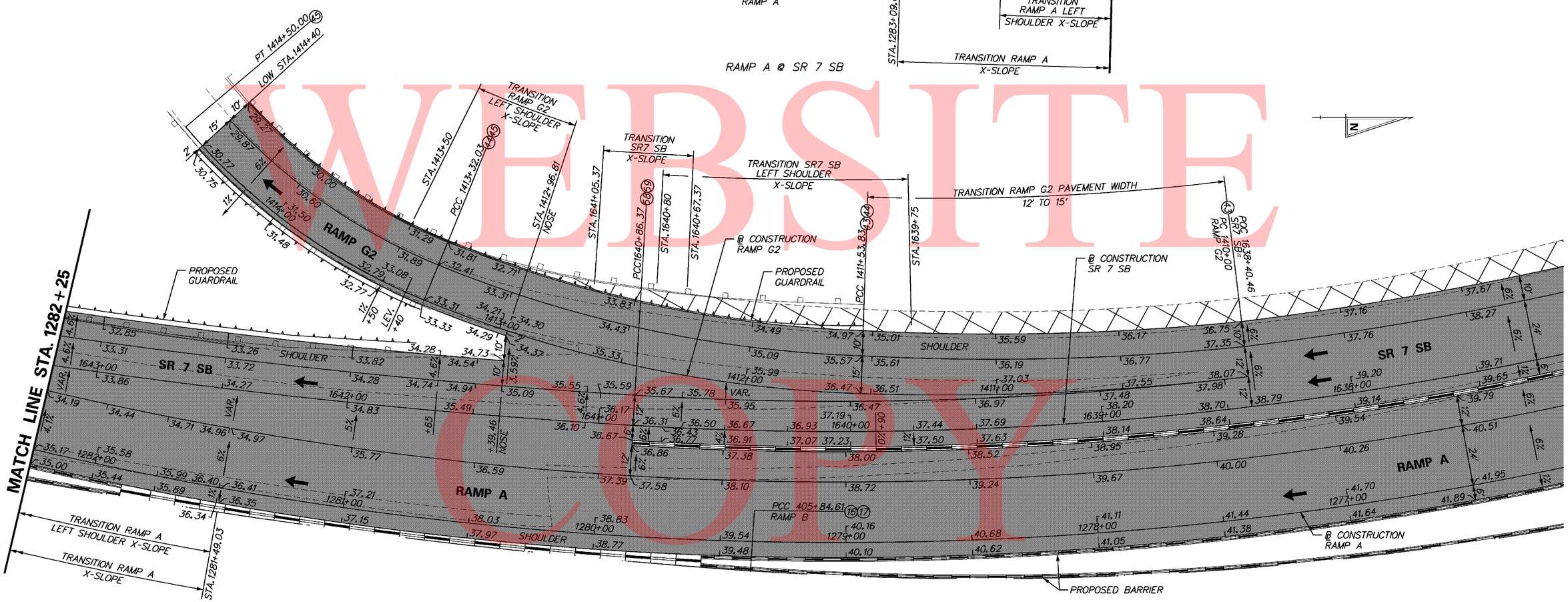

RAMPS A & G2 @ SR 7 SB

DELAWARE DEPARTMENT OF TRANSPORTATION	ADDENDUMS / REVISIONS	SCALE 0 20 40 60 FEET	SR1 / I-95 INTERCHANGE	CONTRACT 28-090-03	BRIDGE NO.	GRADES & GEOMETRICS GORE DETAILS	SHEET NO. 162
				COUNTY NEW CASTLE	DESIGNED BY:		TOTAL SHTS. 803
					CHECKED BY:		

9/10/2010 5:15:06 PM
M:\projects\2003\03059_deltrnpk\SRMall\Cadd\2809003\Plans\cp31_gg_sr1.dgn

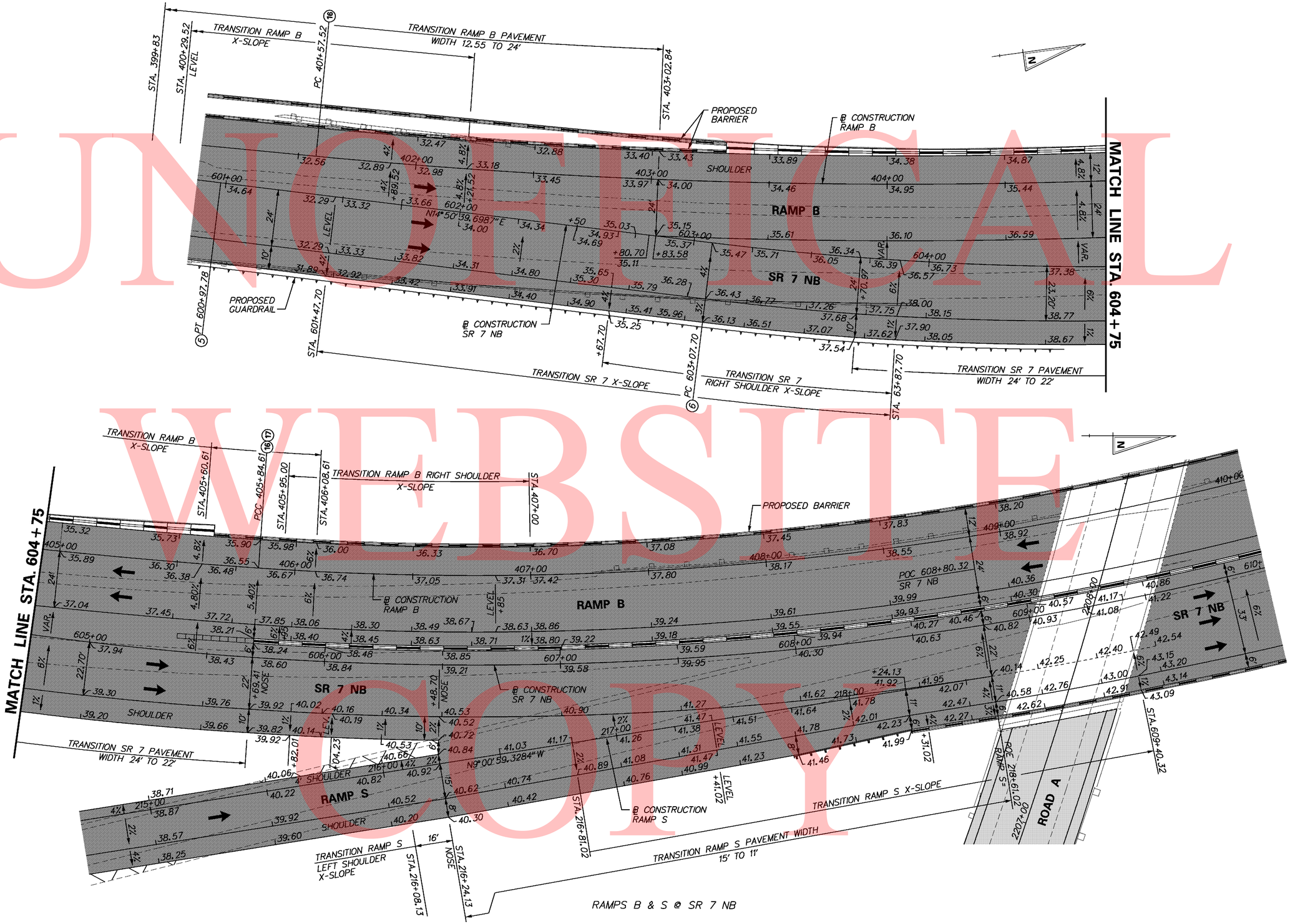

UNOFFICIAL WEBSITE COPY

9/10/2010 5:15:54 PM
M:\projects\2003\03059_deltrnpk\SRTMdll\Cadd\2809003\Plans\cp32_gg_sr1.dgn

DELAWARE DEPARTMENT OF TRANSPORTATION	ADDENDUMS / REVISIONS	SCALE 0 20 40 60 FEET	**SR1 / I-95 INTERCHANGE**	CONTRACT 28-090-03	BRIDGE NO.	**GRADES & GEOMETRICS GORE DETAILS**	SHEET NO. 163
				COUNTY NEW CASTLE	DESIGNED BY:		TOTAL SHTS. 803
					CHECKED BY:		

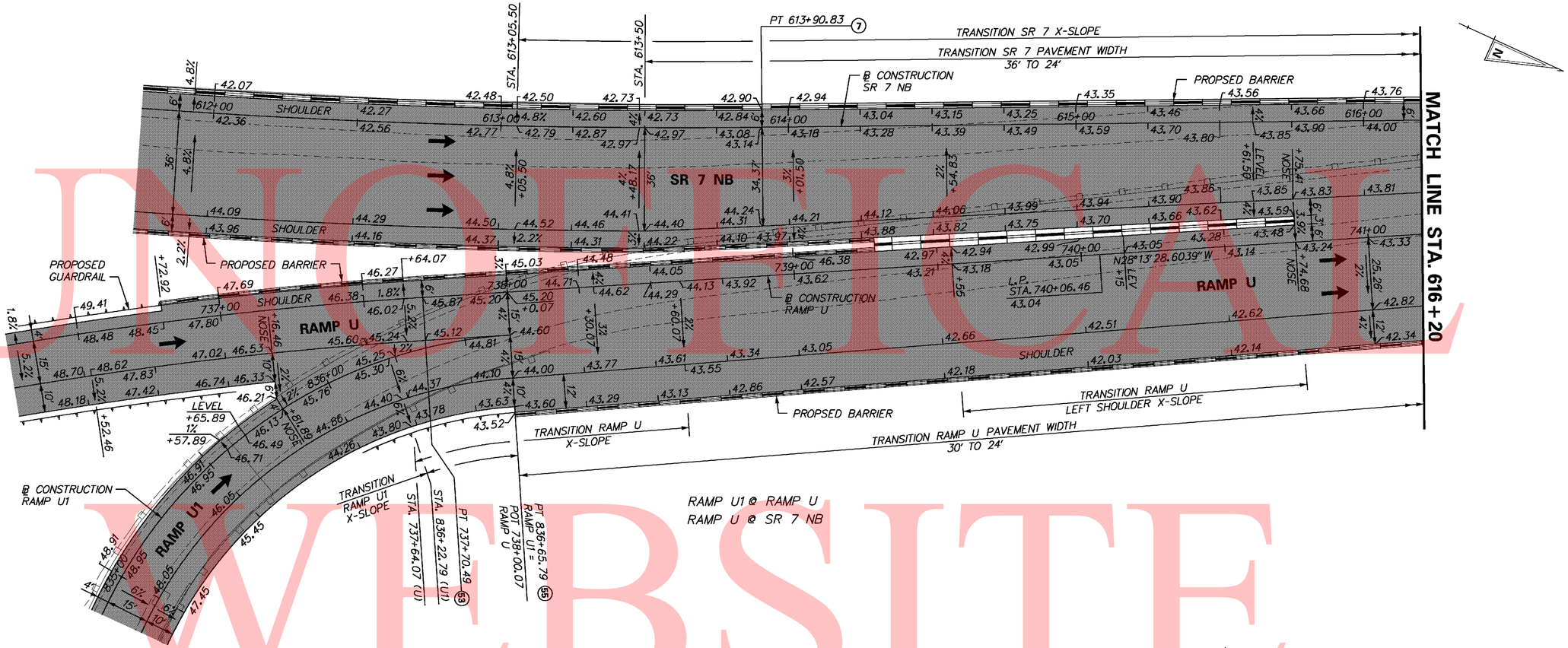

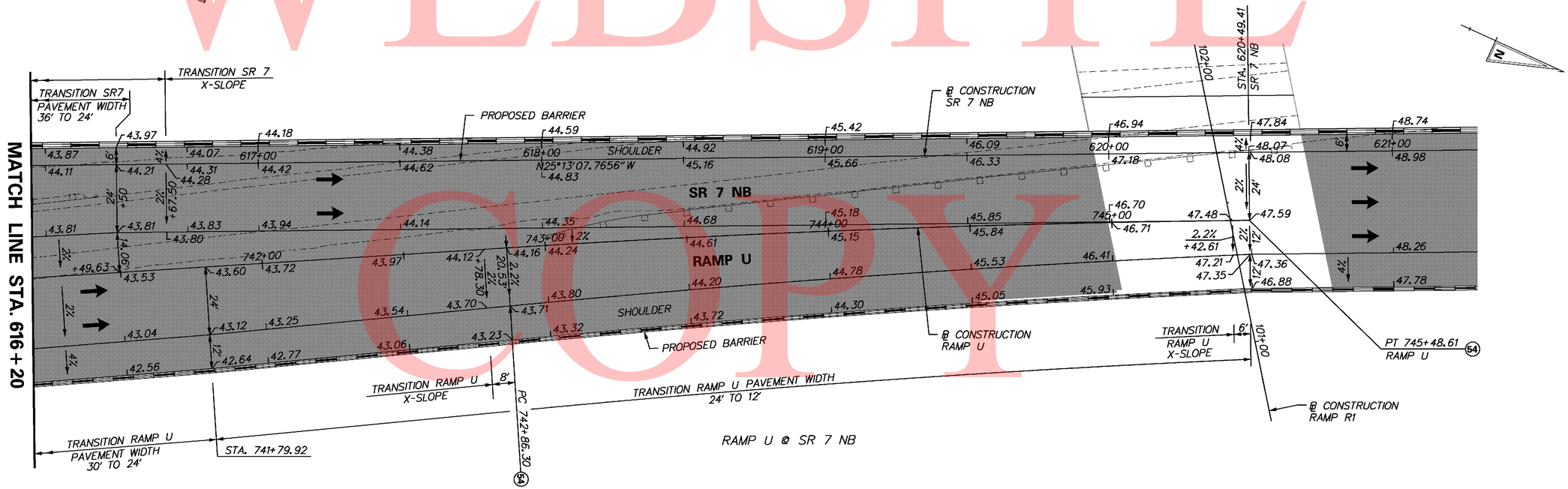

UNOFFICIAL WEBSITE COPY

DELAWARE DEPARTMENT OF TRANSPORTATION	ADDENDUMS / REVISIONS	SCALE 0 20 40 60 FEET	SR1 / I-95 INTERCHANGE	CONTRACT 28-090-03	BRIDGE NO.	GRADES & GEOMETRICS GORE DETAILS
				COUNTY NEW CASTLE	DESIGNED BY:	SHEET NO. 164
					CHECKED BY:	TOTAL SHTS. 803

9/10/2010 5:49:57 PM
M:\PROJECTS\2003\03059_DELTRNPK\SR1MALL\CADD\2809003\PLANS\CP33_GG_SR1.DGN

UNOFFICAL WEBSITE COPY

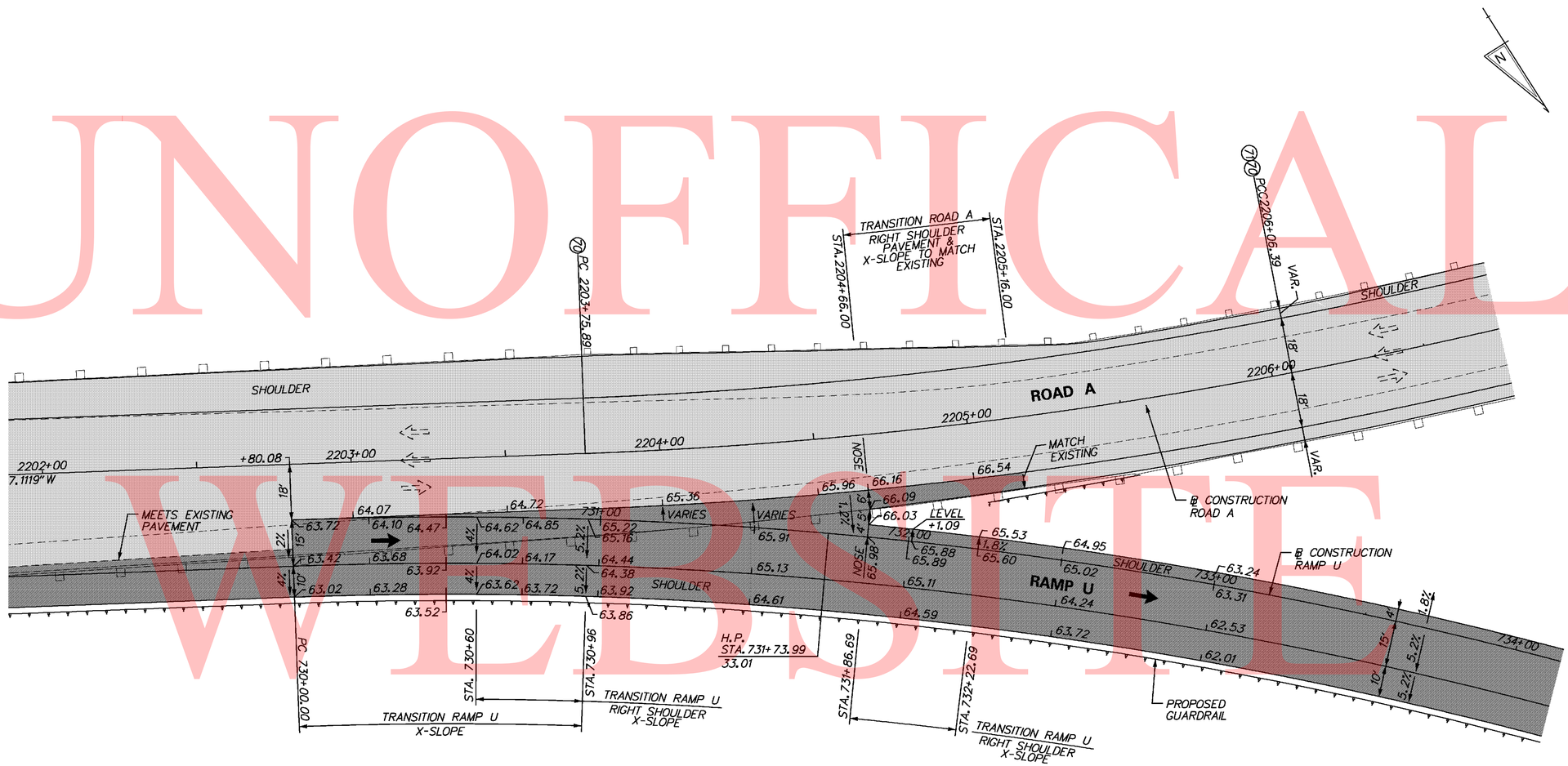

RAMP U @ ROAD A

9/10/2010 5:21:59 PM
M:\PROJECTS\2003\03059_DELTRNPK\SRIMALL\CADD\2809003\PLANS\CP34_GG_SR1.DGN

DELAWARE DEPARTMENT OF TRANSPORTATION	ADDENDUMS / REVISIONS	SCALE 0 20 40 60 FEET	SR1 / I-95 INTERCHANGE	CONTRACT 28-090-03	BRIDGE NO.	GRADES AND GEOMETRICS GORE DETAILS	SHEET NO. 165
				COUNTY NEW CASTLE	DESIGNED BY:		TOTAL SHTS. 803
					CHECKED BY:		

UNOFFICAL WEBSITE COPY

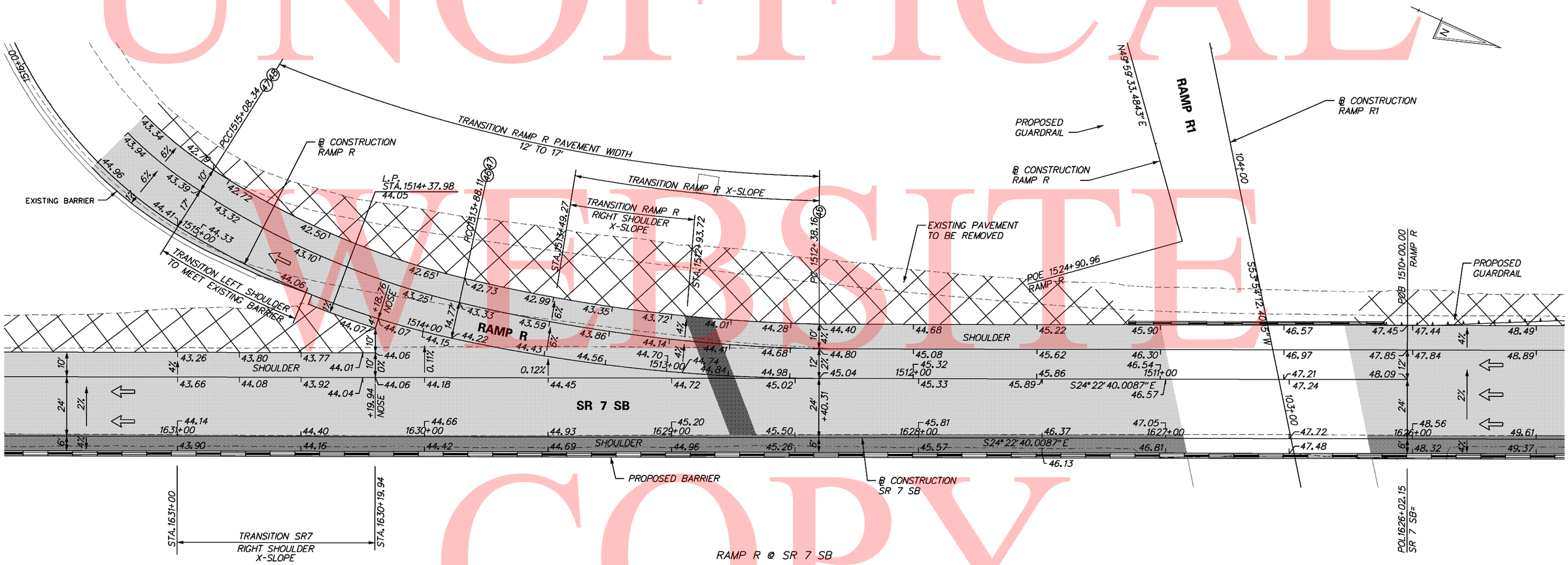

NOTE:
1. FOR FINISHED GRADE ELEVATIONS ON BRIDGES SEE "FINISHED BRIDGE DECK ELEVATIONS" SHEETS INCLUDED IN THE BRIDGE PLANS.

9/10/2010 5:18:37 PM
M:\PROJECTS\2003\03059_DELTRNPK\SRIMALL\CADD\2809003\PLANS\CP37_GG_SR1.DGN

DELAWARE DEPARTMENT OF TRANSPORTATION	ADDENDUMS / REVISIONS	SCALE 0 20 40 60 FEET	SR1 / I-95 INTERCHANGE	CONTRACT 28-090-03	BRIDGE NO.	GRADES & GEOMETRICS GORE DETAILS	SHEET NO. 166
				COUNTY NEW CASTLE	DESIGNED BY:		TOTAL SHTS. 803
					CHECKED BY:		

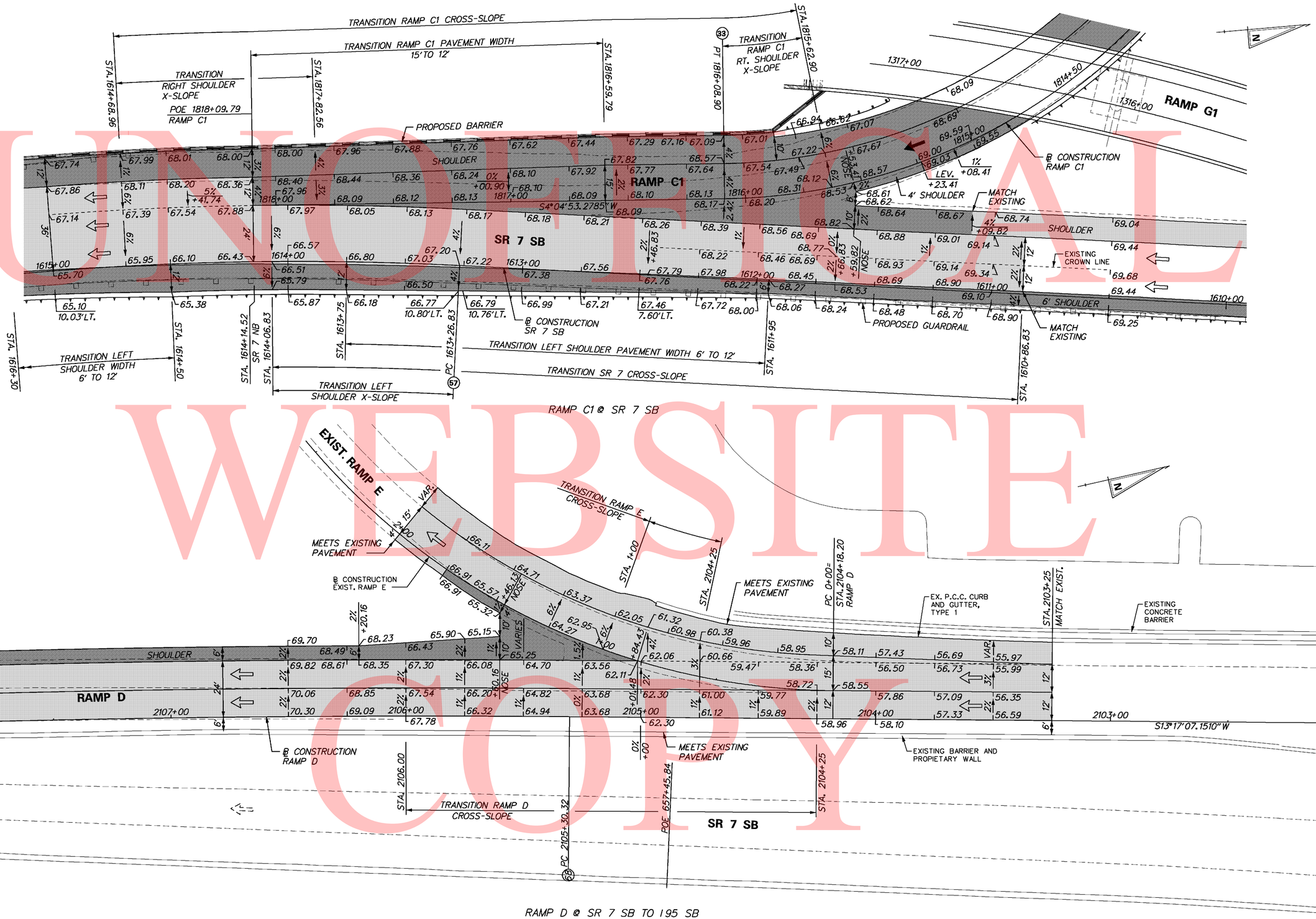

UNOFFICIAL WEBSITE COPY

9/10/2010 5:19:45 PM
M:\PROJECTS\2003\03059_DELTRNPK\SRIMALL\CADD\2809003\PLANS\CP38_GG_SR1.DGN

DELAWARE DEPARTMENT OF TRANSPORTATION	ADDENDUMS / REVISIONS	SCALE 0 20 40 60 FEET	SR1 / I-95 INTERCHANGE	CONTRACT 28-090-03	BRIDGE NO.	GRADES AND GEOMETRICS GORE DETAILS	SHEET NO. 167
				COUNTY NEW CASTLE	DESIGNED BY:		TOTAL SHTS. 803
					CHECKED BY:		

UNOFFICAL WEBSITE COPY

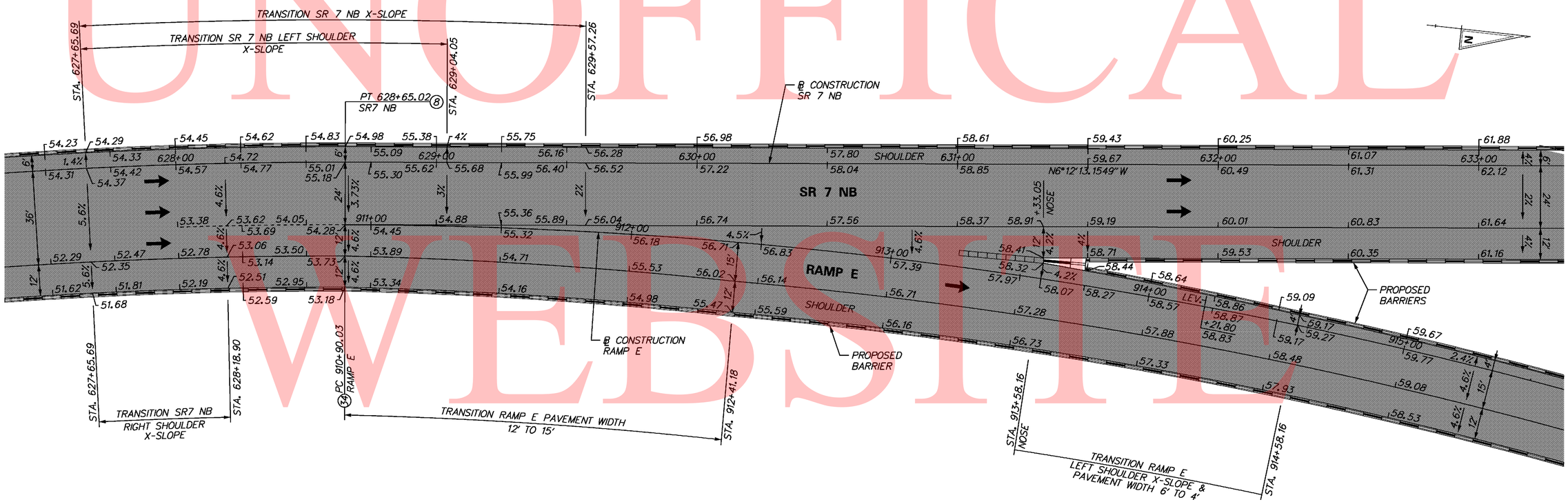

RAMP E @ SR 7 NB

9/10/2010 5:21:02 PM
M:\PROJECTS\2003\03059_DELTRNPK\SRIMALL\CADD\2809003\PLANS\CP40_GG_SR1.DGN

DELAWARE DEPARTMENT OF TRANSPORTATION	ADDENDUMS / REVISIONS	SCALE 0 20 40 60 FEET	SR1 / I-95 INTERCHANGE	CONTRACT 28-090-03	BRIDGE NO.	GRADES & GEOMETRICS GORE DETAILS	SHEET NO. 168
				COUNTY NEW CASTLE	DESIGNED BY:		TOTAL SHTS. 803
					CHECKED BY:		

UNOFFICAL WEBSITE COPY

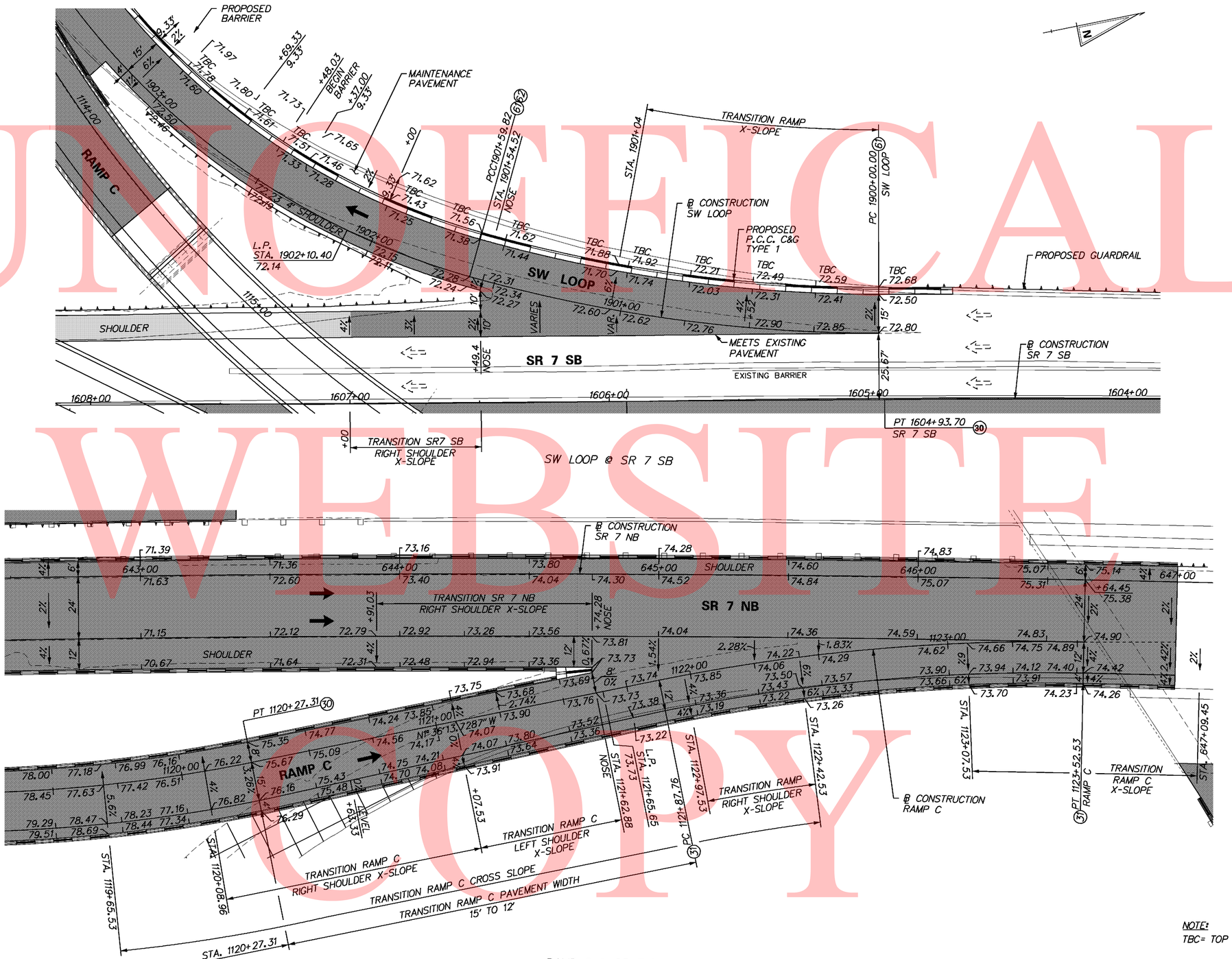

RAMP C @ SR 7 NB

NOTE:
TBC= TOP BACK OF CURB

DELAWARE DEPARTMENT OF TRANSPORTATION	ADDENDUMS / REVISIONS	SCALE 0 20 40 60 FEET	SR1 / I-95 INTERCHANGE	CONTRACT 28-090-03 / COUNTY NEW CASTLE	BRIDGE NO. / DESIGNED BY: / CHECKED BY:	GRADES AND GEOMETRICS GORE DETAILS	SHEET NO. 169 / TOTAL SHTS. 803

6/24/2010 3:15:12 PM
M:\PROJECTS\2003\03059_DELTRNPK\SR1MALL\CADD\2809003\PLANS\CP41_GG_SR1.DGN

UNOFFICAL WEBSITE COPY

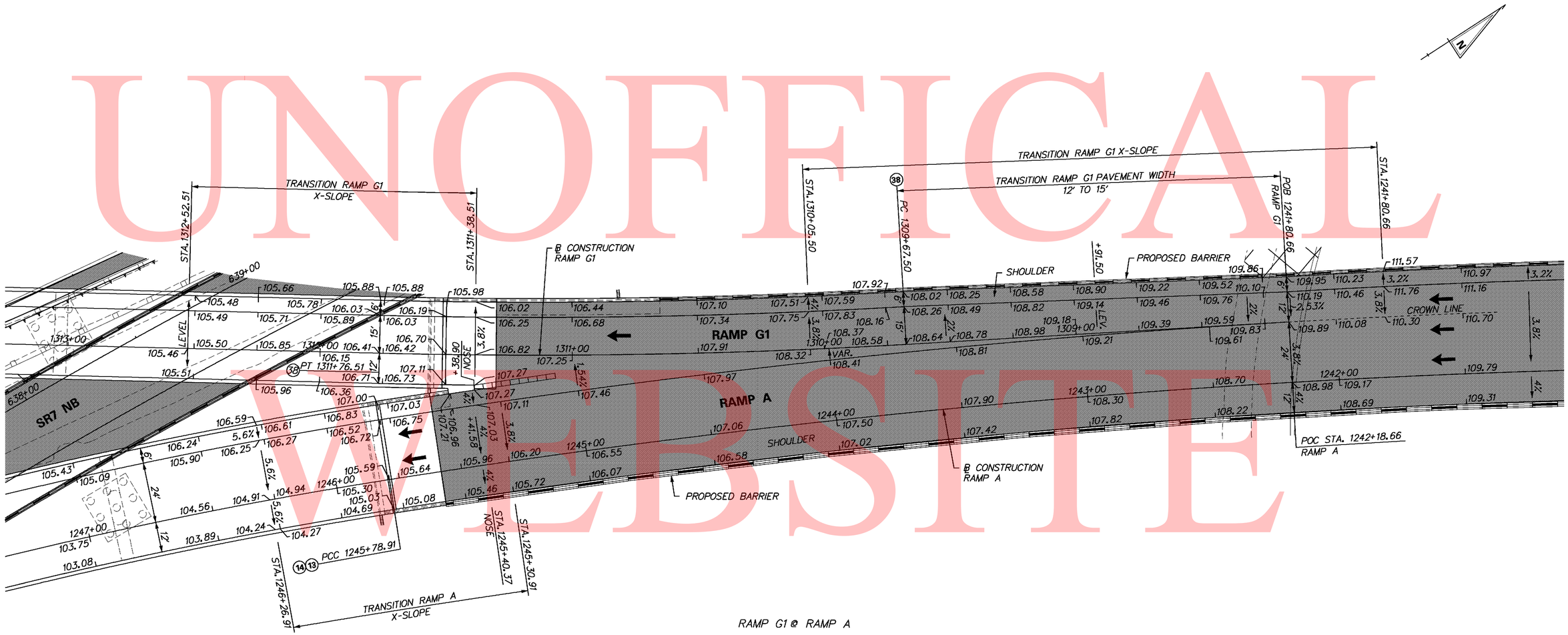

RAMP G1 @ RAMP A

NOTE:
1. FOR FINISHED GRADE ELEVATIONS ON BRIDGES SEE "FINISHED BRIDGE DECK ELEVATIONS" SHEETS INCLUDED IN THE BRIDGE PLANS.

9/10/2010 5:55:14 PM
M:\PROJECTS\2003\03059_DELTRNPK\SRIMALL\CADD\2809003\PLANS\CP42_GG_SR1.DGN

DELAWARE DEPARTMENT OF TRANSPORTATION	ADDENDUMS / REVISIONS	SCALE 0 20 40 60 FEET	SR1 / I-95 INTERCHANGE	CONTRACT 28-090-03	BRIDGE NO.	GRADES & GEOMETRICS GORE DETAILS
				COUNTY NEW CASTLE	DESIGNED BY:	SHEET NO. 170
					CHECKED BY:	TOTAL SHTS. 803

UNOFFICAL WEBSITE COPY

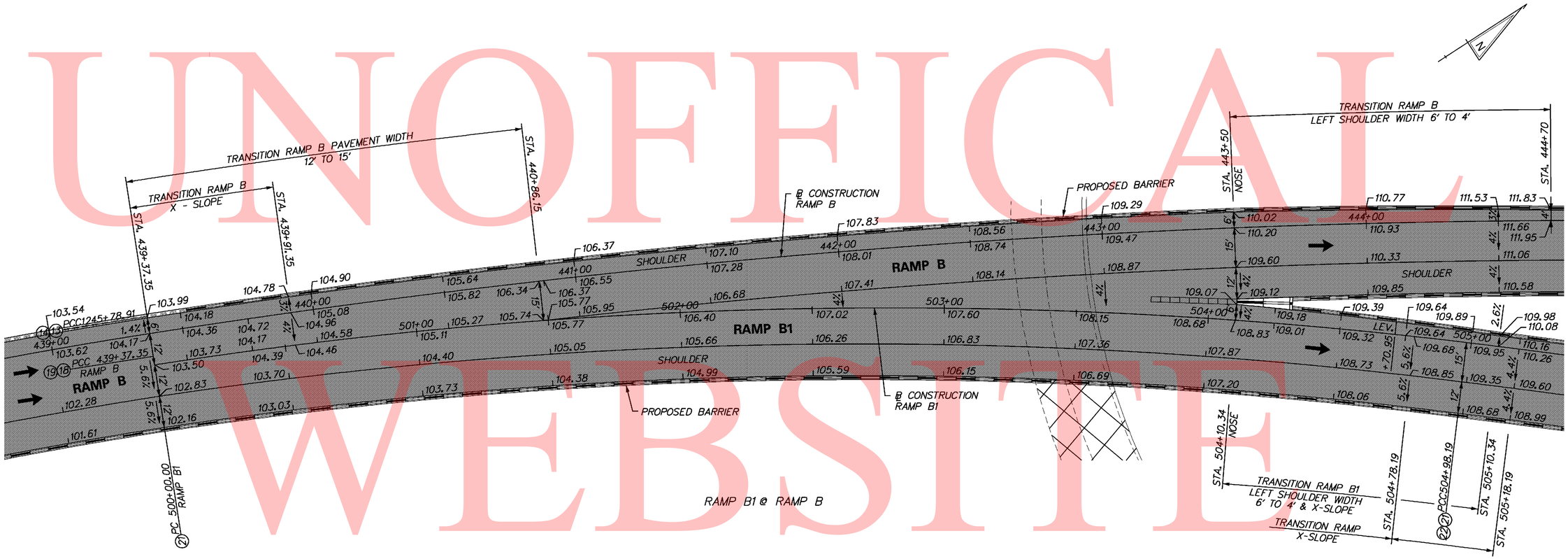

DELAWARE DEPARTMENT OF TRANSPORTATION	ADDENDUMS / REVISIONS	SCALE 0 20 40 60 FEET	SR1 / I-95 INTERCHANGE	CONTRACT 28-090-03	BRIDGE NO.	GRADES & GEOMETRICS GORE DETAILS	SHEET NO. 171
				COUNTY NEW CASTLE	DESIGNED BY:		TOTAL SHTS. 803
					CHECKED BY:		

4/6/2010 8:9:25 AM
M:\PROJECTS\2003\03059_DELTRNPK\SRIMALL\CADD\2809003\PLANS\CP43_GG_SR1.DGN

UNOFFICAL WEBSITE COPY

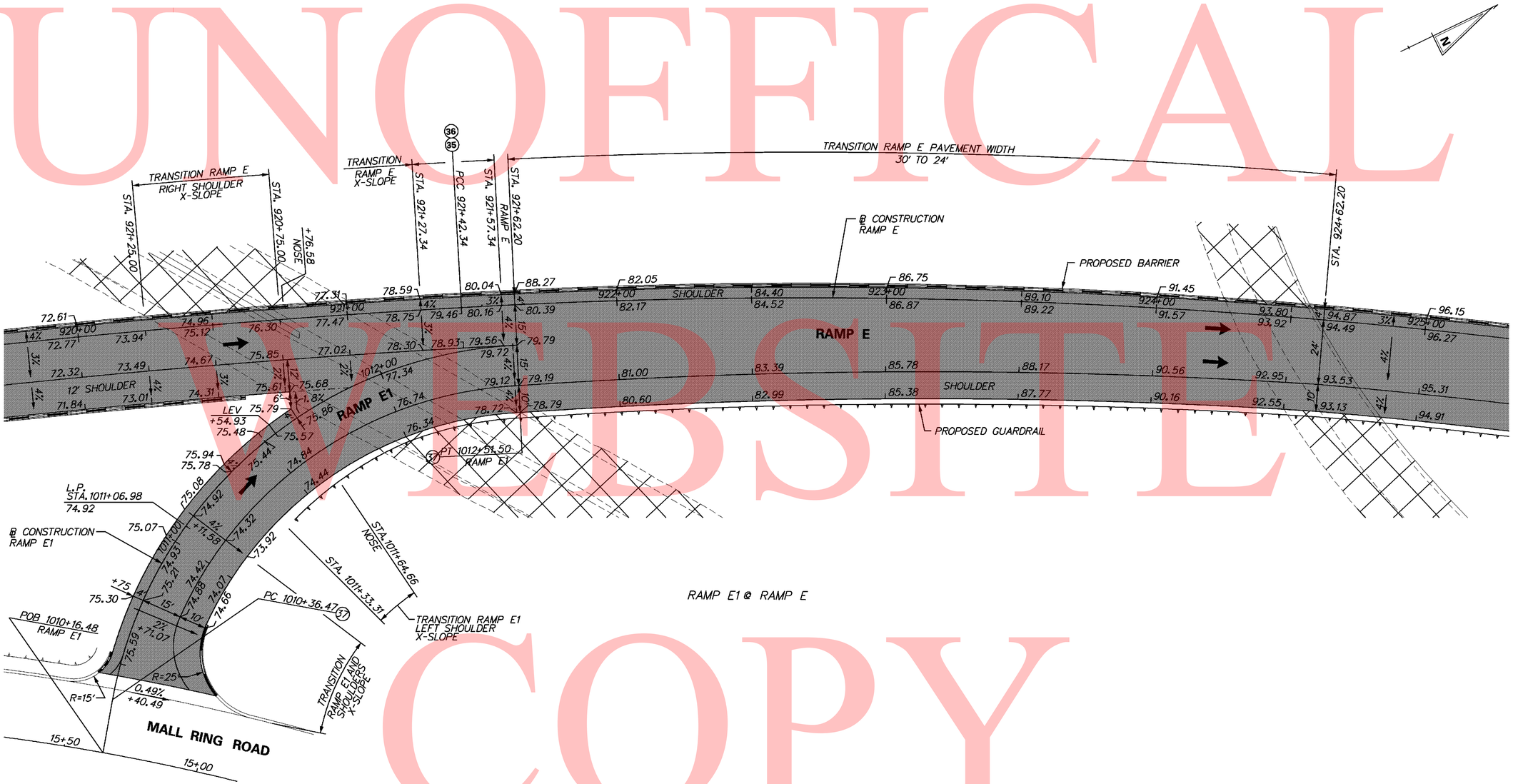

DELAWARE DEPARTMENT OF TRANSPORTATION	ADDENDUMS / REVISIONS	SCALE 0 20 40 60 FEET	SR1 / I-95 INTERCHANGE	CONTRACT 28-090-03	BRIDGE NO.	GRADES & GEOMETRICS GORE DETAILS	SHEET NO. 172
				COUNTY NEW CASTLE	DESIGNED BY:		TOTAL SHTS. 803
					CHECKED BY:		

8/4/2010 2:34:50 PM
M:\projects\2003\03059_deltrans\SRMa\Cad\2809003\Plans\cp14_gga_ar.dgn

UNOFFICIAL WEBSITE COPY

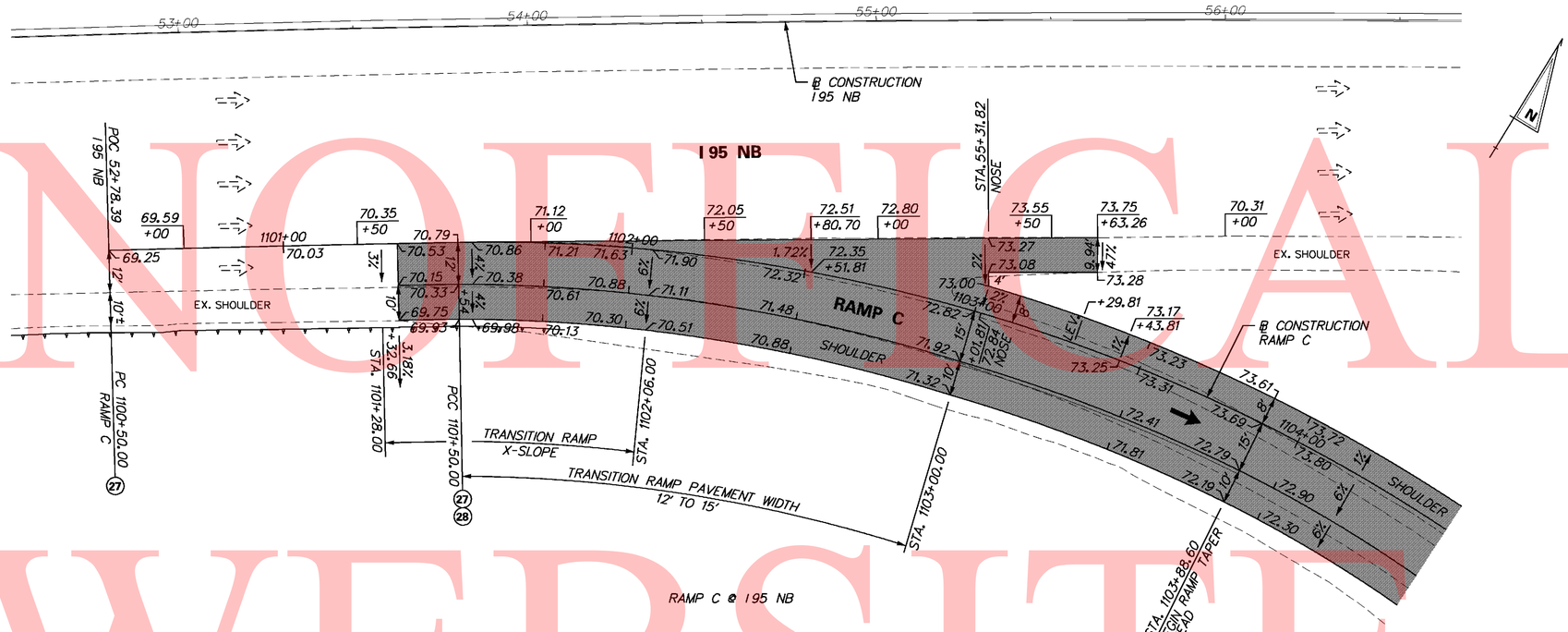

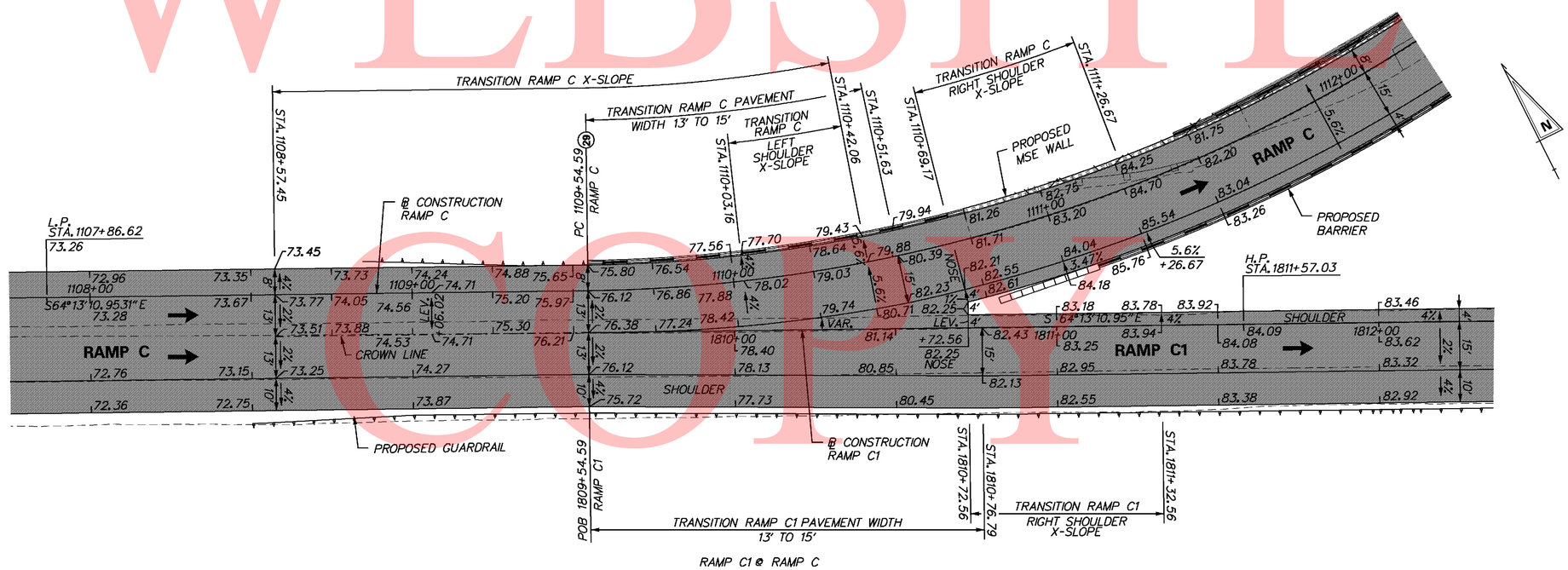

DELAWARE DEPARTMENT OF TRANSPORTATION	ADDENDUMS / REVISIONS	SCALE 0 20 40 60 FEET	SR1 / I-95 INTERCHANGE	CONTRACT 28-090-03	BRIDGE NO.	GRADES AND GEOMETRICS GORE DETAILS	SHEET NO. 173
				COUNTY NEW CASTLE	DESIGNED BY:		TOTAL SHTS. 803
					CHECKED BY:		

9/10/2010 5:59:08 PM
M:\PROJECTS\2003\03059_DELTRNPK\SRMALL\CADD\2809003\PLANS\GP45_GG_SR1.DGN

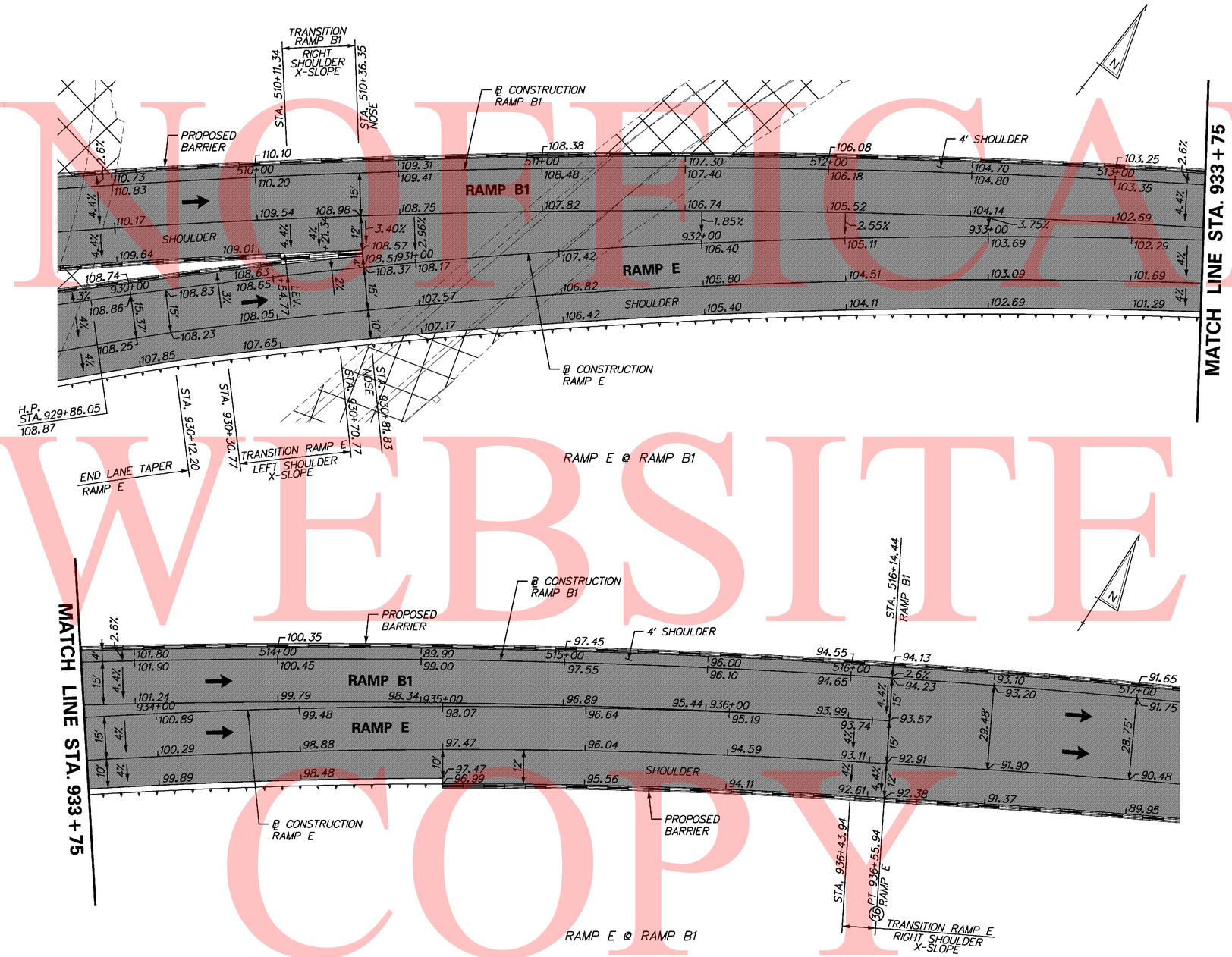

UNOFFICIAL WEBSITE COPY

8/10/2010 11:21:20 AM
M:\PROJECTS\2003\03059_DELTRNPK\SRIMALL\CADD\2809003\PLANS\CP46_GG_SR1.DGN

DELAWARE DEPARTMENT OF TRANSPORTATION	ADDENDUMS / REVISIONS	SCALE 0 20 40 60 FEET	SR1 / I-95 INTERCHANGE	CONTRACT 28-090-03 / COUNTY NEW CASTLE	BRIDGE NO. / DESIGNED BY: / CHECKED BY:	GRADES & GEOMETRICS GORE DETAILS	SHEET NO. 174 / TOTAL SHTS. 803

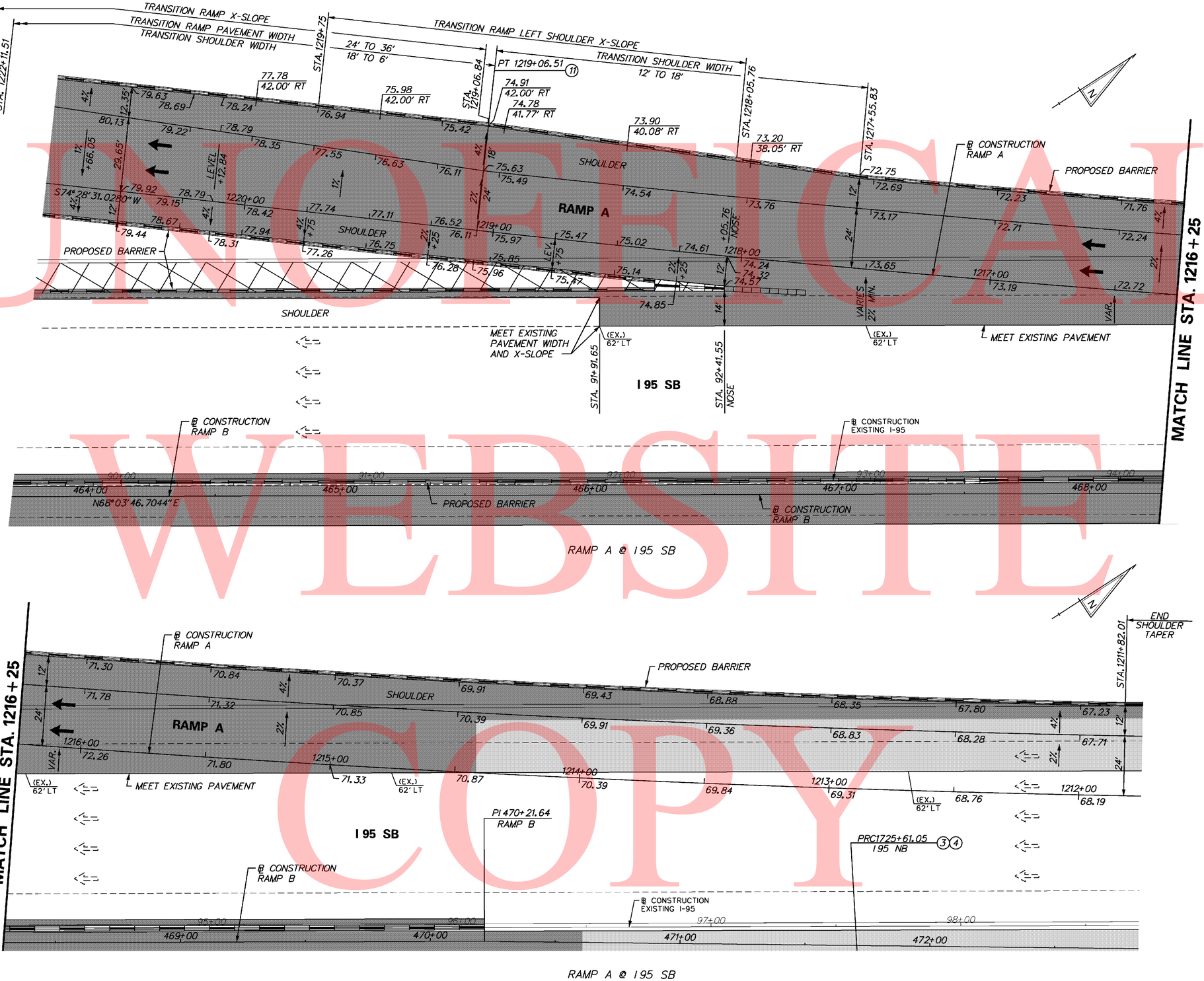

UNOFFICIAL WEBSITE COPY

4/7/2010 10:40:58 AM
M:\PROJECTS\2003\03059_DELTRNPK\SR1MALL\CADD\2809003\PLANS\CP47_GG_SR1.DGN

DELAWARE DEPARTMENT OF TRANSPORTATION	ADDENDUMS / REVISIONS	SCALE 0 20 40 60 FEET	SR1 / I-95 INTERCHANGE	CONTRACT 28-090-03	BRIDGE NO.	GRADES & GEOMETRICS GORE DETAILS	SHEET NO. 175
				COUNTY NEW CASTLE	DESIGNED BY:		TOTAL SHTS. 803
					CHECKED BY:		

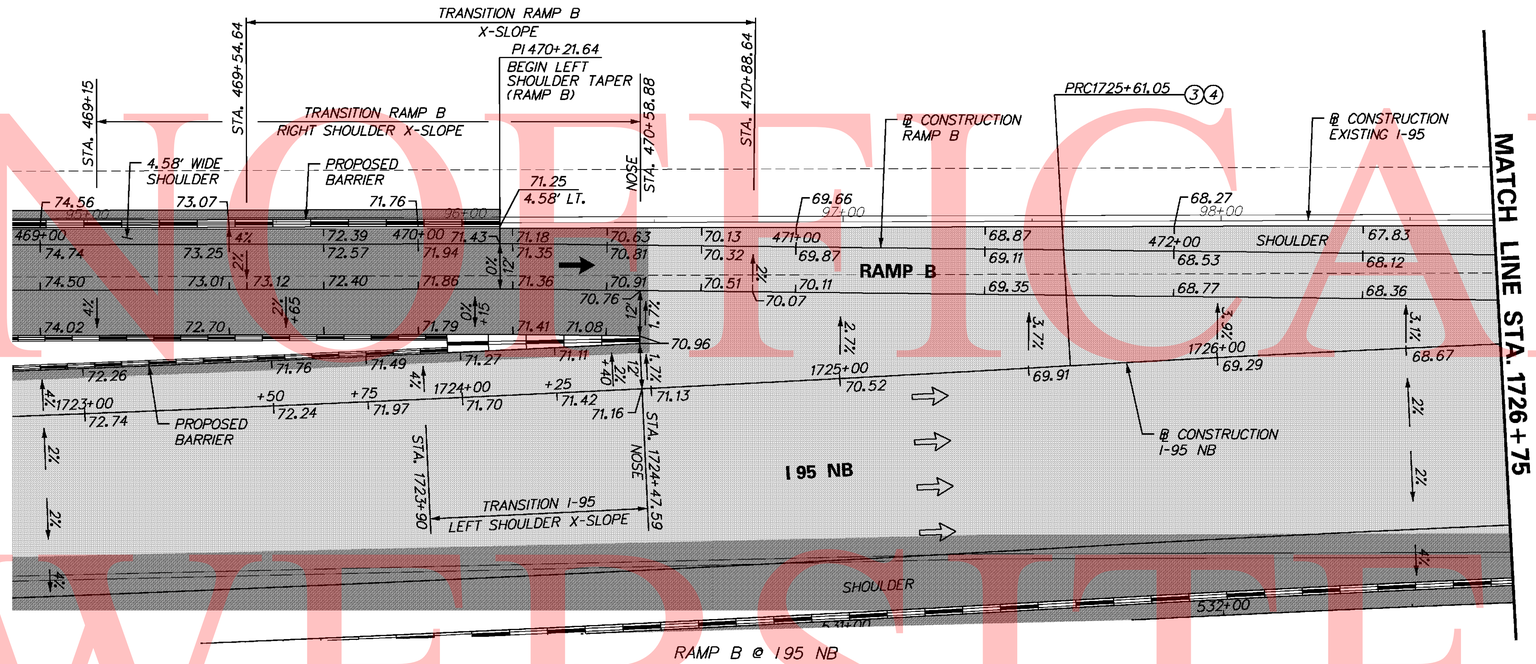

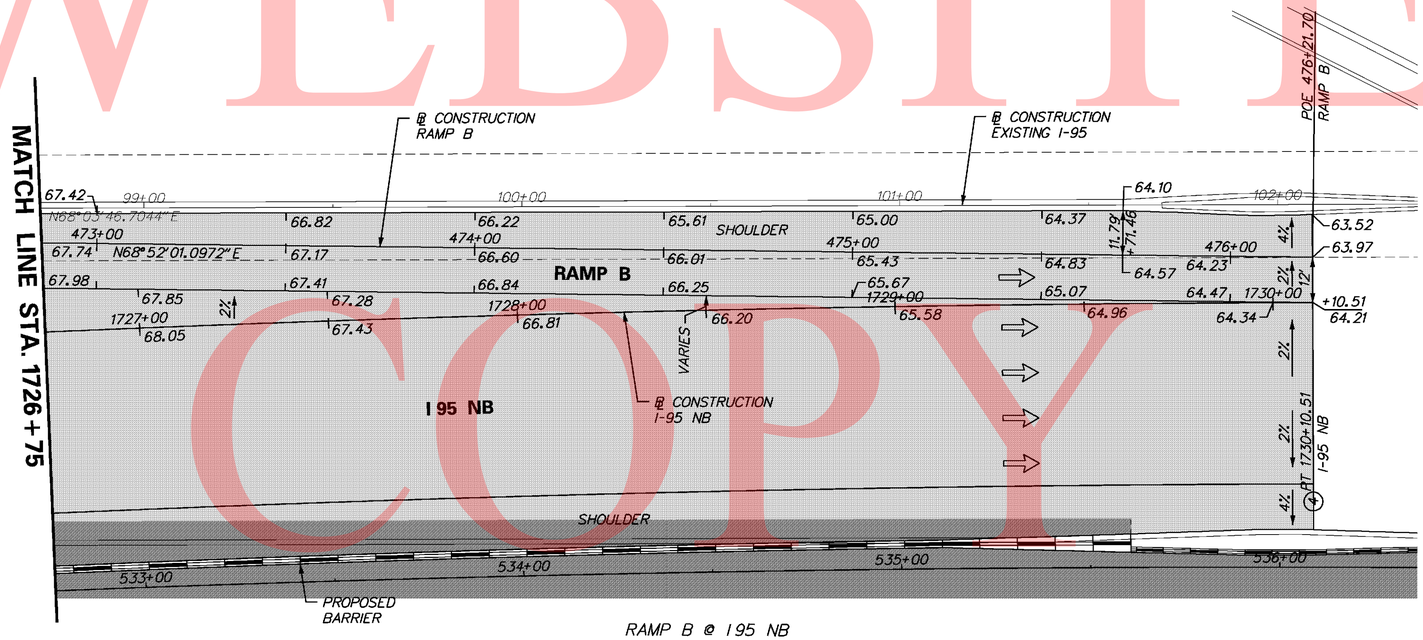

UNOFFICIAL WEBSITE COPY

3/25/2010 4:02:57 PM
M:\PROJECTS\2003\03059_DELTRNPK\SRIMALL\CADD\2809003\PLANS\CP48_GG_SR1.DGN

DELAWARE DEPARTMENT OF TRANSPORTATION	ADDENDUMS / REVISIONS	SCALE 0 20 40 60 FEET	SR1 / I-95 INTERCHANGE	CONTRACT 28-090-03	BRIDGE NO.	GRADES & GEOMETRICS GORE DETAILS	SHEET NO. 176
				COUNTY NEW CASTLE	DESIGNED BY:		TOTAL SHTS. 803
					CHECKED BY:		

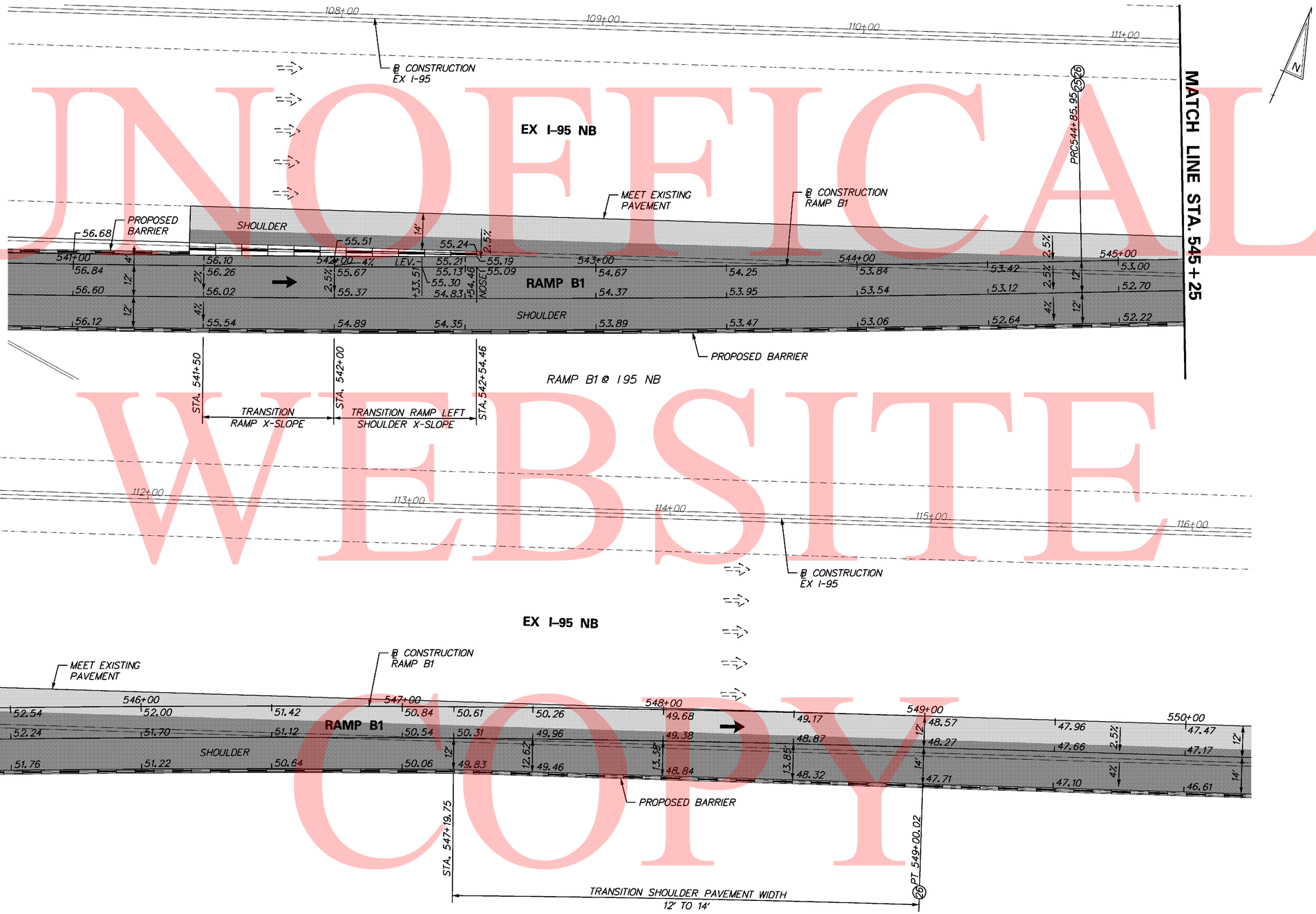

UNOFFICAL WEBSITE COPY

3/29/2010 12:48:07 PM
M:\PROJECTS\2003\03059_DELTRNPK\SRIMALL\CADD\2809003\PLANS\CP49_GG_SR1.DGN

DELAWARE DEPARTMENT OF TRANSPORTATION	ADDENDUMS / REVISIONS	SCALE 0 20 40 60 FEET	SR1 / I-95 INTERCHANGE	CONTRACT 28-090-03	BRIDGE NO.	GRADES & GEOMETRICS GORE DETAILS	SHEET NO. 177
				COUNTY NEW CASTLE	DESIGNED BY:		TOTAL SHTS. 803
					CHECKED BY:		

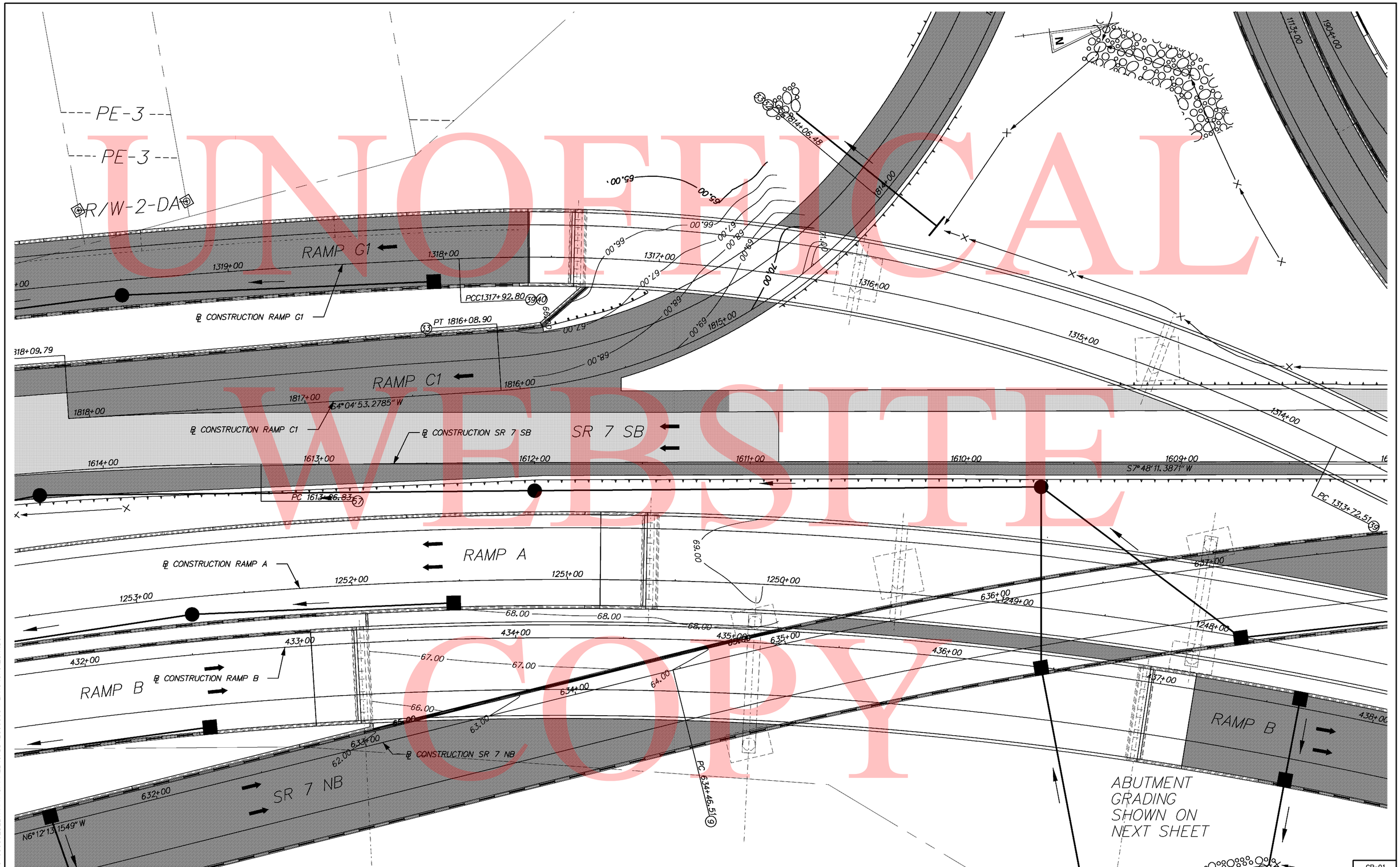

UNOFFICAL WEBSITE COPY

7/27/2010 1:57:14 PM
M:\PROJECTS\2003\03059_DELTRNPK\SRIMALL\CADD\2809003\PLANS\GR01_SR1.DGN

DELAWARE DEPARTMENT OF TRANSPORTATION

ADDENDUMS / REVISIONS

SCALE 0 20 40 60 FEET

SR1 / I-95 INTERCHANGE

CONTRACT	BRIDGE NO.
28-090-03	DESIGNED BY:
COUNTY	
NEW CASTLE	CHECKED BY:

RAMP A ABUT. B OVER SR7
RAMP B ABUT. A OVER SR7
RAMP G1 ABUT. B OVER SR7
GRADING PLAN

	GR-01
SHEET NO.	178
TOTAL SHTS.	803

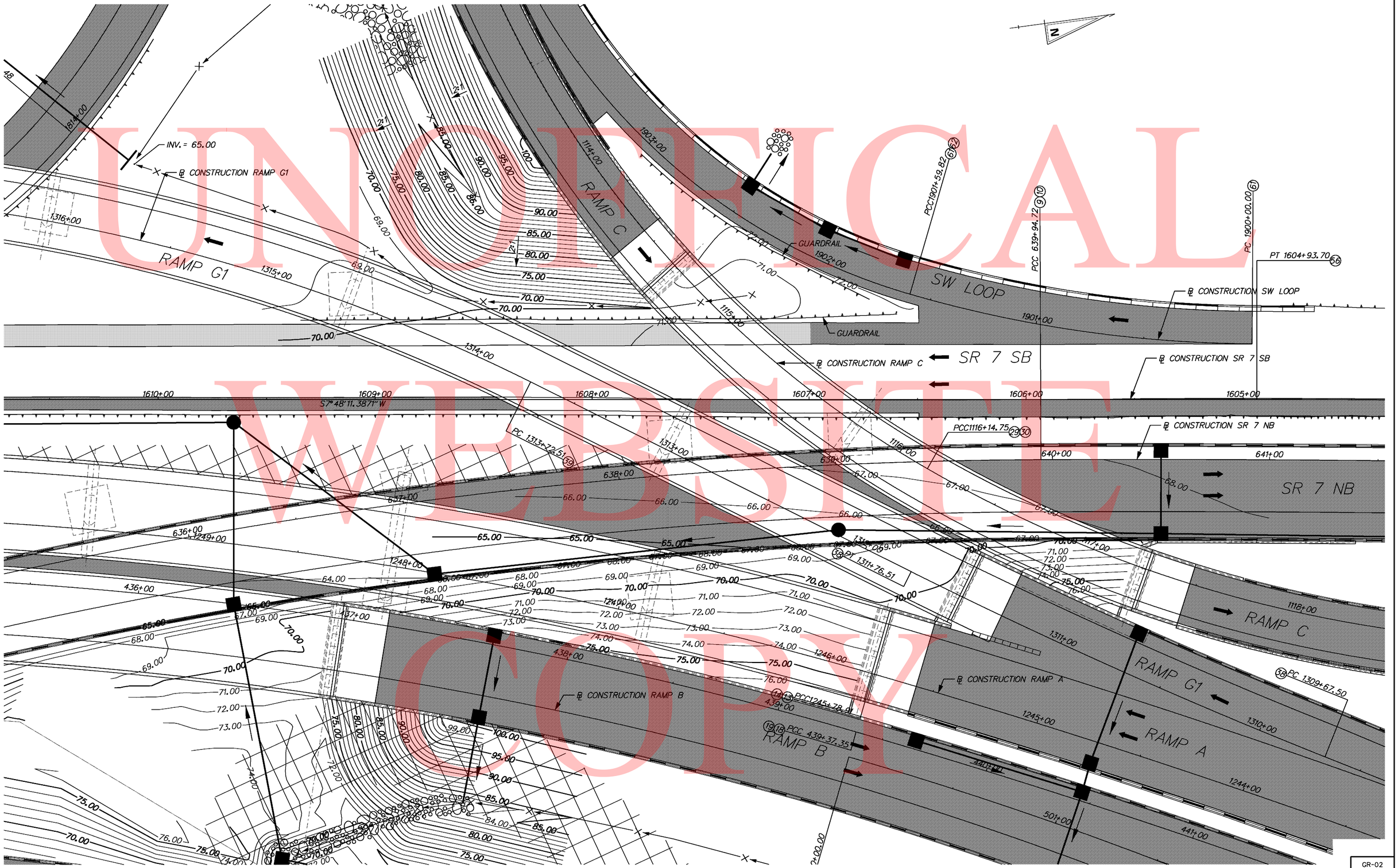

UNOFFICIAL WEBSITE COPY

8/25/2010 1:54:08 PM
M:\PROJECTS\2003\03059_DELTRNPK\SR1MAL\CADD\2809003\PLANS\GR02_SR1.DGN

DELAWARE DEPARTMENT OF TRANSPORTATION

ADDENDUMS / REVISIONS

SCALE 0 20 40 60 FEET

SR1 / I-95 INTERCHANGE

CONTRACT	BRIDGE NO.
28-090-03	DESIGNED BY:
COUNTY	CHECKED BY:
NEW CASTLE	

RAMP A ABUT. A OVER SR7
RAMP B ABUT. B OVER SR7
RAMP C ABUT. A&B OVER SR7
RAMP G1 ABUT. A OVER SR7
GRADING PLAN

GR-02
SHEET NO.
179
TOTAL SHTS.
803

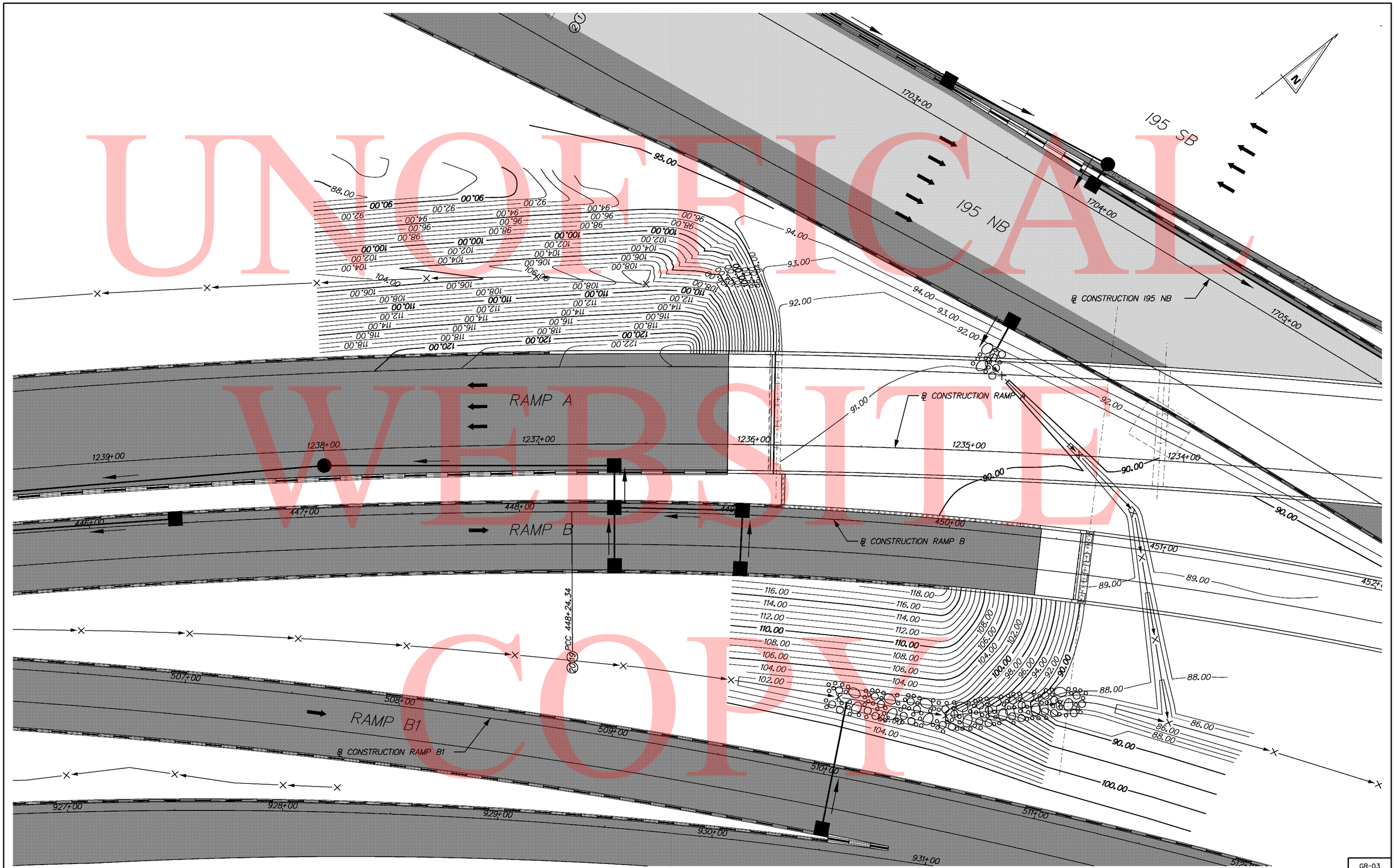

UNOFFICIAL WEBSITE COPY

7/27/2010 1:39:13 PM
M:\PROJECTS\2003\03059_DELTRNPK\SRIMALL\CADD\2809003\PLANS\GR03_SR1.DGN

DELAWARE DEPARTMENT OF TRANSPORTATION

ADDENDUMS / REVISIONS

SCALE 0 20 40 60 FEET

SR1 / I-95 INTERCHANGE

CONTRACT	BRIDGE NO.
28-090-03	DESIGNED BY:
COUNTY	
NEW CASTLE	CHECKED BY:

RAMP A ABUT. B OVER I-95
RAMP B ABUT. B OVER I-95
GRADING PLAN

GR-03
SHEET NO.
180
TOTAL SHTS.
803

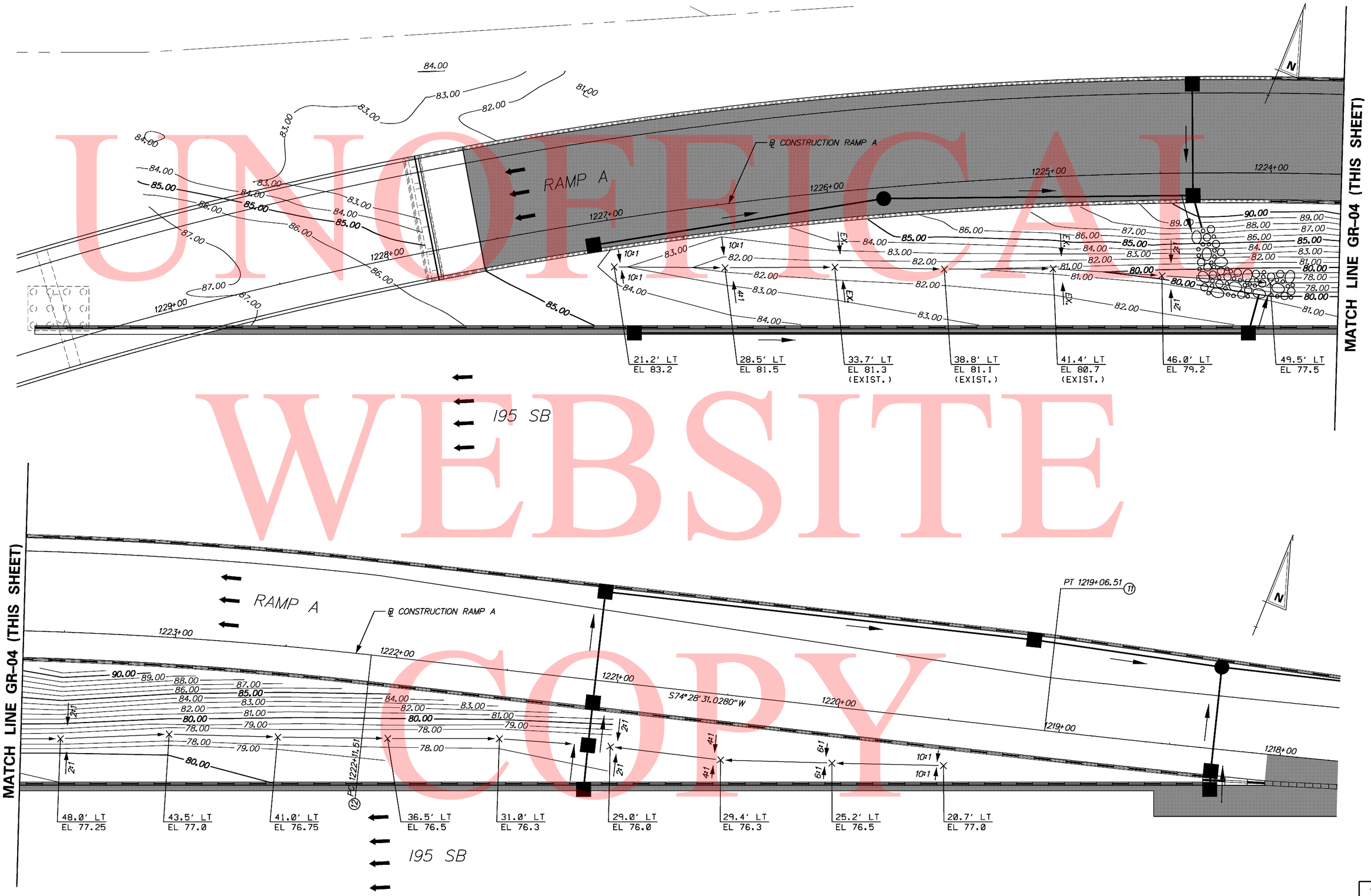

UNOFFICIAL WEBSITE COPY

11/11/2010 2:13:16 PM
M:\PROJECTS\2003\03059_DELTRNPK\SRIMALL\CADD\2809003\PLANS\GR04_SR1.DGN

DELAWARE DEPARTMENT OF TRANSPORTATION

ADDENDUMS / REVISIONS

SCALE 0 20 40 60 FEET

SR1 / I-95 INTERCHANGE

CONTRACT	BRIDGE NO.
28-090-03	DESIGNED BY:
COUNTY	
NEW CASTLE	CHECKED BY:

RAMP A ABUT. A OVER I-95
RAMP B ABUT. A OVER I-95
GRADING PLAN

GR-04
SHEET NO.
181
TOTAL SHTS.
803

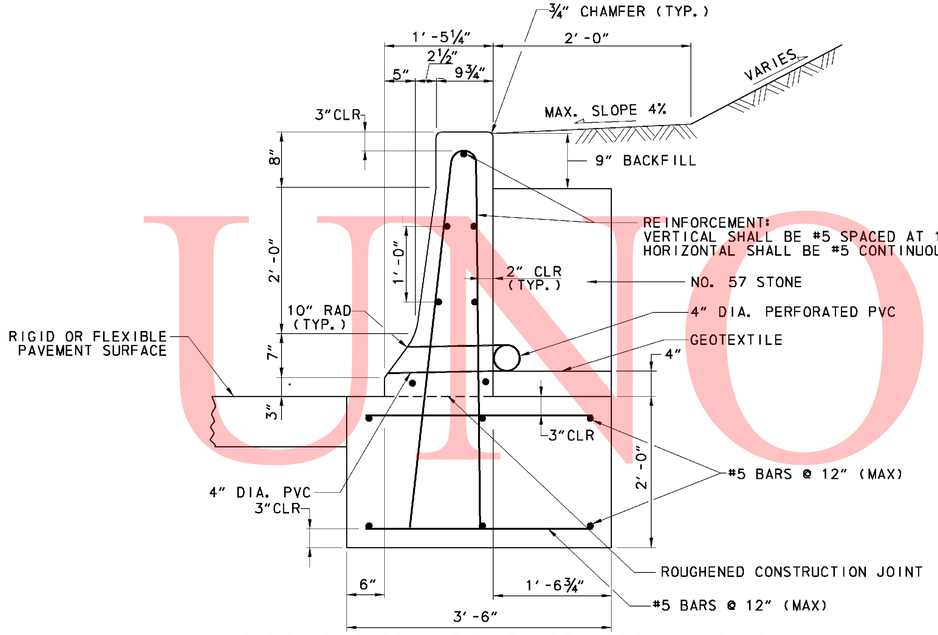

PCC SAFETY BARRIER PERMANENT, SINGLE FACE, MODIFIED TYPE 2 (720655)

NOT TO SCALE

42 INCH F-SHAPE
(BOTTOM OF CUT OR TOE OF FILL)

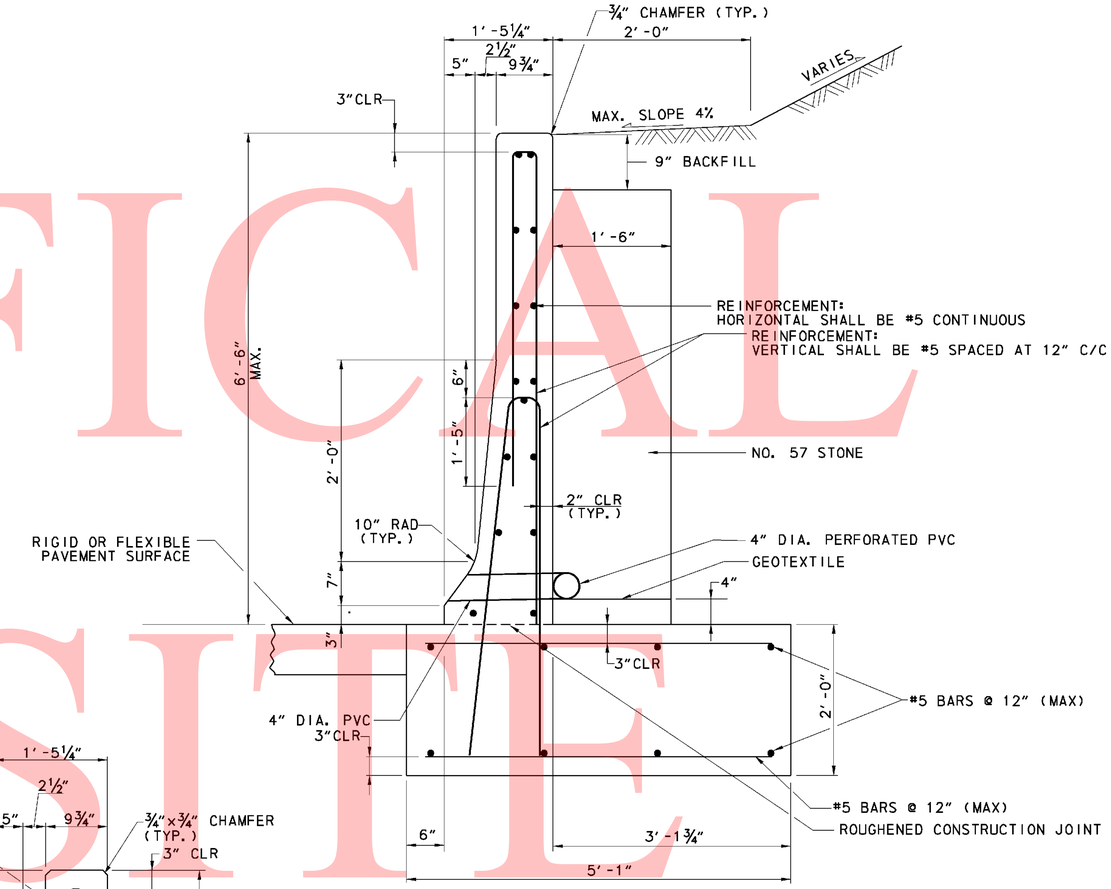

PCC SAFETY BARRIER PERMANENT, SINGLE FACE, MODIFIED TYPE 3 (720656)

NOT TO SCALE

42 INCH F-SHAPE 1'-6" TO 4'-0"

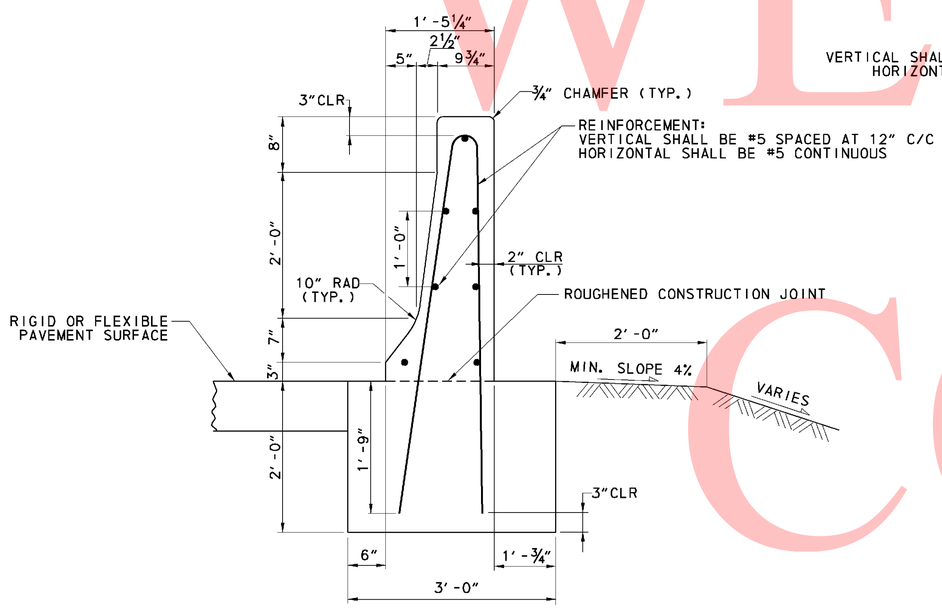

PCC SAFETY BARRIER PERMANENT, SINGLE FACE (720512)

NOT TO SCALE

42 INCH F-SHAPE (FREE STANDING - FILL)

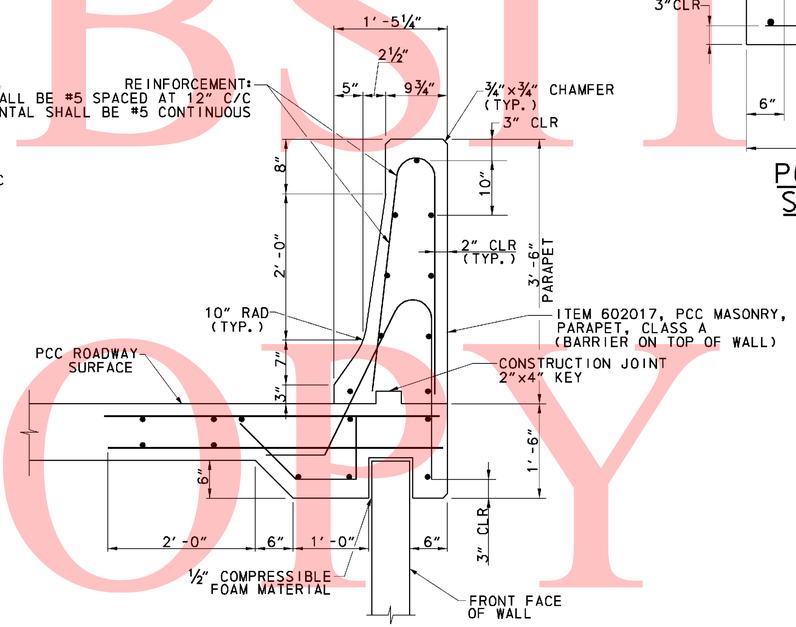

PCC BARRIER

NOT TO SCALE

42 INCH F-SHAPE

NOTES:

1. ALL CONCRETE SHALL BE 4500 PSI. BARRIER AND FOOTING SHALL BE CAST SEPARATELY.
2. ALL REINFORCING BARS SHALL BE ASTM A615, GRADE 60. ALL BARS SHALL BE EPOXY COATED.
3. ALL REINFORCING BAR LAP SPLICES SHALL BE 24" MINIMUM.
4. CONTRACTION JOINTS SHALL BE SPACED AT 20'-0".
5. BARRIER FOOTER AND BARRIER FORMS SHALL BE REMOVED PRIOR TO PLACING PAVEMENT.
6. OUTLET 4" DIA PVC DRAIN INTO INLET WHERE POSSIBLE.

UNOFFICAL WEBSITE COPY

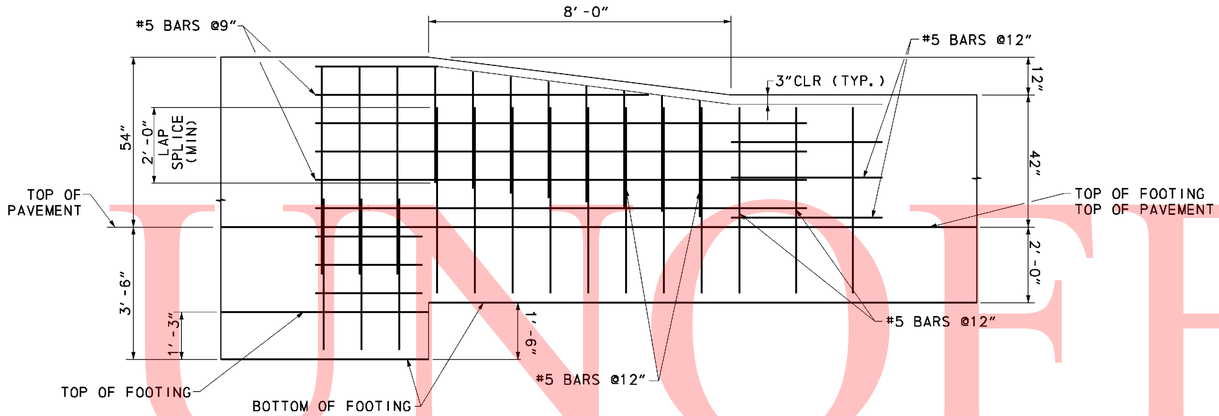

54" to 42" BARRIER TRANSITION DETAIL

NOT TO SCALE

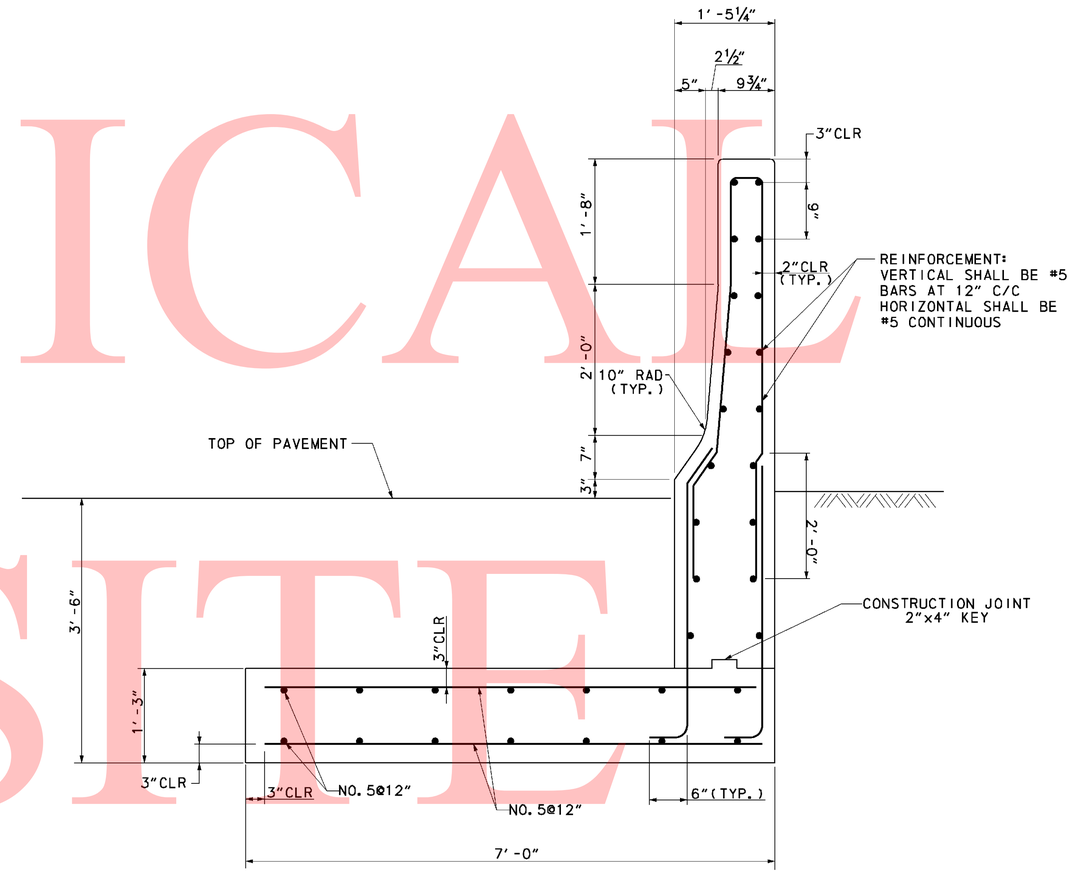

PCC SAFETY BARRIER PERMANENT, SINGLE FACE MODIFIED TYPE 4 (720657)

NOT TO SCALE

NOTES:

1. ALL CONCRETE SHALL BE 4500 PSI. BARRIER AND FOOTING SHALL BE CAST SEPARATELY.
2. ALL REINFORCING BARS SHALL BE ASTM A615, GRADE 60. ALL BARS SHALL BE EPOXY COATED.
3. ALL REINFORCING BAR LAP SPLICES SHALL BE 24" MINIMUM.
4. CONTRACTION JOINTS SHALL BE SPACED AT 20'-0".
5. BARRIER FOOTER AND BARRIER FORMS SHALL BE REMOVED PRIOR TO PLACING PAVEMENT.
6. OUTLET 4" DIA PVC DRAIN INTO INLET WHERE POSSIBLE.

UNOFFICAL WEBSITE COPY

LONGITUDINAL REINFORCING NOT SHOWN FOR CLARITY. FIELD BEND AS REQUIRED.

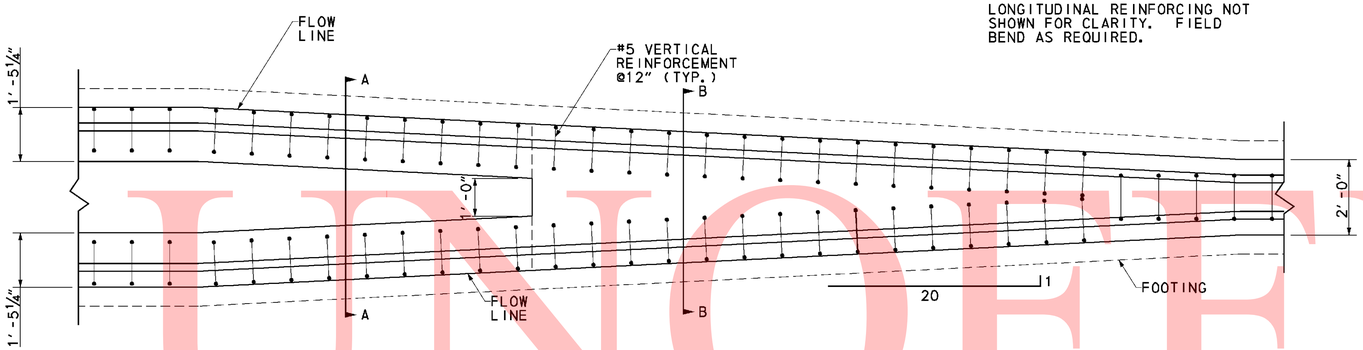

TRANSITION DETAIL DOUBLE FACE TO TWO SINGLE FACE

NOT TO SCALE

PLAN

NOTES:

1. ALL CONCRETE SHALL BE 4500 PSI. BARRIER AND FOOTING SHALL BE CAST SEPARATELY.
2. ALL REINFORCING BARS SHALL BE ASTM A615, GRADE 60. ALL BARS SHALL BE EPOXY COATED.
3. ALL REINFORCING BAR LAP SPLICES SHALL BE 24" MINIMUM.
4. CONTRACTION JOINTS SHALL BE SPACED AT 20'-0".
5. BARRIER FOOTER AND BARRIER FORMS SHALL BE REMOVED PRIOR TO PLACING PAVEMENT.
6. OUTLET 4" DIA PVC DRAIN INTO INLET WHERE POSSIBLE.

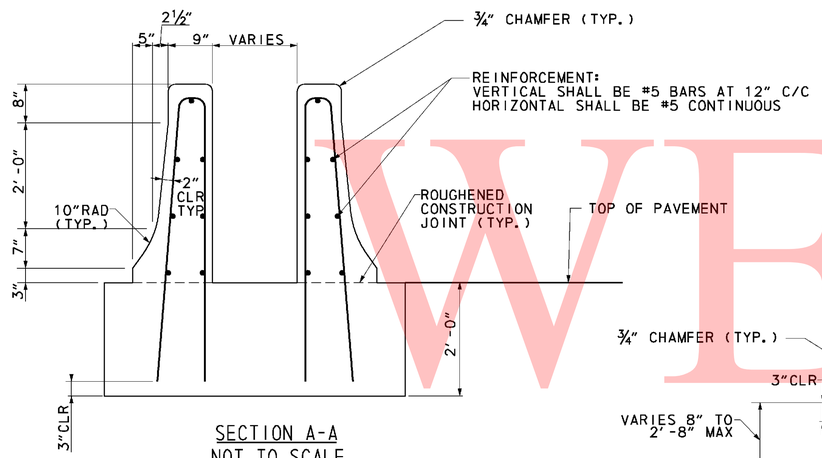

SECTION A-A

NOT TO SCALE

IF TAPER EXCEEDS 70'-0", A TRANSITION FROM SECTION A-A TO TWO SINGLE FACE BARRIERS (7205012) WITH 6" MIN GAP BETWEEN FOOTINGS IS ACCEPTABLE.

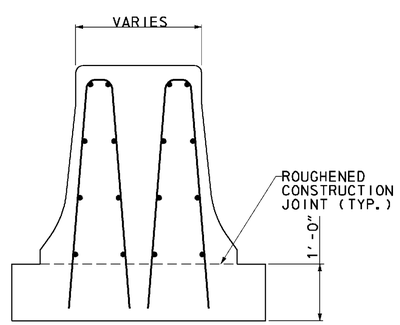

SECTION B-B

NOT TO SCALE

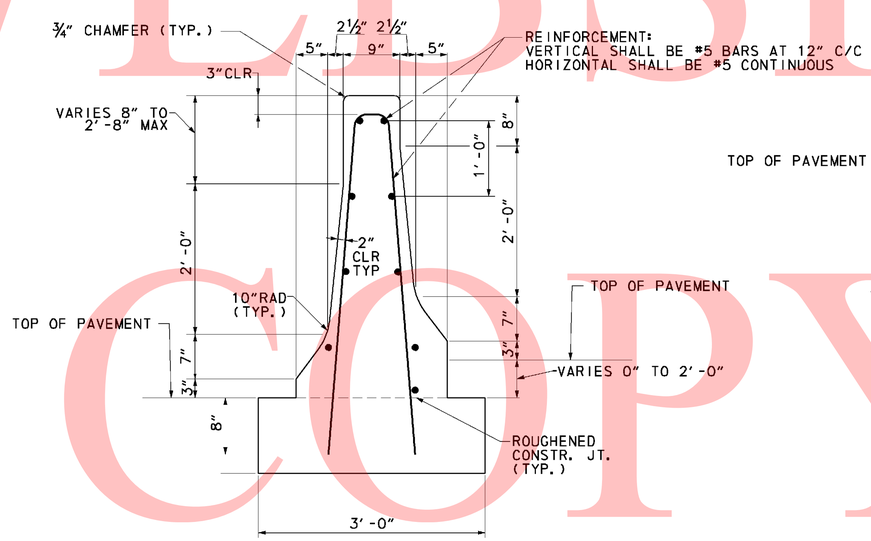

PCC SAFETY BARRIER PERMANENT, DOUBLE FACE BIFURCATED TYPE 1 (720651)

NOT TO SCALE

42 INCH F-SHAPE 0" TO 2'-0"

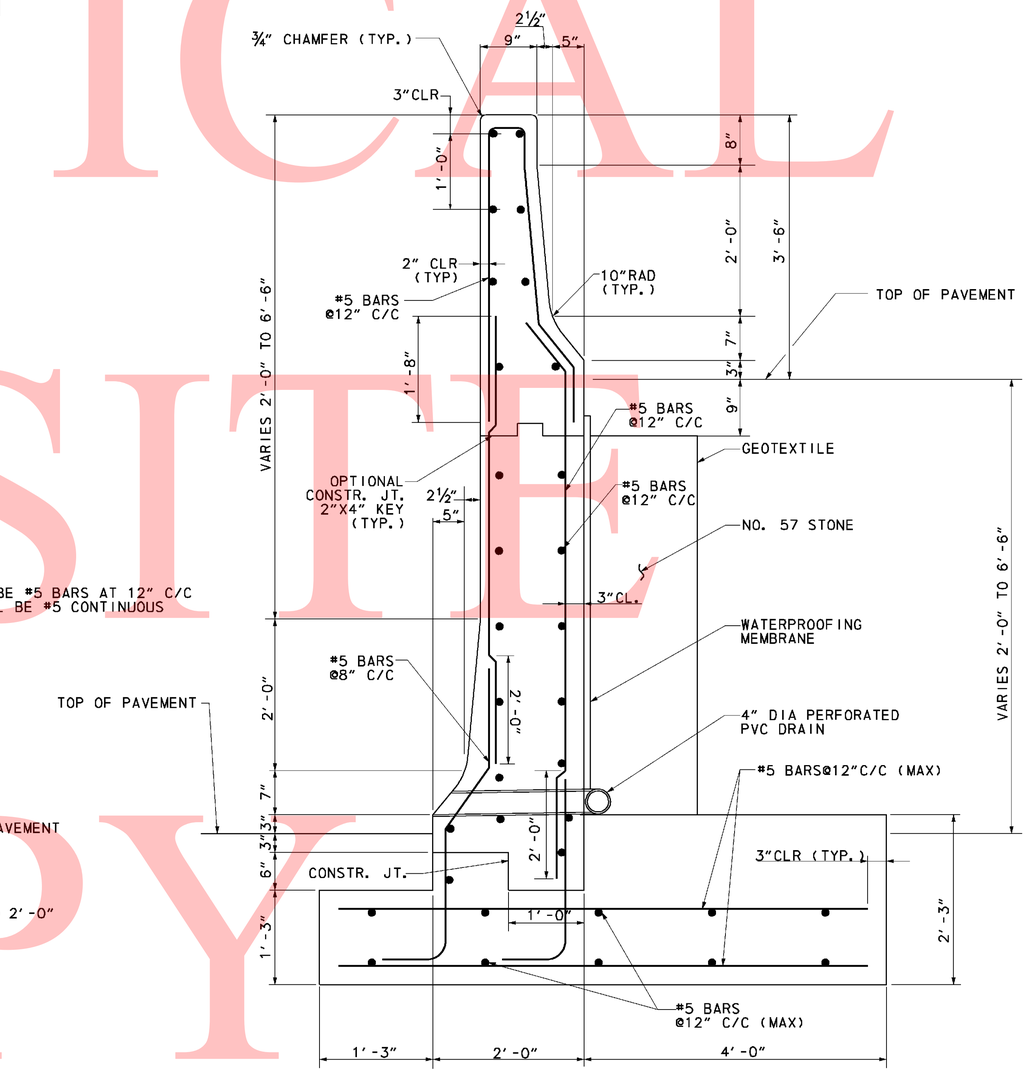

PCC SAFETY BARRIER PERMANENT, DOUBLE FACE BIFURCATED TYPE 2 (720652)

NOT TO SCALE

42 INCH F-SHAPE 2'-0" TO 6'-6"

UNOFFICAL WEBSITE COPY

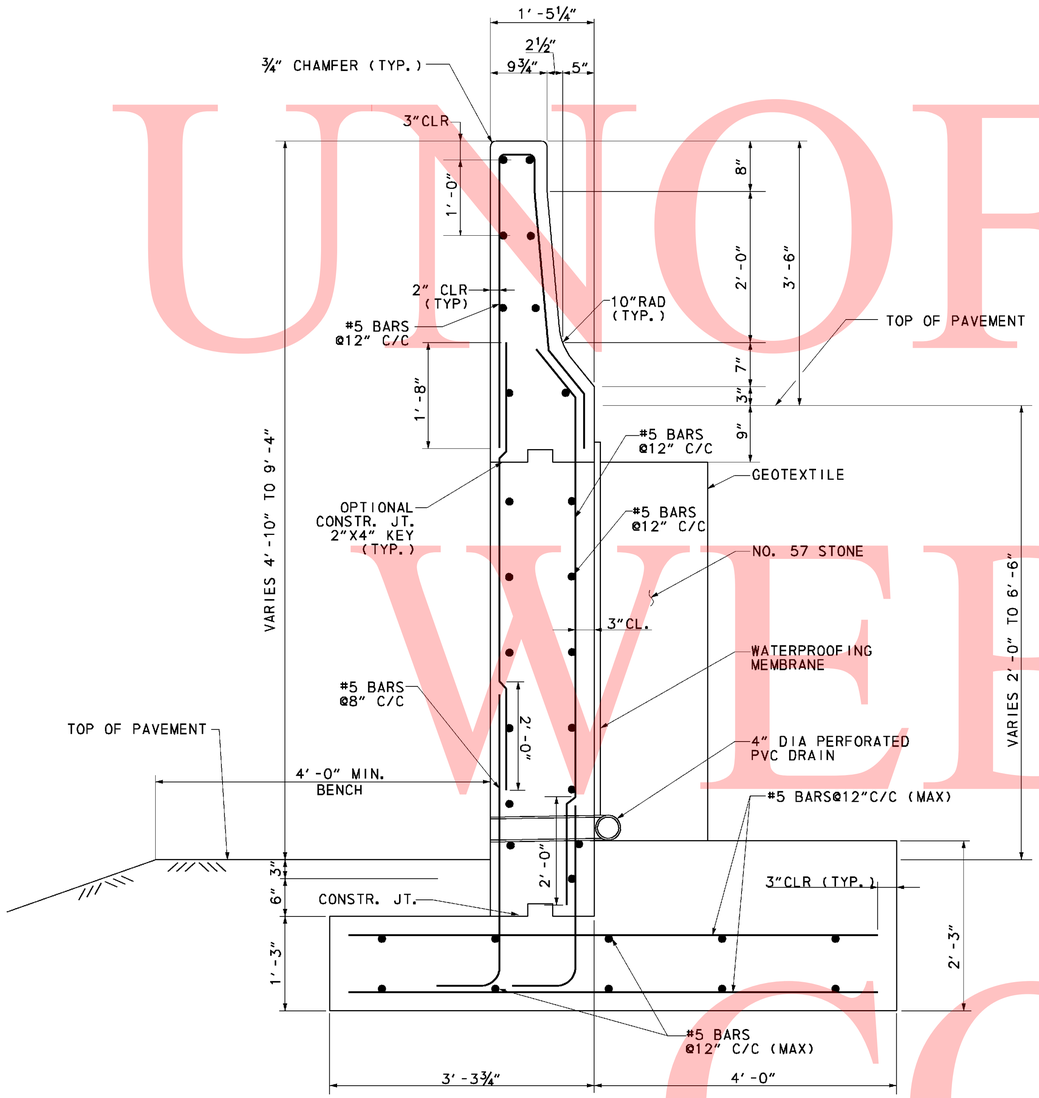

PCC SAFETY BARRIER PERMANENT, SINGLE FACE, MODIFIED TYPE 5 (720585)

NOT TO SCALE

42 INCH F-SHAPE 2'-0" TO 6'-6"

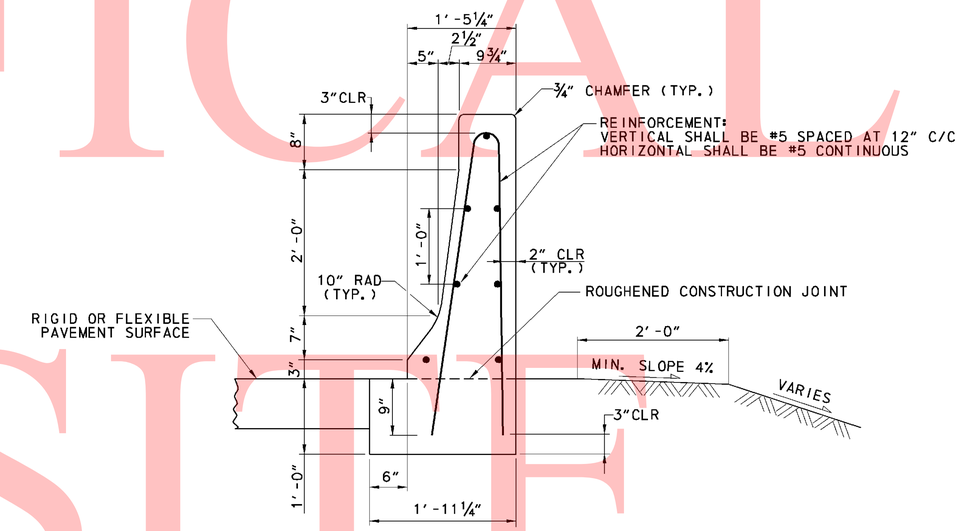

PCC SAFETY BARRIER PERMANENT, SINGLE FACE MODIFIED TYPE 1 (720654)

NOT TO SCALE

42 INCH F-SHAPE (FREE STANDING - FILL)

NOTES:

1. ALL CONCRETE SHALL BE 4500 PSI. BARRIER AND FOOTING SHALL BE CAST SEPARATELY.
2. ALL REINFORCING BARS SHALL BE ASTM A615, GRADE 60. ALL BARS SHALL BE EPOXY COATED.
3. ALL REINFORCING BAR LAP SPLICES SHALL BE 24" MINIMUM.
4. CONTRACTION JOINTS SHALL BE SPACED AT 20'-0".
5. BARRIER FOOTER AND BARRIER FORMS SHALL BE REMOVED PRIOR TO PLACING PAVEMENT.
6. OUTLET 4" DIA PVC DRAIN INTO INLET WHERE POSSIBLE.

UNOFFICAL WEBSITE COPY

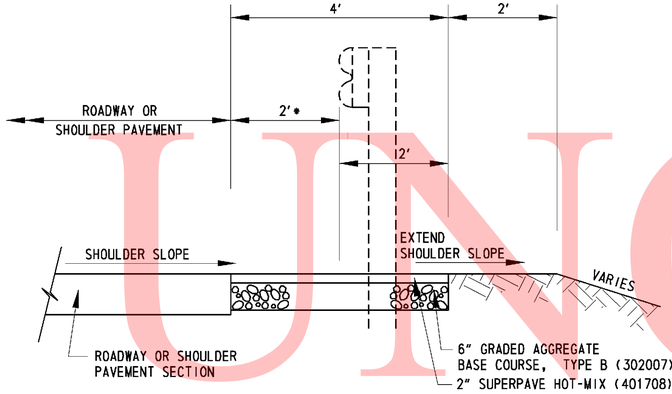

* DIMENSION TO SHOULDER SHALL BE 2' OR MATCH ADJACENT OFFSET.

NOTE:
GUARDRAIL CONSTRUCTION LOCATIONS ARE SHOWN ON THE PLAN SHEETS. MAINTENANCE PAVEMENT SHALL BE CONSTRUCTED WITH GUARDRAIL LOCATIONS WHERE NOTED ON THE PLANS.

MAINTENANCE PAVEMENT SECTION FOR SINGLE FACED GUARDRAIL

NOTE: BENCHING SHALL CONFORM TO THIS DETAIL AT ALL LOCATIONS WHERE EXISTING EMBANKMENTS ARE TO BE WIDENED AND THE PROPOSED SLOPE IS 4:1 OR GREATER. ALL COSTS ASSOCIATED WITH PROVIDING BENCHING SHALL BE INCIDENTAL TO ITEM 202000, EXCAVATION AND EMBANKMENT.

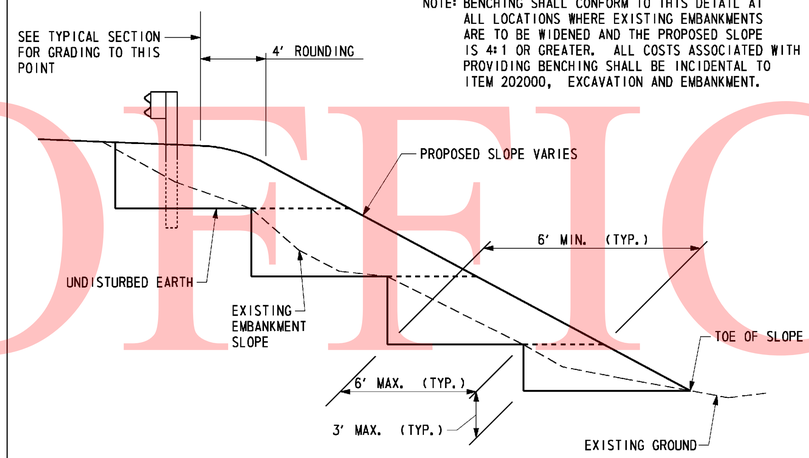

BENCHING DETAIL

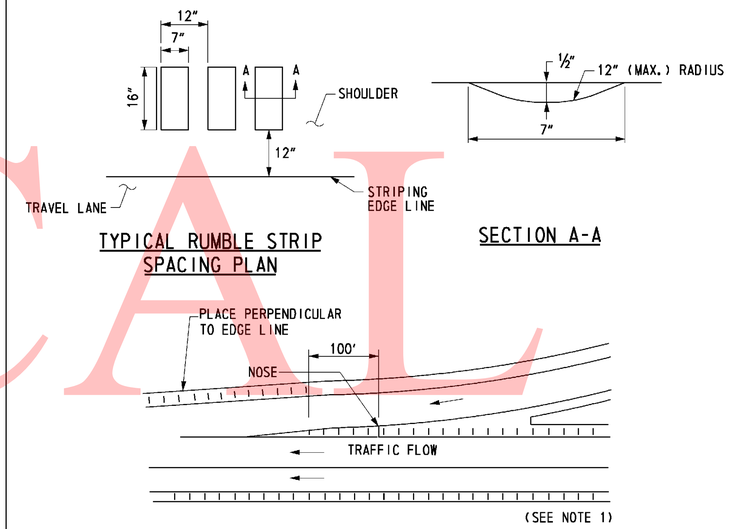

TYPICAL RUMBLE STRIP SPACING PLAN

SECTION A-A

ENTRANCE TERMINALS

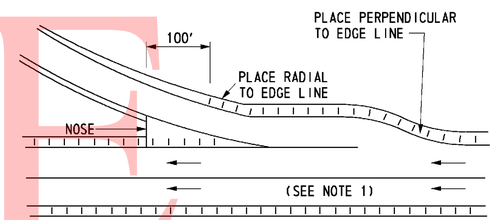

EXIT TERMINALS

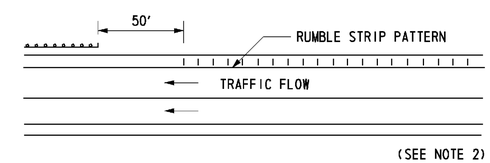

RUMBLE STRIPS IN ADVANCE OF CRITICAL LOCATIONS

NOTES:

1. AT ENTRANCE AND EXIT TERMINALS, THE OUTSIDE SHOULDER PATTERN SHOULD BE EXTENDED TOWARD THE RAMP JUNCTURE AS FAR AS POSSIBLE, AND THEN SHIFTED OVER TO THE OUTSIDE SHOULDER OF THE TERMINAL AREA. THE "NOSE" OF AN ENTRANCE OR EXIT TERMINAL IS A LOGICAL REFERENCE POINT. ON EITHER TERMINAL EXTEND THE PATTERN 100' INTO THE TERMINAL AREA AND THEN TRANSFER TO THE OUTSIDE SHOULDER.
2. RUMBLE STRIPS, WHEN USED IN ADVANCE OF CRITICAL LOCATIONS WITHOUT FULL WIDTH SHOULDERS, SUCH AS APPROACHES TO NARROW SHOULDERS AND AHEAD OF TRAFFIC BARRIER END TREATMENTS, SHOULD BE PLACED AS SHOWN.

RUMBLE STRIPS, HOT-MIX (760504)

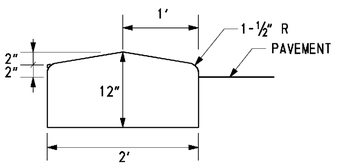

P.C.C. MONOLITHIC MEDIAN (701026)

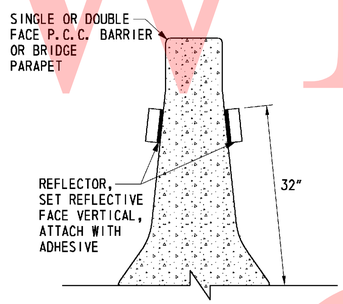

REFLECTOR DETAIL NOTES:

1. COLOR OF REFLECTOR FACING TRAFFIC SHALL MATCH ADJACENT LANE LINE COLOR.
2. REFLECTOR SHALL HAVE A RED REFLECTOR ON THE BACK. SPACING OF THE REFLECTORS ON P.C.C. SAFETY BARRIER, PERMANENT AND BRIDGE PARAPETS SHALL BE 100 FEET IN TANGENT SECTIONS, AND PER DELDOT MUTCD IN CURVED SECTIONS.
3. ALL COSTS SHALL BE INCLUDED IN ITEMS 720544-REFLECTORS, WHITE, CONCRETE AND 720545-REFLECTORS, YELLOW, CONCRETE.

REFLECTOR DETAIL

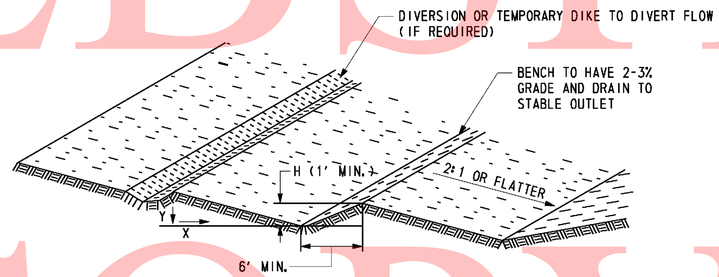

SLOPE X:1	Y (MAX.)
2	20'
3	30'
4	40'

DATA
SLOPE (X:1)
VERTICAL HEIGHT (Y)
BENCH HEIGHT (H)

SLOPE TREATMENT - BENCHING DETAIL

UNOFFICIAL WEBSITE COPY

9/10/2010 3:52:16 PM
M:\PROJECTS\2003\03059_DELTRNPK\SR1MALL\CADD\2809003\PLANS\DT04A_SR1.DGN

DELAWARE DEPARTMENT OF TRANSPORTATION	ADDENDUMS / REVISIONS	NOT TO SCALE	SR1 / I-95 INTERCHANGE	CONTRACT 28-090-03	BRIDGE NO.	CONSTRUCTION DETAILS	SHEET NO. 186
				COUNTY NEW CASTLE	DESIGNED BY:		TOTAL SHTS. 803
					CHECKED BY:		

UNOFFICAL WEBSITE COPY

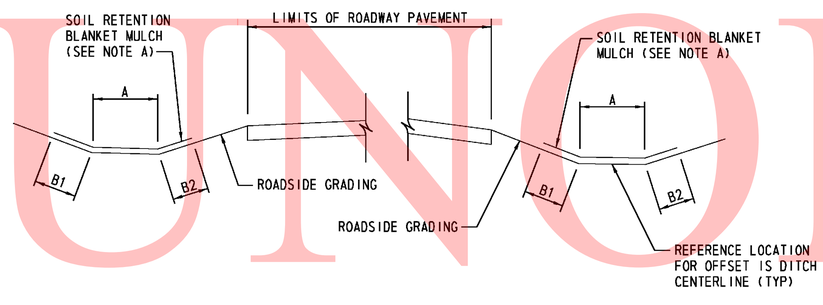

NOTE A:

SOIL RETENTION BLANKET MULCH, TYPE 5 (735535), TYPE 6 (735536) OR TYPE 7 (735537), ACCORDING TO PLAN.

DITCH LINING DETAIL

FOR LONGITUDINAL DITCHES

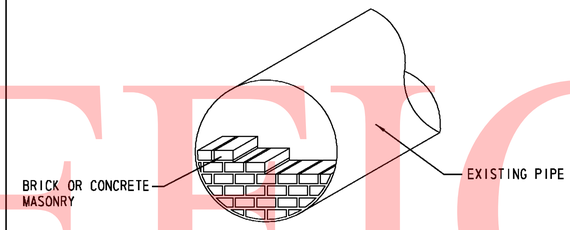

NOTE:
PIPE OPENINGS 24" IN DIAMETER AND SMALLER SHALL BE PLUGGED WITH A BRICK OR CONCRETE MASONRY BULKHEAD OF 8" MINIMUM THICKNESS. PIPE OPENINGS LARGER THAN 24" SHALL BE PLUGGED WITH A BRICK OR CONCRETE MASONRY BULKHEAD OF 12" MINIMUM THICKNESS. PAYMENT FOR BULKHEADS SHALL BE INCIDENTAL TO ITEM 202000 OR ITEM 708579, AS APPLICABLE.

PLUG EXISTING PIPE

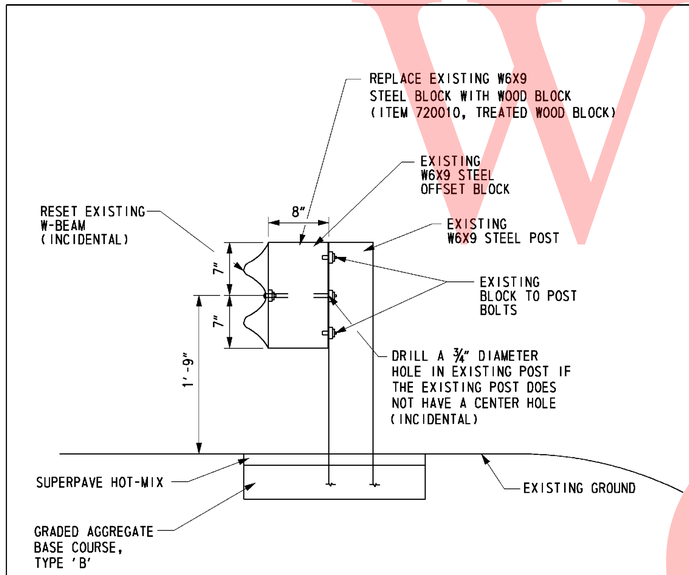

EXISTING GUARDRAIL WITHOUT CURB

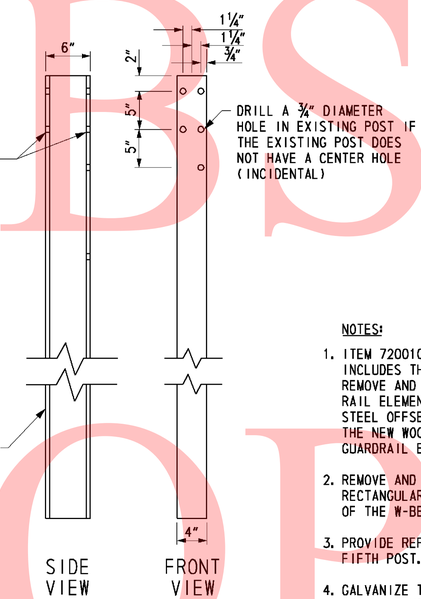

EXISTING STEEL POST

NOTES:

1. ITEM 720010, TREATED WOOD BLOCK INCLUDES THE WORK REQUIRED TO REMOVE AND RESET THE EXISTING RAIL ELEMENT, REMOVE THE EXISTING STEEL OFFSET BLOCK AND INSTALL THE NEW WOOD BLOCK WITH NEW GUARDRAIL BOLT AND RECESS NUT.
2. REMOVE AND DISPOSE OF EXISTING RECTANGULAR WASHERS ON THE FACE OF THE W-BEAM.
3. PROVIDE REFLECTORS AT EVERY FIFTH POST.
4. GALVANIZE THE STEEL AFTER DRILLING HOLES IN POSTS.

REPLACE STEEL OFFSET BLOCKS WITH WOOD BLOCKS

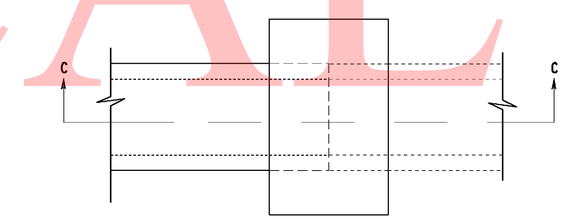

PLAN

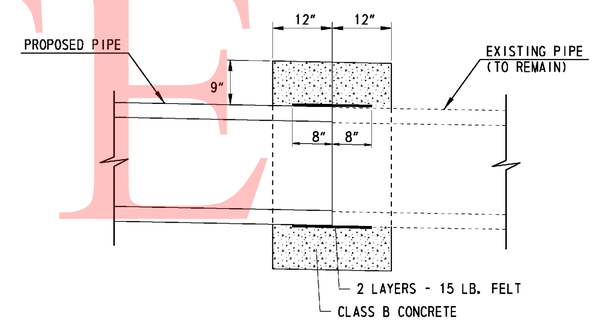

SECTION C-C

NOTES:

1. PIPE CONNECTION SHALL BE CONSTRUCTED OF PLAIN CONCRETE (CLASS B) SIZE, TYPE & DIRECTION OF CONNECTION WILL VARY TO SUIT CONDITIONS.
2. PIPE CONNECTION SHALL BE WRAPPED WITH DOUBLE LAYER OF 15 LB. FELT PRIOR TO PLACEMENT OF CONCRETE COLLAR.
3. NEW PIPE STUB SHALL MATCH THE SIZE, TYPE, DIRECTION AND SLOPE OF THE EXISTING PIPE AT THE PIPE CONNECTION.
4. PAYMENT SHALL BE INCIDENTAL TO PIPE ITEM BEING INSTALLED.

PIPE CONNECTION DETAIL

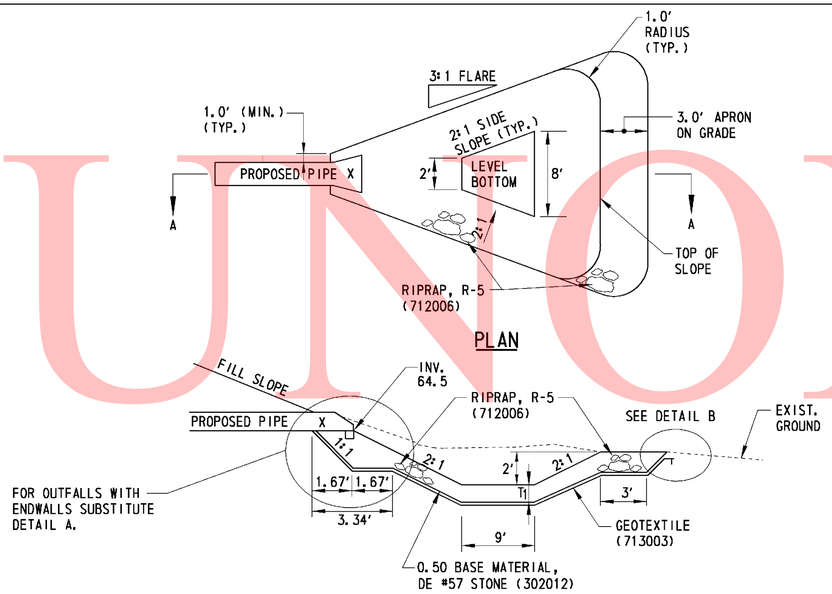

PLAN

SECTION A-A

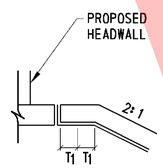

DETAIL A

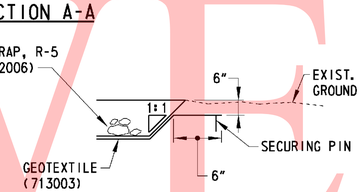

DETAIL B

R-5 RIPRAP ENERGY DISSIPATOR: PIPE OUTFALL P-704

(SEE PLANS FOR PIPE SIZES)

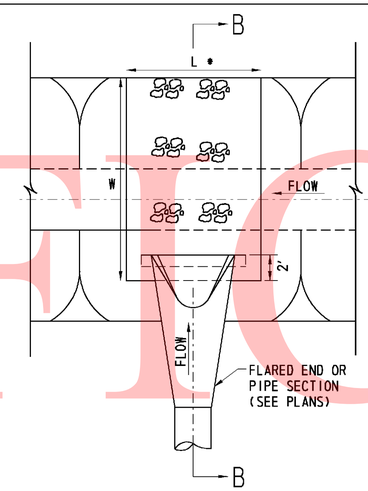

PLAN

* L IS THE LINED DITCH LENGTH, MEASURED ALONG DITCH CENTERLINE.

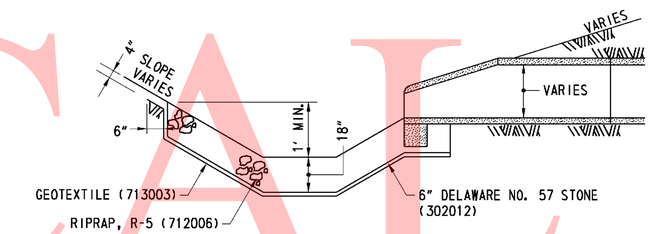

SECTION B-B

R-5 RIPRAP DITCH OUTFALL

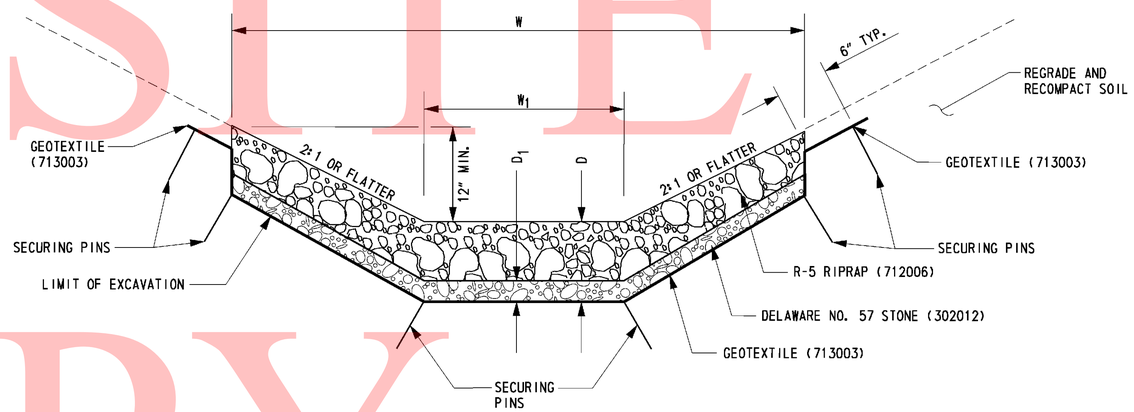

STRUCTURE NO.	RIPRAP SIZE	D	D_1	W	W_1
P-419	R-6	30"	6"	25'	6.0'
P-113	R-5	24"	6"	10'	2.0'

RIPRAP DITCH LINING

UNOFFICAL WEBSITE COPY

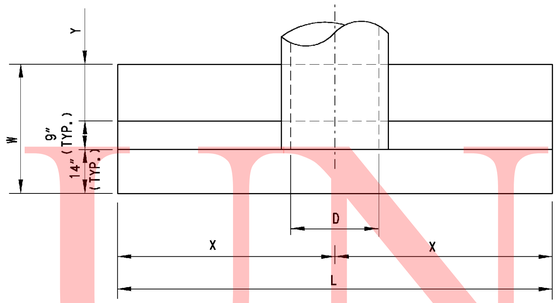

PLAN

STRUCTURE NO.	C	D	H	X	L	Y	W
HW-419	12"	48"	5'-0"	10'-10"	21'-8"	2'-6"	4'-5"
HW-421	12"	24"	2'-9"	5'-9"	11'-6"	1'-6"	3'-5"
HW-502	9"	21"	2'-6"	5'-1½"	10'-3"	1'-6"	3'-5"
HW-704	12"	24"	2'-9"	5'-9"	11'-6"	1'-6"	3'-5"

NOTE:
HEADWALLS SHALL BE PLACED ON A MINIMUM 6" OF NO. 57 STONE (302012) PROVIDING BEARING STRENGTH OF 2000 PSF TO BE VERIFIED BY CONTRACTOR.

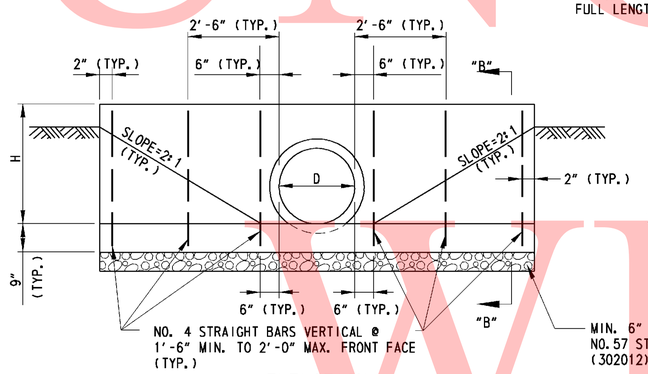

ELEVATION

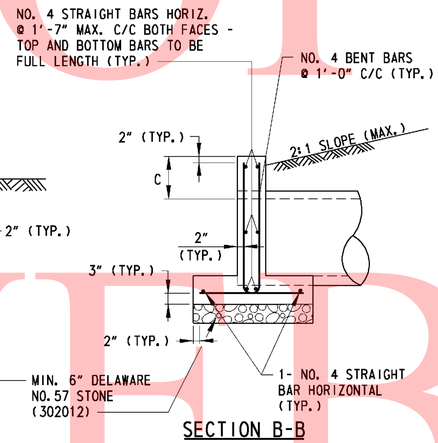

SECTION B-B

HEADWALL (617515)

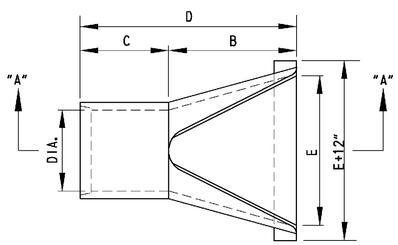

PLAN

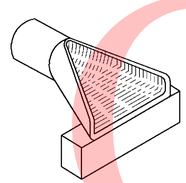

ISOMETRIC VIEW

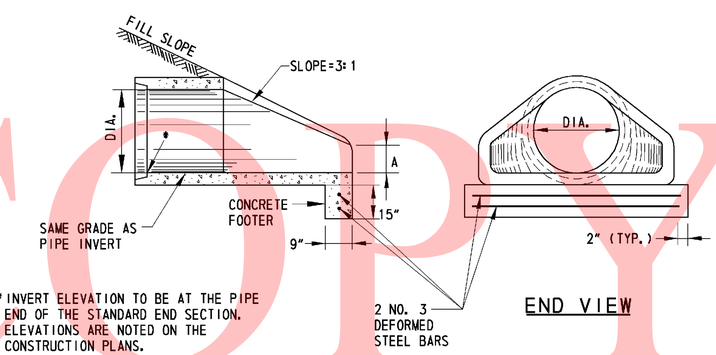

* INVERT ELEVATION TO BE AT THE PIPE END OF THE STANDARD END SECTION. ELEVATIONS ARE NOTED ON THE CONSTRUCTION PLANS.

SECTION A-A

END VIEW

DIAMETER	A	B	C	D	E
12"	4"	2'-0"	4'-0⅞"	6'-0⅞"	2'-0"
15"	6"	2'-3"	3'-10"	6'-1"	2'-6"
18"	9"	2'-3"	3'-10"	6'-1"	3'-0"
24"	9½"	3'-7½"	2'-6"	6'-1½"	4'-0"
30"	1'-0"	4'-6"	1'-7¾"	6'-1¾"	5'-0"
36"	1'-3"	5'-3"	2'-10¾"	8'-1¾"	6'-0"
42"	1'-9"	5'-3"	2'-11"	8'-2"	6'-6"
48"	2'-0"	6'-0"	2'-2"	8'-2"	7'-0"

CONCRETE FLARED END SECTION

UNOFFICIAL WEBSITE COPY

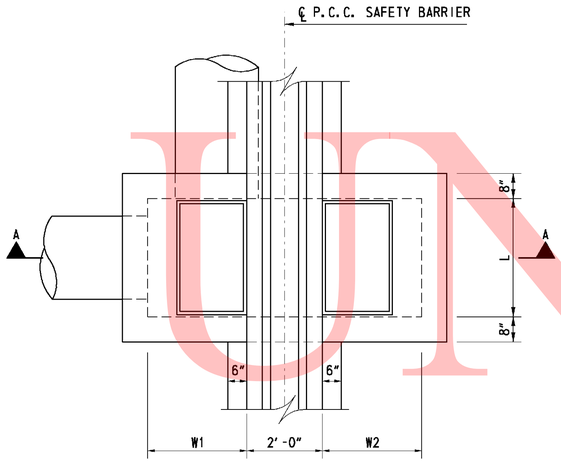

PLAN- SPECIAL I & III (2 SINGLES)

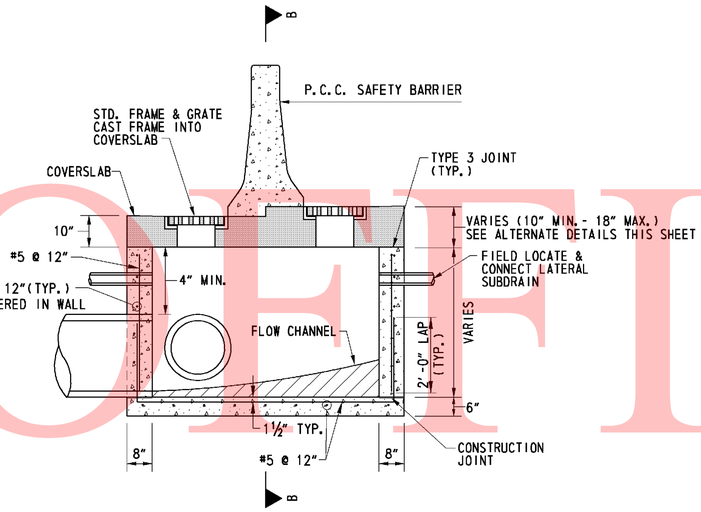

SECTION A-A

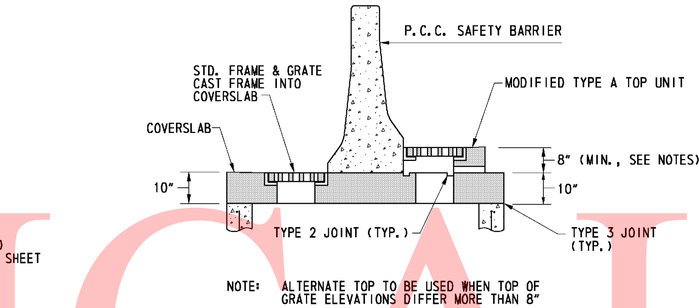

NOTE: ALTERNATE TOP TO BE USED WHEN TOP OF GRATE ELEVATIONS DIFFER MORE THAN 8"

ALTERNATE TOP 1

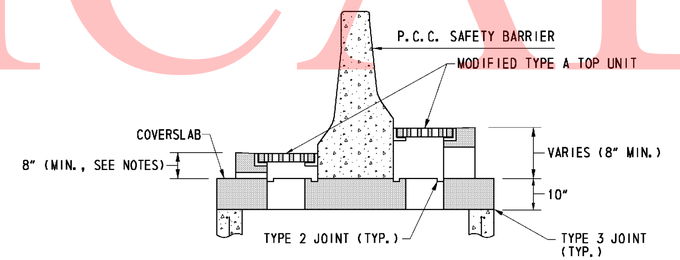

NOTE: ALTERNATE TOP TO BE USED WHEN TOP OF GRATE ELEVATIONS ARE MORE THAN 27" ABOVE CROWN OF PIPE OUT

ALTERNATE TOP 2

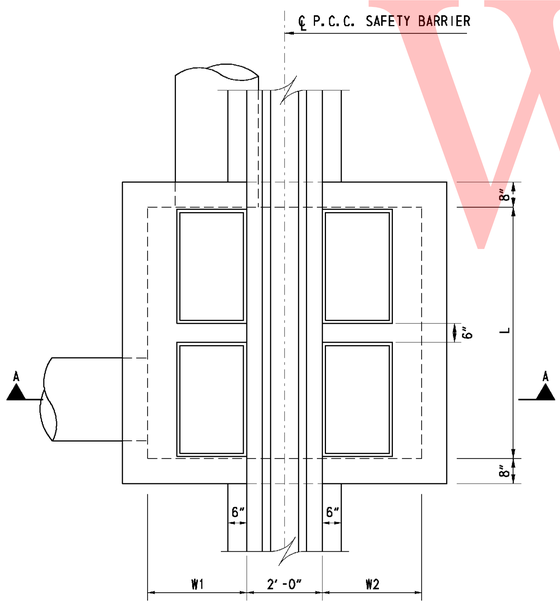

PLAN- SPECIAL II, IV & V (2 DOUBLES)

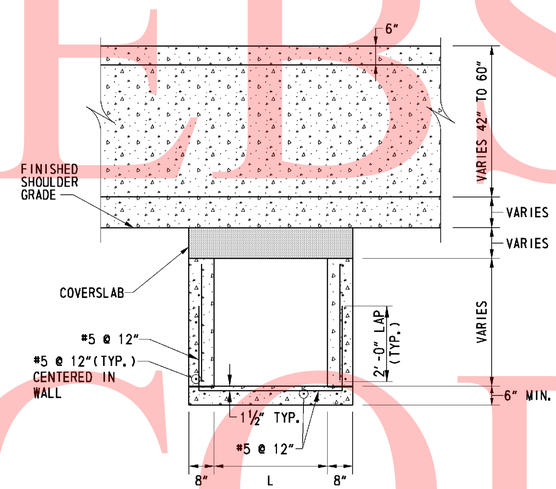

SECTION B-B

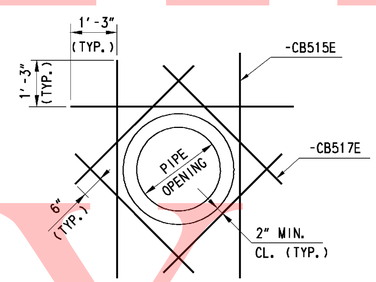

NOTE: FIELD ADJUST REINFORCING AS NECESSARY

ADDITIONAL REINFORCEMENT AT PIPE OPENINGS IN WALL

TYPE	ITEM #	# INLETS	W1	W2	L
SPECIAL I	708512	2 SINGLES	2'-7½"	2'-7½"	3'-1½"
SPECIAL II	708513	2 DOUBLES	2'-7½"	2'-7½"	6'-9¾"
SPECIAL IV	708515	2 DOUBLES	2'-7½"	2'-7½"	6'-9¾"
SPECIAL V	708516	2 DOUBLES	2'-7½"	4'-1½"	6'-9¾"

NOTES:

1. STD. TYPE 1 OR TYPE 2 GRATE, AS SHOWN ON PLANS.
2. SEE ROADWAY PLANS FOR DRAINAGE INLET STATIONS, ROADWAY ELEVATIONS, PIPE PLACEMENT AND INVERTS. CONTRACTOR TO FIELD LOCATE EXISTING INLETS AND ADJUST LOCATION OF PROPOSED INLETS TO MATCH EXISTING FOOTPRINT. TOP ELEVATIONS SHOWN ON STRUCTURE SCHEDULE ON ROADWAY PLANS INDICATES TOP OF GRATE AT FACE OF BARRIER AND MAY DIFFER ON EITHER SIDE OF BARRIER.
3. CONCRETE SHALL BE PORTLAND CEMENT CONCRETE CLASS B (3000 psi) AND CAST-IN-PLACE UNLESS NOTED OTHERWISE. BARRIER TO BE MONOLITHIC FOR 20 FEET AND CENTERED OVER DRAINAGE INLETS. PAYMENT FOR THE BARRIER SHALL BE IN ACCORDANCE WITH THE ROADWAY BARRIER BEING CONSTRUCTED.
4. REINFORCING STEEL SHALL CONFORM TO AASHTO M 31-95, GRADE 60. EPOXY COATING SHALL MEET THE REQUIREMENTS OF AASHTO M 284-95. SEE DELDOT STD. D-4 FOR DETAILS NOT SPECIFIED.
5. STEPS ARE TO BE PLACED IN ALL DRAINAGE INLETS OVER 4'-0" DEEP. INSTALL STEPS ON WALL OPPOSITE FROM THE OUTLET PIPE.
6. CONTRACTOR TO FIELD CUT REINFORCING AS REQUIRED TO ACCOMMODATE PIPE OPENINGS.
7. CONTRACTOR SHALL ATTACH THE YELLOW AND/OR WHITE REFLECTORS TO THE BARRIERS AS SHOWN IN THE ROADWAY DETAILS. PAYMENT FOR THE REFLECTORS SHALL BE IN ACCORDANCE WITH ITEM NOS. 720544 AND 720545 AS APPROPRIATE.
8. EXISTING UNDERDRAIN LATERALS TO BE CONNECTED TO THE NEW INLET, AND THE COST OF THE CONNECTION INCLUDED IN THE UNIT PRICE OF THE INLET.

DRAINAGE INLET - SPECIAL I, II, IV & V

UNOFFICIAL WEBSITE COPY

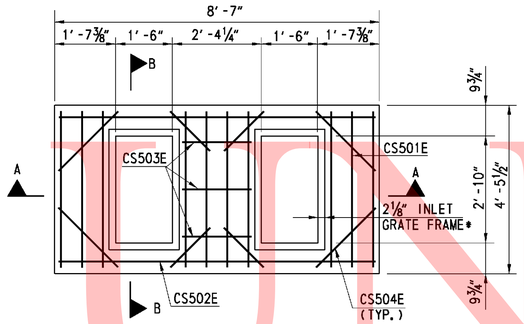

PLAN - TOP REINFORCEMENT MAT

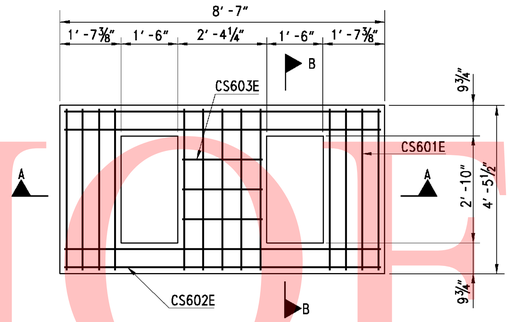

PLAN - BOTTOM REINFORCEMENT MAT

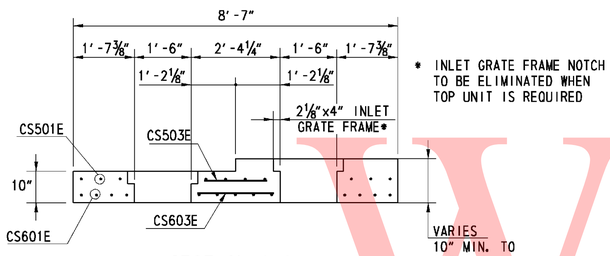

* INLET GRATE FRAME NOTCH TO BE ELIMINATED WHEN TOP UNIT IS REQUIRED

SECTION A-A

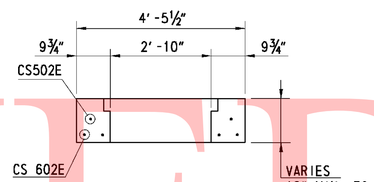

SECTION B-B

DRAINAGE INLET SPECIAL I COVERSLAB

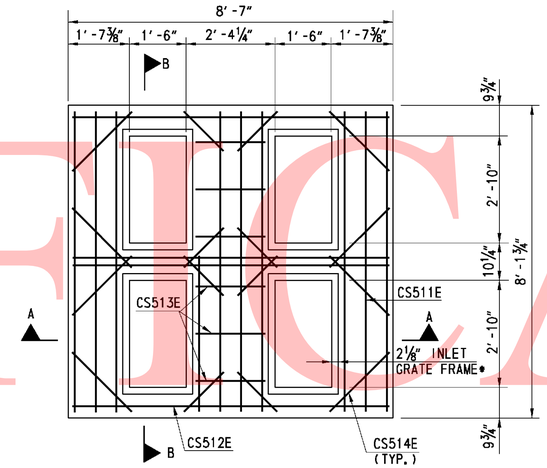

PLAN - TOP REINFORCEMENT MAT

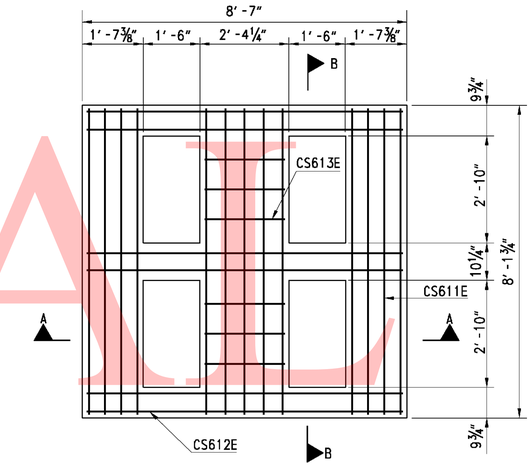

PLAN - BOTTOM REINFORCEMENT MAT

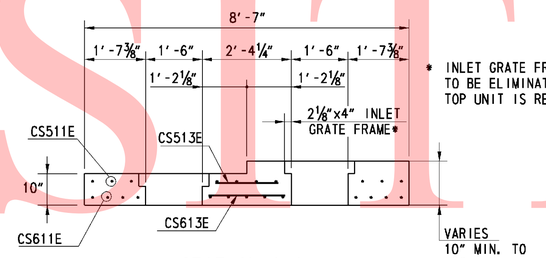

* INLET GRATE FRAME NOTCH TO BE ELIMINATED WHEN TOP UNIT IS REQUIRED

SECTION A-A

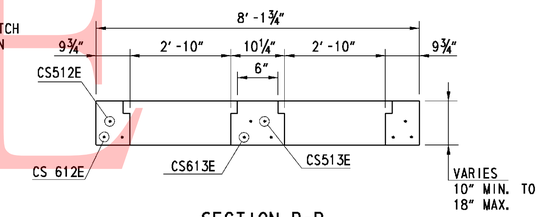

SECTION B-B

DRAINAGE INLET SPECIAL IV COVERSLAB

	MARK	SIZE	LENGTH	QUANTITY PER UNIT
SPECIAL I	CS501E	5	4′-1 1/2″	10
	CS502E	5	8′-3″	2
	CS503E	5	1′-8″	3
	CS504E	5	2′-6″	8
	CS601E	6	4′-1 1/2″	13
	CS602E	6	8′-3″	4
	CS603E	6	2′-0″	3
	CS604E	6	2′-6″	8
SPECIAL IV	CS511E	5	7′-9 3/4″	10
	CS512E	5	8′-3″	4
	CS513E	5	1′-8″	6
	CS514E	5	2′-6″	16
	CS611E	6	7′-9 3/4″	13
	CS612E	6	8′-3″	6
	CS613E	6	2′-0 1/4″	6
	CS614E	6	2′-6″	16

CS = COVERSLAB
REFER TO ROADWAY PLANS FOR LOCATIONS AND QUANTITY OF EACH INLET TYPE.

NOTES:

1. PORTLAND CEMENT CONCRETE FOR SPECIAL I AND SPECIAL IV COVERSLABS SHALL BE NORMAL WEIGHT AND HAVE A 28 DAY COMPRESSIVE STRENGTH OF 4500 PSI, CLASS A.
2. REINFORCING STEEL SHALL BE AASHTO M31 GRADE 60 EPOXY COATED DEFORMED BARS. REINFORCING COVER SHALL BE 2INCHES UNLESS OTHERWISE NOTED.

UNOFFICIAL WEBSITE COPY

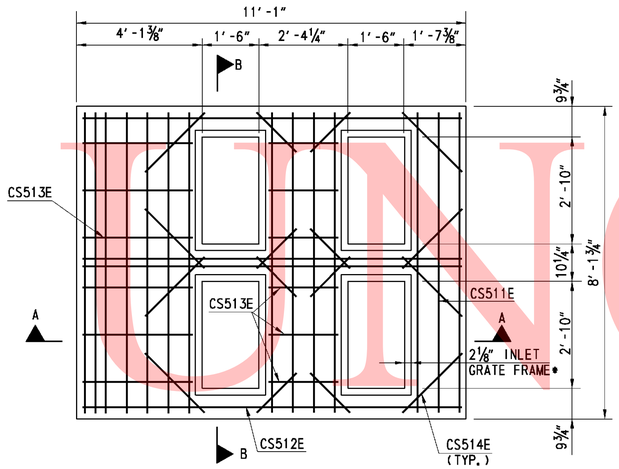

PLAN - TOP REINFORCEMENT MAT

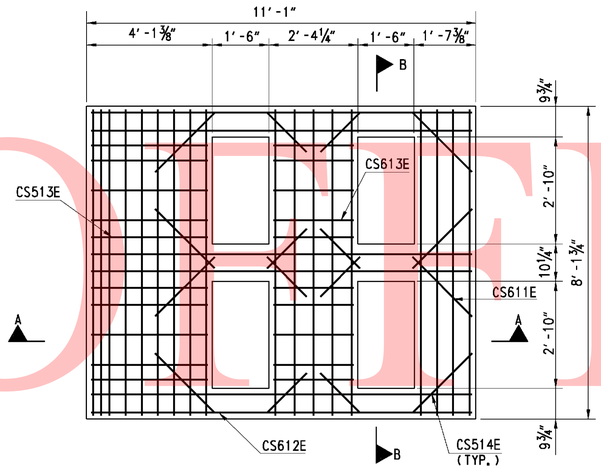

PLAN - BOTTOM REINFORCEMENT MAT

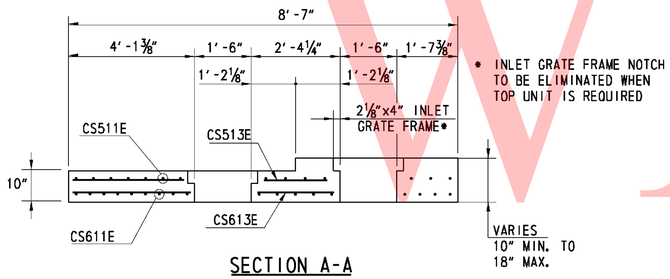

* INLET GRATE FRAME NOTCH TO BE ELIMINATED WHEN TOP UNIT IS REQUIRED

SECTION A-A

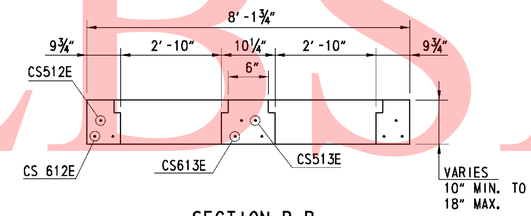

SECTION B-B

	MARK	SIZE	LENGTH	QUANTITY PER UNIT
SPECIAL V	CS511E	5	7'-9¾"	14
	CS512E	5	10'-9"	4
	CS513E	5	1'-8"	6
	CS514E	5	2'-6"	16
	CS515E	5	3'-7¼"	6
	CS611E	6	7'-9¾"	18
	CS612E	6	10'-9"	6
	CS613E	6	2'-0¼"	10
	CS614E	6	2'-6"	16
	CS615E	6	3'-9⅜"	10

CS = COVERSLAB
REFER TO ROADWAY PLANS FOR LOCATIONS AND QUANTITY OF EACH INLET TYPE.

NOTES:

1. PORTLAND CEMENT CONCRETE FOR SPECIAL V COVERSLABS SHALL BE NORMAL WEIGHT AND HAVE A 28 DAY COMPRESSIVE STRENGTH OF 4500 PSI, CLASS A.
2. REINFORCING STEEL SHALL BE AASHTO M31 GRADE 60 EPOXY COATED DEFORMED BARS. REINFORCING COVER SHALL BE 2INCHES UNLESS OTHERWISE NOTED.

DRAINAGE INLET SPECIAL V COVERSLAB

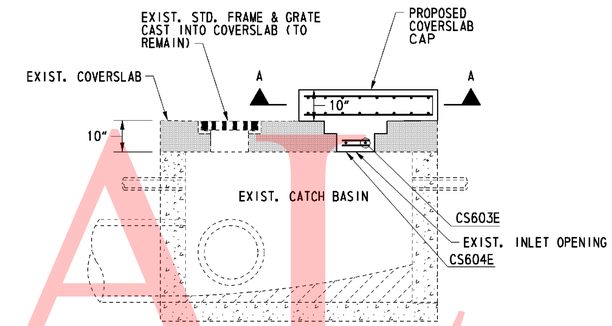

SIDE VIEW

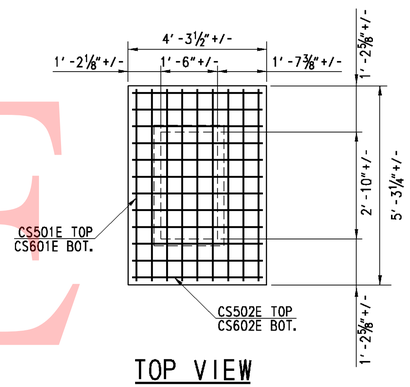

TOP VIEW

COVERSLAB CAP FOR EXISTING INLET OPENING

	MARK	SIZE	LENGTH	QUANTITY PER UNIT
SPECIAL I	CS501E	5	4'-11 1/4"	9
	CS502E	5	3'-11 1/2"	12
	CS601E	6	4'-11 1/4"	9
	CS602E	6	3'-11 1/2"	12
	CS603E	6	2'-6"	3
	CS604E	6	1'-2"	6

NOTE: CONTRACTOR SHALL VERIFY EXISTING CONDTIONS BEFORE FABRICATING REINFORCING STEEL

UNOFFICIAL WEBSITE COPY

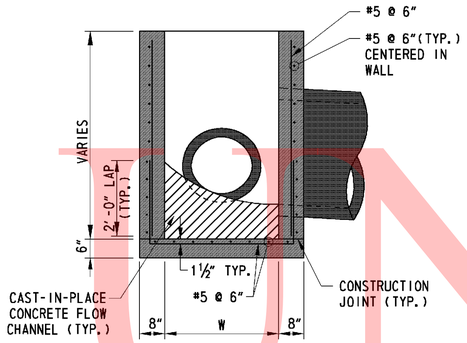

SECTION A-A

NOTES:

1. COVER SLAB SHALL FOLLOW DELDOT STANDARD CONSTRUCTION DETAIL D-5 AND MATCH OUTSIDE TO OUTSIDE DIMENSIONS OF SPECIAL DRAINAGE STRUCTURE. TYPE 3 JOINT DETAIL SHALL BE MODIFIED TO MATCH SPECIAL DRAINAGE STRUCTURE WALL THICKNESS.
2. OTHER DRAINAGE INLET STRUCTURAL COMPONENTS NOT INCLUDED SHALL FOLLOW DELDOT STANDARD CONSTRUCTION DETAILS D-4 AND D-5.
3. OTHER MANHOLE STRUCTURAL COMPONENTS NOT INCLUDED SHALL FOLLOW DELDOT STANDARD CONSTRUCTION DETAILS D-4 AND D-6.
4. REFER TO DRAINAGE INLET SCHEDULE ON DRAINAGE PLANS FOR TOP UNIT TYPE.

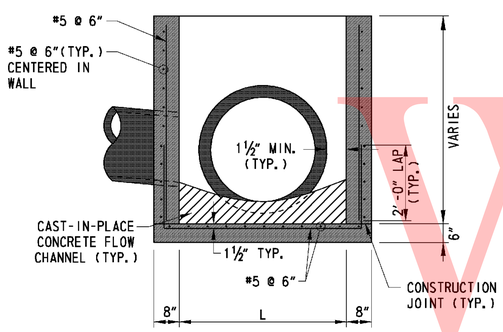

SECTION B-B

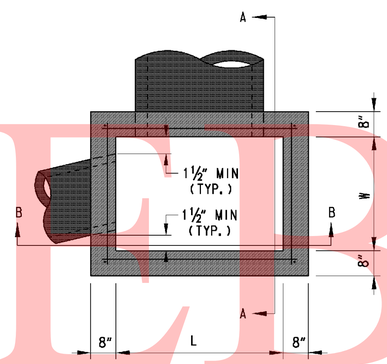

PLAN

STRUCTURE NO.	TYPE	ITEM NO.	W	L
DI-106, DI-402	DRAINAGE INLET, SPECIAL VI	708517	48"	48"
DI-145, DI-335	DRAINAGE INLET, SPECIAL VII	708518	72"	24"
DI-203	DRAINAGE INLET, SPECIAL VIII	708653	72"	48"
DI-230, DI-272	DRAINAGE INLET, SPECIAL IX	708654	72"	72"
MH-156	MANHOLE, SPECIAL I	708582	48"	48"
MH-419	MANHOLE, SPECIAL II	708596	66"	30"
MH-109	MANHOLE, SPECIAL III	708597	66"	48"

SPECIAL DRAINAGE STRUCTURES - 8" WALL

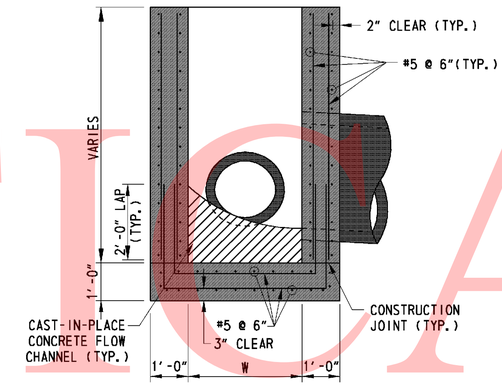

SECTION A-A

NOTES:

1. COVER SLAB SHALL FOLLOW DELDOT STANDARD CONSTRUCTION DETAIL D-5 AND MATCH OUTSIDE TO OUTSIDE DIMENSIONS OF SPECIAL DRAINAGE STRUCTURE. TYPE 3 JOINT DETAIL SHALL BE MODIFIED TO MATCH SPECIAL DRAINAGE STRUCTURE WALL THICKNESS.
2. OTHER DRAINAGE INLET STRUCTURAL COMPONENTS NOT INCLUDED SHALL FOLLOW DELDOT STANDARD CONSTRUCTION DETAILS D-4 AND D-5.
3. OTHER MANHOLE STRUCTURAL COMPONENTS NOT INCLUDED SHALL FOLLOW DELDOT STANDARD CONSTRUCTION DETAILS D-4 AND D-6.
4. REFER TO DRAINAGE INLET SCHEDULE ON DRAINAGE PLANS FOR TOP UNIT TYPE.

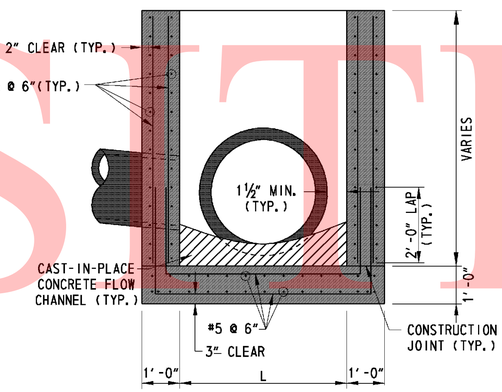

SECTION B-B

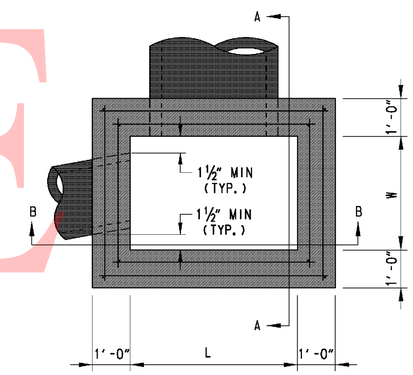

PLAN

STRUCTURE NO.	TYPE	ITEM NO.	W	L
DI-243, DI-298	DRAINAGE INLET, SPECIAL X	708655	72"	48"
DI-351	DRAINAGE INLET, SPECIAL XI	708656	48"	30"

SPECIAL DRAINAGE STRUCTURES - 12" WALL

UNOFFICIAL WEBSITE COPY

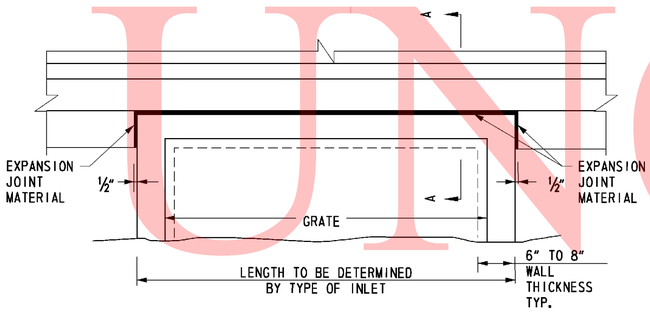

PLAN

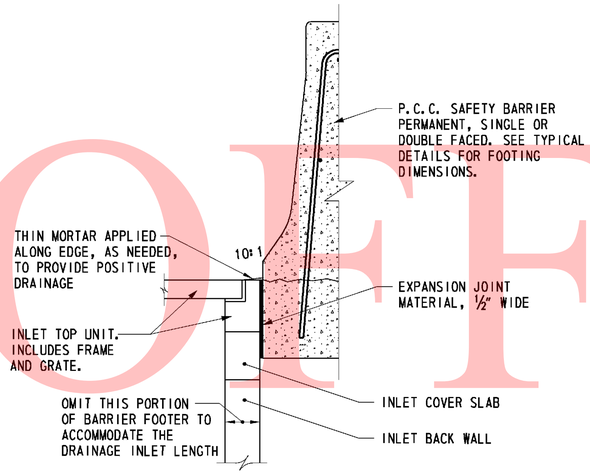

SECTION A-A

NOTE:
THE COST FOR THE THIN MORTAR AND EXPANSION JOINT MATERIAL SHALL BE INCLUDED IN THE UNIT PRICE BID FOR THE DRAINAGE INLET ITEM.

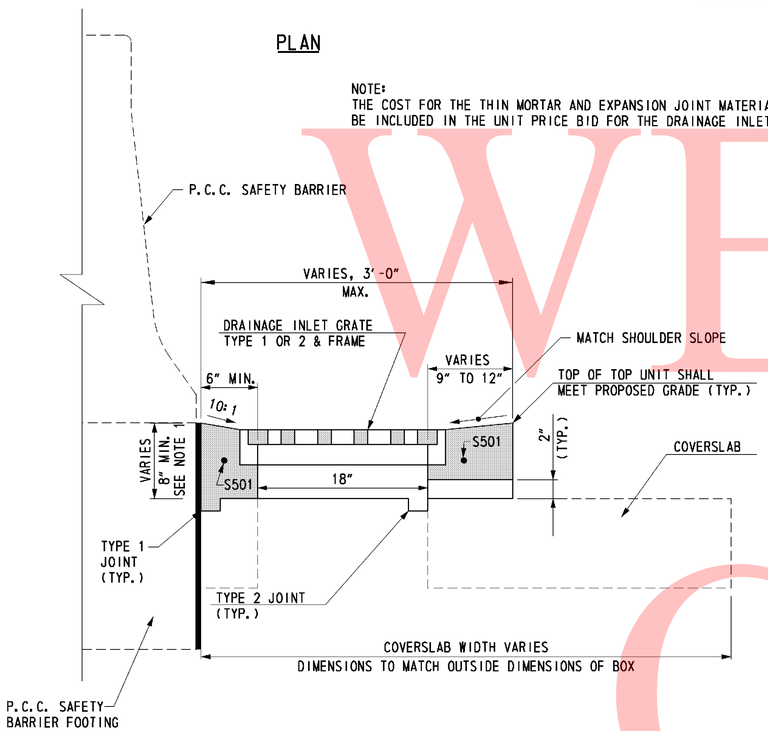

NOTES:

1. TOP UNIT HEIGHT TO BE 20" IN AREAS OF FULL-DEPTH PAVING, TO PREVENT REFLECTIVE CRACKING. IT IS INTENDED THAT THE TOP OF COVERSLAB BE FLUSH WITH THE BOTTOM OF THE LOWEST BITUMINOUS PAVEMENT LAYER. PROVIDE ADDITIONAL REINFORCING TO THE TOP UNIT AS DIRECTED BY THE ENGINEER. WHERE TOP UNIT PENETRATES A CONCRETE MOMENT SLAB: TOP UNIT TO BE AT LEAST 8" + M, WHERE M IS THE MOMENT SLAB THICKNESS, OR AS DIRECTED BY THE ENGINEER.
2. REFERENCE OFFSET AND ELEVATION FOR INLETS IS THE HYPOTHETICAL GUTTER FLOWLINE.
3. TOP UNIT TO BE INCLUDED IN UNIT PRICE BID FOR INLETS.
4. SEE STD. NO. D-5 FOR ADDITIONAL INFORMATION.
5. RELOCATE ENCROACHING COVERSLAB REINFORCING BARS TO ACCOMMODATE REDUCED DISTANCE BETWEEN FRAME AND BACK EDGE OF COVERSLAB.

MODIFIED TYPE A TOP UNIT

DRAINAGE INLET DETAIL AT BARRIER

PIPE NO.	PIPE SIZE	PIPE TYPE	A	B	C	D	L1	L2	L3
P-35	18"	CMP - 16 GA.	85.00	85.05	104.25	104.30	5.0'	33.7'	5.0'
P-55	18"	CMP - 16 GA.	41.50	41.60	58.45	58.50	10.0'	17.8'	5.0'
P-113	18"	CMP - 16 GA.	82.70	83.20	94.45	94.50	20.0'	13.1'	5.0'
P-116	18"	CMP - 16 GA.	71.20	71.25	97.75	97.80	5.0'	57.4'	5.0'
P-220	18"	CMP - 16 GA.	58.20	58.25	72.92	73.00	5.0'	19.4'	8.0'
P-406	18"	CMP - 16 GA.	54.00	54.05	71.42	71.50	5.0'	26.7'	8.0'
P-420	18"	CMP - 16 GA.	67.95	68.15	84.94	85.00	20.0'	22.8'	6.0'

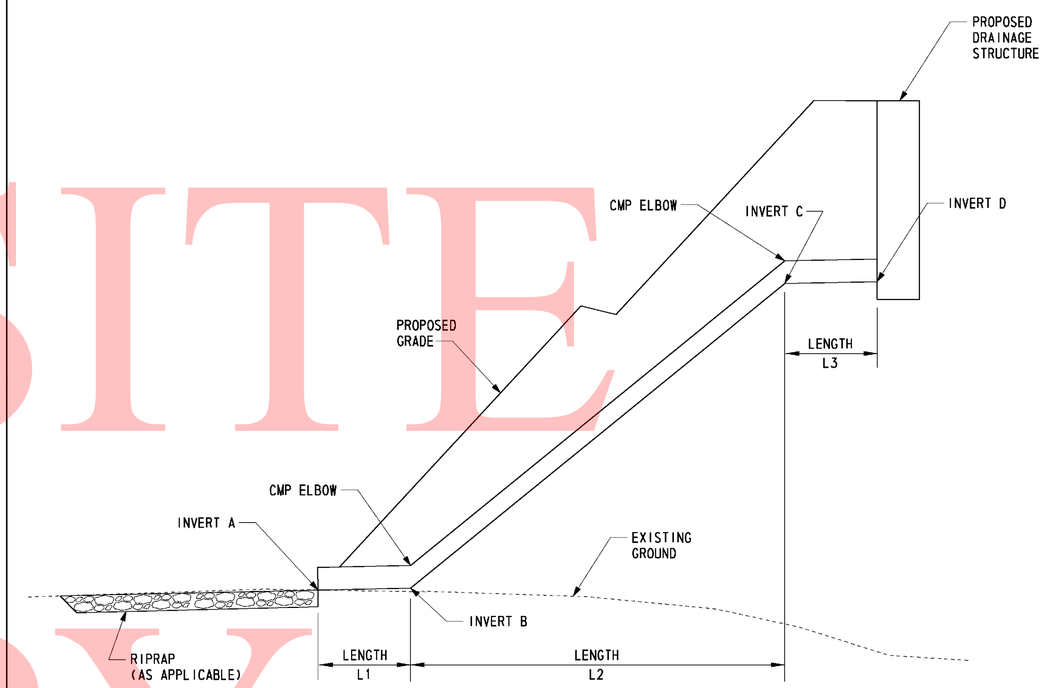

STORM DRAIN DOWNSPOUT DETAIL

NOTE: THE COST OF THE CMP ELBOW SHALL BE INCIDENTAL TO THE UNIT PRICE BID FOR ITEM 614003, GALVANIZED CORRUGATED STEEL PIPE, 18", 16 GAGE.

UNOFFICIAL WEBSITE COPY

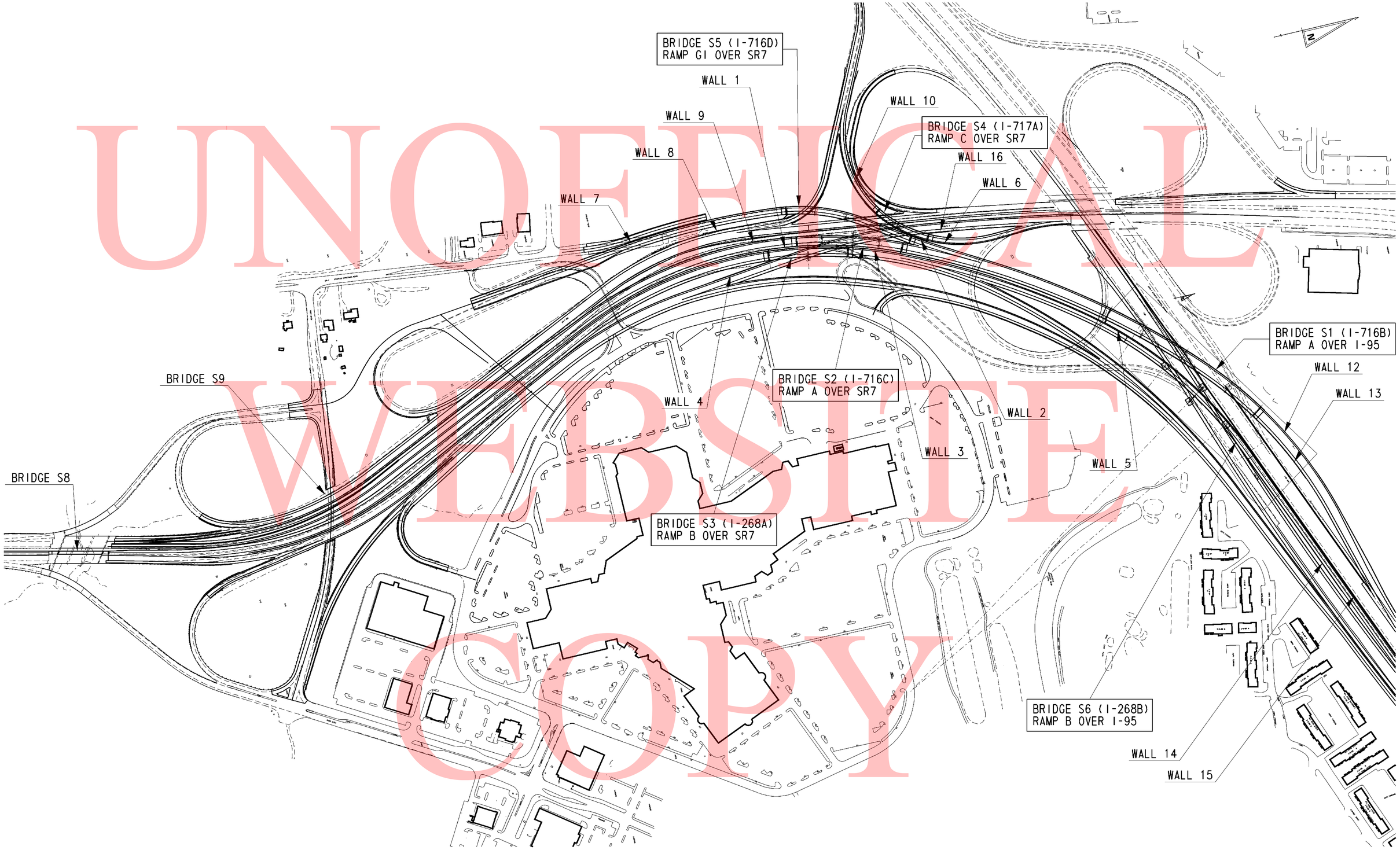

UNOFFICIAL WEBSITE COPY

8/6/2010 7:46:24 AM
M:\PROJECTS\2003\03059_DELTRNPK\SRIMALL\CADD\2809003\PLANS\IS03_SR.DGN

DELAWARE DEPARTMENT OF TRANSPORTATION

ADDENDUMS / REVISIONS

SCALE 0 200 400 800 FEET

SR1 / I-95 INTERCHANGE

CONTRACT	BRIDGE NO.	
28-090-03	DESIGNED BY:	
COUNTY		
NEW CASTLE	CHECKED BY:	

STRUCTURE KEY PLAN

S-1
SHEET NO.
194
TOTAL SHTS.
803

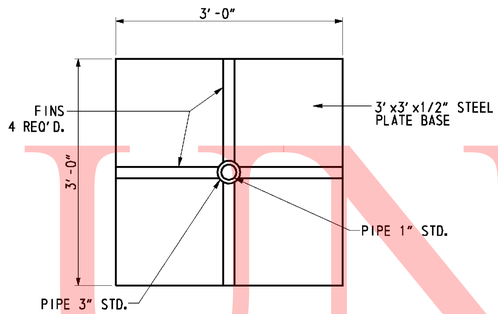

PLAN

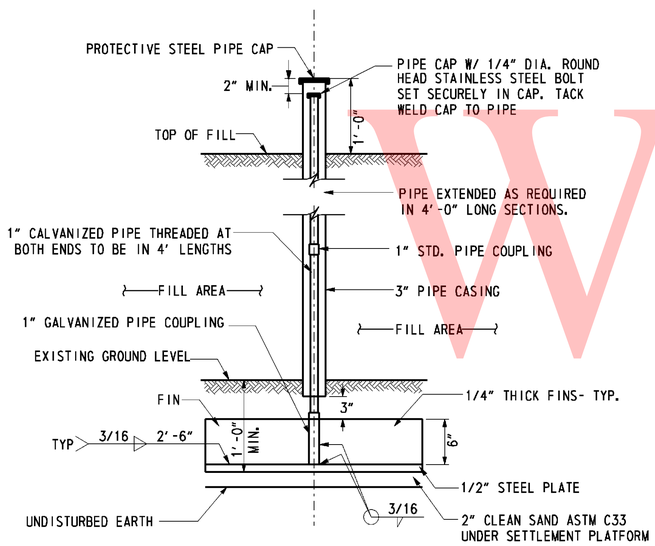

ELEVATION

NOTES:

1. SETTLEMENT PLATFORMS AND SETTLEMENT MONUMENTSS (SM) SHALL BE INSTALLED ACCORDING TO SPECIAL PROVISION XXX.

2. VIBRATING WIRE PIEZIEOMETERS SHALL BE INSTALLED PER SPECIAL PROVISION XXX.

3. THE SETTLEMENT PLATFORM SHALL BE INSTALLE DWITH THE PIPE PLUMB.

4. THE ELEVATION OF THE SETTLEMENT PLATFORMS AND GROUND SURFACE NEAR THE INSTRUMENTS SHALL BE SURVEYED UPON INSTALLATION, AND AGAIN 24-72 HOURS AFTER INSTALLATION TO VERIFY INITAL DATA.

5. SETTLEMENT PLATFORMS SHALL BE READ AT LEAST WEEKLY DURING FILL OPERATION ANDWEEKLY THEREAFTER FOR 30 DAYS. SETTLEMENT PLATFORMS SHALL BE READ ONCE EVERYMONTH THEREAFTER FOR 6 MONTHS, OR AS DIRECTED BY THE ENGINEER.

6. WHEN MEASURING SETTLEMENTS CONTRACTOR SHALL ALSO MEASURE ELEVATION AT THE TOP OF FILL ADJACENT TO SETTLEMENT PLATFORMS AND SETTLMENT MONUMNETS.

7. THE CONTRACTOR SHALL PROTECT ALL SETTLEMENT PLATFORMS AND SETTLEMENT MONUMENT FROM DAMAGE DUE TO CONSTRUCTION OPERATIONS, WEATHER, TRAFFIC, AND VANDALISM. IF A SETTLEMENT PLATFORM OR SETTLEMENT MONUMENT IS DAMAGED, THE CONTRACTOR SHALL REPAIR OR REPLACE THE DAMAGED SETTLEMENT PLATFORM AT NO ADDITIONALCOST TO THE AUTHORITY.

8. THE ELEVATION OF THE SETTLEMENT PLATFORM SHALL BE SURVEYED BEFORE AND AFTER EACH RISER IS INSTALLED.

VIBRATING WIRE PIEZOMETERS

STRUCTURE NO.	INSTRUMENT NAME	COORDINATES		BASELINE	STATION	OFFSET
		NORTHING	EASTING			
S-6-VP-1	S-6-VP-1	613423	433051	RAMP B	450+45	04 LT
S-6-VP-2	S-6-VP-2	613401	433073	RAMP B	450+65	28 RT
S-6-VP-3	S-6-VP-3	613847	433691	RAMP B	458+16	04 LT
S-6-VP-4	S-6-VP-4	613826	433720	RAMP B	158+15	27 RT

SETTLEMENT MONITORING LOCATIONS

STRUCTURE NO.	INSTRUMENT NAME	INSTRUMENTATION TYPE	COORDINATES		BASELINE	STATION	OFFSET
			NORTHING	EASTING			
S1	S-1-SP-1	SETTLEMENT PLATFORM	613933	433547	RAMP A	1227+48	15
S1	S-1-SM-1	SETTLEMENT MONUMENTS	613894	433534	RAMP A	1227+81	11
S1	S-1-SM-2	SETTLEMENT MONUMENTS	613937	433506	RAMP A	1227+81	41
S1	S-1-SP-2	SETTLEMENT PLATFORM	613317	432917	RAMP A	1236+30	0
S1	S-1-SM-3	SETTLEMENT MONUMENTS	613342	432951	RAMP A	1235+89	11
S1	S-1-SM-4	SETTLEMENT MONUMENTS	613375	432912	RAMP A	1235+89	41
S2	S-2-SP-1	SETTLEMENT PLATFORM	612534	432437	RAMP A	1245+51	0
S2	S-2-SM-1	SETTLEMENT MONUMENTS	612502	432435	RAMP A	1245+81	11
S2	S-2-SM-2	SETTLEMENT MONUMENTS	612518	432399	RAMP A	1245+81	29
S2	S-2-SP-2	SETTLEMENT PLATFORM	612014	432275	RAMP A	1250+97	09
S2	S-2-SM-3	SETTLEMENT MONUMENTS	612045	432300	RAMP A	1250+29	11
S2	S-2-SM-4	SETTLEMENT MONUMENTS	612051	432261	RAMP A	1250+29	29
S3	S-3-SP-1	SETTLEMENT PLATFORM	611874	432312	RAMP B	432+93	15
S3	S-3-SM-1	SETTLEMENT MONUMENTS	611910	432296	RAMP B	433+28	04
S3	S-3-SM-2	SETTLEMENT MONUMENTS	611907	432334	RAMP B	433+28	34
S3	S-3-SP-2	SETTLEMENT PLATFORM	612297	432391	RAMP B	437+28	15
S3	S-3-SM-3	SETTLEMENT MONUMENTS	612269	432363	RAMP B	436+93	04
S3	S-3-SM-4	SETTLEMENT MONUMENTS	612258	432400	RAMP B	436+93	34
S4	S-4-SP-1	SETTLEMENT PLATFORM	612421	432202	RAMP C	1114+32	06
S4	S-4-SM-1	SETTLEMENT MONUMENTS	612450	432224	RAMP C	1114+66	07
S4	S-4-SM-2	SETTLEMENT MONUMENTS	612430	432228	RAMP C	1114+66	18
S4	S-4-SP-2	SETTLEMENT PLATFORM	612667	432415	RAMP C	1117+59	06
S4	S-4-SM-3	SETTLEMENT MONUMENTS	612642	432288	RAMP C	1117+18	07
S4	S-4-SM-4	SETTLEMENT MONUMENTS	612630	432410	RAMP C	1117+18	18
S5	S-5-SP-1	SETTLEMENT PLATFORM	612581	432414	RAMP G1	1311+18	0
S5	S-5-SM-1	SETTLEMENT MONUMENTS	612546	432403	RAMP G1	1311+53	11
S5	S-5-SM-2	SETTLEMENT MONUMENTS	612563	432378	RAMP G1	1311+53	20
S5	S-5-SP-2	SETTLEMENT PLATFORM	611999	432135	RAMP G1	1317+73	03
S5	S-5-SM-3	SETTLEMENT MONUMENTS	612032	432147	RAMP G1	1317+38	11
S5	S-5-SM-4	SETTLEMENT MONUMENTS	612037	432117	RAMP G1	1317+38	20
S6	S-6-SP-1	SETTLEMENT PLATFORM	613423	433033	RAMP B	450+53	04 RT
S6	S-6-SM-1	SETTLEMENT MONUMENTS	613437	433065	RAMP B	450+65	04 LT
S6	S-6-SM-2	SETTLEMENT MONUMENTS	613401	433073	RAMP B	450+45	27 RT
S6	S-6-SP-2	SETTLEMENT PLATFORM	613412	433074	RAMP B	450+53	19 RT
S6	S-6-SM-4	SETTLEMENT MONUMENTS	613817	433702	RAMP B	458+35	04 LT
S6	S-6-SP-3	SETTLEMENT PLATFORM	613844	433704	RAMP B	458+27	04 RT
S6	S-6-SM-3	SETTLEMENT MONUMENTS	613855	433709	RAMP B	458+15	28 RT
S6	S-6-SP-4	SETTLEMENT PLATFORM	613830	433709	RAMP B	458+27	19 RT
RW1	RW-1-SP-1	SETTLEMENT PLATFORM	611937	432268	RAMP A	1251+74	07
RW1	RW-1-SM-1	SETTLEMENT MONUMENTS	611976	432292	RAMP A	1251+32	12
RW2	RW-2-SP-1	SETTLEMENT PLATFORM	612615	432439	RAMP G1	1310+76	03
RW2	RW-2-SM-1	SETTLEMENT MONUMENTS	612632	432421	RAMP G1	1310+71	22
RW2	RW-2-SM-2	SETTLEMENT MONUMENTS	612600	432400	RAMP G1	1311+10	22
RW3	RW-3-SM-1	SETTLEMENT MONUMENTS	612472	432433	RAMP B	439+07	07
RW3	RW-3-SP-1	SETTLEMENT PLATFORM	612376	432395	RAMP B	438+05	07
RW3	RW-3-SP-2	SETTLEMENT PLATFORM	612462	432456	RAMP B	439+07	18
RW3	RW-3-SM-2	SETTLEMENT MONUMENTS	612368	432419	RAMP B	438+05	18
RW4	RW-4-SM-1	SETTLEMENT MONUMENTS	611861	432347	SR 7	632+54	06 LT
RW5	RW-5-SM-1	SETTLEMENT MONUMENTS	613409	433037	RAMP B	450+61	05 LT
RW5	RW-5-SM-2	SETTLEMENT MONUMENTS	613354	432985	RAMP B	449+78	05 LT
RW6	RW-6-SM-1	SETTLEMENT MONUMENTS	612828	432471	RAMP C	1119+25	15 RT
RW6	RW-6-SM-2	SETTLEMENT MONUMENTS	612730	432449	RAMP C	1118+27	15 RT
RW6	RW-6-SM-3	SETTLEMENT MONUMENTS	612658	432421	RAMP C	117+51	15 RT
RW7	RW-7-SM-1	SETTLEMENT MONUMENTS	612013	432112	RAMP G1	1317+63	22 RT
RW7	RW-7-SM-2	SETTLEMENT MONUMENTS	611888	432101	RAMP G1	1318+88	22 RT
RW7	RW-7-SM-3	SETTLEMENT MONUMENTS	611787	432096	RAMP G1	1319+87	22 RT
RW7	RW-7-SM-4	SETTLEMENT MONUMENTS	611687	432093	RAMP G1	1320+87	22 RT
RW7	RW-7-SM-5	SETTLEMENT MONUMENTS	611583	432094	RAMP G1	1321+91	22 RT
RW7	RW-7-SM-6	SETTLEMENT MONUMENTS	611495	432097	RAMP G1	1322+78	22 RT
RW9	RW-9-SM-1	SETTLEMENT MONUMENTS	611725	432237	RAMP A	1253+86	31 RT
RW10	RW-10-SM-1	SETTLEMENT MONUMENTS	612428	432184	RAMP C	1114+18	09 LT
RW10	RW-10-SM-2	SETTLEMENT MONUMENTS	612388	432090	RAMP C	1113+14	09 LT
RW10	RW-10-SM-3	SETTLEMENT MONUMENTS	612370	431996	RAMP C	1112+17	09 LT
RW12	RW-12-SMP-1	SETTLEMENT MONUMENTS	614032	433661	RAMP A	1226+04	43 RT
RW12	RW-12-SMP-2	SETTLEMENT MONUMENTS	613983	433575	RAMP A	1227+00	43 RT
RW13	RW-13-SM-1	SETTLEMENT MONUMENTS	613910	433561	RAMP A	1226+35	13 LT
RW13	RW-13-SM-2	SETTLEMENT MONUMENTS	613968	433660	RAMP A	1227+51	13 LT
RW14	RW-14-SM-1	SETTLEMENT MONUMENTS	613831	433732	RAMP B	458+47	28 RT
RW14	RW-14-SM-2	SETTLEMENT MONUMENTS	613871	433832	RAMP B	459+55	27 RT
RW14	RW-14-SM-3	SETTLEMENT MONUMENTS	613908	433921	RAMP B	460+51	26 RT
RW14	RW-14-SM-4	SETTLEMENT MONUMENTS	613953	434028	RAMP B	461+67	25 RT
RW15	RW-15-SM-1	SETTLEMENT MONUMENTS	613955	433955	RAMP B	461+00	05 LT
RW15	RW-15-SM-2	SETTLEMENT MONUMENTS	613918	433862	RAMP B	460+00	05 LT
RW15	RW-15-SM-3	SETTLEMENT MONUMENTS	613881	433769	RAMP B	459+00	06 LT
RW16	RW-16-SM-1	SETTLEMENT MONUMENTS	612678	432388	SR7 NB	640+78	38 RT

UNOFFICIAL WEBSITE COPY

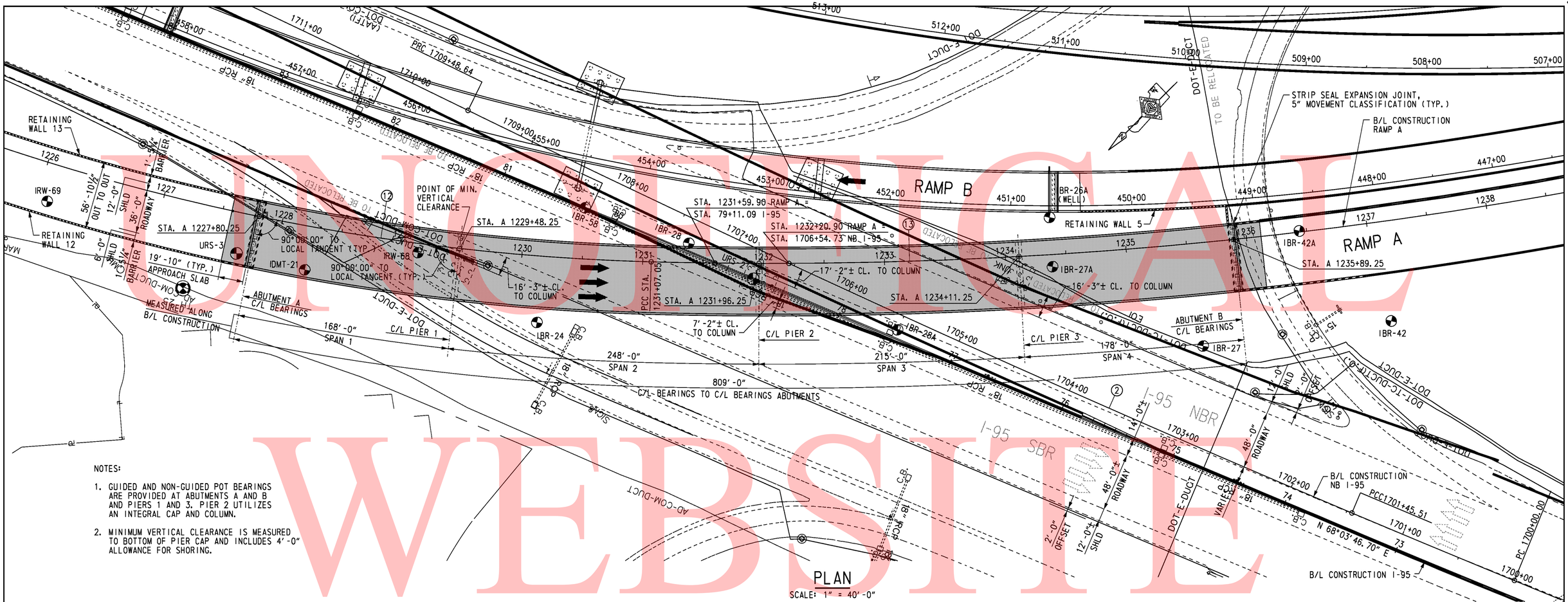

PLAN

SCALE: 1" = 40'-0"

NOTES:

1. GUIDED AND NON-GUIDED POT BEARINGS ARE PROVIDED AT ABUTMENTS A AND B AND PIERS 1 AND 3. PIER 2 UTILIZES AN INTEGRAL CAP AND COLUMN.

2. MINIMUM VERTICAL CLEARANCE IS MEASURED TO BOTTOM OF PIER CAP AND INCLUDES 4'-0" ALLOWANCE FOR SHORING.

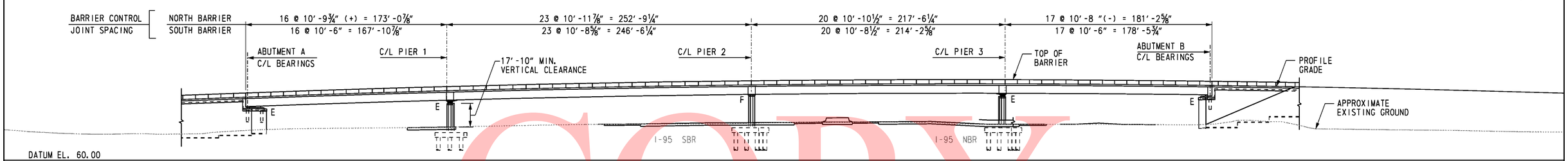

ELEVATION

SCALE: 1" = 40'-0"

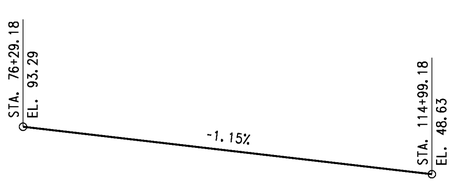

I-95 PROFILE

NOT TO SCALE

INFORMATION SUPPLIED FROM DELAWARE TURNPIKE CONTRACT NO. 7003.
ELEVATIONS ARE GIVEN APPROXIMATELY 40' LEFT OF BASELINE

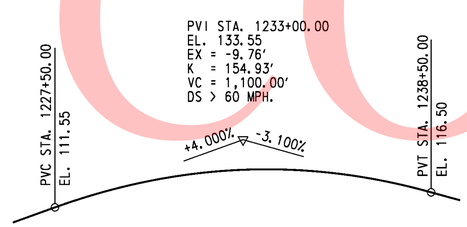

RAMP A - VERTICAL CURVE DATA

NOT TO SCALE

B/L CONSTR. RAMP A CURVE 12 DATA

PI STA. 1226+68.24
Δ = 27°44'07.64" LT
Dc = 3°05'49.45"
R = 1,850.0000'
T = 456.72'
L = 895.54'

B/L CONSTR. RAMP A CURVE 13 DATA

PI STA. 1238+52.84
Δ = 22°47'31.72" LT
Dc = 1°32'54.72"
R = 3,700.0000'
T = 745.79'
L = 1,471.85'

B/L CONSTR. I-95 NB CURVE 2 DATA

PI STA. 1705+47.18
Δ = 3°10'24.61" RT
Dc = 0°23'42.52"
R = 14,500.0000'
T = 401.67'
L = 803.13'

UNOFFICIAL WEBSITE COPY

10/28/2010 O:\20832687-XM\CAD\Bridge\BR-S1\pe01_BR-S1_sr1.dgn untitled

DELAWARE DEPARTMENT OF TRANSPORTATION	ADDENDUMS / REVISIONS	SCALE 0 40 80 120 FEET	SR1 / I-95 INTERCHANGE	CONTRACT 28-090-03	BRIDGE NO. 1-716B	RAMP A OVER I-95 BRIDGE PLAN AND ELEVATION	S1-1 SHEET NO. 195
				COUNTY NEW CASTLE	DESIGNED BY: R. F. KIRCHNER		TOTAL SHTS. 803
					CHECKED BY: G. P. MISTRY		

GENERAL NOTES

1. DESIGN SPECIFICATIONS
AASHTO LRFD BRIDGE DESIGN SPECIFICATIONS, 4th EDITION WITH 2009 INTERIM REVISIONS.
DELAWARE DEPARTMENT OF TRANSPORTATION BRIDGE DESIGN MANUAL, MAY 2005 INCLUDING LATEST REVISIONS. ANSI/AASHTO/AWS D1.5 BRIDGE WELDING CODE.

2. LOADING
UNIT WEIGHTS OF MATERIALS SHALL BE IN ACCORDANCE WITH THE DELAWARE DESIGN MANUAL.
FUTURE OVERLAY ALLOWANCE SHALL BE 25 LBS/SQ FT.
STEEL BRIDGE DECK FORMS WHICH STAY IN PLACE (INCLUDING CONCRETE IN FORM CORRUGATIONS) SHALL BE 15 LBS/SQ FT.
VEHICLE LIVE LOAD SHALL BE HL-93, WHICH CONSISTS OF A DESIGN TRUCK OR TANDEM WITH DYNAMIC LOAD ALLOWANCE AND A LANE LOAD. RATING SHALL USE ALL DELAWARE LEGAL LOADS SPECIFIED IN THE BRIDGE DESIGN MANUAL.
BARRIER HAS BEEN DESIGNED FOR TEST LEVEL FIVE (TL-5).
FATIGUE DESIGN SHALL BE BASED ON THE FOLLOWING ONE DIRECTIONAL TRAFFIC VOLUMES:

RAMP A OVER I-95: DESIGN ADT = 27,550, DESIGN ADTT = 3,300

FOR THERMAL LOADS, CONSIDER THE MODERATE TEMPERATURE RANGE AS STIPULATED IN THE AASHTO LRFD DESIGN SPECIFICATIONS. THE NORMAL TEMPERATURE SHALL BE CONSIDERED TO BE 60F.
FOR SEISMIC LOADS, CONSIDER SEISMIC PERFORMANCE ZONE 1, WITH A SITE CLASS = E AND IMPORTANCE CATEGORY - CRITICAL.

3. PORTLAND CEMENT CONCRETE
PORTLAND CEMENT CONCRETE FOR CAST-IN-PLACE ELEMENTS SHALL BE AS FOLLOWS:
(28 DAY COMPRESSIVE STRENGTH)
ITEM NO. 602007 (CLASS A, F'c=4500 PSI) - PIER ABOVE FOOTING
ITEM NO. 602011 (CLASS A, F'c=4500 PSI) - PIER FOOTING, TOP OF PIER PILES
ITEM NO. 602786 (CLASS A, F'c=8000 PSI) - POST-TENSIONED PIER CAP
ITEM NO. 602013 (CLASS D, F'c=4500 PSI) - DECK
ITEM NO. 602014 (CLASS D, F'c=4500 PSI) - APPROACH SLAB
ITEM NO. 602015 (CLASS A, F'c=4500 PSI) - ABUTMENT, TOP OF ABUTMENT PILES
ITEM NO. 602017 (CLASS A, F'c=4500 PSI) - BARRIER
MIX REQUIREMENTS SHALL CONFORM TO SECTION 812 OF THE DELAWARE DEPARTMENT OF TRANSPORTATION STANDARD SPECIFICATIONS. ALL EXPOSED CORNERS OF CONCRETE SHALL BE CHAMFERED WITH ¾" X ¾" MILLED CHAMFER STRIPS UNLESS NOTED OTHERWISE, EXCEPT ON UNEXPOSED FOOTINGS OR WHERE INDICATED BY THE NOTATION ON THE PLANS, "DO NOT CHAMFER".
NO SLIP-FORMING OF BARRIERS IS PERMITTED, UNLESS NOTED OTHERWISE.

4. BAR REINFORCEMENT
REINFORCING STEEL SHALL CONFORM TO AASHTO M31 (ASTM A615), GRADE 60. ALL REINFORCING STEEL SHALL HAVE A CLEAR COVER OF 2" UNLESS OTHERWISE SPECIFIED ON THE PLANS. FUSION-BONDED EPOXY COATED REINFORCING STEEL SHALL CONFORM TO AASHTO M284 (ASTM D3963), AND SHALL BE DENOTED WITH A SUFFIX "E" IN THE BAR MARKS.

DO NOT WELD GRADE 60 REINFORCING STEEL.

5. POST-TENSIONING STEEL
ALL POST-TENSIONING STRAND TENDONS SHALL CONSIST OF 0.6 INCH DIAMETER SEVEN WIRE UNCOATED LOW RELAXATION STRANDS CONFORMING TO AASHTO M203 (ASTM A416), GRADE 270.
DUCTS SHALL BE 4½ INCH DIA.POLYETHYLENE/POLYPROPYLENE (PE/PP) PLASTIC DUCTS.
GROUT FOR DUCTS SHALL BE IN ACCORDANCE WITH ITEM NO. 602779 "POST TENSIONING GROUT"

6. STRUCTURAL STEEL
STRUCTURAL STEEL SHALL CONFORM TO ASTM A 709, GRADE 50W, AND ASTM A 709, GRADE HPS 70W (AS NOTED), INCLUDING THE ADDITIONAL REQUIREMENTS FOR CHARPY V-NOTCH TESTING OF AASHTO M270 FOR PRIMARY LOAD CARRYING MEMBERS UNDER TENSILE STRESS. THE PRIMARY LOAD CARRYING MEMBER COMPONENTS ARE THE FLANGES, WEBS, AND SPLICE PLATES OF THE STEEL GIRDERS. THE USE OF FRACTURE CRITICAL MEMBERS IS PROHIBITED. FATIGUE CATEGORIES D, E AND F SHALL NOT BE USED IN STRESS REVERSAL OR TENSION AREAS, EXCEPT FOR TEMPORARY CONDITIONS.

TEN (10) FEET AT THE ENDS OF EACH GIRDER AND THE END CROSS FRAMES SHALL BE PAINTED WITH A URETHANE PAINT SYSTEM IN ACCORDANCE WITH SPECIAL PROVISION #605537-URETHANE PAINT SYSTEM. THE FINAL COLOR SHALL BE FEDERAL #10076 (BROWN) OF FED-STD-595B. COST OF PAINTING SHALL BE INCIDENTAL TO ITEM 605002, STEEL STRUCTURES.

ALL BOLTS FOR SPLICE PLATES AND CROSS FRAMES SHALL BE ⅞" DIA. IN 15/16" DIA. HOLES AND CONFORM TO ASTM A325, TYPE 3, WITH THREADS EXCLUDED FROM SHEAR PLANES. BOLTED CONNECTIONS SHALL BE CLASS B SLIP CRITICAL CONNECTIONS, UNLESS NOTED ON THE PLANS.

7. SERVICEABILITY
LIVE LOAD DEFLECTION SHALL BE LIMITED TO L/800.
FOR REINFORCEMENT DISTRIBUTION REQUIREMENTS, CONSIDER CLASS 2 EXPOSURE CRITERIA FOR DECKS. ACCOMMODATION TO JACK GIRDERS FOR FUTURE BEARING REPLACEMENT HAS BEEN CONSIDERED IN THE DESIGN.

8. CONSTRUCTION JOINTS
KEYED CONSTRUCTION JOINTS SHALL BE 2" X 4" OR AS NOTED. ALL EXPOSED CONSTRUCTION JOINT EDGES SHALL HAVE A ¾" V-NOTCH, UNLESS NOTED OTHERWISE.

9. STABILIZING STRUCTURAL EXCAVATIONS
SHEETING AND SHORING SHALL BE REQUIRED FOR ANY EXCAVATION EXCEEDING FIVE (5) FEET IN HEIGHT, THE COST SHALL BE PAID UNDER ITEM NO. 207501. IN LIEU OF SHORING, THE CONTRACTOR MAY USE A 2:1 CUT SLOPE. NO PAYMENT SHALL BE MADE FOR ADDITIONAL EXCAVATION OR FILL OUTSIDE THE LIMITS AS DEFINED IN SECTION 207 OF THE STANDARD SPECIFICATIONS.

10. EXCAVATION REQUIRED TO ATTAIN THE GRADE FOR INSTALLATION OF MSE WALLS SHALL BE INCIDENTAL TO ITEM NO. 602772 - MECHANICALLY STABILIZED EARTH WALLS.

11. STRUCTURAL BACKFILL SHALL CONFORM TO THE REQUIREMENTS OF BORROW TYPE C. MSE WALL BACKFILL SHALL BE AS SPECIFIED ON THE PLANS.

12. ROADWAY CLEARANCES
A MINIMUM OF 16'-6" VERTICAL CLEARANCE SHALL BE MAINTAINED ABOVE ALL ROADWAYS.
A MINIMUM OF 2'-0" HORIZONTAL CLEARANCE SHALL BE MAINTAINED FROM THE OUTSIDE EDGE OF SHOULDER OFFSET (FACE OF CURB) TO THE FACE OF ANY OBSTRUCTION. THESE CLEARANCES APPLY AT ALL TIMES INCLUDING DURING CONSTRUCTION.

13. DECK REPLACEMENT
FUTURE DECK REPLACEMENT FOR THIS BRIDGE MUST TAKE INTO ACCOUNT THE UNBALANCED MOMENT FROM THE SUPERSTRUCTURE ON THE BEARINGS AT PIERS 1 AND 3. IT IS RECOMMENDED THAT THE DECK BE REPLACED IN A SYMMETRICAL FASHION, WORKING IN THE REGIONS AT BOTH FASCIA GIRDERS AT THE SAME TIME, AND PROGRESSING IN STAGES TOWARD THE CENTER OF THE TYPICAL SECTION. THIS APPROACH WILL ELIMINATE THE POSSIBILITY OF UPLIFT AT THE BEARINGS FOR PIERS 1 AND 3.

14. TEST PILES
PILE LENGTHS FOR ORDERING PURPOSES SHALL BE DETERMINED BY TEST PILES. A MINIMUM OF ONE (1) PILE PER SUBSTRUCTURE, AS SHOWN ON THE PLANS, SHALL BE DYNAMICALLY TESTED BY THE CONTRACTOR IN ACCORDANCE WITH SPECIAL PROVISION 619519. TEST AND PRODUCTION PILE RE-STRIKES WILL BE PAID AS FOLLOWS:

A). ALL TEST PILE(S) WILL BE RESTRUCK AND DYNAMICALLY TESTED BY THE CONTRACTOR. THE TEST PILE RESTRIKES SHALL BE INCIDENTAL TO ITEM NO. 619519 DYNAMIC PILE TESTING BY CONTRACTOR PROVIDED THAT THEY ARE PERFORMED WITHIN FIVE (5) CALENDAR DAYS FROM INITIAL DRIVE.

B). AN ADDITIONAL PAYMENT WILL BE MADE TO THE CONTRACTOR IF HE IS DIRECTED BY THE ENGINEER TO WAIT AND RESTRIKE THE TEST PILE MORE THAN FIVE (5) CALENDAR DAYS AFTER INITIAL DRIVE. THE CONTRACTOR SHALL BE COMPENSATED AT THE FIXED PRICE OF $1,000.00 PER CALENDAR DAY FOR EVERY DAY, AFTER THE FIFTH CALENDAR DAY, UNDER ITEM NO. 619502 TEST PILE RESTRIKE. MULTIPLE TEST PILE RESTRIKES OCCURRING ON THE SAME DAY WILL ONLY BE PAID FOR AS ONE CALENDAR DAY. NO ADDITIONAL COMPENSATION WILL BE MADE REGARDLESS OF THE NUMBER OF TEST PILE RESTRIKES PERFORMED THAT DAY.

C). RESTRIKES ON PRODUCTION PILES WHICH ARE DESIGNATED TO BE DYNAMICALLY TESTED WILL NOT BE PAID UNDER ITEM NO. 619501 PRODUCTION PILE RESTRIKE. THESE PRODUCTION PILE RESTRIKES ARE INCIDENTAL TO ITEM NO. 619519 DYNAMIC PILE TESTING BY CONTRACTOR.

THE DEPARTMENT RESERVES THE RIGHT TO PERFORM DYNAMIC TESTING OF RESTRIKES.

15. THE CONCRETE PIER CAPS SHOWN ON THE PLANS SHALL BE USED. NO OTHER ALTERNATES WILL BE CONSIDERED.

BRIDGE LEGAL LOAD RATING (TONS)
RAMP A OVER I-95

TRUCK TYPE	RATING FACTOR	SAFE LOAD CAPACITY
HS-20	2.13	76.6
S220	3.91	78.2
S327	3.08	83.1
S335	2.36	82.6
S437	2.28	83.2
T330	2.95	88.5
T435	2.60	91.0
T540	2.27	90.8

BRIDGE DESIGN LOAD RATING:
INVENTORY = 1.35
OPERATING = 1.75

NOTE:

LOAD RATING IS IN ACCORDANCE WITH THE LOAD AND RESISTANCE FACTOR RATING (LRFR) METHOD.

CROSS REFERENCE NOTE:

FOR MSE WALL NOTES, SEE DWG S1-13 & S1-14.

UNOFFICIAL WEBSITE COPY

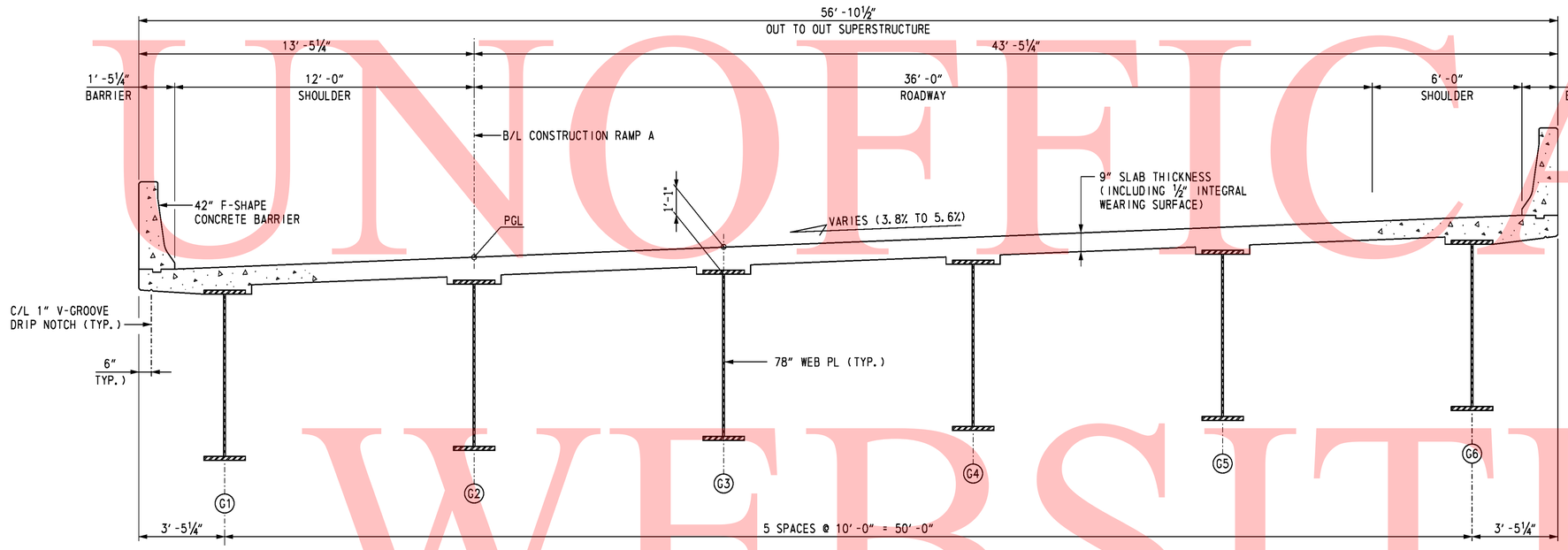

TYPICAL SECTION - RAMP A OVER I-95

(LOOKING STATION AHEAD)
SCALE: ⅜" = 1'-0"

SUPERELEVATION TRANSITION DATA:

STA. 1223+10.84 TO STA. 1230+59.05
CROSS SLOPE = 5.6%

STA. 1230+59.05 TO STA. 1231+55.05
CROSS SLOPE TRANSITION = 5.6% TO 3.8%

STA. 1231+55.05 TO STA. 1245+30.90
CROSS SLOPE = 3.8%

CROSS REFERENCE NOTES:

1. FOR FRAMING PLAN, SEE DWGS. S1-38 & S1-39.
2. FOR DECK AND BARRIER REINFORCEMENT, SEE DWGS. S1-46 THRU S1-49.

UNOFFICAL WEBSITE COPY

10/28/2010 O:\20832687-XM\CAD\Bridge\BR-S1\ts01_BR-S1_sr1.dgn
untitled

DELAWARE DEPARTMENT OF TRANSPORTATION	ADDENDUMS / REVISIONS	SR1 / I-95 INTERCHANGE	CONTRACT 28-090-03	BRIDGE NO. 1-716B	RAMP A OVER I-95	S1-3 SHEET NO.
			COUNTY NEW CASTLE	DESIGNED BY: R. F. KIRCHNER	TYPICAL SECTION	197 TOTAL SHTS.
				CHECKED BY: G.P. MISTRY		893

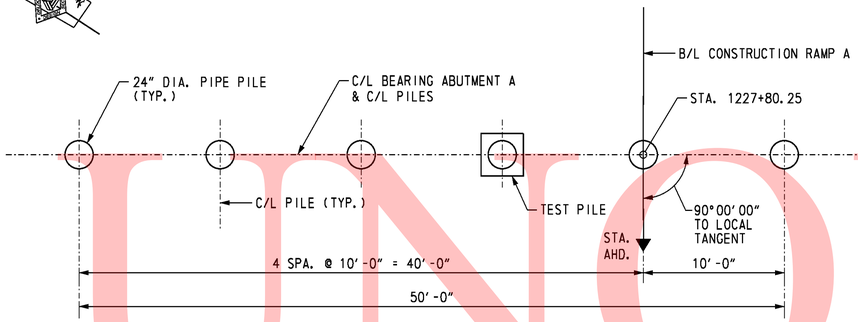

ABUTMENT A PILE PLAN

SCALE: 3/16" = 1'-0"

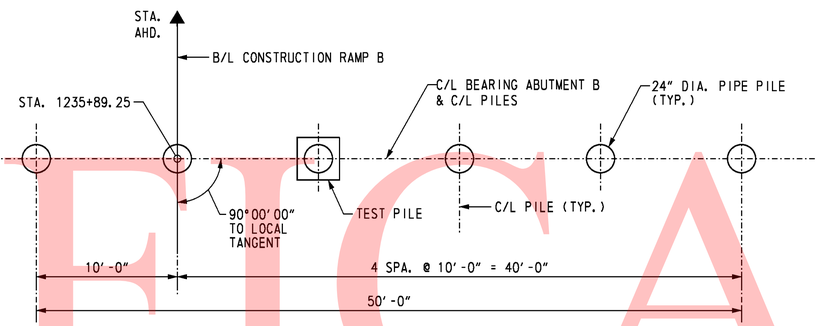

ABUTMENT B PILE PLAN

SCALE: 3/16" = 1'-0"

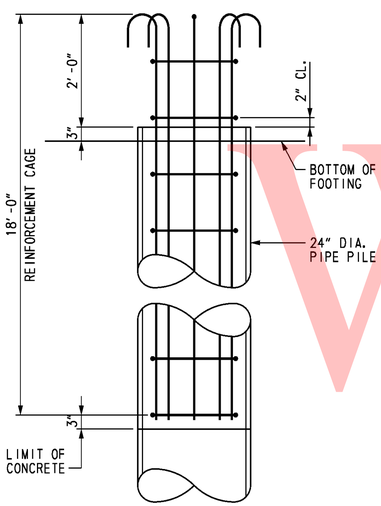

ELEVATION

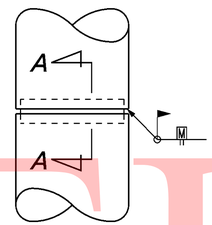

PIPE PILE SPLICE DETAIL

NOT TO SCALE

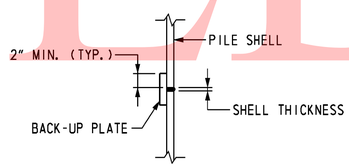

SECTION A-A

NOT TO SCALE

PILE INSTALLATION DATA				
	DESIGN DATA		ACTUAL FIELD DATA	
SUBSTRUCTURE UNIT	NOMINAL PILE DRIVING RESISTANCE (KIPS)	ESTIMATED PILE TIP ELEVATION	AVERAGE MINIMUM TIP ELEVATION	AVERAGE MAXIMUM TIP ELEVATION
ABUTMENT A	580	10.0		
ABUTMENT B	600	20.0		

ABUTMENT A PILE DRIVING INFORMATION
PILE SIZE AND TYPE:
ACTUAL BEARING OBTAINED:
HAMMER TYPE:
PILE HAMMER ENERGY:
SPECIAL DRIVING CONDITIONS AND COMMENTS:

ABUTMENT B PILE DRIVING INFORMATION
PILE SIZE AND TYPE:
ACTUAL BEARING OBTAINED:
HAMMER TYPE:
PILE HAMMER ENERGY:
SPECIAL DRIVING CONDITIONS AND COMMENTS:

NOTES:

1. PILES SHALL BE 24" DIA. WITH ½" WALL THICKNESS OPEN-ENDED STEEL PIPE PILES, ASTM A252 GRADE 3.
2. REINFORCING STRAPS SHALL BE PROVIDED FOR THE ABUTMENT STEM AND BACKWALL TO RESIST THE LONGITUDINAL FORCES ON THE SUPERSTRUCTURE.
3. PILE CASINGS SHALL BE INSTALLED AT THE PROPOSED PILE LOCATIONS DURING THE ABUTMENT MSE WALL CONSTRUCTON.
4. UPON COMPLETION OF THE MSE WALL THERE SHALL BE A 30 TO 60 DAY QUARANTINE PERIOD PRIOR TO DRIVING THE ABUTMENT PILES TO ALLOW FOR SETTLEMENT AND TO MINIMIZE THE DOWNDRAG FORCES THAT MIGHT DEVELOP ON THE PILES.
5. THE ENGINEER SHALL MONITOR THE SETTLEMENT DURING THE QUARANTINE PERIOD TO DETERMINE WHEN THE PILES MAY BE DRIVEN.
6. UPON COMPLETION OF THE QUARANTINE PERIOD, AS JUDGED BY THE ENGINEER, DRIVE PILES TO THE NOMINAL PILE DRIVING RESISTANCE INDICATED ON THE PLANS.
7. 'TEST PILES' SHALL BE TESTED IN ACCORDANCE WITH THE SPECIFICATIONS.

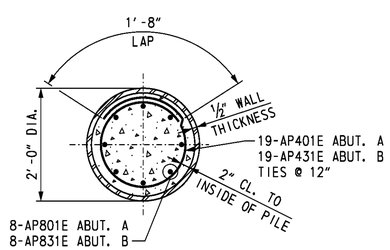

SECTION

PIPE PILE REINFORCEMENT

SCALE: 3/4" = 1'-0"

PILE SPLICE NOTES:

1. BACK-UP PLATE TO BE CUT FROM SAME PILE SIZE AS IS BEING SPLICED. CUT AND BEND TO FIT INSIDE DIAMETER OF PILE.
2. NO PILE SPLICING TO BE ALLOWED ON ANY PORTION OF PILE THAT IS TO REMAIN EXPOSED IN COMPLETED STRUCTURE.
3. SPLICER SLEEVE MATERIAL SHALL BE STEEL CONFORMING TO ASTM DESIGNATION A709, GRADE 36 (250).

CROSS REFERENCE NOTES:

1. FOR ABUTMENT PLAN AND ELEVATION, SEE DWG. S1-5 & S1-6.
2. FOR ABUTMENT REINFORCEMENT SCHEDULE, SEE DWG. S1-15.
3. FOR PILE CASING DETAILS, SEE DWG. S1-5.
4. FOR SOIL PROFILE, SOIL PROPERTIES AND TOTAL ESTIMATED SETTLEMENT, SEE DWG. S1-14.
5. FOR TEST PILE PAYMENT NOTES, SEE DWG. S1-2.

UNOFFICAL WEBSITE COPY

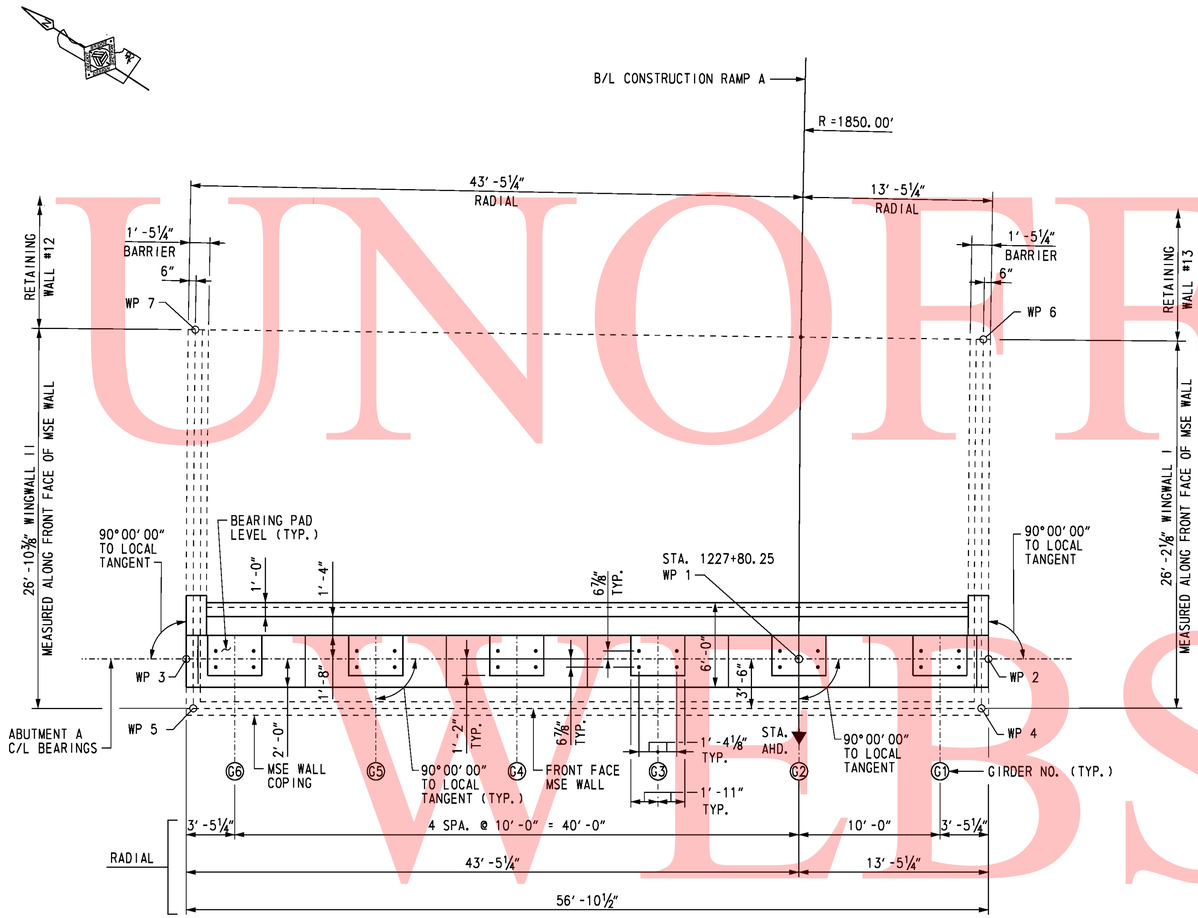

ABUTMENT A PLAN

SCALE: 3/16" = 1'-0"

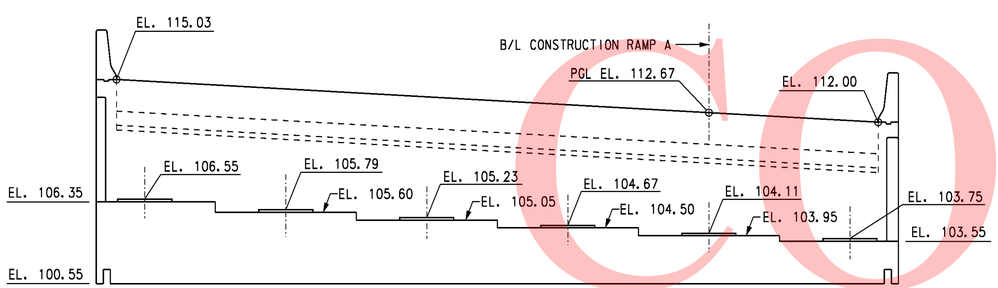

ABUTMENT A ELEVATION

SCALE: 3/16" = 1'-0"

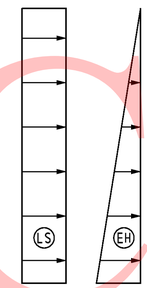

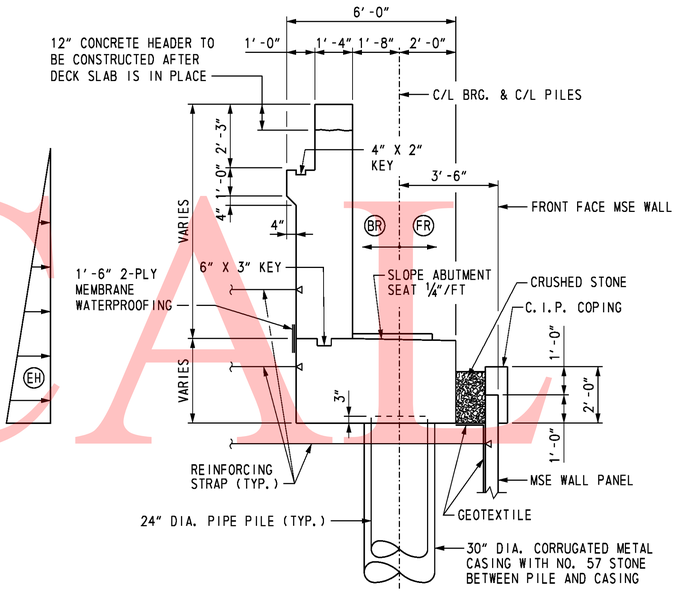

TYPICAL ABUTMENT SECTION

SCALE: 3/8" = 1'-0"

ABUTMENT LATERAL LOADS

TYPE	SERVICE LOAD (KIPS/FT.)
EH	2.70
LS	1.30
BR	0.15
FR	1.25

WORKING POINTS

W.P. NO.	STATION	OFFSET	COORDINATES NORTHING	COORDINATES EASTING
1	1227+80.25	0.00'	613,903.1635	433,528.1518
2	1227+80.25	13.44' LT.	613,891.9117	433,535.4977
3	1227+80.25	43.44' RT.	613,939.5358	433,504.4058
4	1227+83.77	12.94' LT.	613,890.4142	433,532.2955
5	1227+83.67	42.94' RT.	613,937.2010	433,501.7502
6	1227+57.42	12.94' LT.	613,904.6079	433,554.2861
7	1227+57.42	42.94' RT.	613,951.7681	433,524.3206

ABUTMENT LATERAL LOADS:

1. CONTRACTOR SHALL DESIGN THE SOIL REINFORCING STRAPS IN THE ABUTMENT STEM AND BACKWALL TO RESIST LATERAL LOADS "EH", "LS", "BR" AND "FR".
2. LOAD "EH" IS THE HORIZONTAL EARTH PRESSURE RESULTANT EXERTED ON THE ABUTMENT.
3. LOAD "LS" IS THE ADDITIONAL HORIZONTAL SOIL PRESSURE RESULTANT DUE TO 3 FEET OF SOIL SURCHARGE. CONTRACTOR IS RESPONSIBLE FOR PROVIDING MSE WALL DESIGNER WITH OTHER CONSTRUCTION LOADS WHICH WILL BE IN EXCESS OF 3 FEET OF SOIL SURCHARGE.
4. LOAD "BR" IS THE HORIZONTAL LOAD DUE TO BRAKING FORCE ON THE SUPERSTRUCTURE.
5. LOAD "FR" IS THE HORIZONTAL LOAD DUE TO FRICTION ON THE BEARINGS AS A RESULT OF BRIDGE EXPANSION AND CONTRACTION.
6. THE POINT OF APPLICATION OF THE LOADS "EH" AND "LS" ARE AT THE CENTROID OF THE PRESSURE DIAGRAM. THE LOADS "BR" AND "FR" ARE APPLIED AT THE CENTER OF THE BEARINGS. THE LOADS "BR" AND "FR" MAY ACT TOGETHER IN EITHER DIRECTION.

NOTES:

1. CRUSHED STONE AND GEOTEXTILE BETWEEN MSE WALL COPING AND ABUTMENT FOOTING SHALL BE INCIDENTAL TO ITEM NO. 602772 - MECHANICALLY STABILIZED EARTH WALLS.
2. MSE WALL AND COPING NOT SHOWN IN ELEVATION VIEW.
3. BEAM SEAT STEPS MID-WAY BETWEEN GIRDERS. BEAM SEAT ELEVATION IS AT FRONT FACE BACKWALL.
4. METAL CASING FOR PILES SHALL EXTEND FROM BOTTOM OF ABUTMENT TO BOTTOM OF MSE WALL LEVELING PAD. COST OF METAL CASING AND NO. 57 STONE SHALL BE INCIDENTAL TO FURNISHING 24" STEEL PIPE PILE ITEM.

CROSS REFERENCE NOTES:

1. FOR BRIDGE PLAN AND ELEVATION, SEE DWG. S1-1.
2. FOR TYPICAL SIDE ELEVATION, SEE DWG. S1-6.
3. FOR MSE WINGWALLS PLAN AND ELEVATION, SEE DWG S1-11.
4. FOR ABUTMENT REINFORCEMENT, SEE DWG. S1-7 & S1-8.
5. FOR ABUTMENT STRAP ANCHOR DETAIL, SEE DWG. S1-7.

UNOFFICIAL WEBSITE COPY

UNOFFICAL WEBSITE COPY

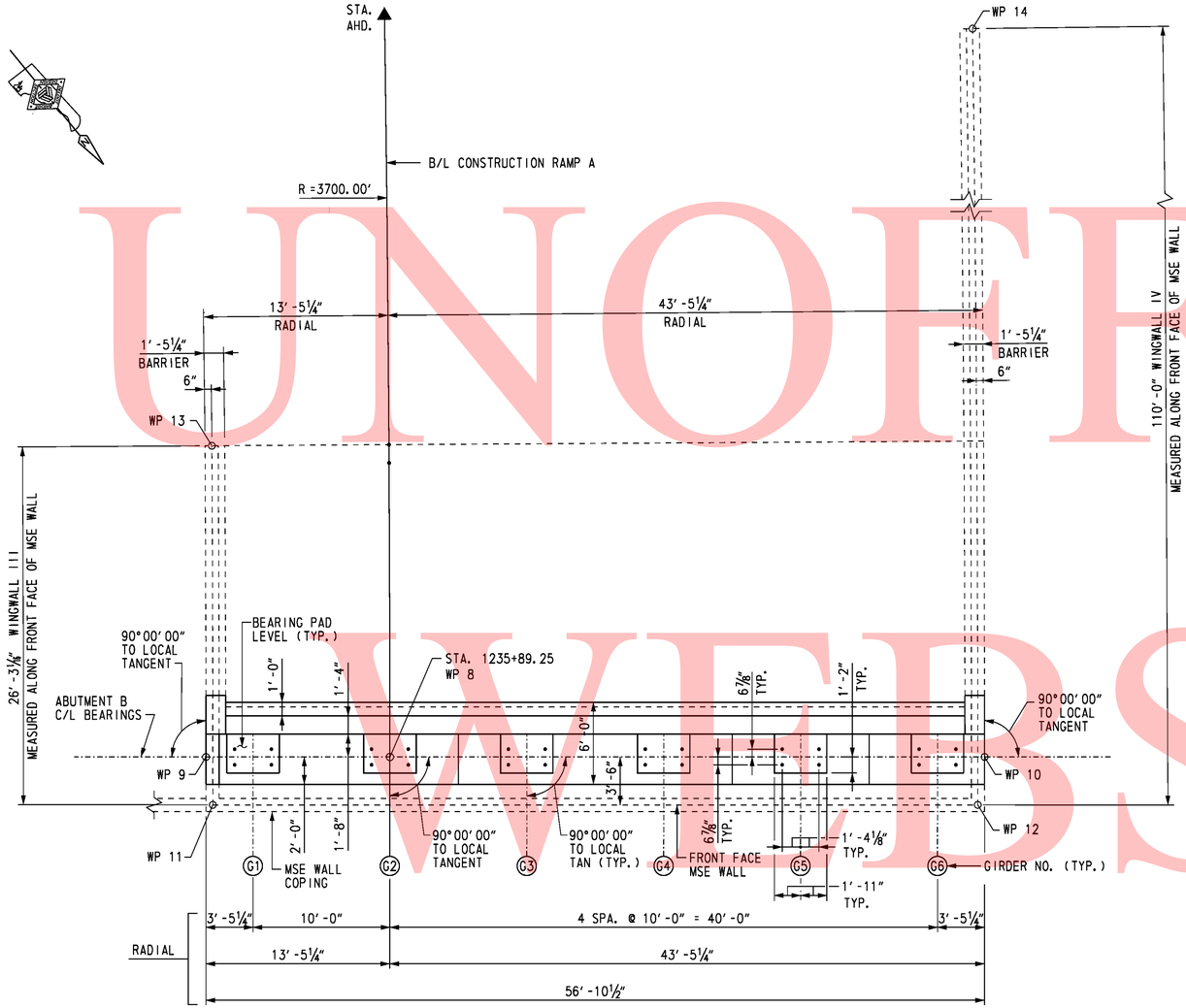

ABUTMENT B PLAN

SCALE: 1/16" = 1'-0"

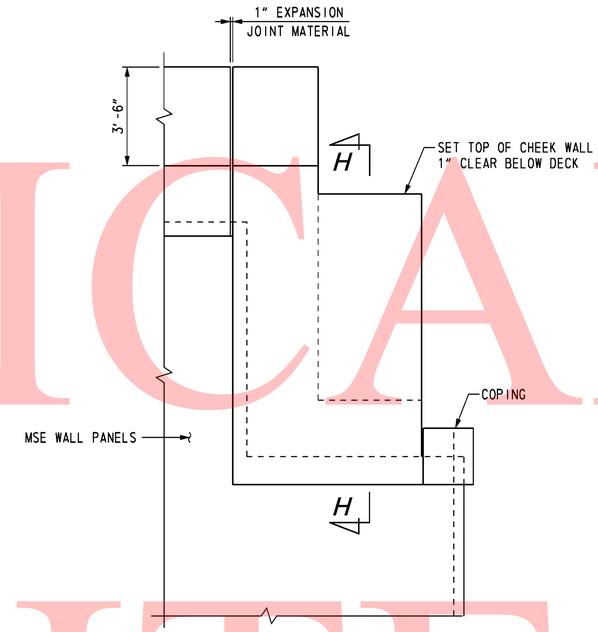

TYPICAL SIDE ELEVATION

SCALE: 3/8" = 1'-0"

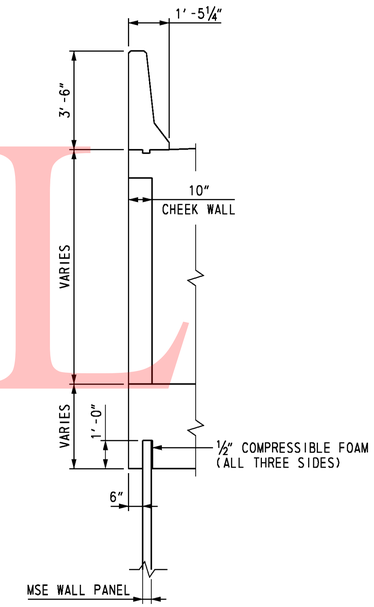

SECTION H-H

SCALE: 3/8" = 1'-0"

WORKING POINTS				
W.P. NO.	STATION	OFFSET	COORDINATES	
			NORTHING	EASTING
8	1235+89.25	0.00'	613,348.9590	432,943.0005
9	1235+89.25	13.44' LT.	613,340.4529	432,953.4030
10	1235+89.25	43.44' RT.	613,376.4555	432,909.3737
11	1235+85.74	12.94' LT.	613,343.4778	432,955.2328
12	1235+85.79	42.94' RT.	613,378.8474	432,911.9776
13	1236+12.08	12.94' LT.	613,323.1107	432,938.6672
14	1236+94.53	42.94' RT.	613,292.7450	432,843.5269

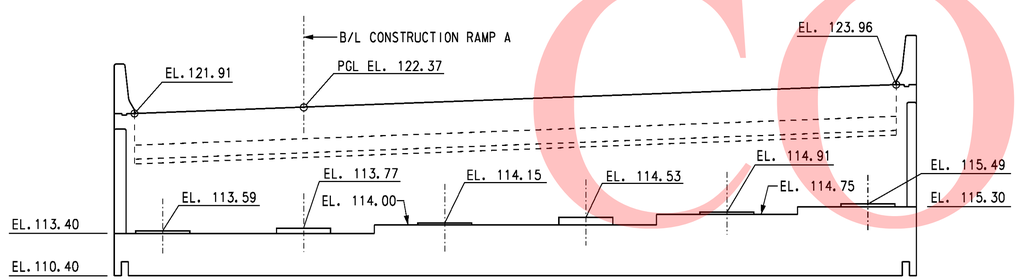

ABUTMENT B ELEVATION

SCALE: 1/16" = 1'-0"

NOTE:

1. MSE WALL AND COPING NOT SHOWN IN ELEVATION VIEW.
2. ABUTMENT SEAT STEPS MID-WAY BETWEEN GIRDERS.

CROSS REFERENCE NOTES:

1. FOR BRIDGE PLAN AND ELEVATION, SEE DWG. S1-1.
2. FOR TYPICAL ABUTMENT SECTION, SEE DWG. S1-5.
3. FOR MSE WINGWALLS PLAN AND ELEVATION, SEE DWG. S1-12.
4. FOR ABUTMENT REINFORCEMENT, SEE DWG. S1-9 & S1-10.

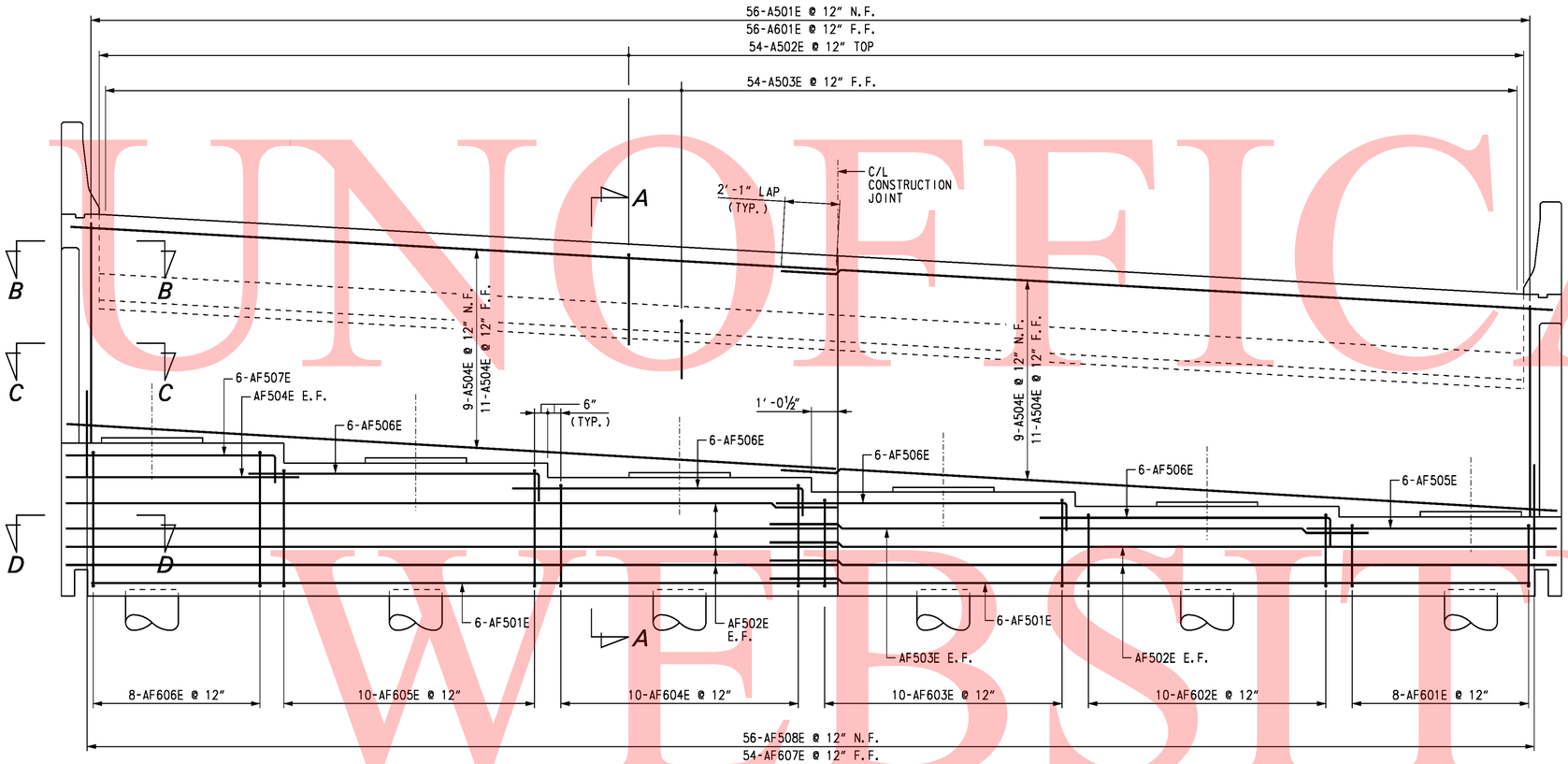

ELEVATION - ABUTMENT A

SCALE: ⅜" = 1'-0"

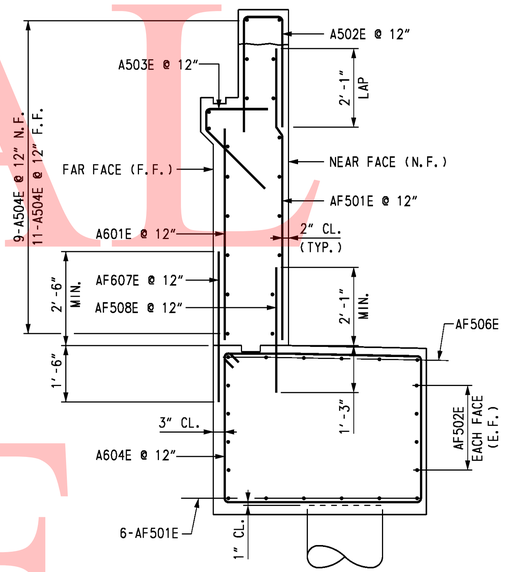

SECTION A-A

SCALE: ½" = 1'-0"

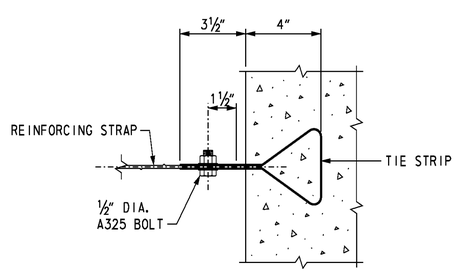

ABUTMENT STRAP ANCHOR DETAIL

NOT TO SCALE

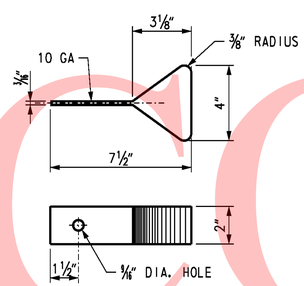

TIE STRIP DETAIL

NOT TO SCALE

NOTE:

1. TIE STRIP MATERIAL IS SAME AS USED IN MSE WALL PANELS. DESIGN SHALL BE CONSISTENT WITH MSE WALL DESIGN. COST OF REINFORCING STRAPS AND ANCHORS SHALL BE INCIDENTAL TO MSE WALL ITEM.

CROSS REFERENCE NOTES:

1. FOR BRIDGE PLAN AND ELEVATION, SEE DWG. S1-1.
2. FOR ABUTMENT A PLAN AND ELEVATION, SEE DWG. S1-5.
3. FOR WINGWALL II SIDE ELEVATION, SEE DWG. S1-8.
4. FOR SECTIONS B-B, C-C AND D-D, SEE DWG. S1-8.
5. FOR REINFORCING BAR LIST, SEE DWG. S1-15.

UNOFFICIAL WEBSITE COPY

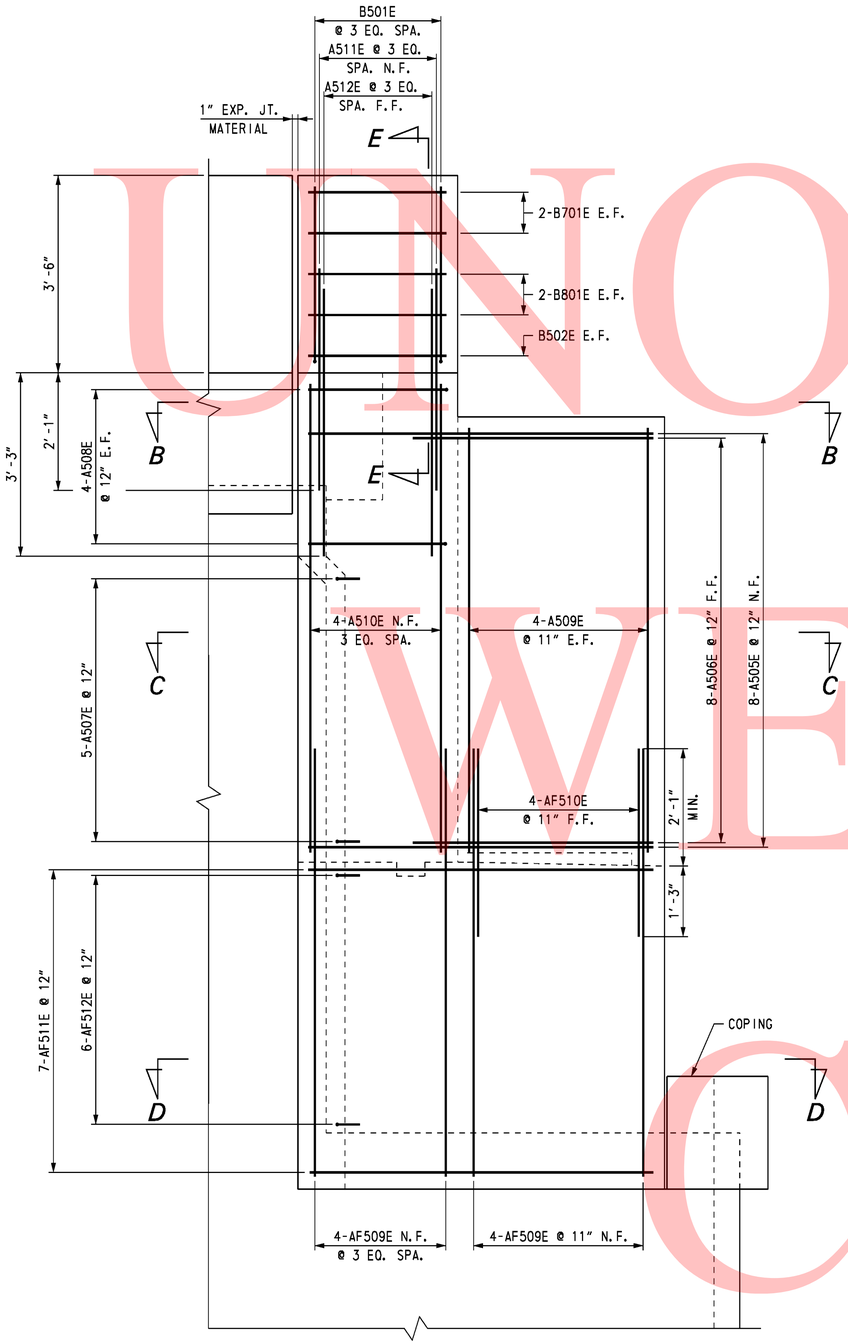

WING WALL 11 SIDE ELEVATION

SCALE: 3/4" = 1'-0"

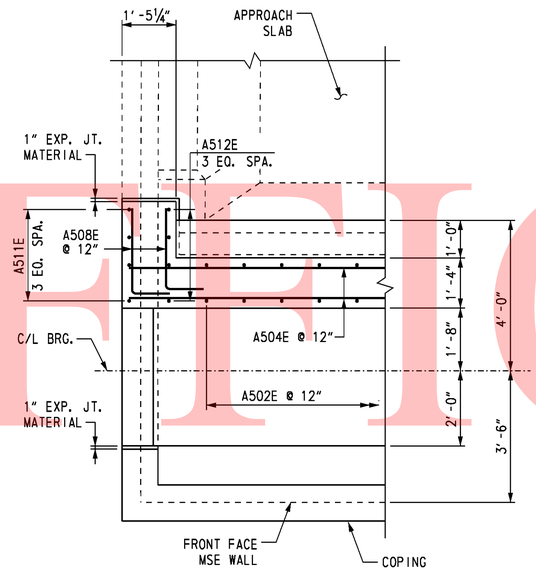

SECTION B-B

SCALE: 1/2" = 1'-0"

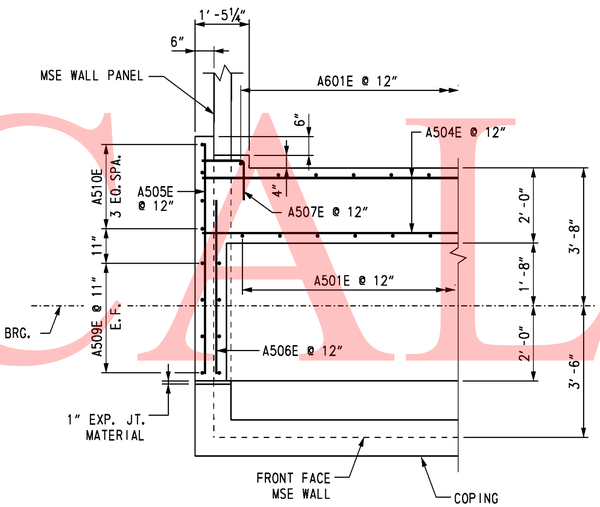

SECTION C-C

SCALE: 1/2" = 1'-0"

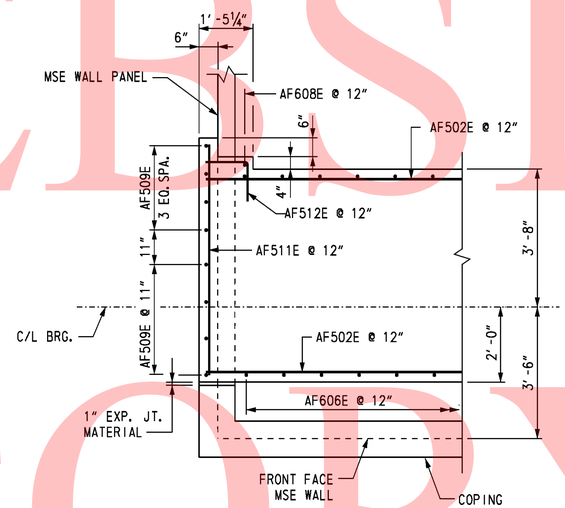

SECTION D-D

SCALE: 1/2" = 1'-0"

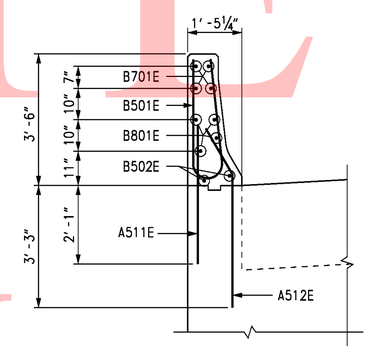

SECTION E-E

SCALE: 1/2" = 1'-0"

CROSS REFERENCE NOTES:

1. FOR ABUTMENT A PLAN AND ELEVATION, SEE DWG. S1-5.
2. FOR ABUTMENT A ELEVATION REINFORCEMENT DETAILS, SEE DWG. S1-7.
3. FOR REINFORCING BAR LIST, SEE DWG. S1-15.

UNOFFICIAL WEBSITE COPY

DELAWARE DEPARTMENT OF TRANSPORTATION	ADDENDUMS / REVISIONS	SR1 / I-95 INTERCHANGE	CONTRACT 28-090-03	BRIDGE NO. 1-716B	RAMP A OVER I-95	S1-8 SHEET NO.	
			COUNTY NEW CASTLE	DESIGNED BY: K.D. BEAVER	ABUTMENT A REINFORCEMENT 2	202 TOTAL SHTS.	
				CHECKED BY: J. S. LI		803	

10/28/2010 O:\20832687-XM\CAD\Bridge\BR-S1\ab05_BR-S1_sr1.dgn
untitled

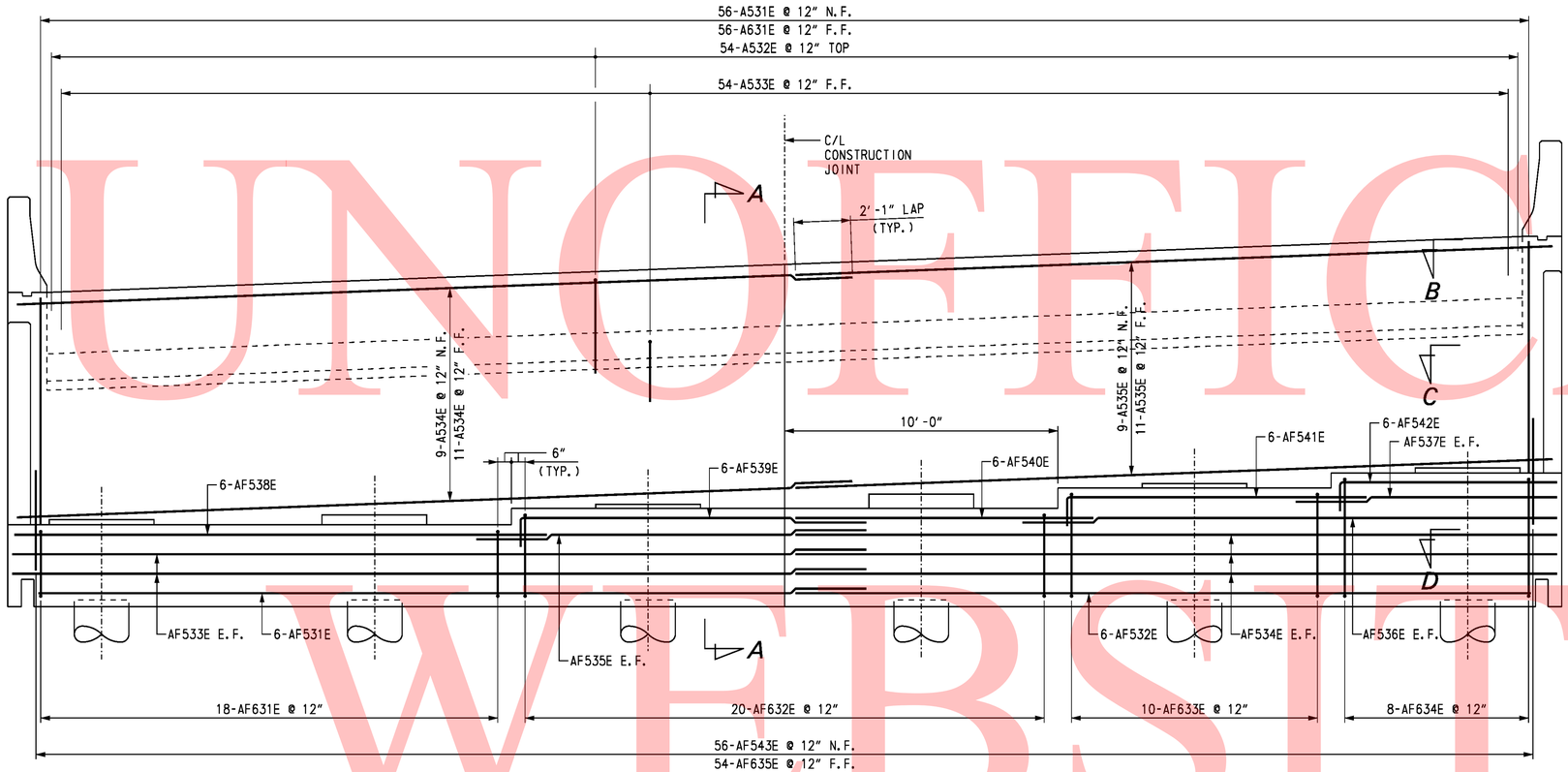

ELEVATION - ABUTMENT B

SCALE: 3/8" = 1'-0"

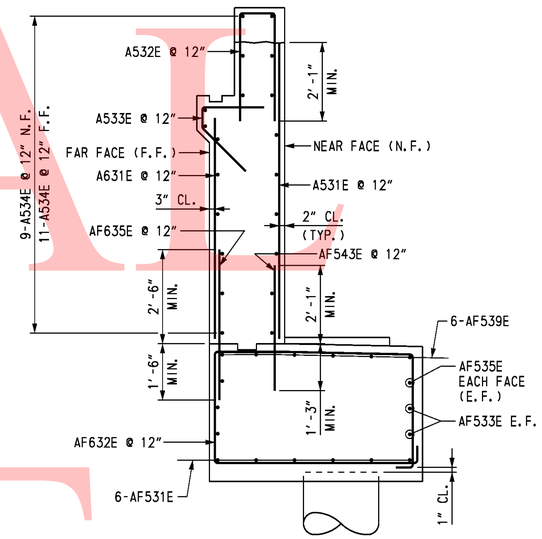

SECTION A-A

SCALE: 1/2" = 1'-0"

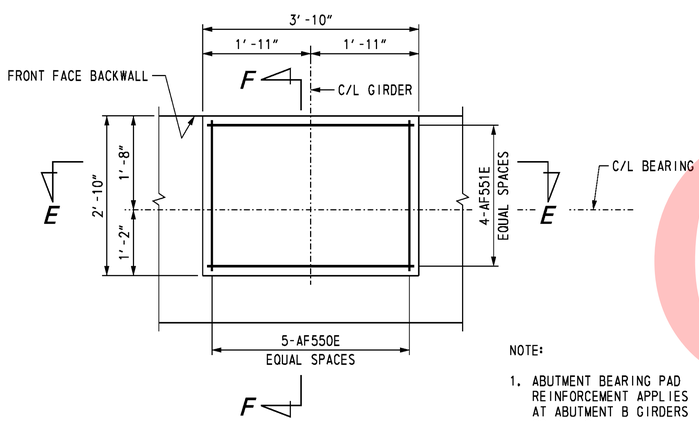

ABUTMENT BEARING PAD

SCALE: 3/4" = 1'-0"

NOTE:

1. ABUTMENT BEARING PAD REINFORCEMENT APPLIES AT ABUTMENT B GIRDERS G2 AND G4.

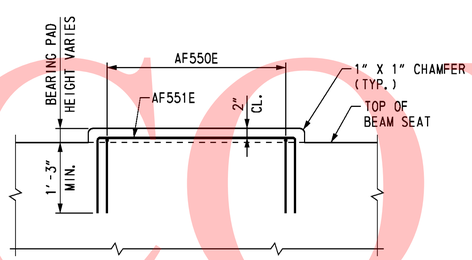

SECTION E-E

SCALE: 3/4" = 1'-0"

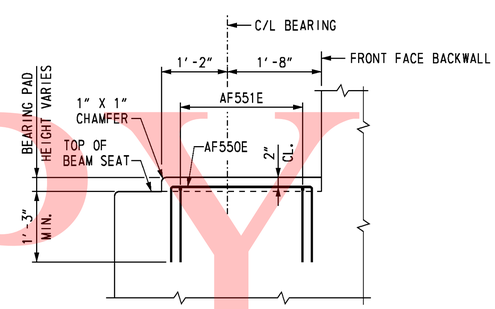

SECTION F-F

SCALE: 3/4" = 1'-0"

CROSS REFERENCE NOTES:

1. FOR BRIDGE PLAN AND ELEVATION, SEE DWG. S1-1.
2. FOR ABUTMENT B PLAN AND ELEVATION, SEE DWG. S1-6.
3. FOR WINGWALL IV SIDE ELEVATION, SEE DWG. S1-10.
4. FOR SECTIONS B-B, C-C AND D-D, SEE DWG. S1-10.
5. FOR REINFORCING BAR LIST, SEE DWG. S1-15.

UNOFFICIAL WEBSITE COPY

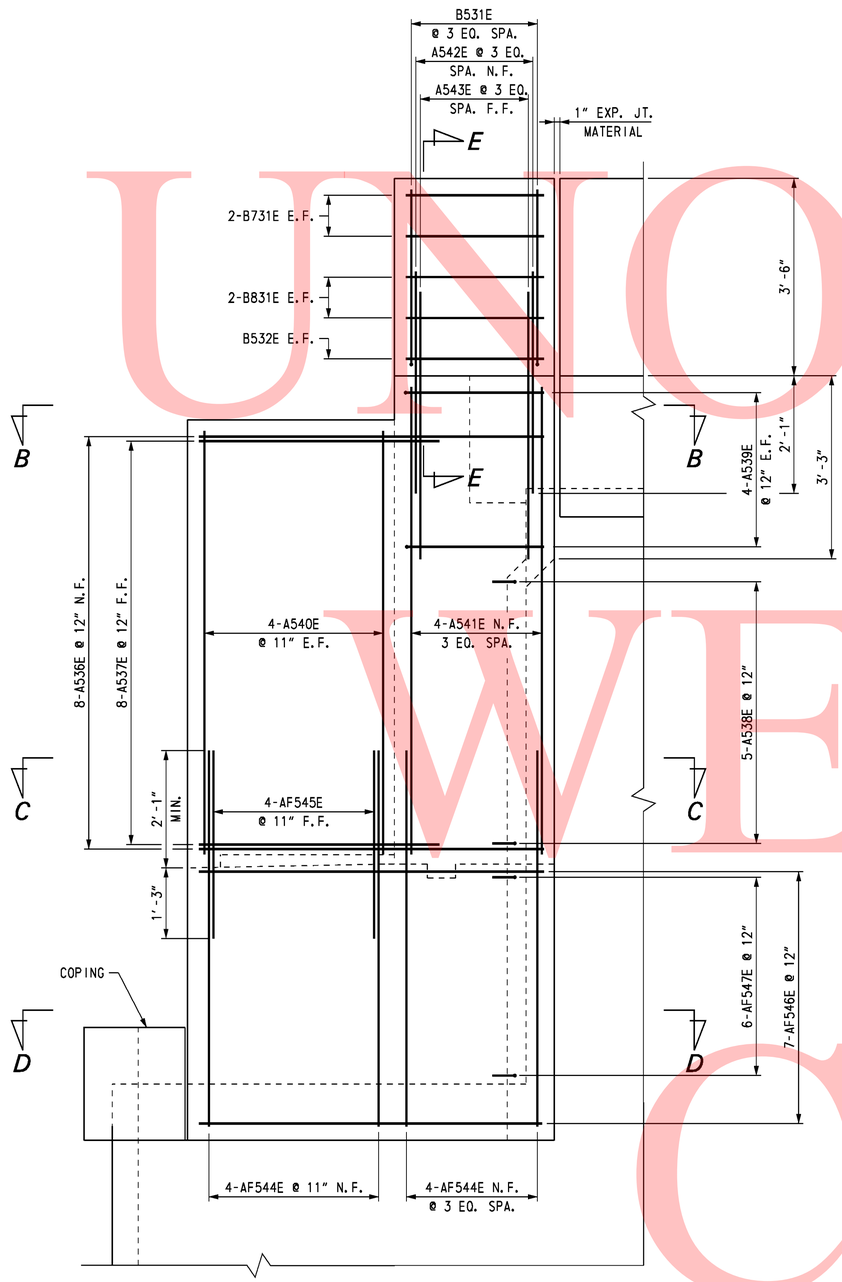

WINGWALL IV SIDE ELEVATION

SCALE: ¾" = 1'-0"

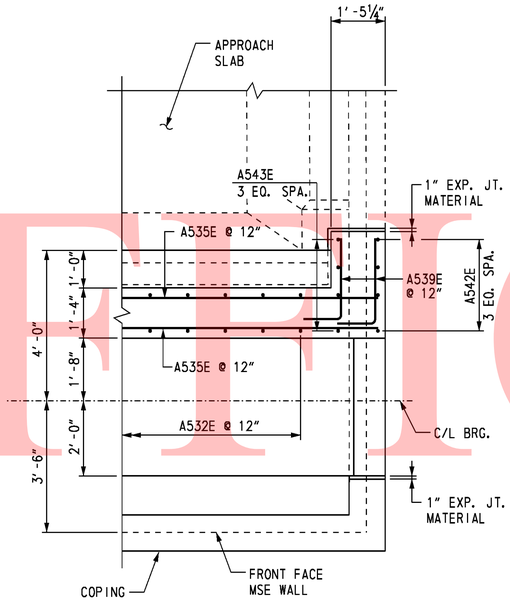

SECTION B-B

SCALE: ½" = 1'-0"

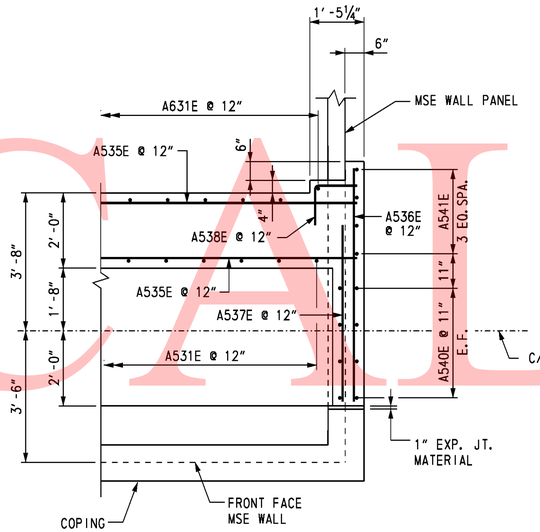

SECTION C-C

SCALE: ½" = 1'-0"

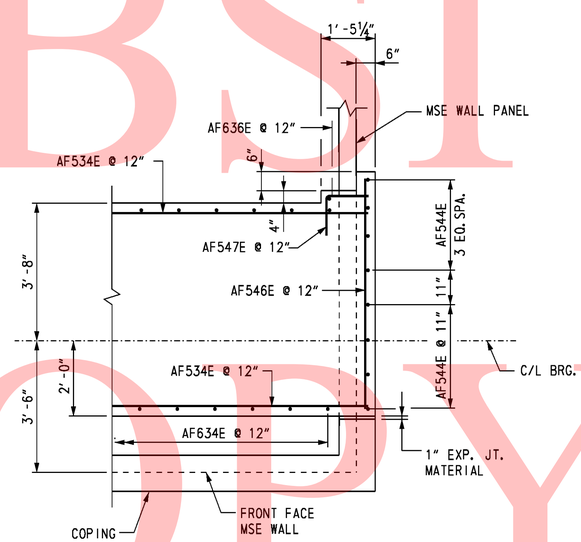

SECTION D-D

SCALE: ½" = 1'-0"

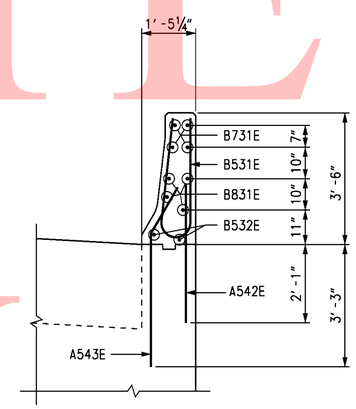

SECTION E-E

SCALE: ½" = 1'-0"

CROSS REFERENCE NOTES:

1. FOR ABUTMENT B PLAN AND ELEVATION, SEE DWG. S1-6.
2. FOR ABUTMENT B ELEVATION REINFORCEMENT DETAILS, SEE DWG. S1-9.
3. FOR REINFORCING BAR LIST, SEE DWG. S1-15.

UNOFFICIAL WEBSITE COPY

10/28/2010 O:\20832687-XM\CAD\Bridge\BR-S1\ab07_BR-S1_sr1.dgn
untitled

DELAWARE DEPARTMENT OF TRANSPORTATION	ADDENDUMS / REVISIONS	SR1 / I-95 INTERCHANGE	CONTRACT 28-090-03	BRIDGE NO. 1-716B	RAMP A OVER I-95	S1-10 SHEET NO.
			COUNTY NEW CASTLE	DESIGNED BY: K.D. BEAVER	ABUTMENT B REINFORCEMENT 2	204 TOTAL SHTS.
				CHECKED BY: J. S. LI		803

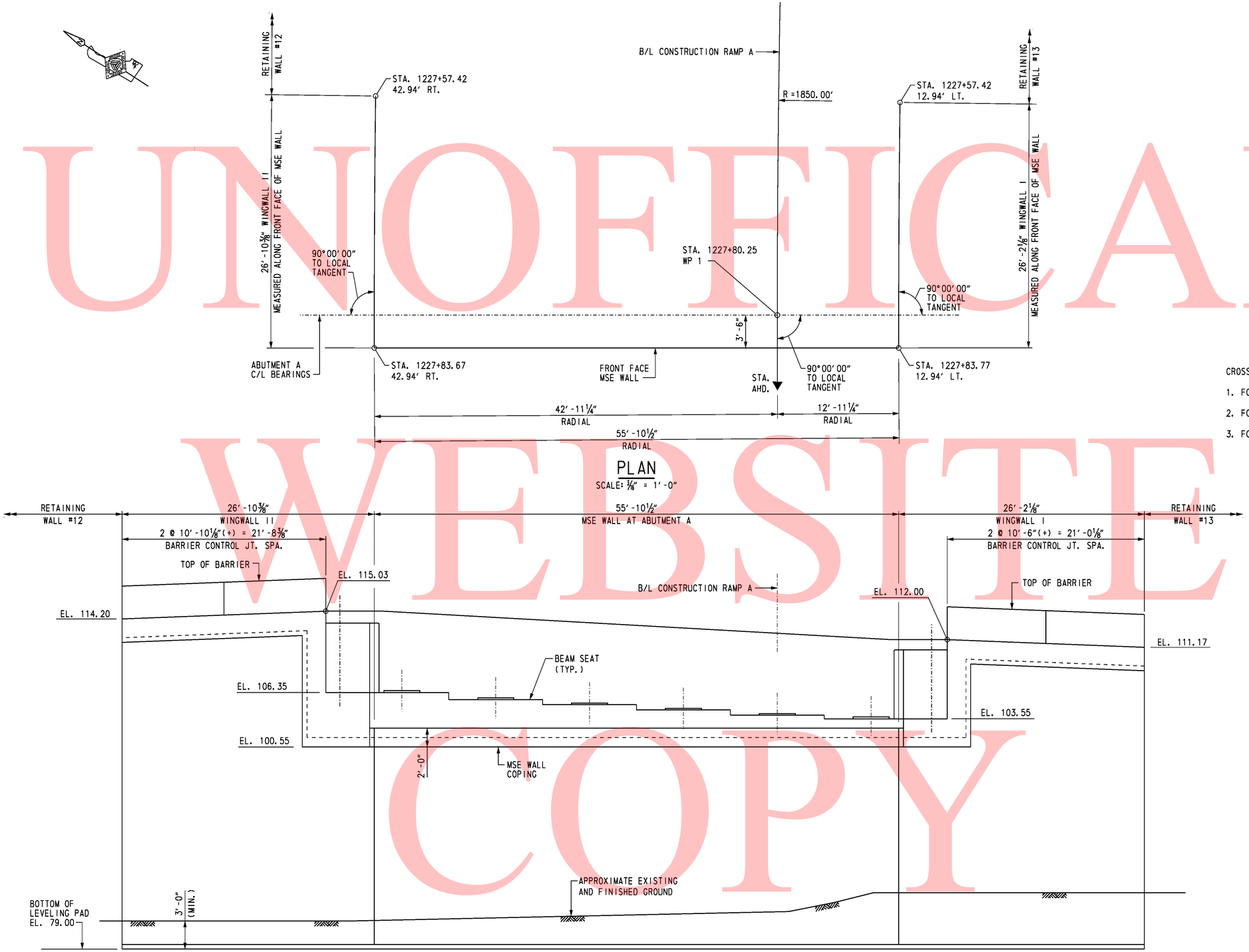

DEVELOPED ELEVATION
SCALE: 3/16" = 1'-0"

CROSS REFERENCE NOTES:

1. FOR BRIDGE PLAN AND ELEVATION, SEE DWG. S1-1.
2. FOR ABUTMENT A PLAN AND ELEVATION, SEE DWG. S1-5.
3. FOR MSE WINGWALL DETAILS, SEE DWG. S1-13 & S1-14.

UNOFFICAL WEBSITE COPY

10/28/2010 O:\20832687-XM\CAD\Bridge\BR-S1\rd01_BR-S1_sr1.dgn
untitled

DELAWARE DEPARTMENT OF TRANSPORTATION	ADDENDUMS / REVISIONS	SR1 / I-95 INTERCHANGE	CONTRACT 28-090-03	BRIDGE NO. 1-716B	RAMP A OVER I-95	S1-11 SHEET NO. 205
			COUNTY NEW CASTLE	DESIGNED BY: R. F. KIRCHNER	WINGWALLS I AND II PLAN AND ELEVATION	TOTAL SHTS. 803
				CHECKED BY: G.P. MISTRY		

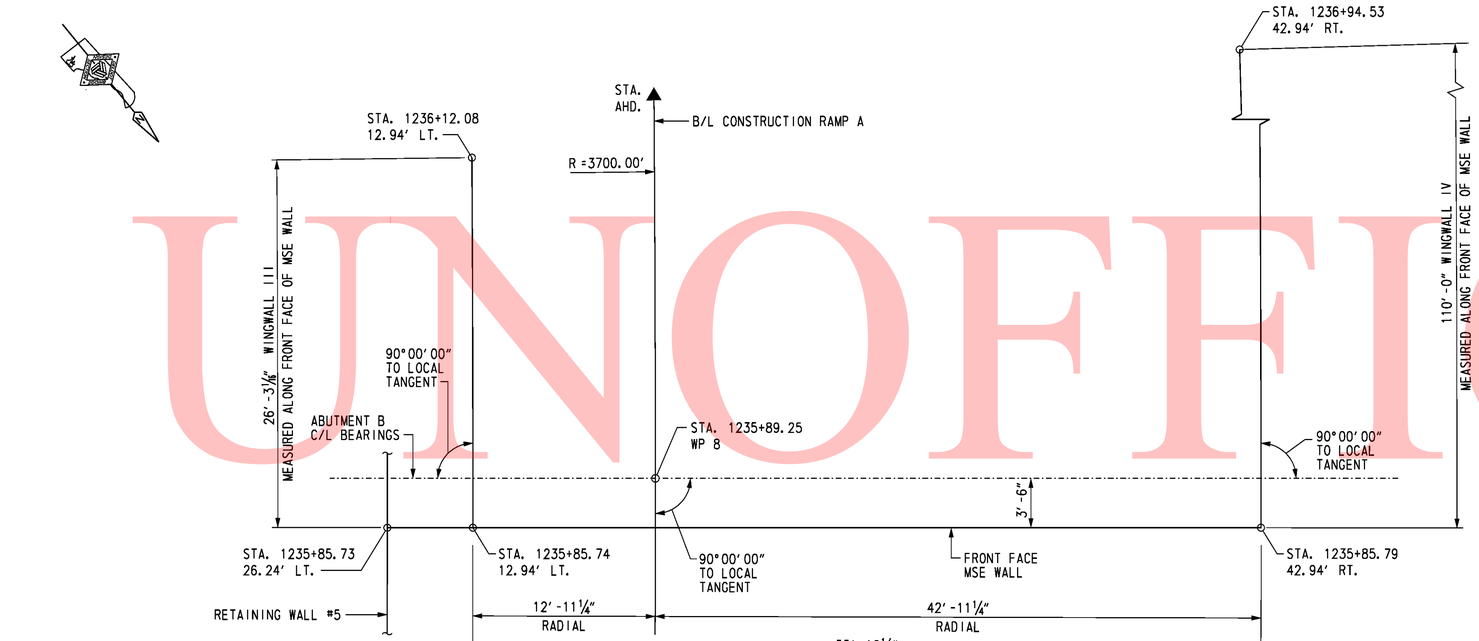

PLAN

SCALE: 3/16" = 1'-0"

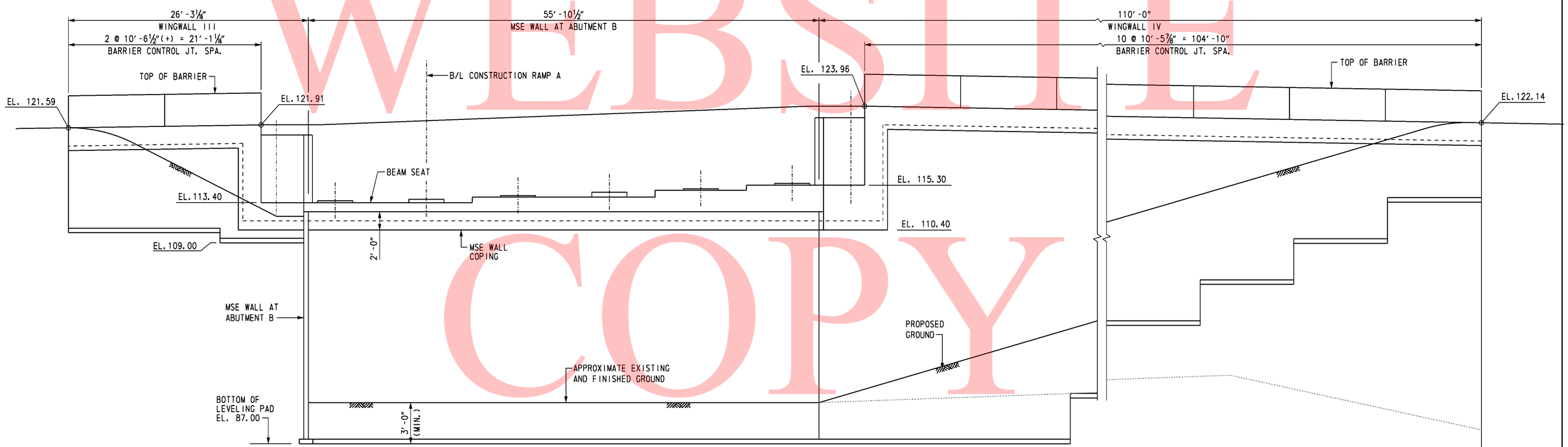

DEVELOPED ELEVATION

SCALE: 3/16" = 1'-0"

CROSS REFERENCE NOTES:

1. FOR BRIDGE PLAN AND ELEVATION, SEE DWG. S1-1.
2. FOR ABUTMENT B PLAN AND ELEVATION, SEE DWG. S1-6.
3. FOR MSE WINGWALL DETAILS, SEE DWG. S1-13 & S1-14.

UNOFFICAL WEBSITE COPY

DELAWARE DEPARTMENT OF TRANSPORTATION	ADDENDUMS / REVISIONS	SR1 / I-95 INTERCHANGE	CONTRACT 28-090-03	BRIDGE NO. 1-716B	RAMP A OVER I-95	S1-12
			COUNTY NEW CASTLE	DESIGNED BY: R. F. KIRCHNER	WINGWALLS III AND IV PLAN AND ELEVATION	SHEET NO. 206
				CHECKED BY: G.P. MISTRY		TOTAL SHTS. 803

10/28/2010 O:\20832687-XM\CAD\Bridge\BR-S1\rd02_BR-S1_sr1.dgn untitled

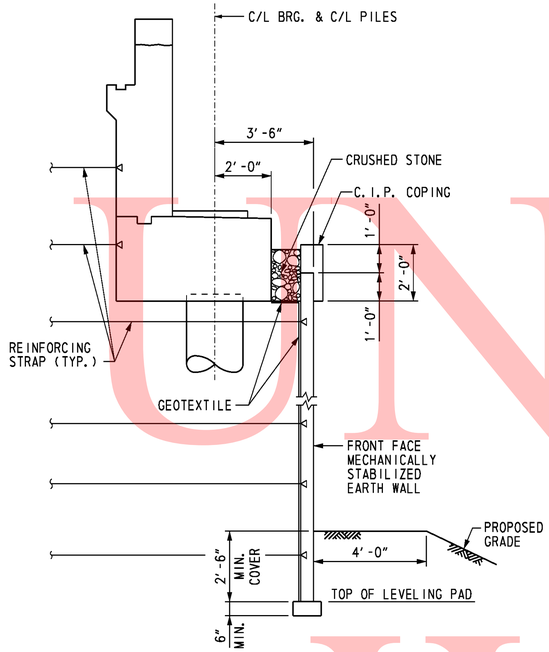

TYPICAL MSE WALL SECTION AT ABUTMENT

SCALE: 3/8" = 1'-0"

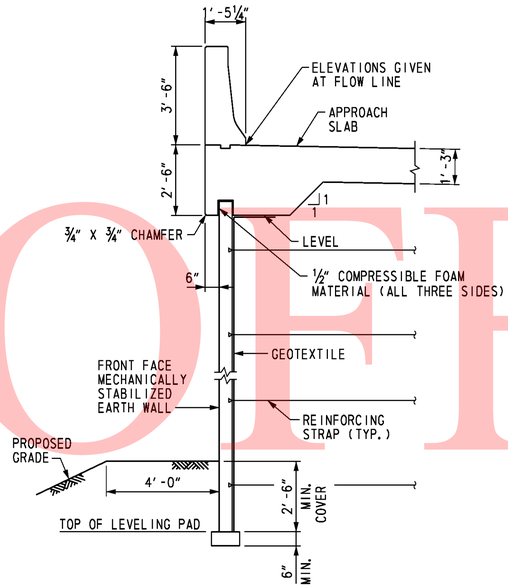

TYPICAL WINGWALL SECTION WITH APPROACH SLAB

SCALE: 3/8" = 1'-0"

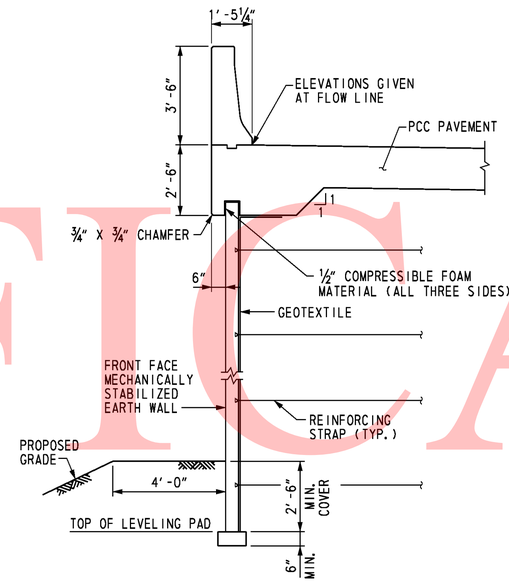

TYPICAL WINGWALL SECTION WITH PCC PAVEMENT

SCALE: 3/8" = 1'-0"

MSE WALL NOTES

SPECIFICATIONS: PROPRIETARY MSE WALLS SHALL BE DESIGNED IN ACCORDANCE WITH THE FOLLOWING:
- AASHTO LRFD BRIDGE DESIGN SPECIFICATIONS, 4TH EDITION WITH ALL CURRENT REVISIONS.
- FEDERAL HIGHWAY ADMINISTRATION PUBLICATION NOS. FHWA-NHI-10-024 AND FHWA-NHI-025, "DESIGN AND CONSTRUCTION OF MECHANICALLY STABILIZED EARTH WALLS AND REINFORCED SOIL SLOPES", VOLUME I AND VOLUME II.

CONCRETE DESIGN SHALL BE PERFORMED USING THE LOAD AND RESISTANCE FACTOR DESIGN METHOD.

CONCRETE: ALL CONCRETE FOR ROADWAY BARRIERS SHALL BE 4,500 PSI. LEVELING PAD CONCRETE SHALL BE 3,500 PSI. MIX REQUIREMENTS SHALL CONFORM TO SECTION 812 OF THE DELAWARE DEPARTMENT OF TRANSPORTATION STANDARD SPECIFICATIONS.

CHAMFERS: ALL EXPOSED CORNERS OF CONCRETE SHALL BE CHAMFERED WITH 3/4" x 3/4" MILLED CHAMFER STRIPS, UNLESS OTHERWISE NOTED, EXCEPT ON UNEXPOSED FOOTINGS OR WHERE INDICATED BY THE FOLLOWING NOTATION ON THE PLANS: "DO NOT CHAMFER".

REINFORCING STEEL: REINFORCING STEEL SHALL CONFORM TO ASTM A 615, GRADE 60. ALL SPLICES, NOT SHOWN, SHALL BE LAPPED AS PER THE LRFD BRIDGE DESIGN SPECIFICATIONS. MINIMUM COVER FOR ANY BAR SHALL BE 2" UNLESS OTHERWISE NOTED.

FOR TIES AND STIRRUPS, STANDARD ACI BENDING TOLERANCES ARE MODIFIED TO PLUS (+) ZERO INCHES, MINUS (-) NORMAL ACI BENDING TOLERANCE.

ONLY GRADE 60 CAN BE USED ON THIS PROJECT.

ALL REINFORCING STEEL IN THE BARRIER SHALL BE FUSION-BONDED EPOXY COATED, AND SHALL CONFORM TO ASTM D3963.

ALL KEYS ARE NOMINAL SIZE.

THE MSE WALL MANUFACTURER MAY SUBSTITUTE ALTERNATE REINFORCING CONFIGURATIONS AND SUBMIT FOR APPROVAL.

EXPANSION AND CONTRACTION JOINTS: THE LOCATION OF THE EXPANSION AND CONTRACTION JOINTS IN THE BARRIER SHOWN ON THE PLANS MAY BE ADJUSTED TO ACCOMMODATE THE PANEL TYPE USED IN THE PROJECT. ANY CHANGE TO THESE JOINT LOCATIONS SHALL BE SUBMITTED TO THE ENGINEER FOR APPROVAL.

LEVELING PAD: THE PROPRIETARY WALL MANUFACTURER MAY RELOCATE THE LEVELING PAD STEPS AT THEIR DISCRETION PROVIDED THAT THE MINIMUM EMBEDMENT IS MAINTAINED. ANY CHANGE TO THE STEP LOCATIONS SHALL BE SUBMITTED TO THE ENGINEER FOR APPROVAL.

ROADWAY LIMITS: THE PROPRIETARY WALL MANUFACTURER SHALL ASSURE THAT PROPOSED PROPRIETARY WALL COMPONENTS ARE POSITIONED SUCH THAT THE DESIGNATED ROADWAY LIMITS ARE NOT ENCROACHED UPON.

TRAFFIC BARRIER JOINTS: TRAFFIC BARRIER FOOTING SHALL HAVE CONSTRUCTION JOINTS TO COINCIDE WITH THE BARRIER JOINTS.

COORDINATION: CONTRACTOR AND PROPRIETARY WALL MANUFACTURER SHALL COORDINATE LOCATIONS OF INLETS AND PIPES WITH LOCATIONS OF PROPRIETARY WALL TIE BACK SYSTEM AND MOMENT SLAB.

ARCHITECTURAL FINISH: THE MSE WALL PANELS SHALL RECEIVE AN ARCHITECTURAL FINISH.

SERVICE LIFE: ALL RETAINING WALL COMPONENTS SHALL BE DESIGNED FOR A MINIMUM SERVICE LIFE OF 100 YEARS.

WALL SYSTEM: ONLY ONE MSE WALL SYSTEM MAY BE USED ON THIS PROJECT.

ROADWAY SUPERELEVATION: FOR ROADWAY SUPERELEVATION, SEE SUPERELEVATION TABLES.

MSE WALL BACKFILL: MSE WALL BACKFILL SHALL CONSIST OF SPECIFIED BACKFILL AS SHOWN ON SOIL PROFILE SECTION.

REINFORCING STRAPS: SET REINFORCING STRAPS TO CLEAR PILE CASING, 2" MIN. CLEARANCE. MAXIMUM IN-FIELD SKEW OF 15 DEGREES. IF GREATER SKEW ANGLE IS REQUIRED, CONTACT MSE WALL FIELD REPRESENTATIVE PRIOR TO INSTALLATION.

CROSS REFERENCE NOTES:

1. FOR BRIDGE PLAN AND ELEVATION, SEE DWG. S1-1.
2. FOR WINGWALLS PLAN AND ELEVATION, SEE DWGS. S1-11 & S1-12.
3. FOR SOIL PROFILE INFORMATION AND FOUNDATION NOTES, SEE DWG. S1-14.

UNOFFICAL WEBSITE COPY

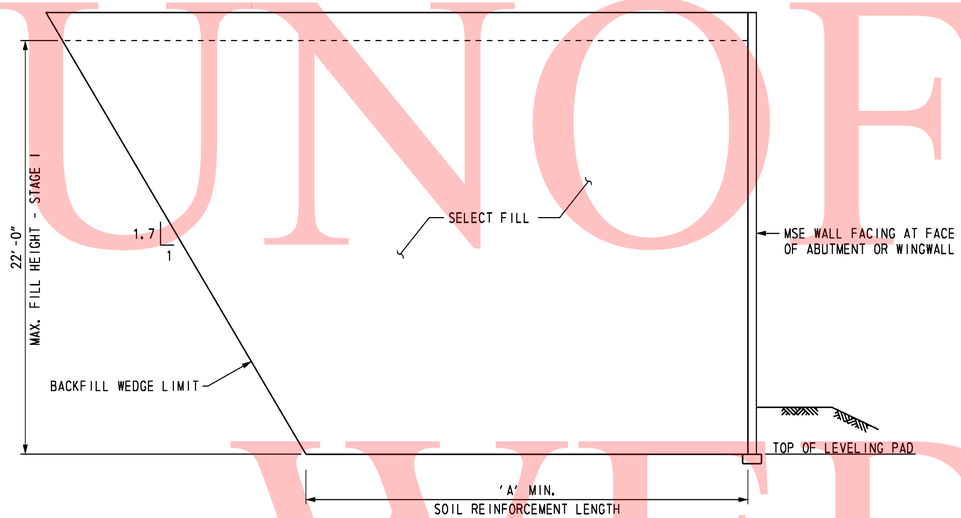

SOIL PROFILE SECTION
ABUTMENT A AND WINGWALLS I AND II

NOT TO SCALE

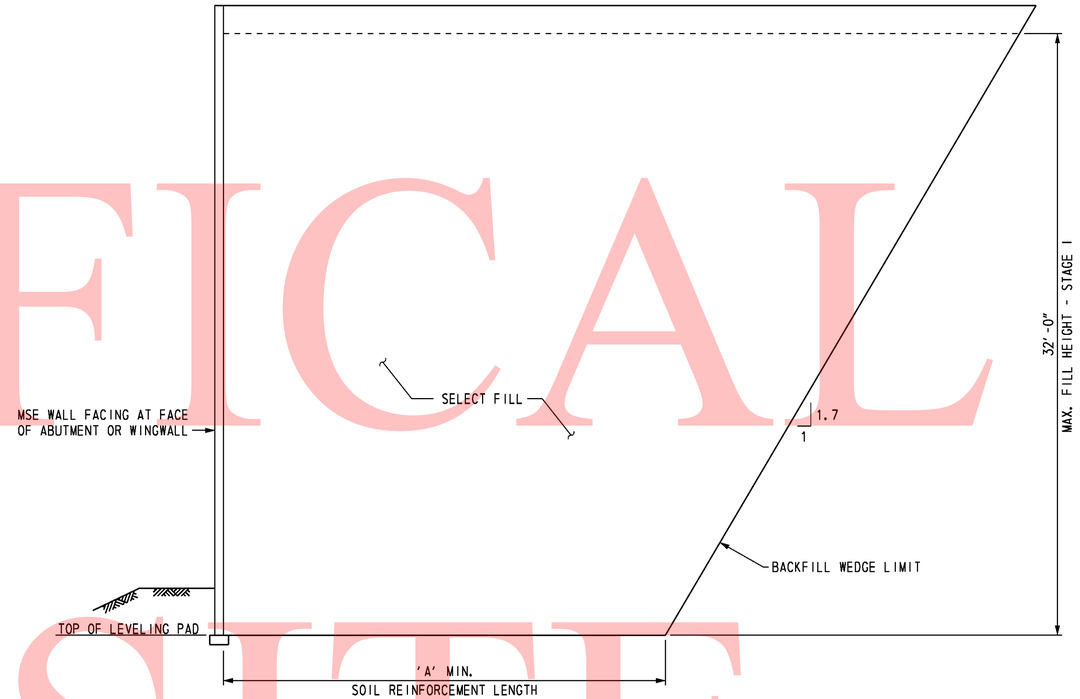

SOIL PROFILE SECTION
ABUTMENT B AND WINGWALLS III AND IV

NOT TO SCALE

MINIMUM REINFORCED ZONE WIDTH (A) FEET	
ABUTMENT A	
FACE OF ABUTMENT	33.0
WINGWALLS I AND III	23.5
ABUTMENT B	
FACE OF ABUTMENT	38.0
WINGWALLS III AND IV	38.0

SOIL PROPERTIES				
SOIL TYPE	UNIT WEIGHT (PCF)	DRAINED ANGLE OF FRICTION (DEGREES)	UNDRAINED SHEAR (PSF)	FACTORED BEARING RESISTANCE (KSF)
SELECT FILL	125	34	-	-
FOUNDATION SOIL:				
ABUTMENT A	70	27	1000	4.0
ABUTMENT B	70	28	1000	6.0

FOUNDATION NOTES

THE FACTORED BEARING RESISTANCE SHALL BE VERIFIED PRIOR TO CONSTRUCTION OF THE MSE WALL.

THE INTERNAL STABILITY OF THE MSE WALL SHALL BE DESIGNED BY THE CONTRACTOR USING THE SOIL PARAMETERS PROVIDED FOR EACH STRUCTURE LOCATION. THE INTERNAL STABILITY CALCULATIONS SHALL BE SIGNED AND SEALED BY A PROFESSIONAL ENGINEER LICENSED IN THE STATE OF DELAWARE AS INDICATED IN THE PROJECT SPECIFICATIONS.

ISOLATED AREAS OF EXISTING FILL MAY BE ENCOUNTERED DURING CONSTRUCTION OF THIS MSE WALL. EXISTING FILL SHALL BE UNDERCUT TO EXPOSE UNDISTURBED NATURAL SOIL. UNDERCUTTING AND BACKFILLING WILL BE MEASURED AND PAID IN ACCORDANCE WITH THE SPECIFICATIONS.

A MINIMUM 7-DAY QUARANTINE PERIOD SHALL BE REQUIRED AFTER CONSTRUCTION OF THE WALL TO THE "MAX. FILL HEIGHT - STAGE 1" INDICATED ON THE SOIL PROFILE SECTION. NO FURTHER FILL SHALL BE PLACED UNTIL AUTHORIZED BY THE ENGINEER. ONCE AUTHORIZATION IS GIVEN, FILL SHALL BE PLACED IN ADDITIONAL INCREMENTS OF 5 FEET IN HEIGHT, WITH THE SAME QUARANTINE PERIOD AND AUTHORIZATION REQUIRED AT EACH INCREMENT. AN ADDITIONAL QUARANTINE PERIOD OF 30 TO 60 DAYS IS REQUIRED AFTER CONSTRUCTION OF THE MSE WALL TO ITS FULL HEIGHT. NO FURTHER CONSTRUCTION SHALL BE PERMITTED UNTIL AUTHORIZED BY THE ENGINEER. A TOTAL ESTIMATED SETTLEMENT OF APPROXIMATELY FOUR (4) TO FIVE (5) INCHES IS ANTICIPATED.

UNOFFICAL WEBSITE COPY

REINFORCING BAR LIST

ABUTMENT A

MARK	LENGTH	NO. BARS	TYPE	A	B	C	D	E	G	H	J	K	O	R	REMARKS
AP401E	6′-7″	114	T3									1′-8″	1′-7″		
AP801E	18′-11″	48	37	0′-11″	18′-0″						0′-8″				
AF501E	28′-4″	12	STR.												
AF502E	29′-4″	12	STR.												
AF503E	21′-1″	2	STR.												
AF504E	8′-3″	2	STR.												
AF505E	10′-4″	6	STR.												
AF506E	12′-9″	24	36	0′-10″	11′-11″										
AF507E	8′-11″	6	36	0′-10″	8′-1″										
AF508E	3′-8″	56	STR.												
AF509E	8′-2″	16	STR.												
AF510E	4′-6″	8	STR.												
AF511E	6′-2″	14	STR.												
AF512E	2′-2″	12	17		1′-1″	1′-1″									
AF601E	17′-8″	8	T2	1′-0″	5′-4″	2′-6″	5′-4″	2′-6″	1′-0″						
AF602E	18′-6″	10	T2	1′-0″	5′-4″	2′-11″	5′-4″	2′-11″	1′-0″						
AF603E	19′-6″	10	T2	1′-0″	5′-4″	3′-5″	5′-4″	3′-5″	1′-0″						
AF604E	20′-8″	10	T2	1′-0″	5′-4″	4′-0″	5′-4″	4′-0″	1′-0″						
AF605E	21′-9″	10	T2	1′-0″	5′-4″	4′-7″	5′-4″	4′-7″	1′-0″						
AF606E	23′-4″	8	T2	1′-0″	5′-4″	5′-4″	5′-4″	5′-4″	1′-0″						
AF607E	4′-3″	54	STR.												
AF608E	7′-7″	2	STR.												
A501E	8′-4″	56	STR.												
A502E	7′-1	54	17		3′-0″	1′-0″	3′-1″								
A503E	3′-9″	54	16		1′-6″	0′-10″	1′-5″			1′-0″		1′-0″			
A504E	29′-4″	40	STR.												
A505E	6′-2″	16	STR.												
A506E	4′-9″	16	STR.												
A507E	2′-2″	10	17		1′-1″	1′-1″									
A508E	3′-3″	16	36	1′-0″	2′-3″										
A509E	7′-1″	16	STR.												
A510E	9′-8″	8	STR.												
A511E	3′-10″	8	STR.												
A512E	4′-8″	8	16			3′-5″	1′-3″			1′-0¼″		0′-8¾″			
A601E	5′-11″	56	STR.												
B501E	6′-9″	8	H1		2′-9½″	1′-2″	2′-9½″			0′-5″				0′-4½″	
B502E	2′-0″	4	STR.												
B701E	2′-0″	8	STR.												
B801E	2′-0″	8	STR.												

ABUTMENT B

MARK	LENGTH	NO. BARS	TYPE	A	B	C	D	E	G	H	J	K	O	R	REMARKS
AP431E	6′-7″	114	T3									1′-8″	1′-7″		
AP831E	18′-11″	48	37	0′-11″	18′-0″						0′-8″				
AF531E	29′-6″	6	STR.												
AF532E	27′-1″	6	STR.												
AF533E	30′-7″	4	STR.												
AF534E	28′-1″	6	STR.												
AF535E	11′-11″	2	STR.												
AF536E	18′-3″	2	STR.												
AF537E	8′-1″	2	STR.												
AF538E	20′-4″	6	STR.												
AF539E	12′-9″	6	36	0′-10″	11′-11″										
AF540E	12′-1″	6	STR.												
AF541E	12′-9″	6	36	0′-10″	11′-11″										
AF542E	8′-11″	6	36	0′-10″	8′-1″										
AF543E	3′-6″	56	STR.												
AF544E	7′-0″	16	STR.												
AF545E	4′-4″	8	STR.												
AF546E	6′-2″	14	STR.												
AF547E	2′-2″	12	17		1′-1″	1′-1″									
AF550E	5′-9″	25	17		1′-7½″	2′-6″	1′-7½″								
AF551E	6′-9″	20	17		1′-7½″	3′-6″	1′-7½″								
AF631E	17′-8″	18	T2	1′-0″	5′-4″	2′-6″	5′-4″	2′-6″	1′-0″						
AF632E	18′-10″	20	T2	1′-0″	5′-4″	3′-1″	5′-4″	3′-1″	1′-0″						
AF633E	20′-4″	10	T2	1′-0″	5′-4″	3′-10″	5′-4″	3′-10″	1′-0″						
AF634E	21′-6″	8	T2	1′-0″	5′-4″	4′-5″	5′-4″	4′-5″	1′-0″						
AF635E	4′-2″	54	STR.												
AF636E	6′-8″	2	STR.												
A531E	8′-4″	56	STR.												
A532E	7′-1	54	17		3′-0″	1′-0″	3′-1″								
A533E	3′-9″	54	16		1′-6″	0′-10″	1′-5″			1′-0″		1′-0″			
A534E	30′-7″	20	STR.												
A535E	28′-2″	20	STR.												
A536E	6′-2″	16	STR.												
A537E	4′-9″	16	STR.												
A538E	2′-2″	10	17		1′-1″	1′-1″									
A539E	3′-3″	16	36	1′-0″	2′-3″										
A540E	7′-2″	16	STR.												
A541E	9′-7″	8	STR.												
A542E	3′-10″	8	STR.												
A543E	4′-8″	8	16			3′-5″	1′-3″			1′-0¼″		0′-8¾″			
A631E	5′-10″	56	STR.												
B531E	6′-9″	8	H1		2′-9½″	1′-2″	2′-9½″			0′-5″				0′-4½″	
B532E	2′-0″	4	STR.												
B731E	2′-0″	8	STR.												
B831E	2′-0″	8	STR.												

BENDING DIAGRAMS

ALL DIMENSIONS ARE FROM OUT TO OUT.

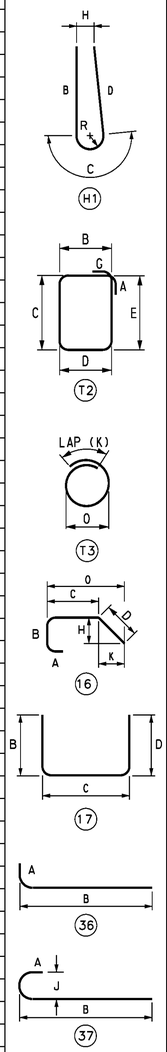

UNOFFICIAL WEBSITE COPY

10/28/2010 O:\20832687-XM\CAD\Bridge\BR-S1\ab08_BR-S1_sr1.dgn untitled

DELAWARE DEPARTMENT OF TRANSPORTATION

ADDENDUMS / REVISIONS

SR1 / I-95 INTERCHANGE

CONTRACT	BRIDGE NO.	1-716B
28-090-03	DESIGNED BY: K.D. BEAVER	
COUNTY		
NEW CASTLE	CHECKED BY: J.S. LI	

RAMP A OVER I-95

ABUTMENTS A AND B REINFORCING BAR LIST

S1-15

SHEET NO. 209

TOTAL SHTS. 803

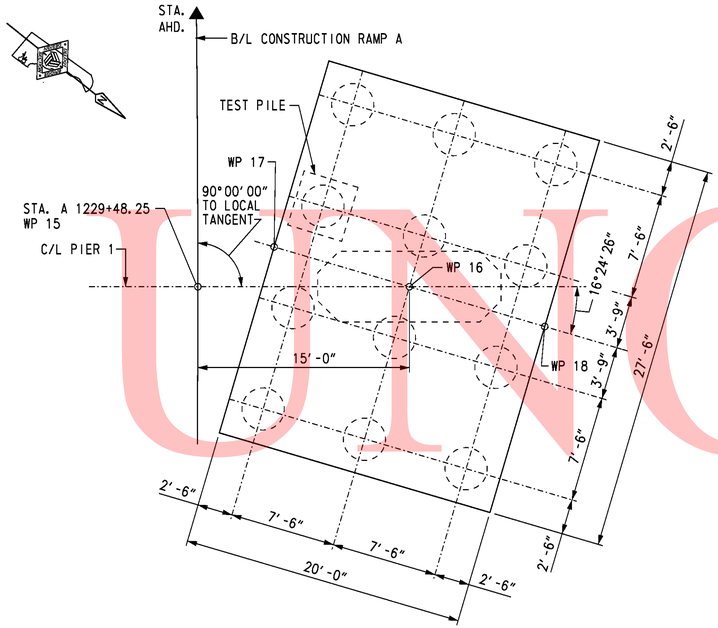

PIER 1 PILE PLAN

SCALE: 3/16″ = 1′-0″

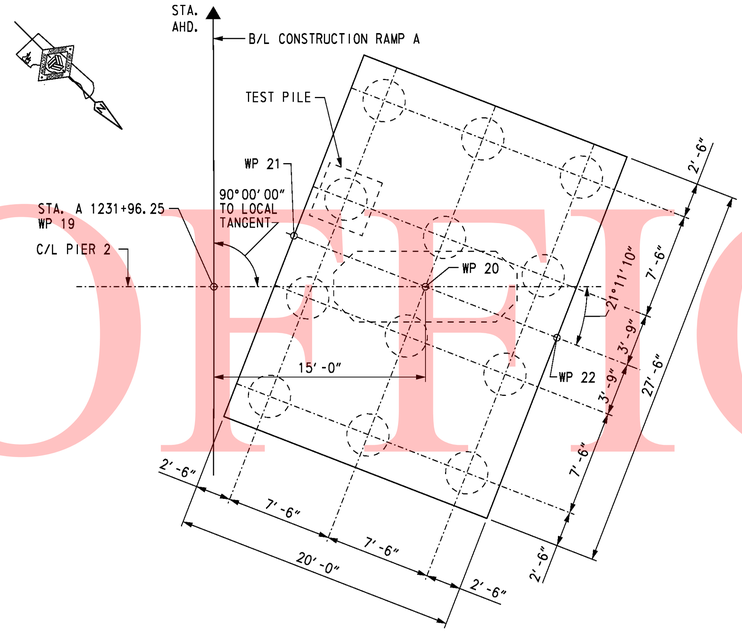

PIER 2 PILE PLAN

SCALE: 3/16″ = 1′-0″

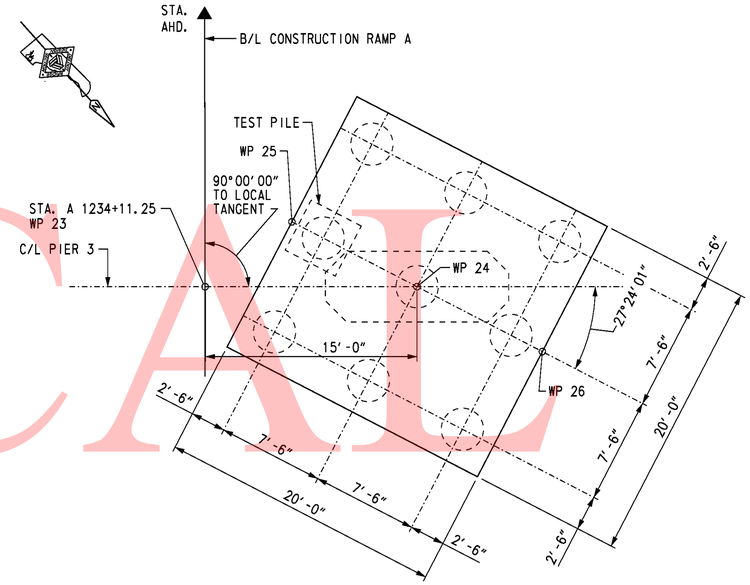

PIER 3 PILE PLAN

SCALE: 3/16″ = 1′-0″

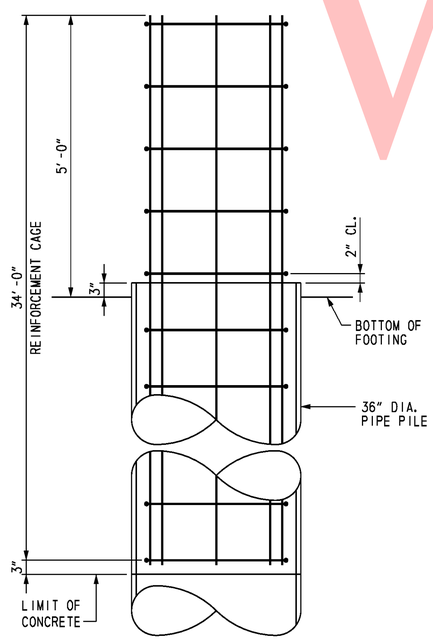

ELEVATION

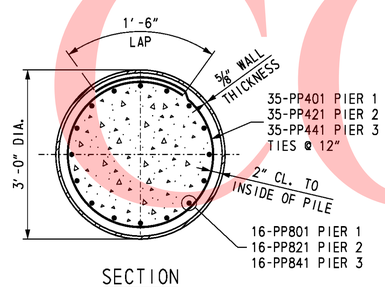

SECTION

PIPE PILE REINFORCEMENT

SCALE: 3/4″ = 1′-0″

PILE INSTALLATION DATA

SUBSTRUCTURE UNIT	DESIGN DATA: NOMINAL PILE DRIVING RESISTANCE (KIPS)	DESIGN DATA: ESTIMATED PILE TIP ELEVATION	ACTUAL FIELD DATA: AVERAGE MINIMUM TIP ELEVATION	ACTUAL FIELD DATA: AVERAGE MAXIMUM TIP ELEVATION
PIER 1	1710	2.0		
PIER 2	1760	-7.0		
PIER 3	1500	23.0		

PIER 1 PILE DRIVING INFORMATION

PILE SIZE AND TYPE:
ACTUAL BEARING OBTAINED:
HAMMER TYPE:
PILE HAMMER ENERGY:
SPECIAL DRIVING CONDITIONS AND COMMENTS:

PIER 2 PILE DRIVING INFORMATION

PILE SIZE AND TYPE:
ACTUAL BEARING OBTAINED:
HAMMER TYPE:
PILE HAMMER ENERGY:
SPECIAL DRIVING CONDITIONS AND COMMENTS:

PIER 3 PILE DRIVING INFORMATION

PILE SIZE AND TYPE:
ACTUAL BEARING OBTAINED:
HAMMER TYPE:
PILE HAMMER ENERGY:
SPECIAL DRIVING CONDITIONS AND COMMENTS:

WORKING POINTS

WP NO.	STATION	OFFSET	COORDINATES: NORTHING	COORDINATES: EASTING
15	1229+48.25	0.00′	613,805.0658	433,391.8380
16	1229+48.25	15.00′ RT.	613,816.8306	433,382.5327
17	1229+51.07	5.41′ RT.	613,807.5546	433,386.2682
18	1229+45.46	24.59′ RT.	613,826.1067	433,378.7972
19	1231+96.25	0.00′	613,639.4252	433,207.4495
20	1231+96.25	15.00′ RT.	613,650.0979	433,196.9094
21	1231+99.86	5.68′ RT.	613,640.9242	433,200.8898
22	1231+92.66	24.33′ RT.	613,659.2716	433,192.9291
23	1234+11.25	0.00′	613,483.9931	433,058.9473
24	1234+11.25	15.00′ RT.	613,494.0358	433,047.8053
25	1234+15.84	6.12′ RT.	613,484.6734	433,051.3189
26	1234+06.68	23.88′ RT.	613,503.3982	433,044.2917

NOTES:

1. PILES SHALL BE 36″ DIA. WITH 5/8″ WALL THICKNESS OPEN-ENDED STEEL PIPE PILES, ASTM A252 GRADE 3.
2. TEST PILE SHALL BE TESTED IN ACCORDANCE WITH THE SPECIFICATIONS.

CROSS REFERENCE NOTES:

1. FOR PIER 1 THRU PIER 3 PLAN AND ELEVATION, SEE DWGS. S1-17 THRU S1-19.
2. FOR REINFORCING BAR LIST, SEE DWG. S1-32 & S1-33.
3. FOR PILE SPLICE DETAIL, SEE DWG. S1-4.
4. FOR TEST PILE PAYMENT NOTES, SEE DWG. S1-2.

UNOFFICAL WEBSITE COPY

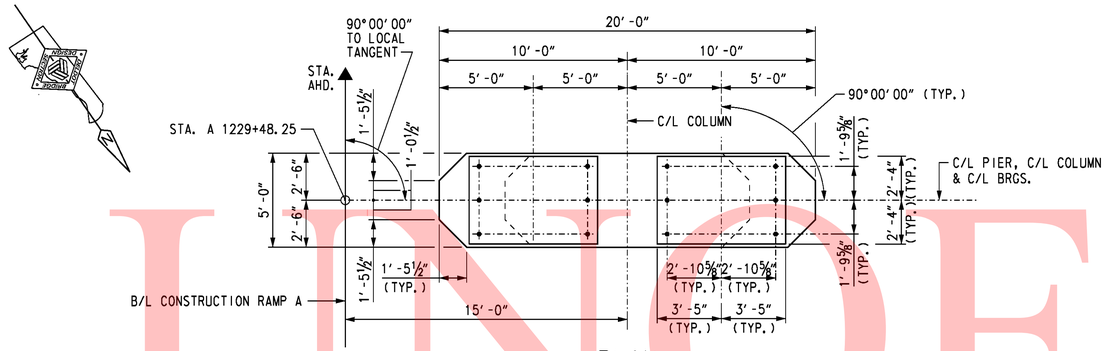

PLAN

SCALE: ¼" = 1'-0"

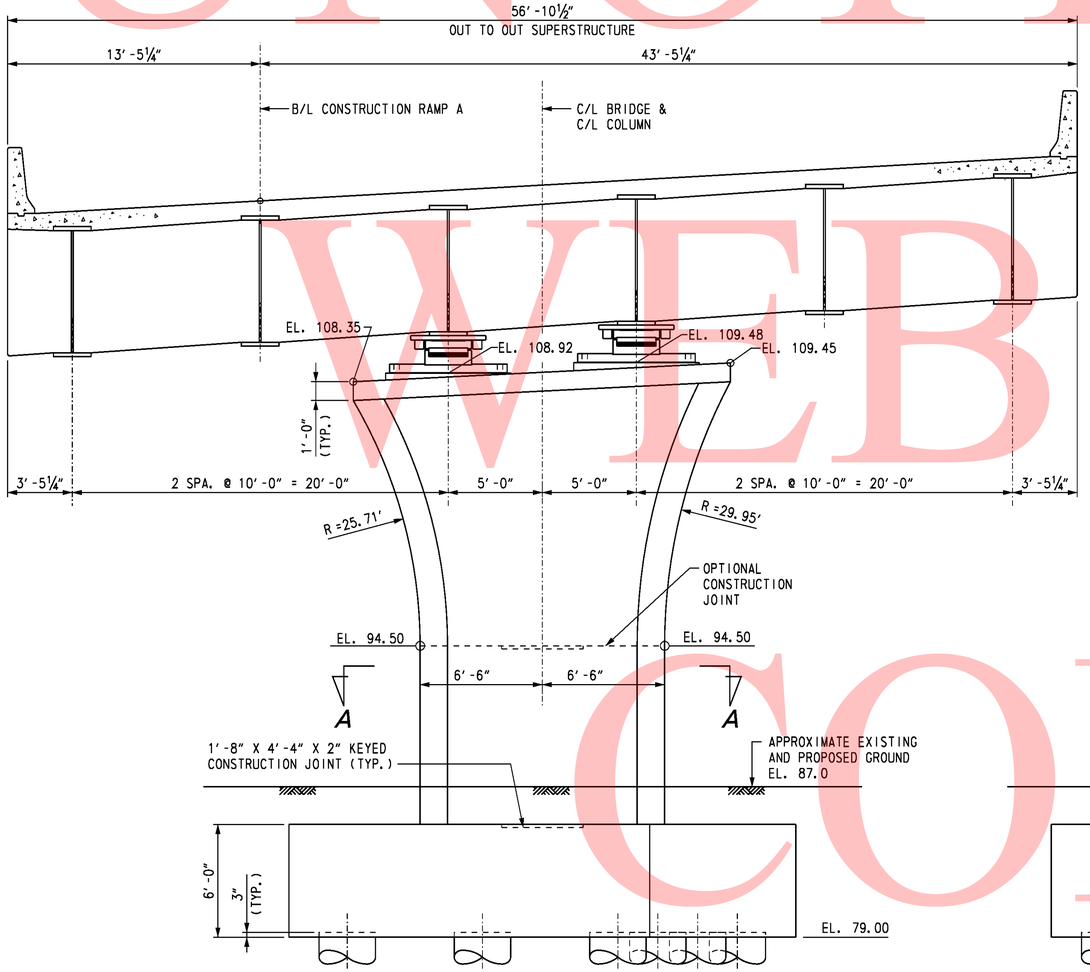

ELEVATION - PIER 1

SCALE: ¼" = 1'-0"

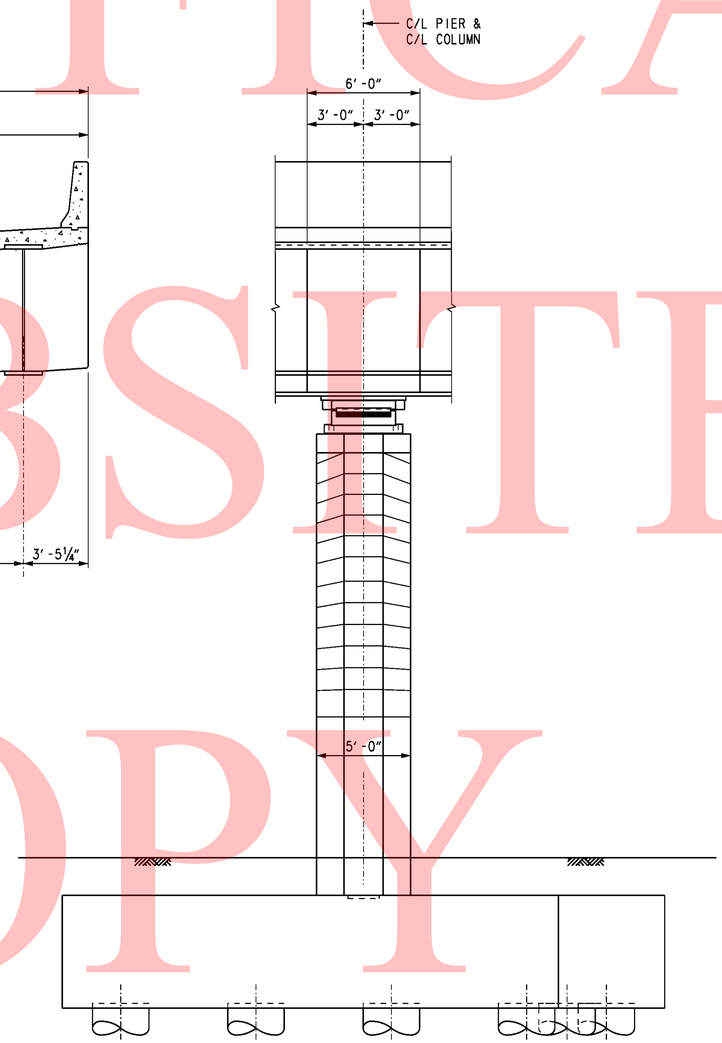

END VIEW

SCALE: ¼" = 1'-0"

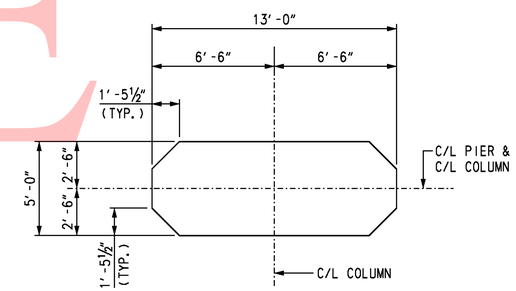

SECTION A-A

SCALE: ¼" = 1'-0"

CROSS REFERENCE NOTES:

1. FOR BRIDGE PLAN AND ELEVATION, SEE DWG. S1-1.
2. FOR PIER FOUNDATION PLAN, SEE DWG. S1-16.
3. FOR INTEGRAL PIER CAP, REINFORCEMENT DETAILS, SEE DWGS. S1-20 & S1-21.
4. FOR PIER COLUMN AND FOOTING REINFORCEMENT DETAILS, SEE DWGS. S1-22 & S1-23.

UNOFFICAL WEBSITE COPY

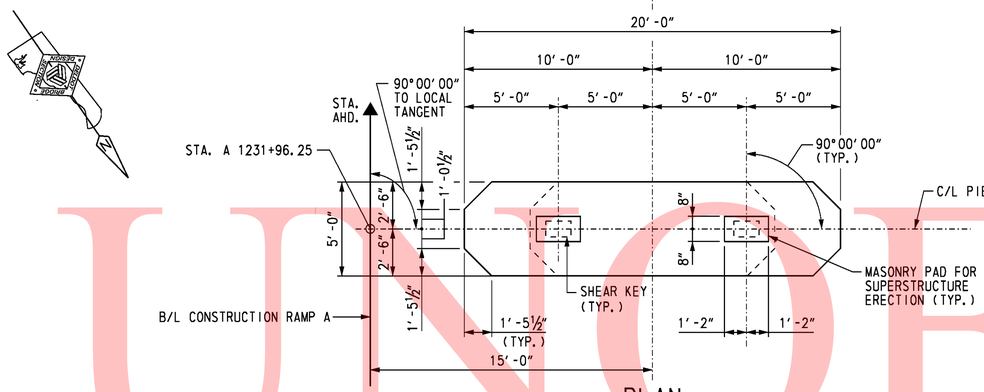

PLAN

SCALE: ¼" = 1'-0"

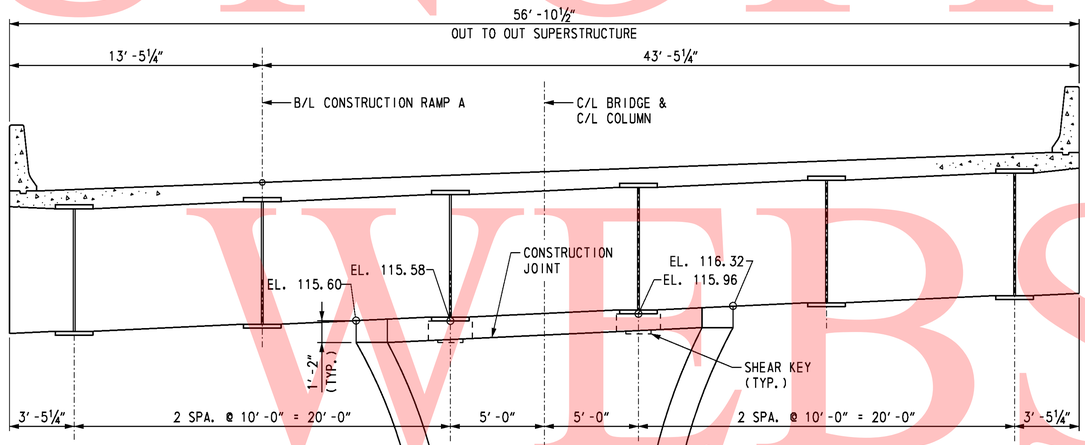

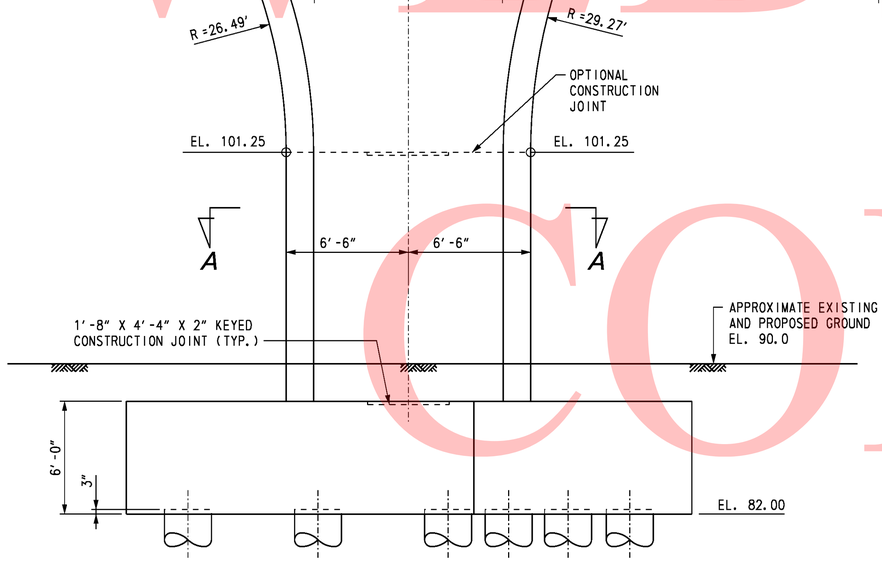

ELEVATION - - PIER 2

SCALE: ¼" = 1'-0"

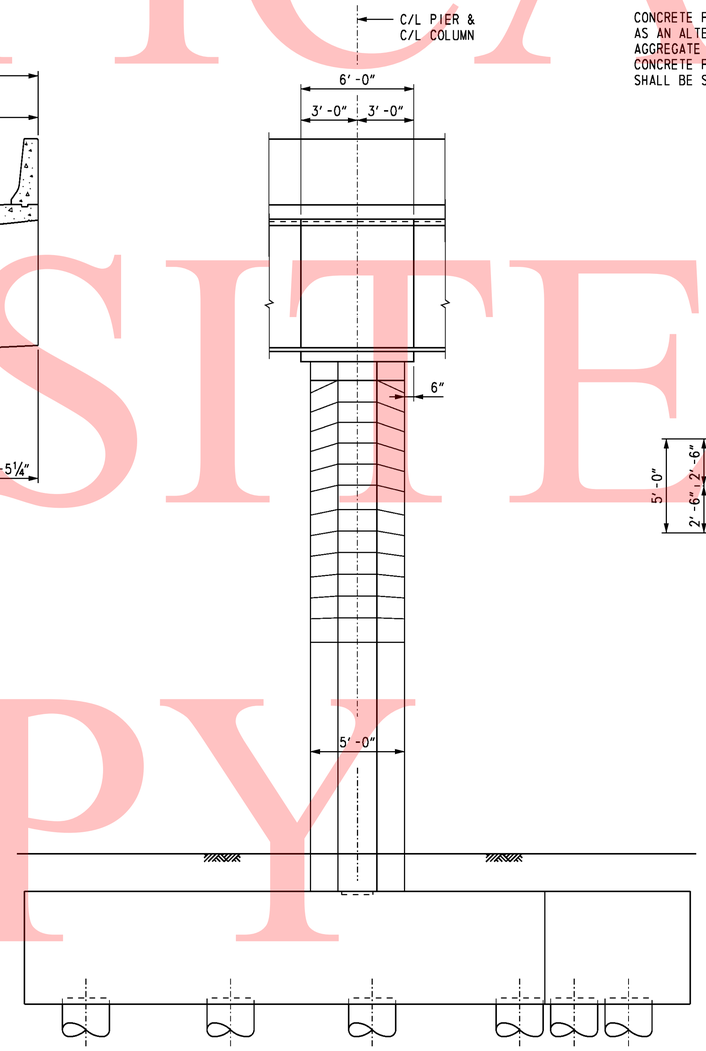

END VIEW

SCALE: ¼" = 1'-0"

NOTE:

CONCRETE FOR MASONRY PAD SHALL BE "PIER ABOVE FOOTING" CONCRETE. AS AN ALTERNATE, A NON-SHRINK GROUT (f'c = 4,500 PSI) WITH 3/8" AGGREGATE MAY BE UTILIZED FOR THE MASONRY PAD CONCRETE. CONCRETE FOR COLUMN OUTSIDE OF MASONRY PAD IN TOP 1'-2" REGION SHALL BE SAME AS "POST TENSIONED PIER CAP" CONCRETE.

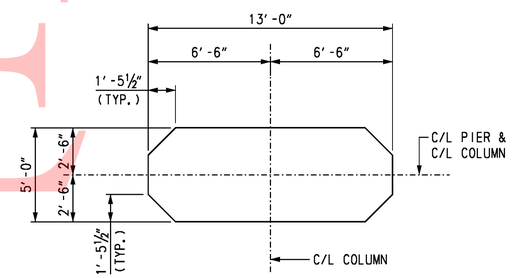

SECTION A-A

SCALE: ¼" = 1'-0"

CROSS REFERENCE NOTES:

1. FOR BRIDGE PLAN AND ELEVATION, SEE DWG. S1-1.
2. FOR PIER FOUNDATION PLAN, SEE DWG. S1-16.
3. FOR INTEGRAL PIER CAP, REINFORCEMENT DETAILS, SEE DWGS. S1-24 & S1-25.
4. FOR PIER COLUMN AND FOOTING REINFORCEMENT DETAILS, SEE DWGS. S1-26 & S1-27.

UNOFFICAL WEBSITE COPY

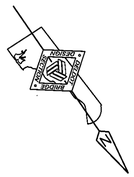

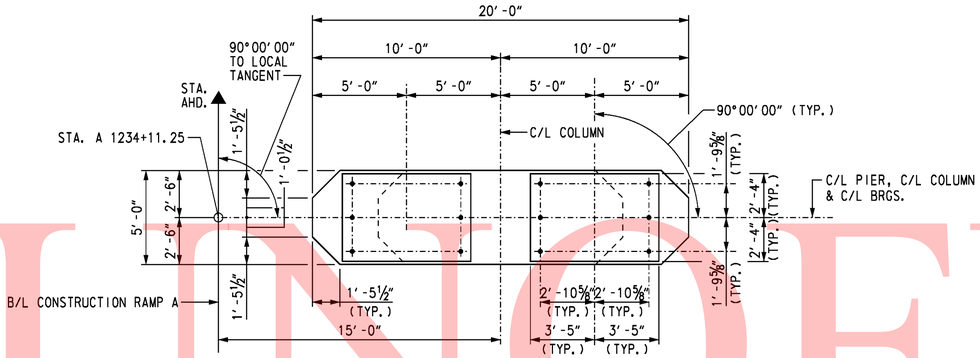

PLAN

SCALE: ¼" = 1'-0"

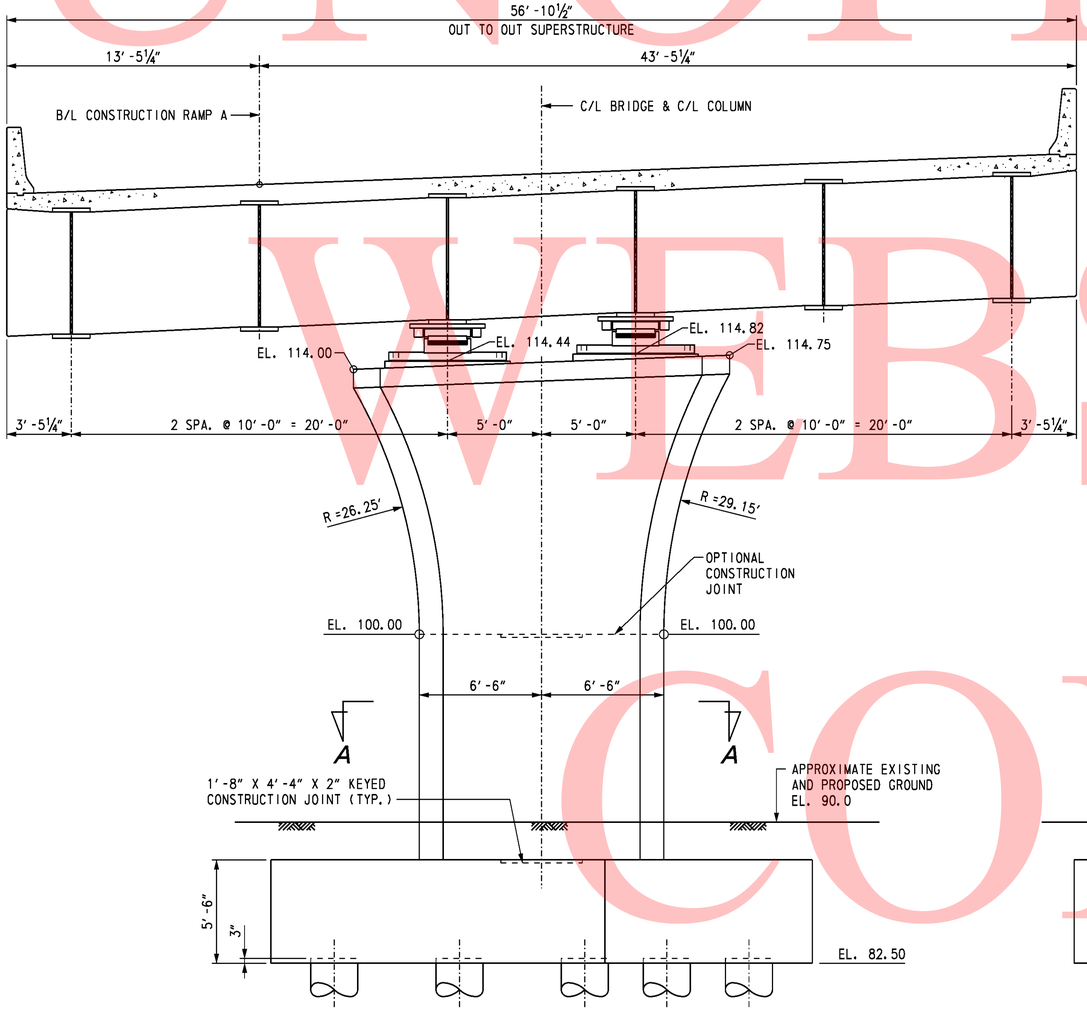

ELEVATION - PIER 3

SCALE: ¼" = 1'-0"

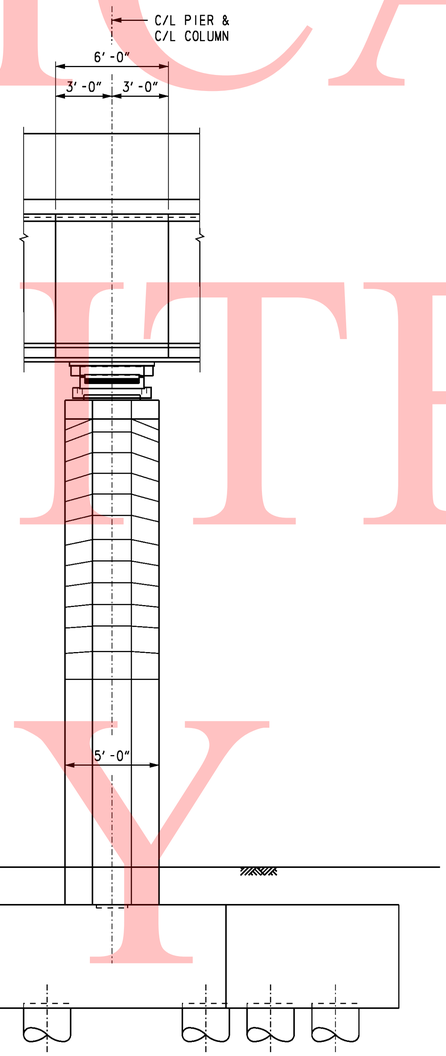

END VIEW

SCALE: ¼" = 1'-0"

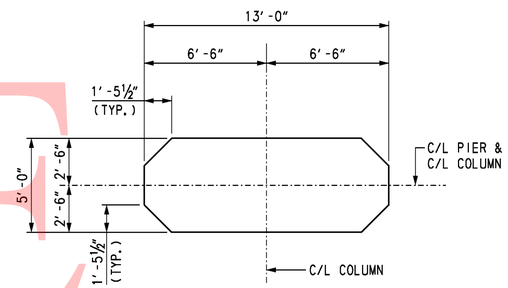

SECTION A-A

SCALE: ¼" = 1'-0"

CROSS REFERENCE NOTES:

1. FOR BRIDGE PLAN AND ELEVATION, SEE DWG. S1-1.
2. FOR PIER FOUNDATION PLAN, SEE DWG. S1-16.
3. FOR INTEGRAL PIER CAP, REINFORCEMENT DETAILS, SEE DWGS. S1-28 & S1-29.
4. FOR PIER COLUMN AND FOOTING REINFORCEMENT DETAILS, SEE DWGS. S1-30 & S1-31.

UNOFFICAL WEBSITE COPY

10/28/2010 O:\20832687-XM\CAD\Bridge\BR-S1\pr04_BR-S1_sr1.dgn
untitled

DELAWARE DEPARTMENT OF TRANSPORTATION	ADDENDUMS / REVISIONS	SR1 / I-95 INTERCHANGE	CONTRACT 28-090-03	BRIDGE NO. 1-716B	RAMP A OVER I-95	S1-19 SHEET NO.	
			COUNTY NEW CASTLE	DESIGNED BY: K.D. BEAVER	PIER 3 PLAN AND ELEVATION	213 TOTAL SHTS.	
				CHECKED BY: R. F. KIRCHNER		803	

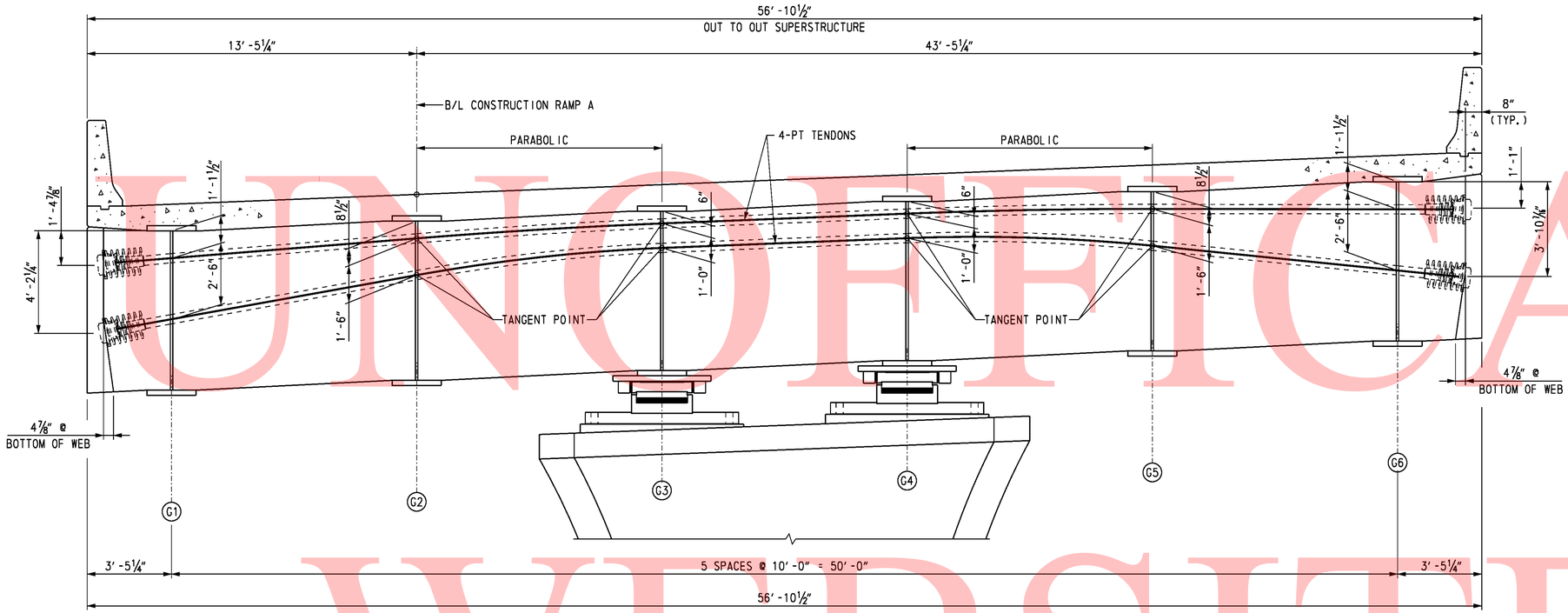

POST-TENSIONING SECTION

SCALE: ⅜" = 1'-0"

SEQUENCE OF CONSTRUCTION:

1. CONSTRUCT PIER FOUNDATION AND COLUMN.
2. AFTER THE FOUNDATION AND COLUMNS HAVE ATTAINED AT LEAST 80% OF THEIR DESIGN COMPRESSIVE STRENGTH, CONSTRUCT TEMPORARY SHORING TO SUPPORT SUPERSTRUCTURE GIRDERS. PIER CAP AND GIRDERS SHALL BE SUPPORTED ON TEMPORARY SHORING FRAMES UNTIL DECK SLAB HAS BEEN CONSTRUCTED AND POST-TENSIONING OPERATIONS HAVE BEEN COMPLETED.
3. ERECT SUPERSTRUCTURE GIRDERS ON TEMPORARY SHORING.
4. POUR DECK CONCRETE IN POSITIVE MOMENT REGIONS 1, 2, 3 AND 4 AS SHOWN ON THE POURING SEQUENCE PLANS. THIS WILL ALLOW THE GIRDERS TO DEFLECT DUE TO THE DECK WEIGHT WITHOUT ANY RESTRAINT AT THE INTEGRAL PIER LOCATIONS.
5. POUR CONCRETE FOR THE INTEGRAL PIER CAP.
6. POUR REMAINING DECK CONCRETE IN NEGATIVE MOMENT REGIONS AFTER PIER CAPS HAVE REACHED A MINIMUM COMPRESSIVE STRENGTH OF 3000 PSI.
7. CONSTRUCT CONCRETE BARRIERS. AS AN ALTERNATE, BARRIERS MAY BE CONSTRUCTED AFTER POST TENSIONING OPERATIONS.
8. AFTER DECK CONCRETE HAS ATTAINED ITS 28 DAY COMPRESSIVE STRENGTH, POST-TENSIONING OPERATIONS MAY COMMENCE. TENDONS SHALL BE STRESSED FROM ONE END OF THE PIER CAP IN THE ORDER SHOWN. CONTRACTOR MAY PROPOSE AN ALTERNATE STRESSING SEQUENCE AND SUBMIT TO THE ENGINEER FOR APPROVAL.
9. DURING THE POST TENSIONING OPERATION, THE GIRDERS SHALL BE SHIMMED AS NECESSARY TO MAINTAIN FULL SUPPORT FROM THE TEMPORARY SHORING.
10. WHEN POST TENSIONING IS COMPLETE, REMOVE TEMPORARY SHORING AND GROUT DUCTS.
11. CONSTRUCT CONCRETE ANCHORAGE COVER AT ENDS OF PIER CAP.

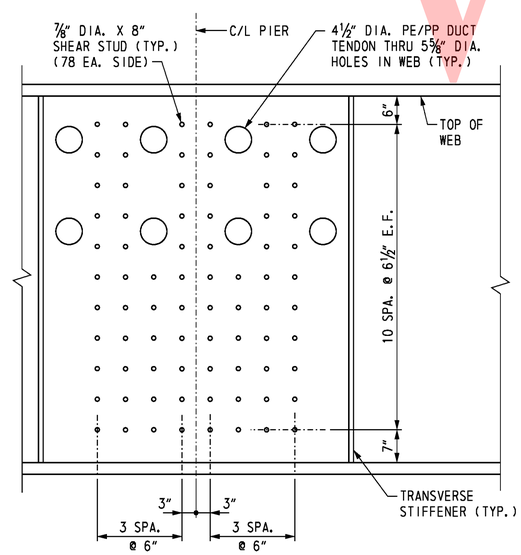

SHEAR STUDS (GIRDERS 2-5)

SCALE: ¾" = 1'-0"

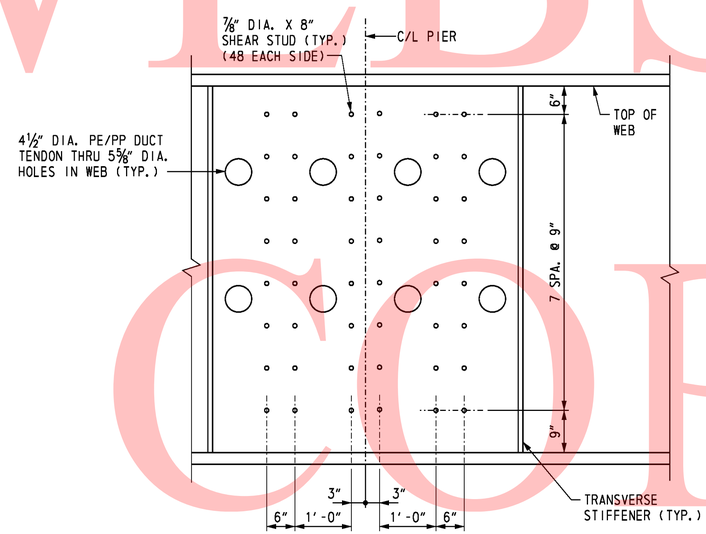

SHEAR STUDS (GIRDERS 1 & 6)

SCALE: ¾" = 1'-0"

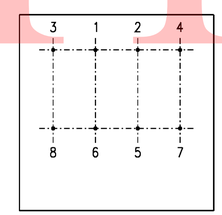

POST-TENSION STRESSING SEQUENCE

NOT TO SCALE

CROSS REFERENCE NOTES:

1. FOR BRIDGE PLAN AND ELEVATION, SEE DWG. S1-1.
2. FOR PIER PLAN AND ELEVATION, SEE DWG. S1-17.
3. FOR PIER CAP REINFORCEMENT DETAILS, SEE DWG. S1-21.
4. FOR PIER COLUMN REINFORCEMENT DETAILS, SEE DWG. S1-22.
5. FOR PIER FOOTING REINFORCEMENT DETAILS, SEE DWG. S1-23.
6. FOR BRIDGE DECK POURING SEQUENCE, SEE DWG. S1-45.

POST TENSIONING NOTES:

MATERIAL PROPERTIES:

CONCRETE CAP: f'c = 8000 psi
f'ci = 5500 psi

POST TENSIONING STEEL:

EACH TENDON CONSISTS OF 22 STRANDS ENCLOSED WITHIN 4½" DIAMETER POLYETHYLENE/POLYPROPYLENE (PE/PP) PLASTIC DUCTS.

STRANDS SHALL BE 0.6 INCH DIAMETER SEVEN WIRE UNCOATED LOW RELAXATION STRANDS CONFORMING TO AASHTO M203 (ASTM A416), GRADE 270.

MODULUS OF ELASTICITY:	28,000 ksi
WOBBLE COEFFICIENT:	0.0002
COEFFICIENT OF FRICTION:	0.23
ANCHOR SET:	0.25 IN
JACKING STRESS:	UPPER TENDON 199,500 PSI LOWER TENDON 204,000 PSI
ANCHORING STRESS:	UPPER TENDON 183,000 PSI LOWER TENDON 179,000 PSI

1. TENDONS SHALL NOT BE STRESSED UNTIL THE PIER CAP CONCRETE REACHES A MINIMUM COMPRESSIVE STRENGTH OF 5,500 psi.
2. LOCAL ZONE REINFORCEMENT FOR TENDON ANCHORAGES SHALL BE DESIGNED BY THE CONTRACTOR, SHOWN ON SHOP DRAWINGS AND SUBMITTED FOR APPROVAL BY THE ENGINEER.

UNOFFICIAL WEBSITE COPY

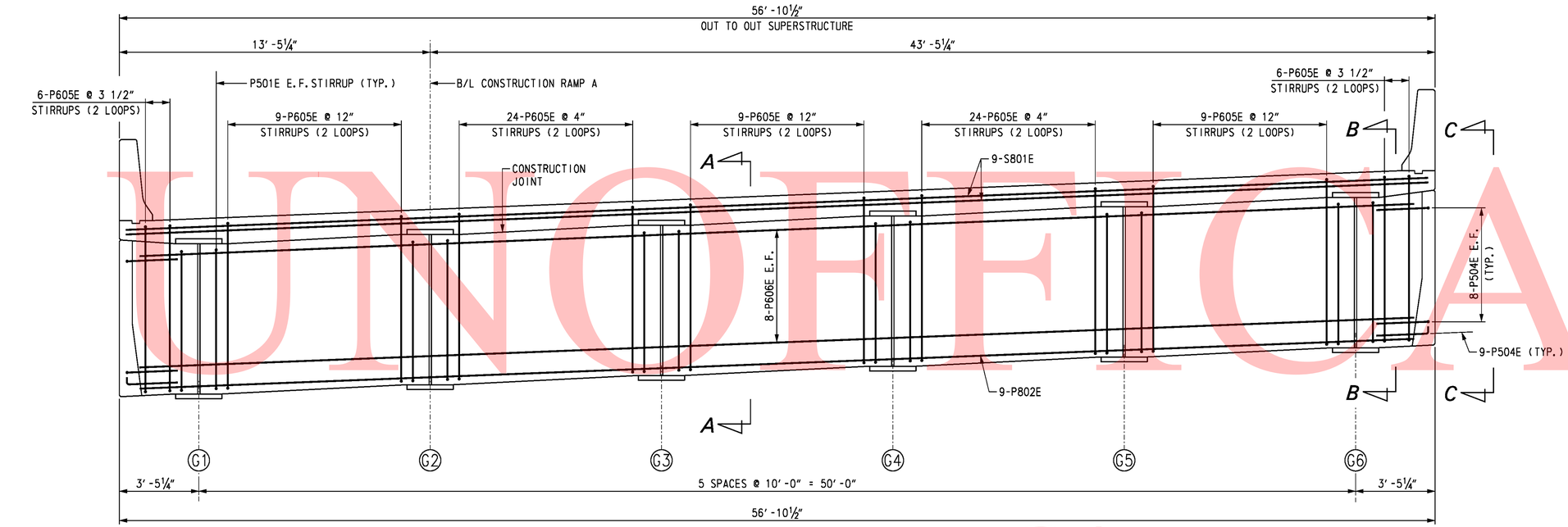

ELEVATION

SCALE: ⅜" = 1'-0"

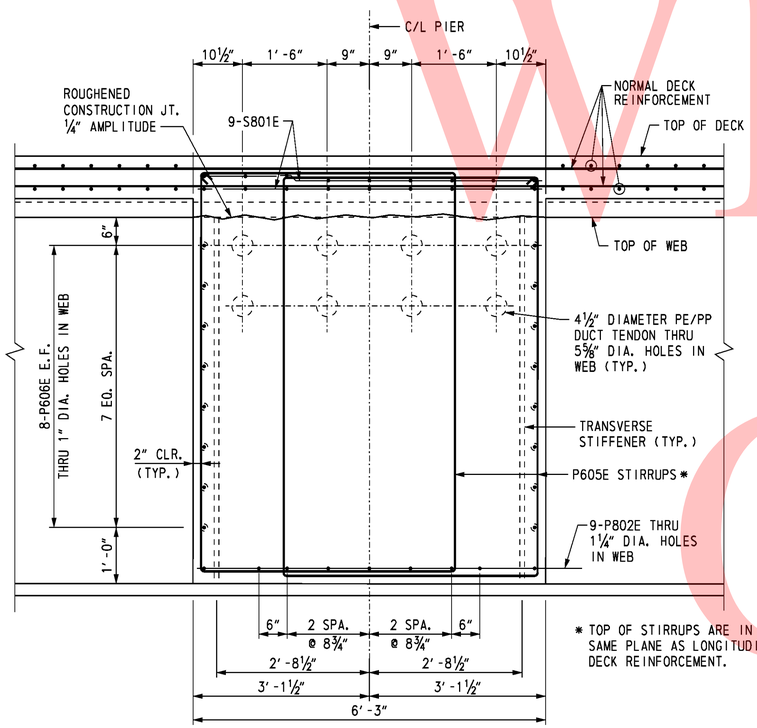

SECTION A-A

SCALE: ¾" = 1'-0"

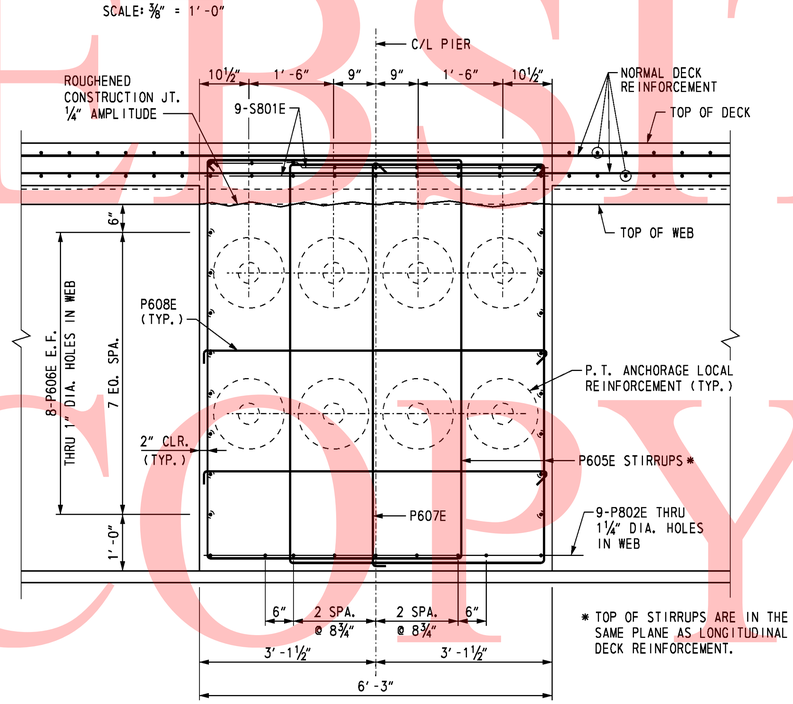

SECTION B-B

SCALE: ¾" = 1'-0"

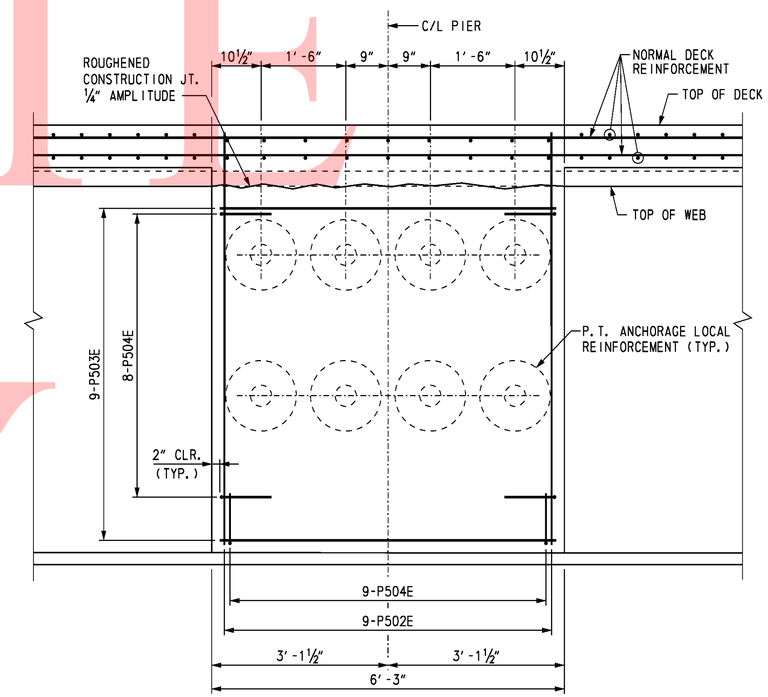

SECTION C-C

SCALE: ¾" = 1'-0"

CROSS REFERENCE NOTES:

1. FOR BRIDGE PLAN AND ELEVATION, SEE DWG. S1-1.
2. FOR PIER PLAN AND ELEVATION, SEE DWG. S1-17.
3. FOR LOCATION OF SHEAR STUDS ON GIRDER WEB, SEE DWG. S1-20.
4. FOR REINFORCING BAR LIST, SEE DWG. S1-32.

UNOFFICIAL WEBSITE COPY

10/28/2010 O:\20832687-XM\CAD\Bridge\BR-S1\pr06_BR-S1_sr1.dgn untitled

DELAWARE DEPARTMENT OF TRANSPORTATION	ADDENDUMS / REVISIONS	SR1 / I-95 INTERCHANGE	CONTRACT 28-090-03	BRIDGE NO. 1-716B	RAMP A OVER I-95 PIER 1 REINFORCEMENT 2	S1-21 SHEET NO. 215
			COUNTY NEW CASTLE	DESIGNED BY: K. D. BEAVER		TOTAL SHTS. 803
				CHECKED BY: R. F. KIRCHNER		

UNOFFICIAL WEBSITE COPY

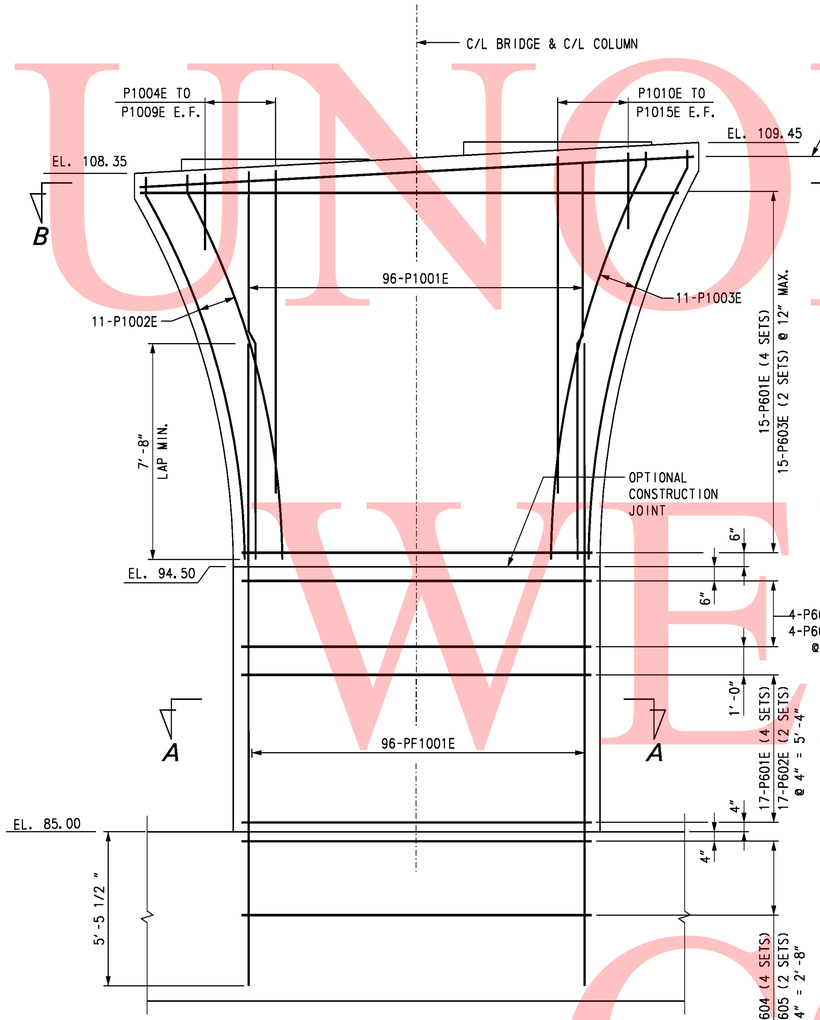

ELEVATION
SCALE: 3/8" = 1'-0"

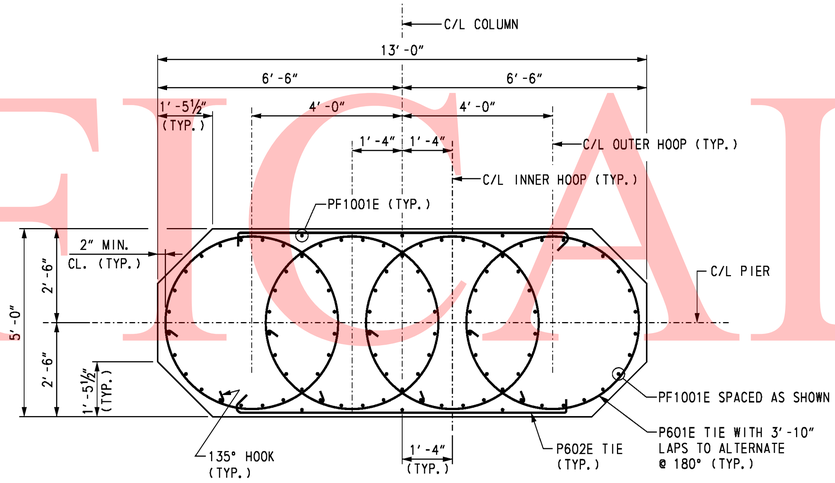

SECTION A-A
SCALE: 1/2" = 1'-0"

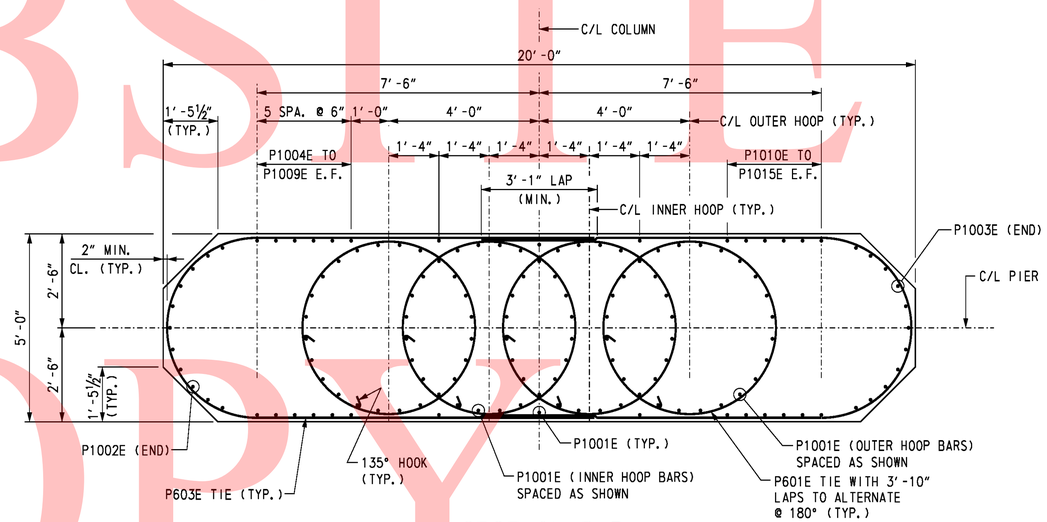

SECTION B-B
SCALE: 1/2" = 1'-0"

CROSS REFERENCE NOTES:

1. FOR BRIDGE PLAN AND ELEVATION, SEE DWG. S1-1.
2. FOR PIER PLAN AND ELEVATION, SEE DWG. S1-17.
3. FOR REINFORCING BAR LIST, SEE DWG. S1-32.

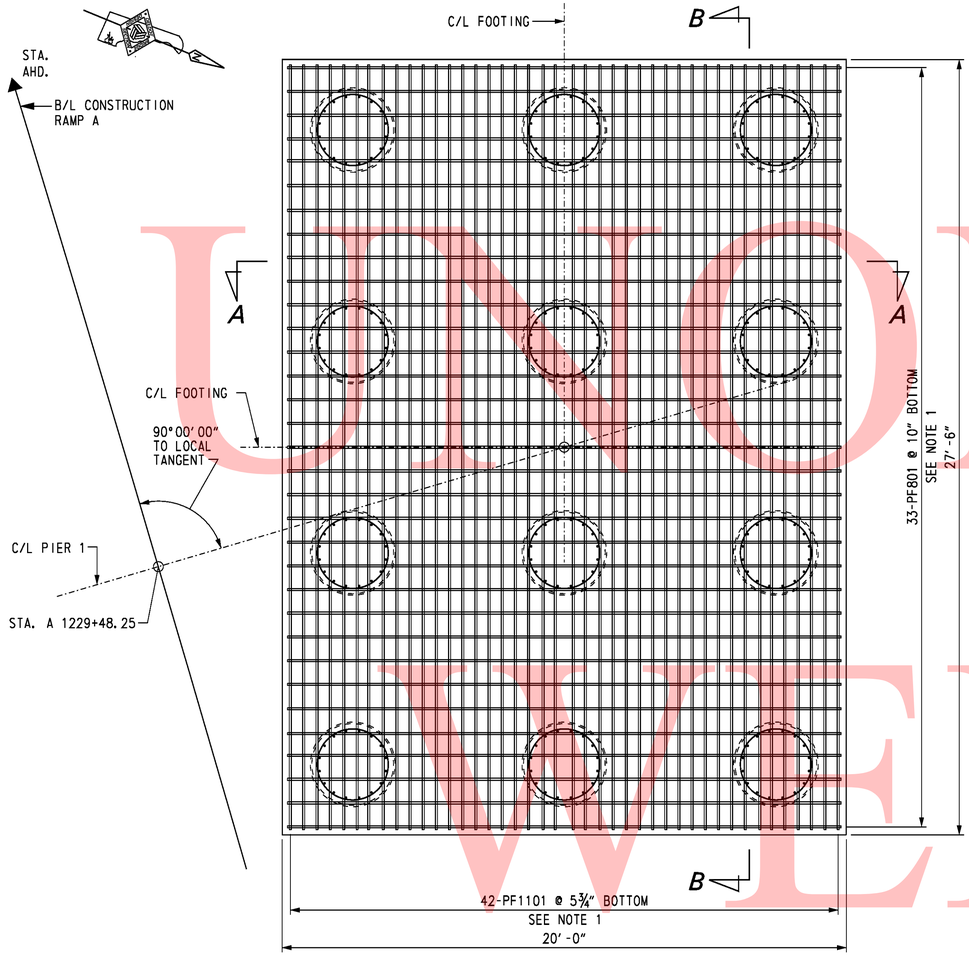

PLAN - BOTTOM MAT FOOTING REINFORCEMENT LAYOUT

SCALE: ⅜″ = 1′-0″

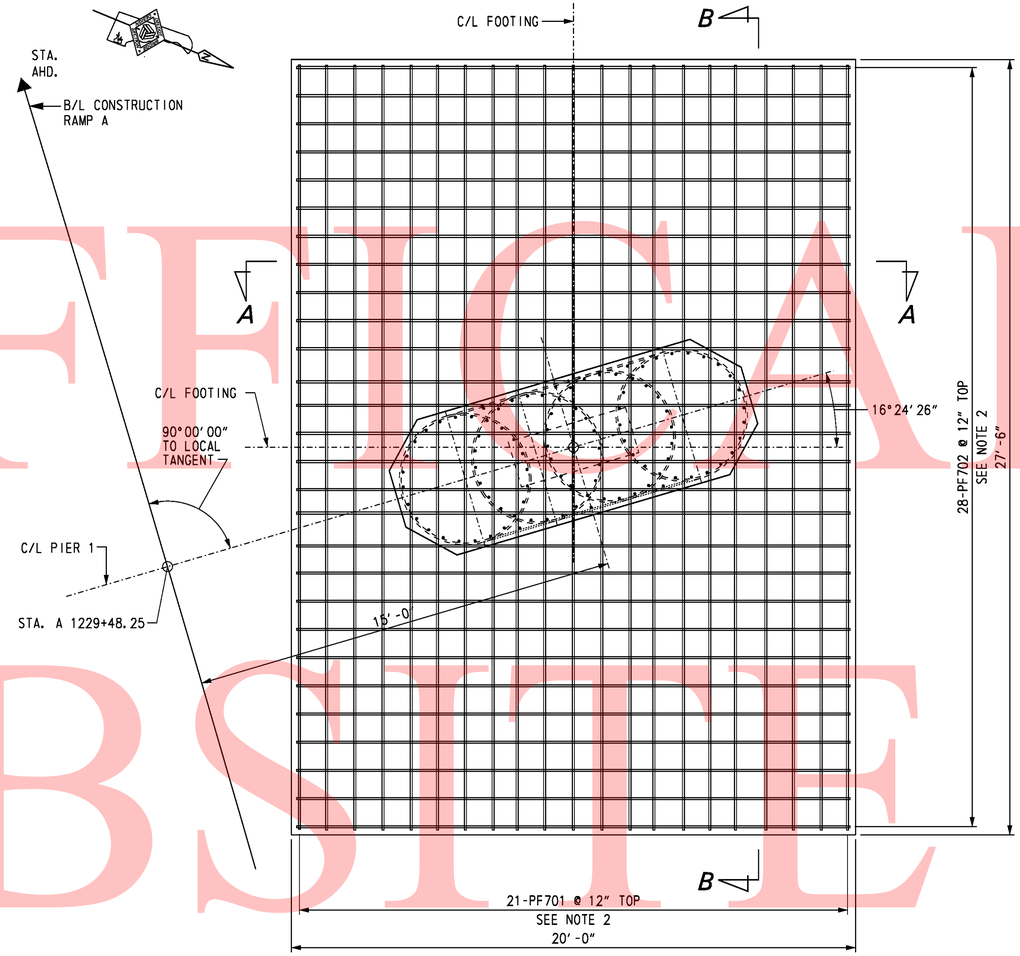

PLAN - TOP MAT FOOTING REINFORCEMENT LAYOUT

SCALE: ⅜″ = 1′-0″

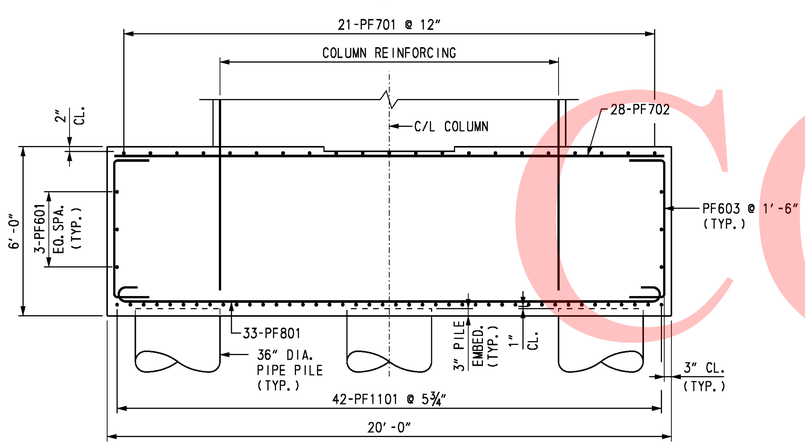

SECTION A-A

SCALE: ⅜″ = 1′-0″

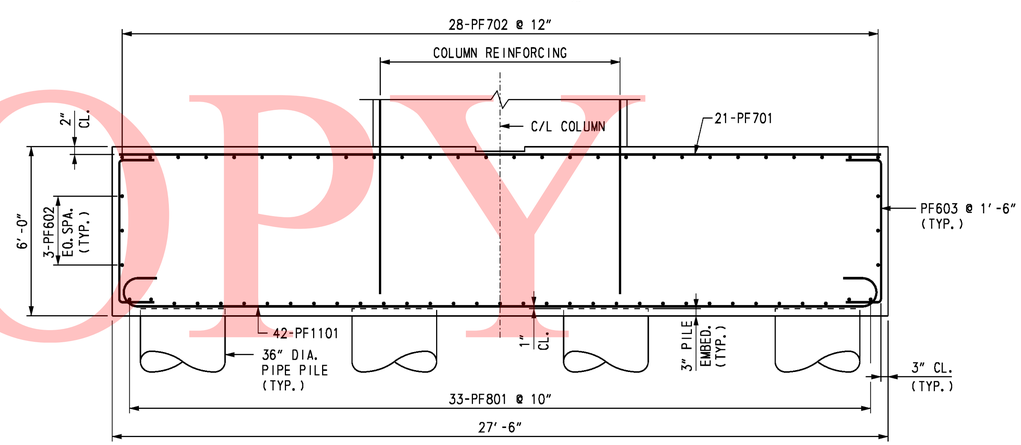

SECTION B-B

SCALE: ⅜″ = 1′-0″

NOTES:

1. ADJUST SPACING OF BOTTOM MAT FOOTING REINFORCING TO CLEAR PIPE PILE REINFORCING.
2. ADJUST SPACING OF TOP MAT FOOTING REINFORCING TO CLEAR COLUMN DOWELS.
3. CONTRACTOR MAY PROVIDE 90° HOOKS ON SOME COLUMN REINFORCEMENT DOWELS IN ORDER TO FACILITATE PLACEMENT OF THE COLUMN REINFORCING.

CROSS REFERENCE NOTES:

1. FOR BRIDGE PLAN AND ELEVATION, SEE DWG. S1-1.
2. FOR PIER FOUNDATION PLAN, SEE DWG. S1-16.
3. FOR PIER PLAN AND ELEVATION, SEE DWG. S1-17.
4. FOR REINFORCING BAR LIST, SEE DWG. S1-32.

UNOFFICIAL WEBSITE COPY

10/28/2010 O:\20832687-XM\CAD\Bridge\BR-S1\pr08_BR-S1_sr1.dgn
untitled

DELAWARE DEPARTMENT OF TRANSPORTATION	ADDENDUMS / REVISIONS	SR1 / I-95 INTERCHANGE	CONTRACT 28-090-03	BRIDGE NO. 1-716B	RAMP A OVER I-95 PIER 1 REINFORCEMENT 4	SHEET NO. S1-23
			COUNTY NEW CASTLE	DESIGNED BY: K. D. BEAVER		217
				CHECKED BY: R. F. KIRCHNER		TOTAL SHTS. 803

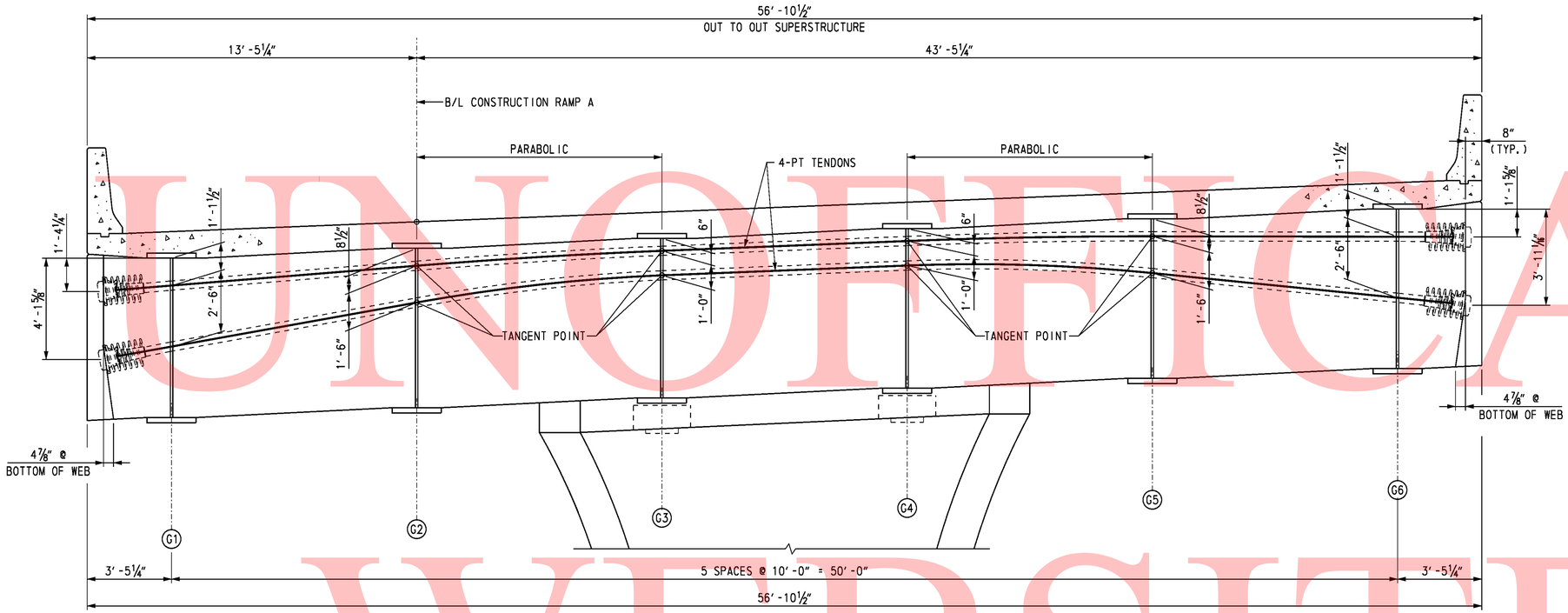

POST-TENSIONING SECTION

SCALE: ⅜" = 1'-0"

SEQUENCE OF CONSTRUCTION:

1. CONSTRUCT PIER FOUNDATION AND COLUMN.
2. AFTER THE FOUNDATION AND COLUMNS HAVE ATTAINED AT LEAST 80% OF THEIR DESIGN COMPRESSIVE STRENGTH, CONSTRUCT TEMPORARY SHORING TO SUPPORT SUPERSTRUCTURE GIRDERS. PIER CAP AND GIRDERS SHALL BE SUPPORTED ON TEMPORARY SHORING FRAMES UNTIL DECK SLAB HAS BEEN CONSTRUCTED AND POST-TENSIONING OPERATIONS HAVE BEEN COMPLETED.
3. ERECT SUPERSTRUCTURE GIRDERS ON TEMPORARY SHORING.
4. POUR DECK CONCRETE IN POSITIVE MOMENT REGIONS 1, 2, 3 AND 4 AS SHOWN ON THE POURING SEQUENCE PLANS. THIS WILL ALLOW THE GIRDERS TO DEFLECT DUE TO THE DECK WEIGHT WITHOUT ANY RESTRAINT AT THE INTEGRAL PIER LOCATIONS.
5. POUR CONCRETE FOR THE INTEGRAL PIER CAP.
6. POUR REMAINING DECK CONCRETE IN NEGATIVE MOMENT REGIONS AFTER PIER CAPS HAVE REACHED A MINIMUM COMPRESSIVE STRENGTH OF 3000 PSI.
7. CONSTRUCT CONCRETE BARRIERS. AS AN ALTERNATE, BARRIERS MAY BE CONSTRUCTED AFTER POST TENSIONING OPERATIONS.
8. AFTER DECK CONCRETE HAS ATTAINED ITS 28 DAY COMPRESSIVE STRENGTH, POST-TENSIONING OPERATIONS MAY COMMENCE. TENDONS SHALL BE STRESSED FROM ONE END OF THE PIER CAP IN THE ORDER SHOWN. CONTRACTOR MAY PROPOSE AN ALTERNATE STRESSING SEQUENCE AND SUBMIT TO THE ENGINEER FOR APPROVAL.
9. DURING THE POST TENSIONING OPERATION, THE GIRDERS SHALL BE SHIMMED AS NECESSARY TO MAINTAIN FULL SUPPORT FROM THE TEMPORARY SHORING.
10. WHEN POST TENSIONING IS COMPLETE, REMOVE TEMPORARY SHORING AND GROUT DUCTS.
11. CONSTRUCT CONCRETE ANCHORAGE COVER AT ENDS OF PIER CAP.

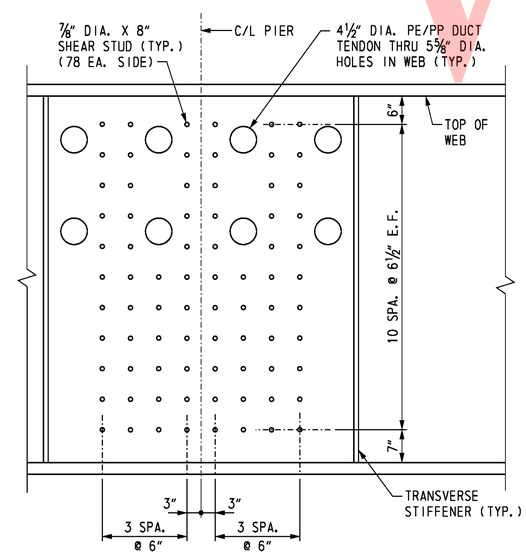

SHEAR STUDS (GIRDERS 2-5)

SCALE: ¾" = 1'-0"

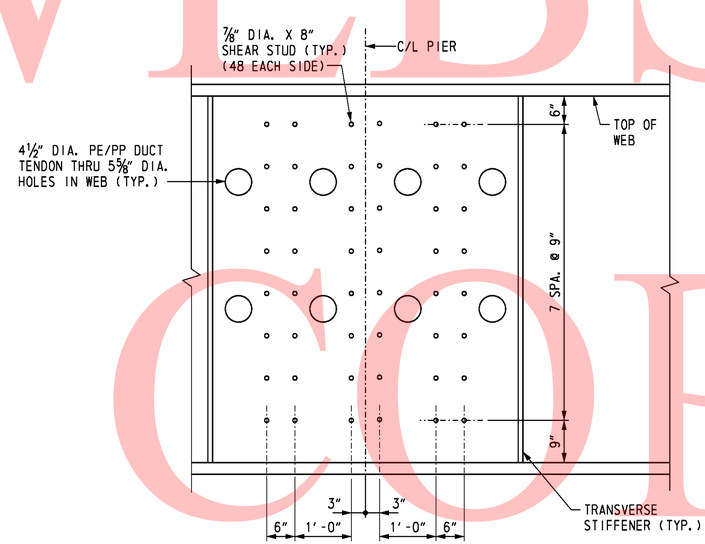

SHEAR STUDS (GIRDERS 1 & 6)

SCALE: ¾" = 1'-0"

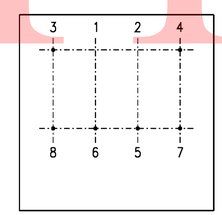

POST-TENSION STRESSING SEQUENCE

NOT TO SCALE

CROSS REFERENCE NOTES:

1. FOR BRIDGE PLAN AND ELEVATION, SEE DWG. S1-1.
2. FOR PIER PLAN AND ELEVATION, SEE DWG. S1-18.
3. FOR PIER CAP REINFORCEMENT DETAILS, SEE DWG. S1-25.
4. FOR PIER COLUMN REINFORCEMENT DETAILS, SEE DWG. S1-26.
5. FOR PIER FOOTING REINFORCEMENT DETAILS, SEE DWG. S1-27.
6. FOR BRIDGE DECK POURING SEQUENCE, SEE DWG. S1-45.

POST TENSIONING NOTES:

MATERIAL PROPERTIES:

CONCRETE CAP: f'c = 8000 psi
f'ci = 5500 psi

POST TENSIONING STEEL:

EACH TENDON CONSISTS OF 22 STRANDS ENCLOSED WITHIN 4½" DIAMETER POLYETHYLENE/POLYPROPYLENE (PE/PP) PLASTIC DUCTS.

STRANDS SHALL BE 0.6 INCH DIAMETER SEVEN WIRE UNCOATED LOW RELAXATION STRANDS CONFORMING TO AASHTO M203 (ASTM A416), GRADE 270.

MODULUS OF ELASTICITY:	28,000 ksi
WOBBLE COEFFICIENT:	0.0002
COEFFICIENT OF FRICTION:	0.23
ANCHOR SET:	0.25 IN
JACKING STRESS:	UPPER TENDON 199,500 PSI
	LOWER TENDON 204,000 PSI
ANCHORING STRESS:	UPPER TENDON 183,000 PSI
	LOWER TENDON 179,000 PSI

1. TENDONS SHALL NOT BE STRESSED UNTIL THE PIER CAP CONCRETE REACHES A MINIMUM COMPRESSIVE STRENGTH OF 5,500 psi.
2. LOCAL ZONE REINFORCEMENT FOR TENDON ANCHORAGES SHALL BE DESIGNED BY THE CONTRACTOR, SHOWN ON SHOP DRAWINGS AND SUBMITTED FOR APPROVAL BY THE ENGINEER.

UNOFFICIAL WEBSITE COPY

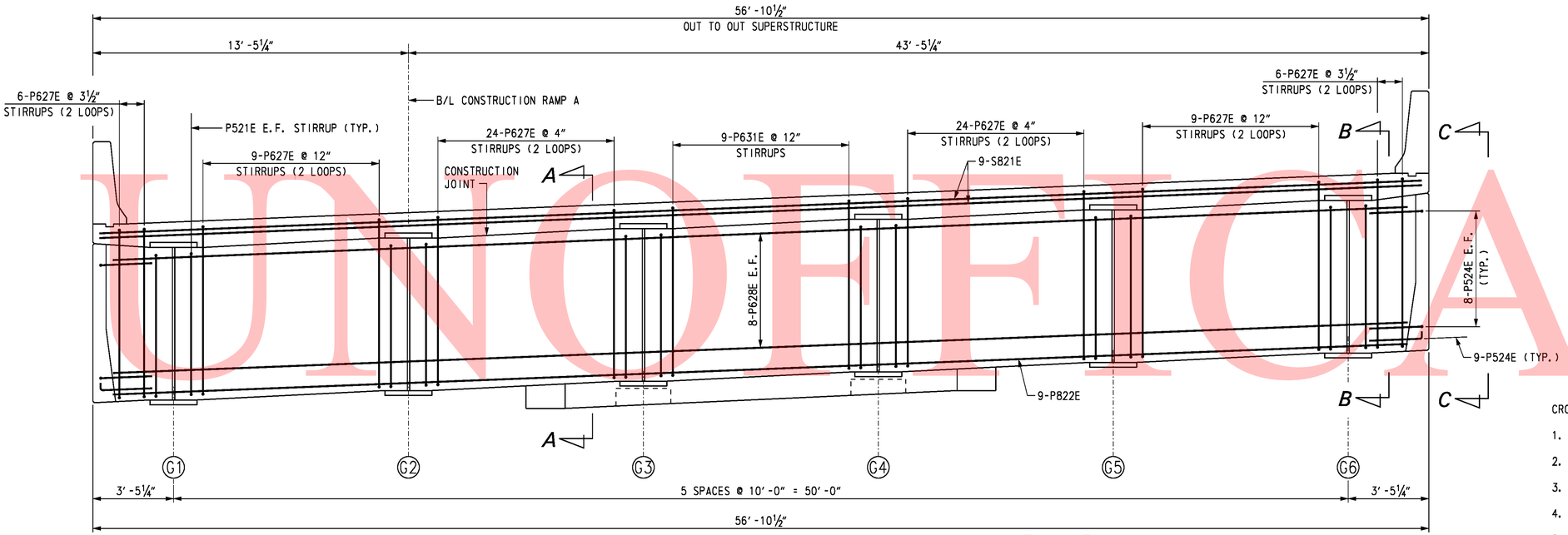

ELEVATION

SCALE: ⅜" = 1'-0"

CROSS REFERENCE NOTES:

1. FOR BRIDGE PLAN AND ELEVATION, SEE DWG. S1-1.
2. FOR PIER PLAN AND ELEVATION, SEE DWG. S1-18.
3. FOR PIER COLUMN REINFORCEMENT DETAILS, SEE DWG. S1-26.
4. FOR LOCATION OF SHEAR STUDS ON GIRDER WEB, SEE DWG. S1-24.
5. FOR REINFORCING BAR LIST, SEE DWG. S1-32.

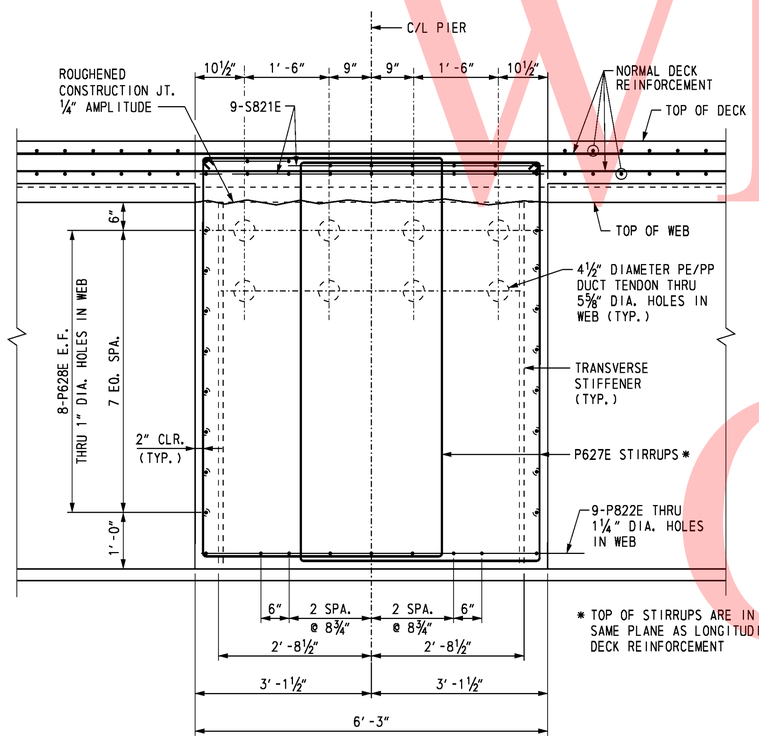

SECTION A-A

SCALE: ¾" = 1'-0"

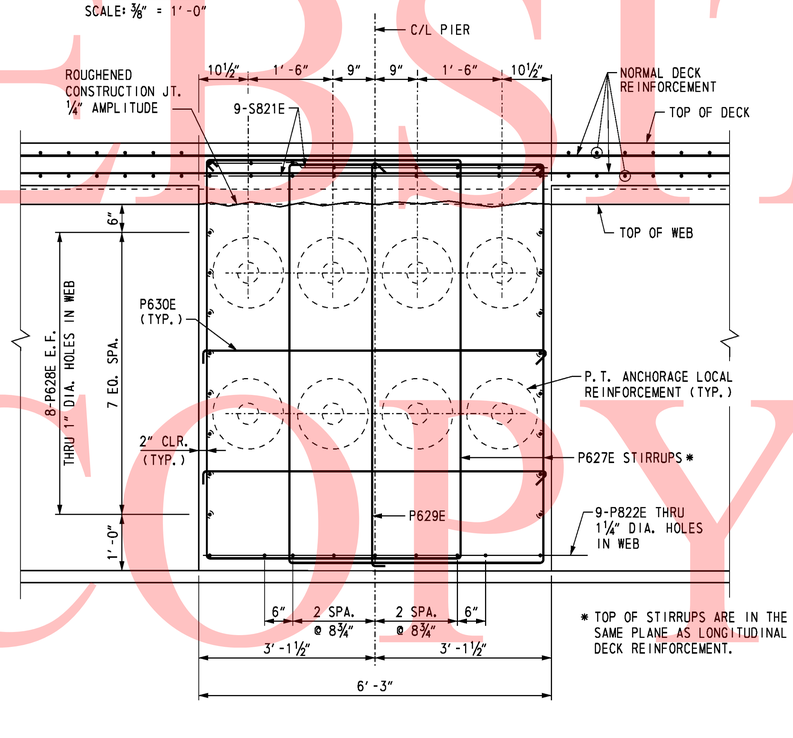

SECTION B-B

SCALE: ¾" = 1'-0"

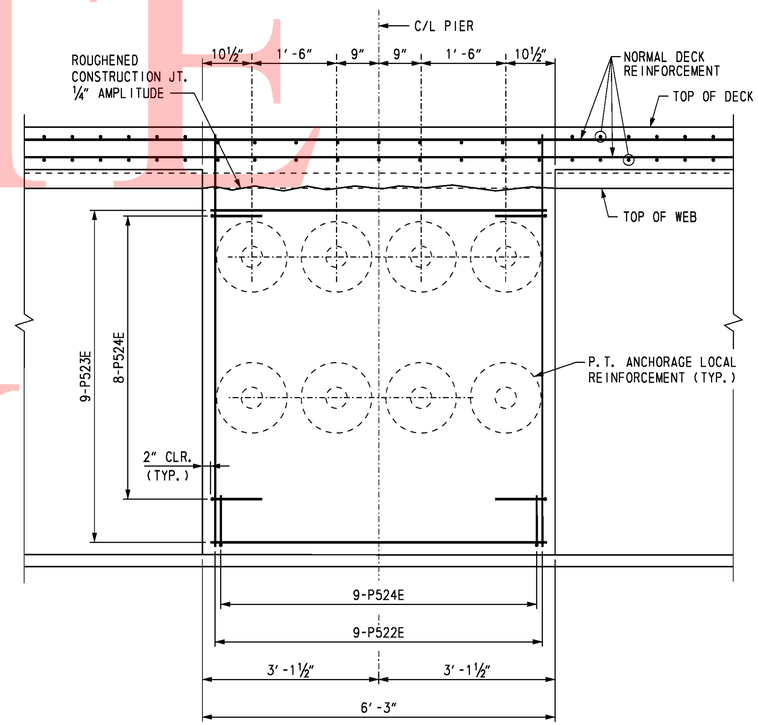

SECTION C-C

SCALE: ¾" = 1'-0"

UNOFFICIAL WEBSITE COPY

DELAWARE DEPARTMENT OF TRANSPORTATION	ADDENDUMS / REVISIONS	SR1 / I-95 INTERCHANGE	CONTRACT 28-090-03	BRIDGE NO. 1-716B	RAMP A OVER I-95	S1-25
			COUNTY NEW CASTLE	DESIGNED BY: K. D. BEAVER	PIER 2 REINFORCEMENT 2	SHEET NO. 219
				CHECKED BY: R. F. KIRCHNER		TOTAL SHTS. 803

untitled 10/28/2010 O:\20832687-XM\CAD\Bridge\BR-S1\pr10_BR-S1_sr1.dgn

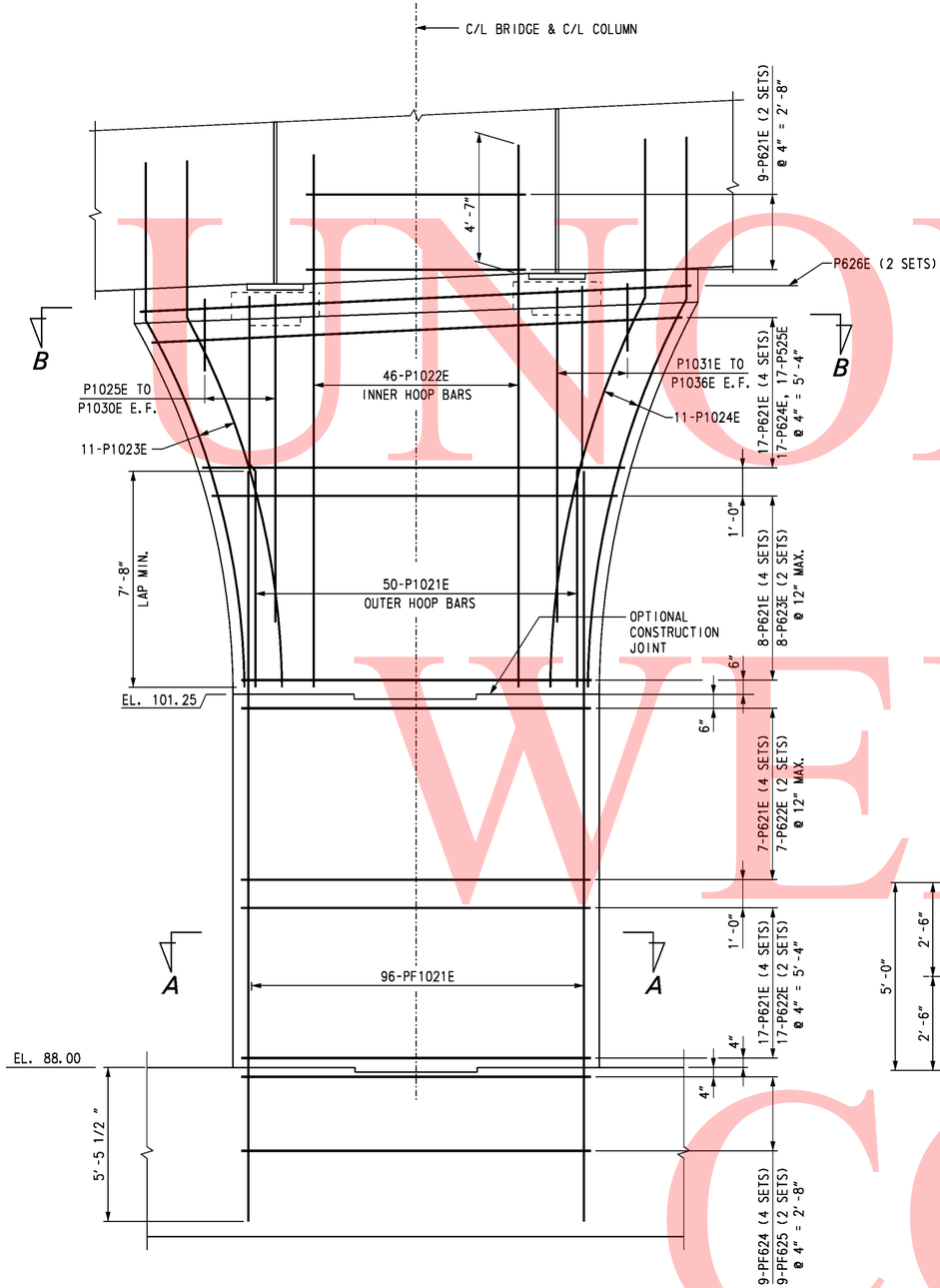

ELEVATION

SCALE: 3/8" = 1'-0"

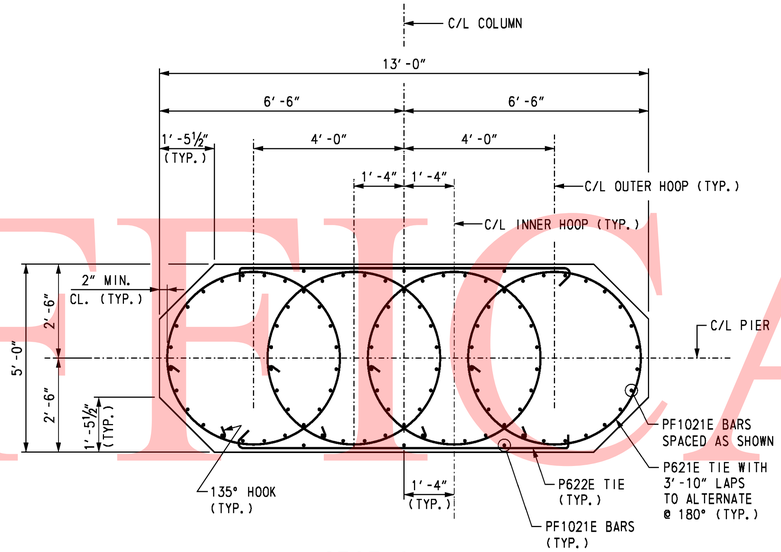

SECTION A-A

SCALE: 1/2" = 1'-0"

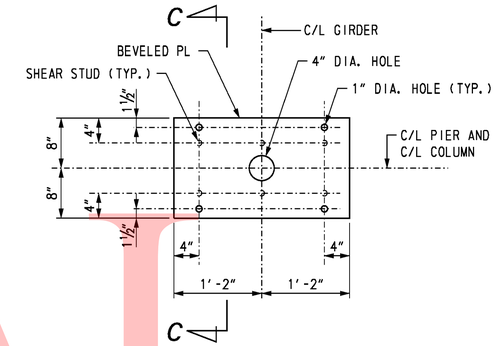

PLAN

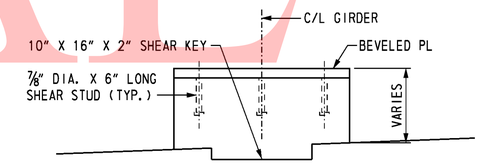

ELEVATION

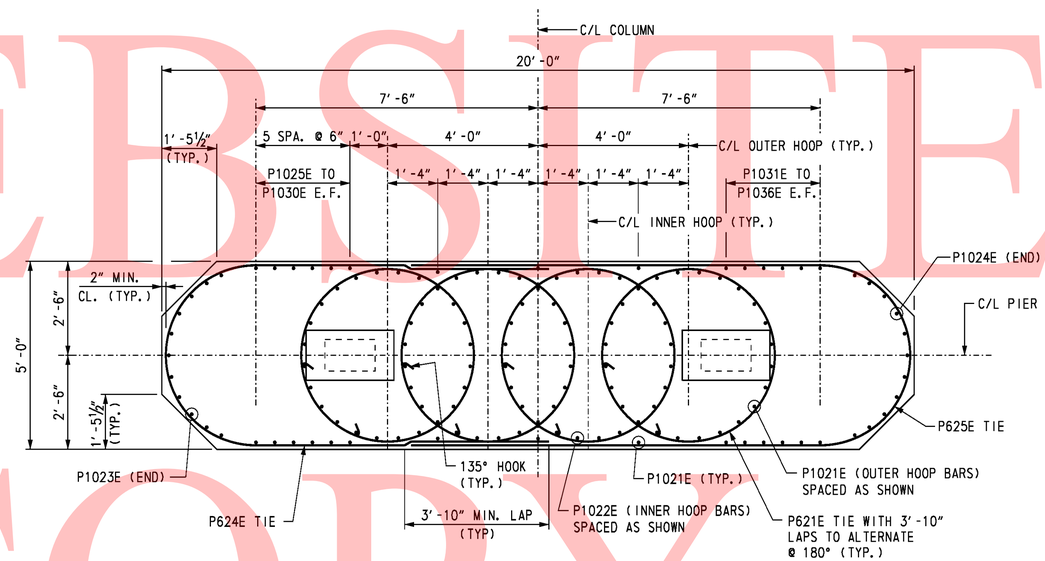

SECTION B-B

SCALE: 1/2" = 1'-0"

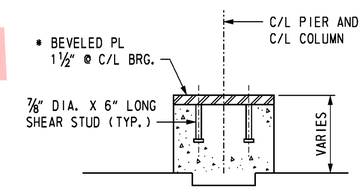

* BEVELED STEEL SHIMS MAY BE PROVIDED IN CONJUCTION WITH UNIFORM STEEL PLATE THICKNESS.

SECTION C-C

MASONRY PAD DETAILS

SCALE: 1" = 1'-0"

NOTE:

FIELD CUT P1021E BARS IN VICINITY OF MASONRY PADS AS REQUIRED TO CLEAR MASONRY PAD.

CROSS REFERENCE NOTES:

1. FOR BRIDGE PLAN AND ELEVATION, SEE DWG. S1-1.
2. FOR PIER PLAN AND ELEVATION, SEE DWG. S1-18.
3. FOR REINFORCING BAR LIST, SEE DWG. S1-32.

UNOFFICIAL WEBSITE COPY

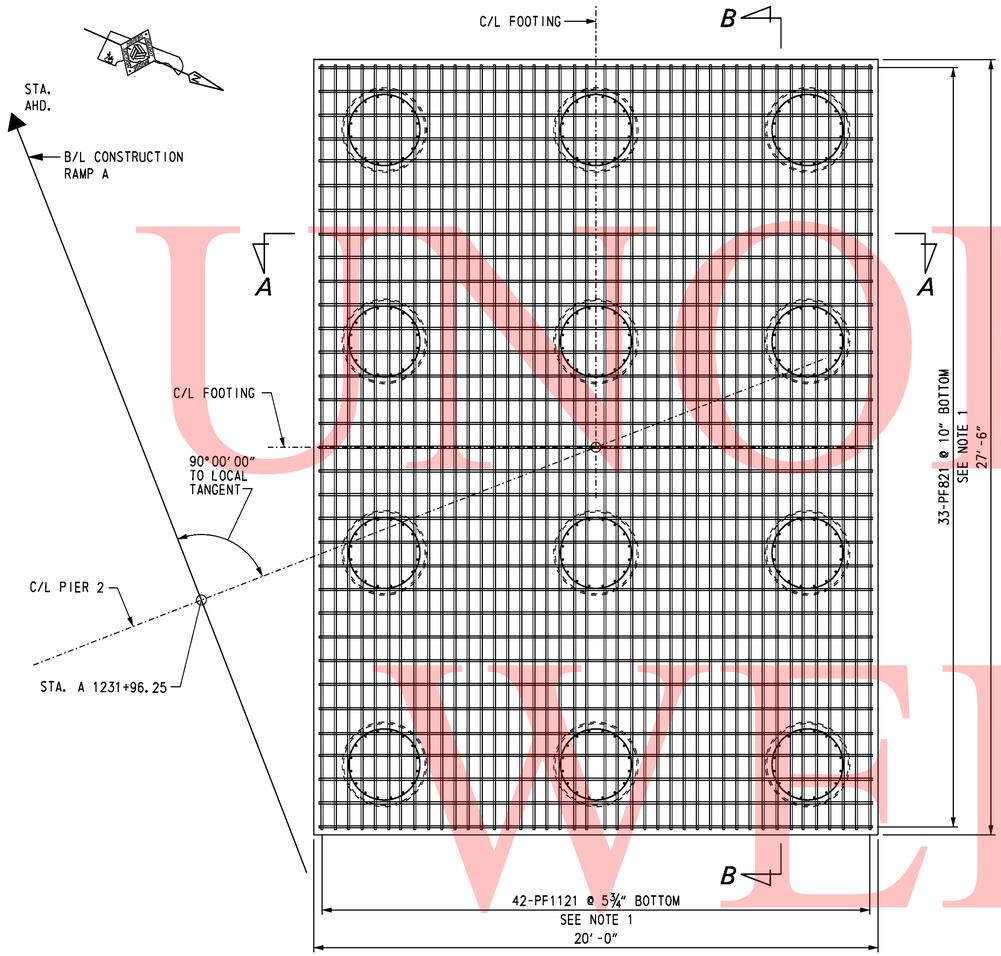

PLAN - BOTTOM MAT FOOTING REINFORCEMENT LAYOUT

SCALE: ⅜″ = 1′-0″

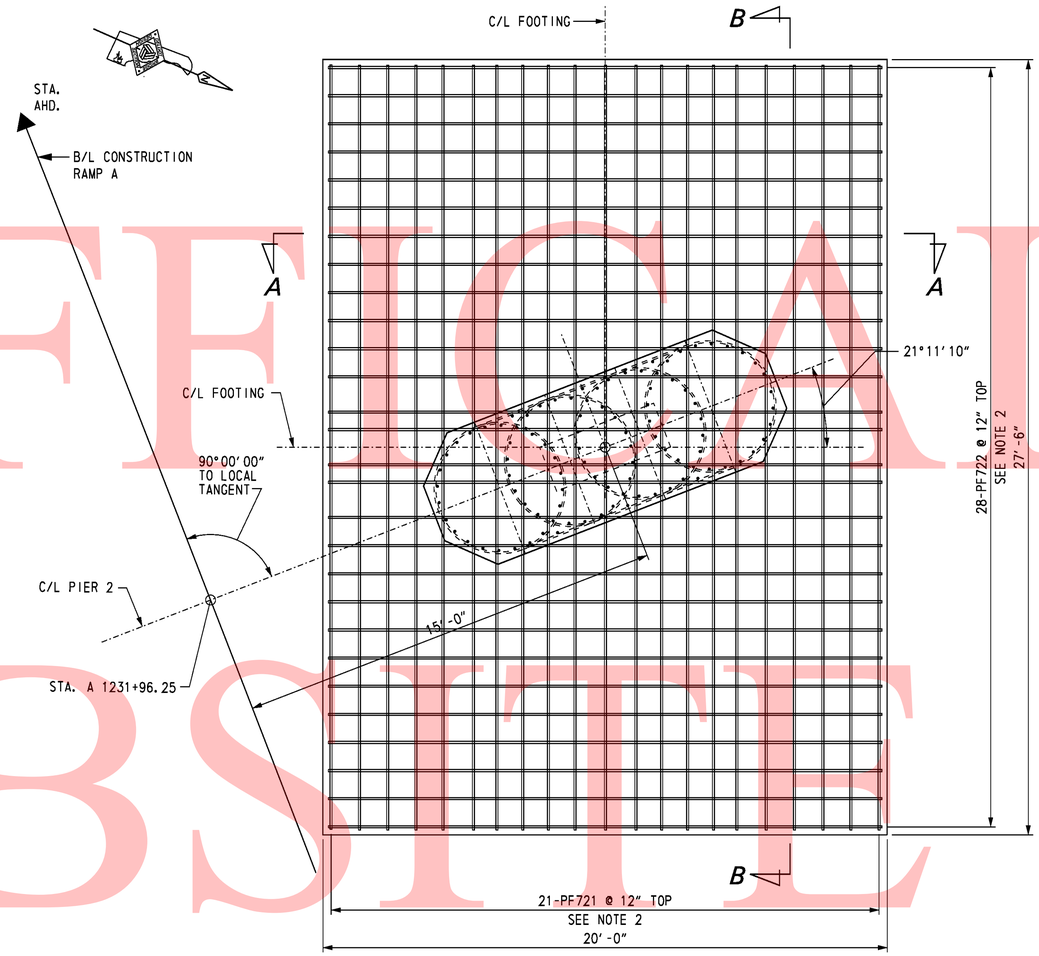

PLAN - TOP MAT FOOTING REINFORCEMENT LAYOUT

SCALE: ⅜″ = 1′-0″

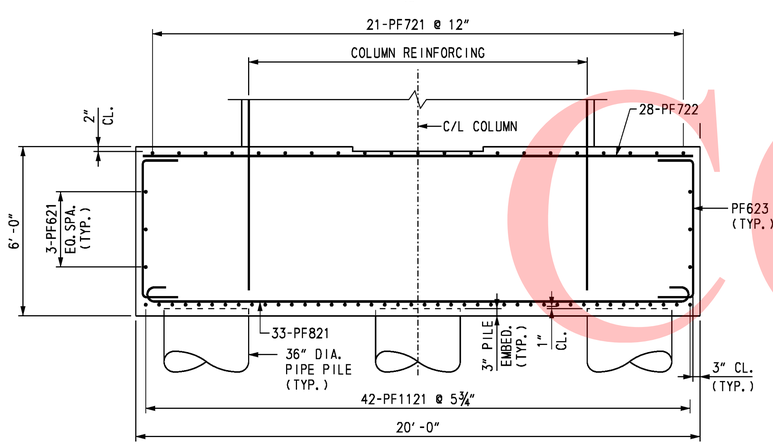

SECTION A-A

SCALE: ⅜″ = 1′-0″

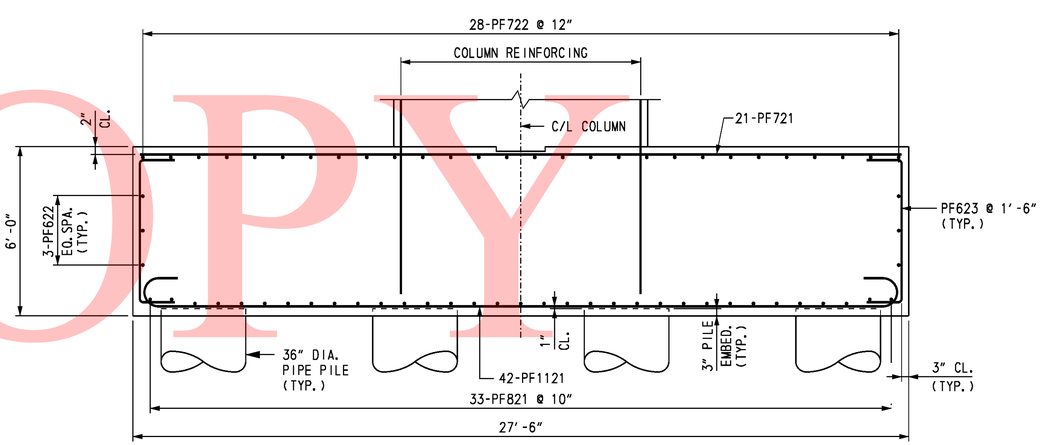

SECTION B-B

SCALE: ⅜″ = 1′-0″

NOTES:

1. ADJUST SPACING OF BOTTOM MAT FOOTING REINFORCING TO CLEAR PIPE PILE REINFORCING.
2. ADJUST SPACING OF TOP MAT FOOTING REINFORCING TO CLEAR COLUMN DOWELS.
3. CONTRACTOR MAY PROVIDE 90° HOOKS ON SOME COLUMN REINFORCEMENT DOWELS IN ORDER TO FACILITATE PLACEMENT OF THE COLUMN REINFORCING.

CROSS REFERENCE NOTES:

1. FOR BRIDGE PLAN AND ELEVATION, SEE DWG. S1-1.
2. FOR PIER FOUNDATION PLAN, SEE DWG. S1-16.
3. FOR PIER PLAN AND ELEVATION, SEE DWG. S1-18.
4. FOR REINFORCING BAR LIST, SEE DWG. S1-32.

UNOFFICIAL WEBSITE COPY

DELAWARE DEPARTMENT OF TRANSPORTATION	ADDENDUMS / REVISIONS	SR1 / I-95 INTERCHANGE	CONTRACT 28-090-03	BRIDGE NO. 1-716B	RAMP A OVER I-95 PIER 2 REINFORCEMENT 4	S1-27 SHEET NO. 221
			COUNTY NEW CASTLE	DESIGNED BY: K. D. BEAVER		TOTAL SHTS. 803
				CHECKED BY: R. F. KIRCHNER		

10/28/2010 O:\20832687-XM\CAD\Bridge\BR-S1\pr12_BR-S1_sr1.dgn untitled

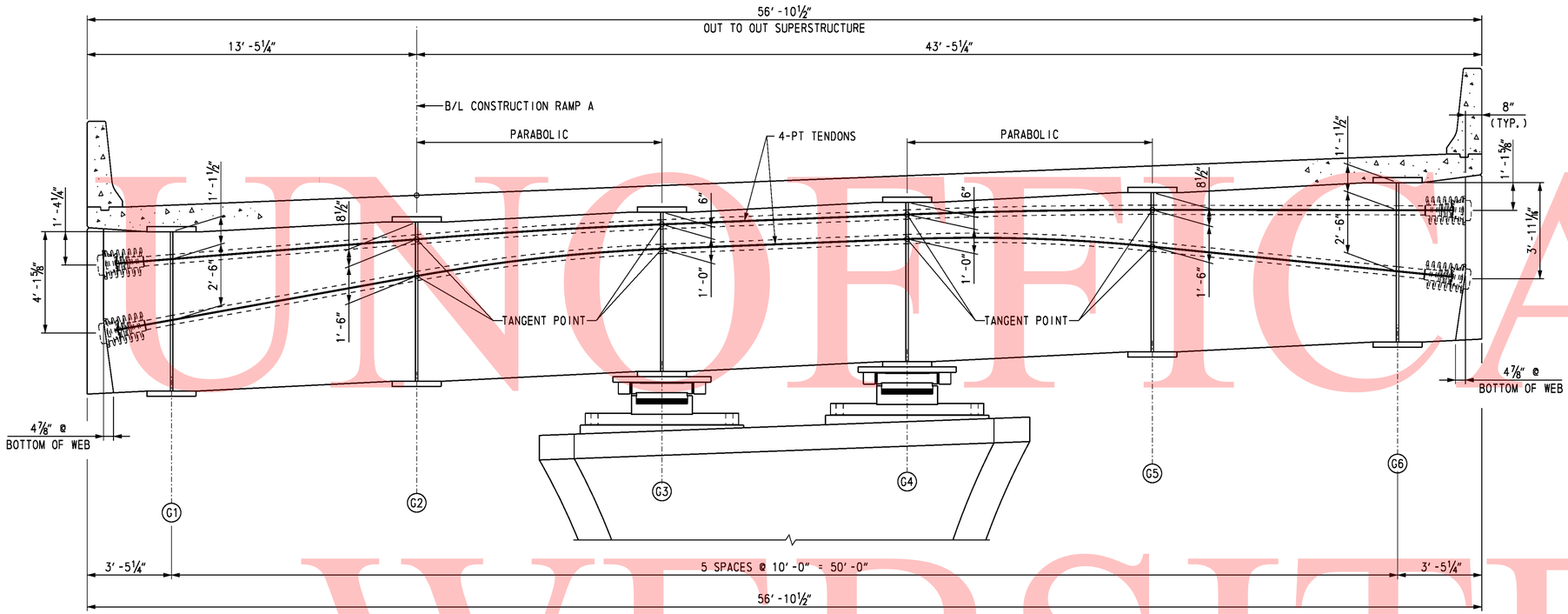

POST-TENSIONING SECTION

SCALE: ⅜" = 1'-0"

SEQUENCE OF CONSTRUCTION:

1. CONSTRUCT PIER FOUNDATION AND COLUMN.
2. AFTER THE FOUNDATION AND COLUMNS HAVE ATTAINED AT LEAST 80% OF THEIR DESIGN COMPRESSIVE STRENGTH, CONSTRUCT TEMPORARY SHORING TO SUPPORT SUPERSTRUCTURE GIRDERS. PIER CAP AND GIRDERS SHALL BE SUPPORTED ON TEMPORARY SHORING FRAMES UNTIL DECK SLAB HAS BEEN CONSTRUCTED AND POST-TENSIONING OPERATIONS HAVE BEEN COMPLETED.
3. ERECT SUPERSTRUCTURE GIRDERS ON TEMPORARY SHORING.
4. POUR DECK CONCRETE IN POSITIVE MOMENT REGIONS 1, 2, 3 AND 4 AS SHOWN ON THE POURING SEQUENCE PLANS. THIS WILL ALLOW THE GIRDERS TO DEFLECT DUE TO THE DECK WEIGHT WITHOUT ANY RESTRAINT AT THE INTEGRAL PIER LOCATIONS.
5. POUR CONCRETE FOR THE INTEGRAL PIER CAP.
6. POUR REMAINING DECK CONCRETE IN NEGATIVE MOMENT REGIONS AFTER PIER CAPS HAVE REACHED A MINIMUM COMPRESSIVE STRENGTH OF 3000 PSI.
7. CONSTRUCT CONCRETE BARRIERS. AS AN ALTERNATE, BARRIERS MAY BE CONSTRUCTED AFTER POST TENSIONING OPERATIONS.
8. AFTER DECK CONCRETE HAS ATTAINED ITS 28 DAY COMPRESSIVE STRENGTH, POST-TENSIONING OPERATIONS MAY COMMENCE. TENDONS SHALL BE STRESSED FROM ONE END OF THE PIER CAP IN THE ORDER SHOWN. CONTRACTOR MAY PROPOSE AN ALTERNATE STRESSING SEQUENCE AND SUBMIT TO THE ENGINEER FOR APPROVAL.
9. DURING THE POST TENSIONING OPERATION, THE GIRDERS SHALL BE SHIMMED AS NECESSARY TO MAINTAIN FULL SUPPORT FROM THE TEMPORARY SHORING.
10. WHEN POST TENSIONING IS COMPLETE, REMOVE TEMPORARY SHORING AND GROUT DUCTS.
11. CONSTRUCT CONCRETE ANCHORAGE COVER AT ENDS OF PIER CAP.

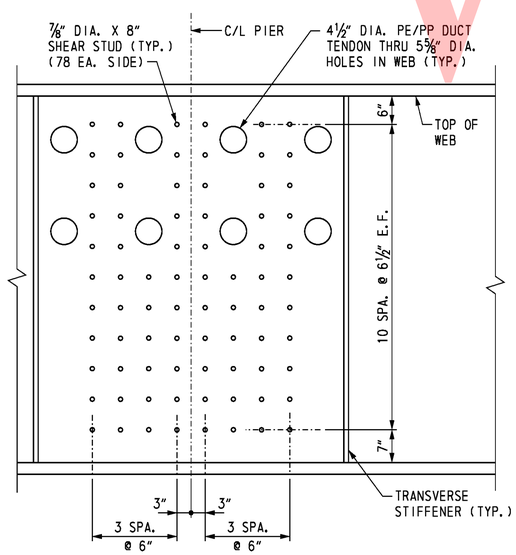

SHEAR STUDS (GIRDERS 2-5)

SCALE: ¾" = 1'-0"

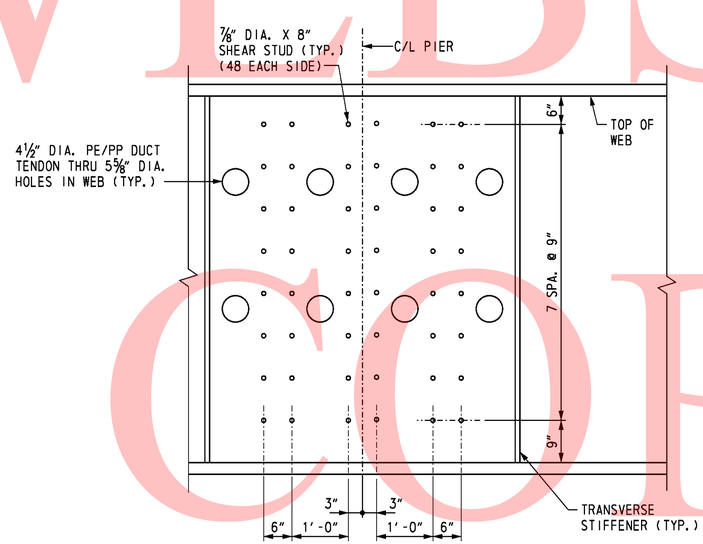

SHEAR STUDS (GIRDERS 1 & 6)

SCALE: ¾" = 1'-0"

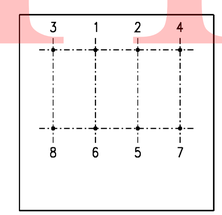

POST-TENSION STRESSING SEQUENCE

NOT TO SCALE

CROSS REFERENCE NOTES:

1. FOR BRIDGE PLAN AND ELEVATION, SEE DWG. S1-1.
2. FOR PIER PLAN AND ELEVATION, SEE DWG. S1-19.
3. FOR PIER CAP REINFORCEMENT DETAILS, SEE DWG. S1-29.
4. FOR PIER COLUMN REINFORCEMENT DETAILS, SEE DWG. S1-30.
5. FOR PIER FOOTING REINFORCEMENT DETAILS, SEE DWG. S1-31.
6. FOR BRIDGE DECK POURING SEQUENCE, SEE DWG. S1-45.

POST TENSIONING NOTES:

MATERIAL PROPERTIES:

CONCRETE CAP: f'c = 8000 psi
f'ci = 5500 psi

POST TENSIONING STEEL:

EACH TENDON CONSISTS OF 22 STRANDS ENCLOSED WITHIN 4½" DIAMETER POLYETHYLENE/POLYPROPYLENE (PE/PP) PLASTIC DUCTS.

STRANDS SHALL BE 0.6 INCH DIAMETER SEVEN WIRE UNCOATED LOW RELAXATION STRANDS CONFORMING TO AASHTO M203 (ASTM A416), GRADE 270.

MODULUS OF ELASTICITY:	28,000 ksi
WOBBLE COEFFICIENT:	0.0002
COEFFICIENT OF FRICTION:	0.23
ANCHOR SET:	0.25 IN
JACKING STRESS:	UPPER TENDON 199,500 PSI
	LOWER TENDON 204,000 PSI
ANCHORING STRESS:	UPPER TENDON 183,000 PSI
	LOWER TENDON 179,000 PSI

1. TENDONS SHALL NOT BE STRESSED UNTIL THE PIER CAP CONCRETE REACHES A MINIMUM COMPRESSIVE STRENGTH OF 5,500 psi.
2. LOCAL ZONE REINFORCEMENT FOR TENDON ANCHORAGES SHALL BE DESIGNED BY THE CONTRACTOR, SHOWN ON SHOP DRAWINGS AND SUBMITTED FOR APPROVAL BY THE ENGINEER.

UNOFFICIAL WEBSITE COPY

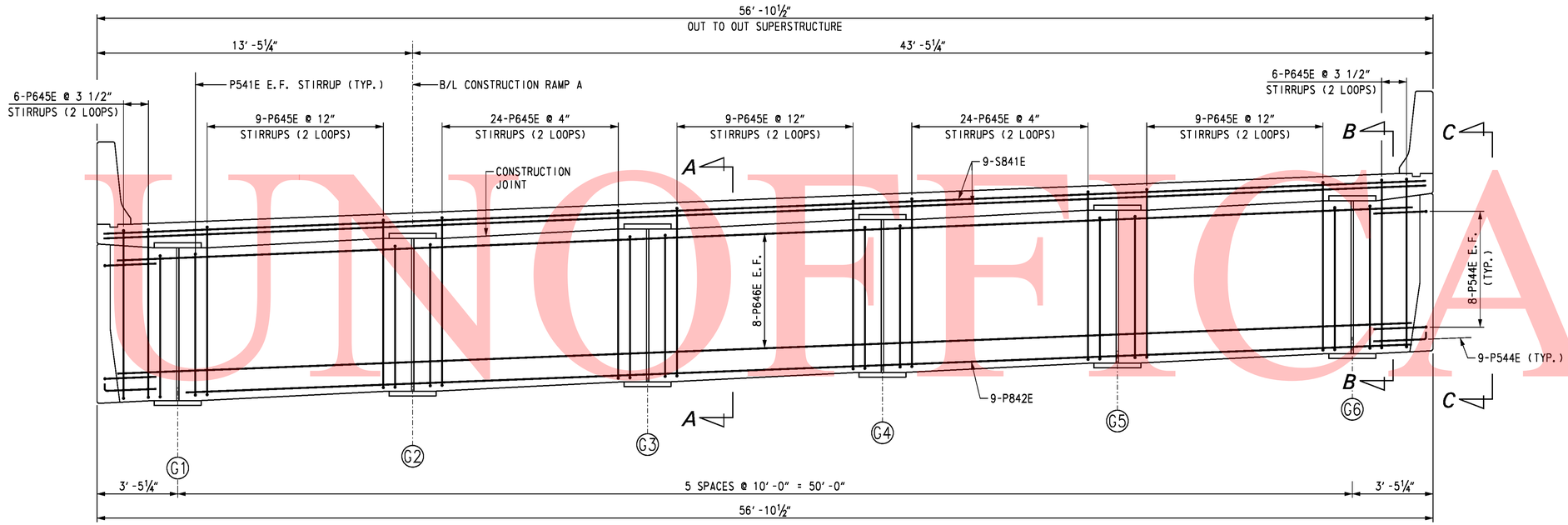

ELEVATION

SCALE: ⅜″ = 1′-0″

CROSS REFERENCE NOTES:

1. FOR BRIDGE PLAN AND ELEVATION, SEE DWG. S1-1.
2. FOR PIER PLAN AND ELEVATION, SEE DWG. S1-19.
3. FOR LOCATION OF SHEAR STUDS ON GIRDER WEB, SEE DWG. S1-28.
4. FOR REINFORCING BAR LIST, SEE DWG. S1-33.

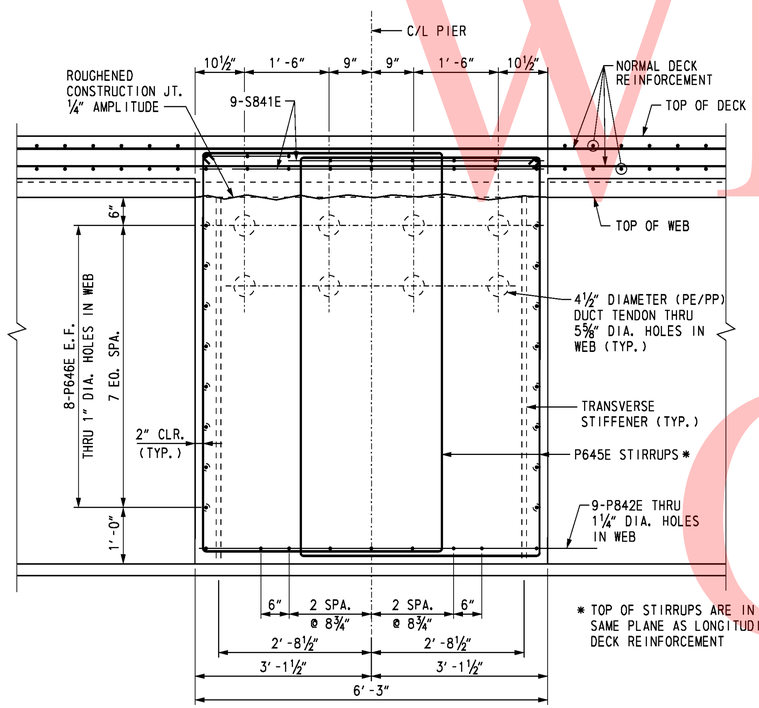

SECTION A-A

SCALE: ¾″ = 1′-0″

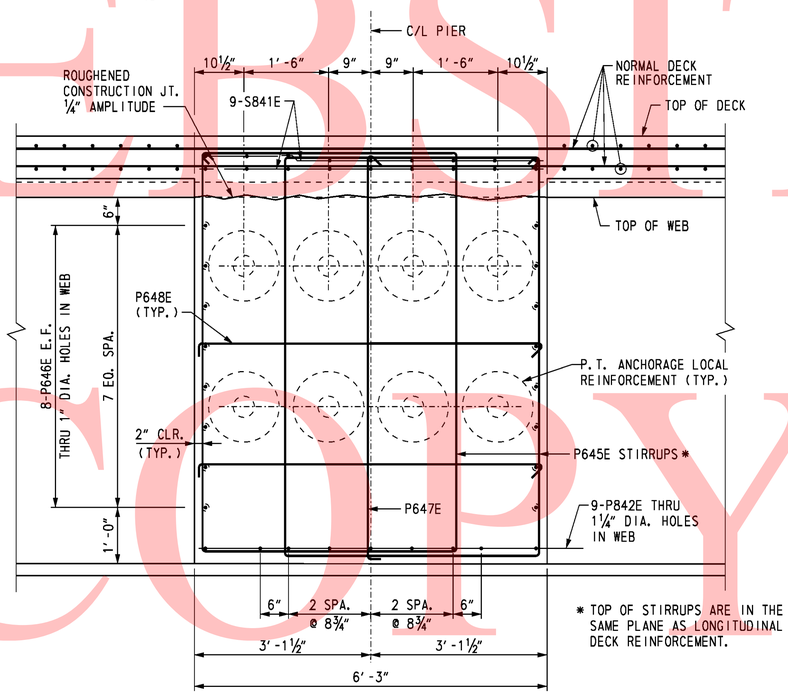

SECTION B-B

SCALE: ¾″ = 1′-0″

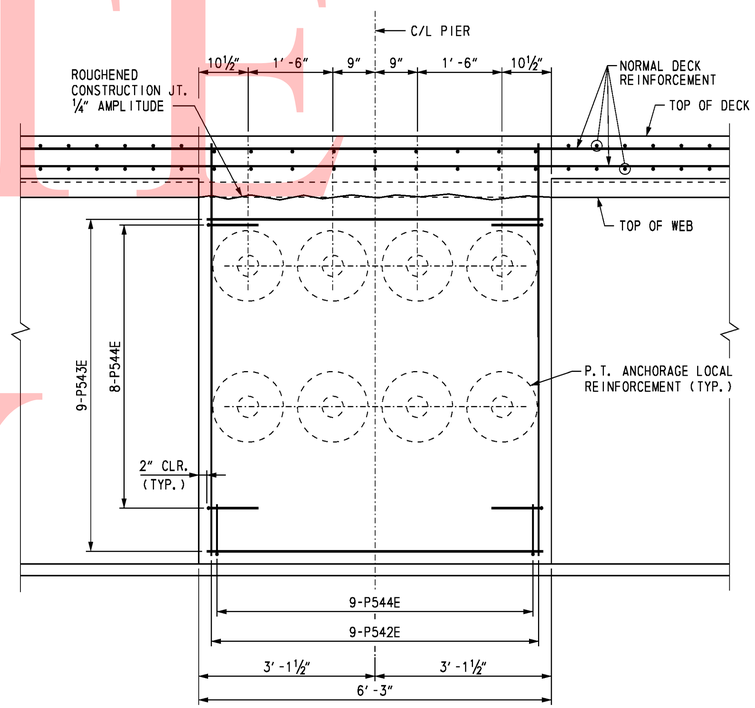

SECTION C-C

SCALE: ¾″ = 1′-0″

UNOFFICIAL WEBSITE COPY

DELAWARE DEPARTMENT OF TRANSPORTATION	ADDENDUMS / REVISIONS	SR1 / I-95 INTERCHANGE	CONTRACT 28-090-03	BRIDGE NO. 1-716B	RAMP A OVER I-95	S1-29 SHEET NO. 223
			COUNTY NEW CASTLE	DESIGNED BY: K. D. BEAVER	PIER 3 REINFORCEMENT 2	TOTAL SHTS. 803
				CHECKED BY: R. F. KIRCHNER		

untitled 10/28/2010 O:\20832687-XM\CAD\Bridge\BR-S1\pr14_BR-S1_sr1.dgn

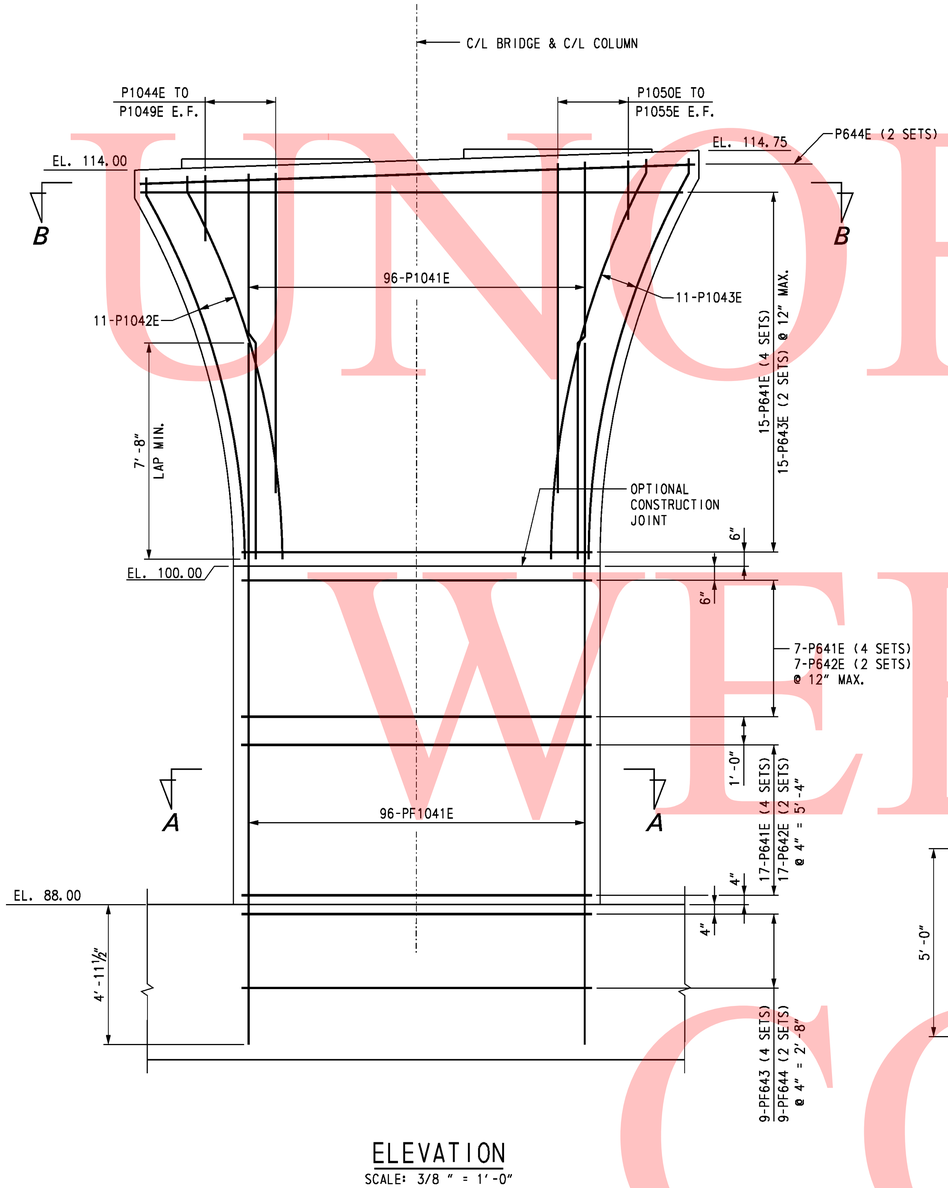

ELEVATION

SCALE: 3/8 " = 1'-0"

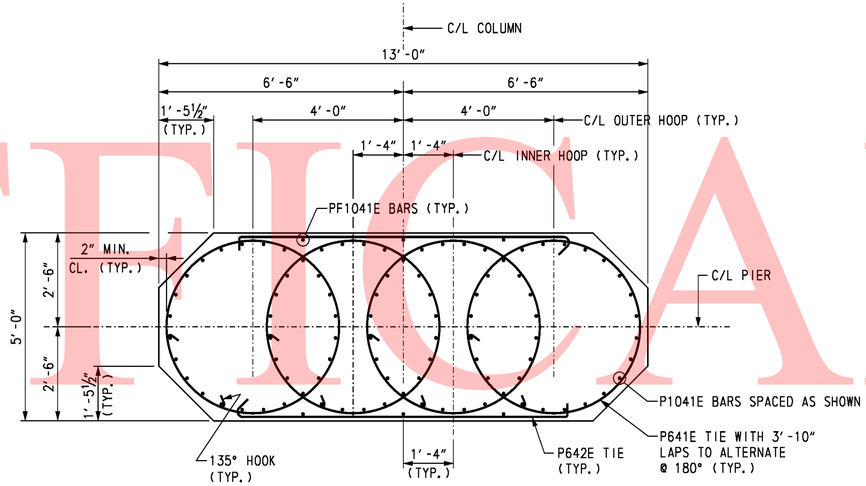

SECTION A-A

SCALE: ½" = 1'-0"

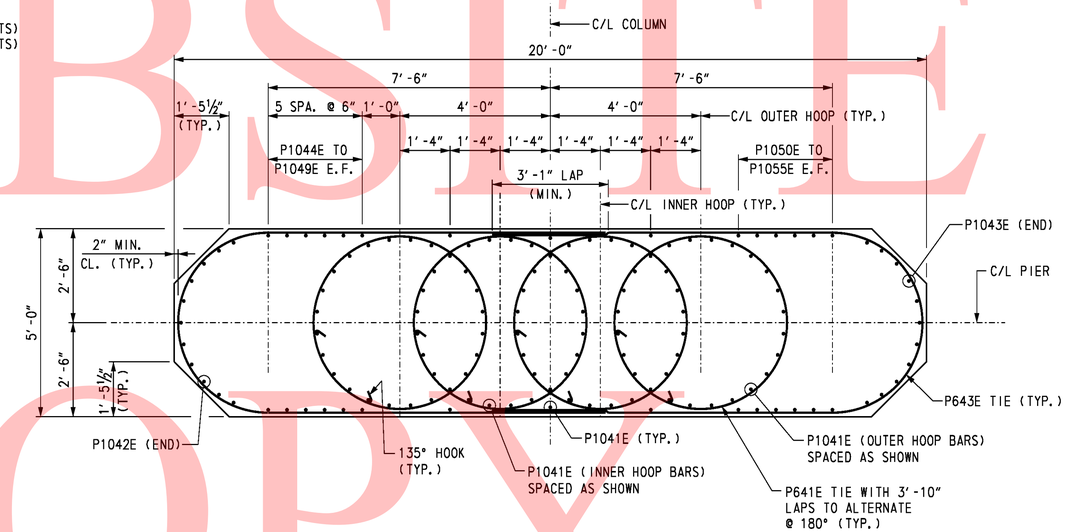

SECTION B-B

SCALE: ½" = 1'-0"

CROSS REFERENCE NOTES:

1. FOR BRIDGE PLAN AND ELEVATION, SEE DWG. S1-1.
2. FOR PIER PLAN AND ELEVATION, SEE DWG. S1-19.
3. FOR REINFORCING BAR LIST, SEE DWG. S1-33.

UNOFFICIAL WEBSITE COPY

10/28/2010 O:\20832687-XM\CAD\Bridge\BR-S1\pr15_BR-S1_sr1.dgn untitled

DELAWARE DEPARTMENT OF TRANSPORTATION	ADDENDUMS / REVISIONS		SR1 / I-95 INTERCHANGE	CONTRACT 28-090-03	BRIDGE NO. 1-716B	RAMP A OVER I-95 PIER 3 REINFORCEMENT 3	S1-30 SHEET NO. 224
				COUNTY NEW CASTLE	DESIGNED BY: K. D. BEAVER		TOTAL SHTS. 803
					CHECKED BY: R. F. KIRCHNER		

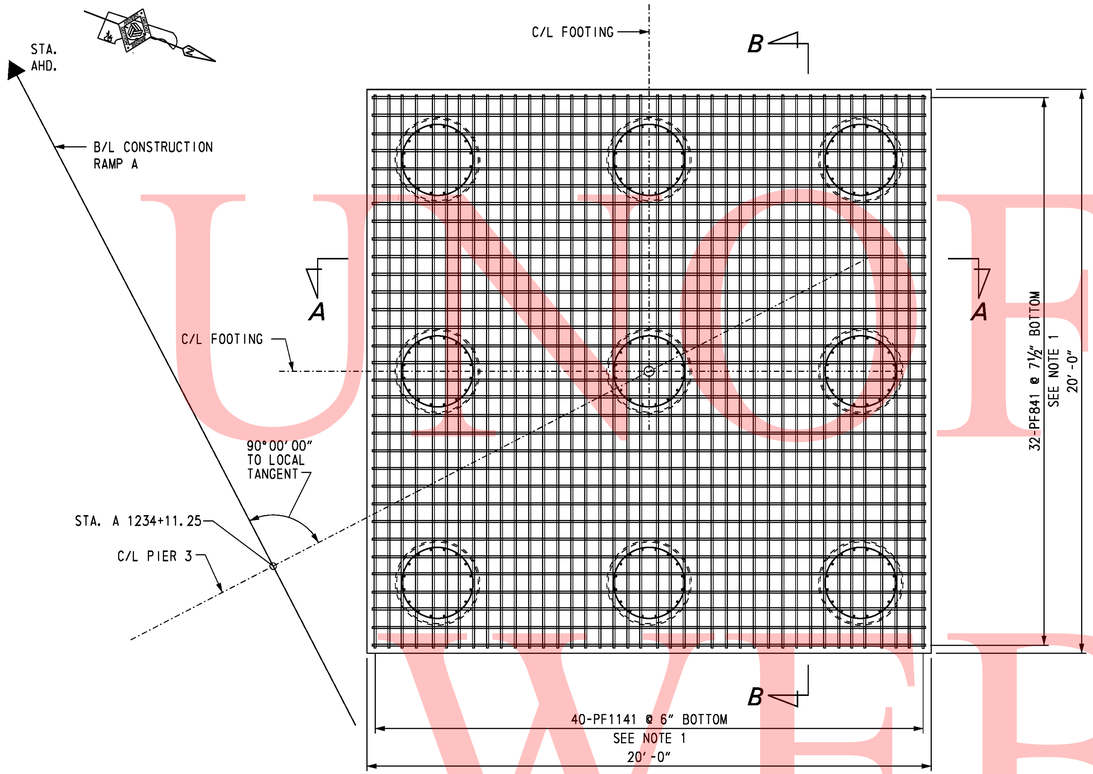

PLAN - BOTTOM MAT FOOTING REINFORCEMENT LAYOUT

SCALE: ⅜″ = 1′-0″

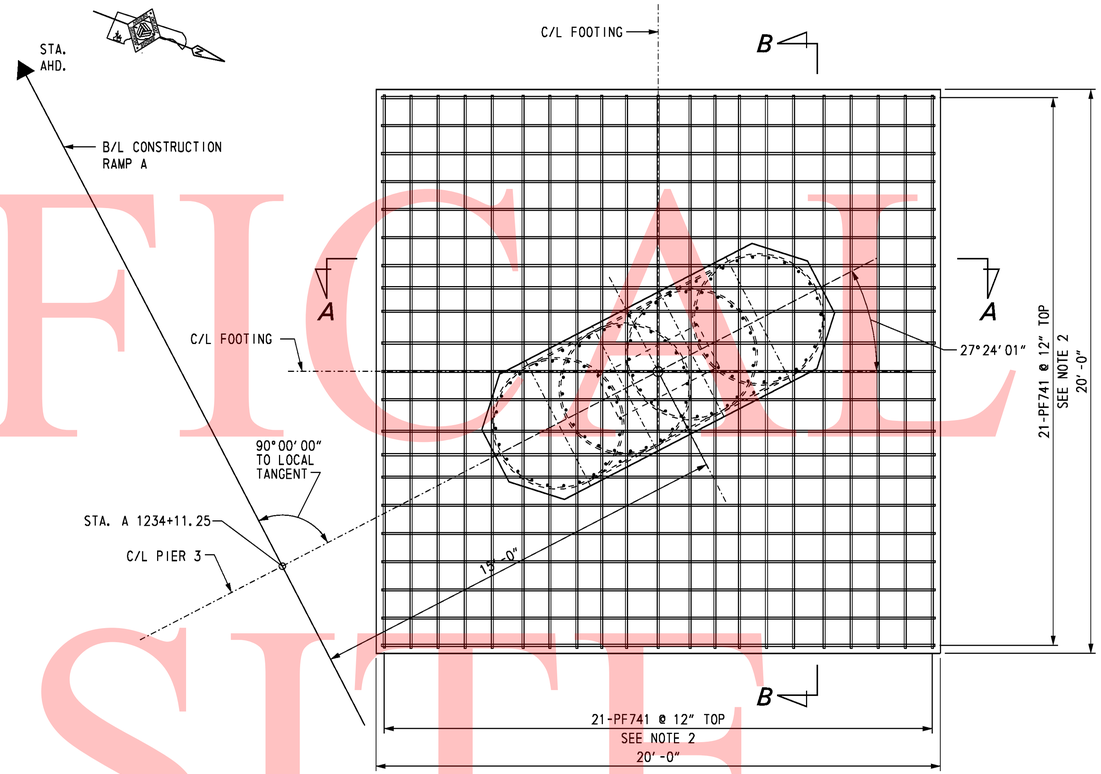

PLAN - TOP MAT FOOTING REINFORCEMENT LAYOUT

SCALE: ⅜″ = 1′-0″

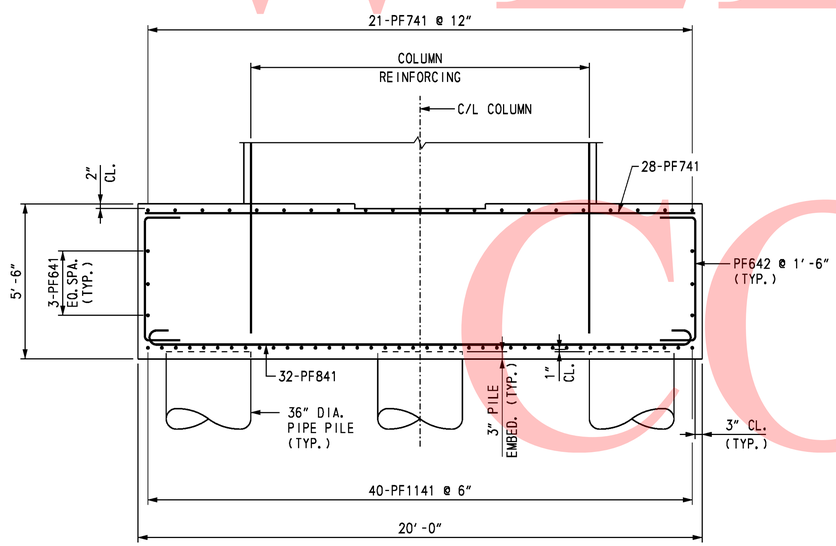

SECTION A-A

SCALE: ⅜″ = 1′-0″

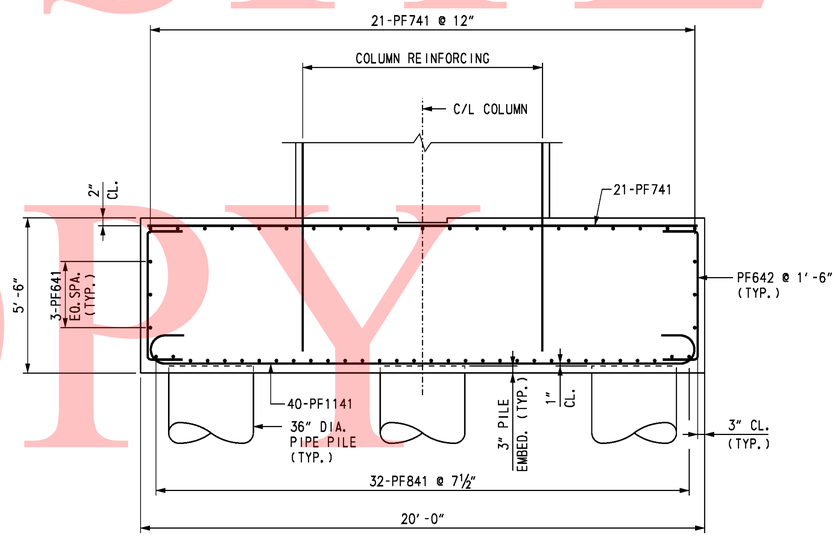

SECTION B-B

SCALE: ⅜″ = 1′-0″

NOTES:

1. ADJUST SPACING OF BOTTOM MAT FOOTING REINFORCING TO CLEAR PIPE PILE REINFORCING.
2. ADJUST SPACING OF TOP MAT FOOTING REINFORCING TO CLEAR COLUMN DOWELS.
3. CONTRACTOR MAY PROVIDE 90° HOOKS ON SOME COLUMN REINFORCEMENT DOWELS IN ORDER TO FACILITATE PLACEMENT OF THE COLUMN REINFORCING.

CROSS REFERENCE NOTES:

1. FOR BRIDGE PLAN AND ELEVATION, SEE DWG. S1-1.
2. FOR PIER FOUNDATION PLAN, SEE DWG. S1-16.
3. FOR PIER PLAN AND ELEVATION, SEE DWG. S1-19.
4. FOR REINFORCING BAR LIST, SEE DWG. S1-32.

UNOFFICIAL WEBSITE COPY

REINFORCING BAR LIST

PIER 1

MARK	LENGTH	NO. BARS	TYPE	A	B	C	D	E	G	H	J	K	O	R	REMARKS
PP401	9′-7″	420	T3									1′-6″	2′-6¾″		
PP801	34′-0″	192	STR.												
PF601	27′-0″	6	STR.												
PF602	19′-6″	6	STR.												
PF603	7′-1″	66	2	1′-0″	5′-1″				1′-0″						
PF604	18′-7″	36	T3S	0′-8″					0′-8″	0′-4½″		2′-7″	4′-8″		
PF605	10′-8″	18	T9	0′-8″	9′-0″				1′-0″	0′-4½″					
PF701	27′-0″	21	STR.												
PF702	19′-6″	28	STR.												
PF801	21′-4″	33	1	0′-11″	19′-6″				0′-11″		0′-8″				
PF1001E	23′-4″	96	STR.												
PF1101	30′-2″	42	1	1′-7″	27′-0″				1′-7″		1′-2¾″				
P501E	6′-10″	20	41	0′-5½″	5′-11″				0′-5½″	0′-3¾″					
P502E	7′-2″	18	STR.												
P503E	5′-11″	18	STR.												
P504E	3′-11″	50	36	0′-10″	3′-1″										
P601E	19′-11″	144	T3S	0′-8″					0′-8″	0′-4½″		3′-10″	4′-8″		
P602E	10′-8″	42	T9	0′-8″	9′-0″				1′-0″	0′-4½″					
P603E	18′-8″ to 25-8″	30	10	5′-8″ to 9′-2″	7′-4″	5′-8″ to 9′-2″							4′-8″	2′-4″	$\Delta_A = \Delta_C = 3''$
P604E	25′-6″	2	10	9′-1″	7′-4″	9′-1″							4′-8″	2′-4″	
P605E	24′-9¾″	174	T1	0′-8″	4′-7″	7′-1⅞″	4′-7″	7′-1⅞″	0′-8″						
P606E	54′-8″	16	STR.												
P607E	8′-10″	12	T9	0′-8″	7′-2″				1′-0″	0′-4½″					
P608E	7′-7″	24	T9	0′-8″	5′-11″				1′-0″	0′-4½″					
P802E	54′-8″	9	STR.												
P1001E	13′-9½″	96	STR.												
P1002E	14′-4″	11	9S		13′-6″		0′-10″	0′-2¾″		0′-10⅝″			13′-5″	25′-8½″	
P1003E	15′-4″	11	9S		14′-6″		0′-10″	0′-2½″		0′-10⅝″			14′-5¾″	29′-11½″	
P1004E	2′-3″	2	STR.												
P1005E	3′-5″	2	STR.												
P1006E	4′-7½″	2	STR.												
P1007E	6′-1″	2	STR.												
P1008E	7′-10″	2	STR.												
P1009E	10′-5″	2	STR.												
P1010E	2′-2″	2	STR.												
P1011E	3′-3½″	2	STR.												
P1012E	4′-5½″	2	STR.												
P1013E	6′-0½″	2	STR.												
P1014E	7′-11″	2	STR.												
P1015E	10′-7½″	2	STR.												
S801E	56′-6″	18	STR.												

PIER 2

MARK	LENGTH	NO. BARS	TYPE	A	B	C	D	E	G	H	J	K	O	R	REMARKS
PP421	9′-7″	420	T3									1′-6″	2′-6¾″		
PP821	34′-0″	192	STR.												
PF621	27′-0″	6	STR.												
PF622	19′-6″	6	STR.												
PF623	7′-1″	66	2	1′-0″	5′-1″				1′-0″						
PF624	18′-7″	36	T3S	0′-8″					0′-8″	0′-4½″		2′-7″	4′-8″		
PF625	10′-8″	18	T9	0′-8″	9′-0″				1′-0″	0′-4½″					
PF721	27′-0″	21	STR.												
PF722	19′-6″	28	STR.												
PF821	21′-4″	33	1	0′-11″	19′-6″				0′-11″		0′-8″				
PF1021E	27′-3″	96	STR.												
PF1121	30′-2″	42	1	1′-7″	27′-0″				1′-7″		1′-2¾″				
P521E	6′-10″	20	41	0′-5½″	5′-11″				0′-5½″	0′-3¾″					
P522E	7′-2″	18	STR.												
P523E	5′-11″	18	STR.												
P524E	3′-11″	50	36	0′-10″	3′-1″										
P621E	19′-11″	214	T3S	0′-8″					0′-8″	0′-4½″		3′-10″	4′-8″		
P622E	10′-8″	48	T9	0′-8″	9′-0″				1′-0″	0′-4½″					
P623E	19′-4″ to 21′-4″	16	10	6′-0″ to 7′-0″	7′-4″	6′-0″ to 7′-0″							4′-8″	2′-4″	$\Delta_A = \Delta_C =$ 1¾″(-)
P624E	18′-2″	17	10	5′-5″	7′-4″	5′-5″							4′-8″	2′-4″	
P625E	25′-10″ to 34′-2″	17	10	9′-3″ to 13′-5″	7′-4″	9′-3″ to 13′-5″							4′-8″	2′-4″	$\Delta_A = \Delta_C = 3\frac{1}{8}''$
P626E	25′-6″	2	10	9′-1″	7′-4″	9′-1″							4′-8″	2′-4″	
P627E	24′-9¾″	156	T1	0′-8″	4′-7″	7′-1⅞″	4′-7″	7′-1⅞″	0′-8″						
P628E	54′-8″	16	STR.												
P629E	8′-10″	12	T9	0′-8″	7′-2″				1′-0″	0′-4½″					
P630E	7′-7″	24	T9	0′-8″	5′-11″				1′-0″	0′-4½″					
P631E	27′-5¾″	9	T1	0′-8″	5′-11″	7′-1⅞″	5′-11″	7′-1⅞″	0′-8″						
P822E	54′-8″	9	STR.												
P1021E	13′-11″	50	STR.												
P1022E	19′-0″	46	STR.												
P1023E	19′-6″	11	9S		13′-9″		5′-9″	1′-6″		0′-10⅝″			13′-7½″	26′-6″	
P1024E	20′-2″	11	9S		14′-5″		5′-9″	1′-5″		0′-10⅝″			14′-4″	29′-3″	
P1025E	2′-4″	2	STR.												
P1026E	3′-5″	2	STR.												
P1027E	4′-8″	2	STR.												
P1028E	6′-1″	2	STR.												
P1029E	7′-10½″	2	STR.												
P1030E	10′-6½″	2	STR.												
P1031E	2′-2½″	2	STR.												
P1032E	3′-3½″	2	STR.												
P1033E	4′-7″	2	STR.												
P1034E	6′-0½″	2	STR.												
P1035E	7′-11″	2	STR.												
P1036E	10′-7½″	2	STR.												
S821E	56′-6″	18	STR.												

BENDING DIAGRAMS

ALL DIMENSIONS ARE FROM OUT TO OUT.

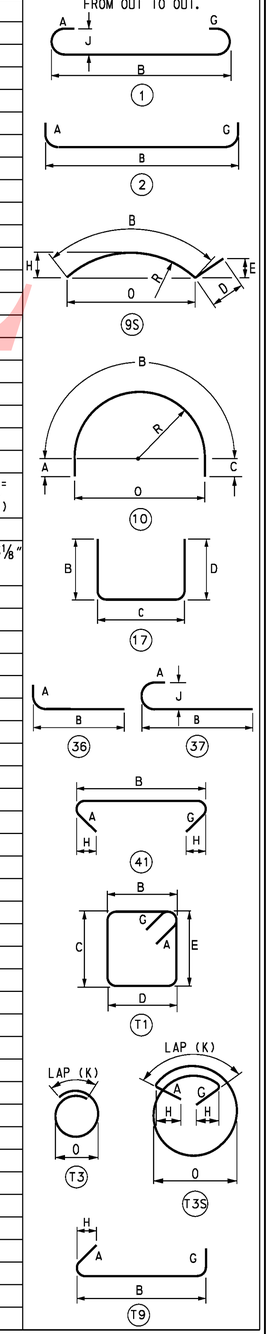

UNOFFICIAL WEBSITE COPY

DELAWARE DEPARTMENT OF TRANSPORTATION

ADDENDUMS / REVISIONS

SR1 / I-95 INTERCHANGE

CONTRACT	BRIDGE NO.	1-716B
28-090-03	DESIGNED BY: K.D. BEAVER	
COUNTY		
NEW CASTLE	CHECKED BY: J.S. LI	

RAMP A OVER I-95

PIERS 1 AND 2 REINFORCING BAR LIST

S1-32

SHEET NO. 226

TOTAL SHTS. 803

10/28/2010 O:\20832687-XM\CAD\Bridge\BR-S1\pr17_BR-S1_sr1.dgn
untitled

REINFORCING BAR LIST

PIER 3

MARK	LENGTH	NO. BARS	TYPE	A	B	C	D	E	G	H	J	K	O	R	REMARKS
PP441	9′-7″	315	T3									1′-6″	2′-6¾″		
PP841	34′-0″	144	STR.												
PF641	19′-6″	12	STR.												
PF642	6′-7″	28	2	1′-0″	4′-7″				1′-0″						
PF643	18′-7″	36	T3S	0′-8″					0′-8″	0′-4½″		2′-7″	4′-8″		
PF644	10′-8″	18	T9	0′-8″	9′-0″				1′-0″	0′-4½″					
PF741	19′-6″	42	STR.												
PF841	21′-4″	32	1	0′-11″	19′-6″				0′-11″		0′-8″				
PF1041E	25′-2″	96	STR.												
PF1141	22′-8″	40	1	1′-7″	19′-6″				1′-7″		1′-2¾″				
P541E	6′-10″	20	41	0′-5½″	5′-11″				0′-5½″	0′-3¾″					
P542E	7′-2″	18	STR.												
P543E	5′-11″	18	STR.												
P544E	3′-11″	50	36	0′-10″	3′-1″										
P641E	19′-11″	156	T3S	0′-8″					0′-8″	0′-4½″		3′-10″	4′-8″		
P642E	10′-8″	48	T9	0′-8″	9′-0″				1′-0″	0′-4½″					
P643E	18′-8″ to 25′-8″	30	10	5′-8″ to 9′-2″	7′-4″	5′-8″ to 9′-2″							4′-8″	2′-4″	$\Delta_A = \Delta_C = 3''$
P644E	25′-6″	2	10	9′-1″	7′-4″	9′-1″							4′-8″	2′-4″	
P645E	24′-9¾″	174	T1	0′-8″	4′-7″	7′-1⅞″	4′-7″	7′-1⅞″	0′-8″						
P646E	54′-8″	16	STR.												
P647E	8′-10″	12	T9	0′-8″	7′-2″				1′-0″	0′-4½″					
P648E	7′-7″	24	T9	0′-8″	5′-11″				1′-0″	0′-4½″					
P842E	54′-8″	9	STR.												
P1041E	13′-11″	96	STR.												
P1042E	14′-7″	11	9S		13′-8″		0′-10″	0′-2 11/16″		0′-10 11/16″			13′-7″	26′-3″	
P1043E	15′-2″	11	9S		14′-4″		0′-10″	0′-2½″		0′-10⅝″			14′-3½″	29′-2″	
P1044E	2′-3″	2	STR.												
P1045E	3′-5″	2	STR.												
P1046E	4′-7½″	2	STR.												
P1047E	6′-1″	2	STR.												
P1048E	7′-10½″	2	STR.												
P1049E	10′-6″	2	STR.												
P1050E	2′-2″	2	STR.												
P1051E	3′-3½″	2	STR.												
P1052E	4′-6½″	2	STR.												
P1053E	6′-0½″	2	STR.												
P1054E	7′-10½″	2	STR.												
P1055E	10′-7″	2	STR.												
S841E	56′-6″	18	STR.												

BENDING DIAGRAMS

ALL DIMENSIONS ARE FROM OUT TO OUT.

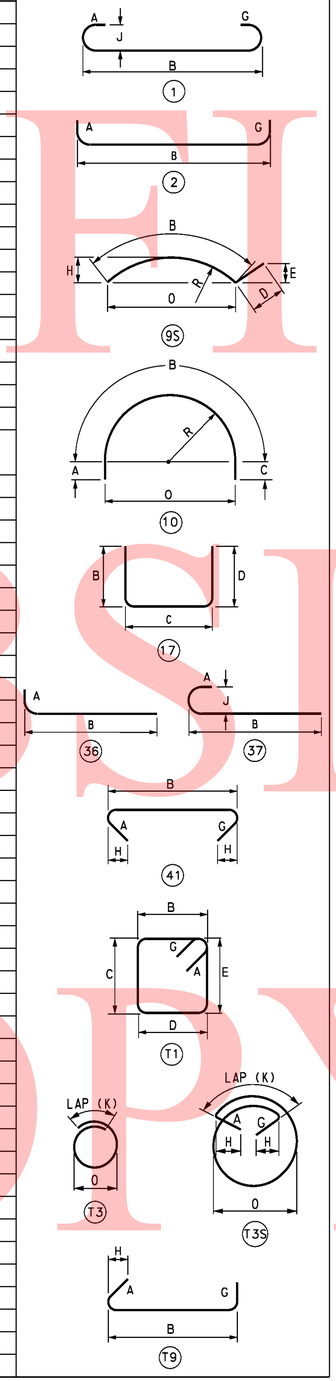

UNOFFICAL WEBSITE COPY

10/28/2010 O:\20832687-XM\CAD\Bridge\BR-S1\pr18_BR-S1_sr1.dgn untitled

DELAWARE DEPARTMENT OF TRANSPORTATION

ADDENDUMS / REVISIONS

SR1 / I-95 INTERCHANGE

CONTRACT	BRIDGE NO.	1-716B	RAMP A OVER I-95	S1-33
28-090-03	DESIGNED BY: K.D. BEAVER			SHEET NO. 227
COUNTY			PIER 3	TOTAL SHTS.
NEW CASTLE	CHECKED BY: J.S. LI		REINFORCING BAR LIST	803

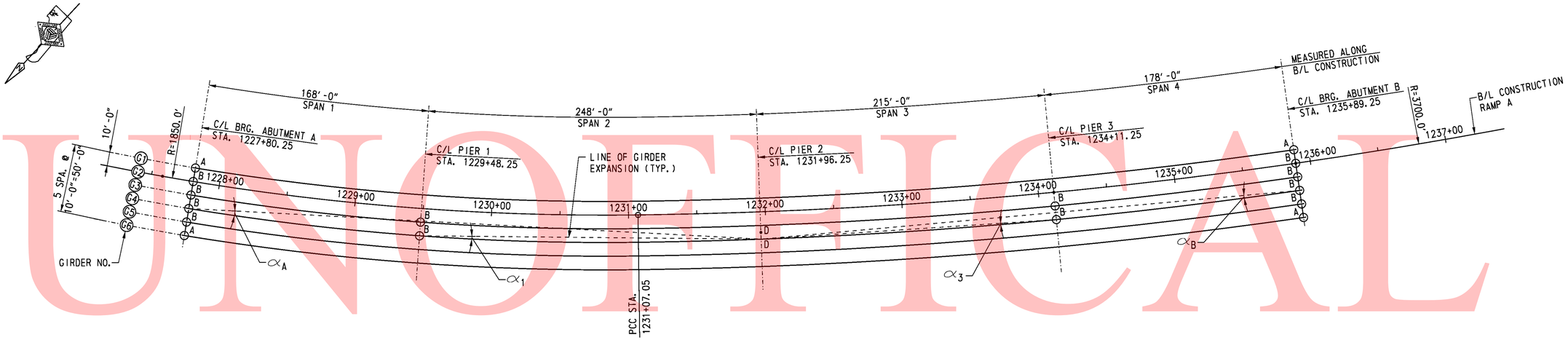

BEARING PLAN

SCALE: 1" = 40'-0"

A = NON-GUIDED EXPANSION BEARING.

B = GUIDED EXPANSION BEARING

D = INTEGRAL COLUMN, NO BEARING.

NOTES:

1. ALL DIMENSIONS ARE IN U.S. CUSTOMARY UNITS.
2. ALL BEARING ASSEMBLIES SHALL BE DESIGNED, MANUFACTURED AND INSTALLED IN ACCORDANCE WITH CURRENT EDITIONS OF THE AASHTO LRFD DESIGN AND CONSTRUCTION SPECIFICATIONS AND THE BEARING MANUFACTURER'S RECOMMENDATIONS.
3. ROUND ALL PTFE CORNERS TO ACCOMMODATE THE MACHINED RECESS IN STEEL GUIDE PLATE/PISTON.
4. ETCH PTFE ON ONE SIDE FOR BONDING INTO THE MACHINED RECESS.
5. PTFE ON THE SIDE OF GUIDE PLATE MUST BE PIGMENTED.
6. PRIOR TO THE APPLICATION OF ADHESIVE, CLEAN ALL MATING STEEL AND PTFE SURFACES BY GRIT BLASTING AND DEGREASING. APPLY ADHESIVE AS PER THE MANUFACTURER'S RECOMMENDATION.
7. LUBRICATE ALL SURFACES OF NEOPRENE DISC WITH SILICONE GREASE IN ACCORDANCE WITH NATO CODE NUMBER S-736 (SAE AS8660).
8. CUT FLAT BRASS SEALING RING ENDS AT 45 DEGREE ANGLE WITH A MAXIMUM GAP OF 0.05 INCHES. STAGGER THE OPENINGS IN THE BRASS RINGS 120 DEGREES APART.
9. MARK THE THICKER EDGE OF THE SOLE PLATE AS SUCH FOR THE PURPOSE OF FIELD IDENTIFICATION. PLACE MARK ON THE EDGE OF SOLE PLATE SO THAT IT WILL BE VISIBLE AFTER BEARING INSTALLATION. IN THE CASE OF A SOLE PLATE WITH A COMPOUND BEVEL, PLACE THE MARK ON EITHER EDGE OF THE THICKEST SOLE PLATE CORNER.
10. MARK CENTERLINE OF GUIDED AND NON-GUIDED POT BEARINGS ON THE SIDES OF MASONRY PLATE AND SOLE PLATE. THE CENTERLINE IDENTIFICATION MARKS WILL BE USEFUL TO LOCATE OFFSET DISTANCES IN THE FIELD. USE INDELIBLE INK TO PLACE ALL MARKS.
11. MARK EACH BEARING WITH THE NAME OF THE MANUFACTURER AND TYPE OR MODEL NUMBER. PLACE THE IDENTIFICATION MARK IN A PERMANENT MANNER AND LOCATION SO THAT IT IS VISIBLE AFTER ERECTION.
12. WHEN THE POT IS RECESSED INTO THE MASONRY PLATE, SEAL AROUND THE POT PERIMETER WITH AN APPROVED CAULKING COMPOUND IN THE SHOP.
13. ANCHOR RODS SHALL BE INSTALLED PRIOR TO ERECTION OF STRUCTURAL STEEL.
14. FILL HOLES AROUND ANCHOR RODS WITH A NONHARDENING CAULKING COMPOUND OR ELASTIC JOINT SEALER.
15. BEARING SHALL BE SHIPPED AS ONE UNIT.
16. DESIGN SERVICE LIMIT STATE ELASTOMER & PTFE BEARING PRESSURE IS 3.50 KSI, MINIMUM IS 0.7 KSI.
17. DESIGN ROTATION = 0.03 RADIANS.
    DESIGN COEFFICIENT OF FRICTION BETWEEN PTFE AND STAINLESS STEEL = 0.05.
    THE MANUFACTURED COEFFICIENT OF FRICTION BETWEEN PTFE AND STAINLESS STEEL SHALL NOT BE MORE THAN 0.03.
18. GUIDED AND NON-GUIDED BEARINGS AT ABUTMENTS ARE DESIGNED FOR ONE WAY LONGITUDINAL MOVEMENT OF 2½" PLUS 1" OF CONSTRUCTION TOLERANCE IN LONGITUDINAL DIRECTION. GUIDED BEARINGS AT PIERS 1 AND 3 ARE DESIGNED FOR ONE WAY LONGITUDINAL MOVEMENT OF 1½" PLUS 1" OF CONSTRUCTION TOLERANCE IN LONGITUDINAL DIRECTION. ONE WAY LONGITUDINAL MOVEMENT IS THE MAXIMUM ONE WAY MOVEMENT (EXPANSION OR CONTRACTION) OF SUPERSTRUCTURE WHEN BEARINGS ARE SET AT 60° F.
19. AS AN ALTERNATE TO BEARING DETAILS SHOWN ON THESE PLANS, BEARINGS MAY BE DESIGNED BY BEARING MANUFACTURER USING LOADS, MOVEMENTS, ROTATIONS AND OTHER CRITERIA SPECIFIED ON THESE PLANS. IF THIS ALTERNATE IS SELECTED CONTRACTOR SHALL COORDINATE ANY REVISIONS TO ANCHOR ROD LAYOUT, BEARING PAD ELEVATIONS, ETC.
20. GUIDE BARS FOR THE EXPANSION BEARINGS SHALL BE ORIENTED PARALLEL TO THE ASSUMED DIRECTION OF MOVEMENT CONNECTING EXPANSION BEARING TO RESPECTIVE FIXED BEARING FOR HORIZONTALLY CURVED ALIGNMENT.

MATERIALS:

1. BEARING PLATES SHALL BE A709 GRADE 50W STEEL.
2. ALL ANCHOR RODS SHALL BE ASTM F1554, GRADE 55. ALL NUTS SHALL BE ASTM A563, GRADE DH. ALL WASHERS SHALL BE ASTM F436, TYPE 1. GALVANIZE BOLTS, NUTS AND WASHERS.
3. STAINLESS STEEL: ASTM A167 OR A264, TYPE 304 WITH A SURFACE FINISH OF 8.0 μ-IN RMS OR BETTER.
4. FLAT BRASS SEALING RINGS: ASTM B36 (HALF HARD) SPECIFICATION.
5. ELASTOMERIC DISC: VIRGIN PLAIN NEOPRENE OR NATURAL RUBBER WITH HARDNESS OF BETWEEN 50 AND 60 DUROMETER.
6. PTFE SHEET: (UNFILLED, DIMPLED AND LUBRICATED) MADE FROM VIRGIN TFE RESIN PER ASTM D4894. DIMPLES MUST HAVE A MINIMUM EDGE DISTANCE OF 0.5 INCHES AND CONFORM TO AASHTO LRFD SECTION 14.
7. BEDDING MATERIAL: ⅛" NEOPRENE PAD.

UNOFFICAL WEBSITE COPY

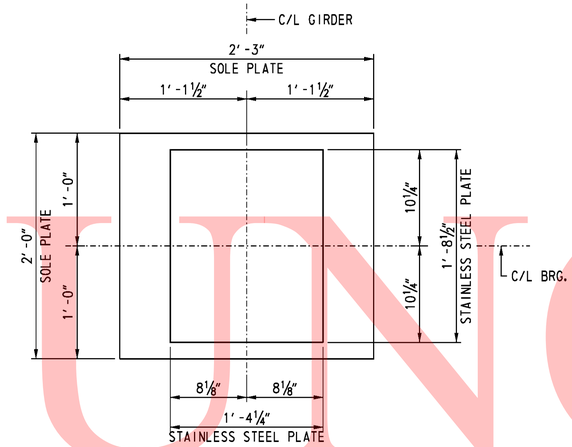

SECTION A-A
SCALE: 1½" = 1'-0"

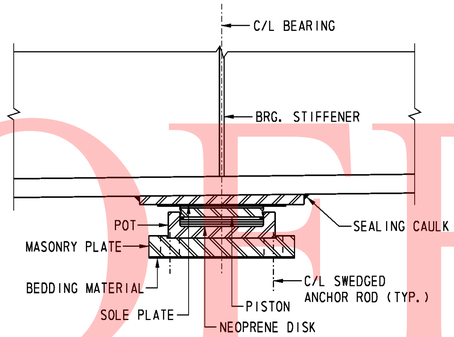

SECTION C-C
SCALE: 1½" = 1'-0"

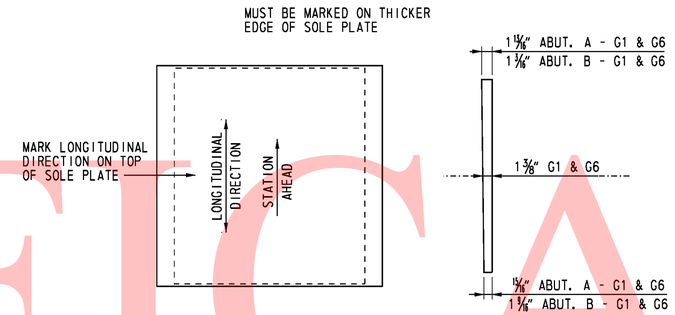

PLAN

SIDE VIEW

SOLE PLATE DETAIL
SCALE: 1½" = 1'-0"

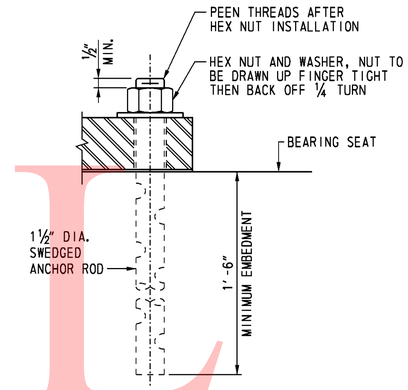

ANCHOR ROD DETAIL
SCALE: 3" = 1'-0"

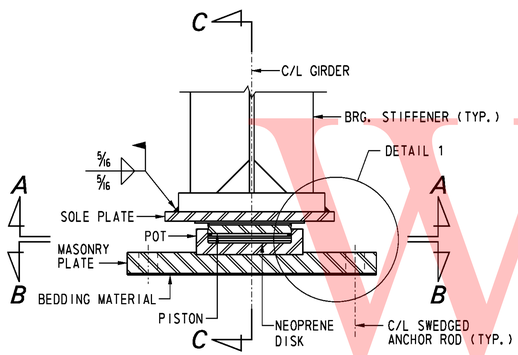

ELEVATION
SCALE: 1½" = 1'-0"

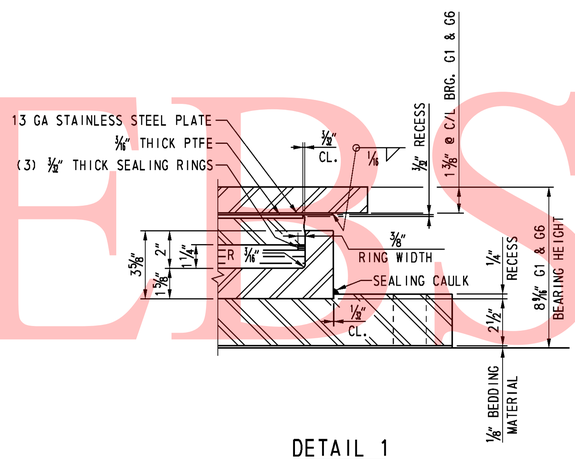

DETAIL 1
SCALE: 3" = 1'-0"

LOCATION	SERVICE VERTICAL LOAD (kips)	STRENGTH VERTICAL LOAD (kips)	ANCHOR ROD	
			QTY.	DIA.
ABUTMENT A - G1 & G6	350	450	4	1½"
ABUTMENT B - G1 & G6	350	450	4	1½"

* BEARING HEIGHT INCLUDES ⅛" BEDDING MATERIAL.
BEARING HEIGHT MEASURED AT C/L BEARING.

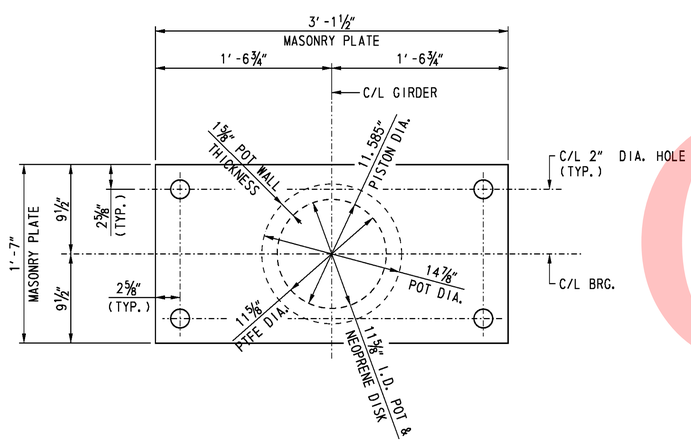

SECTION B-B
SCALE: 1½" = 1'-0"

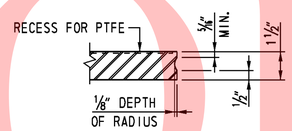

PISTON DETAIL
SCALE: 3" = 1'-0"

NOTE:

SOLE PLATE THICKNESS SHALL NOT BE LESS THAN ¾" INCH.

CROSS REFERENCE NOTE:

FOR BEARING NOTES AND LOCATIONS, SEE DWG. S1-34.

UNOFFICIAL WEBSITE COPY

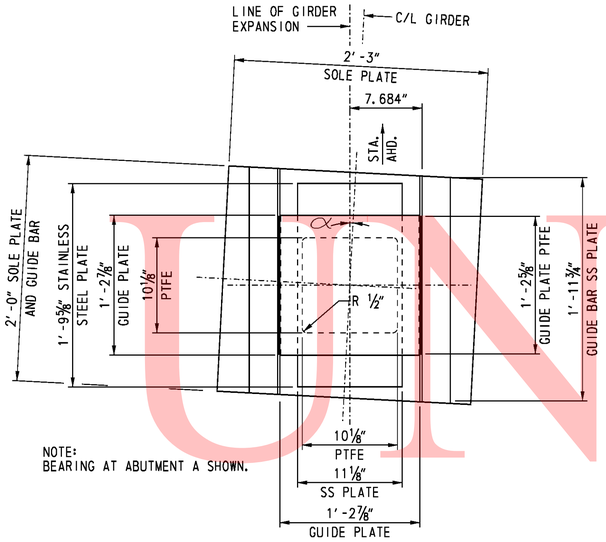

NOTE:
BEARING AT ABUTMENT A SHOWN.

SECTION A-A
SCALE: 1½" = 1'-0"

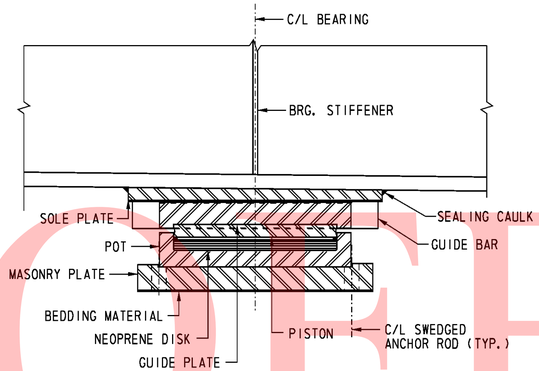

SECTION C-C
SCALE: 1½" = 1'-0"

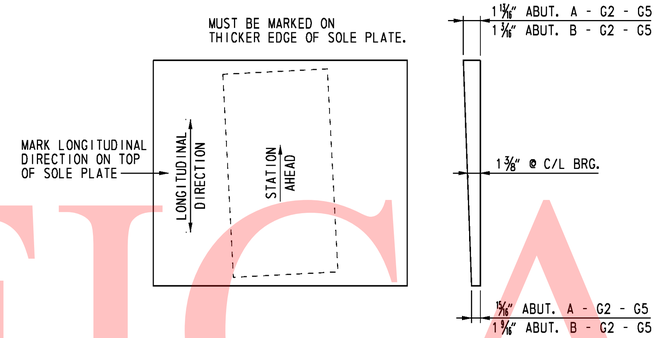

PLAN SIDE VIEW

SOLE PLATE DETAIL
SCALE: 1½" = 1'-0"

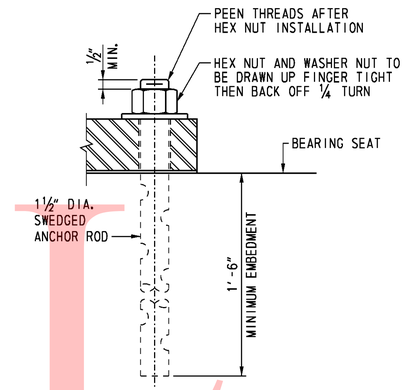

ANCHOR ROD DETAIL
SCALE: 3" = 1'-0"

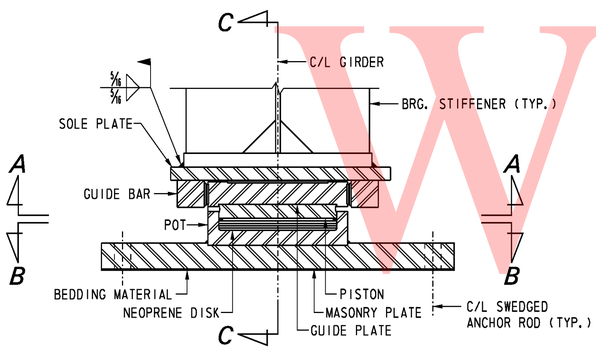

ELEVATION
SCALE: 1½" = 1'-0"

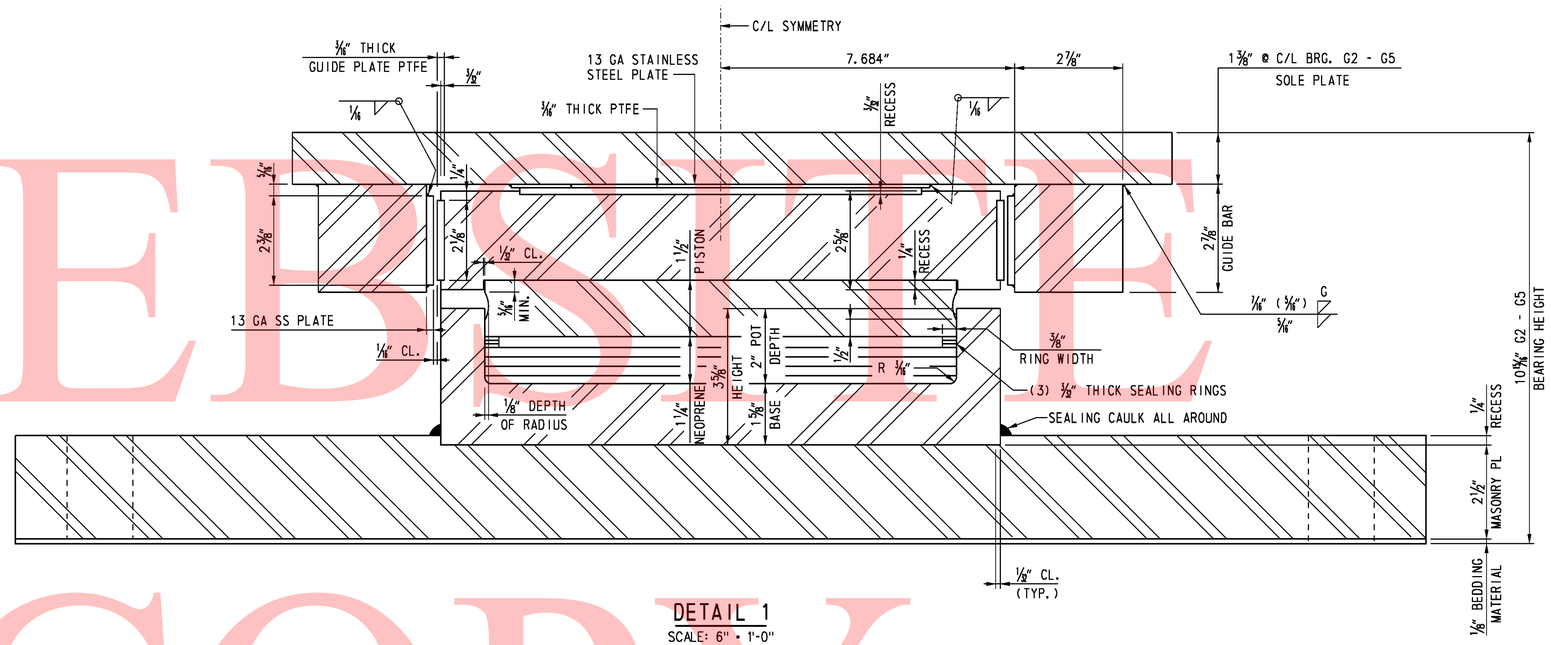

DETAIL 1
SCALE: 6" = 1'-0"

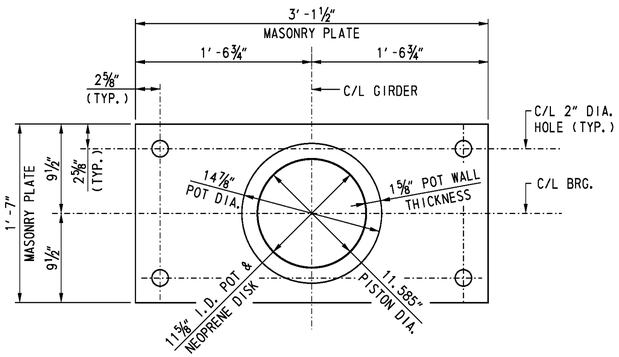

SECTION B-B
SCALE: 1½" = 1'-0"

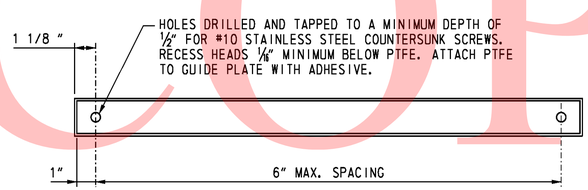

GUIDE PLATE PTFE DETAIL
NOT TO SCALE

LOCATION	SERVICE	STRENGTH		α
	VERTICAL LOAD (kips)	VERTICAL LOAD (kips)	HORIZONTAL LOAD (kips)	
ABUTMENT A - G2-G5	350	450	105	6°-17'-25" LT
ABUTMENT B - G2-G5	350	450	105	3°-02'-34" RT

* BEARING HEIGHT INCLUDES 1/8" BEDDING MATERIAL.
BEARING HEIGHT MEASURED AT C/L BEARING

NOTE:

SOLE PLATE THICKNESS SHALL NOT BE LESS THAN ¾" INCH.

CROSS REFERENCE NOTE:

FOR BEARING NOTES AND LOCATIONS, SEE DWG. S1-34.

UNOFFICIAL WEBSITE COPY

10/28/2010 O:\20832687-XM\CAD\Bridge\BR-S1\bd04_BR-S1_sr1.dgn
untitled

DELAWARE DEPARTMENT OF TRANSPORTATION

ADDENDUMS / REVISIONS

SR1 / I-95 INTERCHANGE

CONTRACT	BRIDGE NO.	1-716B
28-090-03	DESIGNED BY: M.E. PEAL	
COUNTY		
NEW CASTLE	CHECKED BY: G.P. MISTRY	

RAMP A OVER I-95

GUIDED EXPANSION BEARING AT ABUTMENTS

S1-36
SHEET NO.
230
TOTAL SHTS.
803

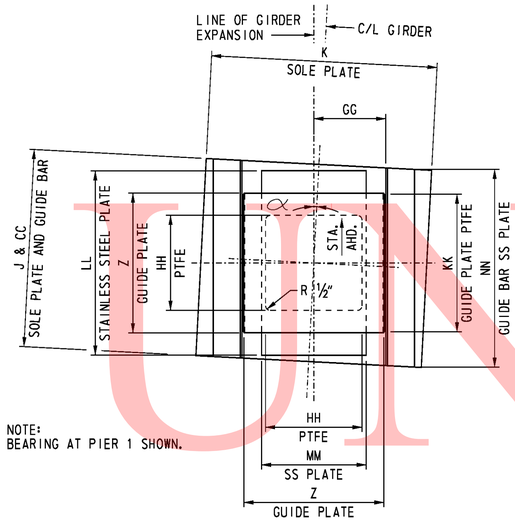

NOTE:
BEARING AT PIER 1 SHOWN.

SECTION A-A
NOT TO SCALE

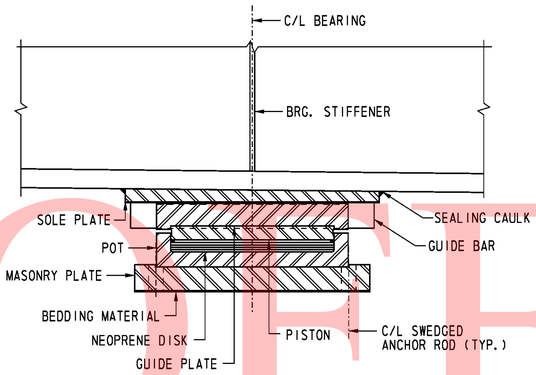

SECTION C-C
NOT TO SCALE

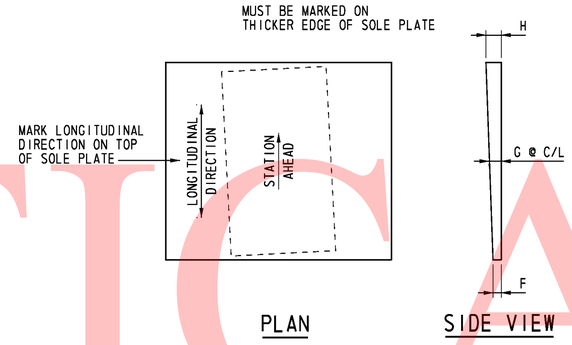

SOLE PLATE DETAIL
NOT TO SCALE

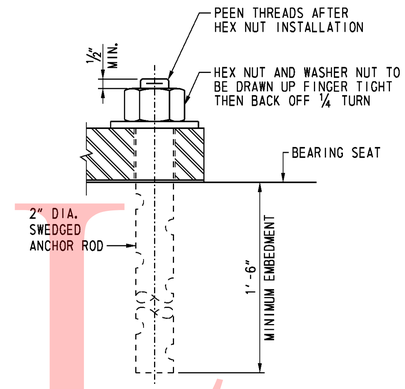

ANCHOR ROD DETAIL
SCALE: 3" = 1'-0"

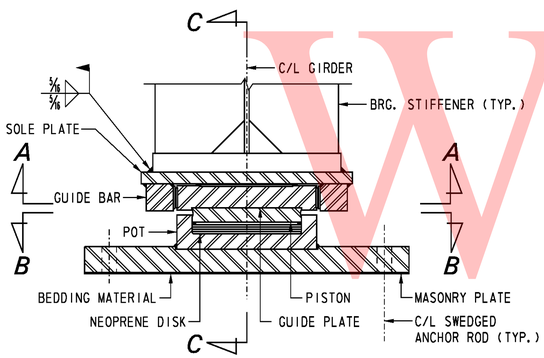

ELEVATION
NOT TO SCALE

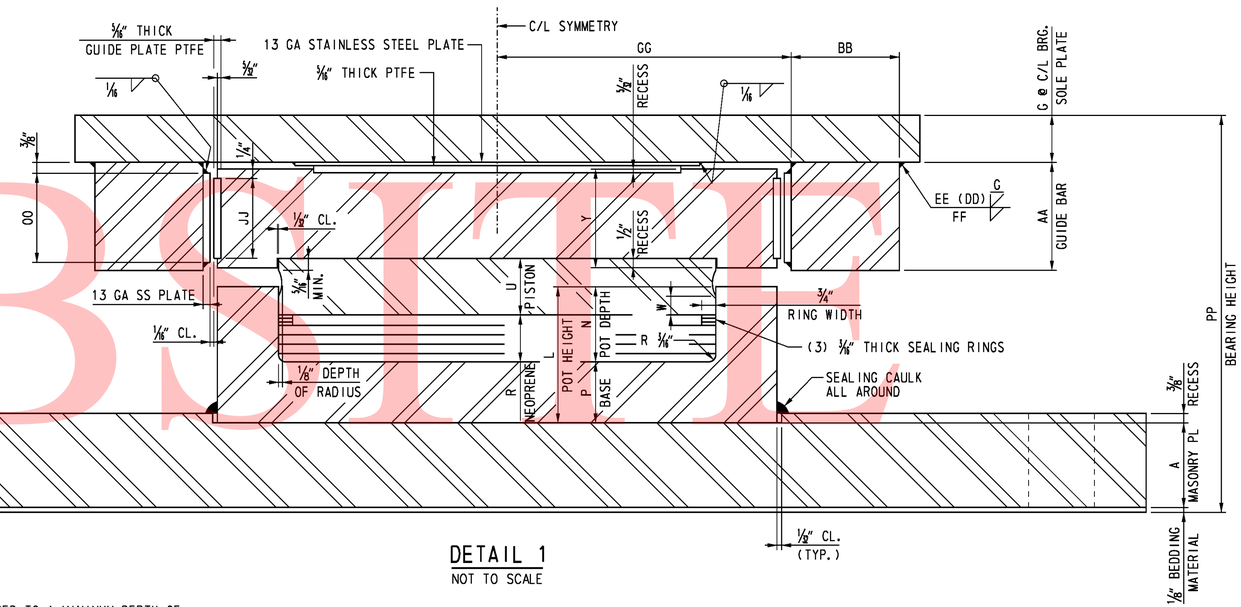

DETAIL 1
NOT TO SCALE

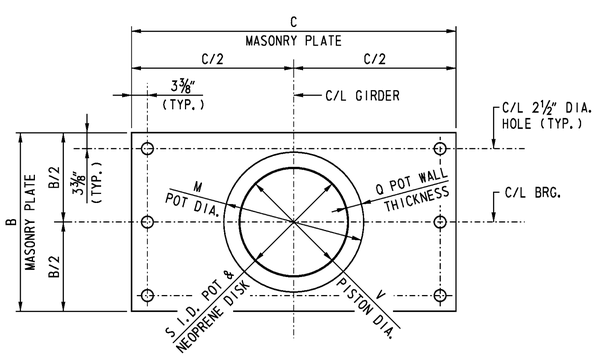

SECTION B-B
NOT TO SCALE

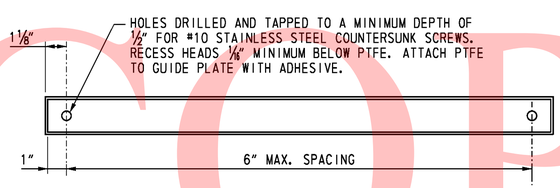

GUIDE PLATE PTFE DETAIL
NOT TO SCALE

NOTE:

SOLE PLATE THICKNESS SHALL NOT BE LESS THAN ¾" INCH.

CROSS REFERENCE NOTE:

FOR BEARING NOTES AND LOCATIONS, SEE DWG. S1-34.

LOCATION	SERVICE VERTICAL LOAD (kips)	STRENGTH VERTICAL LOAD (kips)	STRENGTH HORIZONTAL LOAD (kips)	α	MASONRY PLATE A	MASONRY PLATE B	MASONRY PLATE C	SOLE PLATE F	SOLE PLATE G	SOLE PLATE H	SOLE PLATE J	SOLE PLATE K
PIER 1 - G3 & G4	3650	5400	485	3°-35'-21" LT	5¼"	50"	76"	2¼"	3"	3¾"	54"	62½"
PIER 3 - G3 & G4	3650	5400	485	1°-39'-53" RT	5¼"	50"	76"	3⅛"	3"	2 15/16"	54"	62½"

LOCATION	GUIDE BARS AA	GUIDE BARS BB	GUIDE BARS CC	GUIDE BARS DD	GUIDE BARS EE	GUIDE BARS FF	GUIDE BARS GG	PTFE HH	PTFE JJ	PTFE KK	STAINLESS STEEL LL	STAINLESS STEEL MM	STAINLESS STEEL NN	STAINLESS STEEL OO	* BEARING HEIGHT PP
PIER 1 - G3 & G4	5⅜"	5⅜"	54"	¾"	⅞"	¾"	23 11/16"	32½"	4⅝"	45¾"	50¾"	33½"	53¼"	4⅞"	24 15/16"
PIER 3 - G3 & G4	5⅜"	5⅜"	54"	¾"	⅞"	¾"	23 11/16"	32½"	4⅝"	45¾"	50¾"	33½"	53¼"	4⅞"	24 15/16"

LOCATION	POT L	POT M	POT N	POT P	POT Q	NEOPRENE DISC R	NEOPRENE DISC S	PISTON U	PISTON V	PISTON W	GUIDE PLATE Y	GUIDE PLATE Z
PIER 1 - G3 & G4	10¼"	46"	5½"	4¾"	4¾"	3¾"	36½"	3⅛"	36.460	1⅛"	5 15/16"	46"
PIER 3 - G3 & G4	10¼"	46"	5½"	4¾"	4¾"	3¾"	36½"	3⅛"	36.460	1⅛"	5 15/16"	46"

* BEARING HEIGHT INCLUDES ⅛" BEDDING MATERIAL.
BEARING HEIGHT MEASURED AT C/L BEARING

UNOFFICIAL WEBSITE COPY

10/28/2010 O:\20832687-XM\CAD\Bridge\BR-S1\bd05_BR-S1_sr1.dgn
untitled

DELAWARE DEPARTMENT OF TRANSPORTATION

ADDENDUMS / REVISIONS

SR1 / I-95 INTERCHANGE

CONTRACT	BRIDGE NO.	1-716B
28-090-03	DESIGNED BY: M.E. PEAL	
COUNTY	CHECKED BY: G.P. MISTRY	
NEW CASTLE		

RAMP A OVER I-95

GUIDED EXPANSION BEARING AT PIER 1 AND 3

S1-37
SHEET NO.
231
TOTAL SHTS.
803

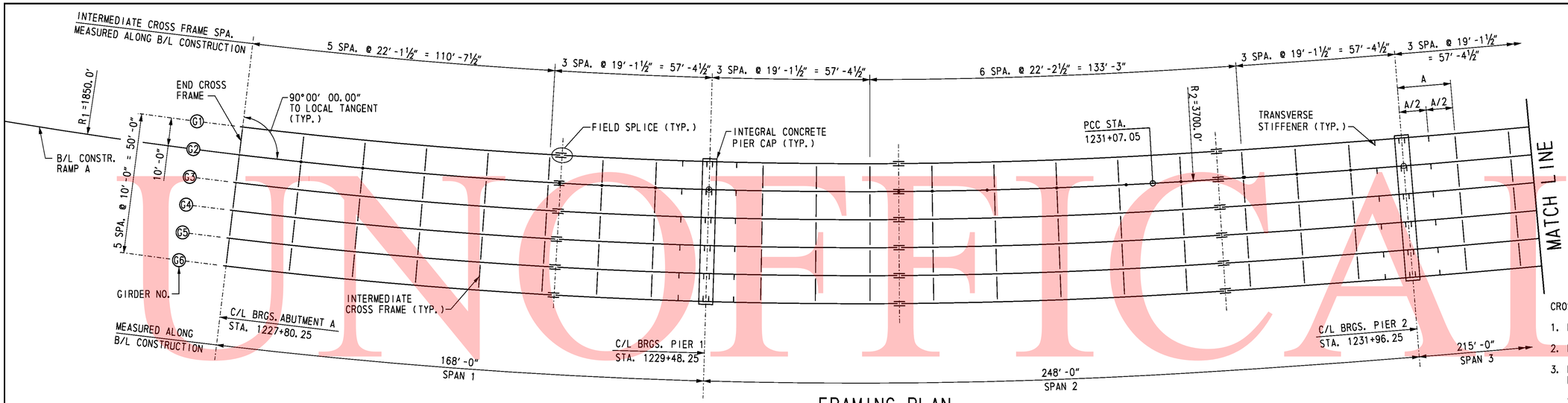

FRAMING PLAN

SCALE: 1" = 20'-0"

CROSS REFERENCE NOTES:

1. FOR GENERAL NOTES, SEE DWG. S1-2.
2. FOR TYPICAL SECTION, SEE DWG. S1-3.
3. FOR INTEGRAL CAP DETAILS, INCLUDING LOCATION OF HOLES IN GIRDER WEB FOR INTEGRAL CAP REINFORCING AND ADDITIONAL SHEAR STUDS AT INTEGRAL CAPS, SEE DWGS. S1-20, S1-21, S1-24, S1-25, S1-28 & S1-29.
4. FOR CROSS FRAMES AND GIRDER DETAILS, SEE DWGS. S1-40 & S1-41.
5. FOR FIELD SPLICE DETAILS, SEE DWG. S1-42.
6. FOR BEARING TYPES AND LOCATIONS, SEE DWG. S1-34.
7. FOR LOCATION OF TRANSVERSE STIFFENER AT INTEGRAL PIER CAPS, SEE DWGS. S1-21, S1-25 & S1-29.

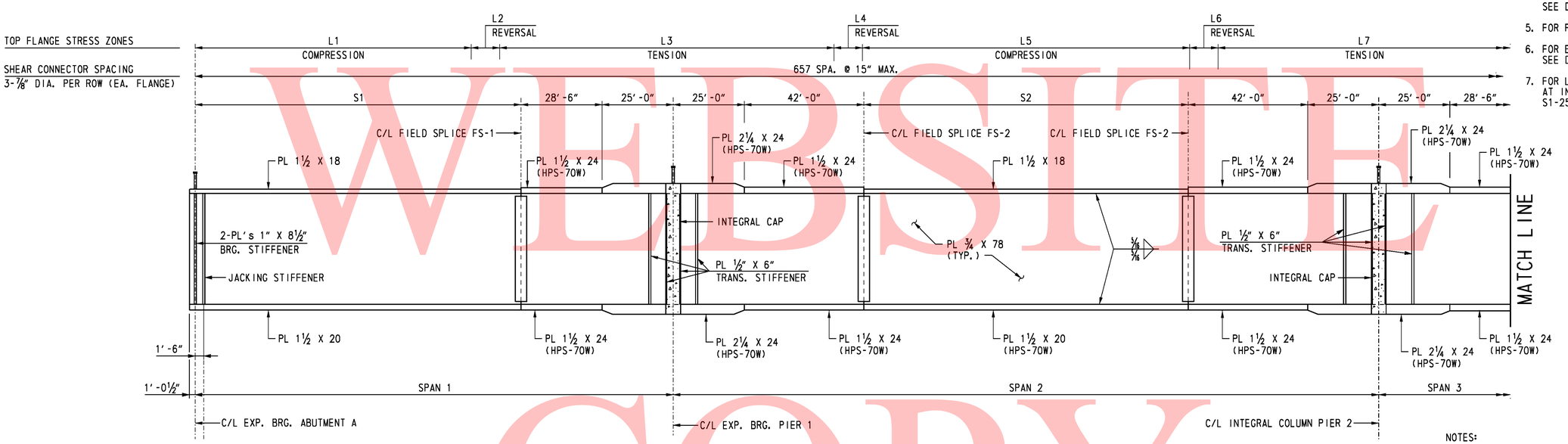

GIRDER ELEVATION

NOT TO SCALE

NOTES:

1. THE ESTIMATED NUMBER OF SHEAR CONNECTORS IS 11844.
2. THERE SHALL BE NO FIELD WELDING TO THE TOP FLANGE, EXCEPT FOR SHEAR STUDS, IN THE TENSION AND STRESS REVERSAL AREAS.
3. STUDS SHALL BE SPACED TO CLEAR SPLICE BOLTS.
4. ALL CROSS FRAMES AND CENTERLINE BEARINGS SHALL BE RADIAL.
5. SET ENDS OF GIRDERS AND BEARING STIFFENERS VERTICAL UNDER FULL DEAD LOAD.
6. ENTIRE SUPERSTRUCTURE FRAMING SHALL BE PREASSEMBLED IN SHOP TO VERIFY FIT.
7. THE DIMENSION 'A' SHOWN ON THE PLAN VIEW DEFINES THE LOCATION OF THE TRANSVERSE STIFFENERS PLACED MID-WAY BETWEEN THE C/L PIER AND INTERMEDIATE CROSS FRAME.

GIRDERS	RADIUS		SPAN LENGTH					PLATE LENGTH				TOP FLANGE STRESS ZONES												
	R_1	R_2	SPAN 1	SPAN 2	SPAN 3	SPAN 4	LENGTH	S1	S2	S3	S4	L1	L2	L3	L4	L5	L6	L7	L8	L9	L10	L11	L12	L13
G1	1840'-0"	3690'-0"	167'-1⅛"	246'-10 11/16"	214'-5"	177'-6¼"	805'-11 3/16"	113'-7⅛"	112'-10 11/16"	107'-11"	115'-6¼"	83'-1⅛"	43'-0"	83'-0"	24'-0"	112'-10 11/16"	27'-0"	85'-0"	47'-0"	53'-5"	34'-0"	68'-0"	28'-0"	117'-6¼"
G2	1850'-0"	3700'-0"	168'-0"	248'-0"	215'-0"	178'-0"	809'-0"	114'-6"	114'-0"	108'-6"	116'-0"	84'-0"	43'-0"	83'-0"	24'-0"	114'-0"	27'-0"	85'-0"	47'-0"	54'-0"	34'-0"	68'-0"	28'-0"	118'-0"
G3	1860'-0"	3710'-0"	168'-10⅞"	249'-1 1/16"	215'-7"	178'-5¾"	812'-0 13/16"	115'-4⅞"	115'-1 1/16"	109'-1"	116'-5¾"	84'-10⅞"	43'-0"	83'-0"	24'-0"	115'-1 1/16"	27'-0"	85'-0"	47'-0"	54'-7"	34'-0"	68'-0"	28'-0"	118'-5¾"
G4	1870'-0"	3720'-0"	169'-9 15/16"	250'-2⅜"	216'-1 15/16"	178'-11 3/16"	815'-1 11/16"	116'-3 11/16"	116'-2⅜"	109'-7 15/16"	116'-11 3/16"	85'-9 15/16"	43'-0"	83'-0"	24'-0"	116'-2⅜"	27'-0"	85'-0"	47'-0"	55'-1 15/16"	34'-0"	68'-0"	28'-0"	118'-11 3/16"
G5	1880'-0"	3730'-0"	170'-8 11/16"	251'-3 1/16"	216'-8 15/16"	179'-5 5/16"	818'-2½"	117'-2 11/16"	117'-3 1/16"	110'-2 15/16"	117'-5 5/16"	86'-8 11/16"	43'-0"	83'-0"	24'-0"	117'-3 1/16"	27'-0"	85'-0"	47'-0"	55'-8 15/16"	34'-0"	68'-0"	28'-0"	119'-5 5/16"
G6	1890'-0"	3740'-0"	171'-7 9/16"	252'-4¾"	217'-3⅞"	179'-11 1/16"	821'-3¼"	118'-1 9/16"	118'-4¾"	110'-9⅞"	117'-11 1/16"	87'-7 9/16"	43'-0"	83'-0"	24'-0"	118'-4¾"	27'-0"	85'-0"	47'-0"	56'-3⅞"	34'-0"	68'-0"	28'-0"	119'-11 1/16"

UNOFFICIAL WEBSITE COPY

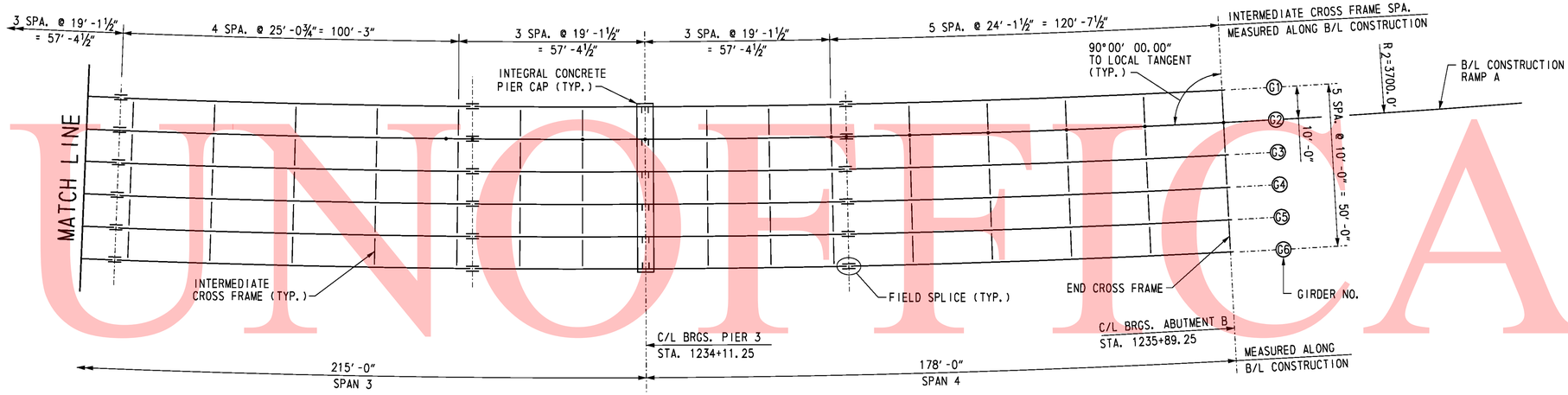

FRAMING PLAN

SCALE: 1" = 20'-0"

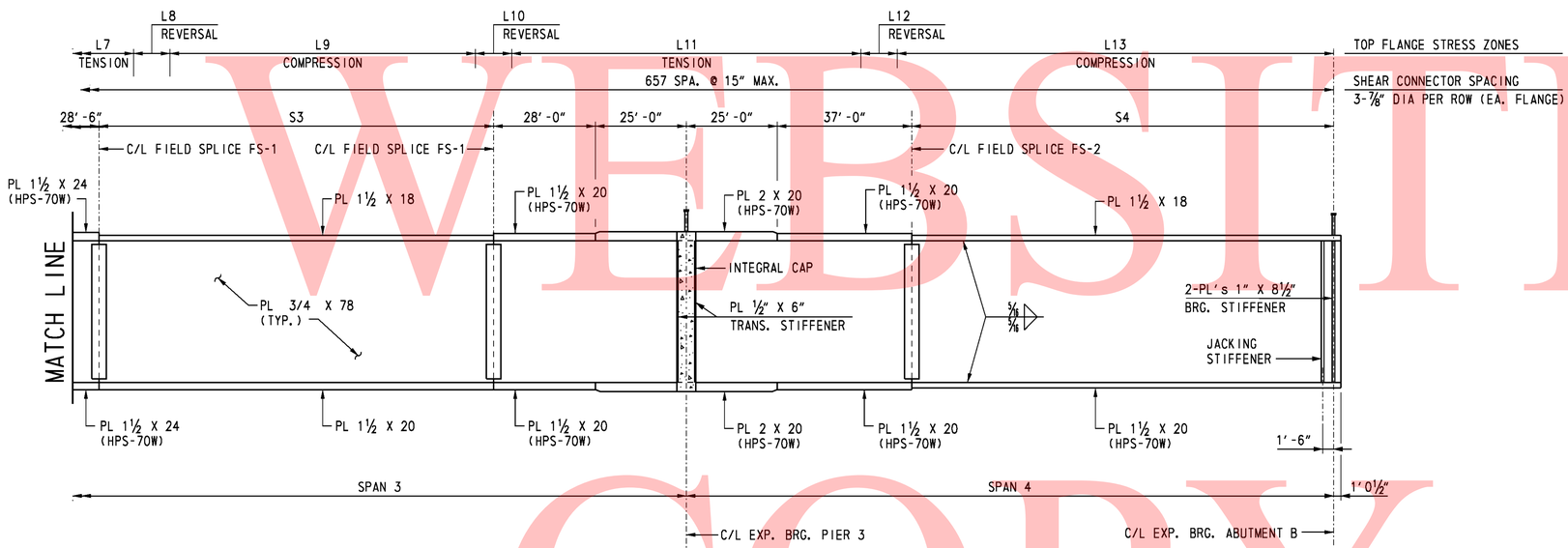

GIRDER ELEVATION

NOT TO SCALE

CROSS REFERENCE NOTES:

1. FOR FRAMING PLAN AND GIRDER ELEVATION NOTES, SEE DWG. S1-38.
2. FOR GIRDER TABLE, SEE DWG. S1-38.
3. FOR LOCATION OF TRANSVERSE STIFFENERS AT INTEGRAL PIER CAP, SEE DWGS. S1-21, S1-25 & S1-29.

UNOFFICIAL WEBSITE COPY

10/28/2010 O:\20832687-XM\CAD\Bridge\BR-S1\fr02_BR-S1_sr1.dgn untitled

DELAWARE DEPARTMENT OF TRANSPORTATION	ADDENDUMS / REVISIONS	SR1 / I-95 INTERCHANGE	CONTRACT 28-090-03	BRIDGE NO. 1-716B	RAMP A OVER I-95	S1-39 SHEET NO. 233
			COUNTY NEW CASTLE	DESIGNED BY: R. F. KIRCHNER	FRAMING PLAN AND GIRDER ELEVATION 2	TOTAL SHTS. 803
				CHECKED BY: J. S. LI		

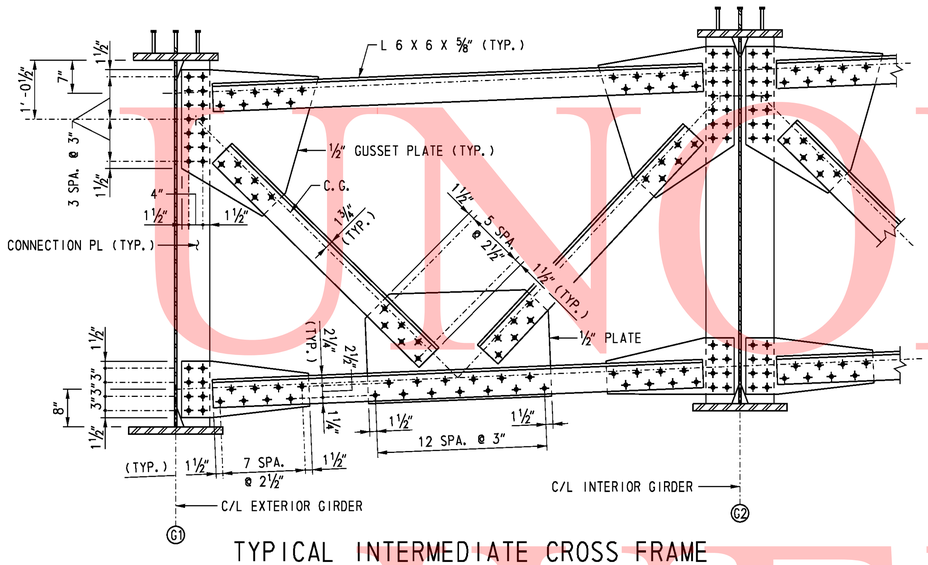

TYPICAL INTERMEDIATE CROSS FRAME

SCALE: 3/4" = 1'-0"

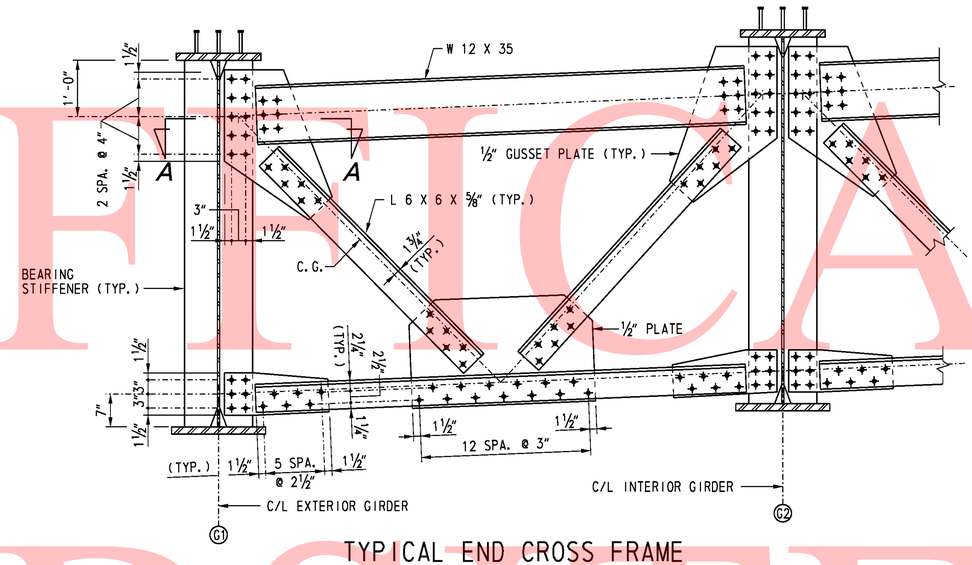

TYPICAL END CROSS FRAME

SCALE: 3/4" = 1'-0"

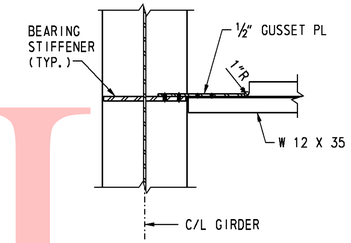

SECTION A-A

SCALE: 3/4" = 1'-0"

NOTES:

1. CROSS FRAMES SHALL BE DETAILED TO FIT IN THE FULL DEAD LOAD CONDITION.

CROSS REFERENCE NOTES:

1. FOR GENERAL NOTES, SEE DWG. S1-2.
2. FOR FRAMING PLAN, SEE DWGS. S1-38 & S1-39.
3. FOR GIRDER DETAILS, SEE DWG. S1-41.
4. FOR BOLT TYPE AND SIZE AS WELL AS HOLE SIZE, SEE DWG. S1-2.

UNOFFICIAL WEBSITE COPY

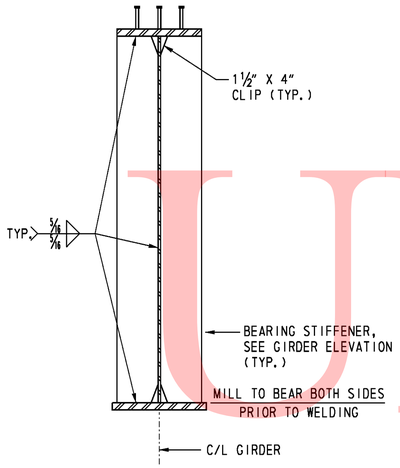

BEARING STIFFENER

SCALE: ¾" = 1'-0"

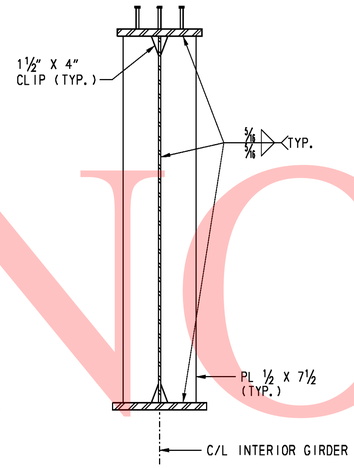

CONNECTION PLATE

SCALE: ¾" = 1'-0"

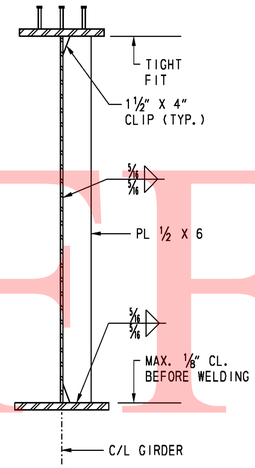

TRANSVERSE STIFFENER

SCALE: ¾" = 1'-0"

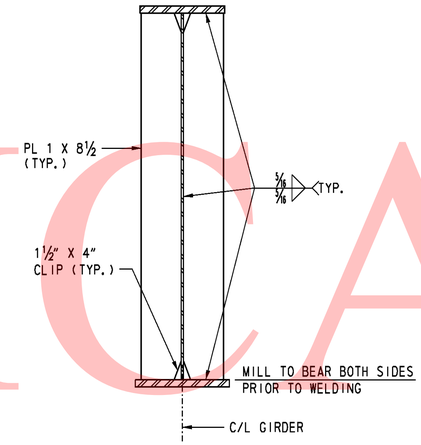

JACKING STIFFENER (AT ABUTMENTS)

SCALE: ¾" = 1'-0"

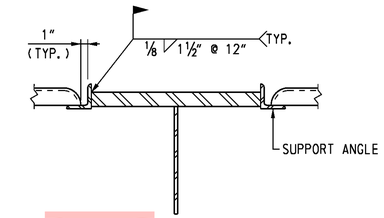

COMPRESSION FLANGE FOR S.I.P. FORMS

SCALE: 1½" = 1'-0"

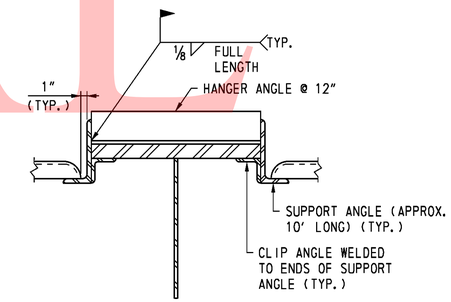

TENSION FLANGE FOR S.I.P. FORMS

SCALE: 1½" = 1'-0"

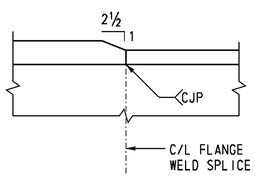

FLANGE PLATE THICKNESS TRANSITION

NOT TO SCALE

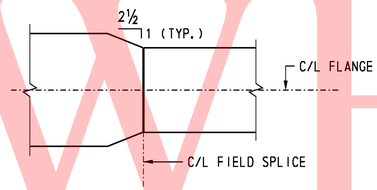

BOTTOM FLANGE PLATE WIDTH TRANSITION

NOT TO SCALE

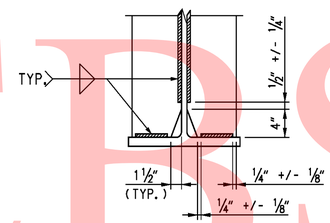

STIFFENER & CONNECTION PLATE WELD TERMINATION

NOT TO SCALE

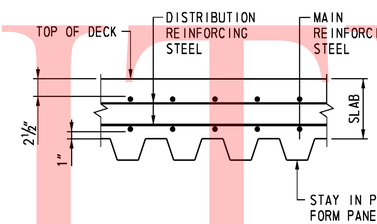

STEEL FORM NOTES:

1. FORMS SHALL BE VERTICALLY ADJUSTED TO ATTAIN FINISHED LINE, GRADE AND SLAB THICKNESS REQUIRED ON THE PLANS.
2. NO WELDING OF THESE FORMS TO FLANGES IN TENSION IS PERMITTED.

STEEL FORM SECTION

SCALE: 1½" = 1'-0"

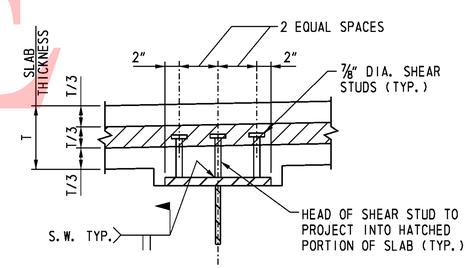

SHEAR STUD DETAIL

NOT TO SCALE

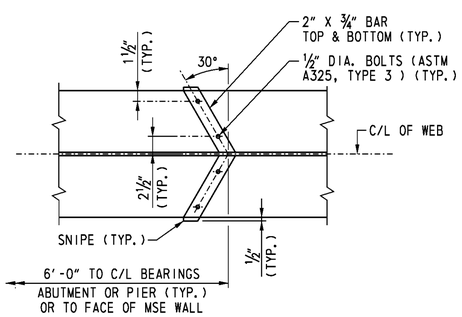

DRIP BAR DETAIL

NOT TO SCALE

NOTES:

1. DRIP BAR DETAIL SHALL BE PLACED ON BOTTOM FLANGE. PROVIDE DRIP BAR FOR GIRDER G1 AND G6 ONLY.
2. DRIP BARS ARE PLACED ADJACENT TO SUPPORTS TO PREVENT WATER FLOW ONTO SUPPORT.

CROSS REFERENCE NOTES:

1. FOR GENERAL NOTES, SEE DWG. S1-2.
2. FOR FRAMING PLAN, SEE DWGS. S1-38 & S1-39.
3. FOR CROSS FRAMING DETAILS, SEE DWG. S1-40.

UNOFFICIAL WEBSITE COPY

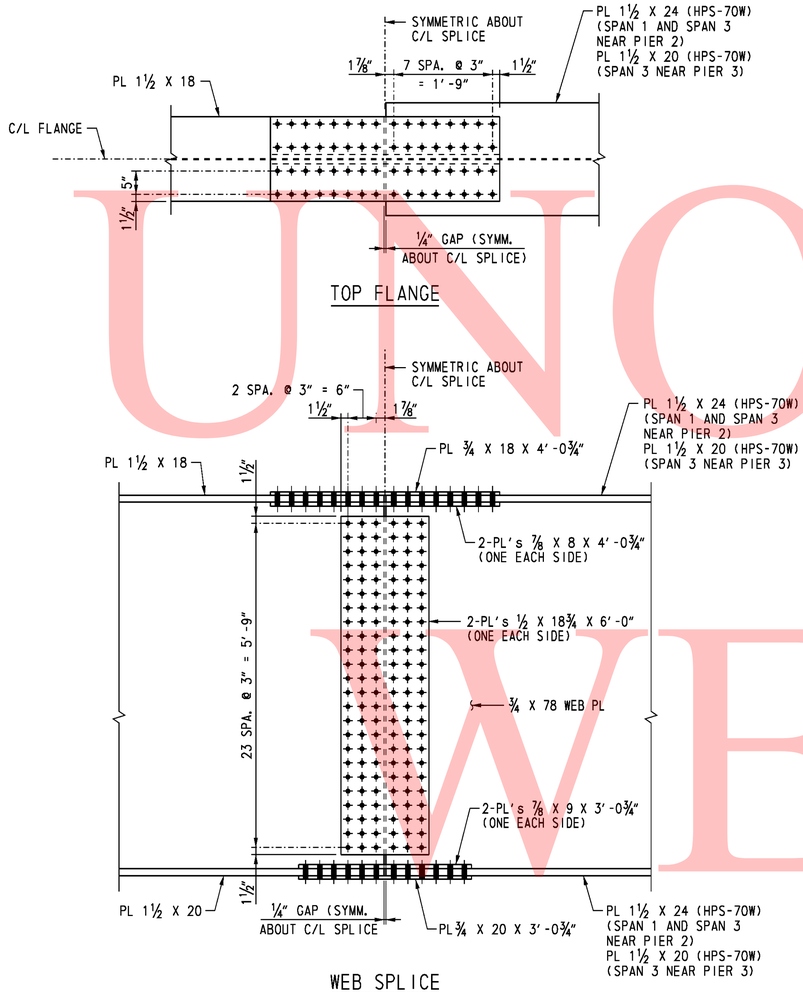

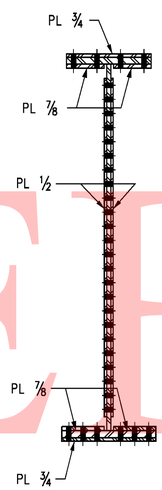

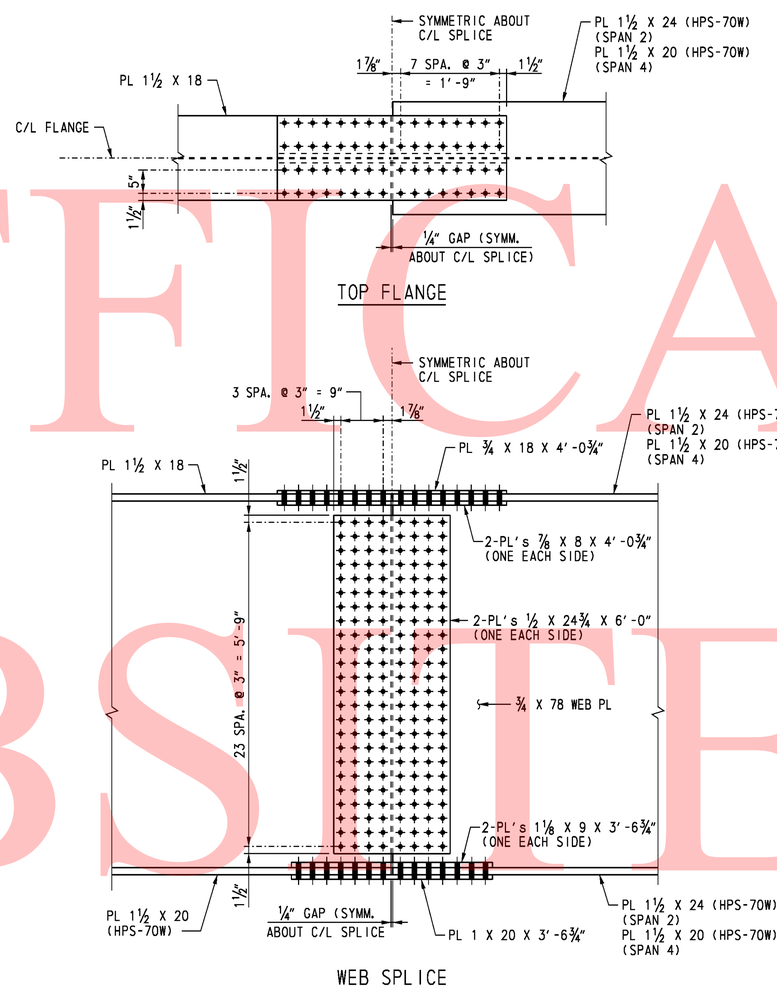

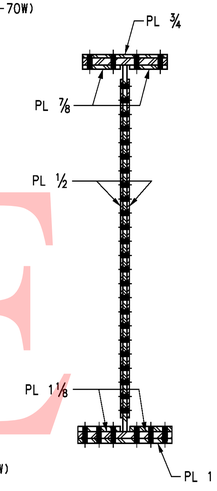

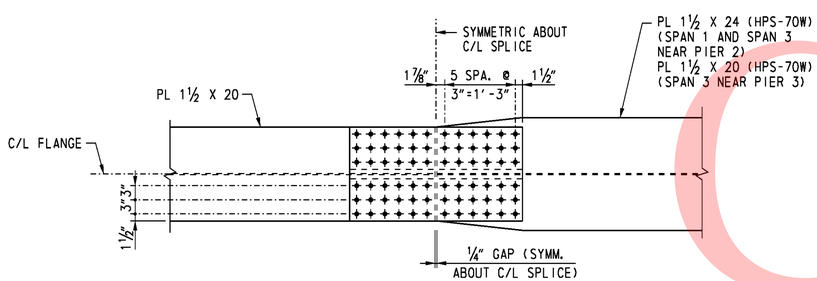

FIELD SPLICE FS-1

SCALE: ¾" = 1'-0"

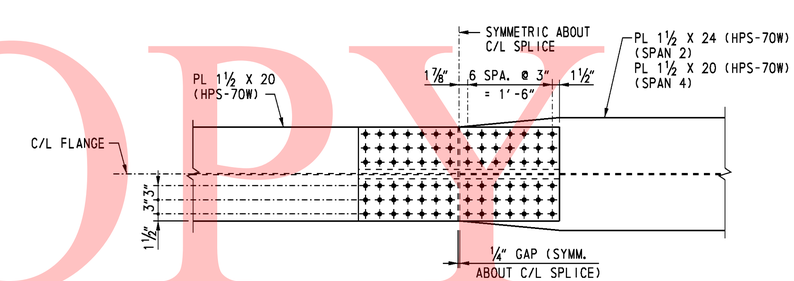

FIELD SPLICE FS-2

SCALE: ¾" = 1'-0"

NOTES:

1. ALL BOLTS SHALL BE ⅞" DIA. ASTM A 325, TYPE 3, HIGH STRENGTH BOLTS IN 15/16" DIA. HOLES. CONTACT SURFACE OF BOLTED PARTS SHALL BE CLASS B. EXCLUDE BOLT THREADS FROM SHEAR PLANES.
2. BOLT HEADS SHALL BE ON THE EXTERIOR FACE OF THE FASCIA GIRDERS AND THE BOTTOM OF THE BOTTOM FLANGE.
3. FIELD SPLICES SHALL BE COMPLETELY SHOP ASSEMBLED AND MATCH MARKED AFTER ALL SHOP WELDING HAS BEEN COMPLETED. CONTACT SURFACES SHALL BE FREE OF ALL OIL AND DIRT.
4. WEB SPLICE PLATES ARE SYMMETRIC ABOUT MID-DEPTH OF WEB.

CROSS REFERENCE NOTES:

1. FOR GENERAL NOTES, SEE DWG. S1-2.
2. FOR FRAMING PLAN AND GIRDER ELEVATION, SEE DWGS. S1-38 & S1-39.

UNOFFICAL WEBSITE COPY

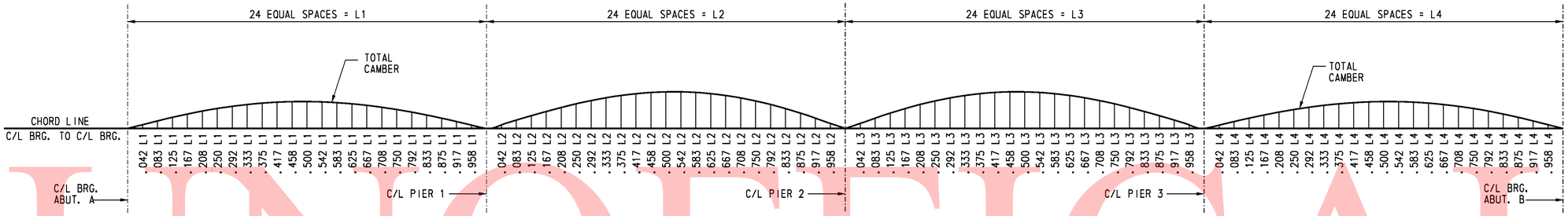

SCHEMATIC CAMBER DIAGRAM

CAMBER ORDINATES (IN)

GIRDER NO.	POINT	C/L BRG. ABUT. A	SPAN 1 .042L	.083L	.125L	.167L	.208L	.250L	.292L	.333L	.375L	.417L	.458L	.500L	.542L	.583L	.625L	.667L	.708L	.750L	.792L	.833L	.875L	.917L	.958L	C/L PIER 1
G1	DLS	0	1/16	1/16	1/4	5/16	3/8	7/16	7/16	7/16	7/16	7/16	7/16	3/8	5/16	1/4	5/16	1/8	1/16	0	-1/16	-1/16	-1/16	-1/16	-1/16	0
	DLC	0	1/4	1/2	11/16	7/8	1 1/16	1 3/16	1 1/4	1 5/16	1 3/16	1 1/4	1 3/16	1 1/8	15/16	15/16	5/8	7/16	1/4	1/8	-1/16	-1/8	-3/16	-3/16	-1/16	0
	SDL	0	1/16	1/8	3/16	1/4	5/16	5/16	3/8	3/8	3/8	3/8	3/8	3/16	3/16	1/4	1/4	3/16	1/8	1/16	1/16	0	0	0	0	0
	TDC	0	3/8	15/16	1 1/8	1 1/8	1 1/16	1 5/16	2 1/16	2 1/8	2 3/16	2 1/8	2	1 15/16	1 5/8	1 3/8	1 1/16	3/4	1/2	3/16	-1/16	-3/16	-5/16	-5/16	-1/8	0
	VCO	0	7/16	15/16	1 7/16	1 1/2	1 15/16	2 1/16	2 1/4	2 7/16	2 9/16	2 11/16	2 11/16	2 3/4	2 11/16	2 11/16	2 5/16	2 7/16	2 1/4	2 1/16	1 15/16	1 1/2	1 3/16	15/16	7/16	0
	TDC+VCO	0	15/16	1 5/8	2 3/8	3	3 1/2	4	4 5/16	4 5/16	4 3/4	4 3/4	4 11/16	4 7/16	4 3/16	4	3 5/8	3 3/16	2 3/4	2 1/4	1 3/4	1 5/16	7/8	5/16	5/16	0
G2	DLS	0	1/16	1/16	1/4	5/16	3/8	7/16	1/2	1/2	1/2	1/2	7/16	7/16	3/8	5/16	1/4	1/8	1/16	0	-1/16	-1/16	-1/16	-1/16	-1/16	0
	DLC	0	1/4	1/2	3/4	9/16	1 1/8	1 1/4	1 3/16	1 3/8	1 3/8	1 3/8	1 1/4	1 1/8	1	15/16	5/8	7/16	1/4	1/16	-1/16	-1/16	-1/4	-5/16	-1/8	0
	SDL	0	1/16	1/8	1/8	3/16	3/16	1/4	1/4	1/4	1/4	1/4	1/4	1/4	3/16	3/16	1/8	1/16	1/16	0	0	-1/16	-1/16	-1/16	0	0
	TDC	0	3/8	15/16	1 1/4	1 1/8	1 3/4	1 15/16	2 1/16	2 1/8	2 1/16	2 1/8	2	1 15/16	1 3/16	1 1/16	1	11/16	3/8	1/8	-1/8	-1/4	-3/8	-3/16	-3/16	0
	VCO	0	7/16	15/16	1 3/16	1 1/8	1 3/4	2 1/16	2 1/16	2 7/16	2 9/16	2 7/16	2 11/16	2 3/4	2 11/16	2 11/16	2 5/16	2 7/16	2 1/4	2 1/16	1 15/16	1 1/2	1 3/16	15/16	7/16	0
	TDC+VCO	0	15/16	1 5/8	2 3/8	3	3 1/2	4	4 5/16	4 5/16	4 11/16	4 3/4	4 11/16	4 1/2	4 1/4	3 15/16	3 5/16	3 1/8	2 5/8	2 3/16	1 11/16	1 1/4	15/16	1/2	1/4	0
G3	DLS	0	1/8	3/16	1/4	3/8	7/16	1/16	1/2	1/2	1/2	1/2	7/16	7/16	3/8	5/16	1/4	1/8	1/16	0	-1/16	-1/16	-1/8	-1/16	-1/16	0
	DLC	0	1/4	9/16	3/4	1	1 1/8	1 3/16	1 3/8	1 7/16	1 7/16	1 3/8	1 3/16	1 1/16	1	7/8	5/8	7/16	1/4	1/16	-1/16	-3/16	-1/4	-1/4	-1/8	0
	SDL	0	1/16	1/16	1/8	1/8	3/16	3/16	3/16	3/16	3/16	3/16	3/16	3/16	1/8	1/8	1/16	1/16	0	0	-1/16	-1/16	-1/16	-1/16	0	0
	TDC	0	3/8	15/16	1 1/8	1 1/8	1 3/4	1 15/16	2 1/16	2 1/8	2 1/8	2 1/16	1 15/16	1 3/4	1 1/2	1 1/4	15/16	5/8	5/16	1/16	-1/16	-1/16	-7/16	-3/8	-3/16	0
	VCO	0	7/16	15/16	1 3/16	1 1/8	1 3/4	2 1/16	2 1/4	2 7/16	2 9/16	2 11/16	2 11/16	2 3/4	2 11/16	2 11/16	2 5/16	2 7/16	2 1/4	2 1/16	1 15/16	1 1/2	1 3/16	15/16	7/16	0
	TDC+VCO	0	15/16	1 5/8	2 3/8	3	3 1/2	4	4 5/16	4 5/16	4 11/16	4 3/4	4 11/16	4 1/2	4 1/4	3 7/8	3 1/2	3 1/16	2 9/16	2 1/8	1 5/8	1 3/16	13/16	1/2	1/4	0
G4	DLS	0	1/8	3/16	1/4	5/16	7/16	1/2	1/2	1/2	1/2	1/2	1/2	7/16	3/8	5/16	1/4	7/16	1/16	0	-1/16	-1/16	-1/8	-1/16	-1/16	0
	DLC	0	1/4	9/16	1 1/16	1	1 3/16	1 3/16	1 3/8	1 7/16	1 7/16	1 3/8	1 5/16	1 1/16	1	15/16	5/8	7/16	3/16	1/16	-1/16	-1/4	-1/4	-1/8	0	0
	SDL	0	1/16	1/16	1/8	1/8	3/16	3/16	3/16	3/16	3/16	3/16	3/16	3/16	1/8	1/8	1/16	1/16	0	0	-1/16	-1/16	-1/16	-1/16	0	0
	TDC	0	7/16	15/16	1 1/16	1 1/2	1 3/4	1 15/16	2 1/16	2 1/16	2 1/16	1 15/16	1 3/4	1 1/2	1 1/4	15/16	5/8	3/16	0	-1/16	-1/4	-3/8	-7/16	-3/8	-3/16	0
	VCO	0	7/16	15/16	1 3/16	1 1/2	1 13/16	2 1/16	2 1/16	2 7/16	2 9/16	2 11/16	2 11/16	2 3/4	2 11/16	2 11/16	2 5/16	2 7/16	2 1/4	2 1/16	1 15/16	1 1/2	1 3/16	15/16	7/16	0
	TDC+VCO	0	7/8	1 11/16	2 3/8	3	3 3/16	4	4 3/8	4 5/8	4 3/4	4 3/4	4 11/16	4 1/2	4 1/4	3 7/8	3 1/2	3 1/16	2 9/16	2 1/16	1 9/16	1 1/8	3/4	7/16	1/4	0
G5	DLS	0	1/8	3/16	1/4	5/16	7/16	1/2	1/2	9/16	9/16	1/2	1/2	7/16	3/8	5/16	1/4	1/8	1/16	0	-1/16	-1/16	-1/8	-1/16	-1/16	0
	DLC	0	1/4	9/16	11/16	1	1 3/16	1 3/16	1 3/8	1 7/16	1 7/16	1 3/8	1 1/4	1 1/8	1	15/16	5/8	3/8	1/16	0	-1/16	-1/4	-5/16	-1/4	-1/8	0
	SDL	0	1/16	1/8	1/8	3/16	1/4	1/4	5/16	5/16	5/16	3/16	1/4	1/4	3/16	3/16	1/8	1/16	1/16	0	-1/16	-1/16	-1/16	-1/16	0	0
	TDC	0	7/16	7/8	1 1/4	1 5/16	1 13/16	2 1/16	2 3/16	2 1/4	2 1/4	2 3/16	2 1/16	1 13/16	1 5/16	1 1/4	15/16	5/8	3/16	0	-1/4	-3/8	-1/2	-7/16	-3/16	0
	VCO	0	7/16	15/16	1 3/16	1 1/2	1 13/16	2 1/16	2 1/4	2 7/16	2 9/16	2 11/16	2 11/16	2 3/4	2 11/16	2 11/16	2 5/16	2 7/16	2 1/4	2 1/16	1 15/16	1 1/2	1 3/16	15/16	7/16	0
	TDC+VCO	0	7/8	1 11/16	2 1/16	3 1/16	3 5/8	4 1/8	4 7/16	4 11/16	4 15/16	4 15/16	4 3/4	4 7/16	4 5/16	3 15/16	3 1/2	3 1/16	2 9/16	2 1/16	1 9/16	1 1/8	3/4	7/16	1/4	0
G6	DLS	0	1/8	3/16	1/4	3/8	7/16	1/2	9/16	9/16	9/16	1/2	1/2	7/16	3/8	5/16	1/4	1/8	1/16	0	-1/16	-1/8	-1/8	-1/8	-1/16	0
	DLC	0	1/4	9/16	11/16	1	1 1/8	1 3/16	1 3/8	1 7/16	1 5/16	1 3/8	1 1/4	1 1/8	15/16	3/4	1/2	5/16	1/8	-1/16	-1/4	-5/16	-3/8	-5/16	-1/8	0
	SDL	0	1/16	3/16	1/4	5/16	3/8	3/8	7/16	7/16	7/16	7/16	7/16	3/8	5/16	1/4	1/4	3/16	1/8	1/16	0	-1/16	-1/16	-1/16	0	0
	TDC	0	7/16	15/16	1 3/16	1 11/16	1 15/16	2 7/16	2 9/16	2 5/8	2 9/16	2 3/4	2 1/8	1 15/16	1 5/8	1 3/16	1	5/8	3/16	0	-1/4	-3/8	-7/16	-3/8	-3/16	0
	VCO	0	7/16	15/16	1 3/16	1 1/2	1 13/16	2 1/16	2 1/16	2 7/16	2 9/16	2 11/16	2 11/16	2 3/4	2 11/16	2 11/16	2 5/16	2 7/16	2 1/4	2 1/16	1 15/16	1 1/2	1 3/16	15/16	7/16	0
	TDC+VCO	0	7/8	1 11/16	2 3/8	3	3 3/16	4	4 3/8	4 5/8	4 3/4	4 3/4	4 11/16	4 1/2	4 1/4	3 7/8	3 1/2	3 1/16	2 9/16	2 1/16	1 9/16	1 1/8	3/4	7/16	1/4	0

GIRDER NO.	POINT	SPAN 2 .042L	.083L	.125L	.167L	.208L	.250L	.292L	.333L	.375L	.417L	.458L	.500L	.542L	.583L	.625L	.667L	.708L	.750L	.792L	.833L	.875L	.917L	.958L	C/L PIER 2
G1	DLS	1/16	3/16	5/16	7/16	11/16	1 1/16	1 5/16	1 9/16	1 11/16	1 9/16	1 5/16	1 1/16	15/16	7/16	5/16	3/16	1/16	0
	DLC	7/16	7/8	1 3/8	2 1/16	2 3/4	3 3/8	4 1/16	4 5/8	5 1/16	5 7/16	5 5/8	5 3/4	5 5/8	5 3/8	5 1/16	4 11/16	4	3 3/8	2 11/16	2	1 3/8	11/16	7/16	0
	SDL	1/8	3/16	3/16	1/2	11/16	15/16	1	1 1/8	1 1/4	1 3/16	1 3/8	1 3/8	1 3/8	1 3/16	1 1/4	1 1/8	1	11/16	5/8	1/2	3/16	3/16	1/8	0
	TDC	11/16	1 7/16	2 5/16	3 3/16	4 1/16	5 1/16	6 5/8	7 1/2	8 1/4	8 11/16	9 3/16	9 3/16	9 3/16	8 11/16	8 3/16	7 11/16	6 1/2	5 1/2	4 3/8	3 5/16	2 1/4	1 3/8	11/16	0
	VCO	7/8	1 5/8	2 5/16	2 15/16	3 1/2	3 11/16	4 5/16	4 5/16	4 3/4	4 7/8	5	5 1/16	5 1/4	5 5/16	5 1/4	5 1/16	4 7/8	4 3/16	4 1/8	3 11/16	2 7/8	2	1 1/16	0
	TDC+VCO	1 1/8	3 1/16	4 5/16	6 3/16	7 9/16	9 1/16	10 7/16	12 1/16	13 1/16	13 3/4	14 3/16	14 1/2	14 7/16	14 1/16	13 1/16	12 1/2	11 7/8	10 1/16	8 1/2	6 15/16	5 1/16	3 3/8	1 3/4	0
G2	DLS	1/16	3/16	5/16	7/16	11/16	1 1/16	1 5/16	1 7/8	2 1/16	2 1/4	2 5/16	2 3/8	2 3/16	2 1/16	1 7/8	1 5/8	1 3/8	1 1/16	15/16	7/16	3/16	3/16	1/8	0
	DLC	1/2	15/16	1 1/2	2 3/16	2 15/16	3 11/16	4 3/8	5	5 1/2	5 7/8	6 1/8	6 1/4	6 1/8	5 7/8	5 1/2	5	4 3/8	3 11/16	2 15/16	2 3/16	1 1/2	15/16	7/16	0
	SDL	1/8	3/16	3/16	1/2	5/8	15/16	15/16	1 1/16	1 1/16	1 1/4	1 3/16	1 3/16	1 3/16	1 1/4	1 3/16	1 1/16	15/16	15/16	5/8	1/2	3/16	3/16	1/8	0
	TDC	3/4	1 1/2	2 1/16	3 3/16	4 3/4	5 7/8	7	7 15/16	8 3/4	9 3/8	9 3/4	9 7/8	9 3/4	9 3/8	8 3/4	7 15/16	6 15/16	5 7/8	4 5/8	3 1/2	2 1/16	1 7/16	3/4	0
	VCO	7/16	15/16	1 7/16	2 5/16	3 3/16	4 1/16	4 15/16	5 7/16	5 13/16	5 15/16	5 7/16	5 7/16	5 13/16	5 7/16	5 1/16	4 15/16	4 1/16	3 7/16	2 15/16	2 3/16	1 7/16	15/16	7/16	0
	TDC+VCO	1 1/16	3 3/16	5 1/16	6 7/8	8 1/16	10 3/16	11 11/16	13 1/4	14 3/8	15 3/16	15 11/16	15 7/8	15 11/16	15 1/8	14 3/16	13 11/16	11 7/8	10 3/16	8 7/16	6 15/16	5	3 3/16	1 11/16	0
G3	DLS	1/16	3/16	5/16	7/16	11/16	1 1/16	1 5/16	1 7/8	2 1/16	2 1/4	2 5/16	2 3/8	2 3/16	2 1/16	1 7/8	1 5/8	1 3/8	1 1/16	15/16	7/16	3/16	3/16	1/8	0
	DLC	1/2	1	1 5/8	2 3/8	3 1/16	3 7/16	4 1/16	4 5/8	5 1/16	5 7/16	5 5/8	5 3/4	5 5/8	5 3/8	5 1/16	4 11/16	4	3 3/8	2 7/16	1 5/8	1	1/2	0	0
	SDL	1/8	3/16	3/16	1/2	5/8	15/16	15/16	1 1/16	1 1/16	1 1/4	1 3/16	1 3/16	1 3/16	1 1/4	1 3/16	1 1/16	15/16	15/16	5/8	1/2	3/16	3/16	1/8	0
	TDC	11/16	1 5/8	2 1/16	3 3/4	5	6 3/16	7 7/16	8 1/16	9 3/16	10	10 3/8	10 11/16	10 3/8	9 15/16	9 3/16	8 1/16	7 3/8	6 1/4	4 15/16	3 3/4	2 1/16	1 3/16	3/4	0
	VCO	7/16	15/16	1 7/16	2 5/16	3 3/16	4 1/16	4 15/16	5 7/16	5 13/16	5 15/16	5 7/16	5 7/16	5 13/16	5 7/16	5 1/16	4 15/16	4 1/16	3 7/16	2 15/16	2 3/16	1 7/16	15/16	7/16	0
	TDC+VCO	1 7/8	3 5/8	5 1/16	7 1/16	9 3/8	11 1/16	13	14 1/16	15 11/16	16 11/16	17 1/16	17 1/4	16 11/16	16 1/4	15 1/4	13 15/16	12 3/8	10 5/8	8 5/8	6 11/16	4 7/8	3 1/16	1 5/8	0
G4	DLS	1/16	3/16	5/16	7/16	11/16	1 1/16	1 5/16	1 7/8	2 1/8	2 1/16	2 1/2	2 5/8	2 5/16	2 1/16	1 7/8	1 5/8	1 1/16	15/16	7/16	3/16	3/16	1/8	0	0
	DLC	1/2	1 1/16	1 11/16	2 1/16	2 9/16	3 1/16	3 7/16	4 1/16	4 5/8	5 1/16	5 7/16	5 5/8	5 7/16	5 1/16	4 11/16	4	3 3/8	2 7/16	1 5/8	1	1/2	0	0	0
	SDL	1/8	1/4	3/8	1/2	11/16	7/8	1	1 1/8	1 1/4	1 3/8	1 7/16	1 7/16	1 7/16	1 3/8	1 1/4	1 1/8	1	7/8	11/16	1/2	3/8	1/4	1/8	0
	TDC	1/2	1 1/16	1 11/16	2 1/16	2 9/16	3 1/16	3 7/16	4 1/16	4 5/8	5 1/16	5 7/16	5 5/8	5 7/16	5 1/16	4 11/16	4	3 3/8	2 7/16	1 5/8	1	1/2	0	0	0
	VCO	7/16	15/16	1 7/16	2 5/16	3 3/16	4 1/16	4 15/16	5 7/16	5 13/16	5 15/16	5 7/16	5 7/16	5 13/16	5 7/16	5 1/16	4 15/16	4 1/16	3 7/16	2 15/16	2 3/16	1 7/16	15/16	7/16	0
	TDC+VCO	1 1/8	2 3/16	3 1/16	4 1/16	5 3/8	6 5/16	7 7/16	9	9 7/16	10 5/8	11	11 3/16	11	10 7/16	9 7/16	9	7 7/8	6 5/8	5 1/4	4	2 3/4	1 5/8	11/16	0
G5	DLS	1/16	3/16	5/16	7/16	11/16	1 1/16	1 5/16	1 9/16	1 11/16	1 9/16	1 5/16	1 1/16	15/16	7/16	5/16	3/16	1/16	0
	DLC	9/16	1 1/16	1 11/16	2 5/16	3 1/16	3 7/16	4 1/16	4 5/8	5 1/16	5 7/16	5 5/8	5 3/4	5 5/8	5 3/8	5 1/16	4 11/16	4	3 3/8	2 7/16	1 5/8	1	9/16	0	0
	SDL	1/8	1/4	3/8	9/16	11/16	7/8	1	1 1/8	1 3/16	1 3/8	1 5/8	1 5/8	1 5/8	1 3/16	1 1/16	1 1/16	1 1/16	1 1/16	1 1/16	1	11/16	5/8	7/16	0
	TDC	7/8	1 3/4	2 7/8	4 1/16	5 5/8	7	8 1/16	9 1/16	10 1/16	11 1/16	11 3/4	11 11/16	11 3/4	11 1/16	10 3/16	9 3/16	8 3/8	7 1/8	5 7/8	4 1/4	2 11/16	1 3/4	7/8	0
	VCO	7/16	15/16	1 7/16	2 5/16	3 3/16	4 1/16	4 15/16	5 7/16	5 13/16	5 15/16	5 7/16	5 7/16	5 13/16	5 7/16	5 1/16	4 15/16	4 1/16	3 7/16	2 15/16	2 3/16	1 7/16	15/16	7/16	0
	TDC+VCO	2 1/8	4 1/8	6 3/16	8 5/8	10 15/16	13 1/8	15 1/4	17	18 9/16	19 11/16	20 7/16	20 1/4	19 5/8	18 9/16	17 7/16	15 1/2	13 3/16	11 3/8	8 15/16	6 1/2	4 1/16	3 1/16	1 9/16	0
G6	DLS	1/16	3/16	5/16	7/16	11/16	1 1/16	1 5/16	1 9/16	1 11/16	1 9/16	1 5/16	1 1/16	15/16	7/16	5/16	3/16	1/16	0
	DLC	9/16	1 3/16	1 7/8	2 3/4	3 3/4	4 5/8	5 5/16	6 3/8	7	7 1/2	7 11/16	8	7 7/8	7 1/2	7 1/16	6 3/8	5 5/8	4 3/4	3 3/4	2 11/16	1 15/16	9/16	0	0
	SDL	1/8	5/16	7/16	11/16	15/16	1 1/8	1 3/8	1 9/16	1 11/16	1 9/16	1 5/16	1 1/8	15/16	7/16	5/16	3/16	1/16	0
	TDC	15/16	2 1/16	3 1/16	4 1/2	6	7 1/2	9	10 1/4	11 1/4	12 1/8	12 5/16	12 5/16	12 5/8	12 1/16	11 3/16	10 1/4	9	7 5/8	6	4 5/16	3 1/16	1 7/8	5/16	0
	VCO	7/16	15/16	1 7/16	2 5/16	3 3/16	4 1/16	4 15/16	5 7/16	5 13/16	5 15/16	5 7/16	5 7/16	5 13/16	5 7/16	5 1/16	4 15/16	4 1/16	3 7/16	2 15/16	2 3/16	1 7/16	15/16	7/16	0
	TDC+VCO	2 1/4	4 7/16	6 3/4	9 1/4	11 3/4	14 1/8	16 1/16	18 3/8	20 1/8	21 1/2	22 5/16	21 7/8	21 1/16	19 7/8	18 5/16	16 3/8	14 3/16	11 3/4	9 1/16	6 1/16	4 5/8	3	1 5/16	0

LEGEND

DLS - DENOTES DEFLECTION DUE TO STRUCTURAL STEEL GIRDER.

DLC - DENOTES DEFLECTION DUE TO DECK SLAB, HAUNCH AND S.I.P. FORMS

SDL - DENOTES DEFLECTION DUE TO BARRIER

TDC - DENOTES TOTAL DEAD LOAD DEFLECTION AND CAMBER

VCO - DENOTES CAMBER FOR VERTICAL CURVE ORDINATE DUE TO ROADWAY PROFILE

TDC+VCO - DENOTES TOTAL CAMBER

ALL GIRDERS SHALL BE CAMBERED FOR DEAD LOAD DEFLECTION ORDINATES TO THE DIMENSIONS SHOWN ON THESE PLANS. THE CAMBER TOLERANCE IS NOTHING UNDER TO THREE QUARTERS (3/4) INCH OVER.

CROSS REFERENCE NOTES:

1. FOR GENERAL NOTES, SEE DWG. S1-2.
2. FOR VERTICAL CURVE DATA, SEE SEE DWG. S1-1.
3. FOR GIRDER ELEVATION, SEE SEE DWGS. S1-38 & S1-39.

UNOFFICAL COPY

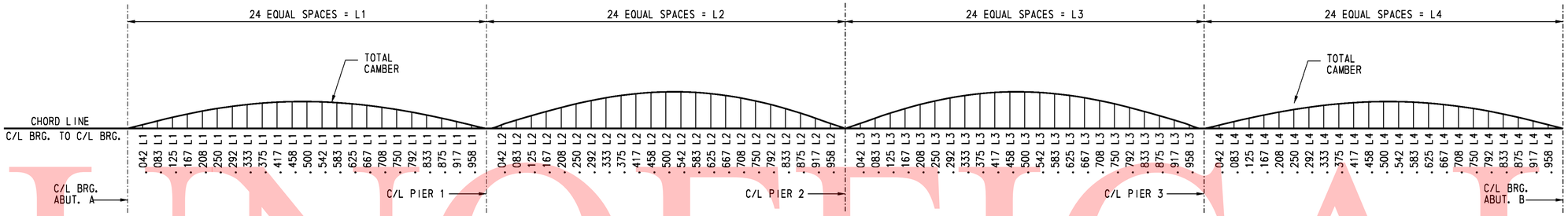

SCHEMATIC CAMBER DIAGRAM

CAMBER ORDINATES (IN)

GIRDER NO.	POINT	C/L PIER 2	SPAN 3 .042L	.083L	.125L	.167L	.208L	.250L	.292L	.333L	.375L	.417L	.458L	.500L	.542L	.583L	.625L	.667L	.708L	.750L	.792L	.833L	.875L	.917L	.958L	C/L PIER 3	SPAN 4 .042L	.083L	.125L	.167L	.208L	.250L	.292L	.333L	.375L	.417L	.458L	.500L	.542L	.583L	.625L	.667L	.708L	.750L	.792L	.833L	.875L	.917L	.958L	C/L BRG. ABUT. B
G1	DLS	0	0	-1/16	0	0	1/8	3/16	3/16	3/8	1/4	3/8	5/8	5/8	5/8	5/8	3/4	1/2	7/16	3/8	1/4	3/16	1/8	1/16	0	0	1/16	1/8	3/16	5/16	7/16	3/4	11/16	15/16	7/8	1 1/16	1 1/8	1 3/16	1 3/16	1 3/16	1 1/8	1 1/16	1	7/8	3/4	9/16	3/8	3/16	0
	DLC	0	-1/16	-1/8	-1/16	1/16	1/4	1/2	3/4	1	1 1/4	1 7/16	1 9/16	1 5/8	1 5/8	1 5/8	1 1/2	1 5/16	1 1/8	15/16	5/8	7/16	1/4	1/16	0	0	3/16	3/8	9/16	7/8	1 1/4	1 9/16	1 15/16	2 1/4	2 3/16	2 11/16	3 1/16	3 3/16	3 3/16	3 3/16	3 1/4	3 1/8	2 15/16	2 11/16	2 3/8	2 1/16	1 1/2	1 1/16	1/2	0
	SDL	0	0	0	0	1/16	1/8	3/16	1/4	3/16	3/8	7/16	1/2	1/2	1/2	1/2	7/16	7/16	3/8	5/16	1/4	1/8	1/16	1/16	0	0	1/16	1/16	1/8	3/16	5/16	3/8	1/2	9/16	5/8	11/16	3/4	13/16	13/16	13/16	13/16	3/4	3/4	11/16	9/16	1/2	3/8	1/4	1/8	0
	TDC	0	-1/16	-1/8	-1/16	3/16	1/2	7/8	1 5/16	1 11/16	2 1/16	2 7/16	2 5/8	2 11/16	2 13/16	2 11/16	2 5/16	2 1/4	1 15/16	1 13/16	1 1/8	3/4	3/8	3/16	1/16	0	1/4	9/16	15/16	1 7/16	2	2 1/2	3 1/8	3 5/8	4 1/8	4 5/16	4 7/8	5 5/16	5 5/16	5 5/16	5 1/4	5 1/16	4 3/4	4 5/16	3 15/16	3 5/16	2 1/16	1 11/16	15/16	0
	VCO	0	11/16	1 3/8	1 15/16	2 1/2	2 15/16	3 3/8	3 11/16	4	4 3/16	4 3/8	4 7/16	4 1/2	4 7/16	4 3/8	4 3/16	4	3 11/16	3 3/8	2 15/16	2 1/2	1 15/16	1 3/8	11/16	0	1/2	15/16	1 5/16	1 11/16	2	2 5/16	2 9/16	2 3/4	2 7/8	3	3 1/16	3 1/16	3 1/16	3	2 7/8	2 3/4	2 9/16	2 3/16	2	1 11/16	1 5/16	15/16	1/2	0
	TDC+VCO	0	5/8	1 1/4	1 7/8	2 11/16	3 1/16	4 1/4	5	5 11/16	6 3/16	6 3/4	7 1/16	7 1/4	7 1/4	7 1/16	6 3/4	6 1/4	5 5/8	4 15/16	4 1/16	3 1/4	2 3/8	1 5/16	11/16	0	3/4	1 1/2	2 1/4	3 1/8	4	4 11/16	5 5/8	6 3/8	7	7 1/2	7 15/16	8 1/4	8 3/8	8 3/16	8 1/16	7 3/4	7 1/4	6 5/8	5 13/16	4 7/8	3 11/16	2 5/8	1 5/16	0
G2	DLS	0	0	-1/16	-1/16	0	1/8	3/16	1/4	3/8	1/4	3/8	5/8	5/8	5/8	5/8	3/4	1/2	7/16	3/8	1/4	3/16	1/16	1/16	0	0	1/16	1/8	1/4	3/16	7/16	5/8	3/4	7/8	1	1 1/16	1 1/8	1 1/4	1 1/4	1 1/4	1 1/4	1 1/8	1	7/8	3/4	5/16	3/8	3/16	0
	DLC	0	-1/16	-1/8	-1/8	0	1/4	7/16	11/16	15/16	1 3/16	1 3/8	1 3/16	1 5/8	1 5/8	1 5/8	1 1/2	1 3/16	1 1/8	7/8	5/8	7/16	3/16	1/16	0	0	3/16	3/8	5/8	15/16	1 3/16	1 11/16	2 1/16	2 3/8	2 11/16	3	3 3/16	3 3/8	3 1/2	3 1/2	3 7/16	3 5/16	3 1/8	2 11/16	2 1/2	2 1/16	1 5/8	1 1/8	5/16	0
	SDL	0	0	0	0	0	1/16	1/8	3/16	3/16	1/4	5/16	3/8	3/8	3/8	3/8	3/16	3/16	1/4	5/16	1/8	1/8	1/16	1/16	0	0	1/16	1/16	1/8	3/16	1/4	5/16	7/16	1/2	9/16	5/8	5/8	11/16	11/16	11/16	11/16	11/16	5/8	9/16	1/2	7/16	3/16	3/16	1/8	0
	TDC	0	-1/16	-3/16	-3/16	1/16	3/8	3/4	1 1/8	1 5/16	2 1/4	2 7/16	2 5/8	2 5/8	2 11/16	2 5/8	2 1/8	1 13/16	1 5/16	1 1/16	11/16	5/16	1/8	1/16	0	0	5/16	9/16	1	1 1/2	2 1/16	2 5/8	3 1/16	3 3/4	4 1/4	4 5/8	5	5 5/16	5 7/16	5 7/16	5 3/8	5 1/16	4 7/8	4 7/16	3 7/8	3 1/4	2 1/2	1 11/16	7/8	0
	VCO	0	11/16	1 3/8	1 15/16	2 1/2	2 15/16	3 3/8	3 11/16	4	4 3/16	4 3/8	4 7/16	4 1/2	4 7/16	4 3/8	4 3/16	4	3 11/16	3 3/8	2 15/16	2 1/2	1 15/16	1 3/8	11/16	0	1/2	15/16	1 5/16	1 11/16	2	2 5/16	2 9/16	2 3/4	2 7/8	3	3 1/16	3 1/16	3 1/16	3	2 7/8	2 3/4	2 9/16	2 3/16	2	1 11/16	1 5/16	15/16	1/2	0
	TDC+VCO	0	5/8	1 1/8	1 15/16	2 5/16	3 1/16	4 1/16	4 7/8	5 1/2	6 1/16	6 9/16	6 15/16	7 1/16	7 1/16	6 7/8	6 9/16	6 1/8	5 1/2	4 15/16	4	3 1/16	2 5/16	1 1/2	3/4	0	15/16	1 1/2	2 5/16	3 5/16	4 1/16	4 7/8	5 3/4	6 1/16	7 1/8	7 5/8	8 1/16	8 3/8	8 1/2	8 1/16	8 1/4	7 7/8	7 3/8	6 3/4	5 7/8	4 15/16	3 7/8	2 5/8	1 3/8	0
G3	DLS	0	0	-1/16	-1/16	0	1/16	3/16	1/4	3/8	1/4	1/2	9/16	5/8	5/8	5/8	9/16	1/2	7/16	3/8	1/4	3/16	1/16	0	0	0	1/16	1/8	1/4	3/8	1/2	5/8	3/4	7/8	1	1 1/8	1 3/16	1 1/4	1 3/16	1 3/16	1 1/16	1 1/4	1 3/16	1 1/16	15/16	3/4	5/8	7/16	3/16	0
	DLC	0	-1/16	-3/16	-1/8	0	3/16	3/8	5/8	7/8	1 1/8	1 3/8	1 1/2	1 5/8	1 5/8	1 5/8	1 1/16	1 1/16	7/8	5/8	3/8	3/16	1/16	0	0	0	3/16	3/8	11/16	1	1 3/8	1 3/4	2 1/8	2 1/2	2 15/16	3 1/8	3 3/8	3 11/16	3 5/8	3 5/8	3 7/16	3 1/4	2 15/16	2 11/16	2 3/8	1 15/16	1 1/8	3/16	0
	SDL	0	0	-1/16	-1/16	-1/16	0	1/16	1/16	1/8	3/16	3/16	1/4	1/4	1/4	1/4	1/4	3/16	3/16	1/8	1/16	1/16	0	0	0	0	1/16	1/16	1/8	3/16	1/4	5/16	3/8	7/16	1/2	9/16	9/16	5/8	5/8	5/8	5/8	5/8	5/8	9/16	1/2	7/16	3/8	5/16	1/8	0
	TDC	0	-1/8	-1/4	-1/4	-1/16	1/4	9/16	1	1 3/8	1 3/4	2 1/16	2 3/16	2 1/16	2 1/2	2 7/16	2 1/4	2	1 11/16	1 3/8	15/16	5/8	3/16	1/16	0	0	5/16	5/8	1	1 3/16	2 1/8	2 11/16	3 3/16	3 7/8	4 3/8	4 13/16	5 1/8	5 7/16	5 5/16	5 5/16	5 1/2	5 5/16	4 15/16	4 3/16	3 15/16	3 3/16	2 5/16	1 3/4	7/8	0
	VCO	0	11/16	1 3/8	1 15/16	2 1/2	2 15/16	3 3/8	3 11/16	4	4 3/16	4 3/8	4 7/16	4 1/2	4 7/16	4 3/8	4 3/16	4	3 11/16	3 3/8	2 15/16	2 1/2	1 15/16	1 3/8	11/16	0	1/2	15/16	1 5/16	1 11/16	2	2 5/16	2 9/16	2 3/4	2 7/8	3	3 1/16	3 1/16	3 1/16	3	2 7/8	2 3/4	2 9/16	2 3/16	2	1 11/16	1 5/16	15/16	1/2	0
	TDC+VCO	0	9/16	1 1/8	1 11/16	2 1/16	3 1/16	3 15/16	4 11/16	5 3/8	5 15/16	6 7/16	6 3/4	6 15/16	6 15/16	6 3/4	6 7/16	6	5 3/8	4 11/16	3 7/8	3 1/16	2 1/4	1 7/16	3/4	0	13/16	1 3/16	2 3/8	3 1/4	4 1/8	5	5 11/16	6 5/16	7 1/4	7 3/4	8 3/16	8 1/2	8 5/8	8 3/16	8 3/8	8	7 1/2	6 11/16	6	5	3 11/16	2 11/16	1 3/8	0
G4	DLS	0	-1/16	-1/16	-1/16	0	1/16	1/8	1/4	3/16	7/16	1/2	9/16	5/8	5/8	5/8	9/16	1/2	7/16	5/16	1/4	1/8	1/16	0	0	0	1/16	1/8	1/4	3/8	1/2	5/8	11/16	15/16	1 1/16	1 1/8	1 1/4	1 1/16	1 3/16	1 3/16	1 1/4	1 3/16	1 1/8	15/16	13/16	5/8	7/16	5/16	0
	DLC	0	-1/8	-3/16	-3/16	-1/16	1/8	3/16	9/16	15/16	1 1/8	1 1/4	1 7/16	1 1/2	1 1/2	1 3/8	1 1/4	1 1/8	15/16	9/16	3/8	1/8	1/16	0	0	0	3/16	7/16	11/16	1 1/8	1 7/16	1 11/16	2 1/4	2 5/8	2 15/16	3 1/4	3 1/2	3 11/16	3 3/4	3 3/4	3 11/16	3 5/16	3 1/4	2 15/16	2 11/16	2 3/16	1 3/4	1 3/16	9/16	0
	SDL	0	0	-1/16	-1/16	-1/16	0	0	1/16	1/16	1/8	3/16	3/16	1/4	1/4	1/4	1/4	3/16	3/16	1/8	1/16	1/16	0	0	0	0	1/16	1/16	1/8	3/16	1/4	5/16	3/8	7/16	1/2	9/16	5/8	5/8	11/16	11/16	5/8	5/8	9/16	9/16	7/16	3/8	5/16	3/16	1/8	0
	TDC	0	-3/16	-5/16	-5/16	-1/8	1/8	7/16	7/8	1 1/4	1 5/8	1 15/16	2 3/16	2 3/8	2 3/8	2 7/16	2 7/16	1 15/16	1 5/8	1 3/16	7/8	5/16	1/4	1/16	0	0	5/16	5/8	1 1/16	1 5/8	2 1/16	2 11/16	3 3/16	4	4 1/2	5	5 3/16	5 5/8	5 3/4	5 11/16	5 11/16	5 1/16	5 1/16	4 11/16	4 1/16	3 1/16	2 5/8	1 15/16	7/8	0
	VCO	0	11/16	1 3/8	1 15/16	2 1/2	2 15/16	3 3/8	3 11/16	4	4 3/16	4 3/8	4 7/16	4 1/2	4 7/16	4 3/8	4 3/16	4	3 11/16	3 3/8	2 15/16	2 1/2	1 15/16	1 3/8	11/16	0	1/2	15/16	1 5/16	1 11/16	2	2 5/16	2 9/16	2 3/4	2 7/8	3	3 1/16	3 1/16	3 1/16	3	2 7/8	2 3/4	2 9/16	2 3/16	2	1 11/16	1 5/16	15/16	1/2	0
	TDC+VCO	0	9/16	1 1/8	1 5/8	2 3/8	3 1/8	3 11/16	4 3/16	5 1/4	5 11/16	6 5/16	6 5/8	6 11/16	6 11/16	6 11/16	6 3/8	5 7/8	5 5/16	4 5/8	3 11/16	3 1/16	2 1/16	1 1/16	3/4	0	13/16	1 3/16	2 1/16	3 3/16	4 1/4	5 1/8	5 11/16	6 3/4	7 3/8	7 15/16	8 3/8	8 11/16	8 13/16	8 3/4	8 9/16	8 1/16	7 11/16	7	6 1/8	5 1/8	4	2 3/4	1 3/8	0
G5	DLS	0	-1/16	-1/16	-1/16	0	1/16	1/8	1/4	3/16	7/16	1/2	9/16	9/16	9/16	9/16	7/16	7/16	3/8	5/16	1/4	1/8	1/16	0	0	0	1/16	1/8	1/4	3/8	1/2	11/16	15/16	15/16	1 1/16	1 1/8	1 1/4	1 3/16	1 3/16	1 3/16	1 1/8	1 1/4	1 1/8	1	15/16	5/8	7/16	5/16	0
	DLC	0	-1/8	-1/4	-1/4	-3/16	0	3/16	7/16	11/16	15/16	1 1/8	1 5/16	1 3/8	1 7/16	1 3/8	1 5/16	1 1/8	15/16	3/4	1/2	5/16	1/8	0	0	0	1/4	7/16	3/4	1 1/8	1 1/2	1 7/8	2 5/16	2 11/16	3	3 5/16	3 3/8	3 3/4	3 7/8	3 7/8	3 11/16	3 5/8	3 7/16	3 1/8	2 3/4	2 1/4	1 3/4	1 3/16	5/8	0
	SDL	0	0	-1/16	-1/16	0	0	1/16	1/8	3/16	3/16	1/4	3/16	3/16	3/16	3/16	3/16	1/4	3/16	3/16	1/8	1/16	1/16	0	0	0	1/16	1/16	1/8	1/4	5/16	3/8	1/2	9/16	5/8	11/16	3/4	3/4	13/16	13/16	3/4	3/4	11/16	5/8	9/16	7/16	3/8	1/4	1/8	0
	TDC	0	-3/16	-3/8	-3/8	-5/16	1/16	3/8	15/16	1 5/16	1 11/16	1 7/8	2 1/8	2 3/16	2 5/16	2 1/4	2 1/8	1 7/8	1 5/16	1 1/4	7/8	1/2	3/16	1/16	0	0	3/8	11/16	1 1/8	1 11/16	2 3/16	2 13/16	3 5/16	4 1/16	4 3/4	5 3/16	5 9/16	5 7/16	5 7/16	6	6 1/16	5 13/16	5 11/16	5 3/16	4 7/8	4 1/4	3 5/16	2 3/4	1 7/8	15/16	0
	VCO	0	11/16	1 3/8	1 15/16	2 1/2	2 15/16	3 3/8	3 11/16	4	4 3/16	4 3/8	4 7/16	4 1/2	4 7/16	4 3/8	4 3/16	4	3 11/16	3 3/8	2 15/16	2 1/2	1 15/16	1 3/8	11/16	0	1/2	15/16	1 5/16	1 11/16	2	2 5/16	2 9/16	2 3/4	2 7/8	3	3 1/16	3 1/16	3 1/16	3	2 7/8	2 3/4	2 9/16	2 3/16	2	1 11/16	1 5/16	15/16	1/2	0
	TDC+VCO	0	9/16	1	1 13/16	2 1/4	3	3 3/4	4 1/2	5 3/16	5 3/4	6 1/4	6 9/16	6 11/16	6 3/4	6 5/8	6 5/16	5 7/8	5 1/4	4 5/8	3 11/16	3	2 1/16	1 3/8	3/4	0	13/16	1 5/8	2 1/2	3 7/16	4 3/8	5 1/4	6 1/8	6 15/16	7 5/8	8 3/16	8 5/8	8 13/16	9 1/16	9	8 11/16	8 1/16	7 7/8	7 3/16	6 5/16	5 1/4	4 1/8	2 13/16	1 7/16	0
G6	DLS	0	-1/16	-1/16	-1/16	-1/16	0	1/16	1/8	3/16	3/8	1/2	1/2	9/16	9/16	9/16	1/2	7/16	3/8	5/16	5/16	5/16	1/16	0	0	0	1/16	3/16	1/4	3/8	9/16	11/16	15/16	1	1 1/16	1 1/4	1 3/16	1 3/8	1 7/16	1 7/16	1 3/8	1 3/8	1 1/4	1 1/8	1	15/16	5/8	7/16	1/4	0
	DLC	0	-1/8	-5/16	-5/16	-1/4	-1/8	1/16	5/16	9/16	7/8	1	1 3/16	1 1/4	1 3/16	1 3/16	1 1/16	7/8	11/16	7/16	1/4	1/16	0	0	0	0	1/4	7/16	3/4	1 1/8	1 3/16	1 9/16	2 3/8	2 3/4	3 1/8	3 3/8	3 5/8	3 7/8	3 9/16	3 9/16	3 7/8	3 3/4	3 1/2	3 1/16	2 9/16	2 1/16	1 11/16	1 1/4	5/8	0
	SDL	0	0	-1/16	-1/16	0	1/16	1/8	3/16	1/4	5/16	3/8	7/16	7/16	7/16	7/16	3/8	5/16	1/4	3/16	1/8	1/16	0	0	0	0	1/16	1/8	3/16	1/4	3/8	1/2	9/16	11/16	3/4	13/16	7/8	15/16	15/16	15/16	15/16	15/16	7/8	13/16	11/16	9/16	7/16	5/16	1/8	0
	TDC	0	-3/16	-7/16	-7/16	-5/16	0	5/16	3/4	1 1/8	1 1/2	1 7/8	2 1/8	2 5/16	2 5/16	2 1/4	2 1/8	1 7/8	1 5/16	1 1/4	15/16	5/8	3/16	1/16	0	0	3/8	3/4	1 1/16	1 5/16	2 1/16	2 7/16	3 1/16	4 3/16	4 7/16	5 1/16	5 7/8	6 5/16	6 5/16	6 1/4	6	5 9/16	5 1/16	4 1/2	3 3/4	2 7/8	2	1	0
	VCO	0	11/16	1 3/8	1 15/16	2 1/2	2 15/16	3 3/8	3 11/16	4	4 3/16	4 3/8	4 7/16	4 1/2	4 7/16	4 3/8	4 3/16	4	3 11/16	3 3/8	2 15/16	2 1/2	1 15/16	1 3/8	11/16	0	1/2	15/16	1 5/16	1 11/16	2	2 5/16	2 9/16	2 3/4	2 7/8	3	3 1/16	3 1/16	3 1/16	3	2 7/8	2 3/4	2 9/16	2 3/16	2	1 11/16	1 5/16	15/16	1/2	0
	TDC+VCO	0	1/2	15/16	1 1/2	2 3/16	2 15/16	3 11/16	4 7/16	5 1/8	5 11/16	6 3/16	6 9/16	6 3/4	6 3/4	6 5/8	6 5/16	5 7/8	5 1/4	4 3/16	3 3/4	3	2 1/8	1 3/8	3/4	0	7/8	1 11/16	2 3/16	3 1/2	4 1/2	5 3/8	6 5/16	7 1/8	7 11/16	8 1/16	8 7/8	9 1/4	9 3/8	9 5/16	9 1/8	8 11/16	8 1/8	7 1/16	6 1/2	5 1/16	4 1/4	2 13/16	1 1/2	0

LEGEND

DLS - DENOTES DEFLECTION DUE TO STRUCTURAL STEEL GIRDER.

DLC - DENOTES DEFLECTION DUE TO DECK SLAB, HAUNCH AND S.I.P. FORMS

SDL - DENOTES DEFLECTION DUE TO BARRIER

TDC - DENOTES TOTAL DEAD LOAD DEFLECTION AND CAMBER

VCO - DENOTES CAMBER FOR VERTICAL CURVE ORDINATE DUE TO ROADWAY PROFILE

TDC+VCO - DENOTES TOTAL CAMBER

ALL GIRDERS SHALL BE CAMBERED FOR DEAD LOAD DEFLECTION ORDINATES TO THE DIMENSIONS SHOWN ON THESE PLANS. THE CAMBER TOLERANCE IS NOTHING UNDER TO THREE QUARTERS (3/4) INCH OVER.

CROSS REFERENCE NOTES:

1. FOR GENERAL NOTES, SEE DWG. S1-2.
2. FOR VERTICAL CURVE DATA, SEE SEE DWG. S1-1.
3. FOR GIRDER ELEVATION, SEE SEE DWGS. S1-38 & S1-39.

UNOFFICAL WORKING COPY

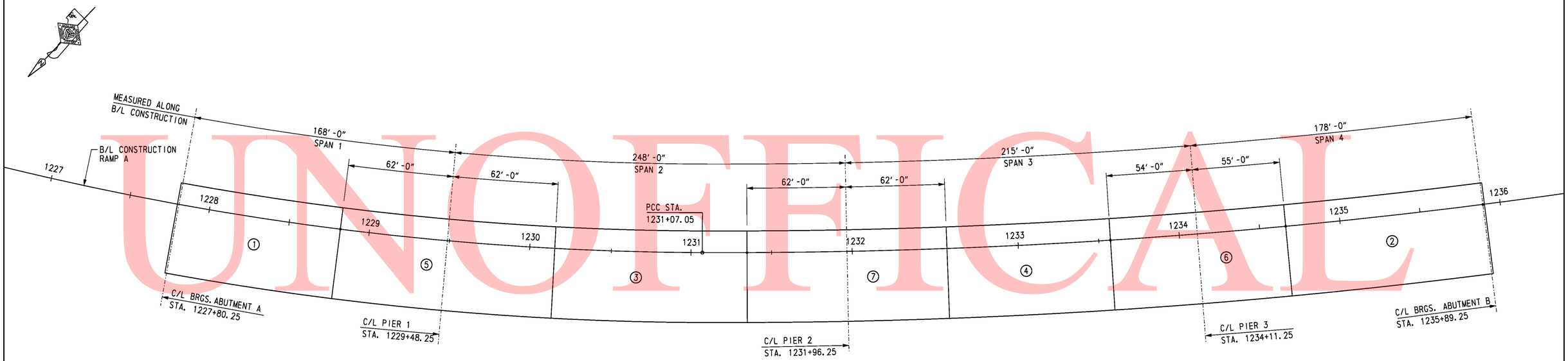

BRIDGE DECK POURING SEQUENCE

SCALE: 1" = 30'-0"

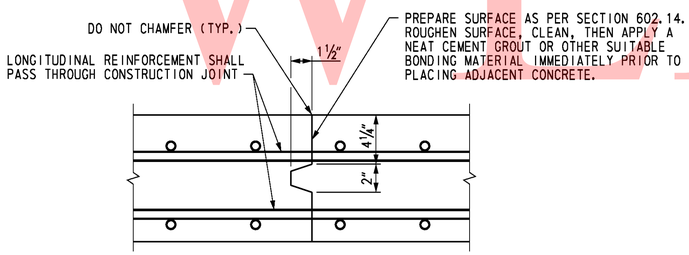

BRIDGE DECK CONSTRUCTION JOINT

NOT TO SCALE

NOTE:

1. THE POURING SEQUENCE FOR THE BRIDGE DECK SLAB SHALL BE MADE IN THE NUMBERED ORDER INDICATED. THERE MUST BE AT LEAST FORTY (40) HOURS BETWEEN THE COMPLETION OF ONE NUMBERED POUR AND THE START OF THE NEXT NUMBERED POUR, EXCEPT THERE MAY BE SIXTEEN (16) HOURS BETWEEN POURS NUMBERED 5, 6, AND 7.
2. AS AN ALTERNATE, CONTRACTOR MAY UTILIZE TWO CREWS AND TWO SETS OF EQUIPMENT TO CONSTRUCT POURS NUMBER 1 AND 2 SIMULTANEOUSLY. SIMILARLY, POURS NUMBER 3 AND 4, MAY BE CONSTRUCTED SIMULTANEOUSLY. POURS NUMBER 5 AND 6 MAY ALSO BE CONSTRUCTED SIMULTANEOUSLY.
3. CONCRETE FOR PIER CAPS SHALL BE POURED BETWEEN POURS 4 AND 5. ALLOW SUFFICIENT TIME FOR PIER CAPS TO REACH A MINIMUM COMPRESSIVE STRENGTH OF 3,000 PSI BEFORE POURING NEGATIVE MOMENT REGION.

CROSS REFERENCE NOTES:

1. FOR GENERAL NOTES, SEE DWG. S1-2.
2. FOR TYPICAL SECTION, SEE DWG. S1-3.
3. FOR PIER CAP CONSTRUCTION, SEE DWG. S1-20, S1-24 & S1-28.

UNOFFICAL WEBSITE COPY

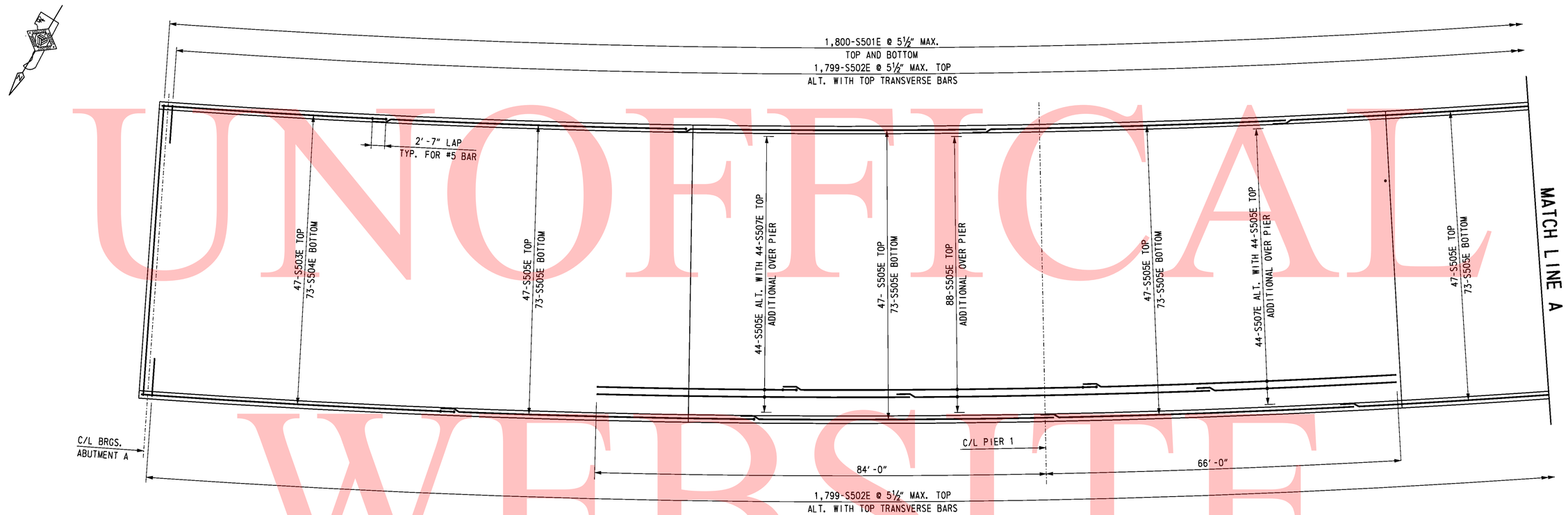

BRIDGE DECK REINFORCEMENT PLAN

SCALE: 1" = 10'-0"

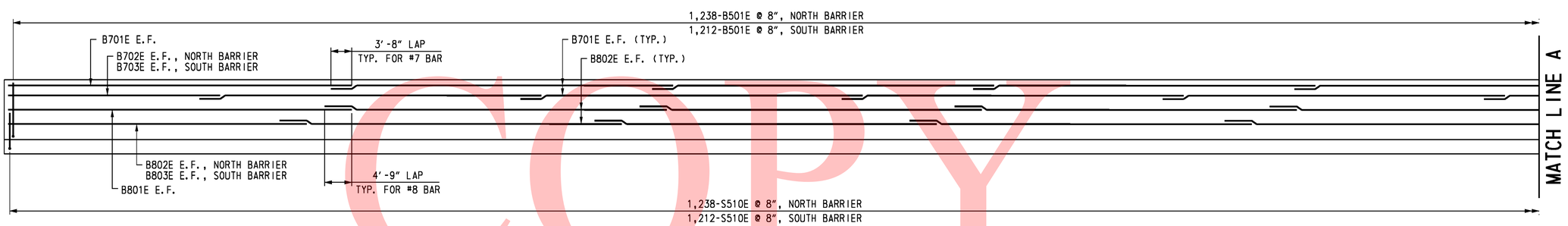

ELEVATION - DECK AND BARRIER REINFORCEMENT

NOT TO SCALE

CROSS REFERENCE NOTES:

1. FOR GENERAL NOTES, SEE DWG. S1-2.
2. FOR TYPICAL SECTION, SEE SEE DWG. S1-3.
3. FOR TYPICAL DECK REINFORCEMENT SECTION, SEE DWG. S1-49.
4. FOR REINFORCING BAR LIST, SEE DWG. S1-50.

UNOFFICAL WEBSITE COPY

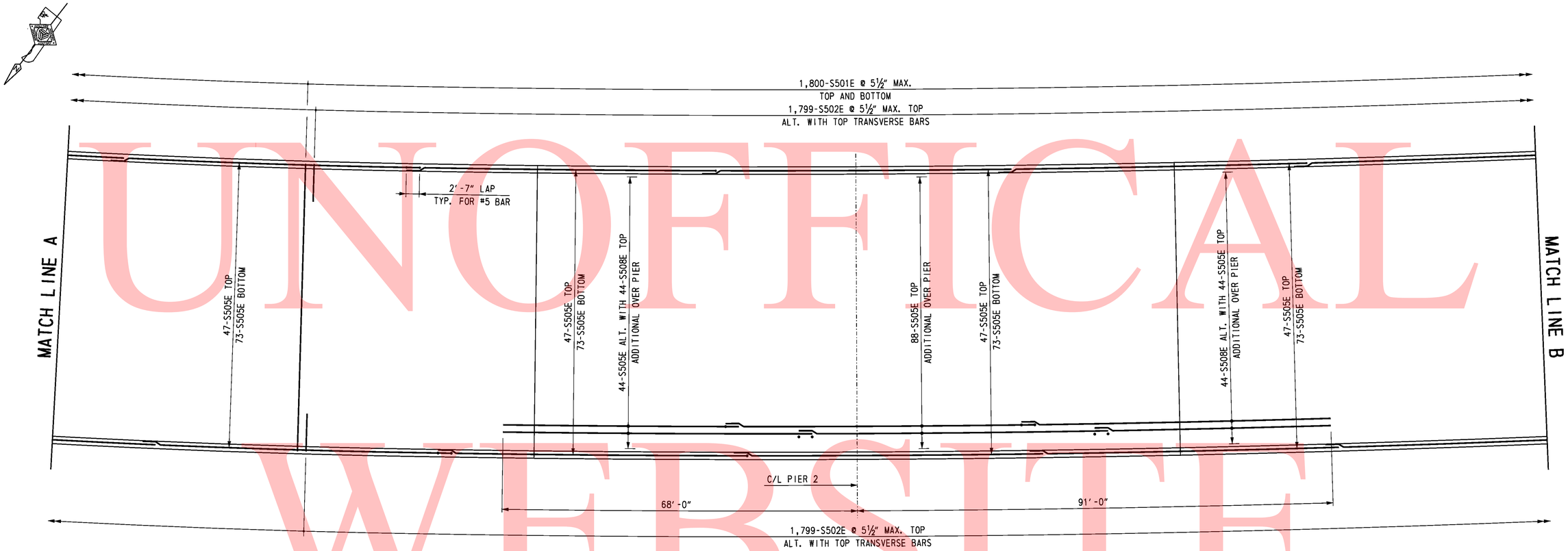

BRIDGE DECK REINFORCEMENT PLAN

SCALE: 1" = 10'-0"

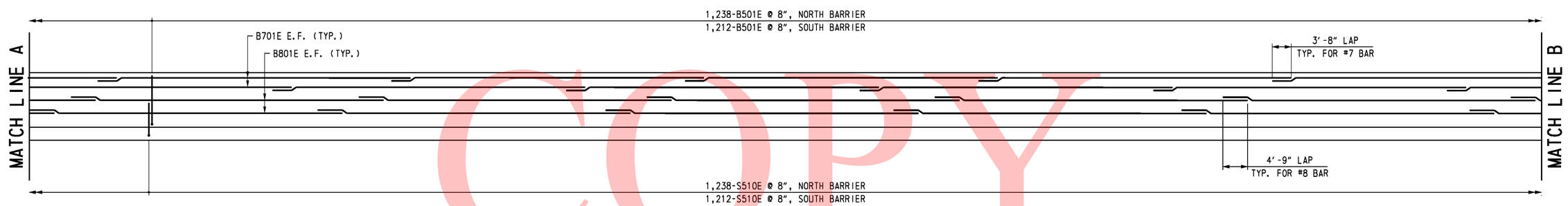

ELEVATION - BARRIER AND DECK REINFORCEMENT

NOT TO SCALE

CROSS REFERENCE NOTES:

1. FOR GENERAL NOTES, SEE DWG. S1-2.
2. FOR TYPICAL SECTION, SEE SEE DWG. S1-3.
3. FOR TYPICAL DECK REINFORCEMENT SECTION, SEE DWG. S1-49.
4. FOR REINFORCING BAR LIST, SEE DWG. S1-50.

UNOFFICAL WEBSITE COPY

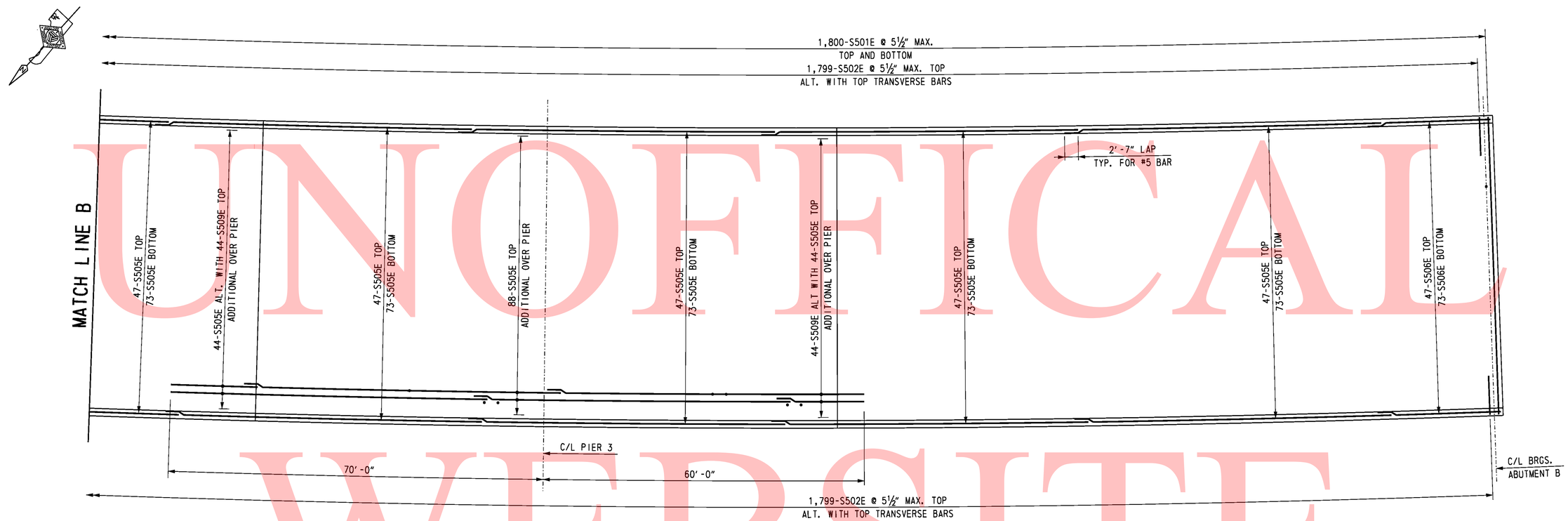

BRIDGE DECK REINFORCEMENT PLAN

SCALE: 1" = 10'-0"

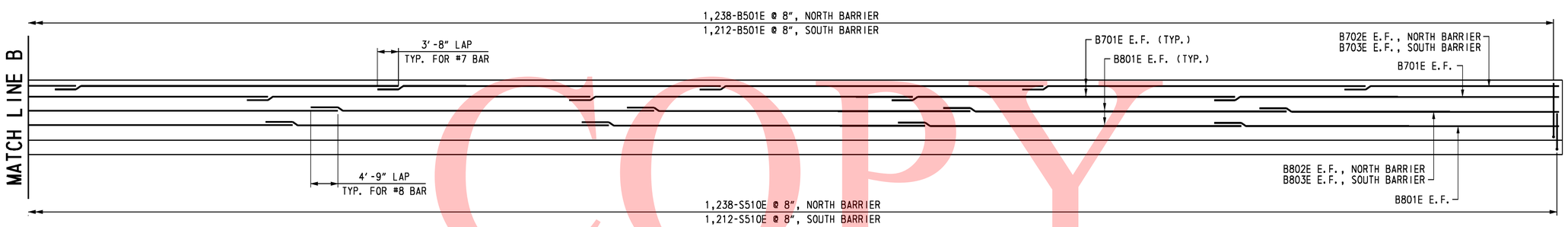

ELEVATION - DECK AND BARRIER REINFORCEMENT

NOT TO SCALE

CROSS REFERENCE NOTES:

1. FOR GENERAL NOTES, SEE DWG. S1-2 .
2. FOR TYPICAL SECTION, SEE SEE DWG. S1-3.
3. FOR TYPICAL DECK REINFORCEMENT SECTION, SEE DWG. S1-49.
4. FOR REINFORCING BAR LIST, SEE DWG. S1-50.

UNOFFICAL WEBSITE COPY

DELAWARE DEPARTMENT OF TRANSPORTATION	ADDENDUMS / REVISIONS	SR1 / I-95 INTERCHANGE	CONTRACT 28-090-03	BRIDGE NO. 1-716B	RAMP A OVER I-95	SHEET NO. S1-48
			COUNTY NEW CASTLE	DESIGNED BY: R. F. KIRCHNER	BRIDGE DECK AND BARRIER REINFORCEMENT 3	TOTAL SHTS. 242
				CHECKED BY: C. J. LOGAN		803

10/28/2010 O:\20832687-XM\CAD\Bridge\BR-S1\dk04_BR-S1_sr1.dgn
untitled

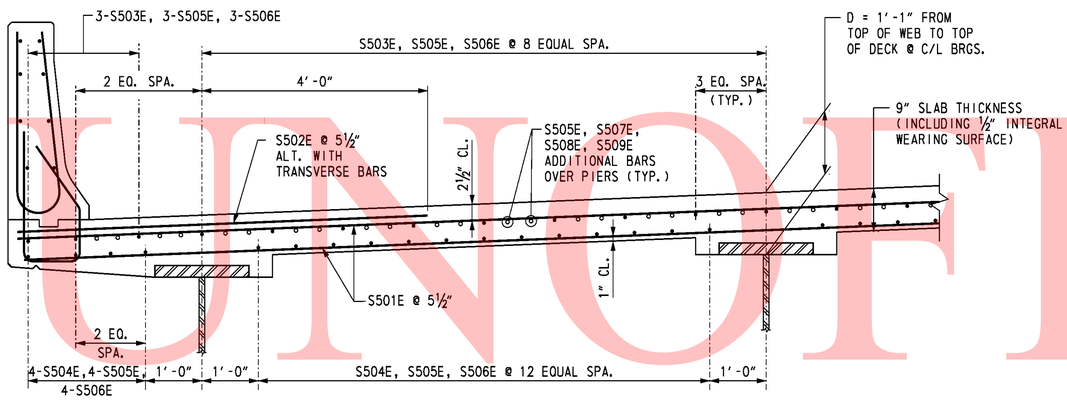

TYPICAL DECK REINFORCEMENT SECTION

SCALE: ¾" = 1'-0"

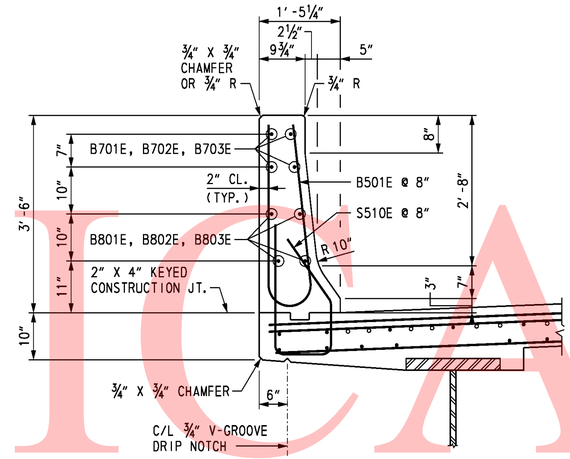

TYPICAL BARRIER REINFORCEMENT SECTION

SCALE: ¾" = 1'-0"

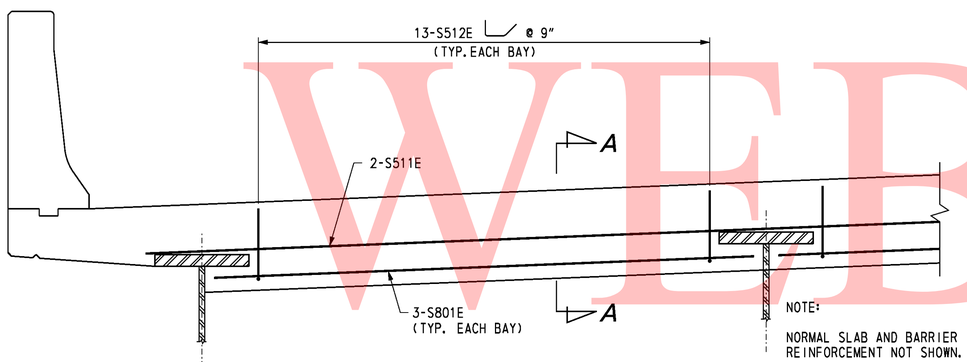

TYPICAL CONCRETE END HAUNCH SECTION

SCALE: ¾" = 1'-0"

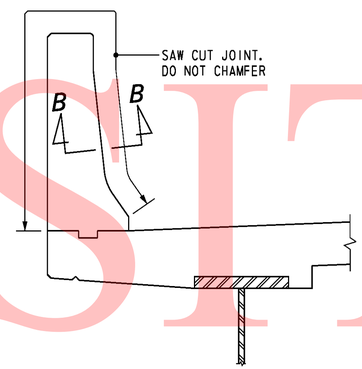

BARRIER CONTROL JOINT DETAIL

SCALE: ¾" = 1'-0"

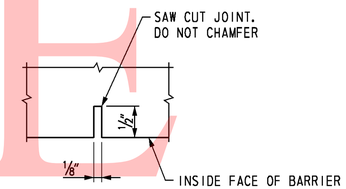

SECTION B-B

NOT TO SCALE

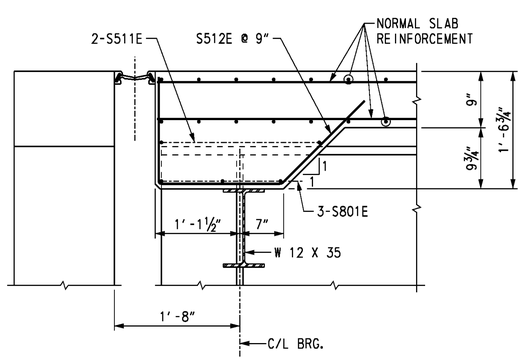

SECTION A-A

SCALE: 1" = 1'-0"

NOTES:

1. LONGITUDINAL SLAB REINFORCEMENT IS SET TO PASS THROUGH TRANSVERSE BARRIER BARS AS SHOWN.
2. ALL LONGITUDINAL BARRIER BARS SHALL BE PLACED CONTINUOUSLY IN BARRIER, LAPPING AS NECESSARY. BARRIER IS PLACED CONTINUOUSLY.
3. FRONT FACE OF BARRIER DIMENSIONED FROM PLUMB LINE.
4. SAW CUT CONTROL JOINT THE SAME DAY THAT CONCRETE IS POURED.

CROSS REFERENCE NOTE:

1. FOR GENERAL NOTES, SEE DWG. S1-2.
2. FOR REINFORCING BAR LIST, SEE DWG. S1-50.

UNOFFICIAL WEBSITE COPY

REINFORCING BAR LIST

BRIDGE DECK SLAB AND BARRIER

MARK	LENGTH	NO. BARS	TYPE	A	B	C	D	E	F	G	H	K	O	R	REMARKS
S501E	56′-6″	3,600	STR.												
S502E	7′-4″	3,598	STR.												
S503E	43′-0″ TO 60′-0″	47	STR.												△ = 0′-4⅜″
S504E	43′-0″ TO 60′-0″	73	STR.												△ = 0′-2⅞″
S505E	60′-0″	2,088	STR.												
S506E	21-0″	120	STR.												
S507E	35′-2″	88	STR.												
S508E	44′-2″	88	STR.												
S509E	15′-2″	88	STR.												
S510E	6′-3¾″	2,450	16	2′-8″	1′-1¼″	10½″	1′-8″				11¾″	1′-4½″			
S511E	52′-0″	4	STR.												
S512E	4′-0¾″	130	4	1′-2¼″	1′-5½″	1′-5″					1′-0″	1′-0″			
S801E	9′-7″	30	STR.												
B501E	6′-8¼″	2,450	H1		2′-10″	1′-0¼″	2′-10″				0′-5″			4¼″	
B701E	60′-0″	112	STR.												
B702E	36′-6″	4	STR.												
B703E	19-0″	4	STR.												
B801E	60′-0″	112	STR.												
B802E	51′-6″	4	STR.												
B803E	34′-0″	4	STR.												

BENDING DIAGRAMS

ALL DIMENSIONS ARE FROM OUT TO OUT.

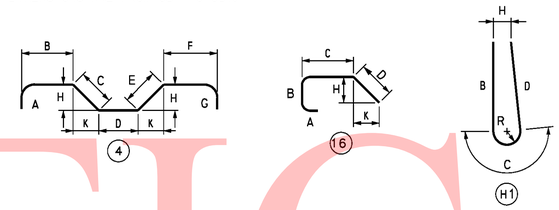

UNOFFICAL WEBSITE COPY

10/28/2010 O:\20832687-XM\CAD\Bridge\BR-S1\dk06_BR-S1_sr1.dgn

untitled

DELAWARE DEPARTMENT OF TRANSPORTATION

ADDENDUMS / REVISIONS

SR1 / I-95 INTERCHANGE

CONTRACT	BRIDGE NO.	1-716B
28-090-03	DESIGNED BY: R. F. KIRCHNER	
COUNTY		
NEW CASTLE	CHECKED BY: C. J. LOGAN	

RAMP A OVER I-95

BRIDGE DECK AND BARRIER REINFORCING BAR LIST

S1-50
SHEET NO.
244
TOTAL SHTS.
803

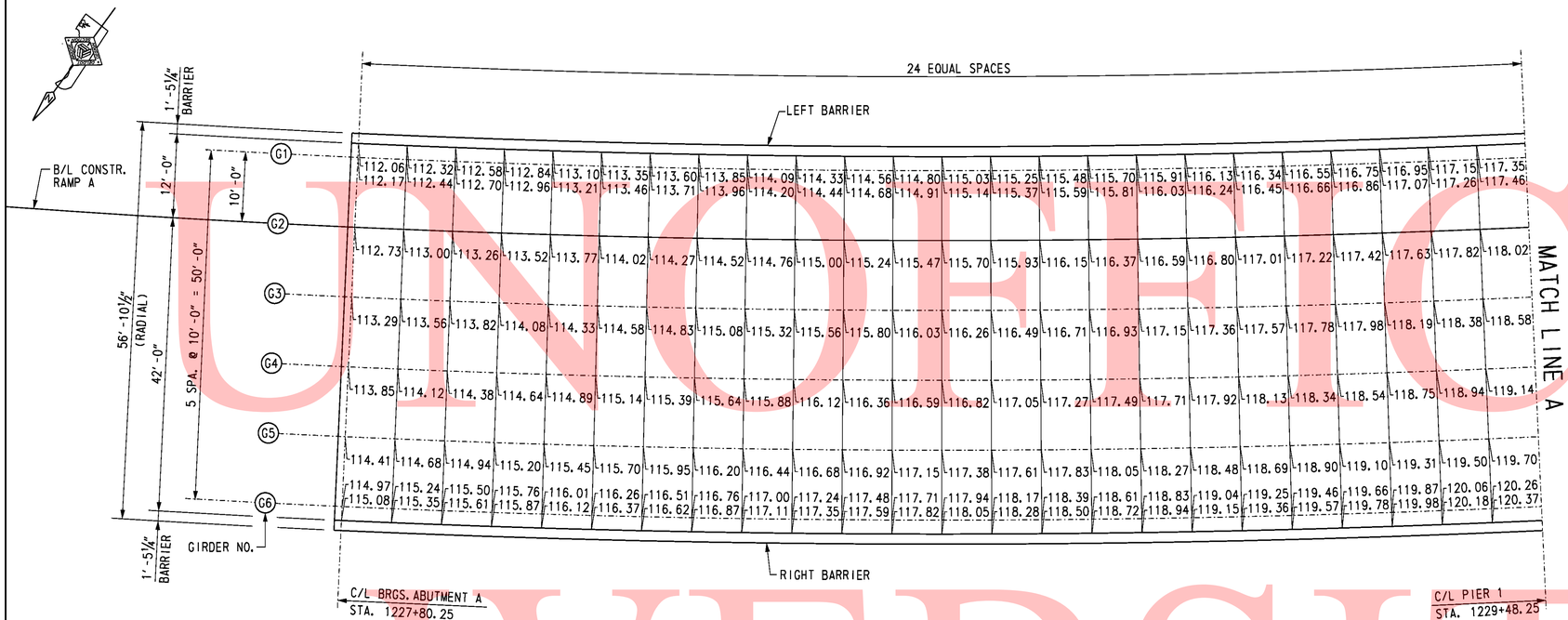

FINISHED BRIDGE DECK ELEVATIONS

SCALE: 1" = 10'-0"

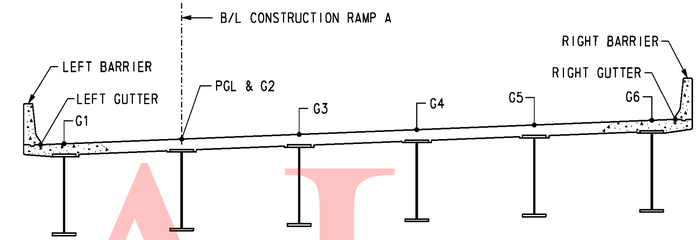

TYPICAL SECTION - RAMP A OVER I-95

NOT TO SCALE

NOTE:

THE FINISHED BRIDGE DECK ELEVATIONS SHOWN ARE TO TOP OF CONCRETE DECK.

CROSS REFERENCE NOTES:

1. FOR VERTICAL CURVE DATA, SEE DWG. S1-1.
2. FOR CROSS-SLOPE TRANSITIONS, SEE DWG. S1-3.
3. FOR GIRDER ELEVATION, SEE DWGS. S1-38 & S1-39.

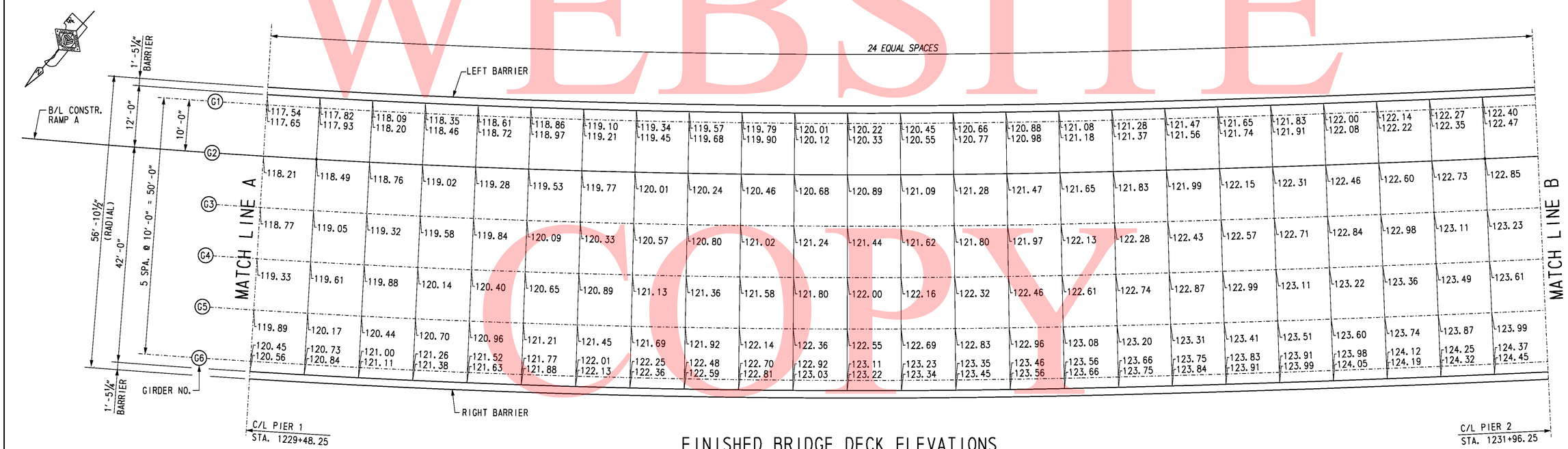

FINISHED BRIDGE DECK ELEVATIONS

SCALE: 1" = 10'-0"

UNOFFICIAL WEBSITE COPY

10/28/2010 O:\20832687-XM\CAD\Bridge\BR-S1\fd01_BR-S1_sr1.dgn
untitled

DELAWARE DEPARTMENT OF TRANSPORTATION	ADDENDUMS / REVISIONS		SR1 / I-95 INTERCHANGE	CONTRACT 28-090-03	BRIDGE NO. 1-716B	RAMP A OVER I-95	S1-51 SHEET NO. 245
				COUNTY NEW CASTLE	DESIGNED BY: K.D. BEAVER	FINISHED BRIDGE DECK ELEVATIONS 1	TOTAL SHTS. 803
					CHECKED BY: G.P. MISTRY		

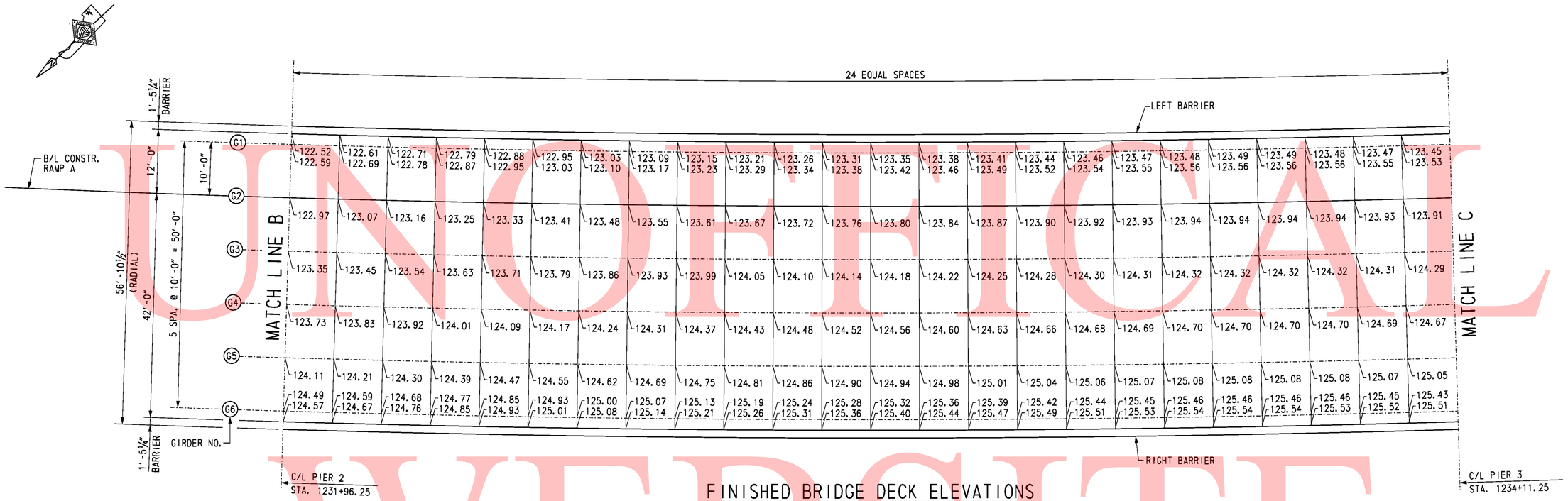

FINISHED BRIDGE DECK ELEVATIONS

SCALE: 1" = 10'-0"

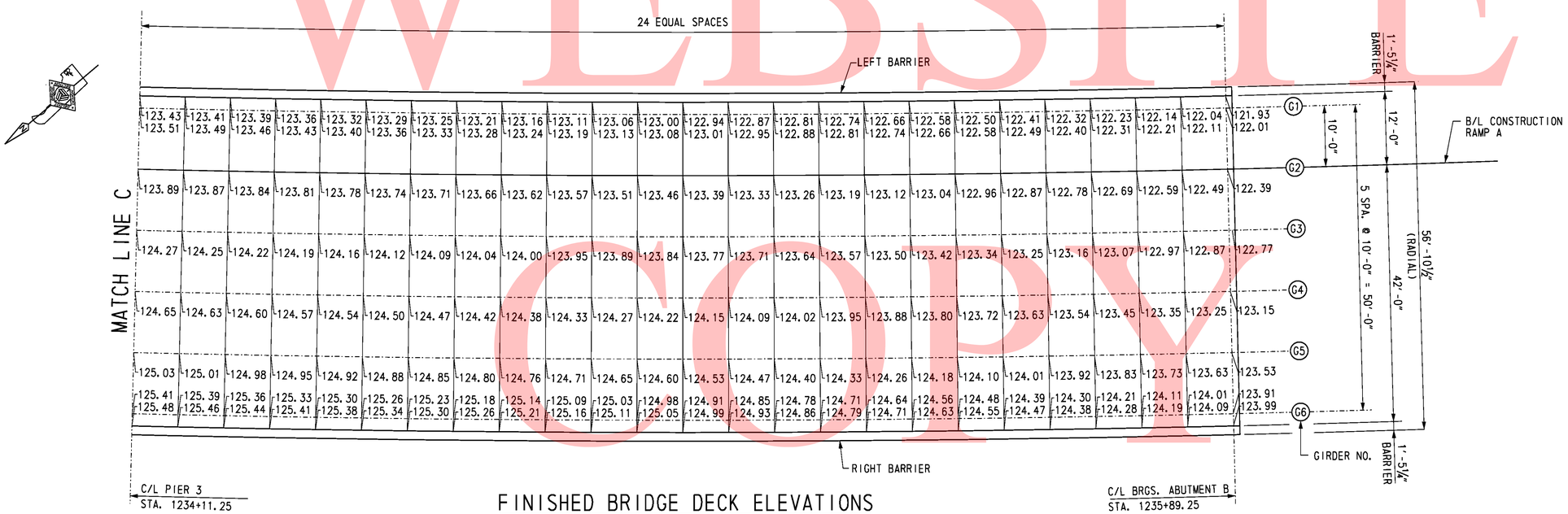

FINISHED BRIDGE DECK ELEVATIONS

SCALE: 1" = 10'-0"

NOTE:

THE FINISHED BRIDGE DECK ELEVATIONS SHOWN ARE TO TOP OF CONCRETE DECK.

CROSS REFERENCE NOTES:

1. FOR VERTICAL CURVE DATA, SEE DWG. S1-1.
2. FOR CROSS-SLOPE TRANSITIONS, SEE DWG. S1-3.
3. FOR GIRDER ELEVATION, SEE DWGS. S1-38 & S1-39.
4. FOR TYPICAL SECTION, FOR DWG S1-51.

UNOFFICIAL WEBSITE COPY

10/28/2010 O:\20832687-XM\CAD\Bridge\BR-S1\fd02_BR-S1_sr1.dgn
untitled

DELAWARE DEPARTMENT OF TRANSPORTATION	ADDENDUMS / REVISIONS	SR1 / I-95 INTERCHANGE	CONTRACT 28-090-03	BRIDGE NO. 1-716B	RAMP A OVER I-95	SHEET NO. S1-52
			COUNTY NEW CASTLE	DESIGNED BY: K.D. BEAVER	FINISHED BRIDGE DECK ELEVATIONS 2	TOTAL SHTS. 246
				CHECKED BY: G.P. MISTRY		803

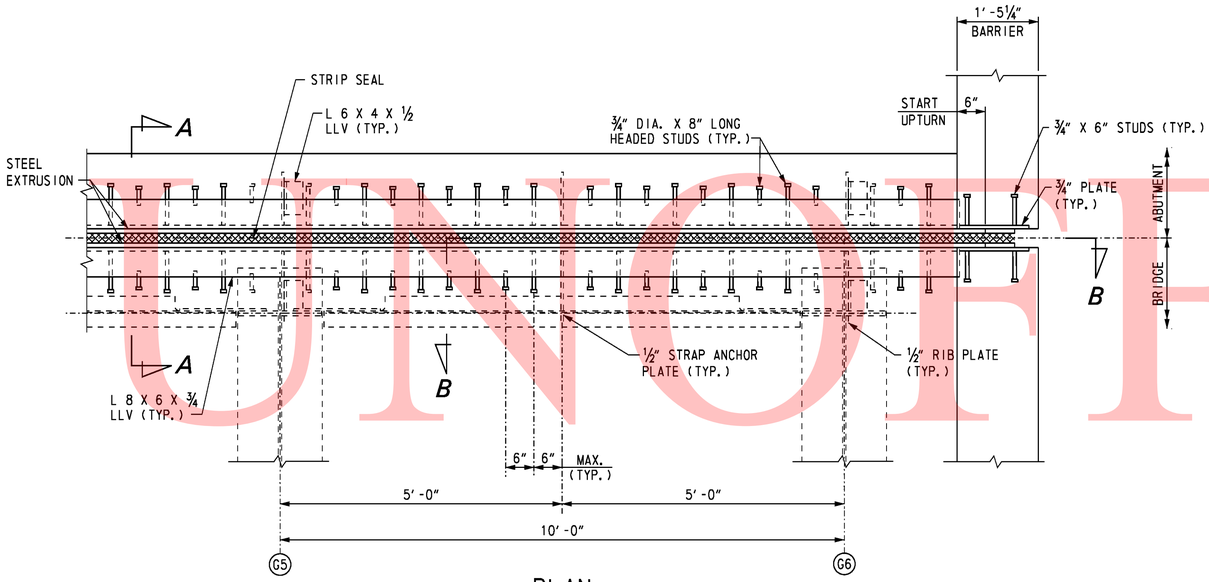

PLAN

SCALE: ¾" = 1'-0"

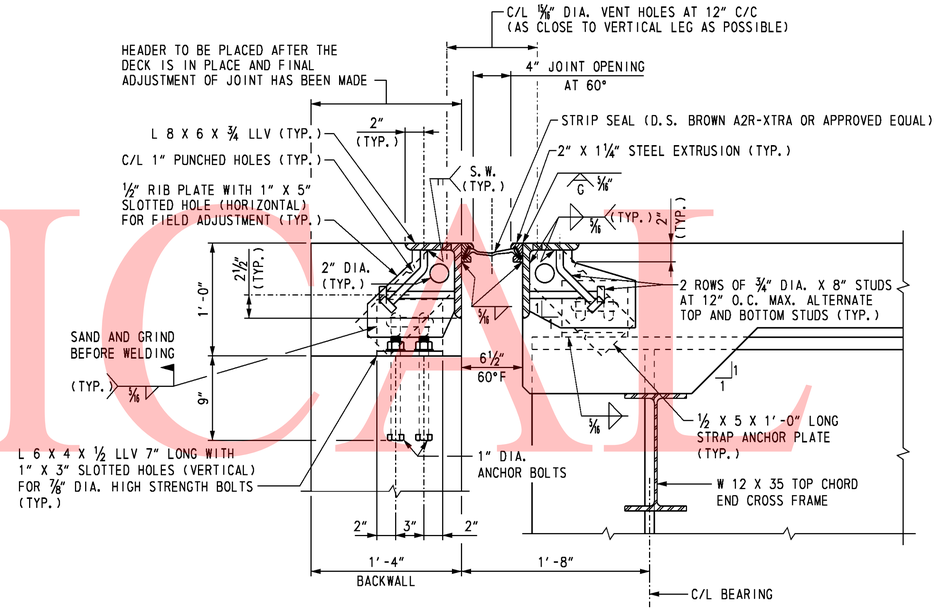

SECTION A-A

SCALE: 1½" = 1'-0"

JOINT OPENING (INCH)												
LOCATION	TEMPERATURE (°F)											MOVEMENT CLASSIFICATION
	0	10	20	30	40	50	60	70	80	90	100	
ABUTMENT A	5 13/16	5 5/8	5 3/8	5	4 5/8	4 3/8	4	3 11/16	3 3/8	3	2 11/16	5"
ABUTMENT B	5 13/16	5 11/16	5 1/4	4 15/16	4 5/8	4 3/8	4	3 11/16	3 3/8	3 1/16	2 3/4	5"

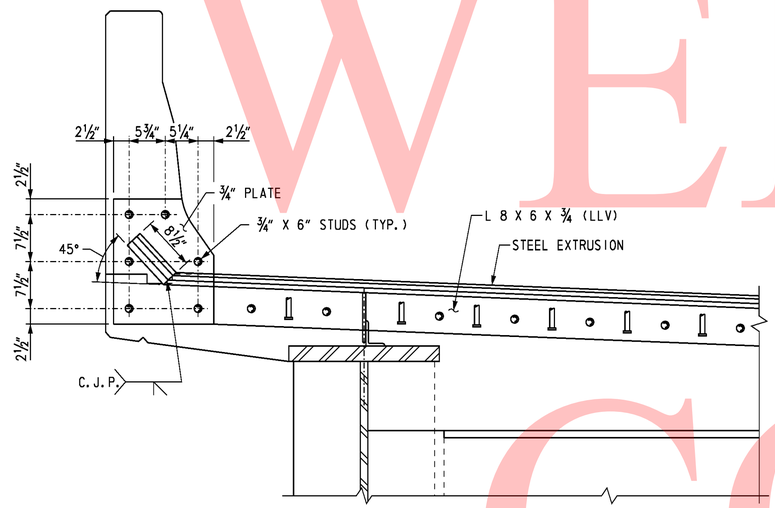

SECTION B-B

SCALE: 1" = 1'-0"

NOTES:

1. STRUCTURAL STEEL FOR DECK JOINTS SHALL CONFORM TO AASHTO M270, GRADE 36.
2. STEEL EXTRUSIONS FOR DECK JOINTS SHALL CONFORM TO AASHTO M270, GRADE 36.
3. HOLES SHALL BE PLACED IN THE ½" RIB PLATES AND THE STRAP ANCHOR PLATES FOR BAR REINFORCEMENT. IF THE HOLES ARE DRILLED IN THE FIELD, AN APPROVED EPOXY PAINT SHALL BE APPLIED TO TOUCH UP THE HOLES.
4. THE NEOPRENE STRIP SEAL SHALL BE PROVIDED CONTINUOUS THROUGHOUT THE LIMITS OF THE DECK. SPLICING OF THE NEOPRENE STRIP SEAL IS NOT PERMITTED.
5. COST FOR MATERIALS, FABRICATION AND INSTALLATION OF STRIP SEAL EXPANSION JOINTS, 5" MOVEMENT CLASSIFICATION, WITH STEEL ELEMENTS INCLUDING STUDS AND STEEL EXTRUSIONS, SHALL BE PAID FOR UNDER ITEM 605513.
6. EXPANSION JOINT PLAN IS SHOWN AT ABUTMENT B. EXPANSION JOINT AT ABUTMENT A IS SIMILAR.

UNOFFICIAL WEBSITE COPY

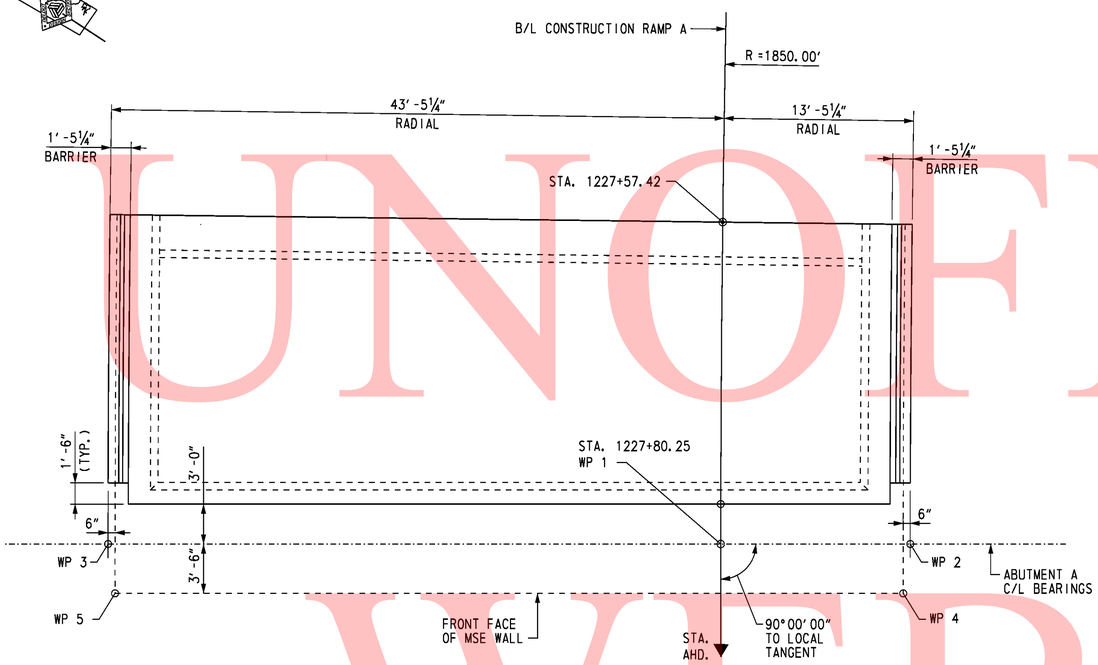

APPROACH SLAB AT ABUTMENT A PLAN

SCALE: 1/16" = 1'-0"

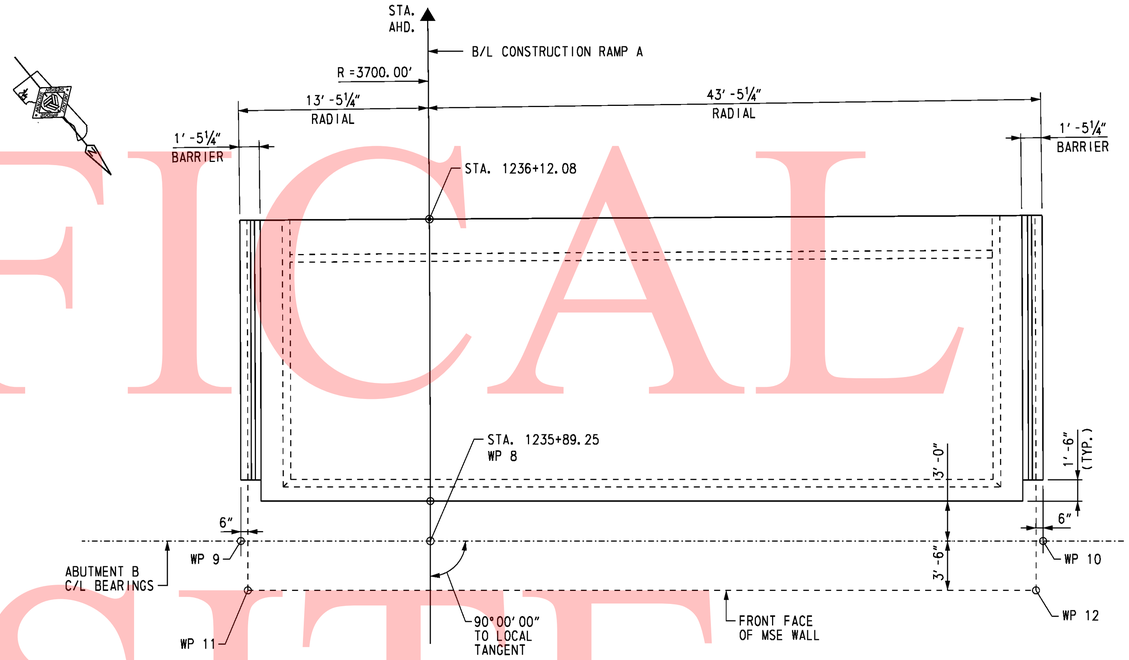

APPROACH SLAB AT ABUTMENT B PLAN

SCALE: 1/16" = 1'-0"

UNOFFICAL WEBSITE COPY

CROSS REFERENCE NOTES:

1. FOR BRIDGE PLAN AND ELEVATION, SEE DWG. S1-1.
2. FOR ABUTMENT A PLAN AND ELEVATION, SEE DWG. S1-5.
3. FOR ABUTMENT B PLAN AND ELEVATION, SEE DWG. S1-6.
4. FOR MSE WINGWALLS PLAN AND ELEVATION, SEE DWGS. S1-11 & S1-12.
5. FOR APPROACH SLAB REINFORCEMENT, SEE DWGS. S1-55 & S1-56.

10/28/2010 O:\20832687-XM\CAD\Bridge\BR-S1\cas01_BR-S1_sr1.dgn

untitled

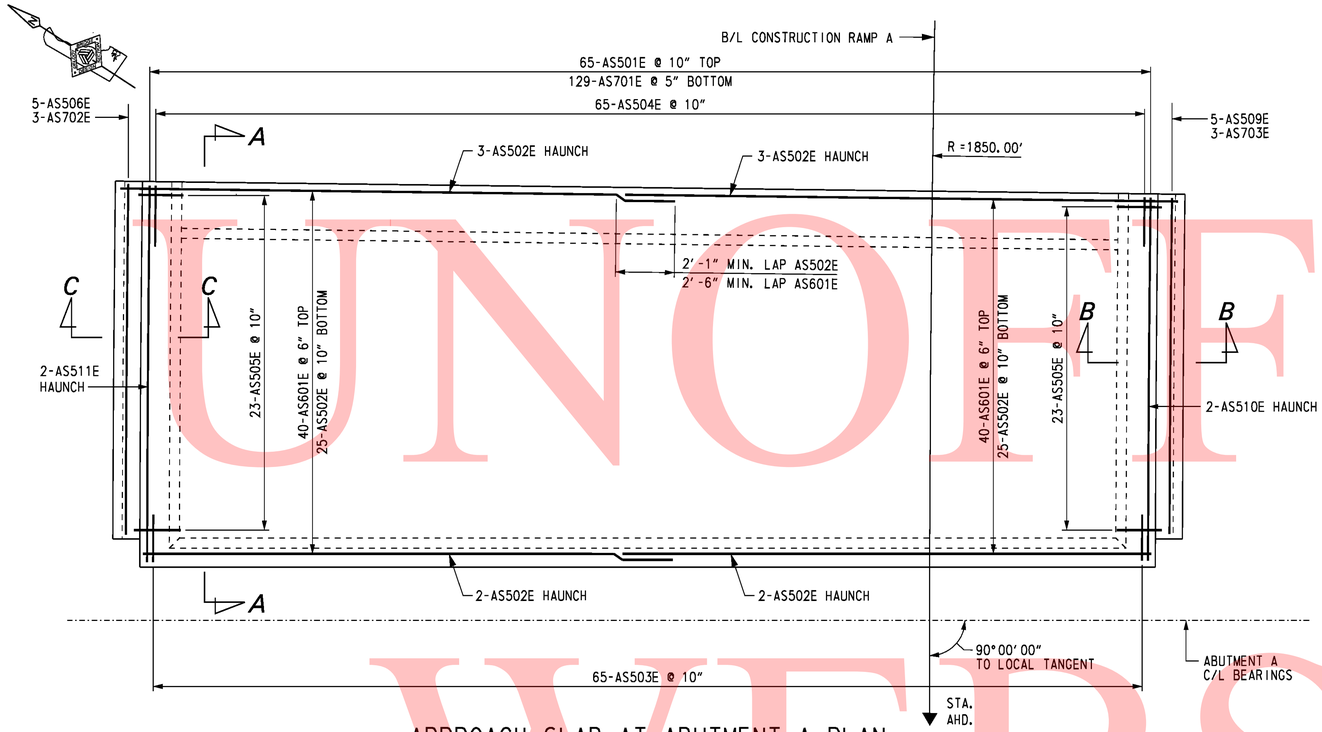

APPROACH SLAB AT ABUTMENT A PLAN

SCALE: 1/4" = 1'-0"

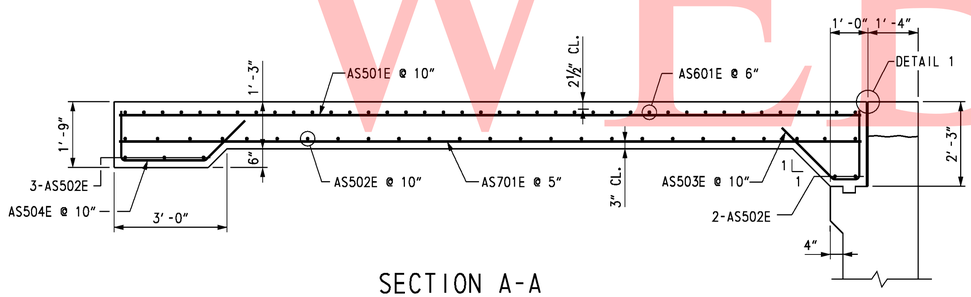

SECTION A-A

SCALE: 1/2" = 1'-0"

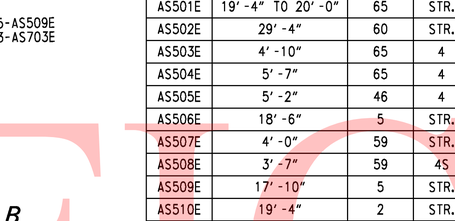

DETAIL 1

SCALE: 3" = 1'-0"

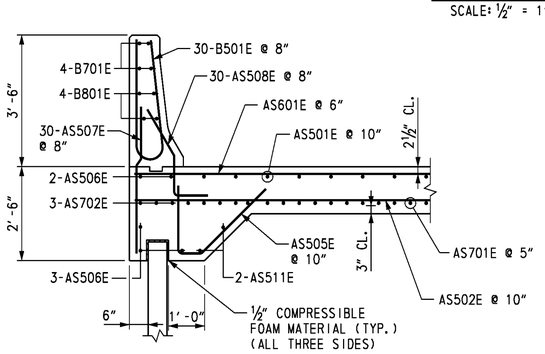

SECTION C-C

SCALE: 1/2" = 1'-0"

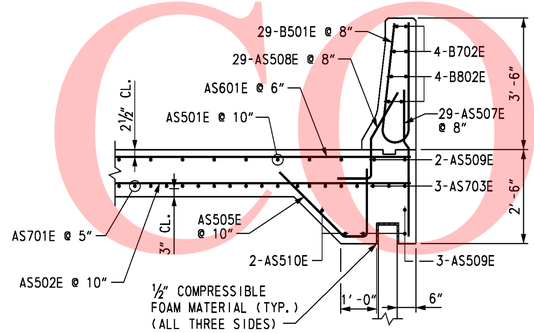

SECTION B-B

SCALE: 1/2" = 1'-0"

REINFORCING BAR LIST

APPROACH SLAB AT ABUTMENT A

MARK	LENGTH	NO. BARS	TYPE	A	B	C	D	E	G	H	K	R	REMARKS
AS501E	19'-4" TO 20'-0"	65	STR.										Δ = 1/8"
AS502E	29'-4"	60	STR.										
AS503E	4'-10"	65	4	1'-11"	0'-8"	2'-3"				1'-7"	1'-7"		
AS504E	5'-7"	65	4	1'-4"	2'-8"	1'-7"				1'-1"	1'-1"		
AS505E	5'-2"	46	4	1'-11"	0'-8"	2'-7"				1'-10"	1'-10"		
AS506E	18'-6"	5	STR.										
AS507E	4'-0"	59	STR.										
AS508E	3'-7"	59	4S	1'-0"	1'-1"	1'-6"				0'-10½"	1'-2⅝"		
AS509E	17'-10"	5	STR.										
AS510E	19'-4"	2	STR.										
AS511E	20'-0"	2	STR.										
AS601E	29'-8"	80	STR.										
AS701E	19'-4" TO 20'-0"	129	STR.										Δ = 1/16"
AS702E	18'-6"	3	STR.										
AS703E	17'-10"	3	STR.										
B501E	6'-8¼"	59	H1		2'-10"	1'-0¼"	2'-10"			0'-5"		0'-4¼"	
B701E	18'-6"	4	STR.										
B702E	17'-10"	4	STR.										
B801E	18'-6"	4	STR.										
B802E	17'-10"	4	STR.										

BENDING DIAGRAMS

ALL DIMENSIONS ARE FROM OUT TO OUT.

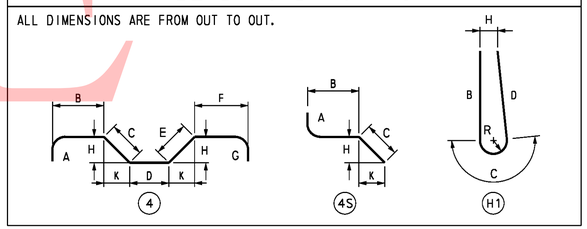

CROSS REFERENCE NOTES:

1. FOR BRIDGE PLAN AND ELEVATION, SEE DWG. S1-1.
2. FOR ABUTMENT A PLAN AND ELEVATION, SEE DWG. S1-5.
3. FOR MSE WINGWALLS PLAN AND ELEVATION, SEE DWGS. S1-11 & S1-12.
4. FOR APPROACH SLAB PLAN, SEE DWG. NO. S1-54.
5. FOR BARRIER DETAIL AND LONGITUDINAL REINFORCING BAR LAYOUT FOR BARRIERS, SEE DWG. S1-49.

UNOFFICIAL WEBSITE COPY

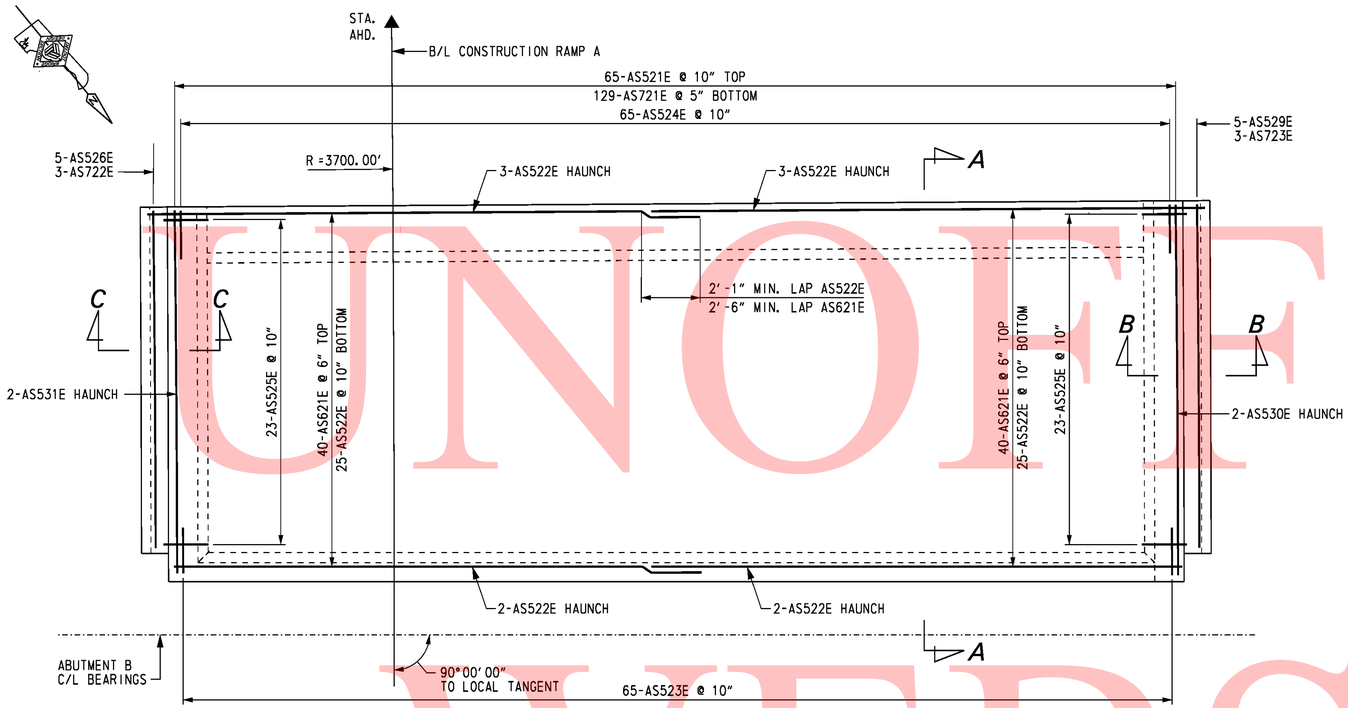

APPROACH SLAB AT ABUTMENT B PLAN

SCALE: 1/8" = 1'-0"

REINFORCING BAR LIST

APPROACH SLAB AT ABUTMENT B

MARK	LENGTH	NO. BARS	TYPE	A	B	C	D	E	G	H	K	R	REMARKS
AS521E	19'-5" TO 19'-9"	65	STR.										△ =1/8"
AS522E	29'-4"	60	STR.										
AS523E	4'-10"	65	4	1'-11"	0'-8"	2'-3"				1'-7"	1'-7"		
AS524E	5'-7"	65	4	1'-4"	2'-8"	1'-7"				1'-1"	1'-1"		
AS525E	5'-2"	46	4	1'-11"	0'-8"	2'-7"				1'-10"	1'-10"		
AS526E	17'-11"	5	STR.										
AS527E	4'-0"	60	STR.										
AS528E	3'-7"	60	4S	1'-0"	1'-1"	1'-6"				0'-10 1/2"	1'-2 5/8"		
AS529E	18'-3"	5	STR.										
AS530E	19'-9"	2	STR.										
AS531E	19'-5"	2	STR.										
AS621E	29'-8"	80	STR.										
AS721E	19'-5" TO 19'-9"	129	STR.										△ =1/8"
AS722E	17'-11"	3	STR.										
AS723E	18'-3"	3	STR.										
B521E	6'-8 1/4"	60	H1		2'-10"	1'-0 1/4"	2'-10"			0'-5"		0'-4 1/4"	
B721E	17'-11"	4	STR.										
B722E	18'-3"	4	STR.										
B821E	17'-11"	4	STR.										
B822E	18'-3"	4	STR.										

BENDING DIAGRAMS

ALL DIMENSIONS ARE FROM OUT TO OUT.

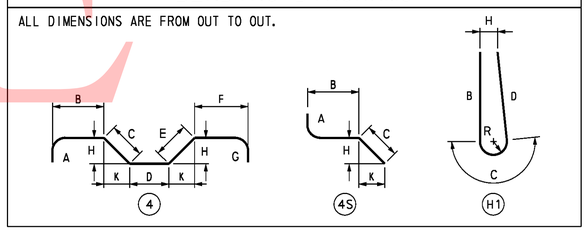

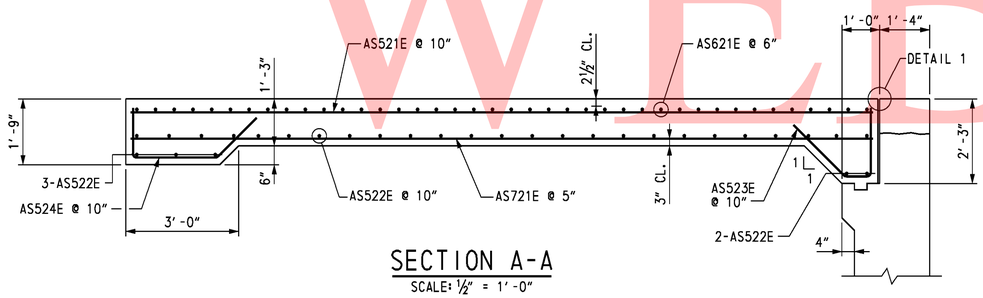

SECTION A-A

SCALE: 1/2" = 1'-0"

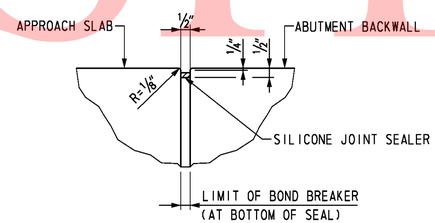

DETAIL 1

SCALE: 3" = 1'-0"

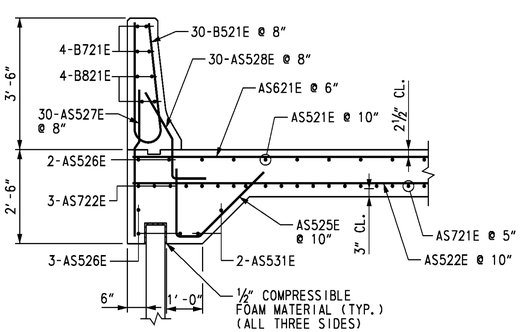

SECTION C-C

SCALE: 1/2" = 1'-0"

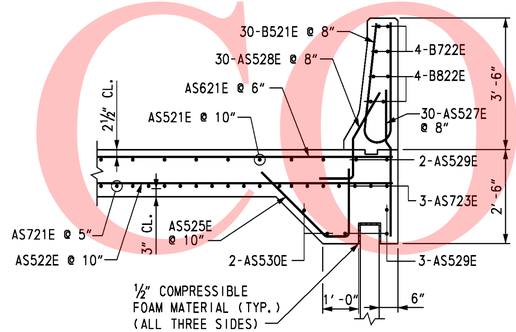

SECTION B-B

SCALE: 1/2" = 1'-0"

CROSS REFERENCE NOTES:

1. FOR BRIDGE PLAN AND ELEVATION, SEE DWG. S1-1.
2. FOR ABUTMENT B PLAN AND ELEVATION, SEE DWG. S1-6.
3. FOR MSE WINGWALLS PLAN AND ELEVATION, SEE DWGS. S1-11 & S1-12.
4. FOR APPROACH SLAB PLAN, SEE DWG. NO. S1-54.
5. FOR BARRIER DETAIL AND LONGITUDINAL REINFORCING BAR LAYOUT FOR BARRIERS, SEE DWG. S1-49.

UNOFFICIAL WEBSITE COPY

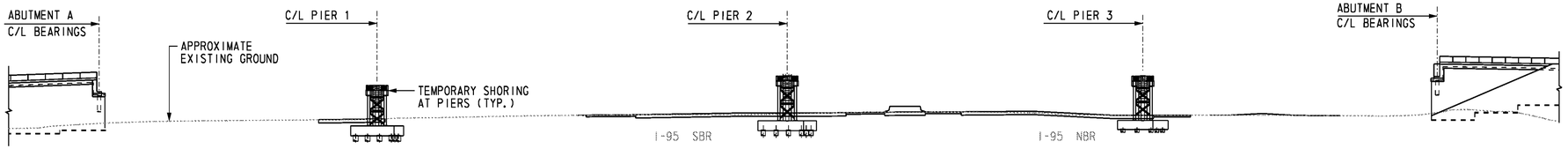

DEVELOPED ELEVATION - ERECTION STAGE 1

SCALE: 1" = 40'-0"

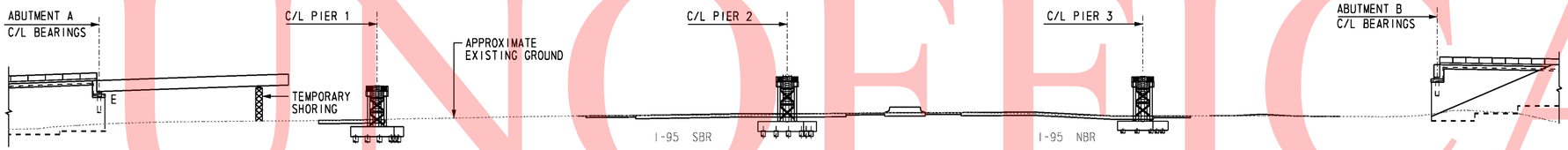

DEVELOPED ELEVATION - ERECTION STAGE 2

SCALE: 1" = 40'-0"

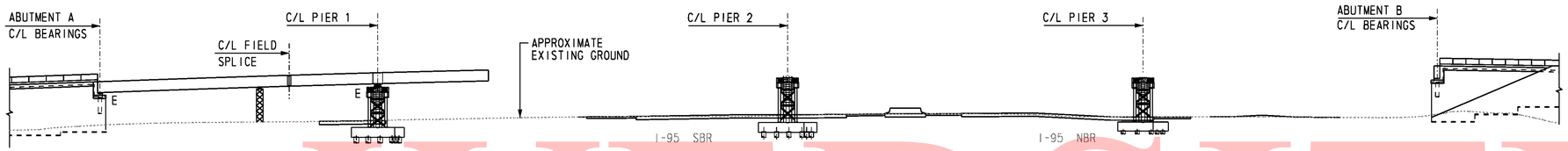

DEVELOPED ELEVATION - ERECTION STAGE 3

SCALE: 1" = 40'-0"

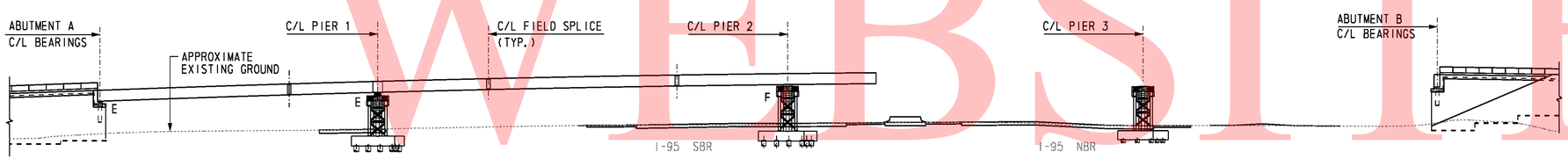

DEVELOPED ELEVATION - ERECTION STAGE 4

SCALE: 1" = 40'-0"

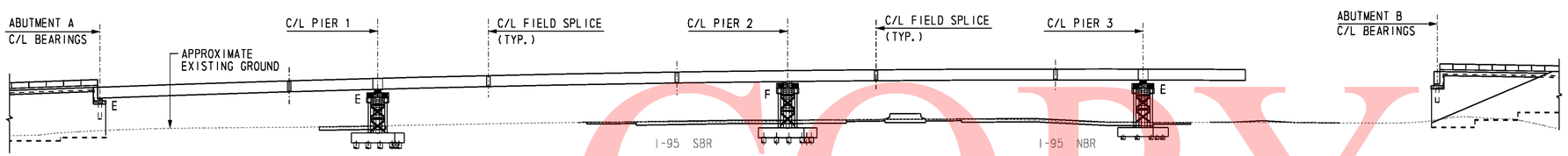

DEVELOPED ELEVATION - ERECTION STAGE 5

SCALE: 1" = 40'-0"

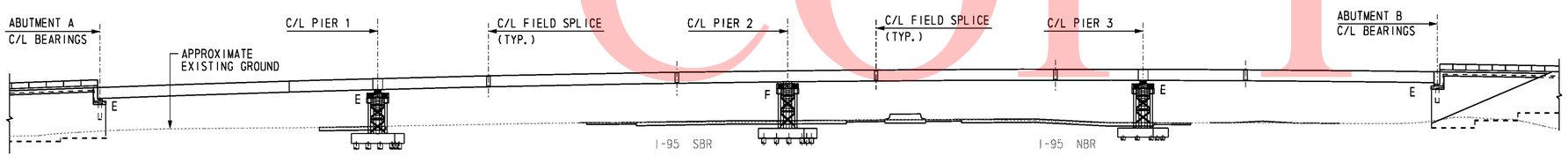

DEVELOPED ELEVATION - ERECTION STAGE 6

SCALE: 1" = 40'-0"

SUGGESTED ERECTION SEQUENCE NOTES

STAGE 1:

1. ERECT TEMPORARY SHORING AT PIERS.

STAGE 2:

1. ERECT TEMPORARY SHORING IN SPAN 1.
2. ERECT GIRDER SECTION IN SPAN 1 WITH ONE END SUPPORTED ON ABUTMENT A AND THE OTHER ON THE TEMPORARY SHORING IN SPAN 1.
3. TIE-DOWN AND STABILIZE ENDS OF GIRDER.
4. REPEAT STEP 2 FOR ALL GIRDERS, INSTALLING CROSS FRAMES AFTER EACH REMAINING GIRDER IS ERECTED.

STAGE 3:

1. ERECT GIRDER SECTION OVER PIER 1 SUPPORTED ON EITHER THE PERMANENT BEARINGS OR THE TEMPORARY SHORING AT PIER.
2. HOLD GIRDER SECTION AND MAKE FIELD SPLICE CONNECTION IN SPAN 1.
3. STABILIZE GIRDER AS NECESSARY.
4. REPEAT STEPS 1 AND 2 FOR ALL GIRDERS, INSTALLING CROSS FRAMES AFTER EACH REMAINING GIRDER IS ERECTED.

STAGE 4:

1. PRE-ASSEMBLE TWO GIRDER SECTIONS.
2. ERECT PRE-ASSEMBLED GIRDER SECTIONS IN SPAN 2 OVER PIER 2 SUPPORTED ON EITHER THE PIER COLUMN OR THE TEMPORARY SHORING AT PIER.
3. HOLD PRE-ASSEMBLED GIRDER SECTION AND MAKE FIELD SPLICE CONNECTION.
4. STABILIZE GIRDER AS NECESSARY.
5. REPEAT STEPS 1 THRU 3 FOR ALL GIRDERS, INSTALLING CROSS FRAMES AFTER EACH REMAINING GIRDER IS ERECTED.
6. REMOVE TEMPORARY SHORING IN SPAN 1.

STAGE 5:

1. PRE-ASSEMBLE TWO GIRDER SECTIONS.
2. ERECT PRE-ASSEMBLED GIRDER SECTIONS IN SPAN 3 OVER PIER 3 SUPPORTED ON EITHER THE PERMANENT BEARINGS OR THE TEMPORARY SHORING AT PIER.
3. HOLD PRE-ASSEMBLED GIRDER SECTION AND MAKE FIELD SPLICE CONNECTION.
4. STABILIZE GIRDER AS NECESSARY.
5. REPEAT STEPS 1 THRU 3 FOR ALL GIRDERS, INSTALLING CROSS FRAMES AFTER EACH REMAINING GIRDER IS ERECTED.

STAGE 6:

1. ERECT GIRDER SECTION IN SPAN 4 WITH ONE END SUPPORTED ON ABUTMENT B.
2. HOLD GIRDER SECTION AND MAKE FIELD SPLICE CONNECTION.
3. TIE-DOWN AND STABILIZE END OF GIRDER.
4. REPEAT STEPS 1 AND 2 FOR ALL GIRDERS, INSTALLING CROSS FRAMES AFTER EACH REMAINING GIRDER IS ERECTED.
5. CHECK GIRDER ELEVATIONS AT TEMPORARY SHORING AND ADJUST GIRDER ELEVATIONS AS NECESSARY.

NOTE TO CONTRACTOR:

THE ERECTION SEQUENCE SHOWN IS ONLY A SUGGESTED METHOD. THE CONTRACTOR IS RESPONSIBLE FOR THE ENTIRE ERECTION OF THE BRIDGE. THE CONTRACTOR SHALL SUBMIT DRAWINGS SEALED BY A PROFESSIONAL ENGINEER REGISTERED IN THE STATE OF DELAWARE, ILLUSTRATING FULLY THE PROPOSED METHOD OF ERECTION. THE DRAWINGS SHALL SHOW DETAILS OF ALL TEMPORARY SHORING, FALSEWORK, BRACING, GUYS, DEAD-MEN, LIFTING DEVICES, HOLD-DOWN DEVICES AND ATTACHMENTS TO THE BRIDGE MEMBERS. THE DRAWINGS SHALL ALSO INCLUDE THE SEQUENCE OF ERECTION, LOCATION OF CRANES, CRANE CAPACITITIES, LOCATION OF LIFTING POINTS ON THE BRIDGE MEMBERS AND WEIGHTS OF MEMBERS. THE PLAN AND DRAWINGS SHALL BE COMPLETE IN DETAIL FOR ALL ANTICIPATED STAGES AND CONDITIONS DURING ERECTION. CALCULATIONS SEALED BY A PROFESSIONAL ENGINEER REGISTERED IN THE STATE OF DELAWARE ARE REQUIRED TO DEMONSTRATE THAT ALLOWABLE STRESSES ARE NOT EXCEEDED AND THAT MEMBER CAPACITIES AND FINAL GEOMETRY WILL BE CORRECT.

COST OF ERECTION AND TEMPORARY SHORING IS INCIDENTAL TO "STEEL STRUCTURES" ITEM.

FOR MAINTENANCE OF TRAFFIC REQUIREMENTS, REFER TO THE APPROPRIATE SHEETS.

PROVIDE TEMPORARY BRACING BETWEEN THE GIRDERS IN THE VICINITY OF EACH INTEGRAL PIER CAP DURING SUPERSTRUCTURE ERECTION AND PLACEMENT OF CONCRETE. THE TEMPORARY BRACING SHALL BE REMOVED AFTER THE INTEGRAL PIER CAP CONCRETE IS PLACED AND PRIOR TO POST-TENSIONING THE INTEGRAL CAP.

UNOFFICAL WEBSITE COPY

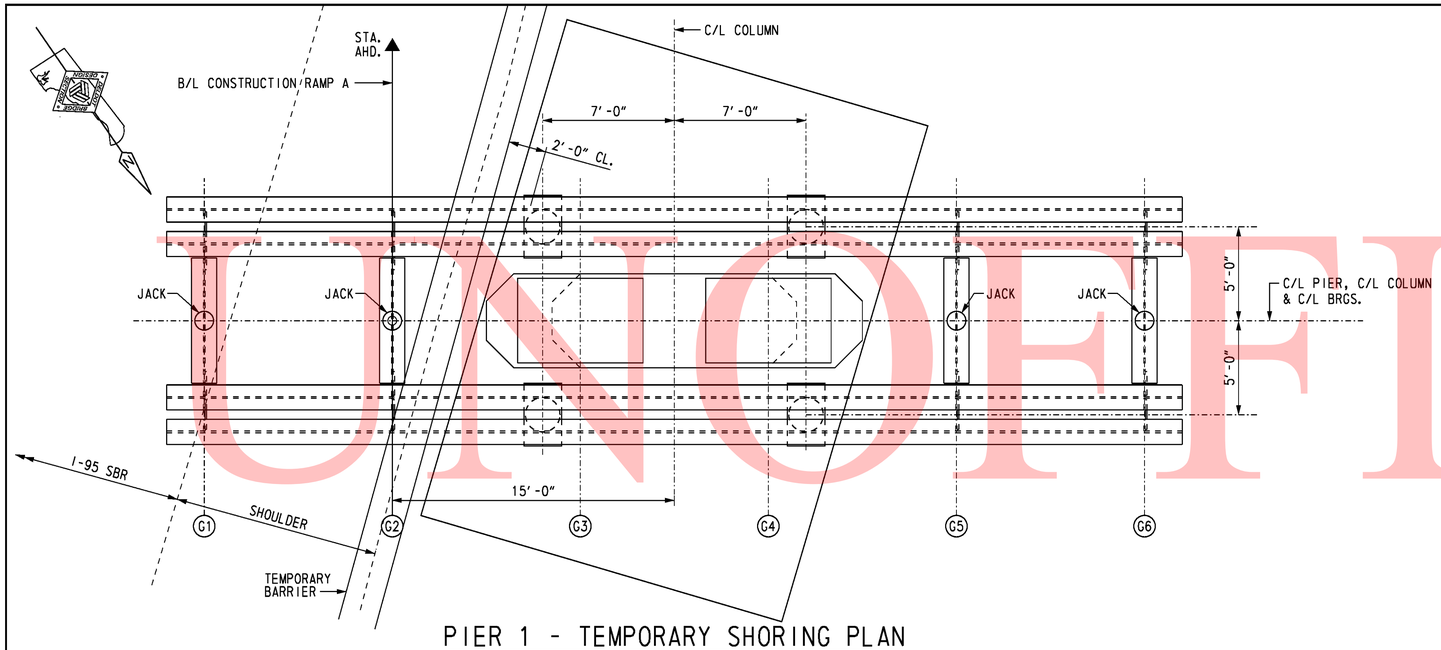

PIER 1 - TEMPORARY SHORING PLAN

SCALE: 1/4" = 1'-0"

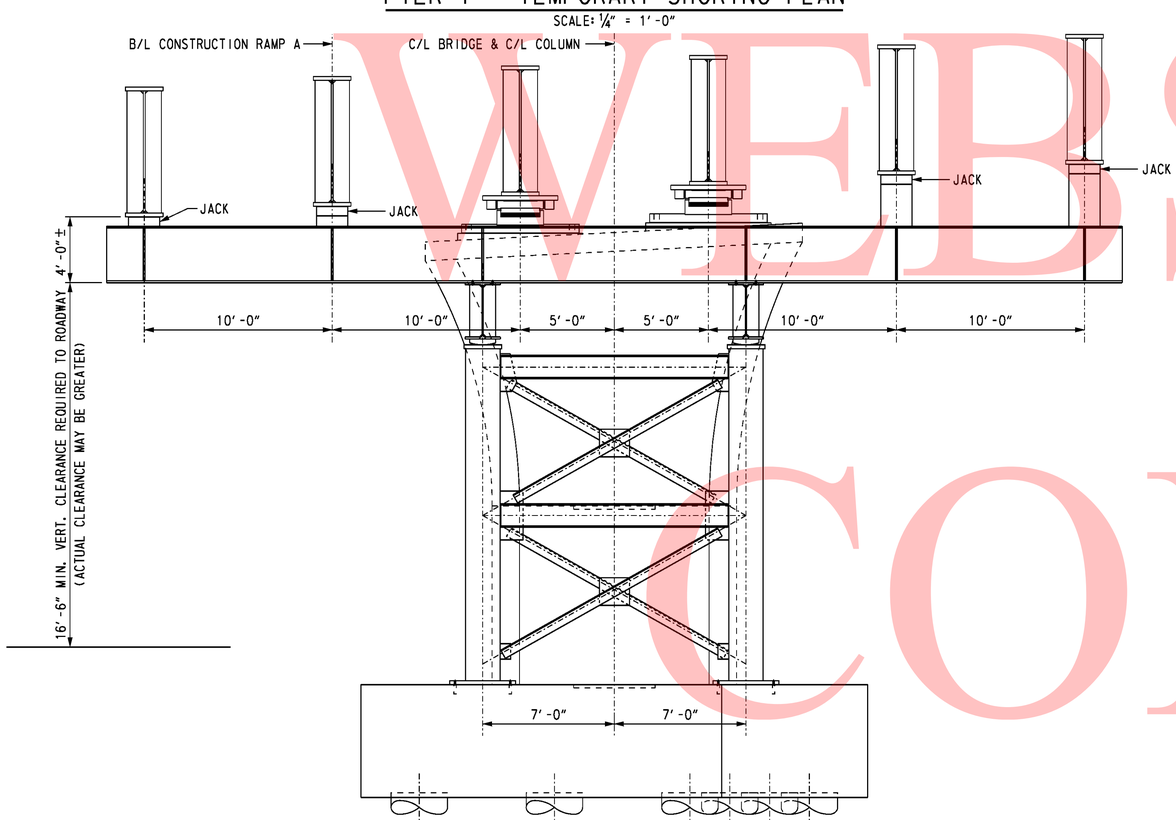

ELEVATION - PIER 1

(PIER 1 SHOWN, PIER 2 & 3 SIMILAR)

SCALE: 1/4" = 1'-0"

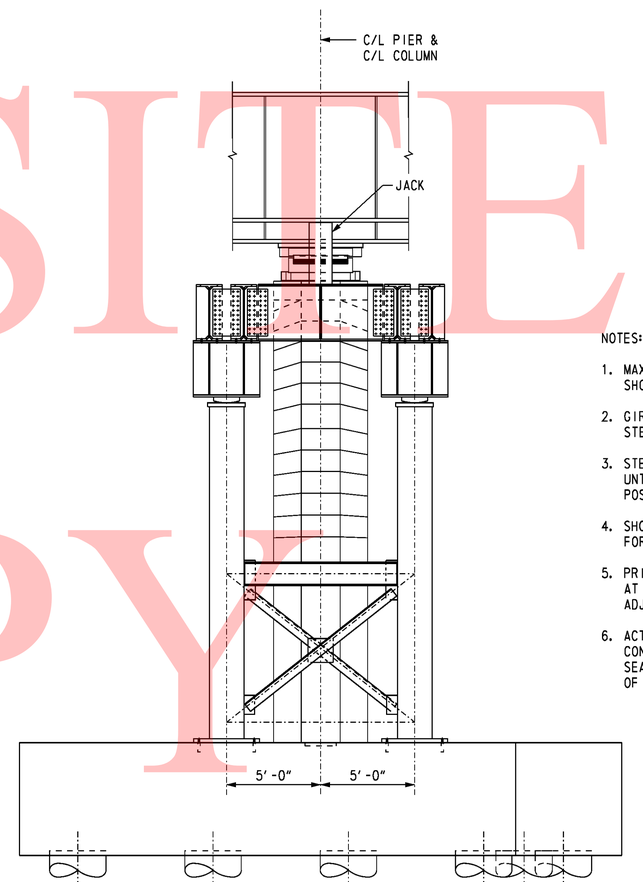

END VIEW

SCALE: 1/4" = 1'-0"

NOTES:

1. MAXIMUM UNFACTORED GIRDER REACTION AT PIER 1 SHORES IS 554 KIPS.
2. GIRDER REACTIONS INCLUDE WEIGHT OF STRUCTURAL STEEL FRAMING, DECK AND INTEGRAL CAP.
3. STEEL ERECTION SHOWN, SHORING TO REMAIN IN PLACE UNTIL DECK AND INTEGRAL CAP HAVE BEEN PLACED AND POST-TENSIONING FORCE APPLIED.
4. SHORING GIRDERS SHALL BE CAMBERED TO ACCOUNT FOR DEAD LOAD DEFLECTIONS.
5. PRIOR TO EACH CONCRETE POUR, THE ELEVATION OF THE GIRDERS AT THE PIERS SHALL BE CHECKED. JACKS SHALL BE USED TO ADJUST THE ELEVATION OF THE GIRDER AS NECESSARY.
6. ACTUAL SHORING TOWERS PROVIDED SHALL BE DESIGNED BY THE CONTRACTOR. SHOP DRAWINGS AND CALCULATIONS SIGNED AND SEALED BY A PROFESSIONAL ENGINEER REGISTERED IN THE STATE OF DELAWARE SHALL BE SUBMITTED FOR APPROVAL.

UNOFFICAL WEBSITE COPY

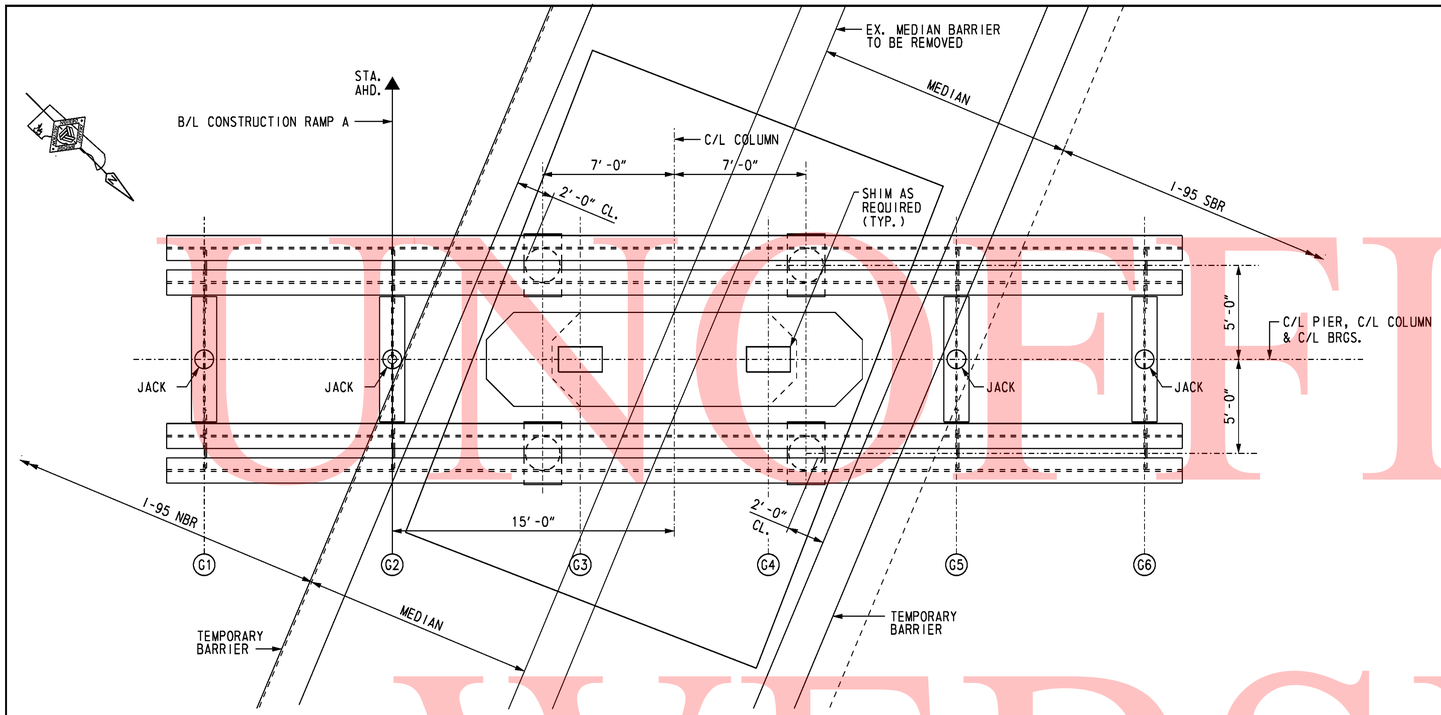

PIER 2 - TEMPORARY SHORING PLAN

SCALE: 1/4" = 1'-0"

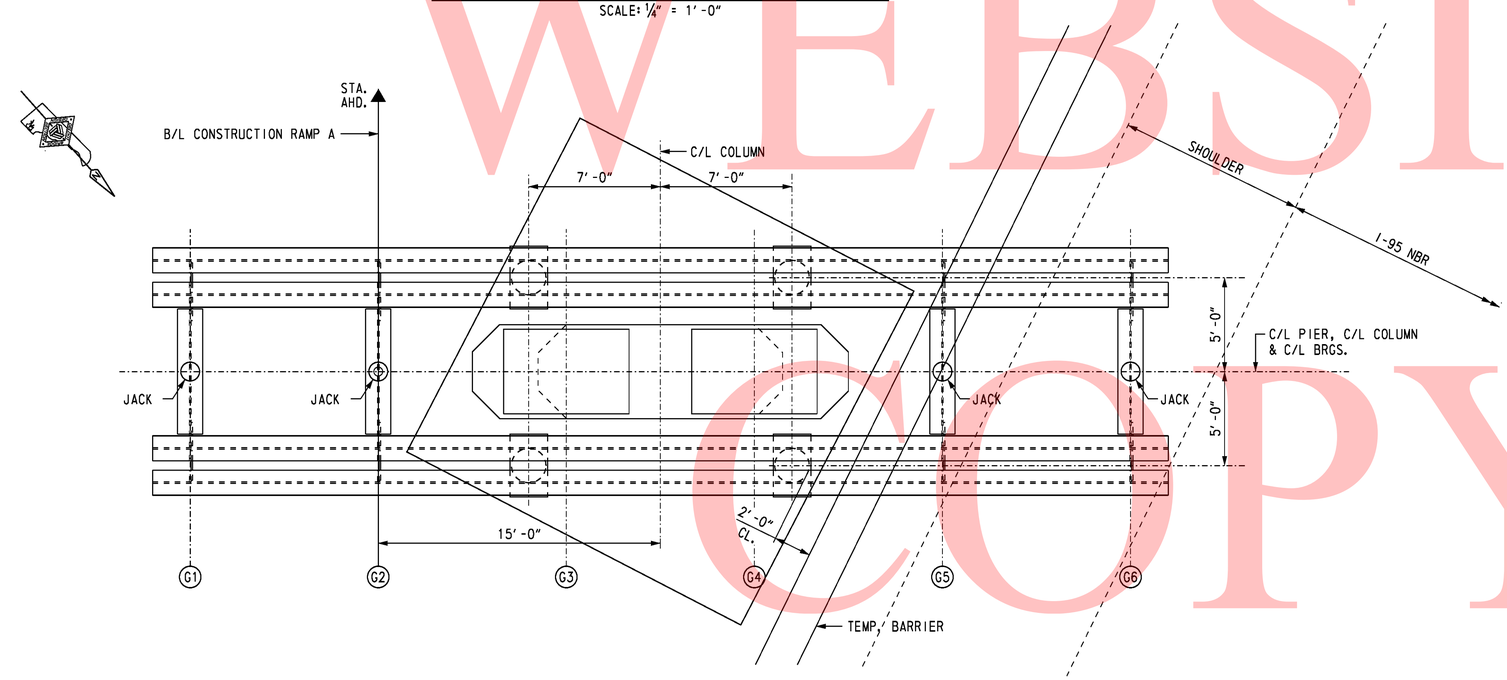

PIER 3 - TEMPORARY SHORING PLAN

SCALE: 1/4" = 1'-0"

NOTES:

1. MAXIMUM UNFACTORED GIRDER REACTION AT PIER 2 SHORES IS 546 KIPS.
2. MAXIMUM UNFACTORED GIRDER REACTION AT PIER 3 SHORES IS 482 KIPS.
3. GIRDER REACTIONS INCLUDE WEIGHT OF STRUCTURAL STEEL FRAMING, DECK AND INTEGRAL CAP.
4. STEEL ERECTION SHOWN, SHORING TO REMAIN IN PLACE UNTIL DECK AND INTEGRAL CAP HAVE BEEN PLACED AND POST-TENSIONING FORCE APPLIED.
5. SHORING GIRDERS SHALL BE CAMBERED TO ACCOUNT FOR DEAD LOAD DEFLECTIONS.
6. PRIOR TO EACH CONCRETE POUR, THE ELEVATION OF THE GIRDERS AT THE PIERS SHALL BE CHECKED. JACKS SHALL BE USED TO ADJUST THE ELEVATION OF THE GIRDER AS NECESSARY.
7. ACTUAL SHORING TOWERS PROVIDED SHALL BE DESIGNED BY THE CONTRACTOR. SHOP DRAWINGS AND CALCULATIONS SIGNED AND SEALED BY A PROFESSIONAL ENGINEER REGISTERED IN THE STATE OF DELAWARE SHALL BE SUBMITTED FOR APPROVAL.
8. PROVIDE SHIMS BETWEEN TEMPORARY MASONRY PLATE AND GIRDER FLANGE AS REQUIRED TO ESTABLISH GIRDER ELEVATION

UNOFFICAL WEBSITE COPY

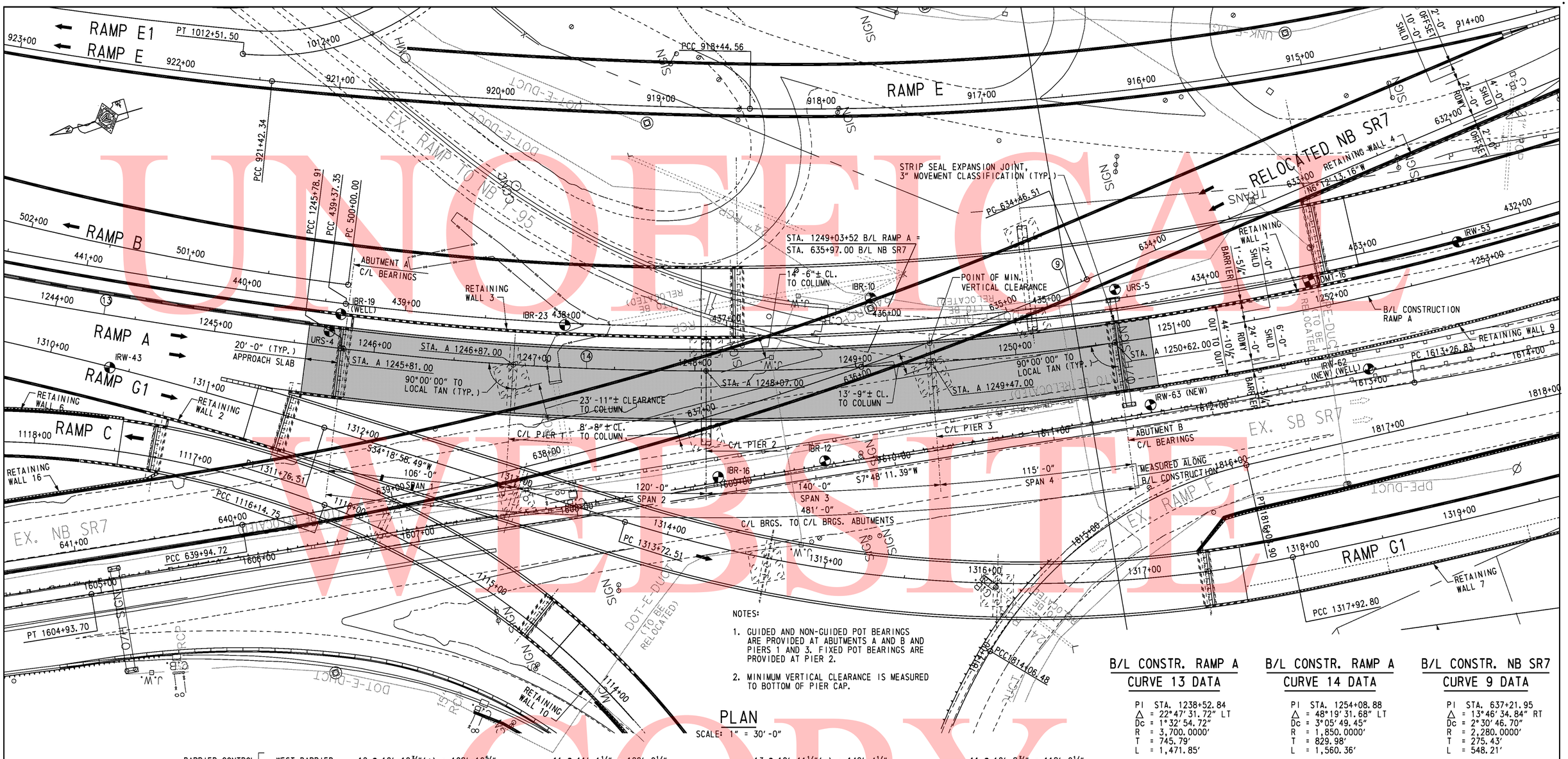

NOTES:

1. GUIDED AND NON-GUIDED POT BEARINGS ARE PROVIDED AT ABUTMENTS A AND B AND PIERS 1 AND 3. FIXED POT BEARINGS ARE PROVIDED AT PIER 2.
2. MINIMUM VERTICAL CLEARANCE IS MEASURED TO BOTTOM OF PIER CAP.

PLAN

SCALE: 1" = 30'-0"

B/L CONSTR. RAMP A CURVE 13 DATA

PI STA. 1238+52.84
Δ = 22°47'31.72" LT
Dc = 1°32'54.72"
R = 3,700.0000'
T = 745.79'
L = 1,471.85'

B/L CONSTR. RAMP A CURVE 14 DATA

PI STA. 1254+08.88
Δ = 48°19'31.68" LT
Dc = 3°05'49.45"
R = 1,850.0000'
T = 829.98'
L = 1,560.36'

B/L CONSTR. NB SR7 CURVE 9 DATA

PI STA. 637+21.95
Δ = 13°46'34.84" RT
Dc = 2°30'46.70"
R = 2,280.0000'
T = 275.43'
L = 548.21'

BARRIER CONTROL / JOINT SPACING				
WEST BARRIER	10 @ 10'-10⅜"(+) = 108'-10⅝"	11 @ 11'-1⅛" = 122'-0½"	13 @ 10'-11½"(-) = 142'-4½"	11 @ 10'-8¾" = 118'-0½"
EAST BARRIER	10 @ 10'-7½" (-) = 106'-3¾"	11 @ 10'-10"(-) = 119'-1½"	13 @ 10'-8¼" = 138'-11¾"	11 @ 10'-5¾" = 115'-3"

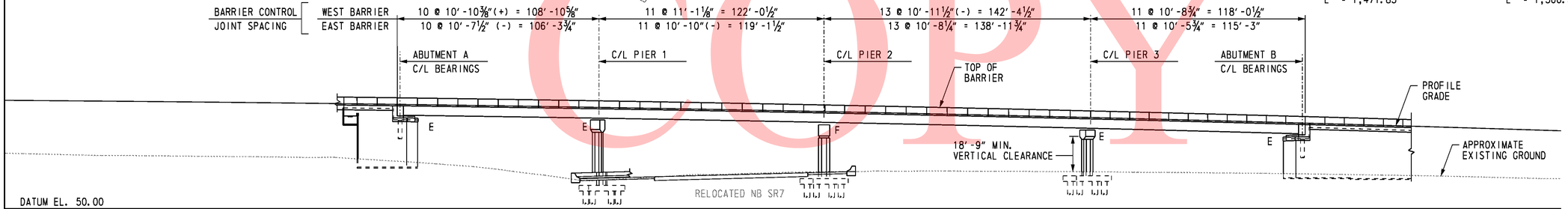

ELEVATION

SCALE: 1" = 30'-0"

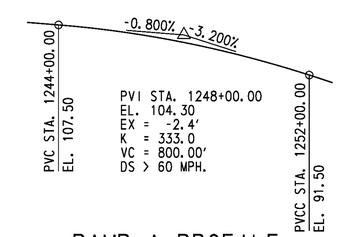

RAMP A PROFILE

NOT TO SCALE

UNOFFICIAL WEBSITE COPY

10/28/2010 O:\20832687-XM\CAD\Bridge\BR-S2\pe01_BR-S2_sr1.dgn untitled

DELAWARE DEPARTMENT OF TRANSPORTATION	ADDENDUMS / REVISIONS	SCALE 0 30 60 90 FEET	SR1 / I-95 INTERCHANGE	CONTRACT 28-090-03	BRIDGE NO. 1-716C	RAMP A OVER SR 7	S2-1 SHEET NO.
				COUNTY NEW CASTLE	DESIGNED BY: R. F. KIRCHNER	BRIDGE PLAN AND ELEVATION	254 TOTAL SHTS.
					CHECKED BY: G. P. MISTRY		803

GENERAL NOTES

1. DESIGN SPECIFICATIONS
AASHTO LRFD BRIDGE DESIGN SPECIFICATIONS, 4th EDITION WITH 2009 INTERIM REVISIONS.
DELAWARE DEPARTMENT OF TRANSPORTATION BRIDGE DESIGN MANUAL, MAY 2005 INCLUDING LATEST REVISIONS. ANSI/AASHTO/AWS D1.5 BRIDGE WELDING CODE.

2. LOADING
UNIT WEIGHTS OF MATERIALS SHALL BE IN ACCORDANCE WITH THE DELAWARE DESIGN MANUAL.
FUTURE OVERLAY ALLOWANCE SHALL BE 25 LBS/SQ FT.
STEEL BRIDGE DECK FORMS WHICH STAY IN PLACE (INCLUDING CONCRETE IN FORM CORRUGATIONS) SHALL BE 15 LBS/SQ FT.
VEHICLE LIVE LOAD SHALL BE HL-93, WHICH CONSISTS OF A DESIGN TRUCK OR TANDEM WITH DYNAMIC LOAD ALLOWANCE AND A LANE LOAD. RATING SHALL USE ALL DELAWARE LEGAL LOADS SPECIFIED IN THE BRIDGE DESIGN MANUAL.
BARRIER HAS BEEN DESIGNED FOR TEST LEVEL FIVE (TL-5).
FATIGUE DESIGN SHALL BE BASED ON THE FOLLOWING ONE DIRECTIONAL TRAFFIC VOLUMES:

RAMP A OVER SR 7: DESIGN ADT = 21,700, DESIGN ADTT = 3,125

FOR THERMAL LOADS, CONSIDER THE MODERATE TEMPERATURE RANGE AS STIPULATED IN THE AASHTO LRFD DESIGN SPECIFICATIONS. THE NORMAL TEMPERATURE SHALL BE CONSIDERED TO BE 60F.
FOR SEISMIC LOADS, CONSIDER SEISMIC PERFORMANCE ZONE 1, WITH A SITE CLASS = E AND IMPORTANCE CATEGORY - CRITICAL.

3. PORTLAND CEMENT CONCRETE
PORTLAND CEMENT CONCRETE FOR CAST-IN-PLACE ELEMENTS SHALL BE AS FOLLOWS:
(28 DAY COMPRESSIVE STRENGTH)
ITEM NO. 602007 (CLASS A, F'c=4500 PSI) - PIER ABOVE FOOTING
ITEM NO. 602011 (CLASS A, F'c=4500 PSI) - PIER FOOTING, TOP OF PIER PILES
ITEM NO. 602786 (CLASS A, F'c=8000 PSI) - POST-TENSIONED PIER CAP
ITEM NO. 602013 (CLASS D, F'c=4500 PSI) - DECK
ITEM NO. 602014 (CLASS D, F'c=4500 PSI) - APPROACH SLAB
ITEM NO. 602015 (CLASS A, F'c=4500 PSI) - ABUTMENT, TOP OF ABUTMENT PILES
ITEM NO. 602017 (CLASS A, F'c=4500 PSI) - BARRIER
MIX REQUIREMENTS SHALL CONFORM TO SECTION 812 OF THE DELAWARE DEPARTMENT OF TRANSPORTATION STANDARD SPECIFICATIONS. ALL EXPOSED CORNERS OF CONCRETE SHALL BE CHAMFERED WITH ¾" X ¾" MILLED CHAMFER STRIPS UNLESS NOTED OTHERWISE, EXCEPT ON UNEXPOSED FOOTINGS OR WHERE INDICATED BY THE NOTATION ON THE PLANS, "DO NOT CHAMFER".
NO SLIP-FORMING OF BARRIERS IS PERMITTED, UNLESS OTHERWISE APPROVED.

4. BAR REINFORCEMENT
REINFORCING STEEL SHALL CONFORM TO AASHTO M31 (ASTM A615), GRADE 60. ALL REINFORCING STEEL SHALL HAVE A CLEAR COVER OF 2" UNLESS OTHERWISE SPECIFIED ON THE PLANS. FUSION-BONDED EPOXY COATED REINFORCING STEEL SHALL CONFORM TO AASHTO M284 (ASTM D3963), AND SHALL BE DENOTED WITH A SUFFIX "E" IN THE BAR MARKS.

DO NOT WELD GRADE 60 REINFORCING STEEL.

5. POST-TENSIONING STEEL
ALL POST-TENSIONING STRAND TENDONS SHALL CONSIST OF 0.6 INCH DIAMETER SEVEN WIRE UNCOATED LOW RELAXATION STRANDS CONFORMING TO AASHTO M203 (ASTM A416), GRADE 270.
DUCTS SHALL BE 4½ INCH DIA. POLYETHYLENE/POLYPROPYLENE (PE/PP) PLASTIC DUCTS.
GROUT FOR DUCTS SHALL BE IN ACCORDANCE WITH ITEM NO. 602779 "POST TENSIONING GROUT"

6. STRUCTURAL STEEL
STRUCTURAL STEEL SHALL CONFORM TO ASTM A 709, GRADE 50W, INCLUDING THE ADDITIONAL REQUIREMENTS FOR CHARPY V-NOTCH TESTING OF AASHTO M270 FOR PRIMARY LOAD CARRYING MEMBERS UNDER TENSILE STRESS. THE PRIMARY LOAD CARRYING MEMBER COMPONENTS ARE THE FLANGES, WEBS, AND SPLICE PLATES OF THE STEEL GIRDERS. THE USE OF FRACTURE CRITICAL MEMBERS IS PROHIBITED. FATIGUE CATEGORIES D, E AND F SHALL NOT BE USED IN STRESS REVERSAL OR TENSION AREAS, EXCEPT FOR TEMPORARY CONDITIONS.

SEVEN (7) FEET AT THE ENDS OF EACH GIRDER AND THE END CROSS FRAMES SHALL BE PAINTED WITH A URETHANE PAINT SYSTEM IN ACCORDANCE WITH SPECIAL PROVISION #605537-URETHANE PAINT SYSTEM. THE FINAL COLOR SHALL BE FEDERAL #10076 (BROWN) OF FED-STD-595B. COST OF PAINTING SHALL BE INCIDENTAL TO ITEM 605002, STEEL STRUCTURES.

ALL BOLTS FOR SPLICE PLATES AND CROSS FRAMES SHALL BE ⅞" DIA. IN 15/16" DIA. HOLES AND CONFORM TO ASTM A325, TYPE 3, WITH THREADS EXCLUDED FROM SHEAR PLANES. BOLTED CONNECTIONS SHALL BE CLASS B SLIP CRITICAL CONNECTIONS, UNLESS NOTED ON THE PLANS.

7. SERVICEABILITY
LIVE LOAD DEFLECTION SHALL BE LIMITED TO L/800.
FOR REINFORCEMENT DISTRIBUTION REQUIREMENTS, CONSIDER CLASS 2 EXPOSURE CRITERIA FOR DECKS. ACCOMMODATION TO JACK GIRDERS FOR FUTURE BEARING REPLACEMENT HAS BEEN CONSIDERED IN THE DESIGN.

8. CONSTRUCTION JOINTS
KEYED CONSTRUCTION JOINTS SHALL BE 2" X 4" OR AS NOTED. ALL EXPOSED CONSTRUCTION JOINT EDGES SHALL HAVE A ¾" V-NOTCH, UNLESS OTHERWISE NOTED.

9. STABILIZING STRUCTURAL EXCAVATIONS
SHEETING AND SHORING SHALL BE REQUIRED FOR ANY EXCAVATION EXCEEDING FIVE (5) FEET IN HEIGHT, THE COST SHALL BE PAID UNDER ITEM NO. 207501 - IN LIEU OF SHORING, THE CONTRACTOR MAY USE A 2:1 CUT SLOPE. NO PAYMENT SHALL BE MADE FOR ADDITIONAL EXCAVATION OR FILL OUTSIDE THE LIMITS AS DEFINED IN SECTION 207 OF THE STANDARD SPECIFICATIONS.

10. EXCAVATION REQUIRED TO ATTAIN THE GRADE FOR INSTALLATION OF MSE WALLS SHALL BE INCIDENTAL TO ITEM NO. 602772 - MECHANICALLY STABILIZED EARTH WALLS.

11. STRUCTURAL BACKFILL SHALL CONFORM TO THE REQUIREMENTS OF BORROW TYPE C. MSE WALL BACKFILL SHALL BE AS SPECIFIED ON THE PLANS.

12. ROADWAY CLEARANCES
A MINIMUM OF 16'-6" VERTICAL CLEARANCE SHALL BE MAINTAINED ABOVE ALL ROADWAYS.
A MINIMUM OF 2'-0" HORIZONTAL CLEARANCE SHALL BE MAINTAINED FROM THE OUTSIDE EDGE OF SHOULDER OFFSET (FACE OF CURB) TO THE FACE OF ANY OBSTRUCTION. THESE CLEARANCES APPLY AT ALL TIMES INCLUDING DURING CONSTRUCTION.

BRIDGE LEGAL LOAD RATING (TONS)
RAMP A OVER SR 7

TRUCK TYPE	RATING FACTOR	SAFE LOAD CAPACITY
HS-20	1.54	55.4
S220	2.45	49.0
S327	2.28	61.5
S335	1.72	60.2
S437	1.70	62.0
T330	2.24	67.2
T435	1.89	66.1
T540	1.73	69.2

BRIDGE DESIGN LOAD RATING:
INVENTORY = 1.14
OPERATING = 1.48

13. TEST PILES
PILE LENGTHS FOR ORDERING PURPOSES SHALL BE DETERMINED BY TEST PILES. A MINIMUM OF ONE (1) PILE PER SUBSTRUCTURE, AS SHOWN ON THE PLANS, SHALL BE DYNAMICALLY TESTED BY THE CONTRACTOR IN ACCORDANCE WITH SPECIAL PROVISION 619519. TEST AND PRODUCTION PILE RE-STRIKES WILL BE PAID AS FOLLOWS:

A). ALL TEST PILE(S) WILL BE RESTRUCK AND DYNAMICALLY TESTED BY THE CONTRACTOR. THE TEST PILE RESTRIKES SHALL BE INCIDENTAL TO ITEM NO. 619519 DYNAMIC PILE TESTING BY CONTRACTOR PROVIDED THAT THEY ARE PERFORMED WITHIN FIVE (5) CALENDAR DAYS FROM INITIAL DRIVE.

B). AN ADDITIONAL PAYMENT WILL BE MADE TO THE CONTRACTOR IF HE IS DIRECTED BY THE ENGINEER TO WAIT AND RESTRIKE THE TEST PILE MORE THAN FIVE (5) CALENDAR DAYS AFTER INITIAL DRIVE. THE CONTRACTOR SHALL BE COMPENSATED AT THE FIXED PRICE OF $1,000.00 PER CALENDAR DAY FOR EVERY DAY, AFTER THE FIFTH CALENDAR DAY, UNDER ITEM NO. 619502 TEST PILE RESTRIKE. MULTIPLE TEST PILE RESTRIKES OCCURRING ON THE SAME DAY WILL ONLY BE PAID FOR AS ONE CALENDAR DAY. NO ADDITIONAL COMPENSATION WILL BE MADE REGARDLESS OF THE NUMBER OF TEST PILE RESTRIKES PERFORMED THAT DAY.

C). RESTRIKES ON PRODUCTION PILES WHICH ARE DESIGNATED TO BE DYNAMICALLY TESTED WILL NOT BE PAID UNDER ITEM NO. 619501 PRODUCTION PILE RESTRIKE. THESE PRODUCTION PILE RESTRIKES ARE INCIDENTAL TO ITEM NO. 619519 DYNAMIC PILE TESTING BY CONTRACTOR.

THE DEPARTMENT RESERVES THE RIGHT TO PERFORM DYNAMIC TESTING OF RESTRIKES.

14. THE CONCRETE PIER CAPS SHOWN ON THE PLANS SHALL BE USED. NO OTHER ALTERNATES WILL BE CONSIDERED.

NOTE:

LOAD RATING IS IN ACCORDANCE WITH THE LOAD AND RESISTANCE FACTOR RATING (LRFR) METHOD.

CROSS REFERENCE NOTE:

FOR MSE WALL NOTES, SEE DWG S2-13.

UNOFFICAL WEBSITE COPY

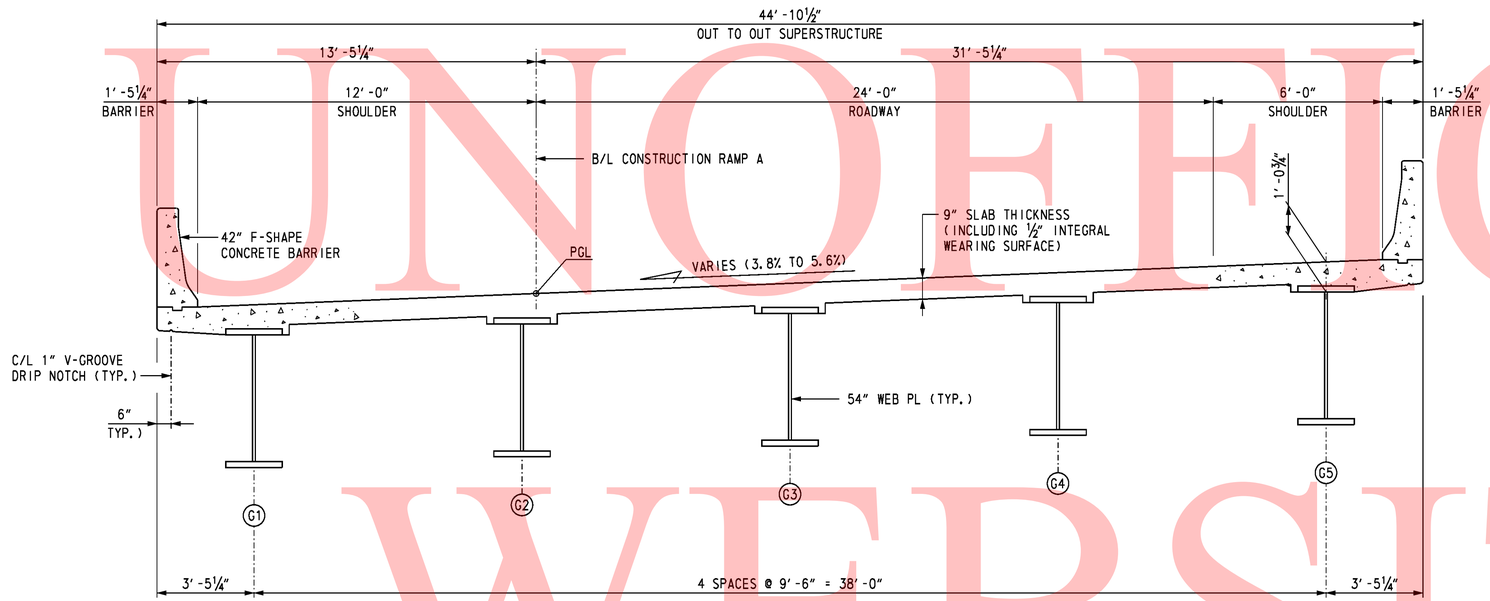

TYPICAL SECTION - RAMP A OVER SR 7

(LOOKING STATION AHEAD)
SCALE: ⅜" = 1'-0"

SUPERELEVATION TRANSITION DATA:

STA. 1231+55.05 TO STA. 1245+30.90
CROSS SLOPE = 3.8%

STA. 1245+30.90 TO STA. 1246+26.90
CROSS SLOPE TRANSITION = 3.8% TO 5.6%

STA. 1246+26.90 TO STA. 1260+64.59
CROSS SLOPE = 5.6%

CROSS REFERENCE NOTES:

1. FOR FRAMING PLAN, SEE DWG. S2-36.
2. FOR DECK AND BARRIER REINFORCEMENT, SEE DWGS. S2-43 THRU S2-45.

UNOFFICAL WEBSITE COPY

10/28/2010 O:\20832687-XM\CAD\Bridge\BR-S2\ts01_BR-S2_sr1.dgn
untitled

DELAWARE DEPARTMENT OF TRANSPORTATION	ADDENDUMS / REVISIONS	SR1 / I-95 INTERCHANGE	CONTRACT 28-090-03	BRIDGE NO. 1-716C	RAMP A OVER SR 7 TYPICAL SECTION	SHEET NO. S2-3
			COUNTY NEW CASTLE	DESIGNED BY: R. F. KIRCHNER		256
				CHECKED BY: G. P. MISTRY		TOTAL SHTS. 803

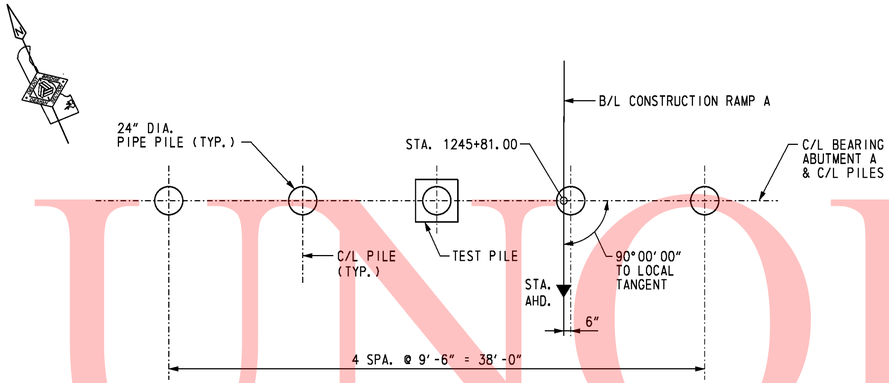

ABUTMENT A PILE PLAN

SCALE: 3/16" = 1'-0"

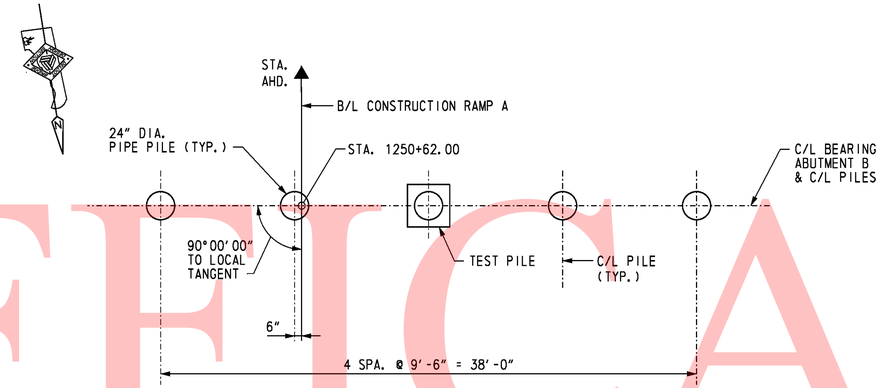

ABUTMENT B PILE PLAN

SCALE: 3/16" = 1'-0"

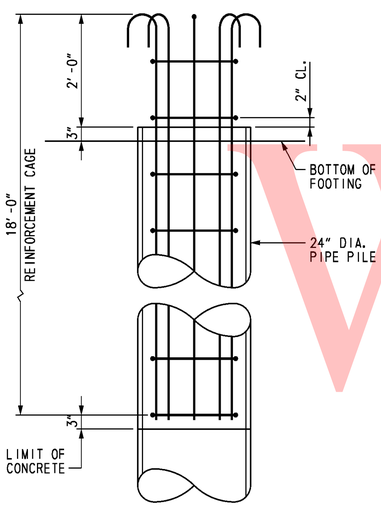

ELEVATION

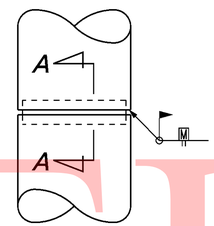

PIPE PILE SPLICE DETAIL

NOT TO SCALE

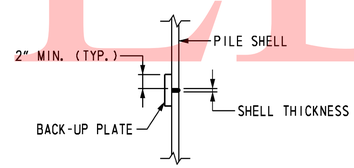

SECTION A-A

NOT TO SCALE

PILE INSTALLATION DATA				
	DESIGN DATA		ACTUAL FIELD DATA	
SUBSTRUCTURE UNIT	NOMINAL PILE DRIVING RESISTANCE (KIPS)	ESTIMATED PILE TIP ELEVATION	AVERAGE MINIMUM TIP ELEVATION	AVERAGE MAXIMUM TIP ELEVATION
ABUTMENT A	430	21.0		
ABUTMENT B	430	13.0		

ABUTMENT A PILE DRIVING INFORMATION
PILE SIZE AND TYPE:
ACTUAL BEARING OBTAINED:
HAMMER TYPE:
PILE HAMMER ENERGY:
SPECIAL DRIVING CONDITIONS AND COMMENTS:

ABUTMENT B PILE DRIVING INFORMATION
PILE SIZE AND TYPE:
ACTUAL BEARING OBTAINED:
HAMMER TYPE:
PILE HAMMER ENERGY:
SPECIAL DRIVING CONDITIONS AND COMMENTS:

NOTES:

1. PILES SHALL BE 24" DIA. WITH ½" WALL THICKNESS OPEN-ENDED STEEL PIPE PILES, ASTM A252 GRADE 3.
2. REINFORCING STRAPS SHALL BE PROVIDED FOR THE ABUTMENT STEM AND BACKWALL TO RESIST THE LONGITUDINAL FORCES ON THE SUPERSTRUCTURE.
3. PILE CASINGS SHALL BE INSTALLED AT THE PROPOSED PILE LOCATIONS DURING THE ABUTMENT MSE WALL CONSTRUCTON.
4. UPON COMPLETION OF THE MSE WALL THERE SHALL BE A 30 TO 60 DAY QUARANTINE PERIOD PRIOR TO DRIVING THE ABUTMENT PILES TO ALLOW FOR SETTLEMENT AND TO MINIMIZE THE DOWNDRAG FORCES THAT MIGHT DEVELOP ON THE PILES.
5. THE ENGINEER SHALL MONITOR THE SETTLEMENT DURING THE QUARANTINE PERIOD TO DETERMINE WHEN THE PILES MAY BE DRIVEN.
6. UPON COMPLETION OF THE QUARANTINE PERIOD, AS JUDGED BY THE ENGINEER, DRIVE PILES TO THE NOMINAL PILE DRIVING RESISTANCE INDICATED ON THE PLANS.
7. 'TEST PILES' SHALL BE TESTED IN ACCORDANCE WITH THE SPECIFICATIONS.

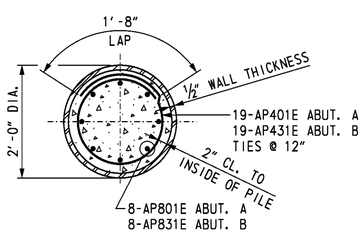

SECTION

PIPE PILE REINFORCEMENT

SCALE: 3/4" = 1'-0"

PILE SPLICE NOTES:

1. BACK-UP PLATE TO BE CUT FROM SAME PILE SIZE AS IS BEING SPLICED. CUT AND BEND TO FIT INSIDE DIAMETER OF PILE.
2. NO PILE SPLICING TO BE ALLOWED ON ANY PORTION OF PILE THAT IS TO REMAIN EXPOSED IN COMPLETED STRUCTURE.
3. SPLICER SLEEVE MATERIAL SHALL BE STEEL CONFORMING TO ASTM DESIGNATION A709, GRADE 36 (250).

CROSS REFERENCE NOTES:

1. FOR ABUTMENT PLAN AND ELEVATION, SEE DWGS. S2-5 & S2-6.
2. FOR REINFORCING BAR LIST, SEE DWG. S2-15.
3. FOR PILE CASING DETAILS, SEE DWG. S2-5.
4. FOR SOIL PROFILE, SOIL PROPERTIES AND TOTAL ESTIMATED SETTLEMENT, SEE DWG. S2.14
5. FOR TEST PILE PAYMENT NOTES, SEE DWG. S2-2..

UNOFFICAL WEBSITE COPY

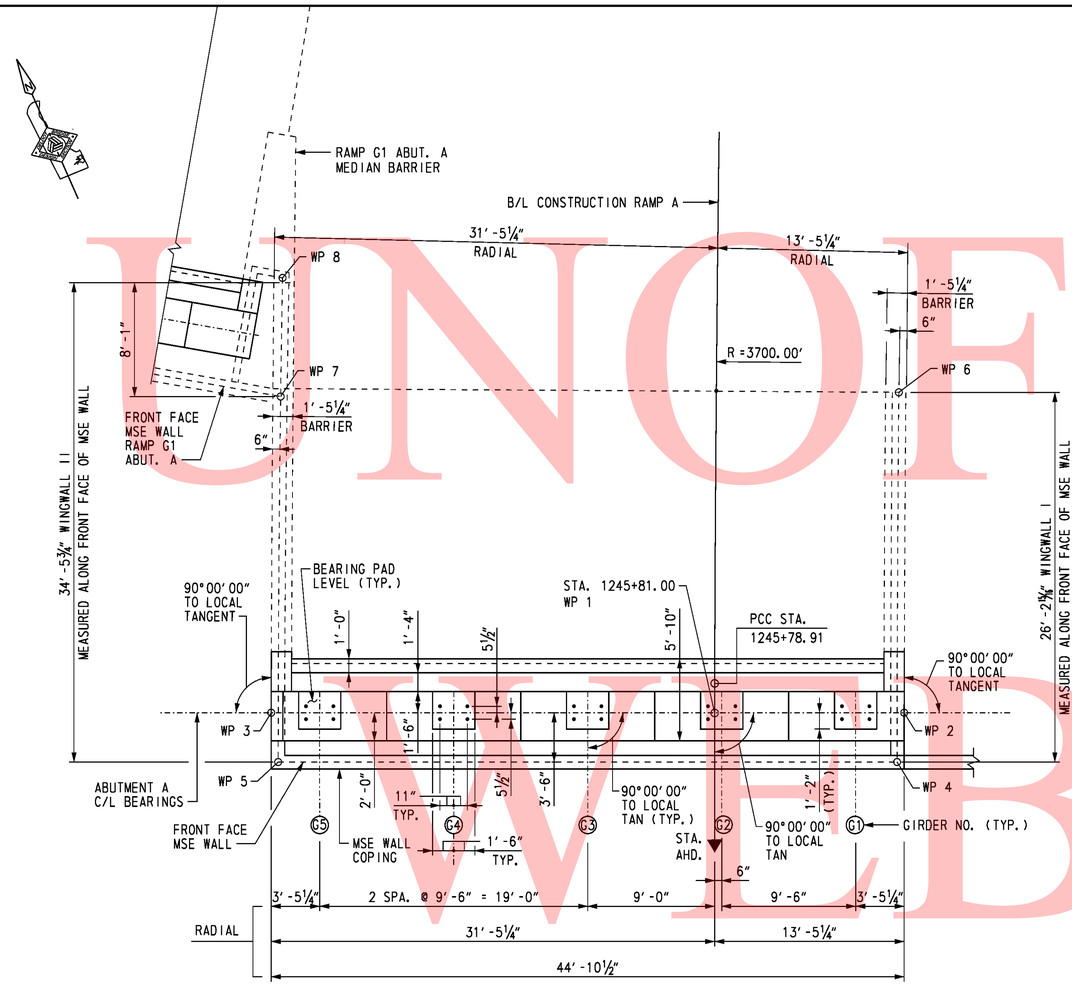

ABUTMENT A PLAN

SCALE: 3/16" = 1'-0"

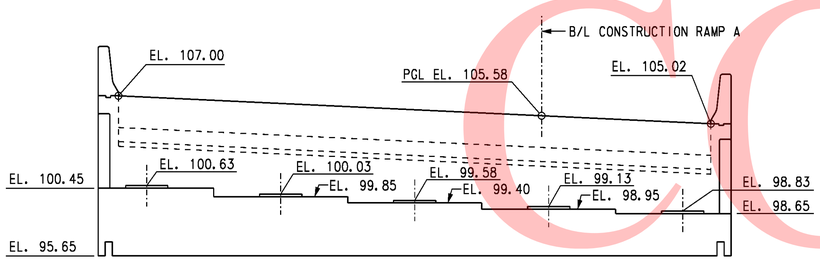

ABUTMENT A ELEVATION

SCALE: 3/16" = 1'-0"

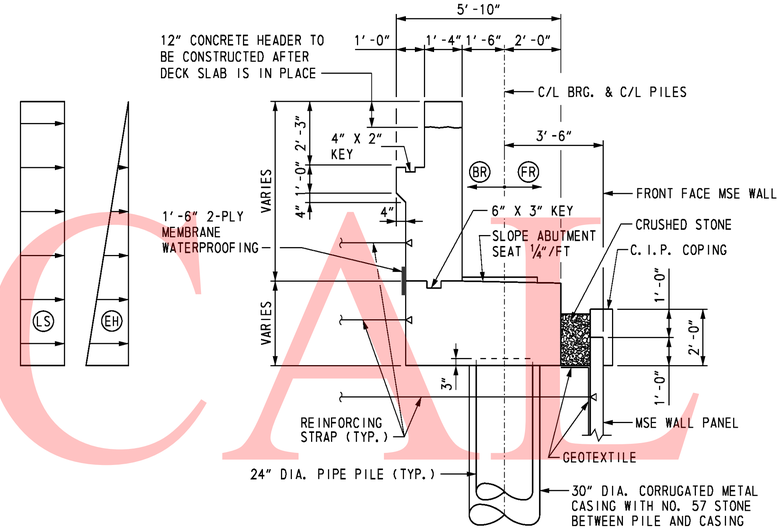

TYPICAL ABUTMENT SECTION

SCALE: 3/8" = 1'-0"

ABUTMENT LATERAL LOADS:

1. CONTRACTOR SHALL DESIGN THE REINFORCING SOIL STRAPS IN THE ABUTMENT STEM AND BACKWALL TO RESIST LATERAL LOADS "EH", "LS", "BR" AND "FR".
2. LOAD "EH" IS THE HORIZONTAL EARTH PRESSURE RESULTANT EXERTED ON THE ABUTMENT.
3. LOAD "LS" IS THE ADDITIONAL HORIZONTAL SOIL PRESSURE RESULTANT DUE TO 3 FEET OF SOIL SURCHARGE. CONTRACTOR IS RESPONSIBLE FOR PROVIDING MSE WALL DESIGNER WITH OTHER CONSTRUCTION LOADS WHICH WILL BE IN EXCESS OF 3 FEET OF SOIL SURCHARGE.
4. LOAD "BR" IS THE HORIZONTAL LOAD DUE TO BRAKING FORCE ON THE SUPERSTRUCTURE.
5. LOAD "FR" IS THE HORIZONTAL LOAD DUE TO FRICTION ON THE BEARINGS AS A RESULT OF BRIDGE EXPANSION AND CONTRACTION.
6. THE POINT OF APPLICATION OF THE LOADS "EH" AND "LS" ARE AT THE CENTROID OF THE PRESSURE DIAGRAM. THE LOADS "BR" AND "FR" ARE APPLIED AT THE CENTER OF THE BEARINGS. THE LOADS "BR" AND "FR" MAY ACT TOGETHER IN EITHER DIRECTION.

ABUTMENT LATERAL LOADS

TYPE	SERVICE LOAD (KIPS/FT.)
EH	1.90
LS	1.10
BR	0.13
FR	0.70

WORKING POINTS

W.P. NO.	STATION	OFFSET	COORDINATES NORTHING	COORDINATES EASTING
1	1245+81.00	0.00'	612,506.7317	432,424.9812
2	1245+81.00	13.44' LT.	612,501.2914	432,437.2682
3	1245+81.00	31.44' RT.	612,519.4597	432,396.2355
4	1245+84.52	12.94' LT.	612,498.2921	432,435.3970
5	1245+84.44	30.94' RT.	612,516.0557	432,395.2787
6	1245+58.17	12.94' LT.	612,522.2587	432,446.0955
7	1245+58.30	30.94' RT.	612,540.1662	432,406.0411
8	1245+50.29	30.94' RT.	612,547.5301	432,409.3704

NOTES:

1. CRUSHED STONE AND GEOTEXTILE BETWEEN MSE WALL COPING AND ABUTMENT FOOTING SHALL BE INCIDENTAL TO ITEM NO. 602772 - MECHANICALLY STABILIZED EARTH WALLS.
2. MSE WALL AND COPING NOT SHOWN IN ELEVATION VIEW.
3. BEAM SEAT STEPS MID-WAY BETWEEN GIRDERS. BEAM SEAT ELEVATION IS AT FRONT FACE BACKWALL.
4. METAL CASING FOR PILES SHALL EXTEND FROM BOTTOM OF ABUTMENT TO BOTTOM OF MSE WALL LEVELING PAD. COST OF METAL CASING AND NO. 57 STONE SHALL BE INCIDENTAL TO FURNISHING 24" STEEL PIPE PILE ITEM.

CROSS REFERENCE NOTES:

1. FOR BRIDGE PLAN AND ELEVATION, SEE DWG. S2-1.
2. FOR TYPICAL SIDE ELEVATION, SEE DWG. S2-6.
3. FOR MSE WINGWALLS PLAN AND ELEVATION, SEE DWG. S2-11 & S2-12.
4. FOR RAMP G1 OVER SR7 ABUTMENT A, SEE DWG. S5-5.
5. FOR ABUTMENT REINFORCEMENT, SEE DWGS. S2-7 & S2-8.
6. FOR ABUTMENT STRAP ANCHOR DETAIL, SEE DWG. S2-7.

UNOFFICIAL WEBSITE COPY

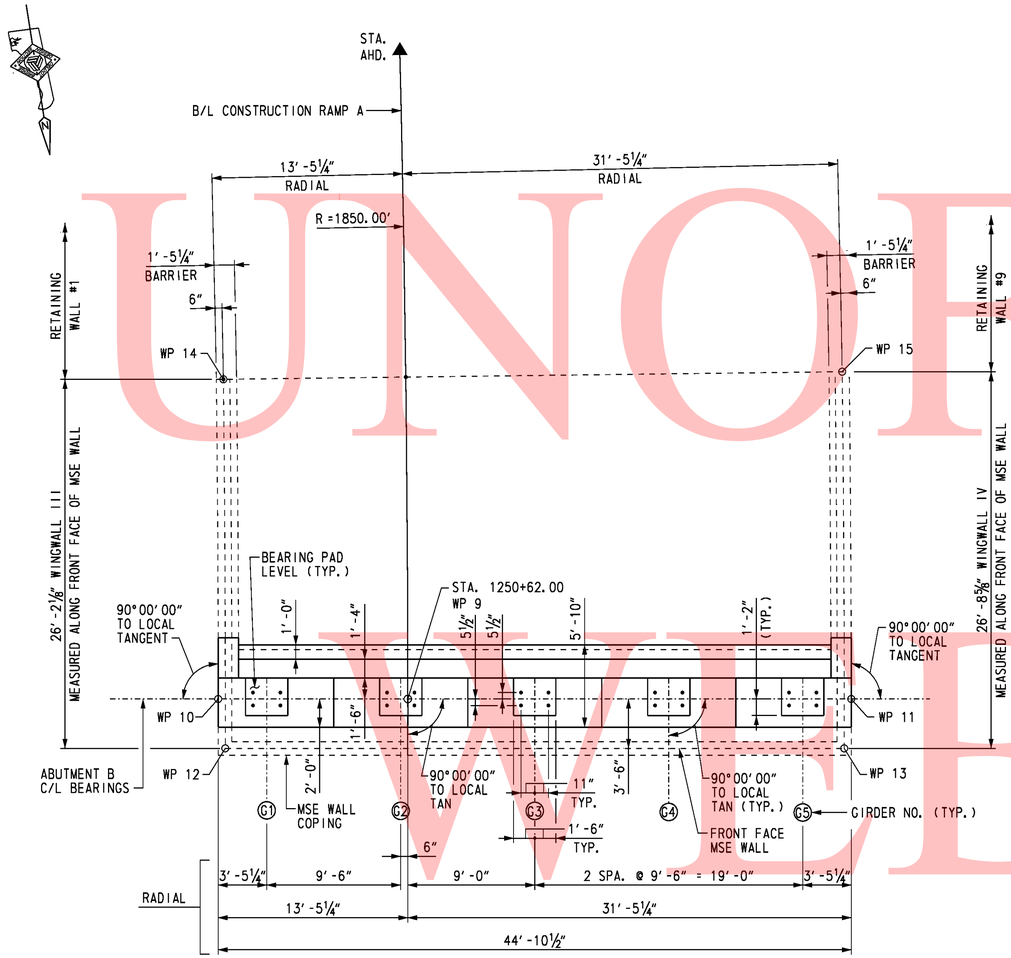

ABUTMENT B PLAN

SCALE: 3/16″ = 1′-0″

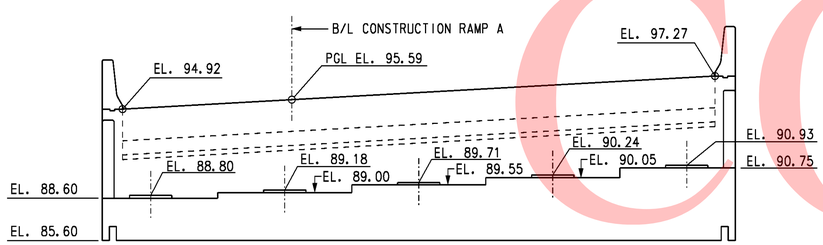

ABUTMENT B ELEVATION

SCALE: 3/16″ = 1′-0″

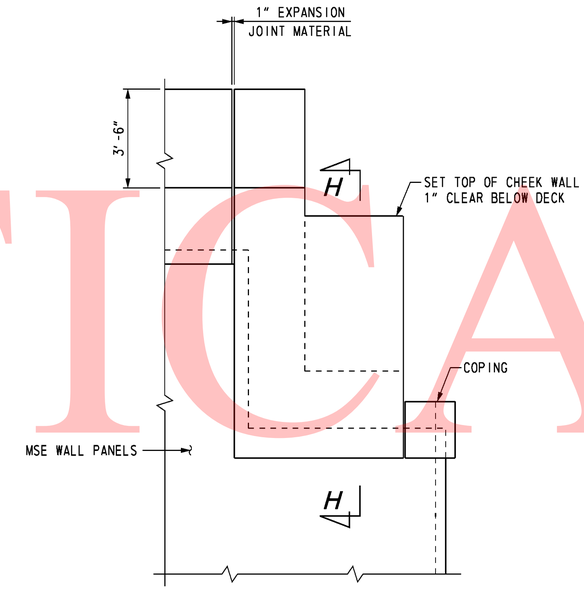

TYPICAL SIDE ELEVATION

SCALE: 3/8″ = 1′-0″

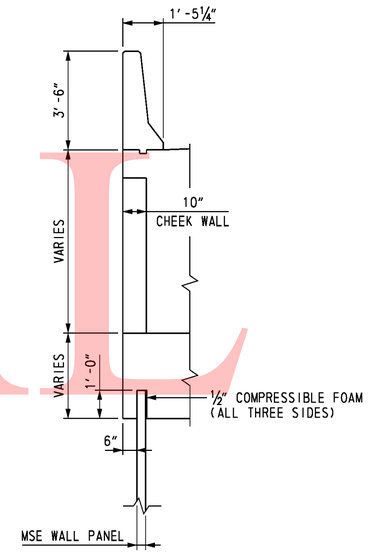

SECTION H-H

SCALE: 3/8″ = 1′-0″

WORKING POINTS

W.P. NO.	STATION	OFFSET	COORDINATES NORTHING	COORDINATES EASTING
9	1250+62.00	0.00′	612,046.6814	432,289.2820
10	1250+62.00	13.44′ LT.	612,044.5826	432,302.5545
11	1250+62.00	31.44′ RT.	612,051.5916	432,258.2303
12	1250+58.48	12.94′ LT.	612,048.1172	432,302.6106
13	1250+58.56	30.94′ RT.	612,054.9701	432,259.2740
14	1250+84.83	12.94′ LT.	612,022.2441	432,298.6576
15	1250+84.83	30.94′ RT.	612,028.5615	432,255.2398

NOTE:

1. MSE WALL AND COPING NOT SHOWN IN ELEVATION VIEW.
2. ABUTMENT SEAT STEPS MID-WAY BETWEEN GIRDERS.

CROSS REFERENCE NOTES:

1. FOR BRIDGE PLAN AND ELEVATION, SEE DWG. S2-1.
2. FOR TYPICAL ABUTMENT SECTION, SEE DWG. S2-5.
3. FOR MSE WINGWALLS PLAN AND ELEVATION, SEE DWGS. S2-11 & S2-12.
4. FOR ABUTMENT REINFORCEMENT, SEE DWGS. S2-9 & S2-10.

UNOFFICAL WEBSITE COPY

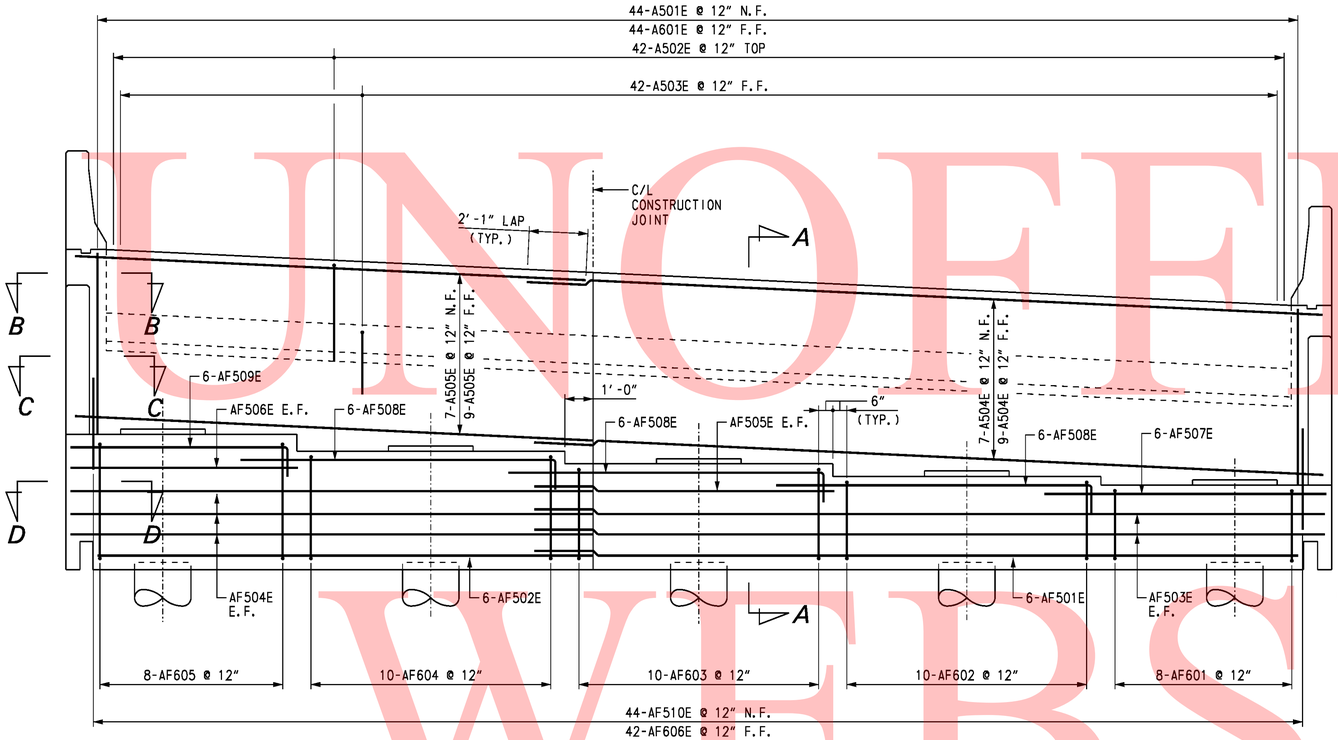

ABUTMENT A ELEVATION

SCALE: 3/8" = 1'-0"

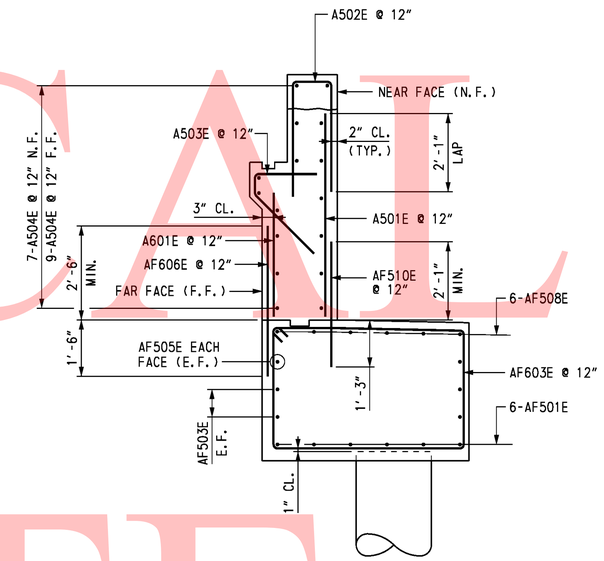

SECTION A-A

SCALE: 1/2" = 1'-0"

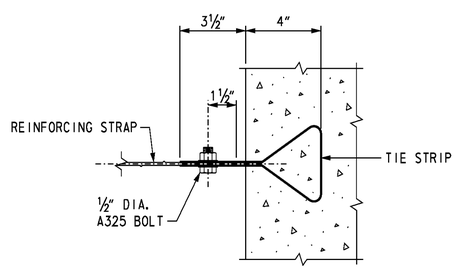

ABUTMENT STRAP ANCHOR DETAIL

NOT TO SCALE

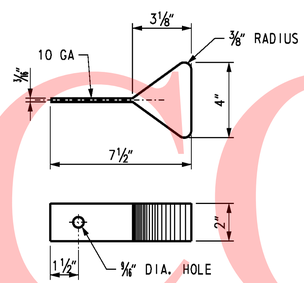

TIE STRIP DETAIL

NOT TO SCALE

NOTE:

TIE STRIP MATERIAL IS SAME AS USED IN MSE WALL PANELS. DESIGN SHALL BE CONSISTENT WITH MSE WALL DESIGN. COST OF REINFORCING STRAPS AND ANCHORS SHALL BE INCIDENTAL TO MSE WALL ITEM.

CROSS REFERENCE NOTES:

1. FOR BRIDGE PLAN AND ELEVATION, SEE DWG. S2-1.
2. FOR ABUTMENT A PLAN AND ELEVATION, SEE DWG. S2-5.
3. FOR WINGWALL 11 SIDE ELEVATION, SEE DWG. S2-8.
4. FOR SECTIONS B-B, C-C AND D-D, SEE DWG. S2-8.
5. FOR REINFORCING BAR LIST, SEE DWG. S2-15.

UNOFFICIAL WEBSITE COPY

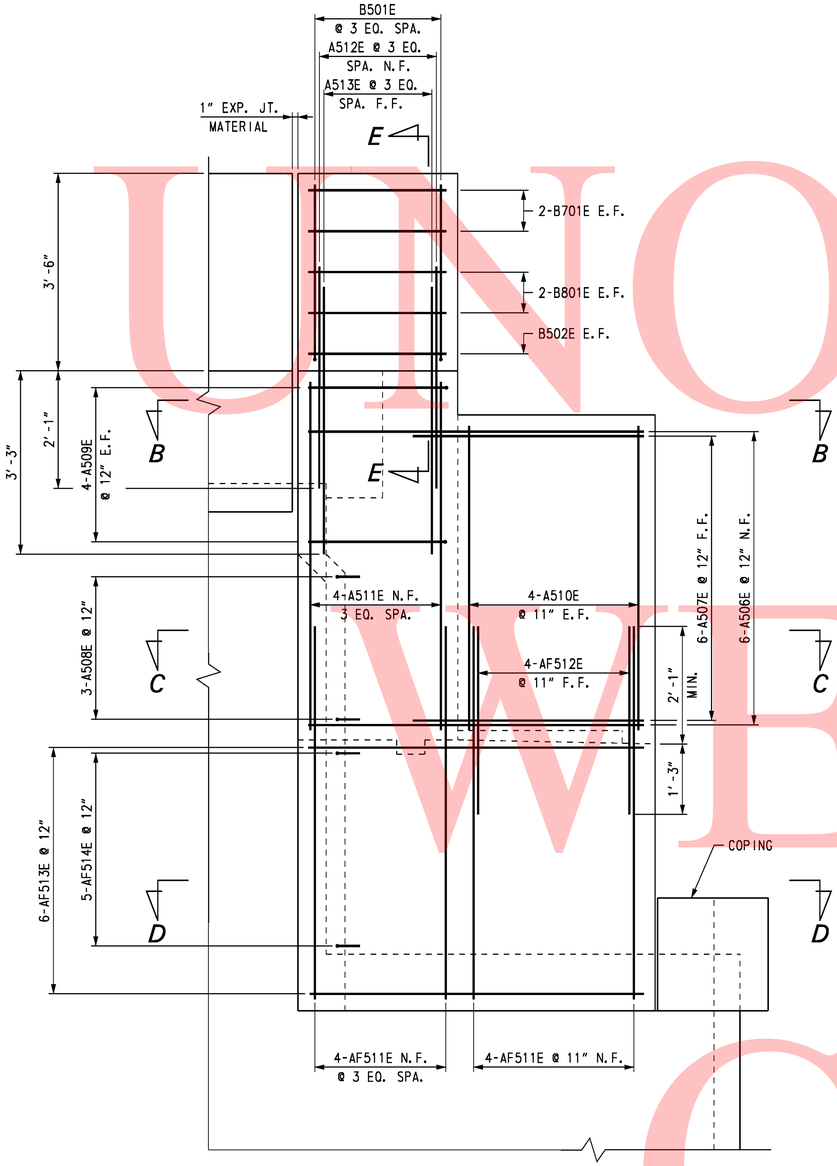

WINGWALL II SIDE ELEVATION

SCALE: ¾" = 1'-0"

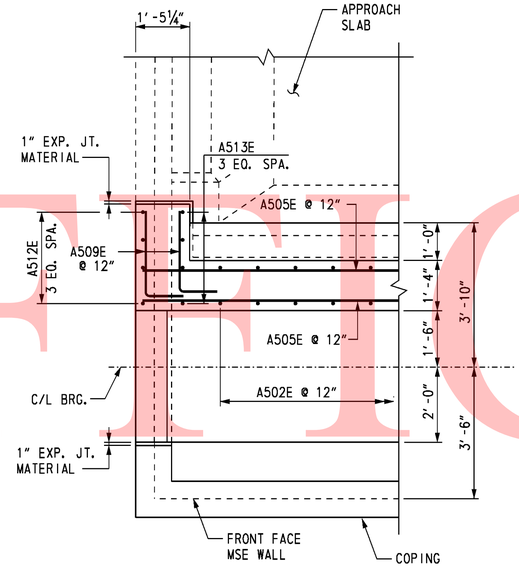

SECTION B-B

SCALE: ½" = 1'-0"

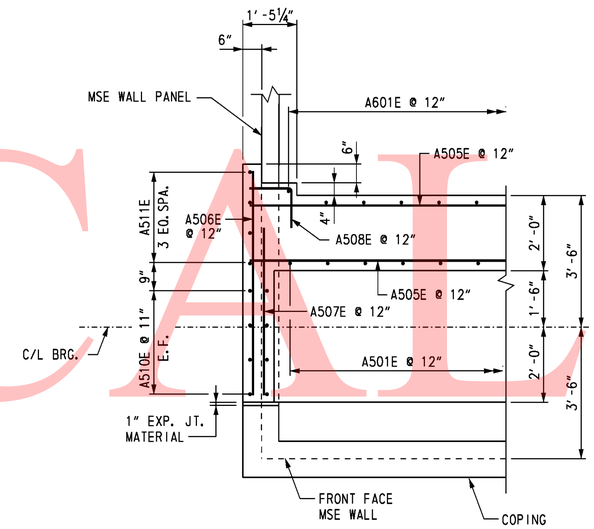

SECTION C-C

SCALE: ½" = 1'-0"

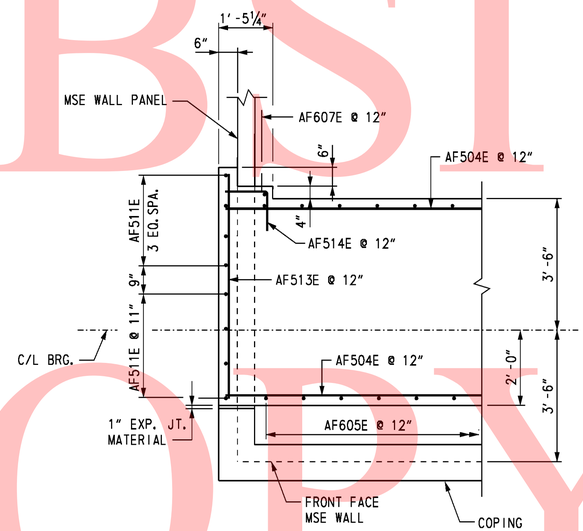

SECTION D-D

SCALE: ½" = 1'-0"

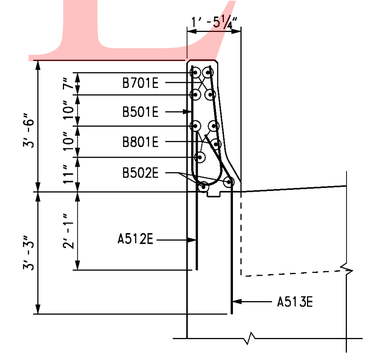

SECTION E-E

SCALE: ½" = 1'-0"

CROSS REFERENCE NOTES:

1. FOR ABUTMENT A PLAN AND ELEVATION, SEE DWG. S2-5.
2. FOR ABUTMENT A ELEVATION REINFORCEMENT DETAILS, SEE DWG. S2-7.
3. FOR REINFORCING BAR LIST, SEE DWG. S2-15.

UNOFFICIAL WEBSITE COPY

DELAWARE DEPARTMENT OF TRANSPORTATION	ADDENDUMS / REVISIONS	SR1 / I-95 INTERCHANGE	CONTRACT 28-090-03	BRIDGE NO. 1-716C	RAMP A OVER SR 7	S2-8 SHEET NO. 261
			COUNTY NEW CASTLE	DESIGNED BY: K. D. BEAVER	ABUTMENT A REINFORCEMENT 2	TOTAL SHTS. 803
				CHECKED BY: J. S. LI		

10/28/2010 O:\20832687-XM\CAD\Bridge\BR-S2\ab05_BR-S2_sr1.dgn untitled

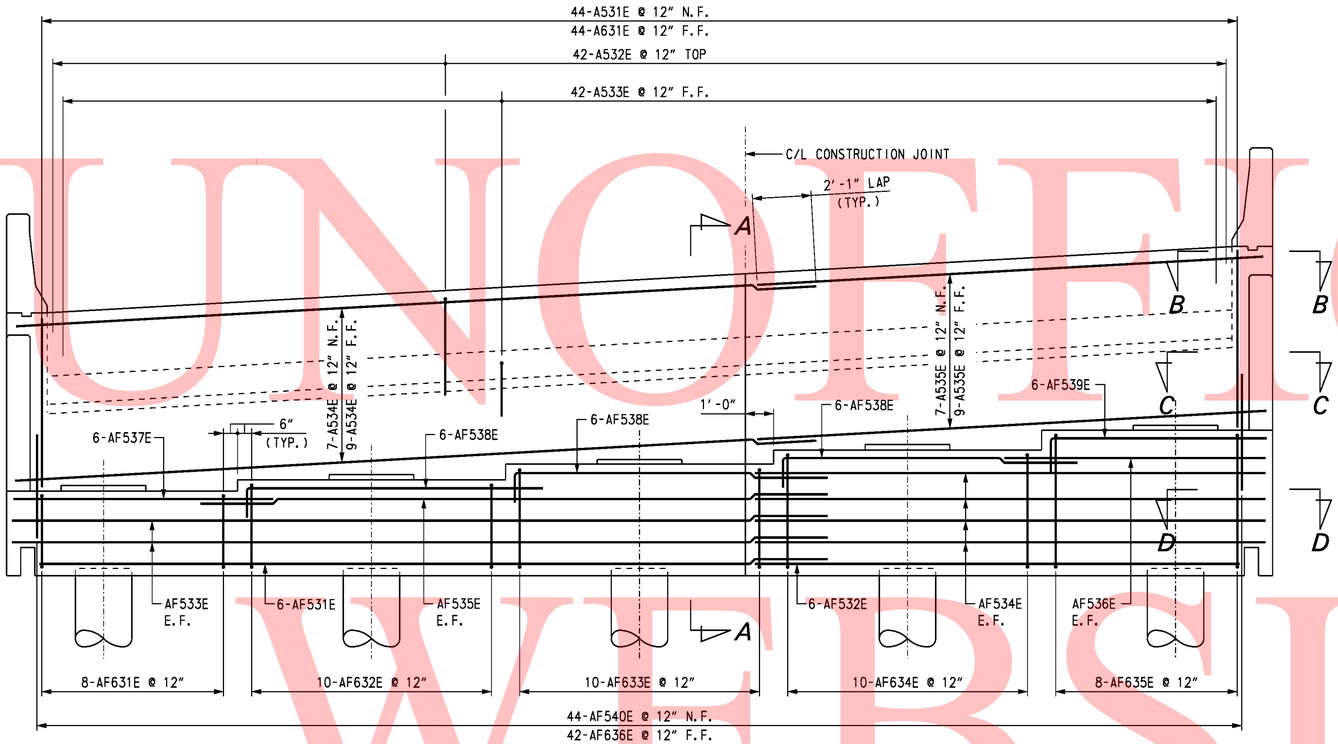

ELEVATION - ABUTMENT B

SCALE: 3/8" = 1'-0"

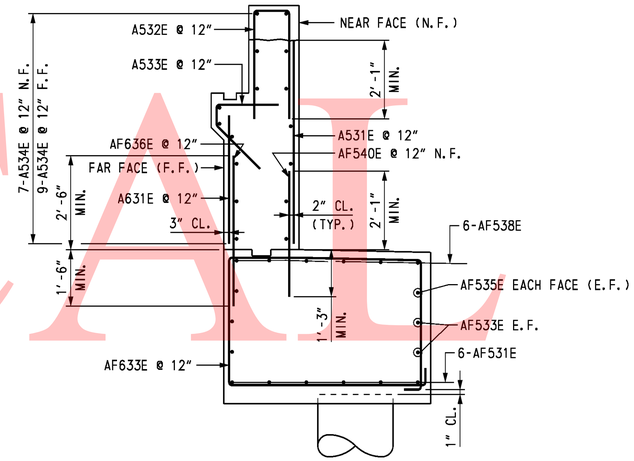

SECTION A-A

SCALE: 1/2" = 1'-0"

CROSS REFERENCE NOTES:

1. FOR BRIDGE PLAN AND ELEVATION, SEE DWG. S2-1.
2. FOR ABUTMENT B PLAN AND ELEVATION, SEE DWG. S2-6.
3. FOR WINGWALL IV SIDE ELEVATION, SEE DWG. S2-10.
4. FOR SECTIONS B-B, C-C AND D-D, SEE DWG. S2-10.
5. FOR REINFORCING BAR LIST, SEE DWG. S2-15.

UNOFFICIAL WEBSITE COPY

10/28/2010 O:\20832687-XM\CAD\Bridge\BR-S2\ab06_BR-S2_sr1.dgn untitled

DELAWARE DEPARTMENT OF TRANSPORTATION	ADDENDUMS / REVISIONS	SR1 / I-95 INTERCHANGE	CONTRACT 28-090-03	BRIDGE NO. 1-716C	RAMP A OVER SR 7	S2-9 SHEET NO.
			COUNTY NEW CASTLE	DESIGNED BY: K. D. BEAVER	ABUTMENT B REINFORCEMENT 1	262 TOTAL SHTS.
				CHECKED BY: J. S. LI		803

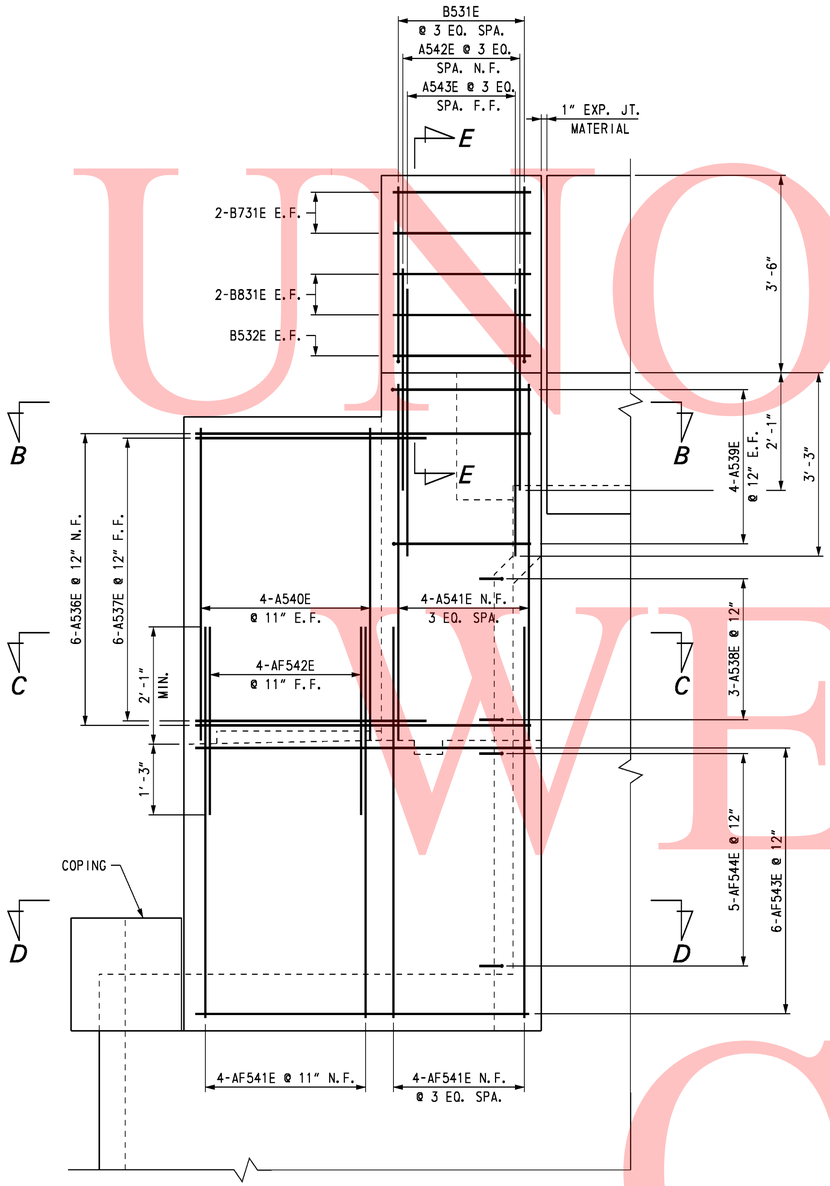

WINGWALL IV SIDE ELEVATION

SCALE: ¾" = 1'-0"

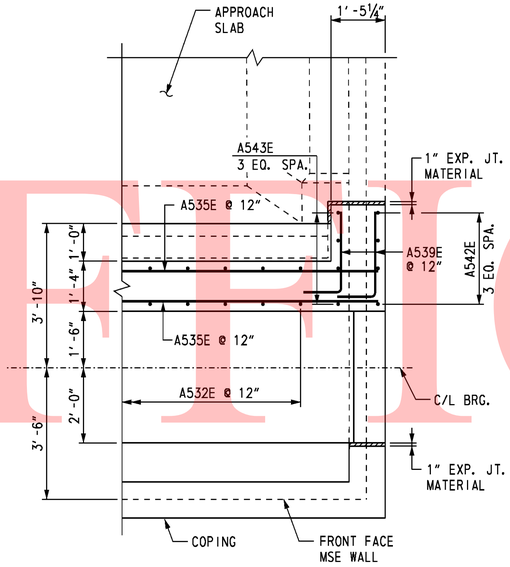

SECTION B-B

SCALE: ½" = 1'-0"

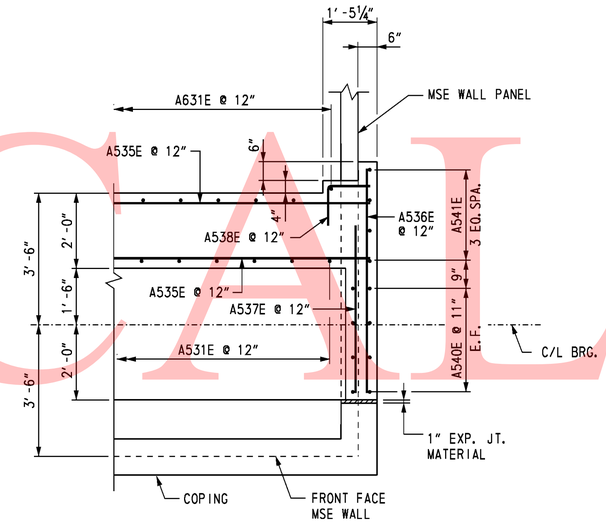

SECTION C-C

SCALE: ½" = 1'-0"

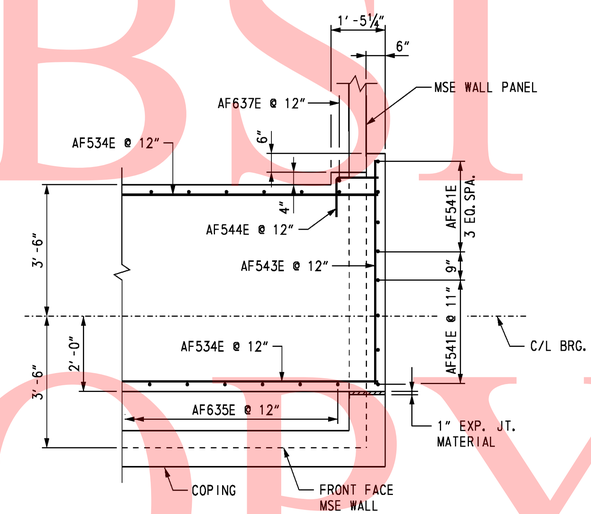

SECTION D-D

SCALE: ½" = 1'-0"

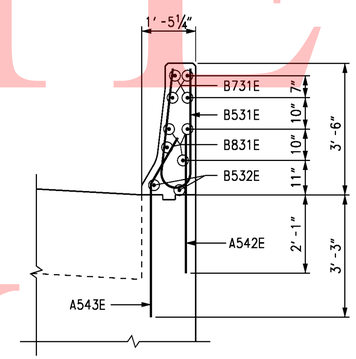

SECTION E-E

SCALE: ½" = 1'-0"

CROSS REFERENCE NOTES:

1. FOR ABUTMENT B PLAN AND ELEVATION, SEE DWG. S2-6.
2. FOR ABUTMENT B ELEVATION REINFORCEMENT DETAILS, SEE DWG. S2-9.
3. FOR REINFORCING BAR LIST, SEE DWG. S2-15.

UNOFFICIAL WEBSITE COPY

DELAWARE DEPARTMENT OF TRANSPORTATION	ADDENDUMS / REVISIONS	SR1 / I-95 INTERCHANGE	CONTRACT 28-090-03	BRIDGE NO. 1-716C	RAMP A OVER SR 7	S2-10 SHEET NO. 263
			COUNTY NEW CASTLE	DESIGNED BY: K. D. BEAVER	ABUTMENT B REINFORCEMENT 2	TOTAL SHTS. 803
				CHECKED BY: J. S. LI		

10/28/2010 O:\20832687-XM\CAD\Bridge\BR-S2\ab07_BR-S2_sr1.dgn untitled

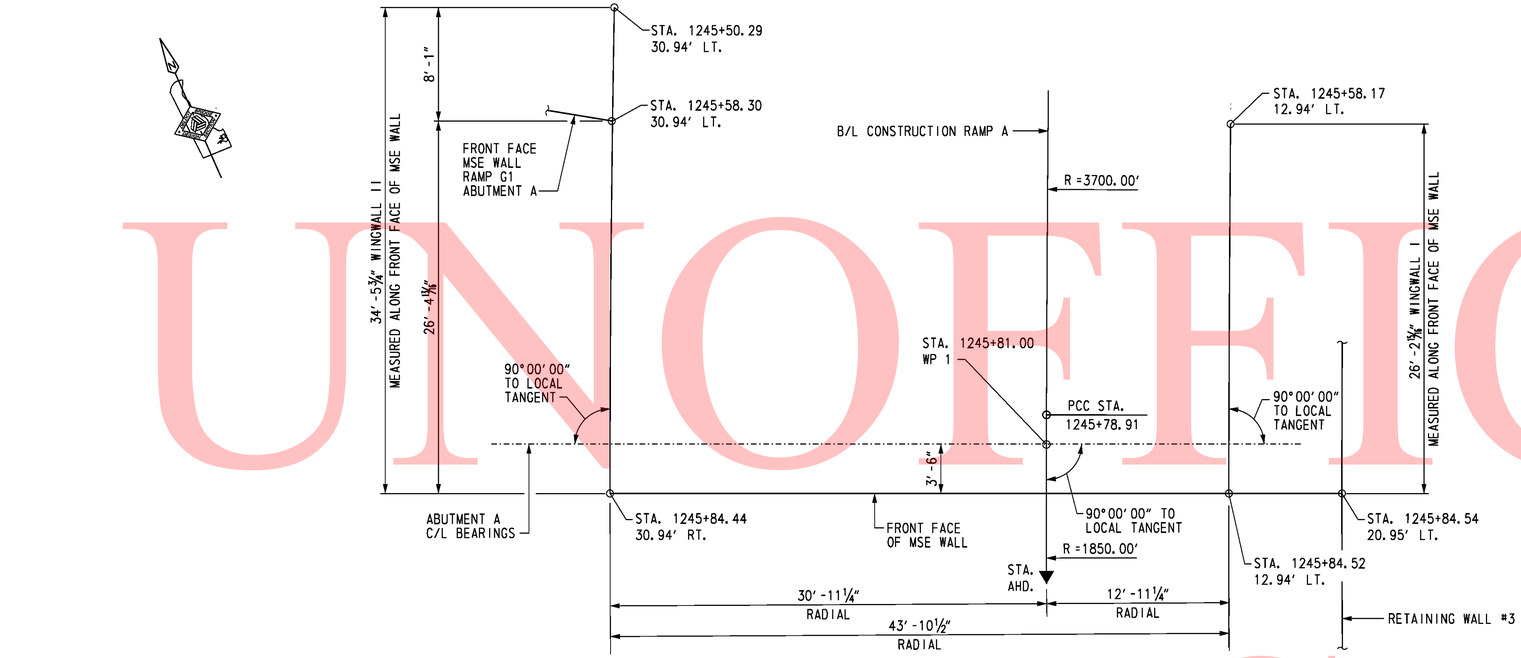

PLAN

SCALE: 3/16" = 1'-0"

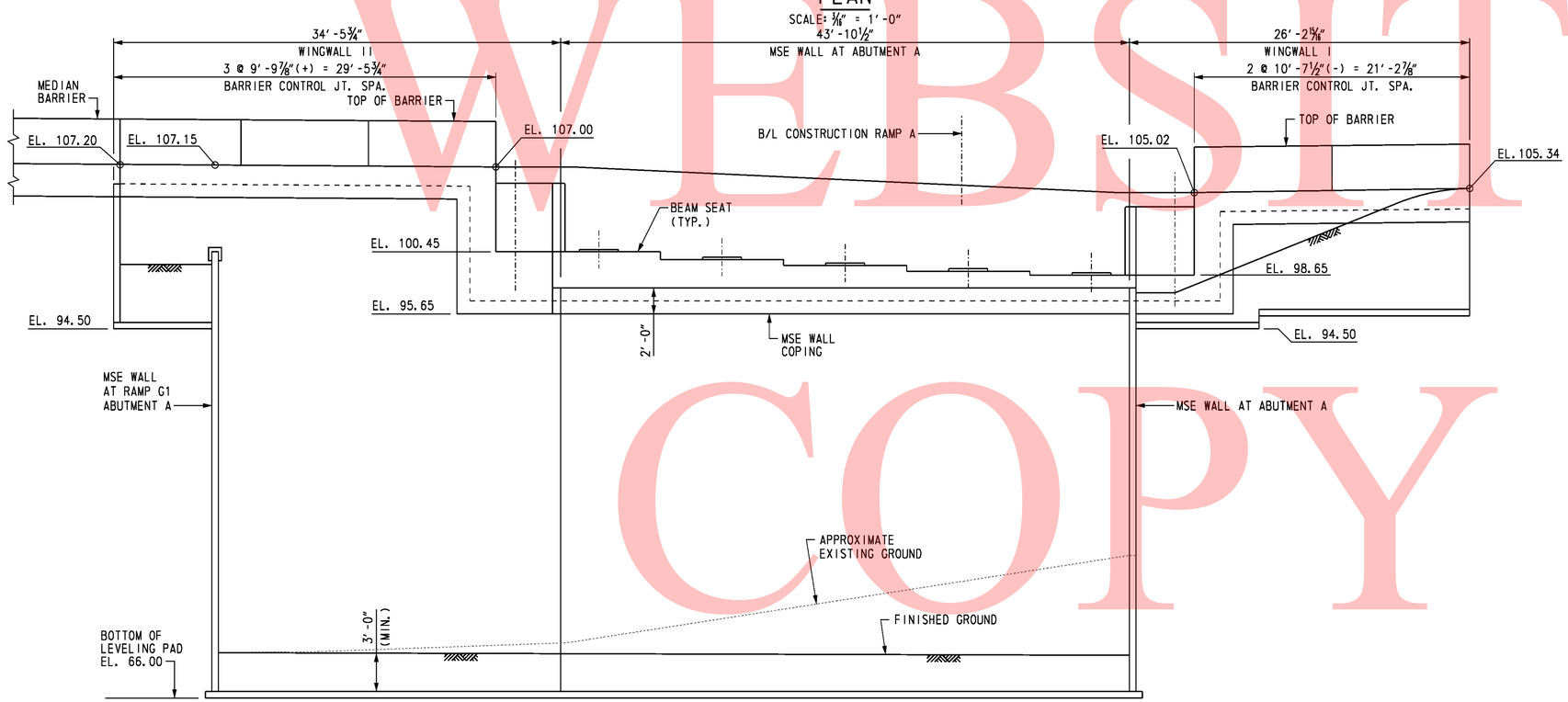

DEVELOPED ELEVATION

SCALE: 3/16" = 1'-0"

CROSS REFERENCE NOTES:

1. FOR BRIDGE PLAN AND ELEVATION, SEE DWG. S2-1.
2. FOR ABUTMENT A PLAN AND ELEVATION, SEE DWG. S2-5.
4. FOR MSE WINGWALL DETAILS, SEE DWG. S2-13 & S2-14.

UNOFFICAL WEBSITE COPY

10/28/2010 O:\20832687-XM\CAD\Bridge\BR-S2\rd01_BR-S2_sr1.dgn
untitled

DELAWARE DEPARTMENT OF TRANSPORTATION	ADDENDUMS / REVISIONS	SR1 / I-95 INTERCHANGE	CONTRACT 28-090-03	BRIDGE NO. 1-716C	RAMP A OVER SR 7	S2-11 SHEET NO.
			COUNTY NEW CASTLE	DESIGNED BY: R. F. KIRCHNER	WINGWALLS I AND II PLAN AND ELEVATION	264 TOTAL SHTS.
				CHECKED BY: G. P. MISTRY		803

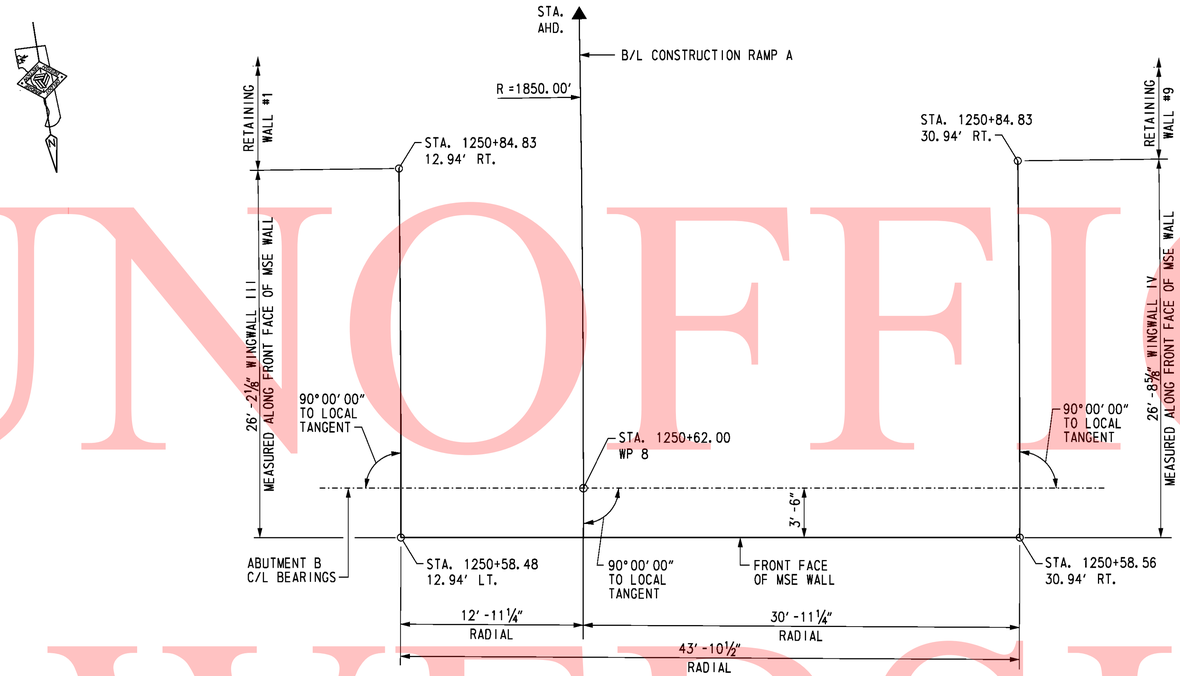

PLAN

SCALE: 3/16" = 1'-0"

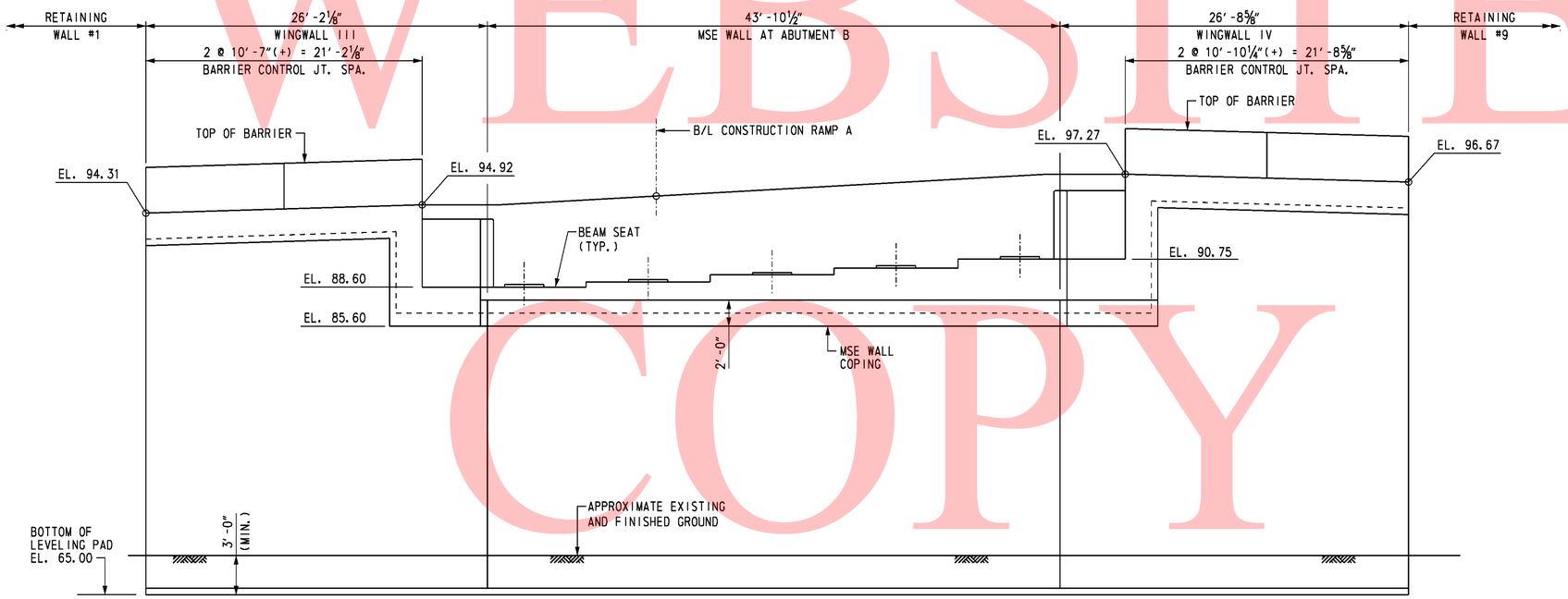

DEVELOPED ELEVATION

SCALE: 3/16" = 1'-0"

CROSS REFERENCE NOTES:

1. FOR BRIDGE PLAN AND ELEVATION, SEE DWG. S2-1.
2. FOR ABUTMENT B PLAN AND ELEVATION, SEE DWG. S2-6.
3. FOR MSE WINGWALL DETAILS, SEE DWG. S2-13 & S2-14.

UNOFFICAL WEBSITE COPY

10/28/2010 O:\20832687-XM\CAD\Bridge\BR-S2\rd02_BR-S2_sr1.dgn
untitled

DELAWARE DEPARTMENT OF TRANSPORTATION	ADDENDUMS / REVISIONS	SR1 / I-95 INTERCHANGE	CONTRACT 28-090-03	BRIDGE NO. 1-716C	RAMP A OVER SR 7	SHEET NO. S2-12
			COUNTY NEW CASTLE	DESIGNED BY: R. F. KIRCHNER	WINGWALLS III AND IV PLAN AND ELEVATION	TOTAL SHTS. 265
				CHECKED BY: G. P. MISTRY		803

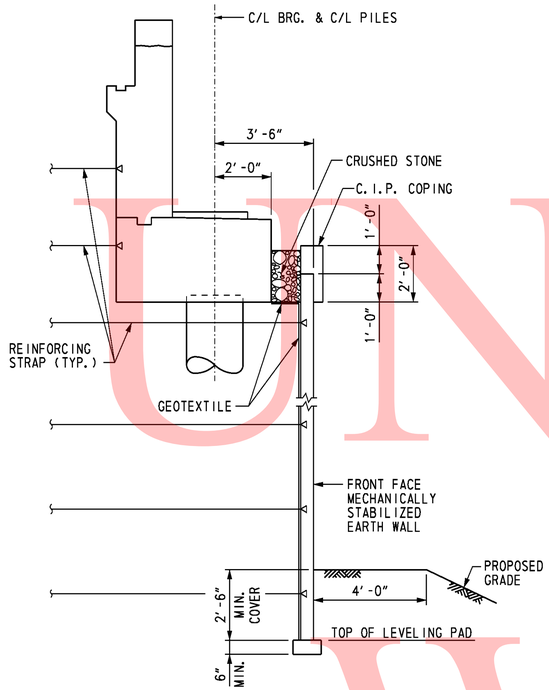

TYPICAL MSE WALL SECTION AT ABUTMENT

SCALE: 3/8" = 1'-0"

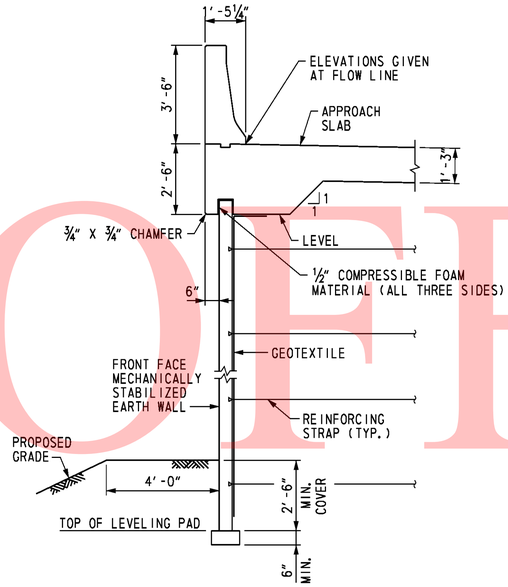

TYPICAL WINGWALL SECTION WITH APPROACH SLAB

SCALE: 3/8" = 1'-0"

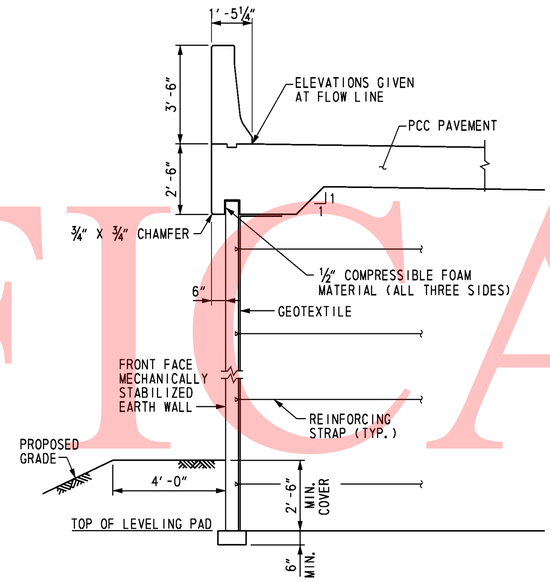

TYPICAL WINGWALL SECTION WITH PCC PAVEMENT

SCALE: 3/8" = 1'-0"

MSE WALL NOTES

SPECIFICATIONS: PROPRIETARY MSE WALLS SHALL BE DESIGNED IN ACCORDANCE WITH THE FOLLOWING:
- AASHTO LRFD BRIDGE DESIGN SPECIFICATIONS, 4TH EDITION WITH ALL CURRENT REVISIONS.
- FEDERAL HIGHWAY ADMINISTRATION PUBLICATION NOS. FHWA-NHI-10-024 AND FHWA-NHI-025, "DESIGN AND CONSTRUCTION OF MECHANICALLY STABILIZED EARTH WALLS AND REINFORCED SOIL SLOPES", VOLUME I AND VOLUME II.

CONCRETE DESIGN SHALL BE PERFORMED USING THE LOAD AND RESISTANCE FACTOR DESIGN METHOD.

CONCRETE: ALL CONCRETE FOR ROADWAY BARRIERS SHALL BE 4,500 PSI. LEVELING PAD CONCRETE SHALL BE 3,500 PSI. MIX REQUIREMENTS SHALL CONFORM TO SECTION 812 OF THE DELAWARE DEPARTMENT OF TRANSPORTATION STANDARD SPECIFICATIONS.

CHAMFERS: ALL EXPOSED CORNERS OF CONCRETE SHALL BE CHAMFERED WITH 3/4" x 3/4" MILLED CHAMFER STRIPS, UNLESS OTHERWISE NOTED, EXCEPT ON UNEXPOSED FOOTINGS OR WHERE INDICATED BY THE FOLLOWING NOTATION ON THE PLANS: "DO NOT CHAMFER".

REINFORCING STEEL: REINFORCING STEEL SHALL CONFORM TO ASTM A 615, GRADE 60. ALL SPLICES, NOT SHOWN, SHALL BE LAPPED AS PER THE LRFD BRIDGE DESIGN SPECIFICATIONS. MINIMUM COVER FOR ANY BAR SHALL BE 2" UNLESS OTHERWISE NOTED.

FOR TIES AND STIRRUPS, STANDARD ACI BENDING TOLERANCES ARE MODIFIED TO PLUS (+) ZERO INCHES, MINUS (-) NORMAL ACI BENDING TOLERANCE.

ONLY GRADE 60 CAN BE USED ON THIS PROJECT.

ALL REINFORCING STEEL IN THE BARRIER SHALL BE FUSION-BONDED EPOXY COATED, AND SHALL CONFORM TO ASTM D3963.

ALL KEYS ARE NOMINAL SIZE.

THE MSE WALL MANUFACTURER MAY SUBSTITUTE ALTERNATE REINFORCING CONFIGURATIONS AND SUBMIT FOR APPROVAL.

EXPANSION AND CONTRACTION JOINTS: THE LOCATION OF THE EXPANSION AND CONTRACTION JOINTS IN THE BARRIER SHOWN ON THE PLANS MAY BE ADJUSTED TO ACCOMMODATE THE PANEL TYPE USED IN THE PROJECT. ANY CHANGE TO THESE JOINT LOCATIONS SHALL BE SUBMITTED TO THE ENGINEER FOR APPROVAL.

LEVELING PAD: THE PROPRIETARY WALL MANUFACTURER MAY RELOCATE THE LEVELING PAD STEPS AT THEIR DISCRETION PROVIDED THAT THE MINIMUM EMBEDMENT IS MAINTAINED. ANY CHANGE TO THE STEP LOCATIONS SHALL BE SUBMITTED TO THE ENGINEER FOR APPROVAL.

ROADWAY LIMITS: THE PROPRIETARY WALL MANUFACTURER SHALL ASSURE THAT PROPOSED PROPRIETARY WALL COMPONENTS ARE POSITIONED SUCH THAT THE DESIGNATED ROADWAY LIMITS ARE NOT ENCROACHED UPON.

TRAFFIC BARRIER JOINTS: TRAFFIC BARRIER FOOTING SHALL HAVE CONSTRUCTION JOINTS TO COINCIDE WITH THE BARRIER JOINTS.

COORDINATION: CONTRACTOR AND PROPRIETARY WALL MANUFACTURER SHALL COORDINATE LOCATIONS OF INLETS AND PIPES WITH LOCATIONS OF PROPRIETARY WALL TIE BACK SYSTEM AND MOMENT SLAB.

ARCHITECTURAL FINISH: THE MSE WALL PANELS SHALL RECEIVE AN ARCHITECTURAL FINISH.

SERVICE LIFE: ALL RETAINING WALL COMPONENTS SHALL BE DESIGNED FOR A MINIMUM SERVICE LIFE OF 100 YEARS.

WALL SYSTEM: ONLY ONE MSE WALL SYSTEM MAY BE USED ON THIS PROJECT.

ROADWAY SUPERELEVATION: FOR ROADWAY SUPERELEVATION, SEE SUPERELEVATION TABLES.

MSE WALL BACKFILL: MSE WALL BACKFILL SHALL CONSIST OF SPECIFIED BACKFILL AS SHOWN ON SOIL PROFILE SECTION.

REINFORCING STRAPS: SET REINFORCING STRAPS TO CLEAR PILE CASING, 2" MIN. CLEARANCE. MAXIMUM IN-FIELD SKEW OF 15 DEGREES. IF GREATER SKEW ANGLE IS REQUIRED, CONTACT MSE WALL FIELD REPRESENTATIVE PRIOR TO INSTALLATION.

CROSS REFERENCE NOTES:

1. FOR BRIDGE PLAN AND ELEVATION, SEE DWG. S2-1.
2. FOR WINGWALLS PLAN AND ELEVATION, SEE DWGS. S2-11 & S2-12.
3. FOR SOIL PROFILE INFORMATION AND FOUNDATION NOTES, SEE DWG. S2-14.

UNOFFICAL WEBSITE COPY

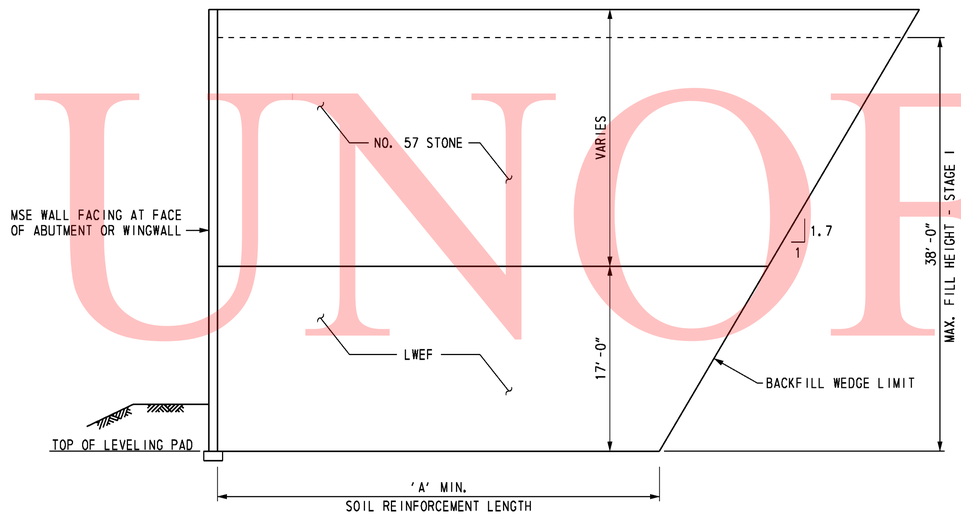

SOIL PROFILE SECTION
ABUTMENT A AND WINGWALLS I AND II

NOT TO SCALE

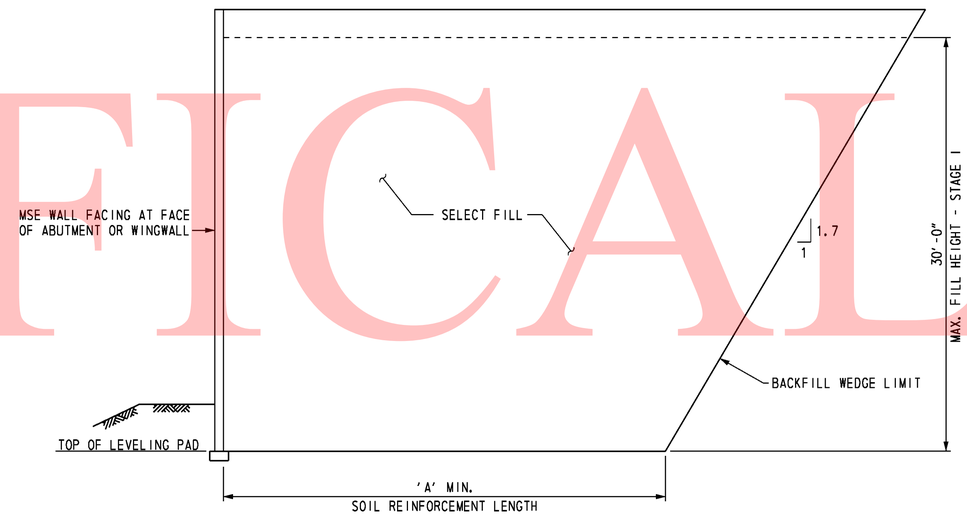

SOIL PROFILE SECTION
ABUTMENT B AND WINGWALLS III AND IV

NOT TO SCALE

MINIMUM REINFORCED ZONE WIDTH (A) FEET	
ABUTMENT A	
FACE OF ABUTMENT	31.0
WINGWALLS I AND II	31.0
ABUTMENT B	
FACE OF ABUTMENT	33.0
WINGWALLS III AND IV	26.0

SOIL PROPERTIES

SOIL TYPE	UNIT WEIGHT (PCF)	DRAINED ANGLE OF FRICTION (DEGREES)	UNDRAINED SHEAR (PSF)	FACTORED BEARING RESISTANCE (KSF)
SELECT FILL	125	34	-	-
LWEF	40	38	-	-
NO. 57 STONE	105	38	-	-
FOUNDATION SOIL:				
ABUTMENT A	120	24	1250	5.0
ABUTMENT B	120	24	1400	5.1

FOUNDATION NOTES

THE FACTORED BEARING RESISTANCE SHALL BE VERIFIED PRIOR TO CONSTRUCTION OF THE MSE WALL.

THE INTERNAL STABILITY OF THE MSE WALL SHALL BE DESIGNED BY THE CONTRACTOR USING THE SOIL PARAMETERS PROVIDED FOR EACH STRUCTURE LOCATION. THE INTERNAL STABILITY CALCULATIONS SHALL BE SIGNED AND SEALED BY A PROFESSIONAL ENGINEER LICENSED IN THE STATE OF DELAWARE AS INDICATED IN THE PROJECT SPECIFICATIONS.

ISOLATED AREAS OF EXISTING FILL MAY BE ENCOUNTERED DURING CONSTRUCTION OF THIS MSE WALL. EXISTING FILL SHALL BE UNDERCUT TO EXPOSE UNDISTURBED NATURAL SOIL. UNDERCUTTING AND BACKFILLING WILL BE MEASURED AND PAID IN ACCORDANCE WITH THE SPECIFICATIONS.

A MINIMUM 7-DAY QUARANTINE PERIOD SHALL BE REQUIRED AFTER CONSTRUCTION OF THE WALL TO THE "MAX. FILL HEIGHT - STAGE 1" INDICATED ON THE SOIL PROFILE SECTION. NO FURTHER FILL SHALL BE PLACED UNTIL AUTHORIZED BY THE ENGINEER. ONCE AUTHORIZATION IS GIVEN, FILL SHALL BE PLACED IN ADDITIONAL INCREMENTS OF 5 FEET IN HEIGHT, WITH THE SAME QUARANTINE PERIOD AND AUTHORIZATION REQUIRED AT EACH INCREMENT. AN ADDITIONAL QUARANTINE PERIOD OF 30 TO 60 DAYS IS REQUIRED AFTER CONSTRUCTION OF THE MSE WALL TO ITS FULL HEIGHT. NO FURTHER CONSTRUCTION SHALL BE PERMITTED UNTIL AUTHORIZED BY THE ENGINEER. A TOTAL ESTIMATED SETTLEMENT OF APPROXIMATELY FOUR TO FIVE INCHES IS ANTICIPATED.

UNOFFICAL WEBSITE COPY

REINFORCING BAR LIST

ABUTMENT A

MARK	LENGTH	NO. BARS	TYPE	A	B	C	D	E	G	H	J	K	O	R	REMARKS
AP401E	6′-7″	95	T3									1′-8″	1′-7″		
AP801E	18′-11″	40	37	0′-11″	18′-0″						0′-8″				
AF501E	26′-11″	6	STR.												
AF502E	17′-6″	6	STR.												
AF503E	27′-11″	4	STR.												
AF504E	18′-6″	6	STR.												
AF505E	10′-7″	2	STR.												
AF506E	8′-0″	2	STR.												
AF507E	9′-3″	6	STR.												
AF508E	12′-3″	18	36	0′-10″	11′-5″										
AF509E	8′-8″	6	36	0′-10″	7′-10″										
AF510E	3′-7″	44	STR.												
AF511E	7′-0″	16	STR.												
AF512E	4′-5″	8	STR.												
AF513E	6′-0″	12	STR.												
AF514E	2′-2″	10	17		1′-1″	1′-1″									
AF601E	17′-4″	8	T2	1′-0″	5′-2″	2′-6″	5′-2″	2′-6″	1′-0″						
AF602E	17′-10″	10	T2	1′-0″	5′-2″	2′-9″	5′-2″	2′-9″	1′-0″						
AF603E	18′-10″	10	T2	1′-0″	5′-2″	3′-3″	5′-2″	3′-3″	1′-0″						
AF604E	19′-8″	10	T2	1′-0″	5′-2″	3′-8″	5′-2″	3′-8″	1′-0″						
AF605E	20′-10″	8	T2	1′-0″	5′-2″	4′-3″	5′-2″	4′-3″	1′-0″						
AF606E	4′-5″	42	STR.												
AF607E	6′-7″	2	STR.												
A501E	6′-2″	44	STR.												
A502E	7′-1″	42	17		3′-0″	1′-0″	3′-1″								
A503E	3′-9″	42	16		1′-6″	0′-10″	1′-5″			1′-0″		1′-0″			
A504E	28′-0″	16	STR.												
A505E	18′-9″	16	STR.												
A506E	6′-0″	12	STR.												
A507E	4′-7″	12	STR.												
A508E	2′-2″	6	17		1′-1″	1′-1″									
A509E	3′-3″	16	36	1′-0″	2′-3″										
A510E	5′-0″	16	STR.												
A511E	7′-7″	8	STR.												
A512E	3′-10″	8	STR.												
A513E	4′-8″	8	16			3′-5″	1′-3″			1′-0¼″		0′-8¾″			
A601E	3′-9″	44	STR.												
B501E	6′-9″	8	H1		2′-9½″	1′-2″	2′-9½″			0′-5″				0′-4½″	
B502E	2′-0″	4	STR.												
B701E	2′-0″	8	STR.												
B801E	2′-0″	8	STR.												

ABUTMENT B

MARK	LENGTH	NO. BARS	TYPE	A	B	C	D	E	G	H	J	K	O	R	REMARKS
AP431E	6′-7″	95	T3									1′-8″	1′-7″		
AP831E	18′-11″	40	37	0′-11″	18′-0″						0′-8″				
AF531E	27′-3″	6	STR.												
AF532E	17′-4″	6	STR.												
AF533E	28′-3″	4	STR.												
AF534E	18′-4″	8	STR.												
AF535E	21′-1″	2	STR.												
AF536E	8′-0″	2	STR.												
AF537E	10′-1″	6	STR.												
AF538E	12′-3″	18	36	0′-10″	11′-5″										
AF539E	8′-8″	6	36	0′-10″	7′-10″										
AF540E	3′-7″	44	STR.												
AF541E	7′-4″	16	STR.												
AF542E	4′-5″	8	STR.												
AF543E	6′-0″	12	STR.												
AF544E	2′-2″	10	17		1′-1″	1′-1″									
AF631E	17′-4″	8	T2	1′-0″	5′-2″	2′-6″	5′-2″	2′-6″	1′-0″						
AF632E	18′-2″	10	T2	1′-0″	5′-2″	2′-11″	5′-2″	2′-11″	1′-0″						
AF633E	19′-2″	10	T2	1′-0″	5′-2″	3′-5″	5′-2″	3′-5″	1′-0″						
AF634E	20′-2″	10	T2	1′-0″	5′-2″	3′-11″	5′-2″	3′-11″	1′-0″						
AF635E	21′-8″	8	T2	1′-0″	5′-2″	4′-8″	5′-2″	4′-8″	1′-0″						
AF636E	4′-3″	42	STR.												
AF637E	6′-11″	2	STR.												
A531E	6′-2″	44	STR.												
A532E	7′-1″	42	17		3′-0″	1′-0″	3′-1″								
A533E	3′-9″	42	16		1′-6″	0′-10″	1′-5″			1′-0″		1′-0″			
A534E	28′-4″	16	STR.												
A535E	18′-5″	16	STR.												
A536E	6′-0″	12	STR.												
A537E	4′-7″	12	STR.												
A538E	2′-2″	6	17		1′-1″	1′-1″									
A539E	3′-3″	16	36	1′-0″	2′-3″										
A540E	5′-0″	16	STR.												
A541E	7′-6″	8	STR.												
A542E	3′-10″	8	STR.												
A543E	4′-8″	8	16			3′-5″	1′-3″			1′-0¼″		0′-8¾″			
A631E	3′-8″	44	STR.												
B531E	6′-9″	8	H1		2′-9½″	1′-2″	2′-9½″			0′-5″				0′-4½″	
B532E	2′-0″	4	STR.												
B731E	2′-0″	8	STR.												
B831E	2′-0″	8	STR.												

BENDING DIAGRAMS

ALL DIMENSIONS ARE FROM OUT TO OUT.

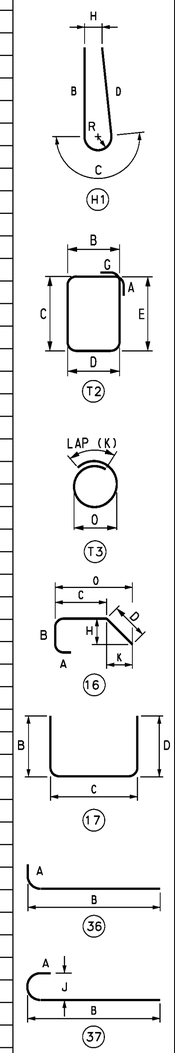

UNOFFICIAL WEBSITE COPY

S2-15

DELAWARE DEPARTMENT OF TRANSPORTATION

ADDENDUMS / REVISIONS

SR1 / I-95 INTERCHANGE

CONTRACT	BRIDGE NO.	1-716C
28-090-03	DESIGNED BY: K.D. BEAVER	
COUNTY		
NEW CASTLE	CHECKED BY: J.S. LI	

RAMP A OVER SR 7

ABUTMENTS A AND B REINFORCING BAR LIST

SHEET NO. 268

TOTAL SHTS. 803

10/28/2010 O:\20832687-XM\CAD\Bridge\BR-S2\ab08_BR-S2_sr1.dgn untitled

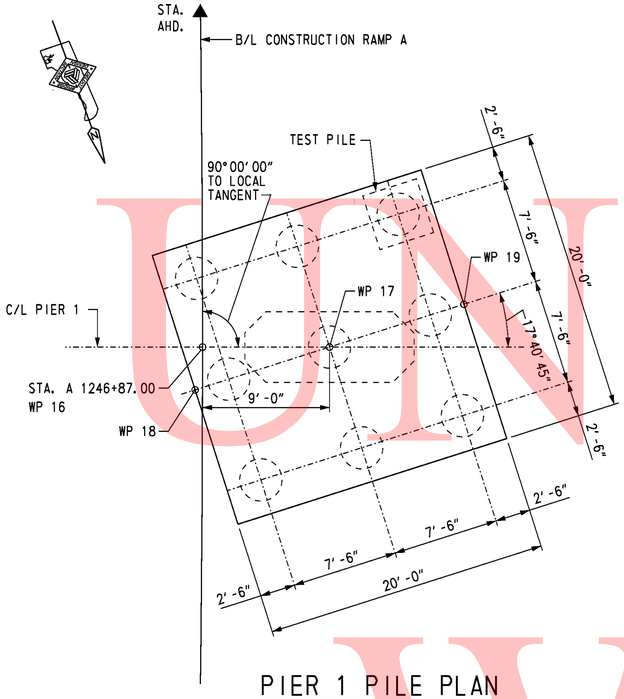

PIER 1 PILE PLAN

SCALE: 3/16" = 1'-0"

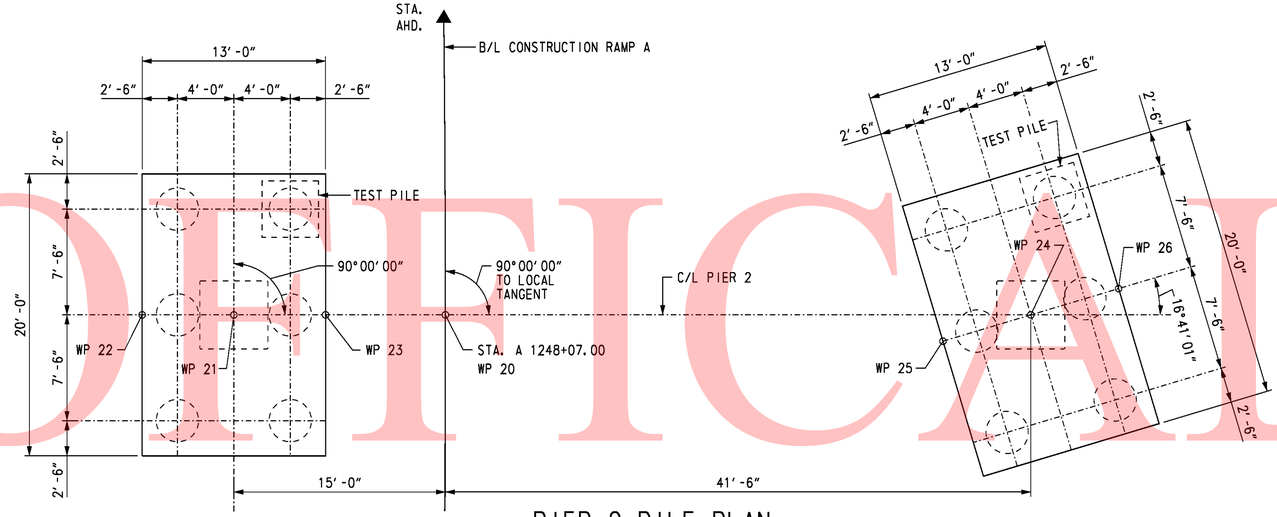

PIER 2 PILE PLAN

SCALE: 3/16" = 1'-0"

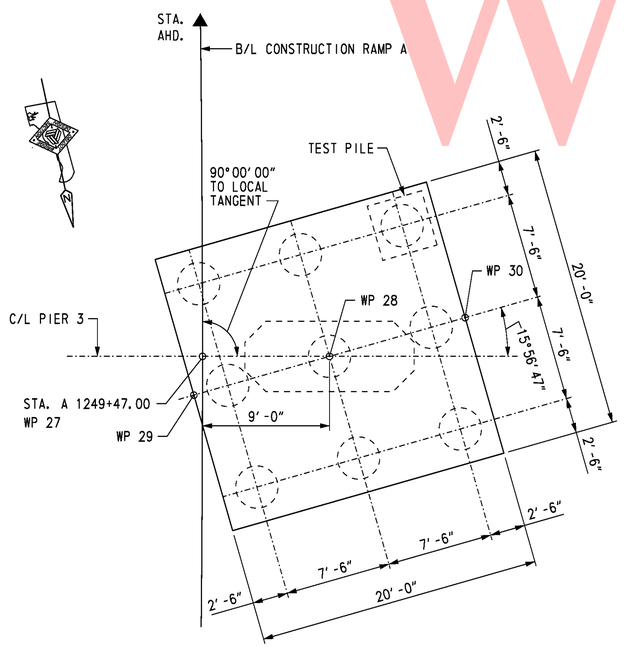

PIER 3 PILE PLAN

SCALE: 3/16" = 1'-0"

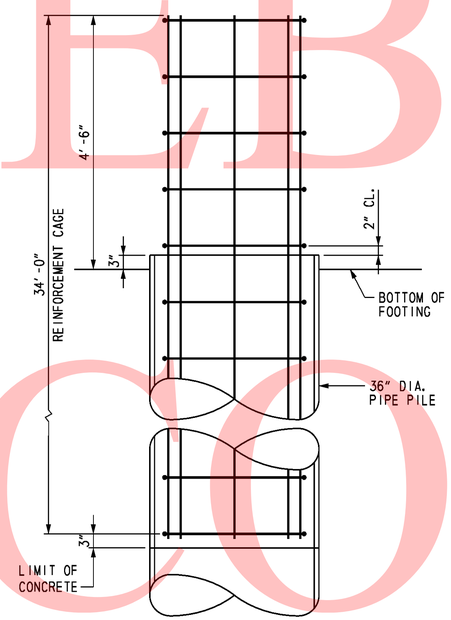

ELEVATION

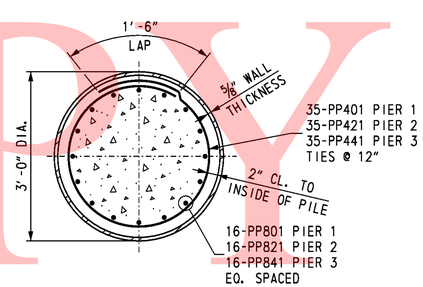

SECTION

PIPE PILE REINFORCEMENT

SCALE: 3/4" = 1'-0"

WORKING POINTS

WP NO.	STATION	OFFSET	COORDINATES NORTHING	COORDINATES EASTING
16	1246+87.00	0.00'	612,408.6318	432,384.8649
17	1246+87.00	9.00' RT.	612,411.7983	432,376.4404
18	1246+83.96	0.53' LT.	612,411.2888	432,386.4274
19	1246+90.01	18.53' RT.	612,412.3078	432,366.4533
20	1248+07.00	0.00'	612,295.0144	432,346.3156
21	1248+07.00	15.00' LT.	612,290.6581	432,360.6691
22	1248+07.00	21.50' LT.	612,288.7703	432,366.8889
23	1248+07.00	8.50' LT.	612,292.5458	432,354.4492
24	1248+07.00	41.50' RT.	612,307.0670	432,306.6043
25	1248+05.17	35.27' RT.	612,307.0444	432,313.1043
26	1248+08.82	47.73' RT.	612,307.0897	432,300.1044
27	1249+47.00	0.00'	612,159.6388	432,310.7616
28	1249+47.00	9.00' RT.	612,161.5940	432,301.9765
29	1249+44.25	0.61' LT.	612,162.1869	432,311.9589
30	1249+49.72	18.62' RT.	612,161.0011	432,291.9941

PILE INSTALLATION DATA

SUBSTRUCTURE UNIT	DESIGN DATA: NOMINAL PILE DRIVING RESISTANCE (KIPS)	DESIGN DATA: ESTIMATED PILE TIP ELEVATION	ACTUAL FIELD DATA: AVERAGE MINIMUM TIP ELEVATION	ACTUAL FIELD DATA: AVERAGE MAXIMUM TIP ELEVATION
PIER 1	1900	-12.0		
PIER 2	1025	-1.0		
PIER 3	1150	-29.0		

PIER 1 PILE DRIVING INFORMATION

PILE SIZE AND TYPE:
ACTUAL BEARING OBTAINED:
HAMMER TYPE:
PILE HAMMER ENERGY:
SPECIAL DRIVING CONDITIONS AND COMMENTS:

PIER 2 PILE DRIVING INFORMATION

PILE SIZE AND TYPE:
ACTUAL BEARING OBTAINED:
HAMMER TYPE:
PILE HAMMER ENERGY:
SPECIAL DRIVING CONDITIONS AND COMMENTS:

PIER 3 PILE DRIVING INFORMATION

PILE SIZE AND TYPE:
ACTUAL BEARING OBTAINED:
HAMMER TYPE:
PILE HAMMER ENERGY:
SPECIAL DRIVING CONDITIONS AND COMMENTS:

NOTES:

1. PILES SHALL BE 36" DIA. WITH 5/8 WALL THICKNESS OPEN-ENDED STEEL PIPE PILES, ASTM A252 GRADE 3.
2. TEST PILES SHALL BE TESTED IN ACCORDANCE WITH THE SPECIFICATIONS.

CROSS REFERENCE NOTES:

1. FOR PIER 1 THRU PIER 3 PLAN AND ELEVATION, SEE DWGS. S2-17 TO S2-19.
2. FOR REINFORCING BAR LIST, SEE DWG. S2-28 & S2-29.
3. FOR PILE SPLICE DETAIL, SEE DWG. S2-4.
4. FOR TEST PILE PAYMENT NOTES, SEE DWG. S2-2.

UNOFFICIAL WEBSITE COPY

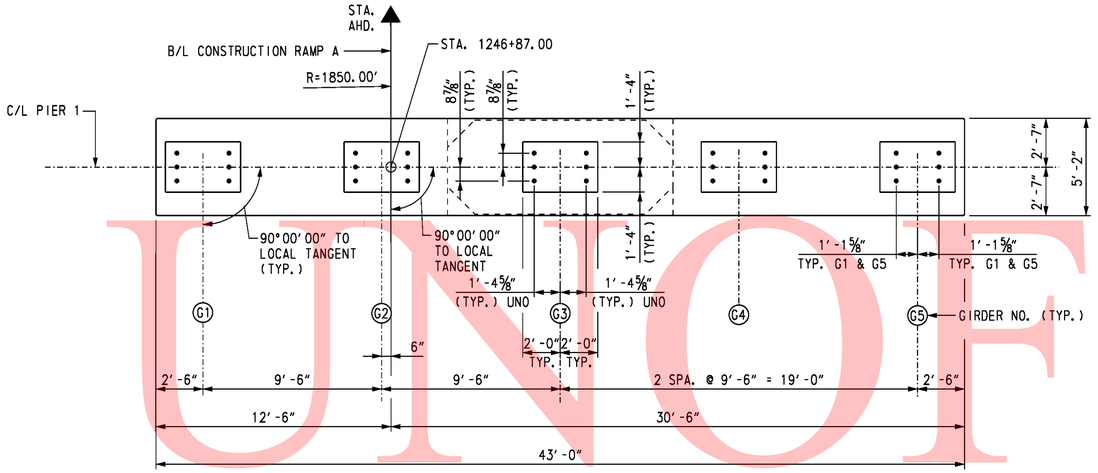

PIER 1 PLAN

SCALE: ¼" = 1'-0"

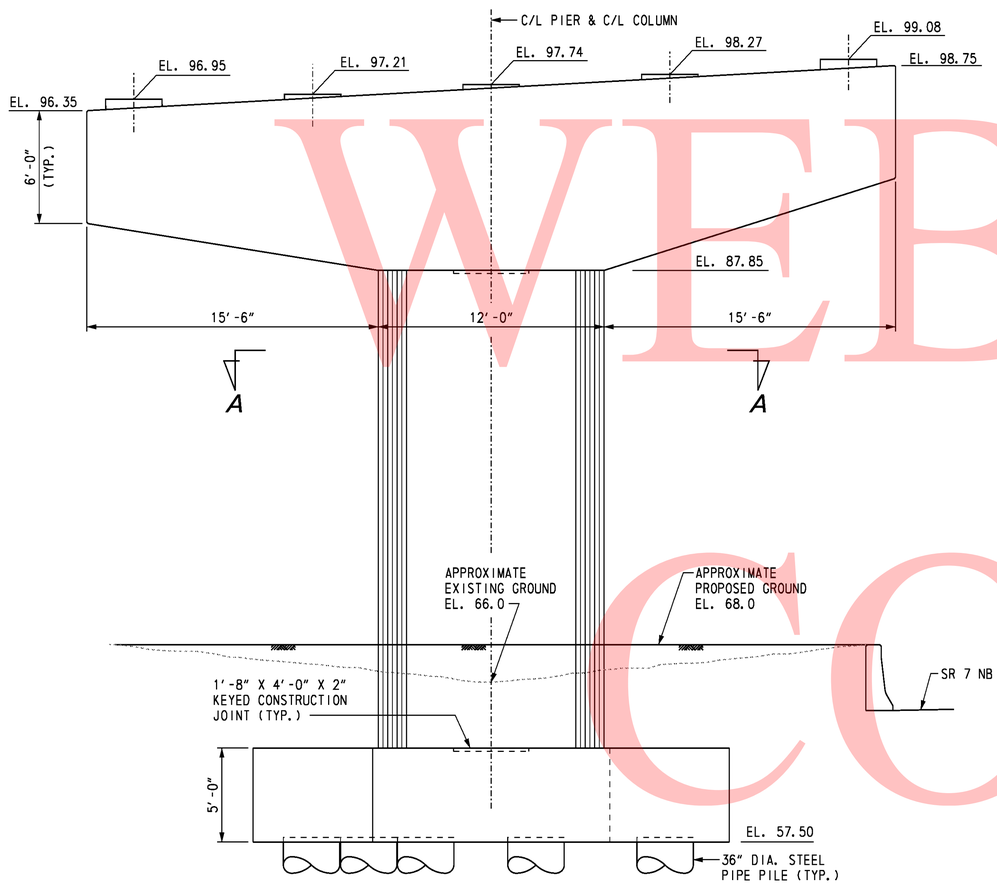

PIER 1 ELEVATION

SCALE: ¼" = 1'-0"

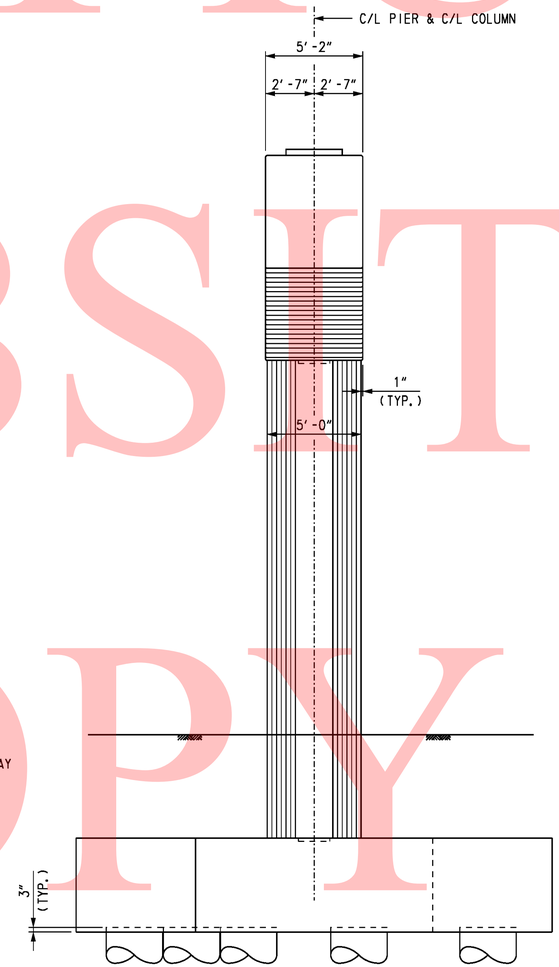

END VIEW

SCALE: ¼" = 1'-0"

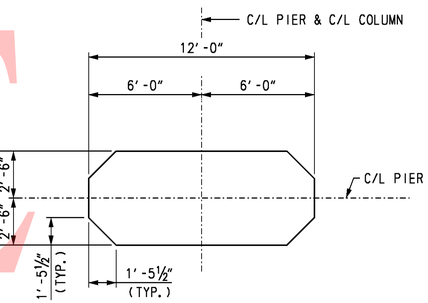

SECTION A-A

SCALE: ⅜" = 1'-0"

CROSS REFERENCE NOTES:

1. FOR BRIDGE PLAN AND ELEVATION, SEE DWG. S2-1.
2. FOR PIER FOUNDATION PLAN, SEE DWG. S2-16.
3. FOR PIER REINFORCING DETAILS, SEE DWGS. S2-20 THRU S2-21.

UNOFFICAL WEBSITE COPY

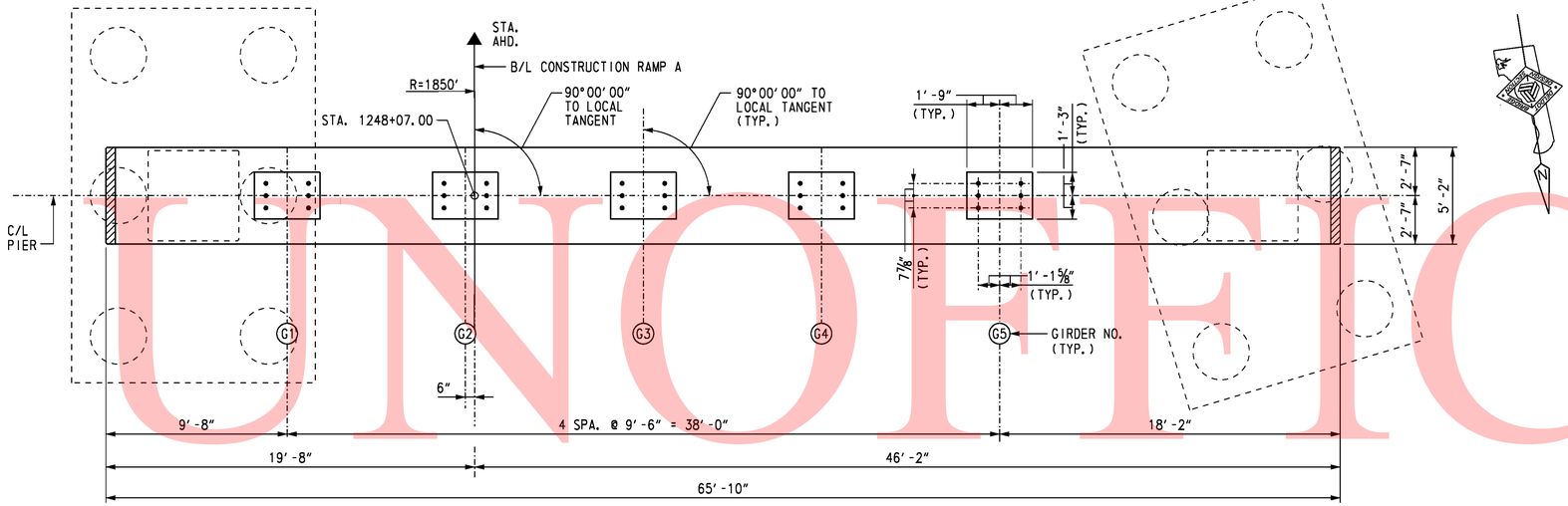

PLAN

SCALE: ¼" = 1'-0"

CROSS REFERENCE NOTES:

1. FOR BRIDGE PLAN AND ELEVATION, SEE DWG. S2-1.
2. FOR PIER FOUNDATION PLAN, SEE DWG. S2-16.
3. FOR PIER REINFORCING DETAILS, SEE DWGS. S2-22 THRU S2-25.

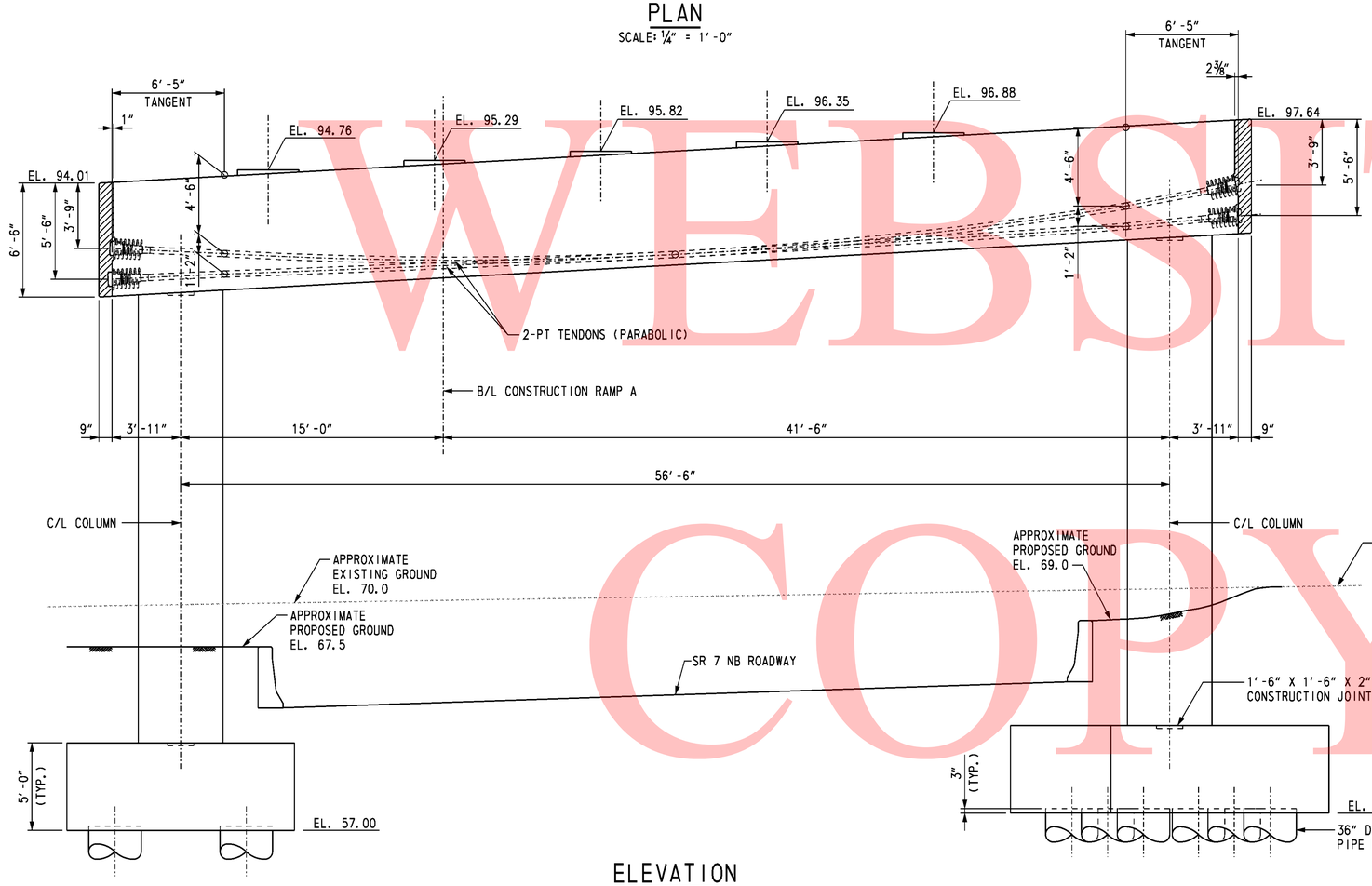

ELEVATION

SCALE: ¼" = 1'-0"

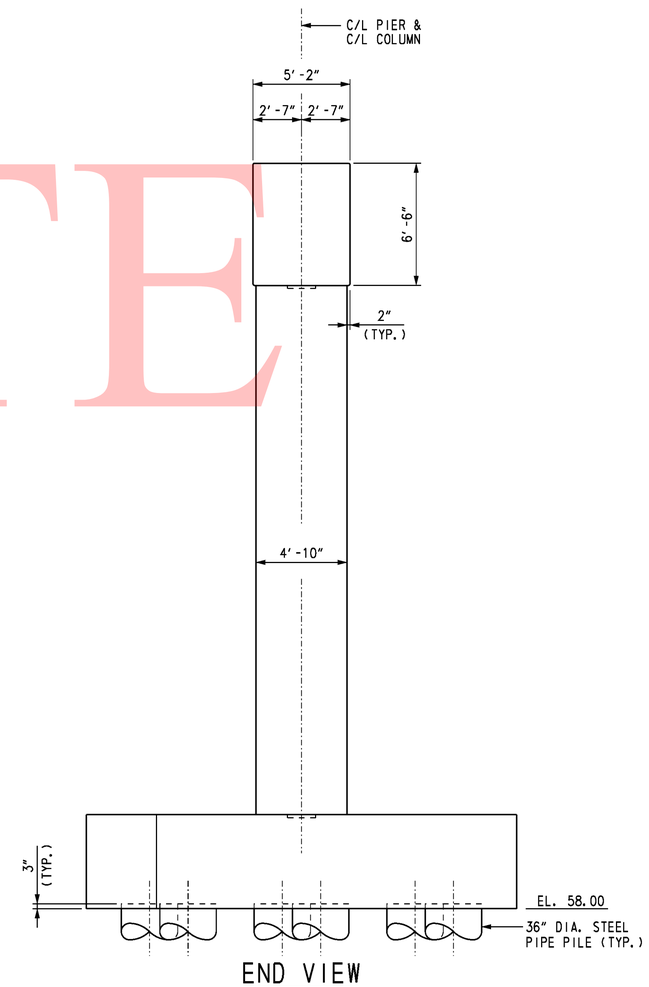

END VIEW

SCALE: ¼" = 1'-0"

UNOFFICAL WEBSITE COPY

10/28/2010 O:\20832687-XM\CAD\Bridge\BR-S2\pr03_BR-S2_sr1.dgn untitled

DELAWARE DEPARTMENT OF TRANSPORTATION	ADDENDUMS / REVISIONS	SR1 / I-95 INTERCHANGE	CONTRACT 28-090-03	BRIDGE NO. 1-716C	RAMP A OVER SR 7	S2-18
			COUNTY NEW CASTLE	DESIGNED BY: T. B. CUSTER	PIER 2 PLAN AND ELEVATION	SHEET NO. 271
				CHECKED BY: J. S. LI		TOTAL SHTS. 803

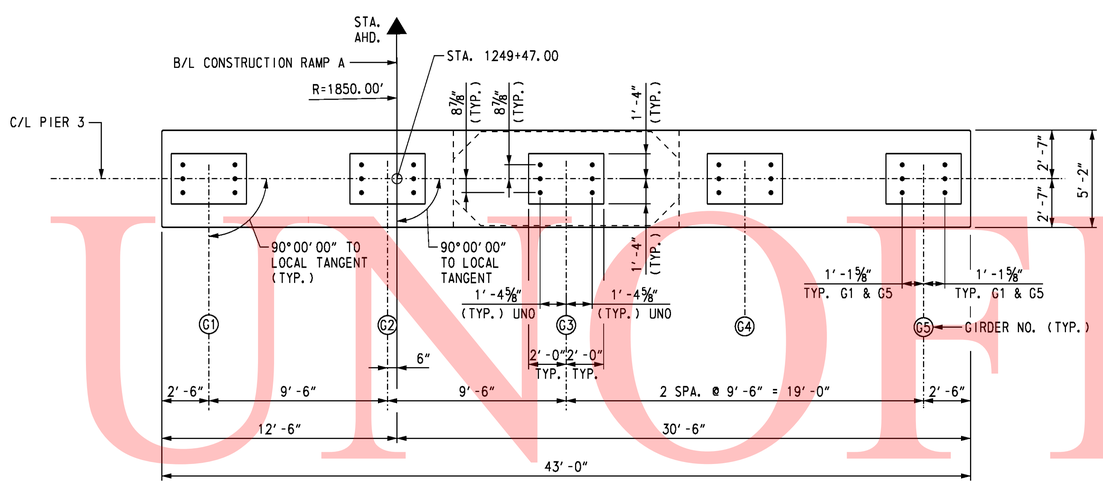

PIER 3 PLAN

SCALE: ¼" = 1'-0"

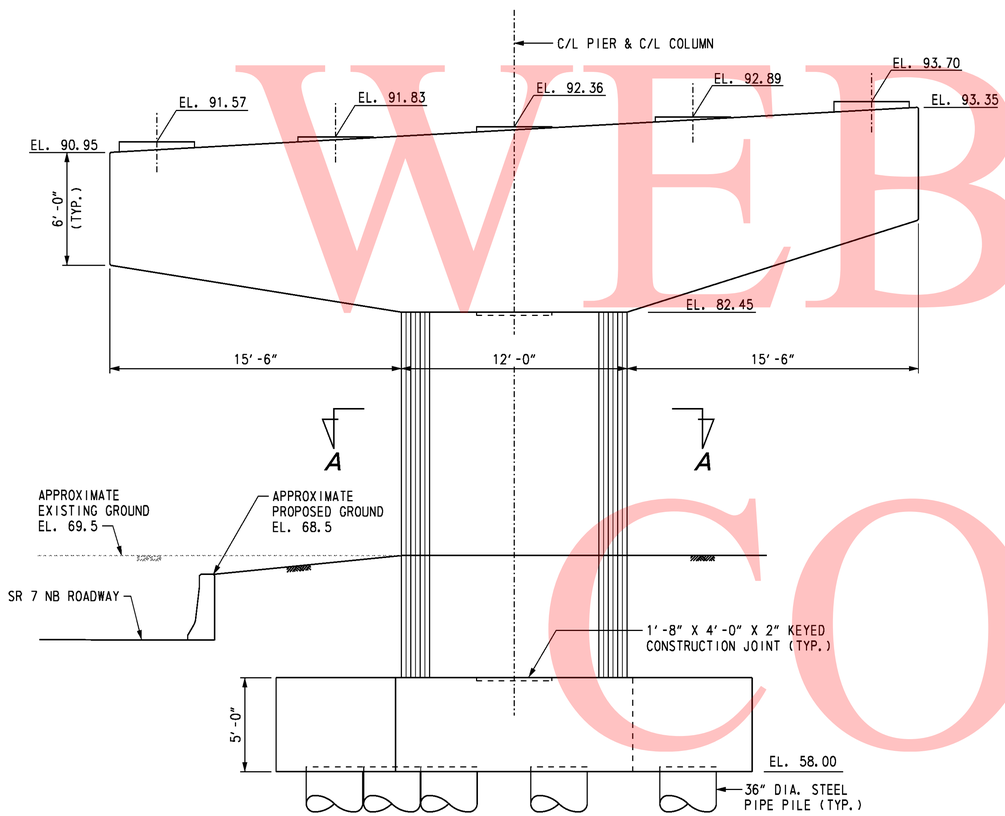

PIER 3 ELEVATION

SCALE: ¼" = 1'-0"

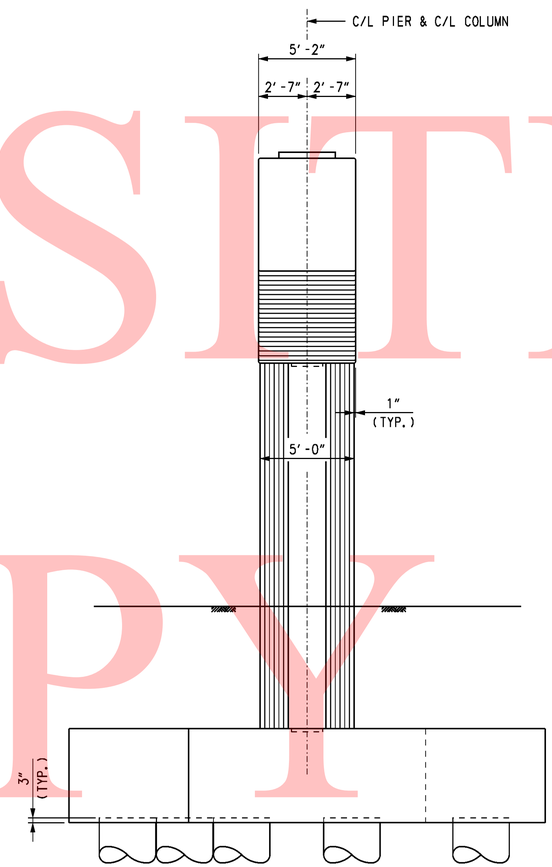

END VIEW

SCALE: ¼" = 1'-0"

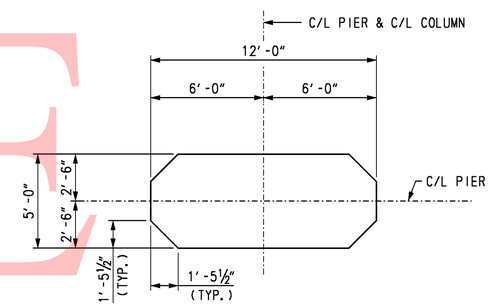

SECTION A-A

SCALE: ⅜" = 1'-0"

CROSS REFERENCE NOTES:

1. FOR BRIDGE PLAN AND ELEVATION, SEE DWG. S2-1.
2. FOR PIER FOUNDATION PLAN, SEE DWG. S2-16.
3. FOR PIER REINFORCING DETAILS, SEE DWGS. S2-26 & S2-27.

UNOFFICAL WEBSITE COPY

DELAWARE DEPARTMENT OF TRANSPORTATION	ADDENDUMS / REVISIONS		SR1 / I-95 INTERCHANGE	CONTRACT 28-090-03	BRIDGE NO. 1-716C	RAMP A OVER SR 7	S2-19 SHEET NO.
				COUNTY NEW CASTLE	DESIGNED BY: R. F. KIRCHNER	PIER 3 PLAN AND ELEVATION	272 TOTAL SHTS.
					CHECKED BY: J. S. LI		803

10/28/2010 O:\20832687-XM\CAD\Bridge\BR-S2\pr04_BR-S2_sr1.dgn untitled

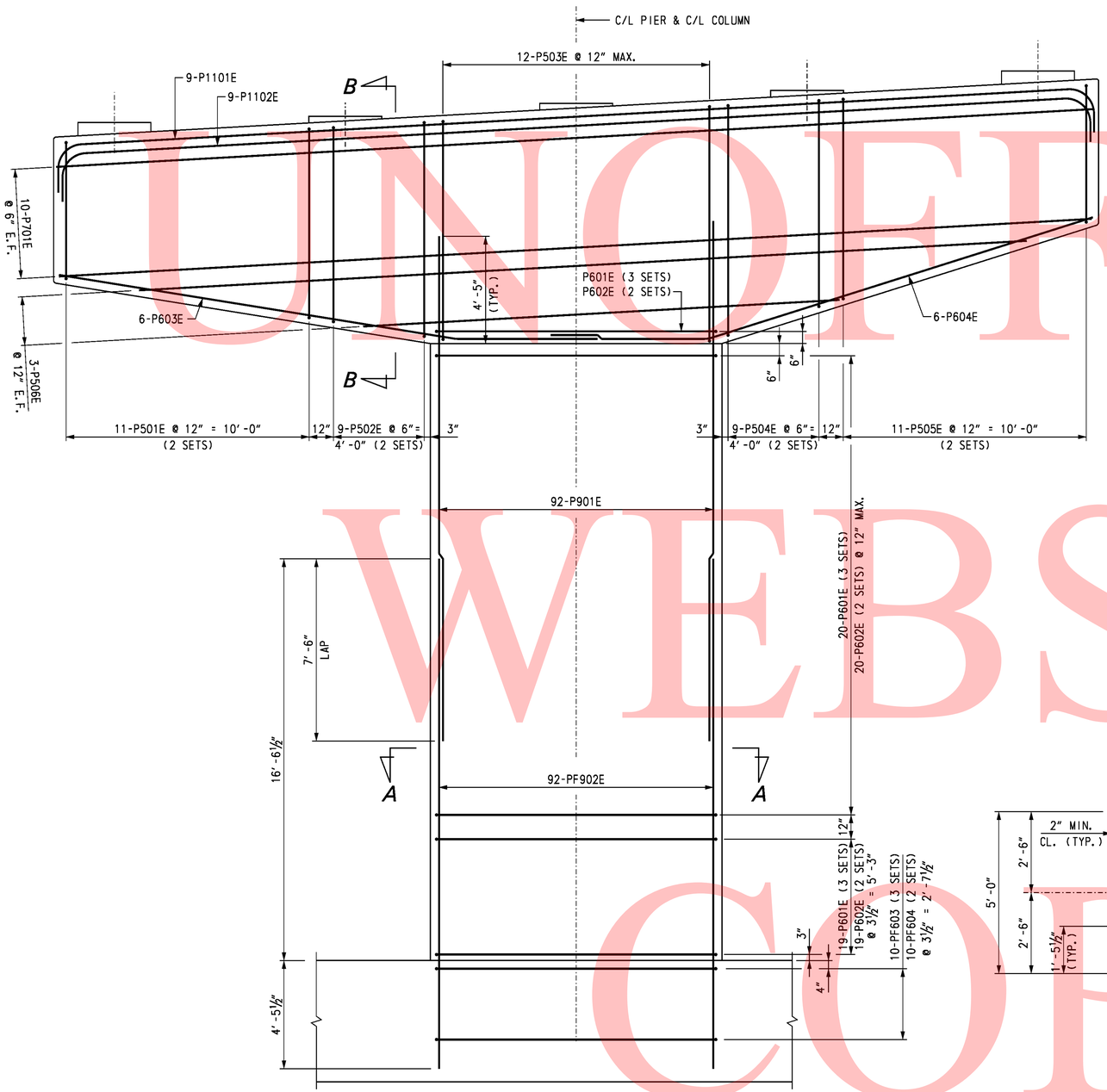

ELEVATION

SCALE: ⅜" = 1'-0"

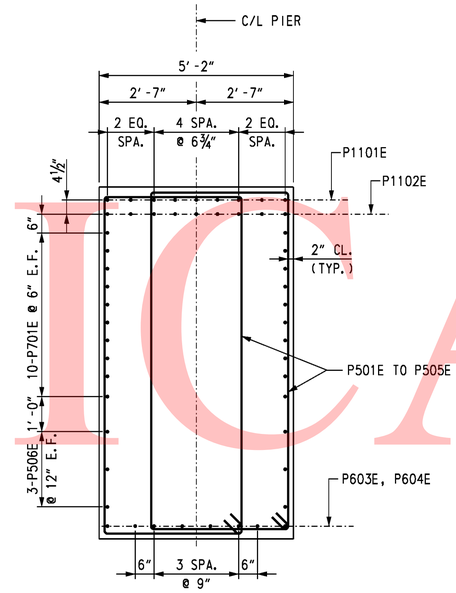

SECTION B-B

SCALE: ½" = 1'-0"

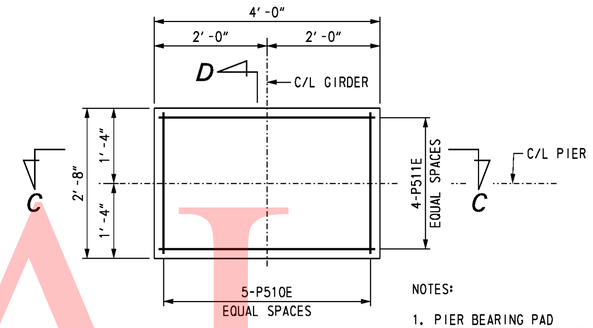

NOTES:

1. PIER BEARING PAD REINFORCEMENT APPLIES AT PIER 1 GIRDERS G1 AND G5.
2. CHAMFER NOT SHOWN ON PLAN VIEW.

PLAN
PIER BEARING PAD

SCALE: ¾" = 1'-0"

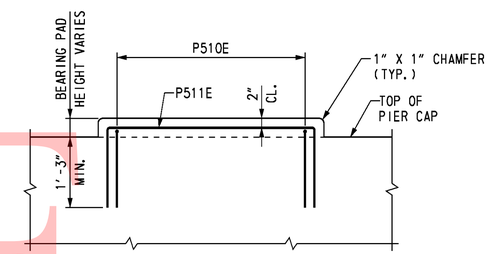

SECTION C-C

SCALE: ¾" = 1'-0"

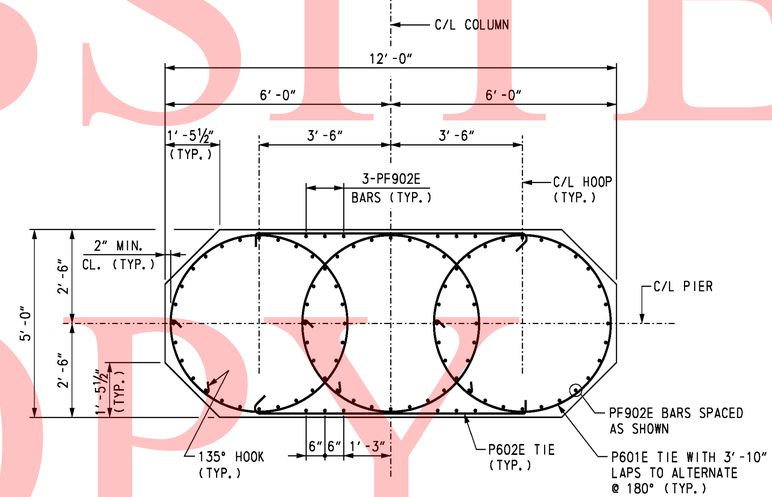

SECTION A-A

SCALE: ½" = 1'-0"

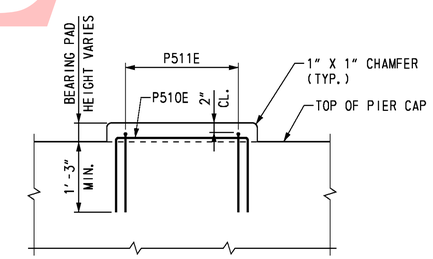

SECTION D-D

SCALE: ¾" = 1'-0"

CROSS REFERENCE NOTES:

1. FOR BRIDGE PLAN AND ELEVATION, SEE DWG. S2-1.
2. FOR PIER FOUNDATION PLAN, SEE DWG. S2-16.
3. FOR PIER PLAN AND ELEVATION, SEE DWG. S2-17.
4. FOR PIER FOOTING REINFORCEMENT, SEE DWG. S2-21.
5. FOR REINFORCING BAR LIST, SEE DWG. S2-28 & S2-29.

UNOFFICIAL WEBSITE COPY

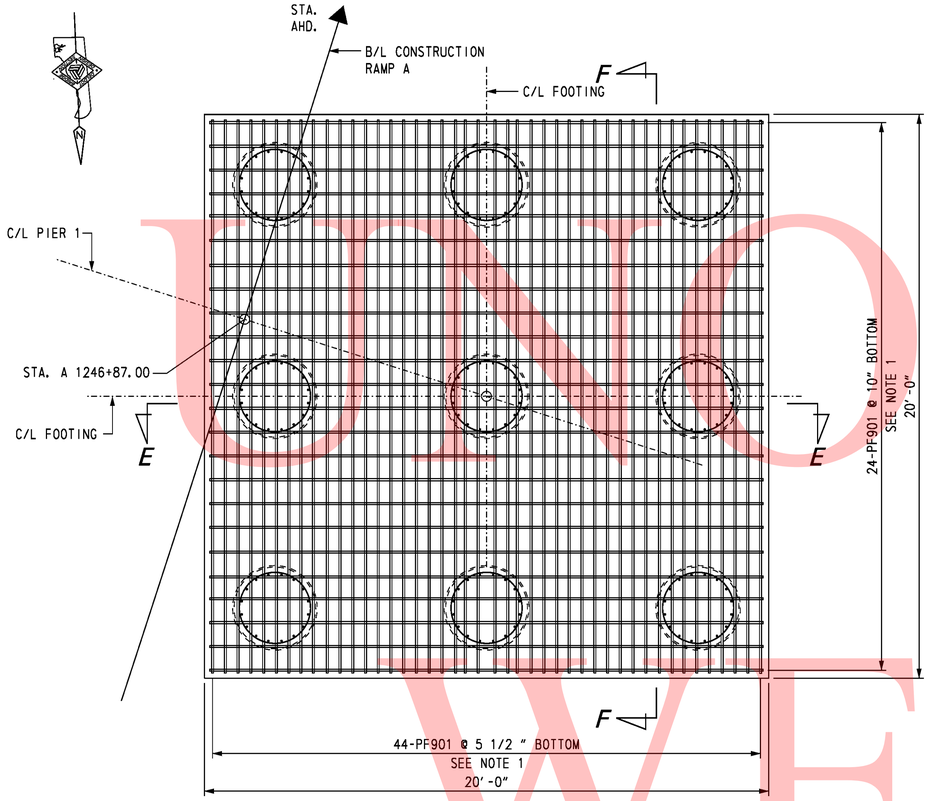

PLAN - BOTTOM MAT FOOTING REINFORCEMENT LAYOUT

SCALE: 3/8" = 1'-0"

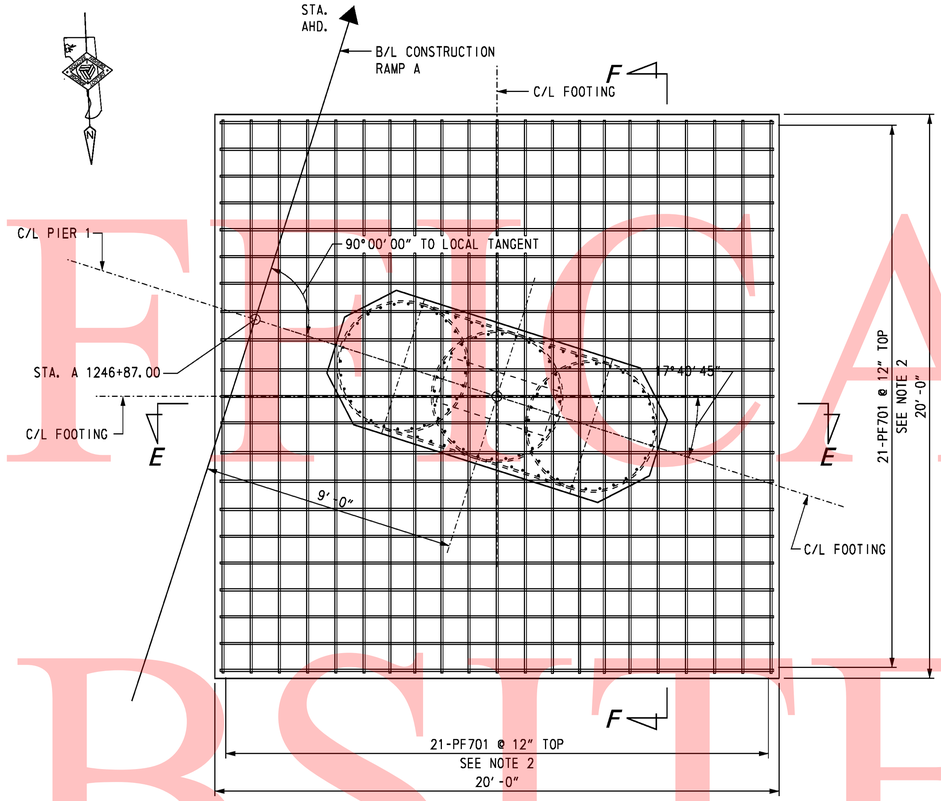

PLAN - TOP MAT FOOTING REINFORCEMENT LAYOUT

SCALE: 3/8" = 1'-0"

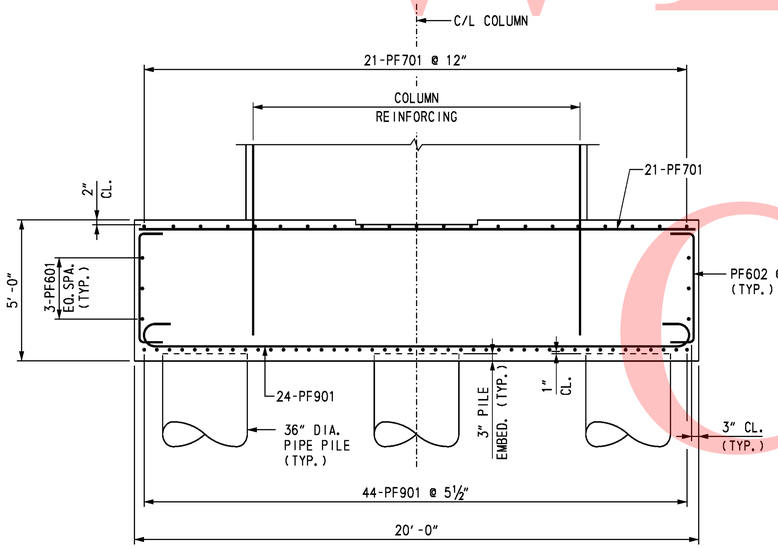

SECTION E-E

SCALE: 3/8" = 1'-0"

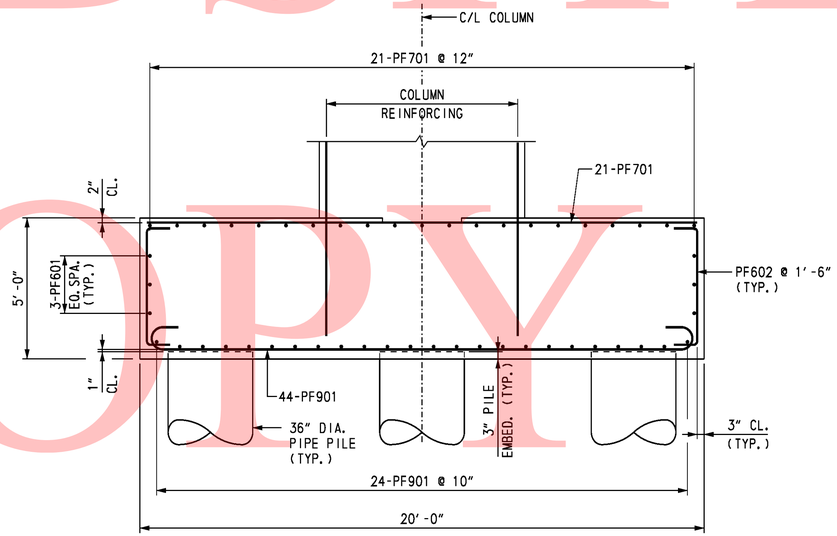

SECTION F-F

SCALE: 3/8" = 1'-0"

NOTES:

1. ADJUST SPACING OF BOTTOM MAT FOOTING REINFORCING TO CLEAR PIPE PILE REINFORCING.
2. ADJUST SPACING OF TOP MAT FOOTING REINFORCING TO CLEAR COLUMN DOWELS.
3. CONTRACTOR MAY PROVIDE 90° HOOKS ON SOME COLUMN REINFORCING DOWELS IN ORDER TO FACILITATE PLACEMENT OF THE COLUMN REINFORCING.

CROSS REFERENCE NOTES:

1. FOR BRIDGE PLAN AND ELEVATION, SEE DWG. S2-1.
2. FOR PIER FOUNDATION PLAN, SEE DWG. S2-16.
3. FOR PIER PLAN AND ELEVATION, SEE DWG. S2-17.
4. FOR PIER CAP AND COLUMN REINFORCEMENT, SEE DWG. S2-20.
5. FOR REINFORCING BAR LIST, SEE DWGS. S2-28 AND S2-29.

UNOFFICIAL WEBSITE COPY

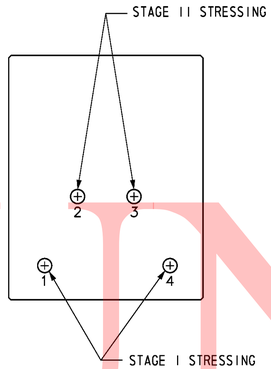

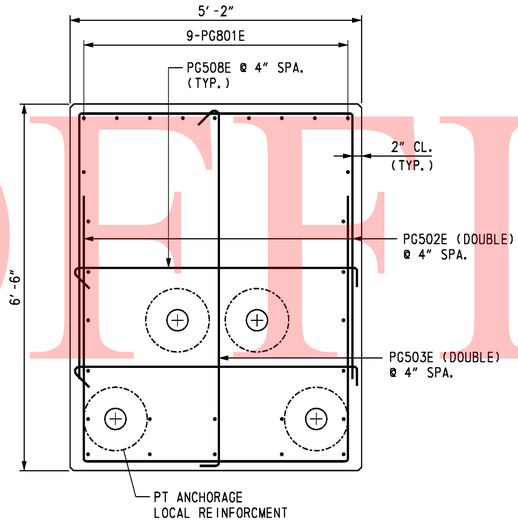

SECTION G-G

SCALE: 3/4" = 1'-0"

POST TENSIONING STEEL

EACH TENDON CONSISTS OF 27 STRANDS ENCLOSED WITHIN 4½" DIAMETER POLYETHYLENE/POLYPROPYLENE (PE/PP) PLASTIC DUCT.

STRANDS SHALL BE 0.6 INCH DIAMETER SEVEN WIRE UNCOATED LOW RELAXATION CONFORMING TO AASHTO M203 (ASTM A416), GRADE 270.

TENDON STRESSING PARAMETERS:

MODULUS OF ELASTICITY	E = 28,000 PSI
WOBBLE FRICTION COEFFICIENT	κ = 0.0002
COEFFICIENT OF FRICTION	μ = 0.23
ANCHOR SET	Δ = 0.25 IN

JACKING STRESS :	TENDONS 2 AND 3	203,500 PSI
	TENDONS 1 AND 4	197,500 PSI
ANCHORING STRESS :	TENDONS 2 AND 3	180,200 PSI
	TENDONS 1 AND 4	183,000 PSI

CONCRETE

28 DAY COMPRESSIVE STRENGTH:	F'C = 8,000 PSI	POST TENSIONED CAP
	F'C = 4,500 PSI	COLUMNS
	F'C = 4,500 PSI	FOOTING

POST TENSIONING NOTES AND STRESSING SEQUENCE

1. TENDONS SHALL NOT BE STRESSED UNTIL THE CAP CONCRETE REACHES A MINIMUM COMPRESSIVE STRENGTH OF 5500 PSI.
2. LOCAL ZONE REINFORCEMENT FOR TENDON ANCHORAGES SHALL BE DESIGNED BY THE CONTRACTOR, SHOWN ON SHOP DRAWINGS AND SUBMITTED FOR APPROVAL BY THE ENGINEER.
3. TENDONS SHALL BE STRESSED FROM ONE END OF THE PIER CAP.
4. ALL TENDON STRESSING OPERATIONS SHALL ADHERE TO THE FOLLOWING STAGED SEQUENCE.

STAGE I

1. CONSTRUCT PIER FOUNDATION AND COLUMNS.
2. CONSTRUCT FORMS FOR PIER CAP.
3. AFTER THE FOUNDATIONS AND COLUMNS HAVE ATTAINED AT LEAST 80% OF THEIR DESIGN COMPRESSIVE STRENGTHS, CONSTRUCT THE PIER CAP.
4. STRESS TENDONS 1 AND 4 TO THEIR SPECIFIED JACKING FORCES.
5. ERECT STRUCTURAL STEEL SUPERSTRUCTURE.

STAGE II

1. STRESS TENDONS 2 AND 3 TO THEIR SPECIFIED JACKING FORCES IN THE SEQUENCE SHOWN IN THE PLANS.
2. CONSTRUCT REINFORCED CONCRETE DECK AND PARAPETS.
3. CONSTRUCT CONCRETE END COVER AT EACH END OF CAP.

CROSS REFERENCE NOTES:

1. FOR GENERAL NOTES, SEE DWG. S2-2.
2. FOR LOCATION OF SECTION G-G, SEE DWG. S2-23.
3. FOR REINFORCING BAR LIST, SEE DWG. S2-28.

UNOFFICAL WEBSITE COPY

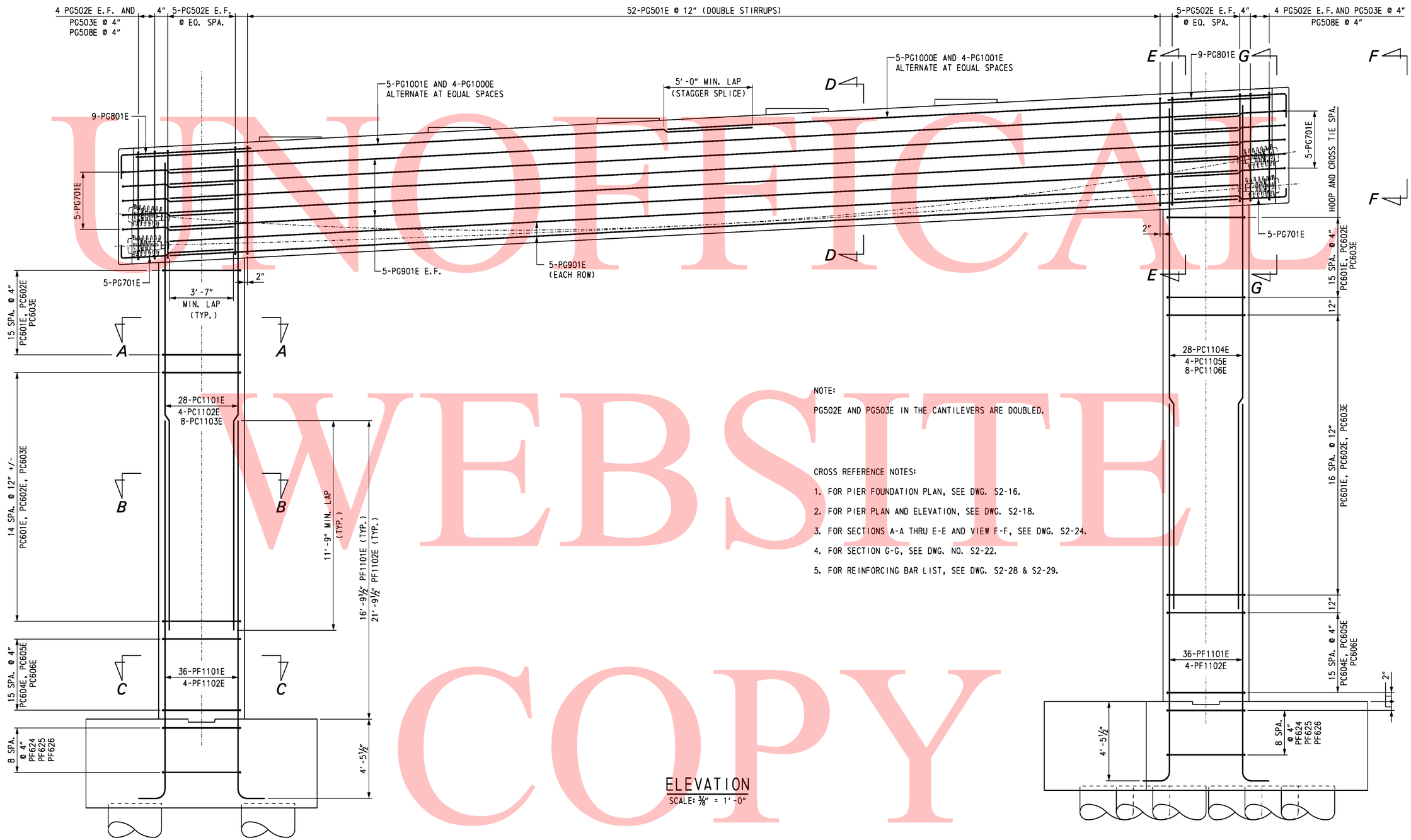

NOTE:

PG502E AND PG503E IN THE CANTILEVERS ARE DOUBLED.

CROSS REFERENCE NOTES:

1. FOR PIER FOUNDATION PLAN, SEE DWG. S2-16.
2. FOR PIER PLAN AND ELEVATION, SEE DWG. S2-18.
3. FOR SECTIONS A-A THRU E-E AND VIEW F-F, SEE DWG. S2-24.
4. FOR SECTION G-G, SEE DWG. NO. S2-22.
5. FOR REINFORCING BAR LIST, SEE DWG. S2-28 & S2-29.

ELEVATION

SCALE: ⅜" = 1'-0"

UNOFFICIAL WEBSITE COPY

10/28/2010 O:\20832687-XM\CAD\Bridge\BR-S2\pr08_BR-S2_sr1.dgn untitled

DELAWARE DEPARTMENT OF TRANSPORTATION	ADDENDUMS / REVISIONS	SR1 / I-95 INTERCHANGE	CONTRACT 28-090-03	BRIDGE NO. 1-716C	RAMP A OVER SR 7	S2-23 SHEET NO.	
			COUNTY NEW CASTLE	DESIGNED BY: T. B. CUSTER	PIER 2 REINFORCEMENT 2	276 TOTAL SHTS.	
				CHECKED BY: J. S. LI		803	

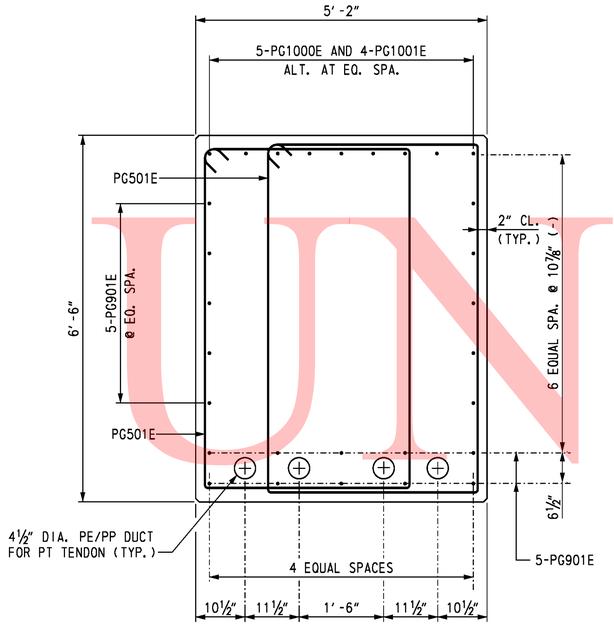

SECTION D-D
SCALE: ¾″ = 1′-0″

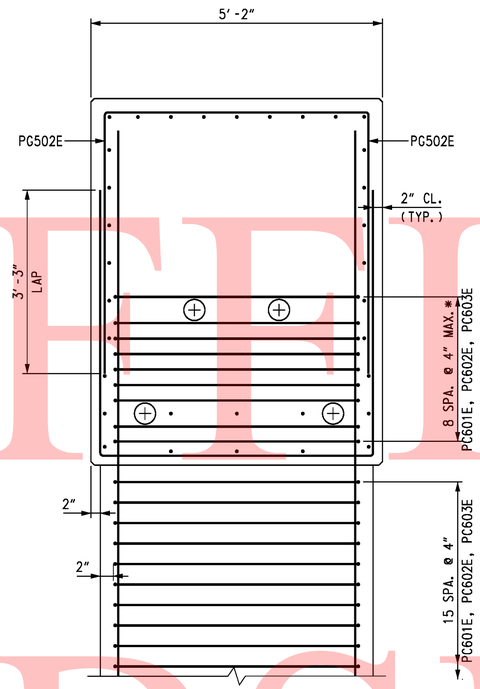

* CLEAR PT DUCTS
AS REQURED

SECTION E-E
SCALE: ¾″ = 1′-0″

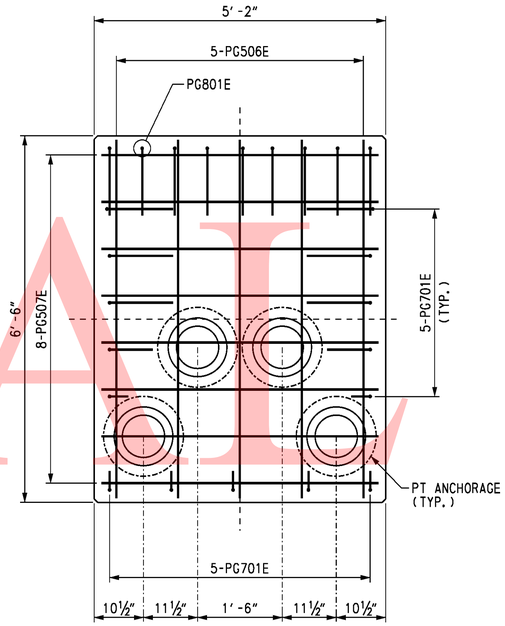

VIEW F-F
SCALE: ¾″ = 1′-0″

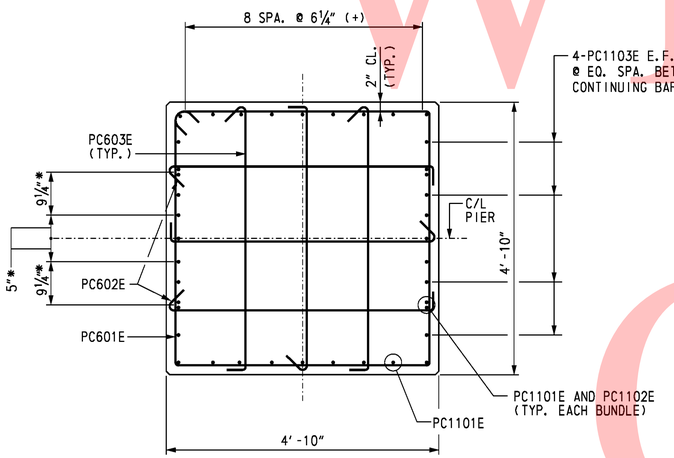

SECTION A-A
SCALE: ¾″ = 1′-0″

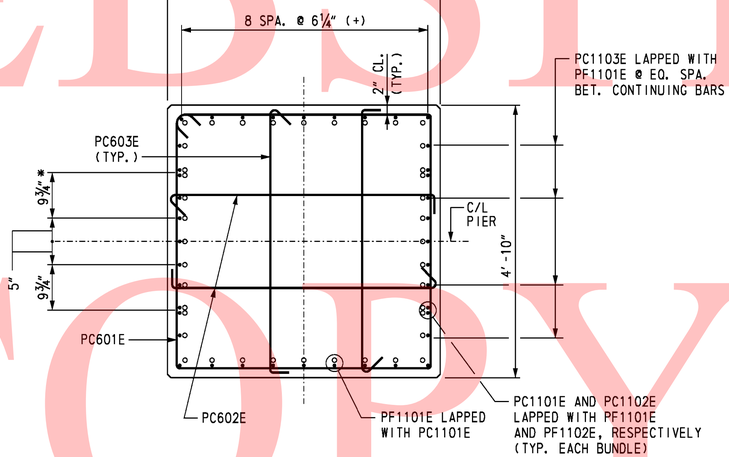

SECTION B-B
SCALE: ¾″ = 1′-0″

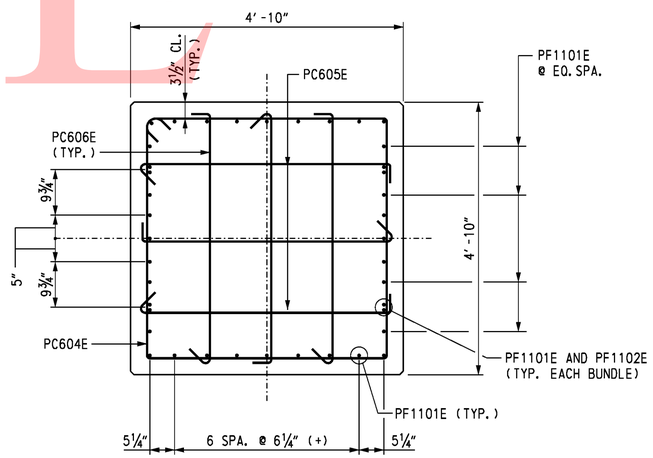

SECTION C-C
SCALE: ¾″ = 1′-0″

* BARS ARE SPACED TO CLEAR PT ANCHORAGES (TYP.)

** BARS TERMINATE AT TOP OF COLUMN

NOTES:

1. FOR PG701E BARS, CUT HOOK LENGTH AS NECESSARY TO CLEAR P.T. ANCHORAGE REINFORCEMENT.

CROSS REFERENCE NOTES:

1. FOR GENERAL NOTES, SEE DWG. S2-2.
2. FOR LOCATION OF SECTIONS A-A THRU E-E AND VIEW F-F, SEE DWG. S2-23.
3. FOR REINFORCING BAR LIST, SEE DWG. S2-28.

UNOFFICIAL WEBSITE COPY

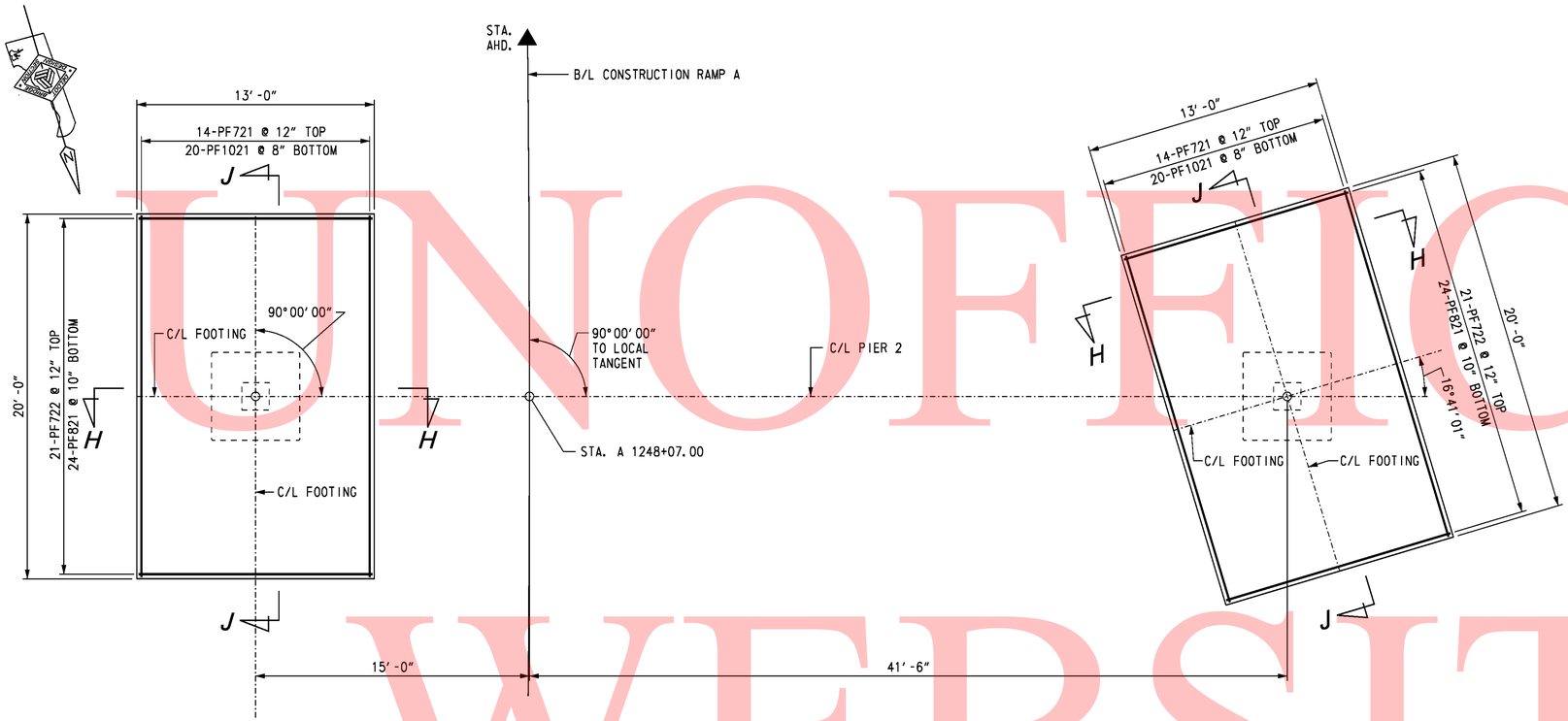

PIER 2 FOOTING PLAN

SCALE: 1/4" = 1'-0"

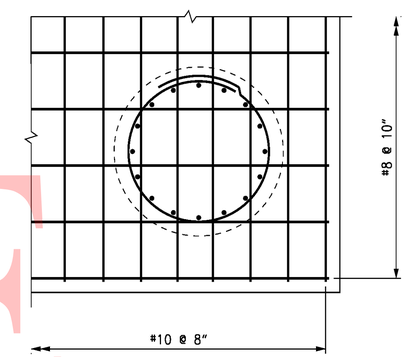

PLAN - BOTTOM FOOTING REINFORCEMENT LAYOUT

SCALE: 3/4" = 1'-0"

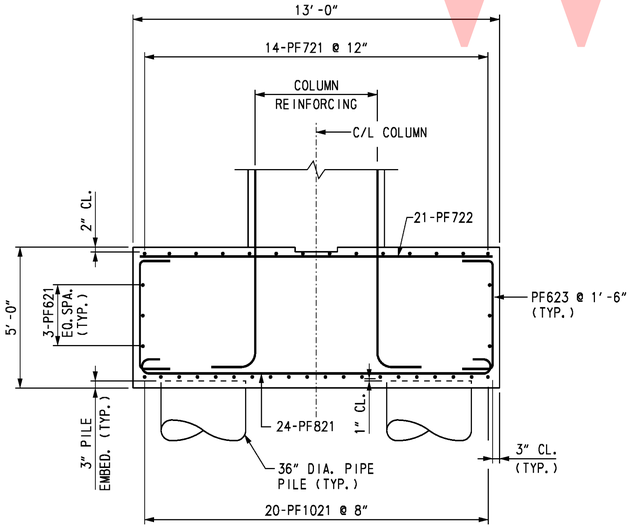

SECTION H-H

SCALE: 3/8" = 1'-0"

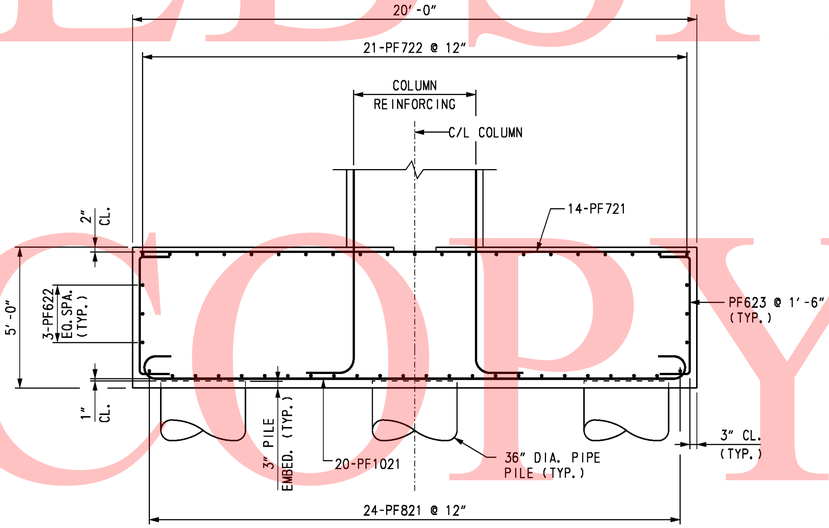

SECTION J-J

SCALE: 3/8" = 1'-0"

NOTES:

1. ADJUST SPACING OF BOTTOM MAT FOOTING REINFORCING TO CLEAR PIPE PILE REINFORCING.
2. ADJUST SPACING OF TOP MAT FOOTING REINFORCIMG TO CLEAR COLUMN DOWELS.

CROSS REFERENCE NOTES:

1. FOR BRIDGE PLAN AND ELEVATION, SEE DWG. S2-1.
2. FOR PIER PLAN AND ELEVATION, SEE DWG. S2-18.
3. FOR PIER FOUNDATION PLAN, SEE DWG. S2-16.
4. FOR PIER COLUMN REINFORCEMENT DETAILS, SEE DWG. S2-23.
5. FOR REINFORCING BAR LIST, SEE DWGS. S2-28 AND S2-29.

UNOFFICAL WEBSITE COPY

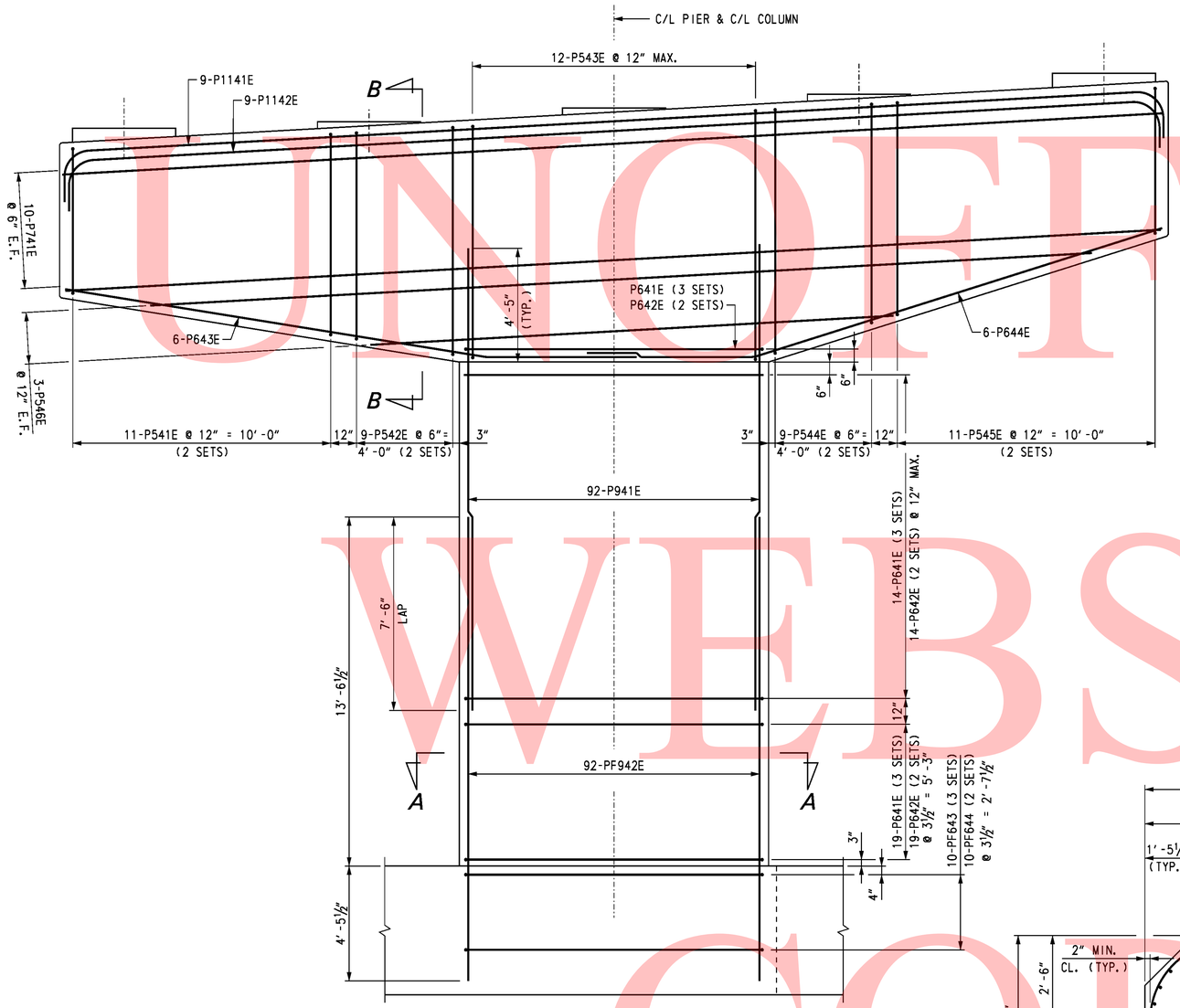

ELEVATION

SCALE: ⅜" = 1'-0"

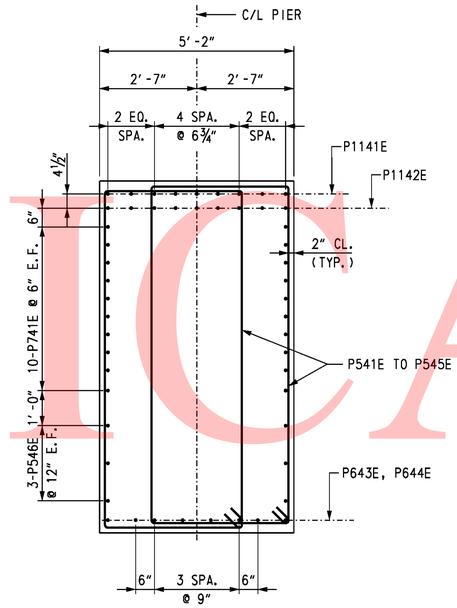

SECTION B-B

SCALE: ½" = 1'-0"

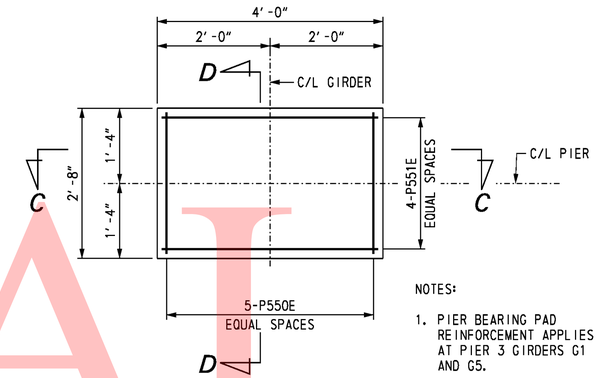

NOTES:

1. PIER BEARING PAD REINFORCEMENT APPLIES AT PIER 3 GIRDERS G1 AND G5.
2. CHAMFER NOT SHOWN ON PLAN VIEW.

PLAN

PIER BEARING PAD

SCALE: ¾" = 1'-0"

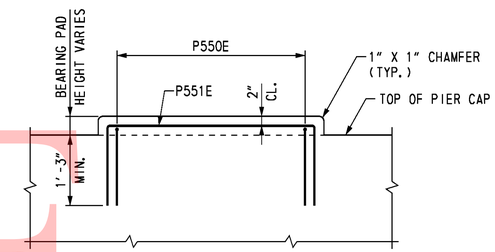

SECTION C-C

SCALE: ¾" = 1'-0"

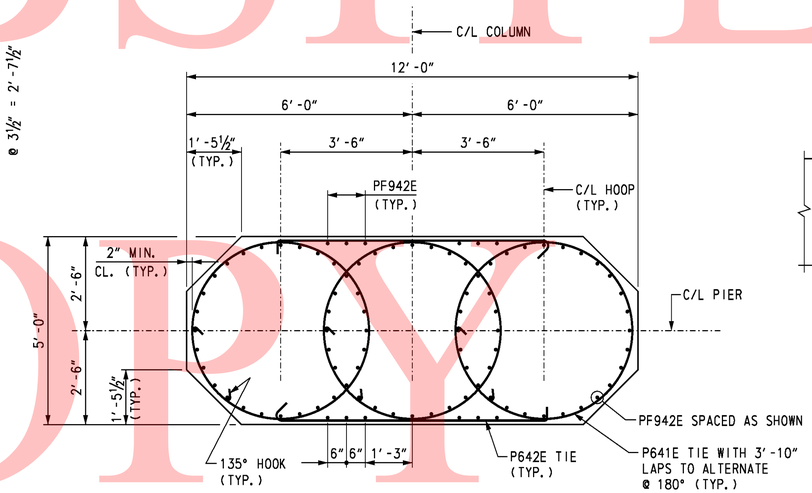

SECTION A-A

SCALE: ½" = 1'-0"

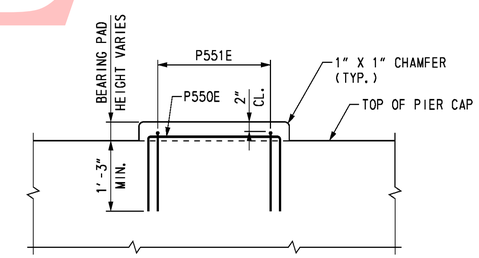

SECTION D-D

SCALE: ¾" = 1'-0"

CROSS REFERENCE NOTES:

1. FOR BRIDGE PLAN AND ELEVATION, SEE DWG. S2-1.
2. FOR PIER FOUNDATION PLAN, SEE DWG. S2-16.
3. FOR PIER PLAN AND ELEVATION, SEE DWG. S2-19.
4. FOR PIER FOOTING REINFORCEMENT, SEE DWG. S2-27.
5. FOR REINFORCING BAR LIST, SEE DWG. S2-28 & S2-29.

UNOFFICIAL WEBSITE COPY

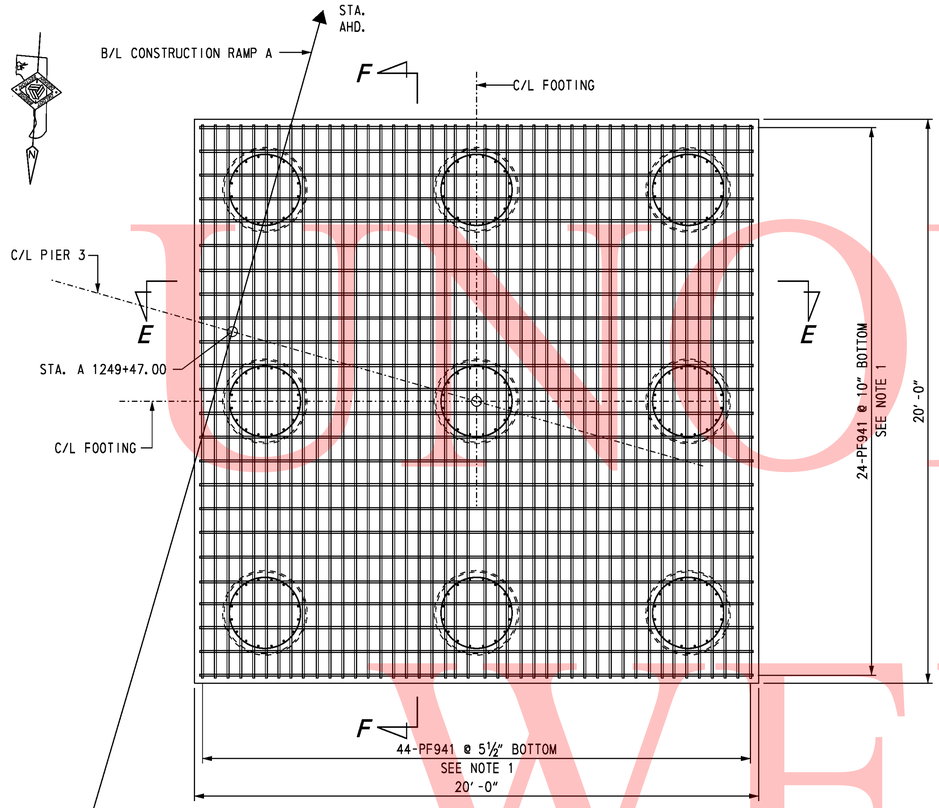

PLAN - BOTTOM MAT FOOTING REINFORCEMENT LAYOUT

SCALE: ⅜" = 1'-0"

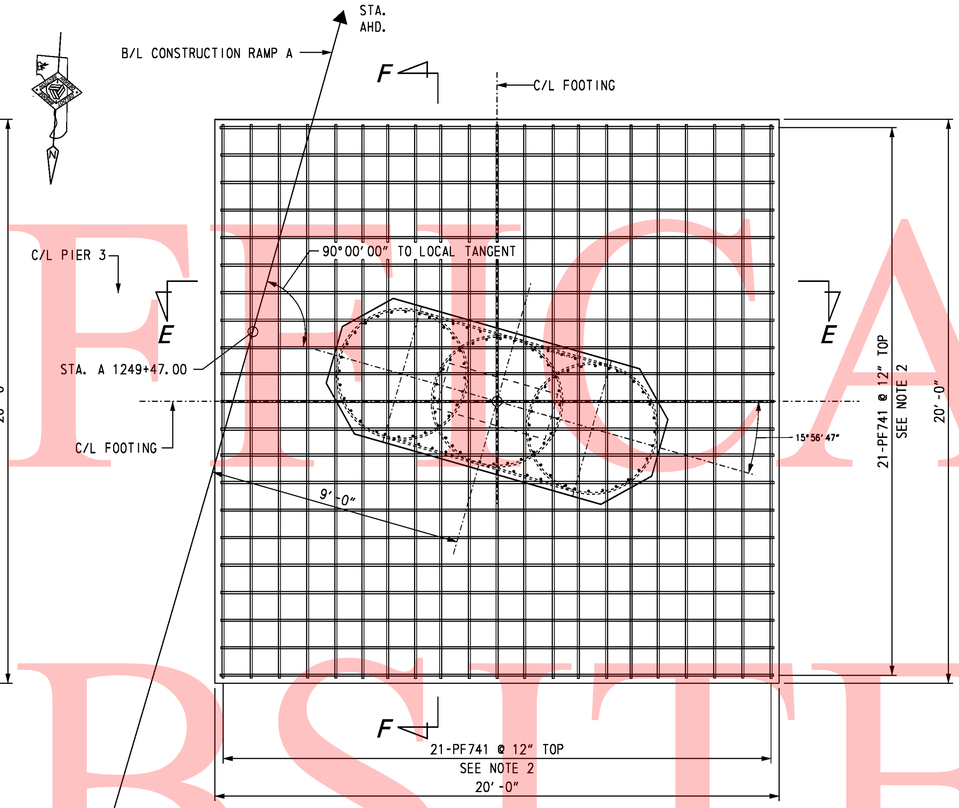

PLAN - TOP MAT FOOTING REINFORCEMENT LAYOUT

SCALE: ⅜" = 1'-0"

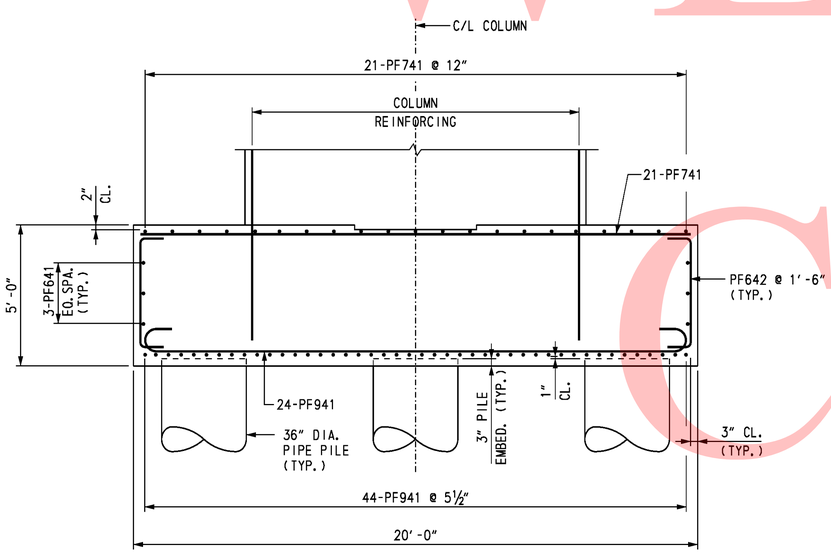

SECTION E-E

SCALE: ⅜" = 1'-0"

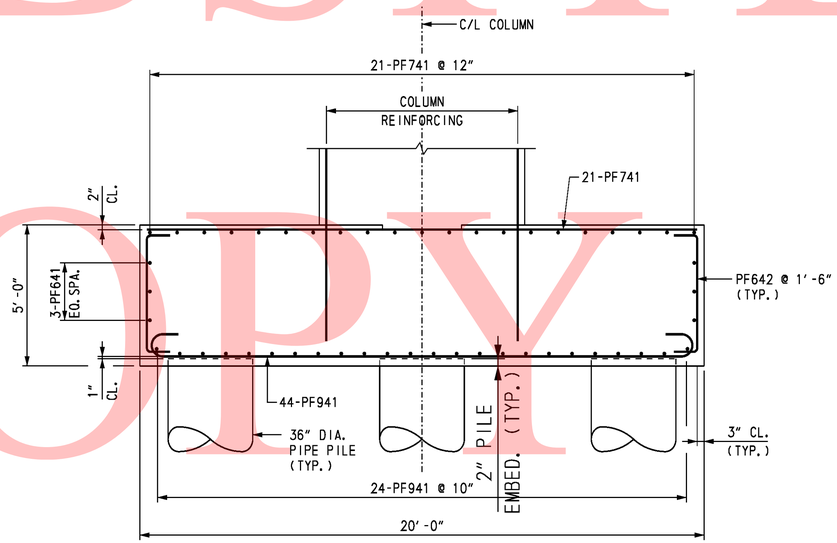

SECTION F-F

SCALE: ⅜" = 1'-0"

NOTES:

1. ADJUST SPACING OF BOTTOM MAT FOOTING REINFORCING TO CLEAR PIPE PILE REINFORCING.
2. ADJUST SPACING OF TOP MAT FOOTING REINFORCING TO CLEAR COLUMN DOWELS.
3. CONTRACTOR MAY PROVIDE 90° HOOKS ON SOME COLUMN REINFORCING DOWELS IN ORDER TO FACILITATE PLACEMENT OF THE COLUMN REINFORCING.

CROSS REFERENCE NOTES:

1. FOR BRIDGE PLAN AND ELEVATION, SEE DWG. S2-1.
2. FOR PIER FOUNDATION PLAN, SEE DWG. S2-16.
3. FOR PIER PLAN AND ELEVATION, SEE DWG. S2-19.
4. FOR PIER CAP AND COLUMN REINFORCEMENT, SEE DWG. S2-26.
5. FOR REINFORCING BAR LIST, SEE DWG. S2-28 AND S2-29.

UNOFFICIAL WEBSITE COPY

REINFORCING BAR LIST

PIER 1

MARK	LENGTH	NO. BARS	TYPE	A	B	C	D	E	G	H	J	K	O	R	REMARKS
PP401	9′-7″	315	T3									1′-6″	2′-6¾″		
PP801	34′-0″	144	STR.												
PF601	19′-6″	12	STR.												
PF602	6′-2″	52	2	1′-0″	4′-2″				1′-0″						
PF603	18′-7″	30	T3S	0′-8″					0′-8″	0′-4½″		2′-7″	4′-8″		
PF604	8′-11″	20	T9	0′-8″	7′-3″				1′-0″	0′-4½″					
PF701	19′-6″	42	STR.												
PF901	22′-0″	68	1	1′-3″	19′-6″				1′-3″		11¾″				
PF902E	21′-0″	92	STR.												
P501E	19′-8″ to 24′-0½″	22	T1	0′-5½″	3′-8″	5′-8½″ to 7′-10¾″	3′-8″	5′-8½″ to 7′-10¾″	0′-5½″						$\Delta_C=\Delta_E=$ 2⅝″ 2 SETS
P502E	24′-5″ to 26′-3″	18	T1	0′-5½″	3′-8″	8′-1″ to 9′-0″	3′-8″	8′-1″ to 9′-0″	0′-5½″						$\Delta_C=\Delta_E=$ 1⅜″ 2 SETS
P503E	28′-9″ to 29′-11″	12	T1	0′-5½″	4′-10″	9′-1″ to 9′-8″	4′-10″	9′-1″ to 9′-8″	0′-5½″						$\Delta_C=\Delta_E=$ 5/8″ 2 SETS
P504E	25′-5″ to 27′-7″	18	T1	0′-5½″	3′-8″	8′-7″ to 9′-8″	3′-8″	8′-7″ to 9′-8″	0′-5½″						$\Delta_C=\Delta_E=$ 1⅝″ 2 SETS
P505E	19′-8½″ to 24′-11″	22	T1	0′-5½″	3′-8″	5′-8¾″ to 8′-4″	3′-8″	5′-8¾″ to 8′-4″	0′-5½″						$\Delta_C=\Delta_E=$ 3⅛″ 2 SETS
P506E	19′-6″ to 37′-3″	6	STR.												$\Delta=$ 8′-10½″ 2 SETS
P510E	5′-10″	10	17		1′-9″	2′-4″	1′-9″								
P511E	7′-2″	8	17		1′-9″	3′-8″	1′-9″								
P601E	19′-11″	120	T3S	0′-8″					0′-8″	0′-4½″		3′-10″	4′-8″		
P602E	8′-11″	80	T9	0′-8″	7′-3″				1′-0″	0′-4½″					
P603E	23′-6″	6	16			8′-0″	15′-6″			2′-6″		15′-4″			
P604E	24′-1″	6	16			8′-0″	16′-1″			4′-11″		15′-4″			
P701E	42′-8″	20	STR.												
P901E	20′-9″	92	STR.												
P1101E	46′-7″	9	2	2′-0″	42′-7″				2′-0″						
P1102E	45′-7″	9	2	2′-0″	41′-7″				2′-0″						

PIER 2

MARK	LENGTH	NO. BARS	TYPE	A	B	C	D	E	G	H	J	K	O	R	REMARKS
PP421	9′-7″	420	T3									1′-6″	2′-6¾″		
PP821	34′-0″	192	STR.												
PF621	19′-6″	12	STR.												
PF622	12′-6″	12	STR.												
PF623	6′-2″	84	2	1′-0″	4′-2″				1′-0″						
PF624	18′-4″	18	T1	0′-8″	4′-3″	4′-3″	4′-3″	4′-3″	0′-8″						
PF625	5′-11¼″	36	T9	0′-8″	4′-3¼″				1′-0″	0′-4½″					
PF626	5′-11″	72	T9	0′-8″	4′-3″				1′-0″	0′-4½″					
PF721	19′-6″	28	STR.												
PF722	12′-6″	42	STR.												
PF821	14′-4″	48	1	0′-11″	12′-6″				0′-11″						
PF1021	22′-4″	40	1	1′-5″	19′-6″				1′-5″		1′-1¼″				
PF1101E	23′-3″	72	36	2′-0″	21′-3″										
PF1102E	28′-3″	8	36	2′-0″	26′-3″										
PC601E	19′-4″	82	T1	0′-8″	4′-6″	4′-6″	4′-6″	4′-6″	0′-8″						
PC602E	6′-2¼″	164	T9	0′-8″	4′-6¼″				1′-0″	0′-4½″					
PC603E	6′-2″	264	T9	0′-8″	4′-6″				1′-0″	0′-4½″					
PC604E	18′-4″	32	T1	0′-8″	4′-3″	4′-3″	4′-3″	4′-3″	0′-8″						
PC605E	5′-11¼″	64	T9	0′-8″	4′-3¼″				1′-0″	0′-4½″					
PC606E	5′-11″	128	T9	0′-8″	4′-3″				1′-0″	0′-4½″					
PC1101E	26′-6″	28	STR.												
PC1102E	21′-6″	4	STR.												
PC1103E	20′-4″	8	STR.												
PC1104E	28′-8″	28	STR.												
PC1105E	23′-8″	4	STR.												
PC1106E	22′-6″	8	STR.												
PG501E	20′-7″	104	T1	0′-5½″	6′-2″	3′-8″	6′-2″	3′-8″	0′-5½″						
PG502E	14′-4″	52	17		4′-9″	4′-10″	4′-9″								
PG503E	7′-1½″	16	T9	0′-5½″	6′-2″				0′-6″	0′-3¾″					
PG506E	6′-2″	10	STR.												
PG507E	4′-10″	16	STR.												
PG508E	5′-9½″	16	T9	0′-5½″	4′-10″				0′-6″	0′-3¾″					
PG701E	7′-7″	30	36	1′-2″	6′-5″										
PG801E	6′-2″	18	36	1′-4″	4′-10″										
PG901E	60′-0″	20	STR.												
PG1000E	41′-1″	9	STR.												
PG1001E	28′-0″	9	STR.												

BENDING DIAGRAMS

ALL DIMENSIONS ARE FROM OUT TO OUT.

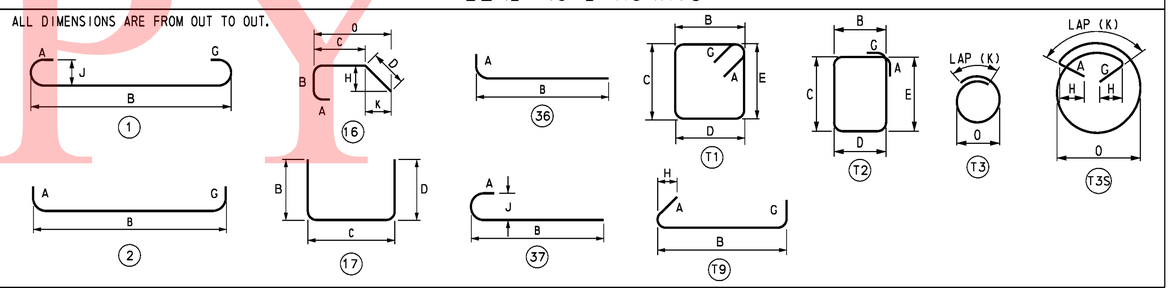

UNOFFICIAL WEBSITE COPY

S2-28

DELAWARE DEPARTMENT OF TRANSPORTATION

ADDENDUMS / REVISIONS

SR1 / I-95 INTERCHANGE

CONTRACT	BRIDGE NO.	1-716C
28-090-03	DESIGNED BY: K.D. BEAVER	
COUNTY		
NEW CASTLE	CHECKED BY: J.S. LI	

RAMP A OVER SR 7

PIERS
REINFORCING BAR LIST 1

SHEET NO.
281
TOTAL SHTS.
803

10/28/2010 O:\20832687-XM\CAD\Bridge\BR-S2\pr13_BR-S2_sr1.dgn
untitled

REINFORCING BAR LIST

PIER 3

MARK	LENGTH	NO. BARS	TYPE	A	B	C	D	E	G	H	J	K	O	R	REMARKS
PP441	9′-7″	315	T3									1′-6″	2′-6¾″		
PP841	34′-0″	144	STR.												
PF641	19′-6″	12	STR.												
PF642	6′-2″	52	2	1′-0″	4′-2″				1′-0″						
PF643	18′-7″	30	T3S	0′-8″					0′-8″	0′-4½″		2′-7″	4′-8″		
PF644	8′-11″	20	T9	0′-8″	7′-3″				1′-0″	0′-4½″					
PF741	19′-6″	42	STR.												
PF941	22′-0″	68	1	1′-3″	19′-6″				1′-3″		11¾″				
PF942E	18′-0″	92	STR.												
P541E	19′-8″ to 24′-0½″	22	T1	0′-5½″	3′-8″	5′-8½″ to 7′-10¾″	3′-8″	5′-8½″ to 7′-10¾″	0′-5½″						$\Delta_C = \Delta_E =$ 2⅝″ 2 SETS
P542E	24′-5″ to 26′-3″	18	T1	0′-5½″	3′-8″	8′-1″ to 9′-0″	3′-8″	8′-1″ to 9′-0″	0′-5½″						$\Delta_C = \Delta_E =$ 1⅜″ 2 SETS
P543E	28′-9″ to 29′-11″	T2	T1	0′-5½″	4′-10″	9′-1″ to 9′-8″	4′-10″	9′-1″ to 9′-8″	0′-5½″						$\Delta_C = \Delta_E =$ ⅝″ 2 SETS
P544E	25′-5″ to 27′-7″	18	T1	0′-5½″	3′-8″	8′-7″ to 9′-8″	3′-8″	8′-7″ to 9′-8″	0′-5½″						$\Delta_C = \Delta_E =$ 1⅝″ 2 SETS
P545E	19′-8½″ to 24′-11″	22	T1	0′-5½″	3′-8″	5′-8¾″ to 8′-4″	3′-8″	5′-8¾″ to 8′-4″	0′-5½″						$\Delta_C = \Delta_E =$ 3⅛″ 2 SETS
P546E	19′-6″ to 37′-3″	6	STR.												$\Delta =$ 8′-10½″ 2 SETS
P550E	5′-10″	10	17		1′-9″	2′-4″	1′-9″								
P551E	7′-2″	8	17		1′-9″	3′-8″	1′-9″								
P641E	19′-11″	102	T3S	0′-8″					0′-8″	0′-4½″		3′-10″	4′-8″		
P642E	8′-11″	68	T9	0′-8″	7′-3″				1′-0″	0′-4½″					
P643E	23′-6″	6	16			8′-0″	15′-6″			2′-6″		15′-4″			
P644E	24′-1″	6	16			8′-0″	16′-1″			4′-11″		15′-4″			
P741E	42′-8″	20	STR.												
P941E	17′-11″	92	STR.												
P1141E	46′-7″	9	2	2′-0″	42′-7″				2′-0″						
P1142E	45′-7″	9	2	2′-0″	41′-7″				2′-0″						

MARK	LENGTH	NO. BARS	TYPE	A	B	C	D	E	G	H	J	K	O	R	REMARKS

BENDING DIAGRAMS

ALL DIMENSIONS ARE FROM OUT TO OUT.

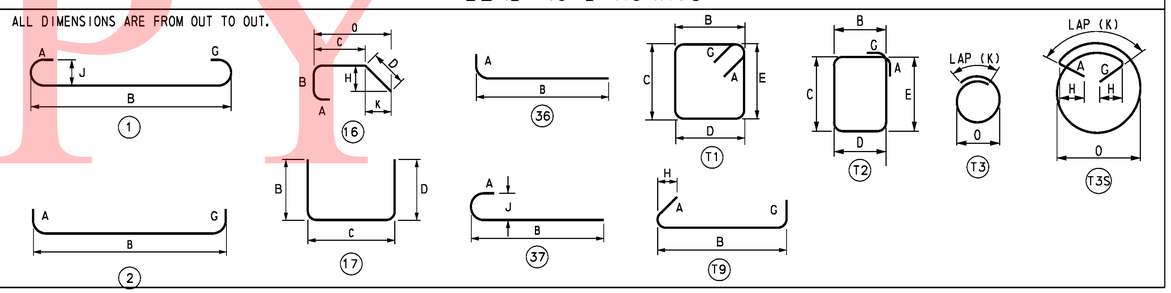

UNOFFICIAL WEBSITE COPY

DELAWARE DEPARTMENT OF TRANSPORTATION

ADDENDUMS / REVISIONS

SR1 / I-95 INTERCHANGE

CONTRACT	BRIDGE NO.	1-716C
28-090-03	DESIGNED BY: K.D. BEAVER	
COUNTY		
NEW CASTLE	CHECKED BY: J.S. LI	

RAMP A OVER SR 7

PIERS
REINFORCING BAR LIST 2

S2-29
SHEET NO.
282
TOTAL SHTS.
803

10/28/2010 O:\20832687-XM\CAD\Bridge\BR-S2\pr14_BR-S2_sr1.dgn
untitled

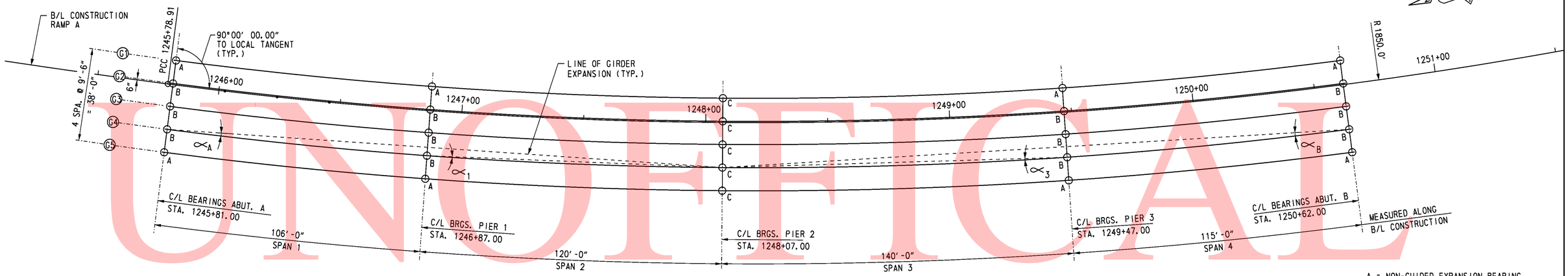

A = NON-GUIDED EXPANSION BEARING.

B = GUIDED EXPANSION BEARING.

C = FIXED BEARING.

BEARING PLAN

SCALE: 1" = 20'-0"

NOTES:

1. ALL DIMENSIONS ARE IN U.S. CUSTOMARY UNITS.
2. ALL BEARING ASSEMBLIES SHALL BE DESIGNED, MANUFACTURED AND INSTALLED IN ACCORDANCE WITH CURRENT EDITIONS OF THE AASHTO LRFD DESIGN AND CONSTRUCTION SPECIFICATIONS AND THE BEARING MANUFACTURER'S RECOMMENDATIONS.
3. ROUND ALL PTFE CORNERS TO ACCOMMODATE THE MACHINED RECESS IN STEEL GUIDE PLATE/PISTON.
4. ETCH PTFE ON ONE SIDE FOR BONDING INTO THE MACHINED RECESS.
5. PTFE ON THE SIDE OF GUIDE PLATE MUST BE PIGMENTED.
6. PRIOR TO THE APPLICATION OF ADHESIVE, CLEAN ALL MATING STEEL AND PTFE SURFACES BY GRIT BLASTING AND DEGREASING. APPLY ADHESIVE AS PER THE MANUFACTURER'S RECOMMENDATION.
7. LUBRICATE ALL SURFACES OF NEOPRENE DISC WITH SILICONE GREASE IN ACCORDANCE WITH NATO CODE NUMBER S-736 (SAE-AS8660).
8. CUT FLAT BRASS SEALING RING ENDS AT 45 DEGREE ANGLE WITH A MAXIMUM GAP OF 0.05 INCHES. STAGGER THE OPENINGS IN THE BRASS RINGS 120 DEGREES APART.
9. MARK THE THICKER EDGE OF THE SOLE PLATE AS SUCH FOR THE PURPOSE OF FIELD IDENTIFICATION. PLACE MARK ON THE EDGE OF SOLE PLATE SO THAT IT WILL BE VISIBLE AFTER BEARING INSTALLATION. IN THE CASE OF A SOLE PLATE WITH A COMPOUND BEVEL, PLACE THE MARK ON EITHER EDGE OF THE THICKEST SOLE PLATE CORNER.
10. MARK CENTERLINE OF GUIDED AND NON-GUIDED POT BEARINGS ON THE SIDES OF MASONRY PLATE AND SOLE PLATE. THE CENTERLINE IDENTIFICATION MARKS WILL BE USEFUL TO LOCATE OFFSET DISTANCES IN THE FIELD. USE INDELIBLE INK TO PLACE ALL MARKS.
11. MARK EACH BEARING WITH THE NAME OF THE MANUFACTURER AND TYPE OR MODEL NUMBER. PLACE THE IDENTIFICATION MARK IN A PERMANENT MANNER AND LOCATION SO THAT IT IS VISIBLE AFTER ERECTION.
12. WHEN THE POT IS RECESSED INTO THE MASONRY PLATE, SEAL AROUND THE POT PERIMETER WITH AN APPROVED CAULKING COMPOUND IN THE SHOP.
13. ANCHOR RODS SHALL BE INSTALLED PRIOR TO ERECTION OF STRUCTURAL STEEL.
14. FILL HOLES AROUND ANCHOR RODS WITH A NONHARDENING CAULKING COMPOUND OR ELASTIC JOINT SEALER.
15. BEARING SHALL BE SHIPPED AS ONE UNIT.
16. DESIGN SERVICE LIMIT STATE ELASTOMER & PTFE BEARING PRESSURE IS 3.50 KSI, MINIMUM IS 0.7 KSI.
17. DESIGN ROTATION = 0.03 RADIANS.
    DESIGN COEFFICIENT OF FRICTION BETWEEN PTFE AND STAINLESS STEEL = 0.05.
    THE MANUFACTURED COEFFICIENT OF FRICTION BETWEEN PTFE AND STAINLESS STEEL SHALL NOT BE MORE THAN 0.03.
18. GUIDED AND NON-GUIDED BEARINGS ARE DESIGNED FOR ONE WAY LONGITUDINAL MOVEMENT OF 1½" PLUS 1" OF CONSTRUCTION TOLERANCE IN LONGITUDINAL DIRECTION. ONE WAY LONGITUDINAL MOVEMENT IS THE MAXIMUM ONE WAY MOVEMENT (EXPANSION OR CONTRACTION) OF SUPERSTRUCTURE WHEN BEARINGS ARE SET AT 60° F.
19. AS AN ALTERNATE TO BEARING DETAILS SHOWN ON THESE PLANS, BEARINGS MAY BE DESIGNED BY BEARING MANUFACTURER USING LOADS, MOVEMENTS, ROTATIONS AND OTHER CRITERIA SPECIFIED ON THESE PLANS. IF THIS ALTERNATE IS SELECTED CONTRACTOR SHALL COORDINATE ANY REVISIONS TO ANCHOR ROD LAYOUT, BEARING PAD ELEVATIONS, ETC.
20. GUIDE BARS FOR THE EXPANSION BEARINGS SHALL BE ORIENTED PARALLEL TO THE ASSUMED DIRECTION OF MOVEMENT CONNECTING EXPANSION BEARING TO RESPECTIVE FIXED BEARING FOR HORIZONTALLY CURVED ALIGNMENT.

MATERIALS:

1. BEARING PLATES SHALL BE A709 GRADE 50W STEEL.
2. ALL ANCHOR RODS SHALL BE ASTM F1554, GRADE 55. ALL NUTS SHALL BE ASTM A563, GRADE DH. ALL WASHERS SHALL BE ASTM F436, TYPE 1. GALVANIZE BOLTS, NUTS AND WASHERS.
3. STAINLESS STEEL: ASTM A167 OR A264, TYPE 304 WITH A SURFACE FINISH OF 8.0 μ-IN RMS OR BETTER.
4. FLAT BRASS SEALING RINGS: ASTM B36 (HALF HARD) SPECIFICATION.
5. ELASTOMERIC DISC: VIRGIN PLAIN NEOPRENE OR NATURAL RUBBER WITH HARDNESS OF BETWEEN 50 AND 60 DUROMETER.
6. PTFE SHEET: (UNFILLED, DIMPLED AND LUBRICATED) MADE FROM VIRGIN TFE RESIN PER ASTM D4894. DIMPLES MUST HAVE A MINIMUM EDGE DISTANCE OF 0.5 INCHES AND CONFORM TO AASHTO LRFD SECTION 14.
7. BEDDING MATERIAL: ⅛" NEOPRENE PAD.

UNOFFICIAL WEBSITE COPY

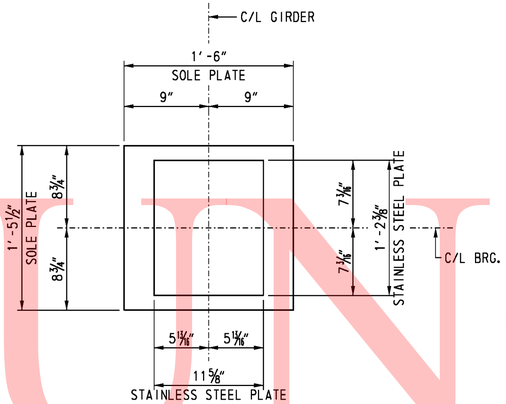

SECTION A-A
SCALE: 1½" = 1'-0"

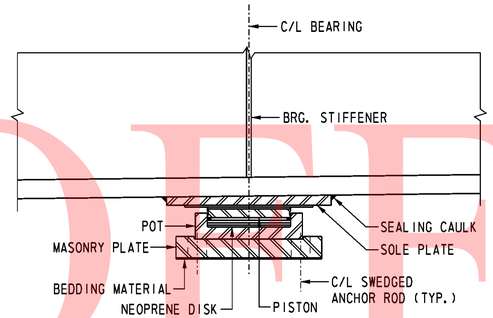

SECTION C-C
SCALE: 1½" = 1'-0"

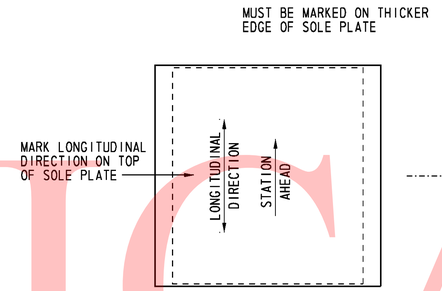

PLAN

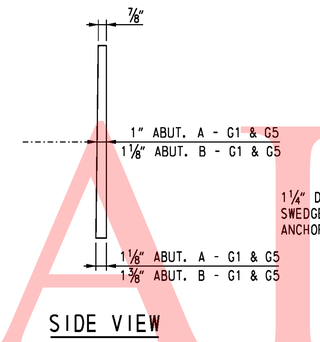

SIDE VIEW

SOLE PLATE DETAIL
SCALE: 1½" = 1'-0"

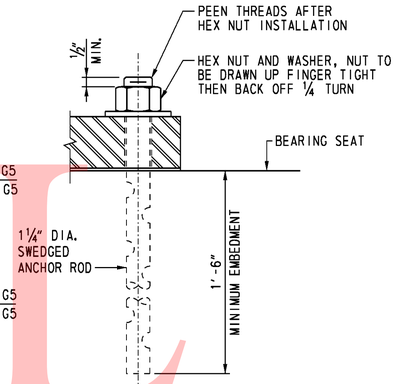

ANCHOR ROD DETAIL
SCALE: 3" = 1'-0"

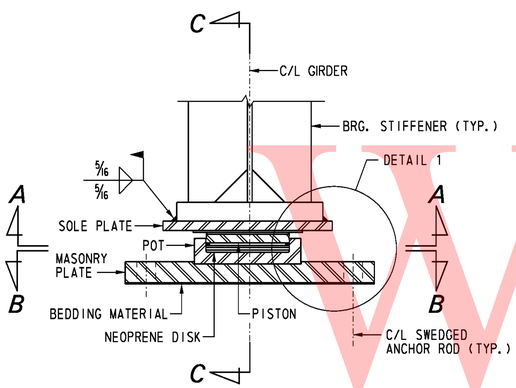

ELEVATION
SCALE: 1½" = 1'-0"

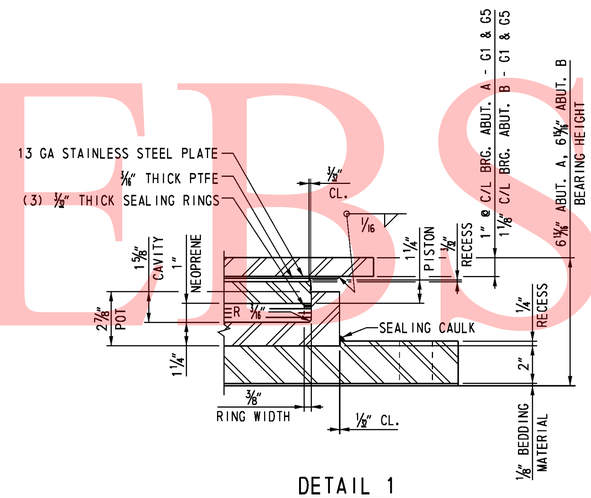

DETAIL 1
SCALE: 3" = 1'-0"

LOCATION	SERVICE VERTICAL LOAD (kips)	STRENGTH VERTICAL LOAD (kips)	ANCHOR ROD	
			QTY.	DIA.
ABUTMENT A - G1 & G5	200	300	4	1¼"
ABUTMENT B - G1 & G5	200	300	4	1¼"

* BEARING HEIGHT INCLUDES ⅛" BEDDING MATERIAL.
BEARING HEIGHT MEASURED AT C/L BEARING.

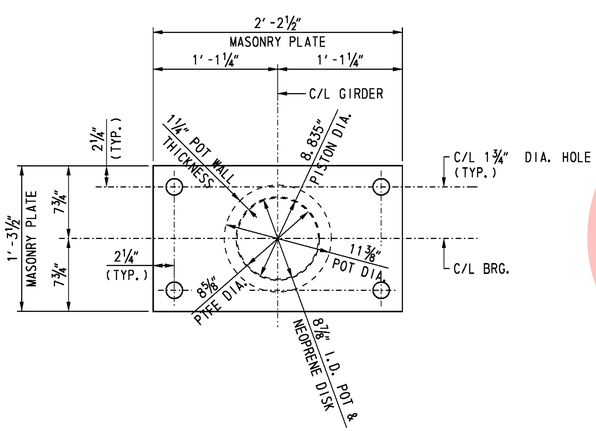

SECTION B-B
SCALE: 1½" = 1'-0"

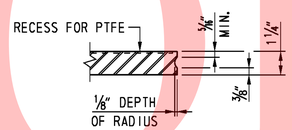

PISTON DETAIL
SCALE: 3" = 1'-0"

NOTES:

1. SOLE PLATE THICKNESS SHALL NOT BE LESS THAN ¾ INCH.

CROSS REFERENCE NOTE:

1. FOR BEARING NOTES AND LOCATIONS, SEE DWG. S2-30.

UNOFFICIAL WEBSITE COPY

10/28/2010 O:\20832687-XM\CAD\Bridge\BR-S2\bd03_BR-S2_sr1.dgn untitled

DELAWARE DEPARTMENT OF TRANSPORTATION

ADDENDUMS / REVISIONS

SR1 / I-95 INTERCHANGE

CONTRACT	BRIDGE NO.	1-716C	RAMP A OVER SR 7	S2-31
28-090-03	DESIGNED BY: J. S. LI		NON-GUIDED EXPANSION BEARING AT ABUTMENTS	SHEET NO. 284
COUNTY				TOTAL SHTS.
NEW CASTLE	CHECKED BY: G. P. MISTRY			803

UNOFFICIAL WEBSITE COPY

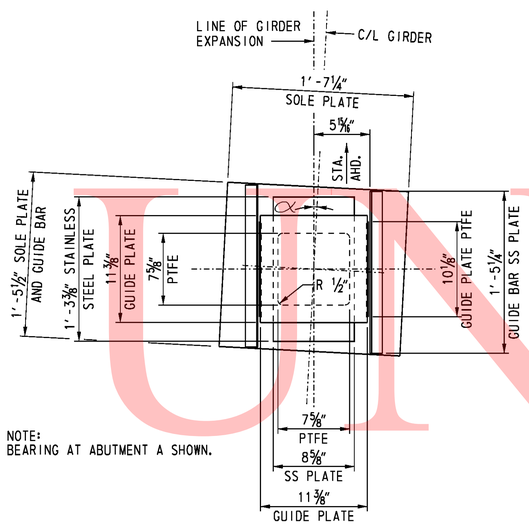

NOTE:
BEARING AT ABUTMENT A SHOWN.

SECTION A-A
SCALE: 1½" = 1'-0"

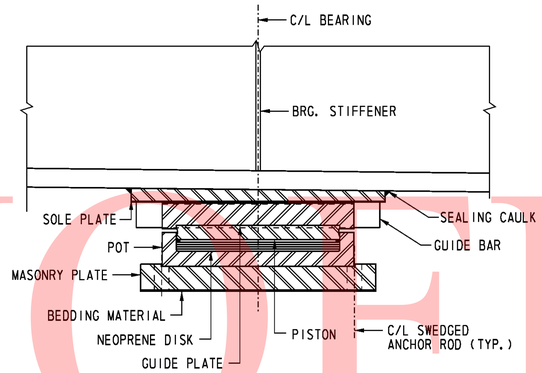

SECTION C-C
SCALE: 1½" = 1'-0"

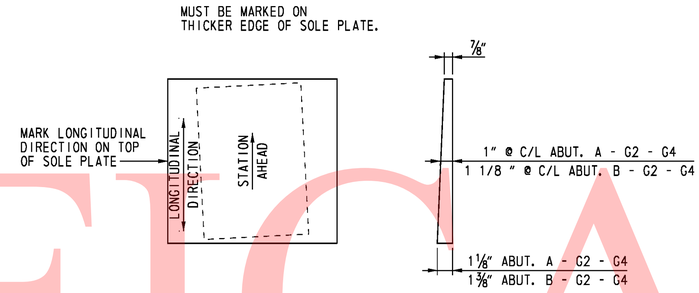

PLAN SIDE VIEW

SOLE PLATE DETAIL
SCALE: 1½" = 1'-0"

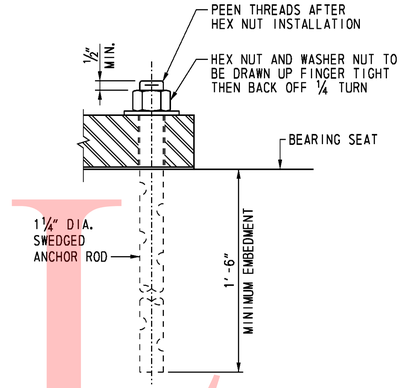

ANCHOR ROD DETAIL
SCALE: 3" = 1'-0"

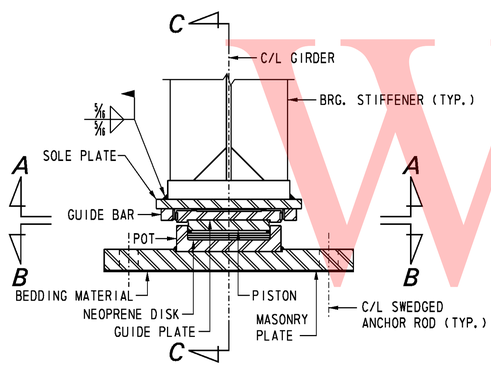

ELEVATION
SCALE: 1½" = 1'-0"

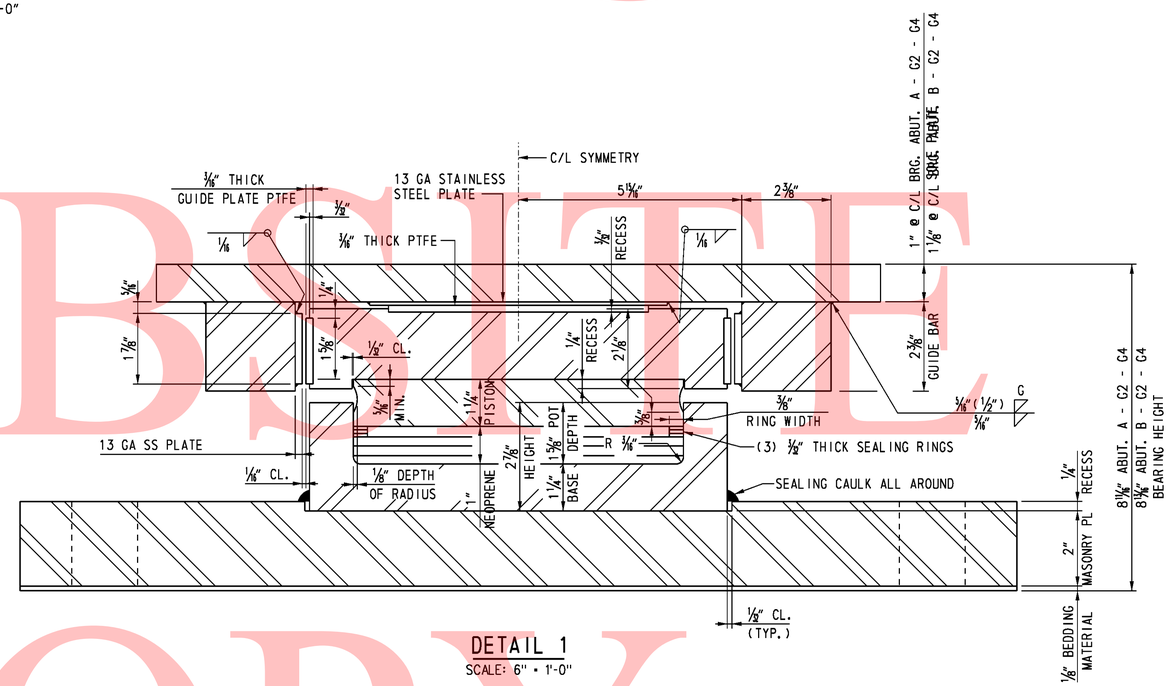

DETAIL 1
SCALE: 6" = 1'-0"

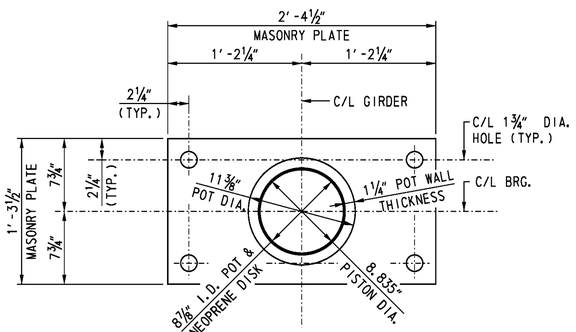

SECTION B-B
SCALE: 1½" = 1'-0"

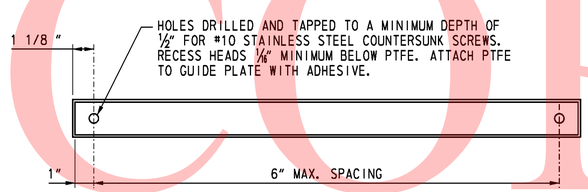

GUIDE PLATE PTFE DETAIL
NOT TO SCALE

LOCATION	SERVICE	STRENGTH		α
	VERTICAL LOAD (Kips)	VERTICAL LOAD (Kips)	HORIZONTAL LOAD (Kips)	
ABUTMENT A - G2-G4	200	300	65	3°-29'-59" LT
ABUTMENT B - G2-G4	200	300	65	3°-56'-56" RT

* BEARING HEIGHT INCLUDES ⅛" BEDDING MATERIAL.
BEARING HEIGHT MEASURED AT C/L BEARING

NOTES:

1. SOLE PLATE THICKNESS SHALL NOT BE LESS THAN ¾ INCH.

CROSS REFERENCE NOTE:

1. FOR BEARING NOTES AND LOCATIONS, SEE DWG. S2-30.

S2-32

DELAWARE DEPARTMENT OF TRANSPORTATION	ADDENDUMS / REVISIONS	SR1 / I-95 INTERCHANGE	CONTRACT 28-090-03	BRIDGE NO. 1-716C	RAMP A OVER SR 7
			COUNTY NEW CASTLE	DESIGNED BY: J. S. LI	GUIDED EXPANSION BEARING AT ABUTMENTS
				CHECKED BY: G. P. MISTRY	

SHEET NO. 285
TOTAL SHTS. 803

10/28/2010 O:\20832687-XM\CAD\Bridge\BR-S2\bd02_BR-S2_sr1.dgn
untitled

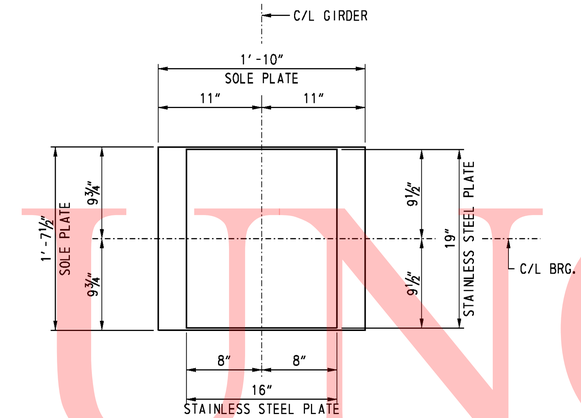

SECTION A-A
SCALE: 1½" = 1'-0"

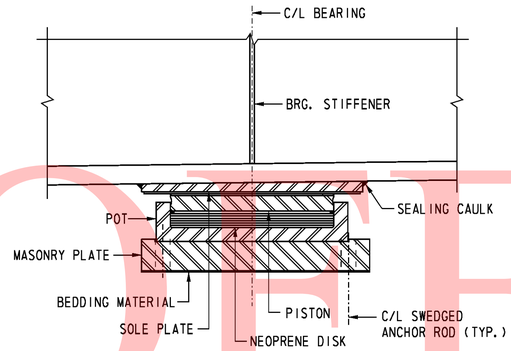

SECTION C-C
SCALE: 1½" = 1'-0"

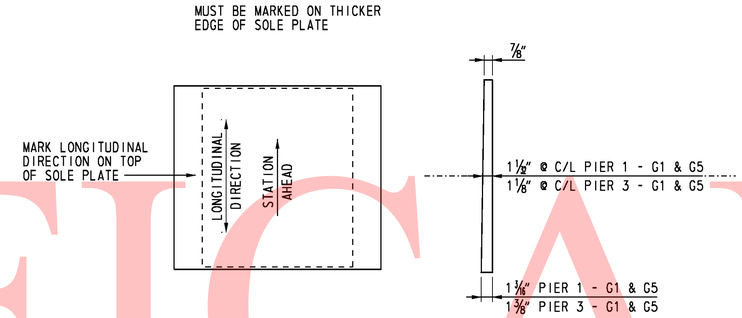

PLAN SIDE VIEW

SOLE PLATE DETAIL
SCALE: 1½" = 1'-0"

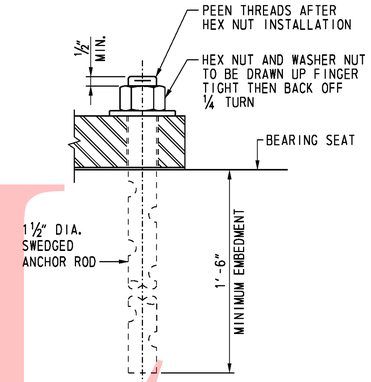

ANCHOR ROD DETAIL
SCALE: 3" = 1'-0"

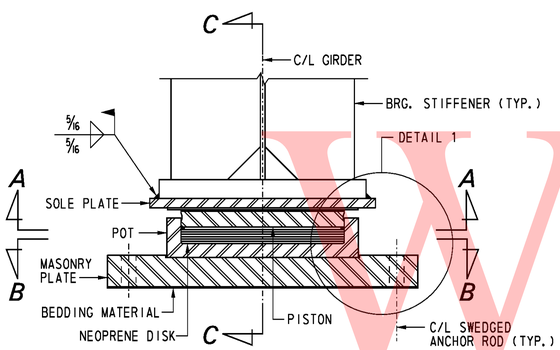

ELEVATION
SCALE: 1½" = 1'-0"

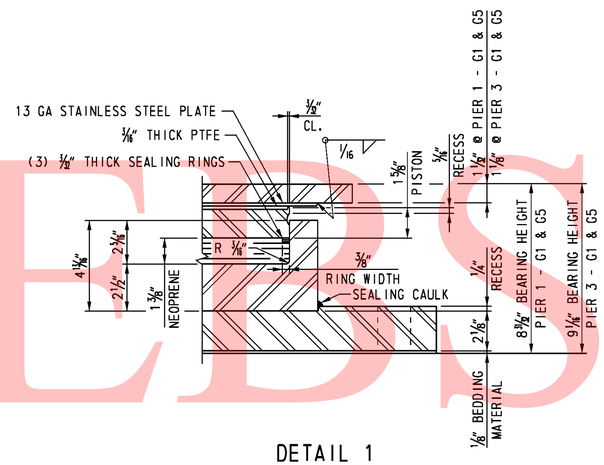

DETAIL 1
SCALE: 3" = 1'-0"

LOCATION	SERVICE VERTICAL LOAD (kips)	STRENGTH VERTICAL LOAD (kips)	ANCHOR ROD	
			QTY.	DIA.
PIER 1 - G1 & G5	500	750	6	1½"
PIER 3 - G1 & G5	500	750	6	1½"

* BEARING HEIGHT INCLUDES ⅛" BEDDING MATERIAL. BEARING HEIGHT MEASURED AT C/L BEARING.

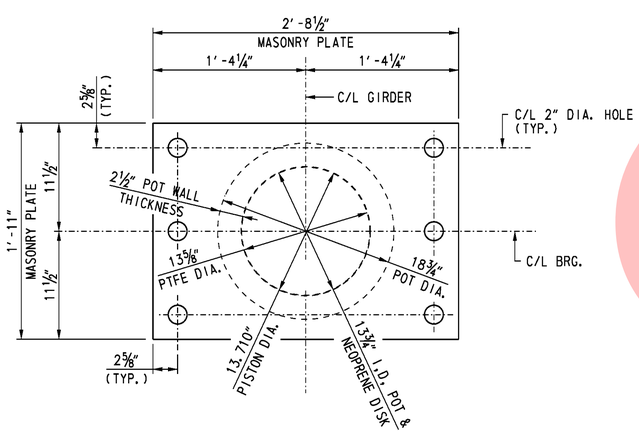

SECTION B-B
SCALE: 1½" = 1'-0"

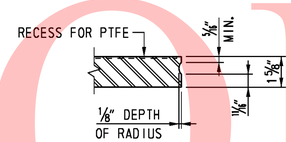

PISTON DETAIL
SCALE: 3" = 1'-0"

NOTES:

1. SOLE PLATE THICKNESS SHALL NOT BE LESS THAN ¾ INCH.

CROSS REFERENCE NOTE:

1. FOR BEARING NOTES AND LOCATIONS, SEE DWG. S2-30.

UNOFFICIAL WEBSITE COPY

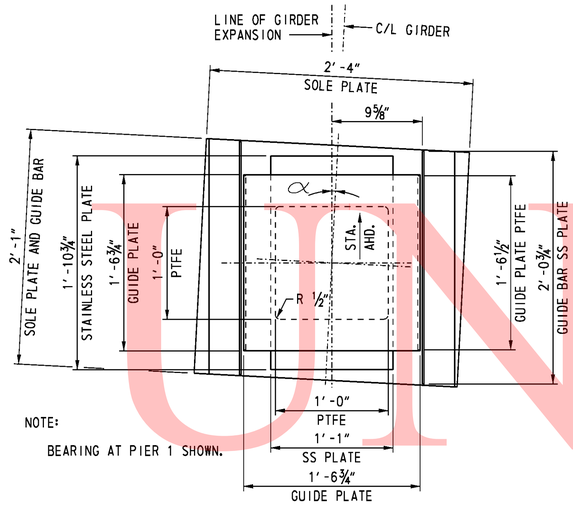

NOTE:
BEARING AT PIER 1 SHOWN.

SECTION A-A
SCALE: 1½" = 1'-0"

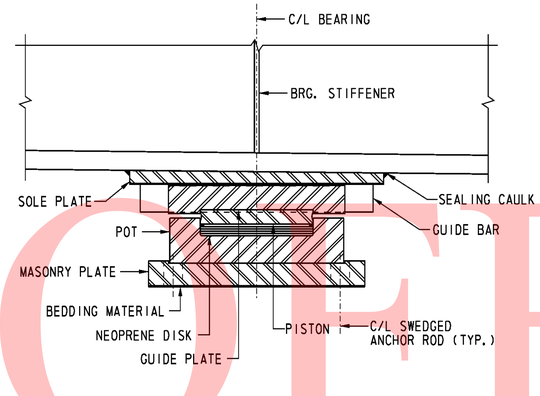

SECTION C-C
SCALE: 1½" = 1'-0"

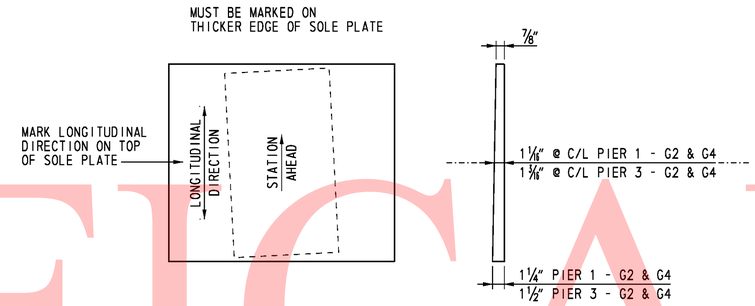

PLAN SIDE VIEW

SOLE PLATE DETAIL
SCALE: 1½" = 1'-0"

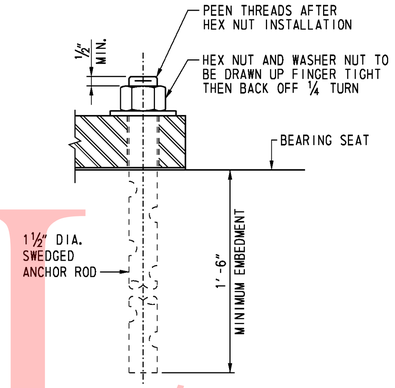

ANCHOR ROD DETAIL
SCALE: 3" = 1'-0"

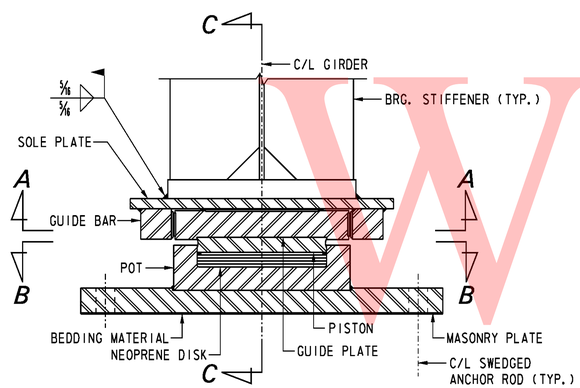

ELEVATION
SCALE: 1½" = 1'-0"

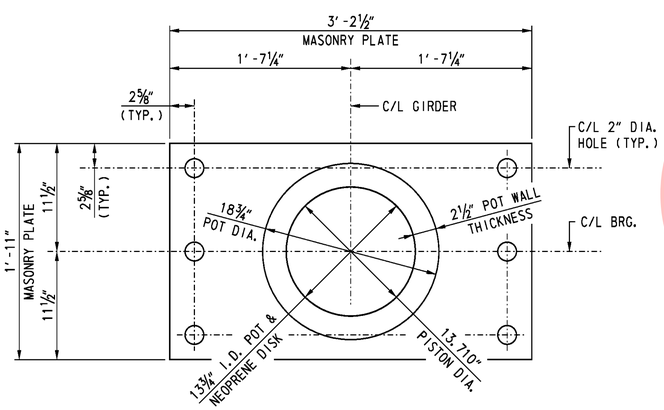

SECTION B-B
SCALE: 1½" = 1'-0"

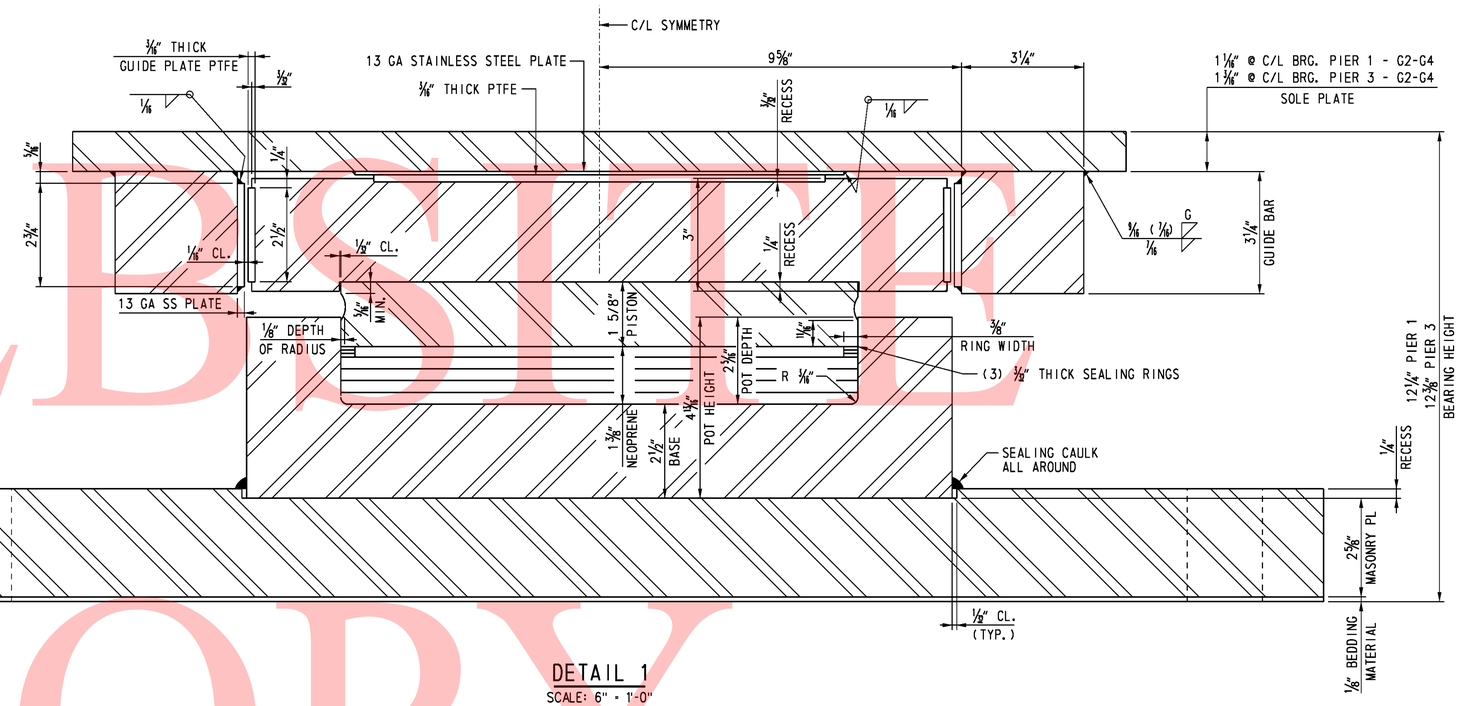

DETAIL 1
SCALE: 6" = 1'-0"

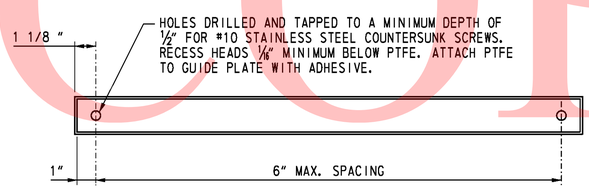

GUIDE PLATE PTFE DETAIL
NOT TO SCALE

LOCATION	SERVICE VERTICAL LOAD (Kips)	STRENGTH VERTICAL LOAD (Kips)	STRENGTH HORIZONTAL LOAD (Kips)	α
PIER 1 - G2-G4	500	750	165	1°-51'-30" LT
PIER 3 - G2-G4	500	750	165	2°-10'-05" RT

* BEARING HEIGHT INCLUDES 1/8" BEDDING MATERIAL.
BEARING HEIGHT MEASURED AT C/L BEARING

NOTES:

1. SOLE PLATE THICKNESS SHALL NOT BE LESS THAN ¾ INCH.

CROSS REFERENCE NOTE:

1. FOR BEARING NOTES AND LOCATIONS, SEE DWG. S2-30.

UNOFFICIAL WEBSITE COPY

10/28/2010 O:\20832687-XM\CAD\Bridge\BR-S2\bd04_BR-S2_sr1.dgn
untitled

DELAWARE DEPARTMENT OF TRANSPORTATION

ADDENDUMS / REVISIONS

SR1 / I-95 INTERCHANGE

CONTRACT	BRIDGE NO.	1-716C
28-090-03	DESIGNED BY: J. S. LI	
COUNTY		
NEW CASTLE	CHECKED BY: G. P. MISTRY	

RAMP A OVER SR 7
GUIDED EXPANSION BEARING AT PIER 1 AND 3

SHEET NO.	TOTAL SHTS.
S2-34	
287	
803	

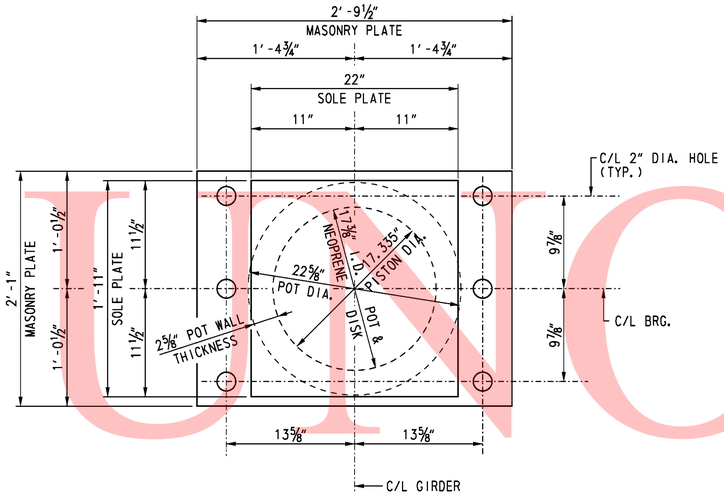

FIXED POT BEARING PLAN

SCALE: 1½" = 1'-0"

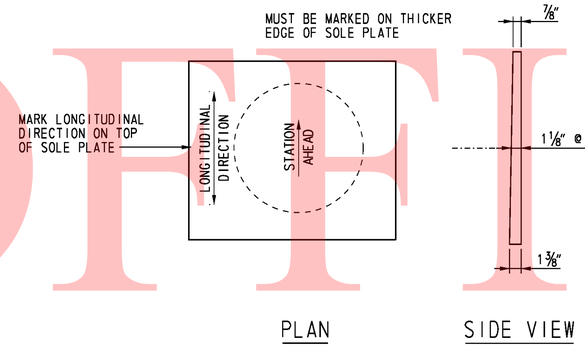

SOLE PLATE DETAIL

SCALE: 1½" = 1'-0"

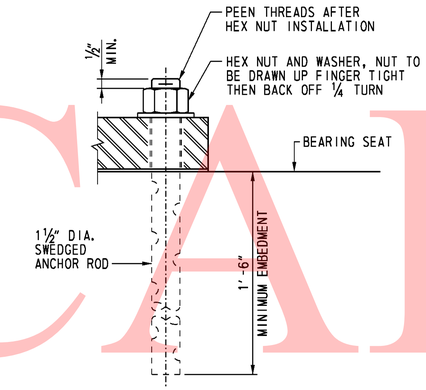

ANCHOR ROD DETAIL

SCALE: 3" = 1'-0"

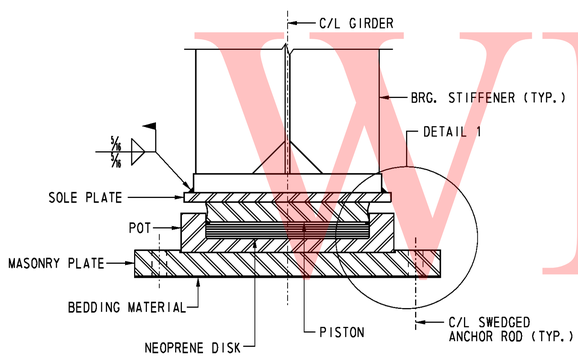

ELEVATION

SCALE: 1½" = 1'-0"

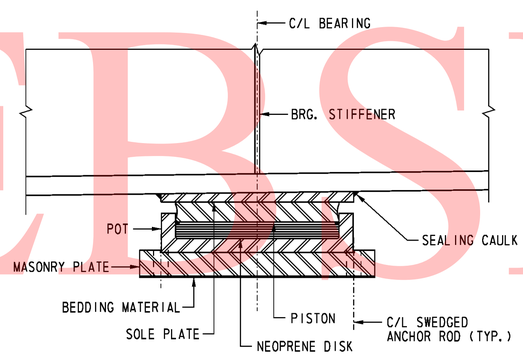

SIDE VIEW

SCALE: 1½" = 1'-0"

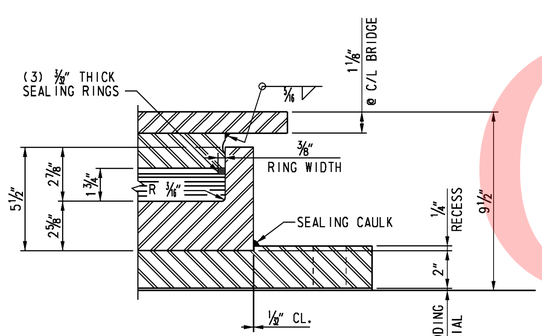

DETAIL 1

SCALE: 3" = 1'-0"

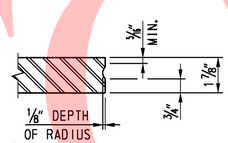

PISTON DETAIL

SCALE: 3" = 1'-0"

DESIGN LOADS:

SERVICE LIMIT STATE VERTICAL LOAD = 800 kips.

STRENGTH LIMIT STATE VERTICAL LOAD = 1100 kips.

STRENGTH LIMIT STATE HORIZONTAL LOAD = 265 kips.

NOTES:

1. SOLE PLATE THICKNESS SHALL NOT BE LESS THAN ¾ INCH.

CROSS REFERENCE NOTE:

1. FOR BEARING NOTES AND LOCATIONS, SEE DWG. S2-30.

UNOFFICAL WEBSITE COPY

10/28/2010 O:\20832687-XM\CAD\Bridge\BR-S2\bd06_BR-S2_sr1.dgn untitled

DELAWARE DEPARTMENT OF TRANSPORTATION	ADDENDUMS / REVISIONS	SR1 / I-95 INTERCHANGE	CONTRACT 28-090-03	BRIDGE NO. 1-716C	RAMP A OVER SR 7 FIXED BEARING AT PIER 2	S2-35 SHEET NO. 288
			COUNTY NEW CASTLE	DESIGNED BY: J. S. LI		TOTAL SHTS. 803
				CHECKED BY: G. P. MISTRY		

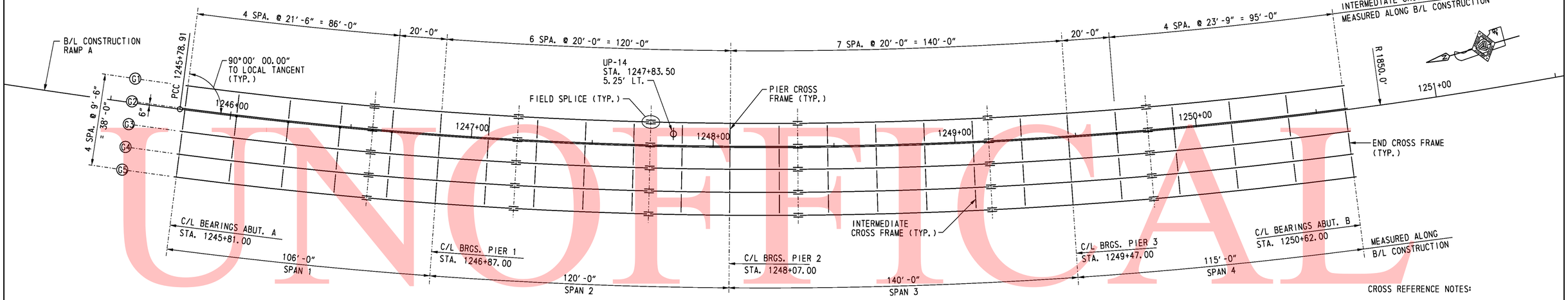

FRAMING PLAN

SCALE: 1" = 20'-0"

CROSS REFERENCE NOTES:

1. FOR GENERAL NOTES, SEE DWG. S2-2.
2. FOR TYPICAL SECTION, SEE DWG. S2-3.
3. FOR CROSS FRAMES AND GIRDER DETAILS, SEE DWGS. S2-37 & S2-38.
4. FOR FIELD SPLICE DETAILS, SEE DWGS. S2-39.
5. FOR BEARING TYPES AND LOCATIONS, SEE DWG. S2-30.
6. FOR UP-14 UNDERPASS LIGHTING SUPPORT DETAIL, SEE DWG. S2-37.

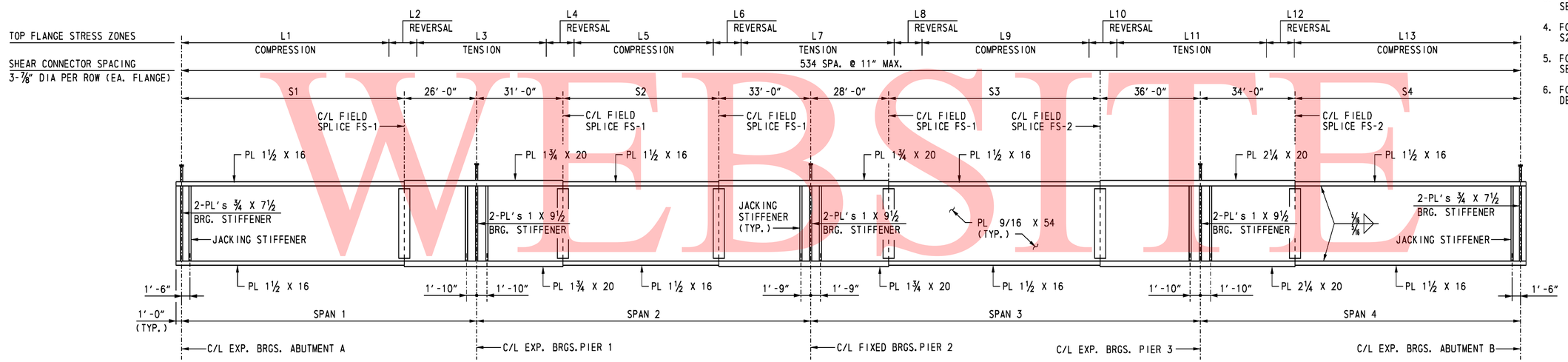

GIRDER ELEVATION

NOT TO SCALE

GIRDERS	RADIUS	SPAN LENGTH					PLATE LENGTH				TOP FLANGE STRESS ZONES												
	R	SPAN 1	SPAN 2	SPAN 3	SPAN 4	LENGTH	S1	S2	S3	S4	L1	L2	L3	L4	L5	L6	L7	L8	L9	L10	L11	L12	L13
G1	1840'-0"	105'-5 1/8"	119'-4 7/8"	139'-2 15/16"	114'-4 5/8"	478'-4 11/16"	79'-5 1/8"	55'-4 5/8"	75'-2 15/16"	80'-4 3/16"	67'-5 1/8"	21'-0"	37'-0"	30'-0"	13'-4 7/16"	36'-0"	39'-0"	22'-0"	50'-2 15/16"	24'-0"	48'-0"	25'-0"	65'-4 3/16"
G2	1849'-6"	105'-11 5/16"	119'-11 5/8"	139'-11 9/16"	114'-11 5/16"	480'-10 7/16"	79'-11 7/8"	55'-11 5/16"	75'-11 9/16"	80'-11 5/8"	67'-11 5/16"	21'-0"	37'-0"	30'-0"	13'-11 5/8"	36'-0"	39'-0"	22'-0"	50'-11 9/16"	24'-0"	48'-0"	25'-0"	65'-11 5/8"
G3	1859'-0"	106'-6 1/16"	120'-7"	140'-8 3/16"	115'-6 11/16"	483'-4 1/16"	80'-6 1/16"	56'-7"	76'-8 1/16"	81'-6 11/16"	68'-6 1/16"	21'-0"	37'-0"	30'-0"	14'-7"	36'-0"	39'-0"	22'-0"	51'-8 3/16"	24'-0"	48'-0"	25'-0"	66'-6 11/16"
G4	1868'-6"	107'-0 3/16"	121'-2 3/8"	141'-4 9/16"	116'-1 13/16"	485'-9 3/4"	81'-0 3/4"	57'-2 3/8"	77'-4 11/16"	82'-1 15/16"	69'-0 3/4"	21'-0"	37'-0"	30'-0"	15'-2 3/8"	36'-0"	39'-0"	22'-0"	52'-4 13/16"	24'-0"	48'-0"	25'-0"	67'-1 15/16"
G5	1878'-0"	107'-7 1/4"	121'-9 13/16"	142'-1 1/16"	116'-8 7/8"	488'-3 3/8"	81'-7 1/4"	57'-9 13/16"	78'-1 1/16"	82'-8 7/8"	69'-7 1/4"	21'-0"	37'-0"	30'-0"	15'-9 13/16"	36'-0"	39'-0"	22'-0"	53'-1 1/16"	24'-0"	48'-0"	25'-0"	67'-8 7/8"

NOTES:

1. THE ESTIMATED NUMBER OF SHEAR CONNECTORS IS 8025.
2. THERE SHALL BE NO FIELD WELDING TO THE TOP FLANGE, EXCEPT FOR SHEAR STUDS, IN THE TENSION AND STRESS REVERSAL AREAS.
3. STUDS SHALL BE SPACED TO CLEAR SPLICE BOLTS.
4. ALL CROSS FRAMES AND CENTERLINE BEARINGS SHALL BE RADIAL.
5. SET ENDS OF GIRDERS AND BEARING STIFFENERS VERTICAL UNDER FULL DEAD LOAD.
6. ENTIRE SUPERSTRUCTURE FRAMING SHALL BE PREASSEMBLED IN SHOP TO VERIFY FIT.

UNOFFICIAL WEBSITE COPY

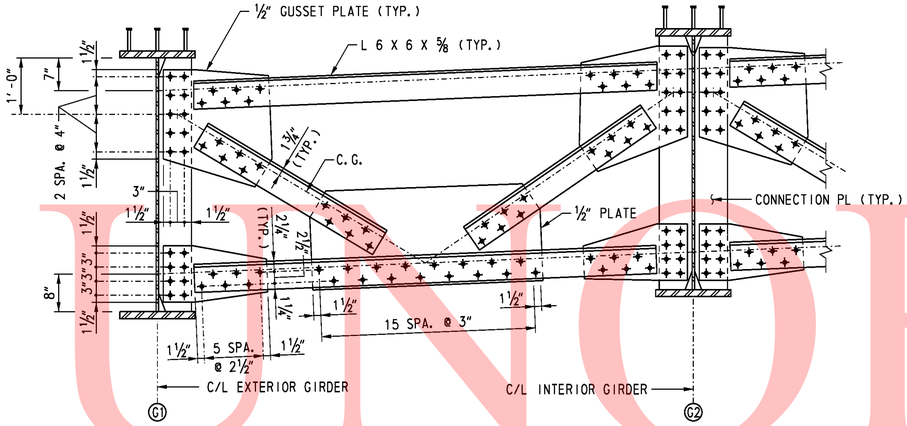

TYPICAL INTERMEDIATE CROSS FRAME

SCALE: ¾" = 1'-0"

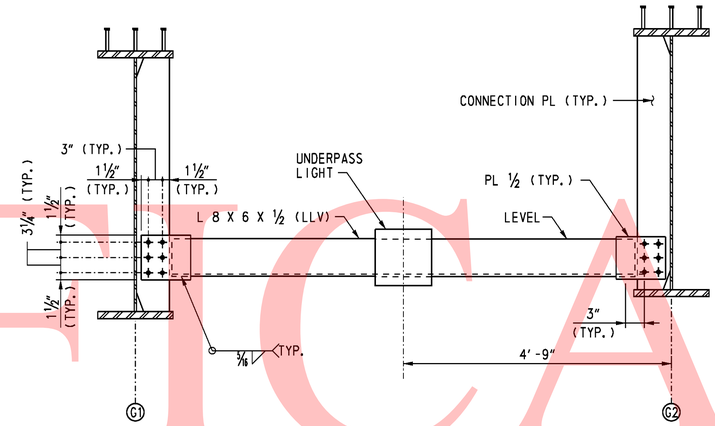

UNDERPASS LIGHT SUPPORT DETAIL

SCALE: ¾" = 1'-0"

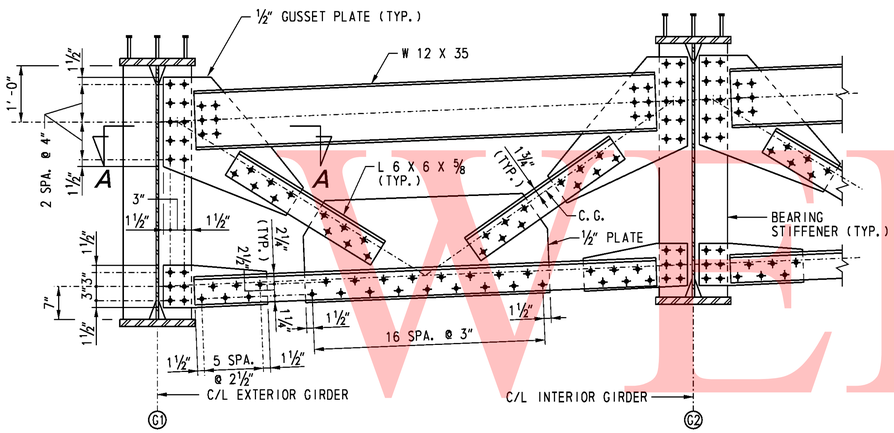

TYPICAL END CROSS FRAME

SCALE: ¾" = 1'-0"

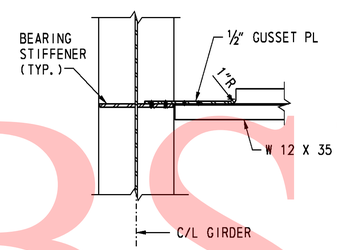

SECTION A-A

SCALE: ¾" = 1'-0"

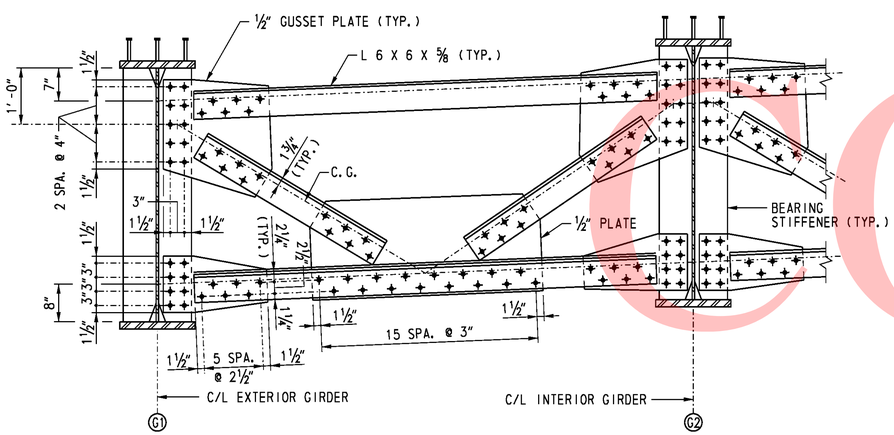

TYPICAL PIER CROSS FRAME

SCALE: ¾" = 1'-0"

NOTES:

1. CROSS FRAMES SHALL BE DETAILED TO FIT IN THE FULL DEAD LOAD CONDITION.
2. THE STEEL FABRICATOR SHALL COORDINATE WITH THE LIGHTING SUPPLIER FOR THE LOCATION OF HOLES IN CONNECTION PLATE FOR MOUNTING UNDERPASS LIGHT SUPPORT.
3. THE BOTTOM OF THE LIGHT FIXTURE SHALL NOT BE MORE THAN 12" FROM THE BOTTOM OF THE GIRDER AND SHALL NOT EXTEND BELOW THE BOTTOM OF THE GIRDER.

CROSS REFERENCE NOTES:

1. FOR GENERAL NOTES, SEE DWG. S2-2.
2. FOR FRAMING PLAN, SEE DWG. S2-36.
3. FOR GIRDER DETAILS, SEE DWG. S2-38.
4. FOR BOLT TYPE AND SIZE AS WELL AS HOLE SIZE, SEE DWG. S2-2.

UNOFFICAL WEBSITE COPY

10/28/2010 O:\20832687-XM\CAD\Bridge\BR-S2\bm02_BR-S2_sr1.dgn
untitled

DELAWARE DEPARTMENT OF TRANSPORTATION	ADDENDUMS / REVISIONS	SR1 / I-95 INTERCHANGE	CONTRACT 28-090-03	BRIDGE NO. 1-716C	RAMP A OVER SR 7 CROSS FRAME DETAILS	S2-37 SHEET NO. 290
			COUNTY NEW CASTLE	DESIGNED BY: J. S. LI		TOTAL SHTS. 803
				CHECKED BY: R. F. KIRCHNER		

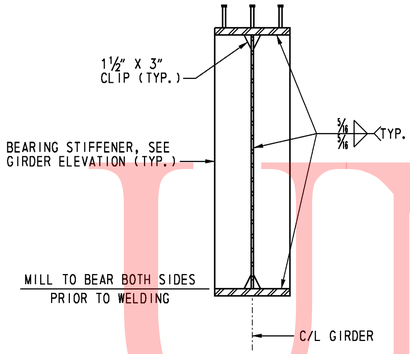

BEARING STIFFENER

SCALE: ¾" = 1'-0"

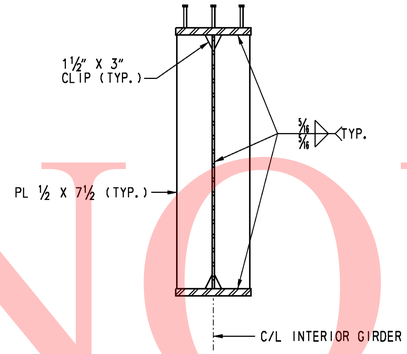

CONNECTION PLATE

SCALE: ¾" = 1'-0"

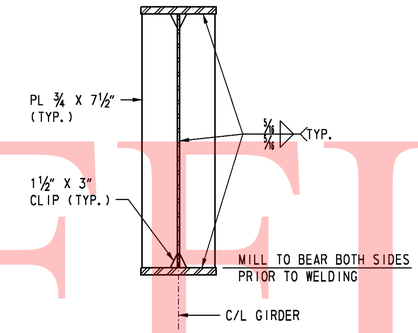

JACKING STIFFENER (AT ABUTMENTS)

SCALE: ¾" = 1'-0"

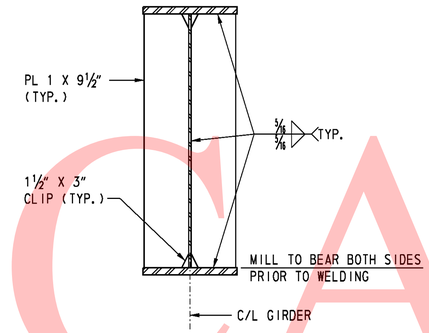

JACKING STIFFENER (AT PIERS)

SCALE: ¾" = 1'-0"

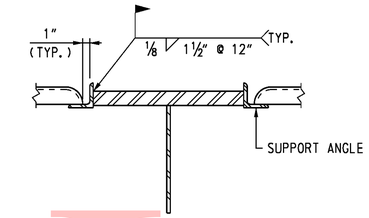

COMPRESSION FLANGE FOR S.I.P. FORMS

SCALE: 1½" = 1'-0"

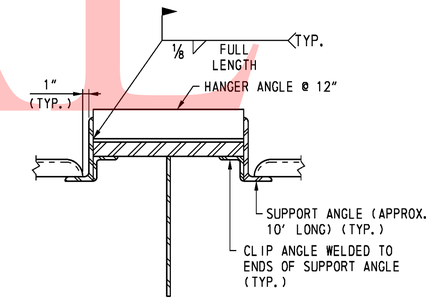

TENSION FLANGE FOR S.I.P. FORMS

SCALE: 1½" = 1'-0"

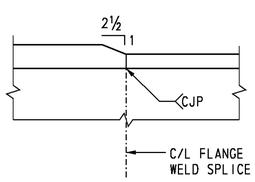

FLANGE PLATE THICKNESS TRANSITION

NOT TO SCALE

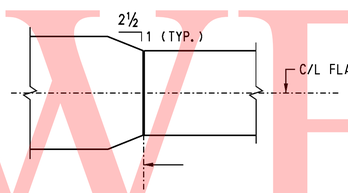

BOTTOM FLANGE PLATE WIDTH TRANSITION

NOT TO SCALE

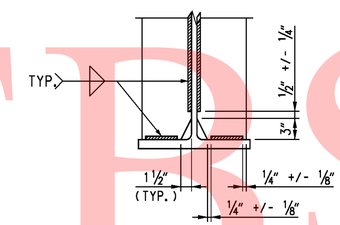

STIFFENER & CONNECTION PLATE WELD TERMINATION

NOT TO SCALE

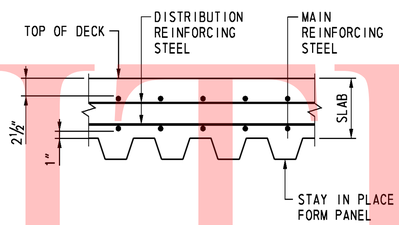

STEEL FORM SECTION

SCALE: 1½" = 1'-0"

STEEL FORM NOTES:

1. FORMS SHALL BE VERTICALLY ADJUSTED TO ATTAIN FINISHED LINE, GRADE AND SLAB THICKNESS REQUIRED ON THE PLANS.
2. NO WELDING OF THESE FORMS TO FLANGES IN TENSION IS PERMITTED.

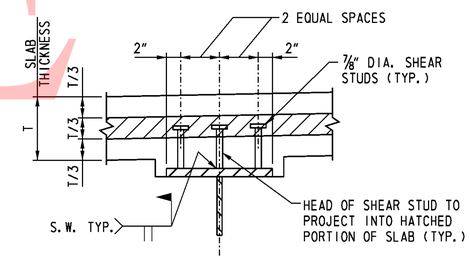

SHEAR STUD DETAIL

NOT TO SCALE

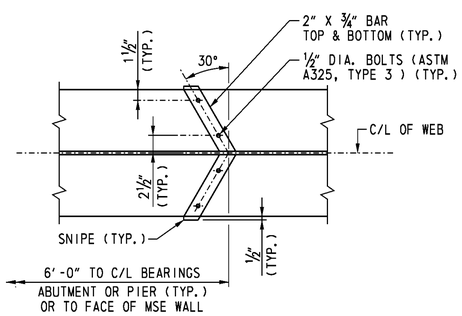

DRIP BAR DETAIL

NOT TO SCALE

NOTES:

1. DRIP BAR DETAIL SHALL BE PLACED ON BOTTOM FLANGE. PROVIDE DRIP BAR FOR GIRDER G1 AND G5 ONLY.
2. DRIP BARS ARE PLACED ADJACENT TO SUPPORTS TO PREVENT WATER FLOW ONTO SUPPORT.

CROSS REFERENCE NOTES:

1. FOR GENERAL NOTES, SEE DWG. S2-2.
2. FOR FRAMING PLAN, SEE DWG. S2-36.
3. FOR CROSS FRAME DETAILS, SEE DWG. S2-37.

UNOFFICAL WEBSITE COPY

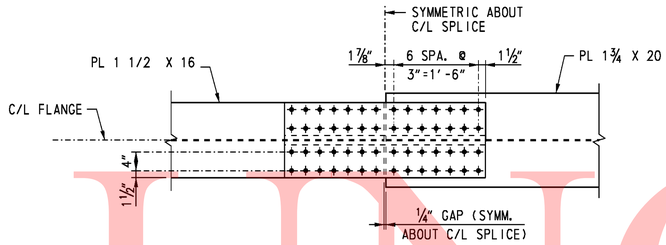

TOP FLANGE

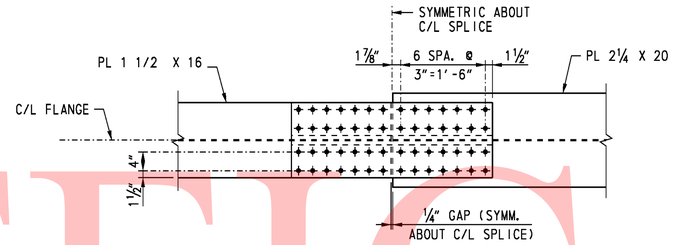

TOP FLANGE

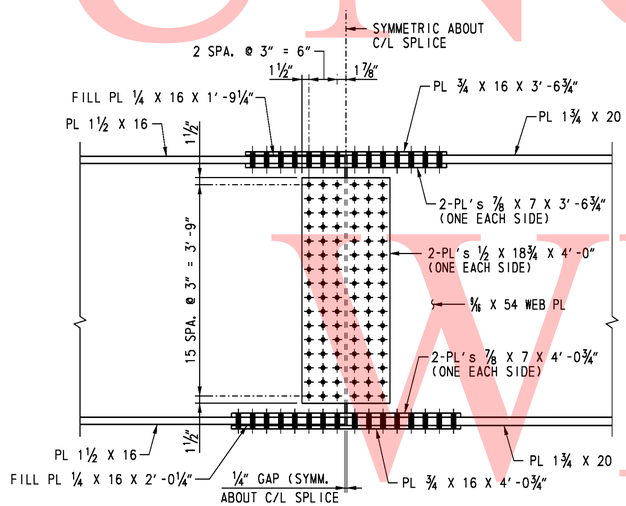

WEB SPLICE

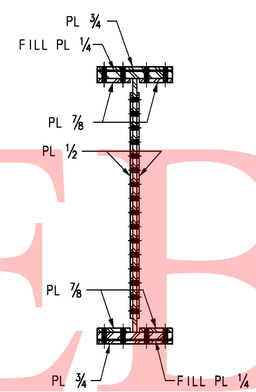

SECTION

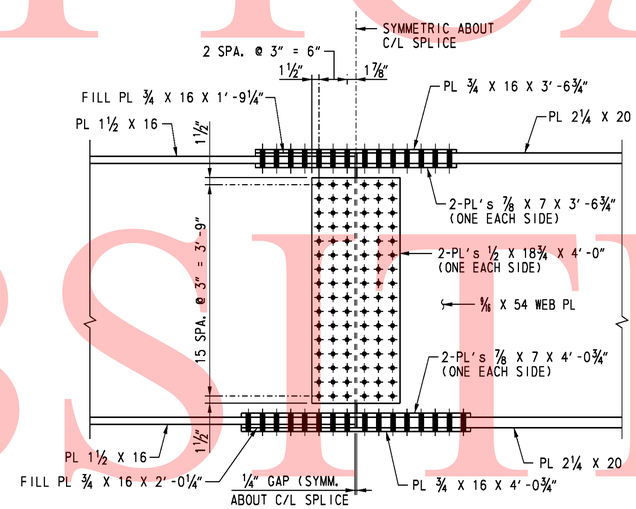

WEB SPLICE

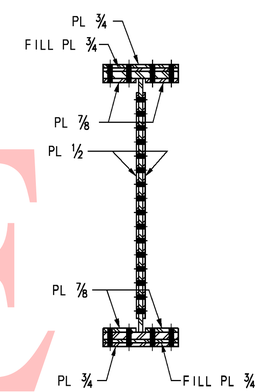

SECTION

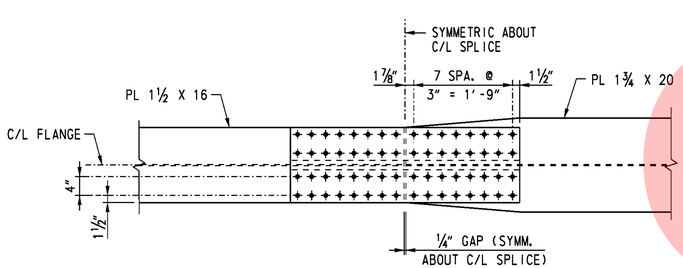

BOTTOM FLANGE

FIELD SPLICE FS-1

SCALE: 3/4" = 1'-0"

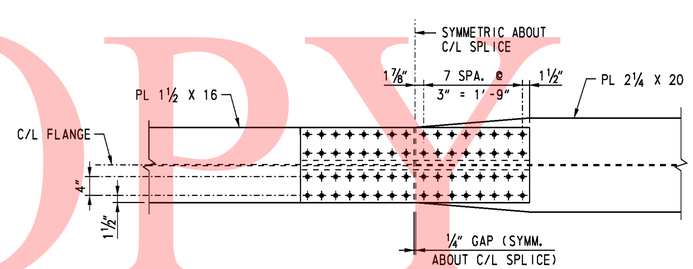

BOTTOM FLANGE

FIELD SPLICE FS-2

SCALE: 3/4" = 1'-0"

NOTES:

1. ALL BOLTS SHALL BE 7/8" DIA. ASTM A 325 TYPE 3 HIGH STRENGTH BOLTS IN 15/16" DIA. HOLES. CONTACT SURFACE OF BOLTED PARTS SHALL BE CLASS B. EXCLUDE BOLT THREADS FROM SHEAR PLANES.
2. BOLT HEADS SHALL BE ON THE EXTERIOR FACE OF THE FASCIA GIRDERS AND THE BOTTOM OF THE BOTTOM FLANGE.
3. FIELD SPLICES SHALL BE COMPLETELY SHOP ASSEMBLED AND MATCH MARKED AFTER ALL SHOP WELDING HAS BEEN COMPLETED. CONTACT SURFACES SHALL BE FREE OF ALL OIL AND DIRT.
4. WEB SPLICE PLATES ARE SYMMETRIC ABOUT MID-DEPTH OF WEB.

CROSS REFERENCE NOTES:

1. FOR GENERAL NOTES, SEE DWG. S2-2.
2. FOR FRAMING PLAN AND GIRDER ELEVATION, SEE DWG. S2-36.

UNOFFICAL WEBSITE COPY

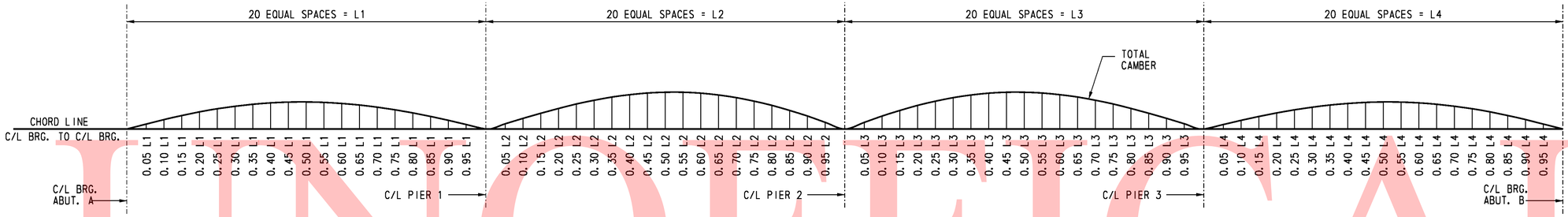

SCHEMATIC CAMBER DIAGRAM

CAMBER ORDINATES (IN)

GIRDER NO.	POINT	C/L BRG. ABUT. A	SPAN 1 0.05L	0.10L	0.15L	0.20L	0.25L	0.30L	0.35L	0.40L	0.45L	0.50L	0.55L	0.60L	0.65L	0.70L	0.75L	0.80L	0.85L	0.90L	0.95L	C/L PIER 1
G1	DLS	0	1/16	1/8	3/16	3/16	1/4	1/4	3/16	3/16	3/16	3/16	1/4	1/4	1/4	3/16	1/8	1/8	1/8	1/8	0	0
	DLC	0	3/16	1/16	3/16	11/16	15/16	15/16	1	1 1/16	1 1/16	1	15/16	7/8	3/4	11/16	9/16	3/8	1/4	3/16	1/16	0
	SDL	0	1/16	1/8	1/8	3/16	1/4	1/4	1/4	3/16	3/16	1/4	1/4	1/4	3/16	3/16	1/8	1/8	1/16	1/16	0	0
	TDC	0	3/16	5/8	7/8	1 1/8	1 5/16	1 1/16	1 3/16	1 5/8	1 5/8	1 9/16	1 1/2	1 3/8	1 3/16	1 1/16	15/16	5/8	7/16	1/4	1/8	0
	VCO	0	0	1/16	1/16	1/16	1/16	0	0	-1/16	-1/16	0	1/16	1/16	1/8	1/8	1/8	1/8	1/16	1/16	1/16	0
	TDC+VCO	0	3/8	11/16	15/16	1 3/16	1 5/16	1 1/16	1 3/16	1 9/16	1 9/16	1 9/16	1 9/16	1 9/16	1 3/16	1 1/8	15/16	3/4	7/16	3/8	1/16	0
G2	DLS	0	1/16	1/8	3/16	3/16	1/4	1/4	5/16	3/16	3/16	3/16	3/16	1/4	1/4	3/16	3/16	1/8	1/16	1/16	0	0
	DLC	0	1/4	7/16	5/8	3/4	15/16	1	1 1/16	1 1/8	1 1/8	1 1/8	1 1/16	15/16	7/8	3/4	9/16	7/16	3/16	3/16	1/8	0
	SDL	0	1/16	1/16	1/8	1/8	3/16	3/16	3/16	3/16	3/16	3/16	3/16	3/16	3/16	1/8	1/8	1/16	1/16	1/16	0	0
	TDC	0	3/16	5/8	15/16	1 1/8	1 5/16	1 1/2	1 3/16	1 11/16	1 11/16	1 5/8	1 9/16	1 3/8	1 1/4	1 1/16	7/8	5/8	7/16	1/4	1/8	0
	VCO	0	1/16	3/16	1/4	5/16	3/8	3/8	7/16	7/16	1/2	1/2	1/2	7/16	7/16	7/16	3/8	3/16	1/4	3/16	1/16	0
	TDC+VCO	0	7/16	15/16	1 3/16	1 7/16	1 11/16	1 7/8	2	2 1/8	2 1/8	2 1/8	2	1 7/8	1 11/16	1 1/2	1 1/4	15/16	11/16	7/16	1/4	0
G3	DLS	0	1/16	1/8	3/16	1/4	1/4	5/16	5/16	3/16	3/16	3/16	3/16	1/4	1/4	3/16	3/16	1/8	1/16	1/16	0	0
	DLC	0	1/4	7/16	11/16	15/16	15/16	1 1/16	1 1/8	1 3/16	1 3/16	1 3/16	1 1/8	1	7/8	3/4	5/8	7/16	5/16	3/16	1/8	0
	SDL	0	1/16	1/16	1/4	3/16	7/16	3/16	1/8	3/16	7/16	3/16	3/16	3/16	1/8	1/8	1/8	1/16	1/16	1/16	0	0
	TDC	0	3/16	11/16	1 1/8	1 3/16	1 11/16	1 1/2	1 3/16	1 11/16	1 3/4	1 11/16	1 3/16	1 1/16	1 1/4	1 1/8	7/8	5/8	7/16	5/16	1/8	0
	VCO	0	3/16	3/16	1/16	3/16	11/16	15/16	7/8	1	1	1	15/16	7/8	13/16	11/16	5/8	1/2	3/8	1/4	1/8	0
	TDC+VCO	0	1/2	1	1 5/16	2 1/8	2 3/8	2 3/16	2 1/2	2 11/16	2 3/4	2 5/8	2 1/2	2 5/16	2 1/16	1 15/16	1 1/2	1 1/8	7/8	5/16	1/8	0
G4	DLS	0	1/16	1/8	3/16	1/4	1/4	3/16	3/16	3/16	3/16	3/16	3/16	1/4	1/4	3/16	3/16	1/8	1/16	1/16	0	0
	DLC	0	1/4	1/2	11/16	15/16	1	1 1/16	1 3/16	1 1/4	1 1/4	1 3/16	1 1/8	1	15/16	15/16	5/8	7/16	3/16	3/16	1/8	0
	SDL	0	1/16	1/16	1/8	3/16	3/16	3/16	1/4	1/4	1/4	1/4	1/4	3/16	3/16	3/16	1/8	1/8	1/16	1/16	0	0
	TDC	0	3/16	11/16	1	1 1/4	1 7/16	1 5/8	1 11/16	1 13/16	1 15/16	1 3/4	1 11/16	1 1/2	1 3/16	1 1/8	15/16	11/16	1/2	3/16	1/8	0
	VCO	0	1/4	7/16	5/8	15/16	1	1 3/16	1 3/16	1 1/2	1 9/16	1 7/16	1 3/8	1 1/4	1 1/8	1	7/8	11/16	9/16	3/8	1/8	0
	TDC+VCO	0	9/16	1 1/8	1 5/8	2 1/16	2 7/16	2 3/4	3 1/16	3 1/4	3 3/8	3 1/4	3	2 3/4	2 1/2	2 1/8	1 15/16	1 3/8	1	11/16	3/8	0
G5	DLS	0	1/16	1/8	3/16	1/4	1/4	3/16	3/16	3/16	3/16	3/16	3/16	1/4	1/4	3/16	3/16	1/8	1/16	1/16	0	0
	DLC	0	1/4	1/2	11/16	7/8	1	1 1/8	1 3/16	1 1/4	1 1/4	1 3/16	1 1/8	1 1/16	15/16	15/16	5/8	1/2	3/16	3/16	1/8	0
	SDL	0	1/16	1/8	3/16	1/4	1/4	3/16	3/16	3/16	3/16	3/16	3/16	3/16	1/4	3/16	3/16	1/8	1/16	1/16	0	0
	TDC	0	3/16	3/4	1 1/16	1 3/16	1 5/16	1 11/16	1 13/16	1 15/16	1 15/16	1 7/8	1 3/4	1 5/8	1 1/16	1 1/4	1	3/4	1/2	3/16	1/8	0
	VCO	0	3/16	9/16	15/16	1 1/16	1 3/16	1 3/16	1 15/16	2	2 1/16	1 15/16	1 11/16	1 5/8	1 1/2	1 3/16	1 1/8	7/8	11/16	1/2	1/4	0
	TDC+VCO	0	11/16	1 5/16	1 7/8	2 3/8	2 7/8	3 1/4	3 5/8	3 15/16	4	3 11/16	3 9/16	3 1/4	2 7/8	2 1/2	2 1/8	1 5/8	1 3/16	15/16	3/8	0

GIRDER NO.	POINT	SPAN 2 0.05L	0.10L	0.15L	0.20L	0.25L	0.30L	0.35L	0.40L	0.45L	0.50L	0.55L	0.60L	0.65L	0.70L	0.75L	0.80L	0.85L	0.90L	0.95L	C/L PIER 2
G1	DLS	0	0	0	0	1/16	1/16	1/16	1/16	1/16	1/16	1/16	1/16	1/16	1/16	0	0	0	0	0	0
	DLC	0	0	0	1/16	1/8	3/16	1/4	5/16	3/8	3/8	3/8	3/16	5/16	3/16	1/8	1/16	1/16	0	0	0
	SDL	0	0	0	1/16	1/16	1/16	1/8	1/8	1/8	1/8	1/8	1/8	1/8	1/16	1/16	1/16	0	0	0	0
	TDC	0	0	1/16	1/8	1/4	3/8	7/16	9/16	9/16	5/8	9/16	9/16	7/16	3/8	1/4	1/8	1/16	0	0	0
	VCO	1/8	1/4	3/16	7/16	1/2	9/16	9/16	5/8	5/8	5/8	5/8	5/8	9/16	9/16	1/2	7/16	5/16	1/4	1/8	0
	TDC+VCO	1/8	3/16	3/8	9/16	3/4	7/8	1 1/16	1 3/16	1 1/4	1 1/4	1 1/8	1 1/16	7/8	3/4	9/16	3/8	3/16	1/4	1/8	0
G2	DLS	0	0	0	1/16	1/16	1/16	1/16	1/16	1/16	1/16	1/16	1/16	1/16	1/16	1/16	0	0	0	0	0
	DLC	0	0	0	1/16	3/16	1/4	5/16	3/8	3/8	7/16	3/8	3/8	5/16	1/4	3/16	1/16	1/16	0	0	0
	SDL	0	0	0	0	0	1/16	1/16	1/16	1/16	1/16	1/16	1/16	1/16	1/16	0	0	0	0	0	0
	TDC	0	0	0	1/16	1/4	3/8	7/16	1/2	9/16	5/8	9/16	1/2	7/16	3/16	1/4	1/8	1/16	0	0	0
	VCO	1/8	1/4	5/16	7/16	1/2	9/16	9/16	5/8	5/8	5/8	5/8	5/8	9/16	9/16	1/2	7/16	5/16	1/4	1/8	0
	TDC+VCO	1/8	1/4	5/16	7/16	1/2	9/16	9/16	5/8	11/16	1 1/8	1 1/4	1 7/16	1 1/8	1	7/8	11/16	7/16	3/8	1/8	0
G3	DLS	0	0	0	1/16	1/16	1/16	1/8	1/8	1/8	1/8	1/8	1/16	1/16	1/16	1/16	0	0	0	0	0
	DLC	0	0	0	1/16	1/8	1/4	5/16	3/8	3/8	7/16	3/8	3/8	5/16	1/4	3/16	1/16	1/16	0	0	0
	SDL	0	0	0	0	0	0	1/16	1/16	1/16	1/16	1/16	1/16	0	0	0	0	0	0	0	0
	TDC	0	0	-1/16	0	1/16	1/4	5/16	7/16	1/2	9/16	9/16	1/2	7/16	5/16	1/4	1/8	1/16	0	0	0
	VCO	1/8	1/4	5/16	7/16	1/2	9/16	9/16	5/8	5/8	5/8	5/8	5/8	9/16	9/16	1/2	7/16	5/16	1/4	1/8	0
	TDC+VCO	1/8	3/16	3/8	9/16	11/16	7/8	1	1 1/8	1 3/16	1 1/4	1 7/16	1 1/8	1	7/8	11/16	1/2	3/8	3/16	1/8	0
G4	DLS	0	0	0	1/16	1/16	1/16	1/8	1/8	1/8	1/8	1/8	1/16	1/16	1/16	1/16	0	0	0	0	0
	DLC	0	0	0	1/16	1/8	1/4	5/16	3/8	3/8	3/8	3/8	3/8	5/16	1/4	1/8	1/16	0	0	0	0
	SDL	0	0	0	0	0	1/16	1/16	1/16	1/16	1/16	1/16	1/16	1/16	1/16	0	0	0	0	0	0
	TDC	0	0	-1/16	0	1/16	1/4	5/16	7/16	1/2	9/16	5/8	9/16	7/16	3/16	1/4	1/8	1/16	0	0	0
	VCO	1/8	1/4	5/16	7/16	1/2	9/16	9/16	5/8	5/8	5/8	5/8	5/8	9/16	9/16	1/2	7/16	5/16	1/4	1/8	0
	TDC+VCO	1/8	3/16	3/8	9/16	11/16	7/8	1	1 1/8	1 3/16	1 1/4	1 7/16	1 1/8	1	7/8	11/16	1/2	3/8	3/16	1/8	0
G5	DLS	0	0	0	1/16	1/16	1/16	1/8	1/8	1/8	1/8	1/8	1/16	1/16	1/16	1/16	0	0	0	0	0
	DLC	0	0	-1/16	0	1/16	1/8	3/16	1/4	5/16	3/8	3/8	3/8	5/16	1/4	3/16	1/8	1/16	0	0	0
	SDL	0	0	0	0	1/16	1/16	1/16	1/8	1/8	1/8	1/8	1/8	1/8	1/16	1/16	1/16	0	0	0	0
	TDC	0	0	-1/16	0	1/16	1/4	3/16	7/16	1/2	9/16	5/8	9/16	7/16	3/16	1/4	1/8	1/16	0	0	0
	VCO	1/8	1/4	5/16	7/16	1/2	9/16	9/16	5/8	5/8	5/8	5/8	5/8	9/16	9/16	1/2	7/16	5/16	1/4	1/8	0
	TDC+VCO	1/8	3/16	3/8	9/16	11/16	7/8	1 1/16	1 3/16	1 1/4	1 1/4	1 3/16	1 1/16	7/8	3/4	9/16	3/8	3/16	1/8	1/8	0

LEGEND

DLS - DENOTES DEFLECTION DUE TO STRUCTURAL STEEL GIRDER.

DLC - DENOTES DEFLECTION DUE TO DECK SLAB, HAUNCH AND S.I.P. FORMS

SDL - DENOTES DEFLECTION DUE TO BARRIER

TDC - DENOTES TOTAL DEAD LOAD DEFLECTION AND CAMBER

VCO - DENOTES CAMBER FOR VERTICAL CURVE ORDINATE DUE TO ROADWAY PROFILE

TDC+VCO - DENOTES TOTAL CAMBER

ALL GIRDERS SHALL BE CAMBERED FOR DEAD LOAD DEFLECTION ORDINATES TO THE DIMENSIONS SHOWN ON THESE PLANS. THE CAMBER TOLERANCE IS NOTHING UNDER TO THREE QUARTERS (3/4) INCH OVER.

CROSS REFERENCE NOTES:

1. FOR GENERAL NOTES, SEE DWG. S2-2.
2. FOR VERTICAL CURVE DATA, SEE DWG. S2-1.
3. FOR GIRDER ELEVATION, SEE DWG. S2-36

UNOFFICAL WORKING COPY

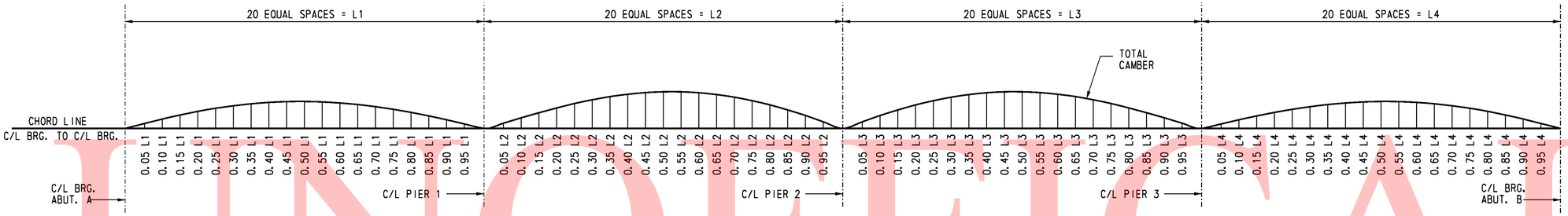

SCHEMATIC CAMBER DIAGRAM

CAMBER ORDINATES (IN)

GIRDER NO.	POINT	C/L PIER 2	SPAN 3 0.05L	0.10L	0.15L	0.20L	0.25L	0.30L	0.35L	0.40L	0.45L	0.50L	0.55L	0.60L	0.65L	0.70L	0.75L	0.80L	0.85L	0.90L	0.95L	C/L PIER 3	SPAN 4 0.05L	0.10L	0.15L	0.20L	0.25L	0.30L	0.35L	0.40L	0.45L	0.50L	0.55L	0.60L	0.65L	0.70L	0.75L	0.80L	0.85L	0.90L	0.95L	C/L BRG. ABUT. B
G1	DLS	0	1/16	1/16	1/8	1/4	5/16	3/8	3/8	7/16	7/16	7/16	7/16	7/16	3/8	5/16	1/4	5/16	1/8	1/16	1/16	0	0	0	1/16	1/16	1/8	1/8	3/16	1/4	1/4	5/16	5/16	5/16	5/16	5/16	5/16	1/4	1/4	5/16	1/8	1/16	0
	DLC	0	1/8	1/4	1/16	5/8	15/16	1	1 3/16	1 1/4	1 5/16	1 3/8	1 5/16	1 3/16	1 1/16	7/8	11/16	1/2	3/8	5/16	1/16	0	0	1/16	1/8	1/4	3/8	1/2	11/16	15/16	15/16	1	1 1/16	1 1/16	1 1/16	1	15/16	15/16	5/8	7/16	1/4	0
	SDL	0	1/16	1/16	1/8	3/16	1/4	1/4	5/16	3/8	3/8	3/8	3/8	5/16	5/16	1/4	5/16	1/8	1/8	1/16	0	0	0	0	1/16	1/16	1/8	1/8	3/16	1/4	1/4	5/16	5/16	5/16	5/16	5/16	1/4	1/4	3/16	1/8	1/16	0
	TDC	0	3/16	3/8	11/16	1	1 5/16	1 5/8	1 7/8	2 1/16	2 1/8	2 3/16	2 1/8	1 15/16	1 3/4	1 7/16	1 3/16	7/8	9/16	5/16	1/8	0	1/16	1/8	1/4	7/16	5/8	13/16	1 1/16	1 3/16	1 7/16	1 5/16	1 5/8	1 3/4	1 11/16	1 9/16	1 7/16	1 1/4	1	11/16	3/8	0
	VCO	0	3/16	3/16	1/16	9/16	11/16	3/4	13/16	7/8	7/8	7/8	7/8	7/8	13/16	3/4	11/16	9/16	7/16	5/16	3/16	0	1/8	3/16	3/16	3/8	7/16	1/2	9/16	9/16	9/16	5/8	9/16	9/16	9/16	1/2	7/16	3/8	5/16	3/16	1/8	0
	TDC+VCO	0	3/8	11/16	1 1/8	1 3/16	2	2 3/8	2 11/16	2 7/8	3	3 1/16	3	2 13/16	2 7/16	2 3/16	1 13/16	1 1/16	1	5/8	3/16	0	1/16	3/16	5/16	7/16	11/16	1 1/16	1 3/16	1 7/8	2 1/16	2 1/8	2 1/4	2 3/16	2 1/4	2 1/16	1 7/8	1 5/8	1 3/16	9/16	1/2	0
G2	DLS	0	1/16	1/16	1/8	1/4	5/16	3/8	3/8	7/16	7/16	7/16	7/16	7/16	3/8	5/16	1/4	5/16	3/8	11/16	5/16	0	0	0	1/16	1/16	1/8	3/16	3/16	1/4	5/16	3/16	5/16	5/16	5/16	5/16	5/16	3/16	1/4	3/16	1/8	1/16	0
	DLC	0	1/8	1/4	1/16	11/16	7/8	1 1/8	1 1/4	1 3/8	1 1/16	1 1/16	1 3/16	1 5/16	1 1/8	15/16	3/4	9/16	3/8	5/16	1/8	0	1/16	1/16	3/16	5/16	7/16	9/16	11/16	7/8	1	1 1/16	1 1/8	1 3/16	1 3/16	1 1/8	1	7/8	11/16	1/2	1/4	0
	SDL	0	1/16	1/16	1/16	1/8	3/16	1/4	1/4	1/4	5/16	5/16	5/16	1/4	1/4	3/16	3/16	1/8	1/16	1/16	0	0	0	0	1/16	1/16	1/8	1/8	3/16	3/16	1/4	1/4	1/4	5/16	3/16	1/4	1/4	3/16	1/8	1/8	1/16	0
	TDC	0	3/16	3/8	11/16	1	1 3/8	1 11/16	1 15/16	2 1/16	2 3/16	2 3/16	2 1/8	2	1 3/4	1 7/16	1 3/16	7/8	13/16	7/8	7/16	0	1/16	1/8	1/4	7/16	5/8	13/16	1 1/16	1 3/16	1 1/2	1 9/16	1 11/16	1 3/4	1 3/4	1 5/8	1 1/2	1 1/4	1	3/4	3/8	0
	VCO	0	3/16	3/16	1/16	9/16	11/16	3/4	13/16	7/8	7/8	7/8	7/8	7/8	13/16	3/4	11/16	9/16	7/16	5/16	3/16	0	1/8	3/16	5/16	3/8	7/16	1/2	9/16	9/16	9/16	5/8	9/16	9/16	9/16	1/2	7/16	3/8	5/16	3/16	1/8	0
	TDC+VCO	0	3/8	3/4	1 1/8	1 3/16	2	2 1/16	2 11/16	2 15/16	3 1/16	3 1/16	3	2 13/16	2 7/16	2 3/16	1 13/16	1 1/16	1 1/4	1 1/16	5/16	0	1/16	3/16	5/16	7/16	11/16	1 1/16	1 3/16	1 5/8	1 7/8	2 1/16	2 1/16	2 1/4	2 1/16	2 1/8	1 13/16	1 5/8	1 3/16	9/16	1/2	0
G3	DLS	0	1/16	1/16	1/8	3/16	5/16	3/8	3/8	7/16	7/16	7/16	7/16	7/16	3/8	5/16	1/4	5/16	1/8	1/16	1/16	0	0	0	1/16	1/16	1/8	3/16	1/4	1/4	5/16	5/16	3/8	3/8	3/8	5/16	5/16	1/4	1/4	3/16	1/8	1/16	0
	DLC	0	1/8	1/4	1/2	11/16	15/16	1 1/8	1 5/16	1 7/16	1 1/2	1 1/2	1 1/16	1 3/8	1 3/16	1	15/16	9/16	3/8	5/16	1/8	0	1/16	1/16	3/16	5/16	7/16	9/16	3/4	15/16	1 1/16	1 1/8	1 3/16	1 1/4	1 1/4	1 1/8	1 1/16	7/8	3/4	1/2	1/4	0
	SDL	0	0	1/16	1/16	1/16	3/16	3/16	1/4	1/4	1/4	1/4	1/4	1/4	3/16	3/16	1/8	1/8	1/16	1/16	0	0	0	0	0	1/16	1/16	1/16	1/8	1/8	3/16	3/16	1/4	1/4	1/4	3/16	3/16	1/8	1/8	1/16	1/16	0
	TDC	0	3/16	7/16	11/16	1 1/16	1 3/8	1 11/16	1 15/16	2 1/16	2 1/4	2 1/4	2 3/16	2	1 3/4	1 1/2	1 3/16	7/8	9/16	5/16	1/8	0	1/16	1/8	1/4	7/16	5/8	7/8	1 1/16	1 3/16	1 1/2	1 5/8	1 3/4	1 13/16	1 3/4	1 11/16	1 1/2	1 5/16	1 1/16	3/4	3/8	0
	VCO	0	3/16	3/16	1/16	9/16	11/16	3/4	13/16	7/8	7/8	7/8	7/8	7/8	13/16	3/4	11/16	9/16	7/16	5/16	3/16	0	1/8	3/16	5/16	3/8	7/16	1/2	9/16	9/16	9/16	5/8	9/16	9/16	9/16	1/2	7/16	3/8	5/16	3/16	1/8	0
	TDC+VCO	0	3/8	3/4	1 1/8	1 5/8	2 1/16	2 7/16	2 3/4	3	3 1/16	3 1/8	3 1/16	2 7/8	2 5/16	2 3/16	1 13/16	1 1/16	1	5/8	3/16	0	1/16	3/16	5/16	7/16	11/16	1 1/8	1 5/8	1 13/16	2 1/8	2 1/4	2 3/16	2 3/8	2 3/16	2 3/16	1 13/16	1 11/16	1 3/8	9/16	1/2	0
G4	DLS	0	1/16	1/16	1/8	3/16	1/4	3/8	3/8	7/16	7/16	7/16	7/16	7/16	3/8	5/16	1/4	5/16	1/8	1/16	0	0	0	0	1/16	1/16	1/8	3/16	1/4	5/16	3/16	3/8	3/8	3/8	3/8	5/16	5/16	1/4	1/4	3/16	1/8	1/16	0
	DLC	0	1/8	3/16	1/2	3/4	15/16	1 3/16	1 3/8	1 7/16	1 1/2	1 3/16	1 1/2	1 3/8	1 3/16	1	15/16	9/16	3/8	5/16	1/8	0	1/16	1/16	3/16	5/16	7/16	9/16	3/4	15/16	1 1/16	1 1/8	1 3/16	1 1/4	1 1/4	1 3/16	1 1/16	15/16	3/4	1/2	1/4	0
	SDL	0	0	1/16	1/8	1/8	3/16	1/4	5/16	5/16	5/16	5/16	5/16	5/16	1/4	3/16	3/16	1/8	1/16	1/16	0	0	0	0	1/16	1/16	1/16	1/8	1/8	3/16	3/16	1/4	1/4	1/4	1/4	1/4	5/16	5/16	1/8	1/8	1/16	0
	TDC	0	3/16	7/16	3/4	1 1/16	1 7/16	1 3/4	2	2 3/16	2 5/16	2 3/16	2 1/4	2 1/16	1 13/16	1 1/2	1 1/4	7/8	5/8	5/16	1/8	0	1/16	1/8	1/4	7/16	11/16	7/8	1 1/8	1 7/16	1 5/8	1 11/16	1 13/16	1 7/8	1 7/8	1 3/4	1 5/16	1 3/16	3/4	3/8	0
	VCO	0	3/16	3/16	1/16	9/16	11/16	3/4	13/16	7/8	7/8	7/8	7/8	7/8	13/16	3/4	11/16	9/16	7/16	5/16	3/16	0	1/8	3/16	5/16	3/8	7/16	1/2	9/16	9/16	9/16	5/8	9/16	9/16	9/16	1/2	7/16	3/8	5/16	3/16	1/8	0
	TDC+VCO	0	3/8	3/4	1 1/16	1 5/8	2 1/16	2 1/2	2 13/16	3 1/16	3 3/16	3 1/16	3 1/8	2 13/16	2 5/8	2 1/4	1 7/8	1 1/16	1 1/16	5/8	3/16	0	1/16	3/16	5/16	7/8	1 1/8	1 1/8	1 13/16	2	2 3/16	2 3/16	2 7/8	2 1/16	2 3/8	2 1/4	2	1 3/4	1 3/8	1	1/2	0
G5	DLS	0	1/16	1/16	1/8	3/16	1/4	5/16	3/8	7/16	7/16	7/16	7/16	7/16	3/8	5/16	1/4	5/16	1/8	1/16	0	0	0	0	1/16	1/16	1/8	3/16	1/4	5/16	3/16	3/8	3/8	3/8	3/8	5/16	5/16	1/4	1/4	3/16	1/8	1/16	0
	DLC	0	1/8	3/16	1/2	3/4	15/16	1 3/16	1 3/8	1 1/2	1 9/16	1 3/16	1 1/2	1 3/8	1 1/4	1	15/16	9/16	3/8	5/16	1/8	0	1/16	1/16	3/16	5/16	7/16	9/16	3/4	15/16	1 1/16	1 1/8	1 3/16	1 1/4	1 1/4	1 3/16	1 1/16	15/16	3/4	1/2	1/4	0
	SDL	0	1/16	1/16	1/8	3/16	1/4	5/16	5/16	7/16	7/16	7/16	7/16	3/8	3/8	5/16	1/4	5/16	1/8	1/16	0	0	0	0	1/16	1/8	1/8	3/16	1/4	1/4	5/16	5/16	3/8	3/8	3/8	5/16	5/16	1/4	5/16	1/8	1/16	0
	TDC	0	1/4	7/16	3/4	1 1/8	1 1/2	1 7/8	2 1/16	2 5/16	2 7/16	2 7/16	2 3/8	2 3/16	1 13/16	1 5/8	1 1/4	15/16	5/8	5/16	3/16	0	1/16	1/8	1/4	1/2	3/4	15/16	1 1/4	1 1/2	1 11/16	1 15/16	1 15/16	2	2	1 7/8	1 11/16	1 7/16	1 3/16	15/16	7/16	0
	VCO	0	3/16	3/16	1/16	9/16	11/16	3/4	13/16	7/8	7/8	7/8	7/8	7/8	13/16	3/4	11/16	9/16	7/16	5/16	3/16	0	1/8	3/16	5/16	3/8	7/16	1/2	9/16	9/16	9/16	5/8	9/16	9/16	9/16	1/2	7/16	3/8	5/16	3/16	1/8	0
	TDC+VCO	0	3/8	3/4	1 1/16	1 11/16	2 5/16	2 5/8	2 13/16	3 1/16	3 3/16	3 1/4	3	2 3/4	2 5/16	1 13/16	1 1/2	1 1/16	5/8	5/16	3/16	0	1/16	3/16	5/16	7/8	1 1/8	1 1/16	1 3/4	2 1/16	2 5/16	2 1/16	2 1/2	2 3/16	2 1/2	2 5/8	2 1/8	1 13/16	1 1/2	1 1/16	9/16	0

LEGEND

DLS - DENOTES DEFLECTION DUE TO STRUCTURAL STEEL GIRDER.

DLC - DENOTES DEFLECTION DUE TO DECK SLAB, HAUNCH AND S.I.P. FORMS

SDL - DENOTES DEFLECTION DUE TO BARRIER

TDC - DENOTES TOTAL DEAD LOAD DEFLECTION AND CAMBER

VCO - DENOTES CAMBER FOR VERTICAL CURVE ORDINATE DUE TO ROADWAY PROFILE

TDC+VCO - DENOTES TOTAL CAMBER

ALL GIRDERS SHALL BE CAMBERED FOR DEAD LOAD DEFLECTION ORDINATES TO THE DIMENSIONS SHOWN ON THESE PLANS. THE CAMBER TOLERANCE IS NOTHING UNDER TO THREE QUARTERS (3/4) INCH OVER.

CROSS REFERENCE NOTES:

1. FOR GENERAL NOTES, SEE DWG. S2-2.
2. FOR VERTICAL CURVE DATA, SEE DWG. S2-1.
3. FOR GIRDER ELEVATION, SEE DWG. S2-36.

UNOFFICAL
WITHDRAWN
COPY

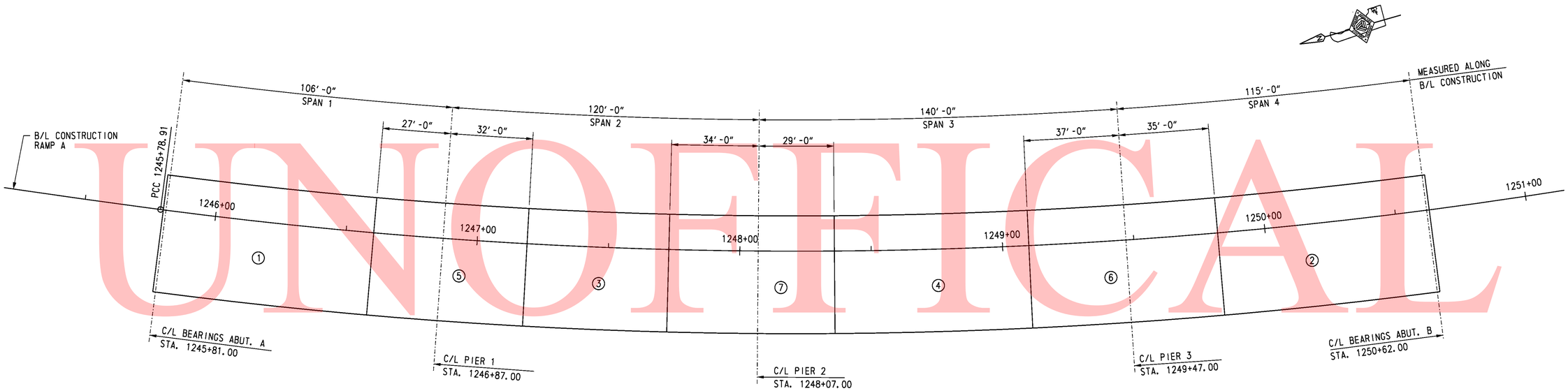

BRIDGE DECK POURING SEQUENCE

SCALE: 1" = 20'-0"

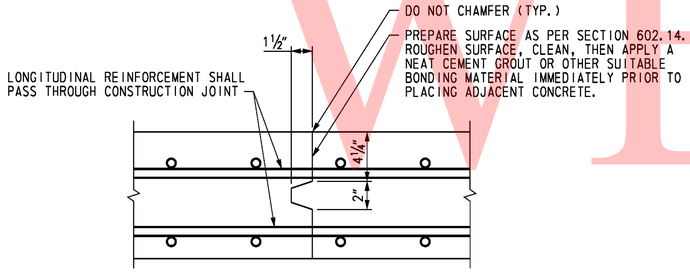

BRIDGE DECK CONSTRUCTION JOINT

NOT TO SCALE

NOTE:

THE POURING SEQUENCE FOR THE BRIDGE DECK SLAB SHALL BE MADE IN THE NUMBERED ORDER INDICATED. THERE MUST BE AT LEAST FORTY (40) HOURS BETWEEN THE COMPLETION OF ONE NUMBERED POUR AND THE START OF THE NEXT NUMBERED POUR, EXCEPT THERE MAY BE SIXTEEN (16) HOURS BETWEEN POURS NUMBERED 5, 6, AND 7.

AS AN ALTERNATE, CONTRACTOR MAY UTILIZE TWO CREWS AND TWO SETS OF EQUIPMENT TO CONSTRUCT POURS NUMBER 1 AND 2 SIMULTANEOUSLY. SIMILARLY, POURS NUMBER 3 AND 4 MAY BE CONSTRUCTED SIMULTANEOUSLY. POURS 5 AND 6 MAY ALSO BE CONSTRUCTED SIMULTANEOUSLY.

CROSS REFERENCE NOTES:

1. FOR GENERAL NOTES, SEE DWG. S2-2.
2. FOR TYPICAL SECTION, SEE DWG. S2-3.

UNOFFICAL WEBSITE COPY

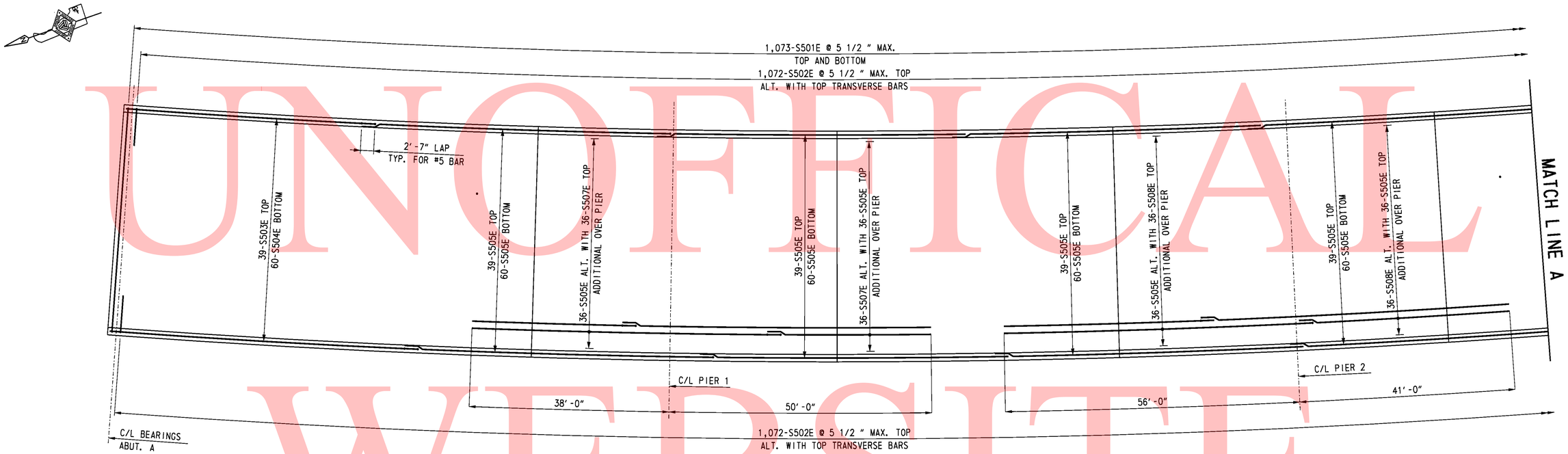

BRIDGE DECK REINFORCEMENT PLAN

SCALE: 1" = 10'-0"

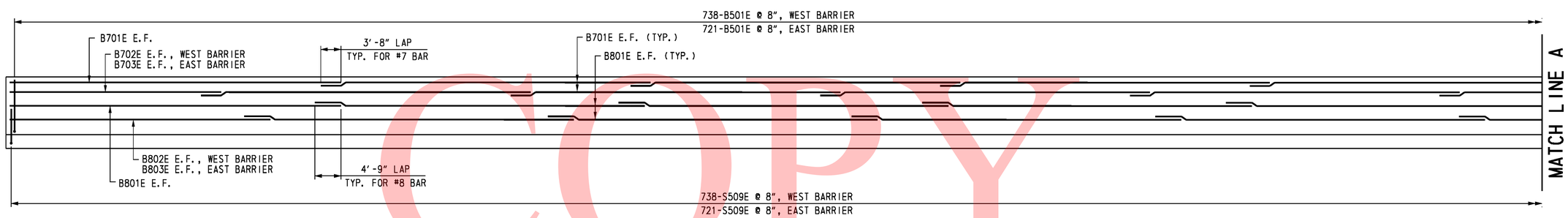

ELEVATION - DECK AND BARRIER REINFORCEMENT

NOT TO SCALE

CROSS REFERENCE NOTES:

1. FOR GENERAL NOTES, SEE DWG. S2-2.
2. FOR TYPICAL SECTION, SEE DWG. S2-3.
3. FOR TYPICAL DECK REINFORCEMENT SECTION, SEE DWG. S2-45.
4. FOR REINFORCING BAR LIST, SEE DWG. S2-46.

UNOFFICAL WEBSITE COPY

DELAWARE DEPARTMENT OF TRANSPORTATION	ADDENDUMS / REVISIONS	SR1 / I-95 INTERCHANGE	CONTRACT 28-090-03	BRIDGE NO. 1-716C	RAMP A OVER SR 7	SHEET NO. S2-43
			COUNTY NEW CASTLE	DESIGNED BY: R. F. KIRCHNER	BRIDGE DECK AND BARRIER REINFORCEMENT 1	296
				CHECKED BY: C. J. LOGAN		TOTAL SHTS. 803

10/28/2010 O:\20832687-XM\CAD\Bridge\BR-S2\dk02_BR-S2_sr1.dgn untitled

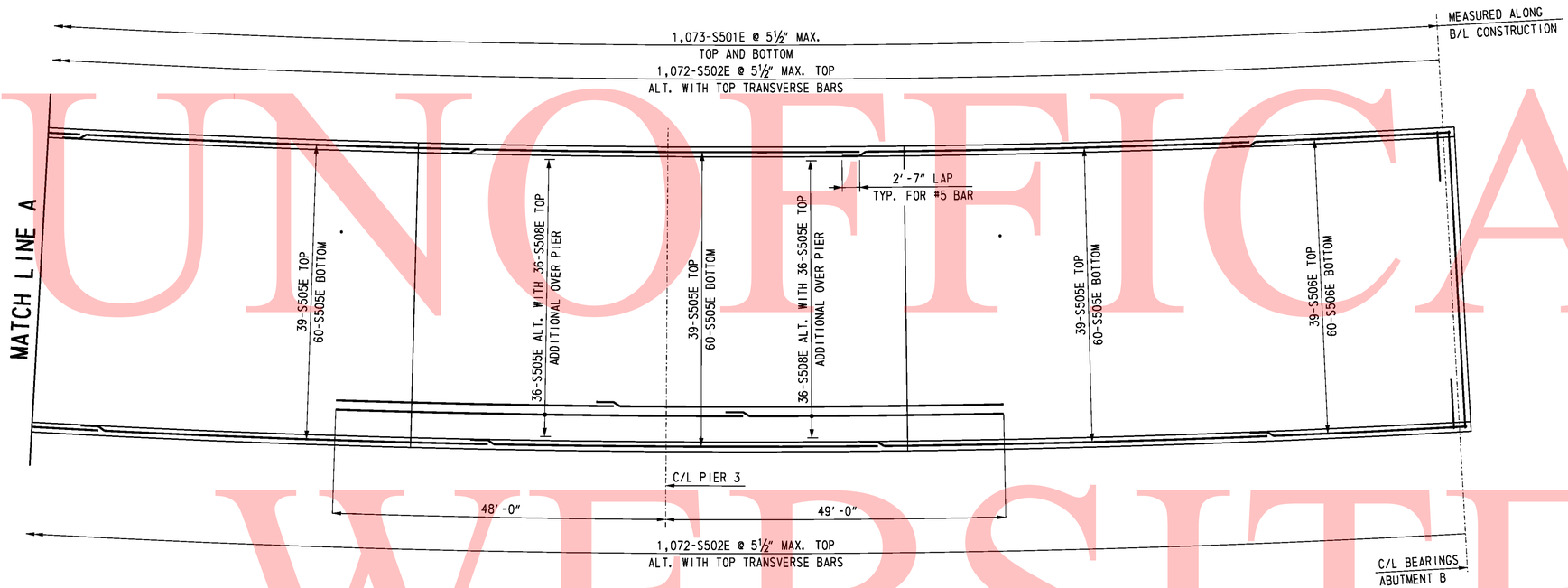

BRIDGE DECK REINFORCEMENT PLAN

SCALE: 1" = 30'-0"

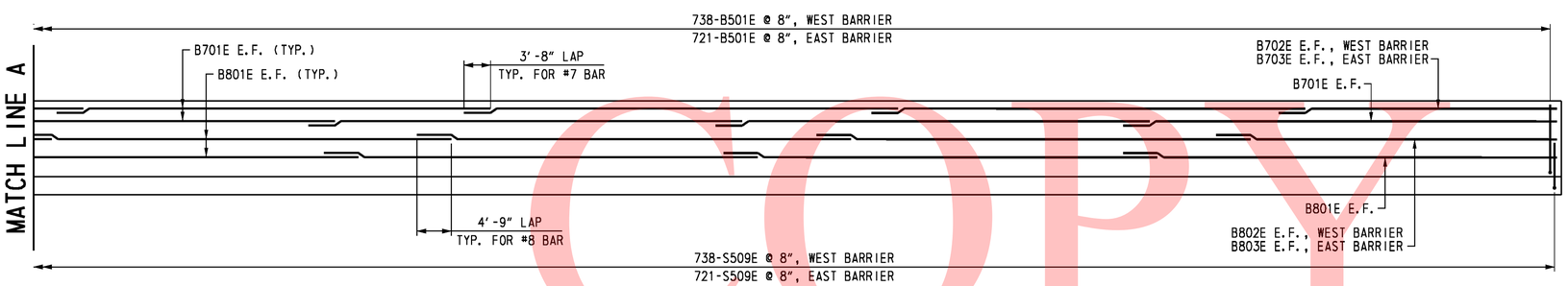

ELEVATION - DECK AND BARRIER REINFORCEMENT

SCALE: 1" = 30'-0"

CROSS REFERENCE NOTES:

1. FOR GENERAL NOTES, SEE DWG. S2-2.
2. FOR TYPICAL SECTION, SEE DWG. S2-3.
3. FOR TYPICAL DECK REINFORCEMENT SECTION, SEE DWG. S2-45.
4. FOR REINFORCING BAR LIST, SEE DWG. S2-46.

UNOFFICAL WEBSITE COPY

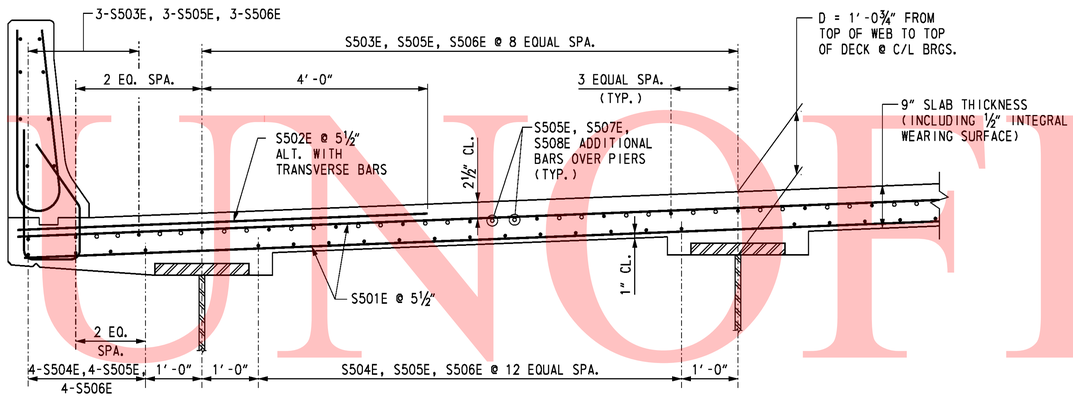

TYPICAL DECK REINFORCEMENT SECTION

SCALE: ¾" = 1'-0"

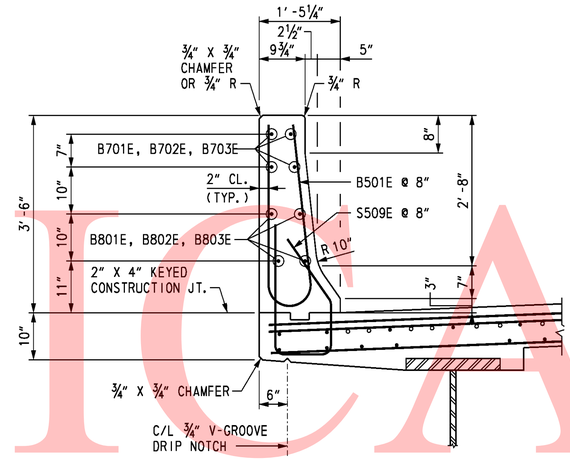

TYPICAL BARRIER REINFORCEMENT SECTION

SCALE: ¾" = 1'-0"

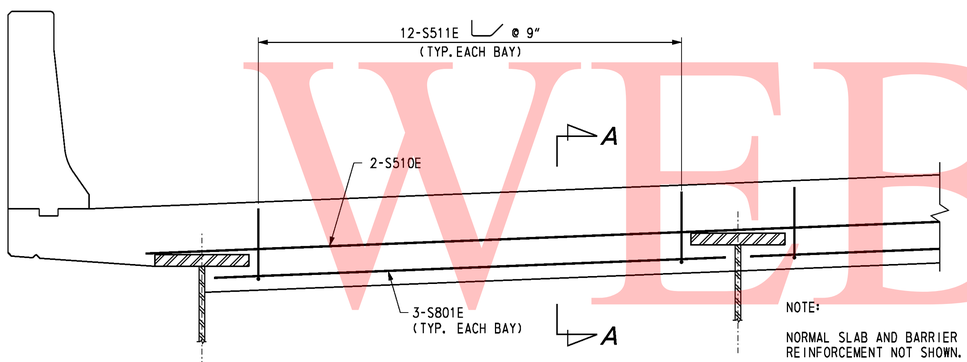

TYPICAL CONCRETE END HAUNCH SECTION

SCALE: ¾" = 1'-0"

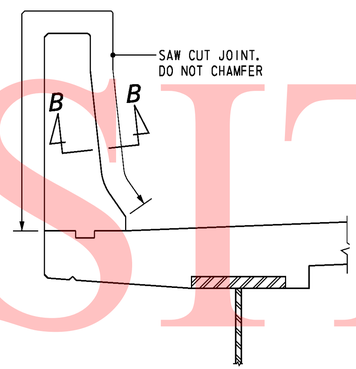

BARRIER CONTROL JOINT DETAIL

SCALE: ¾" = 1'-0"

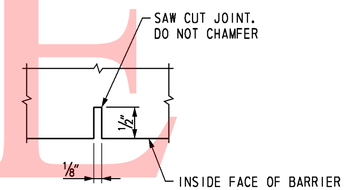

SECTION B-B

NOT TO SCALE

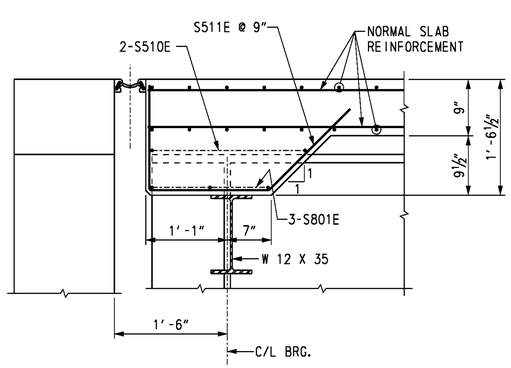

SECTION A-A

SCALE: 1" = 1'-0"

NOTES:

1. LONGITUDINAL SLAB REINFORCEMENT IS SET TO PASS THROUGH TRANSVERSE BARRIER BARS AS SHOWN.
2. ALL LONGITUDINAL BARRIER BARS SHALL BE PLACED CONTINUOUSLY IN BARRIER, LAPPING AS NECESSARY. BARRIER IS PLACED CONTINUOUSLY.
3. FRONT FACE OF BARRIER DIMENSIONED FROM PLUMB LINE.
4. SAW CUT CONTROL JOINT THE SAME DAY THAT CONCRETE IS POURED.

CROSS REFERENCE NOTES:

1. FOR GENERAL NOTES, SEE DWG. S2-2.
2. FOR REINFORCING BAR LIST, SEE DWG. S2-46.

UNOFFICIAL WEBSITE COPY

REINFORCING BAR LIST

BRIDGE DECK SLAB AND BARRIER

MARK	LENGTH	NO. BARS	TYPE	A	B	C	D	E	F	G	H	K	O	R	REMARKS
S501E	44′-6″	2,146	STR.												
S502E	7′-4″	2,144	STR.												
S503E	48′-6″ TO 60′-0″	39	STR.												△ = 0′-3⅝″
S504E	48′-6″ TO 60′-0″	60	STR.												△ = 0′-2⅜″
S505E	60′-0″	909	STR.												
S506E	32′-6″	99	STR.												
S507E	30′-7″	72	STR.												
S508E	39′-7″	144	STR.												
S509E	6′-3¾″	1,459	16	2′-8″	1′-1¼″	10½″	1′-8″				11¾″	1′-4½″			
S510E	40′-0″	4	STR.												
S511E	4′-0″	96	4	1′-2″	1′-5″	1′-5″					1′-0″	1′-0″			
S801E	9′-1″	24	STR.												
B501E	6′-8¼″	1,459	H1		2′-10″	1′-0¼″	2′-10″				0′-5″			4¼″	
B701E	60′-0″	64	STR.												
B702E	41′-2″	4	STR.												
B703E	29-6″	4	STR.												
B801E	60′-0″	64	STR.												
B802E	49′-8″	4	STR.												
B803E	38′-0″	4	STR.												

BENDING DIAGRAMS

ALL DIMENSIONS ARE FROM OUT TO OUT.

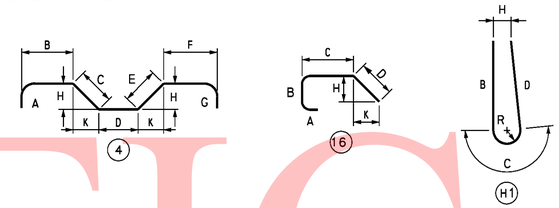

UNOFFICAL WEBSITE COPY

DELAWARE DEPARTMENT OF TRANSPORTATION

ADDENDUMS / REVISIONS

SR1 / I-95 INTERCHANGE

CONTRACT	BRIDGE NO.	1-716C
28-090-03	DESIGNED BY: R. F. KIRCHNER	
COUNTY		
NEW CASTLE	CHECKED BY: C. J. LOGAN	

RAMP A OVER SR 7

BRIDGE DECK AND BARRIER REINFORCING BAR LIST

SHEET NO.	TOTAL SHTS.
S2-46	
299	
803	

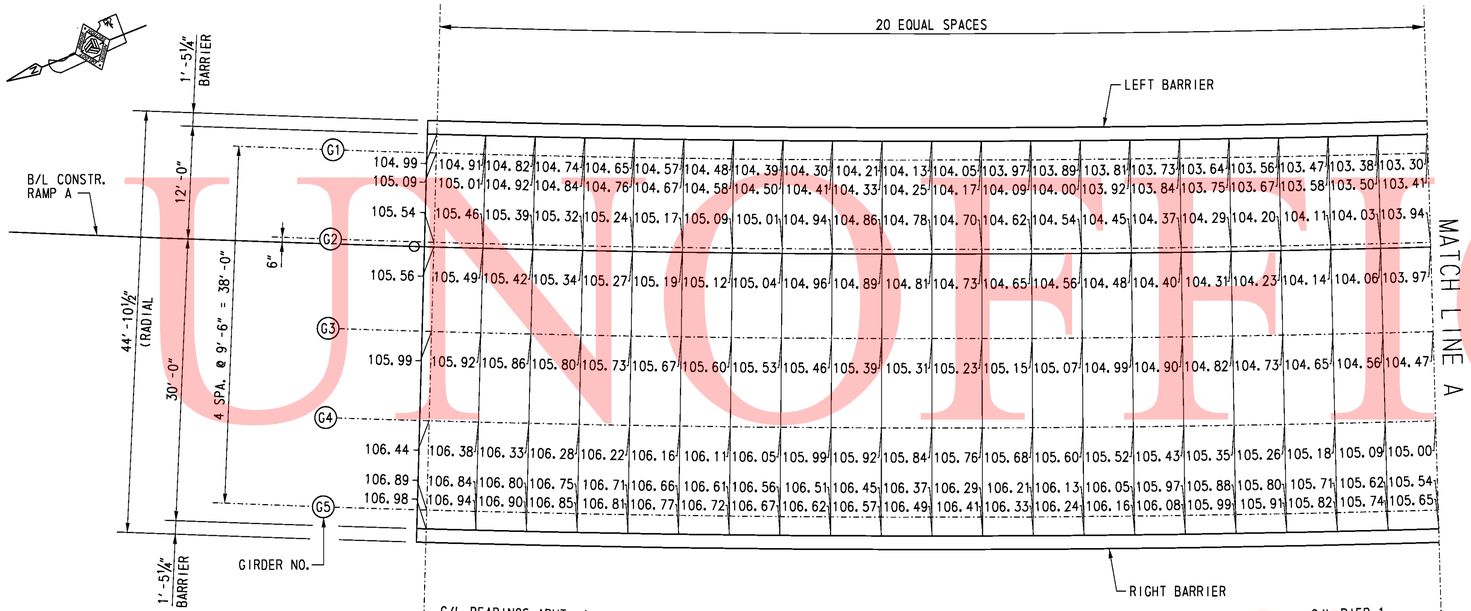

FINISHED BRIDGE DECK ELEVATIONS

SCALE: ⅛" = 1'-0"

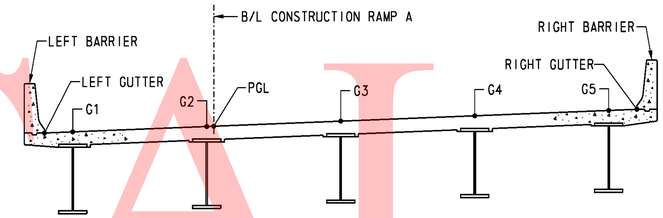

TYPICAL SECTION - RAMP A OVER SR 7

NOT TO SCALE

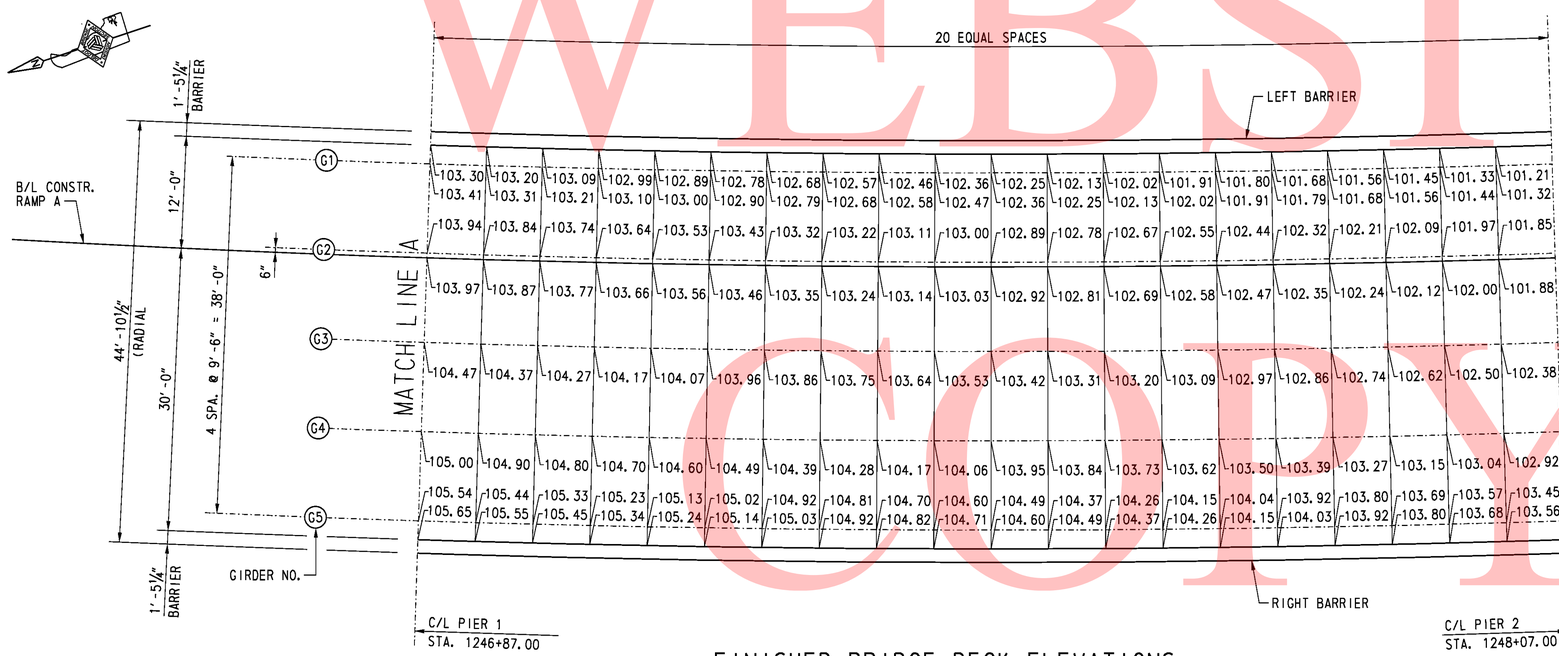

FINISHED BRIDGE DECK ELEVATIONS

SCALE: ⅛" = 1'-0"

NOTE:

THE FINISHED BRIDGE DECK ELEVATIONS SHOWN ARE TO TOP OF CONCRETE DECK.

CROSS REFERENCE NOTES:

1. FOR VERTICAL CURVE DATA, SEE DWG. S2-1.
2. FOR CROSS-SLOPE TRANSITIONS, SEE DWG. S2-3.
3. FOR GIRDER ELEVATION, SEE DWG. S2-36.

UNOFFICIAL WEBSITE COPY

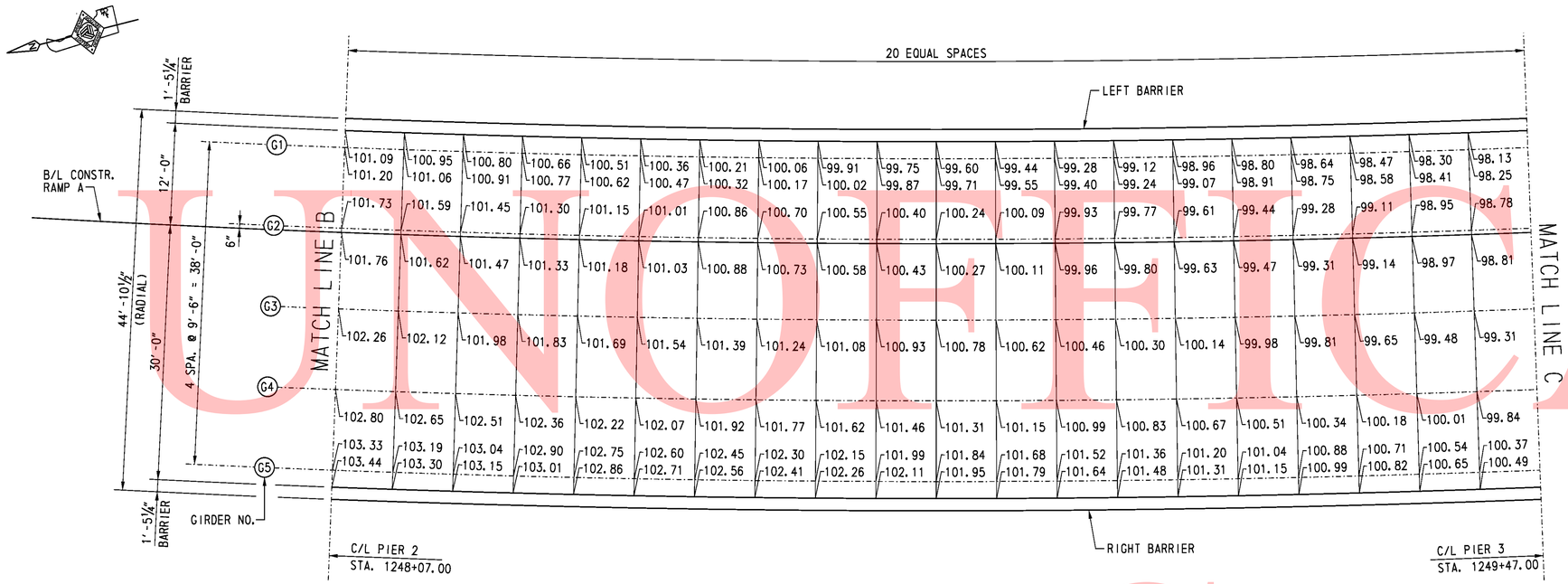

FINISHED BRIDGE DECK ELEVATIONS

SCALE: ⅛" = 1'-0"

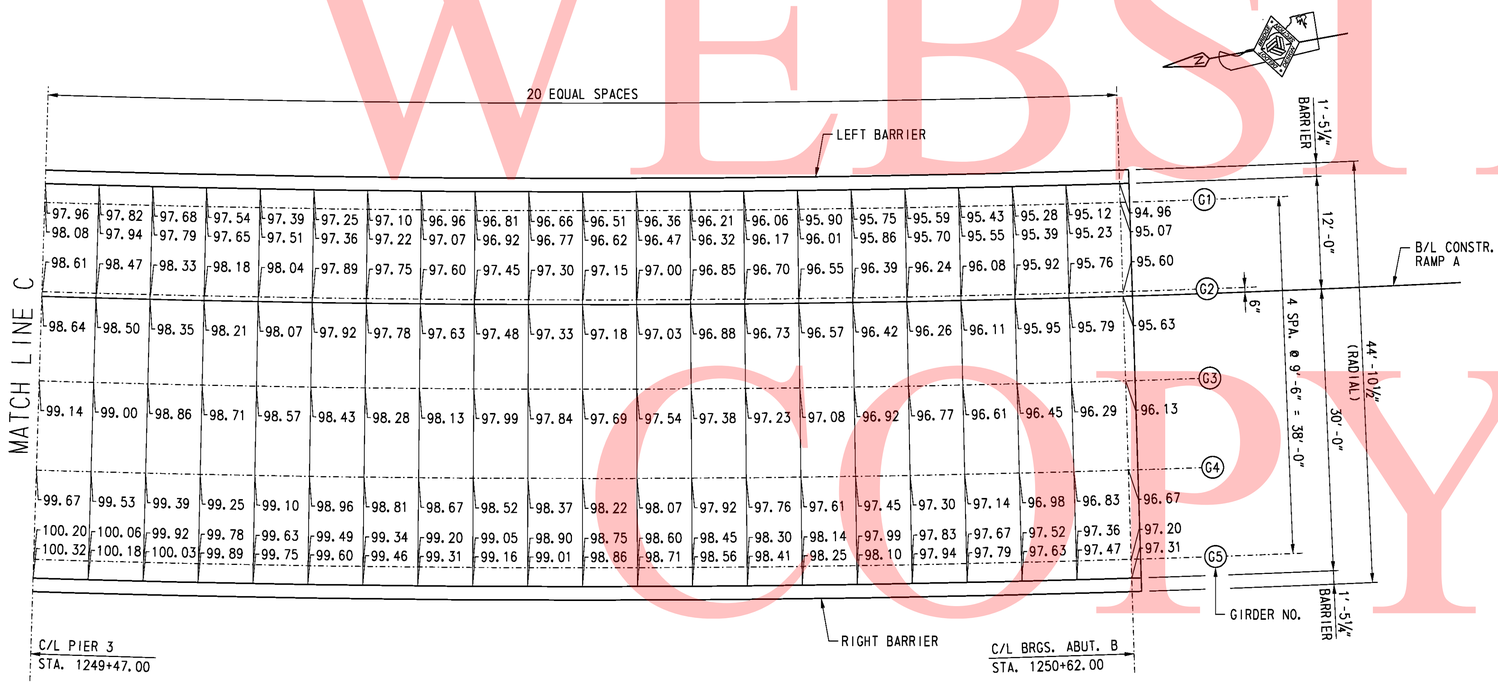

FINISHED BRIDGE DECK ELEVATIONS

SCALE: ⅛" = 1'-0"

NOTE:

THE FINISHED BRIDGE DECK ELEVATIONS SHOWN ARE TO TOP OF CONCRETE DECK.

CROSS REFERENCE NOTES:

1. FOR VERTICAL CURVE DATA, SEE DWG. S2-1.
2. FOR CROSS-SLOPE TRANSITIONS, SEE DWG. S2-3.
3. FOR GIRDER ELEVATION, SEE DWG. S2-36.
4. FOR TYPICAL SECTION, SEE DWG. S2-47.

UNOFFICIAL WEBSITE COPY

DELAWARE DEPARTMENT OF TRANSPORTATION	ADDENDUMS / REVISIONS		SR1 / I-95 INTERCHANGE	CONTRACT 28-090-03	BRIDGE NO. 1-716C	RAMP A OVER SR 7	S2-48 SHEET NO. 301
				COUNTY NEW CASTLE	DESIGNED BY: K. D. BEAVER	FINISHED BRIDGE DECK ELEVATIONS 2	TOTAL SHTS. 803
					CHECKED BY: G. P. MISTRY		

10/28/2010 O:\20832687-XM\CAD\Bridge\BR-S2\fd02_BR-S2_sr1.dgn
untitled

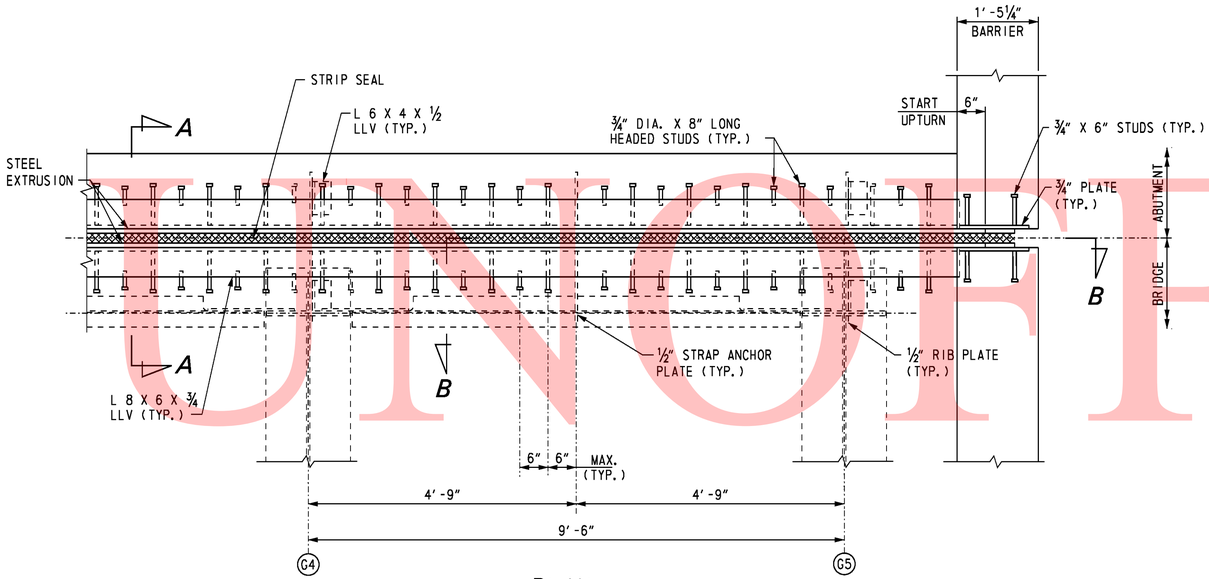

PLAN

SCALE: ¾" = 1'-0"

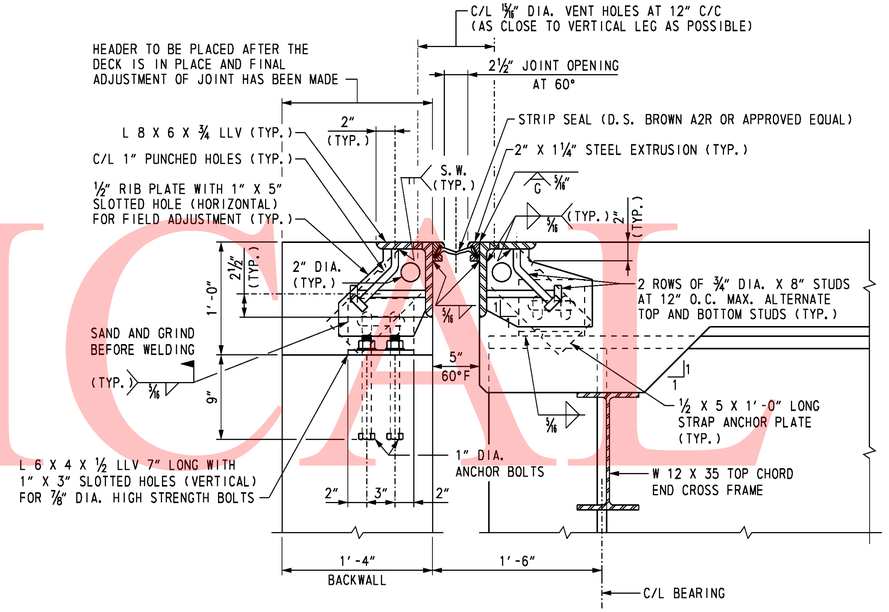

SECTION A-A

SCALE: 1½" = 1'-0"

JOINT OPENING (INCH)

LOCATION	TEMPERATURE (°F)											MOVEMENT CLASSIFICATION
	0	10	20	30	40	50	60	70	80	90	100	
ABUTMENT A	3 3/16	3 3/8	3 3/16	3	2 7/8	2 11/16	2 1/2	2 3/16	2 1/8	2	1 13/16	3"
ABUTMENT B	3 11/16	3 1/2	3 3/16	3 1/8	2 7/8	2 11/16	2 1/2	2 3/16	2 1/8	1 7/8	1 11/16	3"

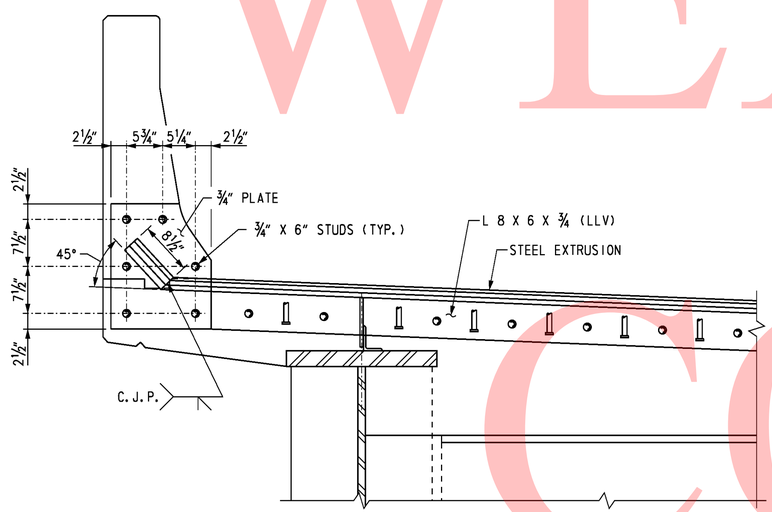

SECTION B-B

SCALE: 1" = 1'-0"

NOTES:

1. STRUCTURAL STEEL FOR DECK JOINTS SHALL CONFORM TO AASHTO M270, GRADE 36.
2. STEEL EXTRUSIONS FOR DECK JOINTS SHALL CONFORM TO AASHTO M270, GRADE 36.
3. HOLES SHALL BE PLACED IN THE ½" RIB PLATES AND THE STRAP ANCHOR PLATES FOR BAR REINFORCEMENT. IF THE HOLES ARE DRILLED IN THE FIELD, AN APPROVED EPOXY PAINT SHALL BE APPLIED TO TOUCH UP THE HOLES.
4. THE NEOPRENE STRIP SEAL SHALL BE PROVIDED CONTINUOUS THROUGHOUT THE LIMITS OF THE DECK. SPLICING OF THE NEOPRENE STRIP SEAL IS NOT PERMITTED.
5. COST FOR MATERIALS, FABRICATION AND INSTALLATION OF STRIP SEAL EXPANSION JOINTS, 3" MOVEMENT CLASSIFICATION, WITH STEEL ELEMENTS INCLUDING STUDS AND STEEL EXTRUSIONS, SHALL BE PAID FOR UNDER ITEM 605511.
6. EXPANSION JOINT PLAN IS SHOWN AT ABUTMENT B. EXPANSION JOINT AT ABUTMENT A IS SIMILAR.

UNOFFICIAL WEBSITE COPY

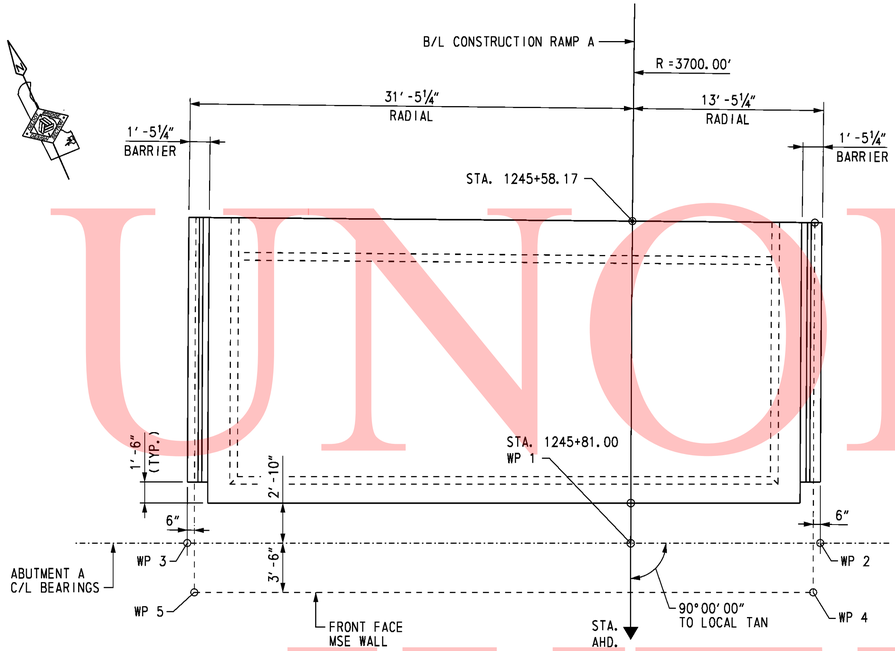

APPROACH SLAB AT ABUTMENT A PLAN

SCALE: 3/16" = 1'-0"

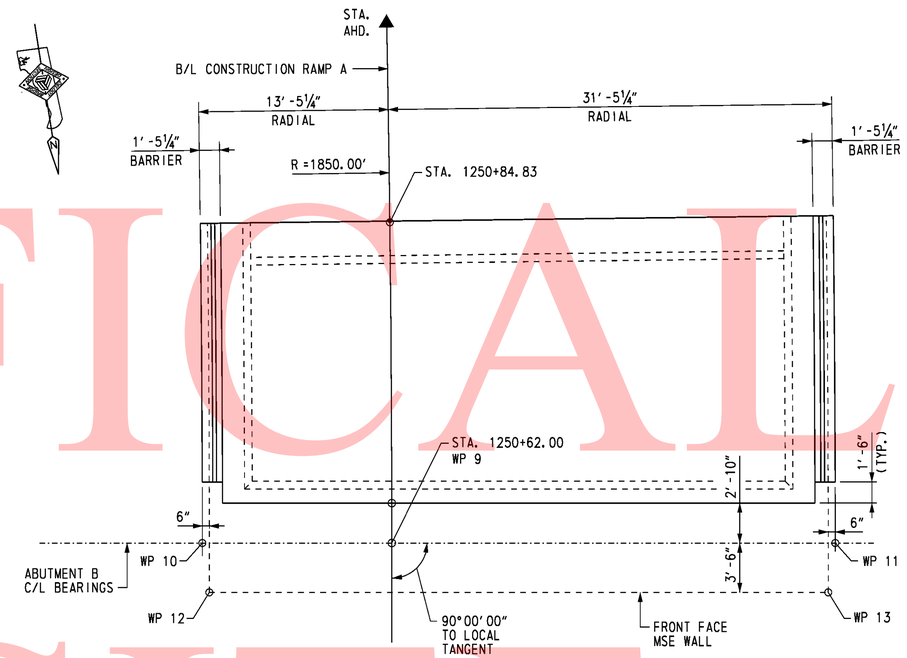

APPROACH SLAB AT ABUTMENT B PLAN

SCALE: 3/16" = 1'-0"

UNOFFICIAL WEBSITE COPY

CROSS REFERENCE NOTES:

1. FOR BRIDGE PLAN AND ELEVATION, SEE DWG. S2-1.
2. FOR ABUTMENT A PLAN AND ELEVATION, SEE DWG. S2-5.
3. FOR ABUTMENT B PLAN AND ELEVATION, SEE DWG. S2-6.
4. FOR MSE WINGWALLS PLAN AND ELEVATION, SEE DWGSS. S2-11 & S2-12.
5. FOR APPROACH SLAB REINFORCEMENT, SEE DWGS. S2-51 & S2-52.

10/28/2010 O:\20832687-XM\CAD\Bridge\BR-S2\ss01_BR-S2_sr1.dgn untitled

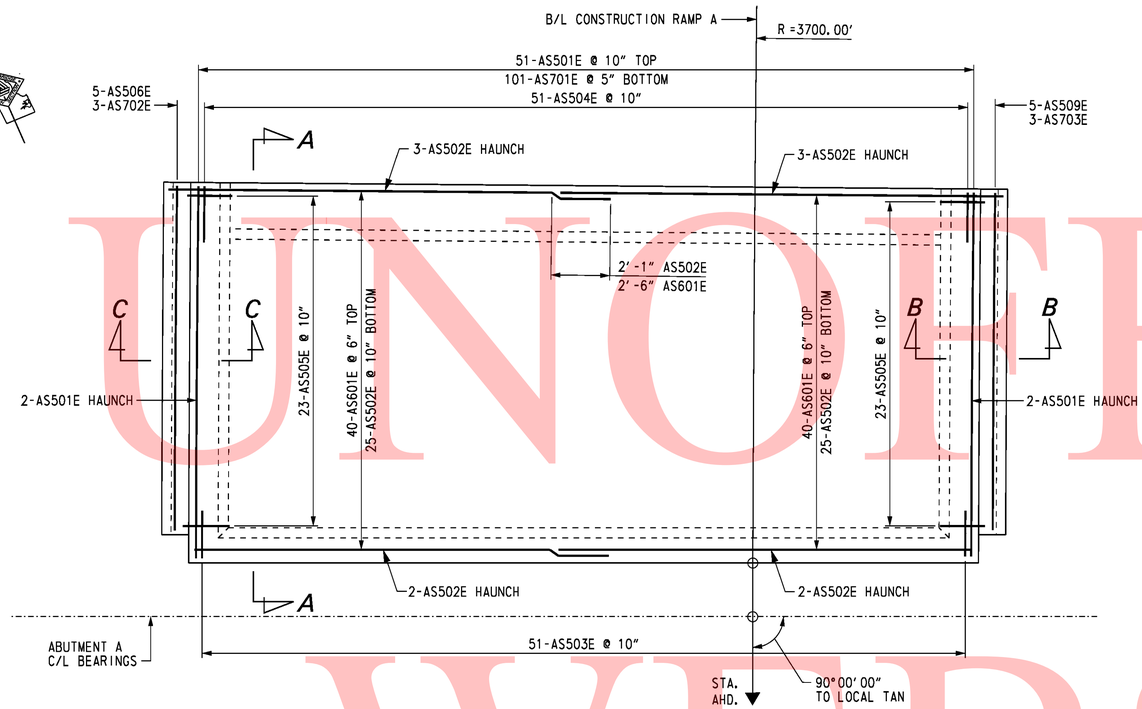

APPROACH SLAB AT ABUTMENT A PLAN

SCALE: 1/4" = 1'-0"

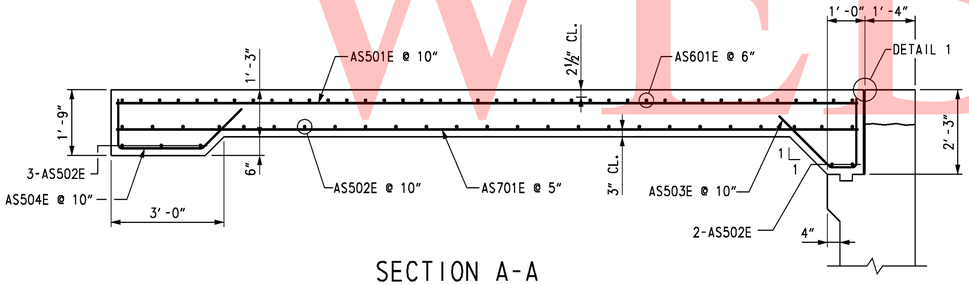

SECTION A-A

SCALE: 1/2" = 1'-0"

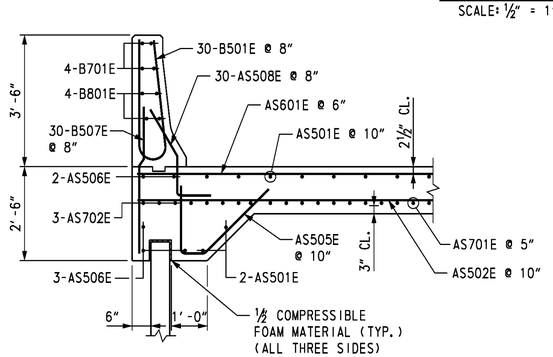

SECTION C-C

SCALE: 1/2" = 1'-0"

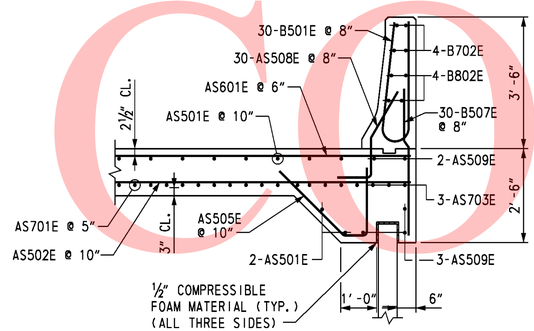

SECTION B-B

SCALE: 1/2" = 1'-0"

REINFORCING BAR LIST

APPROACH SLAB AT ABUTMENT A

MARK	LENGTH	NO. BARS	TYPE	A	B	C	D	E	G	H	K	R	REMARKS
AS501E	19'-8"	55	STR.										
AS502E	23'-4"	60	STR.										
AS503E	4'-10"	51	4	1'-11"	0'-8"	2'-3"				1'-7"	1'-7"		
AS504E	5'-7"	51	4	1'-4"	2'-8"	1'-7"				1'-1"	1'-1"		
AS505E	5'-2"	46	4	1'-11"	0'-8"	2'-7"				1'-10"	1'-10"		
AS506E	18'-4"	5	STR.										
AS507E	4'-0"	60	STR.										
AS508E	3'-7"	60	4S	1'-0"	1'-1"	1'-6"				0'-10½"	1'-2⅝"		
AS509E	18'-2"	5	STR.										
AS601E	23'-8"	80	STR.										
AS701E	19'-8"	101	STR.										
AS702E	18'-4"	3	STR.										
AS703E	18'-2"	3	STR.										
B501E	6'-8¼"	60	H1		2'-10"	1'-0¼"	2'-10"			0'-5"		0'-4¼"	
B701E	18'-4"	4	STR.										
B702E	18'-2"	4	STR.										
B801E	18'-4"	4	STR.										
B802E	18'-2"	4	STR.										

BENDING DIAGRAMS

ALL DIMENSIONS ARE FROM OUT TO OUT.

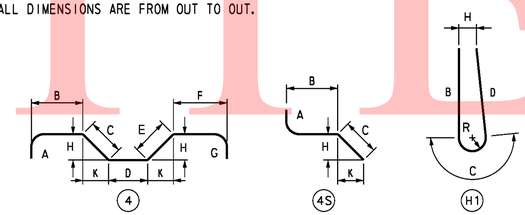

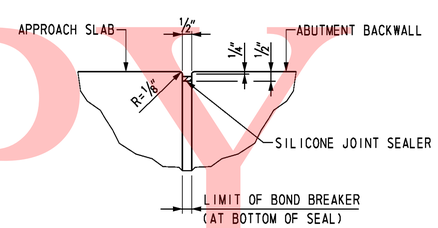

DETAIL 1

SCALE: 3" = 1'-0"

CROSS REFERENCE NOTES:

1. FOR BRIDGE PLAN AND ELEVATION, SEE DWG. S1-2.
2. FOR ABUTMENT A PLAN AND ELEVATION, SEE DWG. S2-5.
3. FOR MSE WINGWALLS PLAN AND ELEVATION, SEE DWGS. S2-11 & S2-12.
4. FOR APPROACH SLAB PLAN, SEE DWG. NO. S2-50.
5. FOR BARRIER DETAIL AND LONGITUDINAL REINFORCING BAR LAYOUT IN BARRIER, SEE DWG. NO. S2-45.

UNOFFICIAL WEBSITE COPY

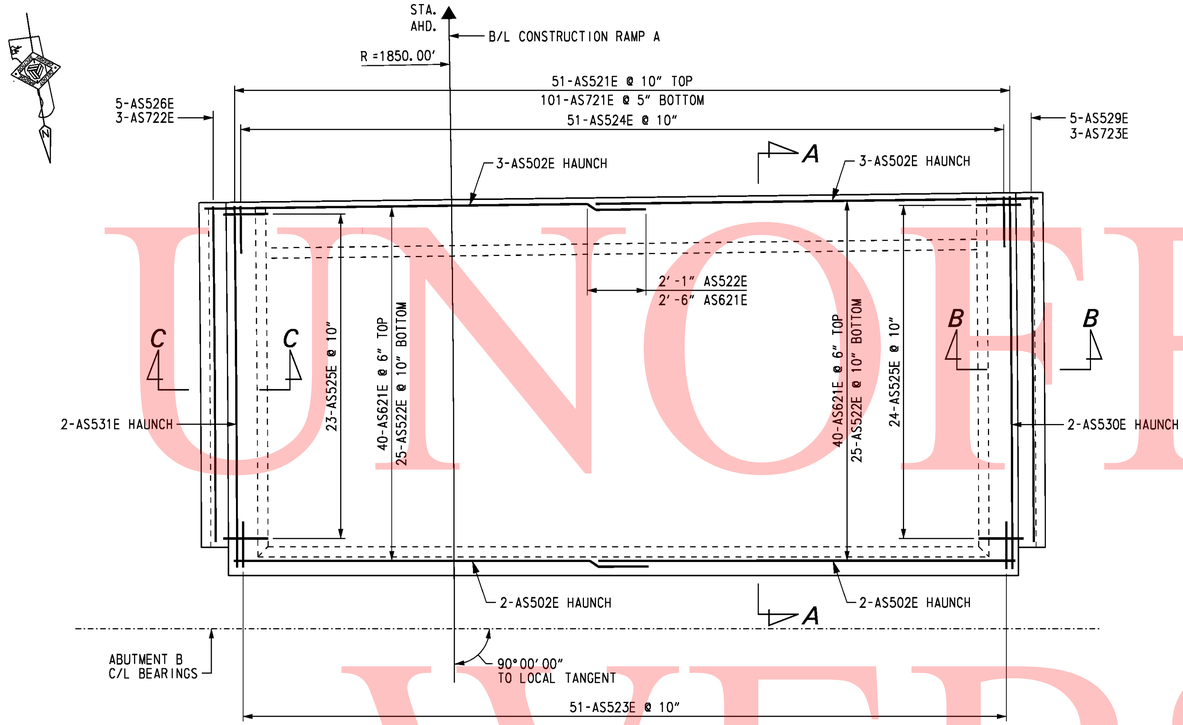

APPROACH SLAB AT ABUTMENT B PLAN

SCALE: 1/4" = 1'-0"

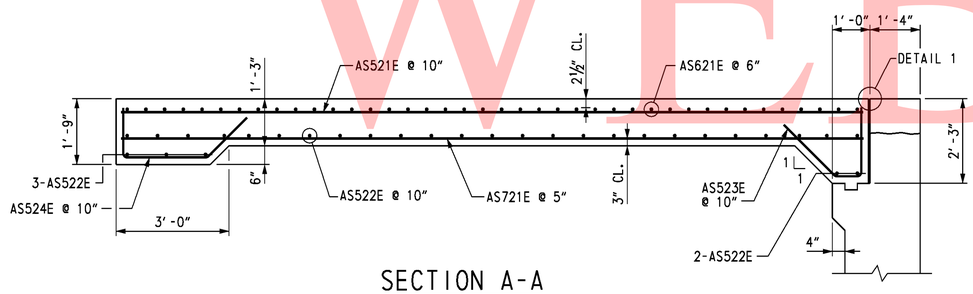

SECTION A-A

SCALE: 1/2" = 1'-0"

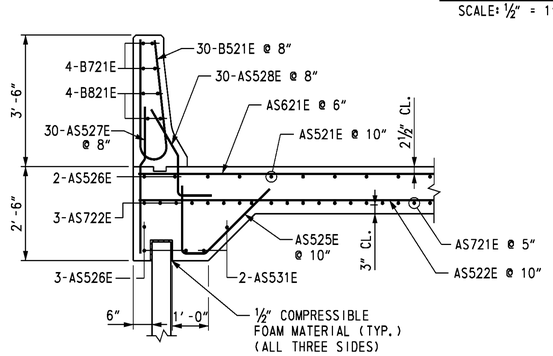

SECTION C-C

SCALE: 1/2" = 1'-0"

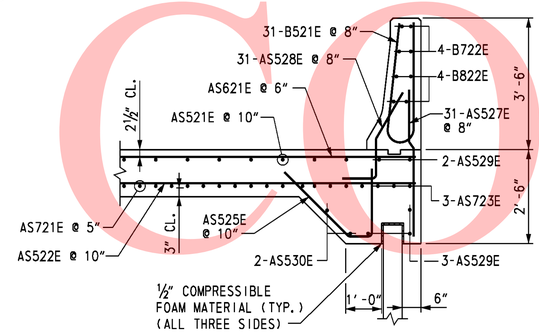

SECTION B-B

SCALE: 1/2" = 1'-0"

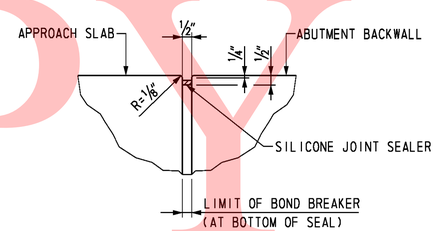

DETAIL 1

SCALE: 3" = 1'-0"

REINFORCING BAR LIST

APPROACH SLAB AT ABUTMENT B

MARK	LENGTH	NO. BARS	TYPE	A	B	C	D	E	G	H	K	R	REMARKS
AS521E	19'-6" TO 20'-0"	51	STR.										△ =1/8"
AS522E	23'-4"	60	STR.										
AS523E	4'-10"	51	4	1'-11"	0'-8"	2'-3"				1'-7"	1'-7"		
AS524E	5'-7"	51	4	1'-4"	2'-8"	1'-7"				1'-1"	1'-1"		
AS525E	5'-2"	47	4	1'-11"	0'-8"	2'-7"				1'-10"	1'-10"		
AS526E	18'-0"	5	STR.										
AS527E	4'-0"	61	STR.										
AS528E	3'-7"	61	4S	1'-0"	1'-1"	1'-6"				0'-10½"	1'-2⅝"		
AS529E	18'-6"	5	STR.										
AS530E	20'-0"	2	STR.										
AS531E	19'-6"	2	STR.										
AS621E	23'-8"	80	STR.										
AS721E	19'-6" TO 20'-0"	101	STR.										△=1/16"
AS722E	18'-0"	3	STR.										
AS723E	18'-6"	3	STR.										
B521E	6'-8¼"	61	H1		2'-10"	1'-0¼"	2'-10"			0'-5"		0'-4¼"	
B721E	18'-0"	4	STR.										
B722E	18'-6"	4	STR.										
B821E	18'-0"	4	STR.										
B822E	18'-6"	4	STR.										

BENDING DIAGRAMS

ALL DIMENSIONS ARE FROM OUT TO OUT.

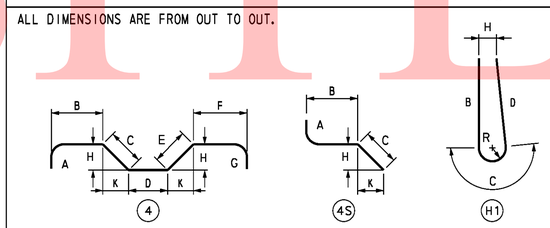

CROSS REFERENCE NOTES:

1. FOR BRIDGE PLAN AND ELEVATION, SEE DWG. S2-1.
2. FOR ABUTMENT B PLAN AND ELEVATION, SEE DWG. S2-6.
3. FOR MSE WINGWALLS PLAN AND ELEVATION, SEE DWGS. S2-11 & S2-12.
4. FOR APPROACH SLAB PLAN, SEE DWG. S2-50.
5. FOR BARRIER DETAILS AND LONGITUDINAL REINFORCING BAR LAYOUT IN BARRIER, SEE DWG. S2-45.

UNOFFICIAL WEBSITE COPY

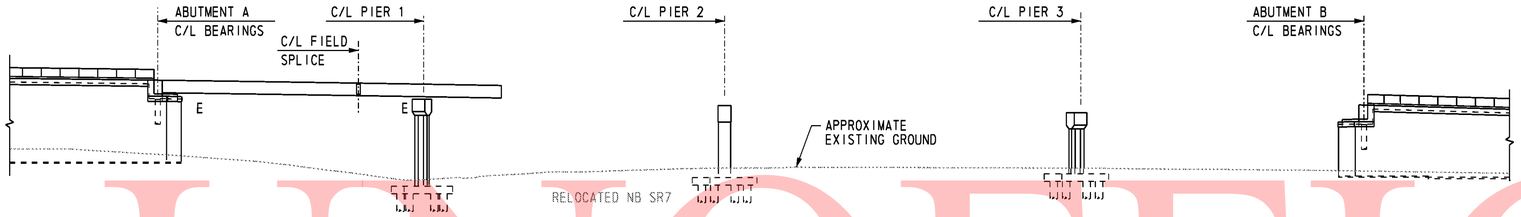

ELEVATION - ERECTION STAGE 1

SCALE: 1" = 30'-0"

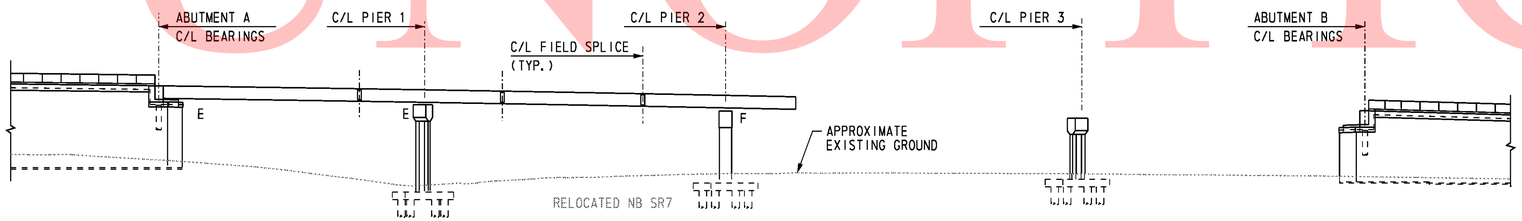

ELEVATION - ERECTION STAGE 2

SCALE: 1" = 30'-0"

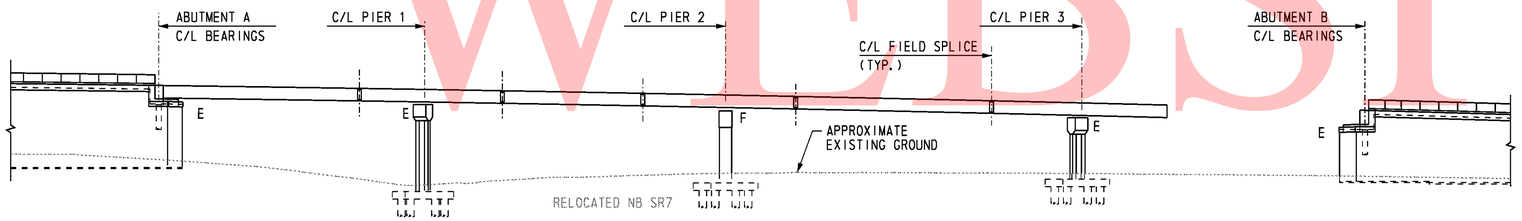

ELEVATION - ERECTION STAGE 3

SCALE: 1" = 30'-0"

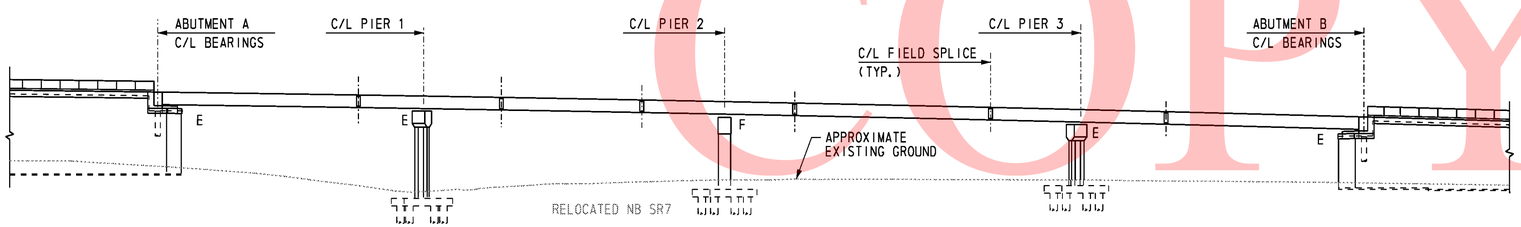

ELEVATION - ERECTION STAGE 4

SCALE: 1" = 30'-0"

SUGGESTED ERECTION SEQUENCE NOTES

STAGE 1:

1. PRE-ASSEMBLE TWO GIRDER SECTIONS.
2. ERECT PRE-ASSEMBLED GIRDER SECTION IN SPAN 1 WITH ONE END SUPPORTED ON ABUTMENT A AND THE OTHER END SUPPORTED ON PIER 1.
3. TIE-DOWN AND STABILIZE PRE-ASSEMBLED GIRDER AS NECESSARY.
4. REPEAT STEP 2 FOR ALL PRE-ASSEMBLED GIRDERS, INSTALLING CROSS FRAMES AFTER EACH REMAINING PRE-ASSEMBLED GIRDER IS ERECTED.

STAGE 2:

1. PRE-ASSEMBLE TWO GIRDER SECTIONS.
2. ERECT PRE-ASSEMBLED GIRDER SECTION IN SPAN 2 WITH ONE END SUPPORTED ON PIER 2 AND THE OTHER END HELD BY THE CRANE.
3. MAKE FIELD SPLICE CONNECTION.
4. STABILIZE PRE-ASSEMBLED GIRDER AS NECESSARY.
5. REPEAT STEPS 2 AND 3 FOR ALL PRE-ASSEMBLED GIRDERS, INSTALLING CROSS FRAMES AFTER EACH REMAINING PRE-ASSEMBLED GIRDER IS ERECTED.

STAGE 3:

1. PRE-ASSEMBLE TWO GIRDER SECTIONS.
2. ERECT PRE-ASSEMBLED GIRDER SECTION IN SPAN 3 WITH ONE END SUPPORTED ON PIER 3 AND THE OTHER END HELD BY THE CRANE.
3. MAKE FIELD SPLICE CONNECTION.
4. STABILIZE PRE-ASSEMBLED GIRDER AS NECESSARY
5. REPEAT STEPS 2 AND 3 FOR ALL PRE-ASSEMBLED GIRDERS, INSTALLING CROSS FRAMES AFTER EACH REMAINING PRE-ASSEMBLED GIRDER IS ERECTED.

STAGE 4:

1. ERECT GIRDER SECTION IN SPAN 4 WITH ONE END SUPPORTED ON ABUTMENT B AND THE OTHER END HELD BY THE CRANE.
2. MAKE FIELD SPLICE CONNECTION.
3. TIE-DOWN AND STABILIZE END OF GIRDER.
4. REPEAT STEPS 1 AND 2 FOR ALL GIRDERS, INSTALLING CROSS FRAMES AFTER EACH REMAINING GIRDER IS ERECTED.

NOTE TO CONTRACTOR:

THE ERECTION SEQUENCE SHOWN IS ONLY A SUGGESTED METHOD. THE CONTRACTOR IS RESPONSIBLE FOR THE ENTIRE ERECTION OF THE BRIDGE. THE CONTRACTOR SHALL SUBMIT DRAWINGS SEALED BY A PROFESSIONAL ENGINEER REGISTERED IN THE STATE OF DELAWARE, ILLUSTRATING FULLY THE PROPOSED METHOD OF ERECTION. THE DRAWINGS SHALL SHOW DETAILS OF ALL TEMPORARY SHORING, FALSEWORK, BRACING, GUYS, DEAD-MEN, LIFTING DEVICES, HOLD-DOWN DEVICES AND ATTACHMENTS TO THE BRIDGE MEMBERS. THE DRAWINGS SHALL ALSO INCLUDE THE SEQUENCE OF ERECTION, LOCATION OF CRANES, CRANE CAPACITITIES, LOCATION OF LIFTING POINTS ON THE BRIDGE MEMBERS AND WEIGHTS OF MEMBERS. THE PLAN AND DRAWINGS SHALL BE COMPLETE IN DETAIL FOR ALL ANTICIPATED STAGES AND CONDITIONS DURING ERECTION. CALCULATIONS SEALED BY A PROFESSIONAL ENGINEER REGISTERED IN THE STATE OF DELAWARE ARE REQUIRED TO DEMONSTRATE THAT ALLOWABLE STRESSES ARE NOT EXCEEDED AND THAT MEMBER CAPACITIES AND FINAL GEOMETRY WILL BE CORRECT.

COST OF ERECTION AND TEMPORARY SHORING IS INCIDENTAL TO "STRUCTURAL STEEL" ITEM.

FOR MAINTENANCE OF TRAFFIC REQUIREMENTS, REFER TO THE APPROPRIATE SHEETS.

UNOFFICAL WEBSITE COPY

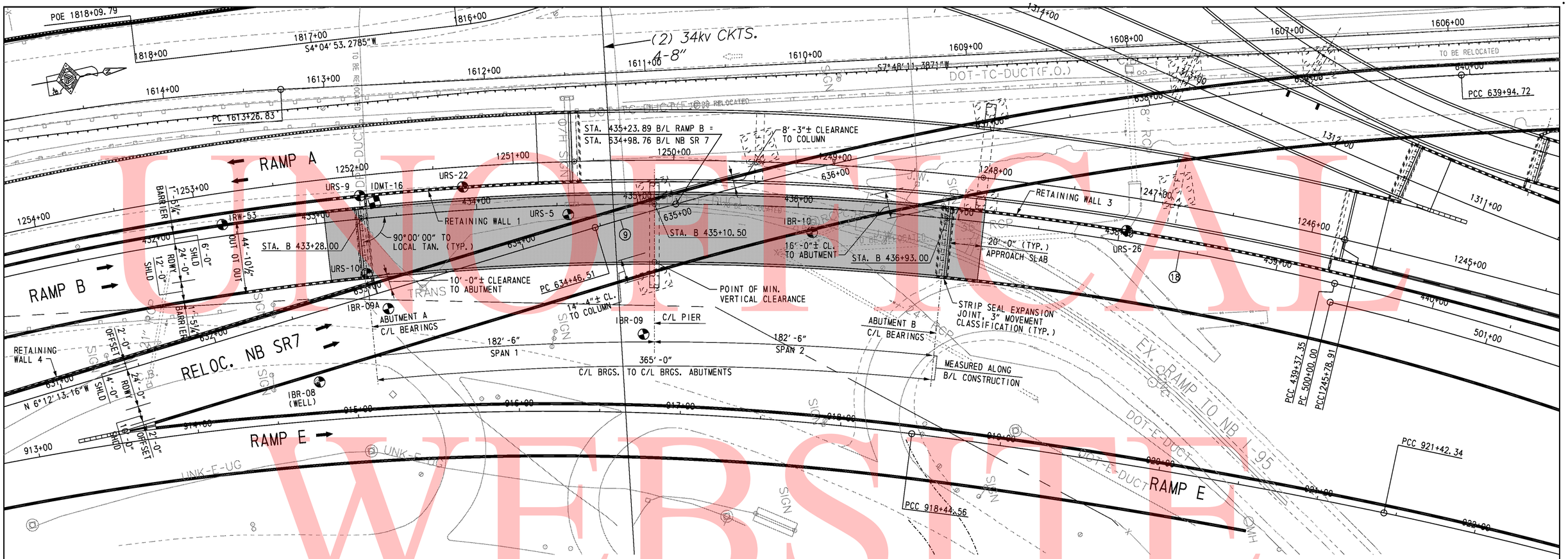

PLAN

SCALE: 1" = 30'-0"

B/L CONSTR. RAMP B
CURVE 18 DATA

PI STA. 432+05.12
△ = 49°15'06.54" RT
Dc = 3°08'22.18"
R = 1,825.0000'
T = 836.55'
L = 1,568.78'

B/L CONSTR. NB SR7
CURVE 9 DATA

PI STA. 637+21.94
△ = 13°46'34.84" RT
Dc = 2°30'46.70"
R = 2,280.0000'
T = 275.43'
L = 548.21'

NOTES:

1. GUIDED AND NON-GUIDED POT BEARINGS ARE PROVIDED AT ABUTMENTS A AND B. FIXED POT BEARINGS ARE PROVIDED AT PIER.
2. MINIMUM VERTICAL CLEARANCE IS MEASURED TO BOTTOM OF PIER CAP.

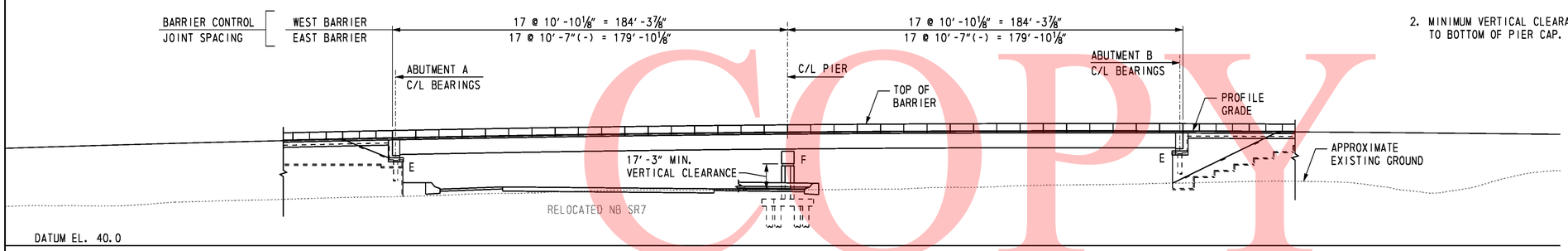

ELEVATION

SCALE: 1" = 30'-0"

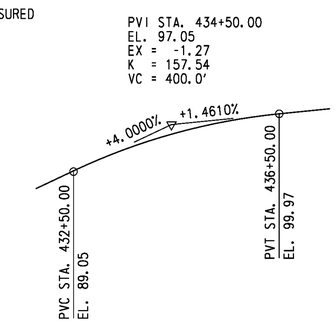

RAMP B PROFILE

NOT TO SCALE

UNOFFICIAL WEBSITE COPY

DELAWARE DEPARTMENT OF TRANSPORTATION	ADDENDUMS / REVISIONS	SCALE 0 30 60 90 FEET	SR1 / I-95 INTERCHANGE	CONTRACT 28-090-03	BRIDGE NO. 1-268A	RAMP B OVER SR 7
				COUNTY NEW CASTLE	DESIGNED BY: R. F. KIRCHNER	BRIDGE PLAN AND ELEVATION
					CHECKED BY: G. P. MISTRY	

S3-1
SHEET NO.
307
TOTAL SHTS.
803

10/28/2010 O:\20832687-XM\CAD\Bridge\BR-S3\pe01_BR-S3_sr1.dgn untitled

GENERAL NOTES

1. DESIGN SPECIFICATIONS
AASHTO LRFD BRIDGE DESIGN SPECIFICATIONS, 4th EDITION WITH 2009 INTERIM REVISIONS.
DELAWARE DEPARTMENT OF TRANSPORTATION BRIDGE DESIGN MANUAL, MAY 2005 INCLUDING LATEST REVISIONS. ANSI/AASHTO/AWS D1.5 BRIDGE WELDING CODE

2. LOADING
UNIT WEIGHTS OF MATERIALS SHALL BE IN ACCORDANCE WITH THE DELAWARE DESIGN MANUAL.
FUTURE OVERLAY ALLOWANCE SHALL BE 25 LBS/SQ FT.
STEEL BRIDGE DECK FORMS WHICH STAY IN PLACE (INCLUDING CONCRETE IN FORM CORRUGATIONS) SHALL BE 15 LBS/SQ FT.
VEHICLE LIVE LOAD SHALL BE HL-93, WHICH CONSISTS OF A DESIGN TRUCK OR TANDEM WITH DYNAMIC LOAD ALLOWANCE AND A LANE LOAD. RATING SHALL USE ALL DELAWARE LEGAL LOADS SPECIFIED IN THE BRIDGE DESIGN MANUAL.
BARRIER HAS BEEN DESIGNED FOR TEST LEVEL FIVE (TL-5).
FATIGUE DESIGN SHALL BE BASED ON THE FOLLOWING ONE DIRECTIONAL TRAFFIC VOLUMES:

RAMP B OVER SR 7: DESIGN ADT = 18,650, DESIGN ADTT = 2,240

FOR THERMAL LOADS, CONSIDER THE MODERATE TEMPERATURE RANGE AS STIPULATED IN THE AASHTO LRFD DESIGN SPECIFICATIONS. THE NORMAL TEMPERATURE SHALL BE CONSIDERED TO BE 60F.
FOR SEISMIC LOADS, CONSIDER SEISMIC PERFORMANCE ZONE 1, WITH A SITE CLASS = E AND IMPORTANCE CATEGORY - CRITICAL.

3. PORTLAND CEMENT CONCRETE
PORTLAND CEMENT CONCRETE FOR CAST-IN-PLACE ELEMENTS SHALL BE AS FOLLOWS:
(28 DAY COMPRESSIVE STRENGTH)
ITEM NO. 602007 (CLASS A, F'c=4500 PSI) - PIER ABOVE FOOTING
ITEM NO. 602011 (CLASS A, F'c=4500 PSI) - PIER FOOTING, TOP OF PIER PILES
ITEM NO. 602786 (CLASS A, F'c=8000 PSI) - POST-TENSIONED PIER CAP
ITEM NO. 602013 (CLASS D, F'c=4500 PSI) - DECK
ITEM NO. 602014 (CLASS D, F'c=4500 PSI) - APPROACH SLAB
ITEM NO. 602015 (CLASS A, F'c=4500 PSI) - ABUTMENT, TOP OF ABUTMENT PILES
ITEM NO. 602017 (CLASS A, F'c=4500 PSI) - BARRIER
MIX REQUIREMENTS SHALL CONFORM TO SECTION 812 OF THE DELAWARE DEPARTMENT OF TRANSPORTATION STANDARD SPECIFICATIONS. ALL EXPOSED CORNERS OF CONCRETE SHALL BE CHAMFERED WITH ¾" X ¾" MILLED CHAMFER STRIPS UNLESS NOTED OTHERWISE, EXCEPT ON UNEXPOSED FOOTINGS OR WHERE INDICATED BY THE NOTATION ON THE PLANS, "DO NOT CHAMFER". NO SLIP-FORMING OF BARRIERS IS PERMITTED, UNLESS OTHERWISE APPROVED.

4. BAR REINFORCEMENT
REINFORCING STEEL SHALL CONFORM TO AASHTO M31 (ASTM A615), GRADE 60. ALL REINFORCING STEEL SHALL HAVE A CLEAR COVER OF 2" UNLESS OTHERWISE SPECIFIED ON THE PLANS.
FUSION-BONDED EPOXY COATED REINFORCING STEEL SHALL CONFORM TO AASHTO M284 (ASTM D3963), AND SHALL BE DENOTED WITH A SUFFIX "E" IN THE BAR MARKS.

DO NOT WELD GRADE 60 REINFORCING STEEL.

5. POST-TENSIONING STEEL
ALL POST-TENSIONING STRAND TENDONS SHALL CONSIST OF 0.6 INCH DIAMETER SEVEN WIRE UNCOATED LOW RELAXATION STRANDS CONFORMING TO AASHTO M203 (ASTM A416), GRADE 270.
DUCTS SHALL BE 4½ INCH DIAMETER POLYETHYLENE/POLYPROPYLENE (PE/PP) PLASTIC DUCTS.
GROUT FOR DUCTS SHALL BE IN ACCORDANCE WITH ITEM NO. 602779 "POST TENSIONING GROUT"

6. STRUCTURAL STEEL
STRUCTURAL STEEL SHALL CONFORM TO ASTM A 709, GRADE 50W, INCLUDING THE ADDITIONAL REQUIREMENTS FOR CHARPY V-NOTCH TESTING OF AASHTO M270 FOR PRIMARY LOAD CARRYING MEMBERS UNDER TENSILE STRESS. THE PRIMARY LOAD CARRYING MEMBER COMPONENTS ARE THE FLANGES, WEBS, AND SPLICE PLATES OF THE STEEL GIRDERS. THE USE OF FRACTURE CRITICAL MEMBERS IS PROHIBITED. FATIGUE CATEGORIES D, E AND F SHALL NOT BE USED IN STRESS REVERSAL OR TENSION AREAS, EXCEPT FOR TEMPORARY CONDITIONS.

NINE (9) FEET AT THE ENDS OF EACH GIRDER AND THE END CROSS FRAMES SHALL BE PAINTED WITH A URETHANE PAINT SYSTEM IN ACCORDANCE WITH SPECIAL PROVISION #605537-URETHANE PAINT SYSTEM. THE FINAL COLOR SHALL BE FEDERAL #10076 (BROWN) OF FED-STD-595B. COST OF PAINTING SHALL BE INCIDENTAL TO ITEM 605002, STEEL STRUCTURES.

ALL BOLTS FOR SPLICE PLATES AND CROSS FRAMES SHALL BE ⅞" DIA. IN 15/16" DIA. HOLES AND CONFORM TO ASTM A325, TYPE 3, WITH THREADS EXCLUDED FROM SHEAR PLANES. BOLTED CONNECTIONS SHALL BE CLASS B SLIP CRITICAL CONNECTIONS, UNLESS NOTED ON THE PLANS.

7. SERVICEABILITY
LIVE LOAD DEFLECTION SHALL BE LIMITED TO L/800.
FOR REINFORCEMENT DISTRIBUTION REQUIREMENTS, CONSIDER CLASS 2 EXPOSURE CRITERIA FOR DECKS. ACCOMMODATION TO JACK GIRDERS FOR FUTURE BEARING REPLACEMENT HAS BEEN CONSIDERED IN THE DESIGN.

8. CONSTRUCTION JOINTS
KEYED CONSTRUCTION JOINTS SHALL BE 2" X 4" OR AS NOTED. ALL EXPOSED CONSTRUCTION JOINT EDGES SHALL HAVE A ¾" V-NOTCH, UNLESS OTHERWISE NOTED.

9. STABILIZING STRUCTURAL EXCAVATIONS
SHEETING AND SHORING SHALL BE REQUIRED FOR ANY EXCAVATION EXCEEDING FIVE (5) FEET IN HEIGHT, THE COST SHALL BE PAID UNDER ITEM NO. 207501 - IN LIEU OF SHORING, THE CONTRACTOR MAY USE A 2:1 CUT SLOPE. NO PAYMENT SHALL BE MADE FOR ADDITIONAL EXCAVATION OR FILL OUTSIDE THE LIMITS AS DEFINED IN SECTION 207 OF THE STANDARD SPECIFICATIONS.

10. EXCAVATION REQUIRED TO ATTAIN THE GRADE FOR INSTALLATION OF MSE WALLS SHALL BE INCIDENTAL TO ITEM NO. 602772 - MECHANICALLY STABILIZED EARTH WALLS.

11. STRUCTURAL BACKFILL SHALL CONFORM TO THE REQUIREMENTS OF BORROW TYPE C. MSE WALL BACKFILL SHALL BE AS SPECIFIED ON THE PLANS.

12. ROADWAY CLEARANCES
A MINIMUM OF 16'-6" VERTICAL CLEARANCE SHALL BE MAINTAINED ABOVE ALL ROADWAYS.
A MINIMUM OF 2'-0" HORIZONTAL CLEARANCE SHALL BE MAINTAINED FROM THE OUTSIDE EDGE OF SHOULDER OFFSET (FACE OF CURB) TO THE FACE OF ANY OBSTRUCTION. THESE CLEARANCES APPLY AT ALL TIMES INCLUDING DURING CONSTRUCTION.

BRIDGE LEGAL LOAD RATING (TONS)
RAMP B OVER SR 7

TRUCK TYPE	RATING FACTOR	SAFE LOAD CAPACITY
HS-20	1.81	65.2
S220	2.83	56.6
S327	2.69	72.6
S335	1.98	69.3
S437	2.00	73.0
T330	2.56	76.8
T435	2.16	75.6
T540	1.89	75.6

BRIDGE DESIGN LOAD RATING:
INVENTORY = 1.13
OPERATING = 1.46

13. TEST PILES
PILE LENGTHS FOR ORDERING PURPOSES SHALL BE DETERMINED BY TEST PILES. A MINIMUM OF ONE (1) PILE PER SUBSTRUCTURE, AS SHOWN ON THE PLANS, SHALL BE DYNAMICALLY TESTED BY THE CONTRACTOR IN ACCORDANCE WITH SPECIAL PROVISION 619519. TEST AND PRODUCTION PILE RE-STRIKES WILL BE PAID AS FOLLOWS:

A). ALL TEST PILE(S) WILL BE RESTRUCK AND DYNAMICALLY TESTED BY THE CONTRACTOR. THE TEST PILE RESTRIKES SHALL BE INCIDENTAL TO ITEM NO. 619519 DYNAMIC PILE TESTING BY CONTRACTOR PROVIDED THAT THEY ARE PERFORMED WITHIN FIVE (5) CALENDAR DAYS FROM INITIAL DRIVE.

B). AN ADDITIONAL PAYMENT WILL BE MADE TO THE CONTRACTOR IF HE IS DIRECTED BY THE ENGINEER TO WAIT AND RESTRIKE THE TEST PILE MORE THAN FIVE (5) CALENDAR DAYS AFTER INITIAL DRIVE. THE CONTRACTOR SHALL BE COMPENSATED AT THE FIXED PRICE OF $1,000.00 PER CALENDAR DAY FOR EVERY DAY, AFTER THE FIFTH CALENDAR DAY, UNDER ITEM NO. 619502 TEST PILE RESTRIKE. MULTIPLE TEST PILE RESTRIKES OCCURRING ON THE SAME DAY WILL ONLY BE PAID FOR AS ONE CALENDAR DAY. NO ADDITIONAL COMPENSATION WILL BE MADE REGARDLESS OF THE NUMBER OF TEST PILE RESTRIKES PERFORMED THAT DAY.

C). RESTRIKES ON PRODUCTION PILES WHICH ARE DESIGNATED TO BE DYNAMICALLY TESTED WILL NOT BE PAID UNDER ITEM NO. 619501 PRODUCTION PILE RESTRIKE. THESE PRODUCTION PILE RESTRIKES ARE INCIDENTAL TO ITEM NO. 619519 DYNAMIC PILE TESTING BY CONTRACTOR.

THE DEPARTMENT RESERVES THE RIGHT TO PERFORM DYNAMIC TESTING OF RESTRIKES.

14. THE CONCRETE PIER CAPS SHOWN ON THE PLANS SHALL BE USED. NO OTHER ALTERNATES WILL BE CONSIDERED.

NOTE:

LOAD RATING IS IN ACCORDANCE WITH THE LOAD AND RESISTANCE FACTOR RATING (LRFR) METHOD.

CROSS REFERENCE NOTE:

FOR MSE WALL NOTES, SEE DWG S3-13.

UNOFFICAL WEBSITE COPY

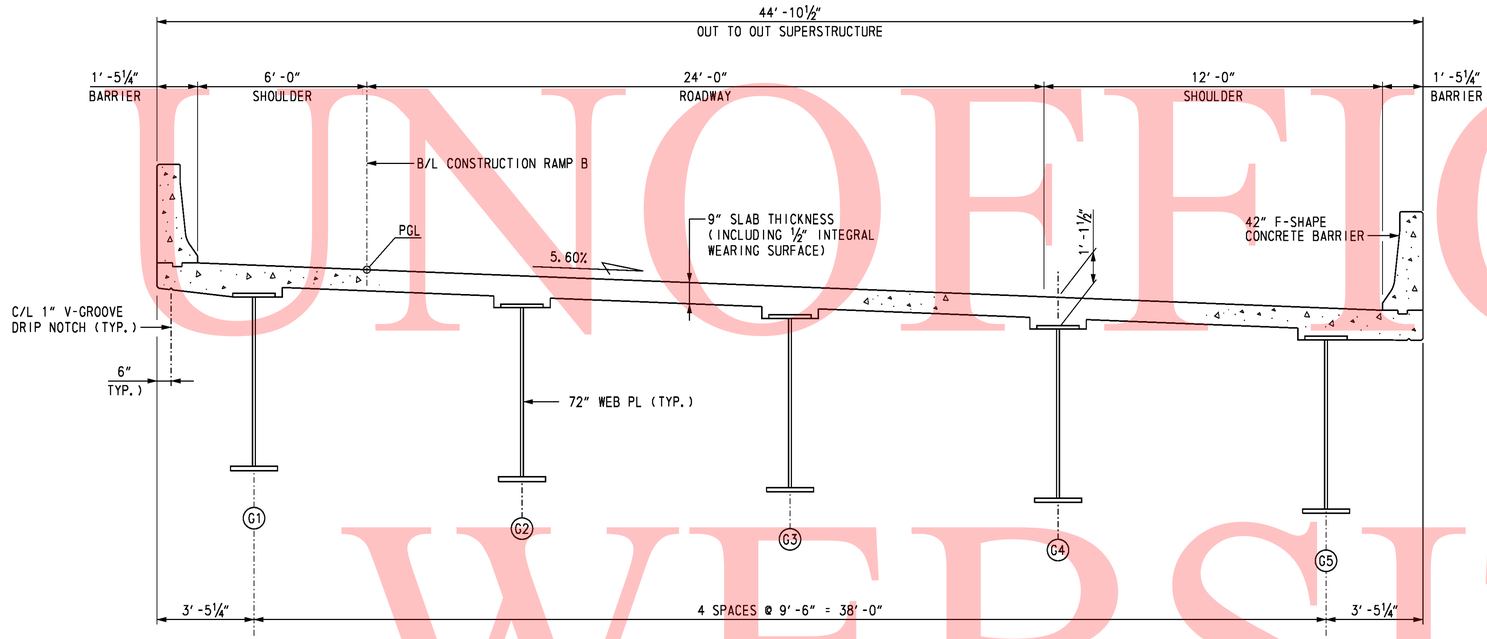

TYPICAL SECTION - RAMP B

(LOOKING STATION AHEAD)
SCALE: ⅜" = 1'-0"

UNOFFICAL WEBSITE COPY

CROSS REFERENCE NOTES:

1. FOR FRAMING PLAN, SEE DWG. S3-27.
2. FOR DECK AND BARRIER REINFORCEMENT, SEE DWGS. S3-33 THRU S3-35.

10/28/2010 O:\20832687-XM\CAD\Bridge\BR-S3\ts01_BR-S3_sr1.dgn
untitled

DELAWARE DEPARTMENT OF TRANSPORTATION	ADDENDUMS / REVISIONS	SR1 / I-95 INTERCHANGE	CONTRACT 28-090-03	BRIDGE NO. 1-268A	RAMP B OVER SR 7	S3-3 SHEET NO.
			COUNTY NEW CASTLE	DESIGNED BY: R. F. KIRCHNER	TYPICAL SECTION	309 TOTAL SHTS.
				CHECKED BY: G. P. MISTRY		803

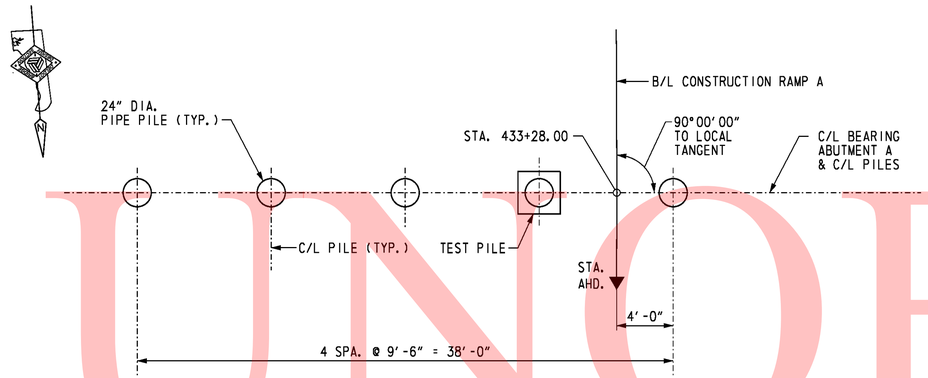

ABUTMENT A PILE PLAN

SCALE: 3/16" = 1'-0"

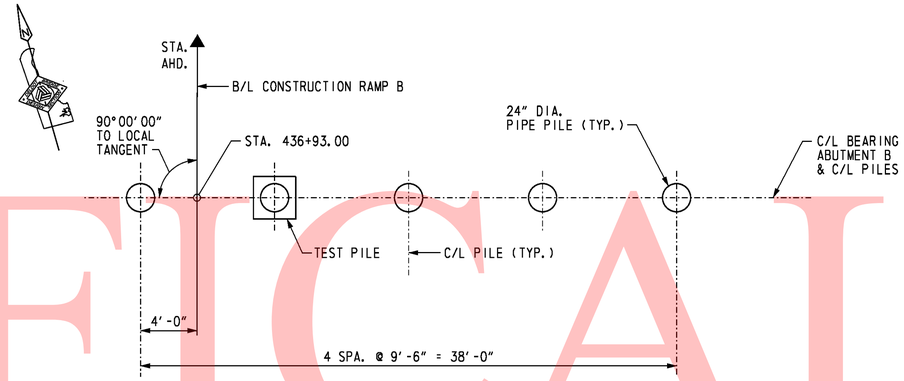

ABUTMENT B PILE PLAN

SCALE: 3/16" = 1'-0"

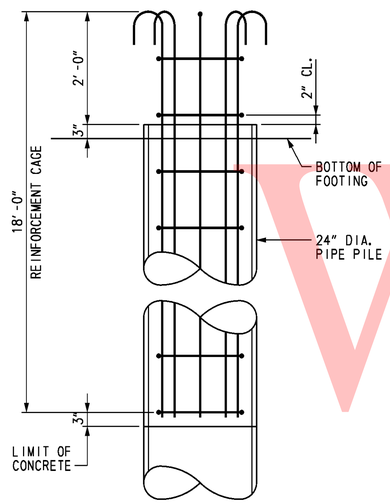

ELEVATION

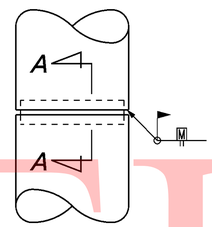

PIPE PILE SPLICE DETAIL

NOT TO SCALE

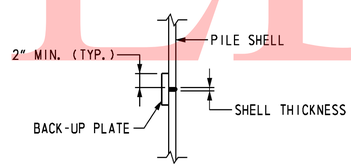

SECTION A-A

NOT TO SCALE

PILE INSTALLATION DATA				
	DESIGN DATA		ACTUAL FIELD DATA	
SUBSTRUCTURE UNIT	NOMINAL PILE DRIVING RESISTANCE (KIPS)	ESTIMATED PILE TIP ELEVATION	AVERAGE MINIMUM TIP ELEVATION	AVERAGE MAXIMUM TIP ELEVATION
ABUTMENT A	660	-7.0		
ABUTMENT B	660	11.0		

ABUTMENT A PILE DRIVING INFORMATION
PILE SIZE AND TYPE:
ACTUAL BEARING OBTAINED:
HAMMER TYPE:
PILE HAMMER ENERGY:
SPECIAL DRIVING CONDITIONS AND COMMENTS:

ABUTMENT B PILE DRIVING INFORMATION
PILE SIZE AND TYPE:
ACTUAL BEARING OBTAINED:
HAMMER TYPE:
PILE HAMMER ENERGY:
SPECIAL DRIVING CONDITIONS AND COMMENTS:

NOTES:

1. PILES SHALL BE 24" DIA. WITH ½" WALL THICKNESS OPEN-ENDED STEEL PIPE PILES, ASTM A252 GRADE 3.
2. REINFORCING STRAPS SHALL BE PROVIDED FOR THE ABUTMENT STEM AND BACKWALL TO RESIST THE LONGITUDINAL FORCES ON THE SUPERSTRUCTURE.
3. PILE CASINGS SHALL BE INSTALLED AT THE PROPOSED PILE LOCATIONS DURING THE ABUTMENT MSE WALL CONSTRUCTON.
4. UPON COMPLETION OF THE MSE WALL THERE SHALL BE A 30 TO 60 DAY QUARANTINE PERIOD PRIOR TO DRIVING THE ABUTMENT PILES TO ALLOW FOR SETTLEMENT AND TO MINIMIZE THE DOWNDRAG FORCES THAT MIGHT DEVELOP ON THE PILES.
5. THE ENGINEER SHALL MONITOR THE SETTLEMENT DURING THE QUARANTINE PERIOD TO DETERMINE WHEN THE PILES MAY BE DRIVEN.
6. UPON COMPLETION OF THE QUARANTINE PERIOD, AS JUDGED BY THE ENGINEER, DRIVE PILES TO THE NOMINAL PILE DRIVING RESISTANCE INDICATED ON THE PLANS.
7. 'TEST PILES' SHALL BE TESTED IN ACCORDANCE WITH THE SPECIFICATIONS.

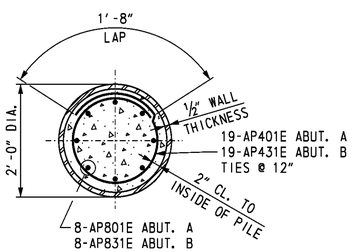

SECTION

PIPE PILE REINFORCEMENT

SCALE: 3/4" = 1'-0"

PILE SPLICE NOTES:

1. BACK-UP PLATE TO BE CUT FROM SAME PILE SIZE AS IS BEING SPLICED. CUT AND BEND TO FIT INSIDE DIAMETER OF PILE.
2. NO PILE SPLICING TO BE ALLOWED ON ANY PORTION OF PILE THAT IS TO REMAIN EXPOSED IN COMPLETED STRUCTURE.
3. SPLICER SLEEVE MATERIAL SHALL BE STEEL CONFORMING TO ASTM DESIGNATION A709, GRADE 36 (250).

CROSS REFERENCE NOTES:

1. FOR ABUTMENT PLAN AND ELEVATION, SEE DWGS. S3-5 & S3-6.
2. FOR REINFORCING BAR LIST, SEE DWG. S3-15.
3. FOR PILE CASING DETAILS, SEE DWG. S3-5.
4. FOR SOIL PROFILE, SOIL PROPERTIES AND TOTAL ESTIMATED SETTLEMENT, SEE DWG. S3-14.
5. FOR TEST PILE PAYMENT NOTES, SEE DWG. S3-2.

UNOFFICAL WEBSITE COPY

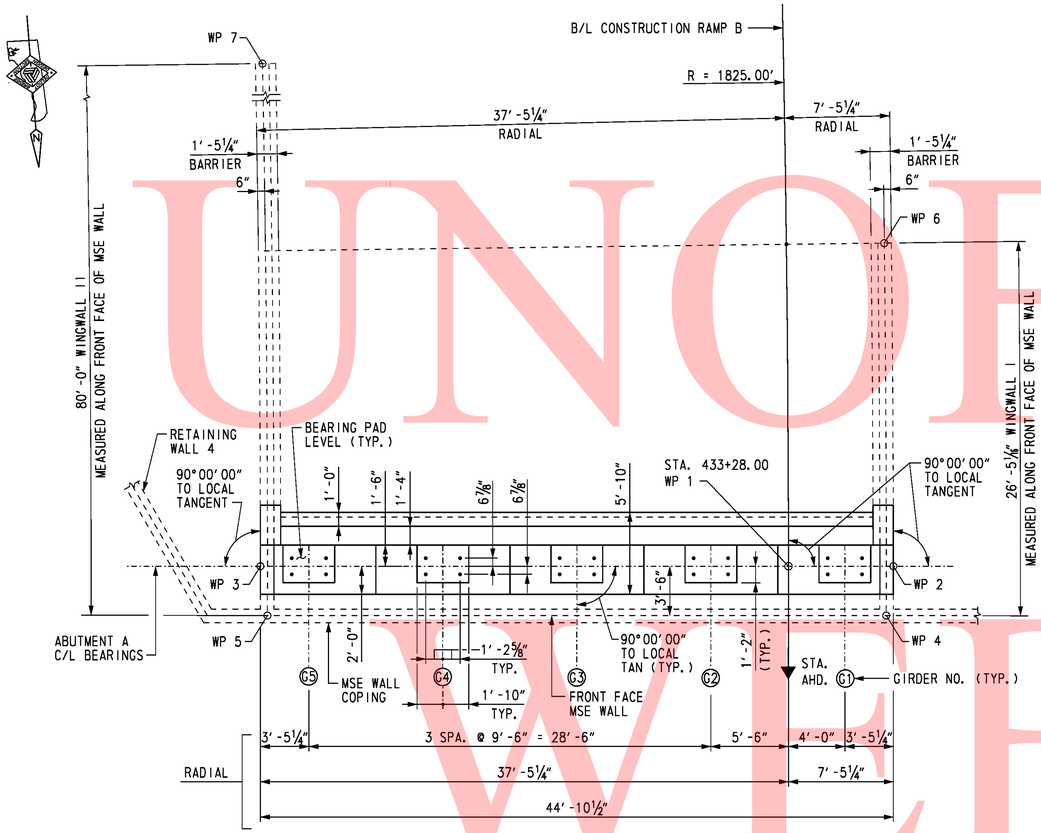

ABUTMENT A PLAN

SCALE: ⅛" = 1'-0"

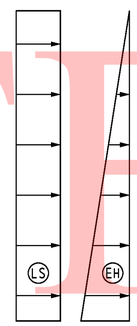

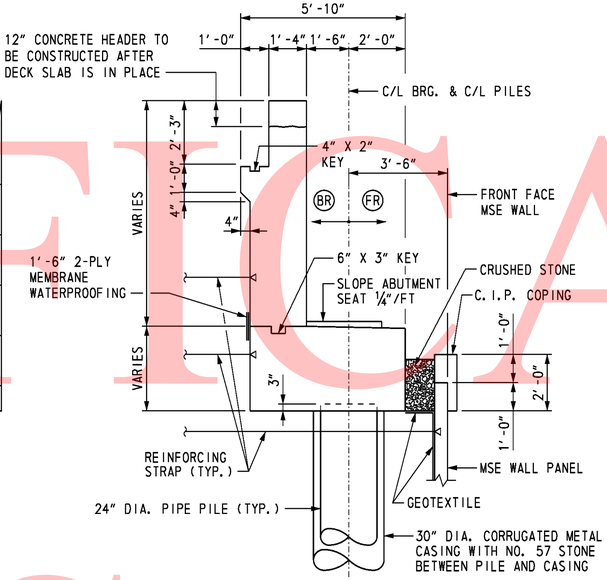

TYPICAL ABUTMENT SECTION

SCALE: ⅜" = 1'-0"

ABUTMENT LATERAL LOADS:

1. CONTRACTOR SHALL DESIGN THE SOIL REINFORCING STRAPS IN THE ABUTMENT STEM AND BACKWALL TO RESIST LATERAL LOADS "EH", "LS", "BR" AND "FR".
2. LOAD "EH" IS THE HORIZONTAL EARTH PRESSURE RESULTANT EXERTED ON THE ABUTMENT.
3. LOAD "LS" IS THE ADDITIONAL HORIZONTAL SOIL PRESSURE RESULTANT DUE TO 3 FEET OF SOIL SURCHARGE. CONTRACTOR IS RESPONSIBLE FOR PROVIDING MSE WALL DESIGNER WITH OTHER CONSTRUCTION LOADS WHICH WILL BE IN EXCESS OF 3 FEET OF SOIL SURCHARGE.
4. LOAD "BR" IS THE HORIZONTAL LOAD DUE TO BRAKING FORCE ON THE SUPERSTRUCTURE.
5. LOAD "FR" IS THE HORIZONTAL LOAD DUE TO FRICTION ON THE BEARINGS AS A RESULT OF BRIDGE EXPANSION AND CONTRACTION.
6. THE POINT OF APPLICATION OF THE LOADS "EH" AND "LS" ARE AT THE CENTROID OF THE PRESSURE DIAGRAM. THE LOADS "BR" AND "FR" ARE APPLIED AT THE CENTER OF THE BEARINGS. THE LOADS "BR" AND "FR" MAY ACT TOGETHER IN EITHER DIRECTION.

ABUTMENT LATERAL LOADS

TYPE	SERVICE LOAD (KIPS/FT.)
EH	2.70
LS	1.30
BR	0.26
FR	1.20

WORKING POINTS

W.P. NO.	STATION	OFFSET	COORDINATES	
			NORTHING	EASTING
1	433+28.00	0.00'	611,910.0335	432,299.7981
2	433+28.00	7.44' LT.	611,910.6691	432,292.3878
3	433+28.00	37.44' RT.	611,906.8341	432,337.0986
4	433+31.49	6.94' LT.	611,914.1133	432,293.1884
5	433+31.57	36.94' RT.	611,910.3638	432,336.9030
6	433+05.17	6.94' LT.	611,887.7785	432,291.0701
7	432+49.92	36.94' RT.	611,830.5402	432,331.6950

NOTES:

1. CRUSHED STONE AND GEOTEXTILE BETWEEN MSE WALL COPING AND ABUTMENT FOOTING SHALL BE INCIDENTAL TO ITEM NO. 602772 - MECHANICALLY STABILIZED EARTH WALLS.
2. MSE WALL AND COPING NOT SHOWN IN ELEVATION VIEW.
3. BEAM SEAT STEPS MID-WAY BETWEEN GIRDERS. BEAM SEAT ELEVATION IS AT FRONT FACE BACKWALL.
4. METAL CASING FOR PILES SHALL EXTEND FROM BOTTOM OF ABUTMENT TO BOTTOM OF MSE WALL LEVELING PAD. COST OF METAL CASING AND NO. 57 STONE SHALL BE INCIDENTAL TO FURNISHING 24" STEEL PIPE PILE ITEM.

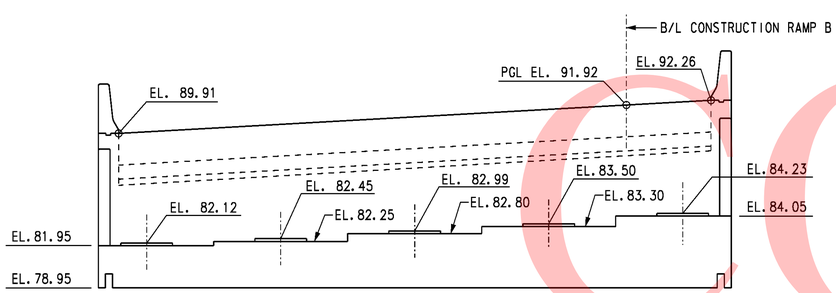

ABUTMENT A ELEVATION

SCALE: ⅛" = 1'-0"

CROSS REFERENCE NOTES:

1. FOR BRIDGE PLAN AND ELEVATION, SEE DWG. S3-1.
2. FOR TYPICAL SIDE ELEVATION, SEE DWG. S3-6.
3. FOR MSE WINGWALLS PLAN AND ELEVATION, SEE DWGS. S3-11 & S3-12.
4. FOR ABUTMENT REINFORCEMENT, SEE DWGS. S3-7 & S3-8.
5. FOR ABUTMENT STRAP ANCHOR DETAIL, SEE DWG. S3-7.

UNOFFICIAL WEBSITE COPY

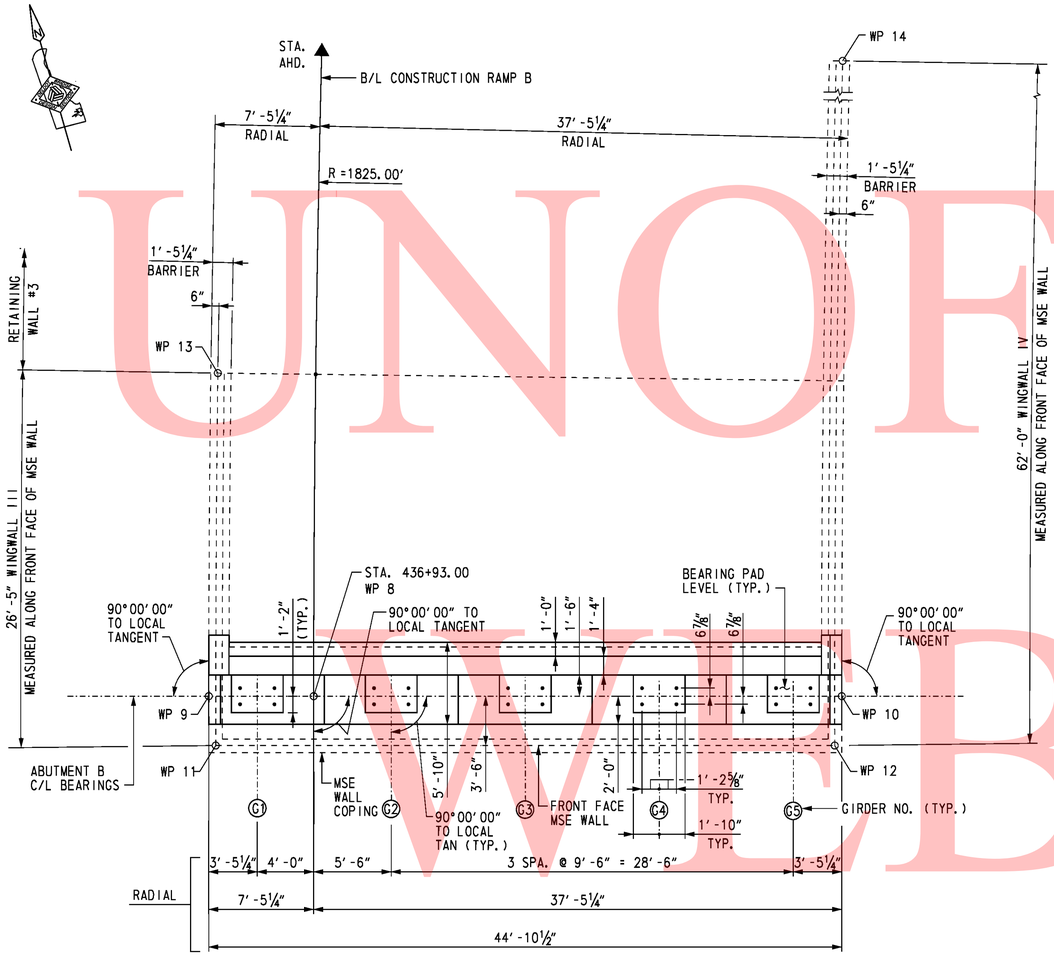

ABUTMENT B PLAN

SCALE: 3/16" = 1'-0"

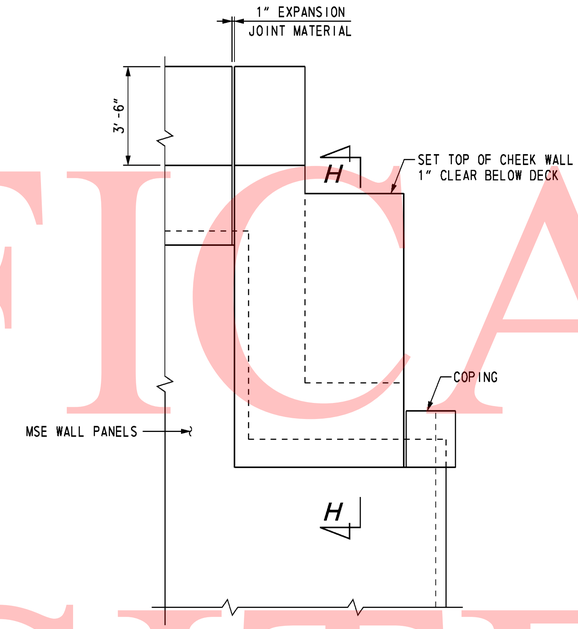

TYPICAL SIDE ELEVATION

SCALE: 3/8" = 1'-0"

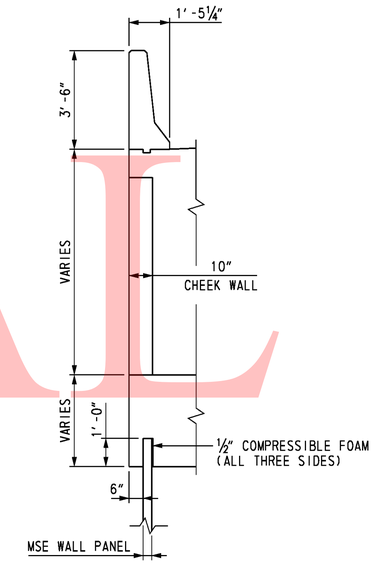

SECTION H-H

SCALE: 3/8" = 1'-0"

WORKING POINTS

W.P. NO.	STATION	OFFSET	COORDINATES	
			NORTHING	EASTING
8	436+93.00	0.00'	612,268.1698	432,367.0286
9	436+93.00	7.44' LT.	612,270.2649	432,359.8923
10	436+93.00	37.44' RT.	612,257.6237	432,402.9500
11	436+89.51	6.94' LT.	612,266.7648	432,359.3893
12	436+89.43	36.94' RT.	612,254.4053	432,401.4875
13	437+15.83	6.94' LT.	612,292.0750	432,366.9660
14	437+52.71	36.94' RT.	612,313.6159	432,419.8648

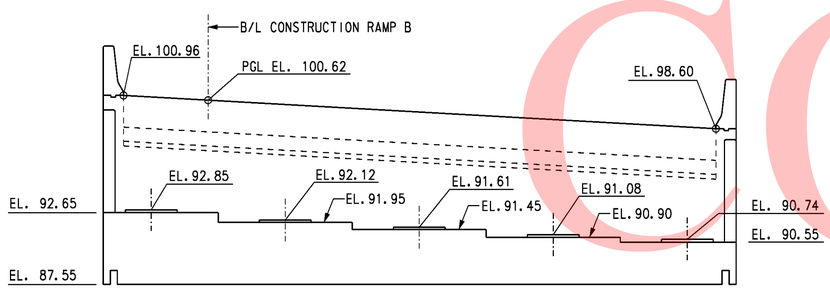

ABUTMENT B ELEVATION

SCALE: 3/16" = 1'-0"

NOTES:

1. MSE WALL AND COPING NOT SHOWN IN ELEVATION VIEW.
2. ABUTMENT SEAT STEPS MID-WAY BETWEEN GIRDERS.

CROSS REFERENCE NOTES:

1. FOR BRIDGE PLAN AND ELEVATION, SEE DWG. S3-1.
2. FOR TYPICAL ABUTMENT SECTION, SEE DWG. S3-5.
3. FOR MSE WINGWALLS PLAN AND ELEVATION, SEE DWGS. S3-11 & S3-12.
4. FOR ABUTMENT REINFORCEMENT, SEE DWGS. S3-9 & S3-10.

UNOFFICIAL WEBSITE COPY

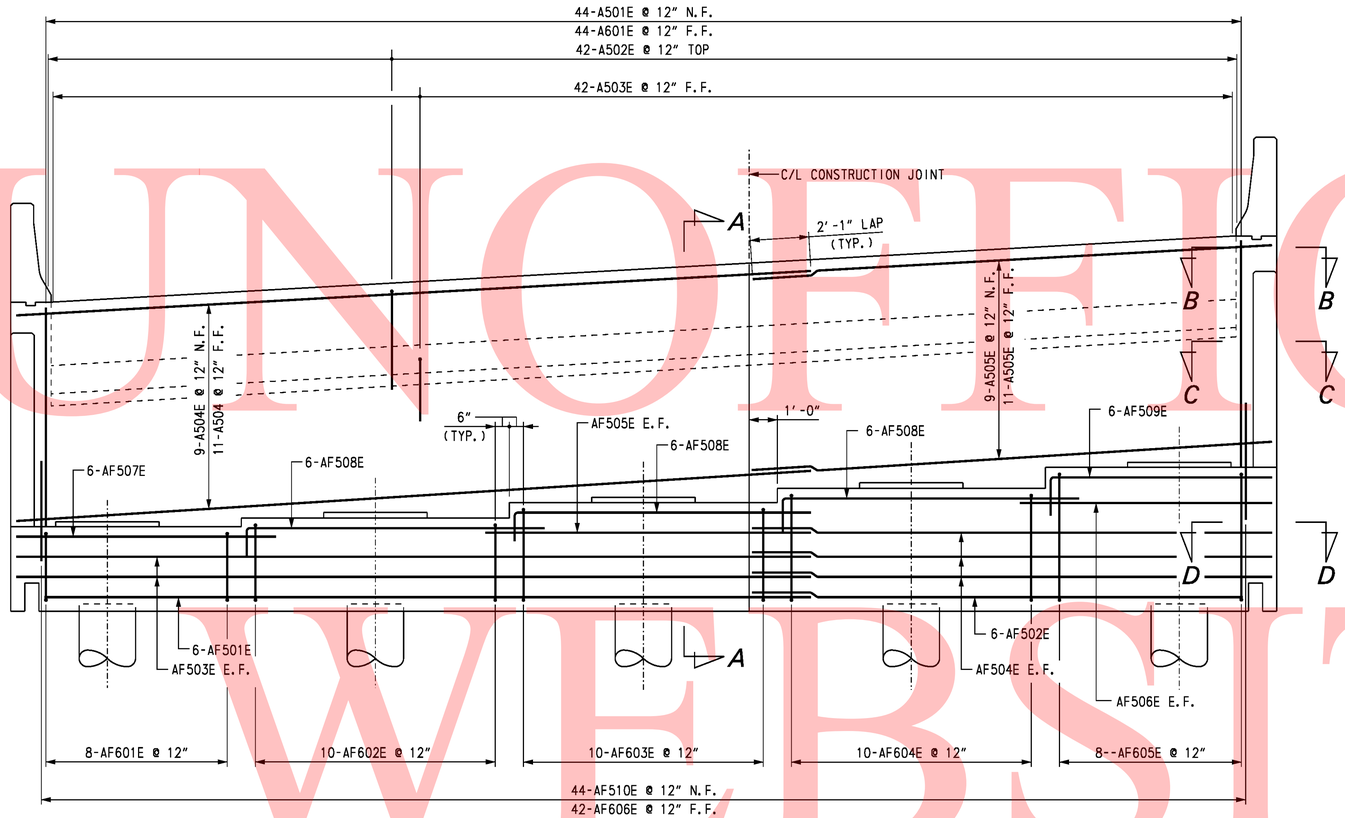

ABUTMENT A ELEVATION

SCALE: 3/8" = 1'-0"

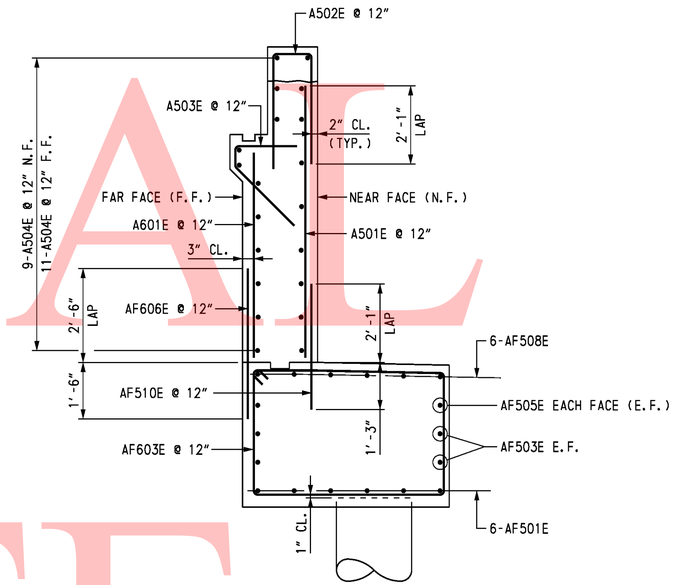

SECTION A-A

SCALE: 1/2" = 1'-0"

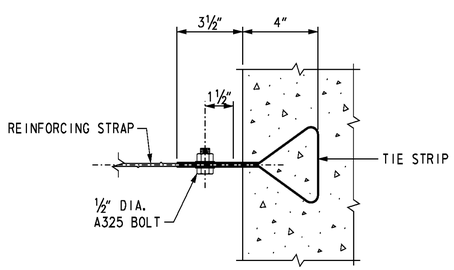

ABUTMENT STRAP ANCHOR DETAIL

NOT TO SCALE

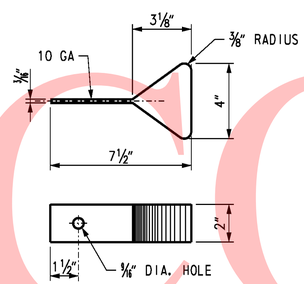

TIE STRIP DETAIL

NOT TO SCALE

NOTE:

1. TIE STRIP MATERIAL IS SAME AS USED IN MSE WALL PANELS. DESIGN SHALL BE CONSISTENT WITH MSE WALL DESIGN. COST OF REINFORCING STRAPS AND ANCHORS SHALL BE INCIDENTAL TO MSE WALL ITEM.

CROSS REFERENCE NOTES:

1. FOR BRIDGE PLAN AND ELEVATION, SEE DWG. S3-1.
2. FOR ABUTMENT A PLAN AND ELEVATION, SEE DWG. S3-5.
3. FOR WINGWALL I SIDE ELEVATION, SEE DWG. S3-8.
4. FOR SECTIONS B-B. C-C AND D-D, SEE DWG. S3-8.
5. FOR REINFORCING BAR LIST, SEE DWG. S3-15.

UNOFFICAL WEBSITE COPY

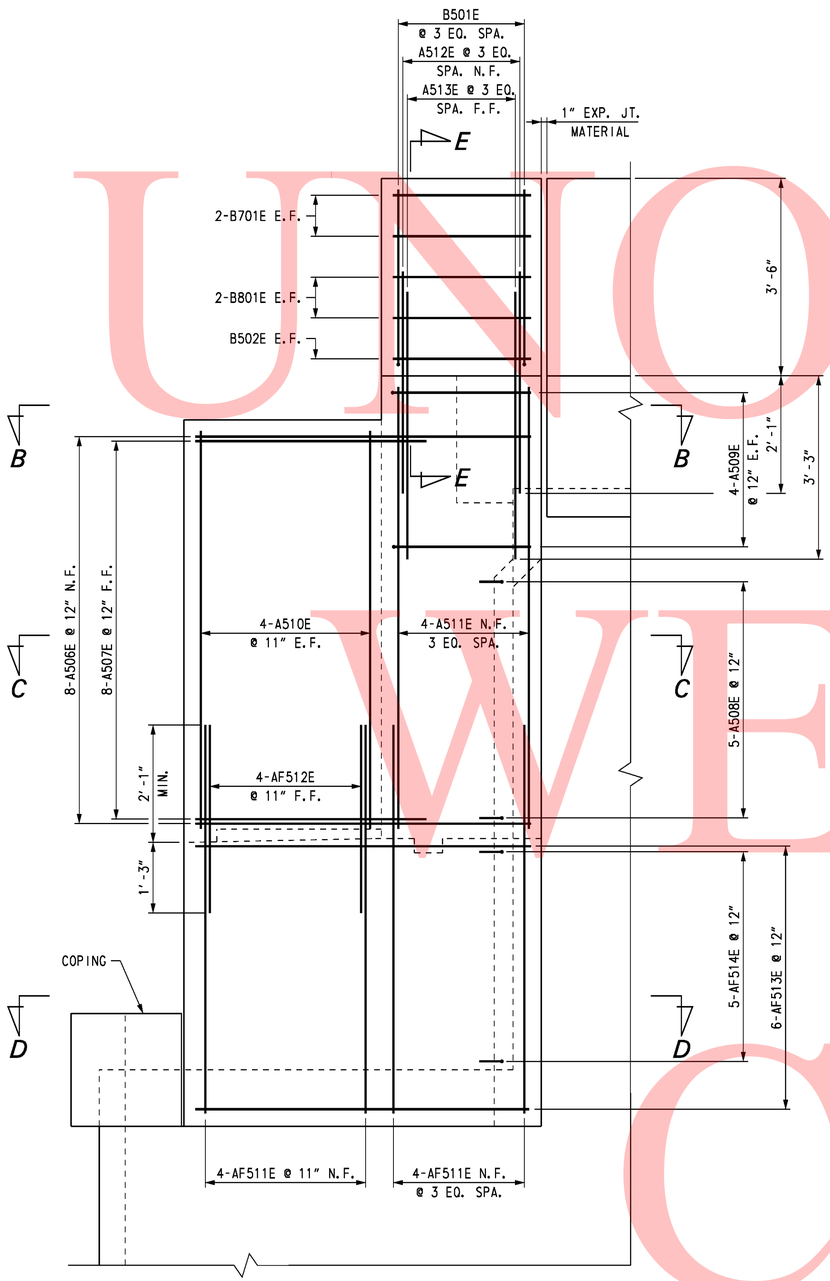

WINGWALL 1 SIDE ELEVATION

SCALE: 3/4" = 1'-0"

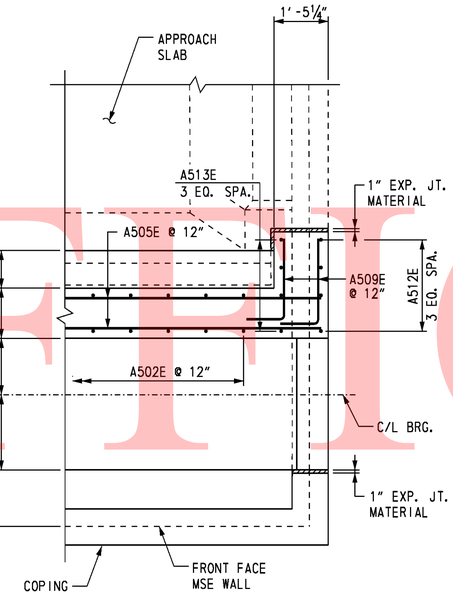

SECTION B-B

SCALE: 1/2" = 1'-0"

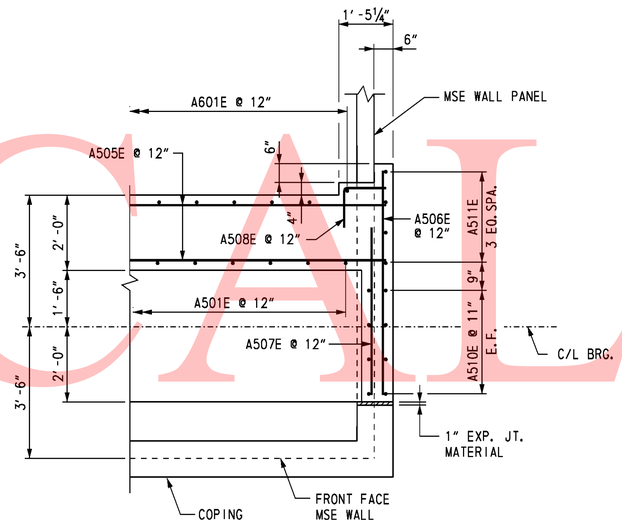

SECTION C-C

SCALE: 1/2" = 1'-0"

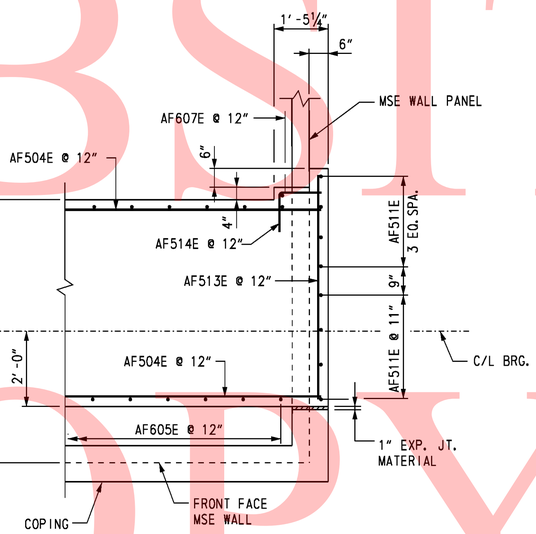

SECTION D-D

SCALE: 1/2" = 1'-0"

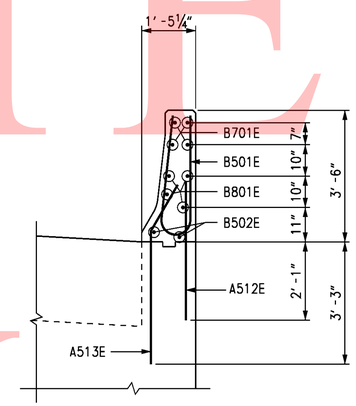

SECTION E-E

SCALE: 1/2" = 1'-0"

CROSS REFERENCE NOTES:

1. FOR ABUTMENT A PLAN AND ELEVATION, SEE DWG. S3-5.
2. FOR ABUTMENT A ELEVATION REINFORCEMENT DETAILS, SEE DWG. S3-7.
3. FOR REINFORCING BAR LIST, SEE DWG. S3-15.

UNOFFICIAL WEBSITE COPY

DELAWARE DEPARTMENT OF TRANSPORTATION	ADDENDUMS / REVISIONS	SR1 / I-95 INTERCHANGE	CONTRACT 28-090-03	BRIDGE NO. 1-268A	RAMP B OVER SR 7	S3-8 SHEET NO.	
			COUNTY NEW CASTLE	DESIGNED BY: K. D. BEAVER	ABUTMENT A REINFORCEMENT 2	314 TOTAL SHTS.	
				CHECKED BY: J. S. LI		803	

untitled 10/28/2010 O:\20832687-XM\CAD\Bridge\BR-S3\ab05_BR-S3_sr1.dgn

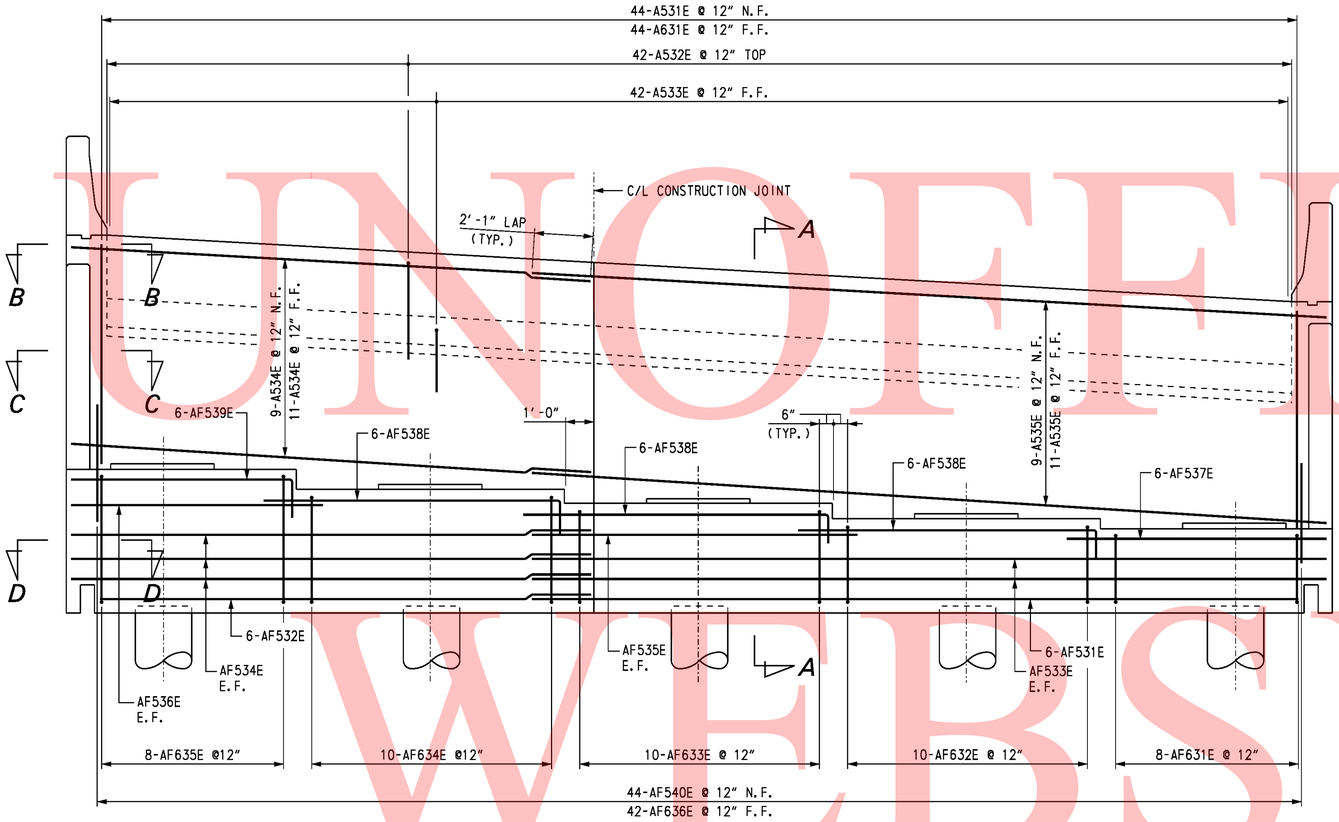

ABUTMENT B ELEVATION

SCALE: 3/8" = 1'-0"

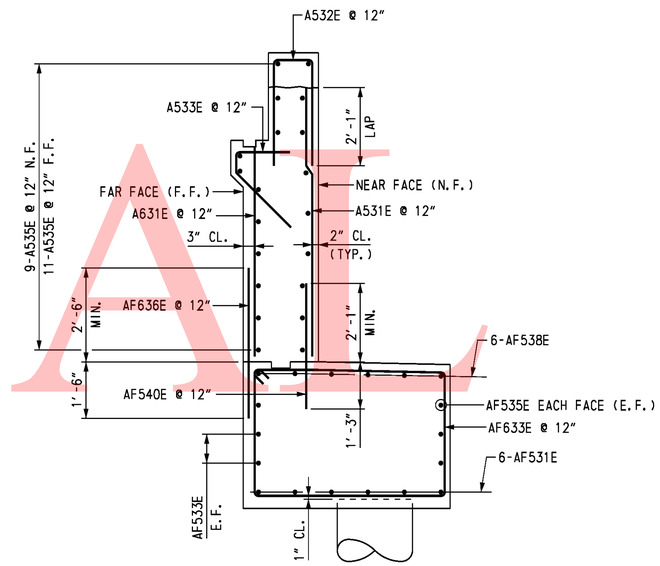

SECTION A-A

SCALE: 1/2" = 1'-0"

CROSS REFERENCE NOTES:

1. FOR BRIDGE PLAN AND ELEVATION, SEE DWG. S3-1.
2. FOR ABUTMENT B PLAN AND ELEVATION, SEE DWG. S3-6.
3. FOR WINGWALL III SIDE ELEVATION, SEE DWG. S3-10.
4. FOR SECTIONS B-B. C-C AND D-D, SEE DWG. S3-10.
5. FOR REINFORCING BAR LIST, SEE DWG. S3-15.

UNOFFICIAL WEBSITE COPY

10/28/2010 O:\20832687-XM\CAD\Bridge\BR-S3\ab06_BR-S3_sr1.dgn untitled

DELAWARE DEPARTMENT OF TRANSPORTATION	ADDENDUMS / REVISIONS		SR1 / I-95 INTERCHANGE	CONTRACT 28-090-03	BRIDGE NO. 1-268A	RAMP B OVER SR 7 ABUTMENT B REINFORCEMENT 1	S3-9 SHEET NO. 315
				COUNTY NEW CASTLE	DESIGNED BY: K. D. BEAVER		TOTAL SHTS. 803
					CHECKED BY: J. S. LI		

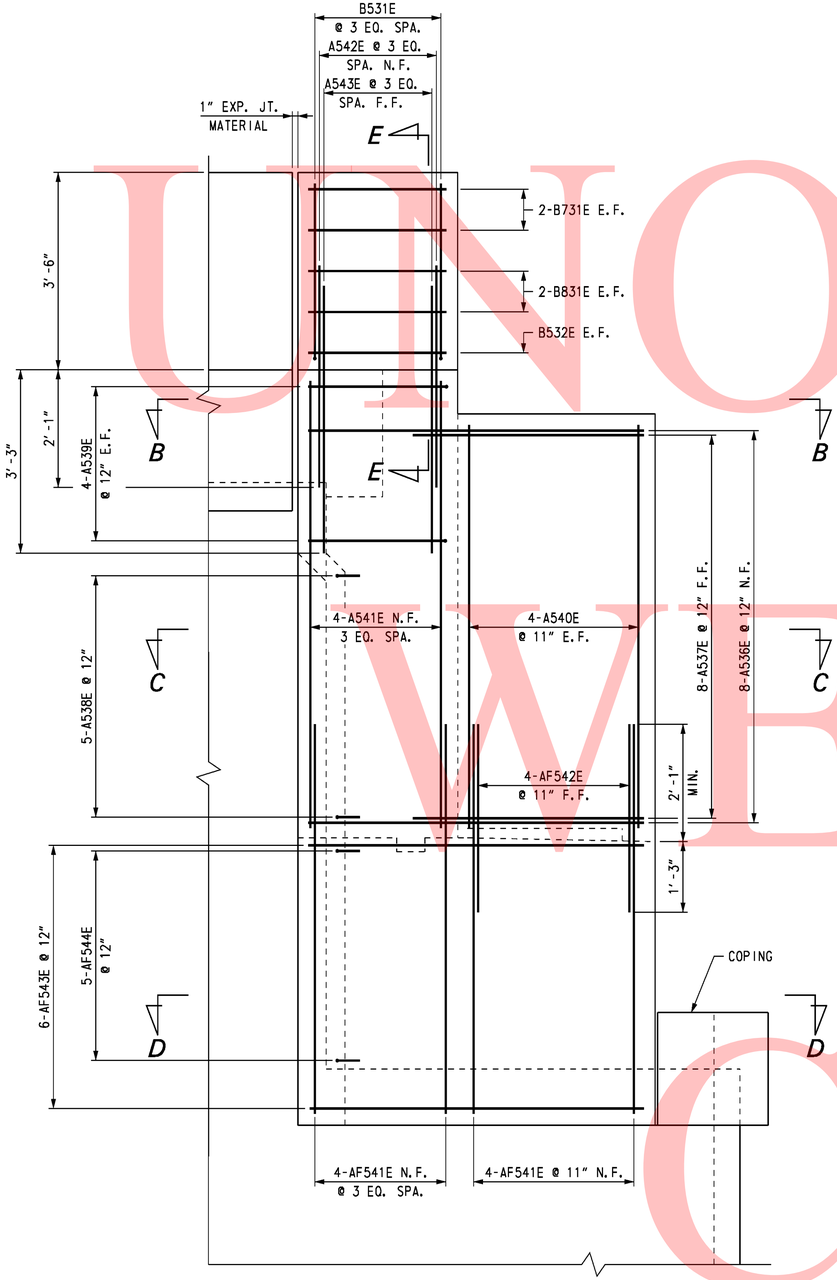

WINGWALL III SIDE ELEVATION

SCALE: 3/4" = 1'-0"

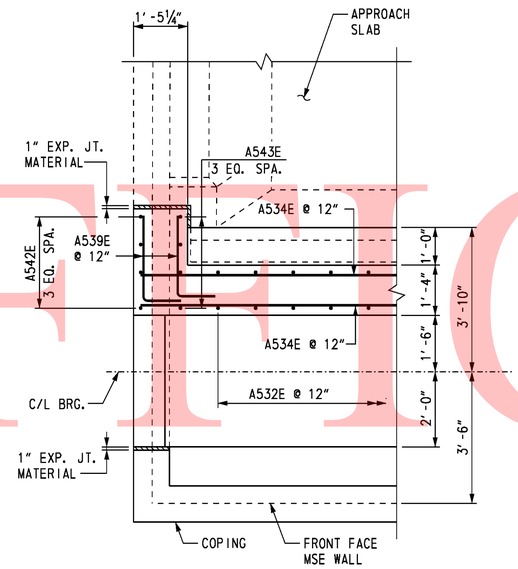

SECTION B-B

SCALE: 1/2" = 1'-0"

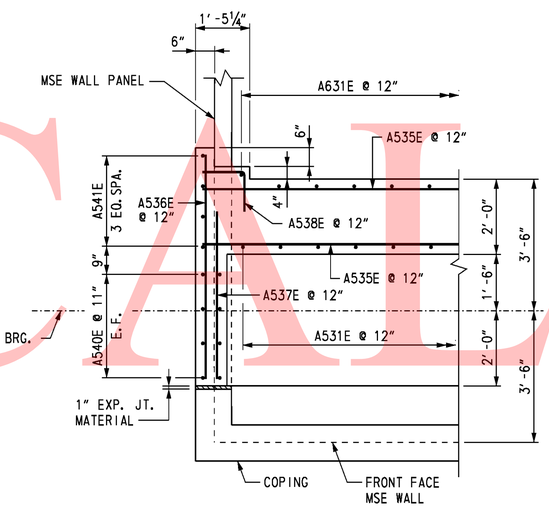

SECTION C-C

SCALE: 1/2" = 1'-0"

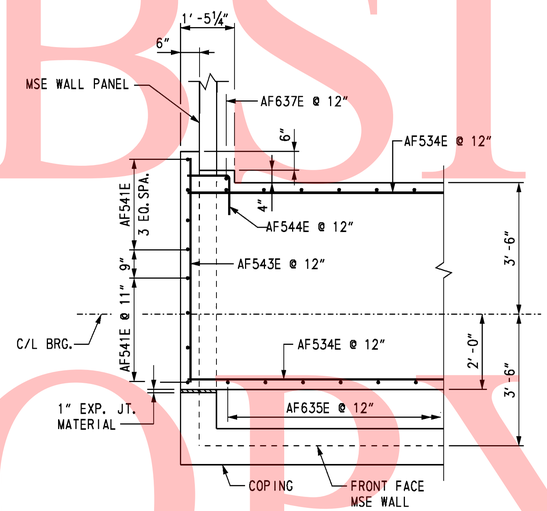

SECTION D-D

SCALE: 1/2" = 1'-0"

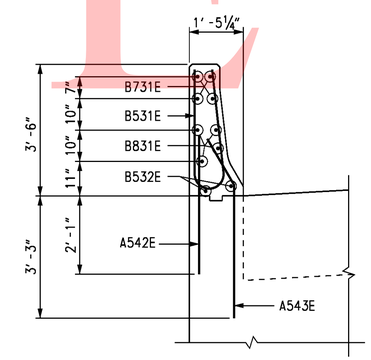

SECTION E-E

SCALE: 1/2" = 1'-0"

CROSS REFERENCE NOTES:

1. FOR ABUTMENT B PLAN AND ELEVATION, SEE DWG. S3-6.
2. FOR ABUTMENT B ELEVATION REINFORCEMENT DETAILS, SEE DWG. S3-9.
3. FOR REINFORCING BAR LIST, SEE DWG. S3-15.

UNOFFICIAL WEBSITE COPY

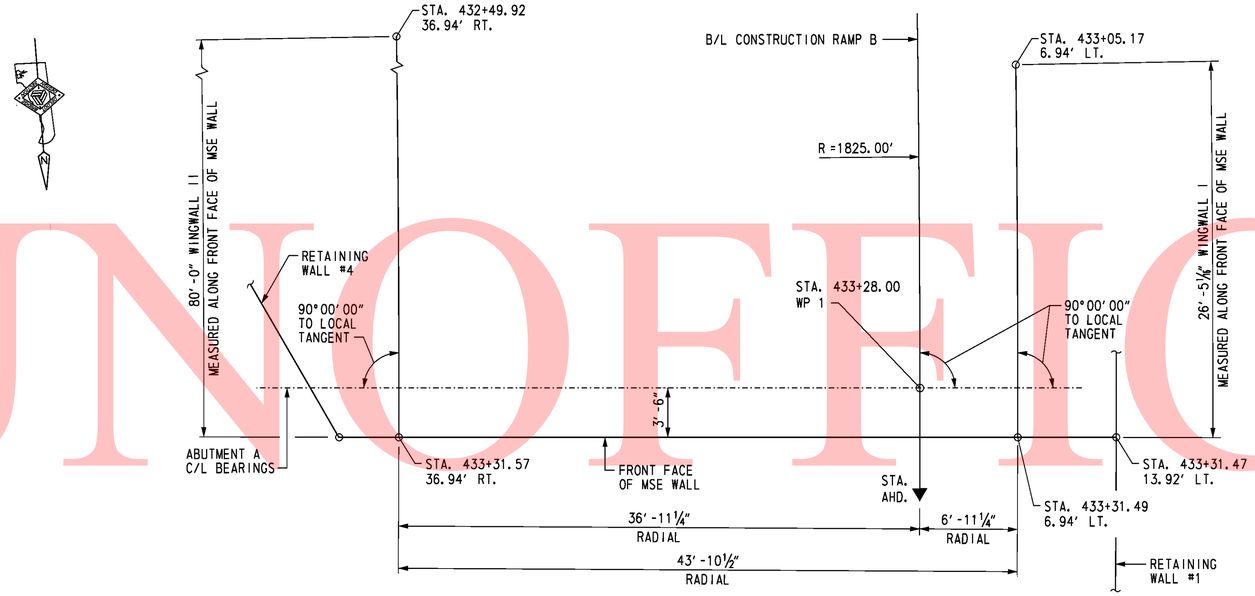

PLAN

SCALE: 3/16" = 1'-0"

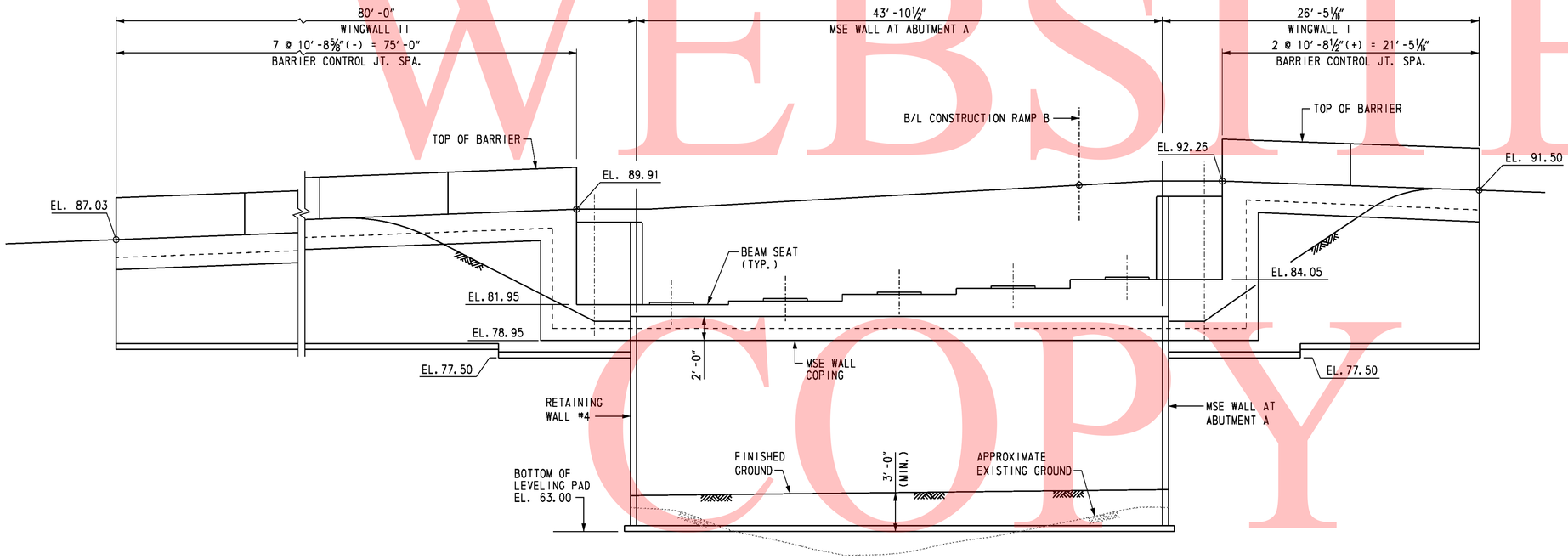

DEVELOPED ELEVATION

SCALE: 3/16" = 1'-0"

CROSS REFERENCE NOTES:

1. FOR BRIDGE PLAN AND ELEVATION, SEE DWG. S3-1.
2. FOR ABUTMENT A PLAN AND ELEVATION, SEE DWG. S3-5.
3. FOR MSE WINGWALL DETAILS, SEE DWG. S3-13 & S3-14.

UNOFFICAL WEBSITE COPY

10/28/2010 O:\20832687-XM\CAD\Bridge\BR-S3\rd01_BR-S3_sr1.dgn untitled

DELAWARE DEPARTMENT OF TRANSPORTATION	ADDENDUMS / REVISIONS	SR1 / I-95 INTERCHANGE	CONTRACT 28-090-03	BRIDGE NO. 1-268A	RAMP B OVER SR 7 WINGWALLS I AND II PLAN AND ELEVATION	S3-11 SHEET NO. 317
			COUNTY NEW CASTLE	DESIGNED BY: R. F. KIRCHNER		TOTAL SHTS. 803
				CHECKED BY: G. P. MISTRY		

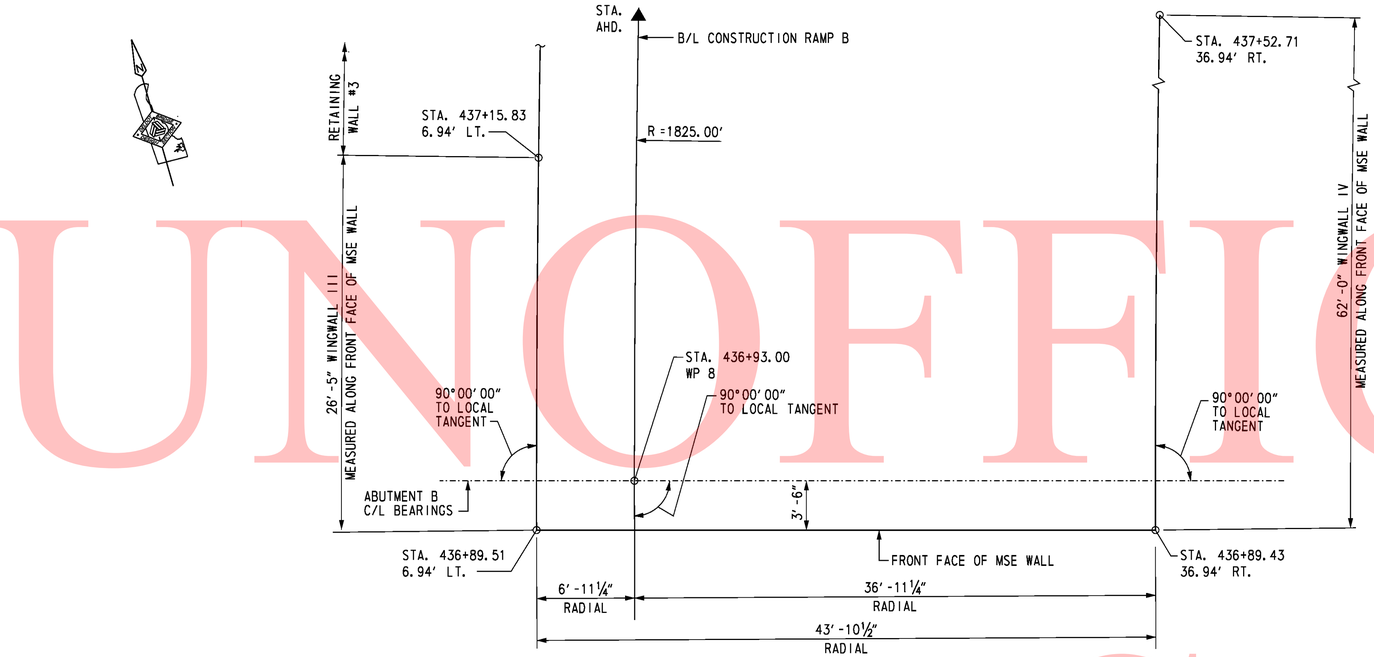

PLAN

SCALE: 3/16" = 1'-0"

CROSS REFERENCE NOTES:

1. FOR BRIDGE PLAN AND ELEVATION, SEE DWG. S3-1.
2. FOR ABUTMENT B PLAN AND ELEVATION, SEE DWG. S3-6.
3. FOR MSE WINGWALL DETAILS, SEE DWG. S3-13 & S-14.

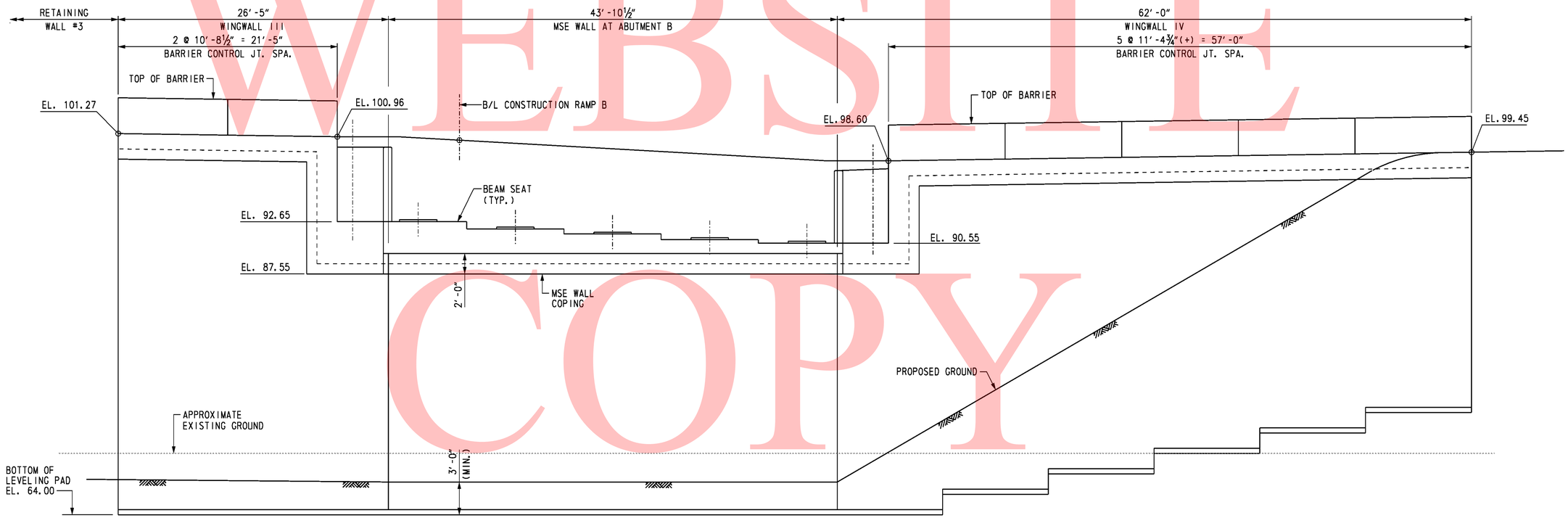

DEVELOPED ELEVATION

SCALE: 3/16" = 1'-0"

UNOFFICAL WEBSITE COPY

O:\20832687-XM\CAD\Bridge\BR-S3\rd02_BR-S3_sr1.dgn
10/28/2010
untitled

DELAWARE DEPARTMENT OF TRANSPORTATION	ADDENDUMS / REVISIONS	SR1 / I-95 INTERCHANGE	CONTRACT 28-090-03	BRIDGE NO. 1-268A	RAMP B OVER SR 7 WINGWALLS III AND IV PLAN AND ELEVATION
			COUNTY NEW CASTLE	DESIGNED BY: R. F. KIRCHNER	SHEET NO. S3-12 / 31B
				CHECKED BY: G. P. MISTRY	TOTAL SHTS. 803

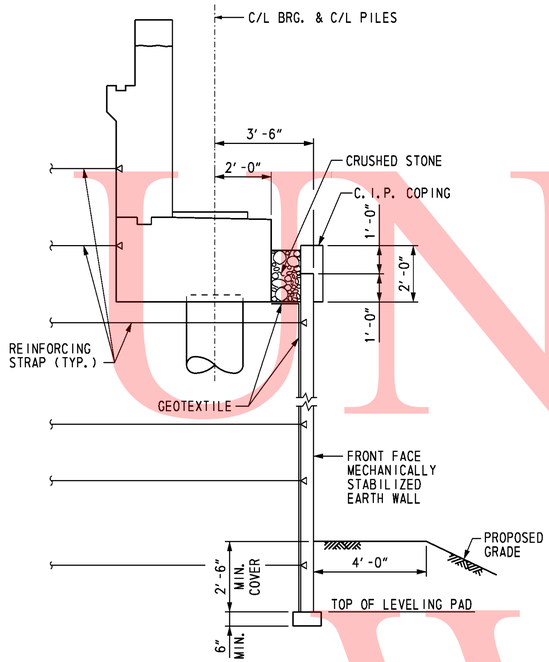

TYPICAL MSE WALL SECTION AT ABUTMENT

SCALE: 3/8" = 1'-0"

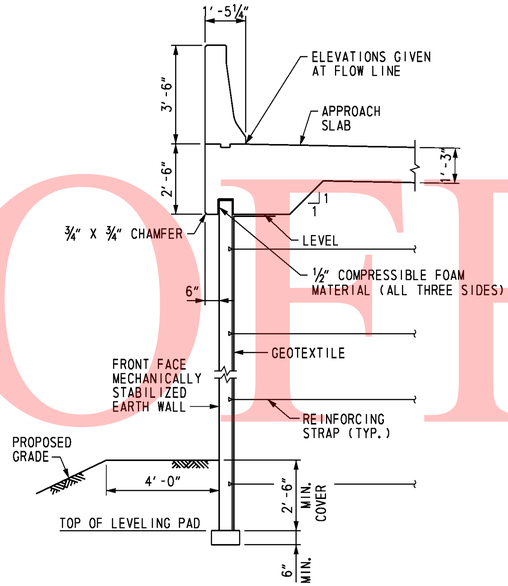

TYPICAL WINGWALL SECTION WITH APPROACH SLAB

SCALE: 3/8" = 1'-0"

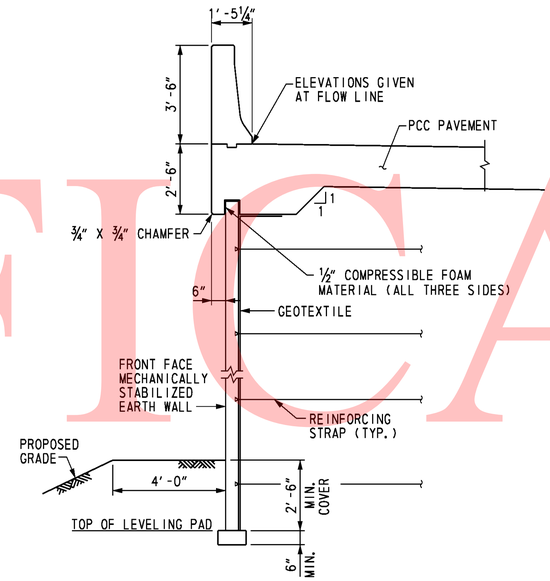

TYPICAL WINGWALL SECTION WITH PCC PAVEMENT

SCALE: 3/8" = 1'-0"

MSE WALL NOTES

SPECIFICATIONS: PROPRIETARY MSE WALLS SHALL BE DESIGNED IN ACCORDANCE WITH THE FOLLOWING:
- AASHTO LRFD BRIDGE DESIGN SPECIFICATIONS, 4TH EDITION WITH ALL CURRENT REVISIONS.
- FEDERAL HIGHWAY ADMINISTRATION PUBLICATION NOS. FHWA-NHI-10-024 AND FHWA-NHI-025, "DESIGN AND CONSTRUCTION OF MECHANICALLY STABILIZED EARTH WALLS AND REINFORCED SOIL SLOPES", VOLUME I AND VOLUME II.

CONCRETE DESIGN SHALL BE PERFORMED USING THE LOAD AND RESISTANCE FACTOR DESIGN METHOD.

CONCRETE: ALL CONCRETE FOR ROADWAY BARRIERS SHALL BE 4,500 PSI. LEVELING PAD CONCRETE SHALL BE 3,500 PSI. MIX REQUIREMENTS SHALL CONFORM TO SECTION 812 OF THE DELAWARE DEPARTMENT OF TRANSPORTATION STANDARD SPECIFICATIONS.

CHAMFERS: ALL EXPOSED CORNERS OF CONCRETE SHALL BE CHAMFERED WITH ¾" x ¾" MILLED CHAMFER STRIPS, UNLESS OTHERWISE NOTED, EXCEPT ON UNEXPOSED FOOTINGS OR WHERE INDICATED BY THE FOLLOWING NOTATION ON THE PLANS: "DO NOT CHAMFER".

REINFORCING STEEL: REINFORCING STEEL SHALL CONFORM TO ASTM A 615, GRADE 60. ALL SPLICES, NOT SHOWN, SHALL BE LAPPED AS PER THE LRFD BRIDGE DESIGN SPECIFICATIONS. MINIMUM COVER FOR ANY BAR SHALL BE 2" UNLESS OTHERWISE NOTED.

FOR TIES AND STIRRUPS, STANDARD ACI BENDING TOLERANCES ARE MODIFIED TO PLUS (+) ZERO INCHES, MINUS (-) NORMAL ACI BENDING TOLERANCE.

ONLY GRADE 60 CAN BE USED ON THIS PROJECT.

ALL REINFORCING STEEL IN THE BARRIER SHALL BE FUSION-BONDED EPOXY COATED, AND SHALL CONFORM TO ASTM D3963.

ALL KEYS ARE NOMINAL SIZE.

TME MSE WALL MANUFACTURER MAY SUBSTITUTE ALTERNATE REINFORCING CONFIGURATIONS AND SUBMIT FOR APPROVAL.

EXPANSION AND CONTRACTION JOINTS: THE LOCATION OF THE EXPANSION AND CONTRACTION JOINTS IN THE BARRIER SHOWN ON THE PLANS MAY BE ADJUSTED TO ACCOMMODATE THE PANEL TYPE USED IN THE PROJECT. ANY CHANGE TO THESE JOINT LOCATIONS SHALL BE SUBMITTED TO THE ENGINEER FOR APPROVAL.

LEVELING PAD: THE PROPRIETARY WALL MANUFACTURER MAY RELOCATE THE LEVELING PAD STEPS AT THEIR DISCRETION PROVIDED THAT THE MINIMUM EMBEDMENT IS MAINTAINED. ANY CHANGE TO THE STEP LOCATIONS SHALL BE SUBMITTED TO THE ENGINEER FOR APPROVAL.

ROADWAY LIMITS: THE PROPRIETARY WALL MANUFACTURER SHALL ASSURE THAT PROPOSED PROPRIETARY WALL COMPONENTS ARE POSITIONED SUCH THAT THE DESIGNATED ROADWAY LIMITS ARE NOT ENCROACHED UPON.

TRAFFIC BARRIER JOINTS: TRAFFIC BARRIER FOOTING SHALL HAVE CONSTRUCTION JOINTS TO COINCIDE WITH THE BARRIER JOINTS.

COORDINATION: CONTRACTOR AND PROPRIETARY WALL MANUFACTURER SHALL COORDINATE LOCATIONS OF INLETS AND PIPES WITH LOCATIONS OF PROPRIETARY WALL TIE BACK SYSTEM AND MOMENT SLAB.

ARCHITECTURAL FINISH: THE MSE WALL PANELS SHALL RECEIVE AN ARCHITECTURAL FINISH.

SERVICE LIFE: ALL RETAINING WALL COMPONENTS SHALL BE DESIGNED FOR A MINIMUM SERVICE LIFE OF 100 YEARS.

WALL SYSTEM: ONLY ONE MSE WALL SYSTEM MAY BE USED ON THIS PROJECT.

ROADWAY SUPERELEVATION: FOR ROADWAY SUPERELEVATION, SEE SUPERELEVATION TABLES.

MSE WALL BACKFILL: MSE WALL BACKFILL SHALL CONSIST OF SPECIFIED BACKFILL AS SHOWN ON SOIL PROFILE SECTION.

REINFORCING STRAPS: SET REINFORCING STRAPS TO CLEAR PILE CASING, 2" MIN. CLEARANCE. MAXIMUM IN-FIELD SKEW OF 15 DEGREES. IF GREATER SKEW ANGLE IS REQUIRED, CONTACT MSE WALL FIELD REPRESENTATIVE PRIOR TO INSTALLATION.

CROSS REFERENCE NOTES:

1. FOR BRIDGE PLAN AND ELEVATION, SEE DWG. S3-1.
2. FOR WINGWALLS PLAN AND ELEVATION, SEE DWGS. S3-11 & S3-12.
3. FOR SOIL PROFILE INFORMATION AND FOUNDATION NOTES, SEE DWG. S3-14.

UNOFFICIAL WEBSITE COPY

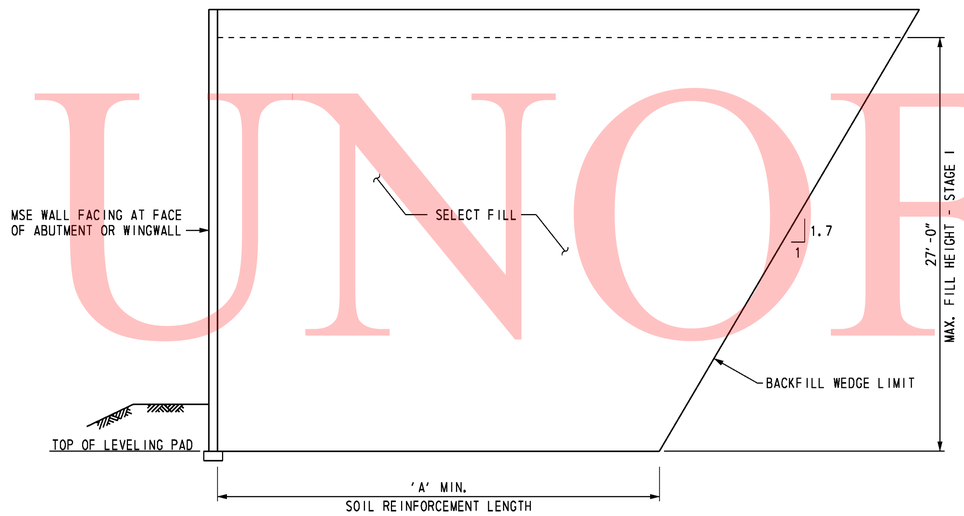

SOIL PROFILE SECTION
ABUTMENT A AND WINGWALLS I AND II

NOT TO SCALE

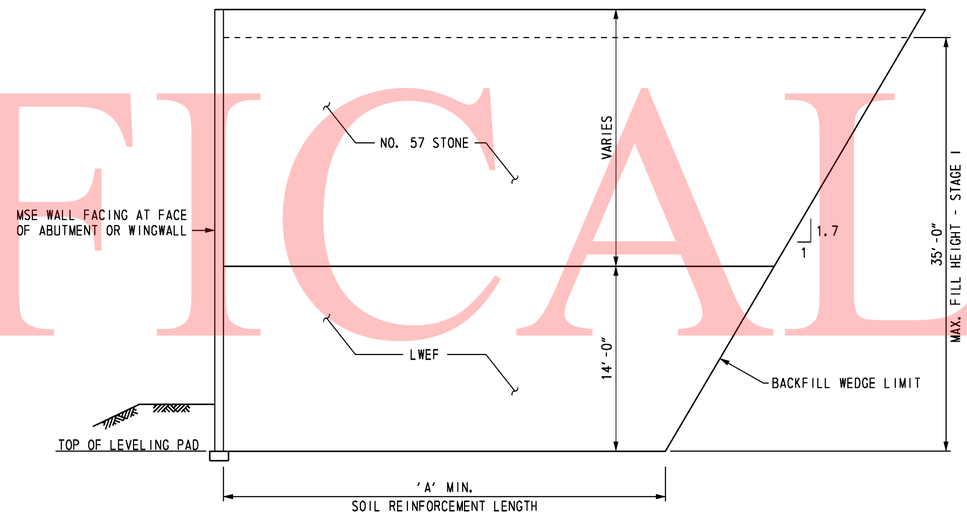

SOIL PROFILE SECTION
ABUTMENT B AND WINGWALLS III AND IV

NOT TO SCALE

MINIMUM REINFORCED ZONE WIDTH (A) FEET	
ABUTMENT A	
FACE OF ABUTMENT	26.0
WINGWALLS I AND II	26.0
ABUTMENT B	
FACE OF ABUTMENT	27.0
WINGWALLS III AND IV	27.0

SOIL PROPERTIES				
SOIL TYPE	UNIT WEIGHT (PCF)	DRAINED ANGLE OF FRICTION (DEGREES)	UNDRAINED SHEAR (PSF)	FACTORED BEARING RESISTANCE (KSF)
SELECT FILL	125	34	-	-
LWEF	40	38	-	-
NO. 57 STONE	105	38	-	-
FOUNDATION SOIL:				
ABUTMENT A	120	24	1400	5.5
ABUTMENT B	120	24	1250	5.5

FOUNDATION NOTES

THE FACTORED BEARING RESISTANCE SHALL BE VERIFIED PRIOR TO CONSTRUCTION OF THE MSE WALL.

THE INTERNAL STABILITY OF THE MSE WALL SHALL BE DESIGNED BY THE CONTRACTOR USING THE SOIL PARAMETERS PROVIDED FOR EACH STRUCTURE LOCATION. THE INTERNAL STABILITY CALCULATIONS SHALL BE SIGNED AND SEALED BY A PROFESSIONAL ENGINEER LICENSED IN THE STATE OF DELAWARE AS INDICATED IN THE PROJECT SPECIFICATIONS.

ISOLATED AREAS OF EXISTING FILL MAY BE ENCOUNTERED DURING CONSTRUCTION OF THIS MSE WALL. EXISTING FILL SHALL BE UNDERCUT TO EXPOSE UNDISTURBED NATURAL SOIL. UNDERCUTTING AND BACKFILLING WILL BE MEASURED AND PAID IN ACCORDANCE WITH THE SPECIFICATIONS.

A MINIMUM 7-DAY QUARANTINE PERIOD SHALL BE REQUIRED AFTER CONSTRUCTION OF THE WALL TO THE "MAX. FILL HEIGHT - STAGE 1" INDICATED ON THE SOIL PROFILE SECTION. NO FURTHER FILL SHALL BE PLACED UNTIL AUTHORIZED BY THE ENGINEER. ONCE AUTHORIZATION IS GIVEN, FILL SHALL BE PLACED IN ADDITIONAL INCREMENTS OF 5 FEET IN HEIGHT, WITH THE SAME QUARANTINE PERIOD AND AUTHORIZATION REQUIRED AT EACH INCREMENT. AN ADDITIONAL QUARANTINE PERIOD OF 30 TO 60 DAYS IS REQUIRED AFTER CONSTRUCTION OF THE MSE WALL TO ITS FULL HEIGHT. NO FURTHER CONSTRUCTION SHALL BE PERMITTED UNTIL AUTHORIZED BY THE ENGINEER. A TOTAL ESTIMATED SETTLEMENT OF APPROXIMATELY FOUR TO FIVE INCHES IS ANTICIPATED.

UNOFFICAL WEBSITE COPY

REINFORCING BAR LIST

ABUTMENT A

MARK	LENGTH	NO. BARS	TYPE	A	B	C	D	E	G	H	J	K	O	R	REMARKS
AP401E	6′-7″	95	T3									1′-8″	1′-7″		
AP801E	18′-11″	40	37	0′-11″	18′-0″						0′-8″				
AF501E	27′-3″	6	STR.												
AF502E	17′-4″	6	STR.												
AF503E	28′-3″	4	STR.												
AF504E	18′-4″	6	STR.												
AF505E	10′-7″	2	STR.												
AF506E	9′-3″	2	STR.												
AF507E	9′-3″	6	STR.												
AF508E	12′-3″	18	36	0′-10″	11′-5″										
AF509E	8′-8″	6	36	0′-10″	7′-10″										
AF510E	3′-8″	44	STR.												
AF511E	7′-4″	16	STR.												
AF512E	4′-6″	8	STR.												
AF513E	6′-0″	12	STR.												
AF514E	2′-2″	10	17		1′-1″	1′-1″									
AF601E	17′-4″	8	T2	1′-0″	5′-2″	2′-6″	5′-2″	2′-6″	1′-0″						
AF602E	17′-10″	10	T2	1′-0″	5′-2″	2′-9″	5′-2″	2′-9″	1′-0″						
AF603E	19′-0″	10	T2	1′-0″	5′-2″	3′-4″	5′-2″	3′-4″	1′-0″						
AF604E	20′-0″	10	T2	1′-0″	5′-2″	3′-10″	5′-2″	3′-10″	1′-0″						
AF605E	21′-6″	8	T2	1′-0″	5′-2″	4′-7″	5′-2″	4′-7″	1′-0″						
AF606E	4′-3″	42	STR.												
AF607E	6′-10″	2	STR.												
A501E	7′-9½″	44	STR.												
A502E	7′-1″	42	17		3′-0″	1′-0″	3′-1″								
A503E	3′-9″	42	16		1′-6″	0′-10″	1′-5″								
A504E	28′-4″	20	STR.												
A505E	18′-5″	20	STR.												
A506E	6′-0″	16	STR.												
A507E	4′-7″	16	STR.												
A508E	2′-2″	10	17		1′-1″	1′-1″									
A509E	3′-3″	16	36	2′-3″	1′-0″										
A510E	6′-7″	16	STR.												
A511E	9′-3″	8	STR.												
A512E	3′-10″	8	STR.												
A513E	4′-8″	8	16			3′-5″	1′-3″			1′-0¼″		0′-8¾″			
A601E	5′-5″	44	STR.												
B501E	6′-9″	8	H1		2′-9½″	1′-2″	2′-9½″			0′-5″				0′-4½″	
B502E	2′-0″	4	STR.												
B701E	2′-0″	8	STR.												
B801E	2′-0″	8	STR.												

ABUTMENT B

MARK	LENGTH	NO. BARS	TYPE	A	B	C	D	E	G	H	J	K	O	R	REMARKS
AP431E	6′-7″	95	T3									1′-8″	1′-7″		
AP831E	18′-11″	40	37	0′-11″	18′-0″						0′-8″				
AF531E	27′-3″	6	STR.												
AF532E	17′-4″	6	STR.												
AF533E	28′-3″	4	STR.												
AF534E	18′-4″	6	STR.												
AF535E	11′-10″	2	STR.												
AF536E	9′-3″	2	STR.												
AF537E	9′-3″	6	STR.												
AF538E	12′-3″	18	36	0′-10″	11′-5″										
AF539E	8′-8″	6	36	0′-10″	7′-10″										
AF540E	3′-8″	44	STR.												
AF541E	7′-4″	16	STR.												
AF542E	4′-6″	8	STR.												
AF543E	6′-0″	12	STR.												
AF544E	2′-2″	10	17		1′-1″	1′-1″									
AF631E	17′-4″	8	T2	1′-0″	5′-2″	2′-6″	5′-2″	2′-6″	1′-0″						
AF632E	18′-0″	10	T2	1′-0″	5′-2″	2′-10″	5′-2″	2′-10″	1′-0″						
AF633E	19′-2″	10	T2	1′-0″	5′-2″	3′-5″	5′-2″	3′-5″	1′-0″						
AF634E	20′-2″	10	T2	1′-0″	5′-2″	3′-11″	5′-2″	3′-11″	1′-0″						
AF635E	21′-6″	8	T2	1′-0″	5′-2″	4′-7″	5′-2″	4′-7″	1′-0″						
AF636E	4′-3″	42	STR.												
AF637E	6′-10″	2	STR.												
A531E	7′-10½″	44	STR.												
A532E	7′-1″	42	17		3′-0″	1′-0″	3′-1″								
A533E	3′-9″	42	16		1′-6″	0′-10″	1′-5″								
A534E	18′-5″	20	STR.												
A535E	28′-4″	20	STR.												
A536E	6′-0″	16	STR.												
A537E	4′-7″	16	STR.												
A538E	2′-2″	10	17		1′-1″	1′-1″									
A539E	3′-3″	16	36	2′-3″	1′-0″										
A540E	6′-9″	16	STR.												
A541E	9′-4″	8	STR.												
A542E	3′-10″	8	STR.												
A543E	4′-8″	8	16			3′-5″	1′-3″			1′-0¼″		0′-8¾″			
A631E	5′-6″	44	STR.												
B531E	6′-9″	8	H1		2′-9½″	1′-2″	2′-9½″			0′-5″				0′-4½″	
B532E	2′-0″	4	STR.												
B731E	2′-0″	8	STR.												
B831E	2′-0″	8	STR.												

BENDING DIAGRAMS

ALL DIMENSIONS ARE FROM OUT TO OUT.

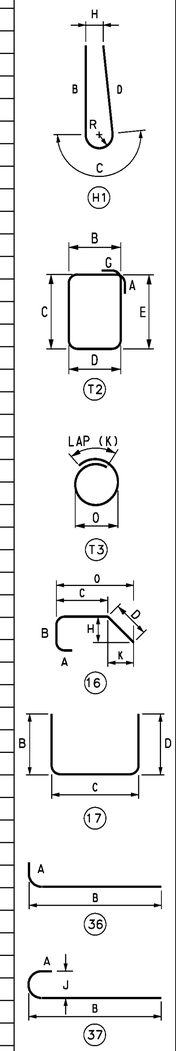

UNOFFICIAL WEBSITE COPY

S3-15

DELAWARE DEPARTMENT OF TRANSPORTATION

ADDENDUMS / REVISIONS

SR1 / I-95 INTERCHANGE

CONTRACT	BRIDGE NO.	1-268A
28-090-03	DESIGNED BY: K.D. BEAVER	
COUNTY		
NEW CASTLE	CHECKED BY: J.S. LI	

RAMP B OVER SR 7

ABUTMENTS A AND B REINFORCING BAR LIST

SHEET NO. 321

TOTAL SHTS. 803

10/28/2010 O:\20832687-XM\CAD\Bridge\BR-S3\ab08_BR-S3_sr1.dgn untitled

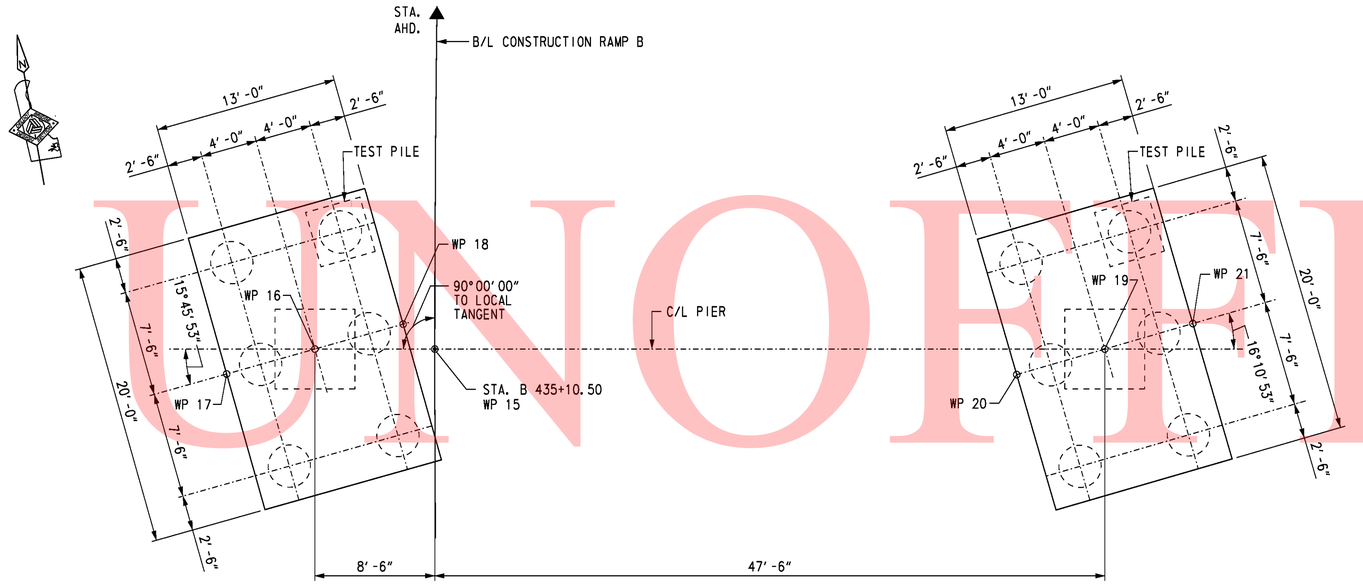

PIER PILE PLAN

SCALE: 3/16" = 1' -0"

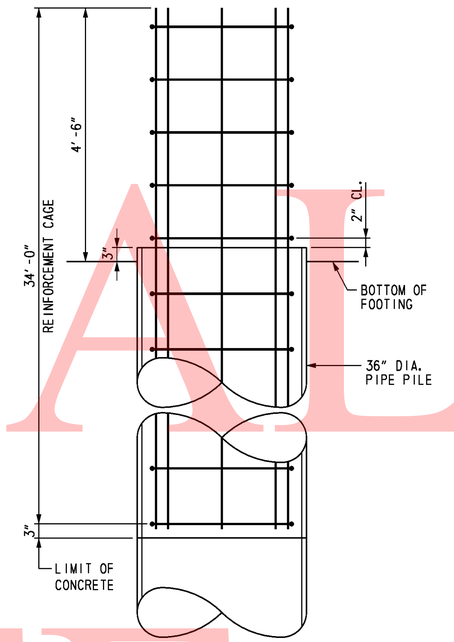

ELEVATION

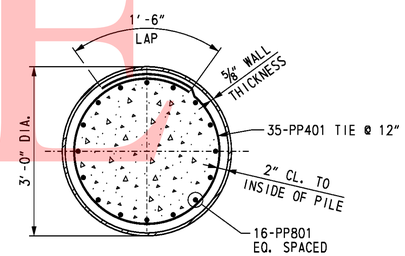

SECTION

PIPE PILE REINFORCEMENT

SCALE: 3/4" = 1' -0"

WORKING POINTS				
WP NO.	STATION	OFFSET	COORDINATES	
			NORTHING	EASTING
15	435+10.50	0.00'	612,090.7838	432,324.4524
16	435+10.50	8.50' LT.	612,092.3521	432,316.0984
17	435+08.75	14.76' LT.	612,091.7705	432,309.6244
18	435+12.26	2.25' LT.	612,092.9336	432,322.5723
19	435+10.50	47.50' RT.	612,082.0200	432,371.1370
20	435+08.65	41.26' RT.	612,081.3915	432,364.6674
21	435+12.37	53.74' RT.	612,082.6486	432,377.6065

PILE INSTALLATION DATA				
	DESIGN DATA		ACTUAL FIELD DATA	
SUBSTRUCTURE UNIT	NOMINAL PILE DRIVING RESISTANCE (KIPS)	ESTIMATED PILE TIP ELEVATION	AVERAGE MINIMUM TIP ELEVATION	AVERAGE MAXIMUM TIP ELEVATION
PIER	1500	-27.0		

PIER PILE DRIVING INFORMATION
PILE SIZE AND TYPE:
ACTUAL BEARING OBTAINED:
HAMMER TYPE:
PILE HAMMER ENERGY:
SPECIAL DRIVING CONDITIONS AND COMMENTS:

NOTES:

1. PILES SHALL BE 36" DIA. WITH 5/8" WALL THICKNESS OPEN-ENDED STEEL PIPE PILES, ASTM A252 GRADE 3.
2. TEST PILES SHALL BE TESTED IN ACCORDANCE WITH THE SPECIFICATIONS.

CROSS REFERENCE NOTES:

1. FOR PIER PLAN AND ELEVATION, SEE DWG. S3-17.
2. FOR REINFORCING BAR LIST, SEE DWG. S3-22.
3. FOR PILE SPLICE DETAIL, SEE DWG. S3-4.
4. FOR TEST PILE PAYMENT NOTES, SEE DWG. S3-2.

UNOFFICAL WEBSITE COPY

CROSS REFERENCE NOTES:

1. FOR BRIDGE PLAN AND ELEVATION, SEE DWG. S3-1.
2. FOR PIER FOUNDATION PLAN, SEE DWG. S3-16.
3. FOR PIER REINFORCING DETAILS, SEE DWG. S3-22.

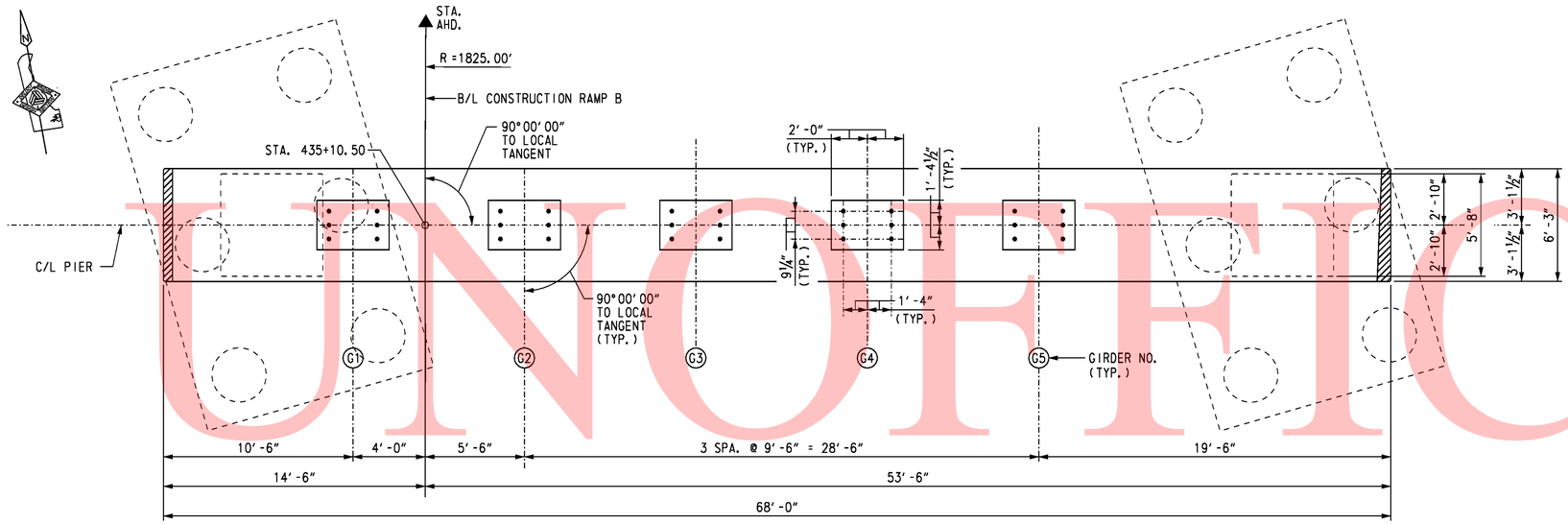

PLAN

SCALE: ¼" = 1'-0"

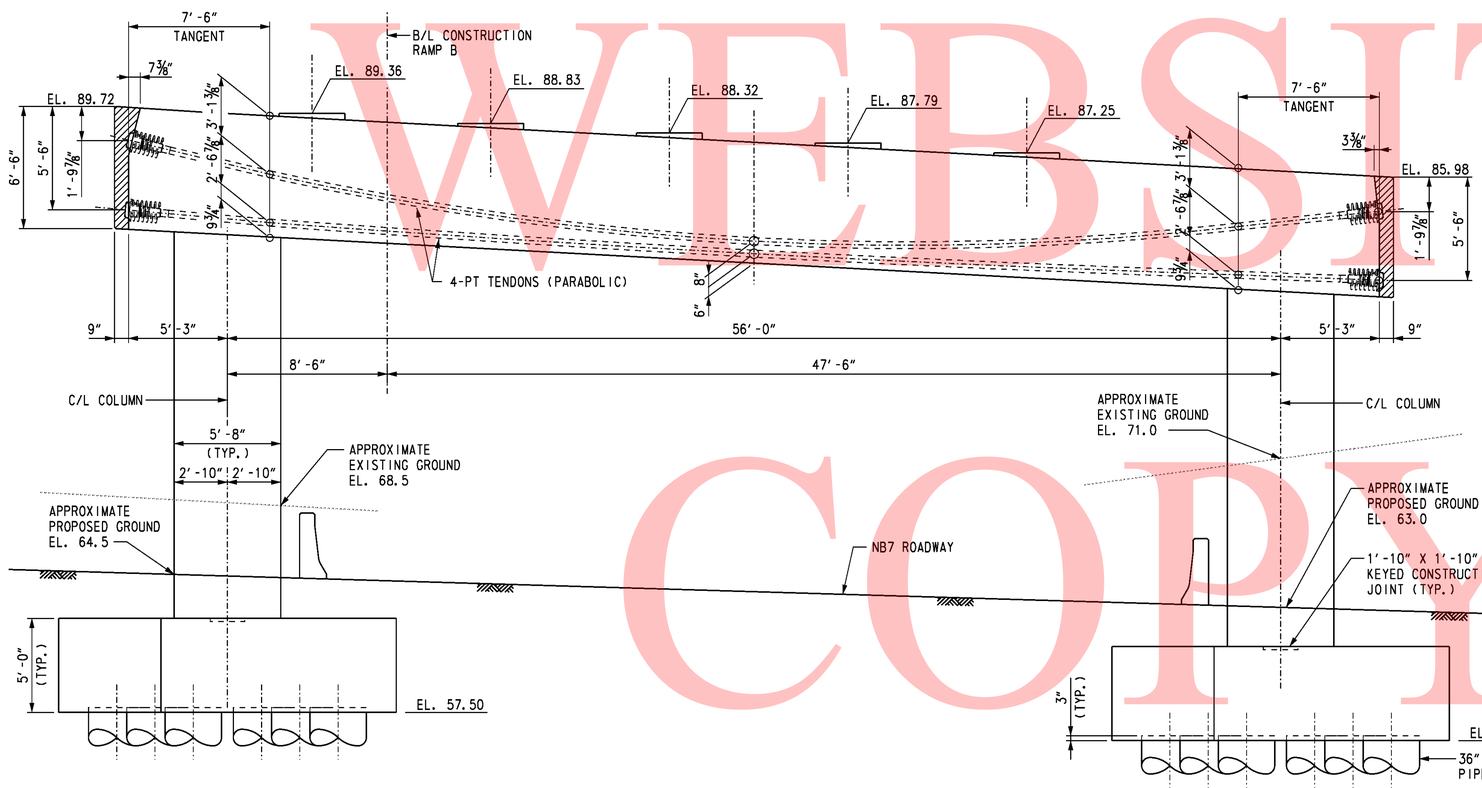

ELEVATION

SCALE: ¼" = 1'-0"

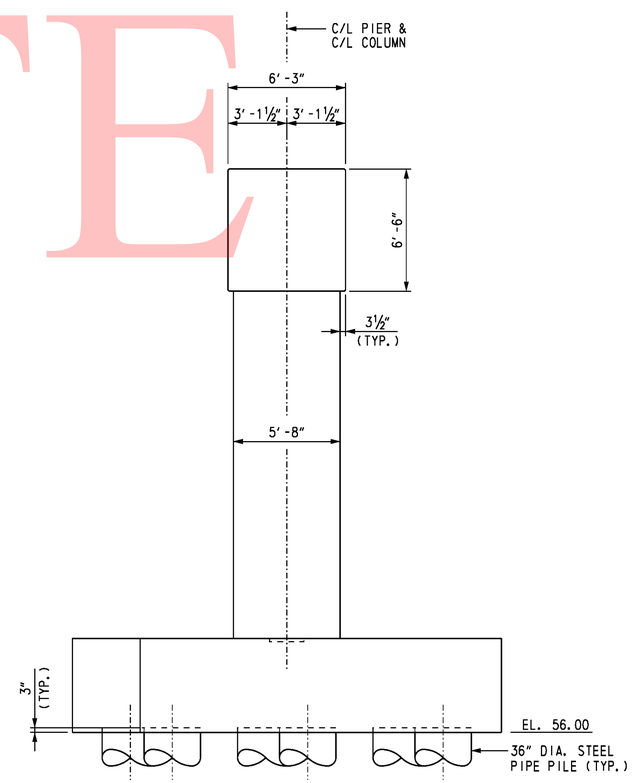

END VIEW

SCALE: ¼" = 1'-0"

UNOFFICAL WEBSITE COPY

10/28/2010 O:\20832687-XM\CAD\Bridge\BR-S3\pr02_BR-S3_sr1.dgn untitled

DELAWARE DEPARTMENT OF TRANSPORTATION	ADDENDUMS / REVISIONS	SR1 / I-95 INTERCHANGE	CONTRACT 28-090-03	BRIDGE NO. 1-268A	RAMP B OVER SR 7 PIER PLAN AND ELEVATION	S3-17 SHEET NO. 323
			COUNTY NEW CASTLE	DESIGNED BY: T. B. CUSTER		TOTAL SHTS. 803
				CHECKED BY: J. S. LI		

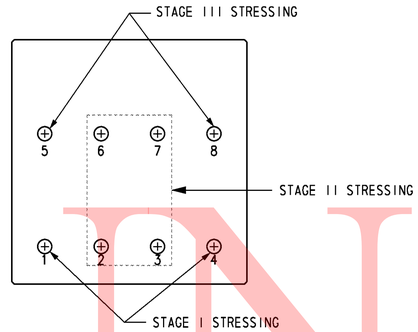

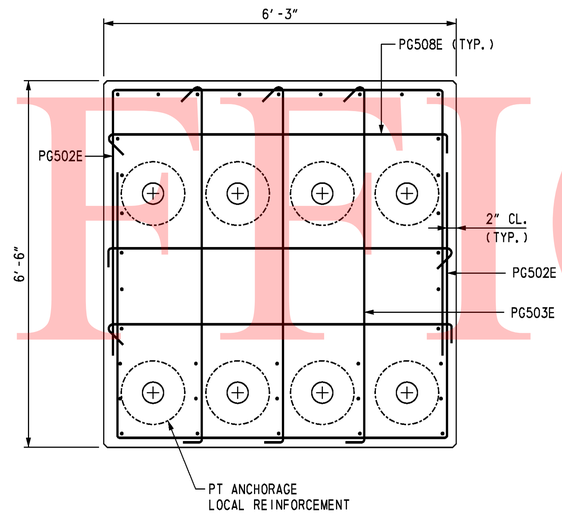

SECTION G-G

SCALE: 3/4" = 1'-0"

POST TENSIONING STEEL

EACH TENDON CONSISTS OF 27 STRANDS ENCLOSED WITHIN 4½" DIAMETER POLYETHYLENE/POLYPROPYLENE (PE/PP) PLASTIC DUCTS.

STRANDS SHALL BE 0.6 INCH DIAMETER SEVEN WIRE UNCOATED LOW RELAXATION CONFORMING TO AASHTO M203 (ASTM A416), GRADE 270.

TENDON STRESSING PARAMETERS:

MODULUS OF ELASTICITY	E = 28,000 PSI
WOBBLE FRICTION COEFFICIENT	κ = 0.0002
COEFFICIENT OF FRICTION	μ = 0.23
ANCHOR SET	δ = 0.25 IN

JACKING STRESS :	TENDONS 1, 2, 3, AND 4	197,500 PSI
	TENDONS 5, 6, 7, AND 8	207,000 PSI
ANCHORING STRESS :	TENDONS 1, 2, 3, AND 4	186,000 PSI
	TENDONS 5, 6, 7, AND 8	181,500 PSI

CONCRETE

28 DAY COMPRESSIVE STRENGTH:	F'C = 8,000 PSI	POST TENSIONED CAP
	F'C = 4,500 PSI	COLUMNS
	F'C = 4,500 PSI	FOOTING

POST TENSIONING NOTES AND STRESSING SEQUENCE

1. TENDONS SHALL NOT BE STRESSED UNTIL THE CAP CONCRETE REACHES A MINIMUM COMPRESSIVE STRENGTH OF 5500 PSI.
2. LOCAL ZONE REINFORCEMENT FOR TENDON ANCHORAGES SHALL BE DESIGNED BY THE CONTRACTOR AND SHOWN ON SHOP DRAWINGS, AND SUBMITTED FOR APPROVAL BY THE ENGINEER.
3. TENDONS SHALL BE STRESSED FROM ONE END OF THE PIER CAP.
4. ALL TENDON STRESSING OPERATIONS SHALL ADHERE TO THE FOLLOWING STAGED SEQUENCE.

STAGE I

1. CONSTRUCT PIER FOUNDATION AND COLUMNS.
2. CONSTRUCT FORMS FOR PIER CAP.
3. AFTER THE FOUNDATIONS AND COLUMNS HAVE ATTAINED AT LEAST 80% OF THEIR DESIGN COMPRESSIVE STRENGTHS, CONSTRUCT THE PIER CAP.
4. STRESS TENDONS 1 AND 4 TO THEIR SPECIFIED JACKING FORCES.
5. ERECT STRUCTURAL STEEL SUPERSTRUCTURE.

STAGE II

1. STRESS TENDONS 2, 3, 6, AND 7 TO THEIR SPECIFIED JACKING FORCES IN THE SEQUENCE SHOWN IN THE PLANS.
2. CONSTRUCT REINFORCED CONCRETE DECK AND PARAPETS.

STAGE III

1. STRESS TENDONS 5 AND 8 TO THEIR SPECIFIED JACKING FORCE.
2. CONSTRUCT CONCRETE END COVER AT EACH END OF CAP.

CROSS REFERENCE NOTES:

1. FOR GENERAL NOTES, SEE DWG. S3-2.
2. FOR LOCATION OF SECTION G-G, SEE DWG. S3-19.
3. FOR REINFORCING BAR LIST, SEE DWG. S3-22.

UNOFFICIAL WEBSITE COPY

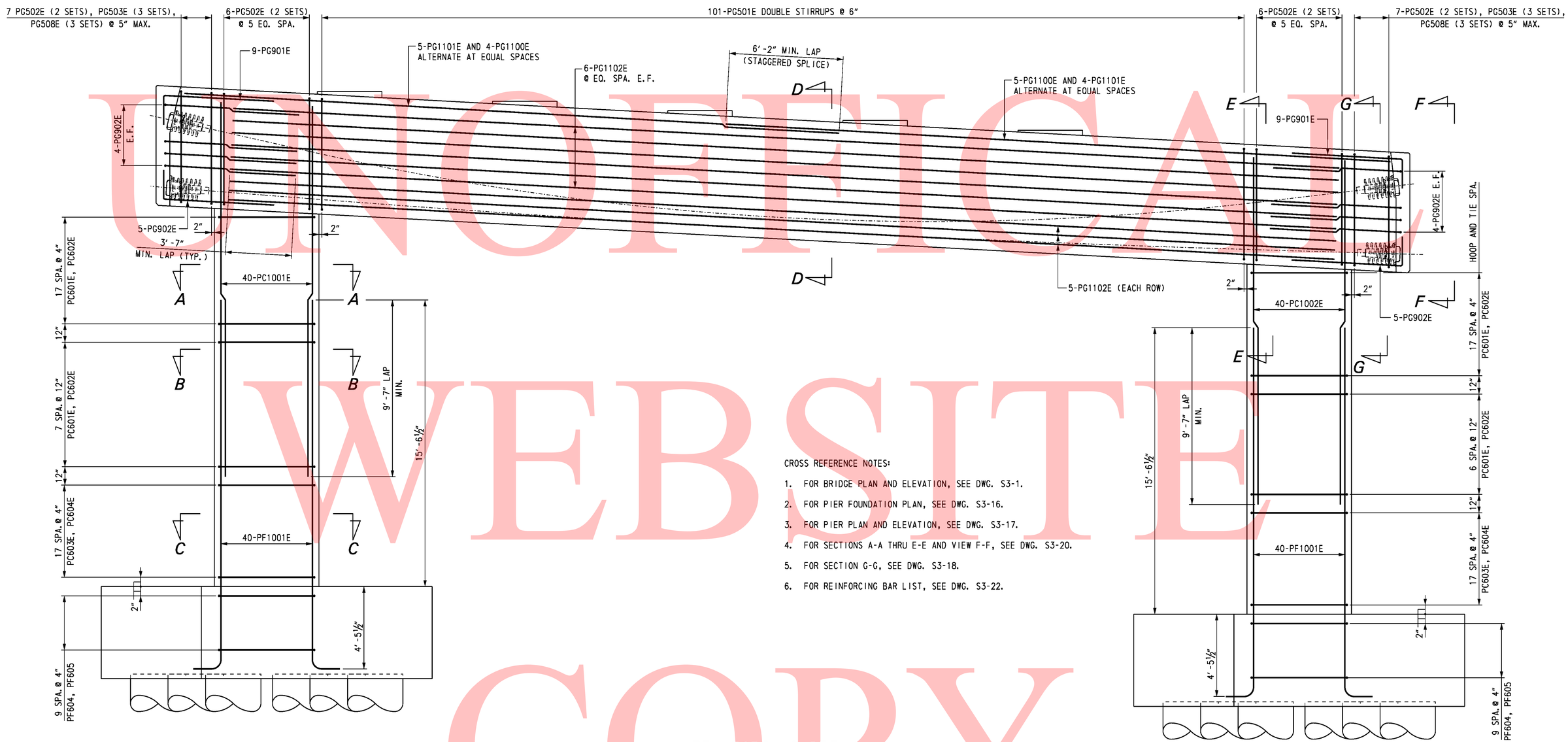

CROSS REFERENCE NOTES:

1. FOR BRIDGE PLAN AND ELEVATION, SEE DWG. S3-1.
2. FOR PIER FOUNDATION PLAN, SEE DWG. S3-16.
3. FOR PIER PLAN AND ELEVATION, SEE DWG. S3-17.
4. FOR SECTIONS A-A THRU E-E AND VIEW F-F, SEE DWG. S3-20.
5. FOR SECTION G-G, SEE DWG. S3-18.
6. FOR REINFORCING BAR LIST, SEE DWG. S3-22.

REINFORCING DETAIL

SCALE: ⅜" = 1'-0"

UNOFFICIAL WEBSITE COPY

10/28/2010 O:\20832687-XM\CAD\Bridge\BR-S3\pr04_BR-S3_sr1.dgn untitled

DELAWARE DEPARTMENT OF TRANSPORTATION	ADDENDUMS / REVISIONS	SR1 / I-95 INTERCHANGE	CONTRACT 28-090-03	BRIDGE NO. 1-268A	RAMP B OVER SR 7 PIER REINFORCEMENT 2	SHEET NO. 325
			COUNTY NEW CASTLE	DESIGNED BY: T. B. CUSTER		TOTAL SHTS. 803
				CHECKED BY: J. S. LI		

S3-19

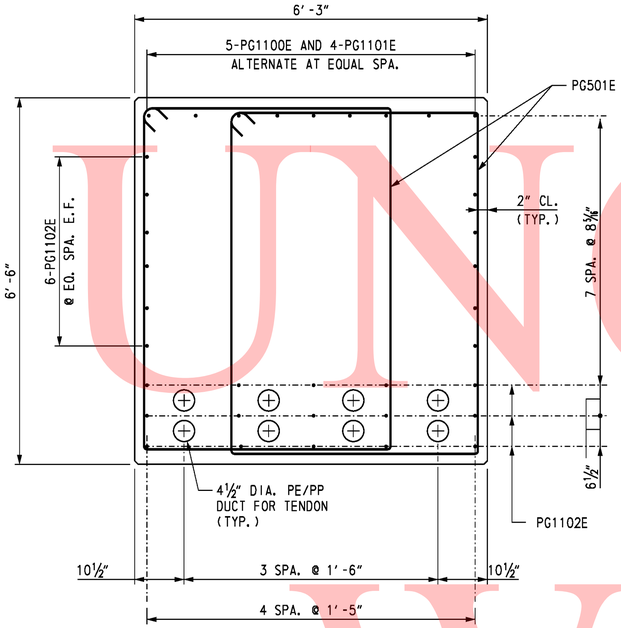

SECTION D-D
SCALE: ¾" = 1'-0"

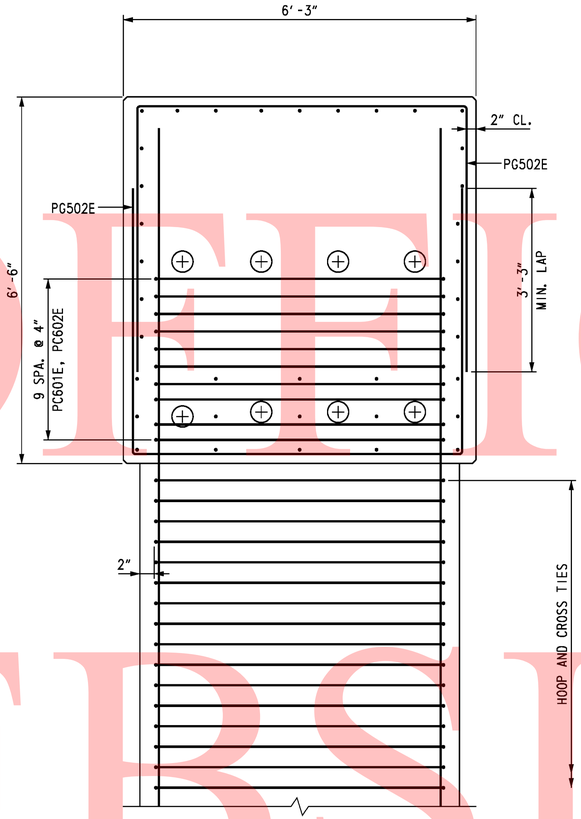

SECTION E-E
SCALE: ¾" = 1'-0"

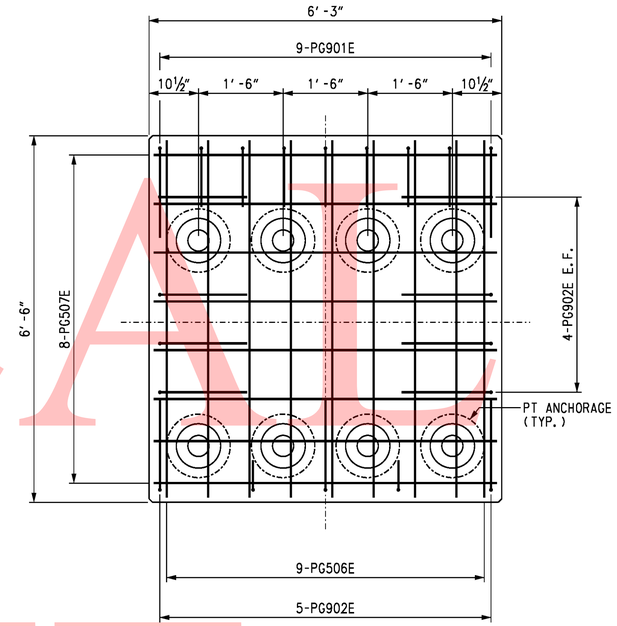

VIEW F-F
SCALE: ¾" = 1'-0"

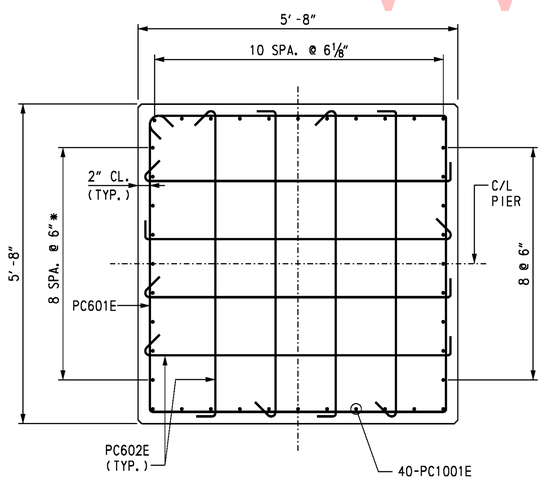

SECTION A-A
SCALE: ¾" = 1'-0"

* BARS SPACED TO CLEAR PT ANCHORAGES

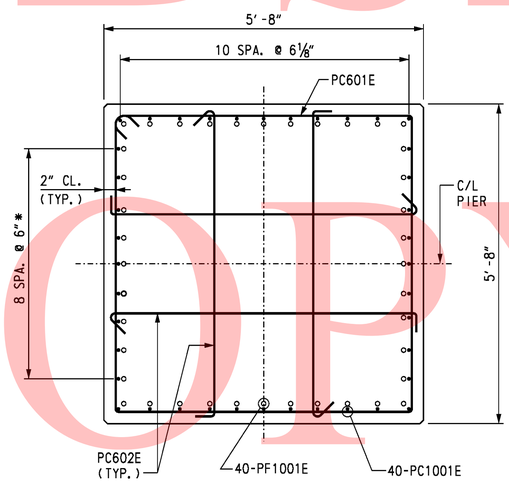

SECTION B-B
SCALE: ¾" = 1'-0"

NOTES:

1. FOR PG901E AND PG902E BARS, CUT HOOK LENGTH AS NECESSARY TO CLEAR P.T. ANCHORAGE REINFORCEMENT.

CROSS REFERENCE NOTES:

1. FOR GENERAL NOTES, SEE DWG. S3-2.
2. FOR LOCATION OF SECTIONS A-A THRU E-E AND VIEW F-F, SEE DWG. S3-19.
3. FOR REINFORCING BAR LIST, SEE DWG. S3-22.

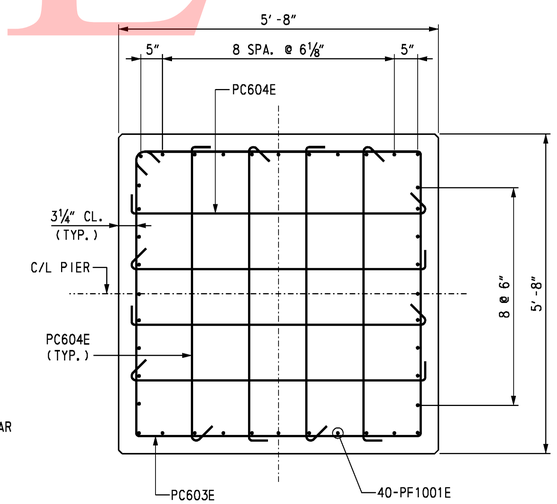

SECTION C-C
SCALE: ¾" = 1'-0"

UNOFFICIAL WEBSITE COPY

DELAWARE DEPARTMENT OF TRANSPORTATION	ADDENDUMS / REVISIONS	SR1 / I-95 INTERCHANGE	CONTRACT 28-090-03	BRIDGE NO. 1-268A	RAMP B OVER SR 7 PIER REINFORCEMENT 3	S3-20 SHEET NO. 326
			COUNTY NEW CASTLE	DESIGNED BY: T.B. CUSTER		TOTAL SHTS. 803
				CHECKED BY: J. S. LI		

10/28/2010 O:\20832687-XM\CAD\Bridge\BR-S3\pr05_BR-S3_sr1.dgn untitled

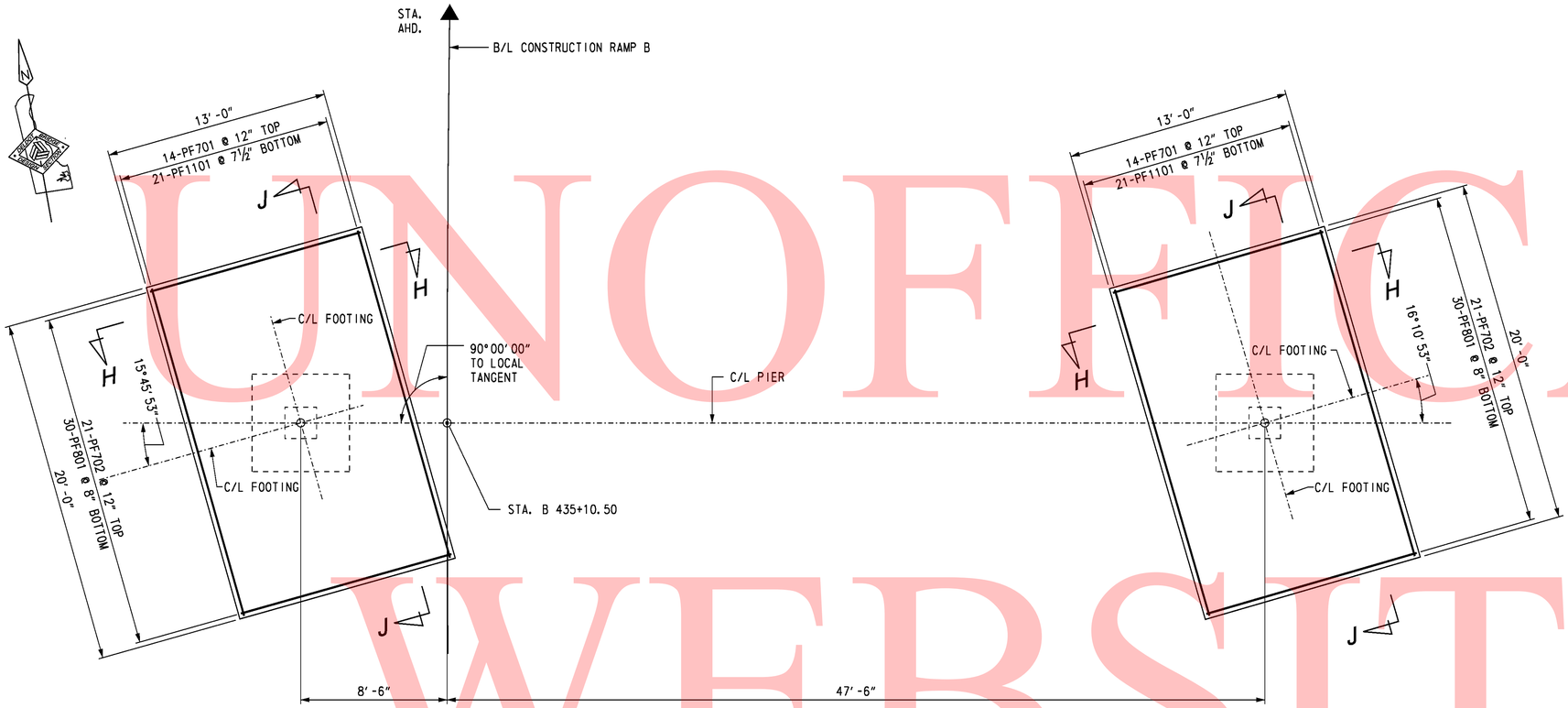

PIER FOOTING PLAN

SCALE: ¼" = 1'-0"

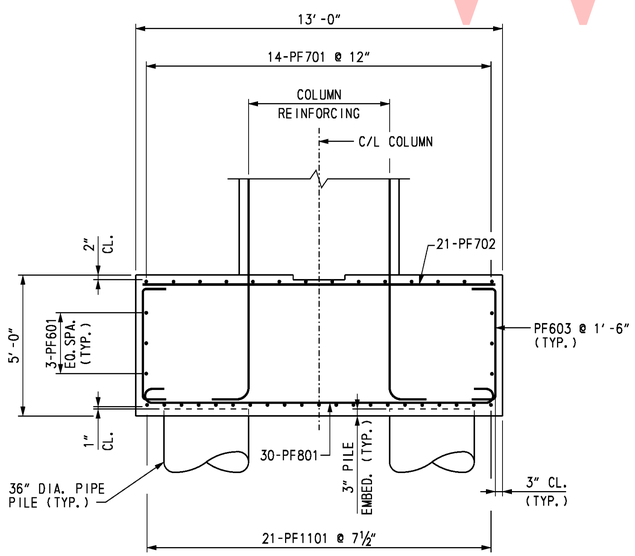

SECTION H-H

SCALE: ⅜" = 1'-0"

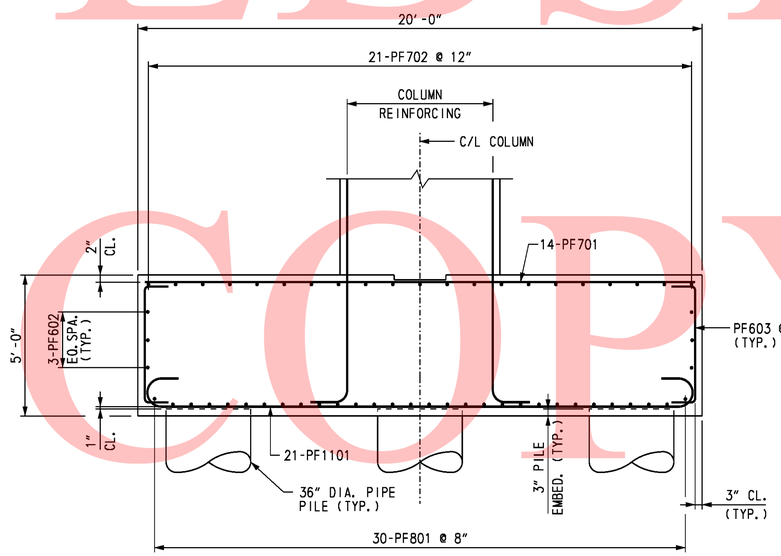

SECTION J-J

SCALE: ⅜" = 1'-0"

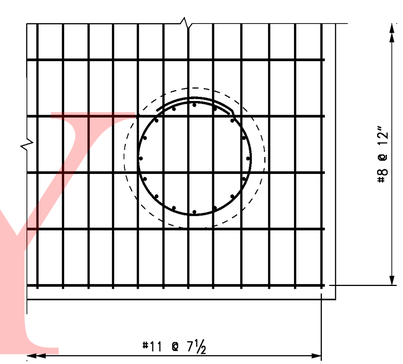

PLAN - BOTTOM FOOTING REINFORCEMENT LAYOUT

SCALE: ¾" = 1'-0"

NOTES:

1. ADJUST SPACING OF BOTTOM MAT FOOTING REINFORCING TO CLEAR PIPE PILE REINFORCING.
2. ADJUST SPACING OF TOP MAT FOOTING REINFORCIMG TO CLEAR COLUMN DOWELS.

CROSS REFERENCE NOTES:

1. FOR BRIDGE PLAN AND ELEVATION, SEE DWG. S3-1.
2. FOR PIER PLAN AND ELEVATION, SEE DWG. S3-17.
3. FOR PIER FOUNDATION PLAN, SEE DWG. S3-16.
4. FOR PIER CAP AND COLUMN REINFORCEMENT DETAILS, SEE DWGS. S3-18 THRU S3-20.
5. FOR REINFORCING BAR LIST, SEE DWG. S3-22.

UNOFFICAL WEBSITE COPY

DELAWARE DEPARTMENT OF TRANSPORTATION	ADDENDUMS / REVISIONS	SR1 / I-95 INTERCHANGE	CONTRACT 28-090-03	BRIDGE NO. 1-268A	RAMP B OVER SR 7	SHEET NO. S3-21
			COUNTY NEW CASTLE	DESIGNED BY: K. D. BEAVER	PIER REINFORCEMENT 4	TOTAL SHTS. 327
				CHECKED BY: R. F. KIRCHNER / J. S. LI		803

untitled 10/28/2010 O:\20832687-XM\CAD\Bridge\BR-S3\pr06_BR-S3_sr1.dgn

REINFORCING BAR LIST

PIER

MARK	LENGTH	NO. BARS	TYPE	A	B	C	D	E	F	G	H	J	K	O	REMARKS
PP401	9′-7″	420	T3										1′-6″	2′-6¾″	
PP801	34′-0″	192	STR.												
PF601	19′-6″	12	STR.												
PF602	12′-6″	12	STR.												
PF603	6′-1″	84	2	1′-0″	4′-1″					1′-0″					
PF604	21′-10″	20	T1	0′-8″	5′-1½″	5′-1½″	5′-1½″	5′-1½″		0′-8″					
PF605	6′-9½″	160	T9	0′-8″	5′-1½″					1′-0″	0′-4½″				
PF701	19′-6″	28	STR.												
PF702	12′-6″	42	STR.												
PF801	14′-4″	60	1	0′-11″	12′-6″					0′-11″		0′-8″			
PF1001E	21′-10″	80	36	1′-10″	20′-0″										
PF1101	22′-8″	42	1	1′-7″	19′-6″					1′-7″		1′-2¾″			
PC601E	22′-8″	71	T1	0′-8″	5′-4″	5′-4″	5′-4″	5′-4″		0′-8″					
PC602E	7′-0″	508	T9	0′-8″	5′-4″					1′-0″	0′-4½″				
PC603E	21′-10″	36	T1	0′-8″	5′-1½″	5′-1½″	5′-1½″	5′-1½″		0′-8″					
PC604E	6′-9½″	288	T9	0′-8″	5′-1½″					1′-0″	0′-4½″				
PC1001E	20′-7″	40	STR												
PC1002E	19′-0″	40	STR												
PG501E	22′-3″	202	T1	0′-5½″	4′-6″	6′-2″	4′-6″	6′-2″		0′-5½″					
PG502E	15′-5″	52	17		4′-9″	5′-11″	4′-9″								
PG503E	7′-1½″	42	T9		6′-2″					0′-6″	0′-3¾″				
PG506E	6′-2″	18	STR.												
PG507E	5′-11″	16	STR.												
PG508E	6′-10½″	42	T9	0′-5½″	5′-11″					0′-6″	0′-3¾″				
PG901E	8′-3″	18	36	1′-7″	6′-8″										
PG902E	10′-9″	26	36	1′-7″	9′-2″										
PG1100E	39′-8″	9	STR.												
PG1101E	32′-0″	9	STR.												
PG1102E	60′-0″	27	STR.												

MARK	LENGTH	NO. BARS	TYPE	A	B	C	D	E	F	G	H	J	K	O	REMARKS

BENDING DIAGRAMS

ALL DIMENSIONS ARE FROM OUT TO OUT.

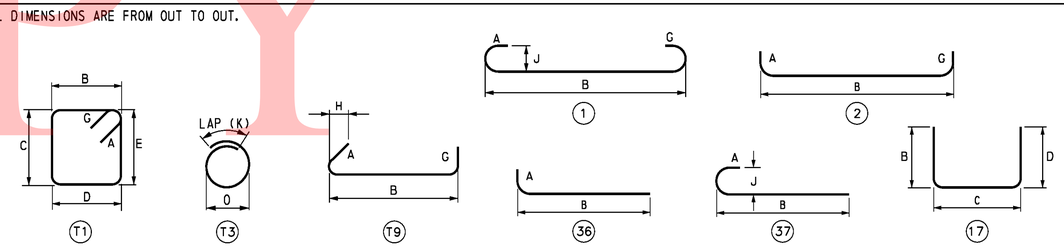

UNOFFICIAL WEBSITE COPY

10/28/2010 O:\20832687-XM\CAD\Bridge\BR-S3\pr07_BR-S3_sr1.dgn untitled

DELAWARE DEPARTMENT OF TRANSPORTATION

ADDENDUMS / REVISIONS

SR1 / I-95 INTERCHANGE

CONTRACT	BRIDGE NO.	1-268A
28-090-03	DESIGNED BY: T.B. CUSTER	
COUNTY		
NEW CASTLE	CHECKED BY: J. S. LI	

RAMP B OVER SR 7

PIER REINFORCING BAR LIST

S3-22
SHEET NO.
328
TOTAL SHTS.
803

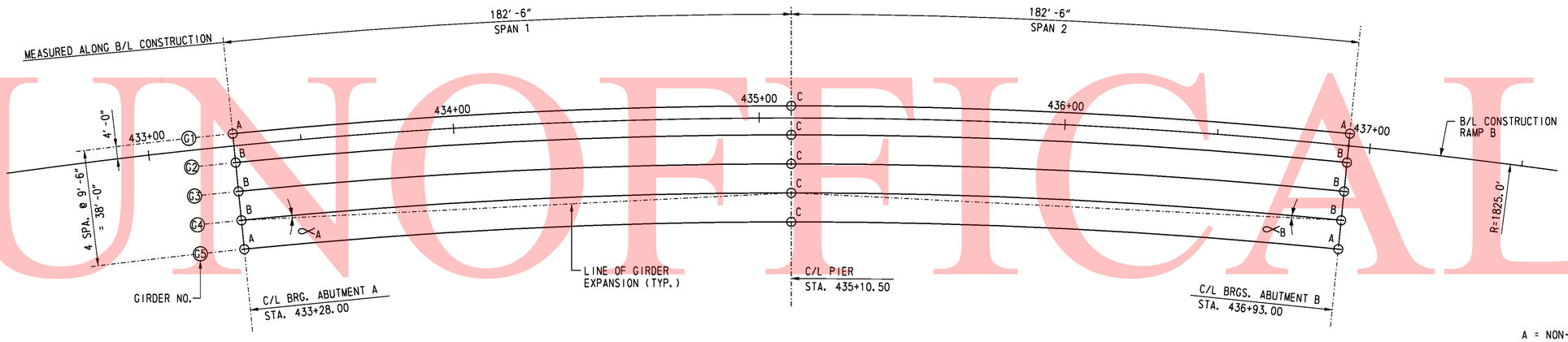

A = NON-GUIDED EXPANSION BEARING

B = GUIDED EXPANSION BEARING

C = FIXED BEARING

BEARING PLAN

SCALE: 1" = 20'-0"

NOTES:

1. ALL DIMENSIONS ARE IN U.S. CUSTOMARY UNITS.
2. ALL BEARING ASSEMBLIES SHALL BE DESIGNED, MANUFACTURED AND INSTALLED IN ACCORDANCE WITH CURRENT EDITIONS OF THE AASHTO LRFD DESIGN AND CONSTRUCTION SPECIFICATIONS AND THE BEARING MANUFACTURER'S RECOMMENDATIONS.
3. ROUND ALL PTFE CORNERS TO ACCOMMODATE THE MACHINED RECESS IN STEEL GUIDE PLATE/PISTON.
4. ETCH PTFE ON ONE SIDE FOR BONDING INTO THE MACHINED RECESS.
5. PTFE ON THE SIDE OF GUIDE PLATE MUST BE PIGMENTED.
6. PRIOR TO THE APPLICATION OF ADHESIVE, CLEAN ALL MATING STEEL AND PTFE SURFACES BY GRIT BLASTING AND DEGREASING. APPLY ADHESIVE AS PER THE MANUFACTURER'S RECOMMENDATION.
7. LUBRICATE ALL SURFACES OF NEOPRENE DISC WITH SILICONE GREASE IN ACCORDANCE WITH NATO CODE NUMBER S-736 (SAE-AS8660).
8. CUT FLAT BRASS SEALING RING ENDS AT 45 DEGREE ANGLE WITH A MAXIMUM GAP OF 0.05 INCHES. STAGGER THE OPENINGS IN THE BRASS RINGS 120 DEGREES APART.
9. MARK THE THICKER EDGE OF THE SOLE PLATE AS SUCH FOR THE PURPOSE OF FIELD IDENTIFICATION. PLACE MARK ON THE EDGE OF SOLE PLATE SO THAT IT WILL BE VISIBLE AFTER BEARING INSTALLATION. IN THE CASE OF A SOLE PLATE WITH A COMPOUND BEVEL, PLACE THE MARK ON EITHER EDGE OF THE THICKEST SOLE PLATE CORNER.
10. MARK CENTERLINE OF GUIDED AND NON-GUIDED POT BEARINGS ON THE SIDES OF MASONRY PLATE AND SOLE PLATE. THE CENTERLINE IDENTIFICATION MARKS WILL BE USEFUL TO LOCATE OFFSET DISTANCES IN THE FIELD. USE INDELIBLE INK TO PLACE ALL MARKS.
11. MARK EACH BEARING WITH THE NAME OF THE MANUFACTURER AND TYPE OR MODEL NUMBER. PLACE THE IDENTIFICATION MARK IN A PERMANENT MANNER AND LOCATION SO THAT IT IS VISIBLE AFTER ERECTION.
12. WHEN THE POT IS RECESSED INTO THE MASONRY PLATE, SEAL AROUND THE POT PERIMETER WITH AN APPROVED CAULKING COMPOUND IN THE SHOP.
13. ANCHOR RODS SHALL BE INSTALLED PRIOR TO ERECTION OF STRUCTURAL STEEL.
14. FILL HOLES AROUND ANCHOR RODS WITH A NONHARDENING CAULKING COMPOUND OR ELASTIC JOINT SEALER.
15. BEARING SHALL BE SHIPPED AS ONE UNIT.
16. DESIGN SERVICE LIMIT STATE ELASTOMER & PTFE BEARING PRESSURE IS 3.50 KSI, MINIMUM IS 0.7 KSI.
17. DESIGN ROTATION = 0.03 RADIANS.
    DESIGN COEFFICIENT OF FRICTION BETWEEN PTFE AND STAINLESS STEEL = 0.05.
    THE MANUFACTURED COEFFICIENT OF FRICTION BETWEEN PTFE AND STAINLESS STEEL SHALL NOT BE MORE THAN 0.03.
18. GUIDED AND NON-GUIDED BEARINGS ARE DESIGNED FOR ONE WAY LONGITUDINAL MOVEMENT OF 1½" PLUS 1" OF CONSTRUCTION TOLERANCE IN LONGITUDINAL DIRECTION. ONE WAY LONGITUDINAL MOVEMENT IS THE MAXIMUM ONE WAY MOVEMENT (EXPANSION OR CONTRACTION) OF SUPERSTRUCTURE WHEN BEARINGS ARE SET AT 60° F.
19. AS AN ALTERNATE TO BEARING DETAILS SHOWN ON THESE PLANS, BEARINGS MAY BE DESIGNED BY BEARING MANUFACTURER USING LOADS, MOVEMENTS, ROTATIONS AND OTHER CRITERIA SPECIFIED ON THESE PLANS. IF THIS ALTERNATE IS SELECTED CONTRACTOR SHALL COORDINATE ANY REVISIONS TO ANCHOR ROD LAYOUT, BEARING PAD ELEVATIONS, ETC.
20. GUIDE BARS FOR THE EXPANSION BEARINGS SHALL BE ORIENTED PARALLEL TO THE ASSUMED DIRECTION OF MOVEMENT CONNECTING EXPANSION BEARING TO RESPECTIVE FIXED BEARING FOR HORIZONTALLY CURVED ALIGNMENT.

MATERIALS:

1. BEARING PLATES SHALL BE A709 GRADE 50W STEEL.
2. ALL ANCHOR RODS SHALL BE ASTM F1554, GRADE 55. ALL NUTS SHALL BE ASTM A563, GRADE DH. ALL WASHERS SHALL BE ASTM F436, TYPE 1. GALVANIZE BOLTS, NUTS AND WASHERS.
3. STAINLESS STEEL: ASTM A167 OR A264, TYPE 304 WITH A SURFACE FINISH OF 8.0 μ-IN RMS OR BETTER.
4. FLAT BRASS SEALING RINGS: ASTM B36 (HALF HARD) SPECIFICATION.
5. ELASTOMERIC DISC: VIRGIN PLAIN NEOPRENE OR NATURAL RUBBER WITH HARDNESS OF BETWEEN 50 AND 60 DUROMETER.
6. PTFE SHEET: (UNFILLED, DIMPLED AND LUBRICATED) MADE FROM VIRGIN TFE RESIN PER ASTM D4894. DIMPLES MUST HAVE A MINIMUM EDGE DISTANCE OF 0.5 INCHES AND CONFORM TO AASHTO LRFD SECTION 14.
7. BEDDING MATERIAL: ⅛" NEOPRENE PAD.

UNOFFICAL WEBSITE COPY

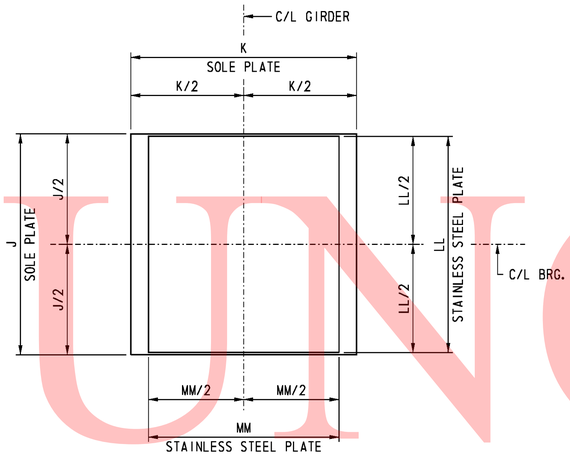

SECTION A-A
SCALE: 1½" = 1'-0"

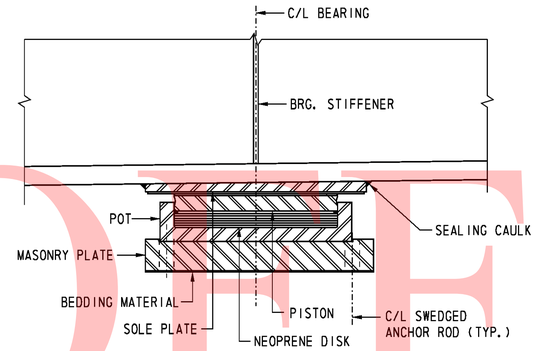

SECTION C-C
SCALE: 1½" = 1'-0"

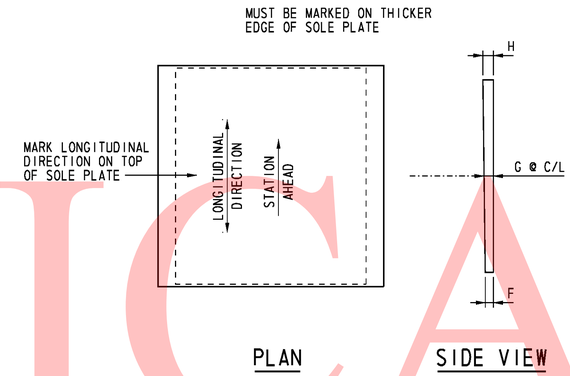

PLAN SIDE VIEW

SOLE PLATE DETAIL
SCALE: 1½" = 1'-0"

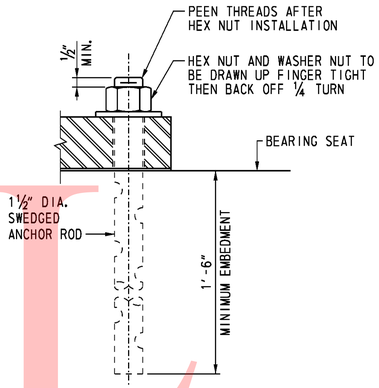

ANCHOR ROD DETAIL
SCALE: 3" = 1'-0"

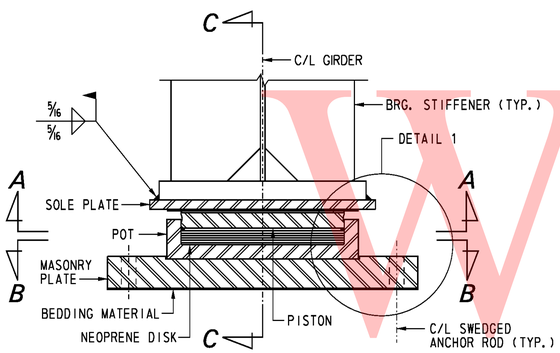

ELEVATION
SCALE: 1½" = 1'-0"

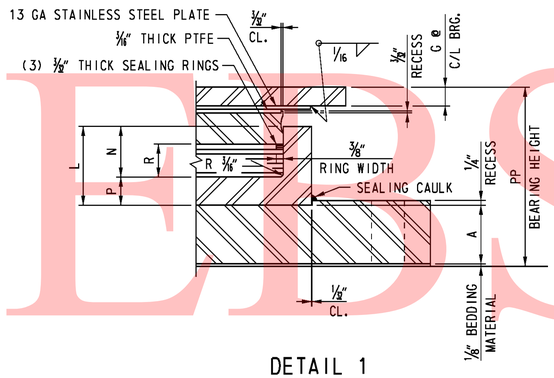

DETAIL 1
SCALE: 3" = 1'-0"

LOCATION	SERVICE VERTICAL LOAD (KIPS)	STRENGTH VERTICAL LOAD (KIPS)	MASONRY PLATE				SOLE PLATE					POT				
			A	B	C	D	F	G	H	J	K	L	M	N	P	Q
ABUTMENT A - G1 & G5	350	450	2¼"	19"	34½"	2⅝"	⅞"	1¼"	1⅝"	21"	24"	3⅝"	14⅞"	2"	1⅝"	1⅝"
ABUTMENT B - G1 & G5	350	450	2¼"	19"	34½"	2⅝"	1⅛"	1¼"	1⅜"	21"	24"	3⅝"	14⅞"	2"	1⅝"	1⅝"

LOCATION	NEOPRENE DISC		PISTON			PTFE	STAINLESS STEEL		ANCHOR ROD		* BEARING HEIGHT
	R	S	U	V	W	HH	LL	MM	QTY.	DIA.	PP
ABUTMENT A - G1 & G5	1¼"	11⅝"	1½"	11.585"	½"	11⅜"	17¼"	14½"	4	1½"	8⅜"
ABUTMENT B - G1 & G5	1¼"	11⅝"	1½"	11.585"	½"	11⅜"	17¼"	14½"	4	1½"	8⅜"

* BEARING HEIGHT INCLUDES ⅛" BEDDING MATERIAL.
BEARING HEIGHT MEASURED AT C/L BEARING.

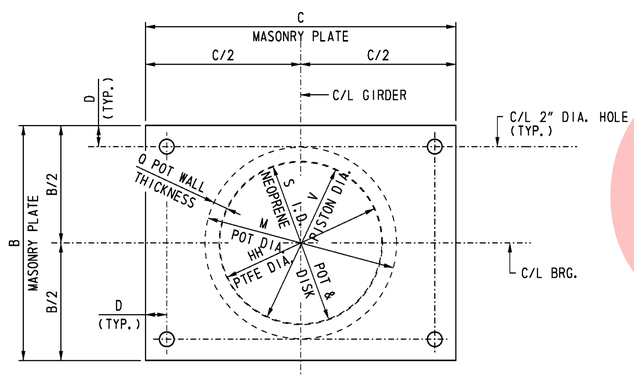

SECTION B-B
SCALE: 1½" = 1'-0"

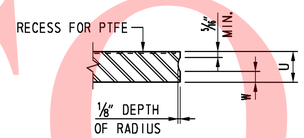

PISTON DETAIL
SCALE: 3" = 1'-0"

NOTES:

1. SOLE PLATE THICKNESS SHALL NOT BE LESS THAN ¾ INCH.

CROSS REFERENCE NOTE:

1. FOR BEARING NOTES AND LOCATIONS, SEE DWG. S3-23.

UNOFFICIAL WEBSITE COPY

10/28/2010 O:\20832687-XM\CAD\Bridge\BR-S3\bd03_BR-S3_sr1.dgn untitled

DELAWARE DEPARTMENT OF TRANSPORTATION	ADDENDUMS / REVISIONS	SR1 / I-95 INTERCHANGE	CONTRACT 28-090-03	BRIDGE NO. 1-268A	RAMP B OVER SR 7 NON-GUIDED EXPANSION BEARING AT ABUTMENTS	S3-24 SHEET NO. 330
			COUNTY NEW CASTLE	DESIGNED BY: R. F. KIRCHNER		TOTAL SHTS. 803
				CHECKED BY: G. P. MISTRY		

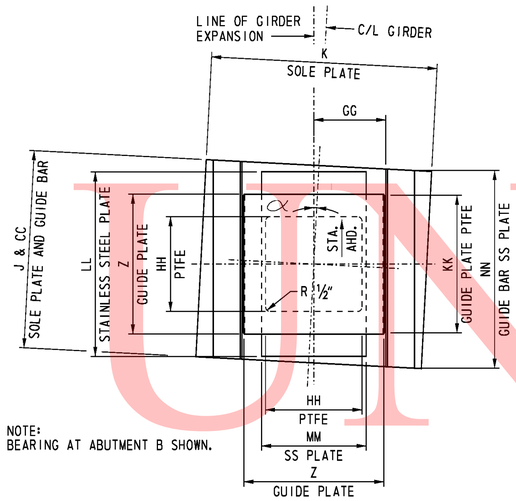

NOTE:
BEARING AT ABUTMENT B SHOWN.

SECTION A-A
SCALE: 1½" = 1'-0"

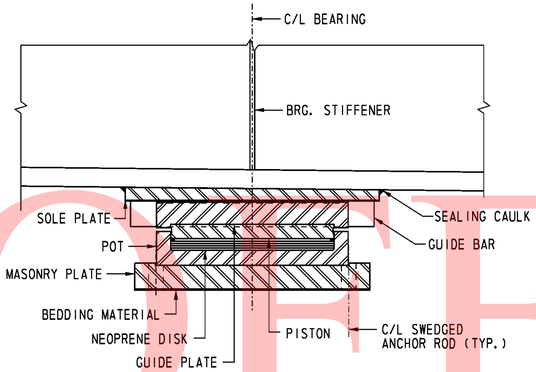

SECTION C-C
SCALE: 1½" = 1'-0"

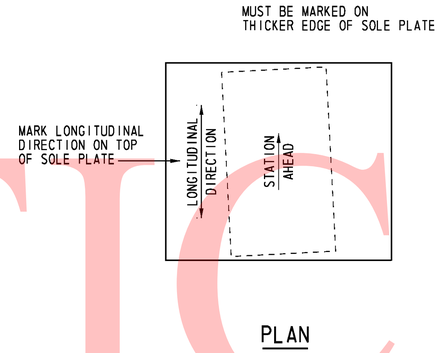

PLAN SIDE VIEW

SOLE PLATE DETAIL
SCALE: 1½" = 1'-0"

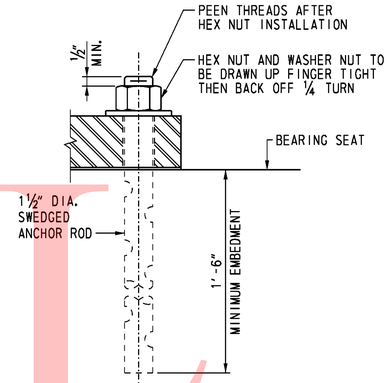

ANCHOR ROD DETAIL
SCALE: 3" = 1'-0"

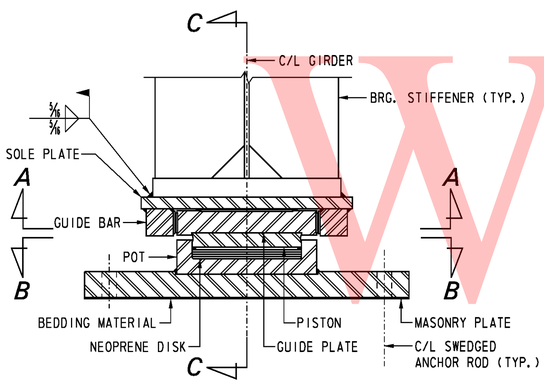

ELEVATION
SCALE: 1½" = 1'-0"

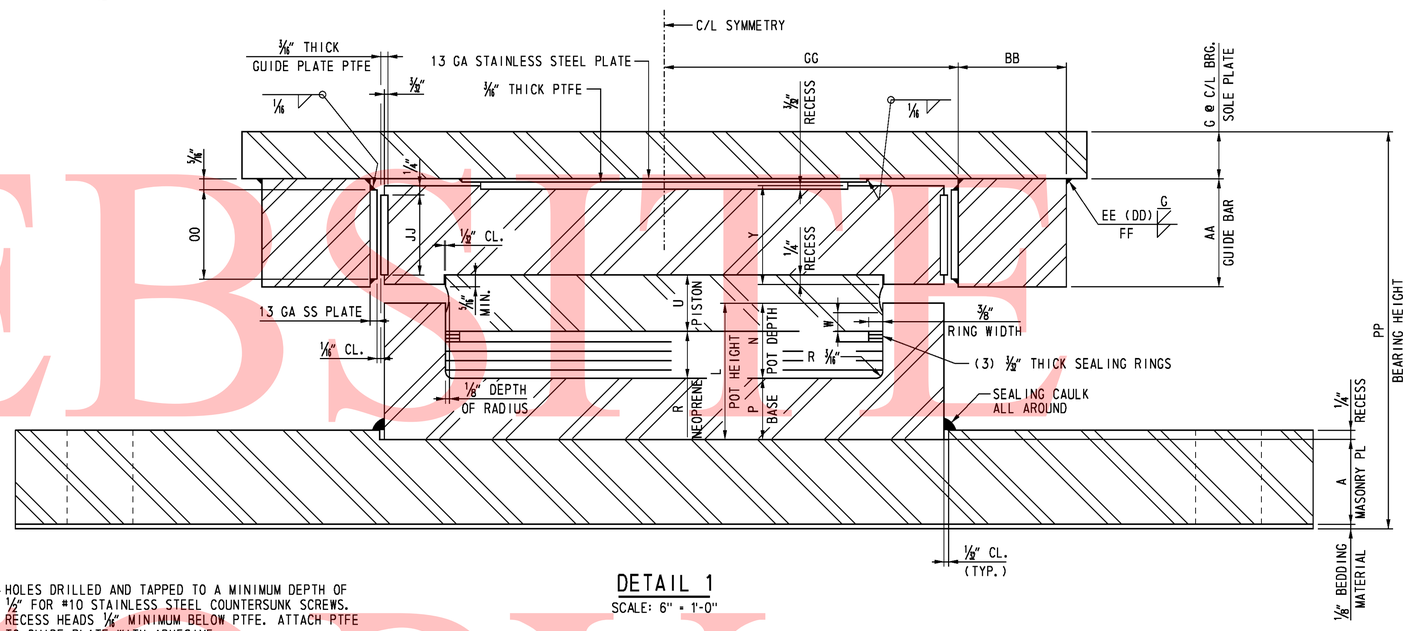

DETAIL 1
SCALE: 6" = 1'-0"

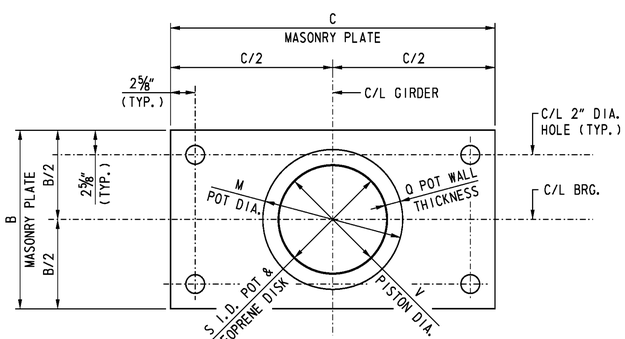

SECTION B-B
SCALE: 1½" = 1'-0"

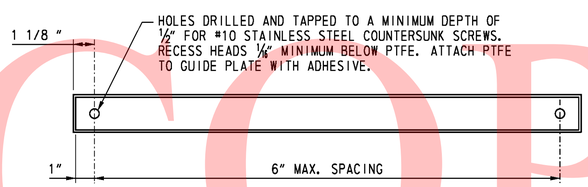

GUIDE PLATE PTFE DETAIL
NOT TO SCALE

LOCATION	SERVICE VERTICAL LOAD (kips)	STRENGTH VERTICAL LOAD (kips)	STRENGTH HORIZONTAL LOAD (kips)	α	MASONRY PLATE A	MASONRY PLATE B	MASONRY PLATE C	SOLE PLATE F	SOLE PLATE G	SOLE PLATE H	SOLE PLATE J	SOLE PLATE K
ABUTMENT A - G2-G4	350	450	100	2°-51'-53" RT	2¼"	19"	34½"	⅞"	1¼"	1⅝"	21"	24"
ABUTMENT B - G2-G4	350	450	100	2°-51'-53" LT	2¼"	19"	34½"	1⅛"	1¼"	1⅜"	21"	24"

LOCATION	POT L	POT M	POT N	POT P	POT Q	NEOPRENE DISC R	NEOPRENE DISC S	PISTON U	PISTON V	PISTON W	GUIDE PLATE Y	GUIDE PLATE Z
ABUTMENT A - G2-G4	3⅝"	14⅞"	2"	1⅝"	1⅝"	1¼"	11⅝"	1½"	11.585	½"	2⅝"	14⅞"
ABUTMENT B - G2-G4	3⅝"	14⅞"	2"	1⅝"	1⅝"	1¼"	11⅝"	1½"	11.585	½"	2⅝"	14⅞"

LOCATION	GUIDE BARS AA	GUIDE BARS BB	GUIDE BARS CC	GUIDE BARS DD	GUIDE BARS EE	GUIDE BARS FF	GUIDE BARS GG	PTFE HH	PTFE JJ	PTFE KK	STAINLESS STEEL LL	STAINLESS STEEL MM	STAINLESS STEEL NN	STAINLESS STEEL OO	* BEARING HEIGHT PP
ABUTMENT A - G2-G4	2⅞"	2⅞"	21"	⅝"	⅞"	⅝"	7.684	10⅛"	2⅛"	14⅝"	19⅝"	11⅛"	20¾"	2⅜"	10⅝"
ABUTMENT B - G2-G4	2⅞"	2⅞"	21"	⅝"	⅞"	⅝"	7.684	10⅛"	2⅛"	14⅝"	19⅝"	11⅛"	20¾"	2⅜"	10⅝"

NOTES:

1. SOLE PLATE THICKNESS SHALL NOT BE LESS THAN ¾ INCH.

CROSS REFERENCE NOTE:

1. FOR BEARING NOTES AND LOCATIONS, SEE DWG. S3-23.

* BEARING HEIGHT INCLUDES ⅛" BEDDING MATERIAL.
BEARING HEIGHT MEASURED AT C/L BEARING

UNOFFICIAL WEBSITE COPY

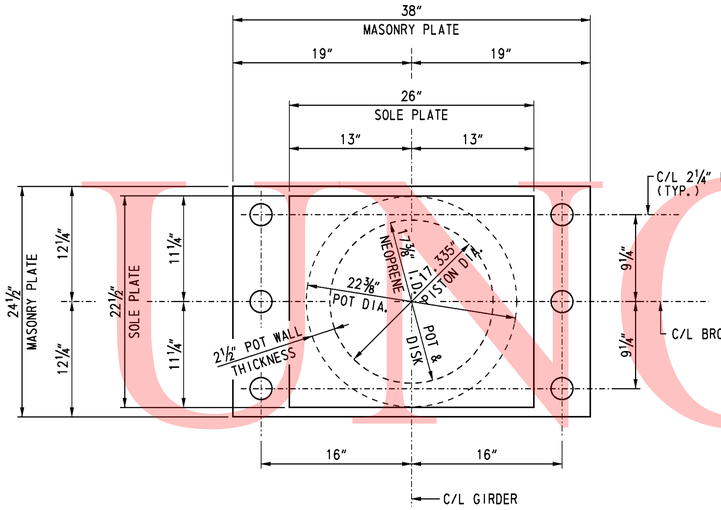

FIXED POT BEARING PLAN

SCALE: 1½" = 1'-0"

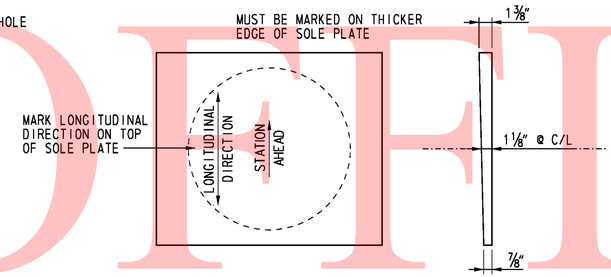

PLAN SIDE VIEW

SOLE PLATE DETAIL

SCALE: 1½" = 1'-0"

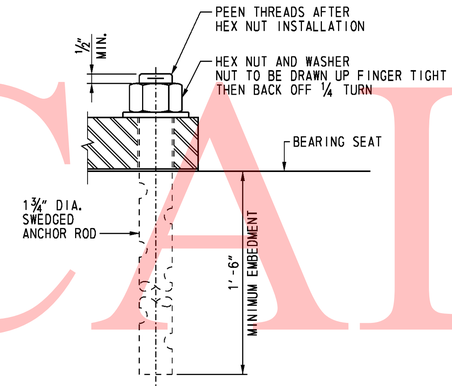

ANCHOR ROD DETAIL

SCALE: 3" = 1'-0"

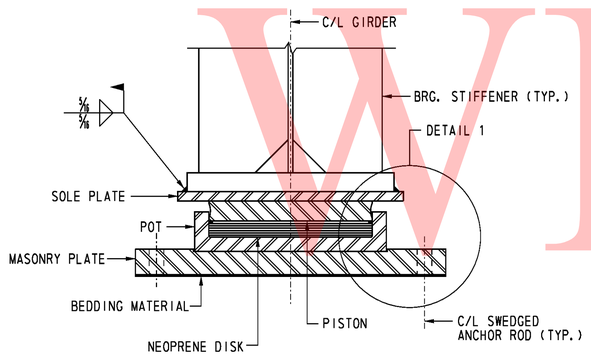

ELEVATION

SCALE: 1½" = 1'-0"

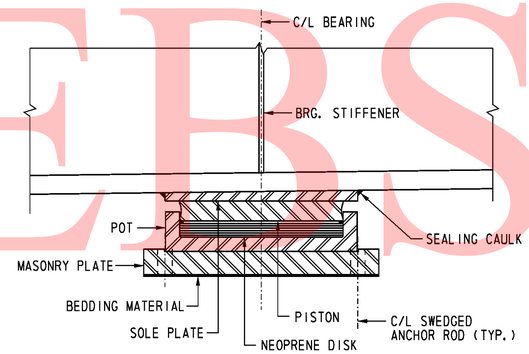

SIDE VIEW

SCALE: 1½" = 1'-0"

DESIGN LOADS:

SERVICE LIMIT STATE VERTICAL LOAD = 800 kips.

STRENGTH LIMIT STATE VERTICAL LOAD = 1100 kips.

STRENGTH LIMIT STATE HORIZONTAL LOAD = 225 kips.

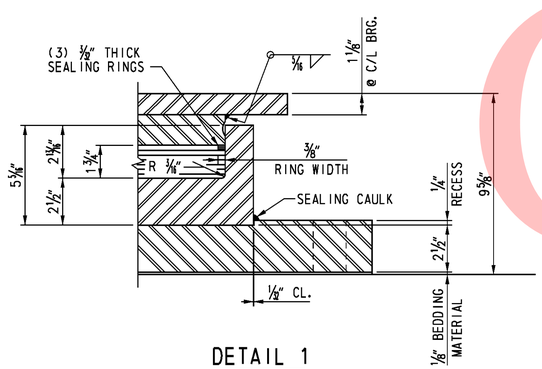

DETAIL 1

SCALE: 3" = 1'-0"

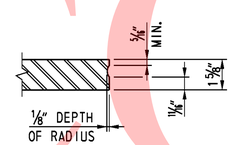

PISTON DETAIL

SCALE: 3" = 1'-0"

NOTES:

1. SOLE PLATE THICKNESS SHALL NOT BE LESS THAN ¾ INCH.

CROSS REFERENCE NOTE:

1. FOR BEARING NOTES AND LOCATIONS, SEE DWG. S3-23.

UNOFFICIAL WEBSITE COPY

10/28/2010 O:\20832687-XM\CAD\Bridge\BR-S3\bd04_BR-S3_sr1.dgn untitled

DELAWARE DEPARTMENT OF TRANSPORTATION	ADDENDUMS / REVISIONS	SR1 / I-95 INTERCHANGE	CONTRACT 28-090-03	BRIDGE NO. 1-268A	RAMP B OVER SR 7 FIXED BEARING AT PIER	S3-26 SHEET NO. 332
			COUNTY NEW CASTLE	DESIGNED BY: R. F. KIRCHNER		TOTAL SHTS. 803
				CHECKED BY: G. P. MISRY		

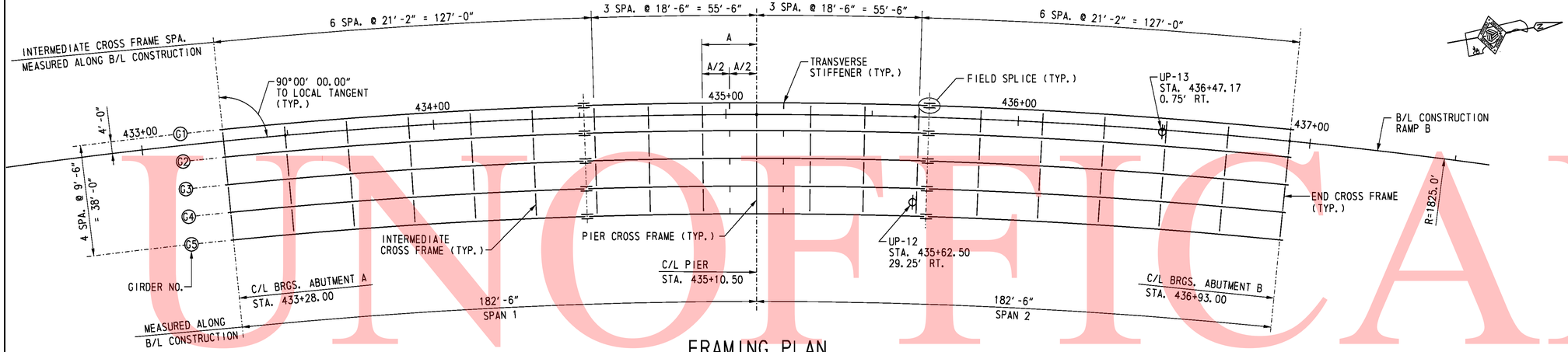

FRAMING PLAN

SCALE: 1" = 20'-0"

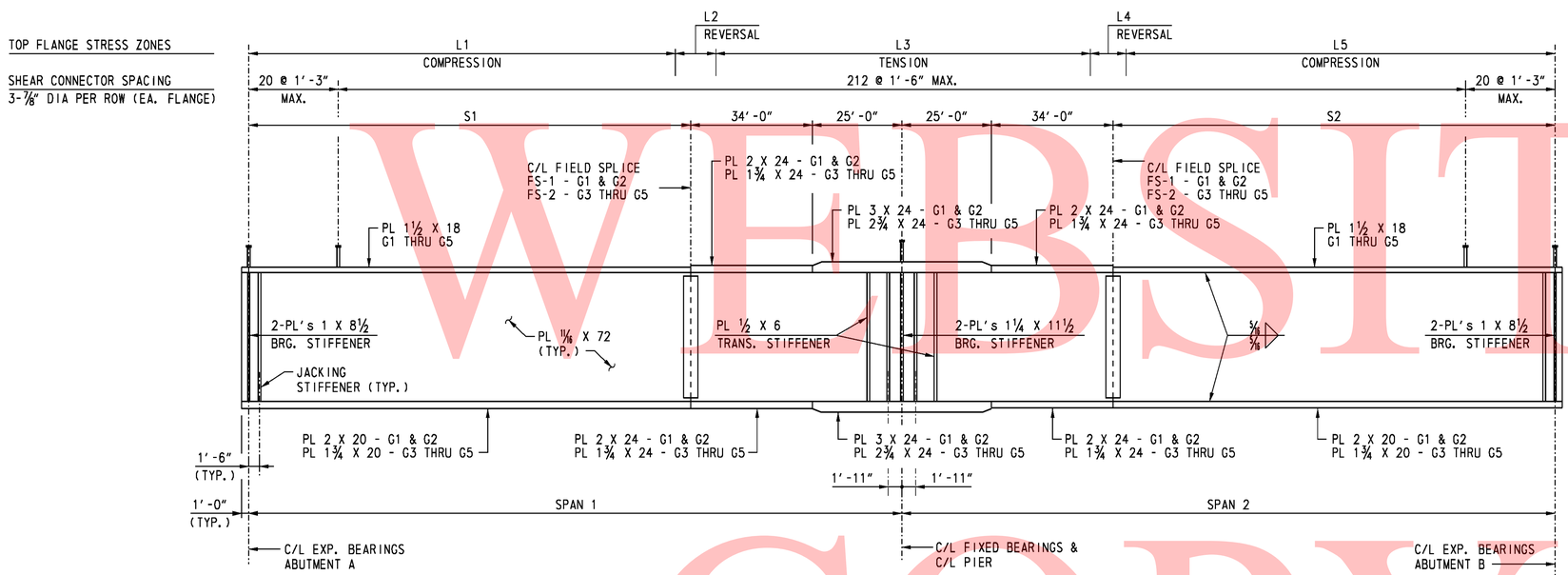

GIRDER ELEVATION

NOT TO SCALE

GIRDERS	RADIUS	SPAN LENGTH			PLATE LENGTH		TOP FLANGE STRESS ZONES				
	R	SPAN 1	SPAN 2	LENGTH	S1	S2	L1	L2	L3	L4	L5
G1	1829'-0"	182'-10 11/16"	182'-10 11/16"	365'-9 5/8"	123'-10 11/16"	123'-10 11/16"	112'-0"	30'-0"	81'-9 5/8"	30'-0"	112'-0"
G2	1819'-6"	181'-11 3/8"	181'-11 3/8"	363'-10 3/4"	122'-11 3/8"	122'-11 3/8"	112'-0"	30'-0"	79'-10 3/4"	30'-0"	112'-0"
G3	1810'-0"	181'-0"	181'-0"	362'-0"	122'-0"	122'-0"	112'-0"	30'-0"	78'-0"	30'-0"	112'-0"
G4	1800'-6"	180'-0 5/8"	180'-0 5/8"	360'-1 1/4"	121'-0 5/8"	121'-0 5/8"	112'-0"	30'-0"	76'-1 1/4"	30'-0"	112'-0"
G5	1791'-0"	179'-1 1/16"	179'-1 1/16"	358'-2 5/8"	120'-1 1/16"	120'-1 1/16"	112'-0"	30'-0"	74'-2 5/8"	30'-0"	112'-0"

NOTES:

1. THE ESTIMATED NUMBER OF SHEAR CONNECTORS IS 3795.
2. THERE SHALL BE NO FIELD WELDING TO THE TOP FLANGE, EXCEPT FOR SHEAR STUDS, IN THE TENSION AND STRESS REVERSAL AREAS.
3. STUDS SHALL BE SPACED TO CLEAR SPLICE BOLTS.
4. ALL CROSS FRAMES AND CENTERLINE BEARINGS SHALL BE RADIAL.
5. SET ENDS OF GIRDERS AND BEARING STIFFENERS VERTICAL UNDER FULL DEAD LOAD.
6. ENTIRE SUPERSTRUCTURE FRAMING SHALL BE PREASSEMBLED IN SHOP TO VERIFY FIT.
7. FOR UP-12 AND UP-13 UNDERPASS LIGHTING SUPPORT DETAIL, SEE DWG. S3-28.

CROSS REFERENCE NOTES:

1. FOR GENERAL NOTES, SEE DWG. S3-2.
2. FOR TYPICAL SECTION, SEE SEE DWG. S3-3.
3. FOR FIELD SPLICE DETAILS, SEE DWG. S3-30.
4. FOR CROSS FRAMES AND GIRDER DETAILS, SEE DWGS. S3-28 AND S3-29.
5. FOR BEARING TYPES AND LOCATIONS, SEE DWG. S3-23.
6. FOR CAMBER TABLE, SEE DWG. S3-31.

UNOFFICAL WEBSITE COPY

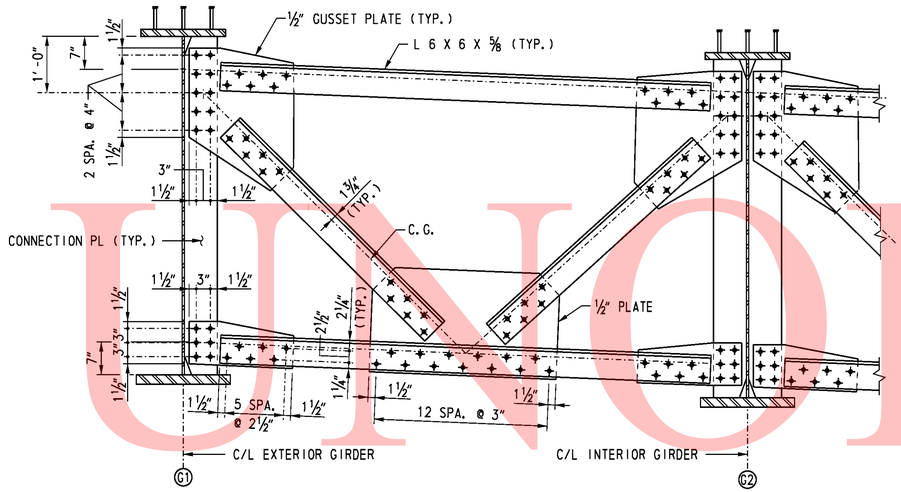

TYPICAL INTERMEDIATE CROSS FRAME

SCALE: ¾" = 1'-0"

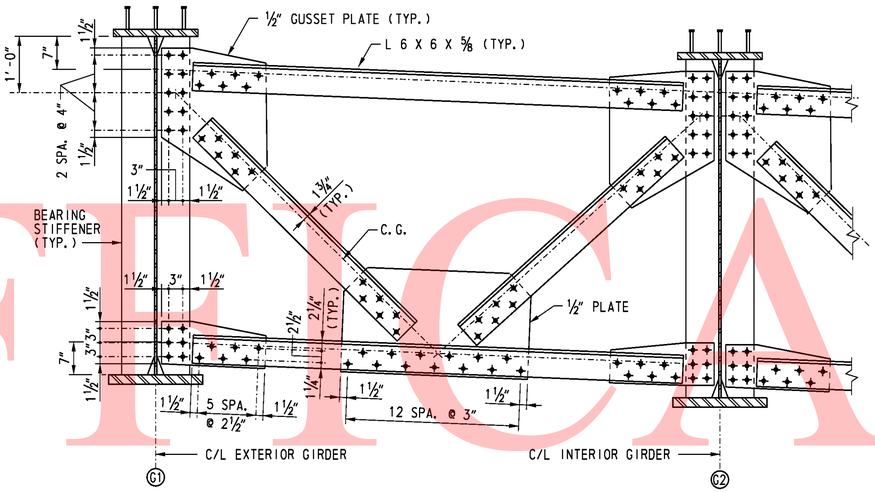

TYPICAL PIER CROSS FRAME

SCALE: ¾" = 1'-0"

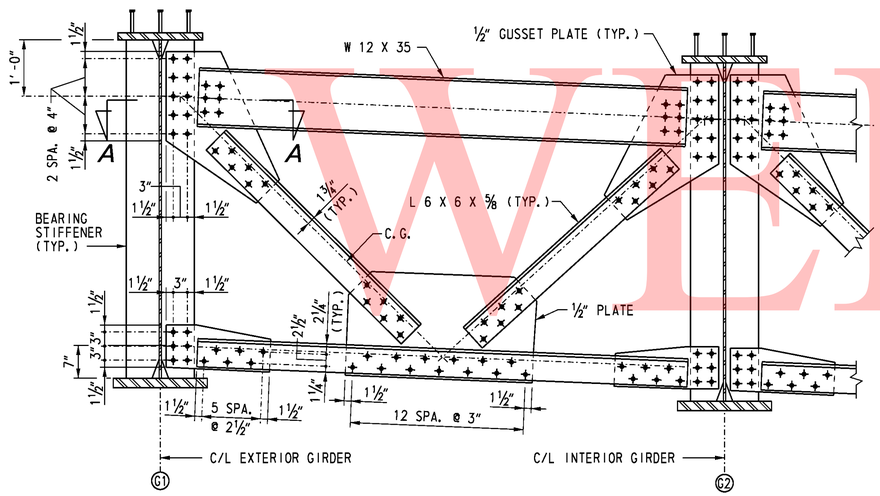

TYPICAL END CROSS FRAME

SCALE: ¾" = 1'-0"

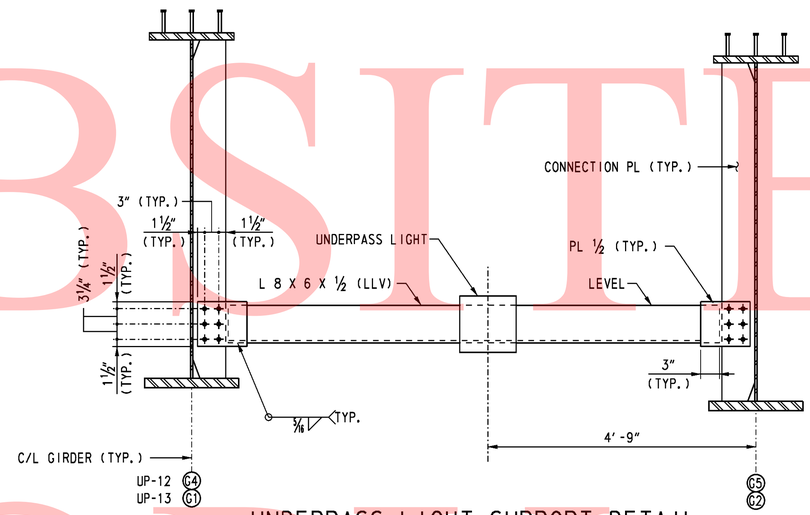

UNDERPASS LIGHT SUPPORT DETAIL

SCALE: ¾" = 1'-0"

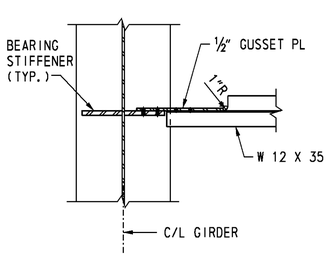

SECTION A-A

SCALE: ¾" = 1'-0"

NOTES:

1. CROSS FRAMES SHALL BE DETAILED TO FIT IN THE FULL DEAD LOAD CONDITION.
2. THE STEEL FABRICATOR SHALL COORDINATE WITH THE LIGHTING SUPPLIER FOR THE LOCATION OF HOLES IN CONNECTION PLATE FOR MOUNTING UNDERPASS LIGHT SUPPORT.
3. THE BOTTOM OF THE LIGHT FIXTURE SHALL NOT BE MORE THAN 12" FROM THE BOTTOM OF THE GIRDER AND SHALL NOT EXTEND BELOW THE BOTTOM OF THE GIRDER.

CROSS REFERENCE NOTES:

1. FOR GENERAL NOTES, SEE DWG. S3-2.
2. FOR FRAMING PLAN, SEE DWG. S3-27.
3. FOR GIRDER DETAILS, SEE DWG. S3-29.
4. FOR BOLT TYPE AND SIZE AS WELL AS HOLE SIZE, SEE DWG. S3-2.

UNOFFICIAL WEBSITE COPY

10/28/2010 O:\20832687-XM\CAD\Bridge\BR-S3\bm02_BR-S3_sr1.dgn
untitled

DELAWARE DEPARTMENT OF TRANSPORTATION	ADDENDUMS / REVISIONS	SR1 / I-95 INTERCHANGE	CONTRACT 28-090-03	BRIDGE NO. 1-268A	RAMP B OVER SR 7 CROSS FRAME DETAILS	S3-28 SHEET NO. 334
			COUNTY NEW CASTLE	DESIGNED BY: R. F. KIRCHNER		TOTAL SHTS. 803
				CHECKED BY: J. S. LI		

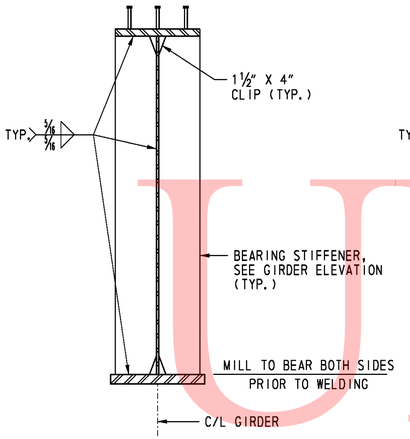

BEARING STIFFENER
SCALE: ¾" = 1'-0"

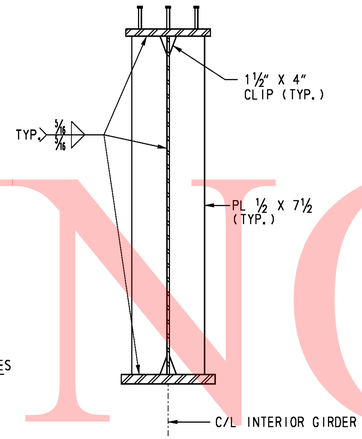

CONNECTION PLATE
SCALE: ¾" = 1'-0"

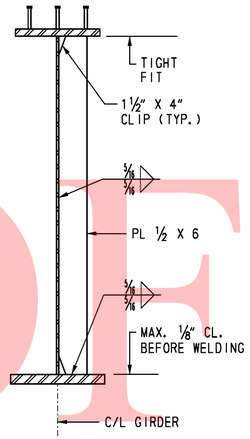

TRANSVERSE STIFFENER
SCALE: ¾" = 1'-0"

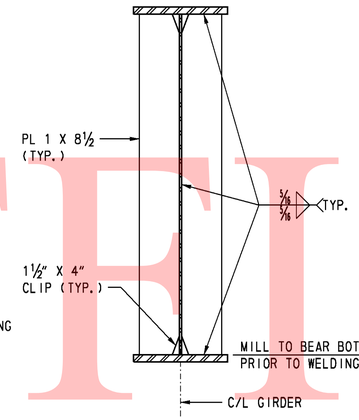

JACKING STIFFENER (AT ABUTMENTS)
SCALE: ¾" = 1'-0"

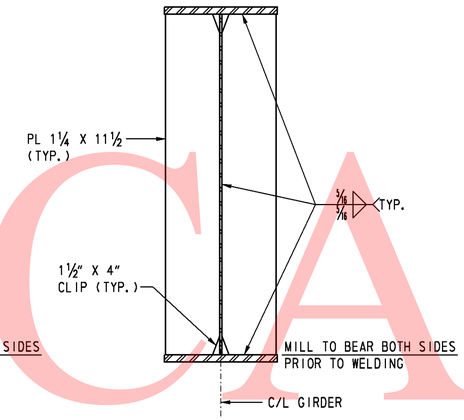

JACKING STIFFENER (AT PIER)
SCALE: ¾" = 1'-0"

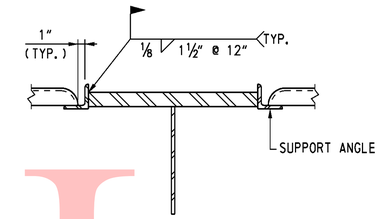

COMPRESSION FLANGE FOR S.I.P. FORMS
SCALE: 1½" = 1'-0"

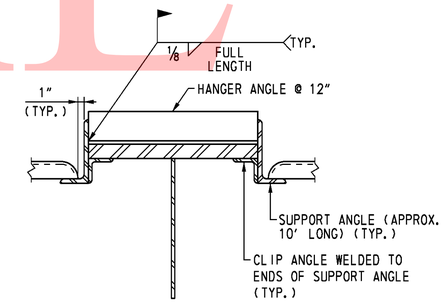

TENSION FLANGE FOR S.I.P. FORMS
SCALE: 1½" = 1'-0"

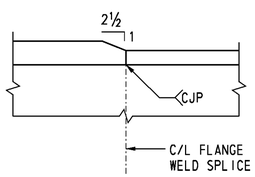

FLANGE PLATE THICKNESS TRANSITION
NOT TO SCALE

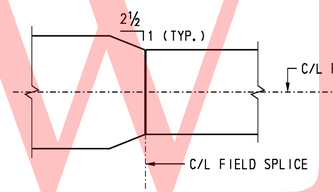

BOTTOM FLANGE PLATE WIDTH TRANSITION
NOT TO SCALE

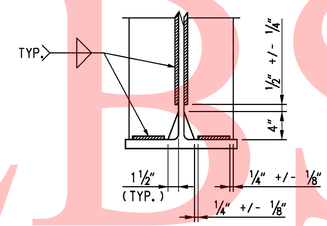

STIFFENER & CONNECTION PLATE WELD TERMINATION
NOT TO SCALE

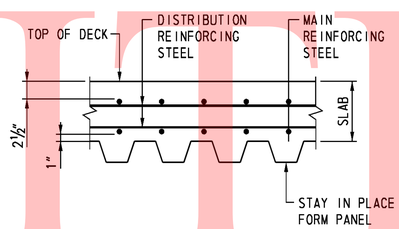

STEEL FORM SECTION
SCALE: 1½" = 1'-0"

STEEL FORM NOTES:

1. FORMS SHALL BE VERTICALLY ADJUSTED TO ATTAIN FINISHED LINE, GRADE AND SLAB THICKNESS REQUIRED ON THE PLANS.
2. NO WELDING OF THESE FORMS TO FLANGES IN TENSION IS PERMITTED.

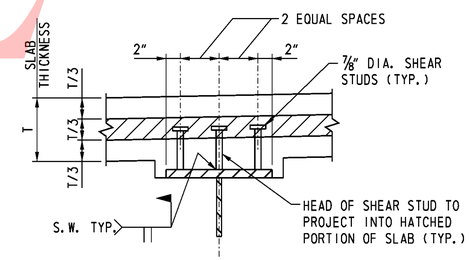

SHEAR STUD DETAIL
NOT TO SCALE

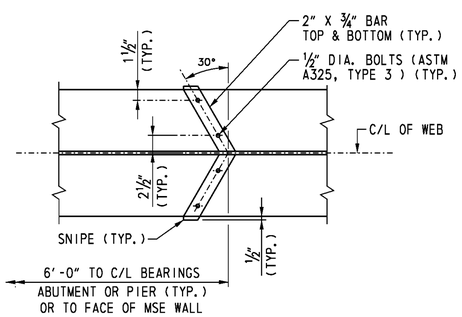

DRIP BAR DETAIL
NOT TO SCALE

NOTES:

1. DRIP BAR DETAIL SHALL BE PLACED ON BOTTOM FLANGE. PROVIDE DRIP BAR FOR GIRDER G1 AND G5 ONLY.
2. DRIP BARS ARE PLACED ADJACENT TO SUPPORTS TO PREVENT WATER FLOW ONTO SUPPORT.

CROSS REFERENCE NOTES:

1. FOR GENERAL NOTES, SEE DWG. S3-2.
2. FOR FRAMING PLAN, SEE DWG. S3-27.
3. FOR CROSS FRAME DETAILS, SEE DWG. S3-28.

UNOFFICIAL WEBSITE COPY

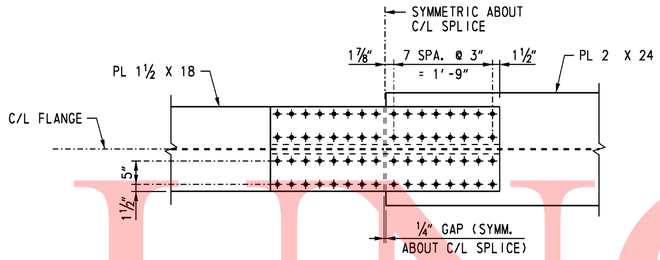

TOP FLANGE

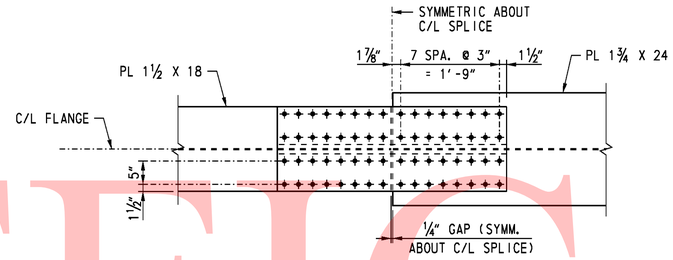

TOP FLANGE

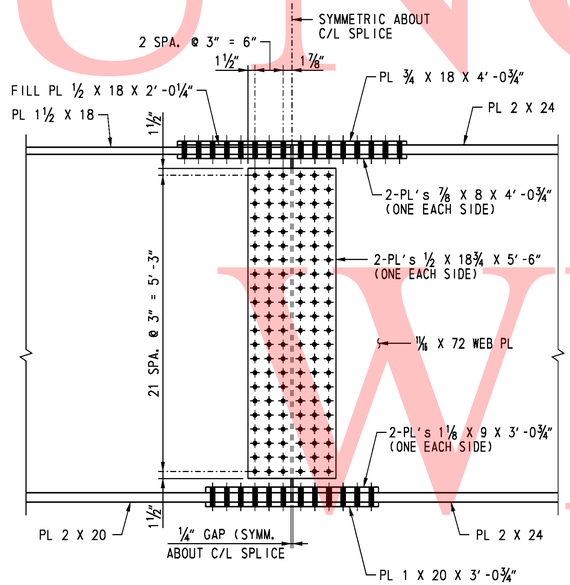

WEB SPLICE

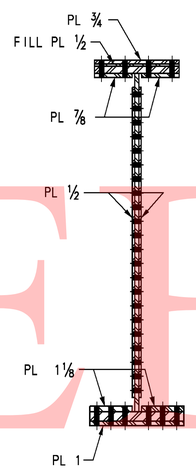

SECTION

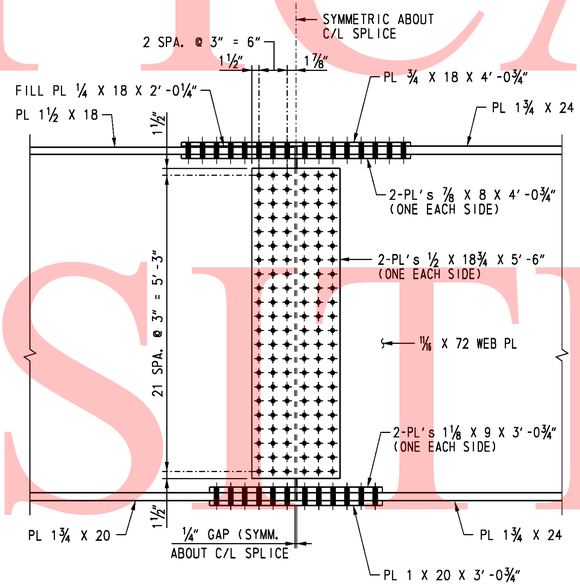

WEB SPLICE

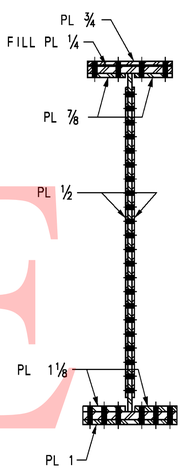

SECTION

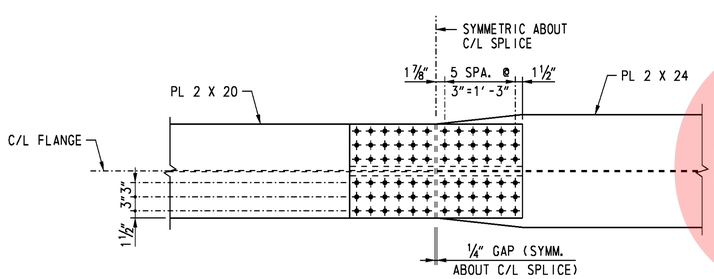

BOTTOM FLANGE

FIELD SPLICE FS-1

SCALE: 3/4" = 1'-0"

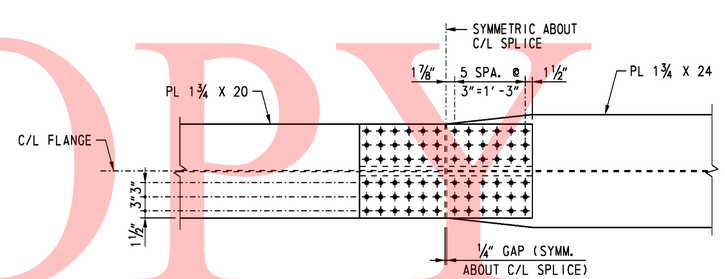

BOTTOM FLANGE

FIELD SPLICE FS-2

SCALE: 3/4" = 1'-0"

NOTES:

1. ALL BOLTS SHALL BE 7/8" DIA. ASTM A 325 TYPE 3 HIGH STRENGTH BOLTS IN 15/16" DIA. HOLES. CONTACT SURFACE OF BOLTED PARTS SHALL BE CLASS B. EXCLUDE BOLT THREADS FROM SHEAR PLANES.
2. BOLT HEADS SHALL BE ON THE EXTERIOR FACE OF THE FASCIA GIRDERS AND THE BOTTOM OF THE BOTTOM FLANGE.
3. FIELD SPLICES SHALL BE COMPLETELY SHOP ASSEMBLED AND MATCH MARKED AFTER ALL SHOP WELDING HAS BEEN COMPLETED. CONTACT SURFACES SHALL BE FREE OF ALL OIL AND DIRT.
4. WEB SPLICE PLATES ARE SYMMETRIC ABOUT MID-DEPTH OF WEB.

CROSS REFERENCE NOTES:

1. FOR GENERAL NOTES, SEE DWG. S3-2.
2. FOR FRAMING PLAN AND GIRDER ELEVATION, SEE DWG. S3-27.

UNOFFICAL WEBSITE COPY

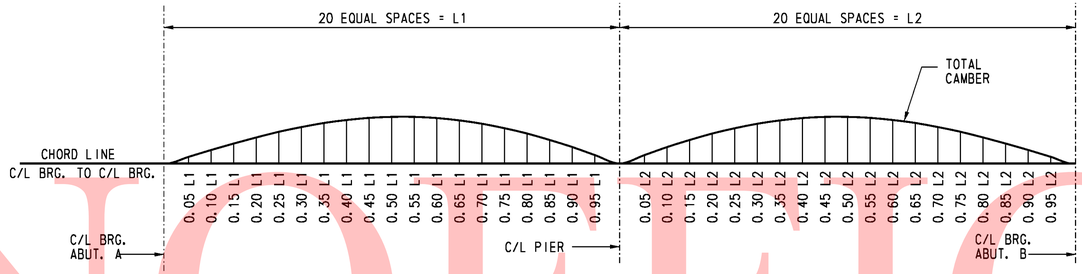

SCHEMATIC CAMBER DIAGRAM

CAMBER ORDINATES (IN)

GIRDER NO.	POINT	C/L BRG. ABUT. A	SPAN 1 0.05L	0.10L	0.15L	0.20L	0.25L	0.30L	0.35L	0.40L	0.45L	0.50L	0.55L	0.60L	0.65L	0.70L	0.75L	0.80L	0.85L	0.90L	0.95L	C/L PIER
G1	DLS	0	1/4	1/2	3/4	15/16	1 1/16	1 1/4	1 3/16	1 5/16	1 7/16	1 1/4	1 1/16	1	7/8	11/16	1/2	3/8	3/16	1/8	1/16	0
	DLC	0	11/16	1 3/8	1 15/16	2 1/16	2 7/16	3 1/16	3 3/8	3 7/16	3 3/8	3 3/16	2 15/16	2 9/16	2 1/16	1 3/4	1 3/16	7/8	1/2	1/4	1/8	0
	SDL	0	3/16	3/8	1/2	5/8	3/4	15/16	7/8	7/8	7/8	15/16	3/4	11/16	9/16	1/2	3/8	1/4	1/8	1/16	1/16	0
	TDC	0	1 1/8	2 1/4	3 3/16	4	4 11/16	5 3/16	5 1/2	5 5/8	5 5/16	5 3/16	4 7/8	4 5/16	3 5/8	2 7/8	2 3/16	1 7/16	7/8	3/8	3/16	0
	VCO	0	5/8	1 1/8	1 5/8	2	2 3/8	2 11/16	2 7/8	3 1/16	3 1/8	3 3/16	3 1/8	3 1/16	2 7/8	2 11/16	2 3/8	2	1 5/8	1 1/8	5/8	0
	TDC+VCO	0	1 11/16	3 3/8	4 15/16	6 1/16	7 1/16	7 7/8	8 7/16	8 11/16	8 11/16	8 1/2	8	7 5/16	6 1/2	5 5/16	4 5/16	3 1/2	2 1/2	1 11/16	11/16	0
G2	DLS	0	1/4	1/2	11/16	7/8	1 1/16	1 3/16	1 1/4	1 1/4	1 1/4	1 3/16	1 1/8	1	15/16	11/16	1/2	5/16	3/16	1/16	1/16	0
	DLC	0	5/8	1 3/16	1 7/8	2 3/8	2 3/4	3 1/16	3 1/4	3 3/16	3 1/4	3 1/8	2 7/8	2 1/2	2 1/16	1 11/16	1 3/16	7/8	1/2	1/4	1/8	0
	SDL	0	1/8	1/16	1/16	1/16	5/16	11/16	3/4	3/4	3/4	3/4	11/16	9/16	1/2	3/8	5/16	3/16	1/16	1/16	0	0
	TDC	0	1 1/4	2 1/8	3	3 11/16	4 7/16	4 15/16	5 1/4	5 3/8	5 5/16	5 1/4	4 5/8	4 1/8	3 1/2	2 3/4	2 1/4	1 7/16	7/8	3/8	3/16	0
	VCO	0	5/8	1 1/8	1 5/8	2	2 3/8	2 11/16	2 7/8	3 1/16	3 1/8	3 3/16	3 1/8	3 1/16	2 7/8	2 11/16	2 3/8	2	1 5/8	1 1/8	5/8	0
	TDC+VCO	0	1 5/8	3 1/4	4 5/8	5 15/16	6 11/16	7 5/8	8 1/8	8 3/8	8 7/16	8 7/16	7 13/16	7 1/16	6 3/8	5 7/16	4 1/2	3 7/16	2 1/2	1 1/2	15/16	0
G3	DLS	0	1/4	1/2	11/16	7/8	1	1 1/8	1 3/16	1 3/16	1 3/16	1 1/8	1 1/16	15/16	13/16	5/8	1/2	5/16	3/16	1/16	1/16	0
	DLC	0	5/8	1 1/4	1 15/16	2 5/16	2 11/16	3	3 1/8	3 1/4	3 3/16	3	2 15/16	2 7/16	2 1/16	1 11/16	1 1/4	7/8	1/2	1/4	1/8	0
	SDL	0	1/8	1/4	3/8	1/2	9/16	5/8	11/16	11/16	11/16	5/8	5/8	9/16	7/16	3/8	1/4	3/16	1/8	1/16	0	0
	TDC	0	1	2	2 7/8	3 5/8	4 1/4	4 3/4	5	5 1/8	5 3/16	4 15/16	4 7/16	3 15/16	3 3/8	2 11/16	2	1 3/8	13/16	3/8	3/16	0
	VCO	0	5/8	1 1/8	1 5/8	2	2 3/8	2 11/16	2 7/8	3 1/16	3 1/8	3 3/16	3 1/8	3 1/16	2 7/8	2 11/16	2 3/8	2	1 5/8	1 1/8	5/8	0
	TDC+VCO	0	1 5/8	3 1/8	4 1/2	5 15/16	6 5/8	7 3/8	7 7/8	8 3/16	8 3/16	8	7 5/8	7	6 1/4	5 5/16	4 3/8	3 3/8	2 7/16	1 1/2	15/16	0
G4	DLS	0	1/4	7/16	5/8	15/16	15/16	1 1/16	1 1/8	1 1/8	1 1/8	1 1/16	1	7/8	3/4	5/8	7/16	5/16	3/16	1/16	1/16	0
	DLC	0	5/8	1 3/16	1 3/4	2 1/16	2 1/16	2 7/8	3	3 1/16	3 1/16	2 15/16	2 11/16	2 3/8	2	1 5/8	1 3/16	15/16	1/2	1/4	1/8	0
	SDL	0	1/8	1/4	3/8	1/2	9/16	5/8	11/16	11/16	11/16	11/16	5/8	9/16	7/16	3/8	5/16	3/16	1/8	1/16	0	0
	TDC	0	15/16	1 15/16	2 3/4	3 1/2	4 1/16	4 3/16	4 11/16	4 15/16	4 7/8	4 11/16	4 3/16	3 11/16	3 1/4	2 3/16	1 15/16	1 3/16	13/16	3/8	3/16	0
	VCO	0	5/8	1 1/8	1 5/8	2	2 3/8	2 11/16	2 7/8	3 1/16	3 1/8	3 3/16	3 1/8	3 1/16	2 7/8	2 11/16	2 3/8	2	1 5/8	1 1/8	5/8	0
	TDC+VCO	0	1 11/16	3 1/16	4 3/8	5 1/2	6 1/16	7 1/16	7 11/16	8	8	7 13/16	7 7/16	6 7/8	6 1/8	5 1/4	4 5/16	3 3/8	2 7/16	1 1/2	15/16	0
G5	DLS	0	3/16	7/16	5/8	3/4	7/8	1	1 1/16	1 1/16	1	15/16	13/16	11/16	9/16	7/16	5/16	3/16	1/16	1/16	0	0
	DLC	0	9/16	1 1/8	1 5/8	2 1/16	2 1/16	2 11/16	2 7/8	2 15/16	2 7/8	2 3/4	2 9/16	2 1/4	1 15/16	1 3/16	1 1/8	3/4	1/2	3/16	1/8	0
	SDL	0	1/8	3/16	1/16	1/2	5/8	11/16	11/16	3/4	3/4	11/16	5/8	9/16	1/2	3/8	5/16	3/16	1/8	1/16	0	0
	TDC	0	15/16	1 7/8	2 5/8	3 3/8	3 15/16	4 3/8	4 5/8	4 3/4	4 11/16	4 1/2	4 3/16	3 11/16	3 1/16	2 1/2	1 7/8	1 5/16	13/16	3/8	3/16	0
	VCO	0	5/8	1 1/8	1 5/8	2	2 3/8	2 11/16	2 7/8	3 1/16	3 1/8	3 3/16	3 1/8	3 1/16	2 7/8	2 11/16	2 3/8	2	1 5/8	1 1/8	5/8	0
	TDC+VCO	0	1 1/2	3	4 1/4	5 3/8	6 5/16	7 1/16	7 1/2	7 13/16	7 7/8	7 11/16	7 3/16	6 3/4	6	5 5/16	4 5/16	3 3/8	2 3/8	1 1/2	3/4	0

GIRDER NO.	POINT	SPAN 2 0.05L	0.10L	0.15L	0.20L	0.25L	0.30L	0.35L	0.40L	0.45L	0.50L	0.55L	0.60L	0.65L	0.70L	0.75L	0.80L	0.85L	0.90L	0.95L	C/L BRG. ABUT. B
G1	DLS	1/16	1/8	3/16	3/8	1/2	11/16	7/8	1	1 1/16	1 1/4	1 3/16	1 5/16	1 5/16	1 1/4	1 1/16	15/16	3/4	1/2	1/4	0
	DLC	1/8	1/4	1/2	7/8	1 1/4	1 3/4	2 1/8	2 5/16	2 7/16	3 1/16	3 3/8	3 1/16	3 3/8	3 3/16	2 7/8	2 1/16	1 15/16	1 3/8	11/16	0
	SDL	1/16	1/16	1/8	1/4	3/8	1/2	5/8	7/16	11/16	3/4	5/8	7/8	7/8	7/8	15/16	3/4	5/8	1/2	3/8	3/16	0
	TDC	3/16	5/8	7/8	1 1/16	2 1/16	2 7/8	3 5/16	4 1/4	4 15/16	5 1/4	5 1/2	5 5/8	5 1/2	5 1/4	4 3/4	4 1/16	3 3/16	2 1/4	1 1/8	0
	VCO	3/16	1 1/16	1 1/2	1 7/8	2 3/16	2 1/16	2 5/8	2 3/4	2 15/16	2 11/16	2 3/4	2 5/8	2 1/16	2 3/16	1 7/8	1 1/2	1 1/8	3/4	3/8	0
	TDC+VCO	3/4	1 1/2	2 3/8	3 3/8	4 5/16	5 1/16	6 7/16	7	7 5/8	8 1/16	8 1/4	8 1/4	7 15/16	7 3/8	6 7/16	5 5/16	4 5/16	2 15/16	1 1/2	0
G2	DLS	1/16	1/16	3/16	5/16	1/2	11/16	13/16	15/16	1 1/16	1 3/16	1 1/4	1 1/4	1 1/4	1 3/16	1 1/16	15/16	3/4	1/2	1/4	0
	DLC	1/8	1/4	1/2	7/8	1 1/4	1 11/16	2 1/16	2 1/2	2 15/16	3 1/8	3 1/4	3 5/16	3 1/4	3 1/16	2 15/16	2 3/8	1 7/8	1 3/16	5/8	0
	SDL	0	1/16	1/8	3/16	5/16	3/8	1/2	9/16	11/16	11/16	3/4	3/4	3/4	11/16	5/8	9/16	7/16	5/16	1/8	0
	TDC	3/16	3/8	13/16	1 7/16	2 1/16	2 3/4	3 7/16	4 1/16	4 9/16	5	5 1/4	5 3/8	5 1/4	4 15/16	4 1/2	3 13/16	3 1/16	2 1/8	1 1/16	0
	VCO	3/16	1 1/16	1 1/2	1 7/8	2 3/16	2 1/16	2 5/8	2 3/4	2 15/16	2 11/16	2 3/4	2 5/8	2 1/16	2 3/16	1 7/8	1 1/2	1 1/8	3/4	3/8	0
	TDC+VCO	3/4	1 7/16	2 3/16	3 3/16	4 1/4	5 1/16	6 11/16	7 3/8	7 15/16	8	8	7 15/16	7 1/16	7 1/8	6 5/16	5 1/16	4 1/8	2 15/16	1 7/16	0
G3	DLS	1/16	1/16	3/16	5/16	7/16	5/8	13/16	7/8	1 1/16	1 1/8	1 3/16	1 3/16	1 3/16	1 1/8	1	7/8	11/16	1/2	1/4	0
	DLC	1/8	1/4	1/2	11/16	1 1/4	1 11/16	2 1/16	2 1/16	2 3/4	3	3 3/16	3 1/16	3 1/8	3	2 11/16	2 5/16	1 15/16	1 1/4	5/8	0
	SDL	0	1/16	1/8	3/16	1/4	3/8	7/16	9/16	5/8	5/8	11/16	11/16	11/16	5/8	7/16	1/2	3/16	1/4	1/8	0
	TDC	3/16	3/8	13/16	1 5/16	1 15/16	2 11/16	3 5/16	3 15/16	4 3/8	4 15/16	5 1/16	5 1/16	5	4 3/4	4 5/16	3 11/16	2 7/8	2	1	0
	VCO	3/16	1 1/16	1 1/2	1 7/8	2 3/16	2 1/16	2 5/8	2 3/4	2 15/16	2 11/16	2 3/4	2 5/8	2 1/16	2 3/16	1 7/8	1 1/2	1 1/8	3/4	3/8	0
	TDC+VCO	3/4	1 7/16	2 3/16	3 1/4	4 1/16	5 1/16	5 15/16	6 11/16	7 1/4	7 5/8	7 11/16	7 3/4	7 1/16	6 15/16	6 1/8	5 1/8	4	2 3/4	1 3/8	0
G4	DLS	1/16	1/16	3/16	5/16	7/16	5/8	3/4	7/8	1	1 1/16	1 1/8	1 1/8	1 1/8	1 1/16	15/16	15/16	5/16	7/16	1/4	0
	DLC	1/8	1/4	1/2	11/16	1 3/16	1 5/8	2	2 3/8	2 5/8	2 7/8	3 1/16	3 1/16	3	2 7/8	2 5/16	2 1/16	1 3/4	1 3/16	5/8	0
	SDL	0	1/16	1/8	3/16	1/4	3/8	7/16	9/16	5/8	5/8	11/16	11/16	11/16	5/8	9/16	1/2	3/8	1/4	1/8	0
	TDC	3/16	5/8	3/4	1 5/16	1 15/16	2 3/16	3 3/16	3 3/4	4 1/4	4 5/8	4 7/8	4 15/16	4 3/16	4 1/8	3 1/2	2 11/16	1 15/16	7/8	3/8	0
	VCO	3/16	1 1/16	1 1/2	1 7/8	2 3/16	2 1/16	2 5/8	2 3/4	2 15/16	2 11/16	2 3/4	2 5/8	2 1/16	2 3/16	1 7/8	1 1/2	1 1/8	3/4	3/8	0
	TDC+VCO	3/4	1 7/16	2 1/4	3 3/16	4 1/16	5 1/16	6 1/16	6 15/16	7 7/16	7 7/8	7 15/16	7 3/4	7 1/16	6 15/16	6 1/8	5 1/8	4 1/8	2 15/16	1 7/16	0
G5	DLS	1/16	1/16	3/16	5/16	7/16	9/16	11/16	13/16	15/16	1	1 1/16	1 1/16	1 1/16	1	7/8	3/4	5/8	7/16	3/16	0
	DLC	1/8	3/16	7/16	3/4	1 1/8	1 1/2	1 7/8	2 1/4	2 1/2	2 3/4	2 7/8	2 15/16	2 7/8	2 11/16	2 1/16	2 1/16	1 11/16	1 1/8	9/16	0
	SDL	0	1/16	1/8	3/16	5/16	3/8	1/2	9/16	5/8	11/16	3/4	3/4	11/16	11/16	5/8	1/2	7/16	5/16	1/8	0
	TDC	3/16	3/8	3/4	1 5/16	1 7/16	2 1/16	3 1/16	3 5/16	4 1/16	4 3/4	5 1/16	5 1/16	4 15/16	4 3/16	3 5/16	2 11/16	1 7/16	7/8	3/8	0
	VCO	3/16	1 1/16	1 1/2	1 7/8	2 3/16	2 1/16	2 5/8	2 3/4	2 15/16	2 11/16	2 3/4	2 5/8	2 1/16	2 3/16	1 7/8	1 1/2	1 1/8	3/4	3/8	0
	TDC+VCO	3/4	1 7/16	2 1/4	3 3/16	4 1/16	4 15/16	5 3/4	6 1/16	6 15/16	7 3/16	7 7/16	7 3/8	7 1/16	6 5/16	5 15/16	4 7/8	3 11/16	2 15/16	1 7/16	0

LEGEND

DLS - DENOTES DEFLECTION DUE TO STRUCTURAL STEEL GIRDER.

DLC - DENOTES DEFLECTION DUE TO DECK SLAB, HAUNCH AND S.I.P. FORMS

SDL - DENOTES DEFLECTION DUE TO BARRIER

TDC - DENOTES TOTAL DEAD LOAD DEFLECTION AND CAMBER

VCO - DENOTES CAMBER FOR VERTICAL CURVE ORDINATE DUE TO ROADWAY PROFILE

TDC+VCO - DENOTES TOTAL CAMBER

ALL GIRDERS SHALL BE CAMBERED FOR DEAD LOAD DEFLECTION ORDINATES TO THE DIMENSIONS SHOWN ON THESE PLANS. THE CAMBER TOLERANCE IS NOTHING UNDER TO THREE QUARTERS (3/4) INCH OVER.

CROSS REFERENCE NOTES:

1. FOR GENERAL NOTES, SEE DWG. S3-2.
2. FOR VERTICAL CURVE DATA, SEE SEE DWG. S3-1.
3. FOR GIRDER ELEVATION, SEE SEE DWG. S3-27.

UNOFFICAL
COPY

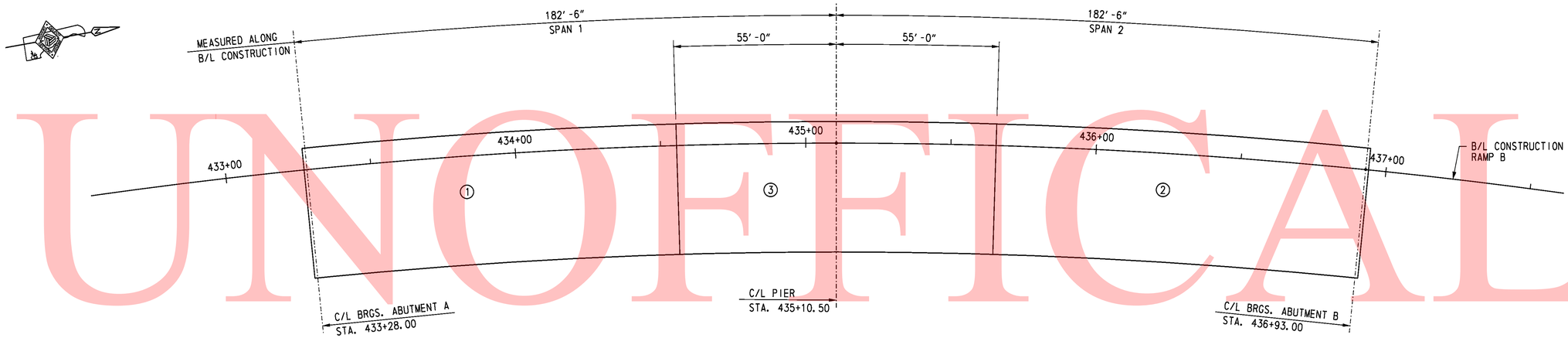

BRIDGE DECK POURING SEQUENCE

SCALE: 1" = 20'-0"

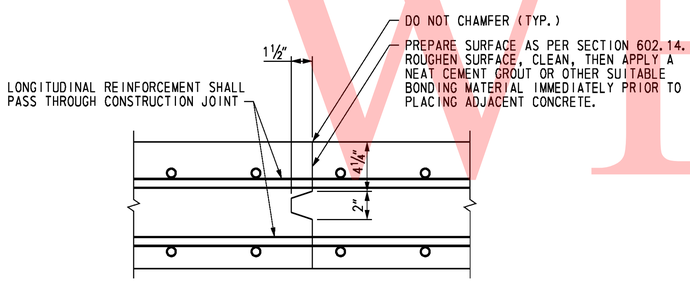

BRIDGE DECK CONSTRUCTION JOINT

NOT TO SCALE

NOTES:

1. THE POURING SEQUENCE FOR THE BRIDGE DECK SLAB SHALL BE MADE IN THE NUMBERED ORDER INDICATED. THERE MUST BE AT LEAST FORTY (40) HOURS BETWEEN THE COMPLETION OF ONE NUMBERED POUR AND THE START OF THE NEXT NUMBERED POUR.
2. AS AN ALTERNATE, CONTRACTOR MAY UTILIZE TWO CREWS AND TWO SETS OF EQUIPMENT TO CONSTRUCT POURS NUMBER 1 AND 2 SIMULTANEOUSLY.

CROSS REFERENCE NOTE:

1. FOR GENERAL NOTES, SEE DWG. S3-2.
2. FOR TYPICAL SECTION, SEE SEE DWG. S3-3.

UNOFFICAL WEBSITE COPY

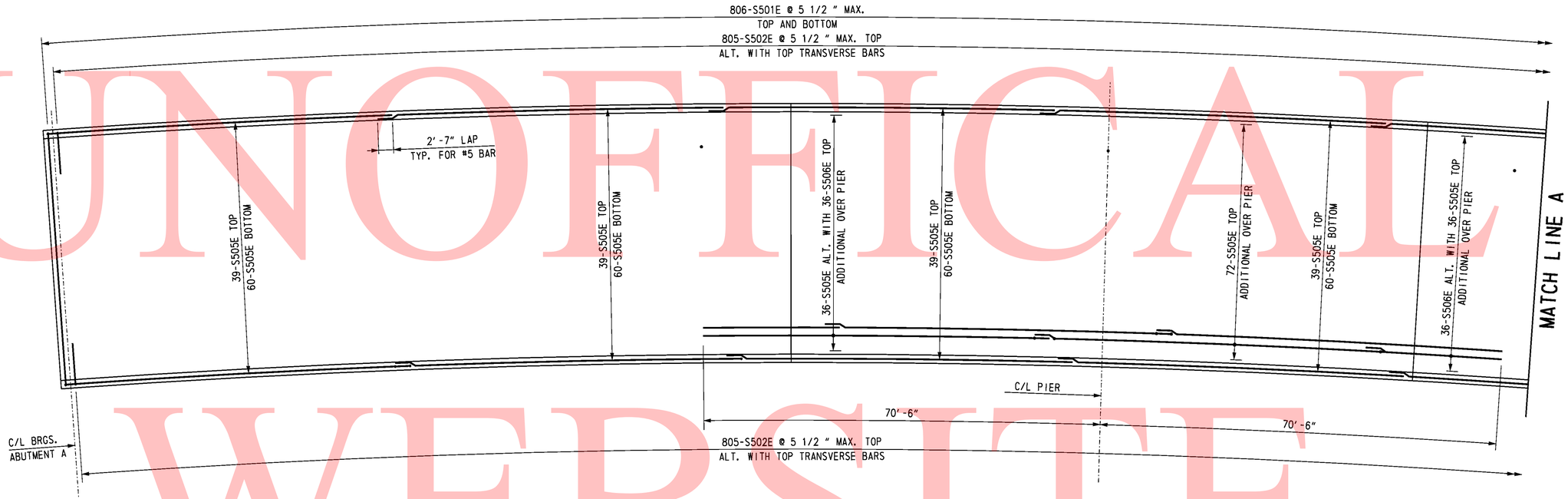

BRIDGE DECK REINFORCEMENT PLAN

SCALE: 1" = 10'-0"

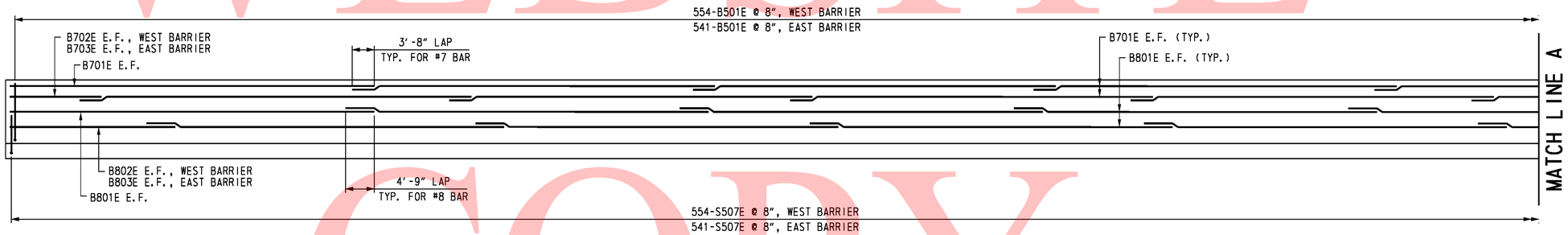

ELEVATION - DECK AND BARRIER REINFORCEMENT

NOT TO SCALE

CROSS REFERENCE NOTES:

1. FOR GENERAL NOTES, SEE DWG. S3-2.
2. FOR TYPICAL SECTION, SEE SEE DWG. S3-3.
3. FOR TYPICAL DECK REINFORCEMENT SECTION, SEE DWG. S3-35.
4. FOR REINFORCING BAR LIST, SEE DWG. S3-36.

UNOFFICAL WEBSITE COPY

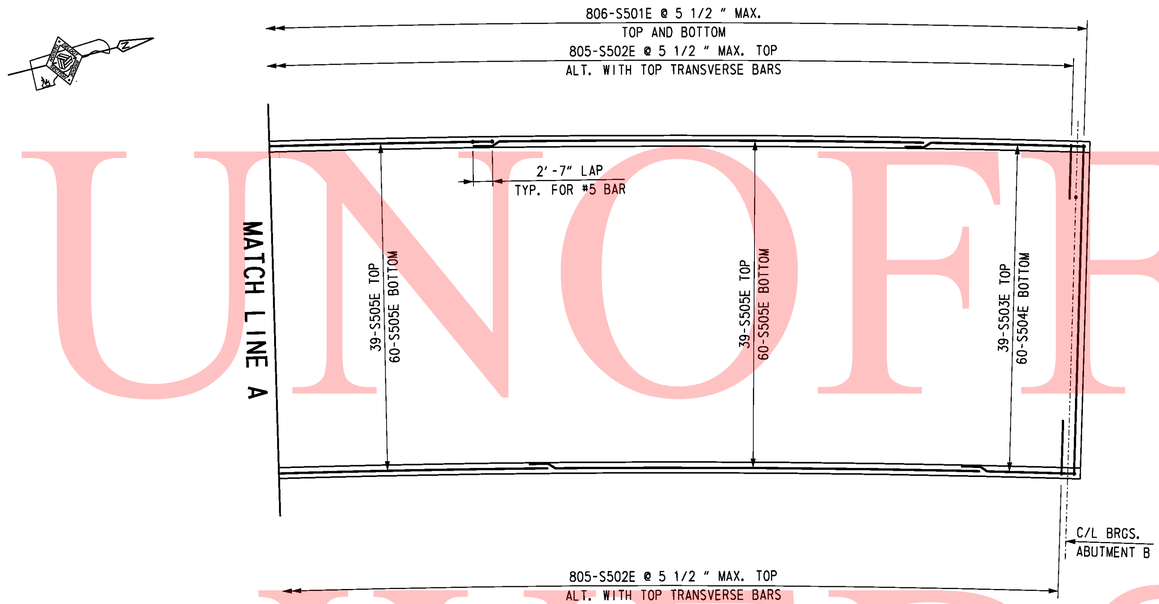

BRIDGE DECK REINFORCEMENT PLAN

SCALE: 1" = 10'-0"

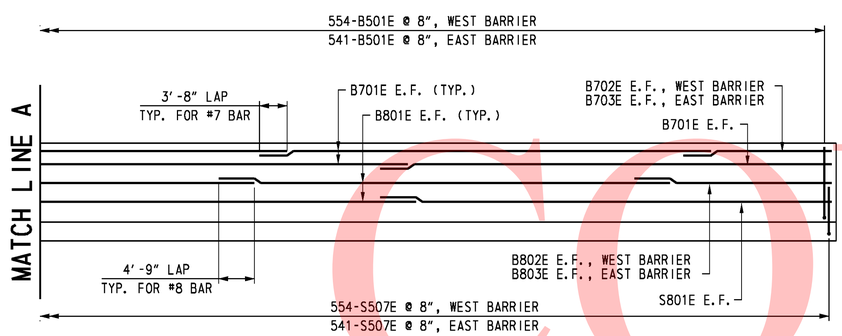

ELEVATION - DECK AND BARRIER REINFORCEMENT

NOT TO SCALE

CROSS REFERENCE NOTES:

1. FOR GENERAL NOTES, SEE DWG. S3-2.
2. FOR TYPICAL SECTION, SEE SEE DWG. S3-3.
3. FOR TYPICAL DECK REINFORCEMENT SECTION, SEE DWG. S3-35.
4. FOR REINFORCING BAR LIST, SEE DWG. S3-36.

UNOFICAL WEBSITE COPY

DELAWARE DEPARTMENT OF TRANSPORTATION	ADDENDUMS / REVISIONS	SR1 / I-95 INTERCHANGE	CONTRACT 28-090-03	BRIDGE NO. 1-268A	RAMP B OVER SR 7	SHEET NO. S3-34
			COUNTY NEW CASTLE	DESIGNED BY: R. F. KIRCHNER	BRIDGE DECK AND BARRIER REINFORCEMENT 2	TOTAL SHTS. 340
				CHECKED BY: C. J. LOGAN		803

10/28/2010 O:\20832687-XM\CAD\Bridge\BR-S3\dk03_BR-S3_sr1.dgn
untitled

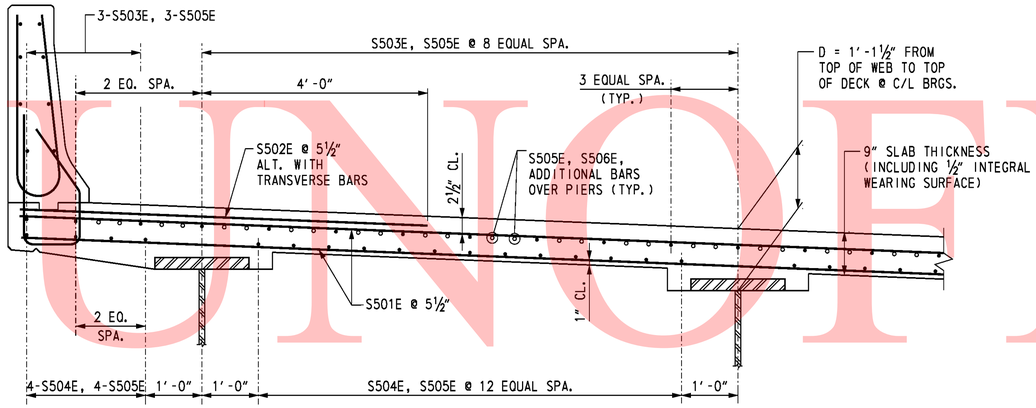

TYPICAL DECK REINFORCEMENT SECTION

SCALE: ¾" = 1'-0"

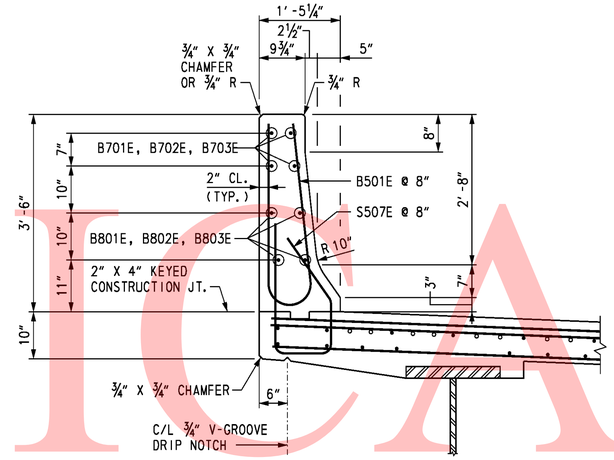

TYPICAL BARRIER REINFORCEMENT SECTION

SCALE: ¾" = 1'-0"

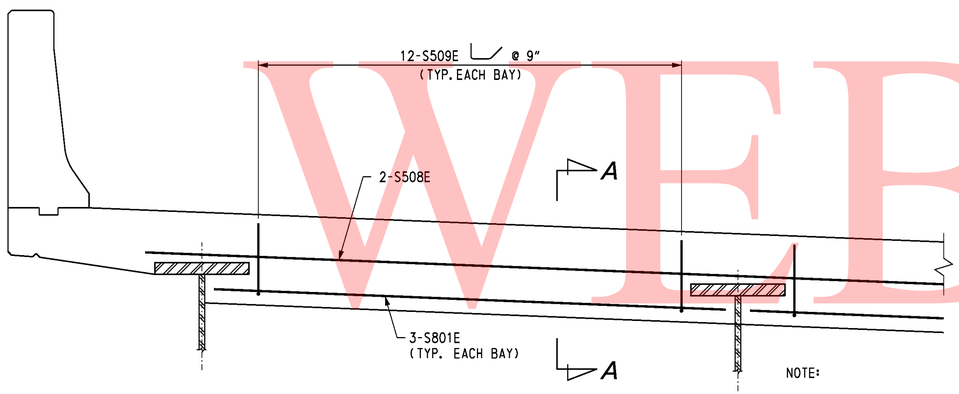

TYPICAL CONCRETE END HAUNCH SECTION

SCALE: ¾" = 1'-0"

NOTE:

NORMAL SLAB AND BARRIER REINFORCEMENT NOT SHOWN.

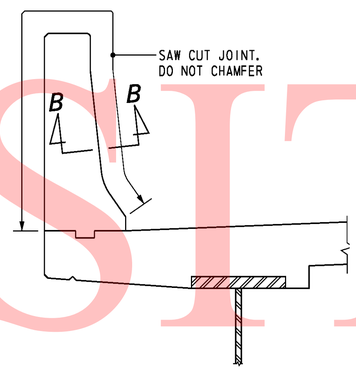

BARRIER CONTROL JOINT DETAIL

SCALE: ¾" = 1'-0"

SECTION B-B

NOT TO SCALE

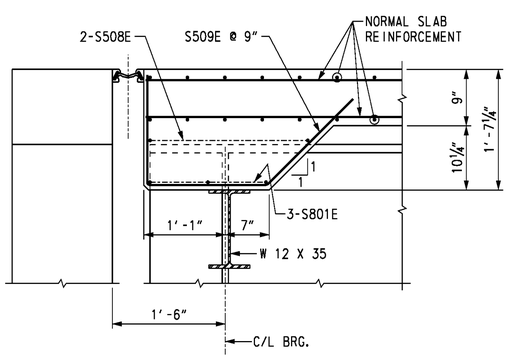

SECTION A-A

SCALE: 1" = 1'-0"

NOTES:

1. LONGITUDINAL SLAB REINFORCEMENT IS SET TO PASS THROUGH TRANSVERSE BARRIER BARS AS SHOWN.
2. ALL LONGITUDINAL BARRIER BARS SHALL BE PLACED CONTINUOUSLY IN BARRIER, LAPPING AS NECESSARY. BARRIER IS PLACED CONTINUOUSLY.
3. FRONT FACE OF BARRIER DIMENSIONED FROM PLUMB LINE.
4. SAW CUT CONTROL JOINT THE SAME DAY THAT CONCRETE IS POURED.

CROSS REFERENCE NOTES:

1. FOR GENERAL NOTES, SEE DWG. S3-2.
2. FOR REINFORCING BAR LIST, SEE DWG. S3-36.

UNOFFICIAL WEBSITE COPY

REINFORCING BAR LIST

BRIDGE DECK SLAB AND BARRIER

MARK	LENGTH	NO. BARS	TYPE	A	B	C	D	E	F	G	H	K	O	R	REMARKS
S501E	44′-6″	1,612	STR.												
S502E	7′-4″	1,610	STR.												
S503E	15′-6″ TO 24′-6″	39	STR.												△ = 0′-2⅞″
S504E	15′-6″ TO 24′-6″	60	STR.												△ = 0′-1⅞″
S505E	60′-0″	738	STR.												
S506E	26′-2″	72	STR.												
S507E	6′-3¾″	1,095	16	2′-8″	1′-1¼″	0′-10½″	1′-8″				0′-11¾″	1′-4½″			
S508E	40′-0″	4	STR.												
S509E	4′-0¾″	96	4	1′-2¾″	1′-5″	1′-5″					1′-0″	1′-0″			
S801E	9′-1″	24	STR.												
B501E	6′-8¼″	1,095	H1		2′-10″	1′-0¼″	2′-10″				0′-5″			0′-4¼″	
B701E	60′-0″	48	STR.												
B702E	31′-0″	4	STR.												
B703E	22′-0″	4	STR.												
B801E	60′-0″	48	STR.												
B802E	37′-6″	4	STR.												
B803E	28′-6″	4	STR.												

BENDING DIAGRAMS

ALL DIMENSIONS ARE FROM OUT TO OUT.

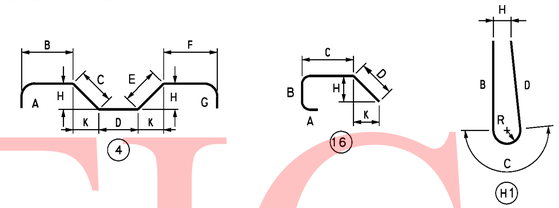

UNOFFICAL WEBSITE COPY

DELAWARE DEPARTMENT OF TRANSPORTATION

ADDENDUMS / REVISIONS

SR1 / I-95 INTERCHANGE

CONTRACT	BRIDGE NO.	1-268A
28-090-03	DESIGNED BY: R. F. KIRCHNER	
COUNTY		
NEW CASTLE	CHECKED BY: C. J. LOGAN	

RAMP B OVER SR 7

BRIDGE DECK AND BARRIER REINFORCING BAR LIST

S3-36
SHEET NO.
342
TOTAL SHTS.
803

10/28/2010 O:\20832687-XM\CAD\Bridge\BR-S3\dk05_BR-S3_sr1.dgn
untitled

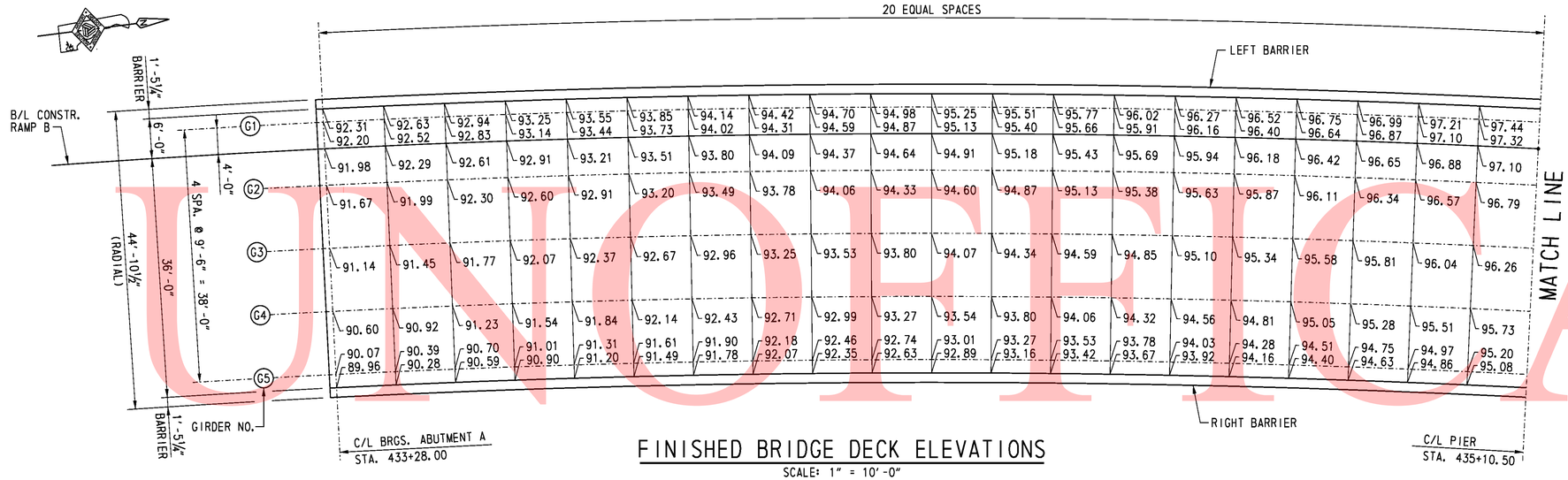

FINISHED BRIDGE DECK ELEVATIONS

SCALE: 1" = 10'-0"

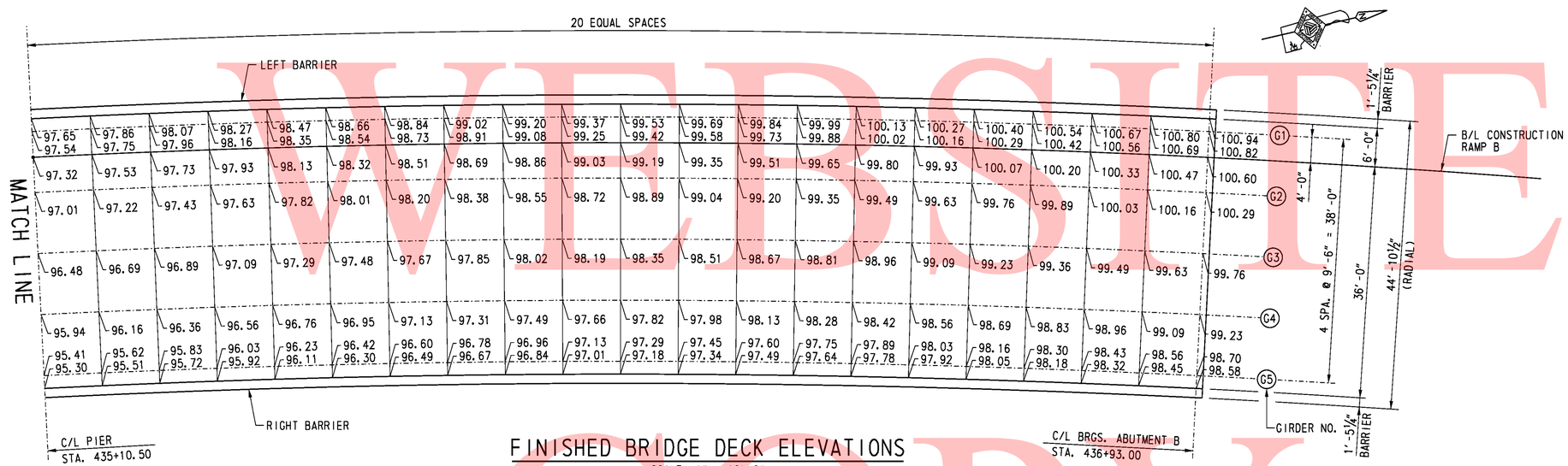

FINISHED BRIDGE DECK ELEVATIONS

SCALE: 1" = 10'-0"

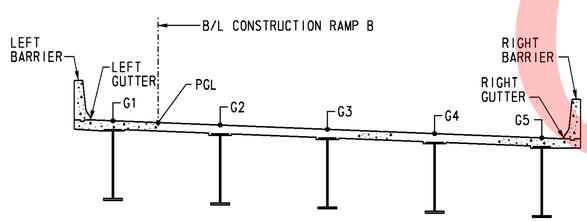

TYPICAL SECTION - RAMP B

NOT TO SCALE

NOTE:

THE FINISHED BRIDGE DECK ELEVATIONS SHOWN ARE TO TOP OF CONCRETE DECK.

CROSS REFERENCE NOTES:

1. FOR VERTICAL CURVE DATA, SEE DWG. S3-1.
2. FOR CROSS-SLOPE, SEE DWG. S3-3.
3. FOR GIRDER ELEVATION, SEE DWG. S3-27.

UNOFFICIAL WEBSITE COPY

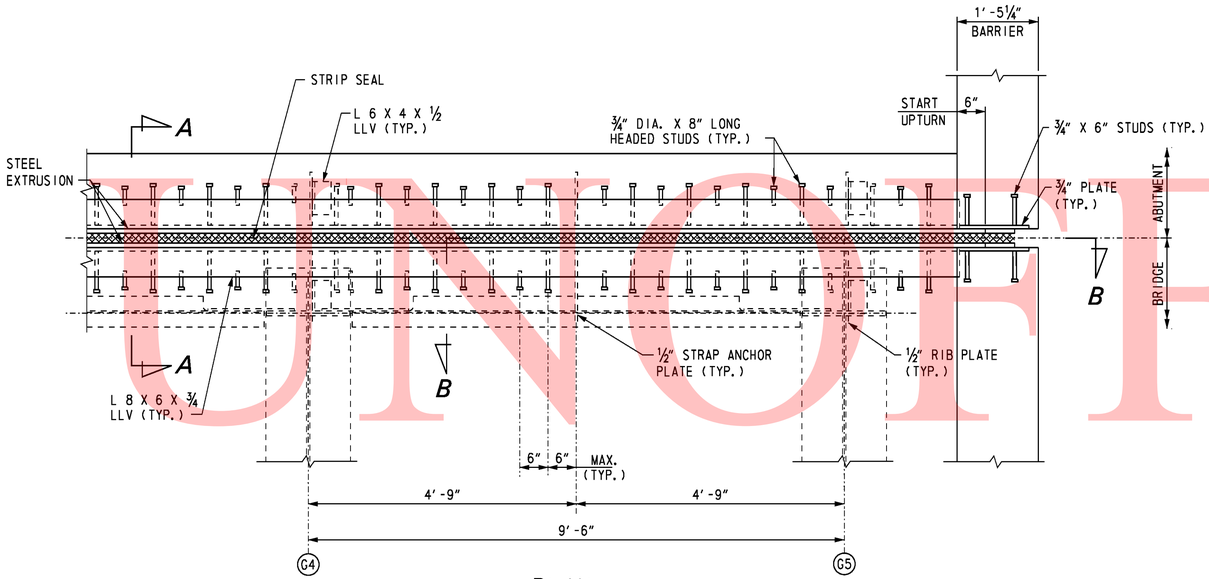

PLAN

SCALE: ¾" = 1'-0"

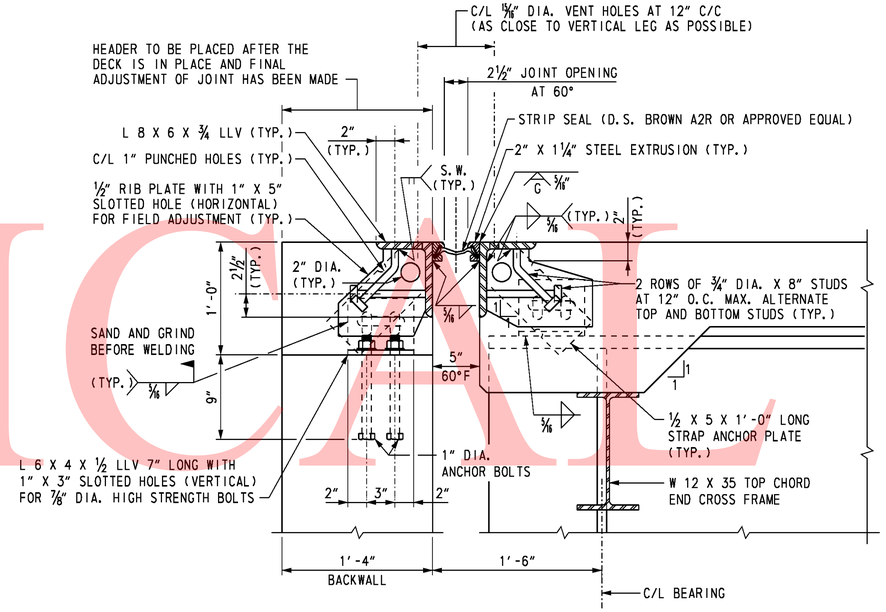

SECTION A-A

SCALE: 1½" = 1'-0"

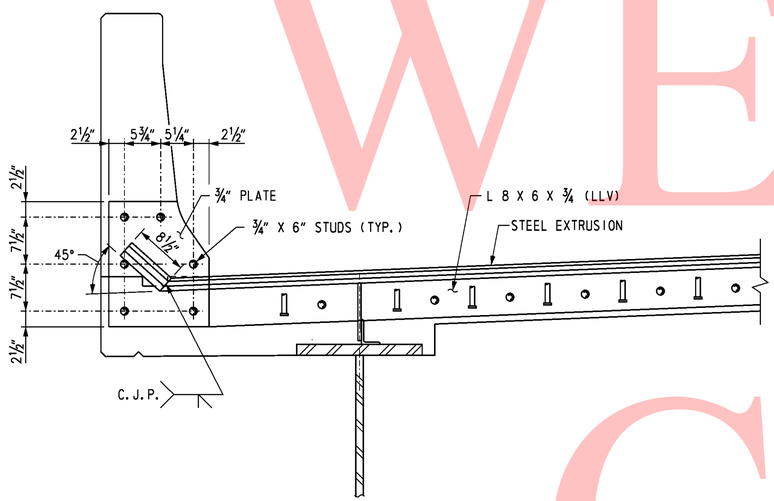

SECTION B-B

SCALE: 1" = 1'-0"

JOINT OPENING (INCH)

LOCATION	TEMPERATURE (°F)											MOVEMENT CLASSIFICATION
	0	10	20	30	40	50	60	70	80	90	100	
ABUTMENT A	3⅜	3 3/16	3 1/16	2 15/16	2¾	2⅝	2½	2⅜	2 3/16	2 1/16	1 15/16	3"
ABUTMENT B	3⅜	3 3/16	3 1/16	2 15/16	2¾	2⅝	2½	2⅜	2 3/16	2 1/16	1 15/16	3"

NOTES:

1. STRUCTURAL STEEL FOR DECK JOINTS SHALL CONFORM TO AASHTO M270, GRADE 36.
2. STEEL EXTRUSIONS FOR DECK JOINTS SHALL CONFORM TO AASHTO M270, GRADE 36.
3. HOLES SHALL BE PLACED IN THE ½" RIB PLATES AND THE STRAP ANCHOR PLATES FOR BAR REINFORCEMENT. IF THE HOLES ARE DRILLED IN THE FIELD, AN APPROVED EPOXY PAINT SHALL BE APPLIED TO TOUCH UP THE HOLES.
4. THE NEOPRENE STRIP SEAL SHALL BE PROVIDED CONTINUOUS THROUGHOUT THE LIMITS OF THE DECK. SPLICING OF THE NEOPRENE STRIP SEAL IS NOT PERMITTED.
5. COST FOR MATERIALS, FABRICATION AND INSTALLATION OF STRIP SEAL EXPANSION JOINTS, 3" MOVEMENT CLASSIFICATION, WITH STEEL ELEMENTS INCLUDING STUDS AND STEEL EXTRUSIONS, SHALL BE PAID FOR UNDER ITEM 605511.
6. EXPANSION JOINT PLAN IS SHOWN AT ABUTMENT B. EXPANSION JOINT AT ABUTMENT A IS SIMILAR.

UNOFFICIAL WEBSITE COPY

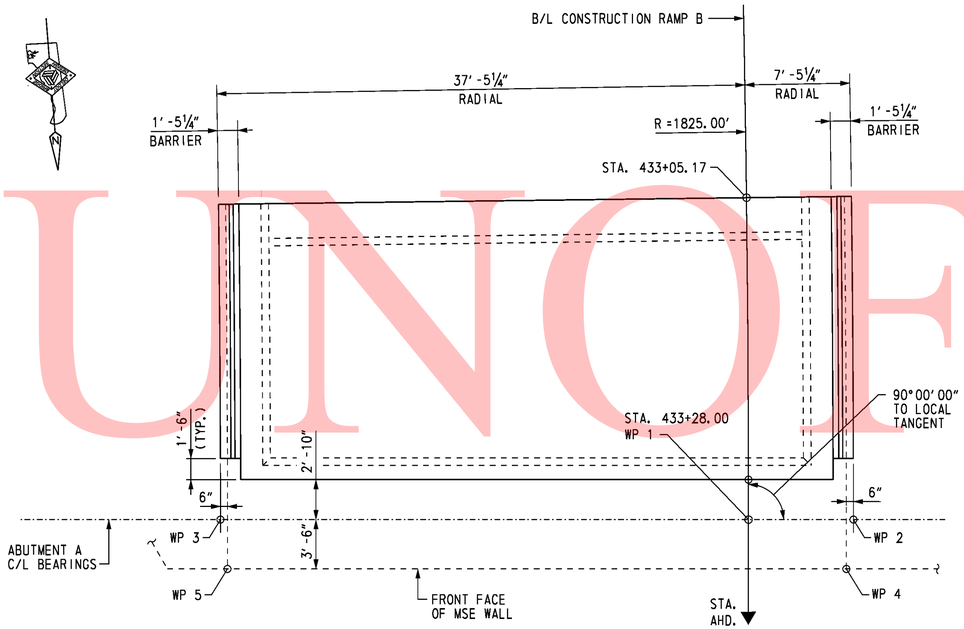

APPROACH SLAB AT ABUTMENT A PLAN

SCALE: 3/16" = 1'-0"

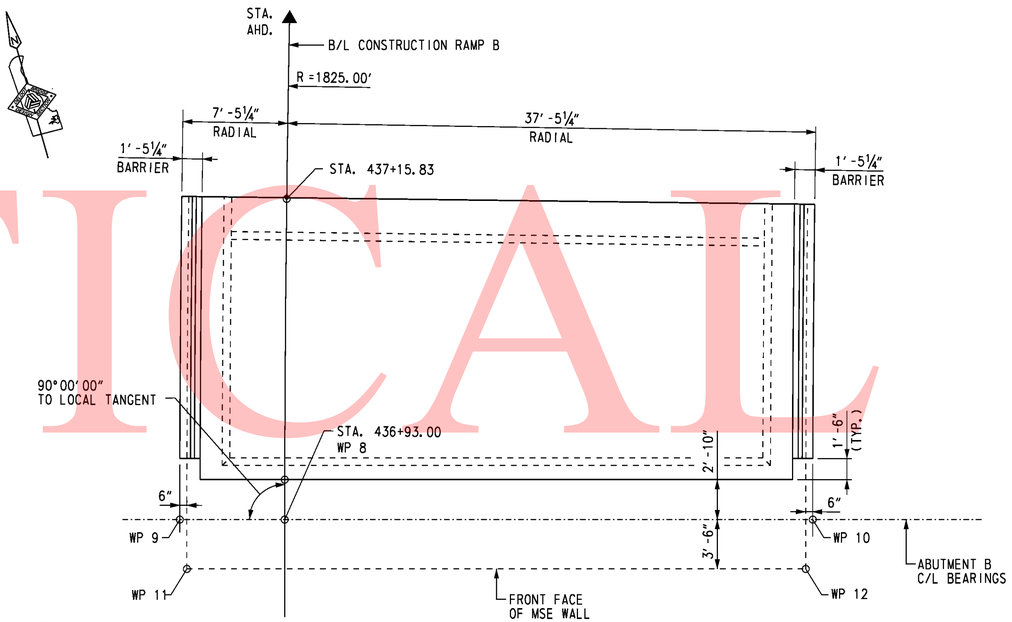

APPROACH SLAB AT ABUTMENT B PLAN

SCALE: 3/16" = 1'-0"

CROSS REFERENCE NOTES:

1. FOR BRIDGE PLAN AND ELEVATION, SEE DWG. S3-1.
2. FOR ABUTMENT A PLAN AND ELEVATION, SEE DWG. S3-5.
3. FOR ABUTMENT B PLAN AND ELEVATION, SEE DWG. S3-6.
4. FOR MSE WINGWALLS PLAN AND ELEVATION, SEE DWGS. S3-11 & S3-12.
5. FOR APPROACH SLAB REINFORCEMENT, SEE DWGS. S3-40 & S3-41.

UNOFFICAL WEBSITE COPY

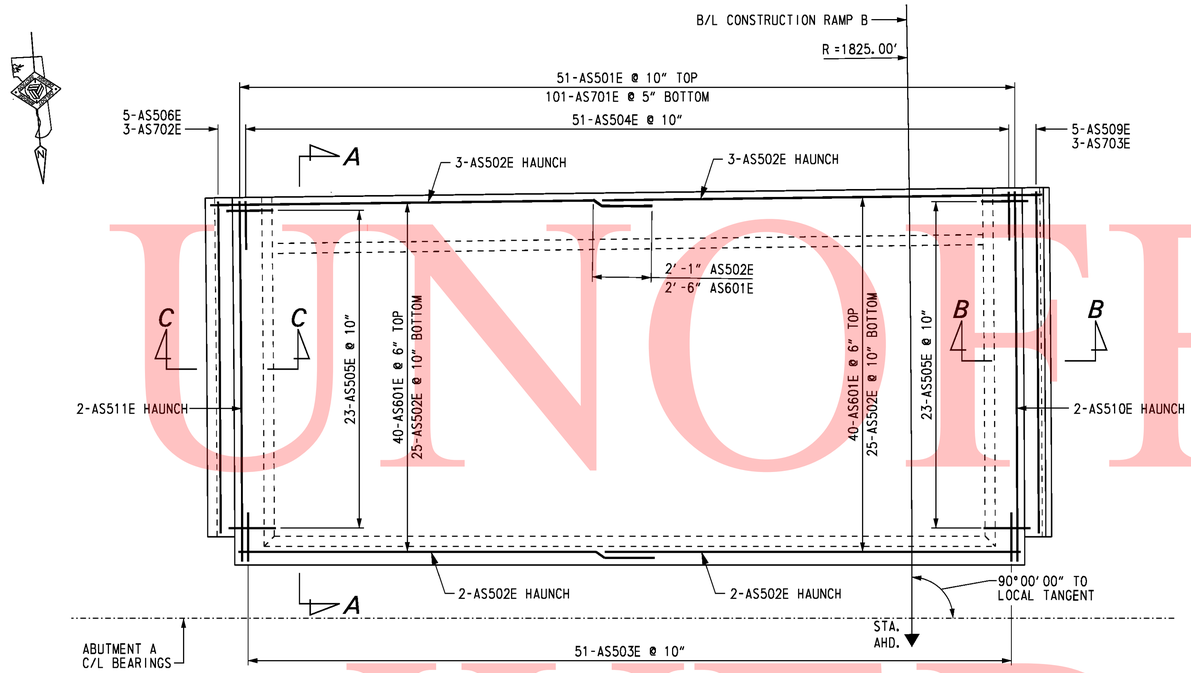

APPROACH SLAB AT ABUTMENT A PLAN

SCALE: ¼" = 1'-0"

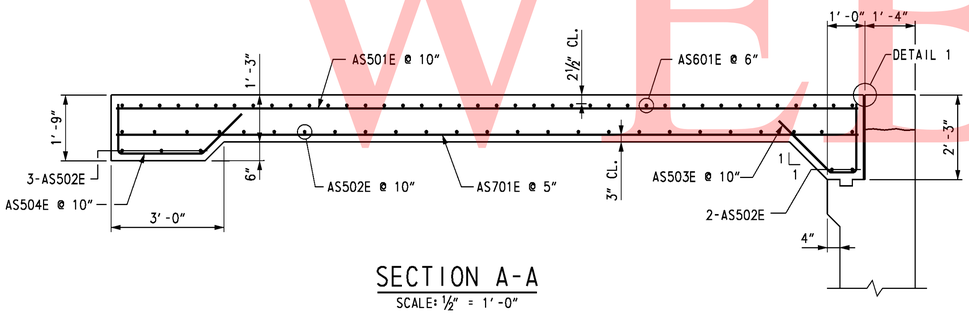

SECTION A-A

SCALE: ½" = 1'-0"

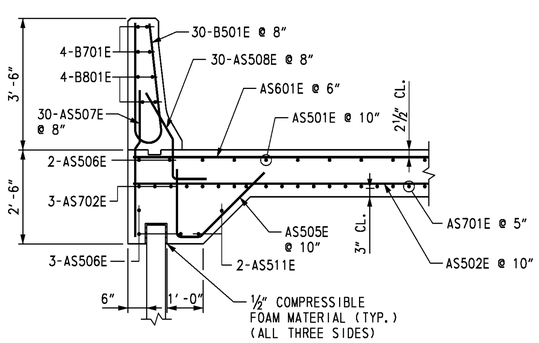

SECTION C-C

SCALE: ½" = 1'-0"

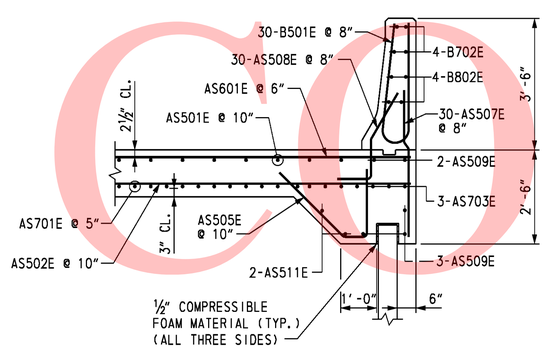

SECTION B-B

SCALE: ½" = 1'-0"

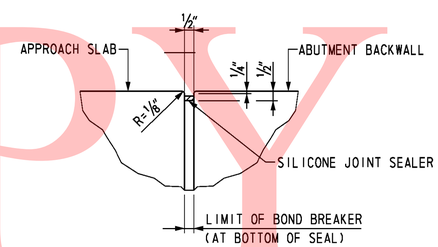

DETAIL 1

SCALE: 3" = 1'-0"

REINFORCING BAR LIST

APPROACH SLAB AT ABUTMENT A

MARK	LENGTH	NO. BARS	TYPE	A	B	C	D	E	G	H	K	R	REMARKS
AS501E	19'-3" TO 19'-9"	51	STR.										Δ = ⅛"
AS502E	23'-4"	60	STR.										
AS503E	4'-10"	51	4	1'-11"	0'-8"	2'-3"				1'-7"	1'-7"		
AS504E	5'-7"	51	4	1'-4"	2'-8"	1'-7"				1'-1"	1'-1"		
AS505E	5'-2"	46	4	1'-11"	0'-8"	2'-7"				1'-10"	1'-10"		
AS506E	17'-9"	5	STR.										
AS507E	4'-0"	60	STR.										
AS508E	3'-7"	60	4S	1'-0"	1'-1"	1'-6"				0'-10½"	1'-2⅝"		
AS509E	18'-3"	5	STR.										
AS510E	19'-9"	2	STR.										
AS511E	19'-3"	2	STR.										
AS601E	23'-8"	80	STR.										
AS701E	19'-3" TO 19'-9"	101	STR.										Δ = ⅛"
AS702E	17'-9"	3	STR.										
AS703E	18'-3"	3	STR.										
B501E	6'-8¼"	60	H1		2'-10"	1'-0¼"	2'-10"			0'-5"		0'-4¼"	
B701E	17'-9"	4	STR.										
B702E	18'-3"	4	STR.										
B801E	17'-9"	4	STR.										
B802E	18'-3"	4	STR.										

BENDING DIAGRAMS

ALL DIMENSIONS ARE FROM OUT TO OUT.

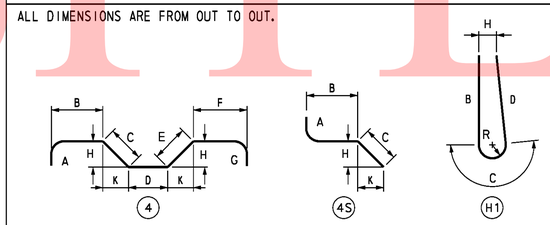

CROSS REFERENCE NOTES:

1. FOR BRIDGE PLAN AND ELEVATION, SEE DWG. S3-1.
2. FOR ABUTMENT A PLAN AND ELEVATION, SEE DWG. S3-5.
3. FOR MSE WINGWALLS PLAN AND ELEVATION, SEE DWGS. S3-11 & S3-12.
4. FOR APPROACH SLAB PLAN, SEE DWG. S3-39.
5. FOR BARRIER DETAIL AND LONGITUDINAL REINFORCING BAR LAYOUT IN BARRIER, SEE DWG. S3-35.

UNOFFICIAL WEBSITE COPY

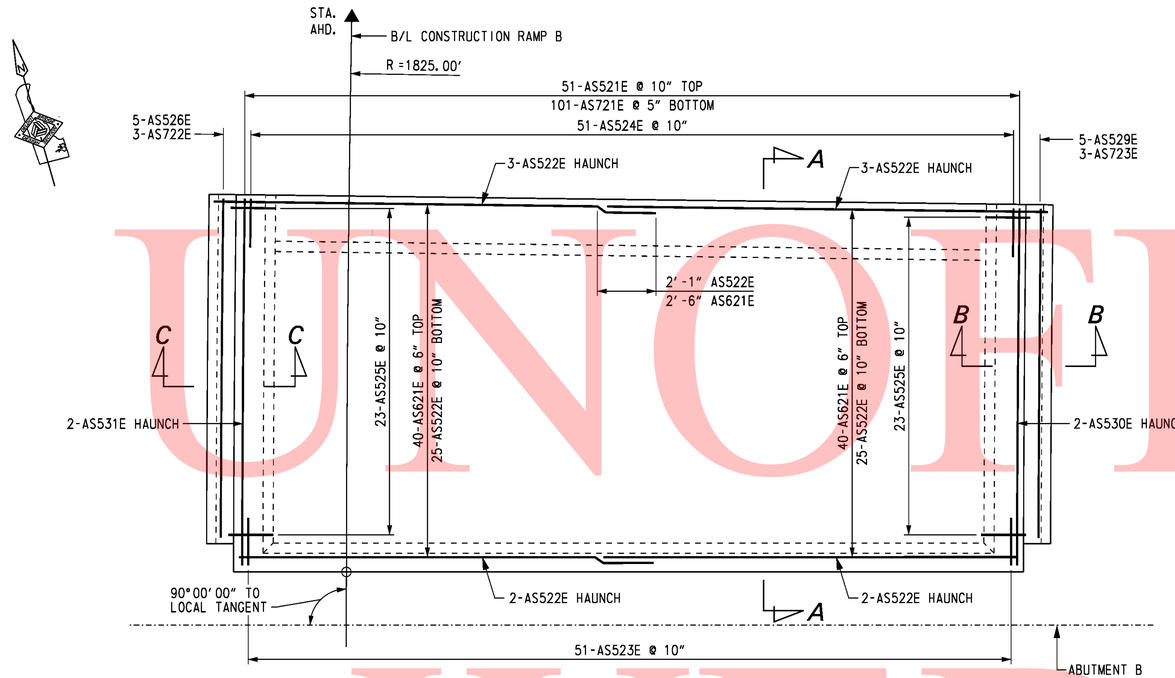

APPROACH SLAB AT ABUTMENT B PLAN

SCALE: 1/4" = 1'-0"

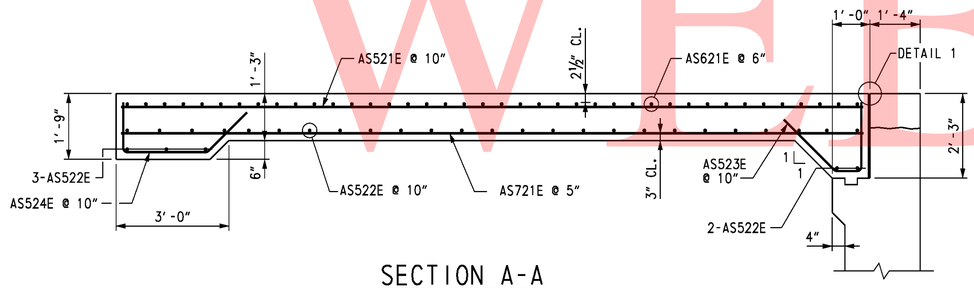

SECTION A-A

SCALE: 1/2" = 1'-0"

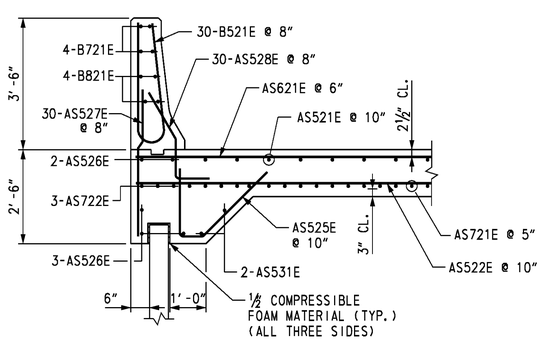

SECTION C-C

SCALE: 1/2" = 1'-0"

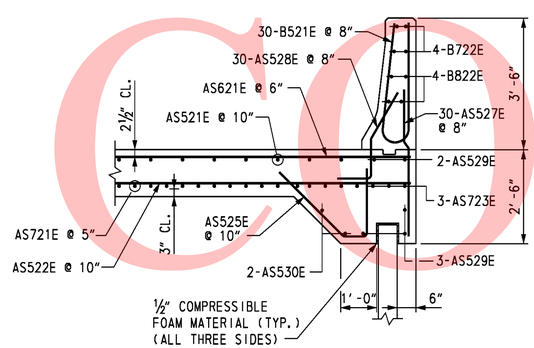

SECTION B-B

SCALE: 1/2" = 1'-0"

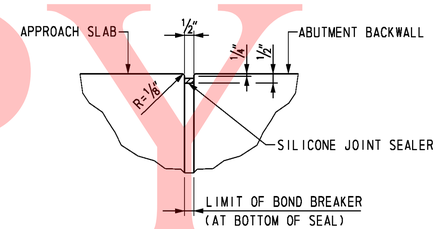

DETAIL 1

SCALE: 3" = 1'-0"

REINFORCING BAR LIST

APPROACH SLAB AT ABUTMENT B

MARK	LENGTH	NO. BARS	TYPE	A	B	C	D	E	G	H	K	R	REMARKS
AS521E	19'-3" TO 19'-9"	51	STR.										△=1/8"
AS522E	23'-4"	60	STR.										
AS523E	4'-10"	51	4	1'-11"	0'-8"	2'-3"				1'-7"	1'-7"		
AS524E	5'-7"	51	4	1'-4"	2'-8"	1'-7"				1'-1"	1'-1"		
AS525E	5'-2"	46	4	1'-11"	0'-8"	2'-7"				1'-10"	1'-10"		
AS526E	18'-3"	5	STR.										
AS527E	4'-0"	60	STR.										
AS528E	3'-7"	60	4S	1'-0"	1'-1"	1'-6"				0'-10½"	1'-2⅝"		
AS529E	17'-9"	5	STR.										
AS530E	19'-3"	2	STR.										
AS531E	19'-9"	2	STR.										
AS621E	23'-8"	80	STR.										
AS721E	19'-3" TO 19'-9"	101	STR.										△=1/16"
AS722E	18'-3"	3	STR.										
AS723E	17'-9"	3	STR.										
B521E	6'-8¼""	60	H1		2'-10"	1'-0¼"	2'-10"			0'-5"		0'-4¼"	
B721E	18'-3"	4	STR.										
B722E	17'-9"	4	STR.										
B821E	18'-3"	4	STR.										
B822E	17'-9"	4	STR.										

BENDING DIAGRAMS

ALL DIMENSIONS ARE FROM OUT TO OUT.

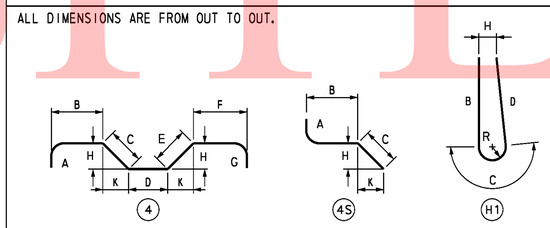

CROSS REFERENCE NOTES:

1. FOR BRIDGE PLAN AND ELEVATION, SEE DWG. S3-1.
2. FOR ABUTMENT B PLAN AND ELEVATION, SEE DWG. S3-6.
3. FOR MSE WINGWALLS PLAN AND ELEVATION, SEE DWGS. S3-11 & S3-12.
4. FOR APPROACH SLAB PLAN, SEE DWG. NO. S3-39.
5. FOR BARRIER DETAILS AND LONGITUDINAL REINFORCING BAR LAYOUT IN BARRIER, SEE DWG. S3-35.

UNOFFICIAL WEBSITE COPY

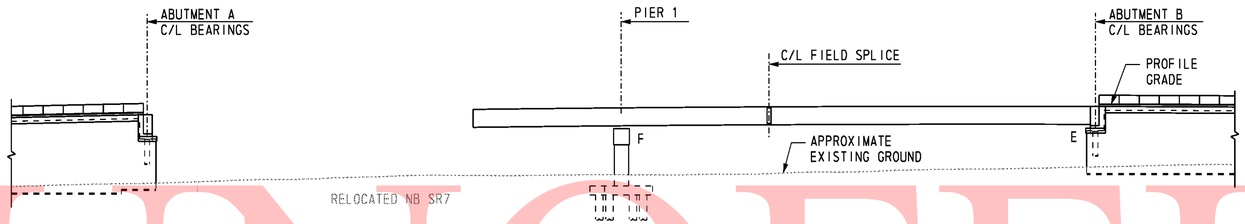

ELEVATION ERECTION STAGE 1

SCALE: 1" = 30'-0"

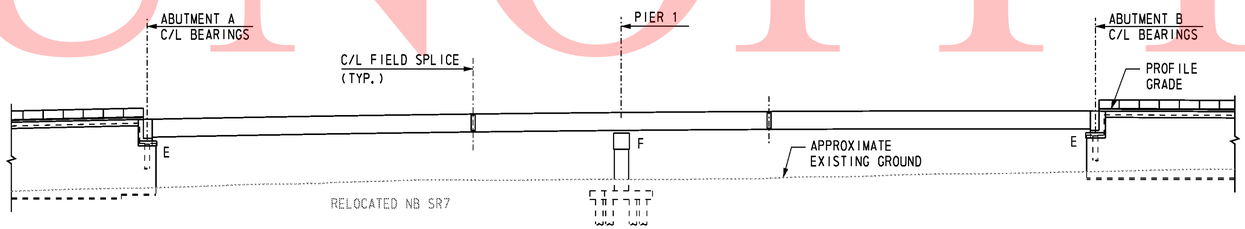

ELEVATION ERECTION STAGE 2

SCALE: 1" = 30'-0"

SUGGESTED ERECTION SEQUENCE NOTES

STAGE 1:

1. ERECT GIRDER SECTION IN SPAN 2 WITH ONE END SUPPORTED ON ABUTMENT A AND THE OTHER END HELD BY THE CRANE.
2. ERECT NEXT GIRDER SECTION IN SPAN 2 OVER PIER 1; HOLD AND MAKE FIELD SPLICE CONNECTION.
3. TIE-DOWN AND STABILIZE GIRDER.
4. REPEAT STEPS 1 AND 2 FOR ALL GIRDERS, INSTALLING CROSS FRAMES AFTER EACH REMAINING GIRDER IS ERECTED.

STAGE 2:

1. ERECT GIRDER SECTION IN SPAN 1 WITH ONE END SUPPORTED ON ABUTMENT A; HOLD AND MAKE FIELD SPLICE CONNECTION.
2. STABILIZE GIRDER AS NECESSARY.
3. REPEAT STEP 1 FOR ALL PRE-ASSEMBLED GIRDERS, INSTALLING CROSS FRAMES AFTER EACH REMAINING PRE-ASSEMBLED GIRDER IS ERECTED.

NOTE TO CONTRACTOR:

THE ERECTION SEQUENCE SHOWN IS ONLY A SUGGESTED METHOD. THE CONTRACTOR IS RESPONSIBLE FOR THE ENTIRE ERECTION OF THE BRIDGE. THE CONTRACTOR SHALL SUBMIT DRAWINGS SEALED BY A PROFESSIONAL ENGINEER REGISTERED IN THE STATE OF DELAWARE, ILLUSTRATING FULLY THE PROPOSED METHOD OF ERECTION. THE DRAWINGS SHALL SHOW DETAILS OF ALL TEMPORARY SHORING, FALSEWORK, BRACING, GUYS, DEAD-MEN, LIFTING DEVICES, HOLD-DOWN DEVICES AND ATTACHMENTS TO THE BRIDGE MEMBERS. THE DRAWINGS SHALL ALSO INCLUDE THE SEQUENCE OF ERECTION, LOCATION OF CRANES, CRANE CAPACITITIES, LOCATION OF LIFTING POINTS ON THE BRIDGE MEMBERS AND WEIGHTS OF MEMBERS. THE PLAN AND DRAWINGS SHALL BE COMPLETE IN DETAIL FOR ALL ANTICIPATED STAGES AND CONDITIONS DURING ERECTION. CALCULATIONS SEALED BY A PROFESSIONAL ENGINEER REGISTERED IN THE STATE OF DELAWARE ARE REQUIRED TO DEMONSTRATE THAT ALLOWABLE STRESSES ARE NOT EXCEEDED AND THAT MEMBER CAPACITIES AND FINAL GEOMETRY WILL BE CORRECT.

COST OF ERECTION AND TEMPORARY SHORING IS INCIDENTAL TO "STRUCTURE STEEL" ITEM.

FOR MAINTENANCE OF TRAFFIC REQUIREMENTS, REFER TO THE APPROPRIATE SHEETS.

UNOFFICAL WEBSITE COPY

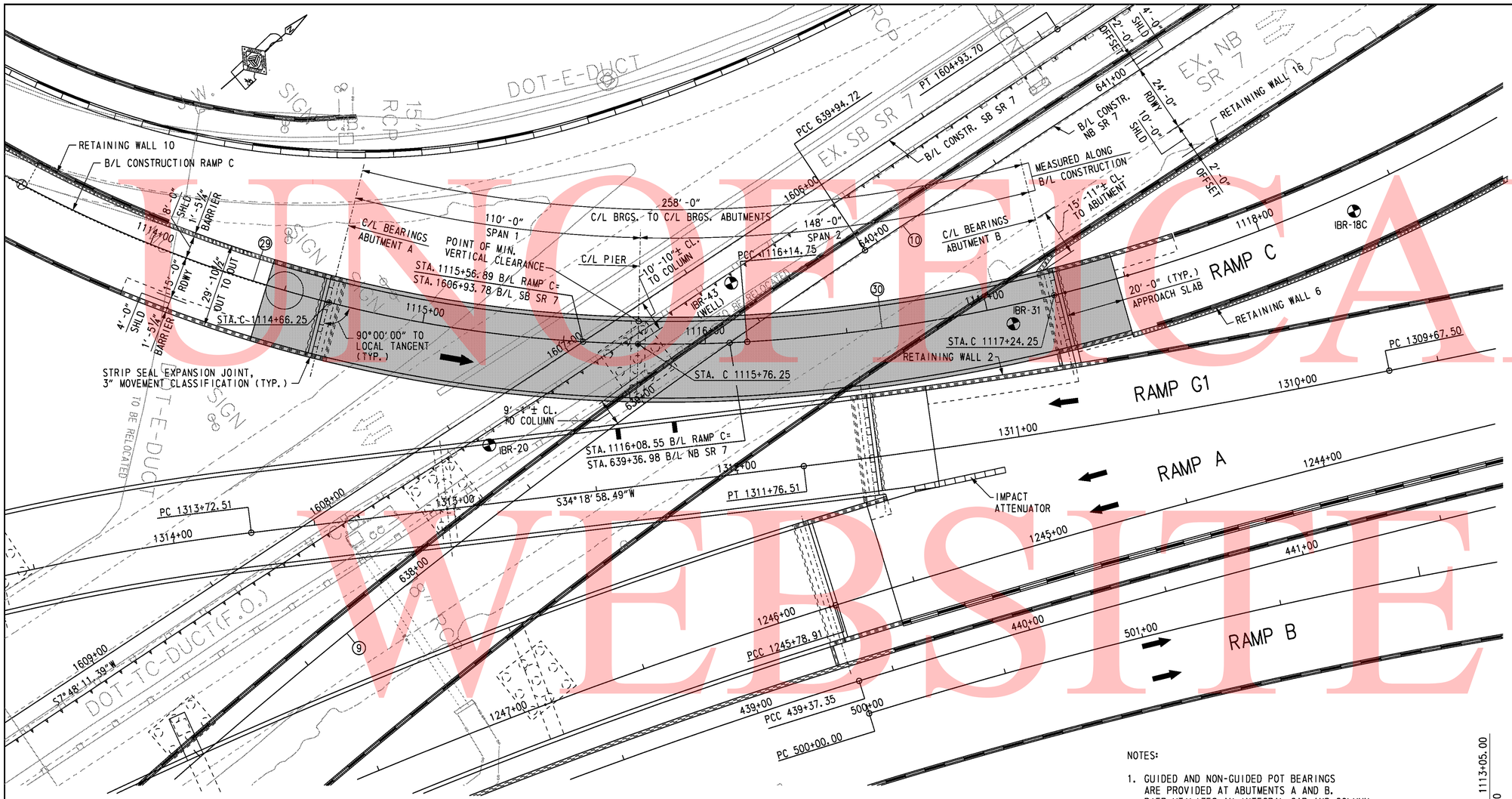

PLAN

SCALE: 1" = 20'-0"

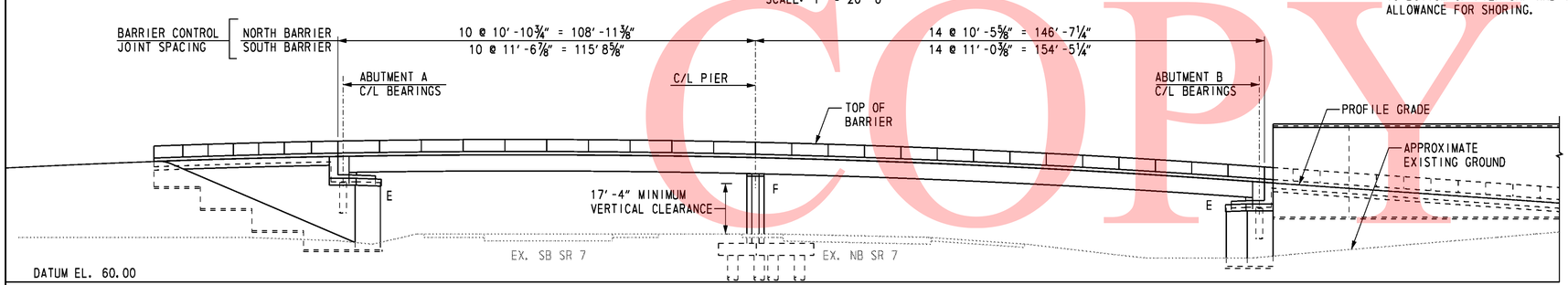

ELEVATION

SCALE: 1" = 20'-0"

NOTES:

1. GUIDED AND NON-GUIDED POT BEARINGS ARE PROVIDED AT ABUTMENTS A AND B. PIER UTILIZES AN INTEGRAL CAP AND COLUMN.
2. MINIMUM VERTICAL CLEARANCE IS MEASURED TO BOTTOM OF PIER CAP AND INCLUDES 3'-6" ALLOWANCE FOR SHORING.

B/L CONSTR. RAMP C CURVE 29 DATA

PI STA. 1113+47.25
Δ = 77°59'15.12" LT
Dc = 11°48'48.83"
R = 485.0'
T = 392.66'
L = 660.15'

B/L CONSTR. RAMP C CURVE 30 DATA

PI STA. 1118+29.56
Δ = 39°23'47.62" LT
Dc = 9°32'57.47"
R = 600.0'
T = 214.81'
L = 412.56'

B/L CONSTR. NB SR7 CURVE 9 DATA

PI STA. 637+21.94
Δ = 13°46'34.84" RT
Dc = 2°30'46.70"
R = 2,280.0000'
T = 275.43'
L = 548.21'

B/L CONSTR. NB SR7 CURVE 10 DATA

PI STA. 647+53.60
Δ = 07°43'05.43" RT
Dc = 0°30'33.46"
R = 11,250.0000'
T = 758.88'
L = 1,515.46'

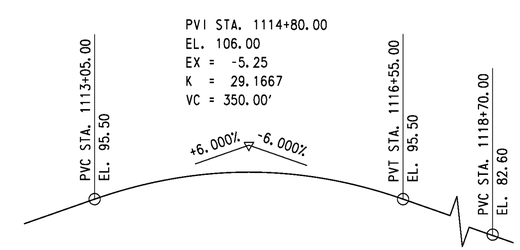

RAMP C - VERTICAL CURVE DATA

NOT TO SCALE

UNOFFICIAL WEBSITE COPY

DELAWARE DEPARTMENT OF TRANSPORTATION	ADDENDUMS / REVISIONS	SCALE 0 20 40 60 FEET	SR1 / I-95 INTERCHANGE	CONTRACT 28-090-03	BRIDGE NO. 1-717A	RAMP C OVER SR 7
				COUNTY NEW CASTLE	DESIGNED BY: R.E. KIRCHNER	BRIDGE PLAN AND ELEVATION
					CHECKED BY: G.P. MISTRY	

S4-1
SHEET NO. 349
TOTAL SHTS. 803

10/28/2010 O:\20832687-XM\CAD\Bridge\BR-S4\pe01_BR-S4_sr1.dgn untitled

GENERAL NOTES

1. DESIGN SPECIFICATIONS
AASHTO LRFD BRIDGE DESIGN SPECIFICATIONS, 4th EDITION WITH 2009 INTERIM REVISIONS.
DELAWARE DEPARTMENT OF TRANSPORTATION BRIDGE DESIGN MANUAL, MAY 2005 INCLUDING LATEST REVISIONS. ANSI/AASHTO/AWS D1.5 BRIDGE WELDING CODE.

2. LOADING
UNIT WEIGHTS OF MATERIALS SHALL BE IN ACCORDANCE WITH THE DELAWARE DESIGN MANUAL.
FUTURE OVERLAY ALLOWANCE SHALL BE 25 LBS/SQ FT.
STEEL BRIDGE DECK FORMS WHICH STAY IN PLACE (INCLUDING CONCRETE IN FORM CORRUGATIONS) SHALL BE 15 LBS/SQ FT.
VEHICLE LIVE LOAD SHALL BE HL-93, WHICH CONSISTS OF A DESIGN TRUCK OR TANDEM WITH DYNAMIC LOAD ALLOWANCE AND A LANE LOAD. RATING SHALL USE ALL DELAWARE LEGAL LOADS SPECIFIED IN THE BRIDGE DESIGN MANUAL.
BARRIER HAS BEEN DESIGNED FOR TEST LEVEL FIVE (TL-5).
FATIGUE DESIGN SHALL BE BASED ON THE FOLLOWING ONE DIRECTIONAL TRAFFIC VOLUMES:

RAMP C OVER SR 7: DESIGN ADT = 7,175, DESIGN ADTT = 215

FOR THERMAL LOADS, CONSIDER THE MODERATE TEMPERATURE RANGE AS STIPULATED IN THE AASHTO LRFD DESIGN SPECIFICATIONS. THE NORMAL TEMPERATURE SHALL BE CONSIDERED TO BE 60F.
FOR SEISMIC LOADS, CONSIDER SEISMIC PERFORMANCE ZONE 1, WITH A SITE CLASS = E AND IMPORTANCE CATEGORY - CRITICAL.

3. PORTLAND CEMENT CONCRETE
PORTLAND CEMENT CONCRETE FOR CAST-IN-PLACE ELEMENTS SHALL BE AS FOLLOWS:
(28 DAY COMPRESSIVE STRENGTH)
ITEM NO. 602007 (CLASS A, F'c=4500 PSI) - PIER ABOVE FOOTING
ITEM NO. 602011 (CLASS A, F'c=4500 PSI) - PIER FOOTING, TOP OF PIER PILES
ITEM NO. 602785 (CLASS A, F'c=6000 PSI) - POST-TENSIONED PIER CAP
ITEM NO. 602013 (CLASS D, F'c=4500 PSI) - DECK
ITEM NO. 602014 (CLASS D, F'c=4500 PSI) - APPROACH SLAB
ITEM NO. 602015 (CLASS A, F'c=4500 PSI) - ABUTMENT, TOP OF ABUTMENT PILES
ITEM NO. 602017 (CLASS A, F'c=4500 PSI) - BARRIER
MIX REQUIREMENTS SHALL CONFORM TO SECTION 812 OF THE DELAWARE DEPARTMENT OF TRANSPORTATION STANDARD SPECIFICATIONS. ALL EXPOSED CORNERS OF CONCRETE SHALL BE CHAMFERED WITH ¾" X ¾" MILLED CHAMFER STRIPS UNLESS NOTED OTHERWISE, EXCEPT ON UNEXPOSED FOOTINGS OR WHERE INDICATED BY THE NOTATION ON THE PLANS, "DO NOT CHAMFER".
NO SLIP-FORMING OF BARRIERS IS PERMITTED, UNLESS OTHERWISE APPROVED.

4. BAR REINFORCEMENT
REINFORCING STEEL SHALL CONFORM TO AASHTO M31 (ASTM A615), GRADE 60. ALL REINFORCING STEEL SHALL HAVE A CLEAR COVER OF 2" UNLESS OTHERWISE SPECIFIED ON THE PLANS.
FUSION-BONDED EPOXY COATED REINFORCING STEEL SHALL CONFORM TO AASHTO M284 (ASTM D3963), AND SHALL BE DENOTED WITH A SUFFIX "E" IN THE BAR MARKS.

DO NOT WELD GRADE 60 REINFORCING STEEL.

5. POST-TENSIONING STEEL
ALL POST-TENSIONING BAR TENDONS SHALL CONFORM TO ASTM A722, GRADE 150 KSI (TYPE II), AND SHALL BE EPOXY COATED. ACCESSORIES INCLUDING ANCHOR PLATE AND NUT SHALL ALSO BE EPOXY COATED. DUCTS SHALL BE SEMI-RIGID METAL. GROUT FOR DUCTS SHALL BE IN ACCORDANCE WITH ITEM NO. 602779 "POST TENSIONING GROUT"

6. STRUCTURAL STEEL
STRUCTURAL STEEL SHALL CONFORM TO ASTM A 709, GRADE 50W, NCLUDING THE ADDITIONAL REQUIREMENTS FOR CHARPY V-NOTCH TESTING OF AASHTO M270 FOR PRIMARY LOAD CARRYING MEMBERS UNDER TENSILE STRESS. THE PRIMARY LOAD CARRYING MEMBER COMPONENTS ARE THE FLANGES, WEBS, AND SPLICE PLATES OF THE STEEL GIRDERS. THE USE OF FRACTURE CRITICAL MEMBERS IS PROHIBITED. FATIGUE CATEGORIES D, E AND F SHALL NOT BE USED IN STRESS REVERSAL OR TENSION AREAS, EXCEPT FOR TEMPORARY CONDITIONS.

EIGHT (8) FEET AT THE ENDS OF EACH GIRDER AND THE END CROSS FRAMES SHALL BE PAINTED WITH A URETHANE PAINT SYSTEM IN ACCORDANCE WITH SPECIAL PROVISION #605537-URETHANE PAINT SYSTEM. THE FINAL COLOR SHALL BE FEDERAL #10076 (BROWN) OF FED-STD-595B.
COST OF PAINTING SHALL BE INCIDENTAL TO ITEM 605002, STEEL STRUCTURES.

ALL BOLTS FOR SPLICE PLATES AND CROSS FRAMES SHALL BE ⅞" DIA. IN 15/16" DIA. HOLES AND CONFORM TO ASTM A325, TYPE 3, WITH THREADS EXCLUDED FROM SHEAR PLANES. BOLTED CONNECTIONS SHALL BE CLASS B SLIP CRITICAL CONNECTIONS, UNLESS NOTED ON THE PLANS.

7. SERVICEABILITY
LIVE LOAD DEFLECTION SHALL BE LIMITED TO L/800.
FOR REINFORCEMENT DISTRIBUTION REQUIREMENTS, CONSIDER CLASS 2 EXPOSURE CRITERIA FOR DECKS. ACCOMMODATION TO JACK GIRDERS FOR FUTURE BEARING REPLACEMENT HAS BEEN CONSIDERED IN THE DESIGN.

8. CONSTRUCTION JOINTS
KEYED CONSTRUCTION JOINTS SHALL BE 2" X 4" OR AS NOTED. ALL EXPOSED CONSTRUCTION JOINT EDGES SHALL HAVE A ¾" V-NOTCH, UNLESS OTHERWISE NOTED.

9. STABILIZING STRUCTURAL EXCAVATIONS
SHEETING AND SHORING SHALL BE REQUIRED FOR ANY EXCAVATION EXCEEDING FIVE (5) FEET IN HEIGHT, THE COST SHALL BE PAID UNDER ITEM NO. 207501 - IN LIEU OF SHORING, THE CONTRACTOR MAY USE A 2:1 CUT SLOPE. NO PAYMENT SHALL BE MADE FOR ADDITIONAL EXCAVATION OR FILL OUTSIDE THE LIMITS AS DEFINED IN SECTION 207 OF THE STANDARD SPECIFICATIONS.

10. EXCAVATION REQUIRED TO ATTAIN THE GRADE FOR INSTALLATION OF MSE WALLS SHALL BE INCIDENTAL TO ITEM NO. 602772 - MECHANICALLY STABILIZED EARTH WALLS.

11. STRUCTURAL BACKFILL SHALL CONFORM TO THE REQUIREMENTS OF BORROW TYPE C. MSE WALL BACKFILL SHALL BE AS SPECIFIED ON THE PLANS.

12. ROADWAY CLEARANCES
A MINIMUM OF 16'-6" VERTICAL CLEARANCE SHALL BE MAINTAINED ABOVE ALL ROADWAYS.
A MINIMUM OF 2'-0" HORIZONTAL CLEARANCE SHALL BE MAINTAINED FROM THE OUTSIDE EDGE OF SHOULDER OFFSET (FACE OF CURB) TO THE FACE OF ANY OBSTRUCTION. THESE CLEARANCES APPLY AT ALL TIMES INCLUDING DURING CONSTRUCTION.

BRIDGE LEGAL LOAD RATING (TONS)
RAMP C OVER SR 7

TRUCK TYPE	RATING FACTOR	SAFE LOAD CAPACITY
HS-20	1.77	63.7
S220	2.84	56.8
S327	2.49	67.2
S335	1.89	66.1
S437	1.84	67.1
T330	2.46	73.8
T435	2.14	74.9
T540	1.90	76.0

BRIDGE DESIGN LOAD RATING:
INVENTORY = 1.27
OPERATING = 1.65

13. TEST PILES
PILE LENGTHS FOR ORDERING PURPOSES SHALL BE DETERMINED BY TEST PILES. A MINIMUM OF ONE (1) PILE PER SUBSTRUCTURE, AS SHOWN ON THE PLANS, SHALL BE DYNAMICALLY TESTED BY THE CONTRACTOR IN ACCORDANCE WITH SPECIAL PROVISION 619519. TEST AND PRODUCTION PILE RE-STRIKES WILL BE PAID AS FOLLOWS:

A). ALL TEST PILE(S) WILL BE RESTRUCK AND DYNAMICALLY TESTED BY THE CONTRACTOR. THE TEST PILE RESTRIKES SHALL BE INCIDENTAL TO ITEM NO. 619519 DYNAMIC PILE TESTING BY CONTRACTOR PROVIDED THAT THEY ARE PERFORMED WITHIN FIVE (5) CALENDAR DAYS FROM INITIAL DRIVE.

B). AN ADDITIONAL PAYMENT WILL BE MADE TO THE CONTRACTOR IF HE IS DIRECTED BY THE ENGINEER TO WAIT AND RESTRIKE THE TEST PILE MORE THAN FIVE (5) CALENDAR DAYS AFTER INITIAL DRIVE. THE CONTRACTOR SHALL BE COMPENSATED AT THE FIXED PRICE OF $1,000.00 PER CALENDAR DAY FOR EVERY DAY, AFTER THE FIFTH CALENDAR DAY, UNDER ITEM NO. 619502 TEST PILE RESTRIKE. MULTIPLE TEST PILE RESTRIKES OCCURRING ON THE SAME DAY WILL ONLY BE PAID FOR AS ONE CALENDAR DAY. NO ADDITIONAL COMPENSATION WILL BE MADE REGARDLESS OF THE NUMBER OF TEST PILE RESTRIKES PERFORMED THAT DAY.

C). RESTRIKES ON PRODUCTION PILES WHICH ARE DESIGNATED TO BE DYNAMICALLY TESTED WILL NOT BE PAID UNDER ITEM NO. 619501 PRODUCTION PILE RESTRIKE. THESE PRODUCTION PILE RESTRIKES ARE INCIDENTAL TO ITEM NO. 619519 DYNAMIC PILE TESTING BY CONTRACTOR.

THE DEPARTMENT RESERVES THE RIGHT TO PERFORM DYNAMIC TESTING OF RESTRIKES.

14. THE CONCRETE PIER CAPS SHOWN ON THE PLANS SHALL BE USED. NO OTHER ALTERNATES WILL BE CONSIDERED.

NOTE:

LOAD RATING IS IN ACCORDANCE WITH THE LOAD AND RESISTANCE FACTOR RATING (LRFR) METHOD.

CROSS REFERENCE NOTE:

FOR MSE WALL NOTES, SEE DWG S4-14.

UNOFFICAL WEBSITE COPY

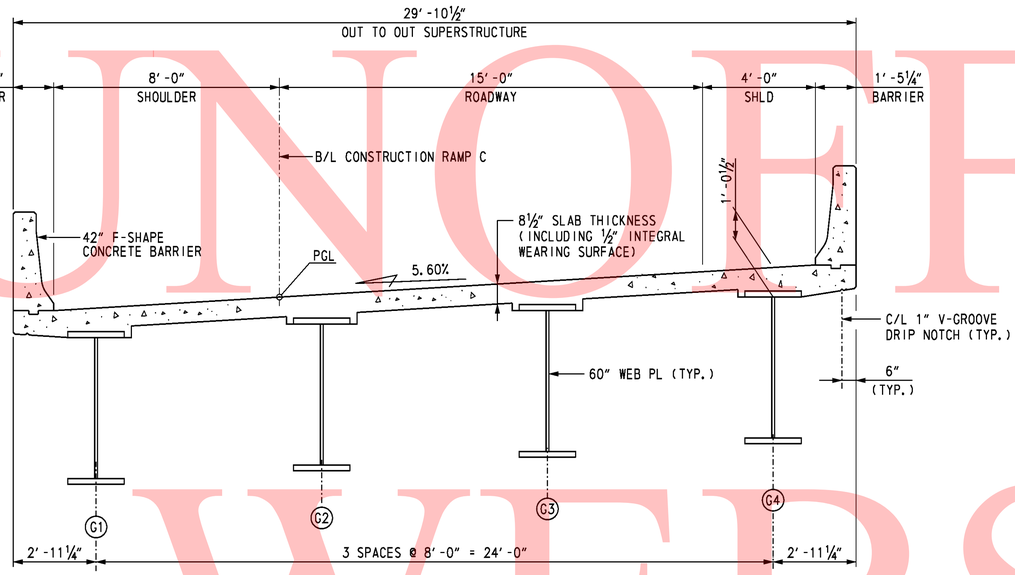

TYPICAL SECTION - RAMP C

(LOOKING UPSTATIONS)

SCALE: ⅜" = 1'-0"

UNOFFICAL WEBSITE COPY

CROSS REFERENCE NOTES:

1. FOR FRAMING PLAN, SEE DWG. S4-29.
2. FOR DECK AND BARRIER REINFORCEMENT, SEE DWGS. S4-36 THRU S4-37.

10/28/2010 O:\20832687-XM\CAD\Bridge\BR-S4\ts01_BR-S4_sr1.dgn
untitled

DELAWARE DEPARTMENT OF TRANSPORTATION	ADDENDUMS / REVISIONS	SR1 / I-95 INTERCHANGE	CONTRACT 28-090-03	BRIDGE NO. 1-717A	RAMP C OVER SR 7	SHEET NO. S4-3
			COUNTY NEW CASTLE	DESIGNED BY: R. F. KIRCHNER	TYPICAL SECTION	TOTAL SHTS. 351
				CHECKED BY: G. P. MISTRY		803

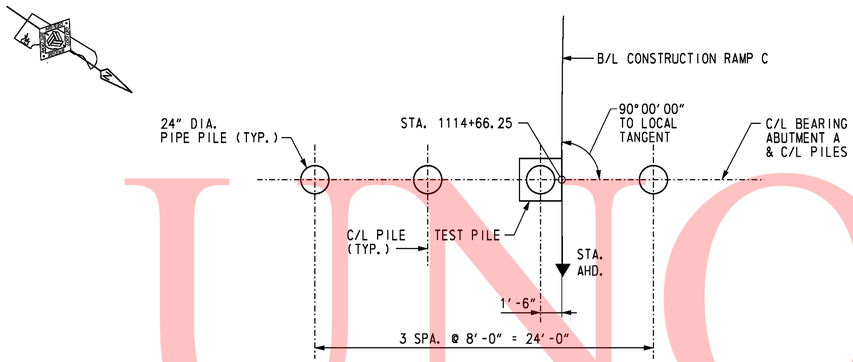

ABUTMENT A PILE PLAN

SCALE: 1/16" = 1'-0"

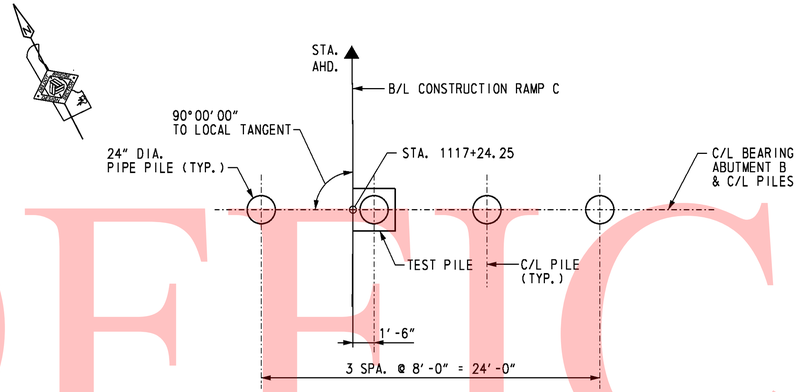

ABUTMENT B PILE PLAN

SCALE: 1/16" = 1'-0"

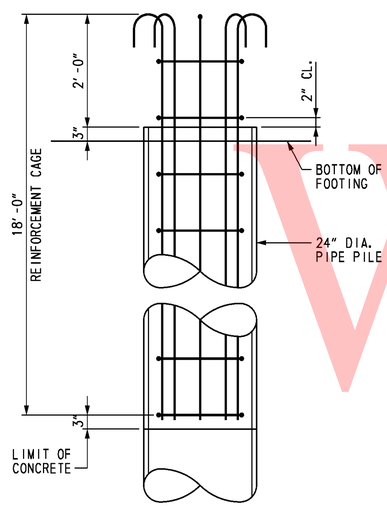

ELEVATION

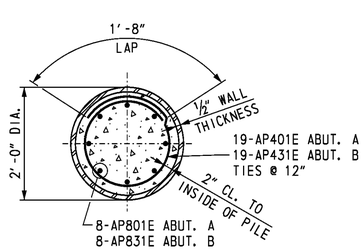

SECTION

PIPE PILE REINFORCEMENT

SCALE: 3/4" = 1'-0"

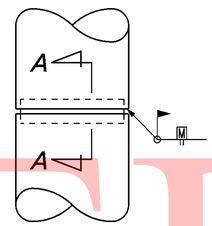

PIPE PILE SPLICE DETAIL

NOT TO SCALE

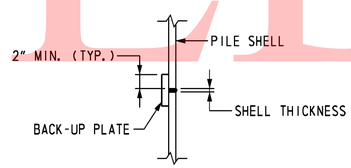

SECTION A-A

NOT TO SCALE

PILE SPLICE NOTES:

1. BACK-UP PLATE TO BE CUT FROM SAME PILE SIZE AS IS BEING SPLICED. CUT AND BEND TO FIT INSIDE DIAMETER OF PILE.
2. NO PILE SPLICING TO BE ALLOWED ON ANY PORTION OF PILE THAT IS TO REMAIN EXPOSED IN COMPLETED STRUCTURE.
3. SPLICER SLEEVE MATERIAL SHALL BE STEEL CONFORMING TO ASTM DESIGNATION A709, GRADE 36 (250).

PILE INSTALLATION DATA

SUBSTRUCTURE UNIT	DESIGN DATA: NOMINAL PILE DRIVING RESISTANCE (KIPS)	DESIGN DATA: ESTIMATED PILE TIP ELEVATION	ACTUAL FIELD DATA: AVERAGE MINIMUM TIP ELEVATION	ACTUAL FIELD DATA: AVERAGE MAXIMUM TIP ELEVATION
ABUTMENT A	477	24.0		
ABUTMENT B	477	15.0		

ABUTMENT A PILE DRIVING INFORMATION

PILE SIZE AND TYPE:	
ACTUAL BEARING OBTAINED:	
HAMMER TYPE:	
PILE HAMMER ENERGY:	
SPECIAL DRIVING CONDITIONS AND COMMENTS:	

ABUTMENT B PILE DRIVING INFORMATION

PILE SIZE AND TYPE:	
ACTUAL BEARING OBTAINED:	
HAMMER TYPE:	
PILE HAMMER ENERGY:	
SPECIAL DRIVING CONDITIONS AND COMMENTS:	

NOTES:

1. PILES SHALL BE 24" DIA. WITH 1/2" WALL THICKNESS OPEN-ENDED STEEL PIPE PILES, ASTM A252 GRADE 3.
2. REINFORCING STRAPS SHALL BE PROVIDED FOR THE ABUTMENT STEM AND BACKWALL TO RESIST THE LONGITUDINAL FORCES ON THE SUPERSTRUCTURE.
3. PILE CASINGS SHALL BE INSTALLED AT THE PROPOSED PILE LOCATIONS DURING THE ABUTMENT MSE WALL CONSTRUCTON.
4. UPON COMPLETION OF THE MSE WALL THERE SHALL BE A 30 TO 60 DAY QUARANTINE PERIOD PRIOR TO DRIVING THE ABUTMENT PILES TO ALLOW FOR SETTLEMENT AND TO MINIMIZE THE DOWNDRAG FORCES THAT MIGHT DEVELOP ON THE PILES.
5. THE ENGINEER SHALL MONITOR THE SETTLEMENT DURING THE QUARANTINE PERIOD TO DETERMINE WHEN THE PILES MAY BE DRIVEN.
6. UPON COMPLETION OF THE QUARANTINE PERIOD, AS JUDGED BY THE ENGINEER, DRIVE PILES TO THE NOMINAL PILE DRIVING RESISTANCE INDICATED ON THE PLANS.
7. 'TEST PILES' SHALL BE TESTED IN ACCORDANCE WITH THE SPECIFICATIONS.

CROSS REFERENCE NOTES:

1. FOR ABUTMENT PLAN AND ELEVATION, SEE DWGS. S4-5 & S4-6.
2. FOR REINFORCING BAR LIST, SEE DWG. S4-18.
3. FOR PILE CASING DETAILS, SEE DWG. S4-5.
4. FOR SOIL PROFILE, SOIL PROPERTIES AND TOTAL ESTIMATED SETTLEMENT, SEE DWG. S4-15.
5. FOR TEST PILE PAYMENT NOTES, SEE DWG. S4-2.

UNOFFICAL WEBSITE COPY

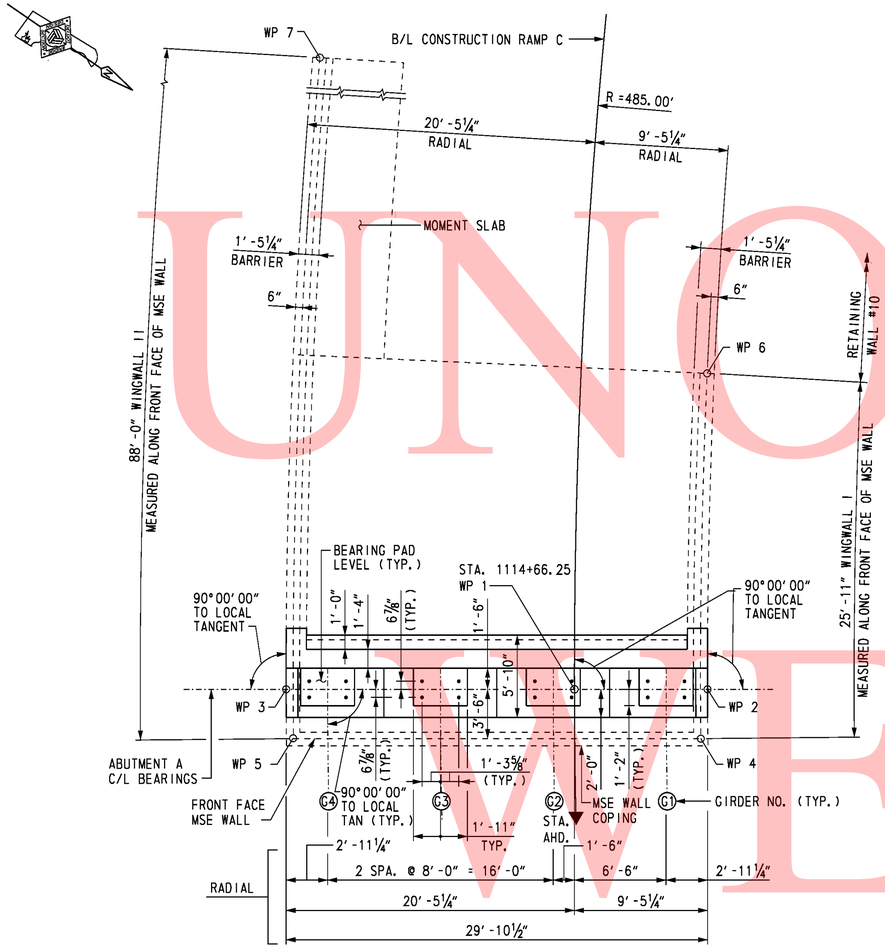

ABUTMENT A PLAN

SCALE: 3/16" = 1'-0"

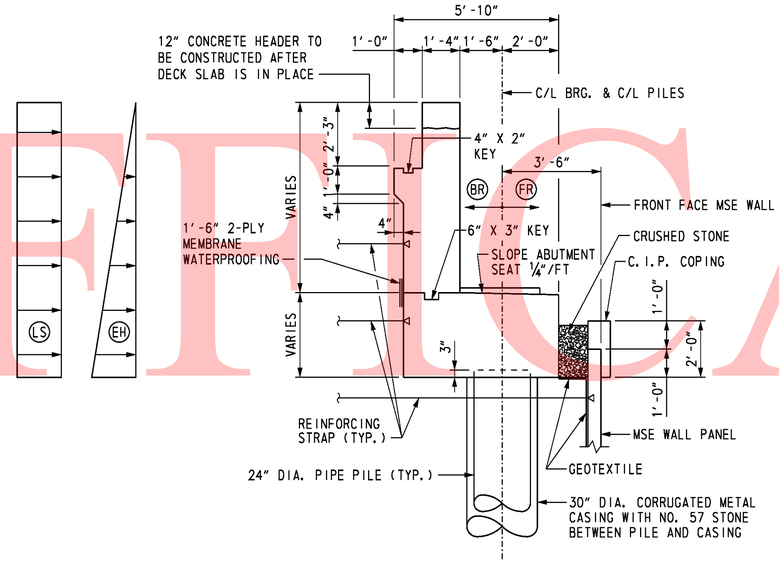

TYPICAL ABUTMENT SECTION

SCALE: 3/8" = 1'-0"

ABUTMENT LATERAL LOADS:

1. CONTRACTOR SHALL DESIGN THE SOIL REINFORCING STRAPS IN THE ABUTMENT STEM AND BACKWALL TO RESIST LATERAL LOADS "EH", "LS", "BR" AND "FR".
2. LOAD "EH" IS THE HORIZONTAL EARTH PRESSURE RESULTANT EXERTED ON THE ABUTMENT.
3. LOAD "LS" IS THE ADDITIONAL HORIZONTAL SOIL PRESSURE RESULTANT DUE TO 3 FEET OF SOIL SURCHARGE. CONTRACTOR IS RESPONSIBLE FOR PROVIDING MSE WALL DESIGNER WITH OTHER CONSTRUCTION LOADS WHICH WILL BE IN EXCESS OF 3 FEET OF SOIL SURCHARGE.
4. LOAD "BR" IS THE HORIZONTAL LOAD DUE TO BRAKING FORCE ON THE SUPERSTRUCTURE.
5. LOAD "FR" IS THE HORIZONTAL LOAD DUE TO FRICTION ON THE BEARINGS AS A RESULT OF BRIDGE EXPANSION AND CONTRACTION.
6. THE POINT OF APPLICATION OF THE LOADS "EH" AND "LS" ARE AT THE CENTROID OF THE PRESSURE DIAGRAM. THE LOADS "BR" AND "FR" ARE APPLIED AT THE CENTER OF THE BEARINGS. THE LOADS "BR" AND "FR" MAY ACT TOGETHER IN EITHER DIRECTION.

ABUTMENT LATERAL LOADS

TYPE	SERVICE LOAD (KIPS/FT.)
EH	2.10
LS	1.15
BR	0.35
FR	1.05

WORKING POINTS

W.P. NO.	STATION	OFFSET	COORDINATES	
			NORTHING	EASTING
1	1114+66.25	0.00'	612,444.6224	432,228.0929
2	1114+66.25	9.44' LT.	612,452.3847	432,222.7251
3	1114+66.25	20.44' RT.	612,427.8128	432,239.7173
4	1114+69.82	8.94' LT.	612,453.9748	432,225.8809
5	1114+69.61	19.94' RT.	612,430.2247	432,242.3047
6	1114+43.42	8.94' LT.	612,439.6643	432,204.2821
7	1113+85.09	19.94' RT.	612,386.1882	432,166.2442

NOTES:

1. CRUSHED STONE AND GEOTEXTILE BETWEEN MSE WALL COPING AND ABUTMENT FOOTING SHALL BE INCIDENTAL TO ITEM NO. 602772 - MECHANICALLY STABILIZED EARTH WALLS.
2. MSE WALL AND COPING NOT SHOWN IN ELEVATION VIEW.
3. BEAM SEAT STEPS MID-WAY BETWEEN GIRDERS. BEAM SEATS ELEVATION IS AT FRONT FACE BACKWALL.
4. METAL CASING FOR PILES SHALL EXTEND FROM BOTTOM OF ABUTMENT TO BOTTOM OF MSE WALL LEVELING PAD. COST OF METAL CASING AND NO. 57 STONE SHALL BE INCIDENTAL TO FURNISHING 24" STEEL PIPE PILE ITEM.

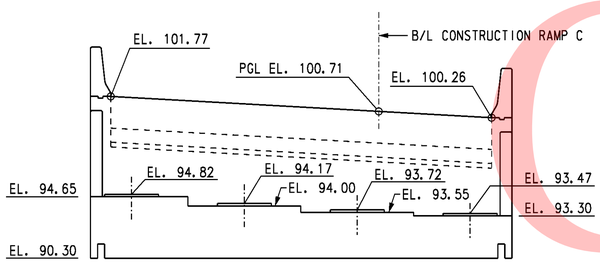

ABUTMENT A ELEVATION

SCALE: 3/16" = 1'-0"

CROSS REFERENCE NOTES:

1. FOR BRIDGE PLAN AND ELEVATION, SEE DWG. S4-1.
2. FOR SIDE ELEVATION, SEE DWG. S4-6.
3. FOR MSE WINGWALLS PLAN AND ELEVATION, SEE DWGS. S4-12 & S4-13.
4. FOR ABUTMENT REINFORCEMENT, SEE DWGS. S4-7 & S4-8.
5. FOR MOMENT SLAB REINFORCEMENT, SEE DWGS. S4-16 & S4-17.
6. FOR ABUTMENT STRAP ANCHOR DETAIL, SEE DWG. S4-7.

UNOFFICIAL WEBSITE COPY

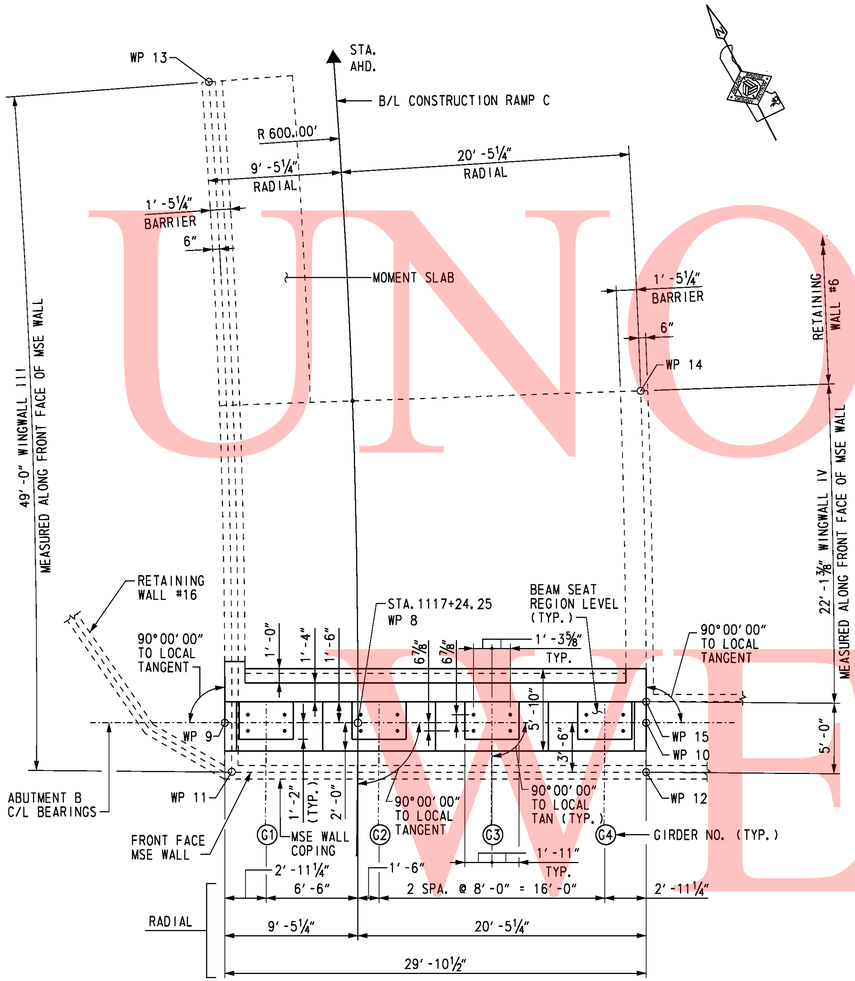

ABUTMENT B PLAN

SCALE: 3/16" = 1'-0"

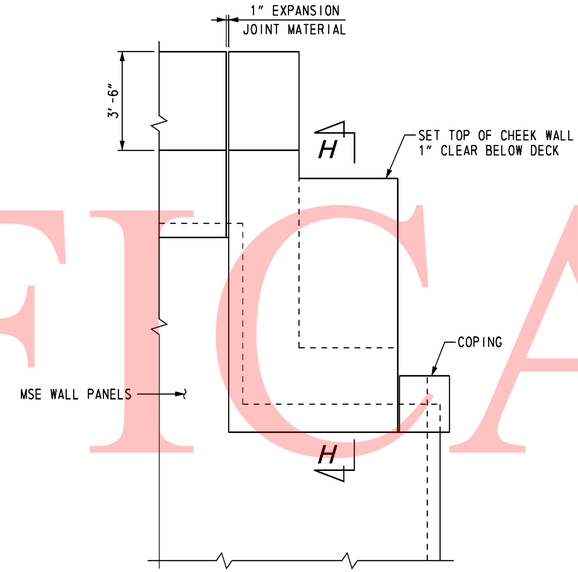

SIDE ELEVATION - WINGWALL I, II & III

SCALE: 3/8" = 1'-0"

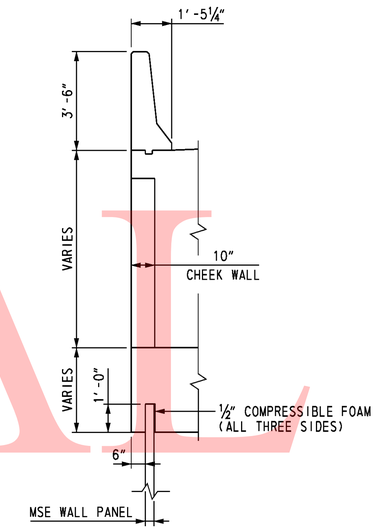

SECTION H-H

SCALE: 3/8" = 1'-0"

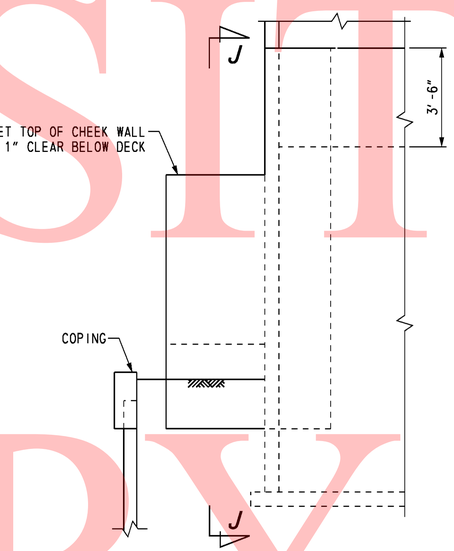

SIDE ELEVATION - WINGWALL IV

SCALE: 3/8" = 1'-0"

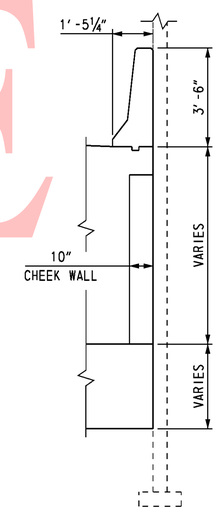

SECTION J-J

SCALE: 3/8" = 1'-0"

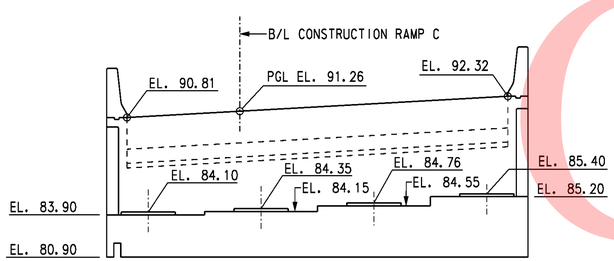

ABUTMENT B ELEVATION

SCALE: 3/16" = 1'-0"

WORKING POINTS

W.P. NO.	STATION	OFFSET	COORDINATES NORTHING	COORDINATES EASTING
8	1117+24.25	0.00'	612,638.4832	432,394.3587
9	1117+24.25	9.44' LT.	612,642.8169	432,385.9751
10	1117+24.25	20.44' RT.	612,629.0982	432,412.5140
11	1117+20.70	8.94' LT.	612,639.4829	432,384.8029
12	1117+20.87	20.44' RT.	612,625.9936	432,410.8981
13	1117+70.44	8.94' LT.	612,683.7703	432,405.7373
14	1117+47.08	20.44' RT.	612,650.2739	432,422.9546
15	1117+25.70	20.44' RT.	612,630.4316	432,413.2012

CROSS REFERENCE NOTES:

1. FOR BRIDGE PLAN AND ELEVATION, SEE DWG. S4-1.
2. FOR TYPICAL ABUTMENT SECTION, SEE DWG. S4-5.
3. FOR MSE WINGWALLS PLAN AND ELEVATION, SEE DWGS. S4-12 & S4-13.
4. FOR ABUTMENT REINFORCEMENT, SEE DWGS. S4-9 TO S4-11.
5. FOR MOMENT SLAB REINFORCEMENT, SEE DWGS. S4-16 & S4-17.

NOTE:

1. MSE WALL AND COPING NOT SHOWN IN ELEVATION VIEW.
2. ABUTMENT SEAT STEPS MID-WAY BETWEEN GIRDERS.

UNOFFICIAL WEBSITE COPY

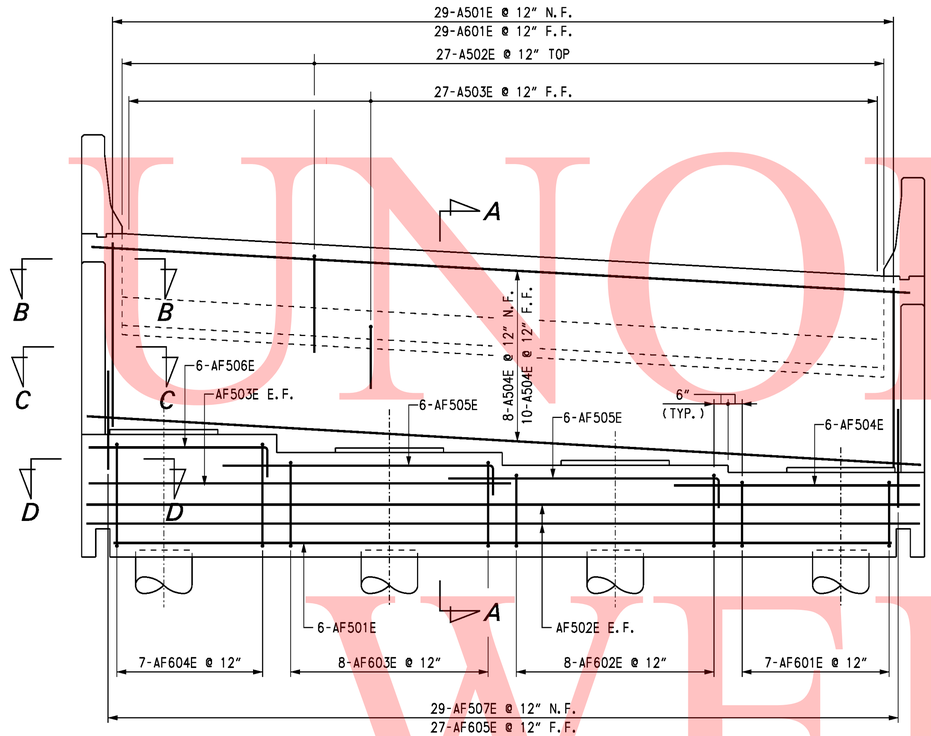

ABUTMENT A ELEVATION

SCALE: 3/8" = 1'-0"

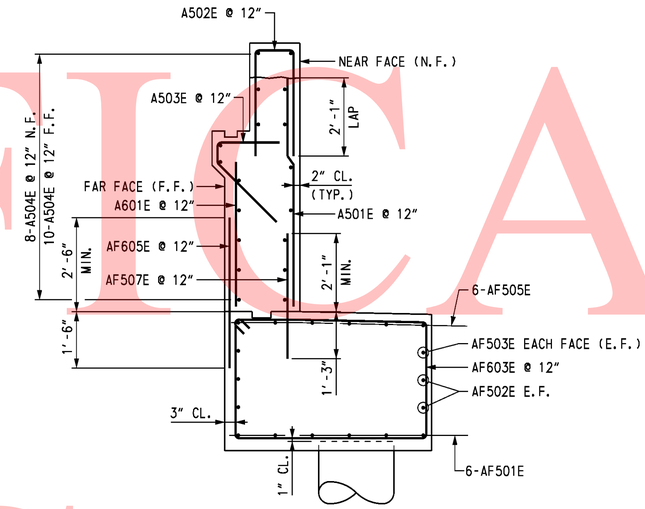

SECTION A-A

SCALE: 1/2" = 1'-0"

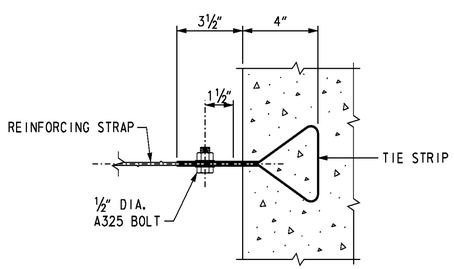

ABUTMENT STRAP ANCHOR DETAIL

NOT TO SCALE

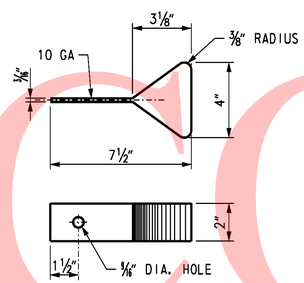

TIE STRIP DETAIL

NOT TO SCALE

NOTE:

TIE STRIP MATERIAL IS SAME AS USED IN MSE WALL PANELS. DESIGN SHALL BE CONSISTENT WITH MSE WALL DESIGN. COST OF REINFORCING STRAPS AND ANCHORS SHALL BE INCIDENTAL TO MSE WALL ITEM.

CROSS REFERENCE NOTES:

1. FOR BRIDGE PLAN AND ELEVATION, SEE DWG. S4-1.
2. FOR ABUTMENT A PLAN AND ELEVATION SEE DWG. S4-5.
3. FOR WINGWALL II SIDE ELEVATION, SEE DWG. S4-8.
4. FOR SECTIONS B-B, C-C AND D-D, SEE DWG. S4-8.
5. FOR REINFORCING BAR LIST, SEE DWG. S4-18.

UNOFFICAL WEBSITE COPY

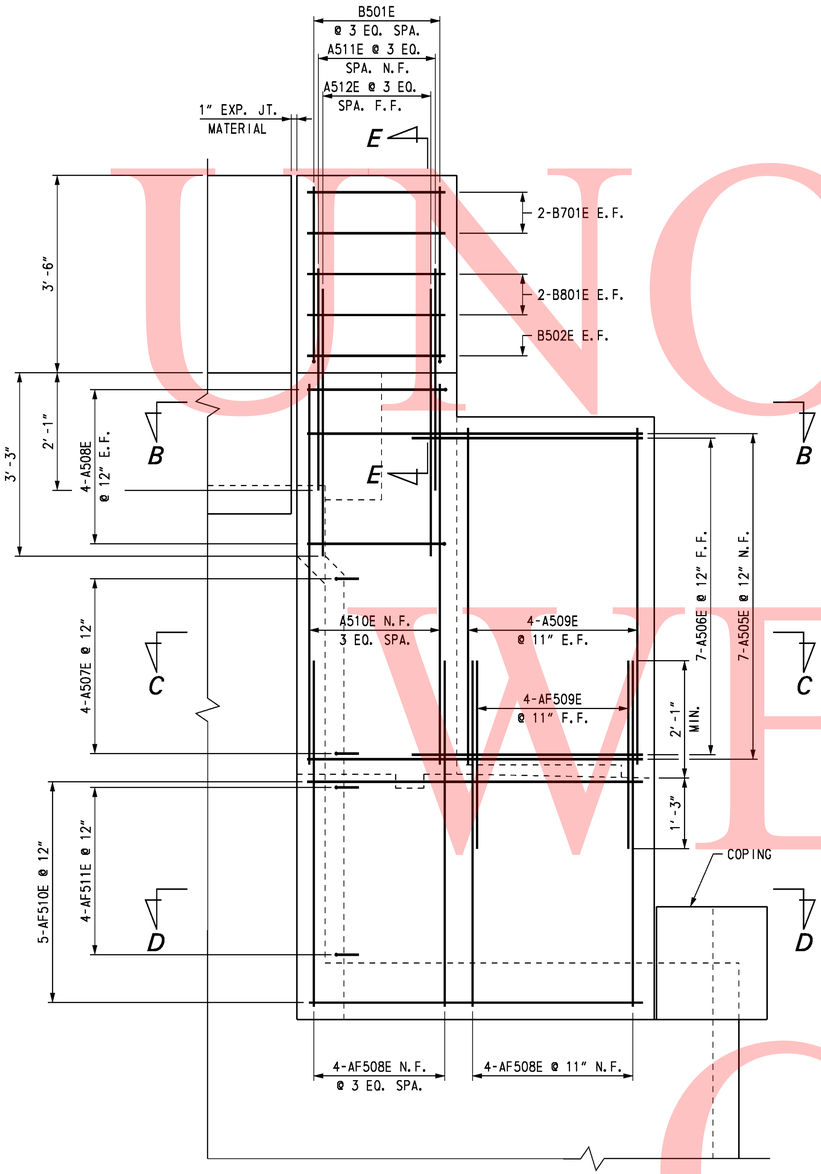

WINGWALL II SIDE ELEVATION

SCALE: ¾" = 1'-0"

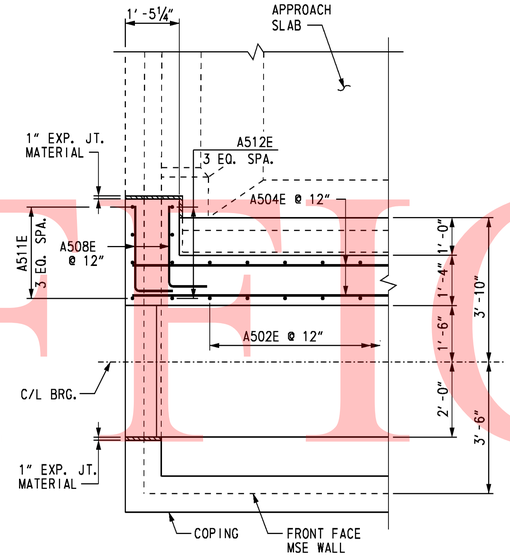

SECTION B-B

SCALE: ½" = 1'-0"

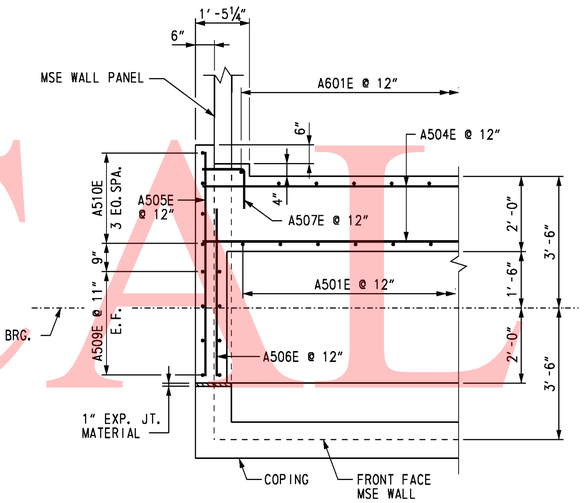

SECTION C-C

SCALE: ½" = 1'-0"

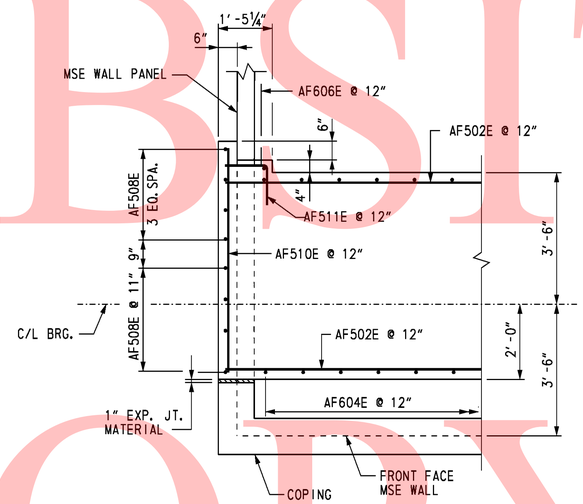

SECTION D-D

SCALE: ½" = 1'-0"

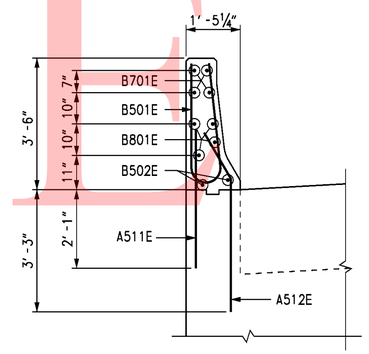

SECTION E-E

SCALE: ½" = 1'-0"

NOTE:

WINGWALL I SIDE ELEVATION IS SIMILAR TO WINGWALL II.

CROSS REFERENCE NOTES:

1. FOR ABUTMENT A PLAN AND ELEVATION, SEE DWG. S4-5.
2. FOR ABUTMENT A ELEVATION REINFORCEMENT DETAILS, SEE DWG. S4-7.
3. FOR REINFORCING BAR LIST, SEE DWG. S4-18.

UNOFFICIAL WEBSITE COPY

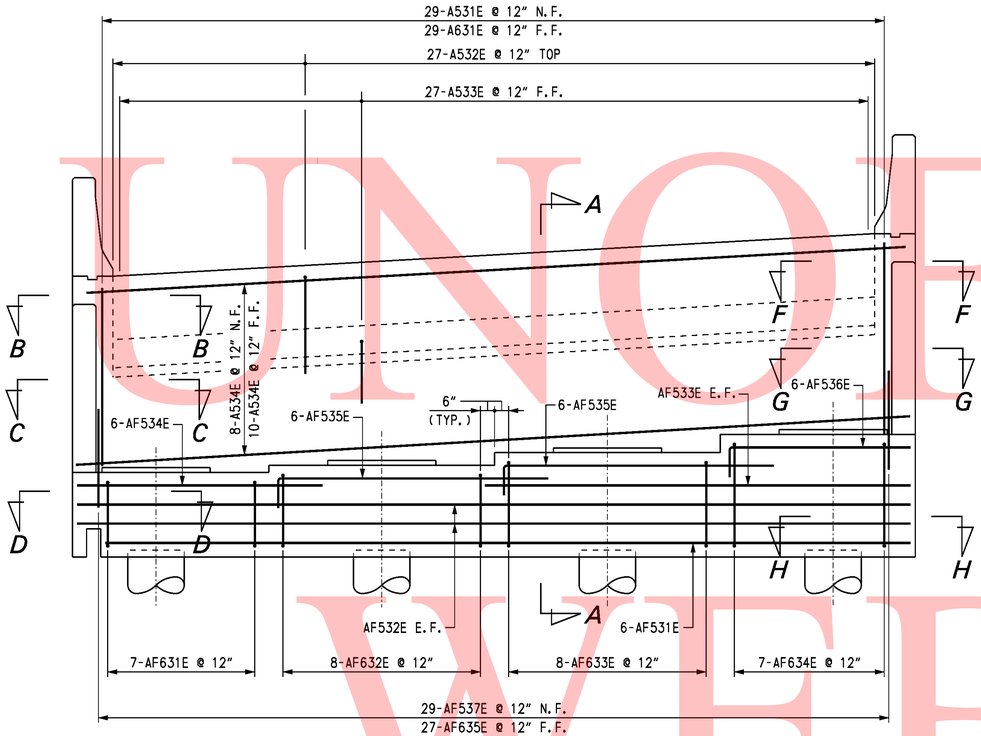

ABUTMENT B ELEVATION

SCALE: 3/8" = 1'-0"

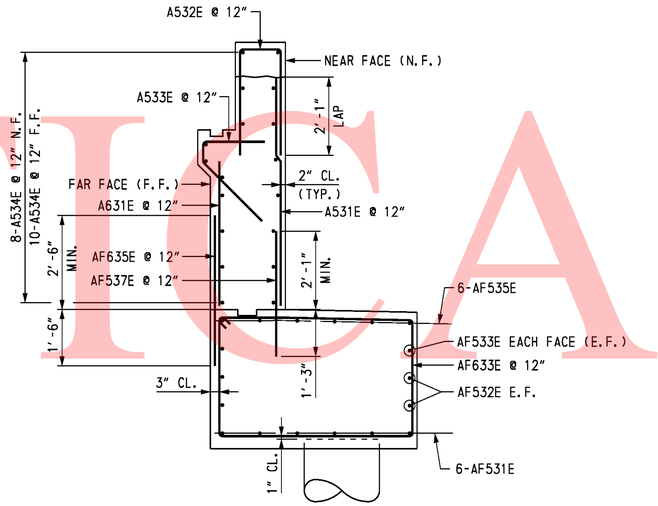

SECTION A-A

SCALE: 1/2" = 1'-0"

CROSS REFERENCE NOTES:

1. FOR BRIDGE PLAN AND ELEVATION, SEE DWG. S4-1.
2. FOR ABUTMENT B PLAN AND ELEVATION, SEE DWG. S4-6.
3. FOR SIDE ELEVATIONS, SEE DWGS. S4-10 & S4-11.
4. FOR SECTIONS B-B, C-C, D-D, F-F, G-G AND H-H, SEE DWGS. S4-10 & S4-11.
5. FOR REINFORCING BAR LIST, SEE DWG. S4-18.

UNOFFICIAL WEBSITE COPY

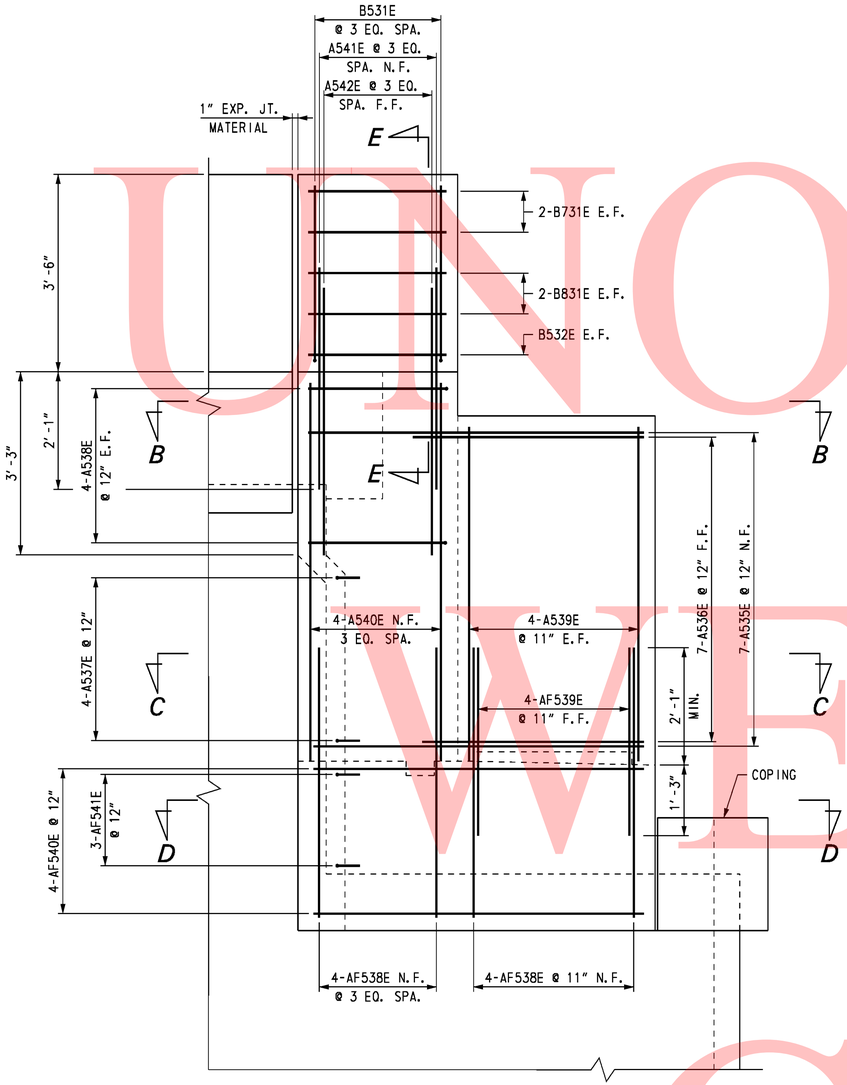

WINGWALL III SIDE ELEVATION

SCALE: ¾" = 1'-0"

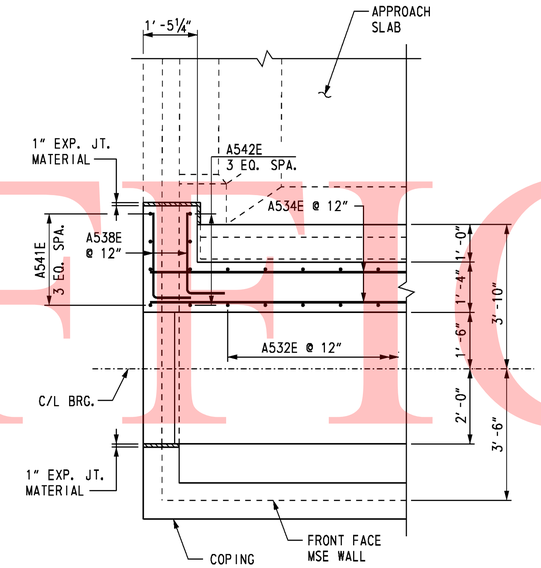

SECTION B-B

SCALE: ½" = 1'-0"

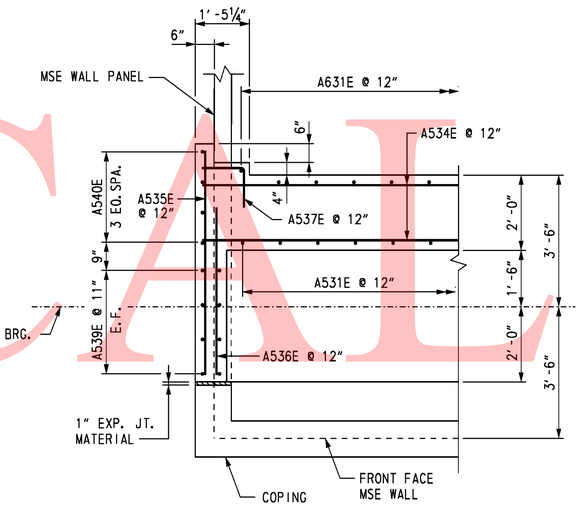

SECTION C-C

SCALE: ½" = 1'-0"

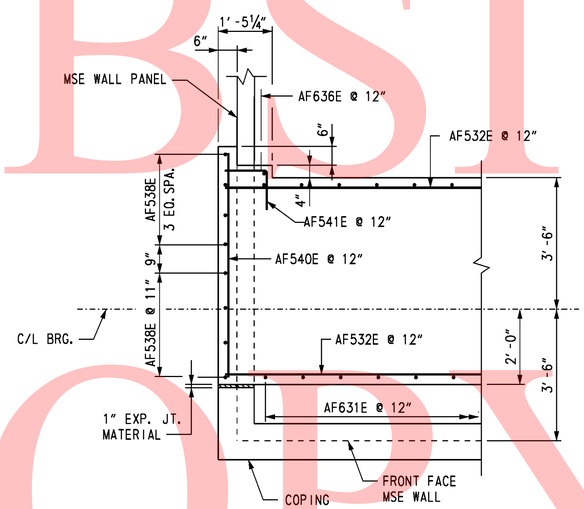

SECTION D-D

SCALE: ½" = 1'-0"

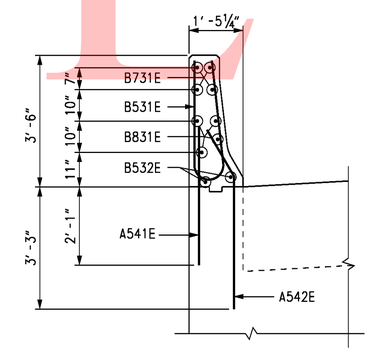

SECTION E-E

SCALE: ½" = 1'-0"

CROSS REFERENCE NOTES:

1. FOR ABUTMENT B PLAN AND ELEVATION, SEE DWG. S4-6.
2. FOR ABUTMENT B ELEVATION REINFORCEMENT DETAILS, SEE DWG. S4-9.
3. FOR REINFORCING BAR LIST, SEE DWG. S4-18.

UNOFFICIAL WEBSITE COPY

10/28/2010 O:\20832687-XM\CAD\Bridge\BR-S4\ab07_BR-S4_sr1.dgn untitled

DELAWARE DEPARTMENT OF TRANSPORTATION	ADDENDUMS / REVISIONS	SR1 / I-95 INTERCHANGE	CONTRACT 28-090-03	BRIDGE NO. 1-717A	RAMP C OVER SR 7	S4-10 SHEET NO.	
			COUNTY NEW CASTLE	DESIGNED BY: K. D. BEAVER	ABUTMENT B REINFORCEMENT 2	358 TOTAL SHTS.	
				CHECKED BY: J. S. LI		803	

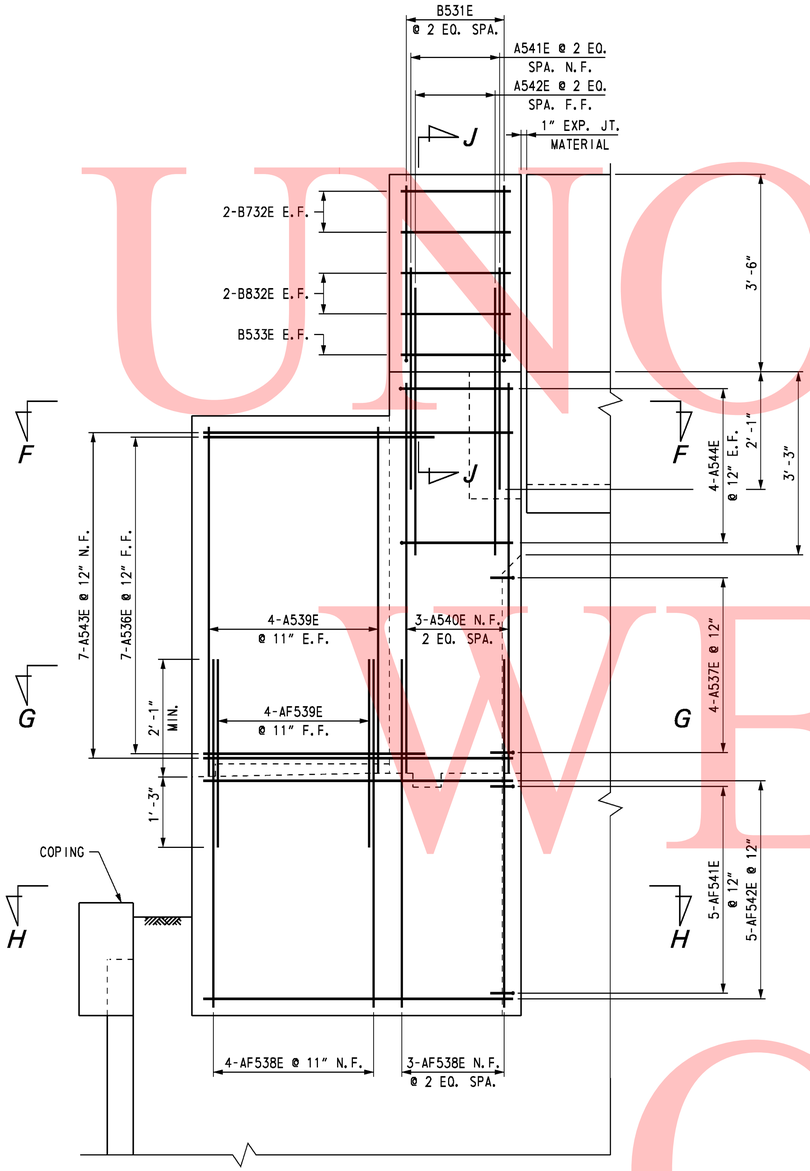

WINGWALL IV SIDE ELEVATION

SCALE: ¾" = 1'-0"

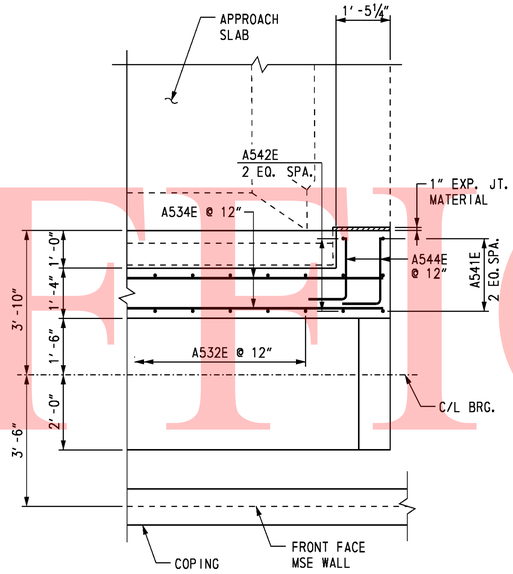

SECTION F-F

SCALE: ½" = 1'-0"

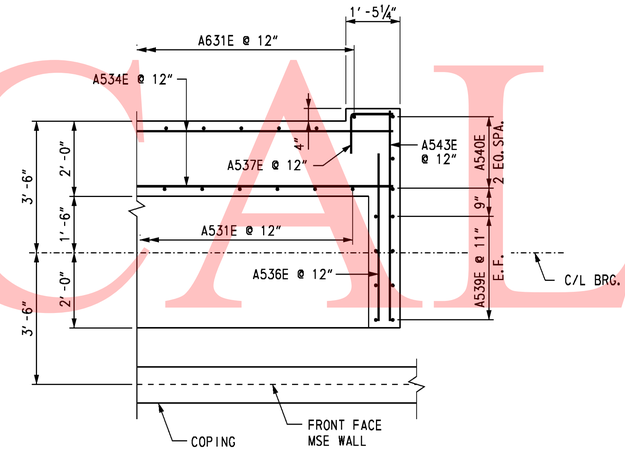

SECTION G-G

SCALE: ½" = 1'-0"

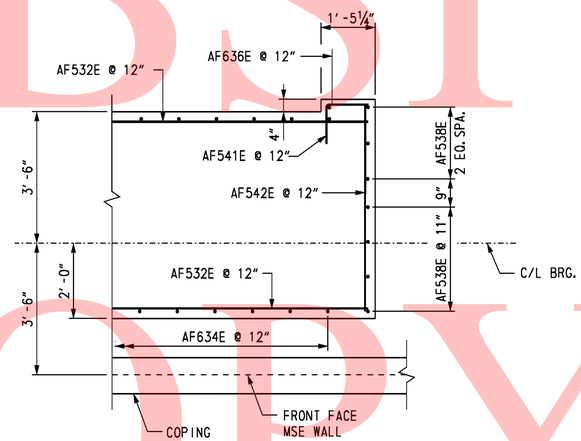

SECTION H-H

SCALE: ½" = 1'-0"

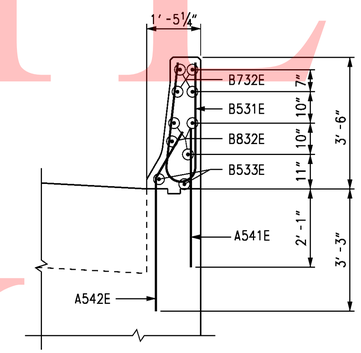

SECTION J-J

SCALE: ½" = 1'-0"

CROSS REFERENCE NOTES:

1. FOR ABUTMENT B PLAN AND ELEVATION, SEE DWG. S4-6.
2. FOR ABUTMENT B ELEVATION REINFORCEMENT DETAILS, SEE DWG. S4-9.
3. FOR REINFORCING BAR LIST, SEE DWG. S4-18.

UNOFFICIAL WEBSITE COPY

UNOFFICAL WEBSITE COPY

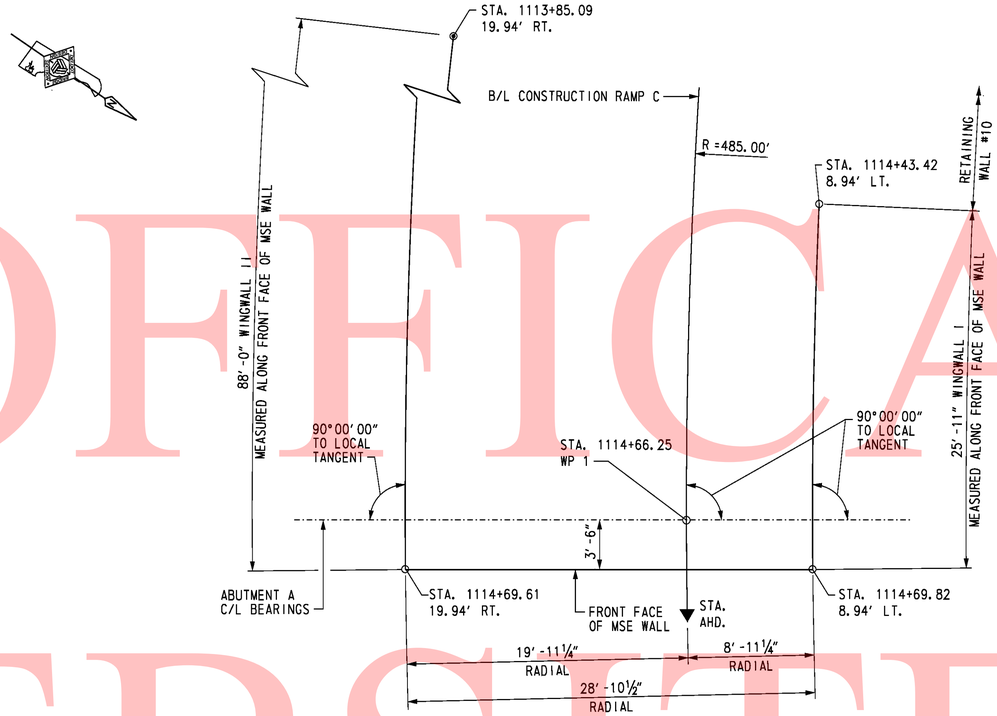

PLAN

SCALE: 1/16" = 1'-0"

CROSS REFERENCE NOTES:

1. FOR BRIDGE PLAN AND ELEVATION, SEE DWG. S4-1.
2. FOR ABUTMENT A PLAN AND ELEVATION, SEE DWG. S4-5.
3. FOR MSE WINGWALL DETAILS, SEE DWG. S4-14 & S4-15.

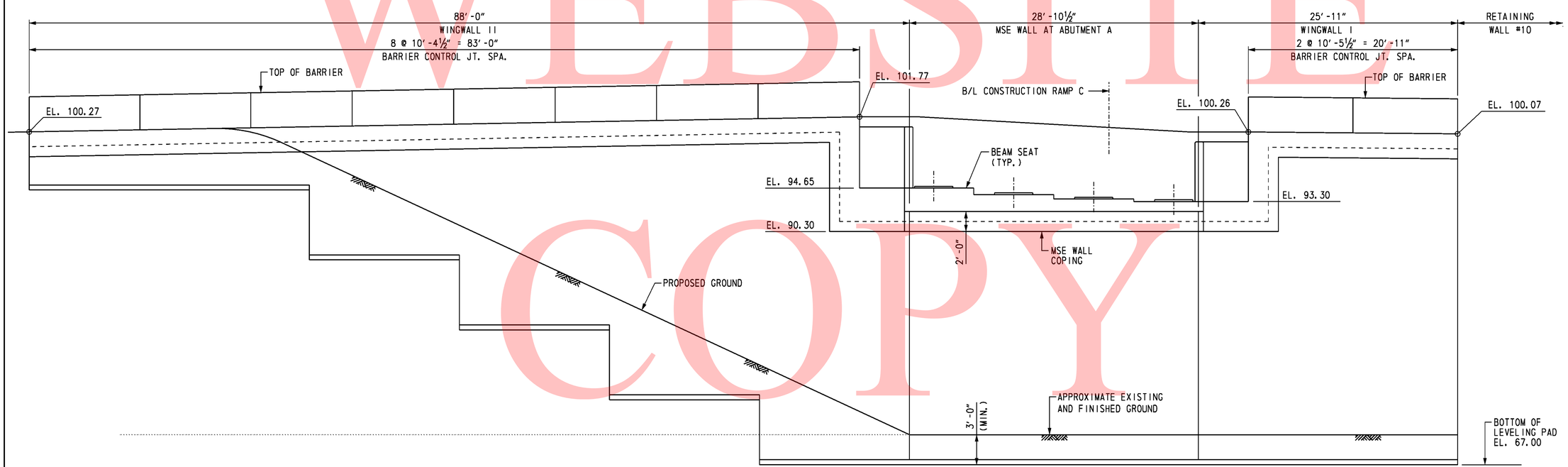

DEVELOPED ELEVATION

SCALE: 1/16" = 1'-0"

S4-12

DELAWARE DEPARTMENT OF TRANSPORTATION	ADDENDUMS / REVISIONS	SR1 / I-95 INTERCHANGE	CONTRACT 28-090-03	BRIDGE NO. 1-717A	RAMP C OVER SR 7	SHEET NO. 360
			COUNTY NEW CASTLE	DESIGNED BY: R. F. KIRCHNER	WINGWALLS I AND II PLAN AND ELEVATION	TOTAL SHTS. 803
				CHECKED BY: G. P. MISTRY		

10/28/2010 O:\20832687-XM\CAD\Bridge\BR-S4\rd01_BR-S4_sr1.dgn
untitled

UNOFFICAL WEBSITE COPY

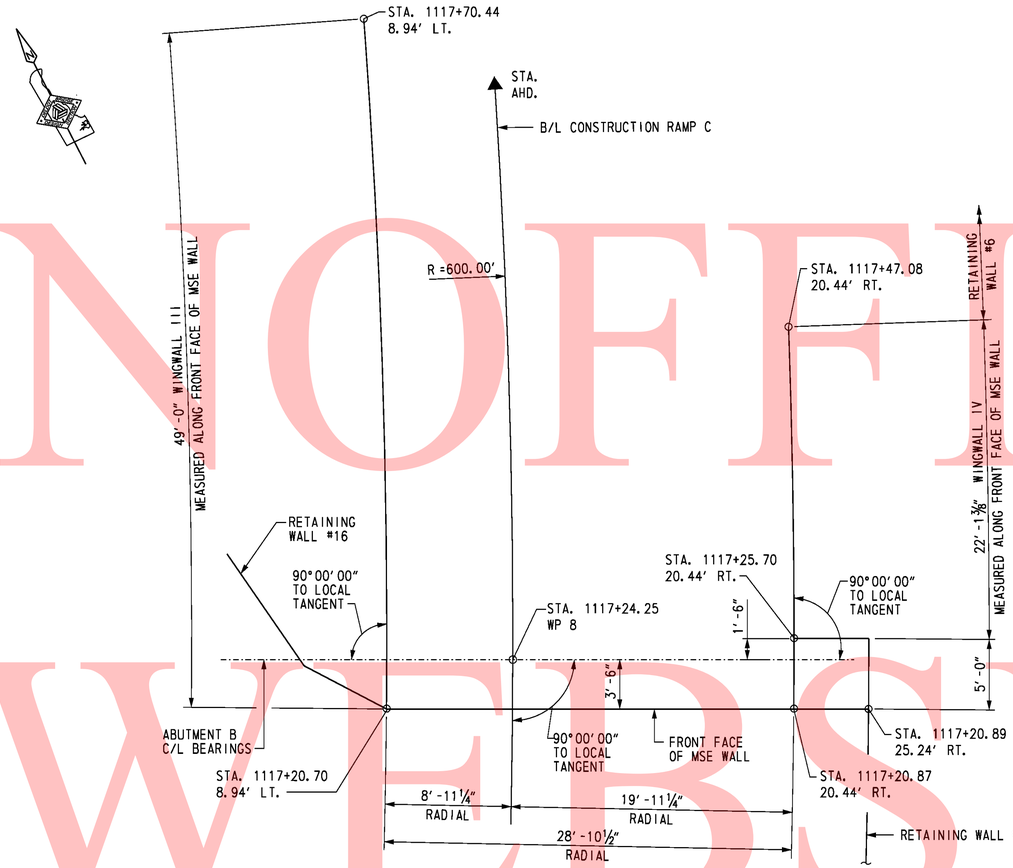

PLAN

SCALE: 3/16" = 1'-0"

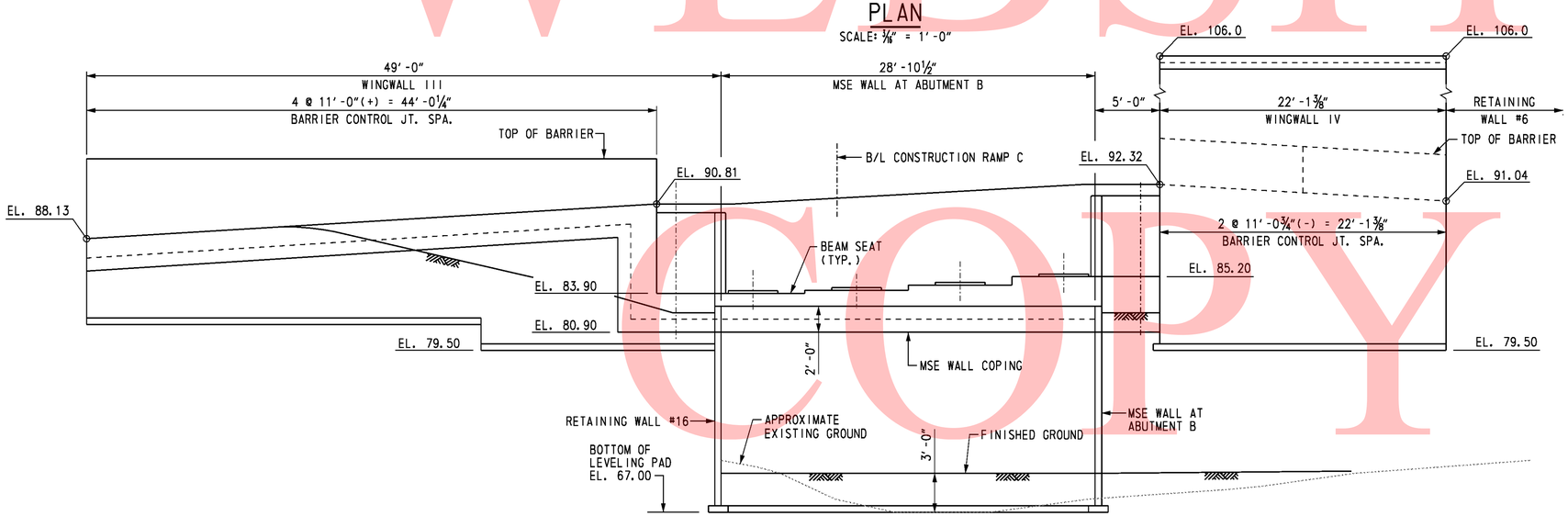

DEVELOPED ELEVATION

SCALE: 3/16" = 1'-0"

CROSS REFERENCE NOTES:

1. FOR BRIDGE PLAN AND ELEVATION, SEE DWG. S4-1.
2. FOR ABUTMENT B PLAN AND ELEVATION, SEE DWG. S4-6.
3. FOR MSE WINGWALL DETAILS, SEE DWG. S4-14 & S4-15.

10/28/2010 O:\20832687-XM\CAD\Bridge\BR-S4\rd02_BR-S4_sr1.dgn untitled

DELAWARE DEPARTMENT OF TRANSPORTATION	ADDENDUMS / REVISIONS		SR1 / I-95 INTERCHANGE	CONTRACT 28-090-03	BRIDGE NO. 1-717A	RAMP C OVER SR 7	S4-13 SHEET NO.
				COUNTY NEW CASTLE	DESIGNED BY: R. F. KIRCHNER	WINGWALLS III AND IV PLAN AND ELEVATION	361 TOTAL SHTS.
					CHECKED BY: G. P. MISTRY		803

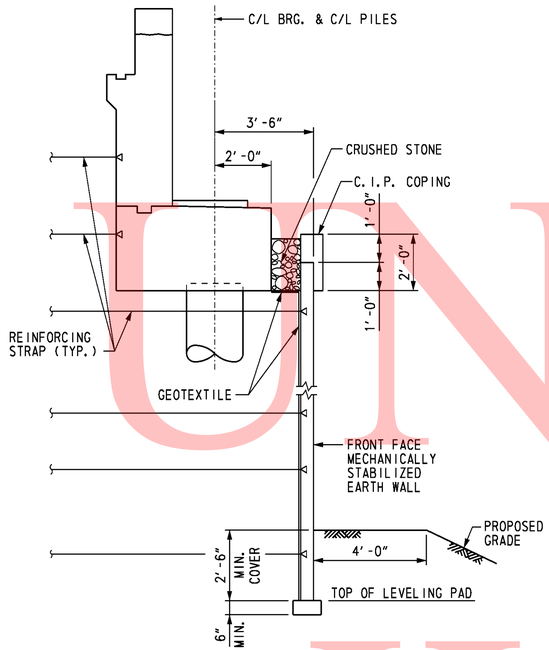

TYPICAL MSE WALL SECTION AT ABUTMENT

SCALE: 3/8" = 1'-0"

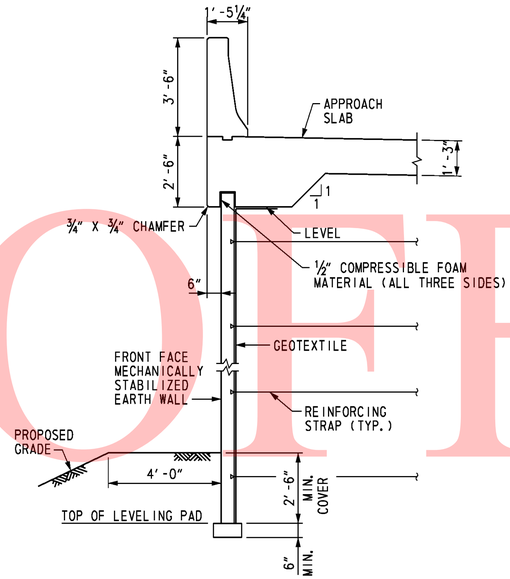

TYPICAL WINGWALL SECTION WITH APPROACH SLAB

SCALE: 3/8" = 1'-0"

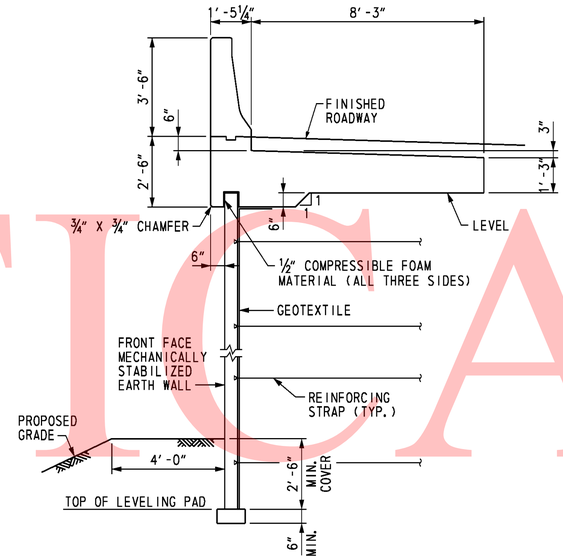

TYPICAL WINGWALL SECTION WITH MOMENT SLAB

SCALE: 3/8" = 1'-0"

MSE WALL NOTES

SPECIFICATIONS: PROPRIETARY MSE WALLS SHALL BE DESIGNED IN ACCORDANCE WITH THE FOLLOWING:
- AASHTO LRFD BRIDGE DESIGN SPECIFICATIONS, 4TH EDITION WITH ALL CURRENT REVISIONS.
- FEDERAL HIGHWAY ADMINISTRATION PUBLICATION NOS. FHWA-NHI-10-024 AND FHWA-NHI-025, "DESIGN AND CONSTRUCTION OF MECHANICALLY STABILIZED EARTH WALLS AND REINFORCED SOIL SLOPES", VOLUME I AND VOLUME II.

CONCRETE DESIGN SHALL BE PERFORMED USING THE LOAD AND RESISTANCE FACTOR DESIGN METHOD.

CONCRETE: ALL CONCRETE FOR BARRIERS, MOMENT SLABS, AND ROADWAY BARRIERS SHALL BE 4,500 PSI. LEVELING PAD CONCRETE SHALL BE 3,500 PSI. MIX REQUIREMENTS SHALL CONFORM TO SECTION 812 OF THE DELAWARE DEPARTMENT OF TRANSPORTATION STANDARD SPECIFICATIONS.

CHAMFERS: ALL EXPOSED CORNERS OF CONCRETE SHALL BE CHAMFERED WITH ¾" x ¾" MILLED CHAMFER STRIPS, UNLESS OTHERWISE NOTED, EXCEPT ON UNEXPOSED FOOTINGS OR WHERE INDICATED BY THE FOLLOWING NOTATION ON THE PLANS: "DO NOT CHAMFER".

REINFORCING STEEL: REINFORCING STEEL SHALL CONFORM TO ASTM A 615, GRADE 60. ALL SPLICES, NOT SHOWN, SHALL BE LAPPED AS PER THE LRFD BRIDGE DESIGN SPECIFICATIONS. MINIMUM COVER FOR ANY BAR SHALL BE 2" UNLESS OTHERWISE NOTED.

FOR TIES AND STIRRUPS, STANDARD ACI BENDING TOLERANCES ARE MODIFIED TO PLUS (+) ZERO INCHES, MINUS (-) NORMAL ACI BENDING TOLERANCE.

ONLY GRADE 60 CAN BE USED ON THIS PROJECT.

ALL REINFORCING STEEL IN THE BARRIER AND MOMENT SLAB SHALL BE FUSION-BONDED EPOXY COATED, AND SHALL CONFORM TO ASTM D3963.

ALL KEYS ARE NOMINAL SIZE.

THE MSE WALL MANUFACTURER MAY SUBSTITUTE ALTERNATE REINFORCING CONFIGURATIONS AND SUBMIT FOR APPROVAL.

EXPANSION AND CONTRACTION JOINTS: THE LOCATION OF THE EXPANSION AND CONTRACTION JOINTS IN THE BARRIER/MOMENT SLAB SHOWN ON THE PLANS MAY BE ADJUSTED TO ACCOMMODATE THE PANEL TYPE USED IN THE PROJECT. ANY CHANGE TO THESE JOINT LOCATIONS SHALL BE SUBMITTED TO THE ENGINEER FOR APPROVAL.

LEVELING PAD: THE PROPRIETARY WALL MANUFACTURER MAY RELOCATE THE LEVELING PAD STEPS AT THEIR DISCRETION PROVIDED THAT THE MINIMUM EMBEDMENT IS MAINTAINED. ANY CHANGE TO THE STEP LOCATIONS SHALL BE SUBMITTED TO THE ENGINEER FOR APPROVAL.

ROADWAY LIMITS: THE PROPRIETARY WALL MANUFACTURER SHALL ASSURE THAT PROPOSED PROPRIETARY WALL COMPONENTS ARE POSITIONED SUCH THAT THE DESIGNATED ROADWAY LIMITS ARE NOT ENCROACHED UPON.

MOMENT SLAB: THE MOMENT SLAB IS DESIGNED IN ACCORDANCE WITH THE SAME CRITERIA SPECIFIED FOR MECHANICALLY STABILIZED EARTH WALLS IN SECTION 11.10.10.2 OF AASHTO LRFD BRIDGE DESIGN SPECIFICATIONS, 4TH. EDITION.

TRAFFIC BARRIER JOINTS: TRAFFIC BARRIER FOOTING/ MOMENT SLAB SHALL HAVE CONSTRUCTION JOINTS TO COINCIDE WITH THE BARRIER JOINTS.

COORDINATION: CONTRACTOR AND PROPRIETARY WALL MANUFACTURER SHALL COORDINATE LOCATIONS OF INLETS AND PIPES WITH LOCATIONS OF PROPRIETARY WALL TIE BACK SYSTEM AND MOMENT SLAB.

ARCHITECTURAL FINISH: THE MSE WALL PANELS SHALL RECEIVE AN ARCHITECTURAL FINISH.

SERVICE LIFE: ALL RETAINING WALL COMPONENTS SHALL BE DESIGNED FOR A MINIMUM SERVICE LIFE OF 100 YEARS.

WALL SYSTEM: ONLY ONE MSE WALL SYSTEM MAY BE USED ON THIS PROJECT.

ROADWAY SUPERELEVATION: FOR ROADWAY SUPERELEVATION, SEE SUPERELEVATION TABLES.

MSE WALL BACKFILL: MSE WALL BACKFILL SHALL CONSIST OF SPECIFIED BACKFILL AS SHOWN ON SOIL PROFILE SECTION.

REINFORCING STRAPS: SET REINFORCING STRAPS TO CLEAR PILE CASING, 2" MIN. CLEARANCE. MAXIMUM IN-FIELD SKEW OF 15 DEGREES. IF GREATER SKEW ANGLE IS REQUIRED, CONTACT MSE WALL FIELD REPRESENTATIVE PRIOR TO INSTALLATION.

CROSS REFERENCE NOTES:

1. FOR BRIDGE PLAN AND ELEVATION, SEE DWG. S4-1.
2. FOR MSE WINGWALLS PLAN AND ELEVATION, SEE DWGS. S4-12 & S4-13.
3. FOR MOMENT SLAB REINFORCEMENT, SEE DWGS. S4-16 & S4-17.

UNOFFICAL WEBSITE COPY

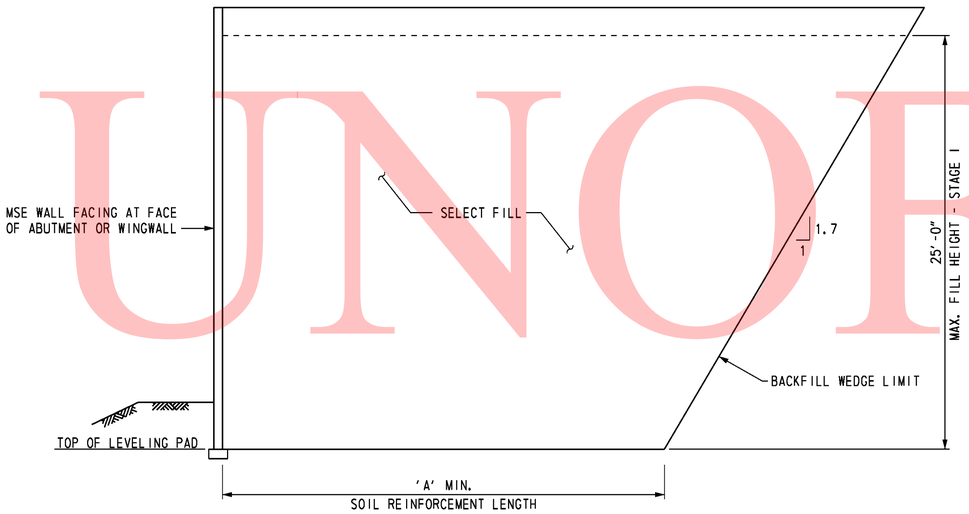

SOIL PROFILE SECTION
ABUTMENT A AND WINGWALLS I AND II

NOT TO SCALE

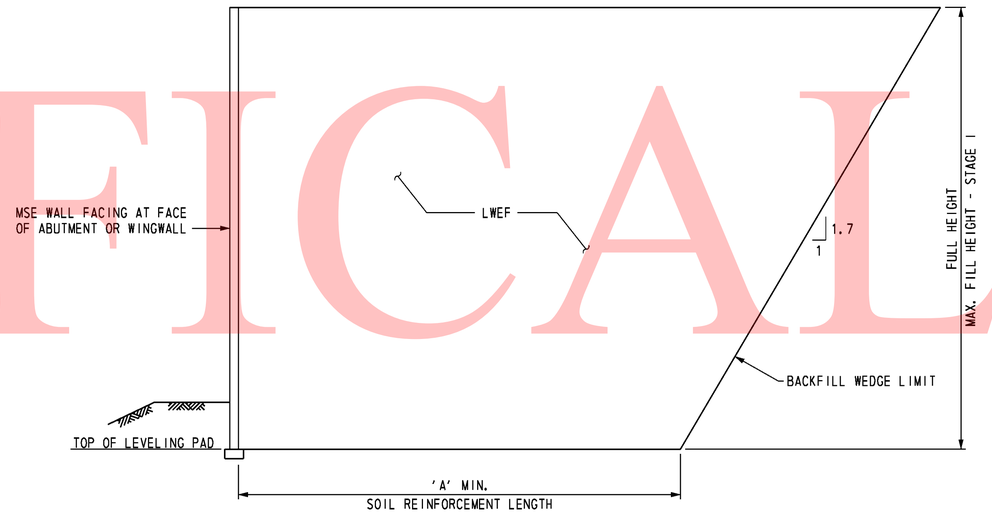

SOIL PROFILE SECTION
ABUTMENT B AND WINGWALLS III AND IV

NOT TO SCALE

MINIMUM REINFORCED ZONE WIDTH (A) FEET	
ABUTMENT A	
FACE OF ABUTMENT	24.0
WINGWALLS I AND II	21.0
ABUTMENT B	
FACE OF ABUTMENT	24.5
WINGWALLS III AND IV	24.5

SOIL PROPERTIES

SOIL TYPE	UNIT WEIGHT (PCF)	DRAINED ANGLE OF FRICTION (DEGREES)	UNDRAINED SHEAR (PSF)	FACTORED BEARING RESISTANCE (KSF)
SELECT FILL	125	34	-	-
LWEF	40	38	-	-
NO. 57 STONE	105	38	-	-
FOUNDATION SOIL:				
ABUTMENT A	120	24	1250	5.0
ABUTMENT B	120	24	1250	5.0

FOUNDATION NOTES

THE FACTORED BEARING RESISTANCE SHALL BE VERIFIED PRIOR TO CONSTRUCTION OF THE MSE WALL.

THE INTERNAL STABILITY OF THE MSE WALL SHALL BE DESIGNED BY THE CONTRACTOR USING THE SOIL PARAMETERS PROVIDED FOR EACH STRUCTURE LOCATION. THE INTERNAL STABILITY CALCULATIONS SHALL BE SIGNED AND SEALED BY A PROFESSIONAL ENGINEER LICENSED IN THE STATE OF DELAWARE AS INDICATED IN THE PROJECT SPECIFICATIONS.

ISOLATED AREAS OF EXISTING FILL MAY BE ENCOUNTERED DURING CONSTRUCTION OF THIS MSE WALL. EXISTING FILL SHALL BE UNDERCUT TO EXPOSE UNDISTURBED NATURAL SOIL. UNDERCUTTING AND BACKFILLING WILL BE MEASURED AND PAID IN ACCORDANCE WITH THE SPECIFICATIONS.

A MINIMUM 7-DAY QUARANTINE PERIOD SHALL BE REQUIRED AFTER CONSTRUCTION OF THE WALL TO THE "MAX. FILL HEIGHT - STAGE 1" INDICATED ON THE SOIL PROFILE SECTION. NO FURTHER FILL SHALL BE PLACED UNTIL AUTHORIZED BY THE ENGINEER. ONCE AUTHORIZATION IS GIVEN, FILL SHALL BE PLACED IN ADDITIONAL INCREMENTS OF 5 FEET IN HEIGHT, WITH THE SAME QUARANTINE PERIOD AND AUTHORIZATION REQUIRED AT EACH INCREMENT. AN ADDITIONAL QUARANTINE PERIOD OF 30 TO 60 DAYS IS REQUIRED AFTER CONSTRUCTION OF THE MSE WALL TO ITS FULL HEIGHT. NO FURTHER CONSTRUCTION SHALL BE PERMITTED UNTIL AUTHORIZED BY THE ENGINEER. A TOTAL ESTIMATED SETTLEMENT OF APPROXIMATELY FOUR TO FIVE INCHES IS ANTICIPATED.

UNOFFICAL WEBSITE COPY

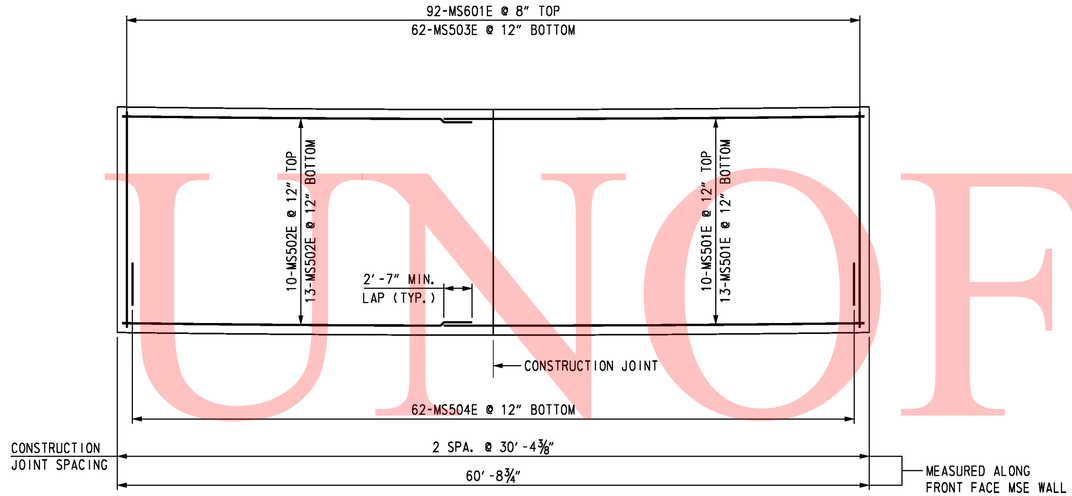

WING WALL II MOMENT SLAB PLAN

NOT TO SCALE

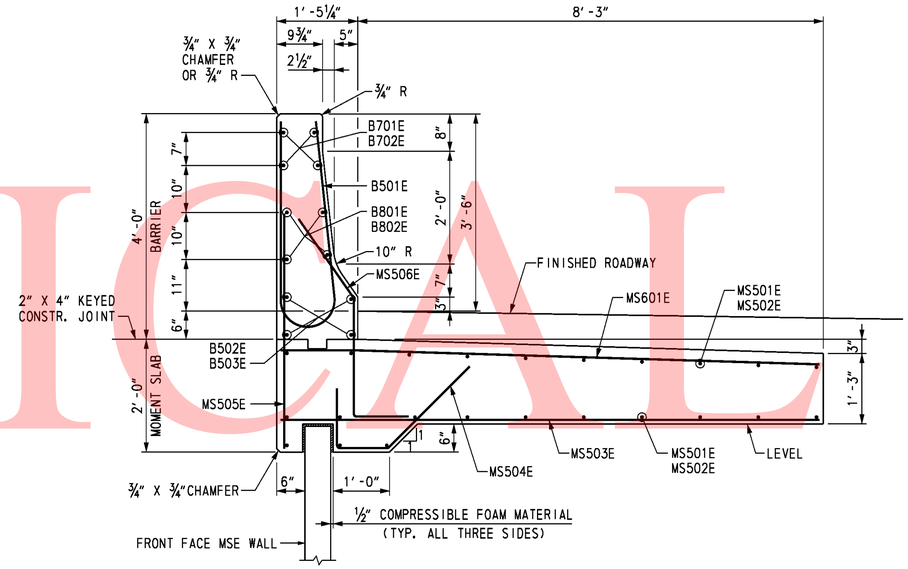

WING WALL II MOMENT SLAB AND BARRIER SECTION

SCALE: ¾" = 1'-0"

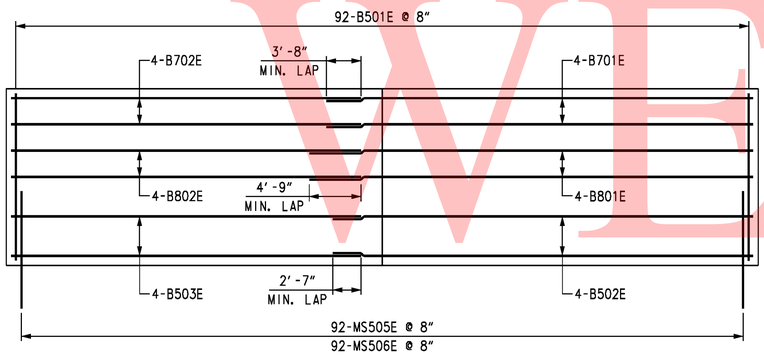

WING WALL II BARRIER ELEVATION

NOT TO SCALE

CROSS REFERENCE NOTES:

1. FOR ABUTMENT A PLAN AND ELEVATION, SEE DWG. S4-5.
2. FOR APPROACH SLAB PLAN, SEE DWG. S4-41.

REINFORCING BAR LIST

WINGWALL II MOMENT SLAB AND BARRIER

MARK	LENGTH	NO. BARS	TYPE	A	B	C	D	H	K	O	R	REMARKS
MS501E	38'-0"	23	STR									
MS502E	25'-0"	23	STR									
MS503E	9'-4"	62	STR									
MS504E	4'-0"	62	16		1'-0"	9"	2'-3"	1'-7"	1'-7"			
MS505E	4'-1"	92	STR									
MS506E	4'-9"	92	4S	1'-0"	2'-0"	1'-9"		1'-0"	1'-5"			
MS601E	9'-4"	92	STR									
B501E	7'-9"	92	H1		3'-3"	1'-3"	3'-3"	5"			4¾"	
B502E	38'-0"	4	STR									
B503E	25'-0"	4	STR									
B701E	39'-1"	4	STR									
B702E	25'-0"	4	STR									
B801E	40'-2"	4	STR									
B802E	25'-0"	4	STR									

BENDING DIAGRAMS

ALL DIMENSIONS ARE FROM OUT TO OUT.

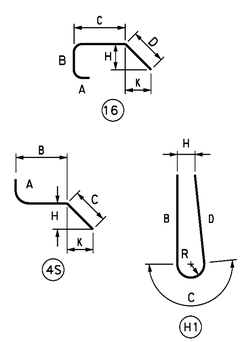

UNOFFICIAL WEBSITE COPY

10/28/2010 O:\20832687-XM\CAD\Bridge\BR-S4\ob10_BR-S4_sr1.dgn untitled

DELAWARE DEPARTMENT OF TRANSPORTATION	ADDENDUMS / REVISIONS	SR1 / I-95 INTERCHANGE	CONTRACT 28-090-03	BRIDGE NO. 1-717A	RAMP C OVER SR 7 MOMENT SLAB AND BARRIER REINFORCING 1	S4-16
			COUNTY NEW CASTLE	DESIGNED BY: K. D. BEAVER		SHEET NO. 364
				CHECKED BY: J. S. LI		TOTAL SHTS. 803

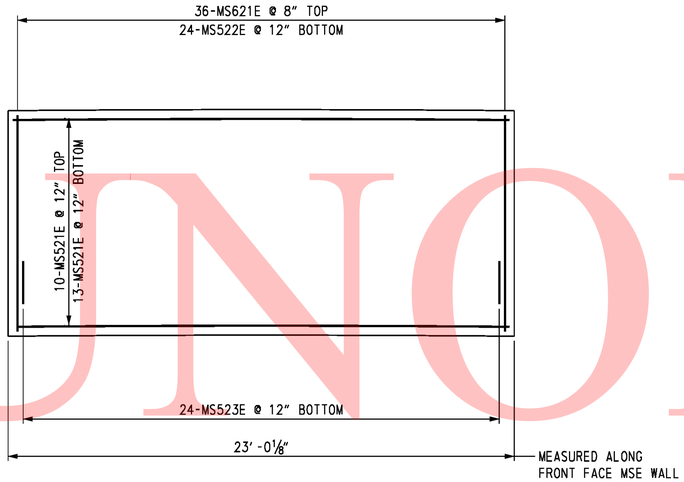

WING WALL III MOMENT SLAB PLAN

NOT TO SCALE

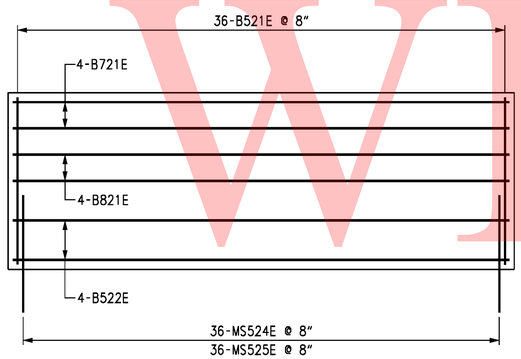

WING WALL III BARRIER ELEVATION

NOT TO SCALE

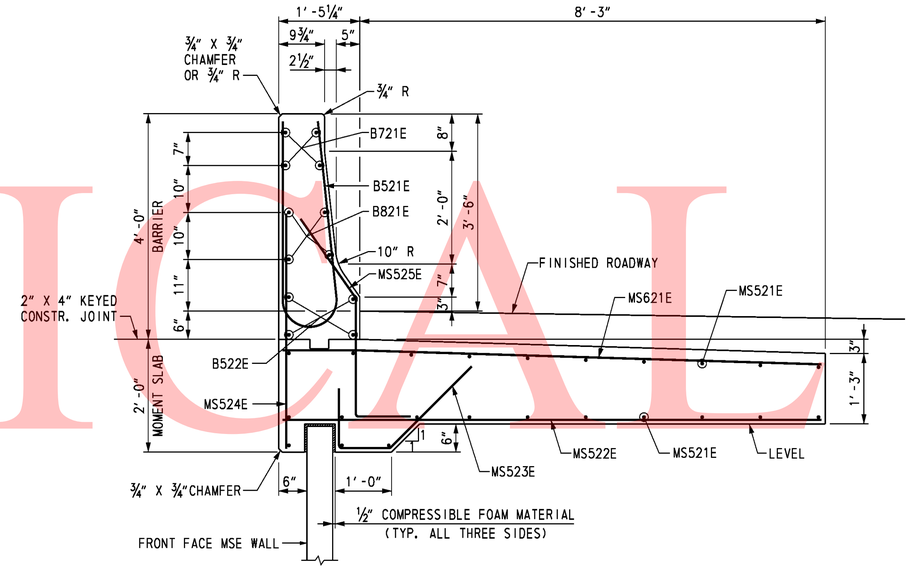

WING WALL III MOMENT SLAB AND BARRIER SECTION

SCALE: ¾" = 1'-0"

CROSS REFERENCE NOTES:

1. FOR ABUTMENT B PLAN AND ELEVATION, SEE DWG. S4-6.
2. FOR APPROACH SLAB PLAN, SEE DWG. S4-41.

REINFORCING BAR LIST

WINGWALL III MOMENT SLAB AND BARRIER

MARK	LENGTH	NO. BARS	TYPE	A	B	C	D	H	K	O	R	REMARKS
MS521E	22'-8"	23	STR									
MS522E	9'-4"	23	STR									
MS523E	4'-0"	24	16		1'-0"	9"	2'-3"	1'-7"	1'-7"			
MS524E	4'-1"	36	STR									
MS525E	4'-9"	36	4S	1'-0"	2'-0"	1'-9"		1'-0"	1'-5"			
MS621E	9'-4"	36	STR									
B521E	7'-9"	36	H1		3'-3"	1'-3"	3'-3"	5"			4¾"	
B522E	22'-8"	4	STR									
B721E	22'-8"	4	STR									
B821E	22'-8"	4	STR									

BENDING DIAGRAMS

ALL DIMENSIONS ARE FROM OUT TO OUT.

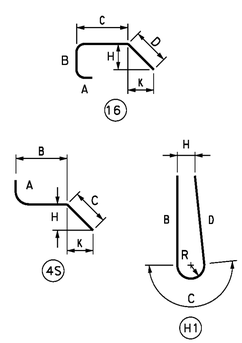

UNOFFICIAL WEBSITE COPY

10/28/2010 O:\20832687-XM\CAD\Bridge\BR-S4\ob11_BR-S4_sr1.dgn untitled

DELAWARE DEPARTMENT OF TRANSPORTATION

ADDENDUMS / REVISIONS

SR1 / I-95 INTERCHANGE

CONTRACT	BRIDGE NO.	1-717A
28-090-03	DESIGNED BY: K. D. BEAVER	
COUNTY	CHECKED BY: J. S. LI	
NEW CASTLE		

RAMP C OVER SR 7
MOMENT SLAB AND BARRIER REINFORCING 2

SHEET NO.	TOTAL SHTS.
S4-17	
365	
803	

REINFORCING BAR LIST

ABUTMENT A

MARK	LENGTH	NO. BARS	TYPE	A	B	C	D	E	G	H	J	K	O	R	REMARKS
AP401E	6′-7″	76	T3									1′-8″	1′-7″		
AP801E	18′-11″	32	37	0′-11″	18′-0″						0′-8″				
AF501E	27′-6½″	6	STR.												
AF502E	29′-6½″	4	STR.												
AF503E	14′-9″	2	STR.												
AF504E	8′-0″	6	STR.												
AF505E	10′-9″	12	36	0′-10″	9′-11″										
AF506E	7′-5″	6	36	0′-10″	6′-7″										
AF507E	3′-7″	29	STR.												
AF508E	6′-6″	16	STR.												
AF509E	4′-5″	8	STR.												
AF510E	6′-0″	10	STR.												
AF511E	2′-2″	8	17		1′-1″	1′-1″									
AF601E	17′-4″	7	T2	1′-0″	5′-2″	2′-6″	5′-2″	2′-6″	1′-0″						
AF602E	17′-10″	8	T2	1′-0″	5′-2″	2′-9″	5′-2″	2′-9″	1′-0″						
AF603E	18′-8″	8	T2	1′-0″	5′-2″	3′-2″	5′-2″	3′-2″	1′-0″						
AF604E	20′-0″	7	T2	1′-0″	5′-2″	3′-10″	5′-2″	3′-10″	1′-0″						
AF605E	4′-3″	27	STR.												
AF606E	6′-1″	2	STR.												
A501E	6′-9″	29	STR.												
A502E	7′-1	27	17		3′-0″	1′-0″	3′-1″								
A503E	3′-9″	27	16		1′-6″	0′-10″	1′-5″								
A504E	29′-7″	18	STR.												
A505E	6′-0″	14	STR.												
A506E	4′-6″	14	STR.												
A507E	2′-2″	8	17		1′-1″	1′-1″									
A508E	3′-3″	16	36	1′-0″	2′-3″										
A509E	5′-7″	16	STR.												
A510E	7′-11″	8	STR.												
A511E	3′-10″	8	STR.												
A512E	4′-8″	8	16			3′-5″	1′-3″			1′-0¼″		0′-8¾″			
A601E	4′-3″	29	STR.												
B501E	6′-9″	8	H1		2′-9½″	1′-2″	2′-9½″			0′-5″				0′-4½″	
B502E	2′-0″	4	STR.												
B701E	2′-0″	8	STR.												
B801E	2′-0″	8	STR.												

ABUTMENT B

MARK	LENGTH	NO. BARS	TYPE	A	B	C	D	E	G	H	J	K	O	R	REMARKS
AP431E	6′-7″	76	T3									1′-8″	1′-7″		
AP831E	18′-11″	32	37	0′-11″	18′-0″						0′-8″				
AF531E	27′-6½″	6	STR.												
AF532E	29′-6½″	4	STR.												
AF533E	14′-9½″	2	STR.												
AF534E	8′-0″	6	STR.												
AF535E	10′-9″	12	36	0′-10″	9′-11″										
AF536E	7′-5″	6	36	0′-10″	6′-7″										
AF537E	3′-7″	29	STR.												
AF538E	6′-6″	15	STR.												
AF539E	4′-5″	8	STR.												
AF540E	6′-0″	4	STR.												
AF541E	2′-2″	8	17		1′-1″	1′-1″									
AF542E	5′-6″	5	STR.												
AF631E	17′-4″	7	T2	1′-0″	5′-2″	2′-6″	5′-2″	2′-6″	1′-0″						
AF632E	17′-10″	8	T2	1′-0″	5′-2″	2′-9″	5′-2″	2′-9″	1′-0″						
AF633E	18′-8″	8	T2	1′-0″	5′-2″	3′-2″	5′-2″	3′-2″	1′-0″						
AF634E	20′-0″	7	T2	1′-0″	5′-2″	3′-10″	5′-2″	3′-10″	1′-0″						
AF635E	4′-3″	27	STR.												
AF636E	6′-1″	2	STR.												
A531E	6′-9″	29	STR.												
A532E	7′-1	27	17		3′-0″	1′-0″	3′-1″								
A533E	3′-9″	27	16		1′-6″	0′-10″	1′-5″								
A534E	29′-7″	18	STR.												
A535E	6′-0″	7	STR.												
A536E	4′-6″	14	STR.												
A537E	2′-2″	8	17		1′-1″	1′-1″									
A538E	3′-9″	4	36	1′-0″	2′-9″										
A539E	5′-8″	8	STR.												
A540E	8′-1″	7	STR.												
A541E	3′-10″	7	STR.												
A542E	4′-8″	7	16			3′-5″	1′-3″			1′-0¼″		0′-8¾″			
A543E	5′-3″	7	STR.												
A544E	3′-3″	4	36	1′-0″	2′-3″										
A631E	5′-3″	29	STR.												
B531E	6′-9″	7	H1		2′-9½″	1′-2″	2′-9½″			0′-5″				0′-4½″	
B532E	2′-0″	4	STR.												
B731E	2′-0″	8	STR.												
B831E	2′-0″	8	STR.												

BENDING DIAGRAMS

ALL DIMENSIONS ARE FROM OUT TO OUT.

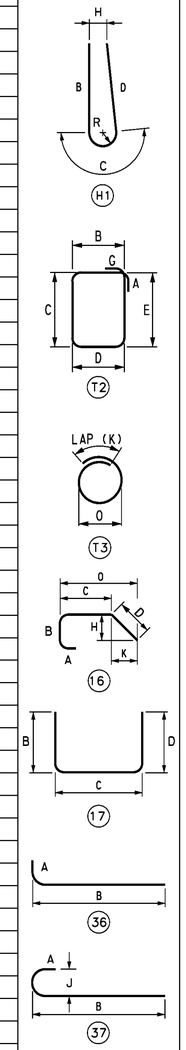

UNOFFICIAL WEBSITE COPY

S4-18

DELAWARE DEPARTMENT OF TRANSPORTATION

ADDENDUMS / REVISIONS

SR1 / I-95 INTERCHANGE

CONTRACT	BRIDGE NO.	1-717A
28-090-03	DESIGNED BY: K. D. BEAVER	
COUNTY		
NEW CASTLE	CHECKED BY: J. S. LI	

RAMP C OVER SR 7

ABUTMENTS A AND B REINFORCING BAR LIST

SHEET NO. 366

TOTAL SHTS. 803

untitled 10/28/2010 O:\20832687-XM\CAD\Bridge\BR-S4\ab08_BR-S4_sr1.dgn

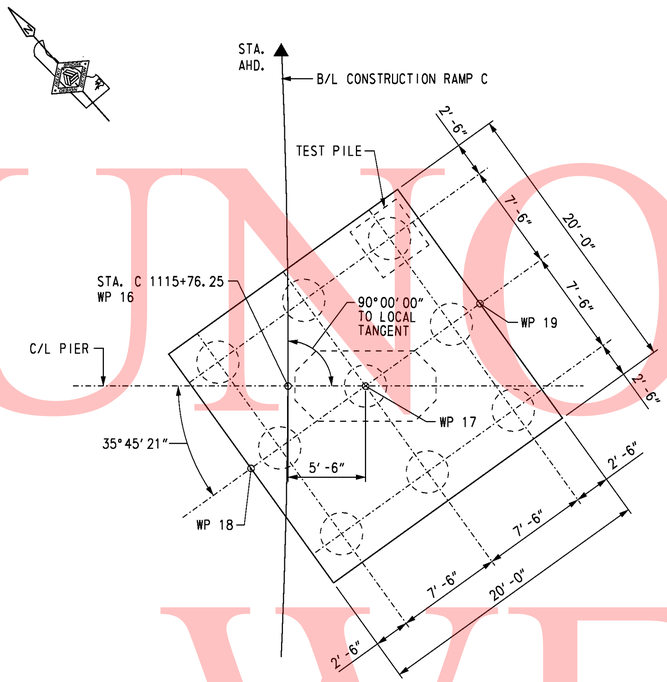

PIER PILE PLAN

SCALE: 1/8" = 1'-0"

WORKING POINTS				
WP NO.	STATION	OFFSET	COORDINATES	
			NORTHING	EASTING
16	1115+76.25	0.00'	612,516.8689	432,310.7286
17	1115+76.25	5.50' RT.	612,513.1645	432,314.7940
18	1115+70.38	2.58' LT.	612,514.3112	432,304.8600
19	1115+81.93	13.65' RT.	612,512.0179	432,324.7280

PILE INSTALLATION DATA				
	DESIGN DATA		ACTUAL FIELD DATA	
SUBSTRUCTURE UNIT	NOMINAL PILE DRIVING RESISTANCE (KIPS)	ESTIMATED PILE TIP ELEVATION	AVERAGE MINIMUM TIP ELEVATION	AVERAGE MAXIMUM TIP ELEVATION
PIER	1100	-12.0		

PIER PILE DRIVING INFORMATION
PILE SIZE AND TYPE:
ACTUAL BEARING OBTAINED:
HAMMER TYPE:
PILE HAMMER ENERGY:
SPECIAL DRIVING CONDITIONS AND COMMENTS:

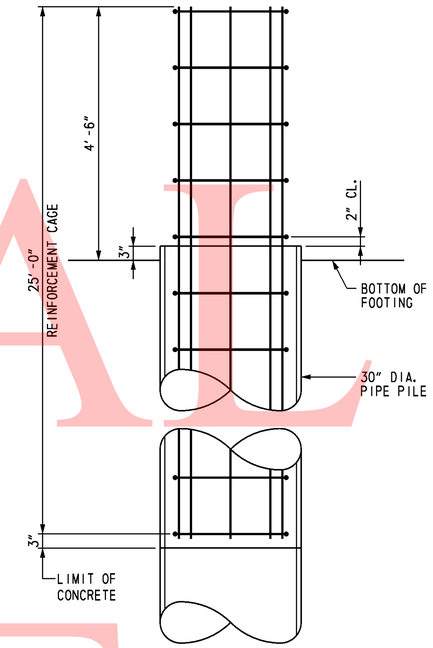

ELEVATION

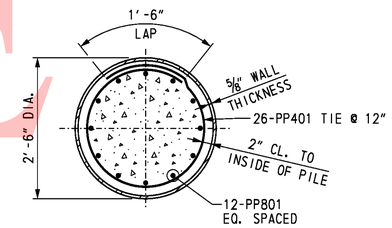

SECTION

PIPE PILE REINFORCEMENT

SCALE: 3/4" = 1'-0"

NOTES:

1. PILES SHALL BE 30" DIA. WITH 5/8" WALL THICKNESS OPEN-ENDED STEEL PIPE PILES, ASTM A252 GRADE 3.
2. TEST PILES SHALL BE TESTED IN ACCORDANCE WITH THE SPECIFICATIONS.

CROSS REFERENCE NOTES:

1. FOR PIER PLAN AND ELEVATION, SEE DWG. S4-20.
2. FOR REINFORCING BAR LIST, SEE DWG. S4-25.
3. FOR PILE SPLICE DETAILS, SEE DWG. S4-4.
4. FOR TEST PILE PAYMENT NOTES, SEE DWG. S4-2.

UNOFFICIAL WEBSITE COPY

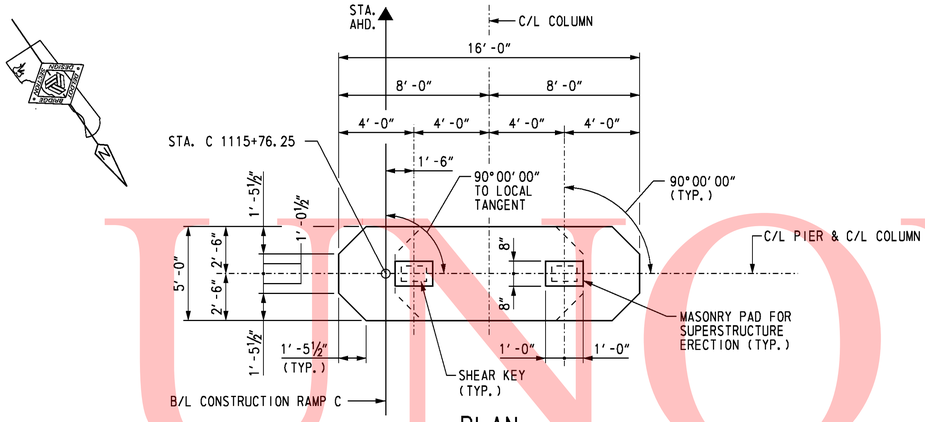

PLAN

SCALE: ¼″ = 1′-0″

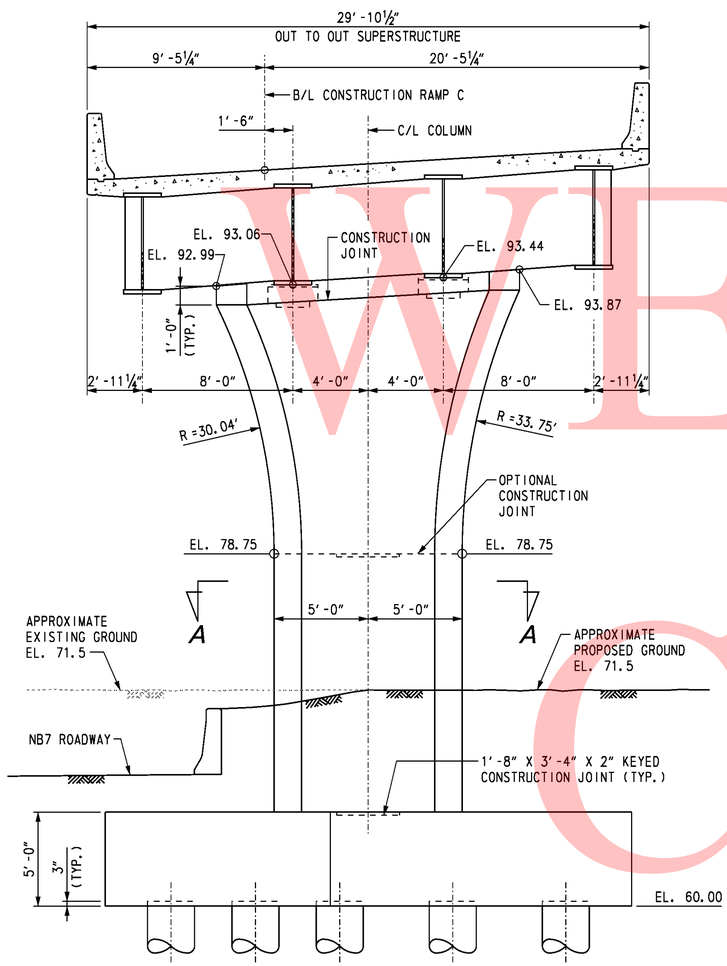

ELEVATION

SCALE: ¼″ = 1′-0″

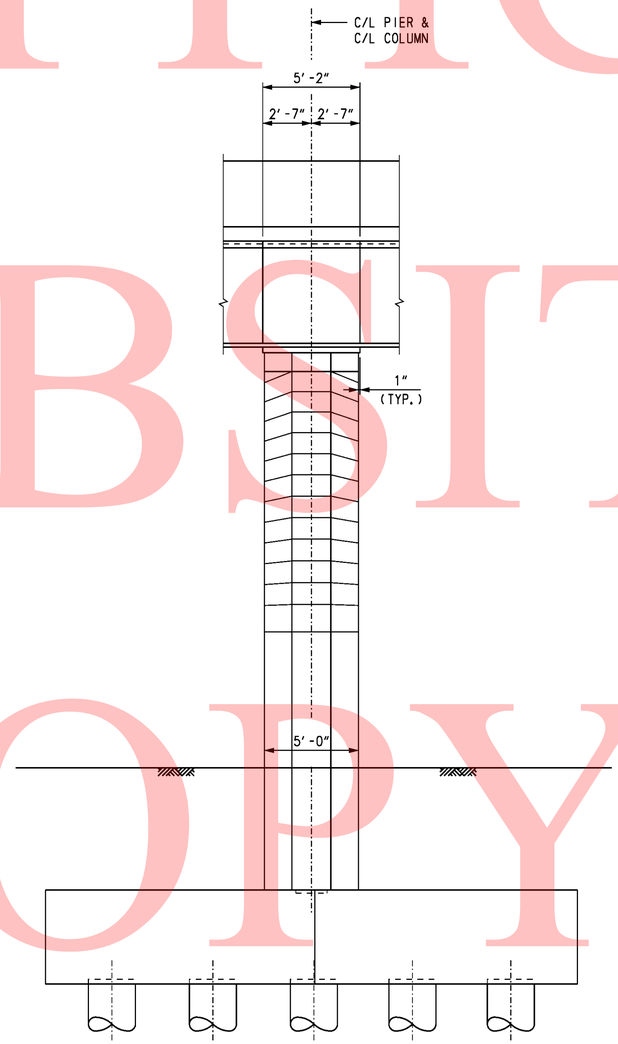

END VIEW

SCALE: ¼″ = 1′-0″

NOTE:

CONCRETE FOR MASONRY PAD SHALL BE "PIER ABOVE FOOTING" CONCRETE. AS AN ALTERNATE, A NON-SHRINK GROUT (f′c = 4,500 PSI) WITH 3/8″ AGGREGATE MAY BE UTILIZED FOR THE MASONRY PAD CONCRETE. CONCRETE FOR COLUMN OUTSIDE OF MASONRY PAD IN TOP 1′-0″ REGION SHALL BE SAME AS "POST TENTIONED PIER CAP" CONCRETE.

CROSS REFERENCE NOTES:

1. FOR BRIDGE PLAN AND ELEVATION, SEE DWG. S4-1.
2. FOR PIER FOUNDATION PLAN, SEE DWG. S4-19.
3. FOR INTEGRAL PIER CAP REINFORCEMENT DETAILS, SEE DWGS. S4-21 & S4-22.
4. FOR PIER COLUMN AND FOOTING REINFORCEMENT DETAILS, SEE DWGS. S4-23 & S4-24.

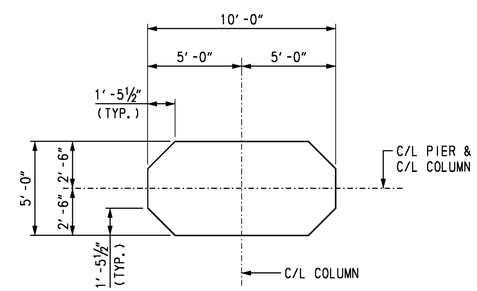

SECTION A-A

SCALE: ¼″ = 1′-0″

UNOFFICAL WEBSITE COPY

10/28/2010 O:\20832687-XM\CAD\Bridge\BR-S4\pr02_BR-S4_sr1.dgn untitled

DELAWARE DEPARTMENT OF TRANSPORTATION	ADDENDUMS / REVISIONS	SR1 / I-95 INTERCHANGE	CONTRACT 28-090-03	BRIDGE NO. 1-717A	RAMP C OVER SR 7 PIER PLAN AND ELEVATION	S4-20 SHEET NO.
			COUNTY NEW CASTLE	DESIGNED BY: K. D. BEAVER		368 TOTAL SHTS.
				CHECKED BY: R. F. KIRCHNER		803

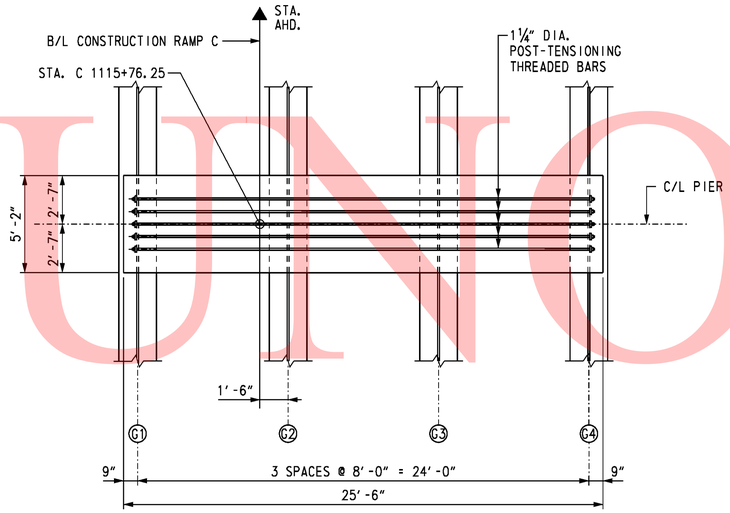

POST TENSIONING PLAN

SCALE: ¼" = 1'-0"

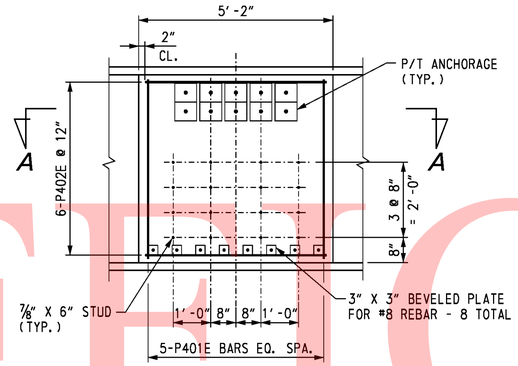

INTEGRAL PIER CAP ANCHORAGE COVER

SCALE: ½" = 1'-0"

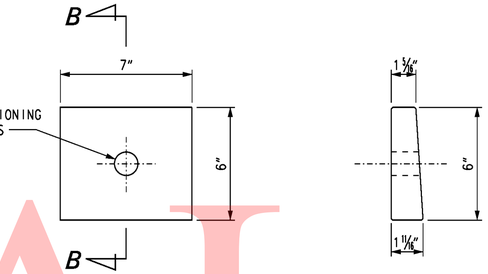

ANCHOR PLATE DETAIL

SCALE: 3" = 1'-0"

SECTION B-B

SCALE: 3" = 1'-0"

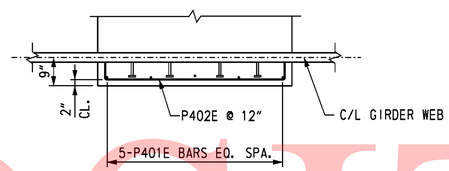

SECTION A-A

SCALE: ½" = 1'-0"

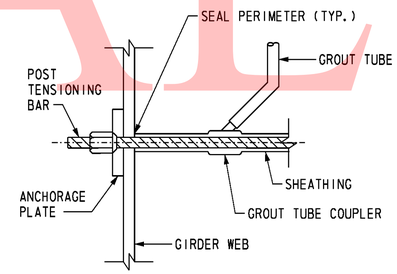

POST-TENSIONING ASSEMBLY DETAIL

NOT TO SCALE

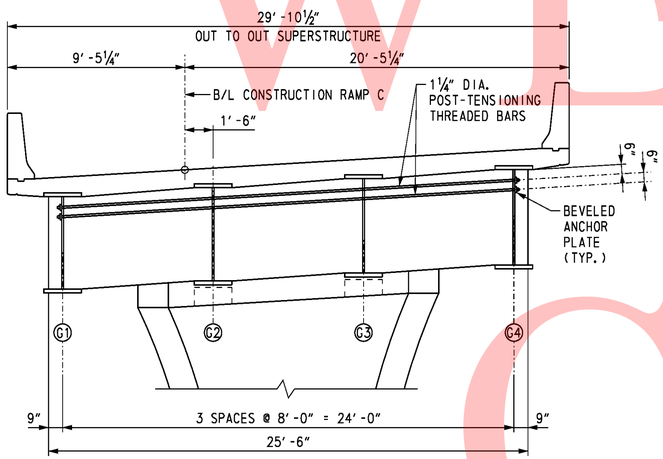

POST TENSIONING SECTION

SCALE: ¼" = 1'-0"

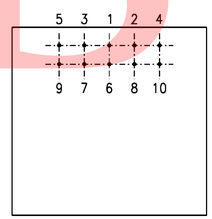

POST-TENSION STRESSING SEQUENCE

SCALE: ½" = 1'-0"

SEQUENCE OF CONSTRUCTION:

1. CONSTRUCT PIER FOUNDATION AND COLUMN.
2. AFTER THE FOUNDATION AND COLUMNS HAVE ATTAINED AT LEAST 80% OF THEIR DESIGN COMPRESSIVE STRENGTH, CONSTRUCT TEMPORARY SHORING TO SUPPORT SUPERSTRUCTURE GIRDERS. PIER CAP AND GIRDERS SHALL BE SUPPORTED ON TEMPORARY SHORING FRAMES UNTIL DECK SLAB HAS BEEN CONSTRUCTED AND POST-TENSIONING OPERATIONS HAVE BEEN COMPLETED.
3. ERECT SUPERSTRUCTURE GIRDERS ON TEMPORARY SHORING.
4. POUR DECK CONCRETE IN ACCORDANCE WITH THE SEQUENCE SHOWN ON POURING SEQUENCE PLANS, EXCLUDING NEGATIVE MOMENT SEGMENT OVER PIER CAP. THIS WILL ALLOW THE GIRDERS TO DEFLECT DUE TO THE DECK WEIGHT WITHOUT ANY RESTRAINT AT THE INTEGRAL PIER LOCATIONS.
5. POUR CONCRETE FOR THE INTEGRAL PIER CAP.
6. POUR REMAINING DECK CONCRETE IN REGION OVER PIER CAP AFTER PIER CAP HAS REACHED A MINIMUM COMPRESSIVE STRENGTH OF 3,000 PSI.
7. CONSTRUCT CONCRETE BARRIERS. AS AN ALTERNATE, BARRIERS MAY BE CONSTRUCTED AFTER POST TENSIONING OPERATIONS.
8. AFTER DECK CONCRETE HAS ATTAINED ITS 28 DAY COMPRESSIVE STRENGTH, POST-TENSIONING OPERATIONS MAY COMMENCE. BARS SHALL BE STRESSED FROM ONE END OF THE PIER CAP IN THE ORDER SHOWN. CONTRACTOR MAY PROPOSE AN ALTERNATE STRESSING SEQUENCE AND SUBMIT TO THE ENGINEER FOR APPROVAL.
9. DURING THE POST TENSIONING OPERATION, THE GIRDERS SHALL BE SHIMMED AS NECESSARY TO MAINTAIN FULL SUPPORT FROM THE TEMPORARY SHORING.
10. WHEN POST TENSIONING IS COMPLETE, DUCTS SHALL BE GROUTED.
11. CONSTRUCT CONCRETE ANCHORAGE COVER AT ENDS OF PIER CAP.
12. REMOVE TEMPORARY SHORING.

NOTES:

MATERIAL PROPERTIES:

CONCRETE CAP: f'c = 6000 psi
f'ci = 4500 psi
Ec = 4270 ksi

PRESTRESSING STEEL:

THREADBARS-ASTM A722, GRADE 150, TYPE II, 1¼" DIAMETER EPOXY COATED

MODULUS OF ELASTICITY:	29,700 ksi
JACKING STRESS:	111,000 psi
ANCHORING STRESS:	104,000 psi
WOBBLE COEFFICIENT:	0.0002
ANCHOR SET:	¼"

CROSS REFERENCE NOTES:

1. FOR PIER PLAN AND ELEVATION, SEE DWG. S4-20
2. FOR PIER CAP REINFORCEMENT DETAILS, SEE DWG. S4-22.
3. FOR PIER COLUMN REINFORCEMENT DETAILS, SEE DWG. S4-23.
4. FOR PIER FOOTING REINFORCEMENT DETAILS, SEE DWG. S4-24.
5. FOR BRIDGE DECK POURING SEQUENCE, SEE DWG. S4-35.

UNOFFICAL WEBSITE COPY

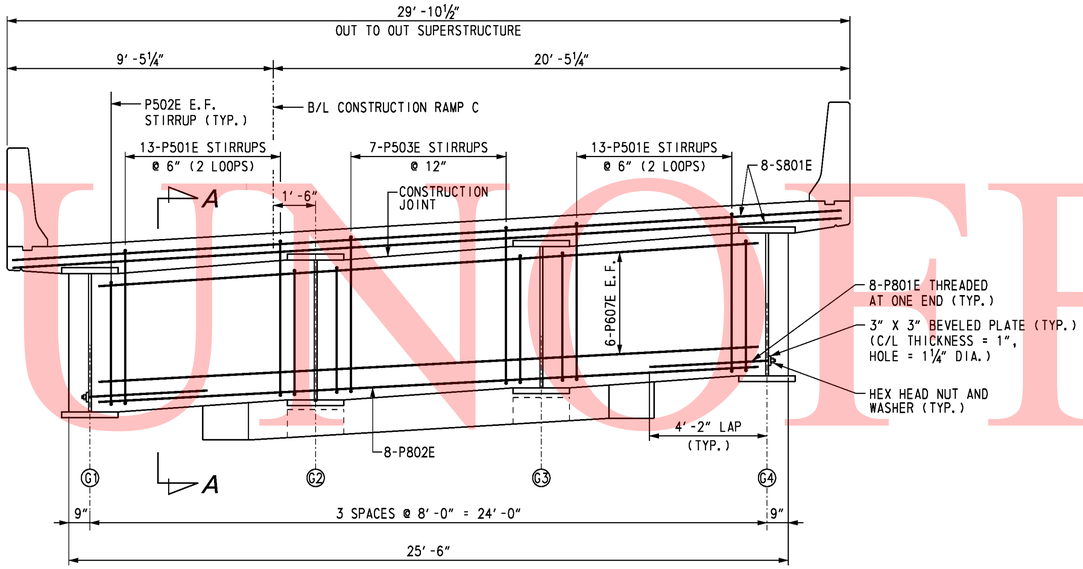

ELEVATION

SCALE: ⅜" = 1'-0"

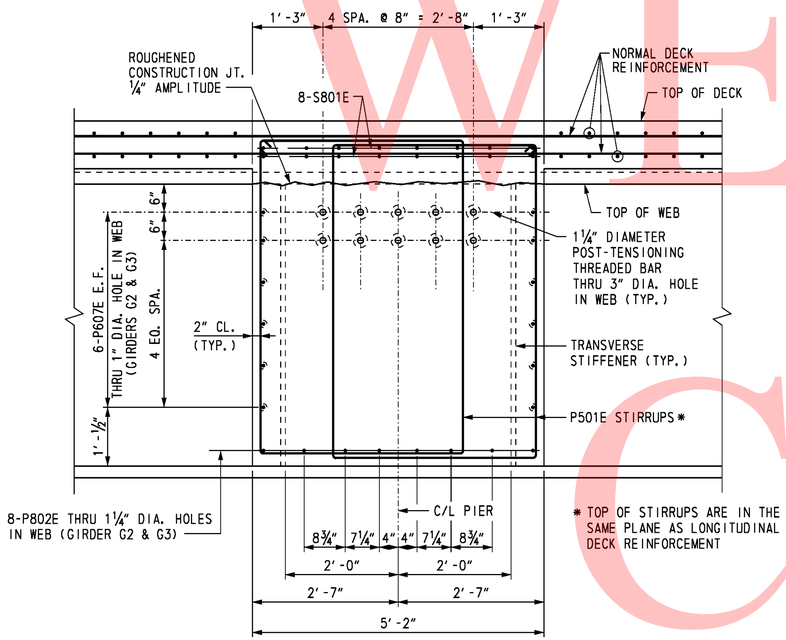

* TOP OF STIRRUPS ARE IN THE SAME PLANE AS LONGITUDINAL DECK REINFORCEMENT

SECTION A-A

SCALE: ¾" = 1'-0"

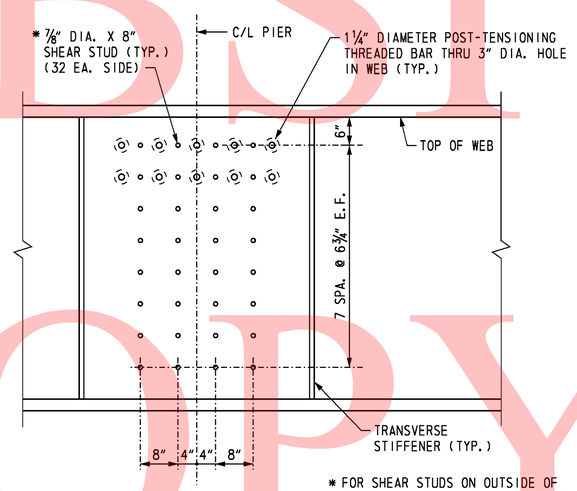

* FOR SHEAR STUDS ON OUTSIDE OF GIRDERS G1 & G4, SEE ANCHORAGE COVER DETAIL ON POST-TENSIONING REINFORCEMENT SHEET.

SHEAR STUDS

SCALE: ¾" = 1'-0"

CROSS REFERENCE NOTES:

1. FOR PIER PLAN AND ELEVATION, SEE DWG. S4-20.
2. FOR PIER CAP POST-TENSIONING REINFORCEMENT, SEE DWG. S4-21.
3. FOR PIER COLUMN REINFORCEMENT DETAILS, SEE DWG. S4-23.
4. FOR PIER FOOTING REINFORCEMENT DETAILS, SEE DWG. S4-24.
5. FOR REINFORCING BAR LIST, SEE DWG. S4-25.

UNOFFICAL WEBSITE COPY

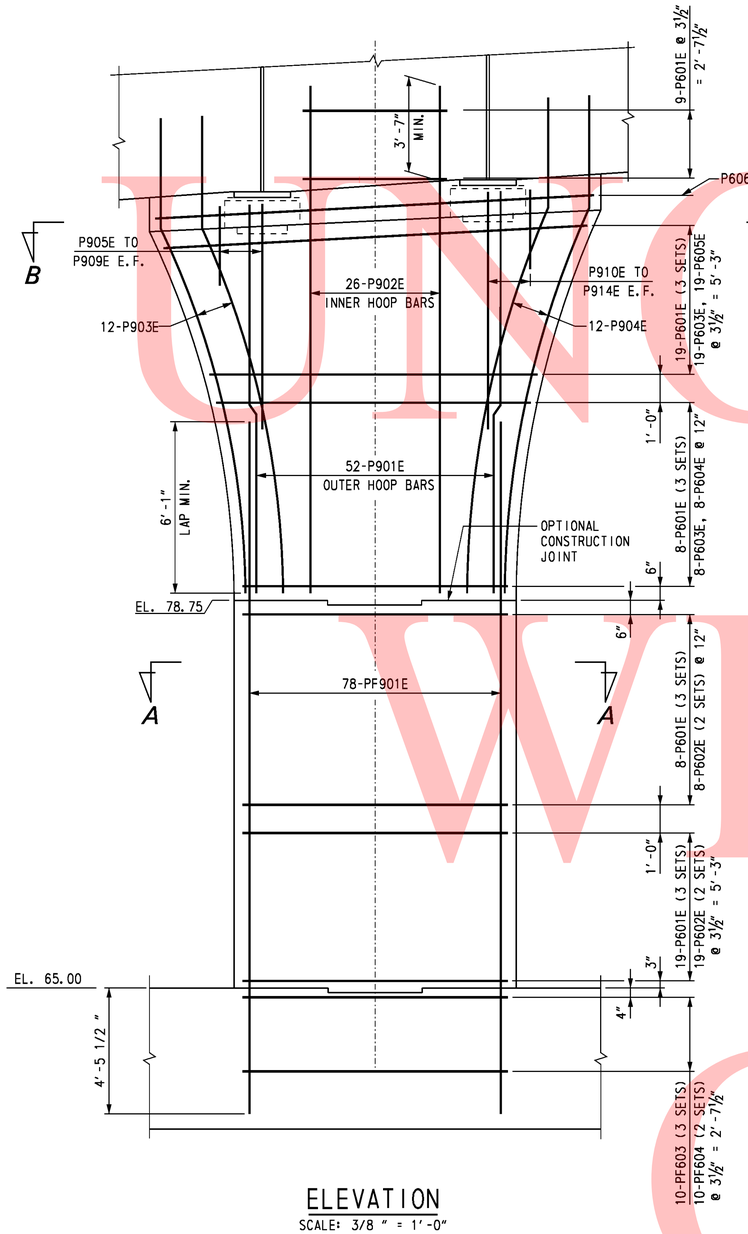

ELEVATION

SCALE: 3/8" = 1'-0"

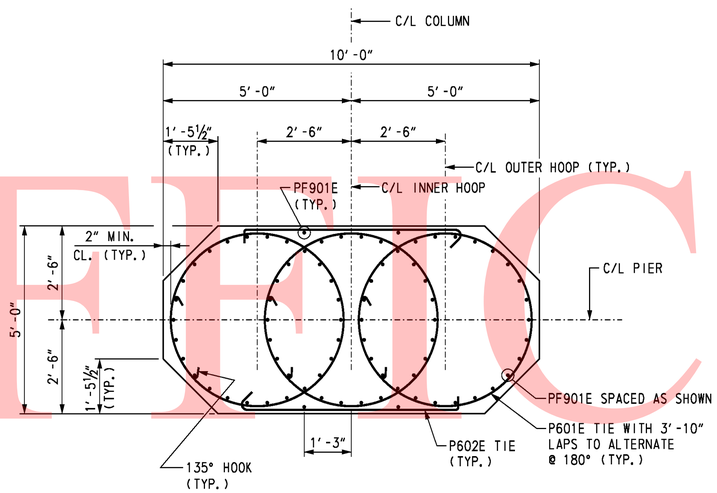

SECTION A-A

SCALE: ½" = 1'-0"

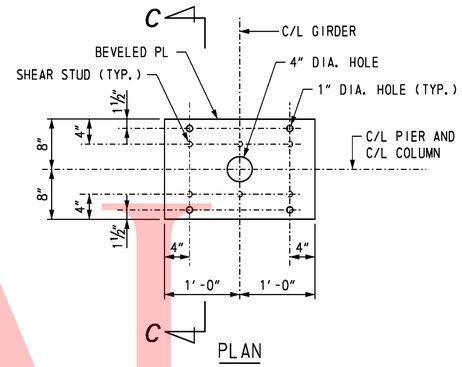

PLAN

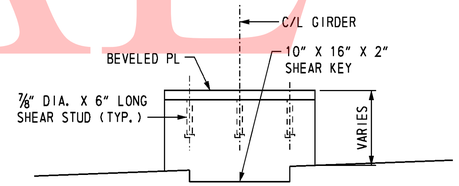

ELEVATION

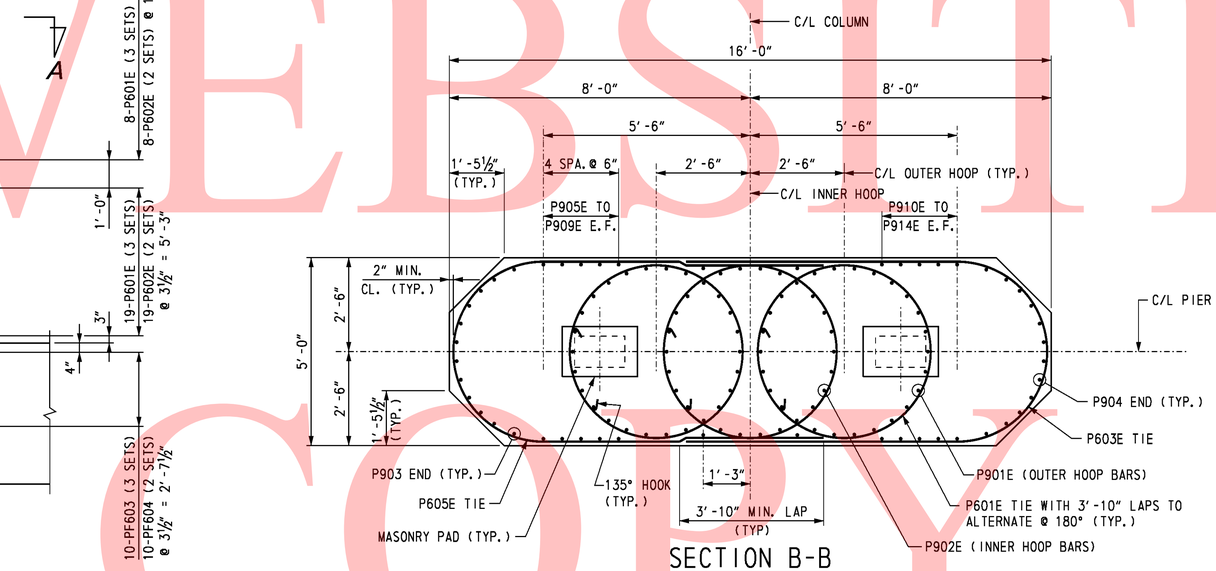

SECTION B-B

SCALE: ½" = 1'-0"

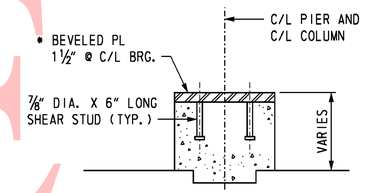

* BEVELED STEEL SHIMS MAY BE PROVIDED IN CONJUNCTION WITH UNIFORM STEEL PLATE THICKNESS.

SECTION C-C

MASONRY PAD DETAILS

SCALE: 1" = 1'-0"

NOTE:

FIELD CUT P901E BARS IN VICINITY OF MASONRY PADS.

CROSS REFERENCE NOTES:

1. FOR BRIDGE PLAN AND ELEVATION, SEE DWG. S4-1.
2. FOR PIER PLAN AND ELEVATION, SEE DWG. S4-20.
3. FOR PIER CAP REINFORCEMENT DETAILS, SEE DWG. S4-22.
4. FOR PIER FOOTING REINFORCEMENT DETAILS, SEE DWG. S4-24.
5. FOR REINFORCING BAR LIST, SEE DWG. S4-25.

UNOFFICAL WEBSITE COPY

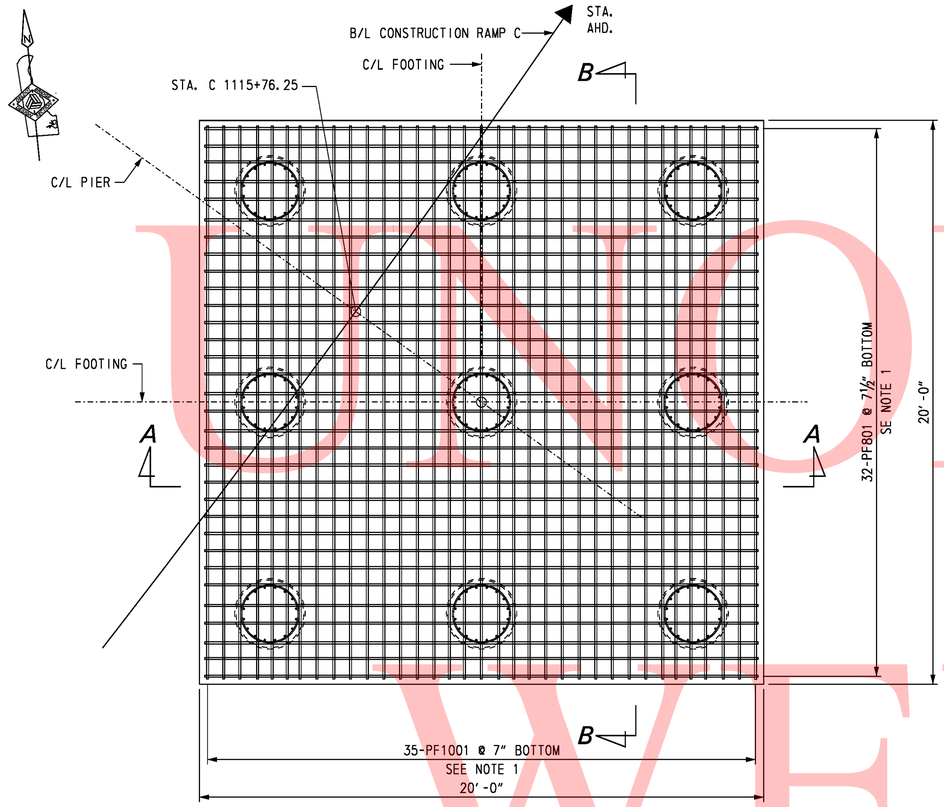

PLAN - BOTTOM MAT FOOTING REINFORCEMENT LAYOUT

SCALE: 3/8" = 1'-0"

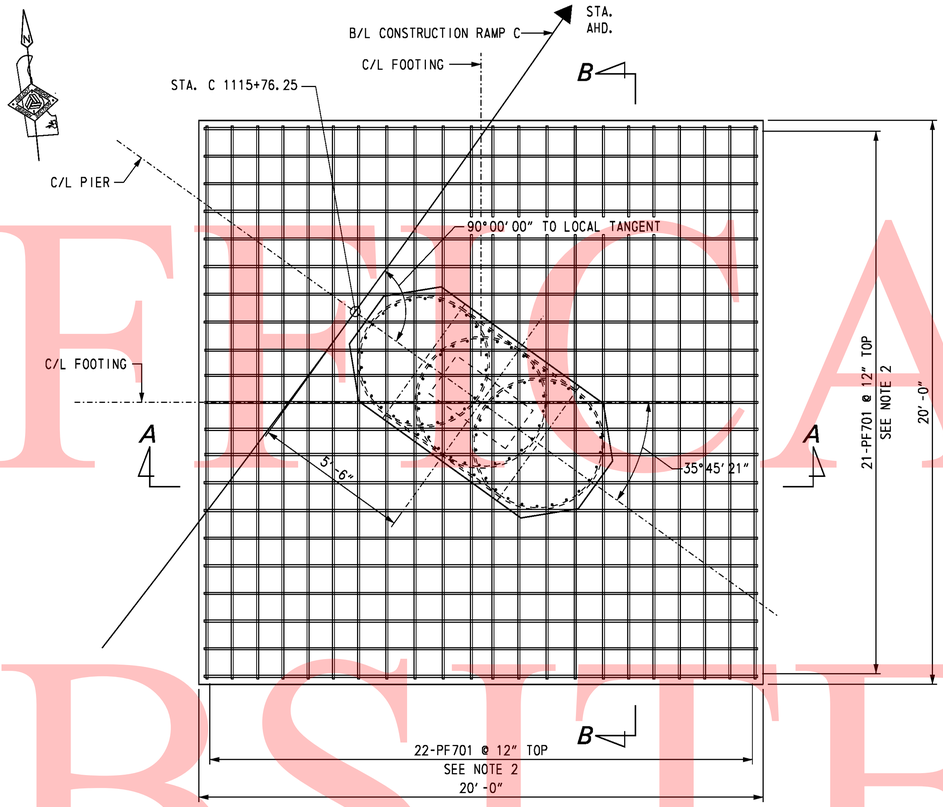

PLAN - TOP MAT FOOTING REINFORCEMENT LAYOUT

SCALE: 3/8" = 1'-0"

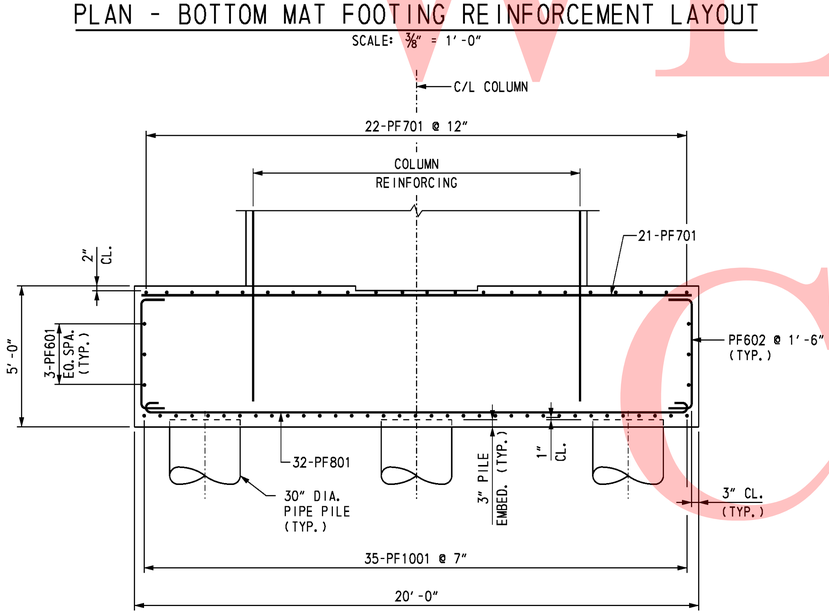

SECTION A-A

SCALE: 3/8" = 1'-0"

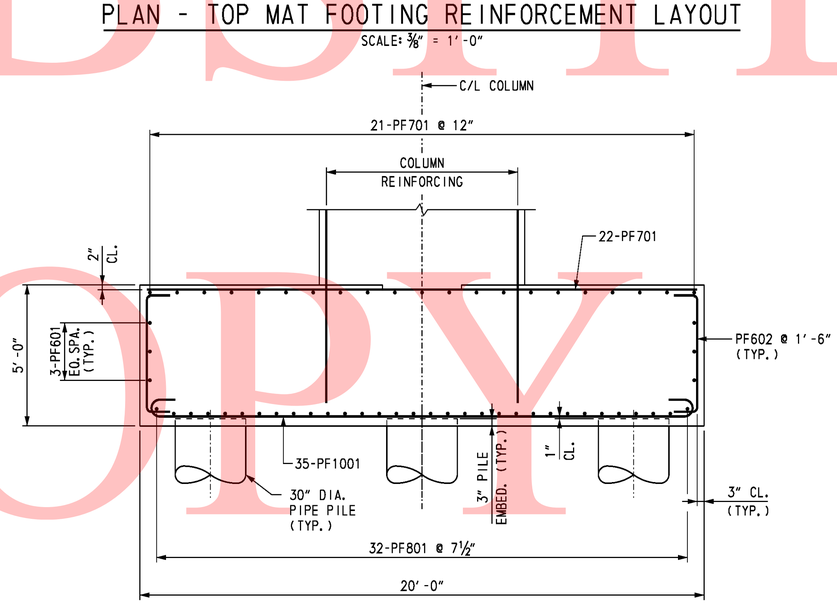

SECTION B-B

SCALE: 3/8" = 1'-0"

NOTES:

1. ADJUST SPACING OF BOTTOM MAT FOOTING REINFORCING TO CLEAR PIPE PILE REINFORCING.
2. ADJUST SPACING OF TOP MAT FOOTING REINFORCING TO CLEAR COLUMN DOWELS.
3. CONTRACTOR MAY PROVIDE 90° HOOKS ON SOME COLUMN REINFORCING DOWELS IN ORDER TO FACILITATE PLACEMENT OF THE COLUMN REINFORCING.

CROSS REFERENCE NOTES:

1. FOR BRIDGE PLAN AND ELEVATION, SEE DWG. S4-1.
2. FOR PIER FOUNDATION PLAN, SEE DWG. S4-19.
3. FOR PIER PLAN AND ELEVATION, SEE DWG. S4-20.
4. FOR PIER COLUMN REINFORCEMENT DETAILS, SEE DWG. S4-23.
5. FOR REINFORCING BAR LIST, SEE DWG. S4-25.

UNOFFICIAL WEBSITE COPY

REINFORCING BAR LIST

PIER

MARK	LENGTH	NO. BARS	TYPE	A	B	C	D	E	F	G	H	J	K	O	R	REMARKS
PP401	8′-0″	234	T3										1′-6″	2′-0¾″		
PP801	25′-0″	108	STR.													
P401E	4′-8″	5	STR.													
P402E	5′-7″	6	2	0′-4½″	4′-10″					0′-4½″						
PF601	19′-6″	12	STR.													
PF602	6′-1″	53	2	1′-0″	4′-1″					1′-0″						
PF603	18′-7″	30	T3S	0′-8″						0′-8″	0′-4½″		2′-7″	4′-8″		
PF604	7′-8″	20	T9	0′-8″	6′-0″					1′-0″	0′-4½″					
PF701	19′-6″	43	STR.													
PF801	21′-4″	32	1	0′-11″	19′-6″					0′-11″		0′-8″				
PF901E	24′-9½″	78	STR.													
PF1001	22′-4″	35	1	1′-5″	19′-6″					1′-5″		1′-1¼″				
P501E	19′-5¾″	52	T1	0′-5½″	3′-8″	5′-7⅜″	3′-8″	5′-7⅜″		0′-5½″						
P502E	5′-5″	12	41	0′-5½″	4′-6″					0′-5½″	0′-3¾″					
P503E	21′-9¾″	7	T1	0′-5½″	4′-10″	5′-7⅜″	4′-10″	5′-7⅜″		0′-5½″						
P601E	19′-10″	171	T3S	0′-8″						0′-8″	0′-4½″		3′-10″	4′-8″		
P602E	7′-8″	54	T9	0′-8″	6′-0″					1′-0″	0′-4½″					
P603E	15′-4″	27	10	4′-0″	7′-4″	4′-0″								4′-8″	2′-4″	
P604E	16′-0″ to 19′-6″	8	10	4′-4″ to 6′-1″	7′-4″	4′-4″ to 6′-1″								4′-8″	2′-4″	$\Delta_A = \Delta_C =$ 3″
P605E	22′-0″ to 29′-0″	19	10	7′-4″ to 10′-10″	7′-4″	7′-4″ to 10′-10″								4′-8″	2′-4″	$\Delta_A = \Delta_C =$ 3″
P606E	21′-6″	2	10	7′-1″	7′-4″	7′-1″								4′-8″	2′-4″	
P607E	23′-8″	12	STR.													
P801E	4′-8″	16	STR.													ONE THREADED END.
P802E	23′-8″	8	STR.													
P901E	14′-1″	52	STR.													
P902E	17′-11″	26	STR.													
P903E	18′-1½″	12	9S		13′-6½″		4′-7″	1′-0¼″			0′-9″			13′-5″	30′-0½″	
P904E	18′-11″	12	9S		14′-4″		4′-7″	0′-11½″			0′-9″			14′-2¾″	33′-9″	
P905E	2′-8″	2	STR.													
P906E	3′-11¾″	2	STR.													
P907E	5′-6″	2	STR.													
P908E	7′-5″	2	STR.													
P909E	10′-2½″	2	STR.													
P910E	2′-6″	2	STR.													
P911E	3′-10½″	2	STR.													
P912E	5′-5½″	2	STR.													
P913E	7′-5½″	2	STR.													
P914E	10′-5″	2	STR.													
S801E	29′-6½″	16	STR.													

BENDING DIAGRAMS

ALL DIMENSIONS ARE FROM OUT TO OUT.

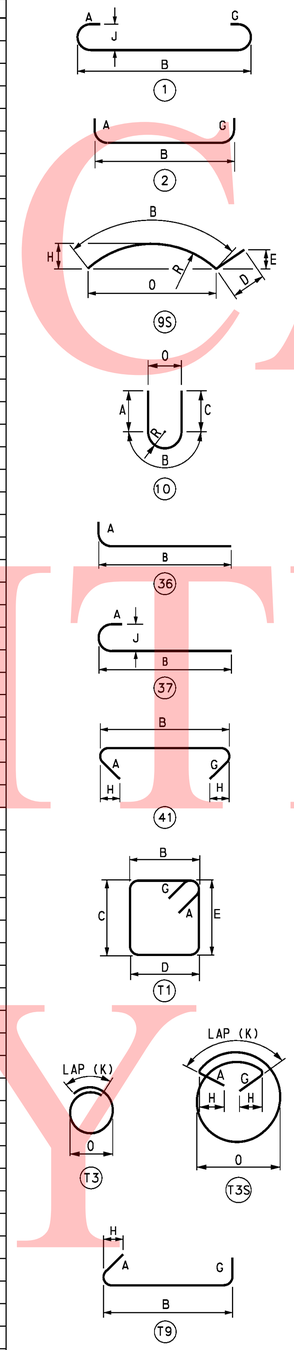

UNOFFICIAL WEBSITE COPY

DELAWARE DEPARTMENT OF TRANSPORTATION	ADDENDUMS / REVISIONS	SR1 / I-95 INTERCHANGE	CONTRACT 28-090-03	BRIDGE NO. 1-717A	RAMP C OVER SR 7 PIER REINFORCING BAR LIST	S4-25 SHEET NO. 373
			COUNTY NEW CASTLE	DESIGNED BY: P. M. DALONI		TOTAL SHTS. 803
				CHECKED BY: J. S. LI		

10/28/2010 O:\20832687-XM\CAD\Bridge\BR-S4\pr07_BR-S4_sr1.dgn
untitled

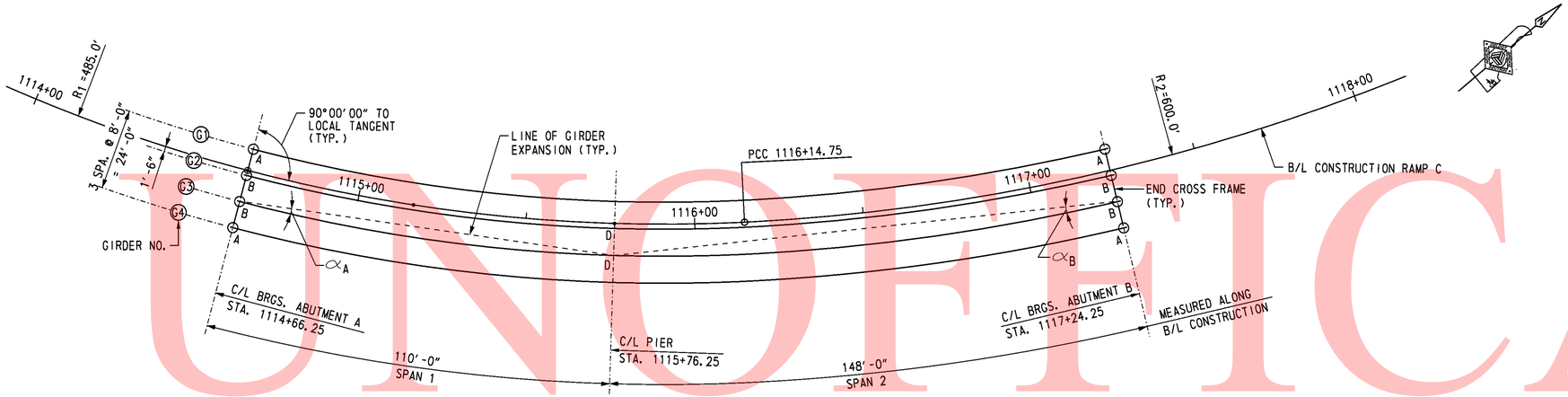

BEARING PLAN

SCALE: 1" = 20'-0"

NOTES:

1. ALL DIMENSIONS ARE IN U.S. CUSTOMARY UNITS.
2. ALL BEARING ASSEMBLIES SHALL BE DESIGNED, MANUFACTURED AND INSTALLED IN ACCORDANCE WITH CURRENT EDITIONS OF THE AASHTO LRFD DESIGN AND CONSTRUCTION SPECIFICATIONS AND THE BEARING MANUFACTURER'S RECOMMENDATIONS.
3. ROUND ALL PTFE CORNERS TO ACCOMMODATE THE MACHINED RECESS IN STEEL GUIDE PLATE/PISTON.
4. ETCH PTFE ON ONE SIDE FOR BONDING INTO THE MACHINED RECESS.
5. PTFE ON THE SIDE OF GUIDE PLATE MUST BE PIGMENTED.
6. PRIOR TO THE APPLICATION OF ADHESIVE, CLEAN ALL MATING STEEL AND PTFE SURFACES BY GRIT BLASTING AND DEGREASING. APPLY ADHESIVE AS PER THE MANUFACTURER'S RECOMMENDATION.
7. LUBRICATE ALL SURFACES OF NEOPRENE DISC WITH SILICONE GREASE IN ACCORDANCE WITH NATO CODE NUMBER S-736 (SAE-AS8660).
8. CUT FLAT BRASS SEALING RING ENDS AT 45 DEGREE ANGLE WITH A MAXIMUM GAP OF 0.05 INCHES. STAGGER THE OPENINGS IN THE BRASS RINGS 120 DEGREES APART.
9. MARK THE THICKER EDGE OF THE SOLE PLATE AS SUCH FOR THE PURPOSE OF FIELD IDENTIFICATION. PLACE MARK ON THE EDGE OF SOLE PLATE SO THAT IT WILL BE VISIBLE AFTER BEARING INSTALLATION. IN THE CASE OF A SOLE PLATE WITH A COMPOUND BEVEL, PLACE THE MARK ON EITHER EDGE OF THE THICKEST SOLE PLATE CORNER.
10. MARK CENTERLINE OF GUIDED AND NON-GUIDED POT BEARINGS ON THE SIDES OF MASONRY PLATE AND SOLE PLATE. THE CENTERLINE IDENTIFICATION MARKS WILL BE USEFUL TO LOCATE OFFSET DISTANCES IN THE FIELD. USE INDELIBLE INK TO PLACE ALL MARKS.
11. MARK EACH BEARING WITH THE NAME OF THE MANUFACTURER AND TYPE OR MODEL NUMBER. PLACE THE IDENTIFICATION MARK IN A PERMANENT MANNER AND LOCATION SO THAT IT IS VISIBLE AFTER ERECTION.
12. WHEN THE POT IS RECESSED INTO THE MASONRY PLATE, SEAL AROUND THE POT PERIMETER WITH AN APPROVED CAULKING COMPOUND IN THE SHOP.
13. ANCHOR RODS SHALL BE INSTALLED PRIOR TO ERECTION OF STRUCTURAL STEEL.
14. FILL HOLES AROUND ANCHOR RODS WITH A NONHARDENING CAULKING COMPOUND OR ELASTIC JOINT SEALER.
15. BEARING SHALL BE SHIPPED AS ONE UNIT.
16. DESIGN SERVICE LIMIT STATE ELASTOMER & PTFE BEARING PRESSURE IS 3.50 KSI, MINIMUM IS 0.7 KSI.
17. DESIGN ROTATION = 0.03 RADIANS.
    DESIGN COEFFICIENT OF FRICTION BETWEEN PTFE AND STAINLESS STEEL = 0.05.
    THE MANUFACTURED COEFFICIENT OF FRICTION BETWEEN PTFE AND STAINLESS STEEL SHALL NOT BE MORE THAN 0.03.
18. GUIDED AND NON-GUIDED BEARINGS ARE DESIGNED FOR A ONE WAY LONGITUDINAL MOVEMENT OF 1½" PLUS 1" OF CONSTRUCTION TOLERANCE IN LONGITUDINAL DIRECTION. ONE WAY LONGITUDINAL MOVEMENT IS THE MAXIMUM ONE WAY MOVEMENT (EXPANSION OR CONTRACTION) OF SUPERSTRUCTURE WHEN BEARINGS ARE SET AT 60° F.
19. AS AN ALTERNATE TO BEARING DETAILS SHOWN ON THESE PLANS, BEARINGS MAY BE DESIGNED BY BEARING MANUFACTURER USING LOADS, MOVEMENTS, ROTATIONS AND OTHER CRITERIA SPECIFIED ON THESE PLANS. IF THIS ALTERNATE IS SELECTED CONTRACTOR SHALL COORDINATE ANY REVISIONS TO ANCHOR ROD LAYOUT, BEARING PAD ELEVATIONS, ETC.
20. GUIDE BARS FOR THE EXPANSION BEARINGS SHALL BE ORIENTED PARALLEL TO THE ASSUMED DIRECTION OF MOVEMENT CONNECTING EXPANSION BEARINGS TO RESPECTIVE FIXED BEARING FOR HORIZONTALLY CURVED ALIGNMENT.

MATERIALS:

1. BEARING PLATES SHALL BE A709 GRADE 50W STEEL.
2. ALL ANCHOR RODS SHALL BE ASTM F1554, GRADE 55. ALL NUTS SHALL BE ASTM A563, GRADE DH. ALL WASHERS SHALL BE ASTM F436, TYPE 1. GALVANIZE BOLTS, NUTS AND WASHERS.
3. STAINLESS STEEL: ASTM A167 OR A264, TYPE 304 WITH A SURFACE FINISH OF 8.0 μ-IN RMS OR BETTER.
4. FLAT BRASS SEALING RINGS: ASTM B36 (HALF HARD) SPECIFICATION.
5. ELASTOMERIC DISC: VIRGIN PLAIN NEOPRENE OR NATURAL RUBBER WITH HARDNESS OF BETWEEN 50 AND 60 DUROMETER.
6. PTFE SHEET: (UNFILLED, DIMPLED AND LUBRICATED) MADE FROM VIRGIN TFE RESIN PER ASTM D4894. DIMPLES MUST HAVE A MINIMUM EDGE DISTANCE OF 0.5 INCHES AND CONFORM TO AASHTO LRFD SECTION 14.
7. BEDDING MATERIAL: ⅛" NEOPRENE PAD.

A = NON-GUIDED EXPANSION BEARING.

B = GUIDED EXPANSION BEARING

D = INTEGRAL COLUMN, NO BEARING..

UNOFFICAL WEBSITE COPY

DELAWARE DEPARTMENT OF TRANSPORTATION	ADDENDUMS / REVISIONS		SR1 / I-95 INTERCHANGE	CONTRACT 28-090-03	BRIDGE NO. 1-717A	RAMP C OVER SR 7	S4-26 SHEET NO. 374
				COUNTY NEW CASTLE	DESIGNED BY: R. F. KIRCHNER	BEARING LOCATIONS AND NOTES	TOTAL SHTS. 803
					CHECKED BY: G. P. MISTRY		

untitled 10/28/2010 O:\20832687-XM\CAD\Bridge\BR-S4\bd01_BR-S4_sr1.dgn

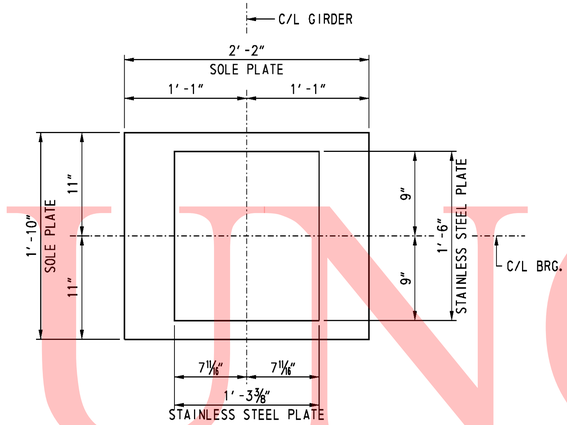

SECTION A-A
SCALE: 1½" = 1'-0"

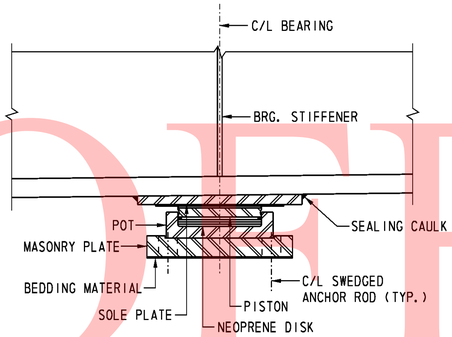

SECTION C-C
SCALE: 1½" = 1'-0"

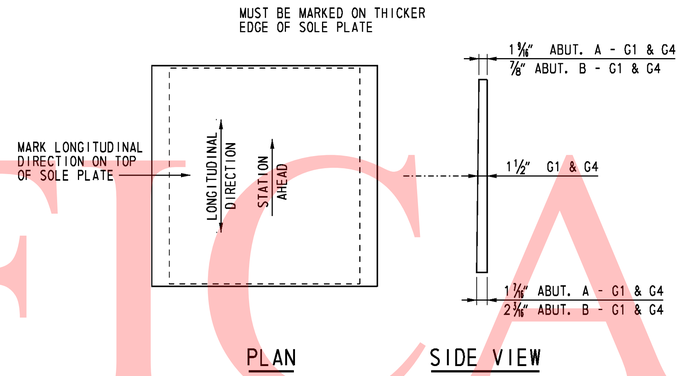

SOLE PLATE DETAIL
SCALE: 1½" = 1'-0"

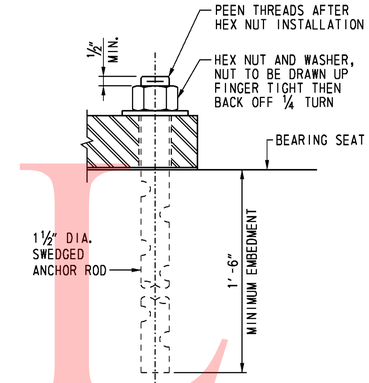

ANCHOR ROD DETAIL
SCALE: 3" = 1'-0"

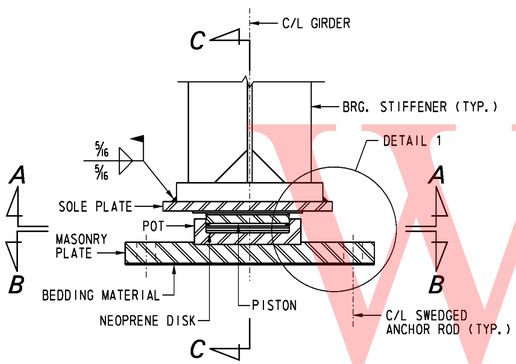

ELEVATION
SCALE: 1½" = 1'-0"

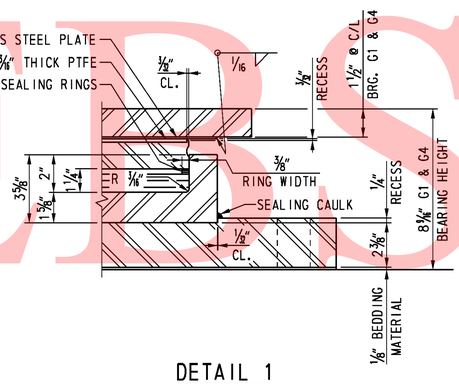

DETAIL 1
SCALE: 3" = 1'-0"

LOCATION	SERVICE VERTICAL LOAD (kips)	STRENGTH VERTICAL LOAD (kips)	ANCHOR ROD	
			QTY.	DIA.
ABUTMENT A - G1 & G4	275	400	4	1½"
ABUTMENT B - G1 & G4	275	400	4	1½"

* BEARING HEIGHT INCLUDES ⅛" BEDDING MATERIAL.
BEARING HEIGHT MEASURED AT C/L BEARING.

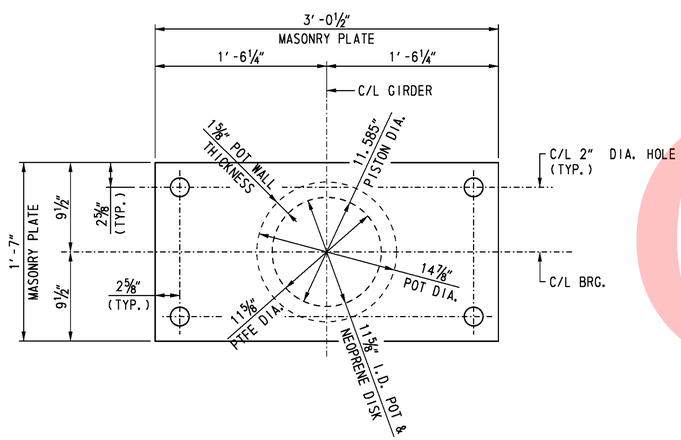

SECTION B-B
SCALE: 1½" = 1'-0"

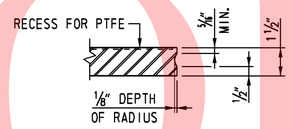

PISTON DETAIL
SCALE: 3" = 1'-0"

NOTES:

1. SOLE PLATE THICKNESS SHALL NOT BE LESS THAN ¾ INCH.

CROSS REFERENCE NOTE:

FOR BEARING NOTES AND LOCATIONS, SEE DWG. S4-26.

UNOFFICIAL WEBSITE COPY

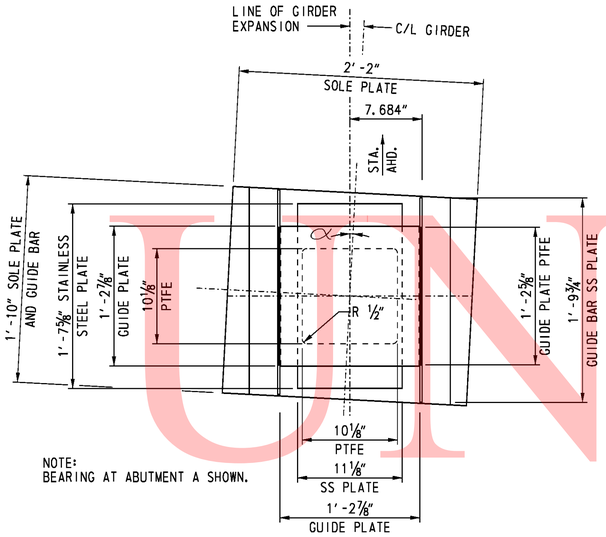

NOTE:
BEARING AT ABUTMENT A SHOWN.

SECTION A-A
SCALE: 1½" = 1'-0"

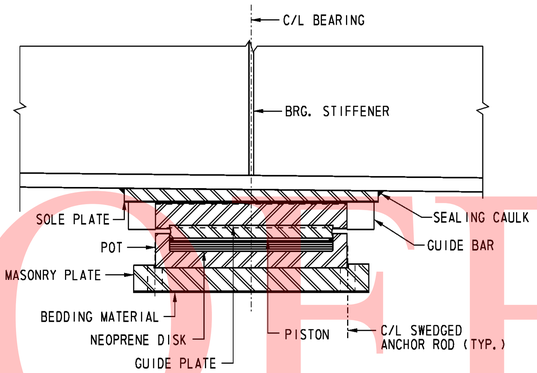

SECTION C-C
SCALE: 1½" = 1'-0"

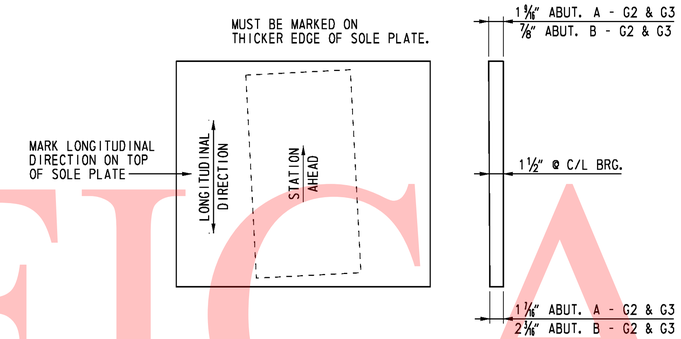

PLAN SIDE VIEW

SOLE PLATE DETAIL
SCALE: 1½" = 1'-0"

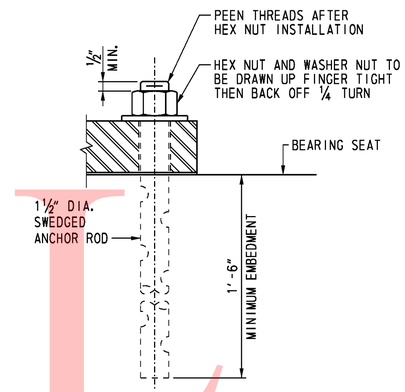

ANCHOR ROD DETAIL
SCALE: 3" = 1'-0"

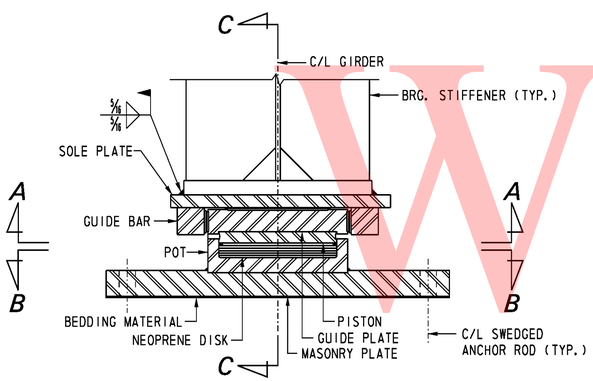

ELEVATION
SCALE: 1½" = 1'-0"

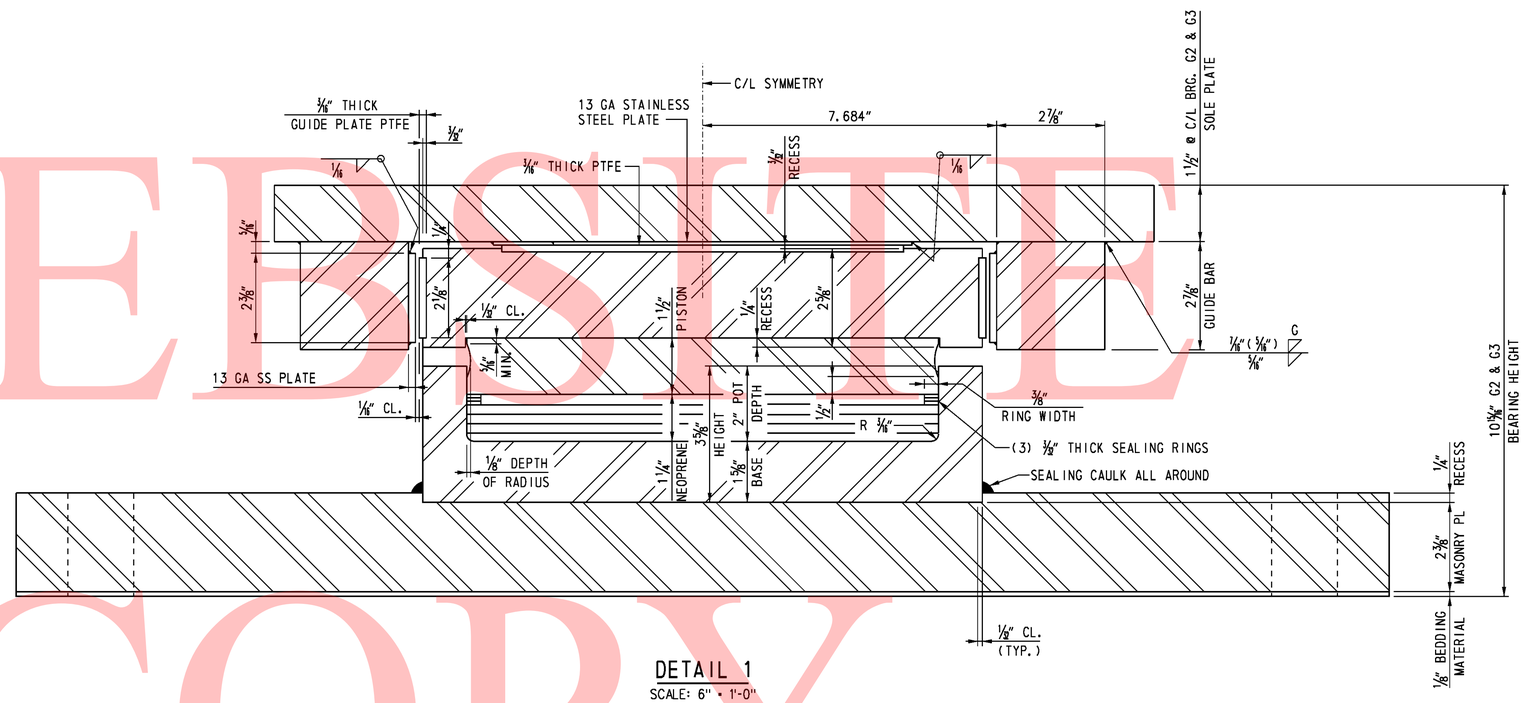

DETAIL 1
SCALE: 6" = 1'-0"

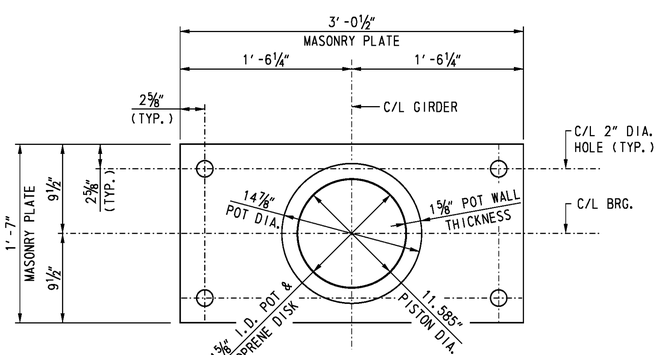

SECTION B-B
SCALE: 1½" = 1'-0"

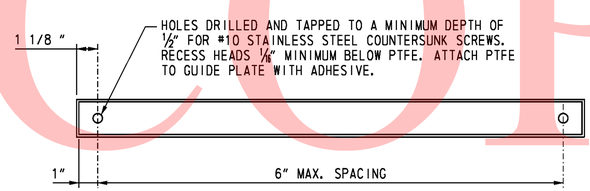

GUIDE PLATE PTFE DETAIL
NOT TO SCALE

LOCATION	SERVICE	STRENGTH		α
	VERTICAL LOAD (Kips)	VERTICAL LOAD (Kips)	HORIZONTAL LOAD (Kips)	
ABUTMENT A - G2 & G3	275	400	110	6°-29'-51" LT
ABUTMENT B - G2 & G3	275	400	110	7°-10'-57" RT

• BEARING HEIGHT INCLUDES ⅛" BEDDING MATERIAL.
BEARING HEIGHT MEASURED AT C/L BEARING

NOTES:

1. SOLE PLATE THICKNESS SHALL NOT BE LESS THAN ¾ INCH.

CROSS REFERENCE NOTE:

FOR BEARING NOTES AND LOCATIONS, SEE DWG. S4-26.

UNOFFICIAL WEBSITE COPY

10/28/2010 O:\20832687-XM\CAD\Bridge\BR-S4\bd03_BR-S4_sr1.dgn untitled

DELAWARE DEPARTMENT OF TRANSPORTATION

ADDENDUMS / REVISIONS

SR1 / I-95 INTERCHANGE

CONTRACT	BRIDGE NO.	1-717A
28-090-03	DESIGNED BY: M. E. PEAL	
COUNTY	CHECKED BY: G. P. MISTRY	
NEW CASTLE		

RAMP C OVER SR 7
GUIDED EXPANSION BEARING AT ABUTMENTS

S4-28
SHEET NO.
376
TOTAL SHTS.
803

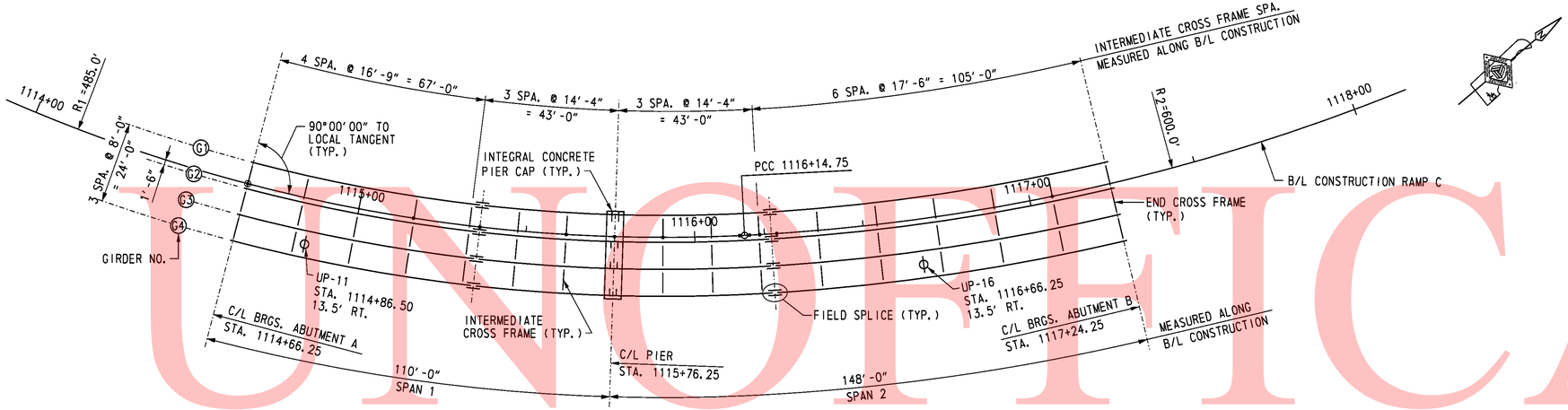

FRAMING PLAN

SCALE: 1" = 20'-0"

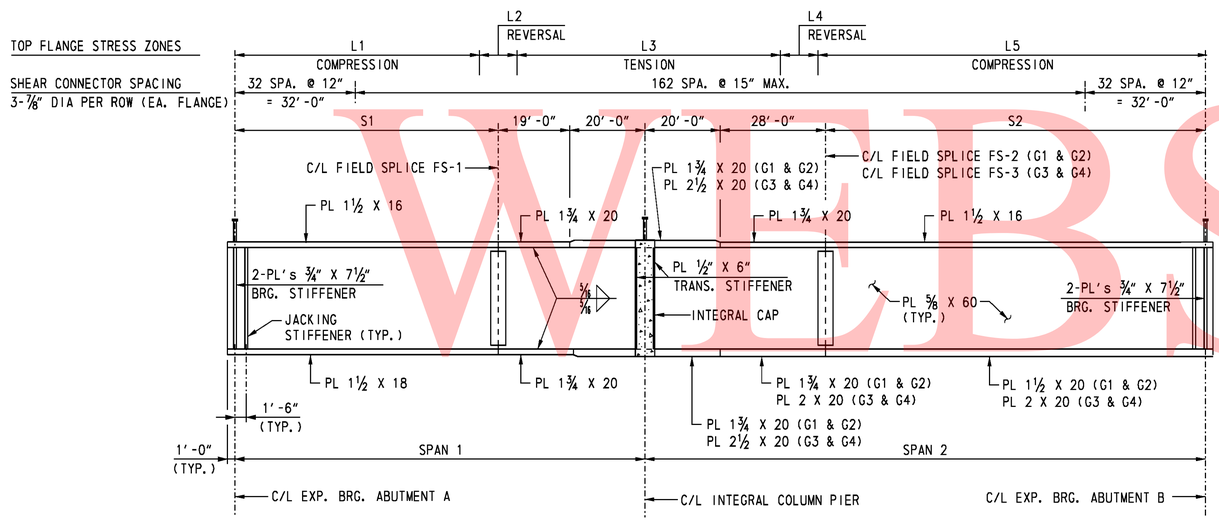

GIRDER ELEVATION

NOT TO SCALE

GIRDERS	RADIUS		SPAN LENGTH			PLATE LENGTH		TOP FLANGE STRESS ZONES				
	R_1	R_2	SPAN 1	SPAN 2	LENGTH	S1	S2	L1	L2	L3	L4	L5
G1	478'-6"	593'-6"	108'-6 3/16"	146'-3 3/16"	254'-9 7/8"	69'-6 3/16"	98'-3 3/16"	35'-0"	50'-0"	44'-9 7/8"	20'-0"	105'-0"
G2	486'-6"	601'-6"	110'-4 1/16"	148'-4 11/16"	258'-8 3/4"	71'-4 1/16"	100'-4 11/16"	35'-0"	50'-0"	48'-8 3/4"	20'-0"	105'-0"
G3	494'-6"	609'-6"	112'-1 7/8"	150'-5 7/8"	262'-7 3/4"	73'-1 7/8"	102'-5 7/8"	35'-0"	50'-0"	52'-7 3/4"	20'-0"	105'-0"
G4	502'-6"	617'-6"	113'-11 5/8"	152'-7"	266'-6 5/8"	74'-11 5/8"	104'-7"	35'-0"	50'-0"	56'-6 5/8"	20'-0"	105'-0"

NOTES:

1. THE ESTIMATED NUMBER OF SHEAR CONNECTORS IS 2724.
2. THERE SHALL BE NO FIELD WELDING TO THE TOP FLANGE, EXCEPT FOR SHEAR STUDS, IN THE TENSION AND STRESS REVERSAL AREAS.
3. STUDS SHALL BE SPACED TO CLEAR SPLICE BOLTS.
4. ALL CROSS FRAMES AND CENTERLINE BEARINGS SHALL BE RADIAL.
5. SET ENDS OF GIRDERS AND BEARING STIFFENERS VERTICAL UNDER FULL DEAD LOAD.
6. ENTIRE SUPERSTRUCTURE FRAMING SHALL BE PREASSEMBLED IN SHOP TO VERIFY FIT.

CROSS REFERENCE NOTES:

1. FOR GENERAL NOTES, SEE DWG. S4-2.
2. FOR TYPICAL SECTION, SEE DWG. S4-3.
3. FOR INTEGRAL CAP DETAILS INCLUDING LOCATION OF HOLES IN GIRDER WEBS FOR INTEGRAL PIER CAP REINFORCING AND ADDITIONAL SHEAR STUDS AT INTEGRAL CAPS, SEE DWGS. S4-21 & S4-22.
4. FOR CROSS FRAMES AND GIRDER DETAILS, SEE DWGS. S4-30 & S4-31.
5. FOR FIELD SPLICE DETAILS, SEE DWGS. S4-32 & S4-33.
6. FOR BEARING TYPES AND LOCATIONS, SEE DWG. S4-26.
7. FOR LOCATION OF TRANSVERSE STIFFENER AT INTEGRAL PIER CAP, SEE DWG. S4-22.
8. FOR UP-11 & UP-16 UNDERPASS LIGHTING SUPPORT DETAIL, SEE DWG. S4-30.

UNOFFICAL WEBSITE COPY

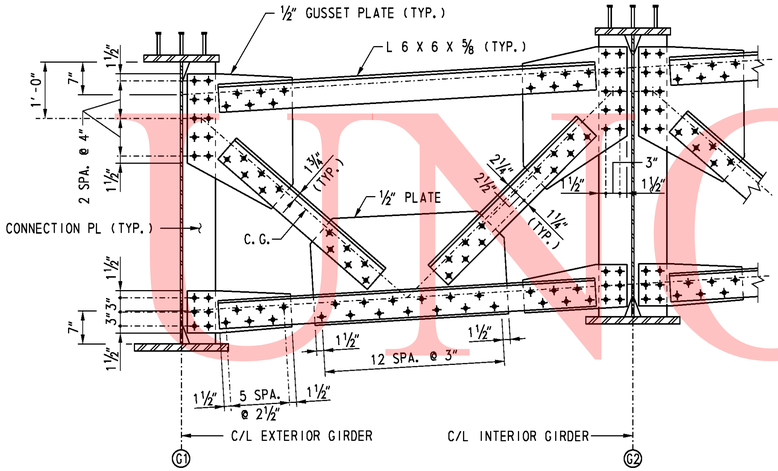

TYPICAL INTERMEDIATE CROSS FRAME

SCALE: ¾" = 1'-0"

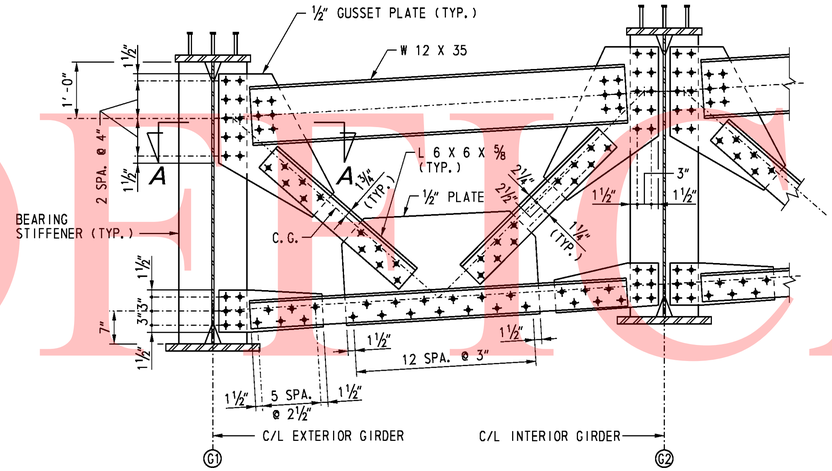

TYPICAL END CROSS FRAME

SCALE: ¾" = 1'-0"

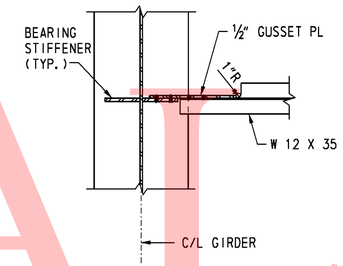

SECTION A-A

SCALE: ¾" = 1'-0"

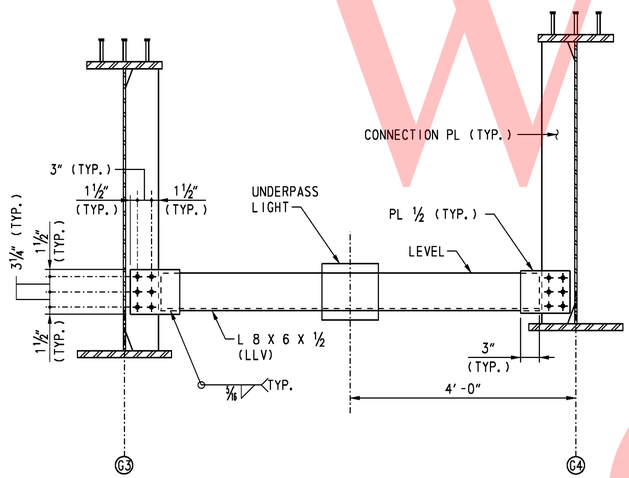

UNDERPASS LIGHT SUPPORT DETAIL

SCALE: ¾" = 1'-0"

NOTES:

1. CROSS FRAMES SHALL BE DETAILED TO FIT IN THE FULL DEAD LOAD CONDITION.
2. THE STEEL FABRICATOR SHALL COORDINATE WITH THE LIGHTING SUPPLIER FOR THE LOCATION OF HOLES IN CONNECTION PLATE FOR MOUNTING UNDERPASS LIGHT SUPPORT.
3. THE BOTTOM OF THE LIGHT FIXTURE SHALL NOT BE MORE THAN 12" FROM THE BOTTOM OF THE GIRDER AND SHALL NOT EXTEND BELOW THE BOTTOM OF THE GIRDER.

CROSS REFERENCE NOTES:

1. FOR GENERAL NOTES, SEE DWG. S4-2.
2. FOR FRAMING PLAN, SEE DWG. S4-29.
3. FOR GIRDER DETAILS, SEE DWG. S4-31.
4. FOR BOLT TYPE AND SIZE AS WELL AS HOLE SIZE, SEE DWG. S4-2.

UNOFFICIAL WEBSITE COPY

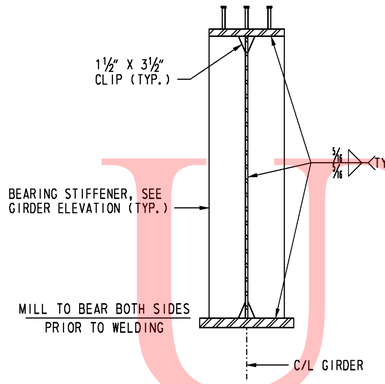

BEARING STIFFENER

SCALE: ¾" = 1'-0"

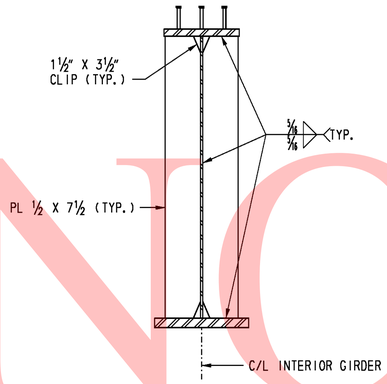

CONNECTION PLATE

SCALE: ¾" = 1'-0"

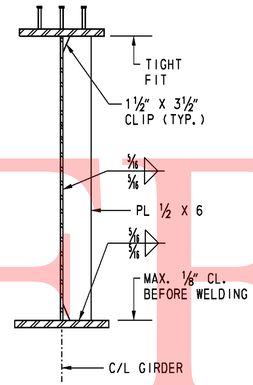

TRANSVERSE STIFFENER

SCALE: ¾" = 1'-0"

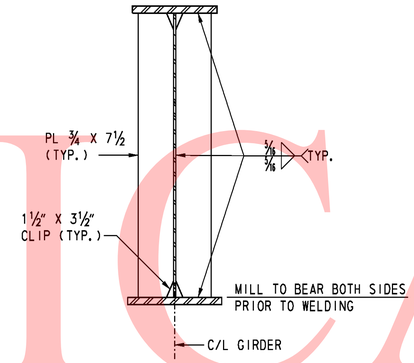

JACKING STIFFENER (AT ABUTMENTS)

SCALE: ¾" = 1'-0"

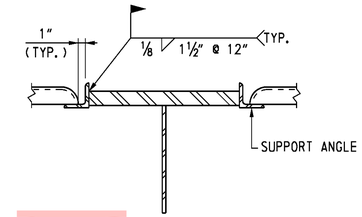

COMPRESSION FLANGE FOR S.I.P. FORMS

SCALE: 1½" = 1'-0"

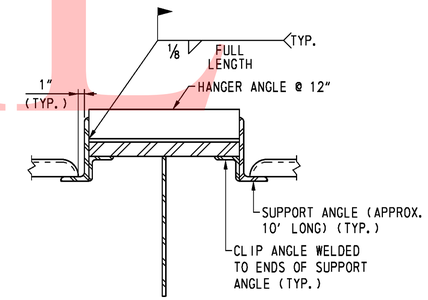

TENSION FLANGE FOR S.I.P. FORMS

SCALE: 1½" = 1'-0"

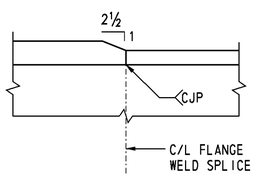

FLANGE PLATE THICKNESS TRANSITION

NOT TO SCALE

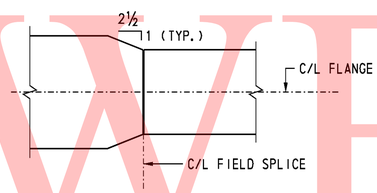

BOTTOM FLANGE PLATE WIDTH TRANSITION

NOT TO SCALE

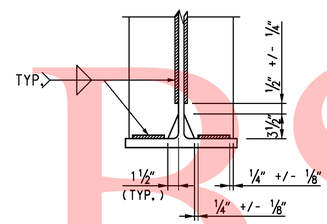

STIFFENER & CONNECTION PLATE WELD TERMINATION

NOT TO SCALE

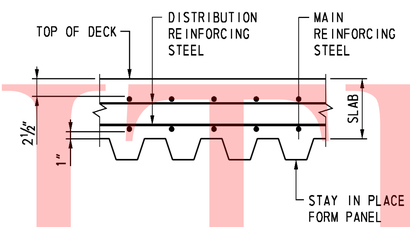

STEEL FORM NOTES:

1. FORMS SHALL BE VERTICALLY ADJUSTED TO ATTAIN FINISHED LINE, GRADE AND SLAB THICKNESS REQUIRED ON THE PLANS.
2. NO WELDING OF THESE FORMS TO FLANGES IN TENSION IS PERMITTED.

STEEL FORM SECTION

SCALE: 1½" = 1'-0"

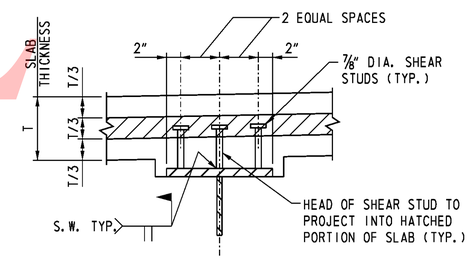

SHEAR STUD DETAIL

NOT TO SCALE

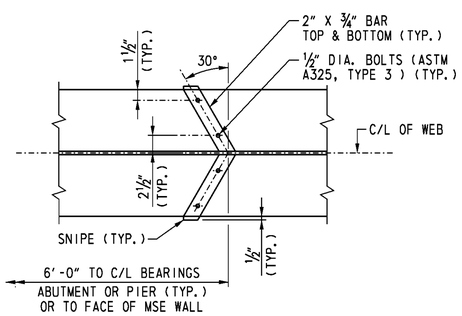

DRIP BAR DETAIL

NOT TO SCALE

NOTES:

1. DRIP BAR DETAIL SHALL BE PLACED ON BOTTOM FLANGE. PROVIDE DRIP BAR FOR GIRDER G1 AND G4 ONLY.
2. DRIP BARS ARE PLACED ADJACENT TO SUPPORTS TO PREVENT WATER FLOW ONTO SUPPORT.

CROSS REFERENCE NOTES:

1. FOR GENERAL NOTES, SEE DWG. S4-2.
2. FOR FRAMING PLAN, SEE DWG. S4-29.
3. FOR CROSS FRAME DETAILS, SEE DWG. S4-30.

UNOFFICIAL WEBSITE COPY

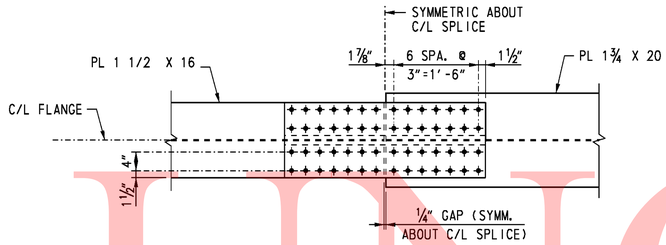

TOP FLANGE

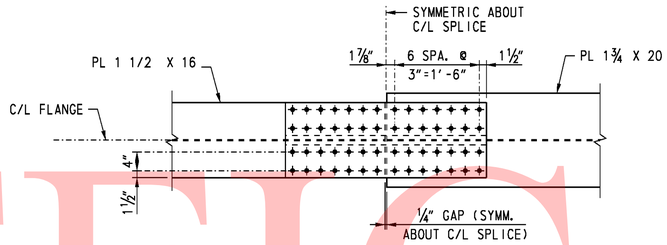

TOP FLANGE

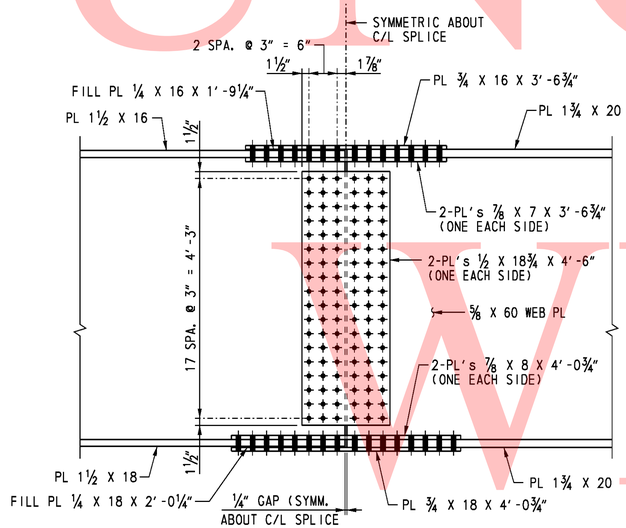

WEB SPLICE

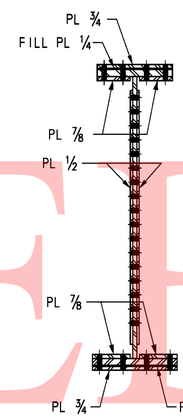

SECTION

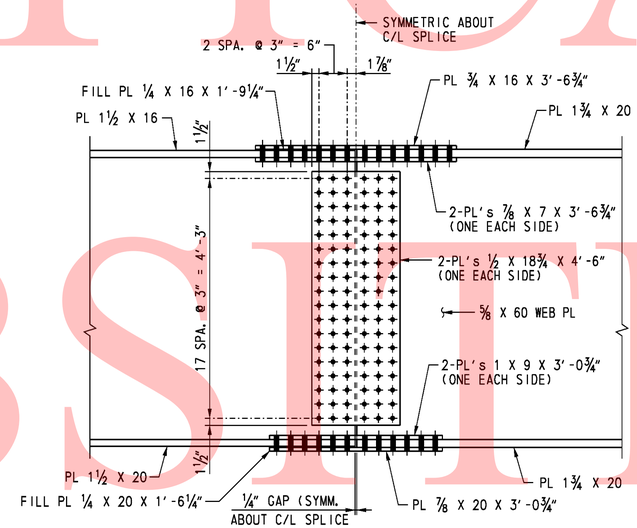

WEB SPLICE

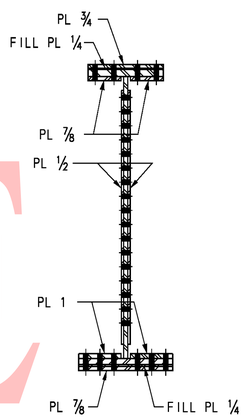

SECTION

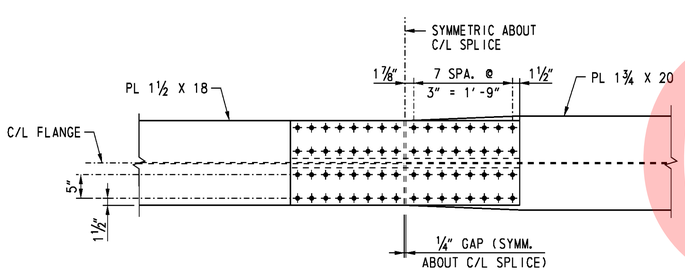

BOTTOM FLANGE

FIELD SPLICE FS-1

SCALE: ¾" = 1'-0"

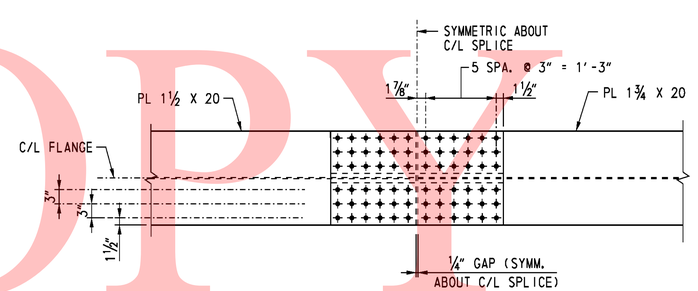

BOTTOM FLANGE

FIELD SPLICE FS-2

SCALE: ¾" = 1'-0"

NOTES:

1. ALL BOLTS SHALL BE ⅞" DIA. ASTM A 325 TYPE 3 HIGH STRENGTH BOLTS IN 15/16" DIA. HOLES. CONTACT SURFACE OF BOLTED PARTS SHALL BE CLASS B. EXCLUDE BOLT THREADS FROM SHEAR PLANES.
2. BOLT HEADS SHALL BE ON THE EXTERIOR FACE OF THE FASCIA GIRDERS AND THE BOTTOM OF THE BOTTOM FLANGE.
3. FIELD SPLICES SHALL BE COMPLETELY SHOP ASSEMBLED AND MATCH MARKED AFTER ALL SHOP WELDING HAS BEEN COMPLETED. CONTACT SURFACES SHALL BE FREE OF ALL OIL AND DIRT.
4. WEB SPLICE PLATES ARE SYMMETRIC ABOUT MID-DEPTH OF WEB.

CROSS REFERENCE NOTES:

1. FOR GENERAL NOTES, SEE DWG. S4-2.
2. FOR FRAMING PLAN AND GIRDER ELEVATION, SEE DWG. S4-29.

UNOFFICAL WEBSITE COPY

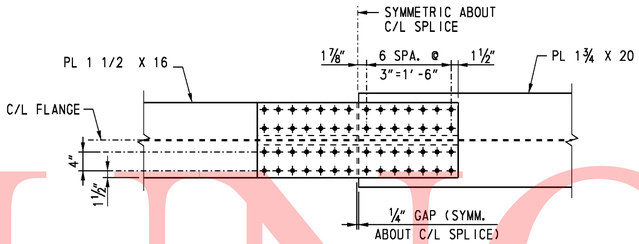

TOP FLANGE

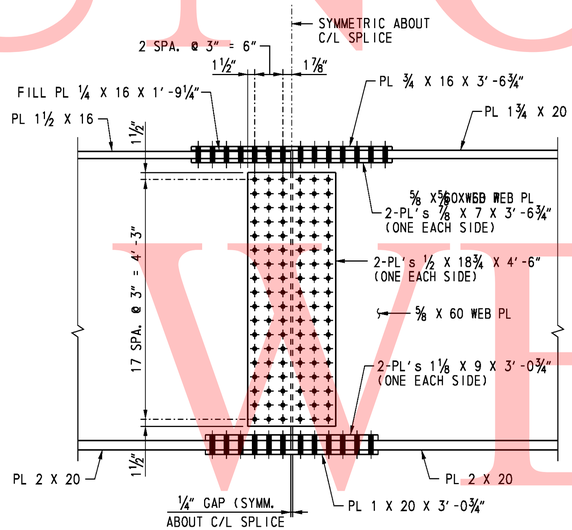

WEB SPLICE

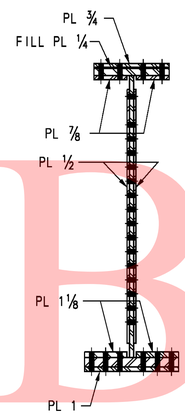

SECTION

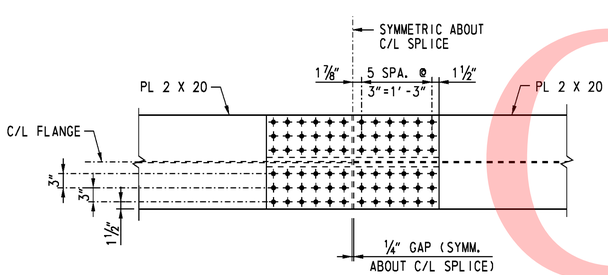

BOTTOM FLANGE

FIELD SPLICE FS-3

SCALE: 3/4" = 1'-0"

NOTES:

1. ALL BOLTS SHALL BE 7/8" DIA. ASTM A 325 TYPE 3 HIGH STRENGTH BOLTS IN 15/16" DIA. HOLES. CONTACT SURFACE OF BOLTED PARTS SHALL BE CLASS B. EXCLUDE BOLT THREADS FROM SHEAR PLANES.
2. BOLT HEADS SHALL BE ON THE EXTERIOR FACE OF THE FASCIA GIRDERS AND THE BOTTOM OF THE BOTTOM FLANGE.
3. FIELD SPLICES SHALL BE COMPLETELY SHOP ASSEMBLED AND MATCH MARKED AFTER ALL SHOP WELDING HAS BEEN COMPLETED. CONTACT SURFACES SHALL BE FREE OF ALL OIL AND DIRT.
4. WEB SPLICE PLATES ARE SYMMETRIC ABOUT MID-DEPTH OF WEB.

CROSS REFERENCE NOTES:

1. FOR GENERAL NOTES, SEE DWG. S4-2.
2. FOR FRAMING PLAN AND GIRDER ELEVATION, SEE DWG. S4-29.

UNOFFICAL WEBSITE COPY

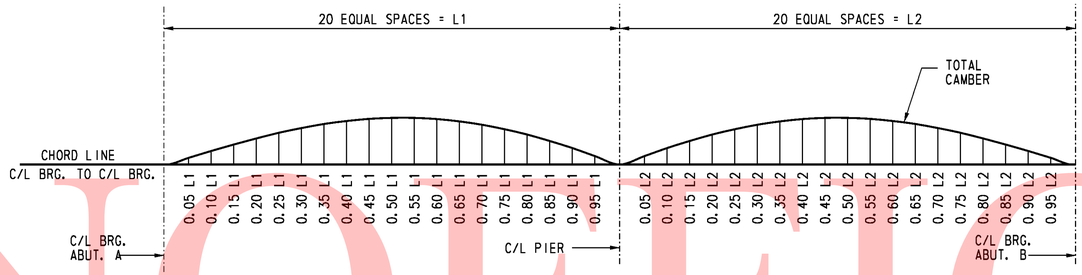

SCHEMATIC CAMBER DIAGRAM

CAMBER ORDINATES (IN)

GIRDER NO.	POINT	C/L BRG. ABUT. A	SPAN 1 0.05L	0.10L	0.15L	0.20L	0.25L	0.30L	0.35L	0.40L	0.45L	0.50L	0.55L	0.60L	0.65L	0.70L	0.75L	0.80L	0.85L	0.90L	0.95L	C/L PIER	SPAN 2 0.05L	0.10L	0.15L	0.20L	0.25L	0.30L	0.35L	0.40L	0.45L	0.50L	0.55L	0.60L	0.65L	0.70L	0.75L	0.80L	0.85L	0.90L	0.95L	C/L BRG. ABUT. B
G1	DLS	0	0	1/16	1/16	1/8	1/8	1/8	1/8	1/8	1/8	1/8	1/8	1/4	1/4	1/4	0	-1/16	-1/16	0	0	0	1/16	1/8	3/16	3/16	7/16	1/2	5/16	11/16	3/4	3/4	3/4	3/4	3/4	11/16	5/8	1/2	7/16	1/4	1/8	0
	DLC	0	1/16	1/8	3/16	1/4	3/16	5/16	3/8	3/8	5/16	5/16	1/4	3/16	1/8	1/16	1/16	0	-1/16	-1/16	0	0	3/16	5/16	3/16	1/8	1 1/16	1 1/4	1 1/2	1 11/16	1 13/16	1 13/16	1 13/16	1 13/16	1 7/8	1 3/4	1 3/16	1 5/16	1 1/16	11/16	3/8	0
	SDL	0	0	1/16	1/16	1/16	1/8	1/8	1/8	1/8	1/8	1/16	1/16	1/16	1/16	0	0	0	0	0	0	0	1/16	1/8	3/16	1/4	3/16	3/8	7/16	1/2	9/16	5/8	5/8	9/16	9/16	1/2	3/8	5/16	3/16	1/16	1/8	0
	TDC	0	1/8	1/4	3/8	7/16	1/2	9/16	5/8	9/16	9/16	1/2	7/16	5/16	1/4	1/8	1/16	-1/16	-1/8	-1/8	-1/16	0	1/4	9/16	15/16	1 3/8	1 3/4	2 3/16	2 9/16	2 7/8	3 1/8	3 1/4	3 3/16	3 3/16	3 3/16	3	2 11/16	2 1/4	1 3/4	1 1/16	5/8	0
	VCO	0	1 3/16	2 1/4	3 3/16	4	4 11/16	5 1/4	5 11/16	6	6 5/16	6 1/4	6 3/16	6	5 11/16	5 1/4	4 11/16	4	3 3/16	2 1/4	1 3/16	0	1 5/8	3 1/16	4 1/4	5 1/4	6	6 1/2	6 13/16	6 7/8	6 11/16	6 3/16	5 3/4	5 1/8	4 1/16	3 13/16	3 3/16	2 9/16	1 15/16	1 1/4	5/8	0
	TDC+VCO	0	1 3/16	2 1/2	3 9/16	4 7/16	5 5/16	5 13/16	6 1/4	6 9/16	6 3/4	6 3/4	6 5/8	6 5/16	5 15/16	5 3/8	4 11/16	3 15/16	3 3/16	2 1/8	1 1/8	0	1 11/16	3 5/8	5 5/16	6 5/16	7 3/4	8 11/16	9 3/16	9 3/4	9 15/16	9 5/8	9 1/16	8 1/16	7 11/16	6 13/16	5 7/8	4 9/16	3 11/16	2 1/2	1 1/4	0
G2	DLS	0	0	1/16	1/16	1/16	1/16	1/16	1/16	1/16	1/16	0	0	0	-1/16	-1/16	-1/16	-1/16	-1/16	-1/16	-1/16	0	1/16	3/16	5/16	7/16	9/16	11/16	13/16	15/16	1	1 1/16	1 1/16	1 1/16	1	15/16	7/8	3/4	9/16	3/8	3/16	0
	DLC	0	1/16	1/8	3/16	3/16	1/4	1/4	1/4	1/4	3/16	1/8	1/8	1/16	0	-1/16	-1/8	-1/8	-1/8	-1/8	-1/16	0	1/4	7/16	3/4	1 1/16	1 3/8	1 11/16	1 13/16	2 3/16	2 3/8	2 1/2	2 3/16	2 3/16	2 7/16	2 3/16	2 1/16	1 3/4	1 3/8	15/16	7/16	0
	SDL	0	0	1/16	1/16	1/16	1/16	1/16	1/16	1/16	1/16	0	0	0	0	0	-1/16	-1/16	-1/16	-1/16	-1/16	0	1/16	1/8	3/16	5/16	1/4	7/16	1/2	9/16	5/8	11/16	3/4	3/4	3/4	3/4	11/16	5/8	1/2	3/8	1/4	1/8	0
	TDC	0	1/8	3/16	1/4	3/16	3/8	3/8	3/8	3/16	3/16	3/16	1/8	0	-1/16	-1/8	-3/16	-1/4	-1/4	-1/4	-1/8	0	3/8	3/4	1 1/4	1 13/16	2 3/8	2 7/8	3 3/8	3 11/16	4 1/16	4 3/16	4 3/8	4 3/8	4 3/16	3 7/8	3 1/2	2 15/16	2 5/16	1 15/16	15/16	0
	VCO	0	1 3/16	2 1/4	3 3/16	4	4 11/16	5 1/4	5 11/16	6	6 5/16	6 1/4	6 3/16	6	5 11/16	5 1/4	4 11/16	4	3 3/16	2 1/4	1 3/16	0	1 5/8	3 1/16	4 1/4	5 1/4	6	6 1/2	6 13/16	6 7/8	6 11/16	6 3/16	5 3/4	5 1/8	4 1/16	3 13/16	3 3/16	2 9/16	1 15/16	1 1/4	5/8	0
	TDC+VCO	0	1 3/16	2 7/16	3 7/16	4 5/16	5	5 5/8	6 1/16	6 5/16	6 7/16	6 3/16	6 3/16	6	5 5/8	5 1/16	4 7/16	3 3/4	2 7/8	2	1 1/16	0	2 1/16	3 11/16	5 1/2	7 1/16	8 3/16	9 3/8	10 1/16	10 5/8	10 11/16	10 5/8	10 1/8	9 1/2	8 11/16	7 3/4	6 11/16	5 1/2	4 1/4	2 7/8	1 7/16	0
G3	DLS	0	0	0	0	0	0	0	0	0	-1/16	-1/16	-1/16	-1/16	-1/16	-1/16	-1/16	-1/16	-1/16	-1/16	-1/16	0	1/8	1/4	7/16	3/16	3/4	15/16	1 1/16	1 3/16	1 5/16	1 5/8	1 3/8	1 3/8	1 5/16	1 1/4	1 1/8	15/16	3/4	1/2	1/4	0
	DLC	0	1/16	1/16	1/8	1/8	1/8	1/8	1/8	1/16	1/16	0	-1/16	-1/16	-3/16	-1/4	-1/4	-5/16	-1/4	-1/4	-1/8	0	5/16	9/16	15/16	1 5/16	1 11/16	2 1/16	2 7/16	2 11/16	2 15/16	3 1/8	3 3/16	3 1/8	3	2 13/16	2 1/2	2 1/8	1 11/16	1 1/8	9/16	0
	SDL	0	0	0	1/16	1/16	1/16	1/16	1/16	0	0	0	0	-1/16	-1/16	-1/16	-1/16	-1/16	-1/16	-1/16	-1/16	0	1/16	3/16	1/4	3/8	1/2	5/8	3/4	13/16	7/8	15/16	15/16	15/16	7/8	15/16	3/4	5/8	1/2	3/16	1/16	0
	TDC	0	1/16	1/8	3/16	3/16	3/16	3/16	1/8	1/16	0	-1/8	-3/16	-3/16	-3/8	-1/2	-1/2	-1/2	-1/2	-3/8	-3/16	0	1/2	1	1 5/8	2 3/16	2 13/16	3 5/8	4 3/16	4 3/4	5 1/8	5 3/8	5 1/2	5 7/16	5 1/4	4 7/8	4 3/8	3 11/16	2 7/8	2	1	0
	VCO	0	1 3/16	2 1/4	3 3/16	4	4 11/16	5 1/4	5 11/16	6	6 5/16	6 1/4	6 3/16	6	5 11/16	5 1/4	4 11/16	4	3 3/16	2 1/4	1 3/16	0	1 5/8	3 1/16	4 1/4	5 1/4	6	6 1/2	6 13/16	6 7/8	6 11/16	6 3/16	5 3/4	5 1/8	4 1/16	3 13/16	3 3/16	2 9/16	1 15/16	1 1/4	5/8	0
	TDC+VCO	0	1 1/4	2 3/8	3 3/8	4 3/16	4 7/8	5 1/16	5 11/16	6 1/16	6 5/16	6 1/8	5 13/16	5 11/16	5 1/4	4 3/4	4 1/8	3 7/16	2 11/16	1 7/8	1	0	2 1/8	4 1/16	5 7/8	7 3/16	8 13/16	10 1/8	11	11 5/8	11 13/16	11 11/16	11 1/4	10 9/16	9 11/16	8 11/16	7 9/16	6 1/4	4 15/16	3 1/4	1 5/8	0
G4	DLS	0	0	0	0	0	-1/16	-1/16	-1/16	-1/8	-1/8	-3/16	-3/16	-1/4	-1/4	-1/4	-1/4	-1/4	-3/16	-3/16	-1/16	0	3/16	5/16	1/2	3/4	15/16	1 1/8	1 5/16	1 1/2	1 5/8	1 11/16	1 11/16	1 11/16	1 5/8	1 1/2	1 3/8	1 1/8	7/8	5/8	3/16	0
	DLC	0	0	1/16	1/16	1/16	1/16	0	0	-1/16	-1/8	-3/16	-1/4	-3/8	-3/8	-7/16	-7/16	-7/16	-3/8	-5/16	-1/8	0	3/8	11/16	1 1/8	1 13/16	2	2 1/2	2 7/8	3 1/4	3 1/2	3 11/16	3 13/16	3 3/4	3 5/8	3 3/8	3	2 9/16	2	1 5/8	11/16	0
	SDL	0	1/8	1/4	3/16	1/16	0	1/16	1/16	0	0	0	-1/16	-1/16	-1/16	-1/8	-1/8	-1/8	-1/8	-1/16	-1/16	0	1/8	1/16	3/8	1/2	5/8	3/4	7/8	1	1 1/8	1 1/8	1 1/16	1 1/16	1 1/8	1 1/16	15/16	15/16	5/8	7/16	3/16	0
	TDC	0	1/8	1/4	1/4	1/16	0	0	-1/16	-3/16	-5/16	-7/16	-1/2	-5/8	-3/4	-15/16	-15/16	-15/16	-11/16	-5/16	-1/4	0	5/8	1 1/4	2	2 11/16	3 5/8	4 3/8	5 1/16	5 3/4	6 5/16	6 11/16	6 11/16	6 5/8	6 3/8	5 15/16	5 3/16	4 1/2	3 3/16	2 7/16	1 3/16	0
	VCO	0	1 3/16	2 1/4	3 3/16	4	4 11/16	5 1/4	5 11/16	6	6 5/16	6 1/4	6 3/16	6	5 11/16	5 1/4	4 11/16	4	3 3/16	2 1/4	1 3/16	0	1 5/8	3 1/16	4 1/4	5 1/4	6	6 1/2	6 13/16	6 7/8	6 11/16	6 3/16	5 3/4	5 1/8	4 1/16	3 13/16	3 3/16	2 9/16	1 15/16	1 1/4	5/8	0
	TDC+VCO	0	1 3/16	2 1/2	3 7/16	4 1/16	4 11/16	5 1/4	5 7/16	5 13/16	5 7/8	5 13/16	5 5/8	5 3/16	4 15/16	4 1/16	3 7/8	3 3/16	2 7/16	1 11/16	7/8	0	2 1/4	4 3/16	6 1/4	8 1/16	9 9/16	10 7/8	11 7/8	12 5/8	12 15/16	12 7/8	12 7/16	11 3/4	10 7/8	9 3/4	8 1/2	7 1/16	5 7/16	3 11/16	1 7/8	0

LEGEND

DLS - DENOTES DEFLECTION DUE TO STRUCTURAL STEEL GIRDER.

DLC - DENOTES DEFLECTION DUE TO DECK SLAB, HAUNCH AND S.I.P. FORMS

SDL - DENOTES DEFLECTION DUE TO BARRIER

TDC - DENOTES TOTAL DEAD LOAD DEFLECTION AND CAMBER

VCO - DENOTES CAMBER FOR VERTICAL CURVE ORDINATE DUE TO ROADWAY PROFILE

TDC+VCO - DENOTES TOTAL CAMBER

ALL GIRDERS SHALL BE CAMBERED FOR DEAD LOAD DEFLECTION ORDINATES TO THE DIMENSIONS SHOWN ON THESE PLANS. THE CAMBER TOLERANCE IS NOTHING UNDER TO THREE QUARTERS (3/4) INCH OVER.

CROSS REFERENCE NOTES:

1. FOR GENERAL NOTES, SEE DWG. S4-2.
2. FOR VERTICAL CURVE DATA, SEE DWG. S4-1.
3. FOR GIRDER ELEVATION, SEE DWG. S4-29.

UNOFFICAL WITNESS COPY

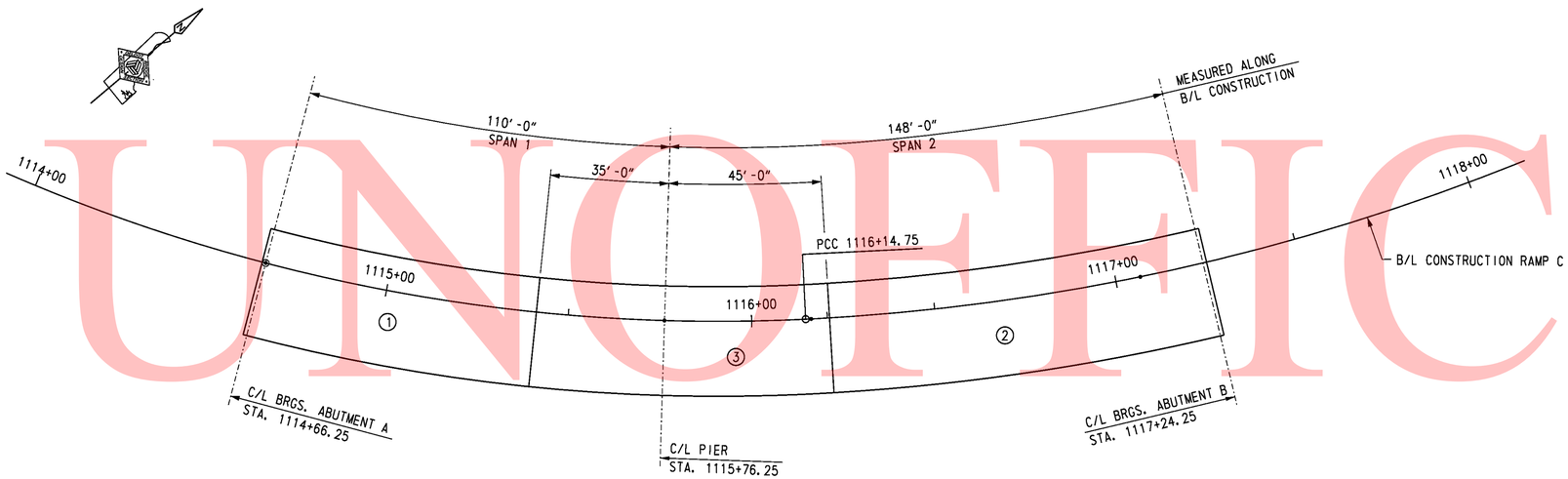

BRIDGE DECK POURING SEQUENCE

SCALE: 1" = 20'-0"

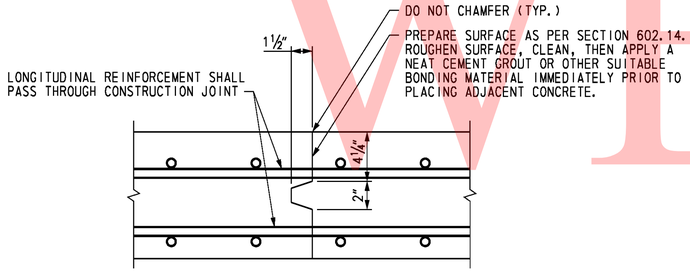

BRIDGE DECK CONSTRUCTION JOINT

NOT TO SCALE

NOTES:

1. THE POURING SEQUENCE FOR THE BRIDGE DECK SLAB SHALL BE MADE IN THE NUMBERED ORDER INDICATED. THERE MUST BE AT LEAST FORTY (40) HOURS BETWEEN THE COMPLETION OF ONE NUMBERED POUR AND THE START OF THE NEXT NUMBERED POUR.
2. AS AN ALTERNATE, CONTRACTOR MAY UTILIZE TWO CREWS AND TWO SETS OF EQUIPMENT TO CONSTRUCT POURS NUMBER 1 AND 2 SIMULTANEOUSLY.
3. CONCRETE FOR PIER CAP IS POURED BETWEEN DECK POURS 2 AND 3. ALLOW SUFFICIENT TIME FOR PIER CAPS TO REACH A MINIMUM COMPRESSIVE STRENGTH OF 3,000 PSI BEFORE POURING NEGATIVE MOMENT REGION.

CROSS REFERENCE NOTES:

1. FOR GENERAL NOTES, SEE DWG. S4-2.
2. FOR TYPICAL SECTION, SEE SEE DWG. S4-3 .
3. FOR PIER CAP CONSTRUCTION, SEE DWG. S4-21.

UNOFFICAL WEBSITE COPY

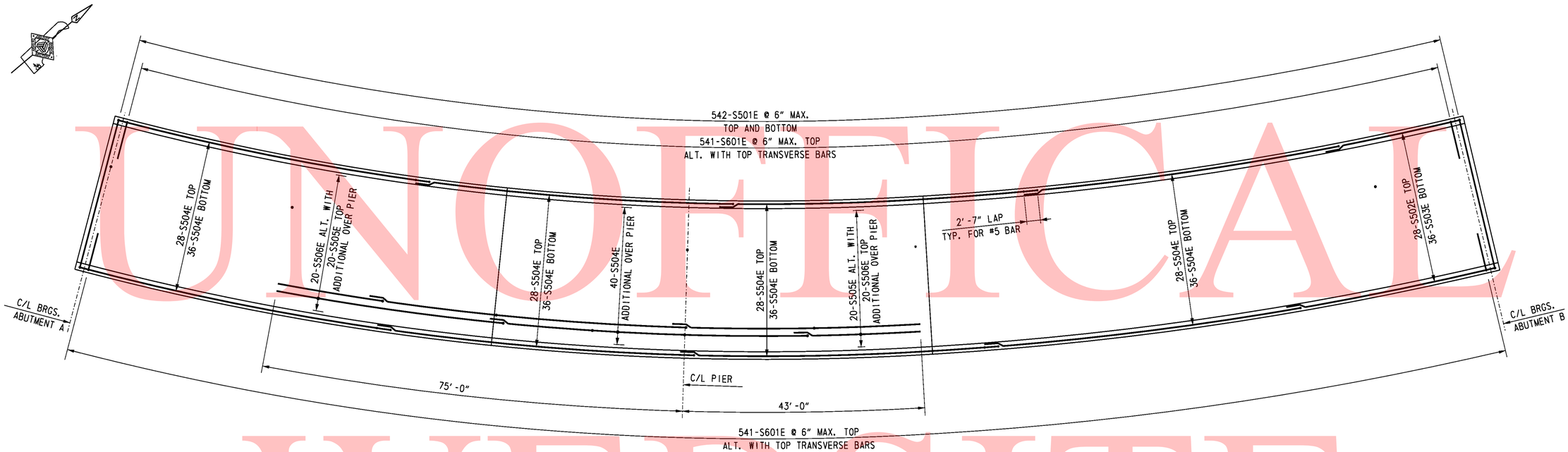

BRIDGE DECK REINFORCEMENT PLAN

SCALE: 1" = 10'-0"

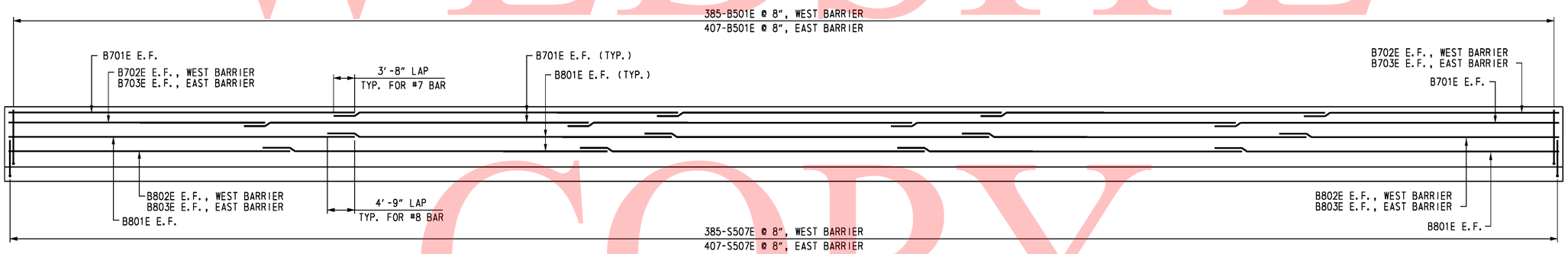

ELEVATION - DECK AND BARRIER REINFORCEMENT

NOT TO SCALE

CROSS REFERENCE NOTES:

1. FOR GENERAL NOTES, SEE DWG. S4-2.
2. FOR TYPICAL SECTION, SEE SEE DWG. S4-3.
3. FOR TYPICAL DECK REINFORCEMENT SECTION, SEE DWG. S4-37.
4. FOR REINFORCING BAR LIST, SEE DWG. S4-38.

UNOFFICAL WEBSITE COPY

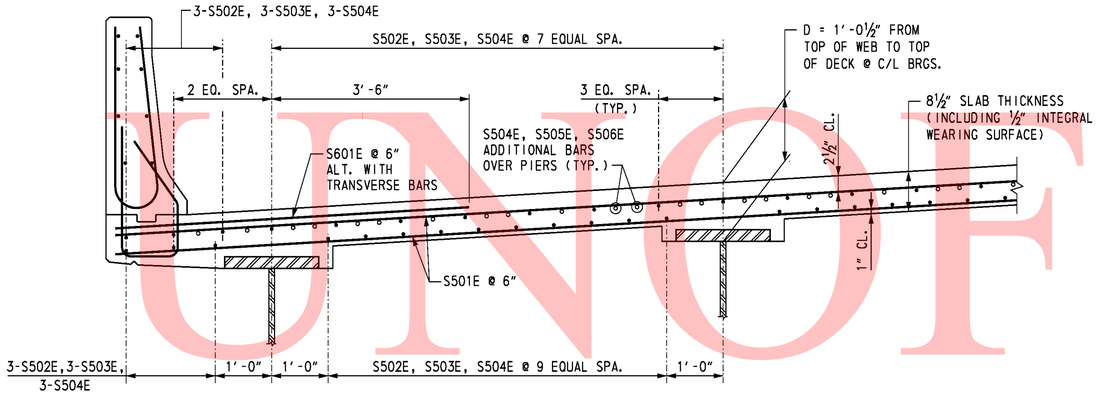

TYPICAL DECK REINFORCEMENT SECTION

SCALE: ¾" = 1'-0"

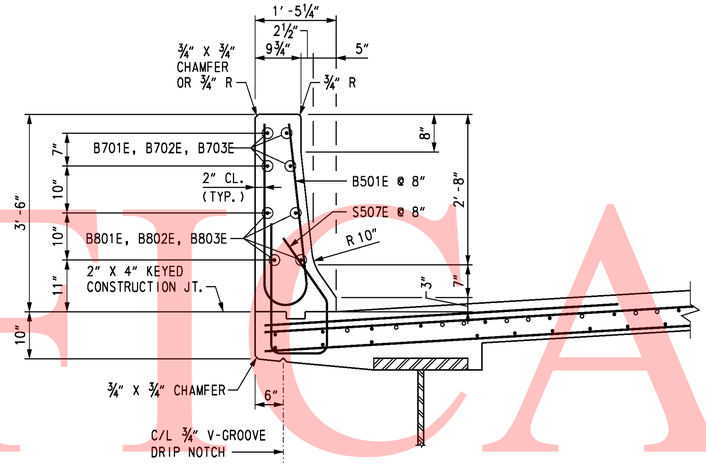

TYPICAL BARRIER REINFORCEMENT SECTION

SCALE: ¾" = 1'-0"

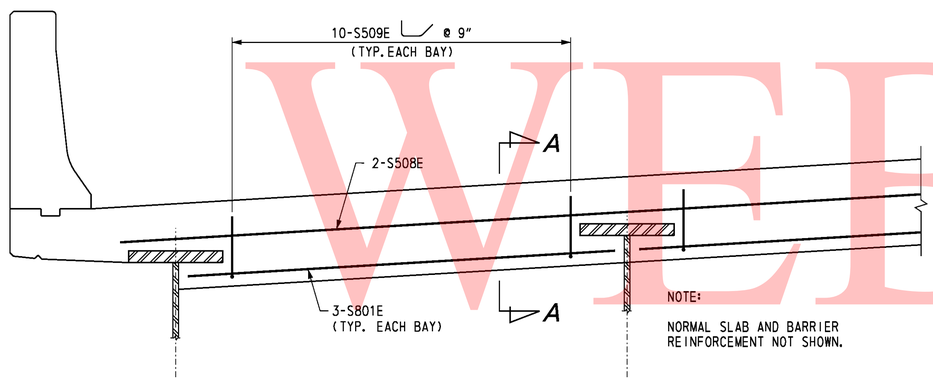

TYPICAL CONCRETE END HAUNCH SECTION

SCALE: ¾" = 1'-0"

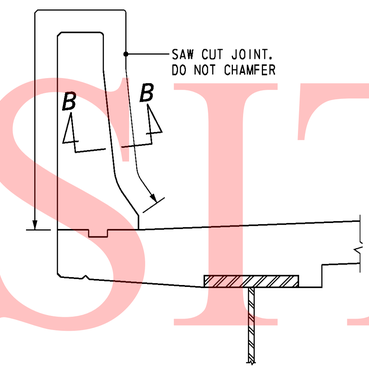

BARRIER CONTROL JOINT DETAIL

SCALE: ¾" = 1'-0"

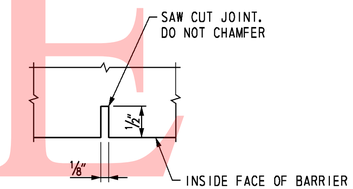

SECTION B-B

NOT TO SCALE

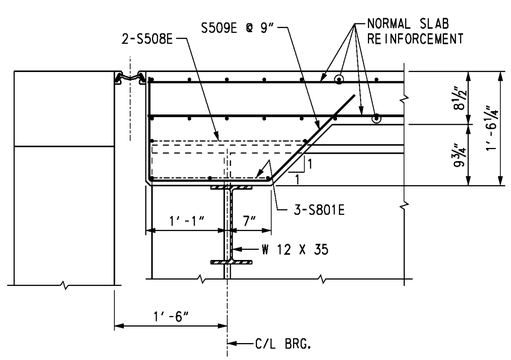

SECTION A-A

SCALE: 1" = 1'-0"

NOTES:

1. LONGITUDINAL SLAB REINFORCEMENT IS SET TO PASS THROUGH TRANSVERSE BARRIER BARS AS SHOWN.
2. ALL LONGITUDINAL BARRIER BARS SHALL BE PLACED CONTINUOUSLY IN BARRIER, LAPPING AS NECESSARY. BARRIER IS PLACED CONTINUOUSLY.
3. FRONT FACE OF BARRIER DIMENSIONED FROM PLUMB LINE.
4. SAW CUT CONTROL JOINT THE SAME DAY THAT CONCRETE IS POURED.

CROSS REFERENCE NOTES:

1. FOR GENERAL NOTES, SEE DWG. S4-2.
2. FOR REINFORCING BAR LIST, SEE DWG. S4-38.

UNOFFICIAL WEBSITE COPY

REINFORCING BAR LIST

BRIDGE DECK SLAB AND BARRIER

MARK	LENGTH	NO. BARS	TYPE	A	B	C	D	E	F	G	H	K	O	R	REMARKS
S501E	29′-6″	1,084	STR.												
S502E	26′-0″ TO 40′-6″	28	STR.												△ = 0′-6½″
S503E	26′-0″ TO 40′-6″	36	STR.												△ = 0′-5″
S504E	60′-0″	296	STR.												
S505E	20′-0″	40	STR.												
S506E	43′-2″	40	STR.												
S507E	6′-3¾″	792	16	2′-8″	1′-1¼″	0′-10½″	1′-8″				0′-11¾″	1′-4½″			
S508E	26′-0″	4	STR.												
S509E	3′-11¾″	60	4	1′-1¾″	1′-5″	1′-5″					1′-0″	1′-0″			
S601E	6′-4″	1,082	STR.												
S801E	7′-7″	18	STR.												
B501E	6′-8¼″	792	H1		2′-10″	1′-0¼″	2′-10″				0′-5″			0′-4¼″	
B701E	60′-0″	32	STR.												
B702E	30′-0″	4	STR.												
B703E	45′-0″	4	STR.												
B801E	60′-0″	32	STR.												
B802E	34′-9″	4	STR.												
B803E	49′-3″	4	STR.												

BENDING DIAGRAMS

ALL DIMENSIONS ARE FROM OUT TO OUT.

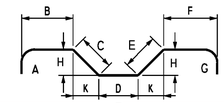

4

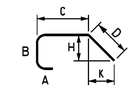

16

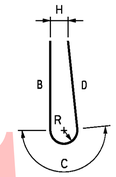

H1

UNOFFICAL WEBSITE COPY

10/28/2010 O:\20832687-XM\CAD\Bridge\BR-S4\dk04_BR-S4_sr1.dgn untitled

DELAWARE DEPARTMENT OF TRANSPORTATION

ADDENDUMS / REVISIONS

SR1 / I-95 INTERCHANGE

CONTRACT	BRIDGE NO.	1-717A	RAMP C OVER SR 7	S4-38
28-090-03	DESIGNED BY: R. F. KIRCHNER		BRIDGE DECK AND BARRIER REINFORCING BAR LIST	SHEET NO. 386
COUNTY				TOTAL SHTS.
NEW CASTLE	CHECKED BY: C. J. LOGAN			803

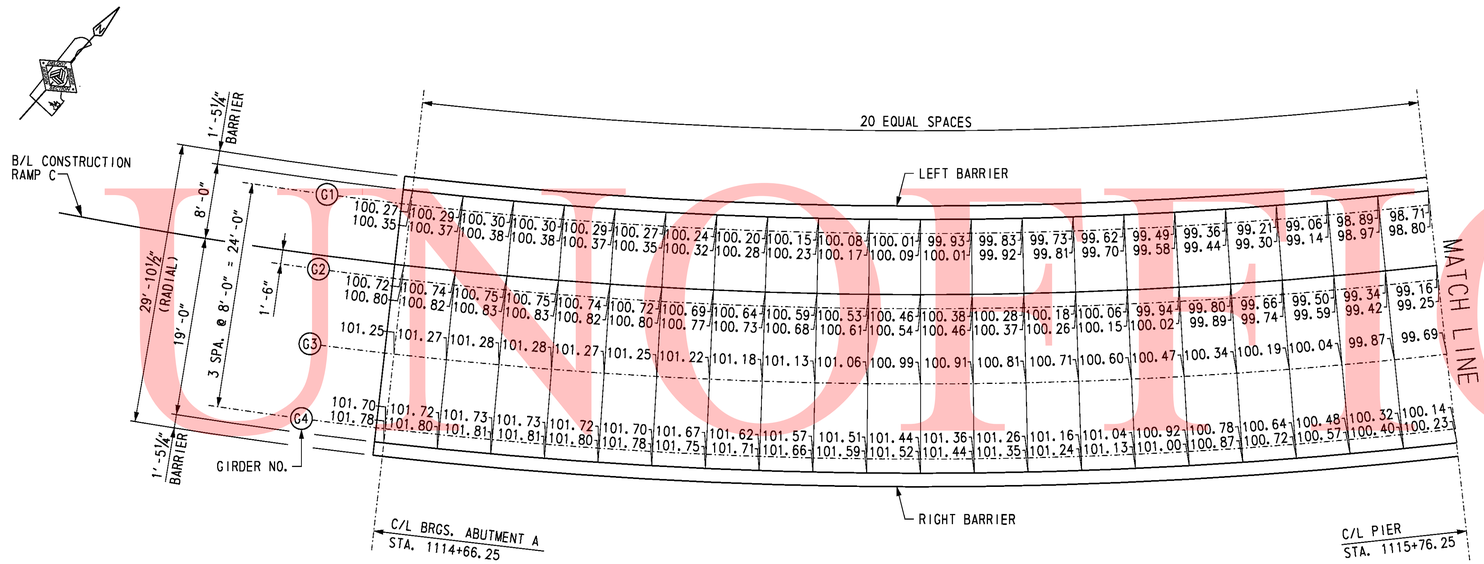

FINISHED BRIDGE DECK ELEVATIONS

SCALE: ⅛" = 1'-0"

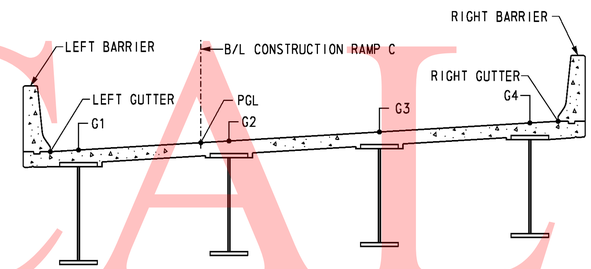

TYPICAL SECTION - RAMP C

SCALE: 1/4" = 1'-0"

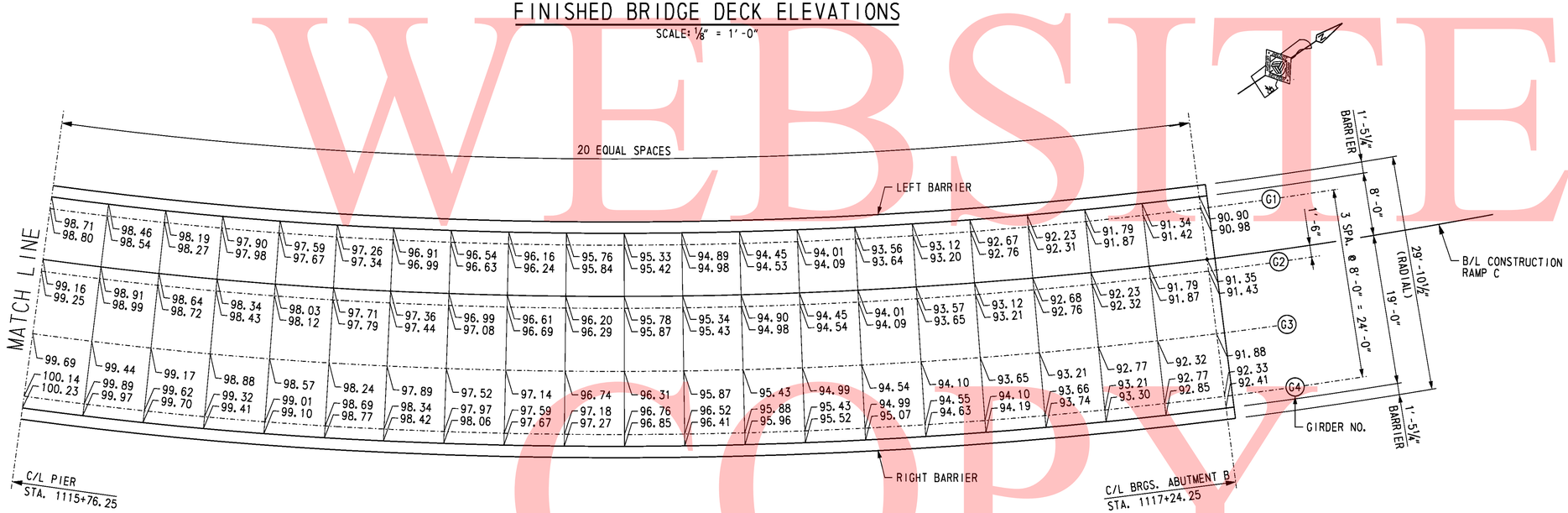

FINISHED BRIDGE DECK ELEVATIONS

SCALE: ⅛" = 1'-0"

NOTE:

THE FINISHED BRIDGE DECK ELEVATIONS SHOWN ARE TO TOP OF CONCRETE DECK.

CROSS REFERENCE NOTES:

1. FOR VERTICAL CURVE DATA, SEE DWG. S4-1.
2. FOR CROSS-SLOPE, SEE DWG. S4-3.
3. FOR GIRDER ELEVATION, SEE DWG. S4-29.

UNOFFICIAL WEBSITE COPY

DELAWARE DEPARTMENT OF TRANSPORTATION	ADDENDUMS / REVISIONS	SR1 / I-95 INTERCHANGE	CONTRACT 28-090-03	BRIDGE NO. 1-717A	RAMP C OVER SR 7 FINISHED BRIDGE DECK ELEVATIONS	S4-39	
			COUNTY NEW CASTLE	DESIGNED BY: K. D. BEAVER		SHEET NO. 387	
				CHECKED BY: G. P. MISTRY		TOTAL SHTS. 803	

10/28/2010 O:\20832687-XM\CAD\Bridge\BR-S4\fd01_BR-S4_sr1.dgn untitled

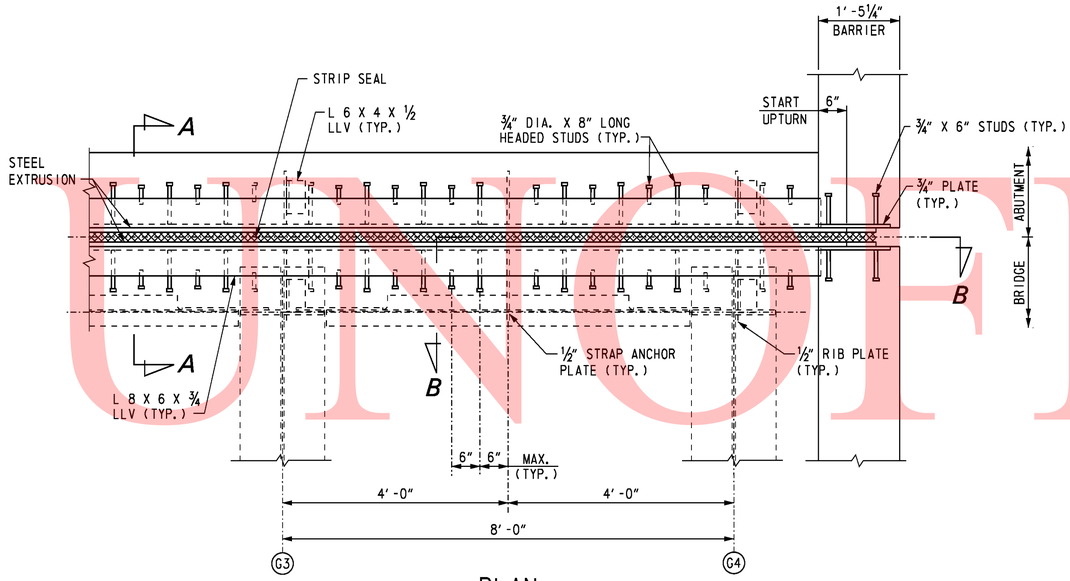

PLAN

SCALE: ¾" = 1'-0"

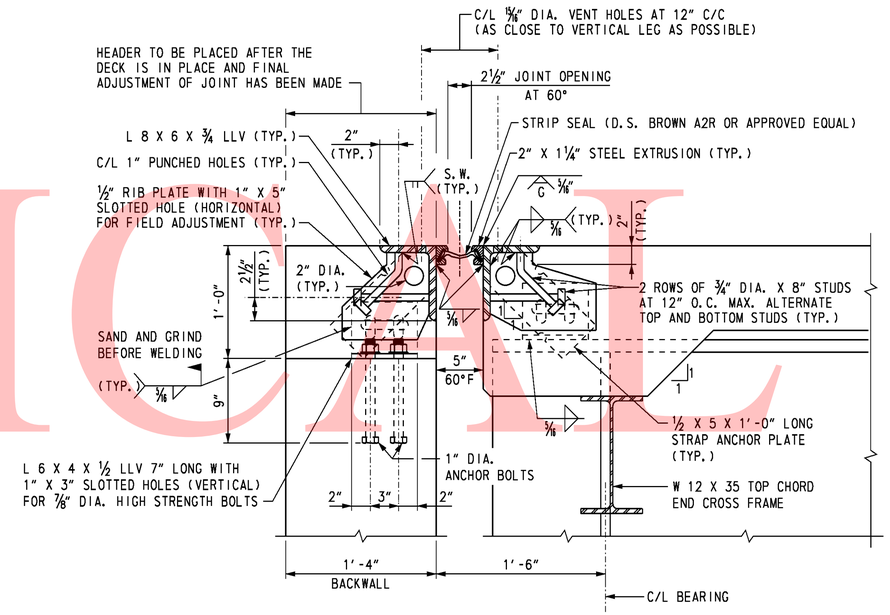

SECTION A-A

SCALE: 1½" = 1'-0"

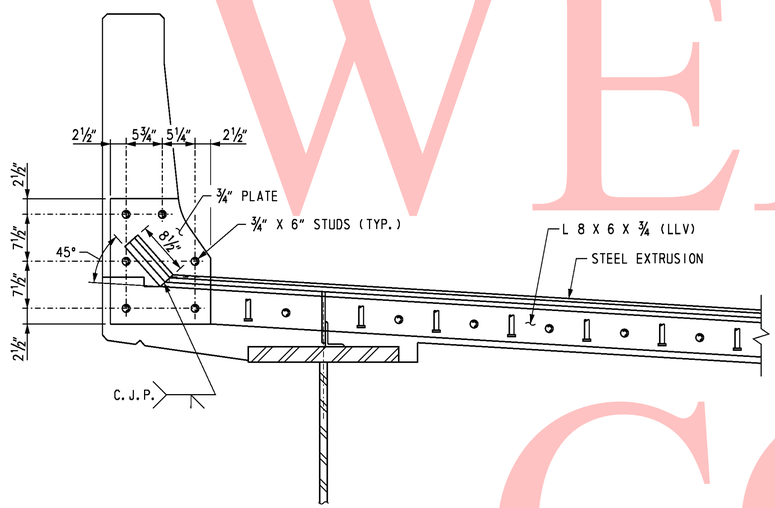

SECTION B-B

SCALE: 1" = 1'-0"

JOINT OPENING (INCH)												
LOCATION	TEMPERATURE (°F)											MOVEMENT CLASSIFICATION
	0	10	20	30	40	50	60	70	80	90	100	
ABUTMENT A	3	2 15/16	2 13/16	2¾	2 11/16	2 9/16	2½	2 7/16	2 3/16	2¼	2 1/16	3"
ABUTMENT B	3 3/16	3 1/16	2 15/16	2⅞	2¾	2⅝	2½	2⅜	2¼	2⅛	2 1/16	3"

NOTES:

1. STRUCTURAL STEEL FOR DECK JOINTS SHALL CONFORM TO AASHTO M270, GRADE 36.
2. STEEL EXTRUSIONS FOR DECK JOINTS SHALL CONFORM TO AASHTO M270, GRADE 36.
3. HOLES SHALL BE PLACED IN THE ½" RIB PLATES AND THE STRAP ANCHOR PLATES FOR BAR REINFORCEMENT. IF THE HOLES ARE DRILLED IN THE FIELD, AN APPROVED EPOXY PAINT SHALL BE APPLIED TO TOUCH UP THE HOLES.
4. THE NEOPRENE STRIP SEAL SHALL BE PROVIDED CONTINUOUS THROUGHOUT THE LIMITS OF THE DECK. SPLICING OF THE NEOPRENE STRIP SEAL IS NOT PERMITTED.
5. COST FOR MATERIALS, FABRICATION AND INSTALLATION OF STRIP SEAL EXPANSION JOINTS, 3" MOVEMENT CLASSIFICATION, WITH STEEL ELEMENTS INCLUDING STUDS AND STEEL EXTRUSIONS, SHALL BE PAID FOR UNDER ITEM 605511.
6. EXPANSION JOINT PLAN IS SHOWN AT ABUTMENT B. EXPANSION JOINT AT ABUTMENT A IS SIMILAR.

UNOFFICIAL WEBSITE COPY

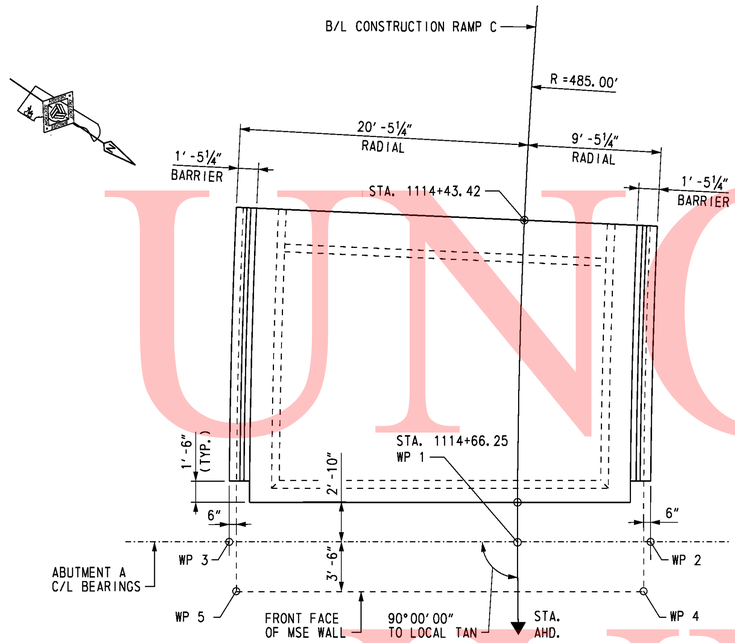

APPROACH SLAB AT ABUTMENT A PLAN

SCALE: 3/16" = 1'-0"

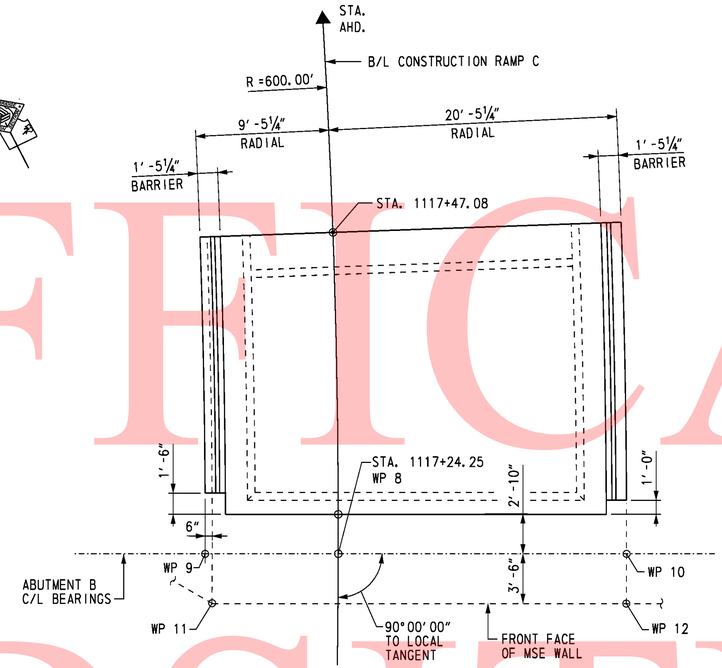

APPROACH SLAB AT ABUTMENT B PLAN

SCALE: 3/16" = 1'-0"

UNOFFICAL WEBSITE COPY

CROSS REFERENCE NOTES:

1. FOR BRIDGE PLAN AND ELEVATION, SEE DWG. S4-1.
2. FOR ABUTMENT A PLAN AND ELEVATION, SEE DWG. S4-5.
3. FOR ABUTMENT B PLAN AND ELEVATION, SEE DWG. S4-6.
4. FOR MSE WINGWALLS PLAN AND ELEVATION, SEE DWGS. S4-12 & S4-13.
5. FOR APPROACH SLAB REINFORCEMENT, SEE DWGS. S4-42 & S4-43.

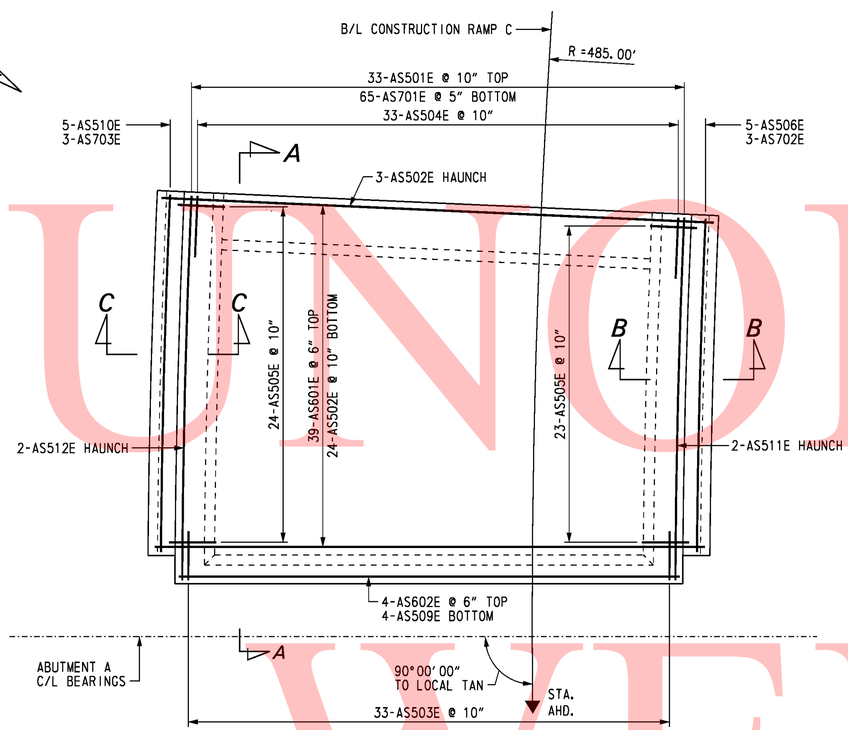

APPROACH SLAB AT ABUTMENT A PLAN

SCALE: 1/4" = 1'-0"

REINFORCING BAR LIST

APPROACH SLAB AT ABUTMENT B

MARK	LENGTH	NO. BARS	TYPE	A	B	C	D	E	G	H	K	R	REMARKS
AS501E	19'-4" TO 20'-5"	33	STR.										△=11/2"
AS502E	29'-6"	27	STR.										
AS503E	4'-10"	33	4	1'-11"	0'-8"	2'-3"				1'-7"	1'-7"		
AS504E	5'-7"	33	4	1'-4"	2'-8"	1'-7"				1'-1"	1'-1"		
AS505E	5'-2"	47	4	1'-11"	0'-8"	2'-7"				1'-10"	1'-10"		
AS506E	17'-9"	5	STR.										
AS507E	4'-0"	58	STR.										
AS508E	3'-7"	58	4S	1'-0"	1'-1"	1'-6"				0'-10 1/2"	1'-2 5/8"		
AS509E	26'-8"	4	STR.										
AS510E	19'-0"	5	STR.										
AS511E	19'-4"	2	STR.										
AS512E	20'-5"	2	STR.										
AS601E	29'-6"	39	STR.										
AS602E	26'-8"	4	STR.										
AS701E	19'-3" TO 20'-5"	65	STR.										△=1/2"
AS702E	17'-9"	3	STR.										
AS703E	19'-0"	3	STR.										
B501E	6'-8 1/4"	58	H1		2'-10"	1'-0 1/4"	2'-10"			0'-5"		0'-4 1/4"	
B701E	17'-9"	4	STR.										
B702E	19'-0"	4	STR.										
B801E	17'-9"	4	STR.										
B802E	19'-0"	4	STR.										

BENDING DIAGRAMS

ALL DIMENSIONS ARE FROM OUT TO OUT.

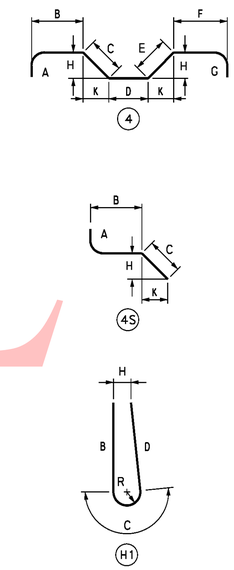

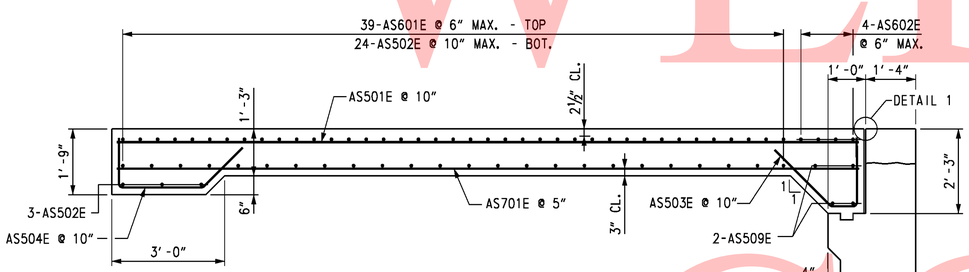

SECTION A-A

SCALE: 1/2" = 1'-0"

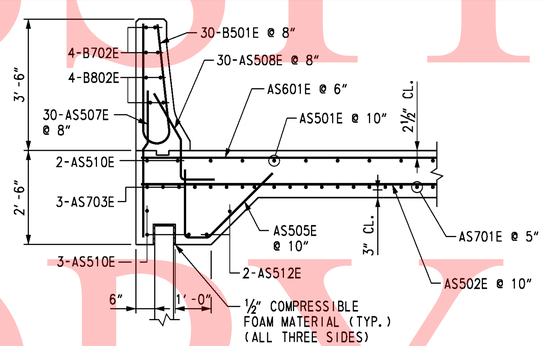

SECTION C-C

SCALE: 1/2" = 1'-0"

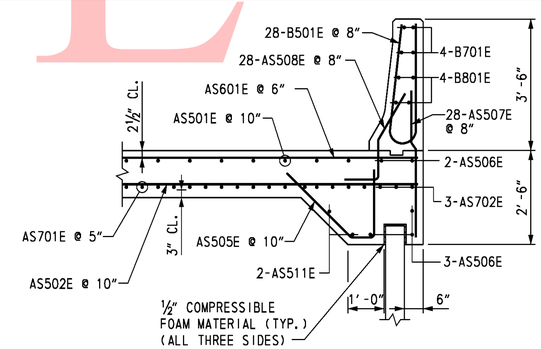

SECTION B-B

SCALE: 1/2" = 1'-0"

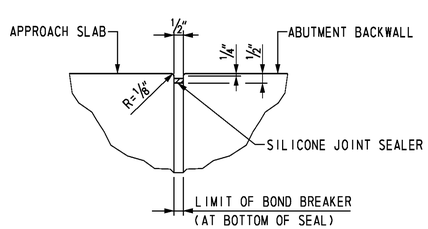

DETAIL 1

SCALE: 3" = 1'-0"

CROSS REFERENCE NOTES:

1. FOR BRIDGE PLAN AND ELEVATION, SEE DWG. S4-1.
2. FOR ABUTMENT A PLAN AND ELEVATION, SEE DWG. S4-5.
3. FOR MSE WINGWALLS PLAN AND ELEVATION, SEE DWGS. S4-12 AND S4-13.
4. FOR APPROACH SLAB PLAN, SEE DWG. S4-41.
5. FOR BARRIER DETAIL AND LONGITUDINAL REINFORCING BAR LAYOUT FOR BARRIER, SEE DWG. S4-37.

UNOFFICIAL WEBSITE COPY

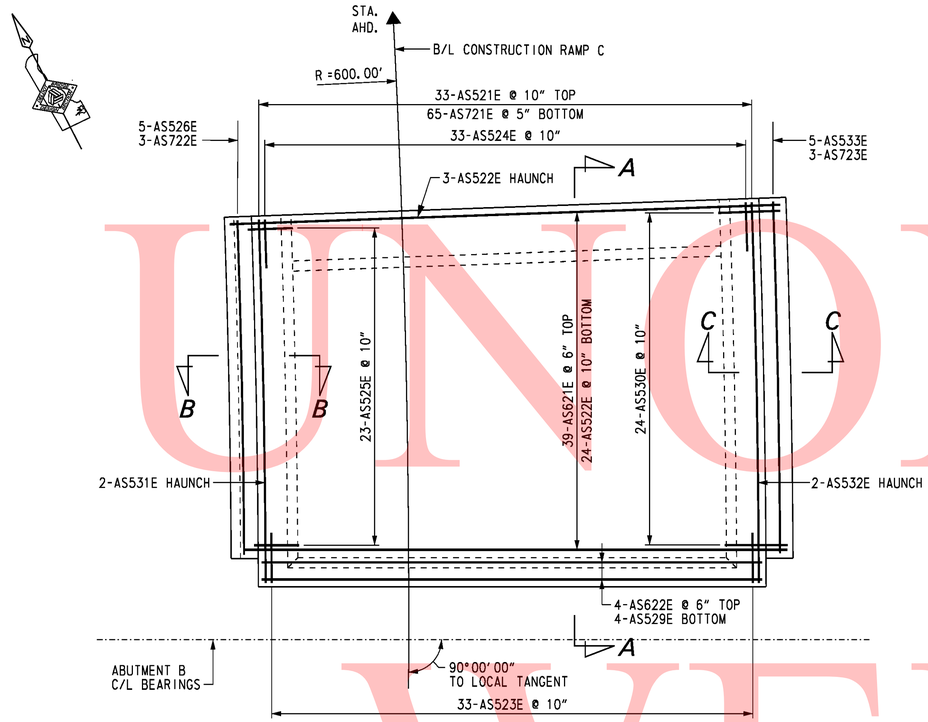

APPROACH SLAB AT ABUTMENT B PLAN

SCALE: 1/4" = 1'-0"

REINFORCING BAR LIST

APPROACH SLAB AT ABUTMENT B

MARK	LENGTH	NO. BARS	TYPE	A	B	C	D	E	G	H	K	R	REMARKS
AS521E	19'-4" TO 20'-5"	33	STR.										Δ = 11/2"
AS522E	29'-6"	27	STR.										
AS523E	4'-10"	33	4	1'-11"	0'-8"	2'-3"				1'-7"	1'-7"		
AS524E	5'-7"	33	4	1'-4"	2'-8"	1'-7"				1'-1"	1'-1"		
AS525E	5'-2"	24	4	1'-11"	0'-8"	2'-7"				1'-10"	1'-10"		
AS526E	17'-9"	5	STR.										
AS527E	4'-0"	58	STR.										
AS528E	3'-7"	58	4S	1'-0"	1'-1"	1'-6"				0'-10 1/2"	1'-2 5/8"		
AS529E	26'-8"	4	STR.										
AS530E	5'-1"	24	4	1'-0"	1'-6"	2'-7"				1'-10"			
AS531E	19'-4"	2	STR.										
AS532E	20'-5"	2	STR.										
AS533E	19'-0"	5	STR.										
AS621E	29'-6"	39	STR.										
AS622E	26'-8"	4	STR.										
AS721E	19'-3" TO 20'-5"	65	STR.										Δ = 1/2"
AS722E	17'-9"	3	STR.										
AS723E	19'-0"	3	STR.										
B521E	6'-8 1/4"	58	H1		2'-10"	1'-0 1/4"	2'-10"			0'-5"		0'-4 1/4"	
B721E	17'-9"	4	STR.										
B722E	19'-0"	4	STR.										
B821E	17'-9"	4	STR.										
B822E	19'-0"	4	STR.										

BENDING DIAGRAMS

ALL DIMENSIONS ARE FROM OUT TO OUT.

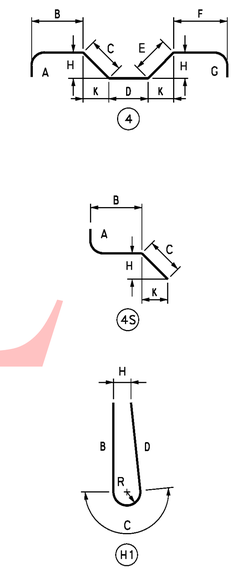

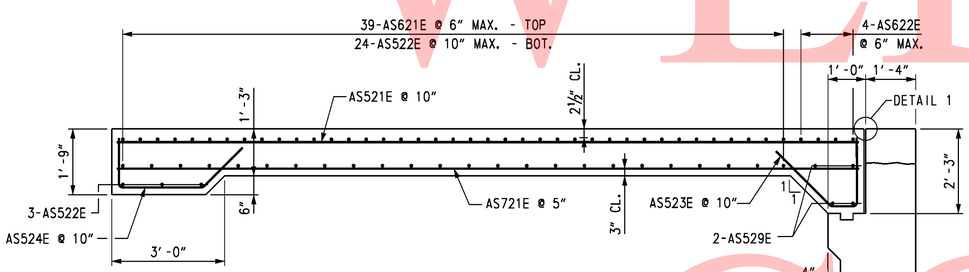

SECTION A-A

SCALE: 1/2" = 1'-0"

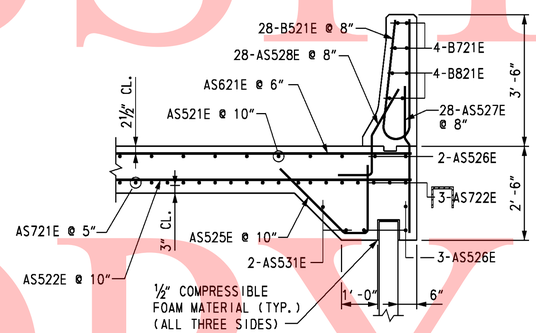

SECTION B-B

SCALE: 1/2" = 1'-0"

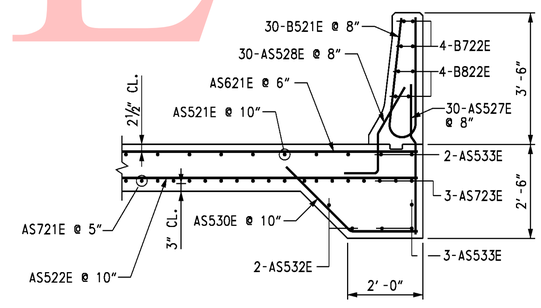

SECTION C-C

SCALE: 1/2" = 1'-0"

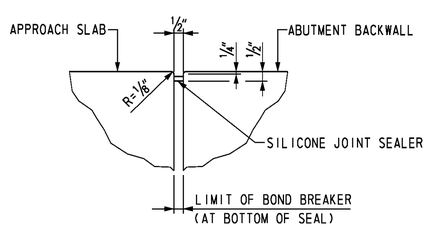

DETAIL 1

SCALE: 3" = 1'-0"

CROSS REFERENCE NOTES:

1. FOR BRIDGE PLAN AND ELEVATION, SEE DWG. S4-1.
2. FOR ABUTMENT B PLAN AND ELEVATION, SEE DWG. S4-6.
3. FOR MSE WINGWALLS PLAN AND ELEVATION, SEE DWGS. S4-12 AND S4-13.
4. FOR APPROACH SLAB PLAN, SEE DWG. S4-41.
5. FOR BARRIER DETAIL AND LONGITUDINAL REINFORCING BAR LAYOUT FOR BARRIER, SEE DWG. S4-37.

UNOFFICIAL WEBSITE COPY

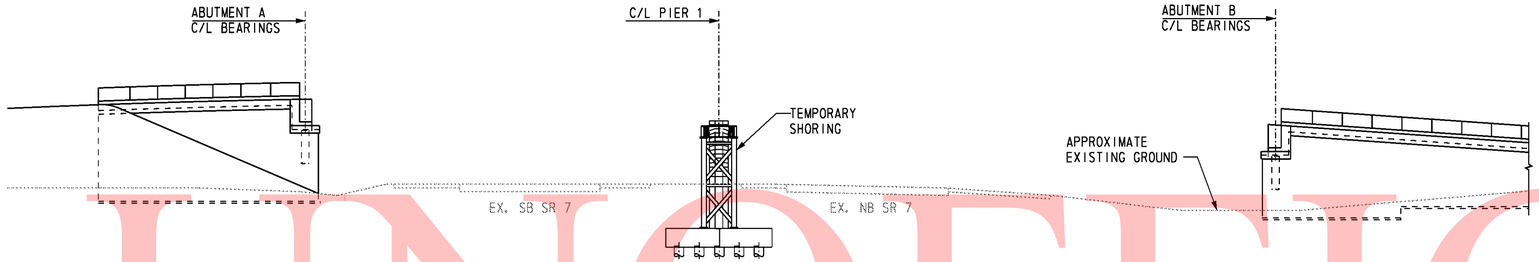

ELEVATION - ERECTION STAGE 1

SCALE: 1" = 20'-0"

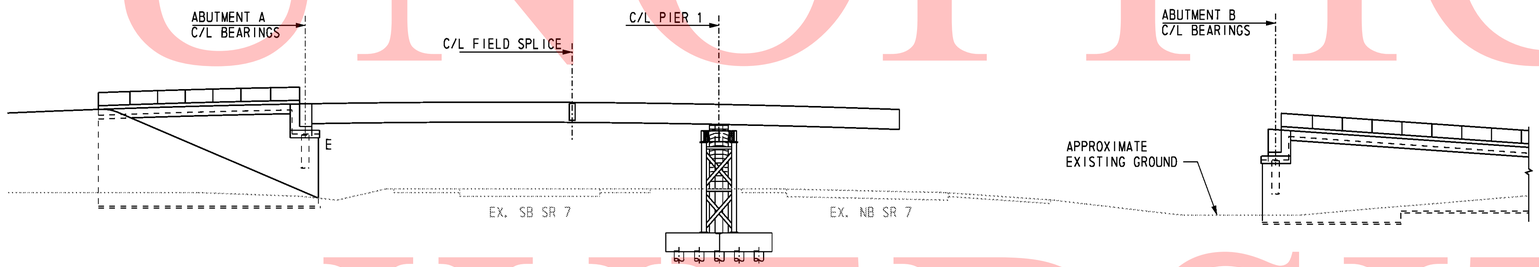

ELEVATION - ERECTION STAGE 2

SCALE: 1" = 20'-0"

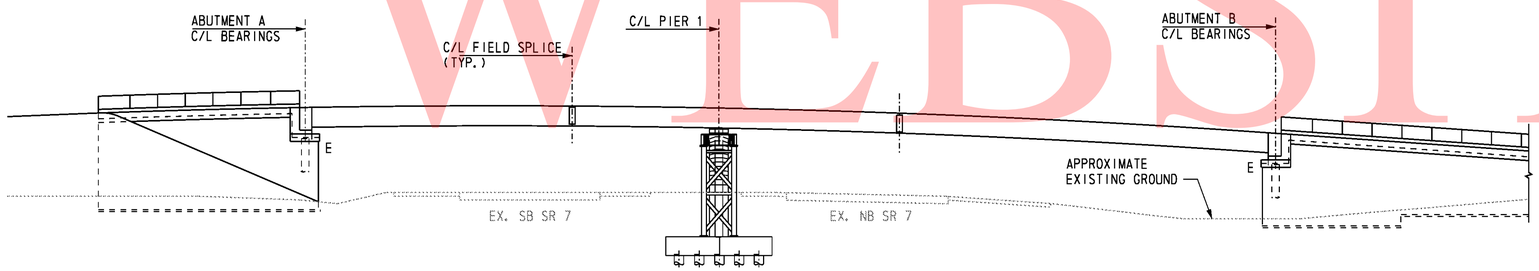

ELEVATION - ERECTION STAGE 3

SCALE: 1" = 20'-0"

SUGGESTED ERECTION SEQUENCE NOTES

STAGE 1:

1. ERECT TEMPORARY SHORING AT PIER 1.

STAGE 2:

1. PRE-ASSEMBLE TWO GIRDER SECTIONS.
2. ERECT PRE-ASSEMBLED GIRDER SECTION IN SPAN 1 WITH ONE END SUPPORTED ON ABUTMENT A AND THE OTHER ON EITHER THE TEMPORARY SHORING OR PIER COLUMN.
3. TIE-DOWN AND STABILIZE GIRDER.
4. REPEAT STEP 2 FOR ALL PRE-ASSEMBLED GIRDER SECTIONS, INSTALLING CROSS FRAMES AFTER EACH REMAINING PRE-ASSEMBLED GIRDER SECTION IS ERECTED.

STAGE 3:

1. ERECT GIRDER SECTION IN SPAN 2 WITH ONE END SUPPORTED ON ABUTMENT B AND THE OTHER END HELD BY THE CRANE.
2. MAKE FIELD SPLICE CONNECTION.
3. TIE-DOWN AND STABILIZE END OF GIRDER.
4. REPEAT STEPS 1 AND 2 FOR ALL GIRDERS, INSTALLING CROSS FRAMES AFTER EACH REMAINING GIRDER IS ERECTED.
5. CHECK GIRDER ELEVATIONS AT TEMPORARY SHORING AND ADJUST GIRDER ELEVATIONS AS NECESSARY.

NOTE TO CONTRACTOR:

THE ERECTION SEQUENCE SHOWN IS ONLY A SUGGESTED METHOD. THE CONTRACTOR IS RESPONSIBLE FOR THE ENTIRE ERECTION OF THE BRIDGE. THE CONTRACTOR SHALL SUBMIT DRAWINGS SEALED BY A PROFESSIONAL ENGINEER REGISTERED IN THE STATE OF DELAWARE, ILLUSTRATING FULLY THE PROPOSED METHOD OF ERECTION. THE DRAWINGS SHALL SHOW DETAILS OF ALL TEMPORARY SHORING, FALSEWORK, BRACING, GUYS, DEAD-MEN, LIFTING DEVICES, HOLD-DOWN DEVICES AND ATTACHMENTS TO THE BRIDGE MEMBERS. THE DRAWINGS SHALL ALSO INCLUDE THE SEQUENCE OF ERECTION, LOCATION OF CRANES, CRANE CAPACITITIES, LOCATION OF LIFTING POINTS ON THE BRIDGE MEMBERS AND WEIGHTS OF MEMBERS. THE PLAN AND DRAWINGS SHALL BE COMPLETE IN DETAIL FOR ALL ANTICIPATED STAGES AND CONDITIONS DURING ERECTION. CALCULATIONS SEALED BY A PROFESSIONAL ENGINEER REGISTERED IN THE STATE OF DELAWARE ARE REQUIRED TO DEMONSTRATE THAT ALLOWABLE STRESSES ARE NOT EXCEEDED AND THAT MEMBER CAPACITIES AND FINAL GEOMETRY WILL BE CORRECT.

COST OF ERECTION AND TEMPORARY SHORING IS INCIDENTAL TO "STRUCTURAL STEEL" ITEM.

FOR MAINTENANCE OF TRAFFIC REQUIREMENTS, REFER TO THE APPROPRIATE SHEETS.

PROVIDE TEMPORARY BRACING BETWEEN THE GIRDERS IN THE VICINITY OF EACH INTEGRAL PIER CAP DURING SUPERSTRUCTURE ERECTION AND PLACEMENT OF CONCRETE. THE TEMPORARY BRACING SHALL BE REMOVED AFTER THE INTEGRAL PIER CAP CONCRETE IS PLACED AND PRIOR TO POST-TENSIONING THE INTEGRAL CAP.

UNOFFICAL WEBSITE COPY

10/28/2010 O:\20832687-XM\CAD\Bridge\BR-S4\bm05_BR-S4_sr1.dgn untitled

DELAWARE DEPARTMENT OF TRANSPORTATION	ADDENDUMS / REVISIONS	SR1 / I-95 INTERCHANGE	CONTRACT 28-090-03	BRIDGE NO. 1-717A	RAMP C OVER SR 7	S4-44 SHEET NO. 392
			COUNTY NEW CASTLE	DESIGNED BY: S. A. MATTY	SUGGESTED ERECTION SEQUENCE	TOTAL SHTS. 803
				CHECKED BY: T. B. CUSTER		

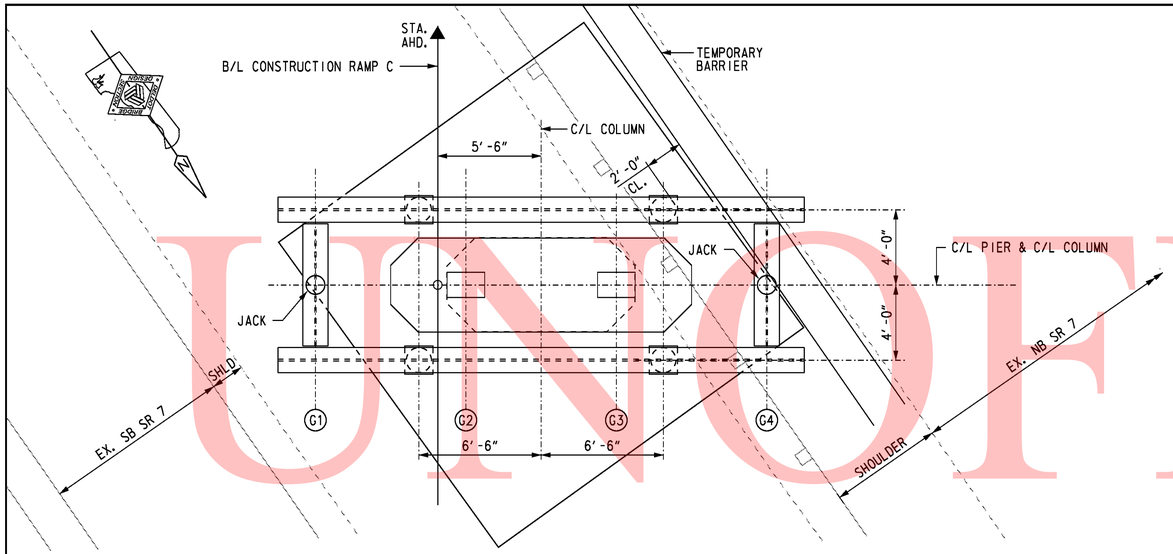

PIER - TEMPORARY SHORING PLAN

SCALE: 1/4" = 1'-0"

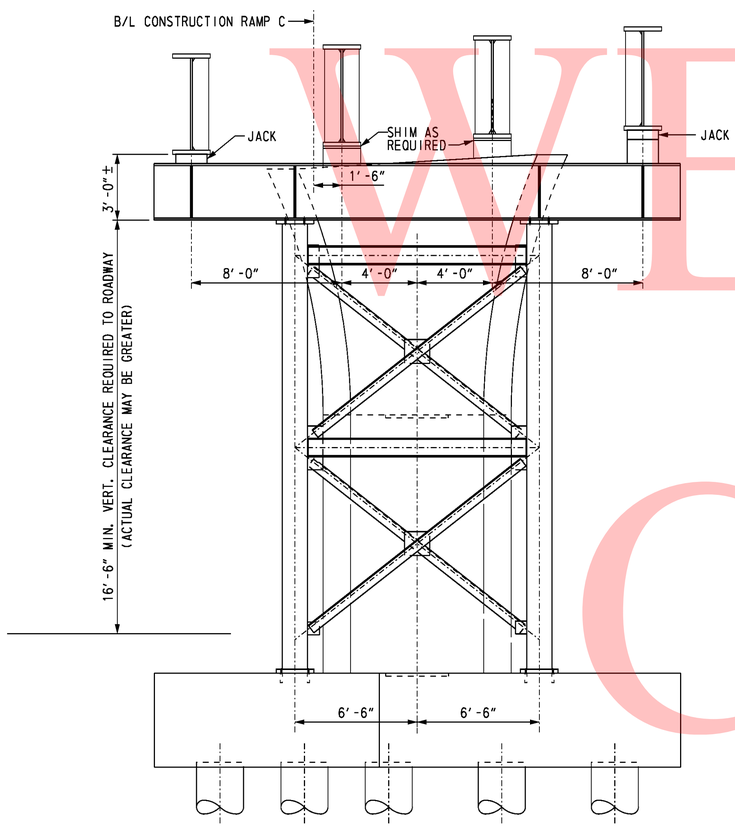

ELEVATION

SCALE: 1/4" = 1'-0"

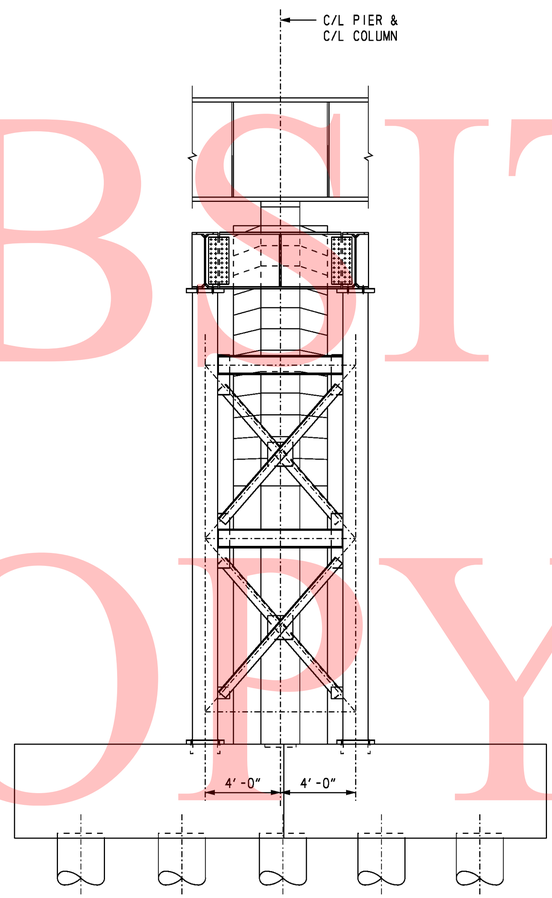

END VIEW

SCALE: 1/4" = 1'-0"

NOTES:

1. MAXIMUM UNFACTORED GIRDER REACTION AT SHORES IS 304 KIPS.
2. GIRDER REACTIONS INCLUDE WEIGHT OF STRUCTURAL STEEL FRAMING, DECK AND INTEGRAL CAP.
3. STEEL ERECTION SHOWN, SHORING TO REMAIN IN PLACE UNTIL DECK AND INTEGRAL CAP HAVE BEEN PLACED AND POST-TENSIONING FORCE APPLIED.
4. ACTUAL SHORING TOWERS PROVIDED SHALL BE DESIGNED BY THE CONTRACTOR. SHOP DRAWINGS AND CALCULATIONS SIGNED AND SEALED BY A PROFESSIONAL ENGINEER REGISTERED IN THE STATE OF DELAWARE SHALL BE SUBMITTED FOR APPROVAL.
5. PROVIDE SHIMS BETWEEN TEMPORARY MASONRY PLATE AND GIRDER FLANGE AS REQUIRED TO ESTABLISH GIRDER ELEVATION.

UNOFFICAL WEBSITE COPY

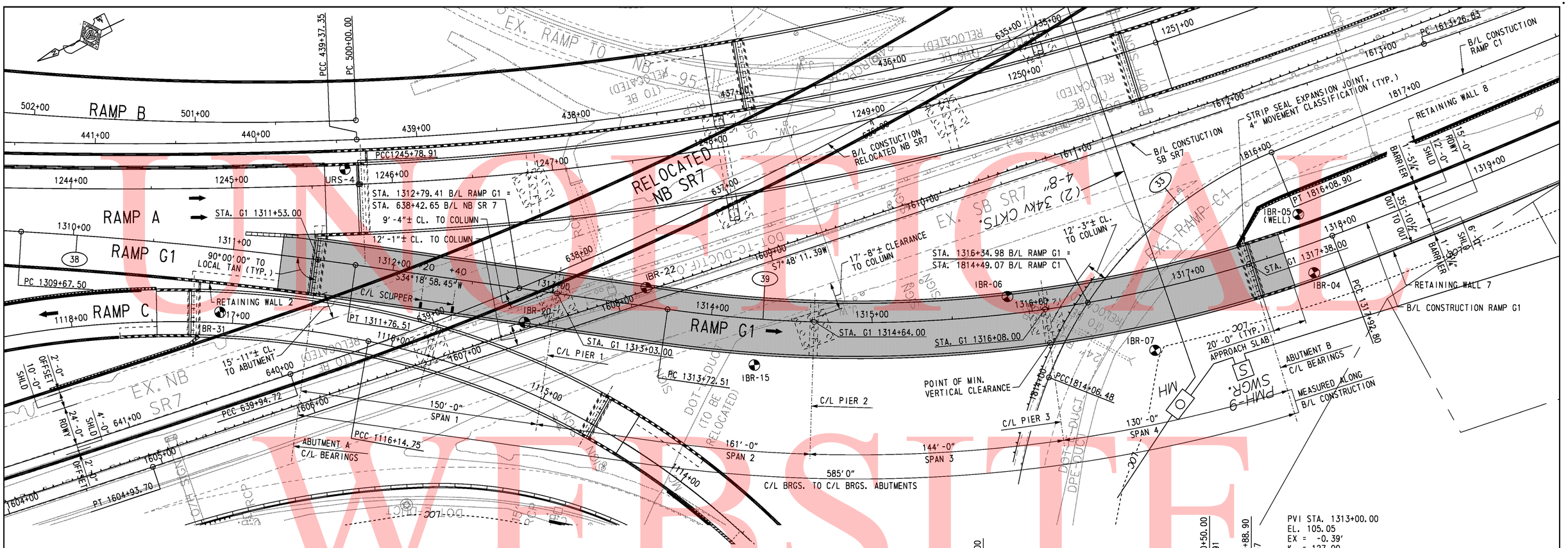

PLAN

SCALE: 1" = 30'-0"

NOTES:

1. GUIDED AND NON-GUIDED POT BEARINGS ARE PROVIDED AT ABUTMENTS A AND B AND PIERS 1 AND 3. FIXED POT BEARINGS ARE PROVIDED AT PIER 2.
2. MINIMUM VERTICAL CLEARANCE IS MEASURED TO BOTTOM OF PIER CAP.

B/L CONSTR. RAMP C1 CURVE 33 DATA

PI STA. 1815+13.61
Δ = 46°23'34.63" RT
Dc = 22°55'05.92"
R = 250.0000'
T = 107.13'
L = 202.43'

B/L CONSTR. RAMP G1 CURVE 38 DATA

PI STA. 1310+72.06
Δ = 4°47'24.25" RT
Dc = 2°17'30.59"
R = 2,500.0000'
T = 104.56'
L = 209.01'

B/L CONSTR. RAMP G1 CURVE 39 DATA

PI STA. 1315+87.21
Δ = 28°50'21.34" LT
Dc = 6°51'42.37"
R = 835.0000'
T = 214.70'
L = 420.29'

B/L CONSTR. NB SR7 CURVE 9 DATA

PI STA. 637+21.95
Δ = 13°46'34.84" RT
Dc = 2°30'46.70"
R = 2,280.0000'
T = 275.43'
L = 548.21'

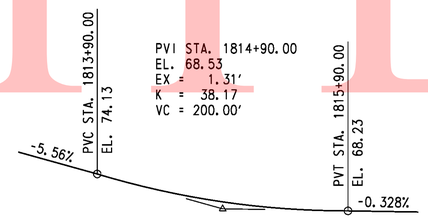

RAMP C1 PROFILE

NOT TO SCALE

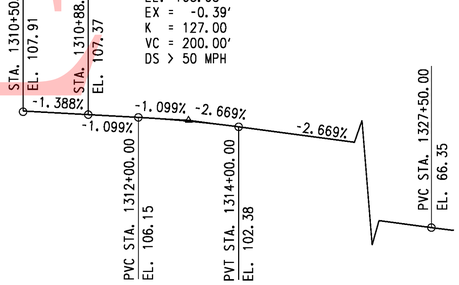

RAMP G1 PROFILE

NOT TO SCALE

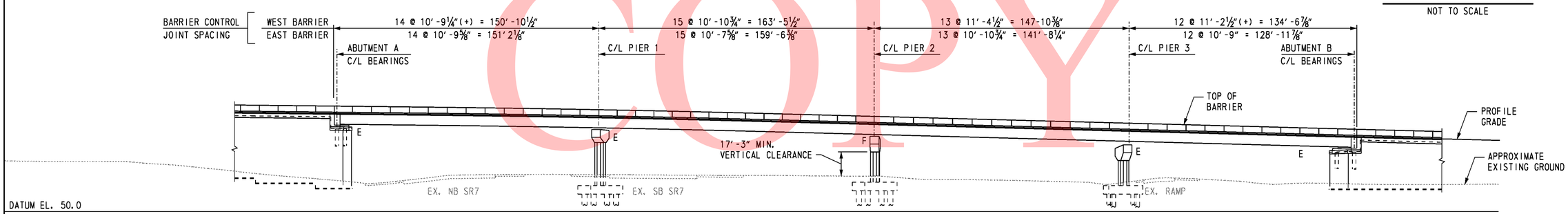

ELEVATION

SCALE: 1" = 30'-0"

UNOFFICIAL WEBSITE COPY

DELAWARE DEPARTMENT OF TRANSPORTATION	ADDENDUMS / REVISIONS	SCALE 0 30 60 90 FEET	SR1 / I-95 INTERCHANGE	CONTRACT 28-090-03	BRIDGE NO. 1-716D	RAMP G1 OVER SR 7 BRIDGE PLAN AND ELEVATION
				COUNTY NEW CASTLE	DESIGNED BY: R. F. KIRCHNER	SHEET NO. S5-1
					CHECKED BY: G. P. MISTRY	TOTAL SHTS. 394
						803

untitled 10/28/2010 O:\20832687-XM\CAD\Bridge\BR-S5\pe01_BR-S5_sr1.dgn

GENERAL NOTES

1. DESIGN SPECIFICATIONS
AASHTO LRFD BRIDGE DESIGN SPECIFICATIONS, 4th EDITION WITH 2009 INTERIM REVISIONS.
DELAWARE DEPARTMENT OF TRANSPORTATION BRIDGE DESIGN MANUAL, MAY 2005 INCLUDING LATEST REVISIONS. ANSI/AASHTO/AWS D1.5 BRIDGE WELDING CODE.

2. LOADING
UNIT WEIGHTS OF MATERIALS SHALL BE IN ACCORDANCE WITH THE DELAWARE DESIGN MANUAL.
FUTURE OVERLAY ALLOWANCE SHALL BE 25 LBS/SQ FT.
STEEL BRIDGE DECK FORMS WHICH STAY IN PLACE (INCLUDING CONCRETE IN FORM CORRUGATIONS) SHALL BE 15 LBS/SQ FT.
VEHICLE LIVE LOAD SHALL BE HL-93, WHICH CONSISTS OF A DESIGN TRUCK OR TANDEM WITH DYNAMIC LOAD ALLOWANCE AND A LANE LOAD. RATING SHALL USE ALL DELAWARE LEGAL LOADS SPECIFIED IN THE BRIDGE DESIGN MANUAL.
BARRIER HAS BEEN DESIGNED FOR TEST LEVEL FIVE (TL-5).
FATIGUE DESIGN SHALL BE BASED ON THE FOLLOWING ONE DIRECTIONAL TRAFFIC VOLUMES:

RAMP G1 OVER SR7: DESIGN ADT = 5,850, DESIGN ADTT = 175

FOR THERMAL LOADS, CONSIDER THE MODERATE TEMPERATURE RANGE AS STIPULATED IN THE AASHTO LRFD DESIGN SPECIFICATIONS. THE NORMAL TEMPERATURE SHALL BE CONSIDERED TO BE 60F.
FOR SEISMIC LOADS, CONSIDER SEISMIC PERFORMANCE ZONE 1, WITH A SITE CLASS = E AND IMPORTANCE CATEGORY - CRITICAL.

3. PORTLAND CEMENT CONCRETE
PORTLAND CEMENT CONCRETE FOR CAST-IN-PLACE ELEMENTS SHALL BE AS FOLLOWS:
(28 DAY COMPRESSIVE STRENGTH)
ITEM NO. 602007 (CLASS A, F'c=4500 PSI) - PIER ABOVE FOOTING
ITEM NO. 602011 (CLASS A, F'c=4500 PSI) - PIER FOOTING, TOP OF PIER PILES
ITEM NO. 602013 (CLASS D, F'c=4500 PSI) - DECK
ITEM NO. 602014 (CLASS D, F'c=4500 PSI) - APPROACH SLAB
ITEM NO. 602015 (CLASS A, F'c=4500 PSI) - ABUTMENT, TOP OF ABUTMENT PILES
ITEM NO. 602017 (CLASS A, F'c=4500 PSI) - BARRIER
MIX REQUIREMENTS SHALL CONFORM TO SECTION 812 OF THE DELAWARE DEPARTMENT OF TRANSPORTATION STANDARD SPECIFICATIONS. ALL EXPOSED CORNERS OF CONCRETE SHALL BE CHAMFERED WITH ¾" X ¾" MILLED CHAMFER STRIPS UNLESS NOTED OTHERWISE, EXCEPT ON UNEXPOSED FOOTINGS OR WHERE INDICATED BY THE NOTATION ON THE PLANS, "DO NOT CHAMFER". NO SLIP-FORMING OF BARRIERS IS PERMITTED, UNLESS OTHERWISE APPROVED.

4. BAR REINFORCEMENT
REINFORCING STEEL SHALL CONFORM TO AASHTO M31 (ASTM A615), GRADE 60. ALL REINFORCING STEEL SHALL HAVE A CLEAR COVER OF 2" UNLESS OTHERWISE SPECIFIED ON THE PLANS. FUSION-BONDED EPOXY COATED REINFORCING STEEL SHALL CONFORM TO AASHTO M284 (ASTM D3963), AND SHALL BE DENOTED WITH A SUFFIX "E" IN THE BAR MARKS.

DO NOT WELD GRADE 60 REINFORCING STEEL.

5. STRUCTURAL STEEL
STRUCTURAL STEEL SHALL CONFORM TO ASTM A 709, GRADE 50W, INCLUDING THE ADDITIONAL REQUIREMENTS FOR CHARPY V-NOTCH TESTING OF AASHTO M270 FOR PRIMARY LOAD CARRYING MEMBERS UNDER TENSILE STRESS. THE PRIMARY LOAD CARRYING MEMBER COMPONENTS ARE THE FLANGES, WEBS, AND SPLICE PLATES OF THE STEEL GIRDERS. THE USE OF FRACTURE CRITICAL MEMBERS IS PROHIBITED. FATIGUE CATEGORIES D, E AND F SHALL NOT BE USED IN STRESS REVERSAL OR TENSION AREAS, EXCEPT FOR TEMPORARY CONDITIONS.

EIGHT (8) FEET AT THE ENDS OF EACH GIRDER AND THE END CROSS FRAMES SHALL BE PAINTED WITH A URETHANE PAINT SYSTEM IN ACCORDANCE WITH SPECIAL PROVISION #605537-URETHANE PAINT SYSTEM. THE FINAL COLOR SHALL BE FEDERAL #10076 (BROWN) OF FED-STD-595B. COST OF PAINTING SHALL BE INCIDENTAL TO ITEM 605002, STEEL STRUCTURES.

ALL BOLTS FOR SPLICE PLATES AND CROSS FRAMES SHALL BE ⅞" DIA. IN 15/16" DIA. HOLES AND CONFORM TO ASTM A325, TYPE 3, WITH THREADS EXCLUDED FROM SHEAR PLANES. BOLTED CONNECTIONS SHALL BE CLASS B SLIP CRITICAL CONNECTIONS, UNLESS NOTED ON THE PLANS.

7. SERVICEABILITY
LIVE LOAD DEFLECTION SHALL BE LIMITED TO L/800.
FOR REINFORCEMENT DISTRIBUTION REQUIREMENTS, CONSIDER CLASS 2 EXPOSURE CRITERIA FOR DECKS. ACCOMMODATION TO JACK GIRDERS FOR FUTURE BEARING REPLACEMENT HAS BEEN CONSIDERED IN THE DESIGN.

8. CONSTRUCTION JOINTS
KEYED CONSTRUCTION JOINTS SHALL BE 2" X 4" OR AS NOTED. ALL EXPOSED CONSTRUCTION JOINT EDGES SHALL HAVE A ¾" V-NOTCH, UNLESS OTHERWISE NOTED.

9. STABILIZING STRUCTURAL EXCAVATIONS
SHEETING AND SHORING SHALL BE REQUIRED FOR ANY EXCAVATION EXCEEDING FIVE (5) FEET IN HEIGHT, THE COST SHALL BE PAID UNDER ITEM NO. 207501 - IN LIEU OF SHORING, THE CONTRACTOR MAY USE A 2:1 CUT SLOPE. NO PAYMENT SHALL BE MADE FOR ADDITIONAL EXCAVATION OR FILL OUTSIDE THE LIMITS AS DEFINED IN SECTION 207 OF THE STANDARD SPECIFICATIONS.

10. EXCAVATION REQUIRED TO ATTAIN THE GRADE FOR INSTALLATION OF MSE WALLS SHALL BE INCIDENTAL TO ITEM NO. 602772 - MECHANICALLY STABILIZED EARTH WALLS.

11. STRUCTURAL BACKFILL SHALL CONFORM TO THE REQUIREMENTS OF BORROW TYPE C. MSE WALL BACKFILL SHALL BE AS SPECIFIED ON THE PLANS.

12. ROADWAY CLEARANCES
A MINIMUM OF 16'-6" VERTICAL CLEARANCE SHALL BE MAINTAINED ABOVE ALL ROADWAYS.
A MINIMUM OF 2'-0" HORIZONTAL CLEARANCE SHALL BE MAINTAINED FROM THE OUTSIDE EDGE OF SHOULDER OFFSET (FACE OF CURB) TO THE FACE OF ANY OBSTRUCTION. THESE CLEARANCES APPLY AT ALL TIMES INCLUDING DURING CONSTRUCTION.

BRIDGE LEGAL LOAD RATING (TONS)
RAMP G1 OVER SR 7

TRUCK TYPE	RATING FACTOR	SAFE LOAD CAPACITY
HS-20	1.84	66.2
S220	2.93	58.6
S327	2.61	70.4
S335	2.00	70.0
S437	2.12	77.3
T330	2.51	75.3
T435	2.12	74.2
T540	2.09	83.6

BRIDGE DESIGN LOAD RATING:
INVENTORY = 1.21
OPERATING = 1.57

13. TEST PILES
PILE LENGTHS FOR ORDERING PURPOSES SHALL BE DETERMINED BY TEST PILES. A MINIMUM OF ONE (1) PILE PER SUBSTRUCTURE, AS SHOWN ON THE PLANS, SHALL BE DYNAMICALLY TESTED BY THE CONTRACTOR IN ACCORDANCE WITH SPECIAL PROVISION 619519. TEST AND PRODUCTION PILE RE-STRIKES WILL BE PAID AS FOLLOWS:

A). ALL TEST PILE(S) WILL BE RESTRUCK AND DYNAMICALLY TESTED BY THE CONTRACTOR. THE TEST PILE RESTRIKES SHALL BE INCIDENTAL TO ITEM NO. 619519 DYNAMIC PILE TESTING BY CONTRACTOR PROVIDED THAT THEY ARE PERFORMED WITHIN FIVE (5) CALENDAR DAYS FROM INITIAL DRIVE.

B). AN ADDITIONAL PAYMENT WILL BE MADE TO THE CONTRACTOR IF HE IS DIRECTED BY THE ENGINEER TO WAIT AND RESTRIKE THE TEST PILE MORE THAN FIVE (5) CALENDAR DAYS AFTER INITIAL DRIVE. THE CONTRACTOR SHALL BE COMPENSATED AT THE FIXED PRICE OF $1,000.00 PER CALENDAR DAY FOR EVERY DAY, AFTER THE FIFTH CALENDAR DAY, UNDER ITEM NO. 619502 TEST PILE RESTRIKE. MULTIPLE TEST PILE RESTRIKES OCCURRING ON THE SAME DAY WILL ONLY BE PAID FOR AS ONE CALENDAR DAY. NO ADDITIONAL COMPENSATION WILL BE MADE REGARDLESS OF THE NUMBER OF TEST PILE RESTRIKES PERFORMED THAT DAY.

C). RESTRIKES ON PRODUCTION PILES WHICH ARE DESIGNATED TO BE DYNAMICALLY TESTED WILL NOT BE PAID UNDER ITEM NO. 619501 PRODUCTION PILE RESTRIKE. THESE PRODUCTION PILE RESTRIKES ARE INCIDENTAL TO ITEM NO. 619519 DYNAMIC PILE TESTING BY CONTRACTOR.

THE DEPARTMENT RESERVES THE RIGHT TO PERFORM DYNAMIC TESTING OF RESTRIKES.

NOTE:

LOAD RATING IS IN ACCORDANCE WITH THE LOAD AND RESISTANCE FACTOR RATING (LRFR) METHOD.

CROSS REFERENCE NOTE:

FOR MSE WALL NOTES, SEE DWG S5-14.

UNOFFICAL WEBSITE COPY

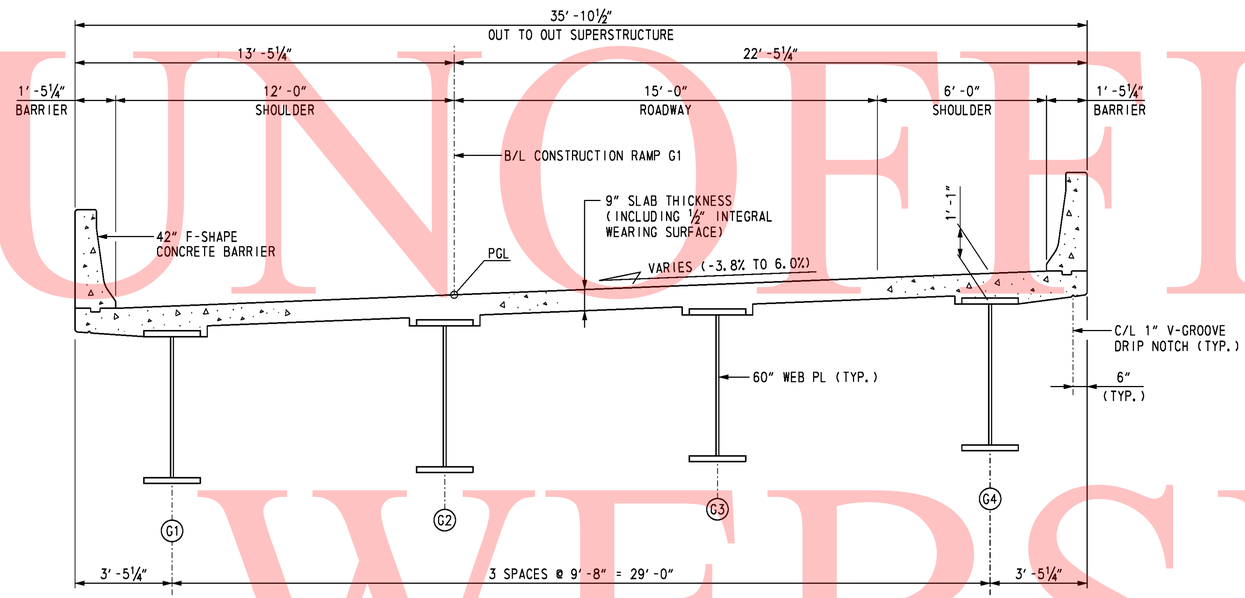

TYPICAL SECTION - RAMP G1

(LOOKING UPSTATIONS)
SCALE: ⅜" = 1'-0"

SUPERELEVATION TRANSITION DATA:

STA. 1310+05.50 TO STA. 1311+38.51 — -3.8%
CROSS SLOPE = -3.8%

STA. 1311+38.51 TO STA. 1312+52.51 — VARIES
CROSS SLOPE TRANSITION = -3.8% TO LEVEL

STA. 1312+52.51 TO STA. 1314+32.51 — VARIES
CROSS SLOPE TRANSITION = LEVEL TO 6%

STA. 1314+32.51 TO STA. 1317+50.80 — +6.0%
CROSS SLOPE = 6%

STA. 1317+50.80 TO STA. 1318+34.80 — VARIES
CROSS SLOPE TRANSITION = 6% TO 3.2%

CROSS REFERENCE NOTES:

1. FOR FRAMING PLAN, SEE DWGS. S5-35 & S5-36.
2. FOR DECK AND BARRIER REINFORCEMENT, SEE DWGS. S5-43 THRU S5-45.

UNOFFICAL WEBSITE COPY

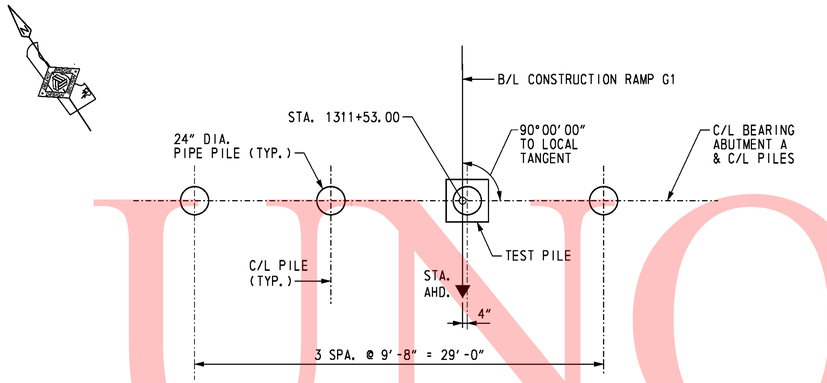

ABUTMENT A PILE PLAN

SCALE: 3/16" = 1'-0"

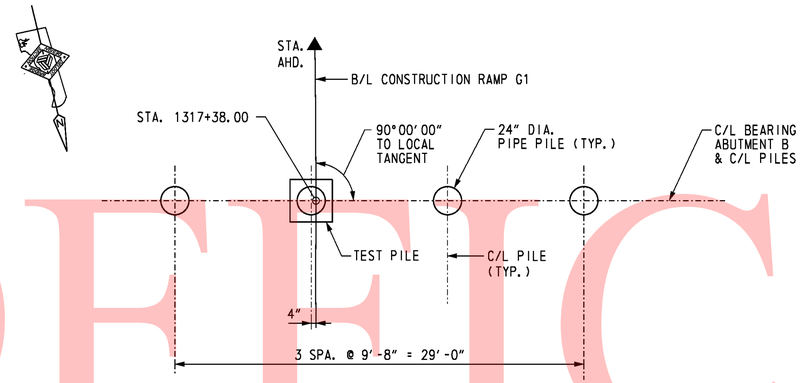

ABUTMENT B PILE PLAN

SCALE: 3/16" = 1'-0"

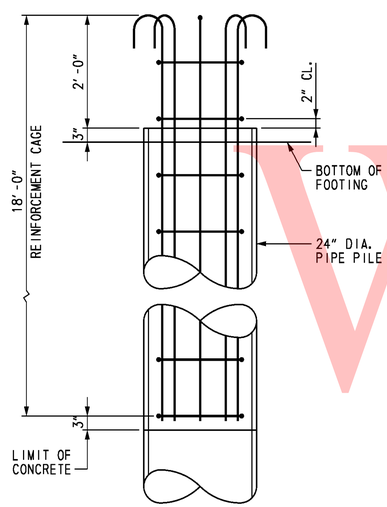

ELEVATION

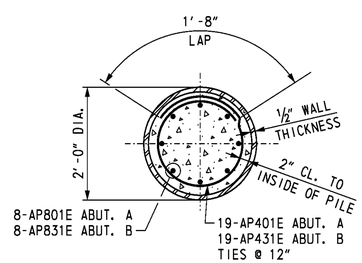

SECTION

PIPE PILE REINFORCEMENT

SCALE: 3/4" = 1'-0"

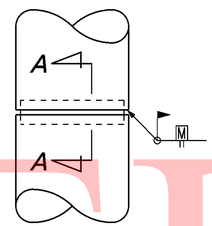

PIPE PILE SPLICE DETAIL

NOT TO SCALE

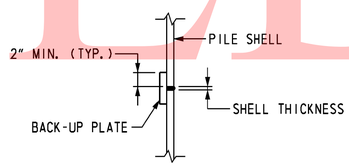

SECTION A-A

NOT TO SCALE

PILE SPLICE NOTES:

1. BACK-UP PLATE TO BE CUT FROM SAME PILE SIZE AS IS BEING SPLICED. CUT AND BEND TO FIT INSIDE DIAMETER OF PILE.
2. NO PILE SPLICING TO BE ALLOWED ON ANY PORTION OF PILE THAT IS TO REMAIN EXPOSED IN COMPLETED STRUCTURE.
3. SPLICER SLEEVE MATERIAL SHALL BE STEEL CONFORMING TO ASTM DESIGNATION A709, GRADE 36 (250).

PILE INSTALLATION DATA

	DESIGN DATA		ACTUAL FIELD DATA	
SUBSTRUCTURE UNIT	NOMINAL PILE DRIVING RESISTANCE (KIPS)	ESTIMATED PILE TIP ELEVATION	AVERAGE MINIMUM TIP ELEVATION	AVERAGE MAXIMUM TIP ELEVATION
ABUTMENT A	540	8.0		
ABUTMENT B	540	10.0		

ABUTMENT A PILE DRIVING INFORMATION

PILE SIZE AND TYPE:
ACTUAL BEARING OBTAINED:
HAMMER TYPE:
PILE HAMMER ENERGY:
SPECIAL DRIVING CONDITIONS AND COMMENTS:

ABUTMENT B PILE DRIVING INFORMATION

PILE SIZE AND TYPE:
ACTUAL BEARING OBTAINED:
HAMMER TYPE:
PILE HAMMER ENERGY:
SPECIAL DRIVING CONDITIONS AND COMMENTS:

NOTES:

1. PILES SHALL BE 24" DIA. WITH ½" WALL THICKNESS OPEN-ENDED STEEL PIPE PILES, ASTM A252 GRADE 3.
2. REINFORCING STRAPS SHALL BE PROVIDED FOR THE ABUTMENT STEM AND BACKWALL TO RESIST THE LONGITUDINAL FORCES ON THE SUPERSTRUCTURE.
3. PILE CASINGS SHALL BE INSTALLED AT THE PROPOSED PILE LOCATIONS DURING THE ABUTMENT MSE WALL CONSTRUCTON.
4. UPON COMPLETION OF THE MSE WALL THERE SHALL BE A 30 TO 60 DAY QUARANTINE PERIOD PRIOR TO DRIVING THE ABUTMENT PILES TO ALLOW FOR SETTLEMENT AND TO MINIMIZE THE DOWNDRAG FORCES THAT MIGHT DEVELOP ON THE PILES.
5. THE ENGINEER SHALL MONITOR THE SETTLEMENT DURING THE QUARANTINE PERIOD TO DETERMINE WHEN THE PILES MAY BE DRIVEN.
6. UPON COMPLETION OF THE QUARANTINE PERIOD, AS JUDGED BY THE ENGINEER, DRIVE PILES TO THE NOMINAL PILE DRIVING RESISTANCE INDICATED ON THE PLANS.
7. 'TEST PILES' SHALL BE TESTED IN ACCORDANCE WITH THE SPECIFICATIONS.

CROSS REFERENCE NOTES:

1. FOR ABUTMENT PLAN AND ELEVATION, SEE DWGS. S5-5 & S5-6.
2. FOR REINFORCING BAR LIST, SEE DWG. S5-16.
3. FOR PILE CASING DETAILS, SEE DWG. S5-5.
4. FOR SOIL PROFILE, SOIL PROPERTIES AND TOTAL ESTIMATED SETTLEMENT, SEE DWG. S5-15.
5. FOR TEST PILE PAYMENT NOTES, SEE DWG. S5-2.

UNOFFICAL WEBSITE COPY

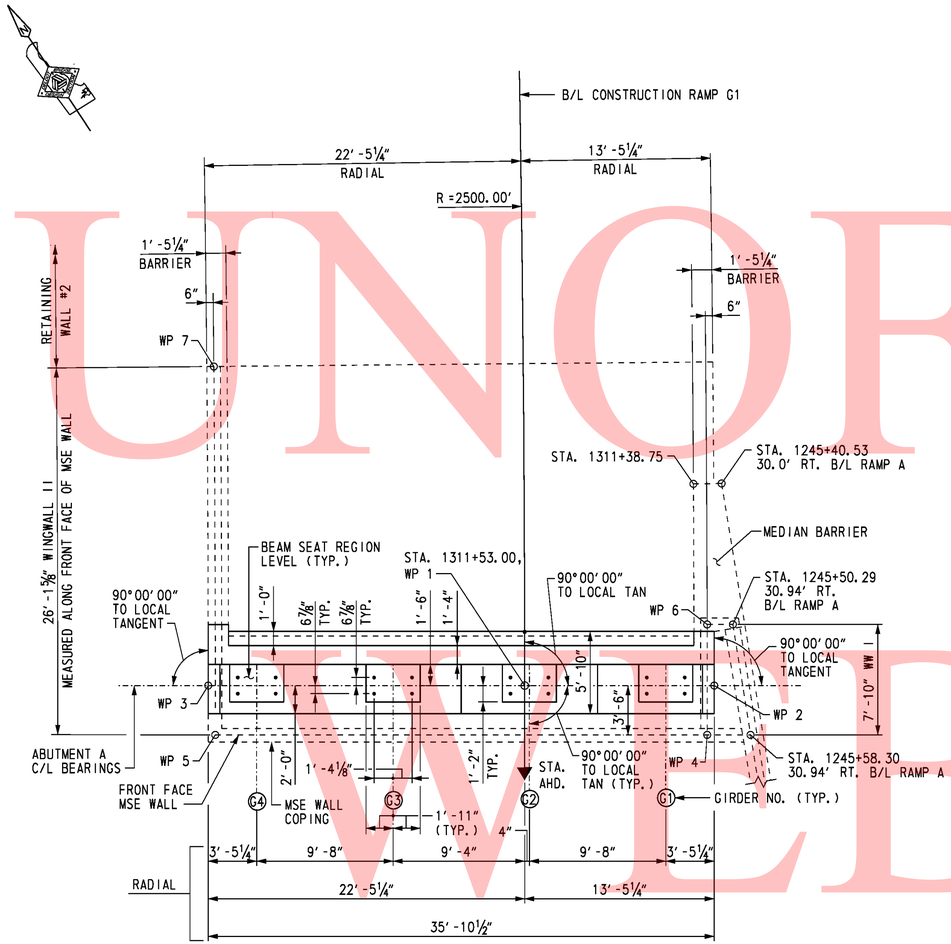

ABUTMENT A PLAN

SCALE: 3/16" = 1'-0"

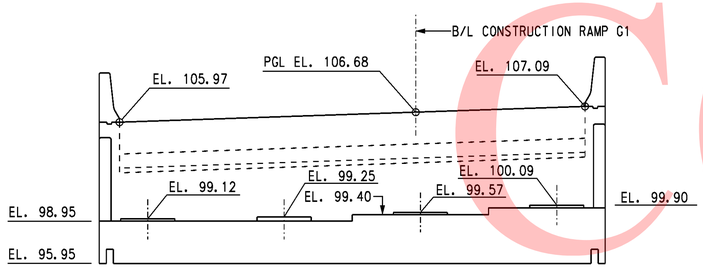

ABUTMENT A ELEVATION

SCALE: 3/16" = 1'-0"

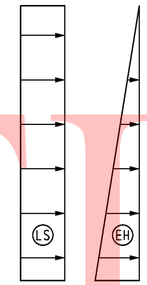

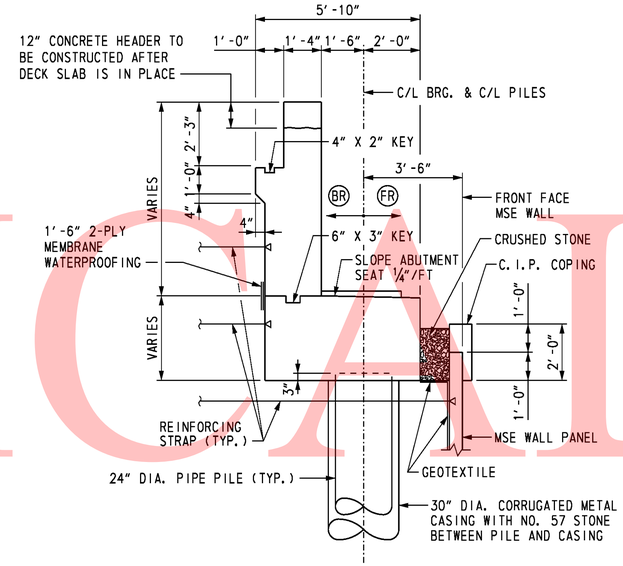

TYPICAL ABUTMENT SECTION

SCALE: 3/8" = 1'-0"

WORKING POINTS

W.P. NO.	STATION	OFFSET	COORDINATES NORTHING	COORDINATES EASTING
1	1311+53.00	0.00'	612,551.9448	432,394.7268
2	1311+53.00	13.44' LT.	612,544.4740	432,405.8961
3	1311+53.00	22.44' RT.	612,564.4194	432,376.0767
4	1311+56.48	12.94' LT.	612,541.8441	432,403.5326
5	1311+56.53	21.94'' RT.	612,561.2335	432,374.5443
6	1311+48.69	12.94' LT.	612,548.3559	432,407.8858
7	1311+30.17	21.94' RT.	612,583.0111	432,388.9894

ABUTMENT LATERAL LOADS

TYPE	SERVICE LOAD (KIPS/FT.)
EH	2.30
LS	1.20
BR	0.16
FR	1.00

ABUTMENT LATERAL LOADS:

1. CONTRACTOR SHALL DESIGN THE SOIL REINFORCING STRAPS IN THE ABUTMENT STEM AND BACKWALL TO RESIST LATERAL LOADS "EH", "LS", "BR" AND "FR".
2. LOAD "EH" IS THE HORIZONTAL EARTH PRESSURE RESULTANT EXERTED ON THE ABUTMENT.
3. LOAD "LS" IS THE ADDITIONAL HORIZONTAL SOIL PRESSURE RESULTANT DUE TO 3 FEET OF SOIL SURCHARGE. CONTRACTOR IS RESPONSIBLE FOR PROVIDING MSE WALL DESIGNER WITH OTHER CONSTRUCTION LOADS WHICH WILL BE IN EXCESS OF 3 FEET OF SOIL SURCHARGE.
4. LOAD "BR" IS THE HORIZONTAL LOAD DUE TO BRAKING FORCE ON THE SUPERSTRUCTURE.
5. LOAD "FR" IS THE HORIZONTAL LOAD DUE TO FRICTION ON THE BEARINGS AS A RESULT OF BRIDGE EXPANSION AND CONTRACTION.
6. THE POINT OF APPLICATION OF THE LOADS "EH" AND "LS" ARE AT THE CENTROID OF THE PRESSURE DIAGRAM. THE LOADS "BR" AND "FR" ARE APPLIED AT THE CENTER OF THE BEARINGS. THE LOADS "BR" AND "FR" MAY ACT TOGETHER IN EITHER DIRECTION.

NOTES:

1. CRUSHED STONE AND GEOTEXTILE BETWEEN MSE WALL COPING AND ABUTMENT FOOTING SHALL BE INCIDENTAL TO ITEM NO. 602772 - MECHANICALLY STABILIZED EARTH WALLS.
2. MSE WALL AND COPING NOT SHOWN IN ELEVATION VIEW.
3. BEAM SEAT STEPS MID-WAY BETWEEN GIRDERS. BEAM SEAT ELEVATION IS AT FRONT FACE BACKWALL.
4. METAL CASING FOR PILES SHALL EXTEND FROM BOTTOM OF ABUTMENT TO BOTTOM OF MSE WALL LEVELING PAD. COST OF METAL CASING AND NO. 57 STONE SHALL BE INCIDENTAL TO FURNISHING 24" STEEL PIPE PILE ITEM.

CROSS REFERENCE NOTES:

1. FOR BRIDGE PLAN AND ELEVATION, SEE DWG. S5-1.
2. FOR SIDE ELEVATION, SEE DWG. S5-6.
3. FOR MSE WINGWALLS PLAN AND ELEVATION, SEE DWGS. S5-12 & S5-13.
4. FOR ABUTMENT REINFORCEMENT, SEE DWGS. S5-7 THRU S5-9.
5. FOR MEDIAN BARRIER DETAILS, SEE DWGS. S5-50 & S5-51.
6. FOR ABUTMENT STRAP ANCHOR DETAIL, SEE DWG. S5-7.

UNOFFICIAL WEBSITE COPY

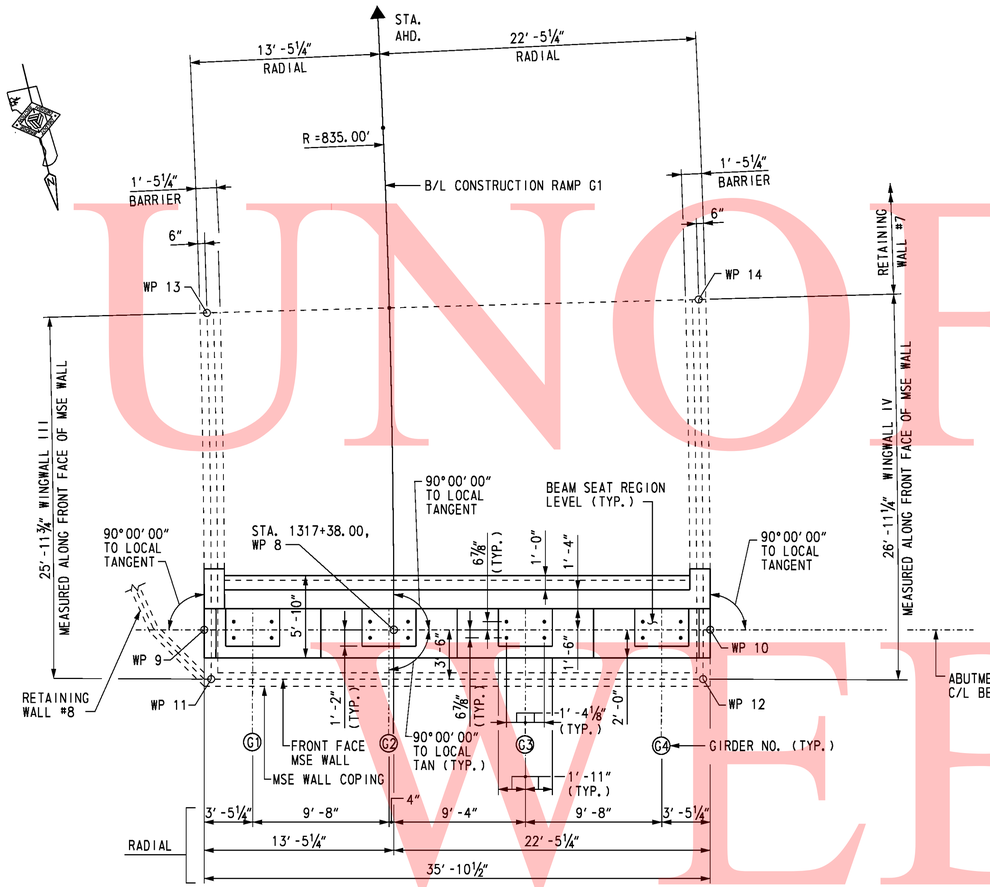

ABUTMENT B PLAN

SCALE: 3/16" = 1' -0"

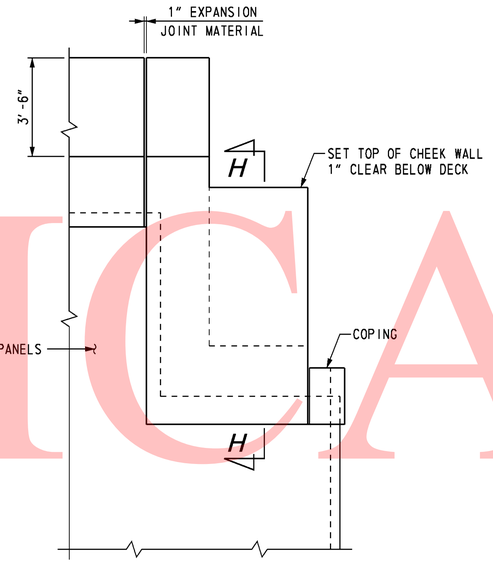

SIDE ELEVATION - WINGWALL II, III & IV

SCALE: 3/8" = 1' -0"

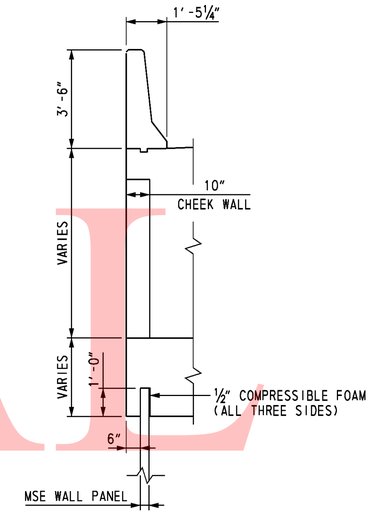

SECTION H-H

SCALE: 3/8" = 1' -0"

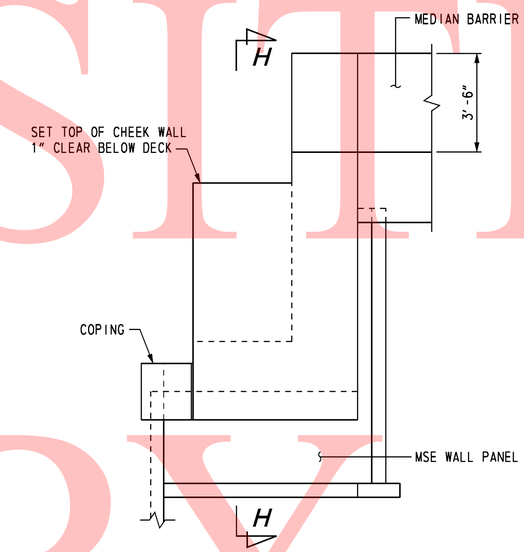

SIDE ELEVATION - WINGWALL I

SCALE: 3/8" = 1' -0"

WORKING POINTS				
W.P. NO.	STATION	OFFSET	COORDINATES	
			NORTHING	EASTING
8	1317+38.00	0.00'	612,033.8759	432,136.5555
9	1317+38.00	13.44' LT.	612,031.7190	432,149.8187
10	1317+38.00	22.44' RT.	612,037.4775	432,114.4089
11	1317+34.44	12.94' LT.	612,035.2527	432,149.8944
12	1317+34.59	21.94' RT.	612,040.8508	432,115.4713
13	1317+60.83	12.94' LT.	612,009.5647	432,146.0207
14	1317+60.83	21.94' RT.	612,014.2194	432,111.4577

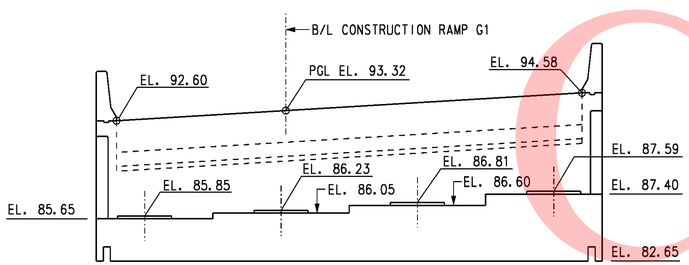

ABUTMENT B ELEVATION

SCALE: 3/16" = 1' -0"

NOTES:

1. MSE WALL AND COPING NOT SHOWN IN ELEVATION VIEW.
2. ABUTMENT SEAT STEPS MID-WAY BETWEEN GIRDERS.

CROSS REFERENCE NOTES:

1. FOR BRIDGE PLAN AND ELEVATION, SEE DWG. S5-1.
2. FOR TYPICAL ABUTMENT SECTION, SEE DWG. S5-5.
3. FOR MSE WINGWALLS PLAN AND ELEVATION, SEE DWGS. S5-12 & S5-13.
4. FOR ABUTMENT REINFORCEMENT, SEE DWGS. S5-10 & S5-11.

UNOFFICIAL WEBSITE COPY

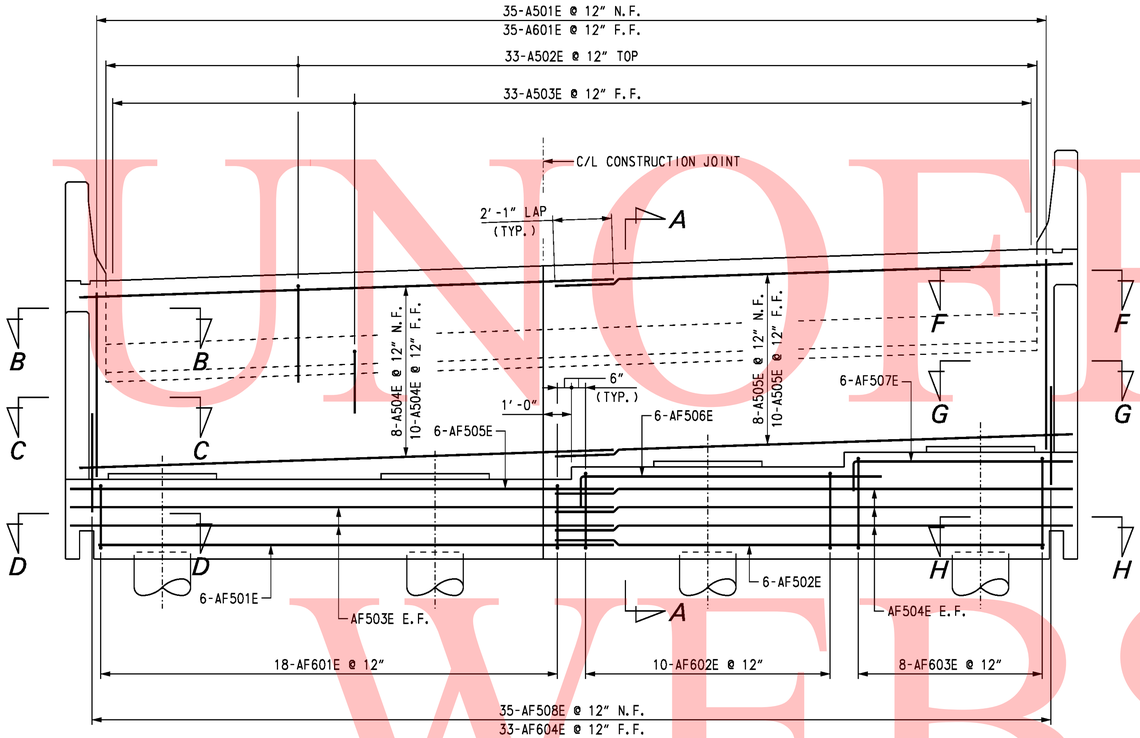

ABUTMENT A ELEVATION

SCALE: 3/8" = 1'-0"

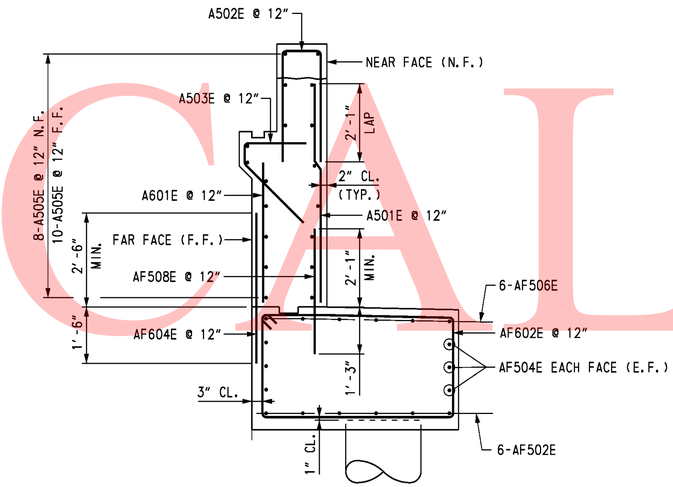

SECTION A-A

SCALE: 1/2" = 1'-0"

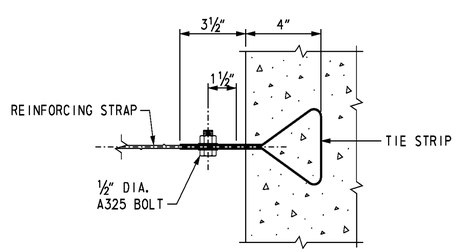

ABUTMENT STRAP ANCHOR DETAIL

NOT TO SCALE

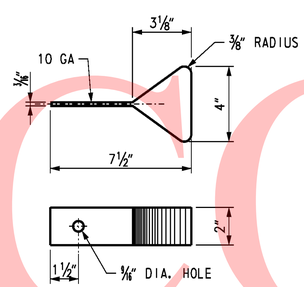

TIE STRIP DETAIL

NOT TO SCALE

NOTE:

1. TIE STRIP MATERIAL IS SAME AS USED IN MSE WALL PANELS. DESIGN SHALL BE CONSISTENT WITH MSE WALL DESIGN. COST OF REINFORCING STRAPS AND ANCHORS SHALL BE INCIDENTAL TO MSE WALL ITEM.

CROSS REFERENCE NOTES:

1. FOR BRIDGE PLAN AND ELEVATION, SEE DWG. S5-1.
2. FOR ABUTMENT A PLAN AND ELEVATION, SEE DWG. S5-5.
3. FOR SIDE ELEVATIONS, SEE DWGS. S5-8 AND S5-9.
4. FOR SECTIONS B-B. C-C, D-D, F-F, G-G, AND H-H, SEE DWGS. S5-8 AND S5-9.
5. FOR REINFORCING BAR LIST, SEE DWG. S5-16.

UNOFFICAL WEBSITE COPY

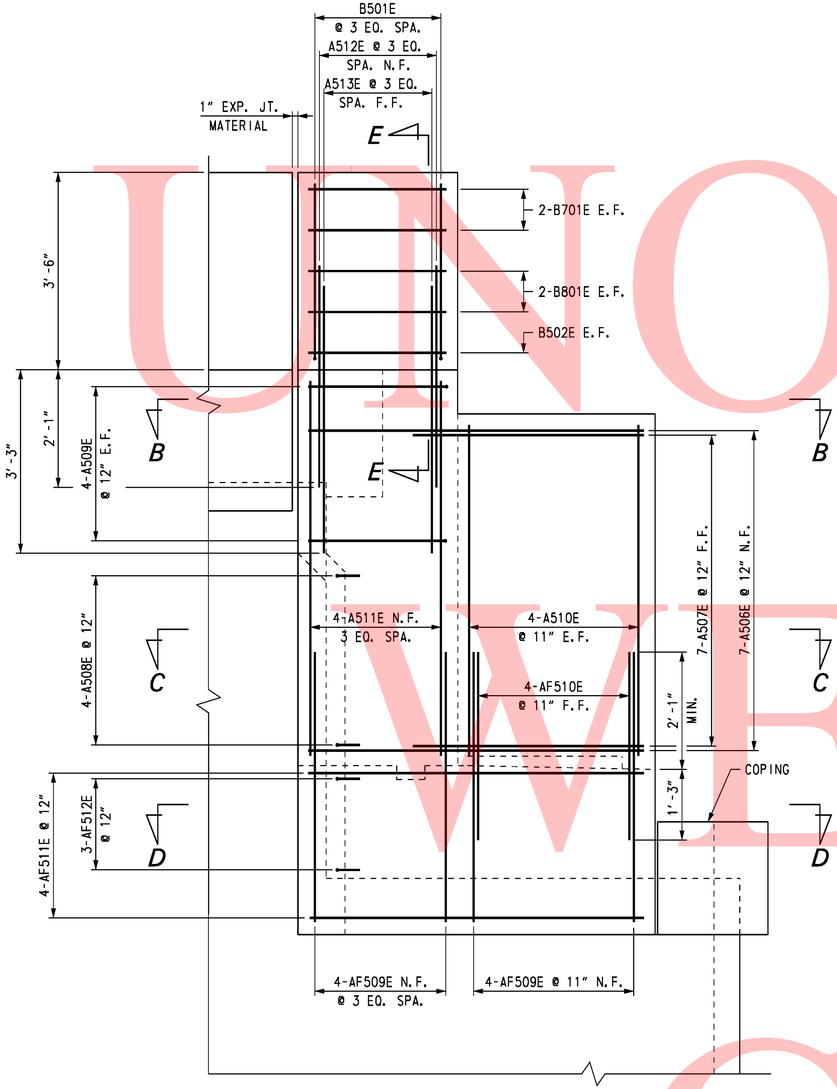

WINGWALL II SIDE ELEVATION

SCALE: 3/4" = 1'-0"

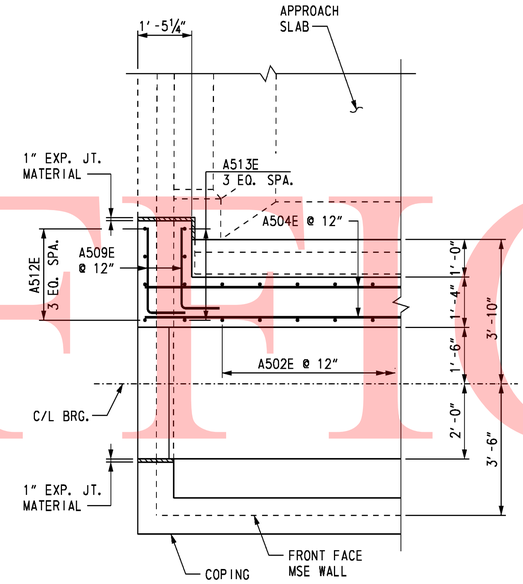

SECTION B-B

SCALE: 1/2" = 1'-0"

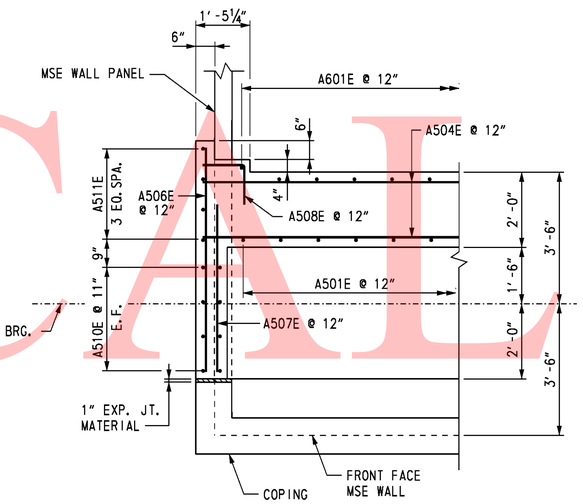

SECTION C-C

SCALE: 1/2" = 1'-0"

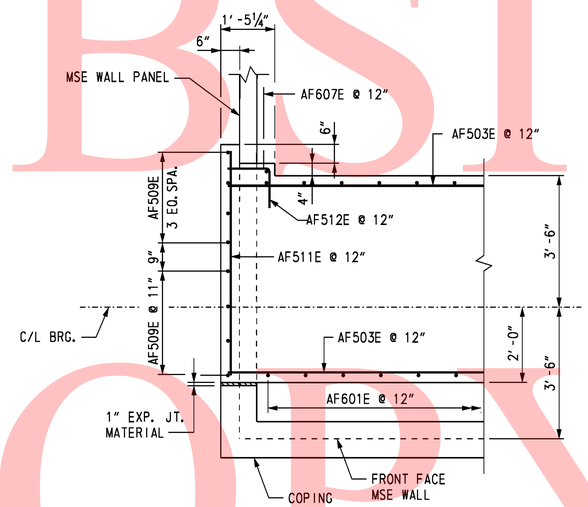

SECTION D-D

SCALE: 1/2" = 1'-0"

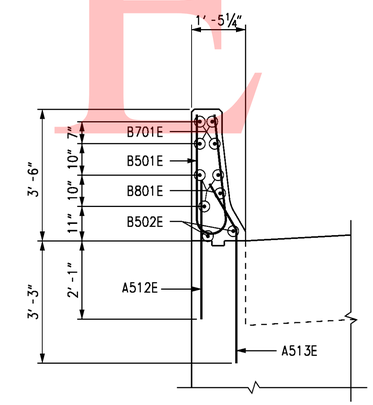

SECTION E-E

SCALE: 1/2" = 1'-0"

CROSS REFERENCE NOTES:

1. FOR ABUTMENT A PLAN AND ELEVATION, SEE DWG. S5-5.
2. FOR ABUTMENT A ELEVATION REINFORCEMENT DETAILS, SEE DWG. S5-7.
3. FOR REINFORCING BAR LIST, SEE DWG. S5-16.

UNOFFICIAL WEBSITE COPY

10/28/2010 O:\20832687-XM\CAD\Bridge\BR-S5\ab05_BR-S5_sr1.dgn untitled

DELAWARE DEPARTMENT OF TRANSPORTATION	ADDENDUMS / REVISIONS	SR1 / I-95 INTERCHANGE	CONTRACT 28-090-03	BRIDGE NO. 1-716D	RAMP G1 OVER SR 7	SHEET NO. 401	S5-8
			COUNTY NEW CASTLE	DESIGNED BY: K. D. BEAVER	ABUTMENT A REINFORCEMENT 2	TOTAL SHTS. 803	
				CHECKED BY: J. S. LI			

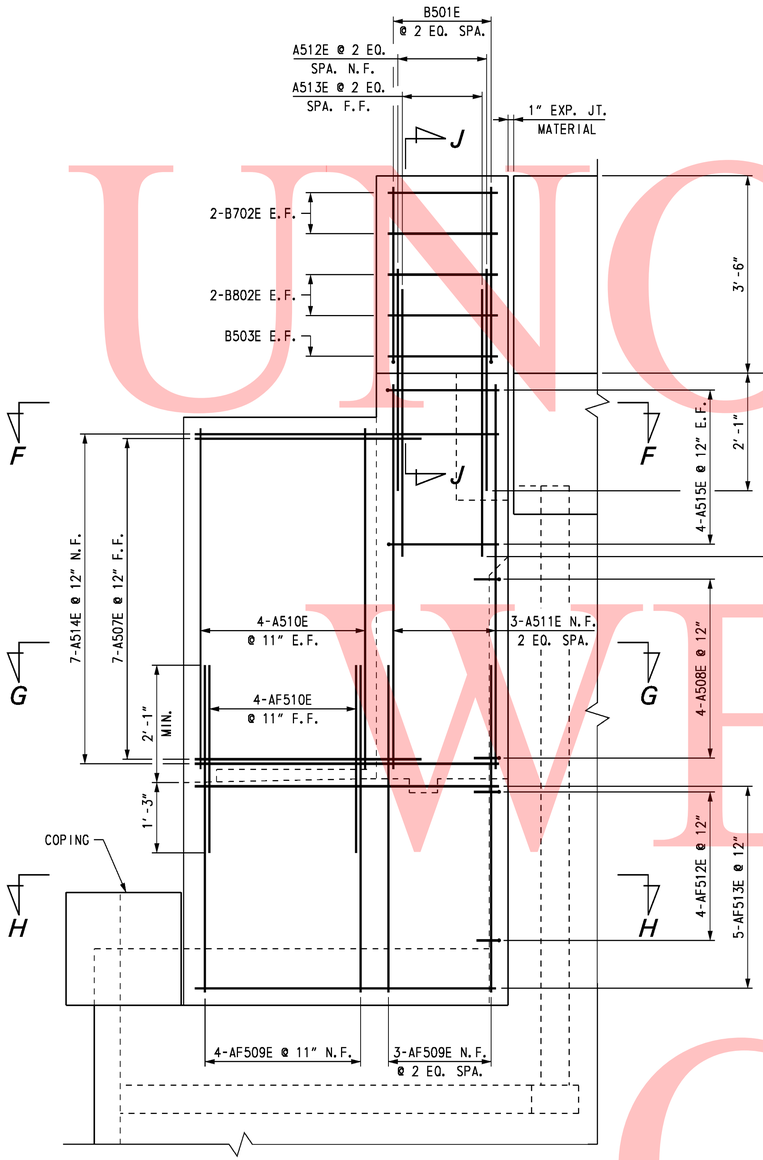

WINGWALL 1 SIDE ELEVATION

SCALE: ¾" = 1'-0"

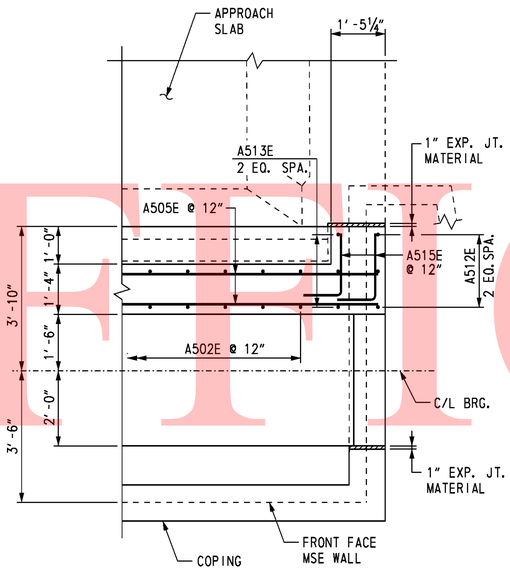

SECTION F-F

SCALE: ½" = 1'-0"

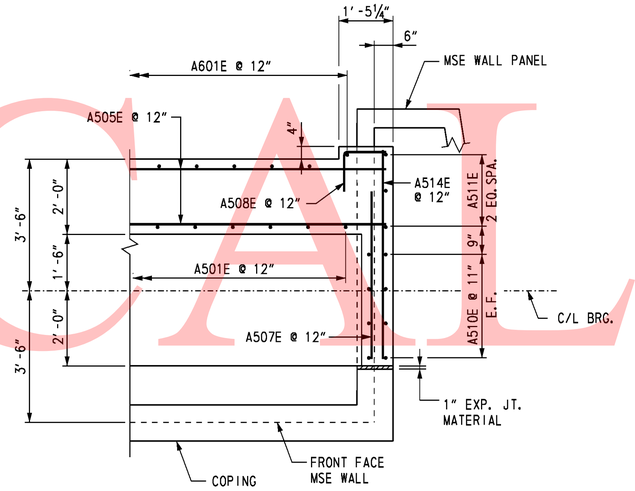

SECTION G-G

SCALE: ½" = 1'-0"

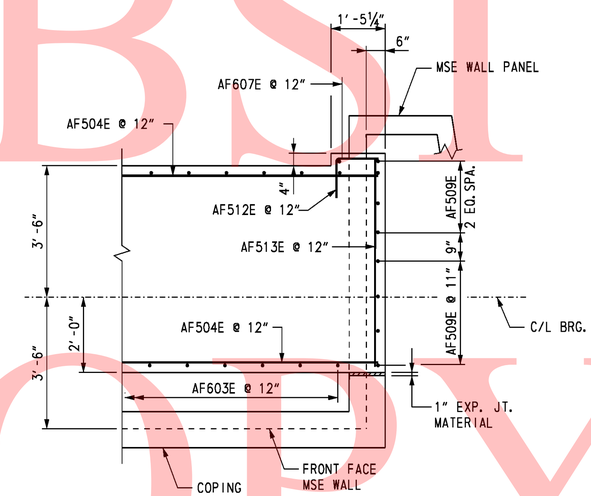

SECTION H-H

SCALE: ½" = 1'-0"

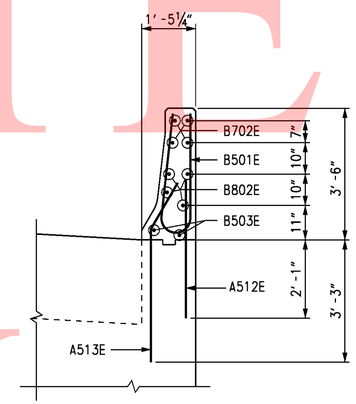

SECTION J-J

SCALE: ½" = 1'-0"

CROSS REFERENCE NOTES:

1. FOR ABUTMENT A PLAN AND ELEVATION, SEE DWG. S5-5.
2. FOR ABUTMENT A ELEVATION REINFORCEMENT DETAILS, SEE DWG. S5-7.
3. FOR REINFORCING BAR LIST, SEE DWG. S5-16.

UNOFFICIAL WEBSITE COPY

DELAWARE DEPARTMENT OF TRANSPORTATION	ADDENDUMS / REVISIONS		SR1 / I-95 INTERCHANGE	CONTRACT 28-090-03	BRIDGE NO. 1-716D	RAMP G1 OVER SR 7	S5-9 SHEET NO.
				COUNTY NEW CASTLE	DESIGNED BY: K. D. BEAVER	ABUTMENT A REINFORCEMENT 3	402 TOTAL SHTS.
					CHECKED BY: J. S. LI		803

untitled 10/28/2010 O:\20832687-XM\CAD\Bridge\BR-S5\ab09_BR-S5_sr1.dgn

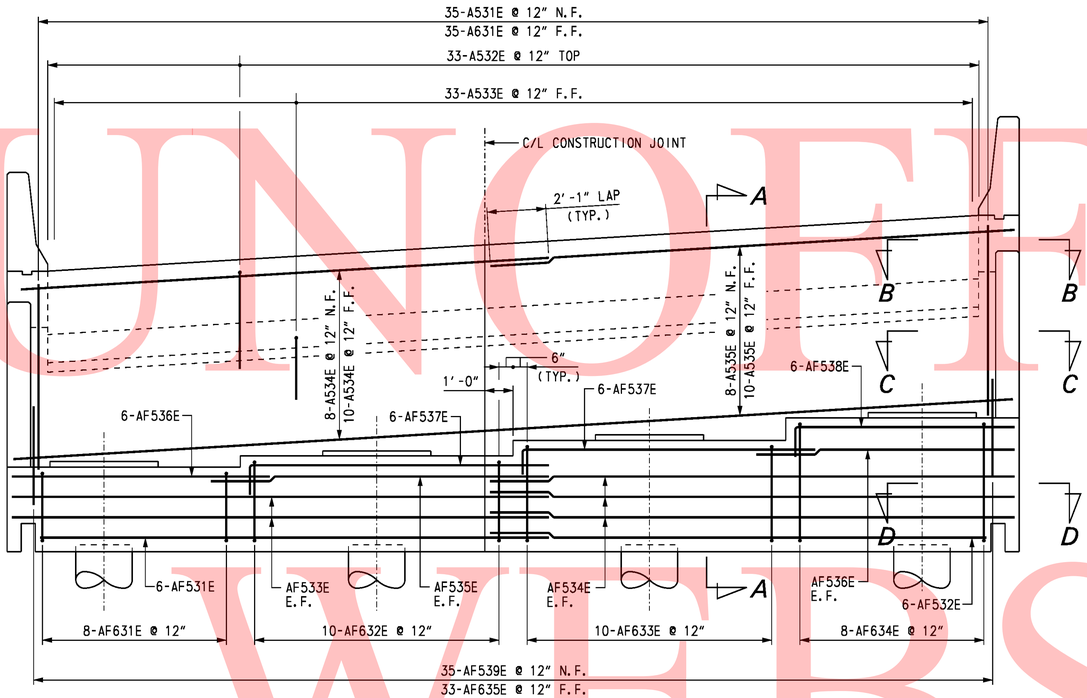

ABUTMENT B ELEVATION

SCALE: 3/8" = 1'-0"

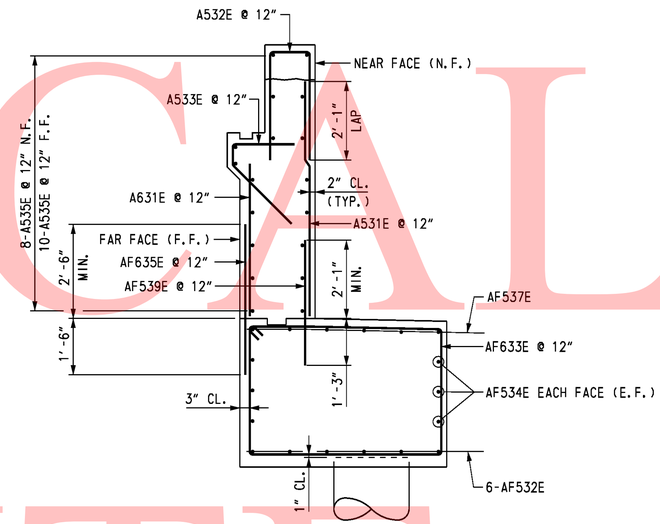

SECTION A-A

SCALE: 1/2" = 1'-0"

CROSS REFERENCE NOTES:

1. FOR BRIDGE PLAN AND ELEVATION, SEE DWG. S5-1.
2. FOR ABUTMENT B PLAN AND ELEVATION, SEE DWG. S5-6.
3. FOR WINGWALL IV SIDE ELEVATION, SEE DWG. S5-11.
4. FOR SECTIONS B-B. C-C, AND D-D, SEE DWG. S5-11.
5. FOR REINFORCING BAR LIST, SEE DWG. S5-16.

UNOFFICAL WEBSITE COPY

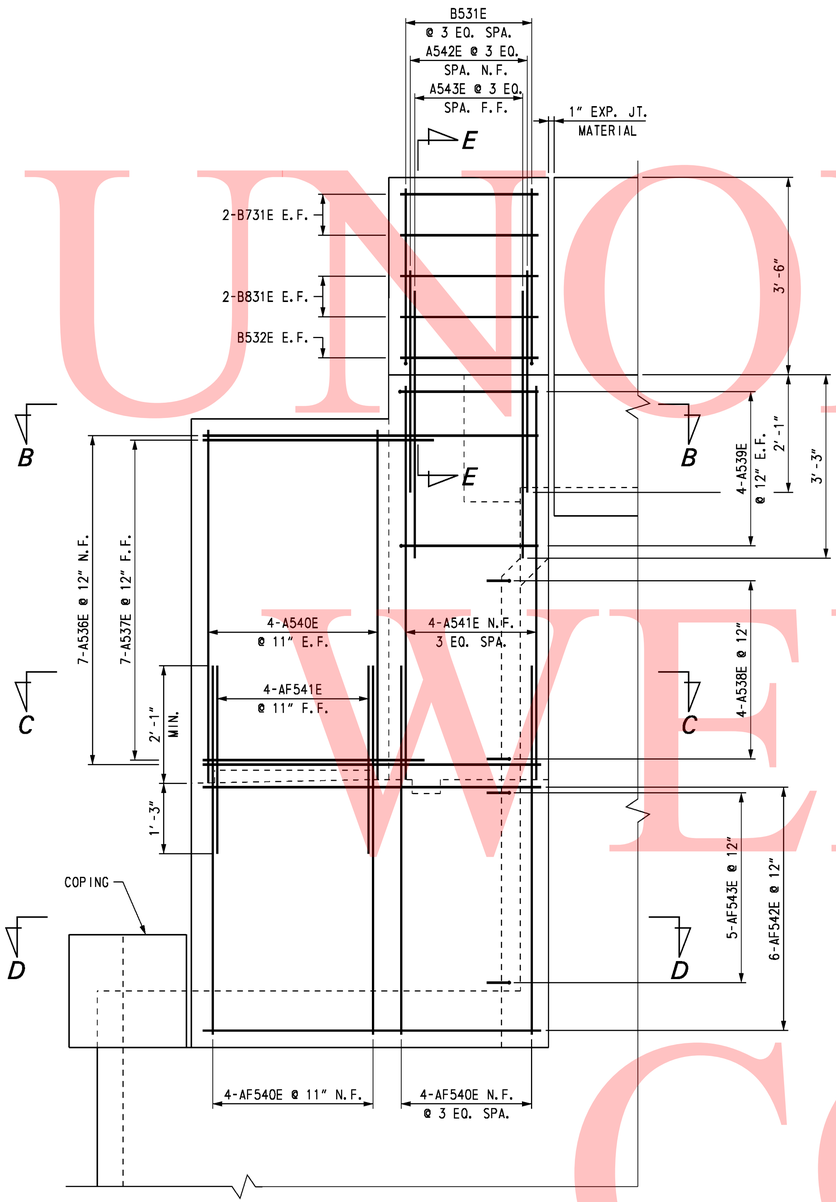

WINGWALL IV SIDE ELEVATION

SCALE: 3/4" = 1'-0"

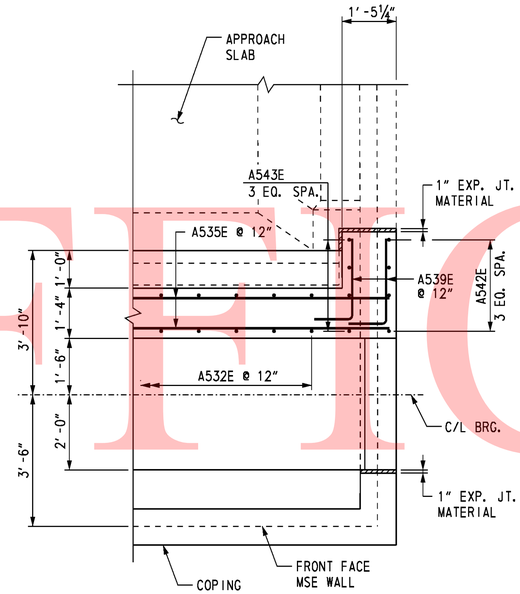

SECTION B-B

SCALE: 1/2" = 1'-0"

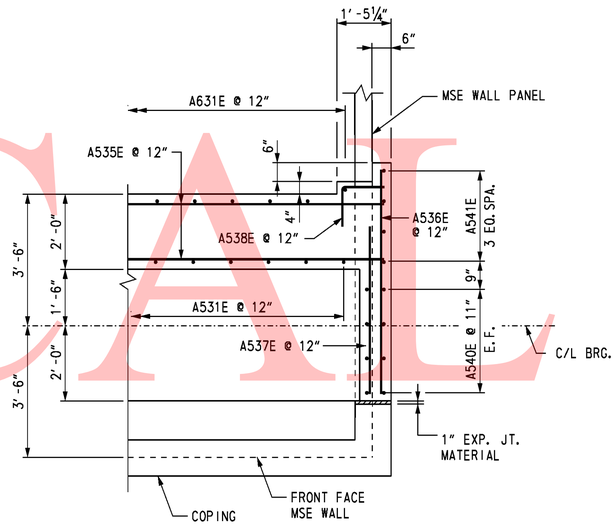

SECTION C-C

SCALE: 1/2" = 1'-0"

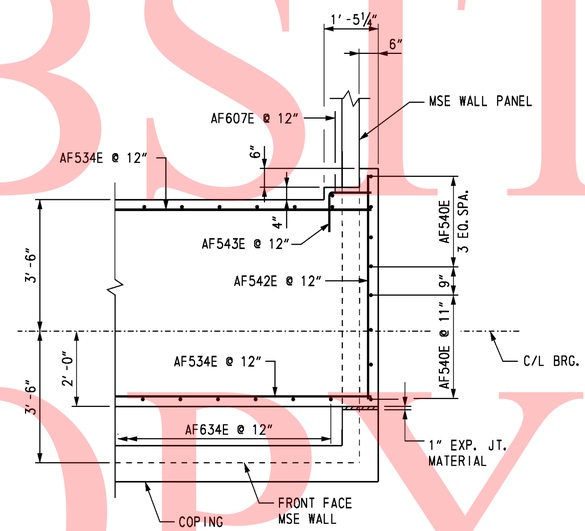

SECTION D-D

SCALE: 1/2" = 1'-0"

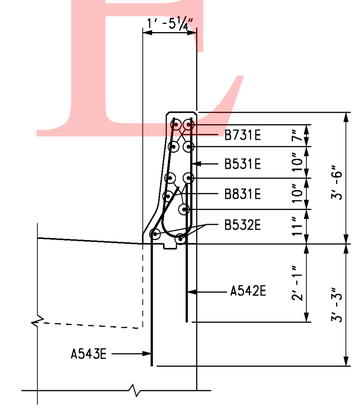

SECTION E-E

SCALE: 1/2" = 1'-0"

CROSS REFERENCE NOTES:

1. FOR ABUTMENT B PLAN AND ELEVATION, SEE DWG. S5-6.
2. FOR ABUTMENT B ELEVATION REINFORCEMENT DETAILS, SEE DWG. S5-10.
3. FOR REINFORCING BAR LIST, SEE DWG. S5-16.

UNOFFICIAL WEBSITE COPY

10/28/2010 O:\20832687-XM\CAD\Bridge\BR-S5\ab07_BR-S5_sr1.dgn untitled

DELAWARE DEPARTMENT OF TRANSPORTATION	ADDENDUMS / REVISIONS	SR1 / I-95 INTERCHANGE	CONTRACT 28-090-03	BRIDGE NO. 1-716D	RAMP G1 OVER SR 7	S5-11 SHEET NO. 404
			COUNTY NEW CASTLE	DESIGNED BY: K. D. BEAVER	ABUTMENT B REINFORCEMENT 2	TOTAL SHTS. 803
				CHECKED BY: J. S. LI		

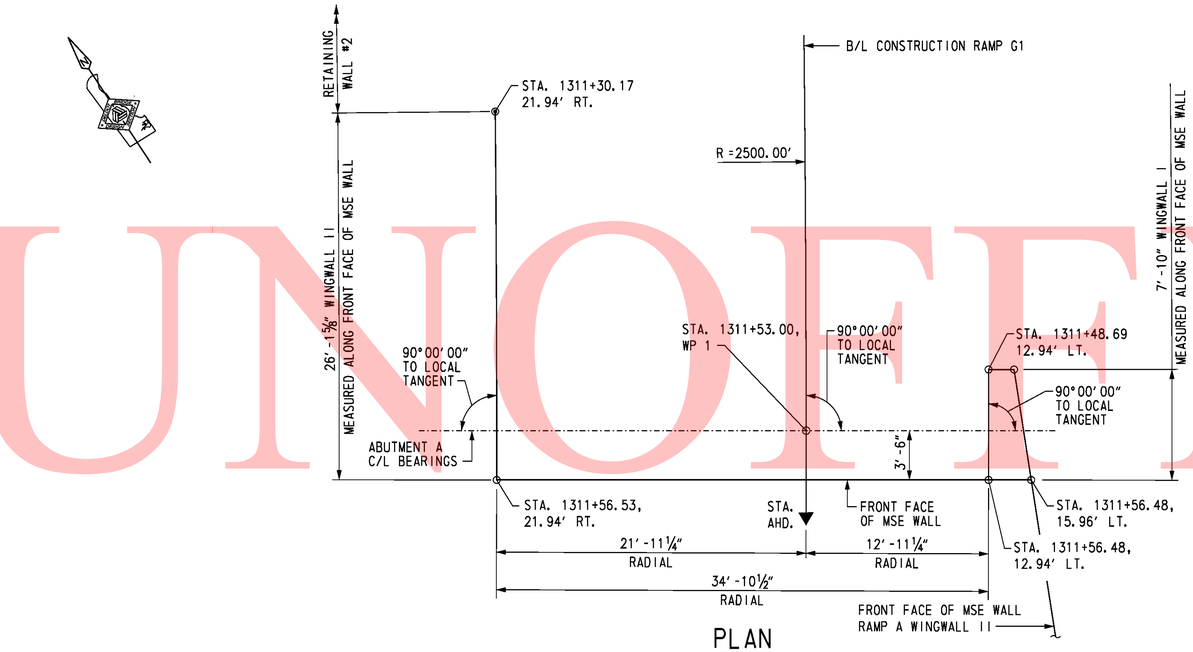

PLAN

SCALE: 3/16" = 1'-0"

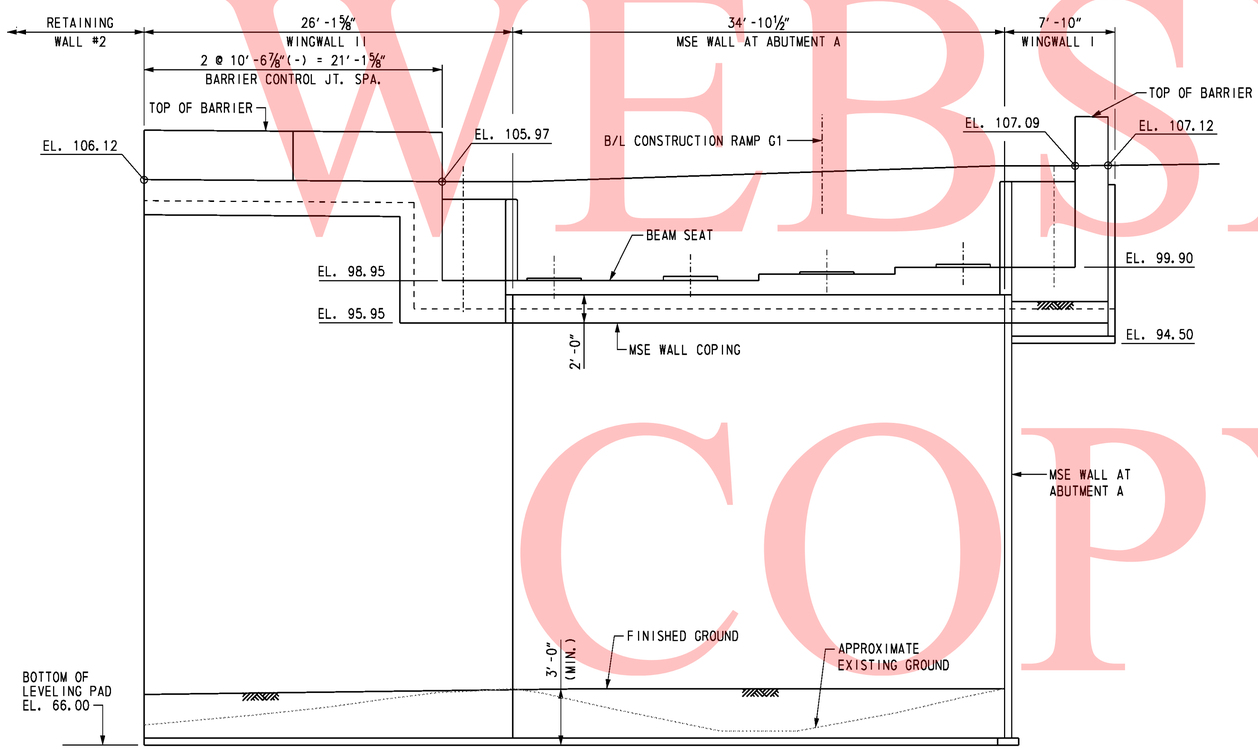

DEVELOPED ELEVATION

SCALE: 3/16" = 1'-0"

CROSS REFERENCE NOTES:

1. FOR BRIDGE PLAN AND ELEVATION, SEE DWG. S5-1.
2. FOR ABUTMENT A PLAN AND ELEVATION, SEE DWG. S5-5.
3. FOR MSE WINGWALL DETAILS, SEE DWG. S5-14 & S5-15.

UNOFFICAL WEBSITE COPY

10/28/2010 O:\20832687-XM\CAD\Bridge\BR-S5\rd01_BR-S5_sr1.dgn untitled

DELAWARE DEPARTMENT OF TRANSPORTATION	ADDENDUMS / REVISIONS	SR1 / I-95 INTERCHANGE	CONTRACT 28-090-03	BRIDGE NO. 1-716D	RAMP G1 OVER SR 7	S5-12 SHEET NO.
			COUNTY NEW CASTLE	DESIGNED BY: R. F. KIRCHNER	WINGWALLS I AND II PLAN AND ELEVATION	405 TOTAL SHTS.
				CHECKED BY: G. P. MISTRY		803

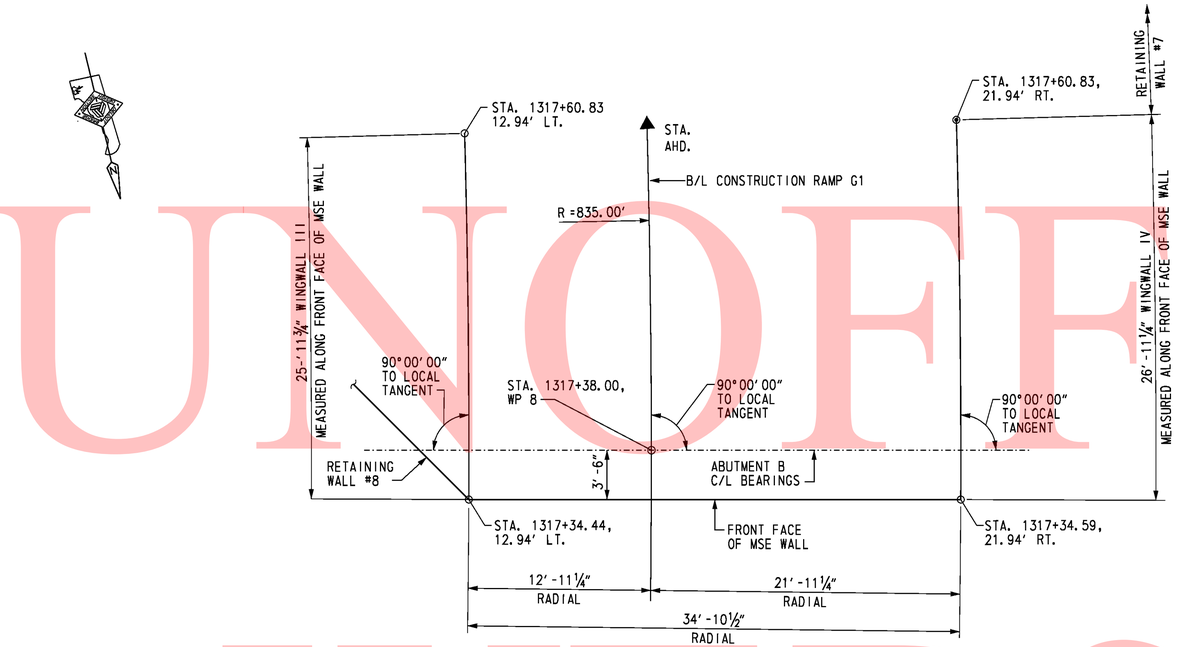

PLAN

SCALE: 1/16" = 1'-0"

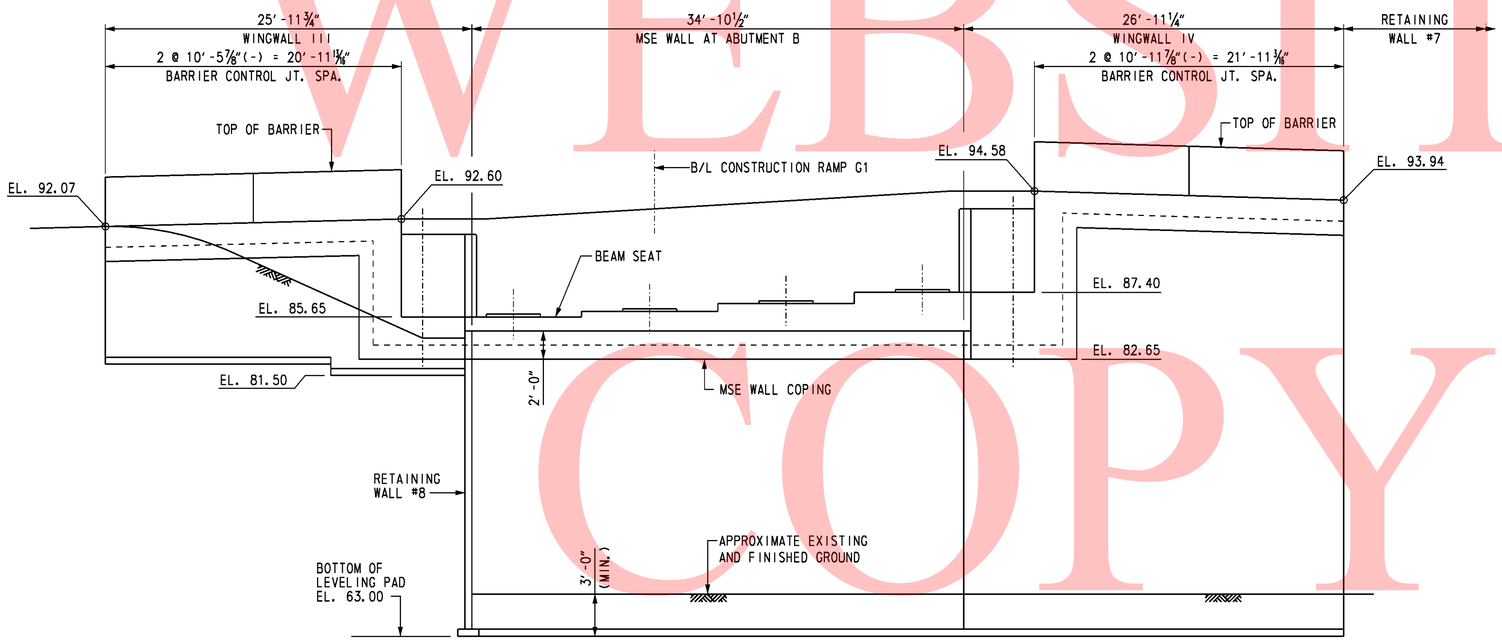

DEVELOPED ELEVATION

SCALE: 1/16" = 1'-0"

CROSS REFERENCE NOTES:

1. FOR BRIDGE PLAN AND ELEVATION, SEE DWG. S5-1.
2. FOR ABUTMENT B PLAN AND ELEVATION, SEE DWG. S5-6.
3. FOR MSE WINGWALL DETAILS, SEE DWG. S5-14 & S5-15.

UNOFFICAL WEBSITE COPY

10/28/2010 O:\20832687-XM\CAD\Bridge\BR-S5\rd02_BR-S5_sr1.dgn untitled

DELAWARE DEPARTMENT OF TRANSPORTATION	ADDENDUMS / REVISIONS	SR1 / I-95 INTERCHANGE	CONTRACT 28-090-03	BRIDGE NO. 1-716D	RAMP G1 OVER SR 7	S5-13 SHEET NO. 406
			COUNTY NEW CASTLE	DESIGNED BY: R. F. KIRCHNER	WINGWALLS III AND IV PLAN AND ELEVATION	TOTAL SHTS. 803
				CHECKED BY: G. P. MISTRY		

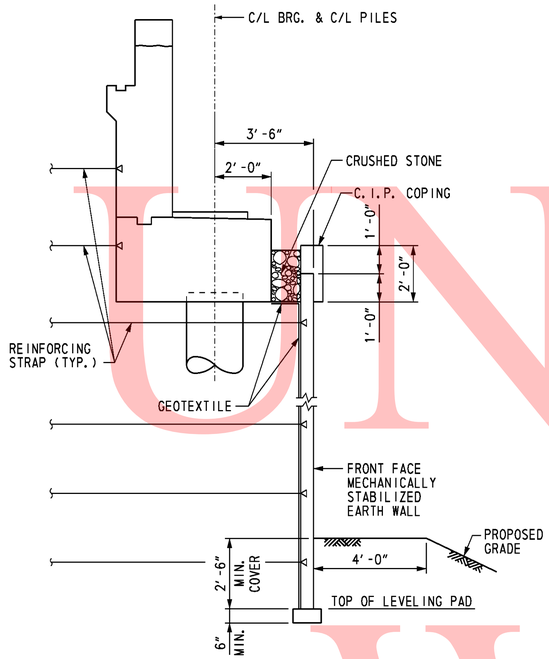

TYPICAL MSE WALL SECTION
AT ABUTMENT
SCALE: 3/8" = 1'-0"

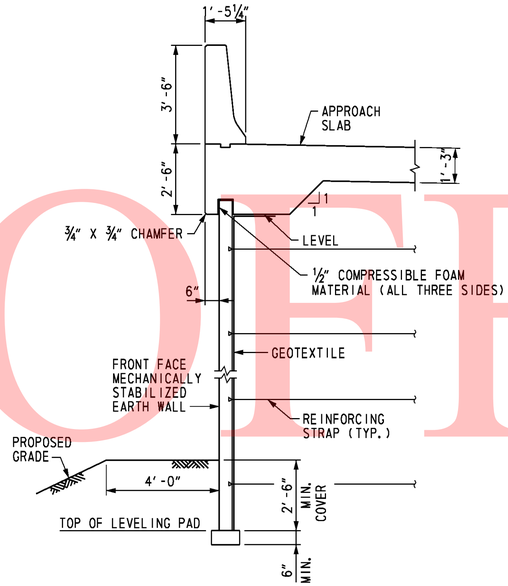

TYPICAL WINGWALL SECTION
WITH APPROACH SLAB
SCALE: 3/8" = 1'-0"

MSE WALL NOTES

SPECIFICATIONS: PROPRIETARY MSE WALLS SHALL BE DESIGNED IN ACCORDANCE WITH THE FOLLOWING:
- AASHTO LRFD BRIDGE DESIGN SPECIFICATIONS, 4TH EDITION WITH ALL CURRENT REVISIONS.
- FEDERAL HIGHWAY ADMINISTRATION PUBLICATION NOS. FHWA-NHI-10-024 AND FHWA-NHI-025, "DESIGN AND CONSTRUCTION OF MECHANICALLY STABILIZED EARTH WALLS AND REINFORCED SOIL SLOPES", VOLUME I AND VOLUME II.

CONCRETE DESIGN SHALL BE PERFORMED USING THE LOAD AND RESISTANCE FACTOR DESIGN METHOD.

CONCRETE: ALL CONCRETE FOR BARRIERS, AND ROADWAY BARRIERS SHALL BE 4,500 PSI. LEVELING PAD CONCRETE SHALL BE 3,500 PSI. MIX REQUIREMENTS SHALL CONFORM TO SECTION 812 OF THE DELAWARE DEPARTMENT OF TRANSPORTATION STANDARD SPECIFICATIONS.

CHAMFERS: ALL EXPOSED CORNERS OF CONCRETE SHALL BE CHAMFERED WITH 3/4" x 3/4" MILLED CHAMFER STRIPS, UNLESS OTHERWISE NOTED, EXCEPT ON UNEXPOSED FOOTINGS OR WHERE INDICATED BY THE FOLLOWING NOTATION ON THE PLANS: "DO NOT CHAMFER".

REINFORCING STEEL: REINFORCING STEEL SHALL CONFORM TO ASTM A 615, GRADE 60. ALL SPLICES, NOT SHOWN, SHALL BE LAPPED AS PER THE LRFD BRIDGE DESIGN SPECIFICATIONS. MINIMUM COVER FOR ANY BAR SHALL BE 2" UNLESS OTHERWISE NOTED.

FOR TIES AND STIRRUPS, STANDARD ACI BENDING TOLERANCES ARE MODIFIED TO PLUS (+) ZERO INCHES, MINUS (-) NORMAL ACI BENDING TOLERANCE.

ONLY GRADE 60 CAN BE USED ON THIS PROJECT.

ALL REINFORCING STEEL IN THE BARRIER SHALL BE FUSION-BONDED EPOXY COATED, AND SHALL CONFORM TO ASTM D3963.

ALL KEYS ARE NOMINAL SIZE.

THE MSE WALL MANUFACTURER MAY SUBSTITUTE ALTERNATE REINFORCING CONFIGURATIONS AND SUBMIT FOR APPROVAL.

EXPANSION AND CONTRACTION JOINTS: THE LOCATION OF THE EXPANSION AND CONTRACTION JOINTS IN THE BARRIER SHOWN ON THE PLANS MAY BE ADJUSTED TO ACCOMMODATE THE PANEL TYPE USED IN THE PROJECT. ANY CHANGE TO THESE JOINT LOCATIONS SHALL BE SUBMITTED TO THE ENGINEER FOR APPROVAL.

LEVELING PAD: THE PROPRIETARY WALL MANUFACTURER MAY RELOCATE THE LEVELING PAD STEPS AT THEIR DISCRETION PROVIDED THAT THE MINIMUM EMBEDMENT IS MAINTAINED. ANY CHANGE TO THE STEP LOCATIONS SHALL BE SUBMITTED TO THE ENGINEER FOR APPROVAL.

ROADWAY LIMITS: THE PROPRIETARY WALL MANUFACTURER SHALL ASSURE THAT PROPOSED PROPRIETARY WALL COMPONENTS ARE POSITIONED SUCH THAT THE DESIGNATED ROADWAY LIMITS ARE NOT ENCROACHED UPON.

TRAFFIC BARRIER JOINTS: TRAFFIC BARRIER FOOTING/ MOMENT SLAB SHALL HAVE CONSTRUCTION JOINTS TO COINCIDE WITH THE BARRIER JOINTS.

COORDINATION: CONTRACTOR AND PROPRIETARY WALL MANUFACTURER SHALL COORDINATE LOCATIONS OF INLETS AND PIPES WITH LOCATIONS OF PROPRIETARY WALL TIE BACK SYSTEM.

ARCHITECTURAL FINISH: THE MSE WALL PANELS SHALL RECEIVE AN ARCHITECTURAL FINISH.

SERVICE LIFE: ALL RETAINING WALL COMPONENTS SHALL BE DESIGNED FOR A MINIMUM SERVICE LIFE OF 100 YEARS.

WALL SYSTEM: ONLY ONE MSE WALL SYSTEM MAY BE USED ON THIS PROJECT.

ROADWAY SUPERELEVATION: FOR ROADWAY SUPERELEVATION, SEE SUPERELEVATION TABLES.

MSE WALL BACKFILL: MSE WALL BACKFILL SHALL CONSIST OF SPECIFIED BACKFILL AS SHOWN ON SOIL PROFILE SECTION.

REINFORCING STRAPS: SET REINFORCING STRAPS TO CLEAR PILE CASING, 2" MIN. CLEARANCE. MAXIMUM IN FIELD SKEW OF 15 DEGREES. IF GREATER SKEW ANGLE IS REQUIRED, CONTACT MSE WALL FIELD REPRESENTATIVE PRIOR TO INSTALLATION.

CROSS REFERENCE NOTES:

1. FOR BRIDGE PLAN AND ELEVATION, SEE DWG. S5-1.
2. FOR WINGWALLS PLAN AND ELEVATION, SEE DWGS. S5-12 & S5-13.
3. FOR SOIL PROFILE INFORMATION AND FOUNDATION NOTES, SEE DWG. S5-15.

UNOFFICAL WEBSITE COPY

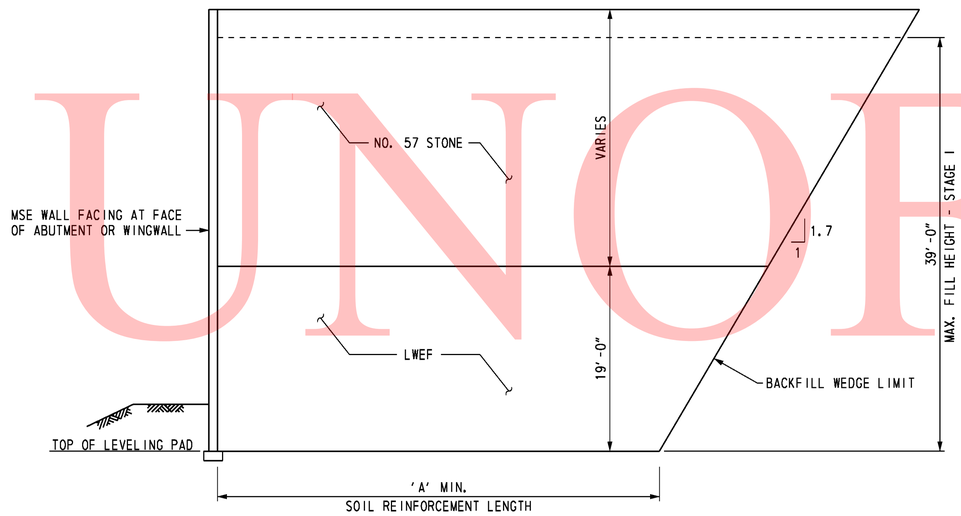

SOIL PROFILE SECTION
ABUTMENT A AND WINGWALLS I AND II

NOT TO SCALE

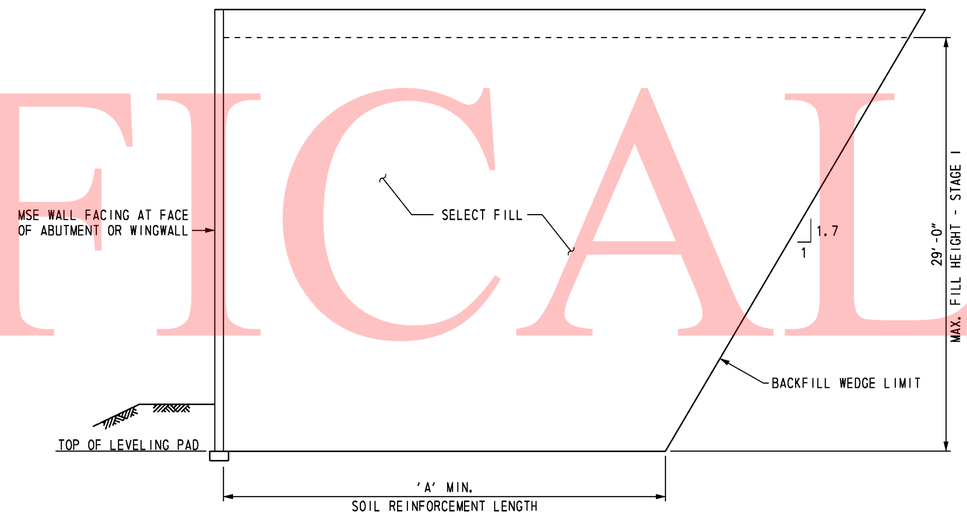

SOIL PROFILE SECTION
ABUTMENT B AND WINGWALLS III AND IV

NOT TO SCALE

MINIMUM REINFORCED ZONE WIDTH (A) FEET	
ABUTMENT A	
FACE OF ABUTMENT	33.0
WINGWALLS I AND II	33.0
ABUTMENT B	
FACE OF ABUTMENT	27.0
WINGWALLS III AND IV	32.0

SOIL PROPERTIES				
SOIL TYPE	UNIT WEIGHT (PCF)	DRAINED ANGLE OF FRICTION (DEGREES)	UNDRAINED SHEAR (PSF)	FACTORED BEARING RESISTANCE (KSF)
SELECT FILL	125	34	-	-
LWEF	40	38	-	-
NO. 57 STONE	105	38	-	-
FOUNDATION SOIL:				
ABUTMENT A	120	24	1250	5.3
ABUTMENT B	120	24	1400	6.0

FOUNDATION NOTES

THE FACTORED BEARING RESISTANCE SHALL BE VERIFIED PRIOR TO CONSTRUCTION OF THE MSE WALL.

THE INTERNAL STABILITY OF THE MSE WALL SHALL BE DESIGNED BY THE CONTRACTOR USING THE SOIL PARAMETERS PROVIDED FOR EACH STRUCTURE LOCATION. THE INTERNAL STABILITY CALCULATIONS SHALL BE SIGNED AND SEALED BY A PROFESSIONAL ENGINEER LICENSED IN THE STATE OF DELAWARE AS INDICATED IN THE PROJECT SPECIFICATIONS.

ISOLATED AREAS OF EXISTING FILL MAY BE ENCOUNTERED DURING CONSTRUCTION OF THIS MSE WALL. EXISTING FILL SHALL BE UNDERCUT TO EXPOSE UNDISTURBED NATURAL SOIL. UNDERCUTTING AND BACKFILLING WILL BE MEASURED AND PAID IN ACCORDANCE WITH THE SPECIFICATIONS.

A MINIMUM 7-DAY QUARANTINE PERIOD SHALL BE REQUIRED AFTER CONSTRUCTION OF THE WALL TO THE "MAX. FILL HEIGHT - STAGE 1" INDICATED ON THE SOIL PROFILE SECTION. NO FURTHER FILL SHALL BE PLACED UNTIL AUTHORIZED BY THE ENGINEER. ONCE AUTHORIZATION IS GIVEN, FILL SHALL BE PLACED IN ADDITIONAL INCREMENTS OF 5 FEET IN HEIGHT, WITH THE SAME QUARANTINE PERIOD AND AUTHORIZATION REQUIRED AT EACH INCREMENT. AN ADDITIONAL QUARANTINE PERIOD OF 30 TO 60 DAYS IS REQUIRED AFTER CONSTRUCTION OF THE MSE WALL TO ITS FULL HEIGHT. NO FURTHER CONSTRUCTION SHALL BE PERMITTED UNTIL AUTHORIZED BY THE ENGINEER. A TOTAL ESTIMATED SETTLEMENT OF APPROXIMATELY FOUR TO FIVE INCHES IS ANTICIPATED.

UNOFFICAL WEBSITE COPY

REINFORCING BAR LIST

ABUTMENT A

MARK	LENGTH	NO. BARS	TYPE	A	B	C	D	E	G	H	J	K	O	R	REMARKS
AP401E	6′-7″	76	T3									1′-8″	1′-7″		
AP801E	18′-11″	32	37	0′-11″	18′-0″						0′-8″				
AF501E	18′-0″	6	STR.												
AF502E	17′-7″	6	STR.												
AF503E	19′-0″	4	STR.												
AF504E	18′-7″	6	STR.												
AF505E	19′-0″	6	STR.												
AF506E	11′-7″	6	36	0′-10″	10′-9″										
AF507E	8′-9″	6	36	0′-10″	7′-11″										
AF508E	3′-7″	35	STR.												
AF509E	6′-1″	15	STR.												
AF510E	4′-5″	8	STR.												
AF511E	6′-0″	4	STR.												
AF512E	2′-2″	7	17		1′-1″	1′-1″									
AF513E	5′-6″	5	STR.												
AF601E	17′-4″	18	T2	1′-0″	5′-2″	2′-6″	5′-2″	2′-6″	1′-0″						
AF602E	18′-2″	10	T2	1′-0″	5′-2″	2′-11″	5′-2″	2′-11″	1′-0″						
AF603E	19′-2″	8	T2	1′-0″	5′-2″	3′-5″	5′-2″	3′-5″	1′-0″						
AF604E	4′-3″	33	STR.												
AF605E	5′-9″	2	STR.												
A501E	6′-10″	35	STR.												
A502E	7′-1	33	17		3′-0″	1′-0″	3′-1″								
A503E	3′-9″	33	16		1′-6″	0′-10″	1′-5″			1′-0″		1′-0″			
A504E	19′-0″	18	STR.												
A505E	18′-7″	18	STR.												
A506E	6′-0″	7	STR.												
A507E	4′-6″	14	STR.												
A508E	2′-2″	8	17		1′-1″	1′-1″									
A509E	3′-9″	8	36	1′-0″	2′-9″										
A510E	5′-8″	16	STR.												
A511E	7′-11″	7	STR.												
A512E	3′-10″	7	STR.												
A513E	4′-8″	7	16			3′-5″	1′-3″			1′-0¼″		0′-8¾″			
A514E	5′-3″	7	STR.												
A515E	3′-3″	8	36	1′-0″	2′-3″										
A601E	4′-4″	35	STR.												
B501E	6′-9″	7	H1		2′-9½″	1′-2″	2′-9½″			0′-5″				0′-4½″	
B502E	2′-0″	4	STR.												
B701E	2′-0″	8	STR.												
B801E	2′-0″	8	STR.												

ABUTMENT B

MARK	LENGTH	NO. BARS	TYPE	A	B	C	D	E	G	H	J	K	O	R	REMARKS
AP431E	6′-7″	76	T3									1′-8″	1′-7″		
AP831E	18′-11″	32	37	0′-11″	18′-0″						0′-8″				
AF531E	18′-0″	6	STR.												
AF532E	17′-7″	6	STR.												
AF533E	19′-0″	4	STR.												
AF534E	18′-7″	6	STR.												
AF535E	11′-10″	2	STR.												
AF536E	9′-2″	8	STR.												
AF537E	11′-7″	12	36	0′-10″	10′-9″										
AF538E	8′-9″	6	36	0′-10″	7′-11″										
AF539E	3′-7″	35	STR.												
AF540E	6′-11″	16	STR.												
AF541E	4′-5″	8	STR.												
AF542E	6′-0″	12	STR.												
AF543E	2′-2″	10	17		1′-1″	1′-1″									
AF631E	17′-4″	8	T2	1′-0″	5′-2″	2′-6″	5′-2″	2′-6″	1′-0″						
AF632E	18′-2″	10	T2	1′-0″	5′-2″	2′-11″	5′-2″	2′-11″	1′-0″						
AF633E	19′-2″	10	T2	1′-0″	5′-2″	3′-5″	5′-2″	3′-5″	1′-0″						
AF634E	20′-10″	8	T2	1′-0″	5′-2″	4′-3″	5′-2″	4′-3″	1′-0″						
AF635E	4′-3″	33	STR.												
AF636E	6′-6″	2	STR.												
A531E	6′-9″	35	STR.												
A532E	7′-1	33	17		3′-0″	1′-0″	3′-1″								
A533E	3′-9″	33	16		1′-6″	0′-10″	1′-5″			1′-0″		1′-0″			
A534E	19′-1″	18	STR.												
A535E	18′-8″	18	STR.												
A536E	6′-0″	14	STR.												
A537E	4′-6″	14	STR.												
A538E	2′-2″	8	17		1′-1″	1′-1″									
A539E	3′-9″	16	36	1′-0″	2′-9″										
A540E	5′-7″	16	STR.												
A541E	7′-10″	8	STR.												
A542E	3′-10″	8	STR.												
A543E	4′-8″	8	16			3′-5″	1′-3″			1′-0¼″		0′-8¾″			
A631E	4′-4″	35	STR.												
B531E	6′-9″	8	H1		2′-9½″	1′-2″	2′-9½″			0′-5″				0′-4½″	
B532E	2′-0″	4	STR.												
B731E	2′-0″	8	STR.												
B831E	2′-0″	8	STR.												

BENDING DIAGRAMS

ALL DIMENSIONS ARE FROM OUT TO OUT.

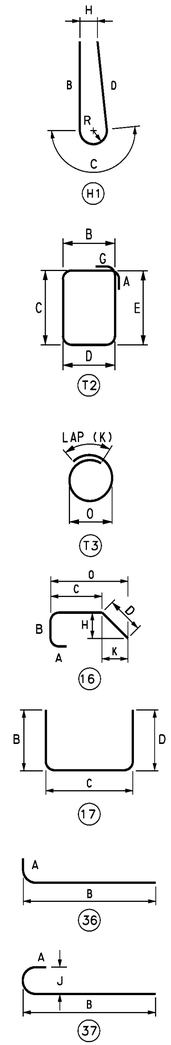

UNOFFICIAL WEBSITE COPY

S5-16

DELAWARE DEPARTMENT OF TRANSPORTATION

ADDENDUMS / REVISIONS

SR1 / I-95 INTERCHANGE

CONTRACT	BRIDGE NO.	1-716D
28-090-03	DESIGNED BY: K. D. BEAVER	
COUNTY		
NEW CASTLE	CHECKED BY: J.S. LI	

RAMP G1 OVER SR 7

ABUTMENTS A AND B REINFORCING BAR LIST

SHEET NO.
409
TOTAL SHTS.
803

10/28/2010 O:\20832687-XM\CAD\Bridge\BR-S5\ab08_BR-S5_sr1.dgn untitled

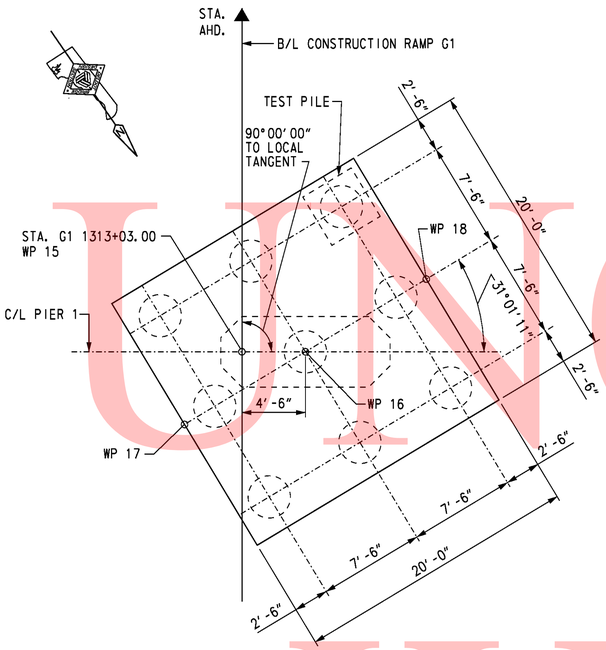

PIER 1 PILE PLAN

SCALE: 3/16″ = 1′-0″

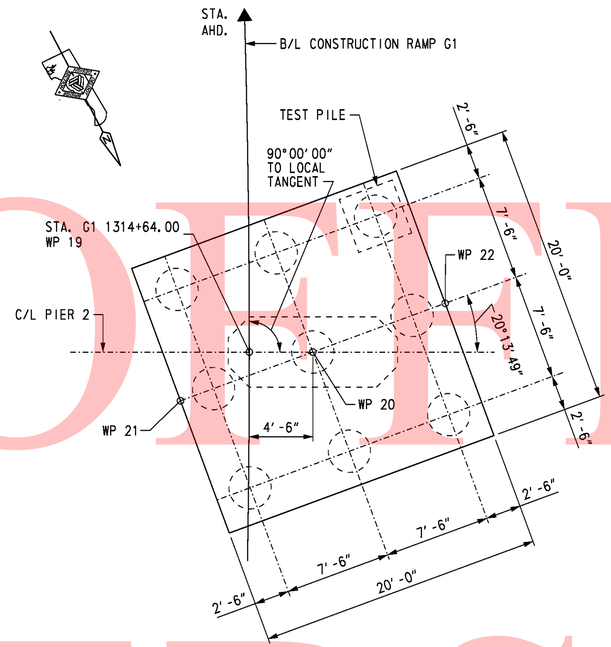

PIER 2 PILE PLAN

SCALE: 3/16″ = 1′-0″

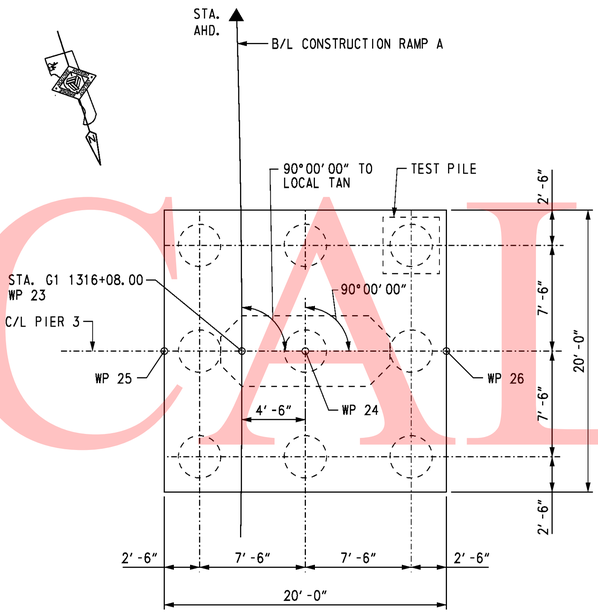

PIER 3 PILE PLAN

SCALE: 3/16″ = 1′-0″

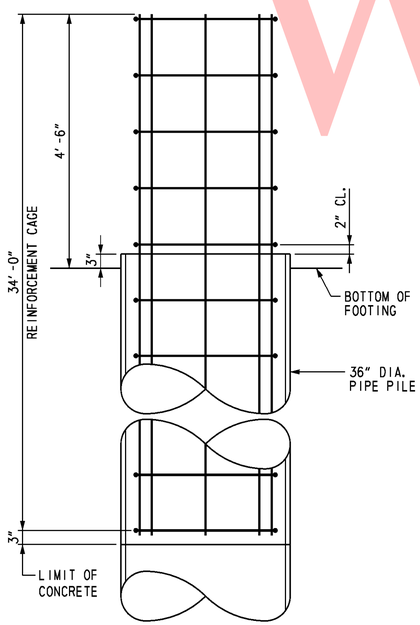

ELEVATION

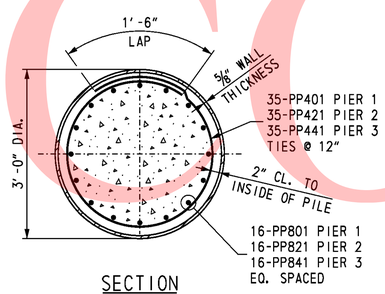

SECTION

PIPE PILE REINFORCEMENT

SCALE: 3/4″ = 1′-0″

PILE INSTALLATION DATA

SUBSTRUCTURE UNIT	DESIGN DATA: NOMINAL PILE DRIVING RESISTANCE (KIPS)	DESIGN DATA: ESTIMATED PILE TIP ELEVATION	ACTUAL FIELD DATA: AVERAGE MINIMUM TIP ELEVATION	ACTUAL FIELD DATA: AVERAGE MAXIMUM TIP ELEVATION
PIER 1	1130	11.0		
PIER 2	1130	24.0		
PIER 3	1130	-4.0		

PIER 1 PILE DRIVING INFORMATION

PILE SIZE AND TYPE:
ACTUAL BEARING OBTAINED:
HAMMER TYPE:
PILE HAMMER ENERGY:
SPECIAL DRIVING CONDITIONS AND COMMENTS:

PIER 2 PILE DRIVING INFORMATION

PILE SIZE AND TYPE:
ACTUAL BEARING OBTAINED:
HAMMER TYPE:
PILE HAMMER ENERGY:
SPECIAL DRIVING CONDITIONS AND COMMENTS:

PIER 3 PILE DRIVING INFORMATION

PILE SIZE AND TYPE:
ACTUAL BEARING OBTAINED:
HAMMER TYPE:
PILE HAMMER ENERGY:
SPECIAL DRIVING CONDITIONS AND COMMENTS:

WORKING POINTS

WP NO.	STATION	OFFSET	COORDINATES: NORTHING	COORDINATES: EASTING
15	1313+03.00	0.00′	612,427.9920	432,310.2543
16	1313+03.00	4.50′ RT.	612,430.5289	432,306.5375
17	1312+97.85	4.07′ LT.	612,429.9539	432,316.5210
18	1313+08.15	13.07′ RT.	612,431.1040	432,296.5541
19	1314+64.00	0.00′	612,292.3439	432,223.7280
20	1314+64.00	4.50′ RT.	612,294.4592	432,219.7562
21	1314+60.52	4.88′ LT.	612,293.1007	432,229.6635
22	1314+67.40	13.89′ RT.	612,295.8177	432,209.8489
23	1316+08.00	0.00′	612,160.0514	432,167.3068
24	1316+08.00	4.50′ RT.	612,161.4537	432,163.0309
25	1316+08.00	5.50′ LT.	612,158.3375	432,172.5330
26	1316+08.00	14.50′ RT.	612,164.5700	432,153.5289

NOTES:

1. PILES SHALL BE 36″ DIA. WITH 5/8″ WALL THICKNESS OPEN-ENDED STEEL PIPE PILES, ASTM A252 GRADE 3.
2. TEST PILES SHALL BE TESTED IN ACCORDANCE WITH THE SPECIFICATIONS.

CROSS REFERENCE NOTES:

1. FOR PIER 1 THRU PIER 3 PLAN AND ELEVATION, SEE DWGS. S5-18 THRU S5-20.
2. FOR REINFORCING BAR LIST, SEE DWG. S5-27 & S5-28.
3. FOR PILE SPLICE DETAIL, SEE DWG. S5-4.
4. FOR TEST PILE PAYMENT NOTES, SEE DWG. S5-2.

UNOFFICIAL WEBSITE COPY

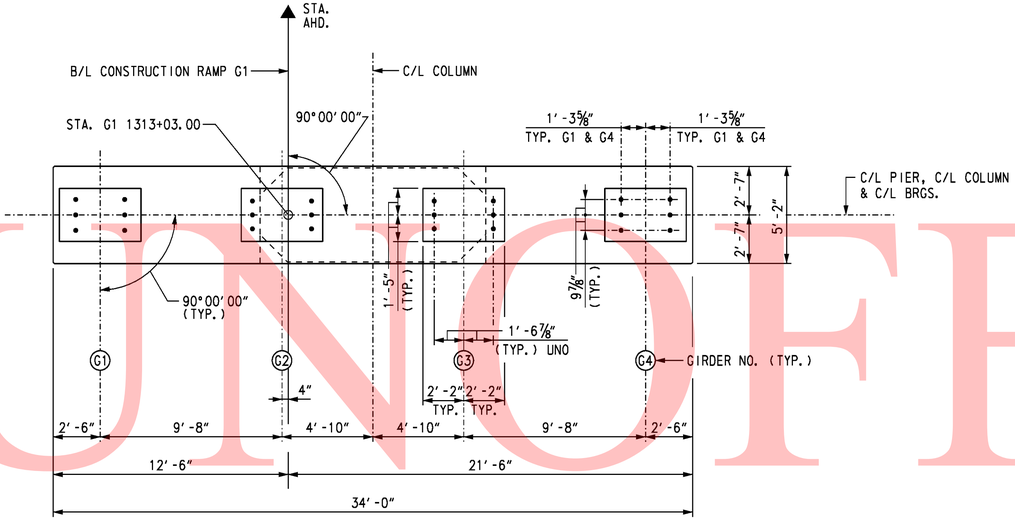

PLAN

SCALE: ¼″ = 1′-0″

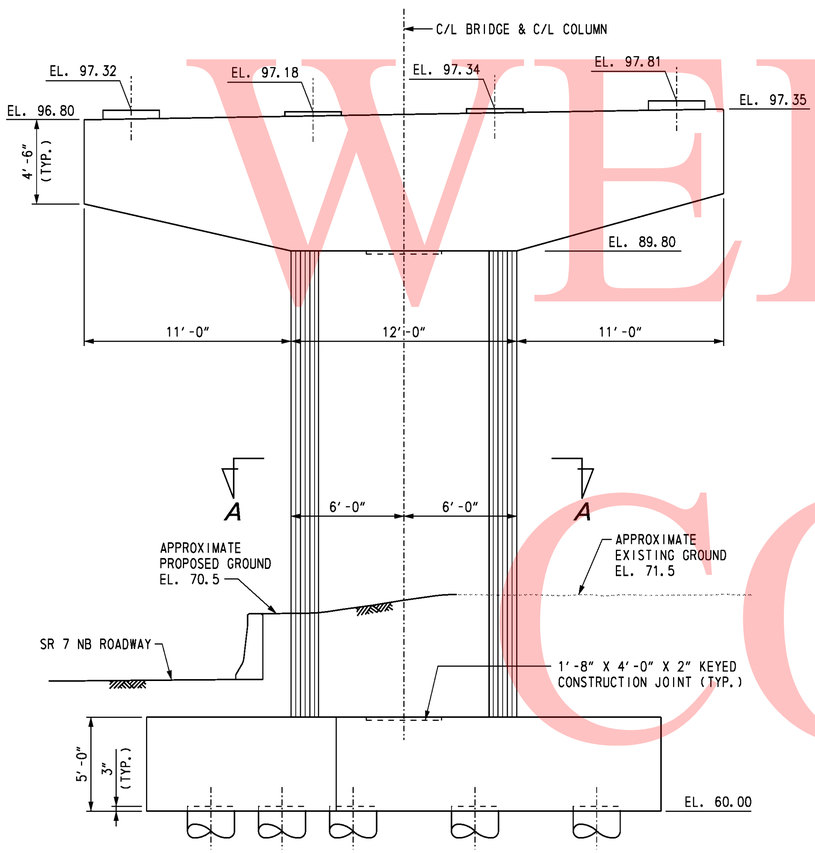

ELEVATION

SCALE: ¼″ = 1′-0″

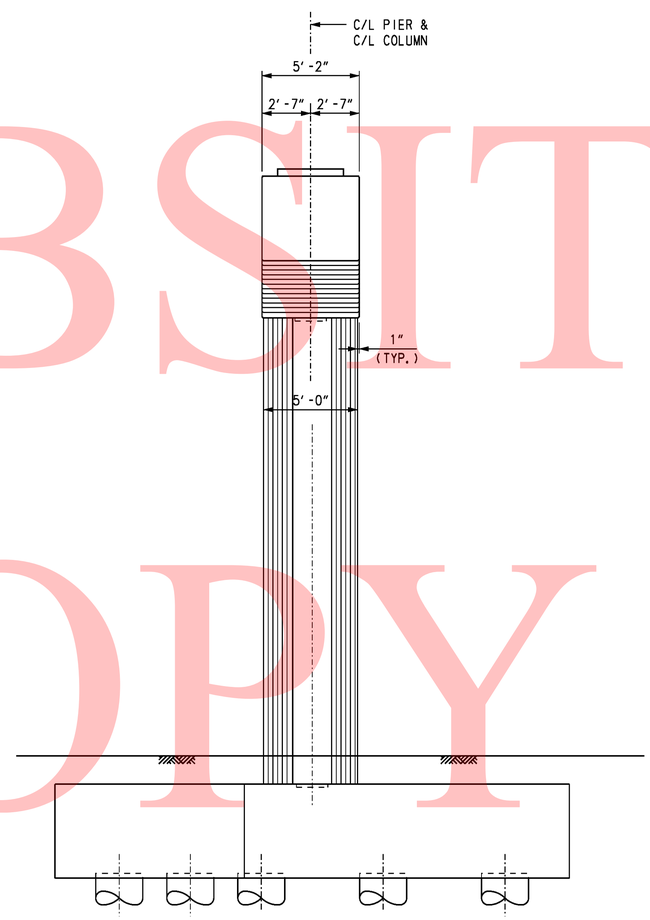

END VIEW

SCALE: ¼″ = 1′-0″

CROSS REFERENCE NOTES:

1. FOR BRIDGE PLAN AND ELEVATION, SEE DWG. S5-1.
2. FOR PIER FOUNDATION PLAN, SEE DWG. S5-17.
3. FOR PIER REINFORCEMENT DETAILS, SEE DWGS. S5-21 & S5-22.

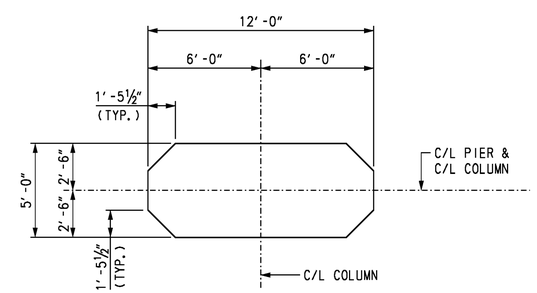

SECTION A-A

SCALE: ¼″ = 1′-0″

UNOFFICAL WEBSITE COPY

10/28/2010 O:\20832687-XM\CAD\Bridge\BR-S5\pr02_BR-S5_sr1.dgn untitled

DELAWARE DEPARTMENT OF TRANSPORTATION	ADDENDUMS / REVISIONS	SR1 / I-95 INTERCHANGE	CONTRACT 28-090-03	BRIDGE NO. 1-716D	RAMP G1 OVER SR 7	S5-18 SHEET NO.
			COUNTY NEW CASTLE	DESIGNED BY: K. D. BEAVER	PIER 1 PLAN AND ELEVATION	411 TOTAL SHTS.
				CHECKED BY: R. F. KIRCHNER		803

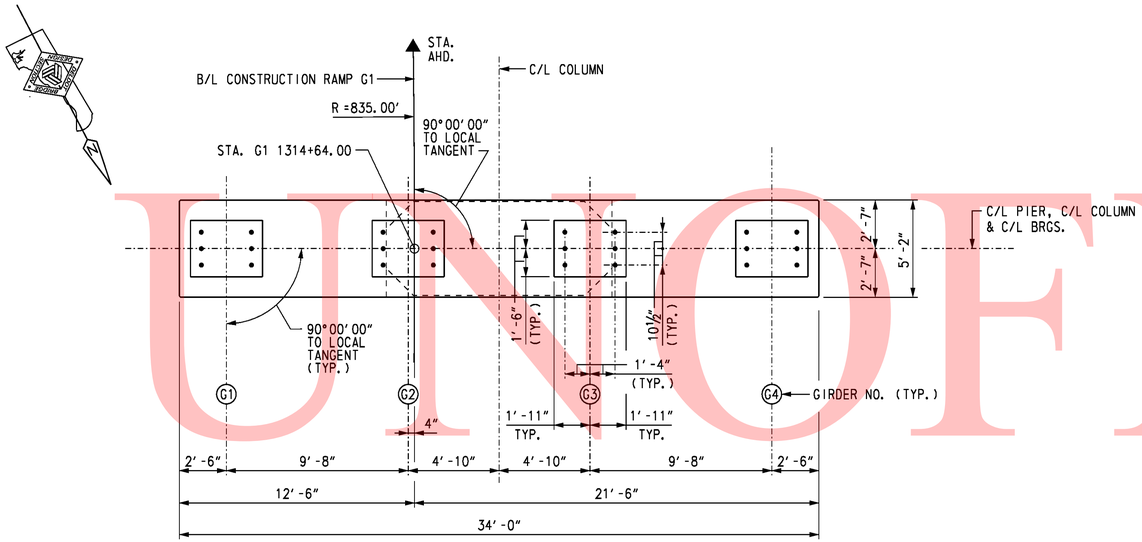

PLAN
SCALE: ¼" = 1'-0"

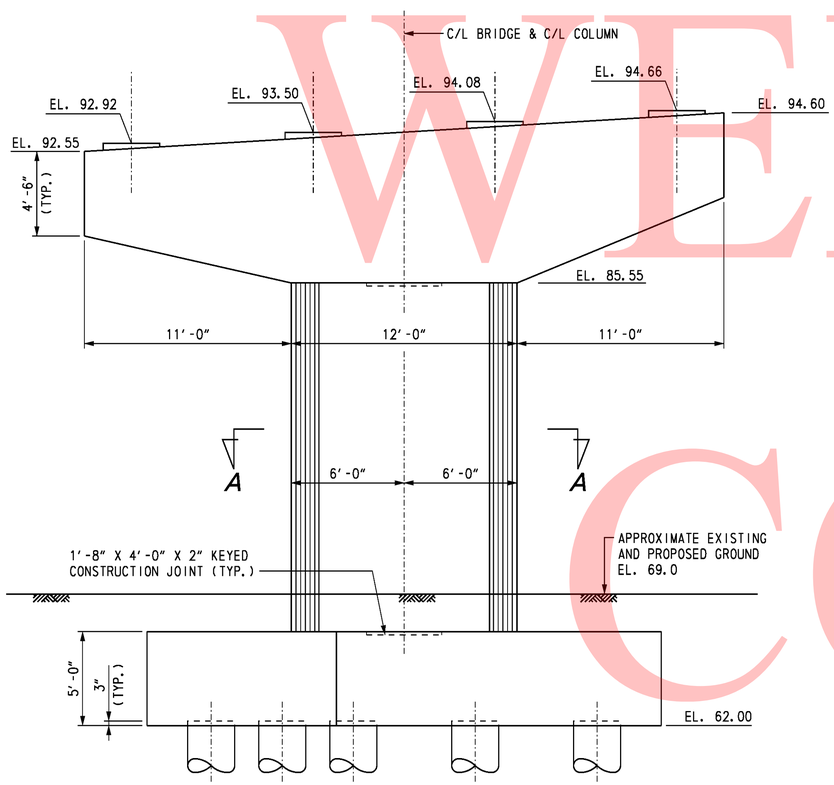

ELEVATION
SCALE: ¼" = 1'-0"

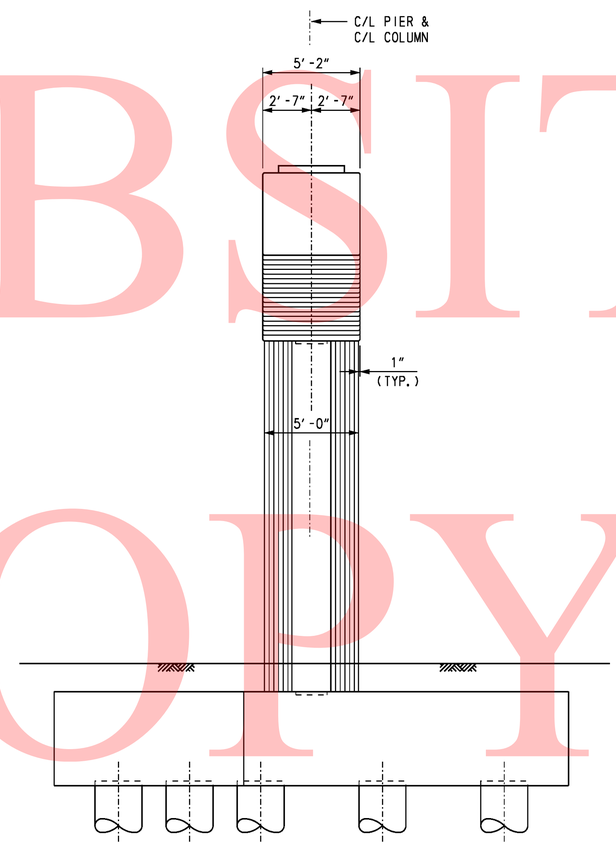

END VIEW
SCALE: ¼" = 1'-0"

CROSS REFERENCE NOTES:

1. FOR BRIDGE PLAN AND ELEVATION, SEE DWG. S51-1.
2. FOR PIER FOUNDATION PLAN, SEE DWG. S5-17.
3. FOR PIER REINFORCEMENT DETAILS, SEE DWGS. S5-23 & S5-24.

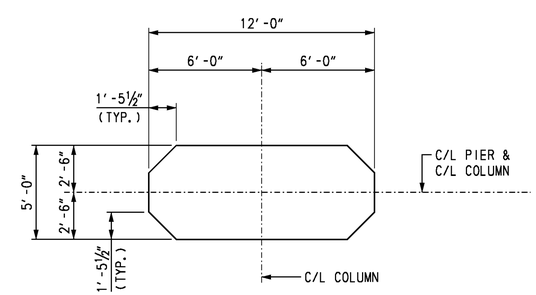

SECTION A-A
SCALE: ¼" = 1'-0"

UNOFFICAL WEBSITE COPY

10/28/2010 O:\20832687-XM\CAD\Bridge\BR-S5\pr03_BR-S5_sr1.dgn untitled

DELAWARE DEPARTMENT OF TRANSPORTATION	ADDENDUMS / REVISIONS	SR1 / I-95 INTERCHANGE	CONTRACT 28-090-03	BRIDGE NO. 1-716D	RAMP G1 OVER SR 7	S5-19
			COUNTY NEW CASTLE	DESIGNED BY: K. D. BEAVER	PIER 2 PLAN AND ELEVATION	SHEET NO. 412
				CHECKED BY: R. F. KIRCHNER		TOTAL SHTS. 803

UNOFFICAL WEBSITE COPY

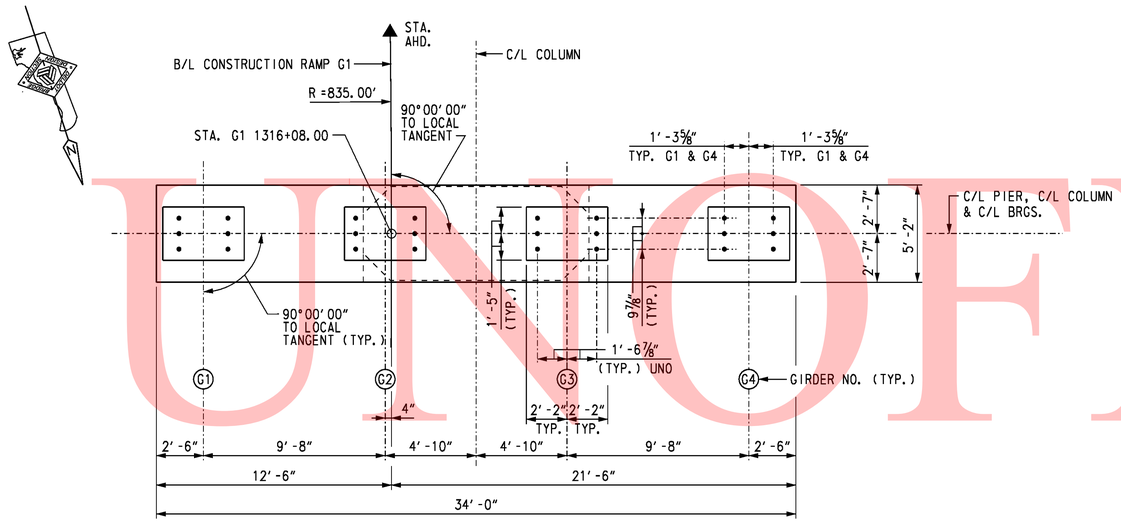

PLAN

SCALE: ¼" = 1'-0"

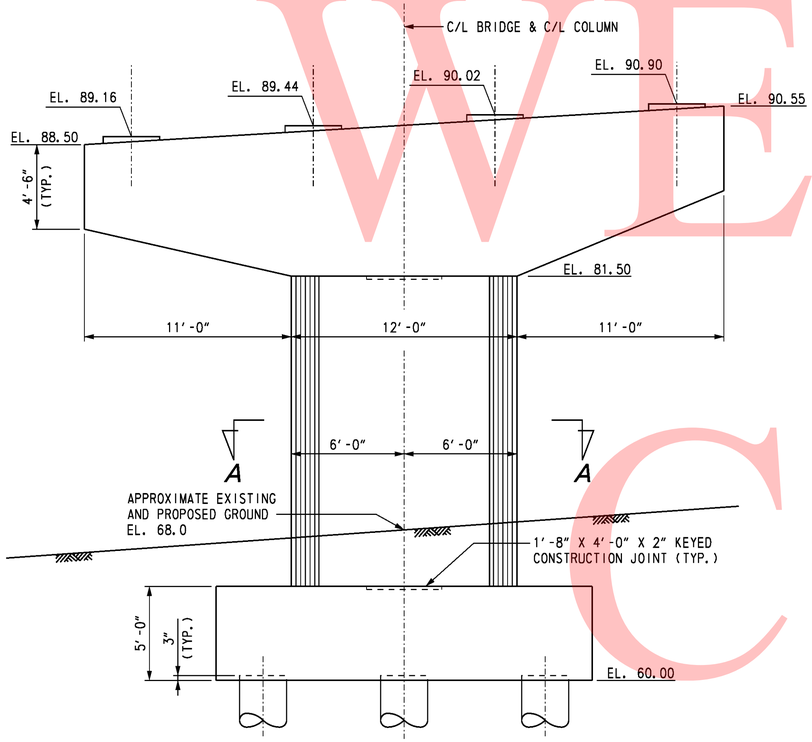

ELEVATION

SCALE: ¼" = 1'-0"

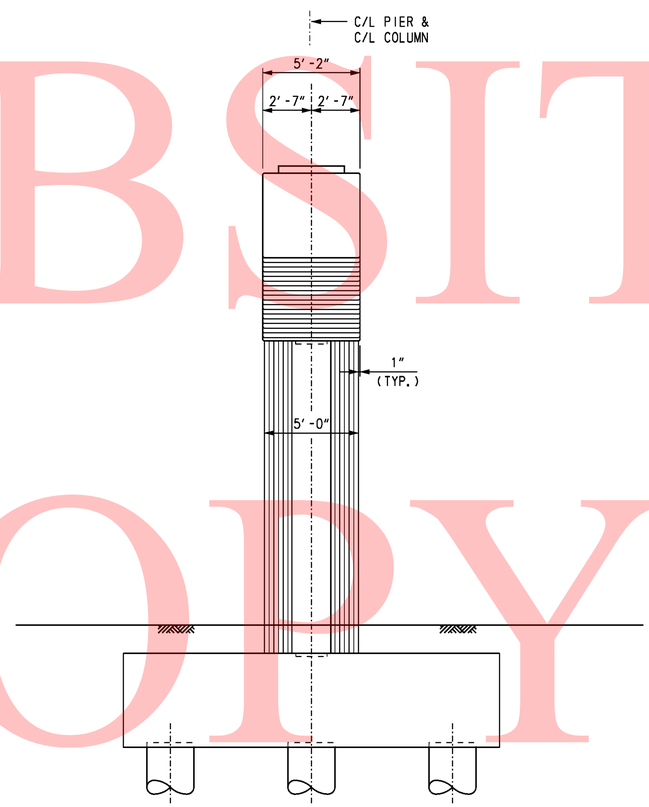

END VIEW

SCALE: ¼" = 1'-0"

CROSS REFERENCE NOTES:

1. FOR BRIDGE PLAN AND ELEVATION, SEE DWG. S5-1.
2. FOR PIER FOUNDATION PLAN, SEE DWG. S5-17.
3. FOR PIER REINFORCEMENT DETAILS, SEE DWGS. S5-25 & S5-26.

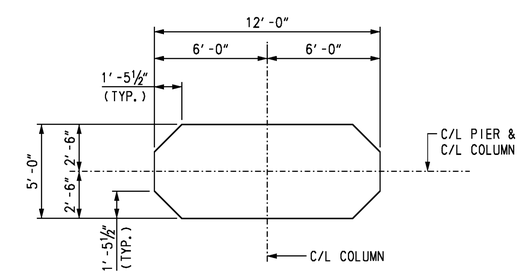

SECTION A-A

SCALE: ¼" = 1'-0"

DELAWARE DEPARTMENT OF TRANSPORTATION	ADDENDUMS / REVISIONS	SR1 / I-95 INTERCHANGE	CONTRACT 28-090-03	BRIDGE NO. 1-716D
			COUNTY NEW CASTLE	DESIGNED BY: K. D. BEAVER
				CHECKED BY: R. F. KIRCHNER

RAMP G1 OVER SR 7

PIER 3
PLAN AND ELEVATION

S5-20

SHEET NO. 413

TOTAL SHTS. 803

10/28/2010 O:\20832687-XM\CAD\Bridge\BR-S5\pr04_BR-S5_sr1.dgn untitled

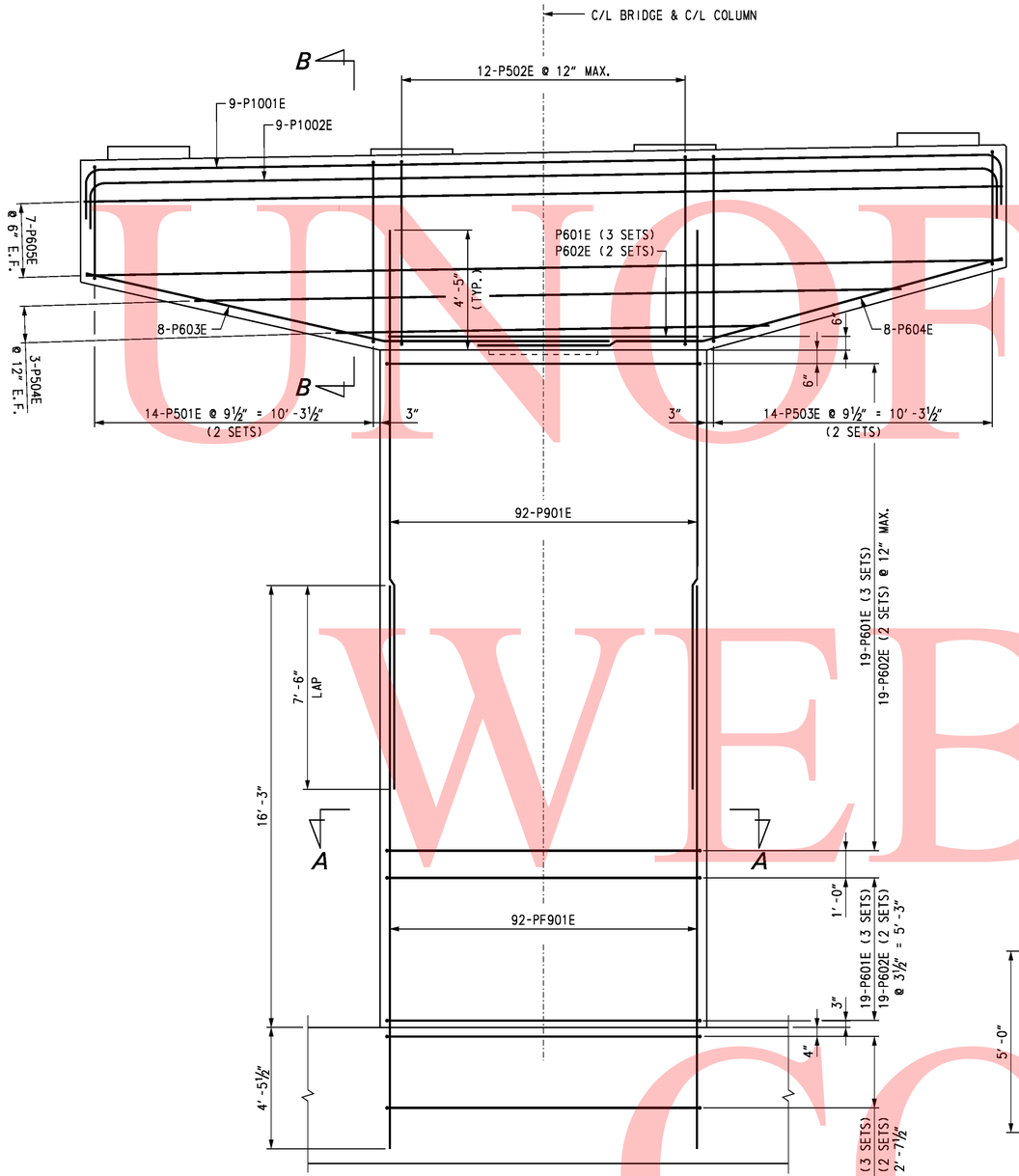

ELEVATION
SCALE: ⅜" = 1'-0"

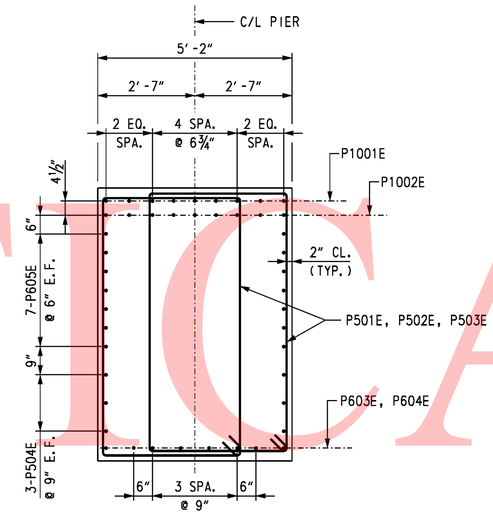

SECTION B-B
SCALE: ½" = 1'-0"

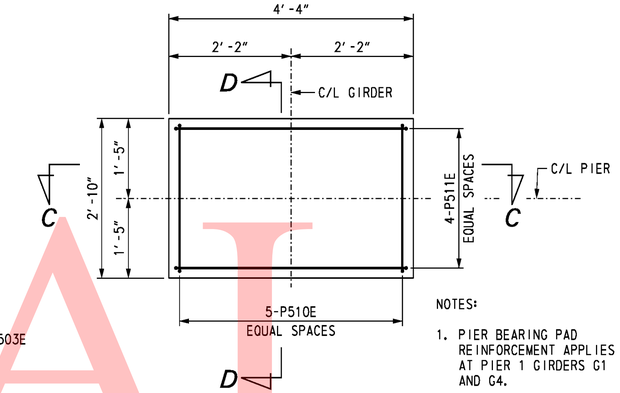

NOTES:

1. PIER BEARING PAD REINFORCEMENT APPLIES AT PIER 1 GIRDERS G1 AND G4.
2. CHAMFER NOT SHOWN ON PLAN VIEW.

PLAN
PIER BEARING PAD
SCALE: ¾" = 1'-0"

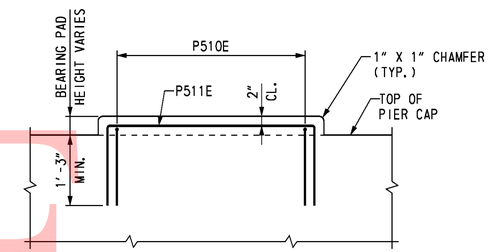

SECTION C-C
SCALE: ¾" = 1'-0"

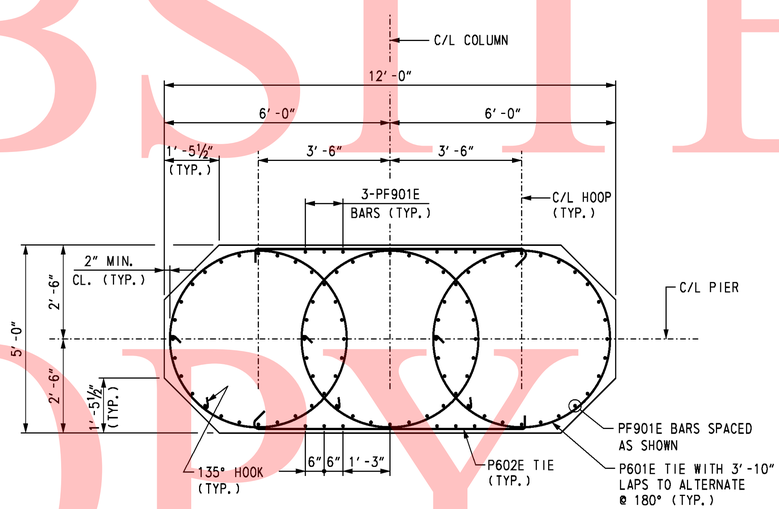

SECTION A-A
SCALE: ½" = 1'-0"

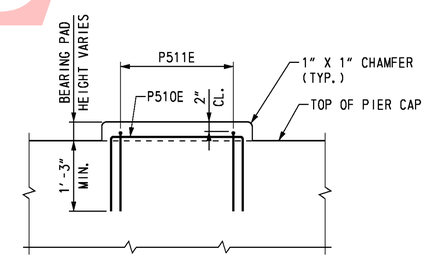

SECTION D-D
SCALE: ¾" = 1'-0"

CROSS REFERENCE NOTES:

1. FOR BRIDGE PLAN AND ELEVATION, SEE DWG. S5-1.
2. FOR PIER PLAN AND ELEVATION, SEE DWG. S5-18.
3. FOR PIER FOOTING REINFORCEMENT DETAILS, SEE DWG. S5-22.
4. FOR REINFORCING BAR LIST, SEE DWG. S5-27.

UNOFFICIAL WEBSITE COPY

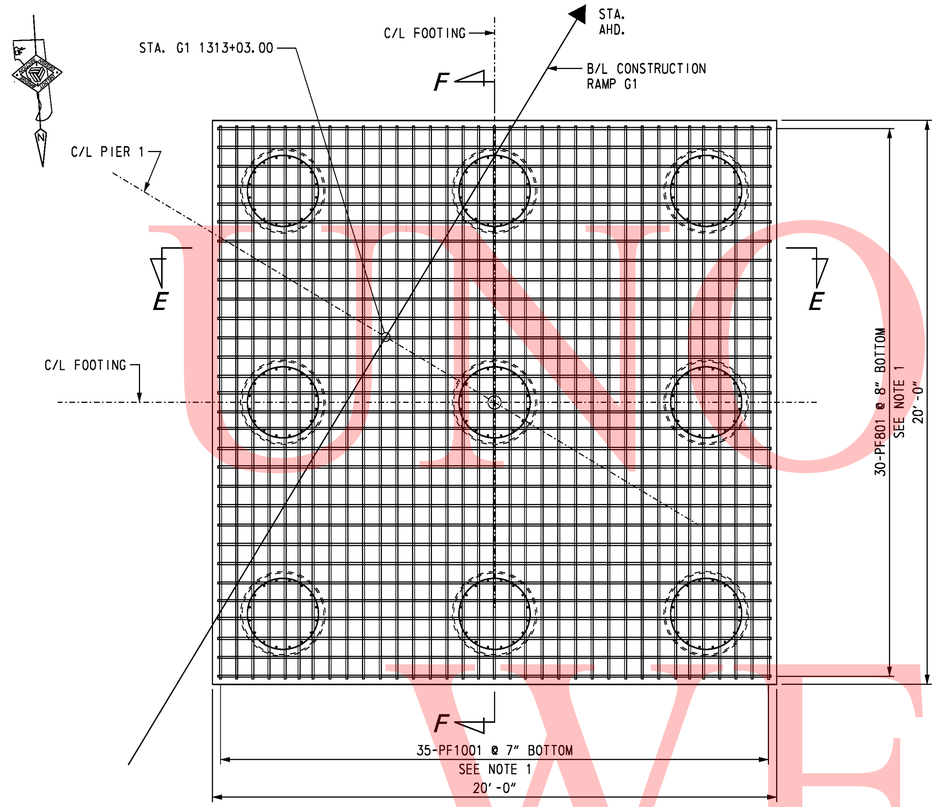

PLAN - BOTTOM MAT FOOTING REINFORCEMENT LAYOUT

SCALE: 3/8" = 1'-0"

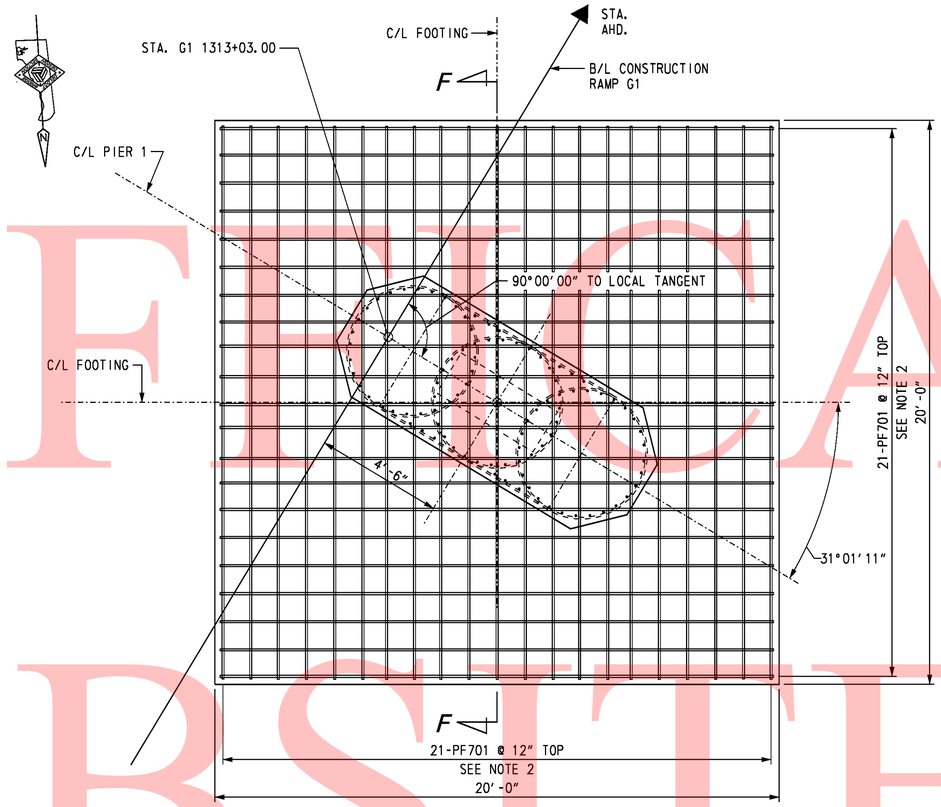

PLAN - TOP MAT FOOTING REINFORCEMENT LAYOUT

SCALE: 3/8" = 1'-0"

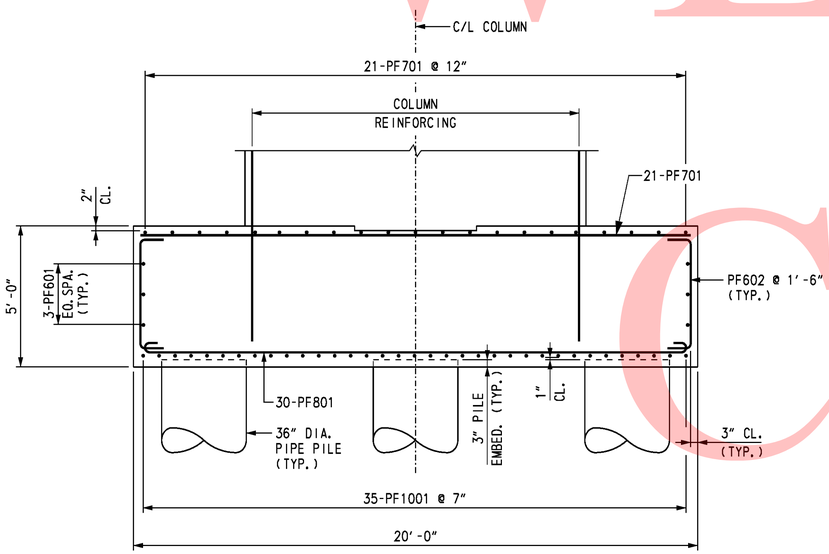

SECTION E-E

SCALE: 3/8" = 1'-0"

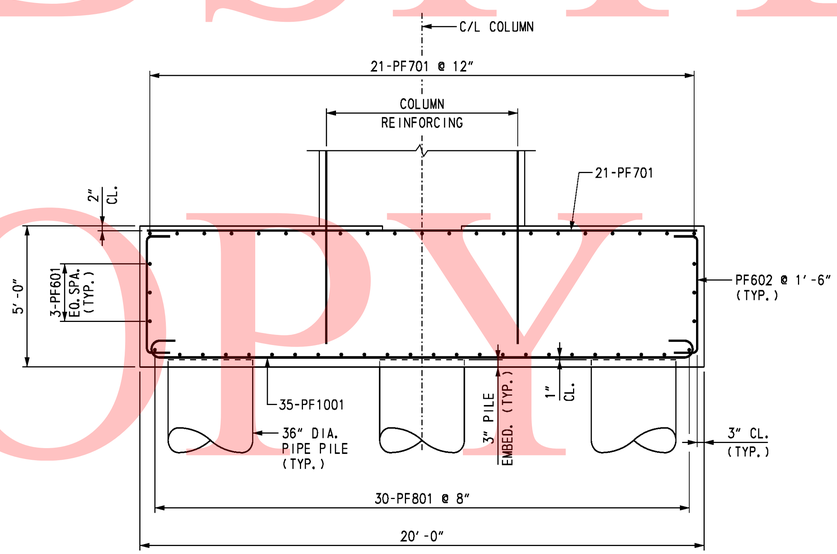

SECTION F-F

SCALE: 3/8" = 1'-0"

NOTES:

1. ADJUST SPACING OF BOTTOM MAT FOOTING REINFORCING TO CLEAR PIPE PILE REINFORCING.
2. ADJUST SPACING OF TOP MAT FOOTING REINFORCING TO CLEAR COLUMN DOWELS.
3. CONTRACTOR MAY PROVIDE 90° HOOKS ON SOME COLUMN REINFORCING DOWELS IN ORDER TO FACILITATE PLACEMENT OF THE COLUMN REINFORCING.

CROSS REFERENCE NOTES:

1. FOR BRIDGE PLAN AND ELEVATION, SEE DWG. S5-1.
2. FOR PIER PLAN AND ELEVATION, SEE DWG. S5-18.
3. FOR PIER FOUNDATION PLAN, SEE DWG. S5-17.
4. FOR PIER COLUMN REINFORCEMENT DETAILS, SEE DWG. S5-21.
5. FOR REINFORCING BAR LIST, SEE DWG. S5-27.

UNOFFICIAL WEBSITE COPY

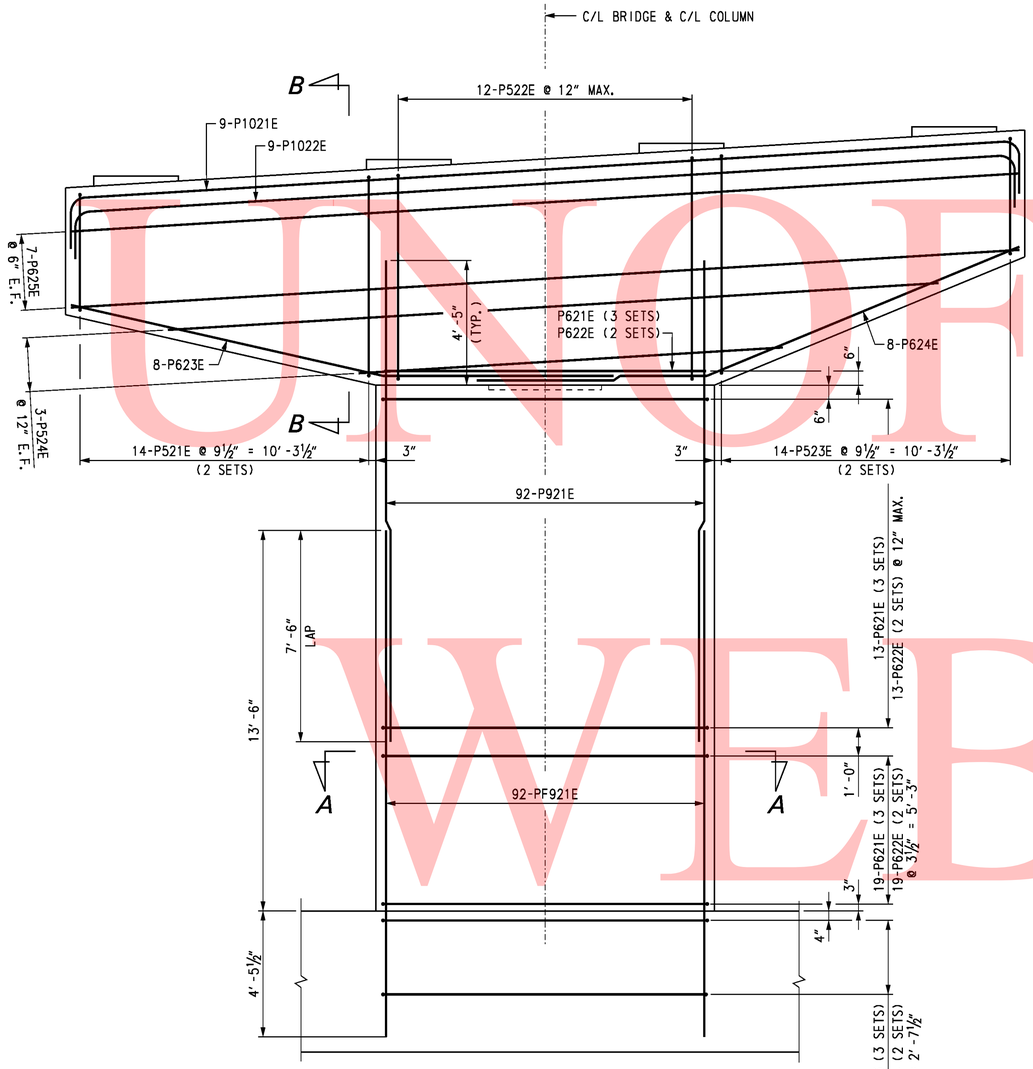

ELEVATION
SCALE: ⅜" = 1'-0"

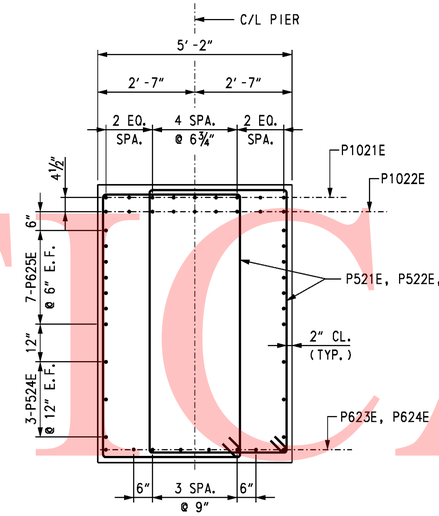

SECTION B-B
SCALE: ½" = 1'-0"

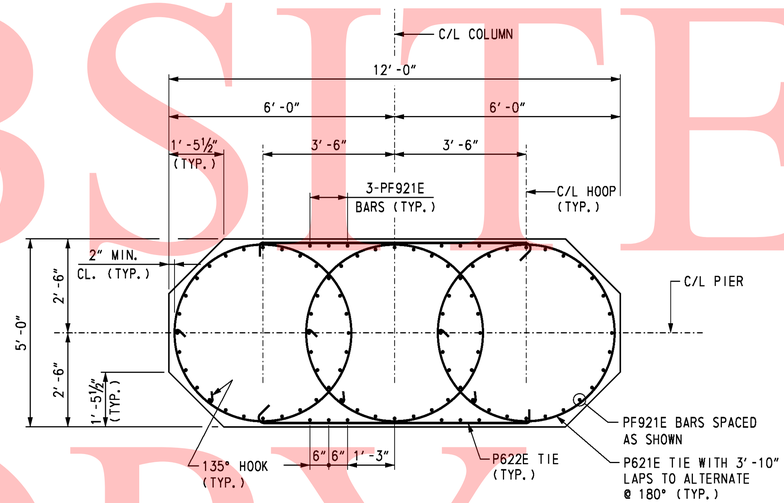

SECTION A-A
SCALE: ½" = 1'-0"

CROSS REFERENCE NOTES:

1. FOR BRIDGE PLAN AND ELEVATION, SEE DWG. S5-1.
2. FOR PIER FOUNDATION PLAN, SEE DWG. S5-17.
3. FOR PIER PLAN AND ELEVATION, SEE DWG. S5-19.
4. FOR FOOTING REINFORCEMENT, SEE DWG. S5-24.
5. FOR REINFORCING BAR LIST, SEE DWG. S5-27.

UNOFFICAL WEBSITE COPY

10/28/2010 O:\20832687-XM\CAD\Bridge\BR-S5\pr07_BR-S5_sr1.dgn untitled

DELAWARE DEPARTMENT OF TRANSPORTATION	ADDENDUMS / REVISIONS	SR1 / I-95 INTERCHANGE	CONTRACT 28-090-03	BRIDGE NO. 1-716D	RAMP G1 OVER SR 7 PIER 2 REINFORCEMENT 1	SHEET NO. S5-23
			COUNTY NEW CASTLE	DESIGNED BY: K. D. BEAVER		416
				CHECKED BY: R. F. KIRCHNER		TOTAL SHTS. 803

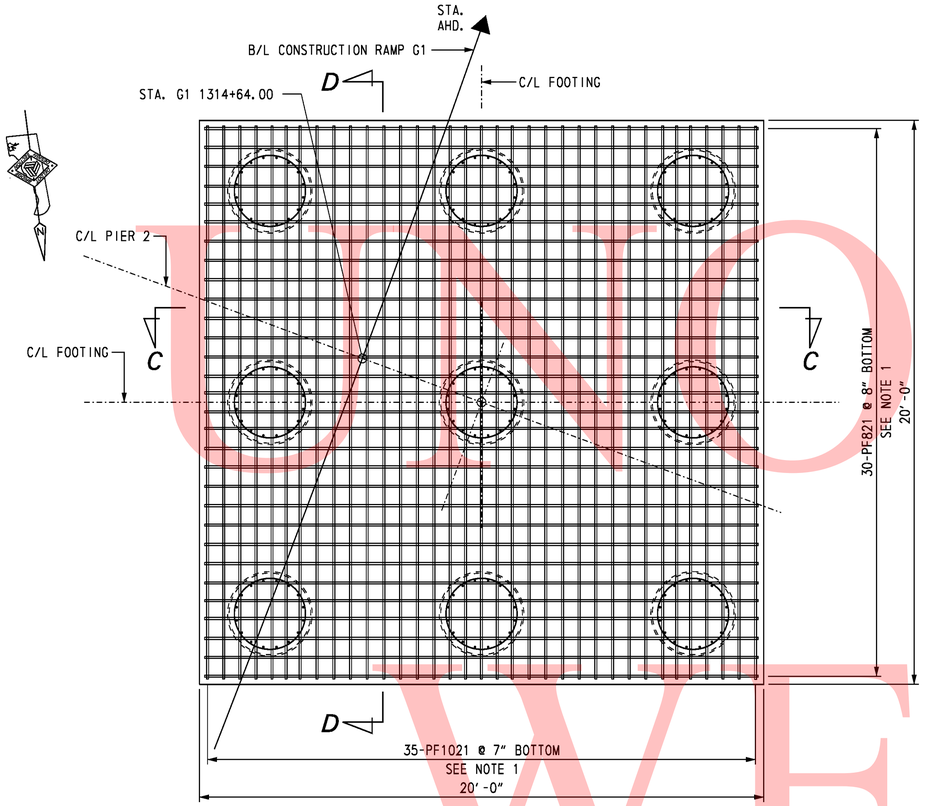

PLAN - BOTTOM MAT FOOTING REINFORCEMENT LAYOUT

SCALE: 3/8" = 1'-0"

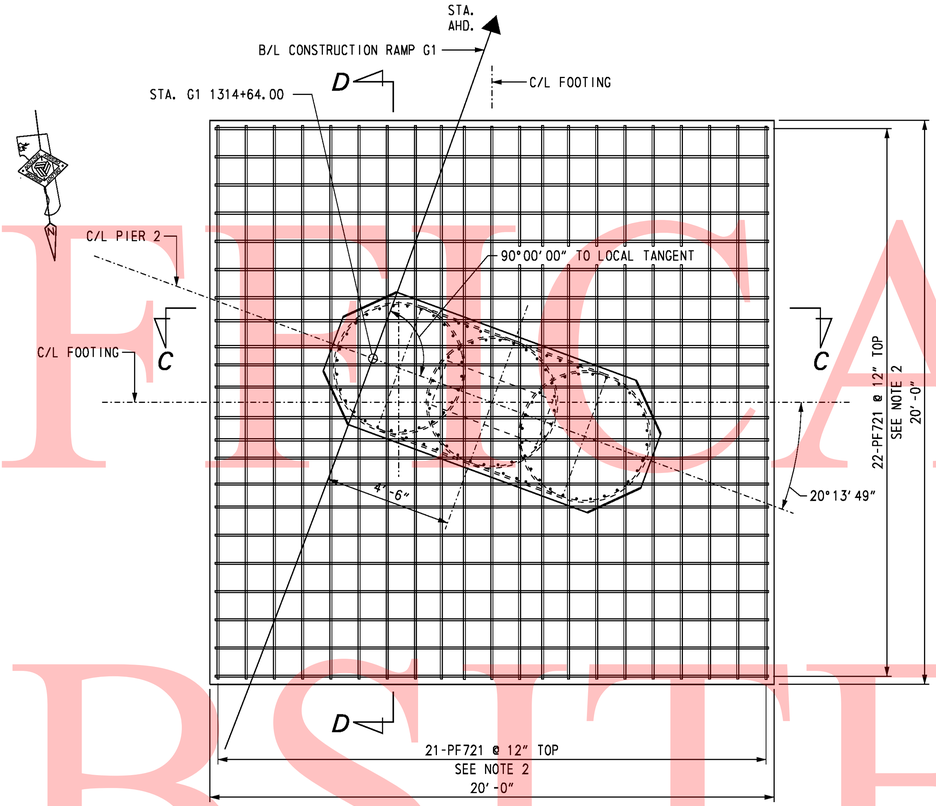

PLAN - TOP MAT FOOTING REINFORCEMENT LAYOUT

SCALE: 3/8" = 1'-0"

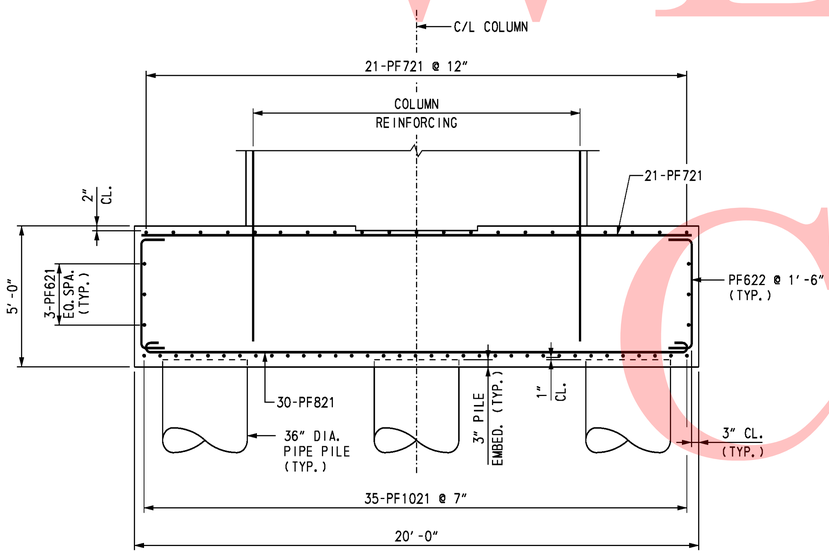

SECTION C-C

SCALE: 3/8" = 1'-0"

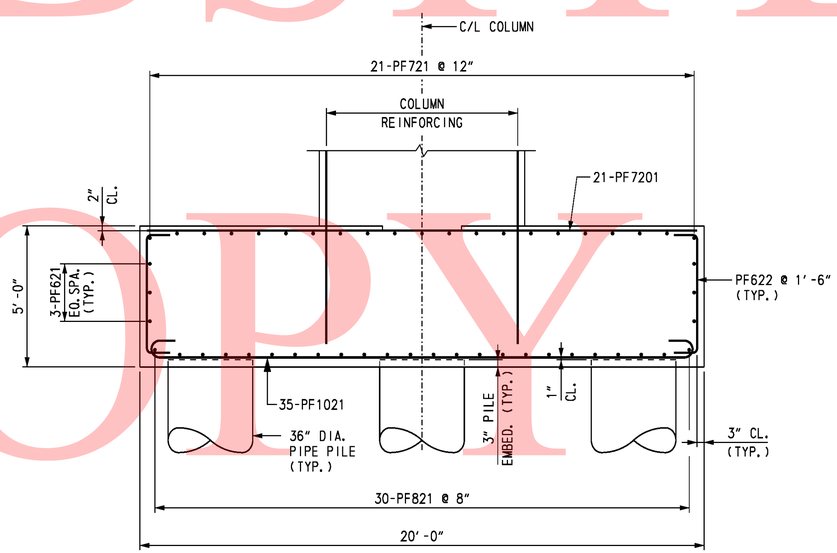

SECTION D-D

SCALE: 3/8" = 1'-0"

NOTES:

1. ADJUST SPACING OF BOTTOM MAT FOOTING REINFORCING TO CLEAR PIPE PILE REINFORCING.
2. ADJUST SPACING OF TOP MAT FOOTING REINFORCIMG TO CLEAR COLUMN DOWELS.

CROSS REFERENCE NOTES:

1. FOR PIER PLAN AND ELEVATION, SEE DWG. S5-19.
2. FOR PIER FOUNDATION PLAN, SEE DWG. S5-17.
3. FOR PIER COLUMN REINFORCEMENT DETAILS, SEE DWG. S5-23.
4. FOR REINFORCING BAR LIST, SEE DWG. S5-27.

UNOFFICIAL WEBSITE COPY

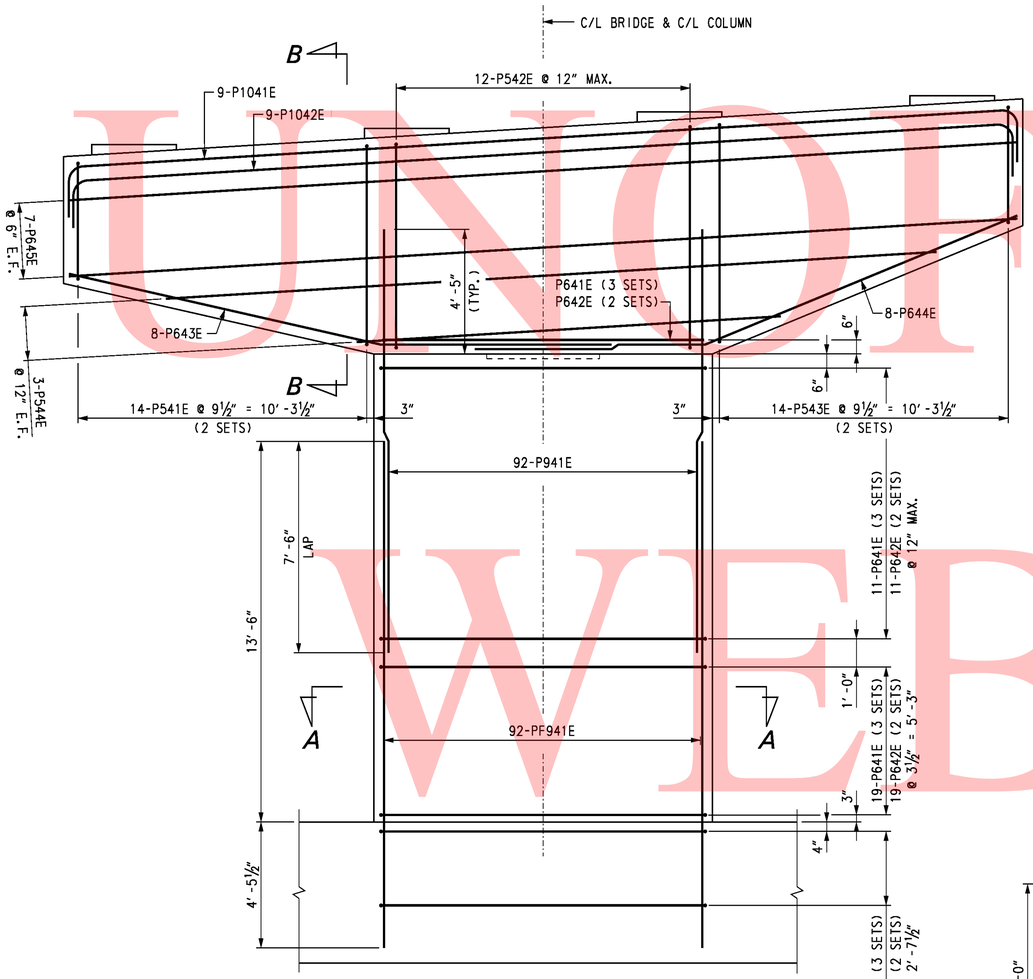

ELEVATION
SCALE: ⅜" = 1'-0"

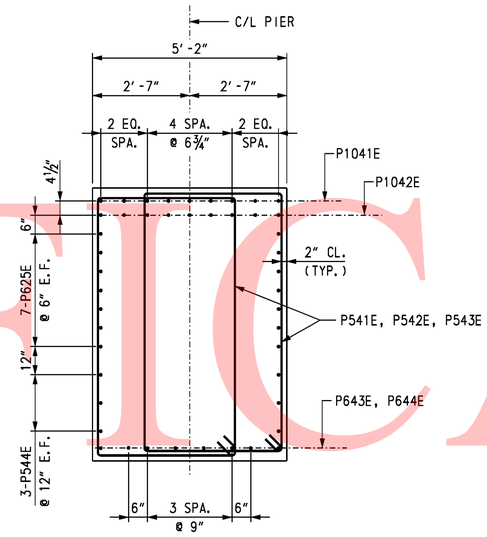

SECTION B-B
SCALE: ½" = 1'-0"

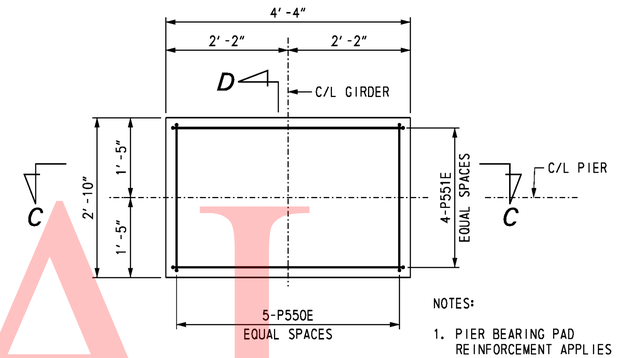

NOTES:

1. PIER BEARING PAD REINFORCEMENT APPLIES AT PIER 3 GIRDERS G1 AND G4.
2. CHAMFER NOT SHOWN ON PLAN VIEW.

PLAN
PIER BEARING PAD
SCALE: ¾" = 1'-0"

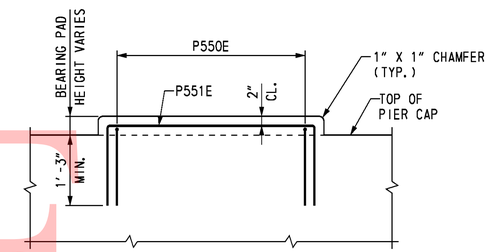

SECTION C-C
SCALE: ¾" = 1'-0"

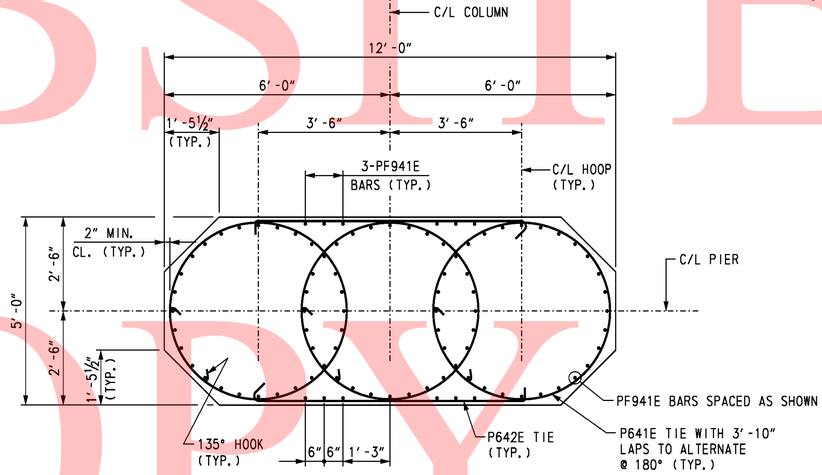

SECTION A-A
SCALE: ½" = 1'-0"

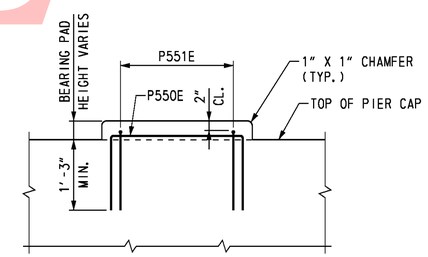

SECTION D-D
SCALE: ¾" = 1'-0"

CROSS REFERENCE NOTES:

1. FOR BRIDGE PLAN AND ELEVATION, SEE DWG. S5-1.
2. FOR PIER PLAN AND ELEVATION, SEE DWG. S5-20.
3. FOR PIER FOOTING REINFORCEMENT DETAILS, SEE DWG. S5-26.
4. FOR REINFORCING BAR LIST, SEE DWG. S5-28.

UNOFFICIAL WEBSITE COPY

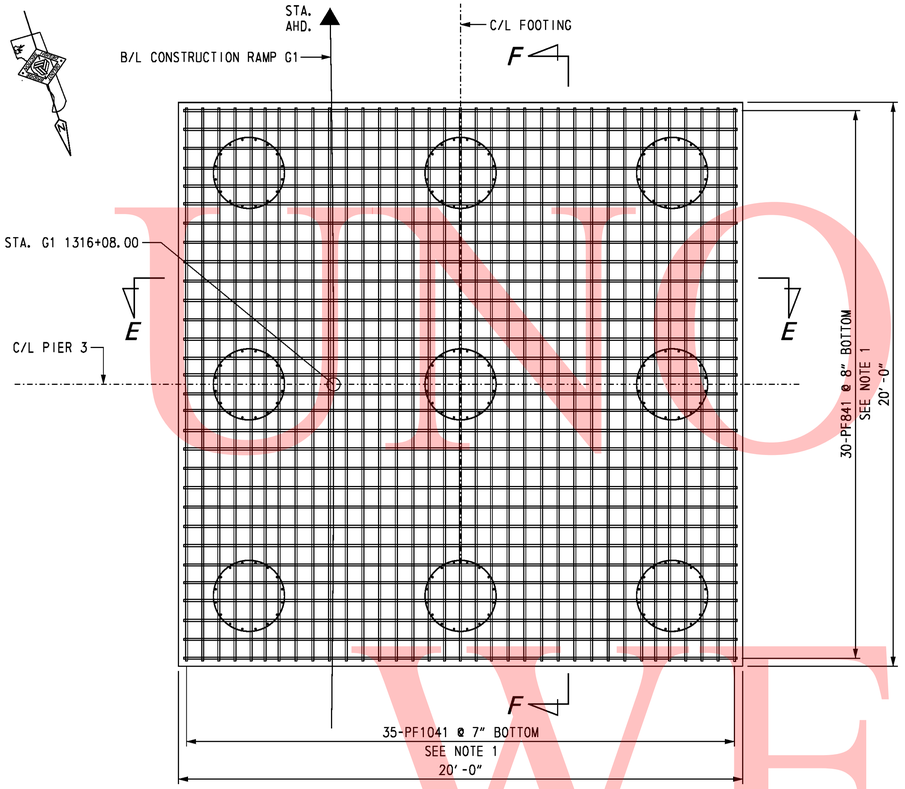

PLAN - BOTTOM MAT FOOTING REINFORCEMENT LAYOUT

SCALE: 3/8" = 1'-0"

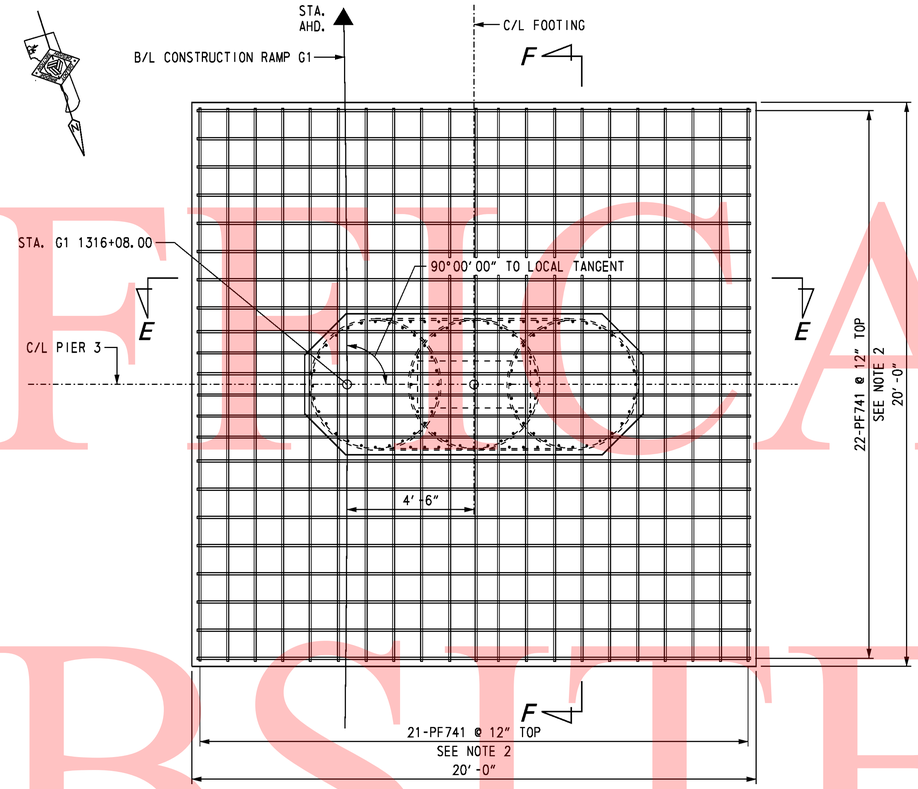

PLAN - TOP MAT FOOTING REINFORCEMENT LAYOUT

SCALE: 3/8" = 1'-0"

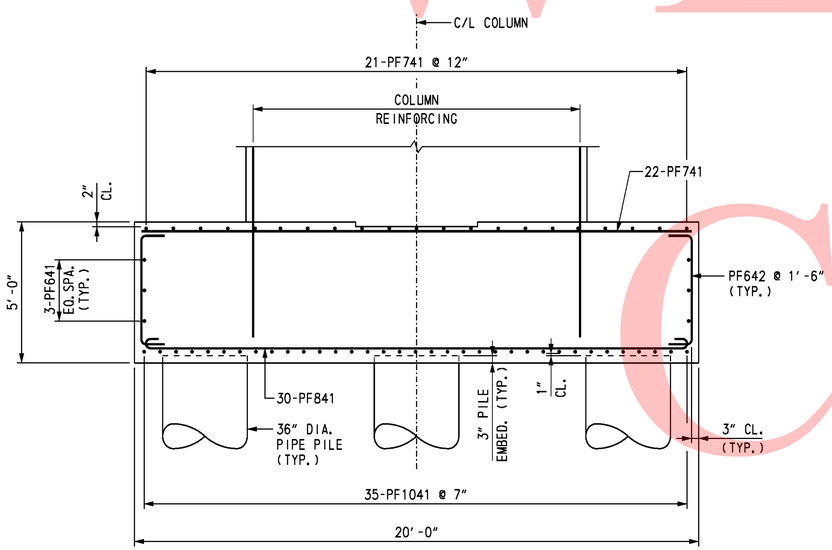

SECTION E-E

SCALE: 3/8" = 1'-0"

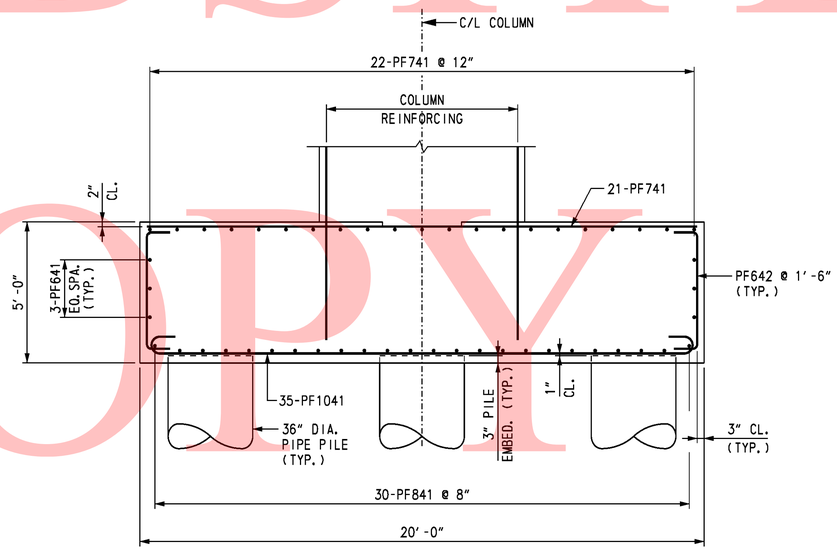

SECTION F-F

SCALE: 3/8" = 1'-0"

NOTES:

1. ADJUST SPACING OF BOTTOM MAT FOOTING REINFORCING TO CLEAR PIPE PILE REINFORCING.
2. ADJUST SPACING OF TOP MAT FOOTING REINFORCING TO CLEAR COLUMN DOWELS.
3. CONTRACTOR MAY PROVIDE 90° HOOKS ON SOME COLUMN REINFORCING DOWELS IN ORDER TO FACILITATE PLACEMENT OF THE COLUMN REINFORCING.

CROSS REFERENCE NOTES:

1. FOR BRIDGE PLAN AND ELEVATION, SEE DWG. S5-1.
2. FOR PIER PLAN AND ELEVATION, SEE DWG. S5-20.
3. FOR PIER FOUNDATION PLAN, SEE DWG. S5-17.
4. FOR PIER COLUMN REINFORCEMENT DETAILS, SEE DWG. S5-25.
5. FOR REINFORCING BAR LIST, SEE DWG. S5-28.

UNOFFICIAL WEBSITE COPY

REINFORCING BAR LIST

PIER 1

MARK	LENGTH	NO. BARS	TYPE	A	B	C	D	E	F	G	H	J	K	O	R	REMARKS
PP401	9′-7″	315	T3										1′-6″	2′-6¾″		
PP801	34′-0″	144	STR.													
PF601	19′-6″	12	STR.													
PF602	6′-2″	53	2	1′-0″	4′-2″					1′-0″						
PF603	18′-7″	30	T3S	0′-8″						0′-8″	0′-4½″		2′-7″	4′-8″		
PF604	8′-11″	20	T9	0′-8″	7′-3″					1′-0″	0′-4½″					
PF701	19′-6″	42	STR.													
PF801	21′-4″	30	1	0′-11″	19′-6″					0′-11″		0′-8″				
PF901E	20′-8½″	92	STR.													
PF1001	22′-4″	35	1	1′-5″	19′-6″					1′-5″		1′-1¼″				
P501E	16′-9¾″ to 21′-10″	28	T1	0′-5½″	3′-8″	4′-3⅜″ to 6′-9½″	3′-8″	4′-3⅜″ to 6′-9½″		0′-5½″						$\Delta_C=\Delta_E=2\frac{3}{16}''$ 2 SETS
P502E	24′-3½″ to 24′-9″	12	T1	0′-5½″	4′-10″	6′-10¼″ to 7′-1″	4′-10″	6′-10¼″ to 7′-1″		0′-5½″						$\Delta_C=\Delta_E=\frac{1}{4}''$ 2 SETS
P503E	16′-10″ to 22′-3″	28	T1	0′-5½″	3′-8″	4′-3½″ to 7′-0″	3′-8″	4′-3½″ to 7′-0″		0′-5½″						$\Delta_C=\Delta_E=2\frac{1}{2}''$ 2 SETS
P504E	14′-8″ to 30′-8″	6	STR.													Δ=8′-0″
P510E	5′-8″	10	17		1′-7″	2′-6″	1′-7″									
P511E	7′-2″	8	17		1′-7″	4′-0″	1′-7″									
P601E	19′-11″	117	T3S	0′-8″						0′-8″	0′-4½″		3′-10″	4′-8″		
P602E	8′-11″	78	T9	0′-8″	7′-3″					1′-0″	0′-4½″					
P603E	19′-1⅜″	8	16			8′-0″	11′-1⅜″				2′-6″		10′-10″			
P604E	19′-3″	8	16			8′-0″	11′-3″				3′-0⅝″		10′-10″			
P605E	33′-8″	14	STR.													
P901E	20′-6″	92	STR.													
P1001E	37′-4″	9	2	1′-10″	33′-8″					1′-10″						
P1002E	36′-9″	9	2	1′-10″	33′-1″					1′-10″						

PIER 2

MARK	LENGTH	NO. BARS	TYPE	A	B	C	D	E	F	G	H	J	K	O	R	REMARKS
PP421	9′-7″	315	T3										1′-6″	2′-6¾″		
PP821	34′-0″	144	STR.													
PF621	19′-6″	12	STR.													
PF622	6′-2″	53	2	1′-0″	4′-2″					1′-0″						
PF623	18′-7″	36	T3S	0′-8″						0′-8″	0′-4½″		2′-7″	4′-8″		
PF624	8′-11″	18	T9	0′-8″	7′-3″					1′-0″	0′-4½″					
PF721	19′-6″	43	STR.													
PF821	21′-4″	30	1	0′-11″	19′-6″					0′-11″		0′-8″				
PF921E	17′-11½″	96	STR.													
PF1021	22′-4″	35	1	1′-5″	19′-6″					1′-5″		1′-1¼″				
P521E	16′-10¼″ to 22′-9¾″	28	T1	0′-5½″	3′-8″	4′-3⅝″ to 7′-3⅜″	3′-8″	4′-3⅝″ to 7′-3⅜″		0′-5½″						$\Delta_C=\Delta_E=2\frac{3}{16}''$ 2 SETS
P522E	25′-4″ to 26′-7″	12	T1	0′-5½″	4′-10″	7′-4½″ to 8′-0″	4′-10″	7′-4½″ to 8′-0″		0′-5½″						$\Delta_C=\Delta_E=\frac{11}{16}''$ 2 SETS
P523E	16′-11″ to 24′-2¾″	28	T1	0′-5½″	3′-8″	4′-4″ to 7′-11⅞″	3′-8″	4′-4″ to 7′-11⅞″		0′-5½″						$\Delta_C=\Delta_E=3\frac{3}{8}''$ 2 SETS
P524E	16′-4″ to 29′-0″	6	STR.													Δ=6′-4″
P621E	19′-11″	99	T3S	0′-8″						0′-8″	0′-4½″		3′-10″	4′-8″		
P622E	8′-11″	66	T9	0′-8″	7′-3″					1′-0″	0′-4½″					
P623E	19′-1⅜″	8	16			8′-0″	11′-1⅜″				2′-6″		10′-10″			
P624E	19′-9″	8	16			8′-0″	11′-9″				4′-6⅝″		10′-10″			
P625E	33′-8¾″	14	STR.													
P626E	22′-7½″	2	10	7′-7¾″	7′-4″	7′-7¾″								4′-8″	2′-4″	
P627E	28′-8″	12	STR.													
P628E	17′-3″	92	STR.													
P1021E	37′-4″	9	2	1′-10″	33′-8″					1′-10″						
P1022E	36′-9″	9	2	1′-10″	33′-1″					1′-10″						

BENDING DIAGRAMS

ALL DIMENSIONS ARE FROM OUT TO OUT.

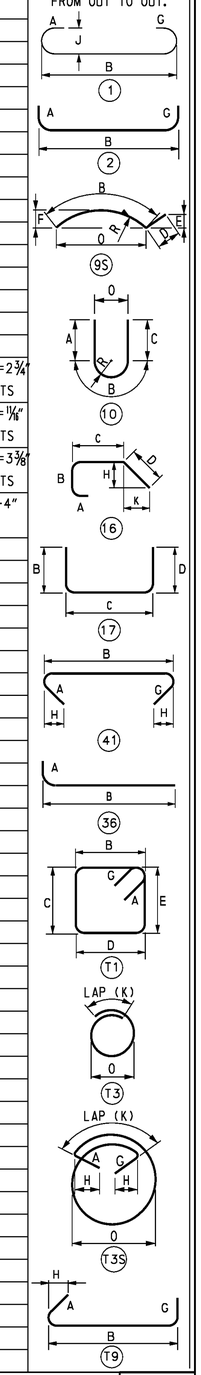

UNOFFICIAL WEBSITE COPY

DELAWARE DEPARTMENT OF TRANSPORTATION

ADDENDUMS / REVISIONS

SR1 / I-95 INTERCHANGE

CONTRACT	BRIDGE NO.	1-716D	RAMP G1 OVER SR 7	S5-27
28-090-03	DESIGNED BY: P. M. DALONI		PIER REINFORCING BAR LIST 1	SHEET NO. 420
COUNTY				TOTAL SHTS.
NEW CASTLE	CHECKED BY: J. S. LI			803

10/28/2010 O:\20832687-XM\CAD\Bridge\BR-S5\pr11_BR-S5_sr1.dgn untitled

REINFORCING BAR LIST

PIER 3

MARK	LENGTH	NO. BARS	TYPE	A	B	C	D	E	F	G	H	J	K	O	R	REMARKS
PP441	9′-7″	315	T3										1′-6″	2′-6¾″		
PP841	34′-0″	144	STR.													
PF641	19′-6″	12	STR.													
PF642	6′-2″	53	2	1′-0″	4′-2″					1′-0″						
PF643	18′-7″	30	T3S	0′-8″						0′-8″	0′-4½″		2′-7″	4′-8″		
PF644	8′-11″	20	T9	0′-8″	7′-3″					1′-0″	0′-4½″					
PF741	19′-6″	43	STR.													
PF841	21′-4″	30	1	0′-11″	19′-6″					0′-11″		0′-8″				
PF941E	17′-11½″	92	STR.													
PF1041	22′-4″	35	1	1′-5″	19′-6″					1′-5″		1′-1¼″				
										0′-4½″						
P541E	16′-10¼″ to 22′-9¾″	28	T1	0′-5½″	3′-8″	4′-3⅝″ to 7′-3⅜″	3′-8″	4′-3⅝″ to 7′-3⅜″		0′-5½″						$\Delta_C=\Delta_E=2\frac{3}{4}''$ 2 SETS
P542E	25′-4″ to 26′-7″	12	T1	0′-5½″	4′-10″	7′-4½″ to 8′-0″	4′-10″	7′-4½″ to 8′-0″		0′-5½″						$\Delta_C=\Delta_E=1\frac{1}{8}''$ 2 SETS
P543E	16′-11″ to 24′-2¾″	28	T1	0′-5½″	3′-8″	4′-4″ to 7′-11⅞″	3′-8″	4′-4″ to 7′-11⅞″		0′-5½″						$\Delta_C=\Delta_E=3\frac{3}{8}''$ 2 SETS
P544E	16′-4″ to 29′-0″	6	STR.													Δ =6′-4″ 2 SETS
P550E	5′-8″	10	17		1′-7″	2′-6″	1′-7″									
P551E	7′-2″	8	17		1′-7″	4′-0″	1′-7″									
P641E	19′-11″	93	T3S	0′-8″						0′-8″	0′-4½″		3′-10″	4′-8″		
P642E	8′-11″	62	T9	0′-8″	7′-3″					1′-0″	0′-4½″					
P643E	19′-1⅜″	8	16			8′-0″	11′-1⅜″				2′-6″		10′-10″			
P644E	19′-9″	8	16			8′-0″	11′-9″				4′-6⅝″		10′-10″			
P645E	33′-8″	14	STR.													
P941E	15′-0″	92	STR.													
P1041E	37′-4″	9	2	1′-10″	33′-8″					1′-10″						
P1042E	36′-9″	9	2	1′-10″	33′-1″					1′-10″						

BENDING DIAGRAMS

ALL DIMENSIONS ARE FROM OUT TO OUT.

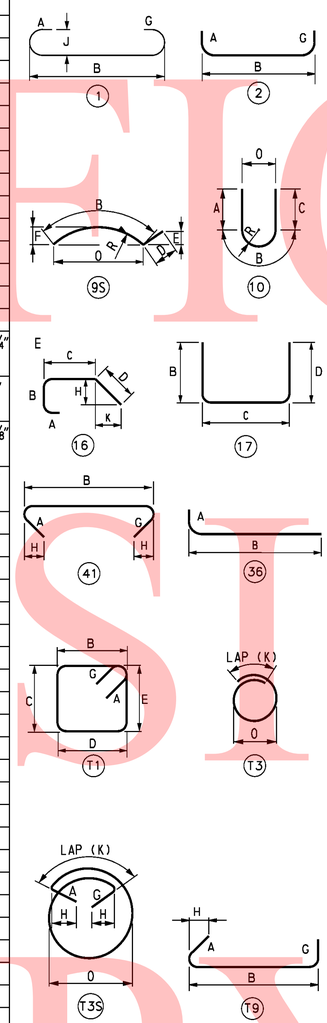

UNOFFICAL WEBSITE COPY

10/28/2010 O:\20832687-XM\CAD\Bridge\BR-S5\pr12_BR-S5_sr1.dgn untitled

DELAWARE DEPARTMENT OF TRANSPORTATION

ADDENDUMS / REVISIONS

SR1 / I-95 INTERCHANGE

CONTRACT	BRIDGE NO.	1-716D	RAMP G1 OVER SR 7	SHEET NO.
28-090-03	DESIGNED BY: P. M. DALONI		PIER REINFORCING BAR LIST 2	421
COUNTY				TOTAL SHTS.
NEW CASTLE	CHECKED BY: J. S. LI			803

S5-28

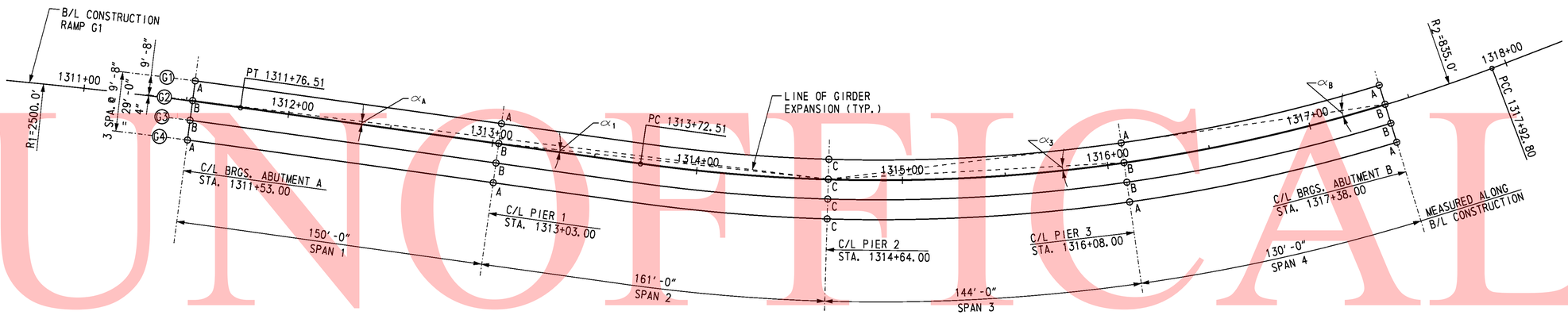

BEARING PLAN

SCALE: 1" = 30'-0"

NOTES:

1. ALL DIMENSIONS ARE IN U.S. CUSTOMARY UNITS.
2. ALL BEARING ASSEMBLIES SHALL BE DESIGNED, MANUFACTURED AND INSTALLED IN ACCORDANCE WITH CURRENT EDITIONS OF THE AASHTO LRFD DESIGN AND CONSTRUCTION SPECIFICATIONS AND THE BEARING MANUFACTURER'S RECOMMENDATIONS.
3. ROUND ALL PTFE CORNERS TO ACCOMMODATE THE MACHINED RECESS IN STEEL GUIDE PLATE/PISTON.
4. ETCH PTFE ON ONE SIDE FOR BONDING INTO THE MACHINED RECESS.
5. PTFE ON THE SIDE OF GUIDE PLATE MUST BE PIGMENTED.
6. PRIOR TO THE APPLICATION OF ADHESIVE, CLEAN ALL MATING STEEL AND PTFE SURFACES BY GRIT BLASTING AND DEGREASING. APPLY ADHESIVE AS PER THE MANUFACTURER'S RECOMMENDATION.
7. LUBRICATE ALL SURFACES OF NEOPRENE DISC WITH SILICONE GREASE IN ACCORDANCE WITH NATO CODE NUMBER S-736 (SAE-AS8660).
8. CUT FLAT BRASS SEALING RING ENDS AT 45 DEGREE ANGLE WITH A MAXIMUM GAP OF 0.05 INCHES. STAGGER THE OPENINGS IN THE BRASS RINGS 120 DEGREES APART.
9. MARK THE THICKER EDGE OF THE SOLE PLATE AS SUCH FOR THE PURPOSE OF FIELD IDENTIFICATION. PLACE MARK ON THE EDGE OF SOLE PLATE SO THAT IT WILL BE VISIBLE AFTER BEARING INSTALLATION. IN THE CASE OF A SOLE PLATE WITH A COMPOUND BEVEL, PLACE THE MARK ON EITHER EDGE OF THE THICKEST SOLE PLATE CORNER.
10. MARK CENTERLINE OF GUIDED AND NON-GUIDED POT BEARINGS ON THE SIDES OF MASONRY PLATE AND SOLE PLATE. THE CENTERLINE IDENTIFICATION MARKS WILL BE USEFUL TO LOCATE OFFSET DISTANCES IN THE FIELD. USE INDELIBLE INK TO PLACE ALL MARKS.
11. MARK EACH BEARING WITH THE NAME OF THE MANUFACTURER AND TYPE OR MODEL NUMBER. PLACE THE IDENTIFICATION MARK IN A PERMANENT MANNER AND LOCATION SO THAT IT IS VISIBLE AFTER ERECTION.
12. WHEN THE POT IS RECESSED INTO THE MASONRY PLATE, SEAL AROUND THE POT PERIMETER WITH AN APPROVED CAULKING COMPOUND IN THE SHOP.
13. ANCHOR RODS SHALL BE INSTALLED PRIOR TO ERECTION OF STRUCTURAL STEEL.
14. FILL HOLES AROUND ANCHOR RODS WITH A NONHARDENING CAULKING COMPOUND OR ELASTIC JOINT SEALER.
15. BEARING SHALL BE SHIPPED AS ONE UNIT.
16. DESIGN SERVICE LIMIT STATE ELASTOMER & PTFE BEARING PRESSURE IS 3.50 KSI, MINIMUM IS 0.7 KSI.
17. DESIGN ROTATION = 0.03 RADIANS.
    DESIGN COEFFICIENT OF FRICTION BETWEEN PTFE AND STAINLESS STEEL = 0.05.
    THE MANUFACTURED COEFFICIENT OF FRICTION BETWEEN PTFE AND STAINLESS STEEL SHALL NOT BE MORE THAN 0.03.
18. GUIDED AND NON-GUIDED BEARINGS AT ABUTMENTS ARE DESIGNED FOR ONE WAY LONGITUDINAL MOVEMENT OF 2" PLUS 1" OF CONSTRUCTION TOLERANCE IN LONGITUDINAL DIRECTION. GUIDED BEARINGS AT PIERS 1 AND 3 ARE DESIGNED FOR ONE WAY LONGITUDINAL MOVEMENT OF 1½" PLUS 1" OF CONSTRUCTION TOLERANCE IN LONGITUDINAL DIRECTION. ONE WAY LONGITUDINAL MOVEMENT IS THE MAXIMUM ONE WAY MOVEMENT (EXPANSION OR CONTRACTION) OF SUPERSTRUCTURE WHEN BEARINGS ARE SET AT 60° F.
19. AS AN ALTERNATE TO BEARING DETAILS SHOWN ON THESE PLANS, BEARINGS MAY BE DESIGNED BY BEARING MANUFACTURER USING LOADS, MOVEMENTS, ROTATIONS AND OTHER CRITERIA SPECIFIED ON THESE PLANS. IF THIS ALTERNATE IS SELECTED CONTRACTOR SHALL COORDINATE ANY REVISIONS TO ANCHOR ROD LAYOUT, BEARING PAD ELEVATIONS, ETC.
20. GUIDE BARS FOR THE EXPANSION BEARINGS SHALL BE ORIENTED PARALLEL TO THE ASSUMED DIRECTION OF MOVEMENT CONNECTING EXPANSION BEARING TO RESPECTIVE FIXED BEARING FOR HORIZONTALLY CURVED ALIGNMENT.

MATERIALS:

1. BEARING PLATES SHALL BE A709 GRADE 50W STEEL.
2. ALL ANCHOR RODS SHALL BE ASTM F1554, GRADE 55. ALL NUTS SHALL BE ASTM A563, GRADE DH. ALL WASHERS SHALL BE ASTM F436, TYPE 1. GALVANIZE BOLTS, NUTS AND WASHERS.
3. STAINLESS STEEL: ASTM A167 OR A264, TYPE 304 WITH A SURFACE FINISH OF 8.0 μ-IN RMS OR BETTER.
4. FLAT BRASS SEALING RINGS: ASTM B36 (HALF HARD) SPECIFICATION.
5. ELASTOMERIC DISC: VIRGIN PLAIN NEOPRENE OR NATURAL RUBBER WITH HARDNESS OF BETWEEN 50 AND 60 DUROMETER.
6. PTFE SHEET: (UNFILLED, DIMPLED AND LUBRICATED) MADE FROM VIRGIN TFE RESIN PER ASTM D4894. DIMPLES MUST HAVE A MINIMUM EDGE DISTANCE OF 0.5 INCHES AND CONFORM TO AASHTO LRFD SECTION 14.
7. BEDDING MATERIAL: 1/8 " NEOPRENE PAD.

A = NON-GUIDED EXPANSION BEARING.

B = GUIDED EXPANSION BEARING.

C = FIXED BEARING.

UNOFFICAL WEBSITE COPY

10/28/2010 O:\20832687-XM\CAD\Bridge\BR-S5\b401_BR-S5_sr1.dgn
untitled

DELAWARE DEPARTMENT OF TRANSPORTATION	ADDENDUMS / REVISIONS	SR1 / I-95 INTERCHANGE	CONTRACT 28-090-03	BRIDGE NO. 1-716D	RAMP G1 OVER SR 7	S5-29 SHEET NO. 422
			COUNTY NEW CASTLE	DESIGNED BY: R. F. KIRCHNER	BEARING LOCATIONS AND NOTES	TOTAL SHTS. 803
				CHECKED BY: G.P. MISTRY		

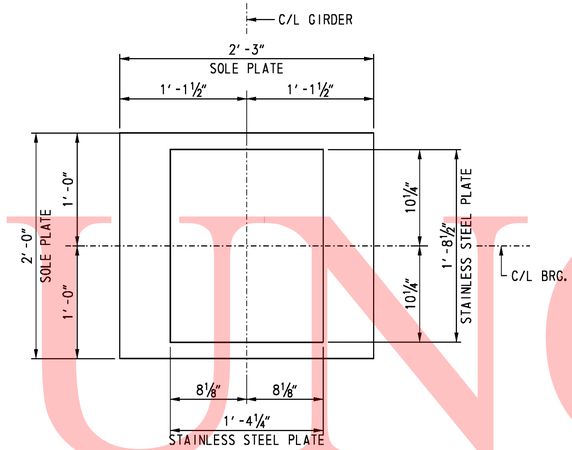

SECTION A-A
SCALE: 1½" = 1'-0"

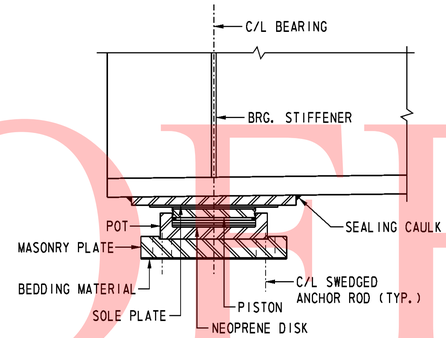

SECTION C-C
SCALE: 1½" = 1'-0"

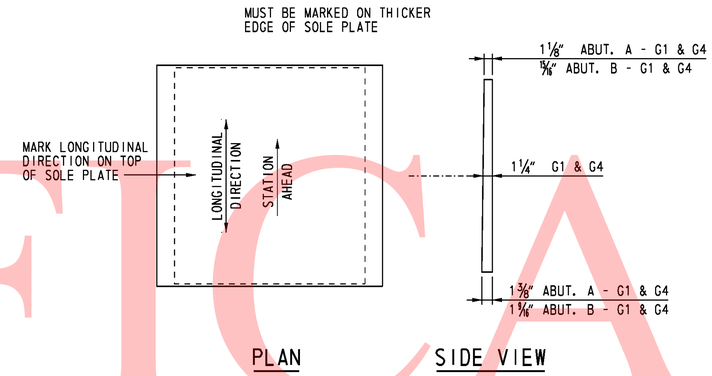

SOLE PLATE DETAIL
SCALE: 1½" = 1'-0"

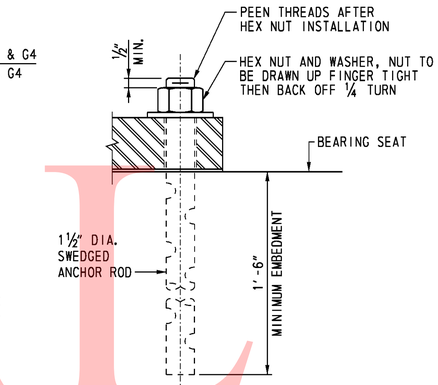

ANCHOR ROD DETAIL
SCALE: 3" = 1'-0"

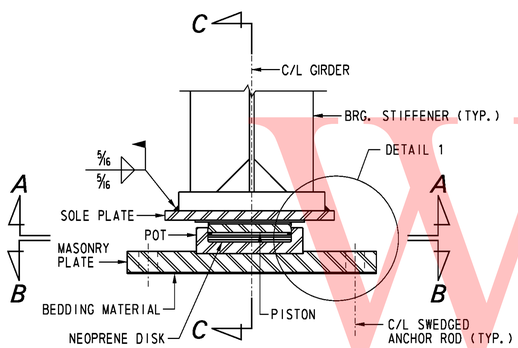

ELEVATION
SCALE: 1½" = 1'-0"

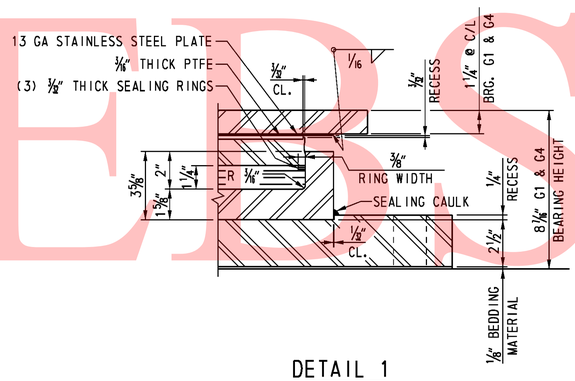

DETAIL 1
SCALE: 3" = 1'-0"

LOCATION	SERVICE VERTICAL LOAD (kips)	STRENGTH VERTICAL LOAD (kips)	ANCHOR ROD	
			QTY.	DIA.
ABUTMENT A - G1 & G4	350	450	4	1½"
ABUTMENT B - G1 & G4	350	450	4	1½"

* BEARING HEIGHT INCLUDES ⅛" BEDDING MATERIAL.
BEARING HEIGHT MEASURED AT C/L BEARING.

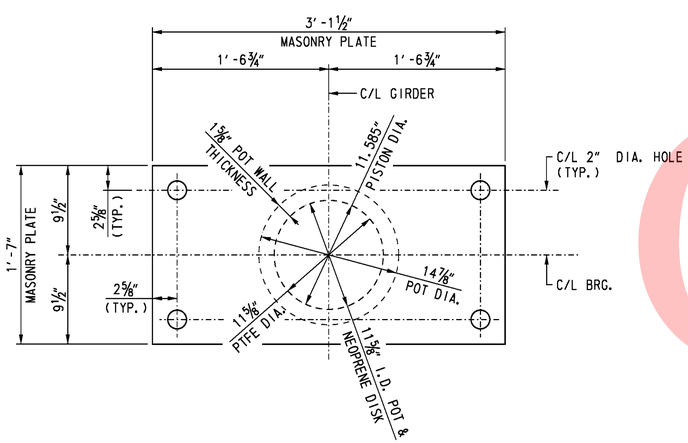

SECTION B-B
SCALE: 1½" = 1'-0"

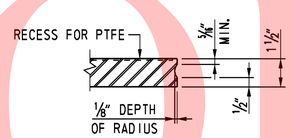

PISTON DETAIL
SCALE: 3" = 1'-0"

NOTE:

SOLE PLATE THICKNESS SHALL NOT BE LESS THAN ¾ INCH.

CROSS REFERENCE NOTE:

FOR BEARING NOTES AND LOCATIONS, SEE DWG. S5-29.

UNOFFICIAL WEBSITE COPY

10/28/2010 O:\20832687-XM\CAD\Bridge\BR-S5\bd05_BR-S5_sr1.dgn
untitled

DELAWARE DEPARTMENT OF TRANSPORTATION	ADDENDUMS / REVISIONS	SR1 / I-95 INTERCHANGE	CONTRACT 28-090-03	BRIDGE NO. 1-716D	RAMP G1 OVER SR 7
			COUNTY NEW CASTLE	DESIGNED BY: M. E. PEAL	NON-GUIDED EXPANSION BEARING AT ABUTMENTS
				CHECKED BY: G. P. MISTRY	

S5-30
SHEET NO. 423
TOTAL SHTS. 803

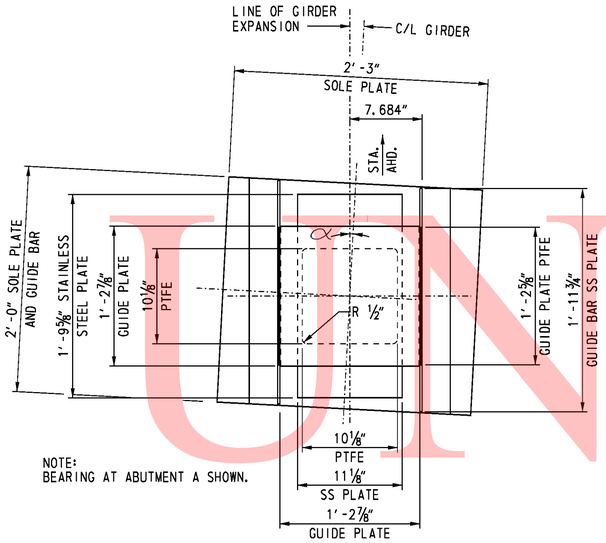

NOTE:
BEARING AT ABUTMENT A SHOWN.

SECTION A-A
SCALE: 1½" = 1'-0"

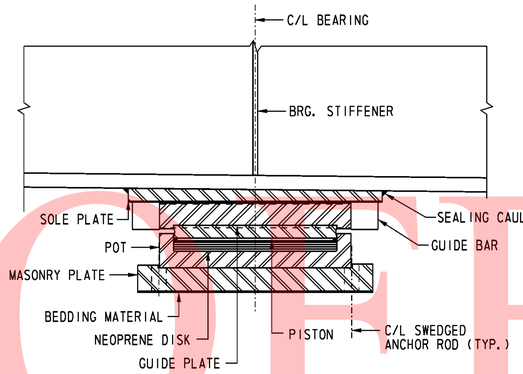

SECTION C-C
SCALE: 1½" = 1'-0"

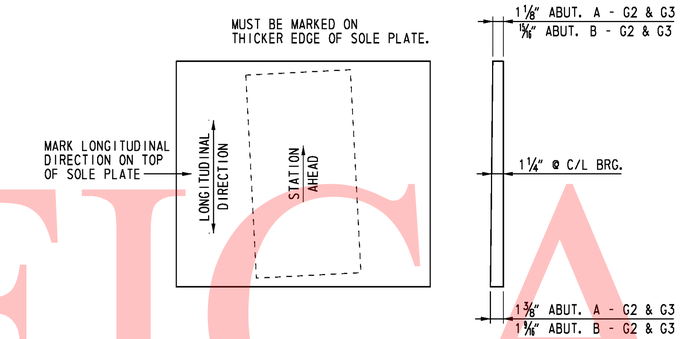

PLAN SIDE VIEW

SOLE PLATE DETAIL
SCALE: 1½" = 1'-0"

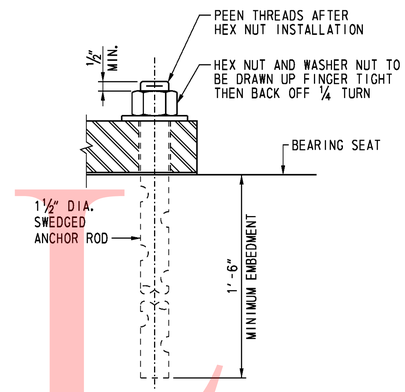

ANCHOR ROD DETAIL
SCALE: 3" = 1'-0"

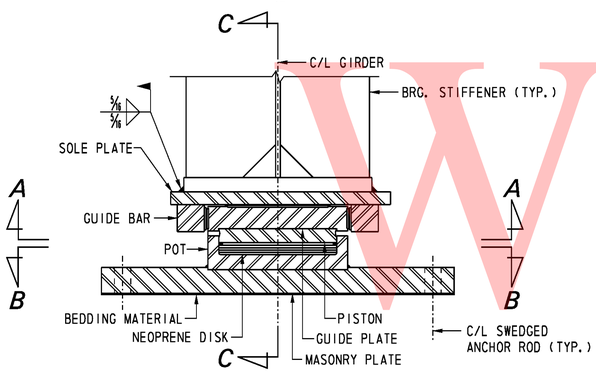

ELEVATION
SCALE: 1½" = 1'-0"

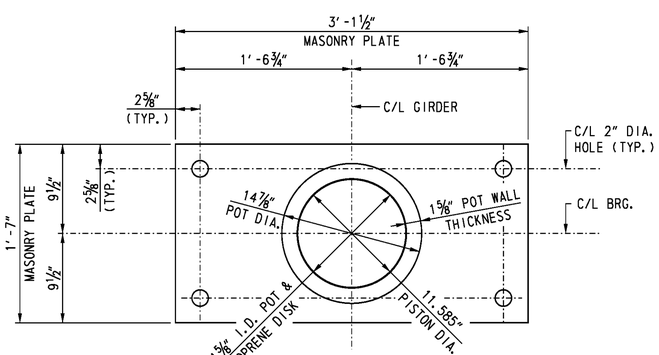

SECTION B-B
SCALE: 1½" = 1'-0"

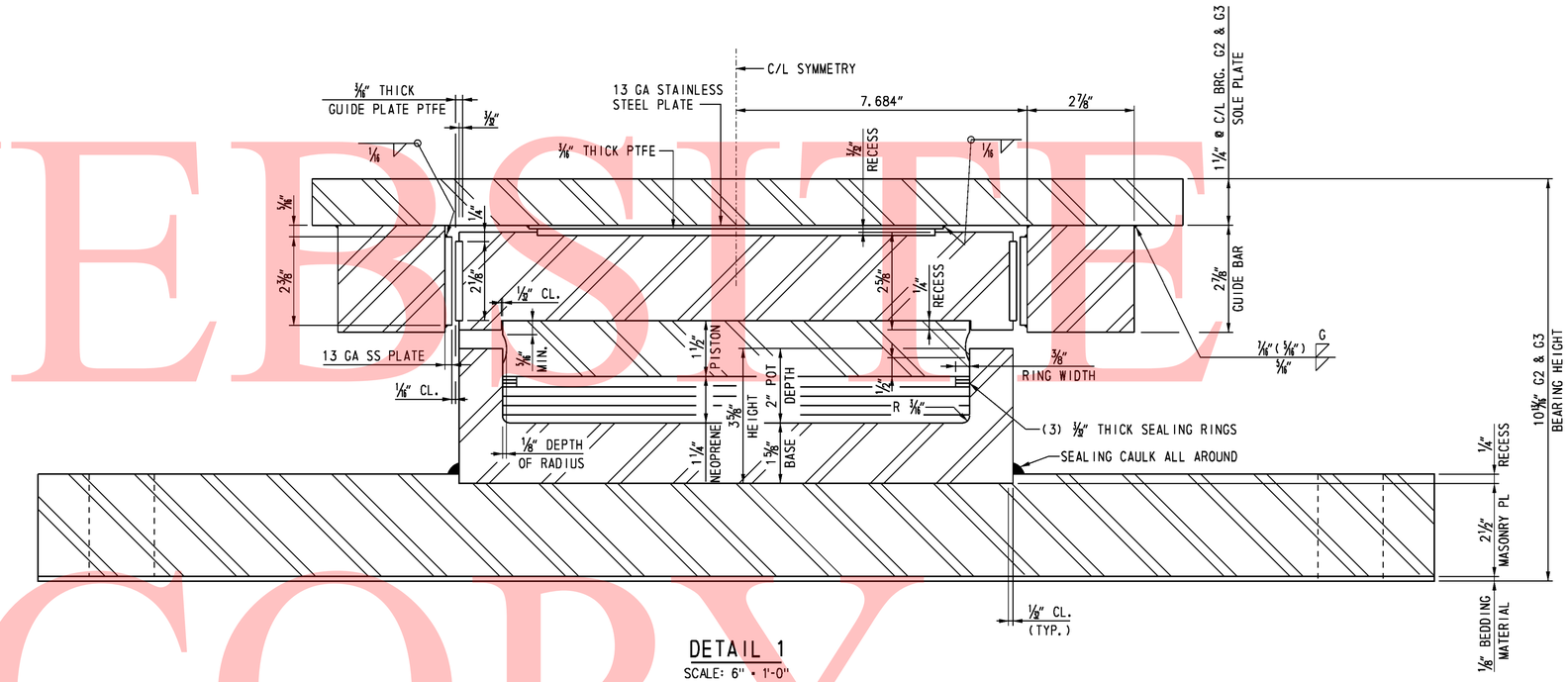

DETAIL 1
SCALE: 6" = 1'-0"

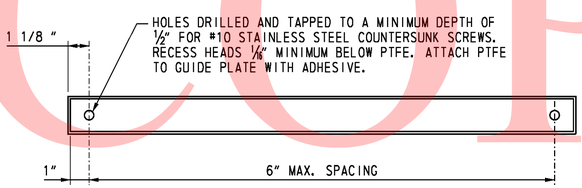

GUIDE PLATE PTFE DETAIL
NOT TO SCALE

LOCATION	SERVICE VERTICAL LOAD (kips)	STRENGTH VERTICAL LOAD (kips)	STRENGTH HORIZONTAL LOAD (kips)	α
ABUTMENT A - G2 & G3	350	450	105	0°-55'-36" LT
ABUTMENT B - G2 & G3	350	450	105	9°-24'-02" RT

* BEARING HEIGHT INCLUDES ⅛" BEDDING MATERIAL.
BEARING HEIGHT MEASURED AT C/L BEARING

NOTES:

1. SOLE PLATE THICKNESS SHALL NOT BE LESS THAN ¾ INCH.

CROSS REFERENCE NOTES:

1. FOR BEARING NOTES AND LOCATIONS, SEE DWG. S5-29.

UNOFFICIAL WEBSITE COPY

10/28/2010 O:\20832687-XM\CAD\Bridge\BR-S5\bd02_BR-S5_sr1.dgn
untitled

DELAWARE DEPARTMENT OF TRANSPORTATION

ADDENDUMS / REVISIONS

SR1 / I-95 INTERCHANGE

CONTRACT	BRIDGE NO.	1-716D
28-090-03	DESIGNED BY: M. E. PEAL	
COUNTY	CHECKED BY: G. P. MISTRY	
NEW CASTLE		

RAMP G1 OVER SR 7
GUIDED EXPANSION BEARING AT ABUTMENTS

S5-31
SHEET NO.
424
TOTAL SHTS.
803

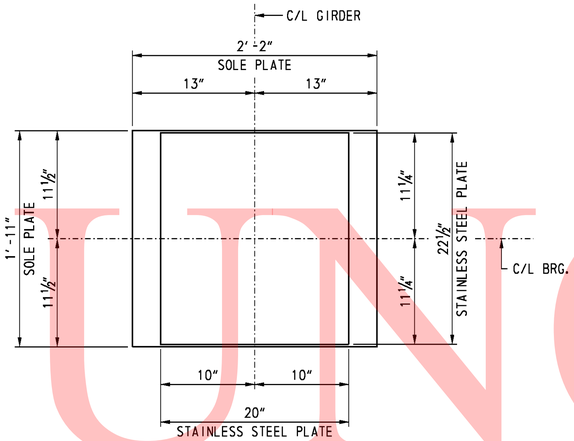

SECTION A-A

SCALE: 1½" = 1'-0"

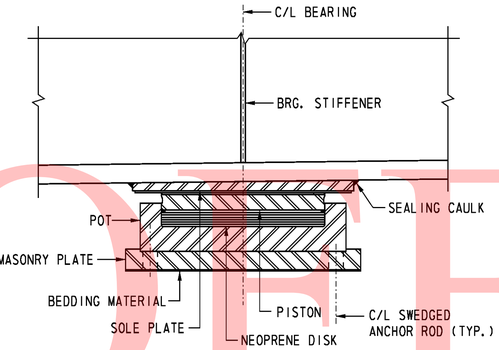

SECTION C-C

SCALE: 1½" = 1'-0"

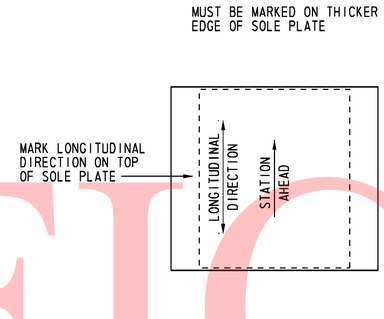

PLAN

SIDE VIEW

SOLE PLATE DETAIL

SCALE: 1½" = 1'-0"

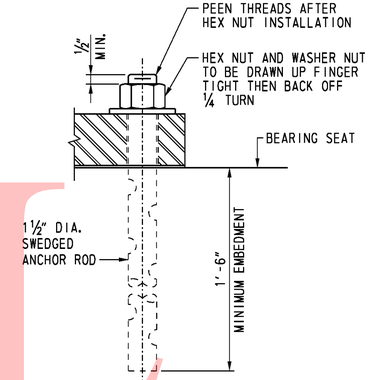

ANCHOR ROD DETAIL

SCALE: 3" = 1'-0"

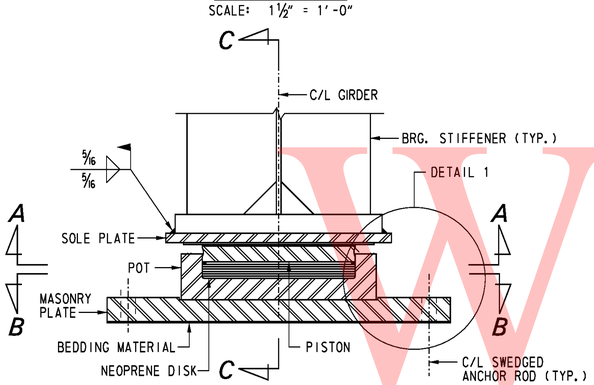

ELEVATION

SCALE: 1½" = 1'-0"

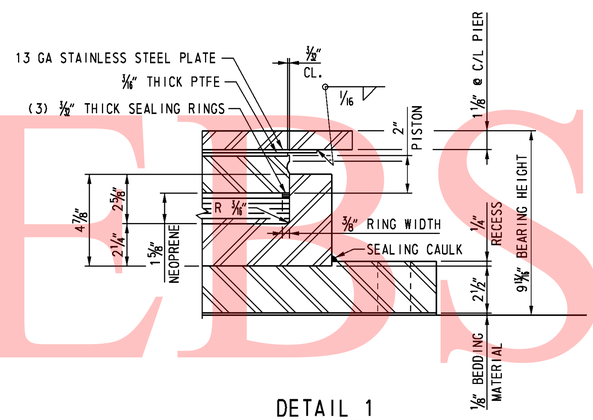

DETAIL 1

SCALE: 3" = 1'-0"

LOCATION	SERVICE VERTICAL LOAD (kips)	STRENGTH VERTICAL LOAD (kips)	ANCHOR ROD	
			QTY.	DIA.
PIER 1 - G1 & G4	700	1,000	6	1½"
PIER 3 - G1 & G4	700	1,000	6	1½"

* BEARING HEIGHT INCLUDES ⅛" BEDDING MATERIAL. BEARING HEIGHT MEASURED AT C/L BEARING.

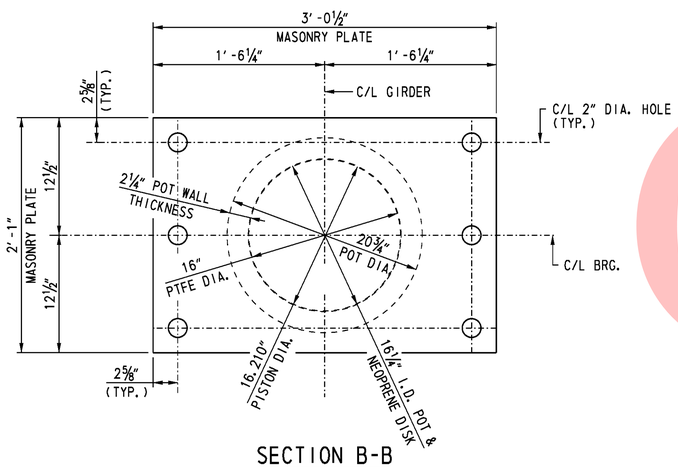

SECTION B-B

SCALE: 1½" = 1'-0"

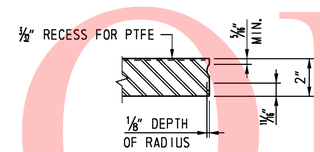

PISTON DETAIL

SCALE: 3" = 1'-0"

NOTE:

SOLE PLATE THICKNESS SHALL NOT BE LESS THAN ¾ INCH.

CROSS REFERENCE NOTE:

FOR BEARING NOTES AND LOCATIONS, SEE DWG. S5-29.

UNOFFICIAL WEBSITE COPY

UNOFFICIAL WEBSITE COPY

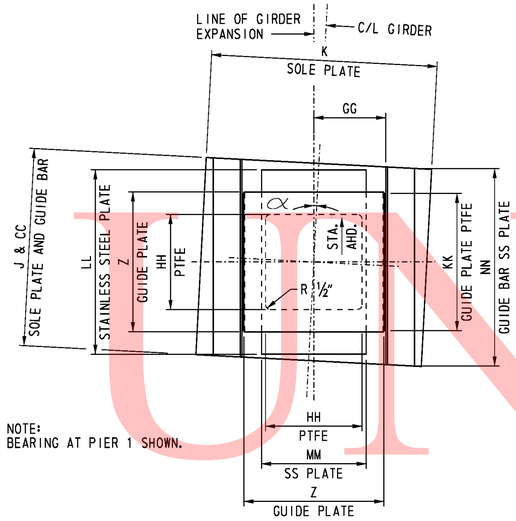

NOTE:
BEARING AT PIER 1 SHOWN.

SECTION A-A
NOT TO SCALE

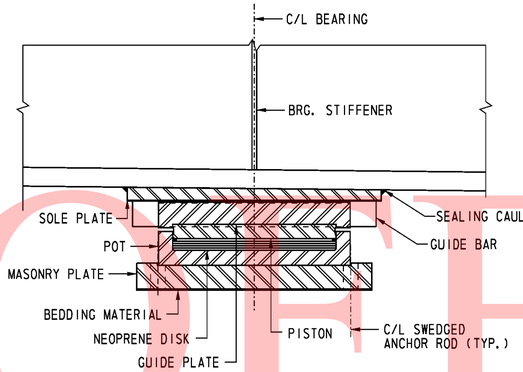

SECTION C-C
NOT TO SCALE

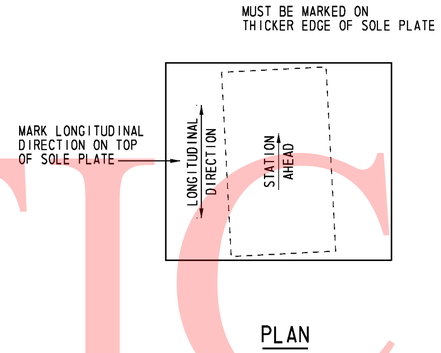

PLAN SIDE VIEW

SOLE PLATE DETAIL
NOT TO SCALE

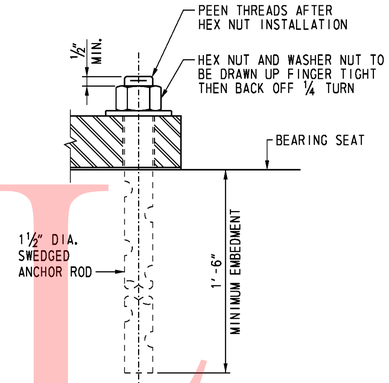

ANCHOR ROD DETAIL
SCALE: 3" = 1'-0"

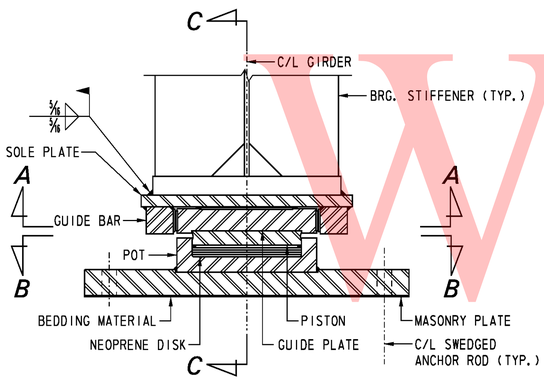

ELEVATION
NOT TO SCALE

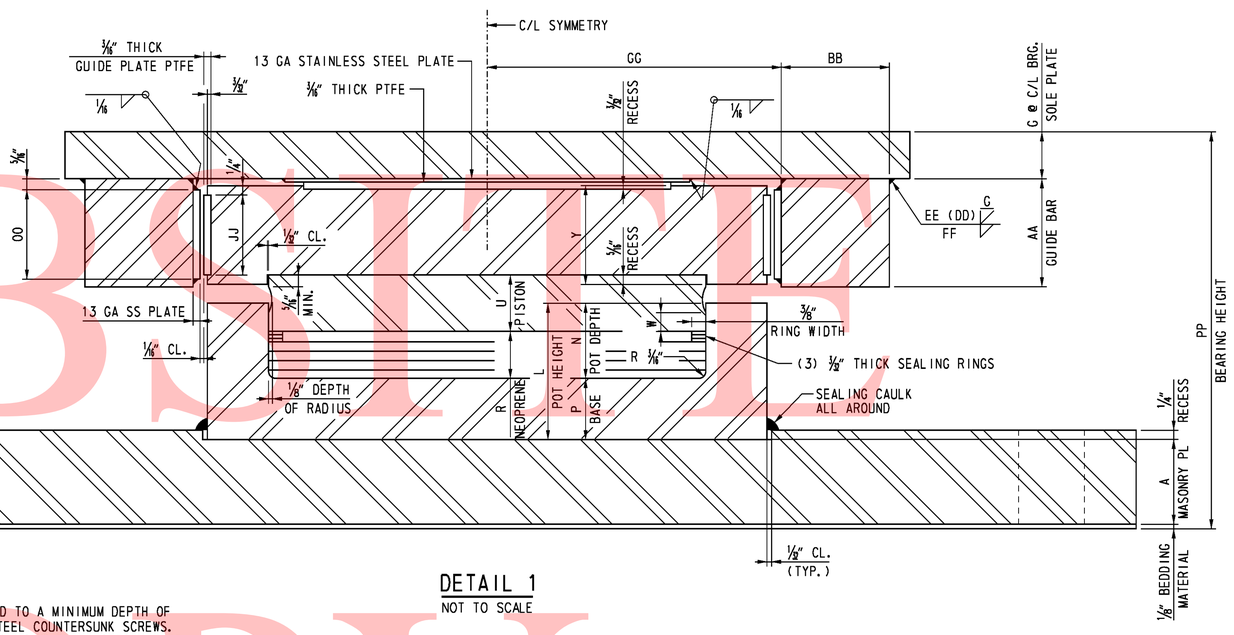

DETAIL 1
NOT TO SCALE

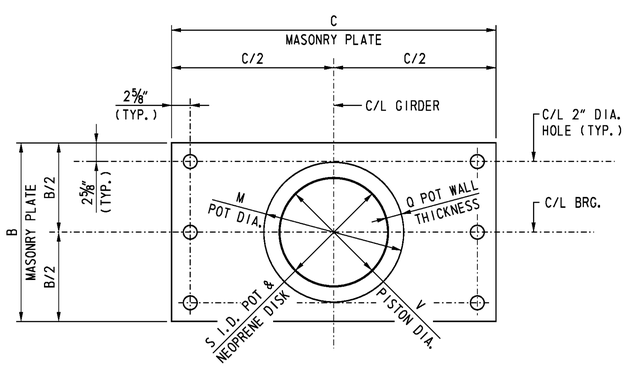

SECTION B-B
NOT TO SCALE

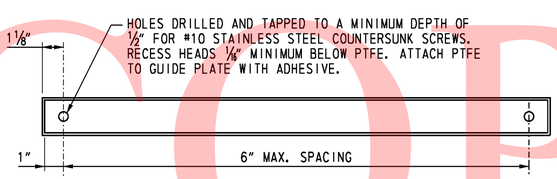

GUIDE PLATE PTFE DETAIL
NOT TO SCALE

NOTE:

SOLE PLATE THICKNESS SHALL NOT BE LESS THAN ¾ INCH.

CROSS REFERENCE NOTE:

FOR BEARING NOTES AND LOCATIONS, SEE DWG. S5-29.

LOCATION	SERVICE VERTICAL LOAD (kips)	STRENGTH VERTICAL LOAD (kips)	STRENGTH HORIZONTAL LOAD (kips)	α	MASONRY PLATE A	MASONRY PLATE B	MASONRY PLATE C	SOLE PLATE F	SOLE PLATE G	SOLE PLATE H	SOLE PLATE J	SOLE PLATE K
PIER 1 - G2 & G3	700	1,000	240	1°-47'-15" LT	3"	25"	43"	1½"	1¼"	1"	27½"	32½"
PIER 3 - G2 & G3	700	1,000	240	4°-56'-26" RT	3"	25"	43"	1⅝"	1¼"	⅞"	27½"	32½"

LOCATION	POT L	POT M	POT N	POT P	POT Q	NEOPRENE DISC R	NEOPRENE DISC S	PISTON U	PISTON V	PISTON W	GUIDE PLATE Y	GUIDE PLATE Z
PIER 1 - G2 & G3	4⅞"	20¾"	2⅝"	2¼"	2¼"	1⅝"	16¼"	2"	16.210"	1¼"	3⅜"	20¾"
PIER 3 - G2 & G3	4⅞"	20¾"	2⅝"	2¼"	2¼"	1⅝"	16¼"	2"	16.210"	1¼"	3⅜"	20¾"

LOCATION	GUIDE BARS AA	GUIDE BARS BB	GUIDE BARS CC	GUIDE BARS DD	GUIDE BARS EE	GUIDE BARS FF	GUIDE BARS GG	PTFE HH	PTFE JJ	PTFE KK	STAINLESS STEEL LL	STAINLESS STEEL MM	STAINLESS STEEL NN	STAINLESS STEEL OO	* BEARING HEIGHT PP
PIER 1 - G2 & G3	3¾"	3¾"	27½"	½"	⅝"	½"	10.621"	14¼"	3"	20½"	25½"	15¼"	27"	3¼"	13½"
PIER 3 - G2 & G3	3¾"	3¾"	27½"	½"	⅝"	½"	10.621"	14¼"	3"	20½"	25½"	15¼"	27"	3¼"	13½"

* BEARING HEIGHT INCLUDES ⅛" BEDDING MATERIAL.
BEARING HEIGHT MEASURED AT C/L BEARING

S5-33

DELAWARE DEPARTMENT OF TRANSPORTATION

ADDENDUMS / REVISIONS

SR1 / I-95 INTERCHANGE

CONTRACT 28-090-03
COUNTY NEW CASTLE
BRIDGE NO. 1-716D
DESIGNED BY: M. E. PEAL
CHECKED BY: G. P. MISTRY

RAMP G1 OVER SR 7
GUIDED EXPANSION BEARING AT PIER 1 AND 3

SHEET NO. 426
TOTAL SHTS. 803

10/28/2010 O:\20832687-XM\CAD\Bridge\BR-S5\bd03_BR-S5_sr1.dgn
untitled

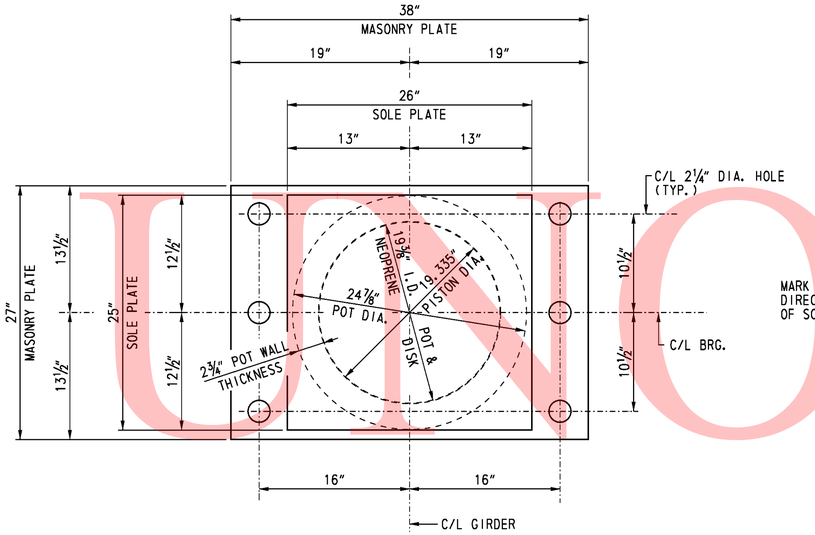

FIXED POT BEARING PLAN

SCALE: 1½" = 1'-0"

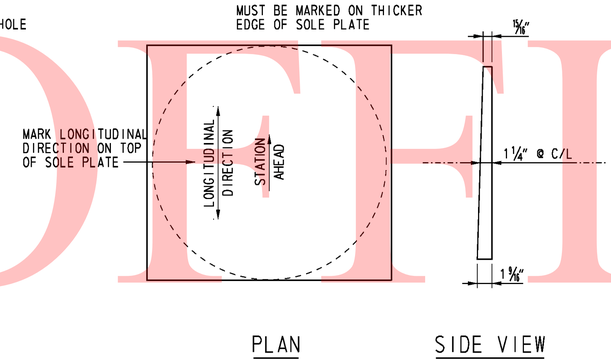

SOLE PLATE DETAIL

SCALE: 1½" = 1'-0"

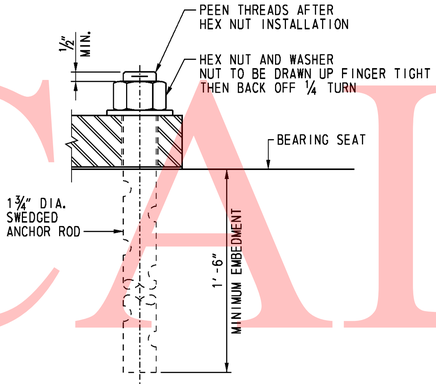

ANCHOR ROD DETAIL

SCALE: 3" = 1'-0"

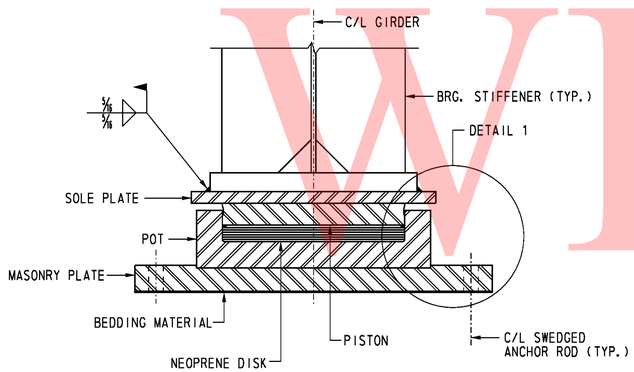

ELEVATION

SCALE: 1½" = 1'-0"

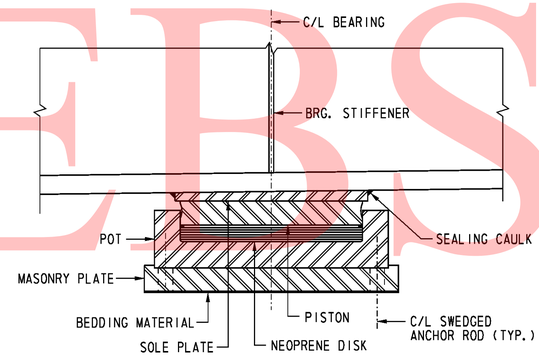

SIDE VIEW

SCALE: 1½" = 1'-0"

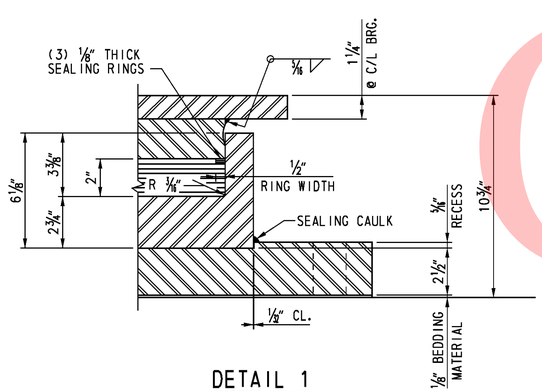

DETAIL 1

SCALE: 3" = 1'-0"

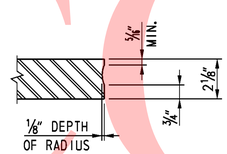

PISTON DETAIL

SCALE: 3" = 1'-0"

DESIGN LOADS:

SERVICE LIMIT STATE VERTICAL LOAD = 1,000 kips.

STRENGTH LIMIT STATE VERTICAL LOAD = 1,400 kips.

STRENGTH LIMIT STATE HORIZONTAL LOAD = 355 kips.

NOTE:

SOLE PLATE THICKNESS SHALL NOT BE LESS THAN ¾ INCH.

CROSS REFERENCE NOTE:

FOR BEARING NOTES AND LOCATIONS, SEE DWG. S5-29.

UNOFFICIAL WEBSITE COPY

10/28/2010 O:\20832687-XM\CAD\Bridge\BR-S5\ba06_BR-S3_sr1.dgn untitled

DELAWARE DEPARTMENT OF TRANSPORTATION	ADDENDUMS / REVISIONS	SR1 / I-95 INTERCHANGE	CONTRACT 28-090-03	BRIDGE NO. 1-716D	RAMP G1 OVER SR 7	S5-34 SHEET NO.	
			COUNTY NEW CASTLE	DESIGNED BY: R. F. KIRCHNER	FIXED BEARING AT PIER 2	427 TOTAL SHTS.	
				CHECKED BY: G. P. MISRY		803	

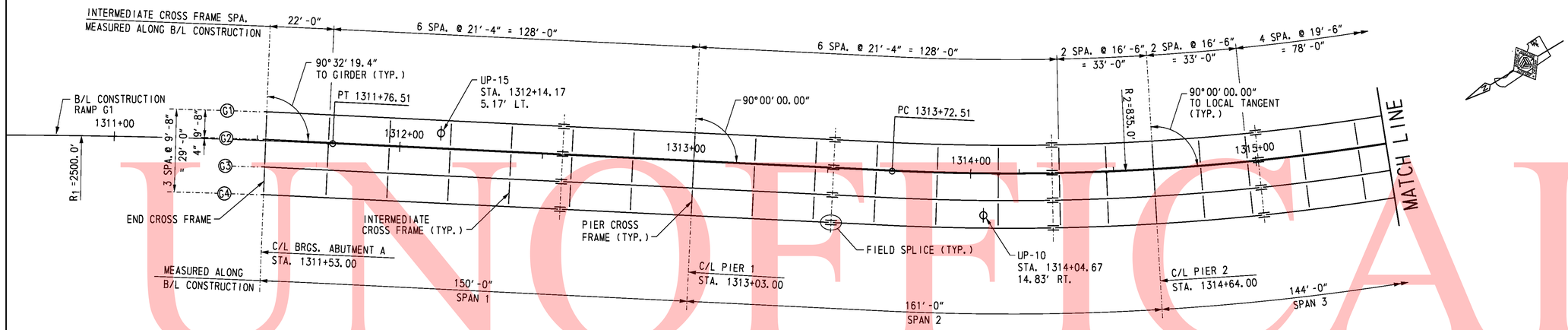

FRAMING PLAN

SCALE: 1" = 20'-0"

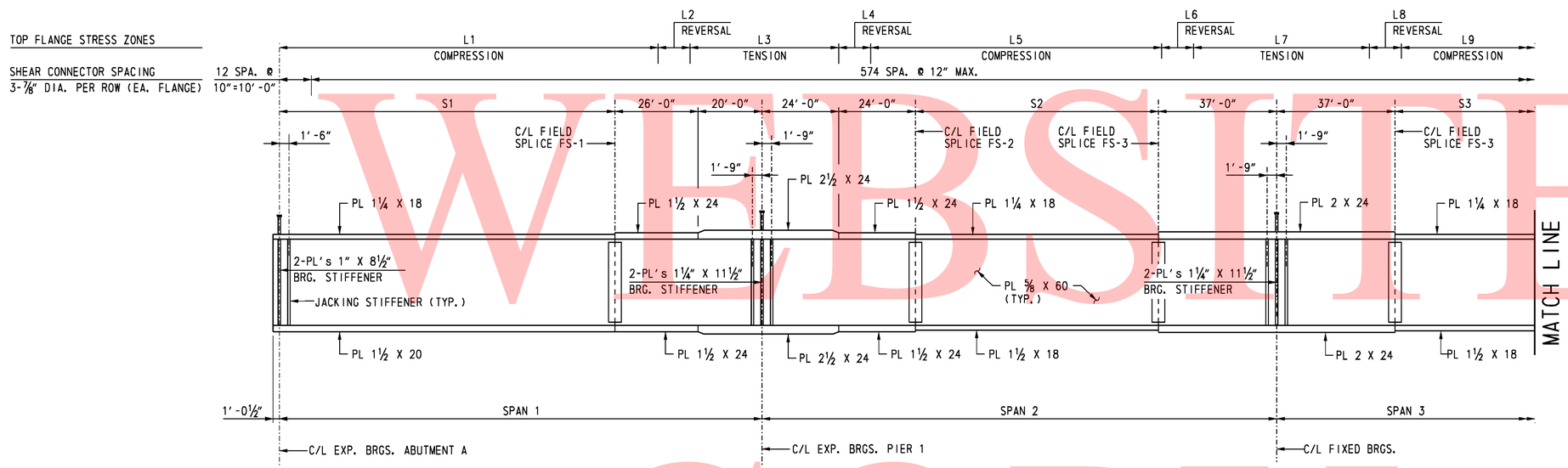

GIRDER ELEVATION

NOT TO SCALE

NOTES:

1. THE ESTIMATED NUMBER OF SHEAR CONNECTORS IS 7188.
2. THERE SHALL BE NO FIELD WELDING TO THE TOP FLANGE, EXCEPT FOR SHEAR STUDS, IN THE TENSION AND STRESS REVERSAL AREAS.
3. STUDS SHALL BE SPACED TO CLEAR SPLICE BOLTS.
4. GIRDERS IN SPAN 1 ARE PARALLEL TO CHORD LINE FROM PT STA. 1311+76.51 TO PC STA. 1313+72.51.
5. ALL CROSS FRAMES AND CENTERLINE BEARINGS SHALL BE RADIAL. CROSS FRAMES IN TANGENT PORTION OF SPANS 1 & 2 SHALL BE NORMAL TO GIRDERS.
6. SET ENDS OF GIRDERS AND BEARING STIFFENERS VERTICAL UNDER FULL DEAD LOAD.
7. ENTIRE SUPERSTRUCTURE FRAMING SHALL BE PREASSEMBLED IN SHOP TO VERIFY FIT.

CROSS REFERENCE NOTES:

1. FOR GENERAL NOTES, SEE DWG. S5-2.
2. FOR TYPICAL SECTION, SEE DWG. S5-3.
3. FOR CROSS FRAMES AND GIRDER DETAILS, SEE DWGS. S5-37 & S5-38.
4. FOR FIELD SPLICE DETAILS, SEE DWGS. S5-39 & S5-40.
5. FOR BEARING TYPES AND LOCATIONS, SEE DWG. S5-29.
6. FOR UP-10 & UP-15 UNDERPASS LIGHTING SUPPORT DETAIL, SEE DWG. S5-37.

GIRDERS	RADIUS	SPAN LENGTH					PLATE LENGTH				TOP FLANGE STRESS ZONES												
	R2	SPAN 1	SPAN 2	SPAN 3	SPAN 4	LENGTH	S1	S2	S3	S4	L1	L2	L3	L4	L5	L6	L7	L8	L9	L10	L11	L12	L13
G1	825'-0"	150'-1 1/8"	159'-10 7/8"	142'-3 5/8"	128'-5 3/8"	580'-8 5/8"	104'-1 1/8"	74'-10 7/8"	64'-3 3/16"	91'-5 5/16"	90'-1 1/8"	31'-0"	63'-0"	31'-0"	45'-10 7/8"	27'-0"	46'-0"	46'-0"	2'-3 3/16"	44'-0"	51'-0"	23'-0"	80'-5 5/16"
G2	834'-8"	150'-0 1/16"	160'-11 3/16"	143'-11 3/16"	129'-11 3/8"	584'-10 3/8"	104'-0 1/16"	75'-11 3/16"	65'-11 3/16"	92'-11 3/8"	90'-0 1/16"	31'-0"	63'-0"	31'-0"	46'-11 3/16"	27'-0"	46'-0"	46'-0"	3'-11 3/16"	44'-0"	51'-0"	23'-0"	81'-11 3/8"
G3	844'-4"	149'-10 15/16"	162'-0 1/4"	145'-7 5/16"	131'-5 7/16"	588'-11 15/16"	103'-10 15/16"	77'-0 1/4"	67'-7 3/16"	94'-5 7/16"	89'-10 15/16"	31'-0"	63'-0"	31'-0"	48'-0 1/4"	27'-0"	46'-0"	46'-0"	5'-7 5/16"	44'-0"	51'-0"	23'-0"	83'-5 7/16"
G4	854'-0"	149'-9 7/8"	163'-1"	147'-3 5/16"	132'-11 1/2"	593'-1 11/16"	103'-9 7/8"	78'-1"	69'-3 3/16"	95'-11 1/2"	89'-9 7/8"	31'-0"	63'-0"	31'-0"	49'-1"	27'-0"	46'-0"	46'-0"	7'-3 3/16"	44'-0"	51'-0"	23'-0"	84'-11 1/2"

UNOFFICIAL WEBSITE COPY

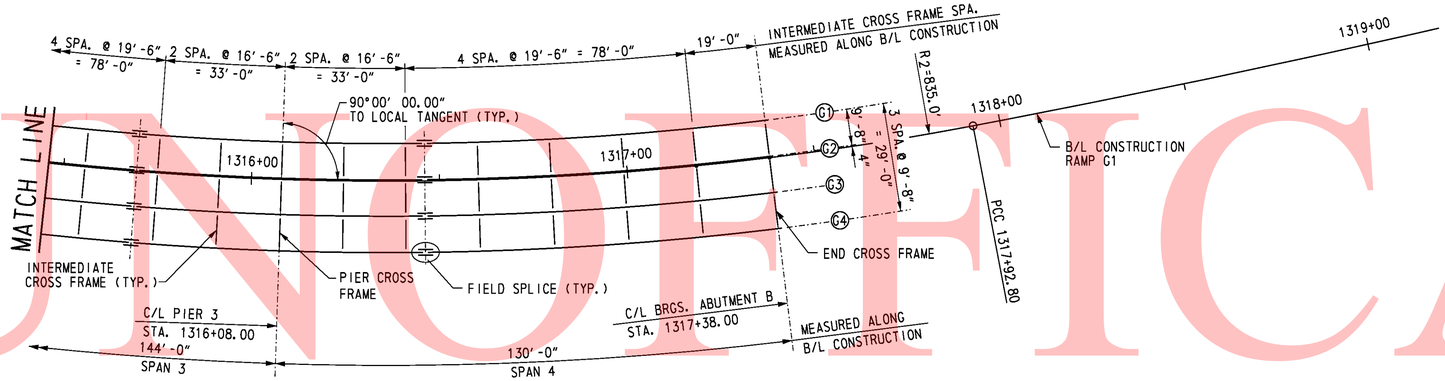

FRAMING PLAN

SCALE: 1" = 20'-0"

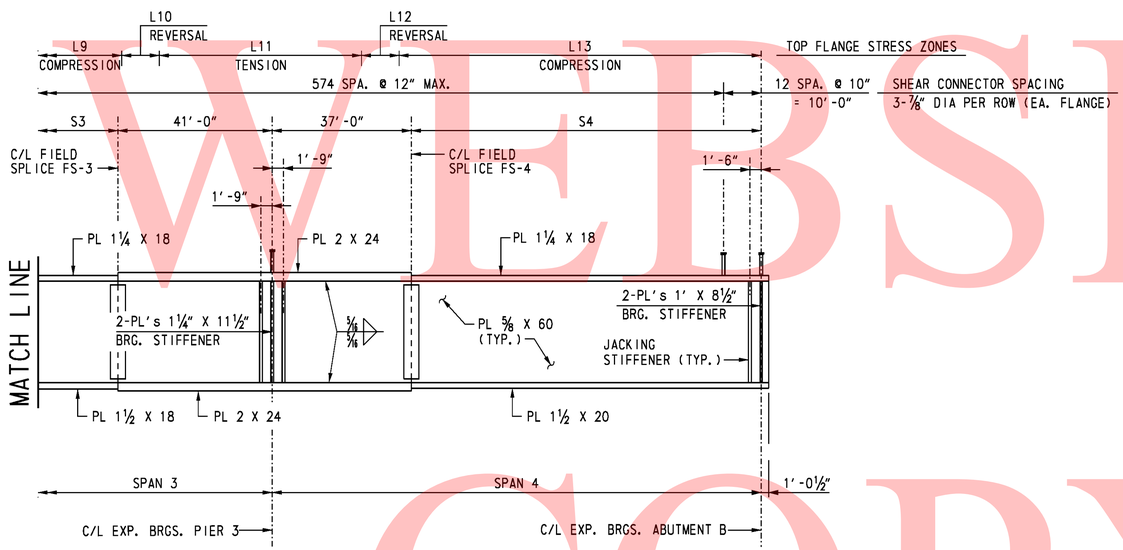

GIRDER ELEVATION

NOT TO SCALE

CROSS REFERENCE NOTES:

1. FOR FRAMING PLAN AND GIRDER ELEVATION NOTES, SEE DWG. S5-35.
2. FOR GIRDER TABLE, SEE DWG. S5-35.

UNOFFICAL WEBSITE COPY

10/28/2010 O:\20832687-XM\CAD\Bridge\BR-S5\Vr02_BR-S5_sr1.dgn untitled

DELAWARE DEPARTMENT OF TRANSPORTATION	ADDENDUMS / REVISIONS	SR1 / I-95 INTERCHANGE	CONTRACT 28-090-03	BRIDGE NO. 1-716D	RAMP G1 OVER SR 7	SHEET NO. S5-36
			COUNTY NEW CASTLE	DESIGNED BY: J. TRUSCELLO	FRAMING PLAN AND GIRDER ELEVATION 2	TOTAL SHTS. 429
				CHECKED BY: R. F. KIRCHNER		803

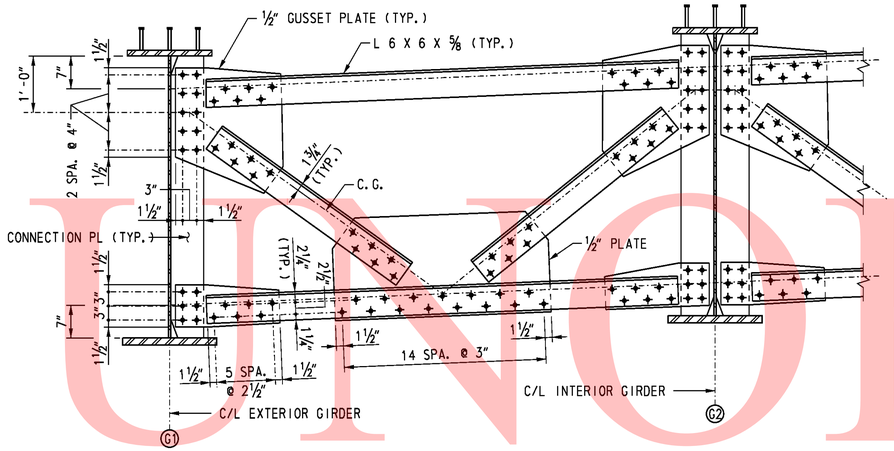

TYPICAL INTERMEDIATE CROSS FRAME

SCALE: ¾" = 1'-0"

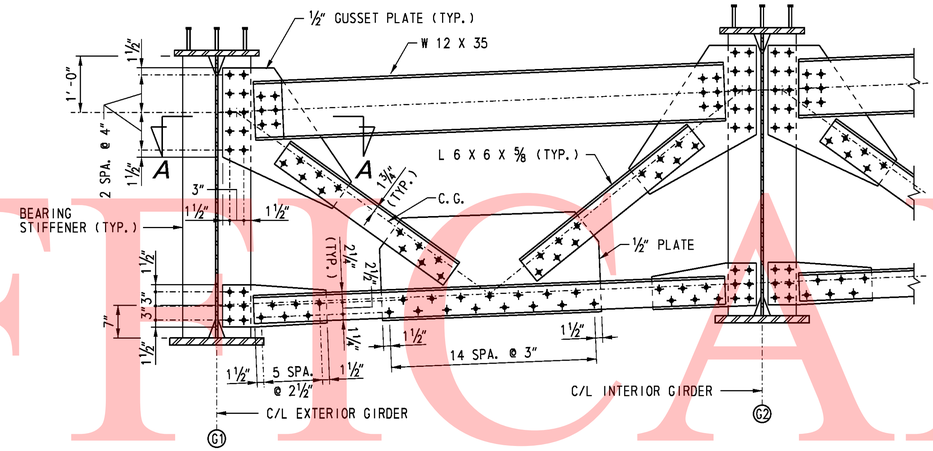

TYPICAL END CROSS FRAME

SCALE: ¾" = 1'-0"

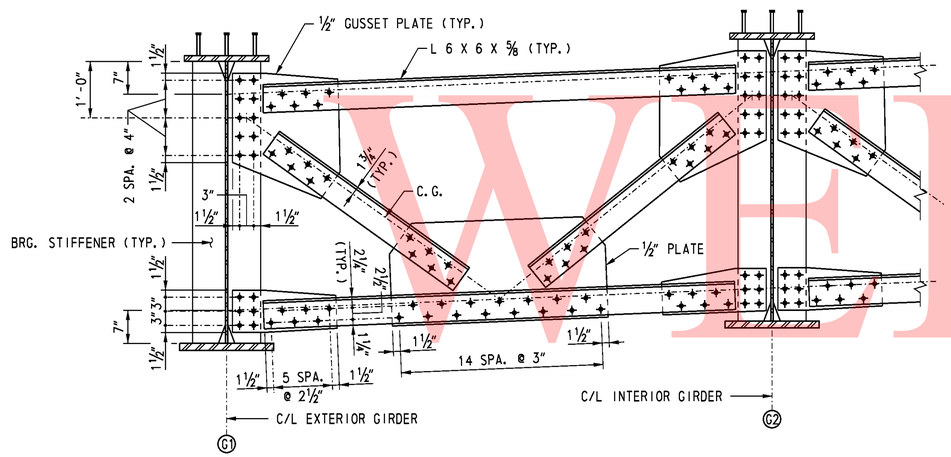

TYPICAL PIER CROSS FRAME

SCALE: ¾" = 1'-0"

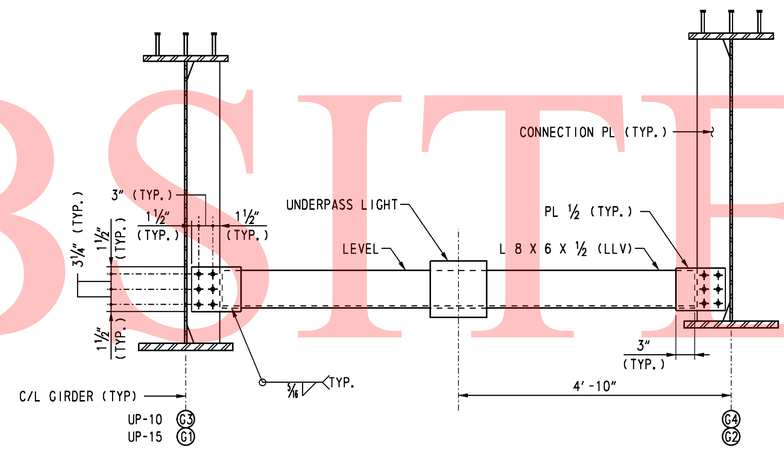

UNDERPASS LIGHT SUPPORT DETAIL

SCALE: ¾" = 1'-0"

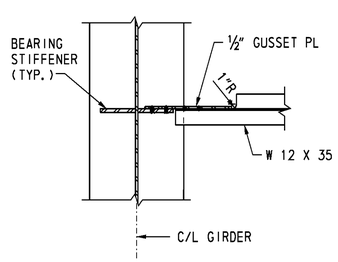

SECTION A-A

SCALE: ¾" = 1'-0"

NOTES:

1. CROSS FRAMES SHALL BE DETAILED TO FIT IN THE FULL DEAD LOAD CONDITION.
2. THE STEEL FABRICATOR SHALL COORDINATE WITH THE LIGHTING SUPPLIER FOR THE LOCATION OF HOLES IN CONNECTION PLATE FOR MOUNTING UNDERPASS LIGHT SUPPORT.
3. THE BOTTOM OF THE LIGHT FIXTURE SHALL NOT BE MORE THAN 12" FROM THE BOTTOM OF THE GIRDER AND SHALL NOT EXTEND BELOW THE BOTTOM OF THE GIRDER.

CROSS REFERENCE NOTES:

1. FOR GENERAL NOTES, SEE DWG. S5-2.
2. FOR FRAMING PLAN, SEE DWGS. S5-35 & S5-36.
3. FOR GIRDER DETAILS, SEE DWG. S5-38.
4. FOR BOLT TYPE AND SIZE AS WELL AS HOLE SIZE, SEE DWG. S5-2.

UNOFFICIAL WEBSITE COPY

10/28/2010 O:\20832687-XM\CAD\Bridge\BR-S5\bm03_BR-S5_sr1.dgn
untitled

DELAWARE DEPARTMENT OF TRANSPORTATION	ADDENDUMS / REVISIONS	SR1 / I-95 INTERCHANGE	CONTRACT 28-090-03	BRIDGE NO. 1-716D	RAMP G1 OVER SR 7 CROSS FRAME DETAILS	S5-37 SHEET NO. 430
			COUNTY NEW CASTLE	DESIGNED BY: J. TRUSCELLO		TOTAL SHTS. 803
				CHECKED BY: R. F. KIRCHNER		

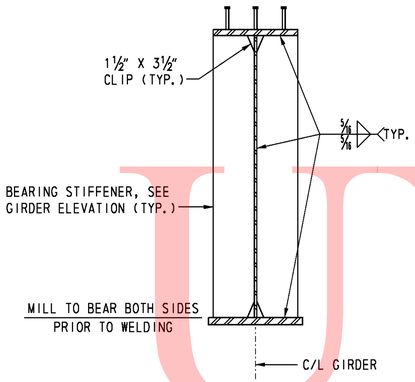

BEARING STIFFENER

SCALE: ¾" = 1'-0"

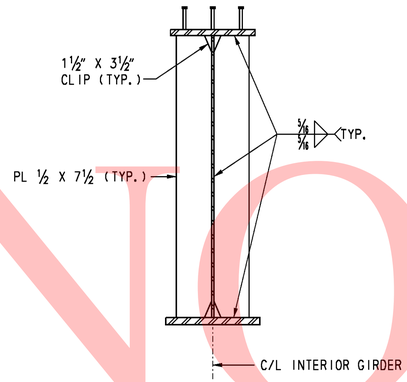

CONNECTION PLATE

SCALE: ¾" = 1'-0"

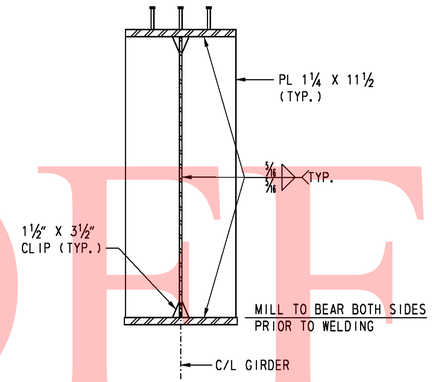

JACKING STIFFENER AT PIERS

SCALE: ¾" = 1'-0"

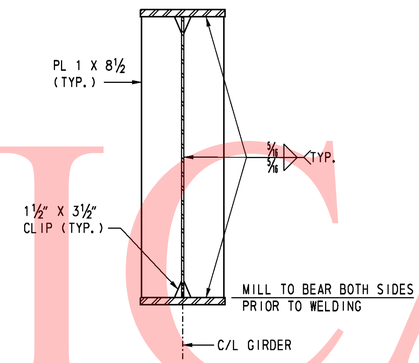

JACKING STIFFENER (AT ABUTMENTS)

SCALE: ¾" = 1'-0"

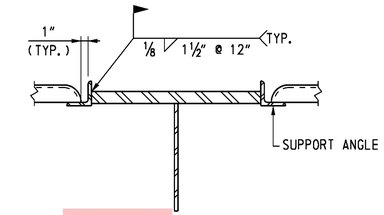

COMPRESSION FLANGE FOR S.I.P. FORMS

SCALE: 1½" = 1'-0"

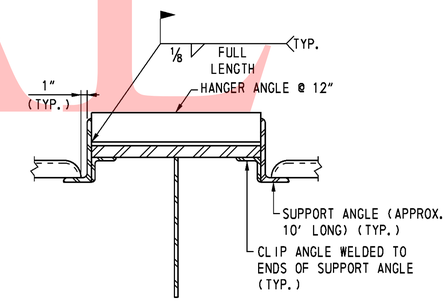

TENSION FLANGE FOR S.I.P. FORMS

SCALE: 1½" = 1'-0"

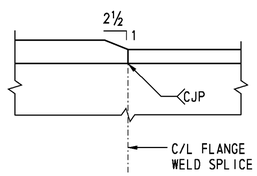

FLANGE PLATE THICKNESS TRANSITION

NOT TO SCALE

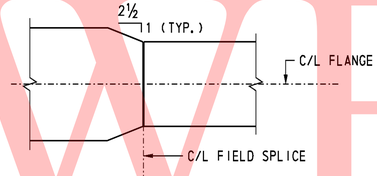

BOTTOM FLANGE PLATE WIDTH TRANSITION

NOT TO SCALE

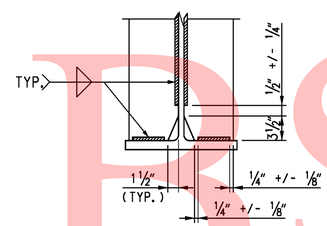

STIFFENER & CONNECTION PLATE WELD TERMINATION

NOT TO SCALE

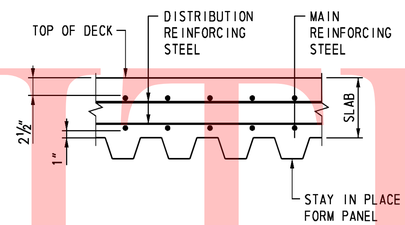

STEEL FORM NOTES:

1. FORMS SHALL BE VERTICALLY ADJUSTED TO ATTAIN FINISHED LINE, GRADE AND SLAB THICKNESS REQUIRED ON THE PLANS.
2. NO WELDING OF THESE FORMS TO FLANGES IN TENSION IS PERMITTED.

STEEL FORM SECTION

SCALE: 1½" = 1'-0"

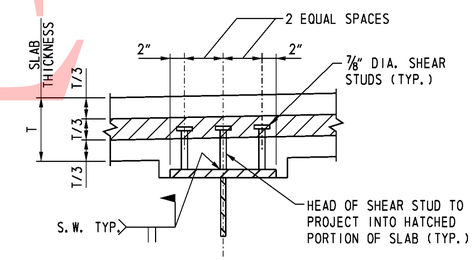

SHEAR STUD DETAIL

NOT TO SCALE

CONNECTION PLATE

SCALE: ¾" = 1'-0"

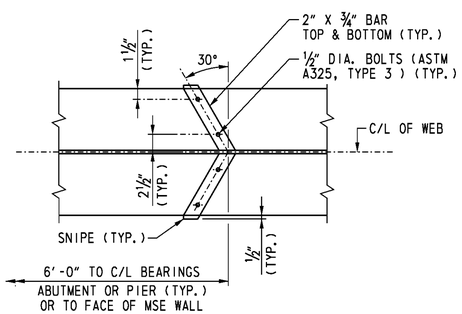

DRIP BAR DETAIL

NOT TO SCALE

NOTES:

1. DRIP BAR DETAIL SHALL BE PLACED ON BOTTOM FLANGE. PROVIDE DRIP BAR FOR GIRDER G1 AND G4 ONLY.
2. DRIP BARS ARE PLACED ADJACENT TO SUPPORTS TO PREVENT WATER FLOW ONTO SUPPORT.

CROSS REFERENCE NOTES:

1. FOR GENERAL NOTES, SEE DWG. S5-2.
2. FOR FRAMING PLAN, SEE DWGS. S5-35 & S5-36.
3. FOR CROSS FRAME DETAILS, SEE DWG. S5-37.

UNOFFICIAL WEBSITE COPY

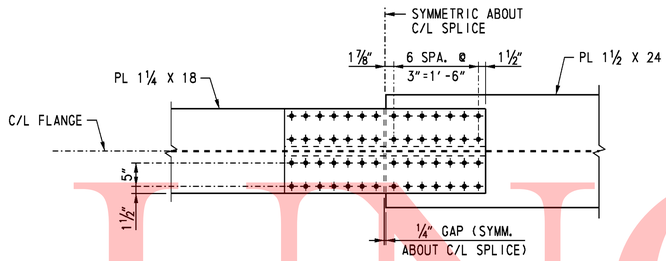

TOP FLANGE

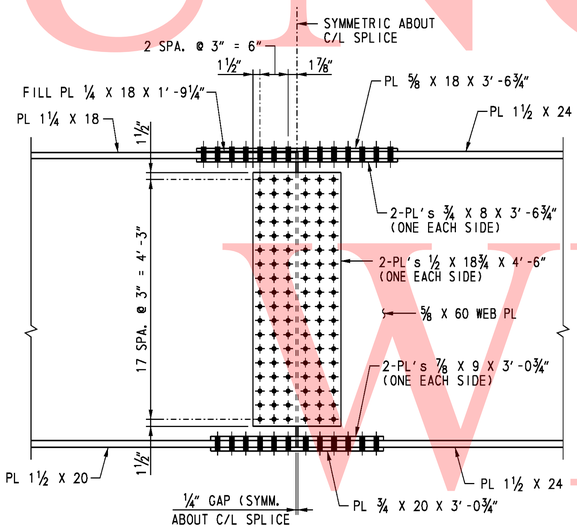

WEB SPLICE

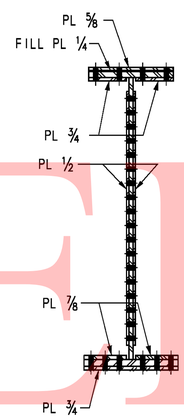

SECTION

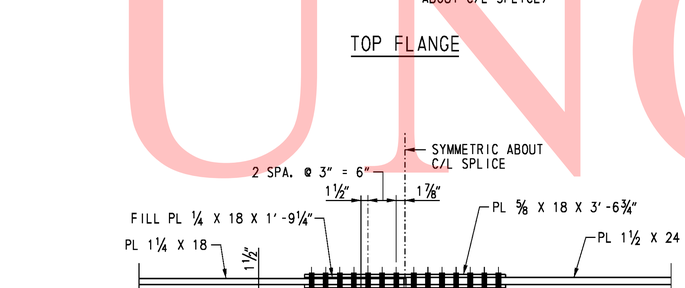

BOTTOM FLANGE

FIELD SPLICE FS-1

SCALE: 3/4" = 1'-0"

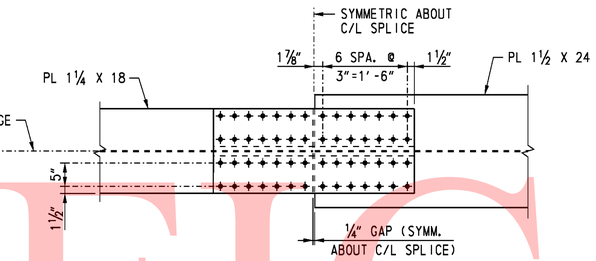

TOP FLANGE

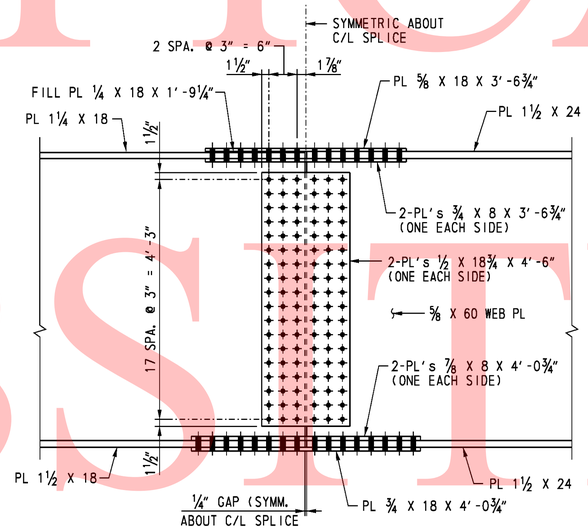

WEB SPLICE

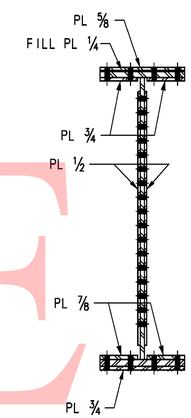

SECTION

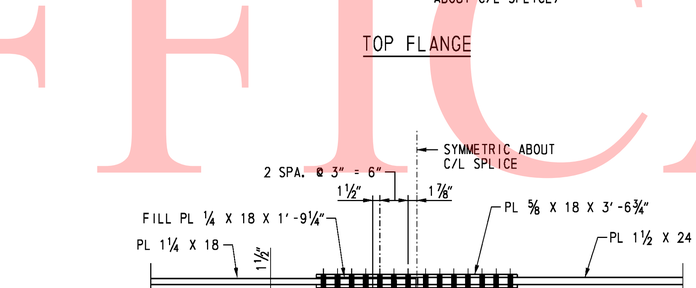

BOTTOM FLANGE

FIELD SPLICE FS-2

SCALE: 3/4" = 1'-0"

NOTES:

1. ALL BOLTS SHALL BE 7/8" DIA. TYPE 3 ASTM A 325 HIGH STRENGTH BOLTS IN 15/16" DIA. HOLES. CONTACT SURFACE OF BOLTED PARTS SHALL BE CLASS B. EXCLUDE BOLT THREADS FROM SHEAR PLANES.
2. BOLT HEADS SHALL BE ON THE EXTERIOR FACE OF THE FASCIA GIRDERS AND THE BOTTOM OF THE BOTTOM FLANGE.
3. FIELD SPLICES SHALL BE COMPLETELY SHOP ASSEMBLED AND MATCH MARKED AFTER ALL SHOP WELDING HAS BEEN COMPLETED. CONTACT SURFACES SHALL BE FREE OF ALL OIL AND DIRT.
4. WEB SPLICE PLATES ARE SYMMETRIC ABOUT MID-DEPTH OF WEB.

CROSS REFERENCE NOTES:

1. FOR GENERAL NOTES, SEE DWG. S5-2.
2. FOR FRAMING PLAN AND GIRDER ELEVATION, SEE DWGS. S5-35 & S5-36.

UNOFFICAL WEBSITE COPY

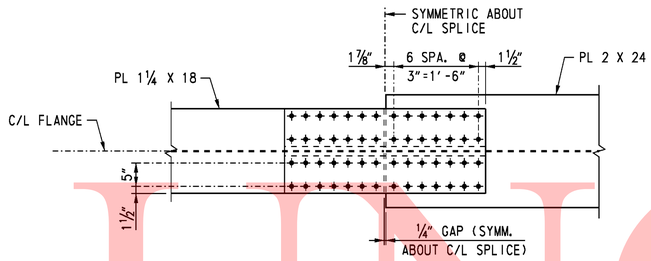

TOP FLANGE

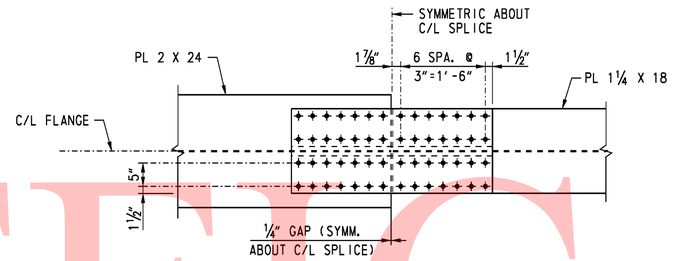

TOP FLANGE

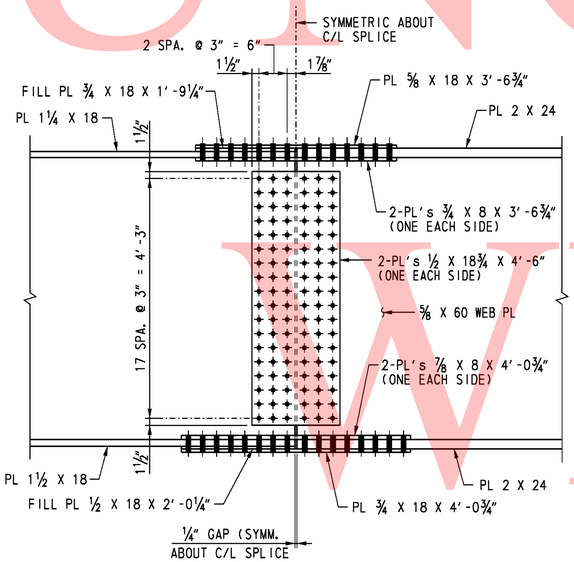

WEB SPLICE

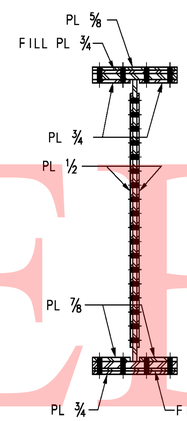

SECTION

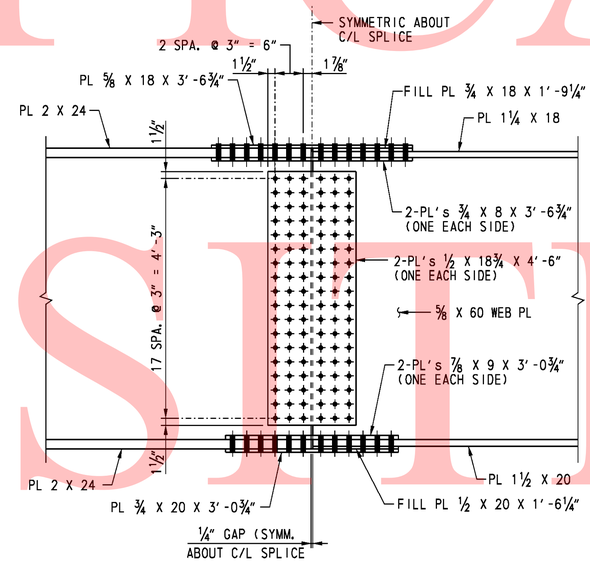

WEB SPLICE

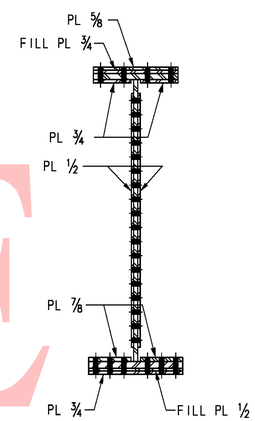

SECTION

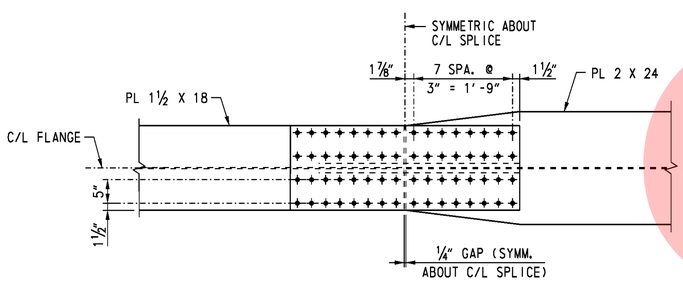

BOTTOM FLANGE

FIELD SPLICE FS-3

SCALE: ¾" = 1'-0"

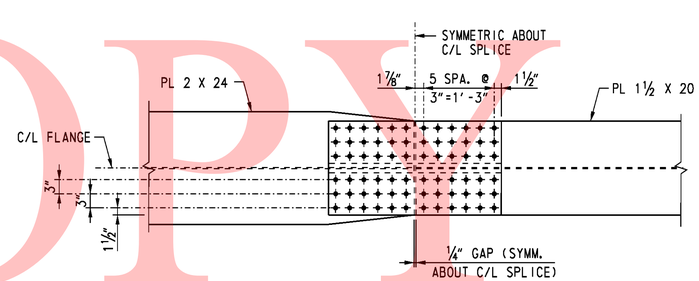

BOTTOM FLANGE

FIELD SPLICE FS-4

SCALE: ¾" = 1'-0"

NOTES:

1. ALL BOLTS SHALL BE ⅞" DIA. TYPE 3 ASTM A 325 HIGH STRENGTH BOLTS IN 15/16" DIA. HOLES. CONTACT SURFACE OF BOLTED PARTS SHALL BE CLASS B. EXCLUDE BOLT THREADS FROM SHEAR PLANES.
2. BOLT HEADS SHALL BE ON THE EXTERIOR FACE OF THE FASCIA GIRDERS AND THE BOTTOM OF THE BOTTOM FLANGE.
3. FIELD SPLICES SHALL BE COMPLETELY SHOP ASSEMBLED AND MATCH MARKED AFTER ALL SHOP WELDING HAS BEEN COMPLETED. CONTACT SURFACES SHALL BE FREE OF ALL OIL AND DIRT.
4. WEB SPLICE PLATES ARE SYMMETRIC ABOUT MID-DEPTH OF WEB.
5. FOR ORIENTATION OF FIELD SPLICE FS-3, COORDINATE WITH FRAMING PLAN.

CROSS REFERENCE NOTES:

1. FOR GENERAL NOTES, SEE DWG. S5-2.
2. FOR FRAMING PLAN AND GIRDER ELEVATION, SEE DWGS. S5-35 & S5-36.

S5-40

DELAWARE DEPARTMENT OF TRANSPORTATION	ADDENDUMS / REVISIONS	SR1 / I-95 INTERCHANGE	CONTRACT 28-090-03	BRIDGE NO. 1-716D	RAMP G1 OVER SR 7	SHEET NO. 433
			COUNTY NEW CASTLE	DESIGNED BY: K. D. BEAVER	FIELD SPLICE DETAILS 2	TOTAL SHTS. 803
				CHECKED BY: R. F. KIRCHNER		

UNOFFICAL WEBSITE COPY

10/28/2010 O:\20832687-XM\CAD\Bridge\BR-S5\bm02_BR-S5_sr1.dgn untitled

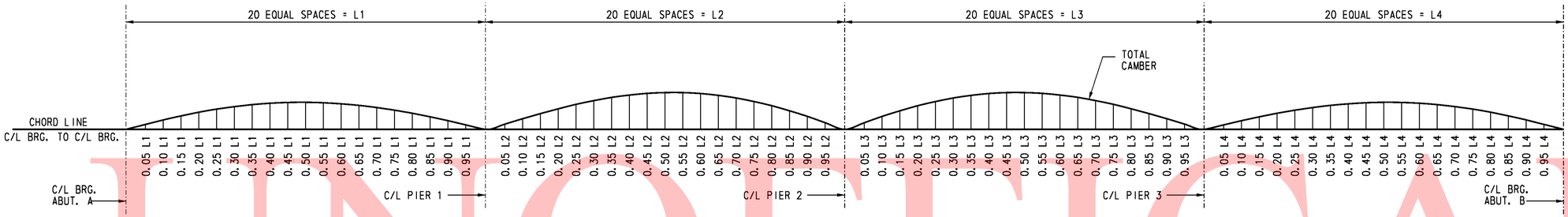

LEGEND

DLS - DENOTES DEFLECTION DUE TO STRUCTURAL STEEL GIRDER.

DLC - DENOTES DEFLECTION DUE TO DECK SLAB, HAUNCH AND S.I.P. FORMS

SDL - DENOTES DEFLECTION DUE TO BARRIER

TDC - DENOTES TOTAL DEAD LOAD DEFLECTION AND CAMBER

VCO - DENOTES CAMBER FOR VERTICAL CURVE ORDINATE DUE TO ROADWAY PROFILE

TDC+VCO - DENOTES TOTAL CAMBER

ALL GIRDERS SHALL BE CAMBERED FOR DEAD LOAD DEFLECTION ORDINATES TO THE DIMENSIONS SHOWN ON THESE PLANS. THE CAMBER TOLERANCE IS NOTHING UNDER TO THREE QUARTERS (3/4) INCH OVER.

SCHEMATIC CAMBER DIAGRAM

CAMBER ORDINATES (IN)

GIRDER NO.	POINT	C/L BRG. ABUT. A	SPAN 1 0.05L	0.10L	0.15L	0.20L	0.25L	0.30L	0.35L	0.40L	0.45L	0.50L	0.55L	0.60L	0.65L	0.70L	0.75L	0.80L	0.85L	0.90L	0.95L	C/L PIER 1
G1	DLS	0	3/16	3/8	9/16	11/16	15/16	7/8	15/16	1	1	15/16	7/8	13/16	11/16	9/16	1/2	3/8	1/4	1/8	1/16	0
	DLC	0	5/8	1 3/16	1 11/16	2 1/8	2 1/2	2 13/16	3	3 1/16	3 1/16	3	2 13/16	2 1/2	2 3/16	1 13/16	1 1/16	1 1/16	3/4	7/16	5/16	0
	SDL	0	1/8	3/16	7/16	9/16	5/8	11/16	3/4	3/4	3/4	3/4	11/16	5/8	9/16	7/16	3/8	5/16	5/16	1/8	1/16	0
	TDC	0	15/16	1 7/8	2 5/8	3 5/16	3 15/16	4 7/16	4 11/16	4 7/8	4 11/16	4 11/16	4 3/8	3 15/16	3 7/16	2 7/8	2 3/16	1 11/16	1 3/16	11/16	5/16	0
	VCO	0	1/4	1/2	3/4	1	1 1/4	1 1/2	1 3/4	1 15/16	2 1/16	2 1/8	2 1/16	2 1/8	2 1/16	1 15/16	1 3/4	1 1/2	1 1/16	7/16	1/16	0
	TDC+VCO	0	1 1/16	2 3/8	3 3/8	4 5/16	5 1/16	5 15/16	6 7/16	6 3/4	6 7/8	6 11/16	6 5/16	6 1/16	5 1/2	4 13/16	4 1/16	3 3/16	2 3/8	1 1/2	15/16	0
G2	DLS	0	3/16	3/8	9/16	11/16	15/16	7/8	15/16	1	1	15/16	7/8	13/16	11/16	9/16	7/16	5/16	1/4	1/8	1/16	0
	DLC	0	7/16	1 1/16	1 11/16	2 1/8	2 7/16	2 3/4	2 15/16	3 1/16	3	2 15/16	2 3/4	2 7/16	2 1/8	1 3/4	1 3/8	1 1/16	11/16	3/8	3/16	0
	SDL	0	1/8	1/4	3/8	1/2	9/16	5/8	11/16	11/16	11/16	11/16	5/8	9/16	1/2	7/16	5/16	1/4	5/16	1/8	1/16	0
	TDC	0	15/16	1 13/16	2 9/16	3 1/4	3 13/16	4 3/16	4 9/16	4 11/16	4 11/16	4 9/16	4 1/4	3 13/16	3 3/16	2 3/4	2 3/16	1 5/8	1 1/8	5/8	3/16	0
	VCO	0	1/4	1/2	3/4	1	1 1/4	1 1/2	1 3/4	1 15/16	2 1/16	2 1/8	2 1/16	2 1/16	2 1/16	1 15/16	1 3/4	1 1/2	1 1/16	7/16	1/16	0
	TDC+VCO	0	1 1/16	2 3/16	3 3/16	4 1/4	5 1/16	5 15/16	6 5/16	6 5/8	6 3/4	6 11/16	6 5/8	5 15/16	5 3/8	4 11/16	3 13/16	3 1/8	2 5/16	1 1/2	3/4	0
G3	DLS	0	3/16	3/8	1/2	11/16	3/4	7/8	15/16	15/16	15/16	15/16	7/8	3/4	11/16	9/16	7/16	5/16	1/4	1/8	1/16	0
	DLC	0	9/16	1 1/8	1 5/8	2 1/16	2 7/16	2 11/16	2 7/8	2 15/16	2 15/16	2 11/16	2 5/8	2 3/8	2 1/16	1 11/16	1 3/16	1	11/16	3/8	3/16	0
	SDL	0	1/8	1/4	3/8	1/2	9/16	5/8	11/16	11/16	11/16	11/16	5/8	9/16	1/2	3/8	5/16	1/4	3/16	1/16	1/16	0
	TDC	0	7/8	1 13/16	2 9/16	3 3/16	3 3/4	4 3/16	4 1/2	4 5/8	4 3/16	4 1/16	4 1/8	3 11/16	3 1/16	2 5/8	2 1/8	1 7/16	1 1/16	5/16	1/16	0
	VCO	0	1/4	1/2	3/4	1	1 1/4	1 1/2	1 3/4	1 15/16	2 1/16	2 1/8	2 1/16	2 1/16	2 1/16	1 15/16	1 3/4	1 1/2	1 1/16	7/16	1/16	0
	TDC+VCO	0	1 1/8	2 3/16	3 5/16	4 3/16	5	5 11/16	6 1/4	6 1/2	6 5/8	6 3/16	6 3/16	5 13/16	5 1/4	4 3/16	3 13/16	3 1/16	2 1/4	1 7/16	3/4	0
G4	DLS	0	3/16	3/8	1/2	5/8	3/4	7/8	15/16	15/16	7/8	13/16	3/4	5/8	7/16	3/16	1/16	1/16	1/16	1/16	1/16	0
	DLC	0	9/16	1 1/8	1 11/16	2	2 3/16	2 5/8	2 13/16	2 7/8	2 13/16	2 3/4	2 13/16	2 1/4	1 15/16	1 5/8	1 1/4	15/16	5/8	3/16	1/16	0
	SDL	0	1/8	1/4	3/8	1/2	9/16	11/16	11/16	3/4	3/4	11/16	5/8	9/16	1/2	7/16	3/16	1/16	1/16	0	0	0
	TDC	0	7/8	1 3/4	2 1/2	3 1/8	3 11/16	4 1/8	4 1/2	4 1/2	4 3/16	4	3 11/16	3 1/8	2 5/16	2	1 1/2	1	5/16	1/4	0	0
	VCO	0	1/4	1/2	3/4	1	1 1/4	1 1/2	1 3/4	1 15/16	2 1/16	2 1/8	2 1/16	2 1/16	2 1/16	1 15/16	1 3/4	1 1/2	1 1/16	7/16	1/16	0
	TDC+VCO	0	1 1/8	2 1/4	3 1/4	4 1/8	4 15/16	5 5/8	6 1/8	6 1/8	6 5/16	6 1/16	6 1/16	5 3/4	5 5/16	4 1/16	3 3/4	2 15/16	2 1/16	1 7/16	3/4	0

GIRDER NO.	POINT	C/L PIER 2	SPAN 2 0.05L	0.10L	0.15L	0.20L	0.25L	0.30L	0.35L	0.40L	0.45L	0.50L	0.55L	0.60L	0.65L	0.70L	0.75L	0.80L	0.85L	0.90L	0.95L	C/L BRG. ABUT. B
G1	DLS	0	0	0	0	1/16	1/16	1/8	3/16	1/4	5/16	5/16	3/8	3/8	3/16	5/16	1/4	3/16	1/8	1/16	1/16	0
	DLC	0	0	-1/16	-1/8	-1/16	1/16	1/4	7/16	5/8	13/16	15/16	1	1 1/16	1 1/16	15/16	7/8	11/16	1/2	3/8	7/16	0
	SDL	0	0	0	0	1/16	1/8	1/8	3/16	1/4	5/16	5/16	3/8	3/8	3/16	1/4	5/16	1/8	1/8	1/16	0	0
	TDC	0	-1/16	-1/8	-1/16	1/8	3/8	3/4	1	1 3/16	1 1/2	1 5/8	1 11/16	1 11/16	1 9/16	1 3/8	1 1/8	13/16	9/16	5/16	1/8	0
	VCO	0	7/16	13/16	1 1/16	1 3/16	1 1/2	1 5/8	1 11/16	1 11/16	1 5/8	1 1/2	1 1/4	1	3/4	3 3/16	5/16	-1/8	-1/8	-1/16	-1/16	0
	TDC+VCO	0	3/8	5/8	1	1 1/2	1 7/8	2 3/16	2 11/16	3	3 1/8	3 1/8	3	2 11/16	2 3/16	4 3/4	1 13/16	11/16	7/16	1/4	1/16	0
G2	DLS	0	0	0	0	1/16	1/8	3/16	1/4	5/16	3/8	3/8	3/8	3/8	3/8	5/16	1/4	3/16	1/8	1/16	1/16	0
	DLC	0	0	-1/16	0	1/16	3/16	9/16	3/4	1	1 1/8	1 3/16	1 1/4	1 1/4	1 1/8	1	13/16	5/8	7/16	1/4	1/8	0
	SDL	0	0	0	0	1/16	1/8	3/16	3/16	1/4	5/16	5/16	3/8	3/8	3/16	1/4	5/16	1/8	1/8	1/16	0	0
	TDC	0	-1/16	-1/16	1/16	1/4	9/16	7/8	1 1/4	1 9/16	1 3/4	1 15/16	1 15/16	1 15/16	1 13/16	1 9/16	1 3/16	15/16	11/16	3/16	3/16	0
	VCO	0	1/2	7/8	1 1/4	1 9/16	1 13/16	2	2 1/8	2 1/8	2 1/8	2 1/16	1 15/16	1 3/4	1 1/2	1 3/16	1 1/16	7/8	5/8	7/16	3/16	0
	TDC+VCO	0	7/16	13/16	1 5/16	1 13/16	2 3/16	2 7/8	3 3/16	3 11/16	3 15/16	4	3 15/16	3 11/16	3 3/16	2 7/8	2 3/8	1 13/16	1 5/16	15/16	3/8	0
G3	DLS	0	0	0	0	1/16	1/8	3/16	1/4	3/8	3/8	1/16	1/16	1/16	3/8	3/8	5/16	1/4	1/8	1/16	1/16	0
	DLC	0	0	0	1/16	1/4	7/16	11/16	15/16	1 1/8	1 3/16	1 3/8	1 1/16	1 3/8	1 3/16	1 1/8	15/16	11/16	1/2	1/4	1/8	0
	SDL	0	0	0	1/16	1/16	3/16	3/16	1/4	5/16	5/16	3/8	3/8	3/8	3/16	5/16	1/4	3/16	1/8	1/16	1/16	0
	TDC	0	0	0	1/16	3/8	3/4	1 1/16	1 1/4	1 3/16	1 3/8	1 1/16	1 3/8	1 3/16	1 1/8	15/16	3/4	1/16	3/16	1/16	1/16	0
	VCO	0	7/16	13/16	1 1/16	1 3/16	1 1/2	1 5/8	1 11/16	1 11/16	1 5/8	1 1/2	1 1/4	1	3/4	3 3/16	5/16	-1/8	-1/8	-1/16	-1/16	0
	TDC+VCO	0	3/8	5/8	1	1 1/2	1 7/8	2 3/16	2 11/16	3	3 1/8	3 1/8	3	2 11/16	2 3/16	4 3/4	1 13/16	11/16	7/16	1/4	1/16	0
G4	DLS	0	0	0	0	1/16	1/8	3/16	1/4	5/16	5/16	3/8	3/8	3/8	3/16	5/16	1/4	3/16	1/8	1/16	1/16	0
	DLC	0	0	0	1/16	1/4	7/16	11/16	15/16	1 1/8	1 3/16	1 3/8	1 1/16	1 3/8	1 3/16	1 1/8	15/16	11/16	1/2	1/4	1/8	0
	SDL	0	0	0	1/16	1/8	3/16	3/16	1/4	5/16	5/16	3/8	3/8	3/8	3/16	5/16	1/4	3/16	1/8	1/16	1/16	0
	TDC	0	0	0	1/16	3/8	3/4	1 1/16	1 1/4	1 3/16	1 3/8	1 1/16	1 3/8	1 3/16	1 1/8	15/16	3/4	1/16	3/16	1/16	1/16	0
	VCO	0	5/8	1 1/8	1 5/8	2 1/16	2 7/16	2 11/16	2 15/16	3 1/16	3 1/4	3 3/16	3 1/16	3 1/4	3 1/8	3	2 7/8	2 11/16	2 1/8	1 7/16	11/16	0
	TDC+VCO	0	5/8	1 3/16	1 7/8	2 5/8	3 3/16	4 1/16	4 11/16	5 1/4	5 5/16	5 11/16	5 7/8	5 3/4	5 1/16	5 1/16	4 9/16	4 1/16	3	1 15/16	15/16	0

CAMBER ORDINATES (IN)

GIRDER NO.	POINT	C/L PIER 2	SPAN 3 0.05L	0.10L	0.15L	0.20L	0.25L	0.30L	0.35L	0.40L	0.45L	0.50L	0.55L	0.60L	0.65L	0.70L	0.75L	0.80L	0.85L	0.90L	0.95L	C/L PIER 3
G1	DLS	0	0	0	1/16	1/16	1/8	1/8	3/16	3/16	3/16	3/16	3/16	3/16	1/8	1/8	1/16	1/16	0	0	0	0
	DLC	0	0	1/16	1/8	1/4	5/16	7/16	1/2	5/8	5/8	11/16	5/8	9/16	1/2	3/8	5/16	3/16	1/16	0	0	0
	SDL	0	0	0	1/16	1/16	1/8	1/8	1/8	3/16	3/16	3/16	3/16	1/8	1/8	1/8	1/16	1/16	0	0	0	0
	TDC	0	1/16	1/16	3/16	3/8	1/2	11/16	7/8	1	1 1/16	1 1/16	1	15/16	13/16	5/8	1/2	5/16	1/8	0	0	0
	VCO	0	0	0	0	0	0	0	0	0	0	0	0	0	0	0	0	0	0	0	0	0
	TDC+VCO	0	1/16	1/16	3/16	3/8	1/2	11/16	7/8	1	1 1/16	1 1/16	1	15/16	13/16	5/8	1/2	5/16	1/8	0	0	0
G2	DLS	0	0	0	1/16	1/16	1/8	1/8	3/16	3/16	3/16	3/16	3/16	3/16	1/8	1/8	1/16	1/16	0	0	0	0
	DLC	0	0	0	1/16	3/16	5/16	3/8	1/2	9/16	5/8	5/8	5/8	9/16	1/2	3/8	1/4	1/8	1/16	0	0	0
	SDL	0	0	0	0	1/16	1/16	1/8	1/8	1/8	1/8	1/8	1/8	1/8	1/8	1/8	1/16	1/16	0	0	0	0
	TDC	0	0	1/16	1/8	3/16	1/16	5/16	3/4	15/16	1	1	15/16	7/8	3/4	9/16	3/8	3/16	1/16	-1/16	0	0
	VCO	0	0	0	0	0	0	0	0	0	0	0	0	0	0	0	0	0	0	0	0	0
	TDC+VCO	0	0	1/16	1/8	3/16	1/16	5/16	3/4	15/16	1	1	15/16	7/8	3/4	9/16	3/8	3/16	1/16	-1/16	0	0
G3	DLS	0	0	0	0	1/16	1/16	1/8	1/8	3/16	3/16	3/16	3/16	1/8	1/8	1/16	0	0	0	0	0	0
	DLC	0	0	0	1/16	3/16	1/4	3/8	1/16	1/2	9/16	9/16	9/16	1/2	3/8	5/16	1/16	0	-1/16	0	0	0
	SDL	0	0	0	0	1/16	1/16	1/16	1/8	1/8	1/8	1/8	1/8	1/8	1/8	1/8	1/16	1/16	0	0	0	0
	TDC	0	0	1/8	1/4	3/8	9/16	11/16	15/16	7/8	15/16	7/8	7/8	3/4	5/8	1/2	5/16	1/8	0	-1/16	-1/16	0
	VCO	0	0	0	0	0	0	0	0	0	0	0	0	0	0	0	0	0	0	0	0	0
	TDC+VCO	0	0	1/8	1/4	3/8	9/16	11/16	15/16	7/8	15/16	7/8	7/8	3/4	5/8	1/2	5/16	1/8	0	-1/16	-1/16	0
G4	DLS	0	0	0	0	1/16	1/16	1/8	1/8	3/16	3/16	3/16	3/16	1/8	1/8	1/16	1/16	0	0	-1/16	0	0
	DLC	0	0	0	0	1/8	3/16	5/16	3/8	1/2	1/2	1/2	1/2	7/16	5/16	3/16	1/8	0	-1/16	-1/8	-1/16	0
	SDL	0	0	0	0	1/16	1/16	1/8	1/8	3/16	3/16	1/4	1/4	1/8	1/8	1/8	1/16	0	0	0	0	0
	TDC	0	0	0	1/16	3/16	3/8	1/2	11/16	15/16	7/8	7/8	15/16	11/16	9/16	5/16	3/16	1/16	-1/16	-1/8	-1/16	0
	VCO	0	0	0	0	0	0	0	0	0	0	0	0	0	0	0	0	0	0	0	0	0
	TDC+VCO	0	0	0	1/16	3/16	3/8	1/2	11/16	15/16	7/8	7/8	15/16	11/16	9/16	5/16	3/16	1/16	-1/16	-1/8	-1/16	0

GIRDER NO.	POINT	C/L PIER 3	SPAN 4 0.05L	0.10L	0.15L	0.20L	0.25L	0.30L	0.35L	0.40L	0.45L	0.50L	0.55L	0.60L	0.65L	0.70L	0.75L	0.80L	0.85L	0.90L	0.95L	C/L BRG. ABUT. B
G1	DLS	0	1/16	1/16	1/8	3/16	1/4	5/16	3/8	3/8	7/16	7/16	1/2	1/2	7/16	7/16	3/8	5/16	1/4	3/16	1/16	0
	DLC	0	1/8	3/16	5/16	1/2	11/16	7/8	1 1/16	1 1/4	3/16	1 1/16	1 1/2	1 1/2	1 1/16	1 3/16	1 1/16	11/16	9/16	5/16	0	0
	SDL	0	0	1/16	1/16	1/8	3/16	1/4	1/4	3/16	3/8	3/8	3/8	3/8	3/8	5/16	5/16	1/4	1/8	1/8	1/16	0
	TDC	0	1/8	3/16	5/16	11/16	1 1/16	1 5/16	1 11/16	2 1/16	2 1/4	2 3/16	2 3/16	2 1/4	2 1/16	1 13/16	1 5/16	1 5/16	7/8	1/16	0	0
	VCO	0	0	0	0	0	0	0	0	0	0	0	0	0	0	0	0	0	0	0	0	0
	TDC+VCO	0	1/8	3/16	5/16	11/16	1 1/8	1 3/8	1 11/16	2 1/16	2 1/4	2 3/16	2 3/16	2 1/4	2 1/16	1 13/16	1 5/16	1 5/16	7/8	1/16	0	0
G2	DLS	0	1/16	1/16	1/8	3/16	1/4	5/16	3/8	1/2	1/2	9/16	9/16	9/16	9/16	1/2	7/16	3/8	3/16	3/16	1/8	0
	DLC	0	1/8	1/4	7/16	5/8	7/8	1 1/16	1 1/4	1 1/2	1 5/8	1 11/16	1 3/4	1 11/16	1 3/4	1 5/8	1 1/16	1 1/4	1	11/16	5/16	0
	SDL	0	0	1/16	1/16	1/8	3/16	1/4	5/16	1/2	9/16	5/8	5/8	5/8	5/8	5/16	5/16	1/4	1/4	1/16	1/16	0
	TDC	0	3/16	5/16	7/16	1	1 3/16	1 7/16	2	2 3/16	2 1/2	2 11/16	2 3/4	2 3/4	2 11/16	2 1/2	2 1/4	1 15/16	1 1/2	1 1/16	1/2	0
	VCO	0	0	0	0	0	0	0	0	0	0	0	0	0	0	0	0	0	0	0	0	0
	TDC+VCO	0	3/16	5/16	7/16	1	1 3/16	1 7/16	2	2 3/16	2 1/2	2 11/16	2 3/4	2 3/4	2 11/16	2 1/2	2 1/4	1 15/16	1 1/2	1 1/16	1/2	0
G3	DLS	0	1/16	1/16	3/16	1/4	5/16	7/16	1/2	9/16	5/8	5/8	11/16	11/16	5/8	5/8	9/16	7/16	3/8	1/4	1/8	0
	DLC	0	1/8	3/16	1/2	3/4	1	1 1/4	1 1/2	1 11/16	1 7/8	2	2 1/16	2 1/16	2	1 7/8	1 11/16	1 7/16	1 1/8	13/16	3/8	0
	SDL	0	1/16	1/16	1/8	3/16	1/4	5/16	3/8	3/8	7/16	7/16	1/2	1/2	7/16	7/16	3/8	5/16	1/4	3/16	1/16	0
	TDC	0	1/4	7/16	13/16	1 3/16	1 9/16	1 15/16	2 3/16	2 11/16	2 15/16	3 1/16	3 3/16	3 3/16	3 1/8	2 7/8	2 5/8	2 3/16	1 3/4	1 1/16	5/8	0
	VCO	0	0	0	0	0	0	0	0	0	0	0	0	0	0	0	0	0	0	0	0	0
	TDC+VCO	0	1/4	7/16	13/16	1 3/16	1 9/16	1 15/16	2 3/16	2 11/16	2 15/16	3 1/16	3 3/16	3 3/16	3 1/8	2 7/8	2 5/8	2 3/16	1 3/4	1 1/16	5/8	0
G4	DLS	0	1/16	1/16	3/16	5/16	3/8	7/16	9/16	5/8	11/16	3/4	3/4	3/4	3/4	11/16	5/8	1/2	7/16	5/16	1/8	0
	DLC	0	3/16	3/8	9/16	7/8	1 1/8	1 1/8	1 11/16	1 15/16	2 1/8	2 1/4	2 5/16	2 3/8	2 1/4	2 1/8	1 15/16	1 5/8	1 5/16	7/8	1/16	0
	SDL	0	1/16	1/16	1/8	3/16	1/4	5/16	3/8	1/2	9/16	9/16	5/8	5/8	9/16	9/16	1/2	7/16	5/16	1/4	1/8	0
	TDC	0	1/4	9/16	15/16	1 3/8	1 11/16	2 1/4	2 11/16	3 1/8	3 3/8	3 11/16	3 11/16	3 11/16	3 3/8	3	2 9/16	2	1 3/8	11/16	0	0
	VCO	0	0	0	0	0	0	0	0	0	0	0	0	0	0	0	0	0	0	0	0	0
	TDC+VCO	0	1/4	9/16	15/16	1 3/8	1 11/16	2 1/4	2 11/16	3 1/8	3 3/8	3 11/16	3 11/16	3 11/16	3 3/8	3	2 9/16	2	1 3/8	11/16	0	0

CROSS REFERENCE NOTES:

1. FOR GENERAL NOTES, SEE DWG. S5-2.
2. FOR VERTICAL CURVE DATA, SEE DWG. S5-1.
3. FOR GIRDER ELEVATION, SEE DWGS. S5-35 & S5-36.

UNOFFICIAL
NOT FOR BIDDING

DELAWARE DEPARTMENT OF TRANSPORTATION

ADDENDUMS / REVISIONS

SR1 / I-95 INTERCHANGE

CONTRACT	BRIDGE NO.	1-716D
28-090-03	DESIGNED BY: K. D. BEAVER	
COUNTY		
NEW CASTLE	CHECKED BY: J. S. LI	

RAMP G1 OVER SR 7

CAMBER TABLE

S5-41

SHEET NO. 434

TOTAL SHTS. 803

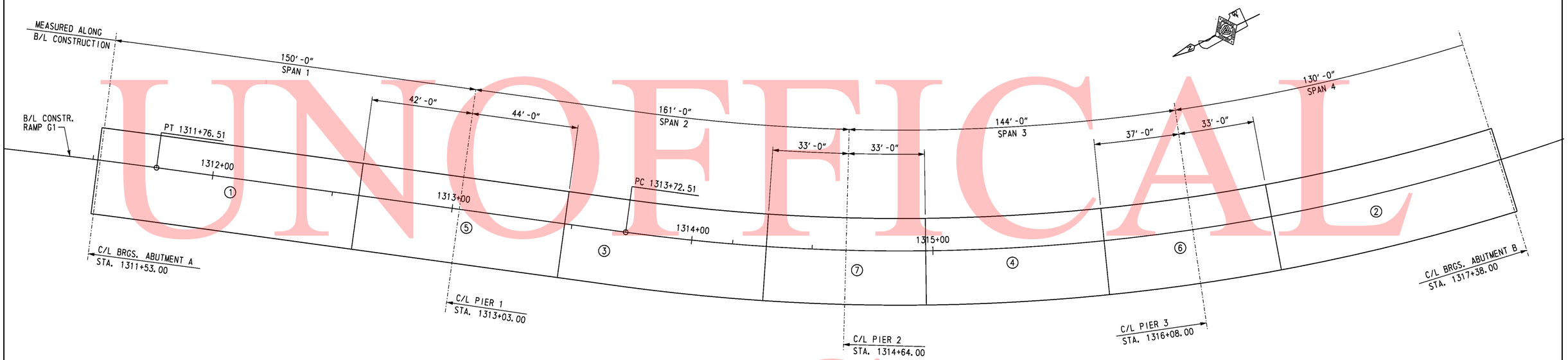

BRIDGE DECK POURING SEQUENCE

SCALE: 1" = 20'-0"

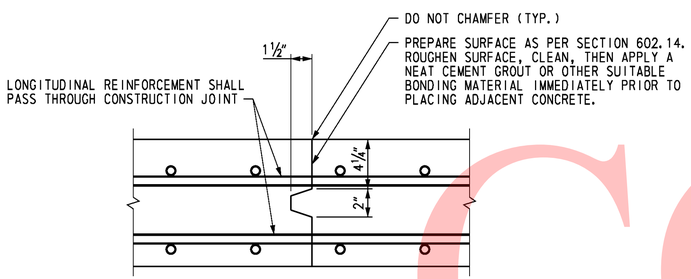

BRIDGE DECK CONSTRUCTION JOINT

NOT TO SCALE

NOTES:

1. THE POURING SEQUENCE FOR THE BRIDGE DECK SLAB SHALL BE MADE IN THE NUMBERED ORDER INDICATED. THERE MUST BE AT LEAST FORTY (40) HOURS BETWEEN THE COMPLETION OF ONE NUMBERED POUR AND THE START OF THE NEXT NUMBERED POUR, EXCEPT THERE MAY BE SIXTEEN (16) HOURS BETWEEN POURS NUMBERED 5, 6, AND 7.
2. AS AN ALTERNATE, CONTRACTOR MAY UTILIZE TWO CREWS AND TWO SETS OF EQUIPMENT TO CONSTRUCT POURS NUMBER 1 AND 2 SIMULTANEOUSLY. SIMILARLY, POURS NUMBER 3 AND 4, MAY BE CONSTRUCTED SIMULTANEOUSLY. POURS NUMBER 5 AND 6 MAY ALSO BE CONSTRUCTED SIMULTANEOUSLY.

CROSS REFERENCE NOTES:

1. FOR GENERAL NOTES, SEE DWG. S5-2.
2. FOR TYPICAL SECTION, SEE SEE DWG. S5-3.

UNOFFICAL WEBSITE COPY

10/28/2010 O:\20832687-XM\CAD\Bridge\BR-S5\dk01_BR-S5_sr1.dgn
untitled

DELAWARE DEPARTMENT OF TRANSPORTATION	ADDENDUMS / REVISIONS	SR1 / I-95 INTERCHANGE	CONTRACT 28-090-03	BRIDGE NO. 1-716D	RAMP G1 OVER SR 7	S5-42 SHEET NO.	
			COUNTY NEW CASTLE	DESIGNED BY: J. TRUSCELLO	BRIDGE DECK POURING SEQUENCE	435 TOTAL SHTS.	
				CHECKED BY: R. F. KIRCHNER		803	

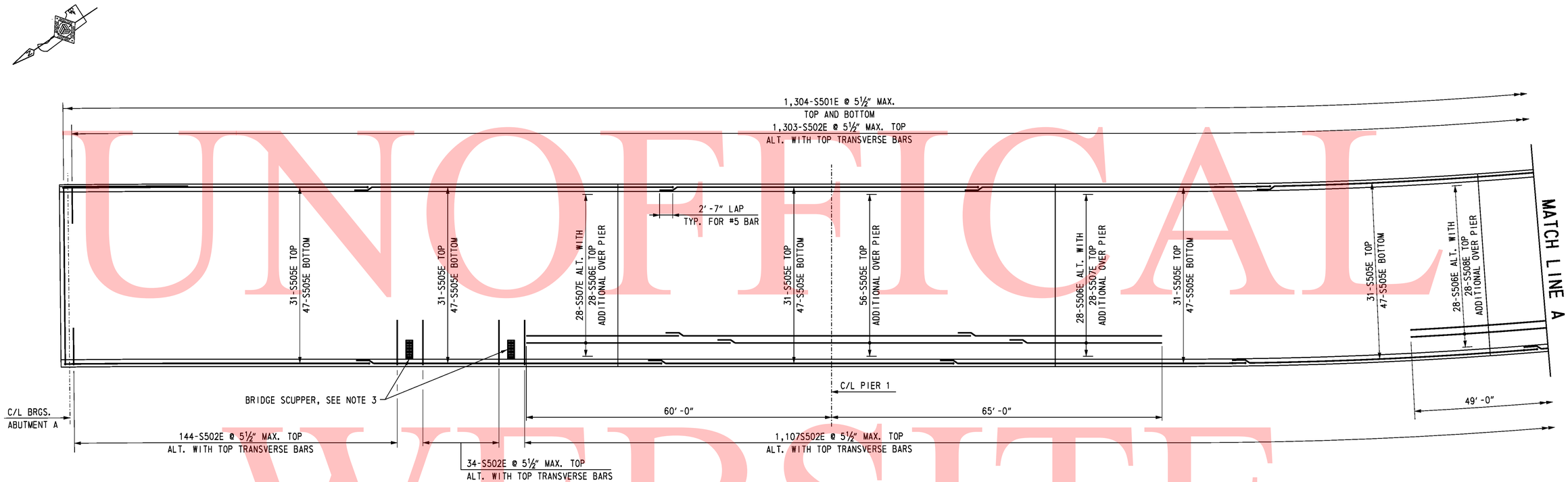

BRIDGE DECK REINFORCEMENT PLAN

SCALE: 1" = 10'-0"

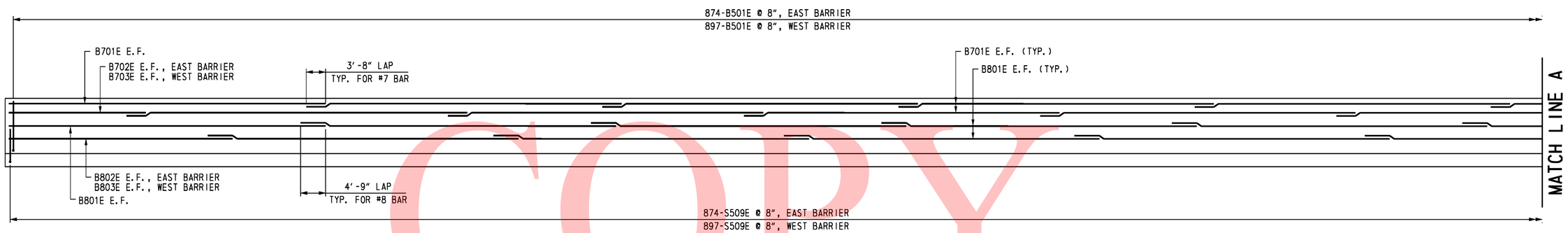

ELEVATION - DECK AND BARRIER REINFORCEMENT

NOT TO SCALE

CROSS REFERENCE NOTES:

1. FOR GENERAL NOTES, SEE DWG. S5-2.
2. FOR TYPICAL SECTION, SEE SEE DWG. S5-3.
3. FOR ADDITONAL REINFORCING AT SCUPPERS, SEE DWG. S5-53.
4. FOR REINFORCING BAR LIST, SEE DWG. S5-46.
5. FOR TYPICAL DECK REINFORCEMENT SECTION, SEE DWG. S5-45.

UNOFFICAL WEBSITE COPY

DELAWARE DEPARTMENT OF TRANSPORTATION	ADDENDUMS / REVISIONS	SR1 / I-95 INTERCHANGE	CONTRACT 28-090-03	BRIDGE NO. 1-716D	RAMP G1 OVER SR 7	SHEET NO. S5-43
			COUNTY NEW CASTLE	DESIGNED BY: R. F. KIRCHNER	BRIDGE DECK AND BARRIER REINFORCEMENT 1	436
				CHECKED BY: C. J. LOGAN		TOTAL SHTS. 803

10/28/2010 O:\20832687-XM\CAD\Bridge\BR-S5\dk02_BR-S5_sr1.dgn
untitled

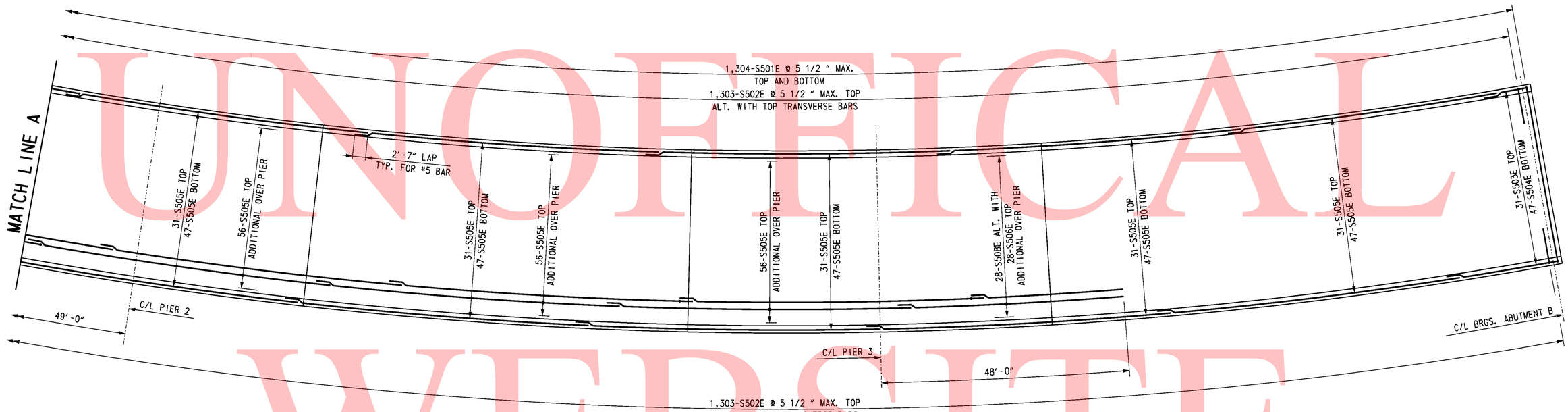

BRIDGE DECK REINFORCEMENT PLAN

SCALE: 1" = 10'-0"

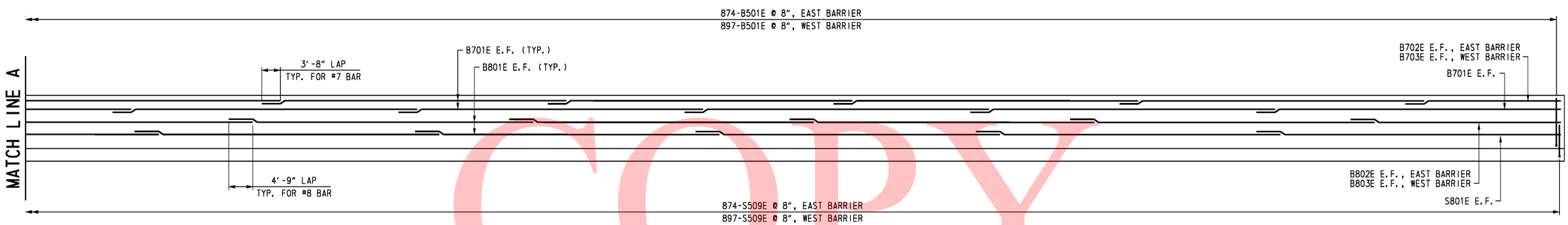

ELEVATION - DECK AND BARRIER REINFORCEMENT

NOT TO SCALE

CROSS REFERENCE NOTES:

1. FOR GENERAL NOTES, SEE DWG. S5-2.
2. FOR TYPICAL SECTION, SEE SEE DWG. S5-3.
3. FOR TYPICAL DECK REINFORCEMENT SECTION, SEE DWG. S5-45.
4. FOR REINFORCING BAR LIST, SEE DWG. S5-46.

UNOFFICAL WEBSITE COPY

DELAWARE DEPARTMENT OF TRANSPORTATION	ADDENDUMS / REVISIONS	SR1 / I-95 INTERCHANGE	CONTRACT 28-090-03	BRIDGE NO. 1-716D	RAMP G1 OVER SR 7	SHEET NO. S5-44
			COUNTY NEW CASTLE	DESIGNED BY: R. F. KIRCHNER	BRIDGE DECK AND BARRIER REINFORCEMENT 2	TOTAL SHTS. 437
				CHECKED BY: C. J. LOGAN		803

10/28/2010 O:\20832687-XM\CAD\Bridge\BR-S5\dk03_BR-S5_sr1.dgn untitled

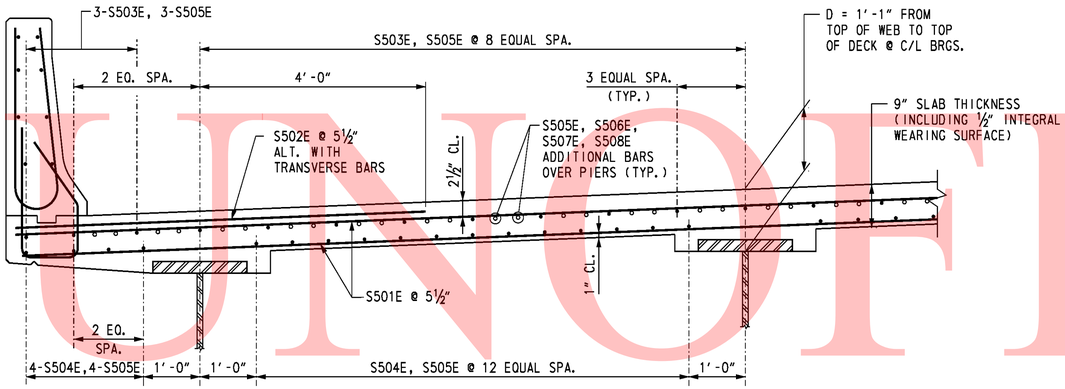

TYPICAL DECK REINFORCEMENT SECTION

SCALE: ¾" = 1'-0"

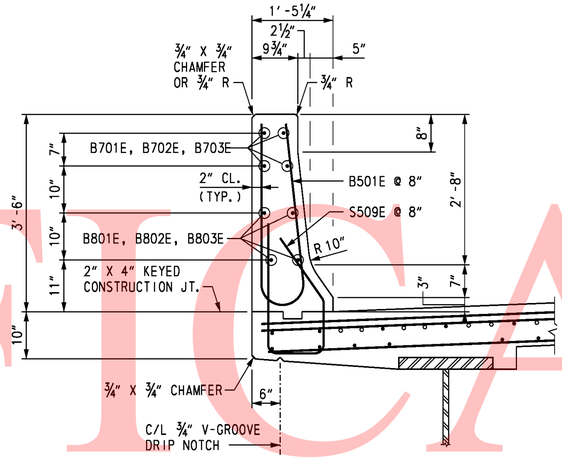

TYPICAL BARRIER REINFORCEMENT SECTION

SCALE: ¾" = 1'-0"

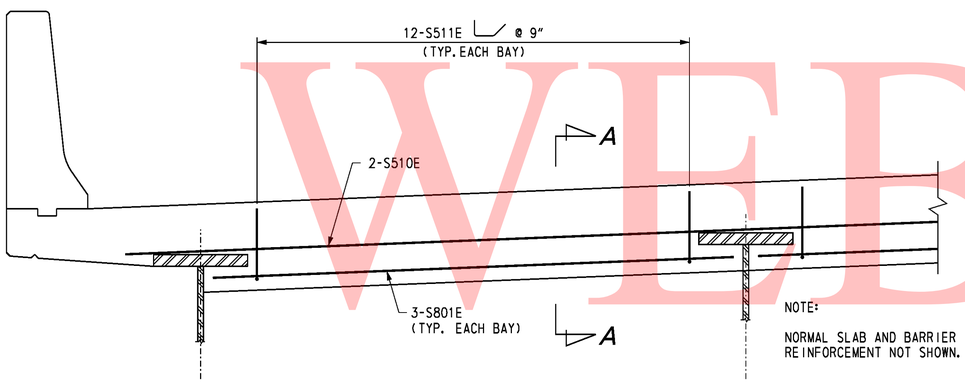

NOTE:

NORMAL SLAB AND BARRIER REINFORCEMENT NOT SHOWN.

TYPICAL CONCRETE END HAUNCH SECTION

SCALE: ¾" = 1'-0"

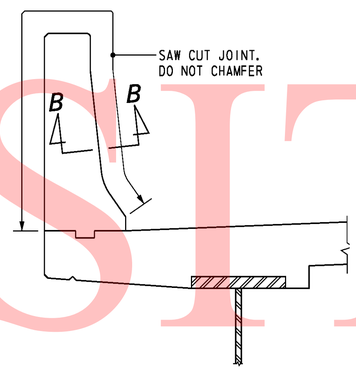

BARRIER CONTROL JOINT DETAIL

SCALE: ¾" = 1'-0"

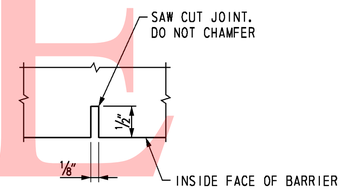

SECTION B-B

NOT TO SCALE

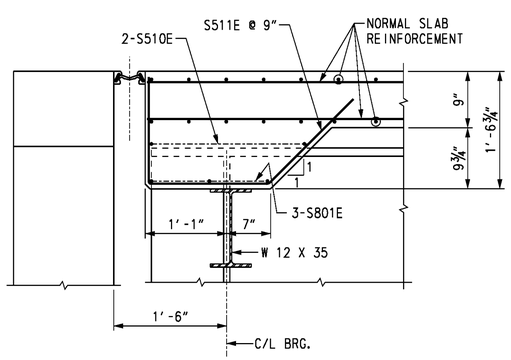

SECTION A-A

SCALE: 1" = 1'-0"

NOTES:

1. LONGITUDINAL SLAB REINFORCEMENT IS SET TO PASS THROUGH TRANSVERSE BARRIER BARS AS SHOWN.
2. ALL LONGITUDINAL BARRIER BARS SHALL BE PLACED CONTINUOUSLY IN BARRIER, LAPPING AS NECESSARY. BARRIER IS PLACED CONTINUOUSLY.
3. FRONT FACE OF BARRIER DIMENSIONED FROM PLUMB LINE.
4. SAW CUT CONTROL JOINT THE SAME DAY THAT CONCRETE IS POURED.

CROSS REFERENCE NOTES:

1. FOR GENERAL NOTES, SEE DWG. S5-2.
2. FOR REINFORCING BAR LIST, SEE DWG. S5-46.

UNOFFICIAL WEBSITE COPY

REINFORCING BAR LIST

BRIDGE DECK SLAB AND BARRIER

MARK	LENGTH	NO. BARS	TYPE	A	B	C	D	E	F	G	H	K	O	R	REMARKS
S501E	35′-6″	2,608	STR.												
S502E	7′-4″	2,588	STR.												
S503E	8′-0″ TO 23′-6″	31	STR.												△ = 0′-6¼″
S504E	8′-0″ TO 23′-6″	47	STR.												△ = 0′-4″
S505E	60′-0″	1,004	STR.												
S506E	30′-0″	112	STR.												
S507E	40′-2″	56	STR.												
S508E	45′-4″	56	STR.												
S509E	6′-3¾″	1,771	16	2′-8″	1′-1¼″	0′-10½″	1′-8″				0′-11¾″	1′-4½″			
S510E	31′-0″	4	STR.												
S511E	4′-0¼″	72	4	1′-2¼″	1′-5″	1′-5″					1′-0″	1′-0″			
S512E	6′-0⅜″	8	4		2′-6″	1′-6⅜″	2′-0″				1′-1″	1′-1″			AT SCUPPERS
S513E	4′-6″	8	4		2′-5″	1′-0″	1′-1″				0′-8½″	0′-8½″			AT SCUPPERS
S514E	2′-10″	8	STR.												AT SCUPPERS
S515E	10′-5¾″	6	4		2′-6″	1′-6⅜″	2′-5″	1′-6⅜″	2′-6″	1′-1″	1′-1″				AT SCUPPERS
S701E	7′-4″	12	STR.												AT SCUPPERS
S801E	9′-3″	18	STR.												
		1,771	H1		2′-10″	1′-0¼″	2′-10″				0′-5″			4¼″	
B501E	6′-8¼″														
		80	STR.												
B701E	60′-0″	4	STR.												
B702E	18′-9″	4	STR.												
B703E	34′-0″														
		80	STR.												
B801E	60′-0″	4	STR.												
B802E	29′-6″	4	STR.												
B803E	45′-0″														

BENDING DIAGRAMS

ALL DIMENSIONS ARE FROM OUT TO OUT.

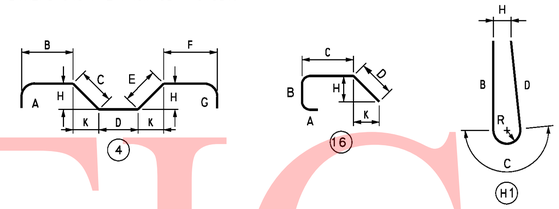

UNOFFICAL WEBSITE COPY

10/28/2010 O:\20832687-XM\CAD\Bridge\BR-S5\dk05_BR-S5_sr1.dgn untitled

DELAWARE DEPARTMENT OF TRANSPORTATION

ADDENDUMS / REVISIONS

SR1 / I-95 INTERCHANGE

CONTRACT	BRIDGE NO.	1-716D	RAMP G1 OVER SR 7	S5-46
28-090-03	DESIGNED BY: R. F. KIRCHNER		BRIDGE DECK AND BARRIER REINFORCING BAR LIST	SHEET NO. 439
COUNTY				TOTAL SHTS.
NEW CASTLE	CHECKED BY: C. J. LOGAN			803

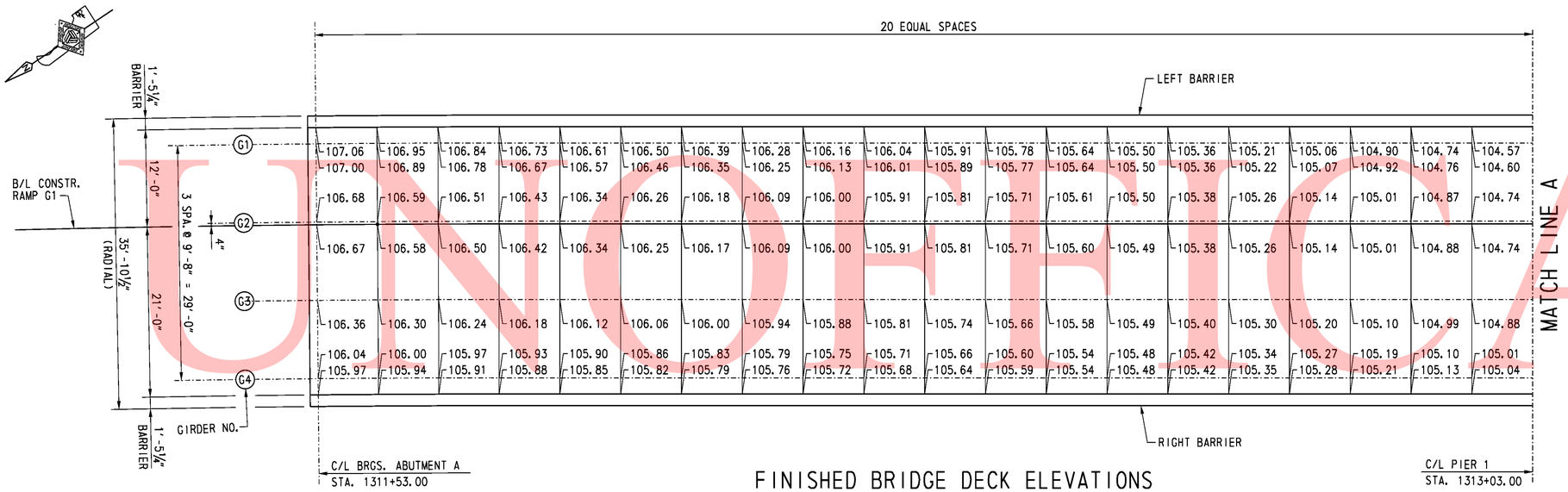

FINISHED BRIDGE DECK ELEVATIONS

SCALE: ⅛" = 1'-0"

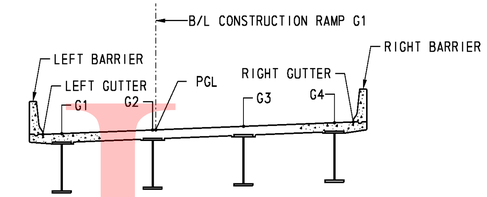

TYPICAL SECTION - RAMP G1

NOT TO SCALE

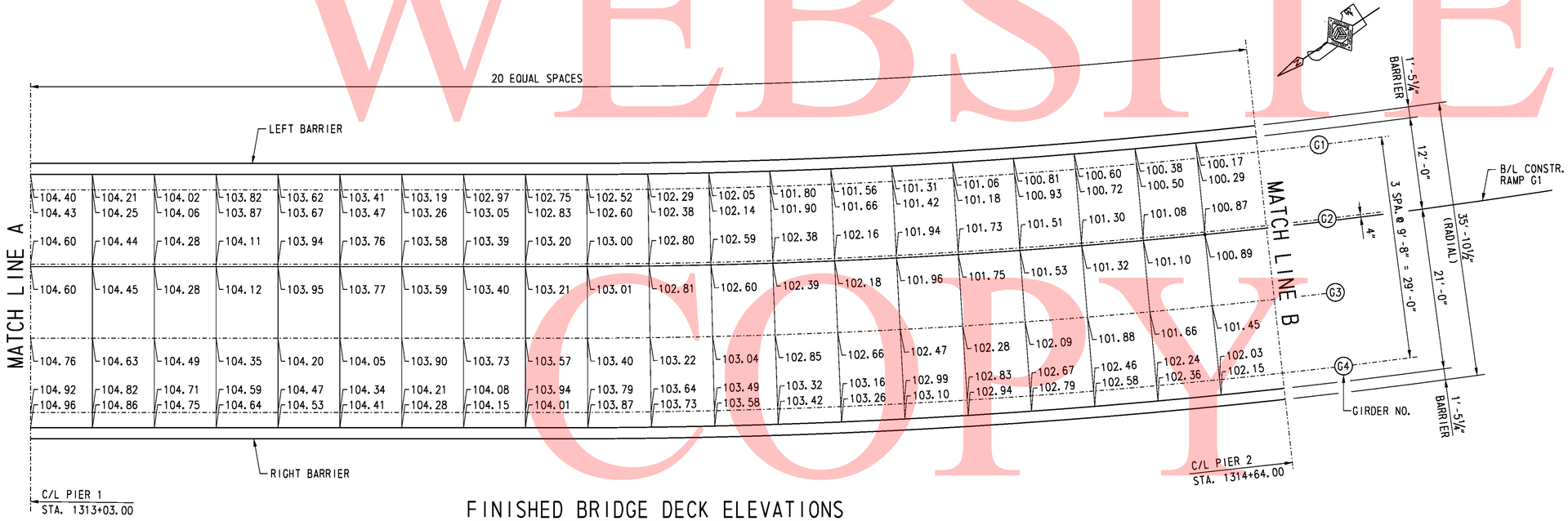

FINISHED BRIDGE DECK ELEVATIONS

SCALE: ⅛" = 1'-0"

NOTE:

THE FINISHED BRIDGE DECK ELEVATIONS SHOWN ARE TO TOP OF CONCRETE DECK.

CROSS REFERENCE NOTES:

1. FOR VERTICAL CURVE DATA, SEE DWG. S5-1.
2. FOR CROSS-SLOPE TRANSITIONS, SEE DWG. S5-3.
3. FOR GIRDER ELEVATION, SEE DWGS. S5-35 & S5-36.

UNOFFICIAL WEBSITE COPY

10/28/2010 untitled O:\20832687-XM\CAD\Bridge\BR-S5\1d01_BR-S5_sr1.dgn

DELAWARE DEPARTMENT OF TRANSPORTATION	ADDENDUMS / REVISIONS	SR1 / I-95 INTERCHANGE	CONTRACT 28-090-03	BRIDGE NO. 1-716D	RAMP G1 OVER SR 7	S5-47 SHEET NO.
			COUNTY NEW CASTLE	DESIGNED BY: K. D. BEAVER	FINISHED BRIDGE DECK ELEVATIONS 1	440 TOTAL SHTS.
				CHECKED BY: G. P. MISTRY		803

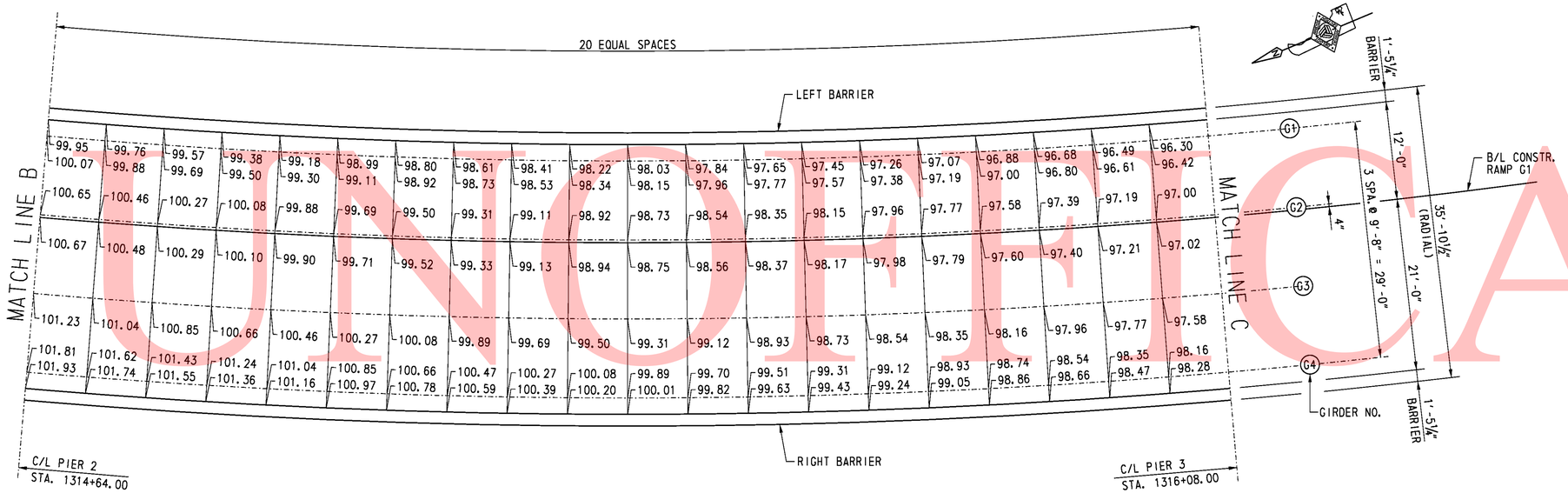

FINISHED BRIDGE DECK ELEVATIONS

SCALE: ⅛" = 1'-0"

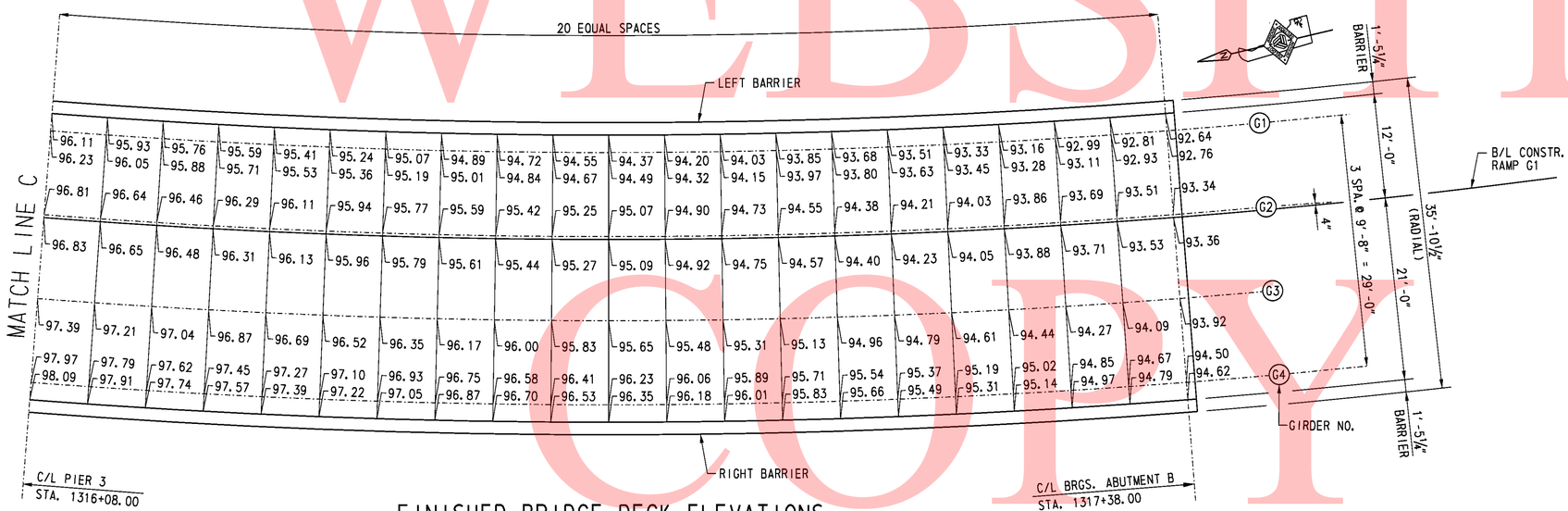

FINISHED BRIDGE DECK ELEVATIONS

SCALE: ⅛" = 1'-0"

NOTE:

THE FINISHED BRIDGE DECK ELEVATIONS SHOWN ARE TO TOP OF CONCRETE DECK.

CROSS REFERENCE NOTES:

1. FOR VERTICAL CURVE DATA, SEE DWG. S5-1.
2. FOR CROSS-SLOPE TRANSITIONS, SEE DWG. S5-3.
3. FOR GIRDER ELEVATION, SEE DWGS. S5-35 & S5-36.
4. FOR TYPICAL SECTION, SEE DWG. S5-47.

UNOFFICIAL WEBSITE COPY

10/28/2010 O:\20832687-XM\CAD\Bridge\BR-S5\rd02_BR-S5_sr1.dgn
untitled

DELAWARE DEPARTMENT OF TRANSPORTATION	ADDENDUMS / REVISIONS	SR1 / I-95 INTERCHANGE	CONTRACT 28-090-03	BRIDGE NO. 1-716D	RAMP G1 OVER SR 7	SHEET NO. S5-48
			COUNTY NEW CASTLE	DESIGNED BY: K. D. BEAVER	FINISHED BRIDGE DECK ELEVATIONS 2	TOTAL SHTS. 441
				CHECKED BY: G. P. MISTRY		803

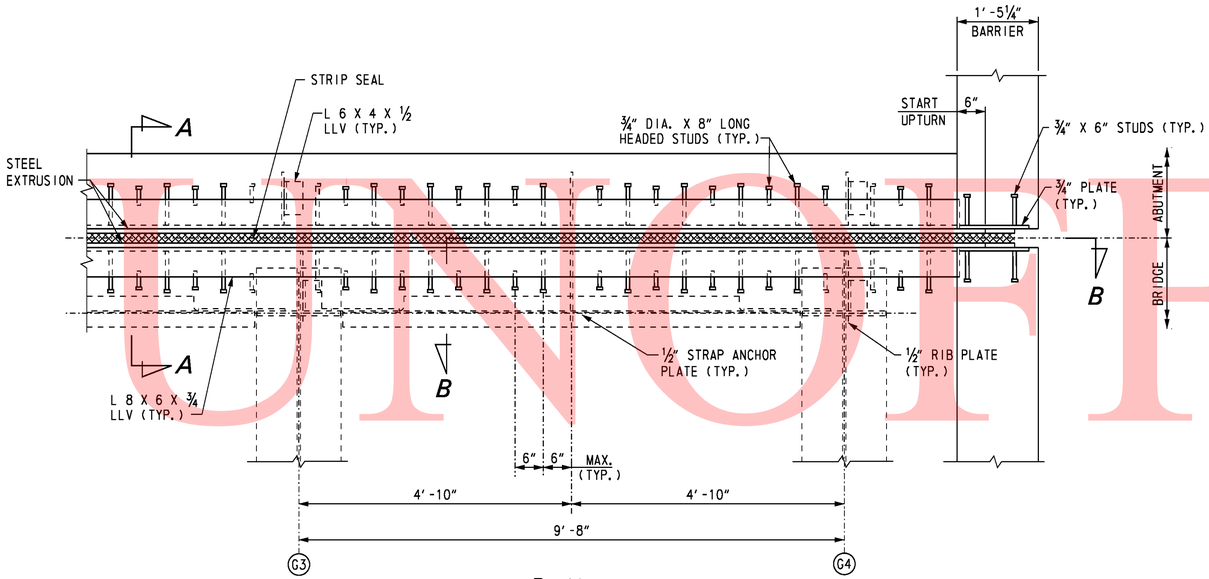

PLAN

SCALE: ¾" = 1'-0"

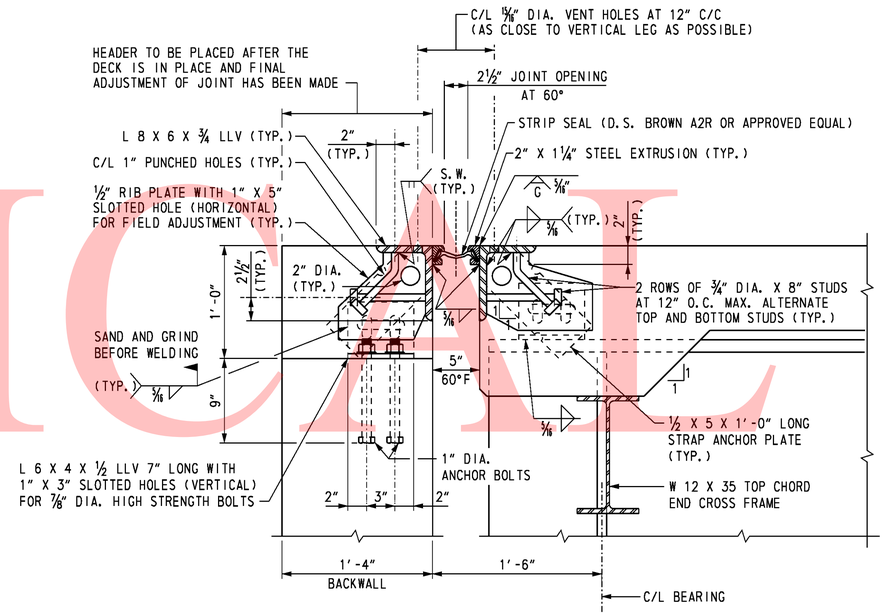

SECTION A-A

SCALE: 1½" = 1'-0"

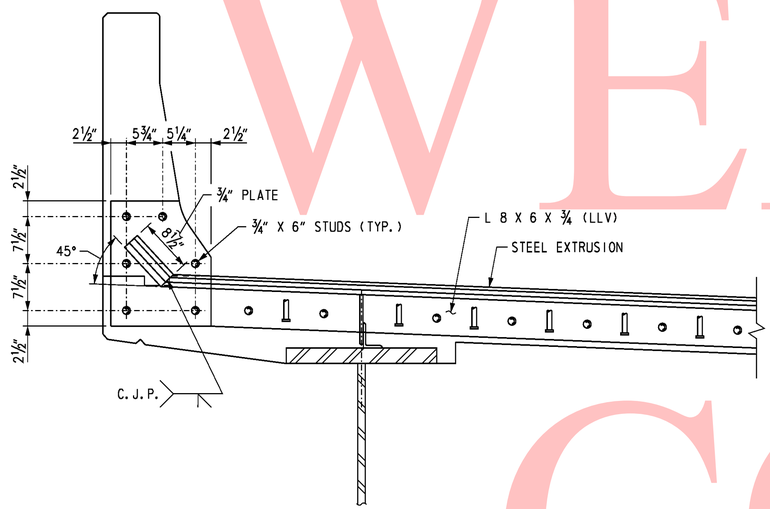

SECTION B-B

SCALE: 1" = 1'-0"

JOINT OPENING (INCH)												
LOCATION	TEMPERATURE (°F)											MOVEMENT CLASSIFICATION
	0	10	20	30	40	50	60	70	80	90	100	
ABUTMENT A	3 13/16	3 11/16	3½	3¼	3	2¾	2½	2¼	2	1¾	1½	4"
ABUTMENT B	3 13/16	3¾	3⅜	3⅛	2 15/16	2 11/16	2½	2 5/16	2 1/16	1⅞	1⅝	4"

NOTES:

1. STRUCTURAL STEEL FOR DECK JOINTS SHALL CONFORM TO AASHTO M270, GRADE 36.
2. STEEL EXTRUSIONS FOR DECK JOINTS SHALL CONFORM TO AASHTO M270, GRADE 36.
3. HOLES SHALL BE PLACED IN THE ½" RIB PLATES AND THE STRAP ANCHOR PLATES FOR BAR REINFORCEMENT. IF THE HOLES ARE DRILLED IN THE FIELD, AN APPROVED EPOXY PAINT SHALL BE APPLIED TO TOUCH UP THE HOLES.
4. THE NEOPRENE STRIP SEAL SHALL BE PROVIDED CONTINUOUS THROUGHOUT THE LIMITS OF THE DECK. SPLICING OF THE NEOPRENE STRIP SEAL IS NOT PERMITTED.
5. COST FOR MATERIALS, FABRICATION AND INSTALLATION OF STRIP SEAL EXPANSION JOINTS, 4" MOVEMENT CLASSIFICATION, WITH STEEL ELEMENTS INCLUDING STUDS AND STEEL EXTRUSIONS, SHALL BE PAID FOR UNDER ITEM 605512.
6. EXPANSION JOINT PLAN SHOWN IS AT ABUTMENT B. EXPANSION JOINT AT ABUTMENT A IS SIMILAR.

UNOFFICIAL WEBSITE COPY

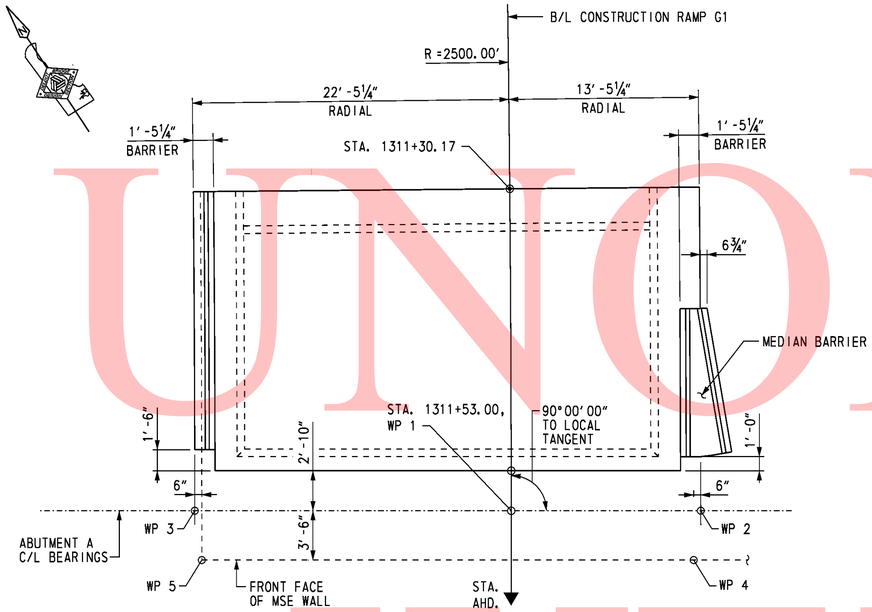

APPROACH SLAB AT ABUTMENT A PLAN

SCALE: 3/16" = 1'-0"

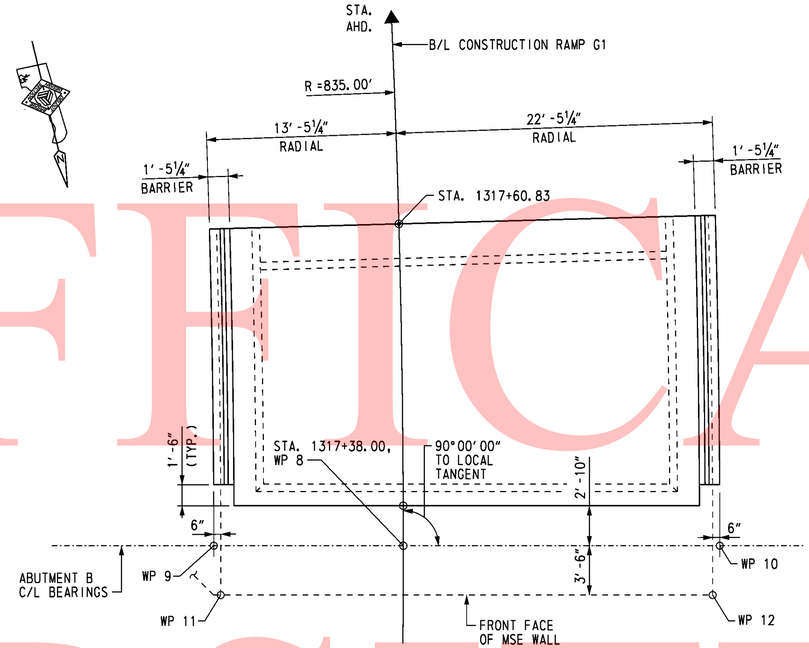

APPROACH SLAB AT ABUTMENT B PLAN

SCALE: 3/16" = 1'-0"

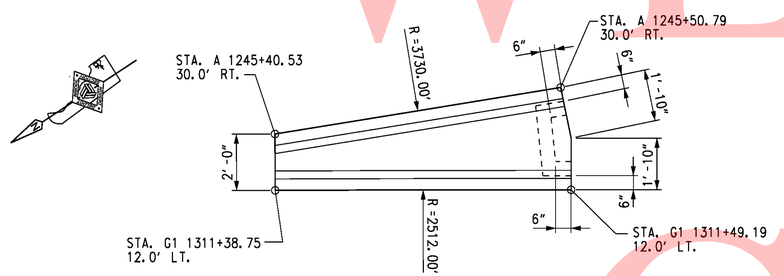

MEDIAN BARRIER PLAN

SCALE: 3/8" = 1'-0"

CROSS REFERENCE NOTES:

1. FOR BRIDGE PLAN AND ELEVATION, SEE DWG. S5-1.
2. FOR ABUTMENT A PLAN AND ELEVATION, SEE DWG. S5-5.
3. FOR ABUTMENT B PLAN AND ELEVATION, SEE DWG. S5-6.
4. FOR MSE WINGWALLS PLAN AND ELEVATION, SEE DWGS. S5-12 & S5-13.
5. FOR APPROACH SLAB REINFORCEMENT, SEE DWGS. S5-51 & S5-52.
6. FOR MEDIAN BARRIER REINFORCEMENT, SEE DWG. S5-51.

UNOFFICIAL WEBSITE COPY

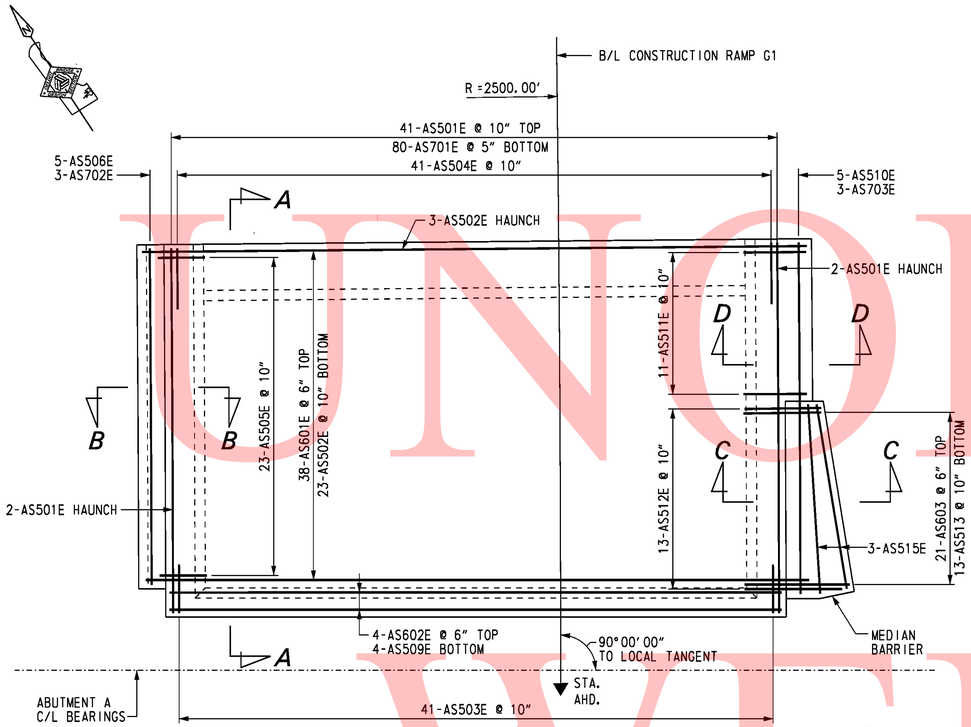

APPROACH SLAB AT ABUTMENT A PLAN

SCALE: 1/4" = 1'-0"

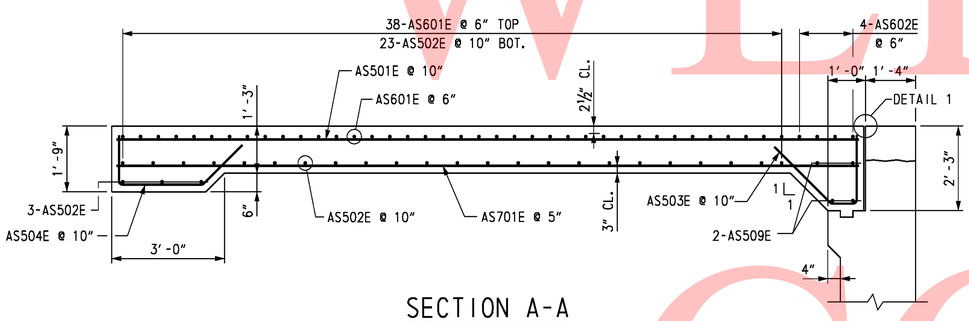

SECTION A-A

SCALE: 1/2" = 1'-0"

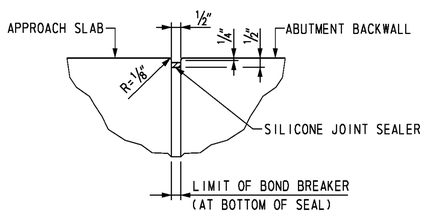

DETAIL 1

SCALE: 3" = 1'-0"

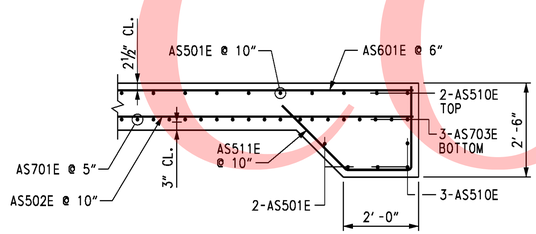

SECTION D-D

SCALE: 1/2" = 1'-0"

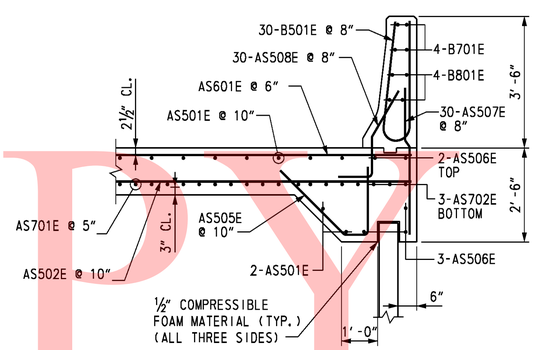

SECTION B-B

SCALE: 1/2" = 1'-0"

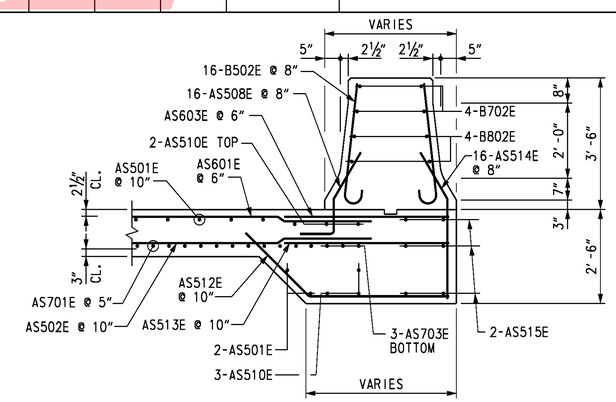

SECTION C-C

SCALE: 1/2" = 1'-0"

REINFORCING BAR LIST

APPROACH SLAB AT ABUTMENT A

MARK	LENGTH	NO. BARS	TYPE	A	B	C	D	E	G	H	K	R	REMARKS
AS501E	19'-6"	45	STR.										
AS502E	35'-6"	26	STR.										
AS503E	4'-10"	41	4	1'-11"	8"	2'-3"				1'-7"	1'-7"		
AS504E	5'-7"	41	4	1'-4"	2'-8"	1'-7"				1'-1"	1'-1"		
AS505E	5'-2"	23	4	1'-11"	8"	2'-7"				1'-10"	1'-10"		
AS506E	18'-0"	5	STR.										
AS507E	4'-0"	30	STR.										
AS508E	3'-7"	46	4S	1'-0"	1'-1"	1'-6"				0'-10½"	1'-2⅝"		
AS509E	32'-8"	2	STR.										
AS510E	19'-5"	5	STR.										
AS511E	6'-0"	11	4	1'-9"	1'-8"	2'-7"				1'-10"			
AS512E	4'-3" TO 5'-11"	13	4		1'-8" TO 3'-4"	2'-7"							△ = 1⅛"
AS513E	5'-7"	12	STR.										
AS514E	4'-0"	16	4		2'-6"	1'-6"				0'-10½"			
AS515E	10'-0"	6	STR.										
AS601E	35'-6"	38	STR.										
AS602E	32'-8"	4	STR.										
AS603E	6'-0"	21	STR.										
AS701E	19'-6"	80	STR.										
AS702E	18'-0"	3	STR.										
AS703E	19'-5"	3	STR.										
B501E	6'-8¼"	30	H1		2'-10"	1'-0¼""	2'-10"			0'-5"		0'-4¼"	
B502E	3'-9"	32	37	0'-7"	3'-2"					0'-5"			
B701E	18'-0"	4	STR.										
B702E	10'-0"	4	STR.										
B801E	18'-0"	4	STR.										
B802E	10'-0"	4	STR.										

BENDING DIAGRAMS

ALL DIMENSIONS ARE FROM OUT TO OUT.

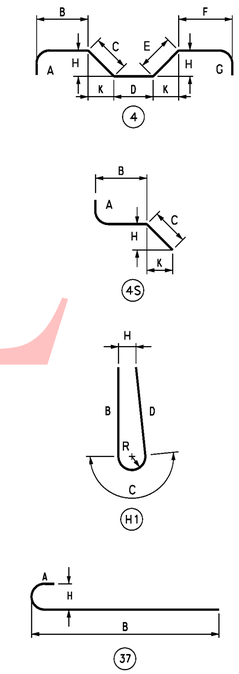

CROSS REFERENCE NOTES:

1. FOR BRIDGE PLAN AND ELEVATION, SEE DWG. S5-1.
2. FOR ABUTMENT A PLAN AND ELEVATION, SEE DWG. S5-5.
3. FOR MSE WINGWALLS PLAN AND ELEVATION, SEE DWGS. S5-12 & S5-13.
4. FOR APPROACH SLAB PLAN, SEE DWG. S5-50.

UNOFFICIAL WEBSITE COPY

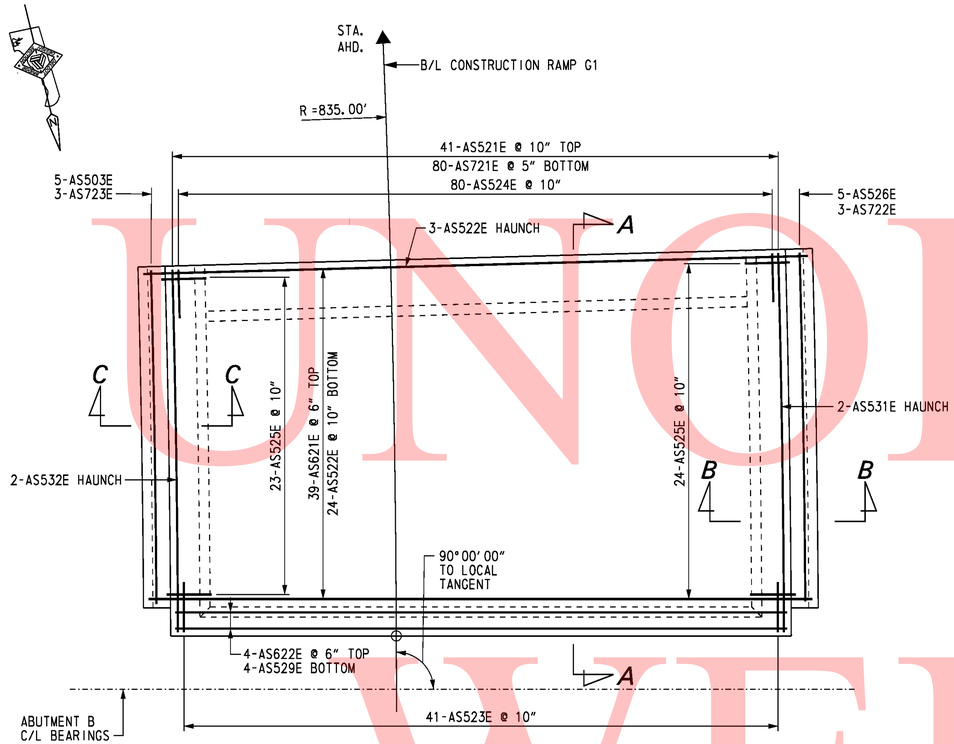

APPROACH SLAB AT ABUTMENT B PLAN

SCALE: 1/4" = 1'-0"

REINFORCING BAR LIST

APPROACH SLAB AT ABUTMENT B

MARK	LENGTH	NO. BARS	TYPE	A	B	C	D	E	G	H	K	R	REMARKS
AS521E	19'-4" TO 20'-2"	41	STR.										△ = 1/4"
AS522E	35'-6"	27	STR.										
AS523E	4'-10"	41	4	1'-11"	8"	2'-3"				1'-7"	1'-7"		
AS524E	5'-7"	41	4	1'-4"	2'-8"	1'-7"				1'-1"	1'-1"		
AS525E	5'-2"	47	4	1'-11"	8"	2'-7"				1'-10"	1'-10"		
AS526E	18'-8"	5	STR.										
AS527E	4'-0"	61	STR.										
AS528E	3'-7"	61	4S	1'-0"	1'-1"	1'-6"				0'-10 1/2"	1'-2 5/8"		
AS529E	32'-8"	4	STR.										
AS530E	17'-10"	5	STR.										
AS531E	20'-2"	2	STR.										
AS532E	19'-4"	2	STR.										
AS621E	35'-6"	39	STR.										
AS622E	32'-8"	4	STR.										
AS721E	19'-4" TO 20'-2"	80	STR.										△ = 1/8"
AS722E	18'-8"	3	STR.										
AS723E	17'-10"	3	STR.										
B521E	6'-8 1/4"	61	H1		2'-10"	1'-0 1/4"	2'-10"			0'-5"		0'-4 1/4"	
B721E	18'-8"	4	STR.										
B722E	17'-10"	4	STR.										
B821E	18'-8"	4	STR.										
B822E	17'-10"	4	STR.										

BENDING DIAGRAMS

ALL DIMENSIONS ARE FROM OUT TO OUT.

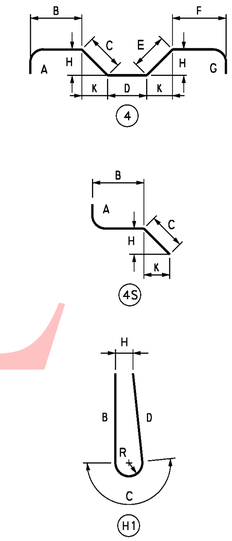

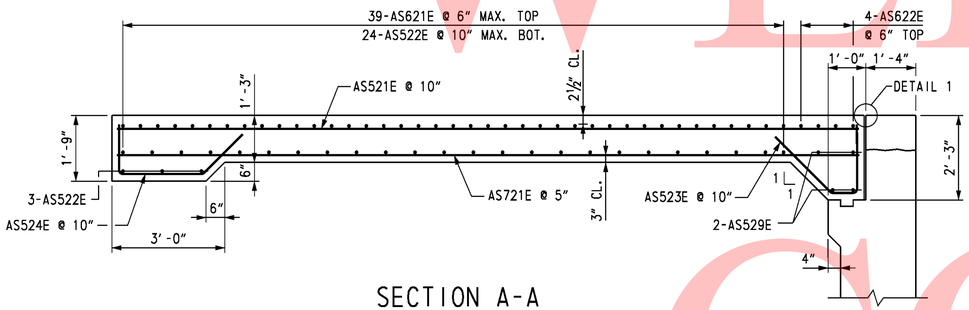

SECTION A-A

SCALE: 1/2" = 1'-0"

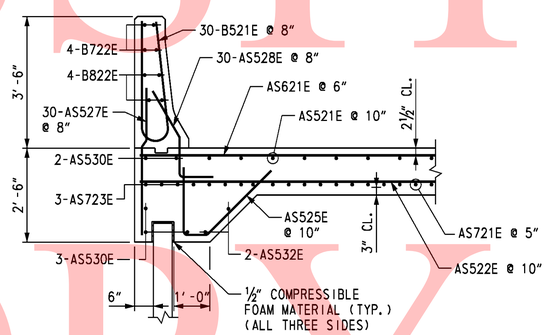

SECTION C-C

SCALE: 1/2" = 1'-0"

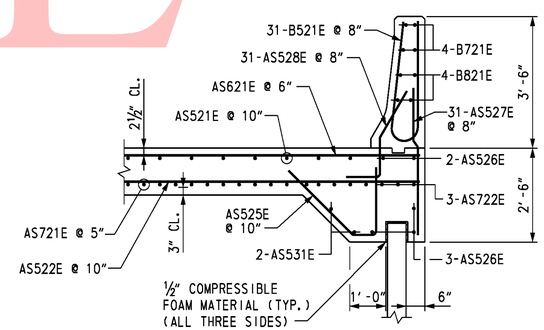

SECTION B-B

SCALE: 1/2" = 1'-0"

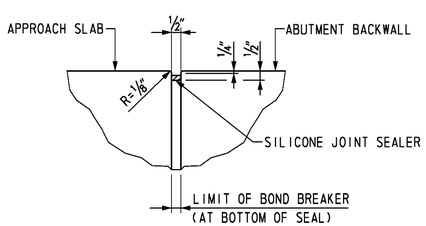

DETAIL 1

SCALE: 3" = 1'-0"

CROSS REFERENCE NOTES:

1. FOR BRIDGE PLAN AND ELEVATION, SEE DWG. S5-1.
2. FOR ABUTMENT B PLAN AND ELEVATION, SEE DWG. S5-6.
3. FOR MSE WINGWALLS PLAN AND ELEVATION, SEE DWGS. S5-12 & S5-13.
4. FOR APPROACH SLAB PLAN, SEE DWG. S5-50.

UNOFFICIAL WEBSITE COPY

UNOFFICAL WEBSITE COPY

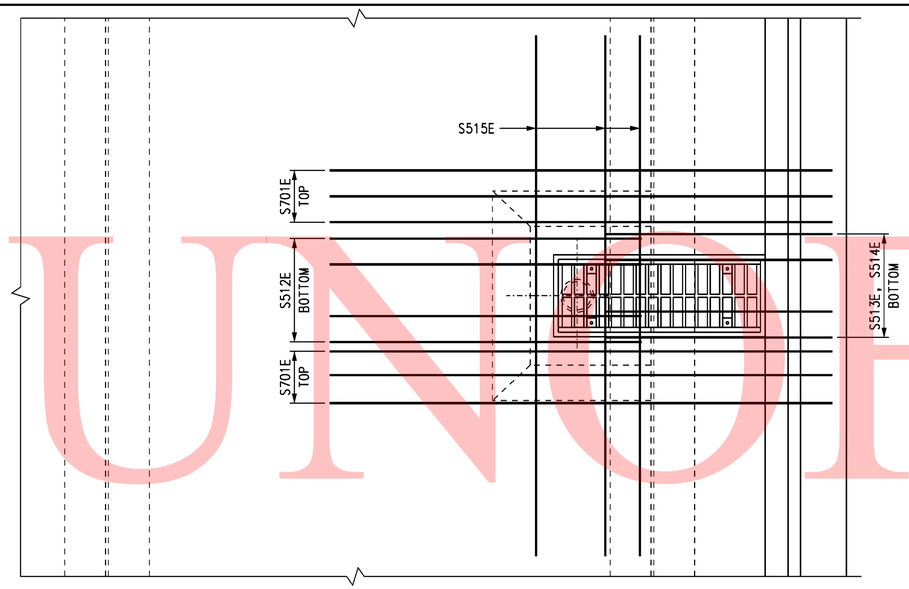

PLAN - ADDITIONAL DECK REINFORCING AT SCUPPER

SCALE: 3/4" = 1'-0"

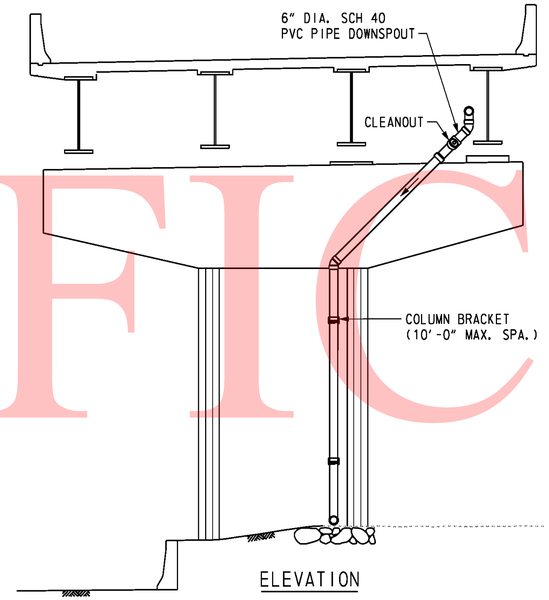

ELEVATION

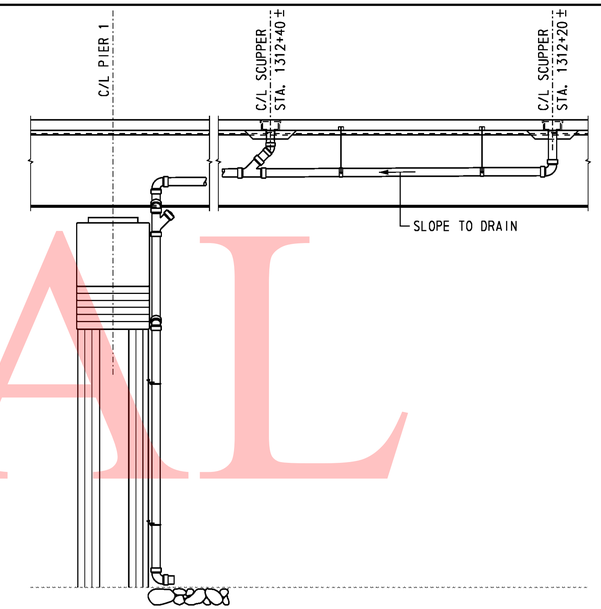

SIDE VIEW

DOWNSPOUT AT PIER 1

SCALE: 3/16" = 1'-0"

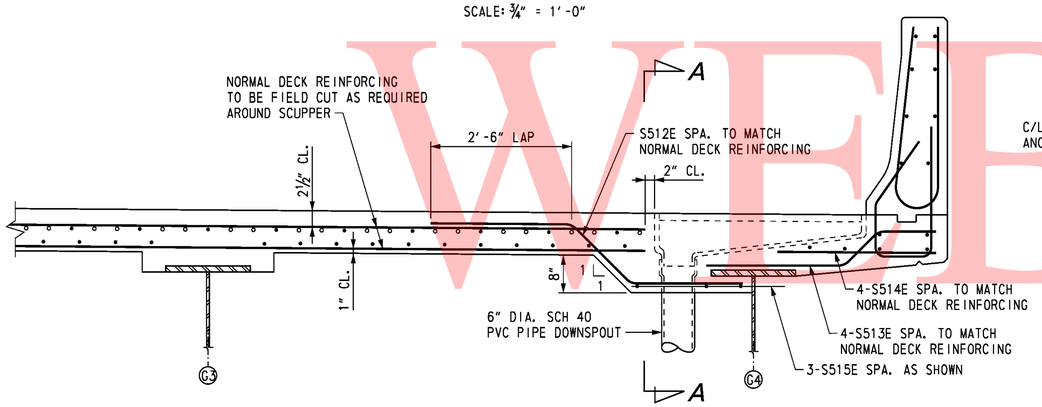

DECK REINFORCING SECTION AT SCUPPER

SCALE: 3/4" = 1'-0"

NOTE:

UNLESS OTHERWISE NOTED, ALL REINFORCING STEEL SHOWN IS NORMAL DECK AND BARRIER REINFORCING.

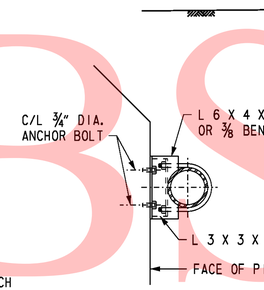

PLAN

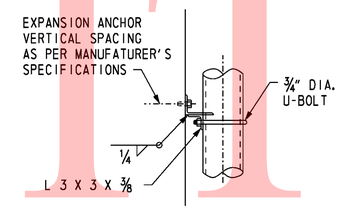

ELEVATION

COLUMN BRACKET

SCALE: 1" = 1'-0"

BRIDGE SCUPPER GENERAL NOTES:

SPECIFICATIONS: DELAWARE DEPARTMENT OF TRANSPORTATION BRIDGE DESIGN MANUAL, MAY 2005 INCLUDING LATEST REVISIONS.

MATERIALS: SCUPPERS SHALL BE GREY CAST IRON, CONFORMING TO ASTM A 48 CLASS 30 B.

GRATINGS SHALL BE STRUCTURAL STEEL CONFORMING TO ASTM A 709 GRADE 36 AND EPOXY COATED.

STAINLESS STEEL BOLTS SHALL CONFORM TO ASTM A 193, IDENTIFICATION SYMBOL B8, TYPE 304.

PAINT: SCUPPERS SHALL BE PAINTED AS PER DELDOT SPECIFICATION SECTION 826.28 THRU 826.37.

SHIPPING: GRATE AND SCUPPER SHALL BE SHIPPED AS UNIT WITH GRATE HOLD DOWN BOLTS IN PLACE (NOT WELDED).

MEASUREMENT AND PAYMENT: DRAIN CASTING ASSEMBLIES OF THE TYPE CALLED FOR SHALL BE INCLUDED IN THE LUMP SUM PRICE FOR SUPERSTRUCTURE CONCRETE FOR BRIDGE WHICH INCLUDES PAYMENT FOR FURNISHING AND INSTALLING DRAIN CASTINGS, DOWNSPOUTS AND BRACKETS.

NOTES:

1. WOOD FORMS MAY BE USED IN THE AREA OF THE SCUPPER AS APPROVED BY THE ENGINEER.
2. SCUPPER AND GRATE SHALL BE NEENAH R-4014-B1 OR APPROVED EQUAL.
3. STEEL FOR BRACKETS SHALL BE ASTM A36, GALVANIZED.
4. FASTENERS SHALL MEET THE REQUIREMENTS OF ASTM A307, GALVANIZED.
5. WASHERS SHALL MEET THE REQUIREMENTS OF ASTM F844, GALVANIZED.
6. GALVANIZING SHALL BE BY THE HOT DIP PROCESS. ALL FABRICATION SHALL BE COMPLETED BEFORE GALVANIZING.

CROSS REFERENCE NOTES:

1. FOR SCUPPER LOCATIONS, SEE DWG. S5-1.
2. FOR GENERAL NOTES, SEE DWG. S5-2.
3. FOR DECK REINFORCING, SEE DWG. S5-45.
4. FOR REINFORCING BAR LIST, SEE DWG. S5-46.

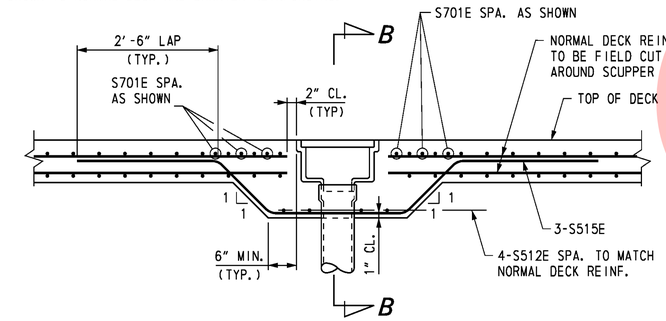

SECTION A-A

SCALE: 3/4" = 1'-0"

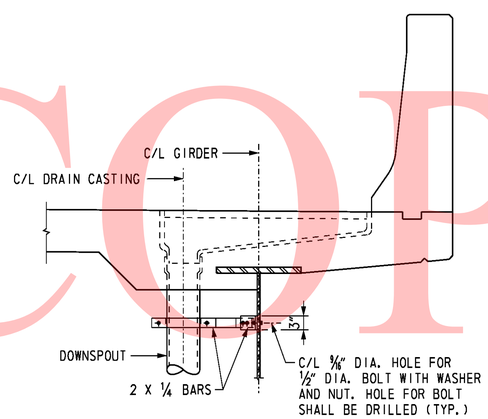

SECTION B-B

SCALE: 3/4" = 1'-0"

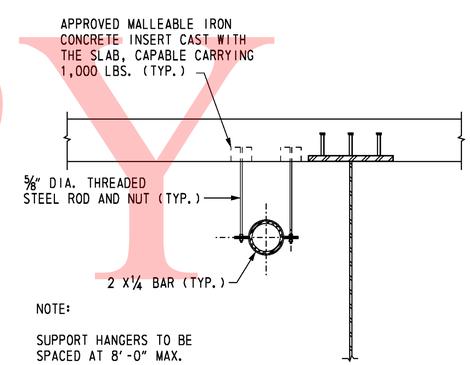

NOTE:

SUPPORT HANGERS TO BE SPACED AT 8'-0" MAX.

SUPPORT HANGER

SCALE: 3/4" = 1'-0"

DELAWARE DEPARTMENT OF TRANSPORTATION	ADDENDUMS / REVISIONS	SR1 / I-95 INTERCHANGE	CONTRACT 28-090-03 / COUNTY NEW CASTLE	BRIDGE NO. 1-716D / DESIGNED BY: G. P. MISTRY / CHECKED BY: J. S. LI	RAMP G1 OVER SR 7 BRIDGE SCUPPER DETAILS

S5-53

SHEET NO. 446

TOTAL SHTS. 803

10/28/2010 O:\20832687-XM\CAD\Bridge\BR-S5\dk06_BR-S5_sr1.dgn untitled

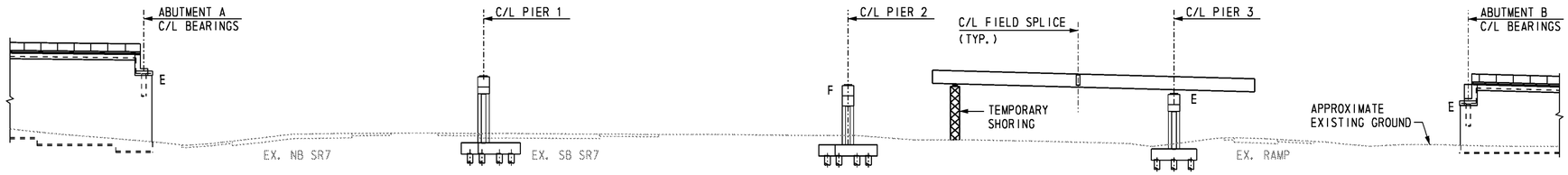

DEVELOPED ELEVATION - ERECTION STAGE 1

SCALE: 1" = 30'-0"

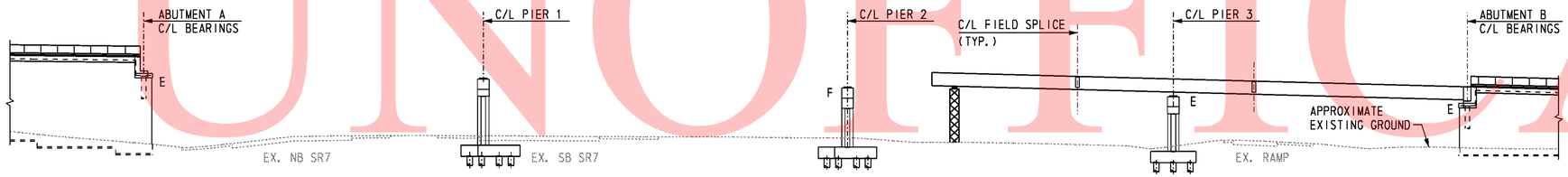

DEVELOPED ELEVATION - ERECTION STAGE 2

SCALE: 1" = 30'-0"

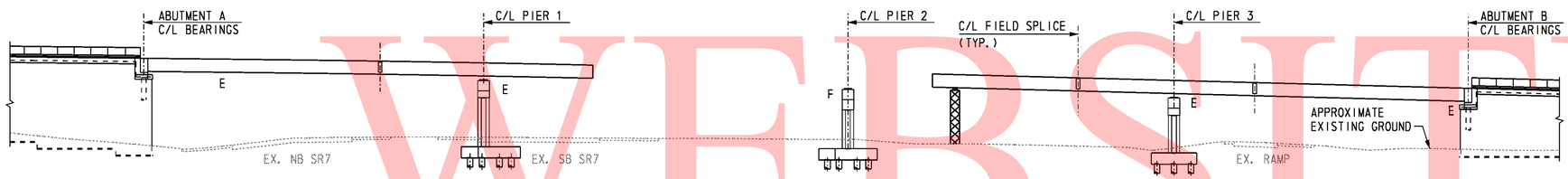

DEVELOPED ELEVATION - ERECTION STAGE 3

SCALE: 1" = 30'-0"

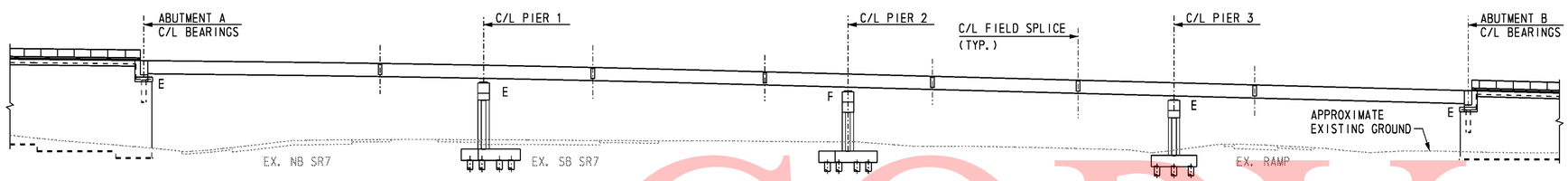

DEVELOPED ELEVATION - ERECTION STAGE 4

SCALE: 1" = 30'-0"

SUGGESTED ERECTION SEQUENCE NOTES

STAGE 1:

1. ERECT TEMPORARY SHORING IN SPAN 3.
2. PRE-ASSEMBLE TWO GIRDER SECTIONS.
3. ERECT PRE-ASSEMBLED GIRDER SECTION IN SPAN 3 WITH ONE END SUPPORTED ON PIER 3 AND THE OTHER ON THE TEMPORARY SHORING.
4. TIE-DOWN AND STABILIZE ENDS OF GIRDER.
5. REPEAT STEP 3 FOR ALL PRE-ASSEMBLED GIRDER SECTIONS, INSTALLING CROSS FRAMES AFTER EACH REMAINING PRE-ASSEMBLED GIRDER SECTION IS ERECTED.

STAGE 2:

1. ERECT GIRDER SECTION IN SPAN 4 WITH ONE END SUPPORTED ON ABUTMENT B AND THE OTHER END HELD BY THE CRANE.
2. MAKE FIELD SPLICE CONNECTION.
3. TIE-DOWN AND STABILIZE END OF GIRDER.
4. REPEAT STEPS 1 AND 2 FOR ALL GIRDERS, INSTALLING CROSS FRAMES AFTER EACH REMAINING GIRDER IS ERECTED.

STAGE 3:

1. ERECT GIRDER SECTION IN SPAN 1 WITH ONE END SUPPORTED ON ABUTMENT A AND THE OTHER END HELD BY THE CRANE.
2. ERECT NEXT GIRDER SECTION IN SPAN 1 OVER PIER 1; HOLD AND MAKE FIELD SPLICE CONNECTION.
3. TIE-DOWN AND STABILIZE GIRDER.
4. REPEAT STEPS 1 AND 2 FOR ALL GIRDERS, INSTALLING CROSS FRAMES AFTER EACH REMAINING GIRDER IS ERECTED.

STAGE 4:

1. PRE-ASSEMBLE TWO GIRDER SECTIONS.
2. ERECT PRE-ASSEMBLED GIRDER SECTION IN SPAN 2 OVER PIER 2.
3. HOLD PRE-ASSEMBLED GIRDER SECTION AND MAKE FIELD SPLICE CONNECTIONS AT EACH END.
4. STABILIZE GIRDER AS NECESSARY.
5. REPEAT STEPS 2 AND 3 FOR ALL PRE-ASSEMBLED GIRDERS, INSTALLING CROSS FRAMES AFTER EACH REMAINING PRE-ASSEMBLED GIRDER IS ERECTED.
6. REMOVE SHORING TOWER IN SPAN 3.

NOTE TO CONTRACTOR:

THE ERECTION SEQUENCE SHOWN IS ONLY A SUGGESTED METHOD. THE CONTRACTOR IS RESPONSIBLE FOR THE ENTIRE ERECTION OF THE BRIDGE. THE CONTRACTOR SHALL SUBMIT DRAWINGS SEALED BY A PROFESSIONAL ENGINEER REGISTERED IN THE STATE OF DELAWARE, ILLUSTRATING FULLY THE PROPOSED METHOD OF ERECTION. THE DRAWINGS SHALL SHOW DETAILS OF ALL TEMPORARY SHORING, FALSEWORK, BRACING, GUYS, DEAD-MEN, LIFTING DEVICES, HOLD-DOWN DEVICES AND ATTACHMENTS TO THE BRIDGE MEMBERS. THE DRAWINGS SHALL ALSO INCLUDE THE SEQUENCE OF ERECTION, LOCATION OF CRANES, CRANE CAPACITITIES, LOCATION OF LIFTING POINTS ON THE BRIDGE MEMBERS AND WEIGHTS OF MEMBERS. THE PLAN AND DRAWINGS SHALL BE COMPLETE IN DETAIL FOR ALL ANTICIPATED STAGES AND CONDITIONS DURING ERECTION. CALCULATIONS SEALED BY A PROFESSIONAL ENGINEER REGISTERED IN THE STATE OF DELAWARE ARE REQUIRED TO DEMONSTRATE THAT ALLOWABLE STRESSES ARE NOT EXCEEDED AND THAT MEMBER CAPACITIES AND FINAL GEOMETRY WILL BE CORRECT.

COST OF ERECTION AND TEMPORARY SHORING IS INCIDENTAL TO "STRUCTURAL STEEL" ITEM.

FOR MAINTENANCE OF TRAFFIC REQUIREMENTS, REFER TO THE APPROPRIATE SHEETS.

UNOFFICAL WEBSITE COPY

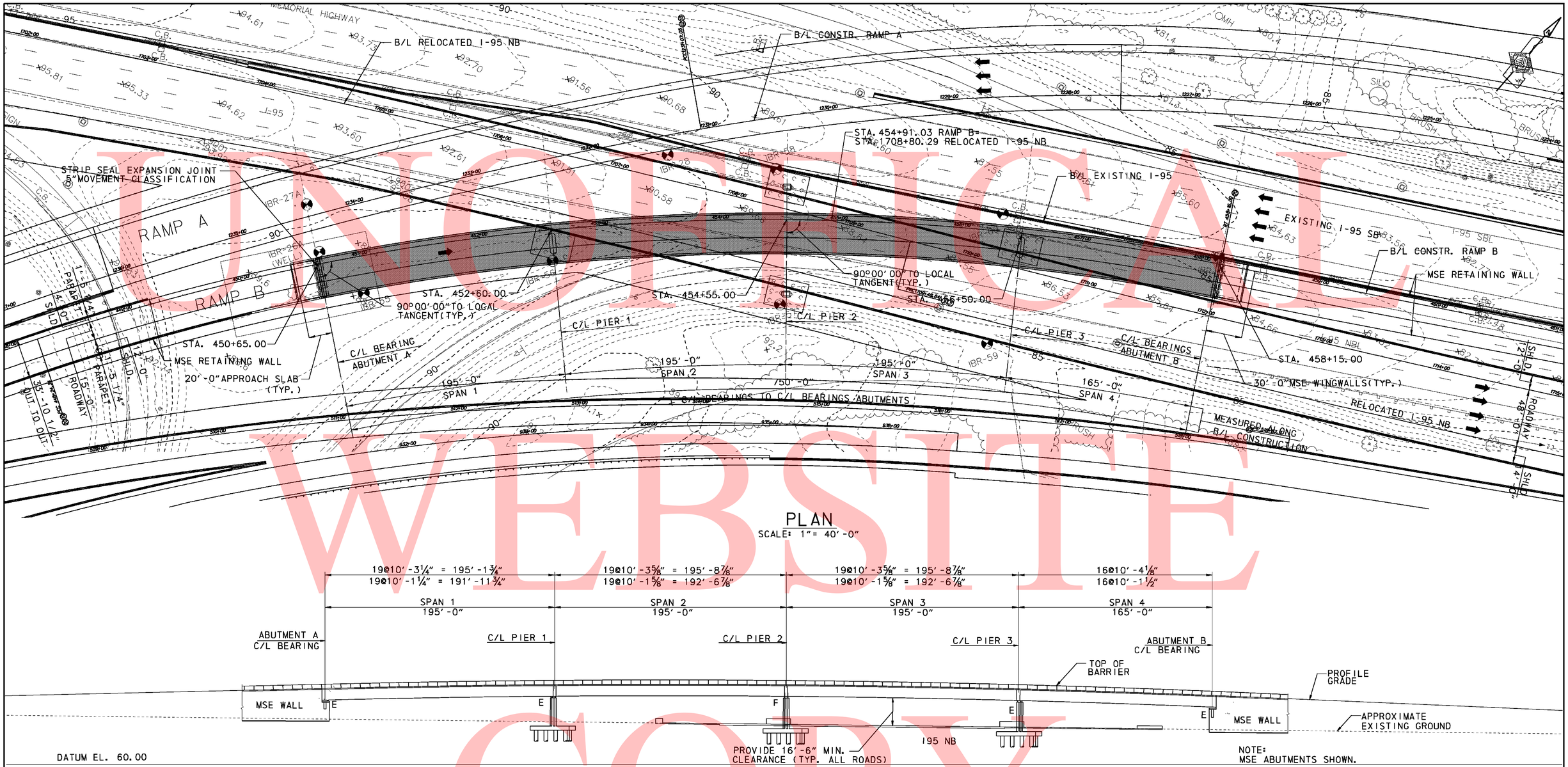

PLAN

SCALE: 1" = 40'-0"

NOTE:
MSE ABUTMENTS SHOWN.

ELEVATION

SCALE: 1" = 40'-0"

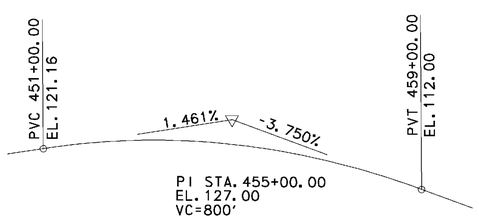

RAMP B-VERTICAL CURVE DATA

NOT TO SCALE

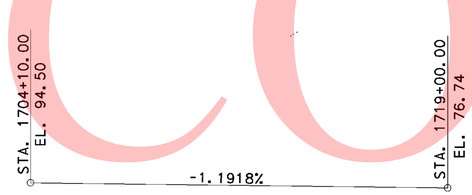

RELOCATED I-95 NB PROFILE

NOT TO SCALE

B/L CONSTR. RAMP B CURVE DATA

PI STA. 453+31.90
Δ = 29° 54' 47.21" RT
Dc = 3° 00' 56.04"
R = 1,900.0000'
T = 507.5597'
L = 991.9565'

NOTE:
1. FOR GENERAL NOTES, SEE DWG. NO S6-2.
2. GUIDED POT BEARINGS AT ABUTMENT A AND B AND PIERS 1 AND 3. NON-GUIDED POT BEARINGS AT ABUTMENT A AND B.
3. PIER 2 IS A CONCRETE FILLED INTEGRAL CROSS GIRDER.
4. MINIMUM VERTICAL CLEARANCE IS MEASURED TO THE BOTTOM OF PIER CAP AND INCLUDES 3'-0" ALLOWANCE FOR TEMPORARY SHORING.

UNOFFICIAL WEBSITE COPY

9/9/2010 2:13:46 PM
M:\PROJECTS\2003\03059_DELTRNPK\SR1_MALL\CADD\2809003\PLANS.DGV\PE01_BR-S6_SR1.DGN

DELAWARE DEPARTMENT OF TRANSPORTATION	ADDENDUMS / REVISIONS	SR1 / I-95 INTERCHANGE	CONTRACT 28-090-03	BRIDGE NO. 1-268B	RAMP B OVER I-95NB GENERAL PLAN AND ELEVATION	S6-1 SHEET NO. 448
			COUNTY NEW CASTLE	DESIGNED BY: MDM		TOTAL SHTS. 803
				CHECKED BY: DWD		

GENERAL NOTES

1. DESIGN SPECIFICATIONS
AASHTO LRFD BRIDGE DESIGN SPECIFICATIONS 4TH EDITION WITH 2009 INTERIM
DELAWARE DEPARTMENT OF TRANSPORTATION BRIDGE DESIGN MANUAL, MAY 2005 INCLUDING LATEST REVSIONS
ANSI/AASHTO/AWS D1.5 BRIDGE WELDING CODE.

2. LOADING
UNIT WEIGHTS OF MATERIALS ARE IN ACCORDANCE WITH THE DELAWARE DESIGN MANUAL.
FUTURE OVERLAY ALLOWANCE IS 25 PSF.
STEEL BRIDGE DECK FORMS WHICH STAY IN PLACE (INCLUDING CONCRETE IN FORM CORRUGATIONS) IS 15 PSF.
VEHICLE LIVE LOAD IS HL-93, WHICH CONSISTS OF A DESIGN TRUCK OR TANDEM WITH DYNAMIC LOAD ALLOWANCE AND A LANE LOAD RATING, WILL USE ALL DELAWARE LEGAL LOADS SPECIFIED IN THE BRIDGE DESIGN MANUAL. BARRIER HAS BEEN DESIGNED FOR TEST LEVER FIVE (TL-5).
FATIGUE DESIGN SHALL BE BASED ON THE FOLLOWING ONE DIRECTIONAL TRAFFIC VOLUMES:
RAMP B OVER I-95NB:

DESIGN ADT=18,650, DESIGN ADTT=1,679.

FOR THERMAL LOADS, CONSIDER THE MODERATE TEMPERATURE RANGE AS STIPULATED IN THE AASHTO LRFD DESIGN SPECIFICATIONS. THE NORMAL TEMPERATURE IS CONSIDERED TO BE 60F.
FOR SEISMIC LOADS, THE PROJECT SITE IS LOCATED WITHIN SEISMIC PERFORMANCE ZONE 1, WITH A SITE CLASS E AND IMPORTANCE CATEGORY - CRITICAL.

3. PORTLAND CEMENT CONCRETE
PORTLAND CEMENT CONCRETE FOR CAST-IN-PLACE ELEMENTS SHALL BE AS FOLLOWS:
(28 DAY COMPRESSIVE STRENGTH)
ITEM NO. 602007 (CLASS A, F'C=4500 PSI) - PIER ABOVE FOOTING
ITEM NO. 602011 (CLASS A, F'C=4500 PSI) - PIER FOOTING, TOP OF PIER PILES
ITEM NO. 602013 (CLASS D, F'C=4500 PSI) - DECK
ITEM NO. 602014 (CLASS D, F'C=4500 PSI) - APPROACH SLAB
ITEM NO. 602015 (CLASS A, F'C=4500 PSI) - ABUTMENT, TOP OF ABUTMENT PILES
ITEM NO. 602017 (CLASS A, F'C=4500 PSI) - PARAPET
ITEM NO. 602785 (CLASS A, F'C=6000 PSI) - POST-TENSIONED PIER CAP, CROSS-GIRDER
MIX REQUIREMENTS SHALL CONFORM TO SECTION 812 OF THE DELAWARE DEPARTMENT OF TRANSPORTATION STANDARD SPECIFICATIONS. ALL EXPOSED CORNERS OF CONCRETE SHALL BE CHAMFERED WITH 3/4" X 3/4" MILLED CHAMFER STRIPS UNLESS NOTED OTHERWISE, EXCEPT ON UNEXPOSED FOOTINGS OR WHERE INDICATED BY THE NOTATION ON THE PLANS, "DO NOT CHAMFER". NO SLIP-FORMING OF PARAPETS IS PERMITTED.

4. BAR REINFORCEMENT
REINFORCING STEEL SHALL CONFORM TO AASHTO M31 (ASTM A615), GRADE 60. ALL REINFORCING STEEL SHALL HAVE A CLEAR COVER OF 2" UNLESS OTHERWISE SPECIFIED ON THE PLANS.
EPOXY COATED REINFORCING STEEL SHALL CONFORM TO AASHTO M284 (ASTM D3963), AND IS DENOTED WITH A SUFFIX "E" IN THE BAR MARKS. EPOXY COATED REINFORCING STEEL IS USED IN THE FOLLOWING LOCATIONS:
APPROACH SLABS
DECK SLAB
PARAPETS AND BARRIERS
BEARING SEAT PADS
ABUTMENT BEARING SEAT REGIONS
ABUTMENT BACKWALLS
PARAPET PORTION OF WINGWALLS
DO NOT WELD GRADE 60 REINFORCING STEEL.

5. POST-TENSIONING STEEL
ALL POST-TENSIONING STRAND TENDONS SHALL CONSIST OF 0.6 INCH DIAMETER SEVEN WIRE UNCOATED LOW RELAXATION STRANDS CONFORMING TO AASHTO M203 (ASTM A416), GRADE 270.
DUCTS SHALL BE 4 1/2 INCH DIA. POLYETHYLENE/POLYPROPYLENE (PE/PP) PLASTIC DUCTS.
CROUT FOR DUCTS SHALL BE IN ACCORDANCE WITH ITEM NO. 602779 "POST TENSIONING GROUT."

6. STRUCTURAL STEEL
STRUCTURAL STEEL SHALL CONFORM TO ASTM A709, GRADE 50W, AND ASTM A709, GRADE HPS 70W INCLUDING THE ADDITIONAL REQUIREMENTS FOR CHARPY V-NOTCH TESTING OF AASHTO M270 FOR PRIMARY LOAD CARRYING MEMBERS. THE PRIMARY LOAD CARRYING MEMBER COMPONENTS ARE THE FLANGES, WEBS AND SPLICE PLATES OF THE STEEL GIRDERS. THE USE OF FRACTURE CRITICAL MEMBERS IS PROHIBITED. FATIGUE CATEGORIES D, E AND F SHALL NOT BE USED IN STRESS REVERSAL OR TENSION AREAS, EXCEPT FOR TEMPORARY CONDITIONS.

TEN FEET AT THE ENDS OF EACH GIRDER AND THE END CROSS FRAMES SHALL BE PAINTED WITH A URETHANE PAINT SYSTEM IN ACCORDANCE WITH SPECIAL PROVISION #605537-URETHANE PAINT SYSTEM. THE FINAL COLOR SHALL BE FEDERAL #10076 (BROWN) OF FED-STD-595B. COST OF PAINTING SHALL BE INCIDENTAL TO ITEM 605002, STEEL STRUCTURES.

ALL BOLTS SHALL CONFORM TO ASTM A325, WITH THREADS EXCLUDED FROM SHEAR PLANES. BOLTED CONNECTIONS SHALL BE CLASS B SLIP CRITICAL CONNECTIONS, UNLESS NOTED ON THE PLANS.

7. SERVICEABILITY
LIVE LOAD DEFLECTION SHALL BE LIMITED TO L/800.
FOR REINFORCEMENT DISTRIBUTION REQUIREMENTS, CONSIDER CLASS 2 EXPOSURE CRITERIA.
ACCOMODATION TO JACK GIRDERS FOR FUTURE BEARING REPLACEMENT HAS BEEN CONSIDERED IN THE DESIGN.

8. CONSTRUCTION JOINTS
KEYED CONSTRUCTION JOINTS SHALL BE 2"X4" OR AS NOTED. ALL EXPOSED CONSTRUCTION JOINT EDGES SHALL HAVE A 3/4" V-NOTCH.

9. SHEETING AND SHORING
SHEETING AND SHORING SHALL BE REQUIRED FOR ANY EXCAVATION EXCEEDING 5 FEET IN HEIGHT, THE COST SHALL BE PAID UNDER ITEM 207501. IN LIEU OF SHORING, THE CONTRACTOR MAY USE A 2:1 CUT SLOPE. NO PAYEMENT SHALL BE MADE FOR ADDITIONAL EXCAVATION OR FILL OUTSIDE THE LIMITS AS DEFINED IN SECTION 207 OF THE STD SPEC.

10. EXCAVATION REQUIRED TO ATTAIN THE GRADE FOR INSTALLATION OF MSE WALLS SHALL BE INCIDENTAL TO ITEM NO. 602772 - MECHANICALLY STABILIZED EARTH WALLS.

11. STRUCTURAL BACKFILL SHALL CONFORM TO THE REQUIREMENTS OF BORROW TYPE C. MSE WALL BACKFILL SHALL ALSO CONFORM TO BORROW TYPE C.

12. ROADWAY CLEARANCES
A MINIMUM OF 16'-6" VERTICAL CLEARANCE SHALL BE MAINTAINED ABOVE ALL ROADWAYS.
A MINUMUM OF 2'-0" HORIZONTAL CLEARANCE SHLL BE MAINTAINED FROM THE OUTSIDE EDGE OF SHOULDER OFFSET (FACE OF CURB) TO THE FACE OF ANY OBSTRUCTION.

BRIDGE LEGAL LOAD RATING (TONS) RAMP B OVER I95		
TRUCK TYPE	RATING FACTOR	SAFE LOAD CAPACITY
HS-20	1.84	66.2
S 220	3.40	68.0
S 327	2.49	67.2
S 335	1.88	65.8
S 437	1.80	66.6
T 330	2.28	68.4
T 435	1.94	67.9
T 540	1.69	67.6

BRIDGE DESIGN LOAD RATING:
INVENTORY = 1.21
OPERATING = 2.11

CROSS REFERENCE NOTES

1. FOR MSE WALL NOTES, SEE DWG. S6-14

UNOFFICIAL WEBSITE COPY

UNOFFICAL WEBSITE COPY

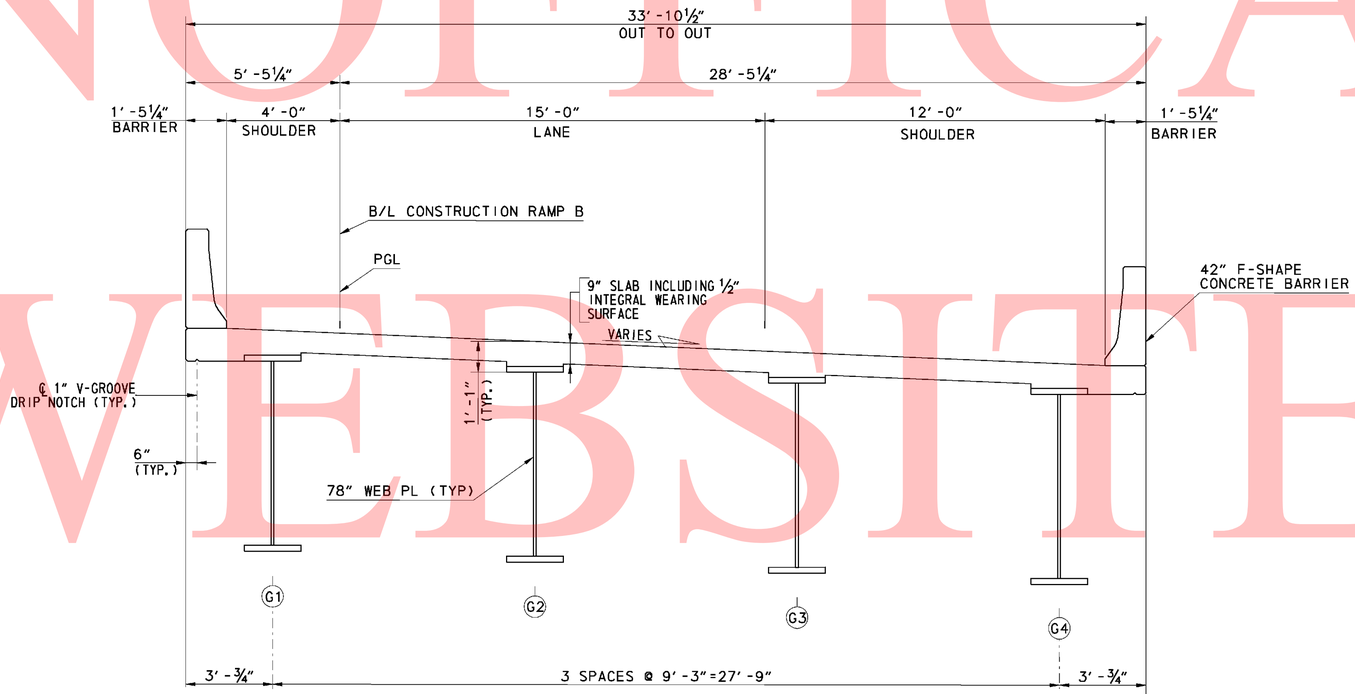

TYPICAL SECTION - RAMP B OVER I-95NB

SCALE: ⅜″ = 1′-0″

(LOOKING STATIONS AHEAD)

CROSS REFERENCE NOTES:

1. FOR GIRDER DETAILS SEE SHEET S6-33 & S6-34.
2. FOR CROSS FRAME DETAILS, SEE SHEET S6-35.
3. FOR DECK SLAB REINFORCING PLAN, SEE SHEET S6-42 THRU S6-45.
4. FOR STAY-IN-PLACE FORM AND SHEAR STUD DETAILS, SEE SHEET NO. S6-46.
5. FOR OTHER DECK AND DIAPHRAGM DETAILS, SEE SHEET NO. S6-46.
6. FOR F-SHAPE BARRIER DETAILS, SEE SHEET S6-47.
7. FOR FRAMING PLAN SEE DWG. S6-31 & S6-32.

0 2 4 8

SCALE: ⅜″=1′-0″

9/9/2010 2:36:17 PM
M:\PROJECTS\2003\03059_DELTRNPK\SR1_MALL\CADD\2809003\PLANS.DOV\ST01_BR-S6_SR1.DGN

DELAWARE DEPARTMENT OF TRANSPORTATION	ADDENDUMS / REVISIONS	SR1 / I-95 INTERCHANGE	CONTRACT 28-090-03	BRIDGE NO. 1-268B	RAMP B OVER I-95NB TYPICAL SECTION	S6- 3 SHEET NO. 450
			COUNTY NEW CASTLE	DESIGNED BY: RMB		TOTAL SHTS. 803
				CHECKED BY: DWD		

UNOFFICAL WEBSITE COPY

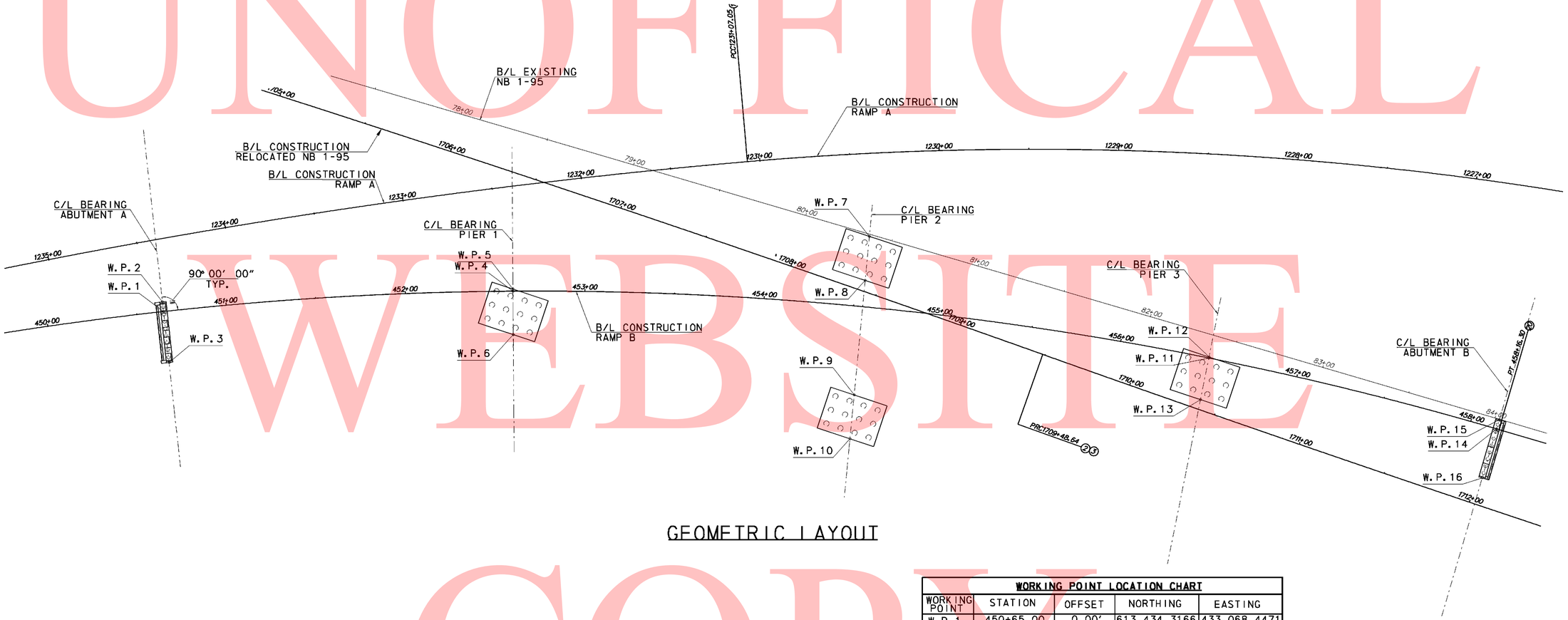

GEOMETRIC LAYOUT

WORKING POINT LOCATION CHART				
WORKING POINT	STATION	OFFSET	NORTHING	EASTING
W.P. 1	450+65.00	0.00'	613,434.3166	433,068.4471
W.P. 2	450+65.00	5.44' LT	613,438.1187	433,064.6296
W.P. 3	450+65.00	28.44' RT	613,414.0658	433,088.4122
W.P. 4	452+60.00	0.00'	613,563.8598	433,214.0846
W.P. 5	452+60.00	1.17' LT	613,564.7796	433,213.3474
W.P. 6	452+60.00	24.17' RT	613.545.0008	433,229.2022
W.P. 7	454+55.00	39.37' LT	613,710.8871	433,350.8782
W.P. 8	454+55.00	14.75' LT	613,690.1993	433,364.2270
W.P. 9	454+55.00	49.26' RT	613,636.4129	433,398.9329
W.P. 10	454+55.00	73.88' RT	613,615.7251	433,412.2818
W.P. 11	456+50.00	0.00'	613,774.9397	433,541.2115
W.P. 12	456+50.00	0.59' LT	613,775.4688	433,540.9424
W.P. 13	456+50.00	23.59' RT	613,753.9143	433,551.9022
W.P. 14	458+15.00	0.00'	613,843.2484	433,691.3508
W.P. 15	458+15.00	5.44' LT	613,848.2908	433,689.5160
W.P. 16	458+15.00	33.16' RT	613,816.8772	433,701.9927

0 15 30 45
SCALE: 1" = 30'

DELAWARE DEPARTMENT OF TRANSPORTATION

ADDENDUMS / REVISIONS

SR1 / I-95 INTERCHANGE

CONTRACT	BRIDGE NO.	1-268B
28-090-03	DESIGNED BY:	RMB
COUNTY	CHECKED BY:	DWD
NEW CASTLE		

RAMP B OVER I-95NB
GEOMETRIC AND FOOTING LAYOUT

S6-4
SHEET NO. 451
TOTAL SHTS. 803

9/7/2010 2:55:00 PM
M:\PROJECTS\2003\03059_DELTRNPK\SR1_MALL\CADD\2809003\PLANS.DGN\FT01_BR-S6_SR1.DGN

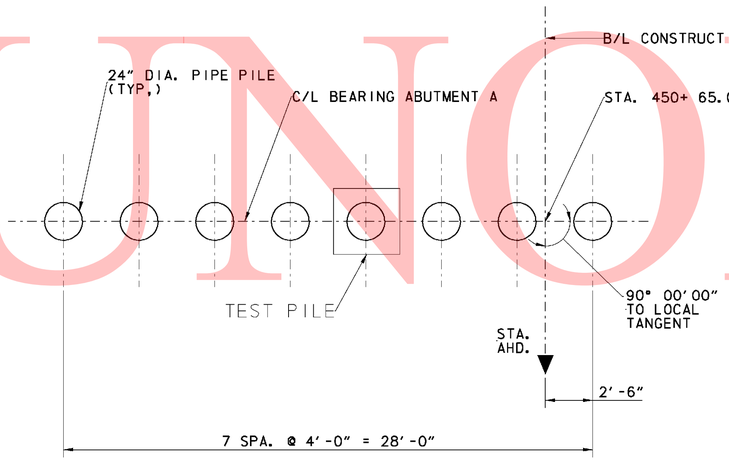

ABUTMENT A PILE PLAN
SCALE: 1/4" = 1'-0"

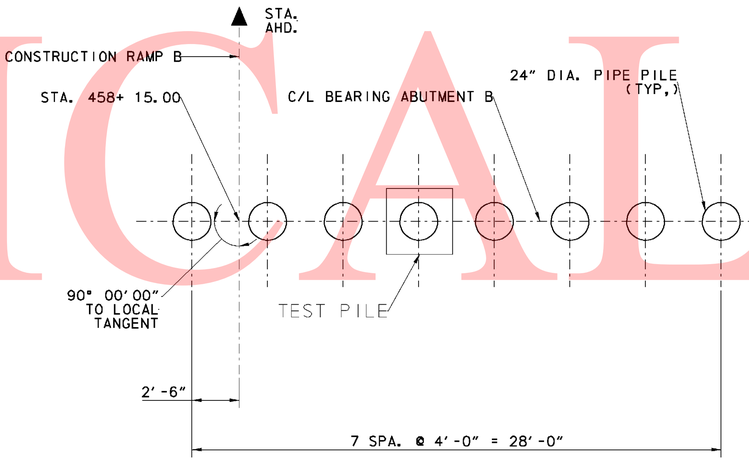

ABUTMENT B PILE PLAN
SCALE: 1/4" = 1'-0"

NOTES:

1. PILE ARE 24" DIA. WITH 0.5" THICKNESS OPEN-ENDED STEEL PIPE PILE, ASTM A252 GRADE 3.
2. REINFORCING STRAPS SHALL BE PROVIDED FOR THE ABUTMENT STEM AND BACKWALL TO RESIST THE LONGITUDINAL FORCES ON THE SUPERSTRUCTURE.
3. PILE CASINGS SHALL BE INSTALLED AT THE PROPOSED PILE LOCATIONS DURING THE ABUTMENT MSE WALL CONSTRUCTION.
4. UPON COMPLETION OF THE MSE WALL THERE SHALL BE A 60 DAY QUARANTINE PERIOD PRIOR TO DRIVING THE ABUTMENT PILES TO ALLOW FOR SETTLEMENT AND TO MINIMIZE THE DOWNDRAG FORCES THAT MIGHT DEVELOPE ON THE PILES.
5. UPON COMPLETION OF THE QUARANTINE PERIOD, AS JUDGED BY THE ENGINEER, DRIVE PILES TO THE NOMINAL PILE DRIVING RESISTANCE INDICATED ON THE PLANS.
6. TEST PILES SHALL BE TESTED IN ACCORDANCE WITH THE SPECIFICATIONS.

CROSS REFERECE NOTES.

1. FOR ABUTMENT PLAN AND ELEVATION, SEE DWG. S6-6 & S6-9.
2. FOR ABUTMENT REINFORCEMENT SCHEDULE, SEE DWG. S6-15.

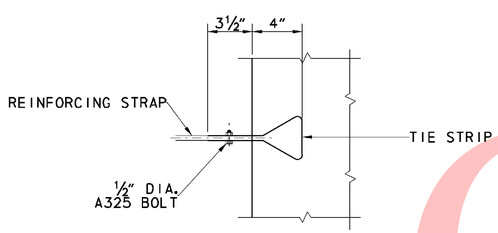

ABUTMENT STRAP ANCHOR DETAIL
NOT TO SCALE

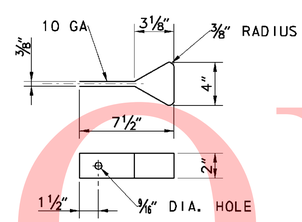

TIE STRIP DETAIL
NOT TO SCALE

UNOFFICIAL WEBSITE COPY

9/6/2010 2:31:59 PM
M:\PROJECTS\2003\03059_DELTRNPK\SR1_WALL\CADD\2809003\PLANS.DGN\FT02_BR-S6_SR1.DGN

DELAWARE DEPARTMENT OF TRANSPORTATION

ADDENDUMS / REVISIONS

SR1 / I-95 INTERCHANGE

CONTRACT	BRIDGE NO.	1-268B
28-090-03	DESIGNED BY: RMB	
COUNTY	CHECKED BY:	
NEW CASTLE		

RAMP B OVER I-95NB
ABUTMENT FOUNDATION PLAN

S6-5
SHEET NO. 452
TOTAL SHTS. 803

UNOFFICIAL WEBSITE COPY

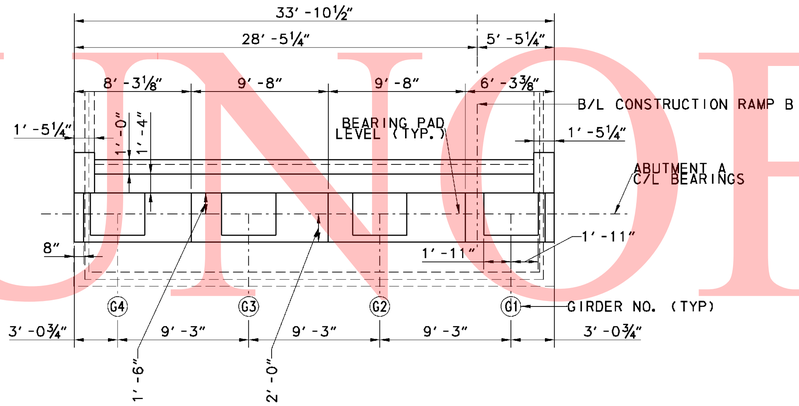

ABUTMENT A PLAN

SCALE: 3/16" = 1'-0"

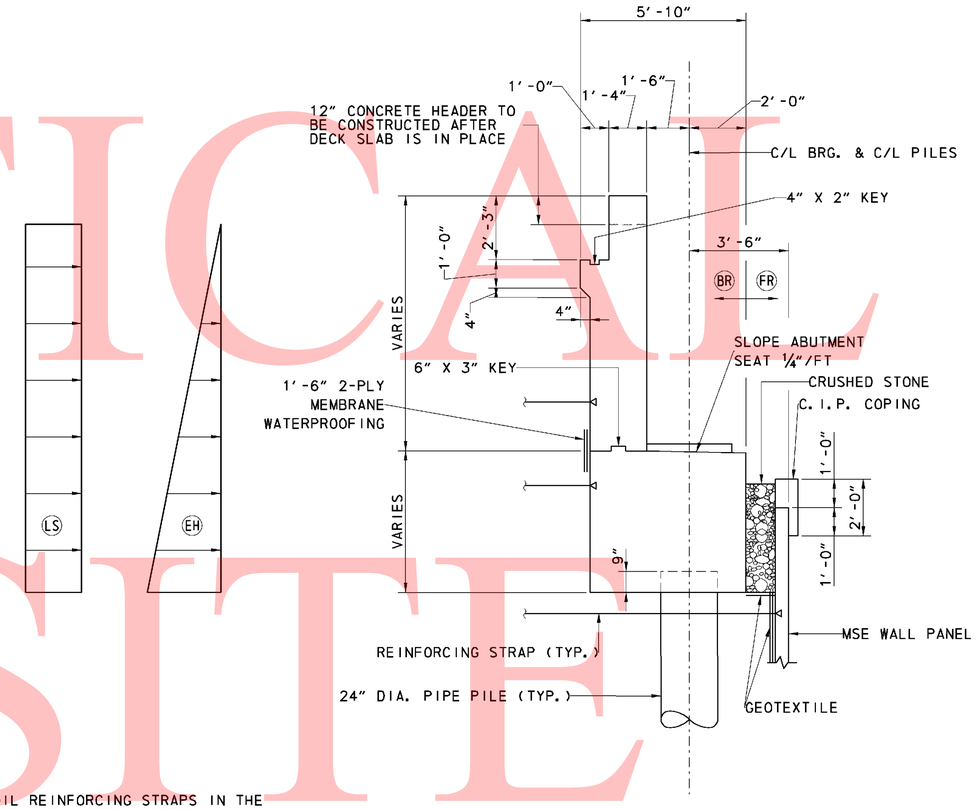

TYPICAL ABUTMENT SECTION

SCALE: 3/8" = 1'-0"

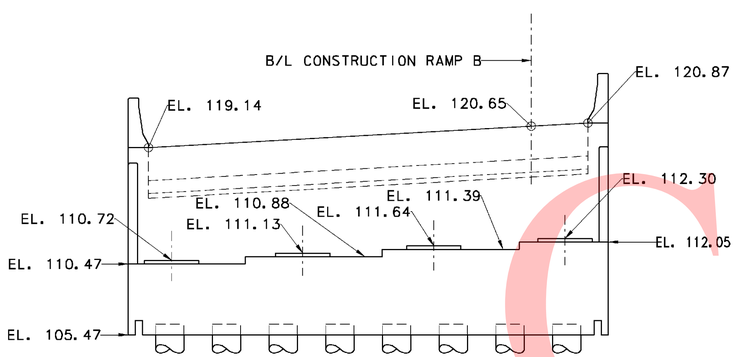

ABUTMENT A ELEVATION

SCALE: 3/16" = 1'-0"

ABUTMENT NOTES:

1. CONTRACTOR SHALL DESIGN THE SOIL REINFORCING STRAPS IN THE ABUTMENT STEM AND BACKWALL TO RESIST LATERAL LOADS "EH", "LS", "BR" AND "FR".
2. LOAD "EH" IS THE HORIZONTAL EARTH PRESSURE EXERTED ON THE ABUTMENT.
3. LOAD "LS" IS THE ADDITIONAL HORIZONTAL SOIL PRESSURE DUE TO 3 FEET OF SOIL SURCHARGE. CONTRACTOR IS RESPONSIBLE FOR PROVIDING MSE WALL DESIGNER WITH OTHER CONSTRUCTION LOADS WHICH WILL BE IN EXCESS OF 3 FEET OF SOIL SURCHARGE.
4. LOAD "BR" IS THE HORIZONTAL LOAD DUE TO BRAKING FORCE ON THE SUPERSTRUCTURE.
5. LOAD "FR" IS THE HORIZONTAL LOAD DUE TO FRICTION ON THE BEARINGS AS A RESULT OF BRIDGE EXPANSION AND CONTRACTION.
6. THE POINT OF APPLICATION OF LOADS.

ABUTMENT LATERAL LOADS

TYPE	SERVICE LOAD (KIPS/FT.)
EH	3.00
LS	1.31
BR	0.19
FR	1.11

NOTES:

1. CRUSHED STONE AND GEOTEXTILE BETWEEN MSE WALL COPING AND ABUTMENT FOOTING SHALL BE INCIDENTAL TO ITEM NO. 602772 - MECHANICALLY STABILIZED EARTH WALLS.
2. MSE WALL AND COPING NOT SHOWN IN ELEVATION VIEW.

CROSS REFERENCE NOTES:

1. FOR BRIDGE PLAN AND ELEVATION, SEE DWG. S6-1.
2. FOR TYPICAL SIDE ELEVATION, SEE DWG. S6-9.
3. FOR MSE WINGWALLS PLAN AND ELEVATION, SEE DWG. S6-12.
4. FOR ABUTMENT REINFORCEMENT, SEE DWG. S6-7 & S6-8.

UNOFFICAL WEBSITE COPY

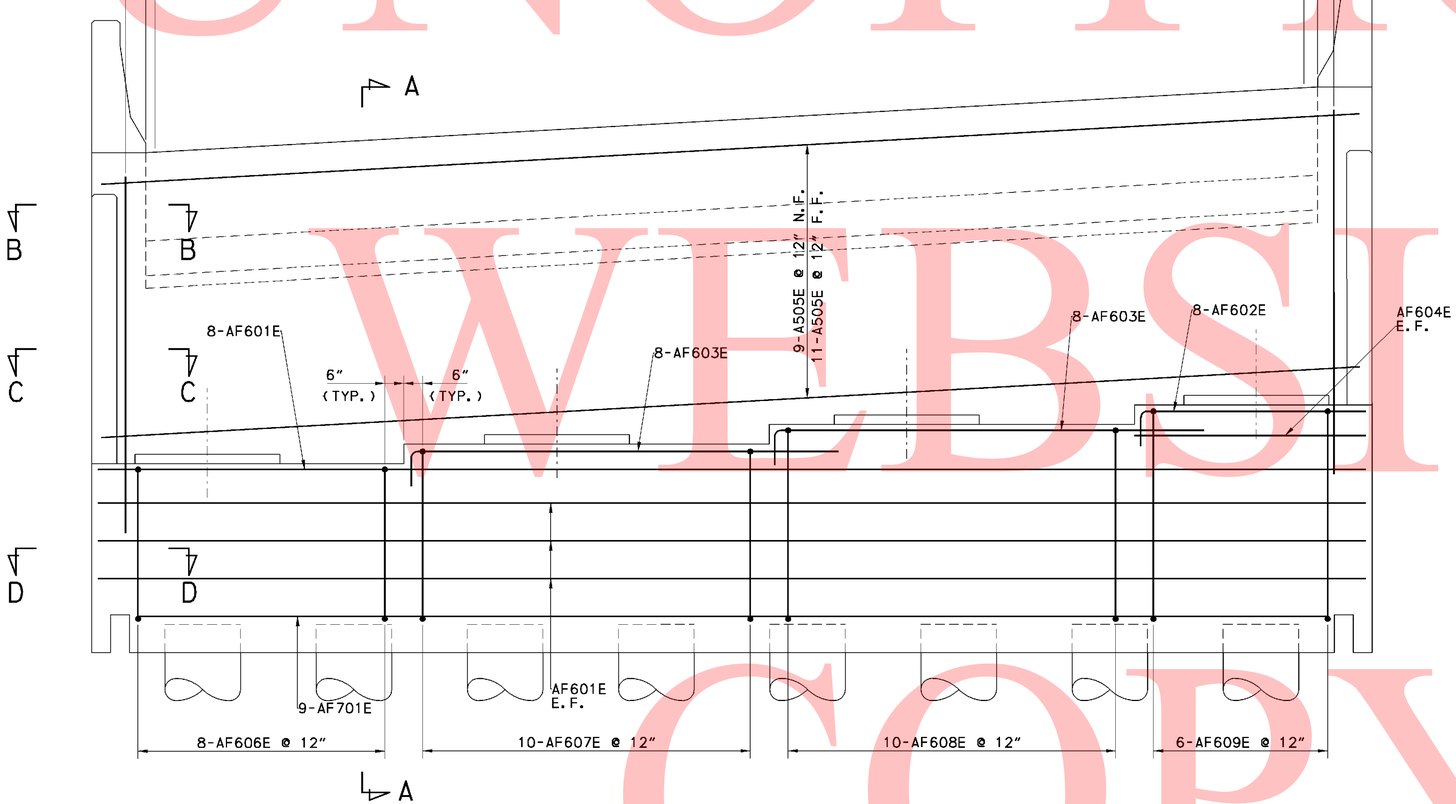

ELEVATION - ABUTMENT A

SCALE: ½" = 1'-0"

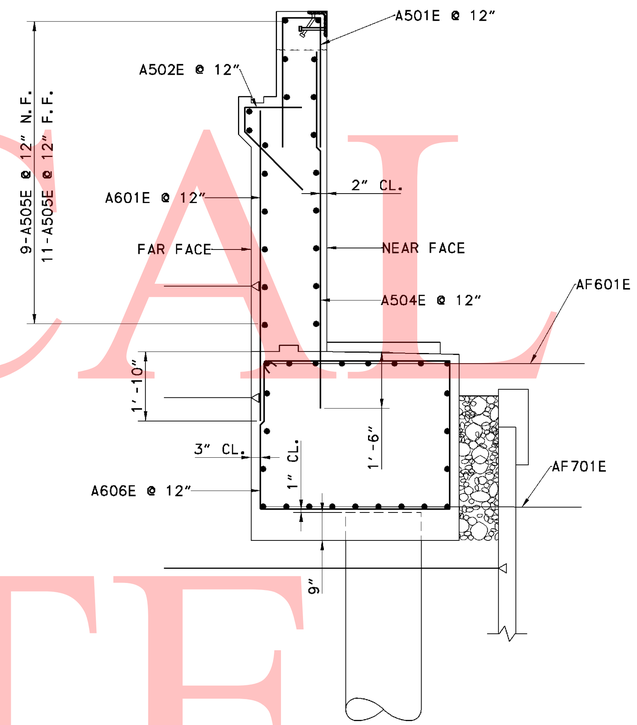

SECTION A-A

SCALE: ½" = 1'-0"

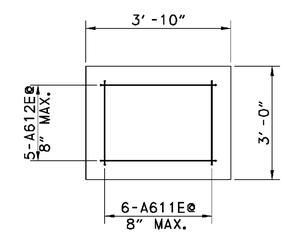

PEDESTAL REINFORCING

SCALE: ½" = 1'-0"

CROSS REFERENCE NOTES:

1. FOR BRIDGE PLAN AND ELEVATION, SEE DWG. S6-1.
2. FOR ABUTMENT A PLAN AND ELEVATION, SEE DWG. S6-6.
3. FOR WINGWALL 11 SIDE ELEVATION, SEE DWG. S6-12.
4. FOR SECTIONS B-B, C-C AND D-D, SEE DWG. S6-8.
5. FOR ABUTMENT REINFORCEMENT BAR SCHEDULE, SEE DWG. S6-15.

8/5/2010 8:13:31 AM
M:\PROJECTS\2003\03059_DELTRNPK\SR1_MALL\CADD\2809003\PLANS.DGV\AB02_BR-S6_SR1.DGN

DELAWARE DEPARTMENT OF TRANSPORTATION	ADDENDUMS / REVISIONS		SR1/I-95 INTERCHANGE	CONTRACT 28-090-03	BRIDGE NO. 1-268B	RAMP B OVER I-95NB ABUTMENT A REINFORCING DETAILS 1	S6-7 SHEET NO. 454
				COUNTY NEW CASTLE	DESIGNED BY: RMB		TOTAL SHTS. 803
					CHECKED BY: DWD		

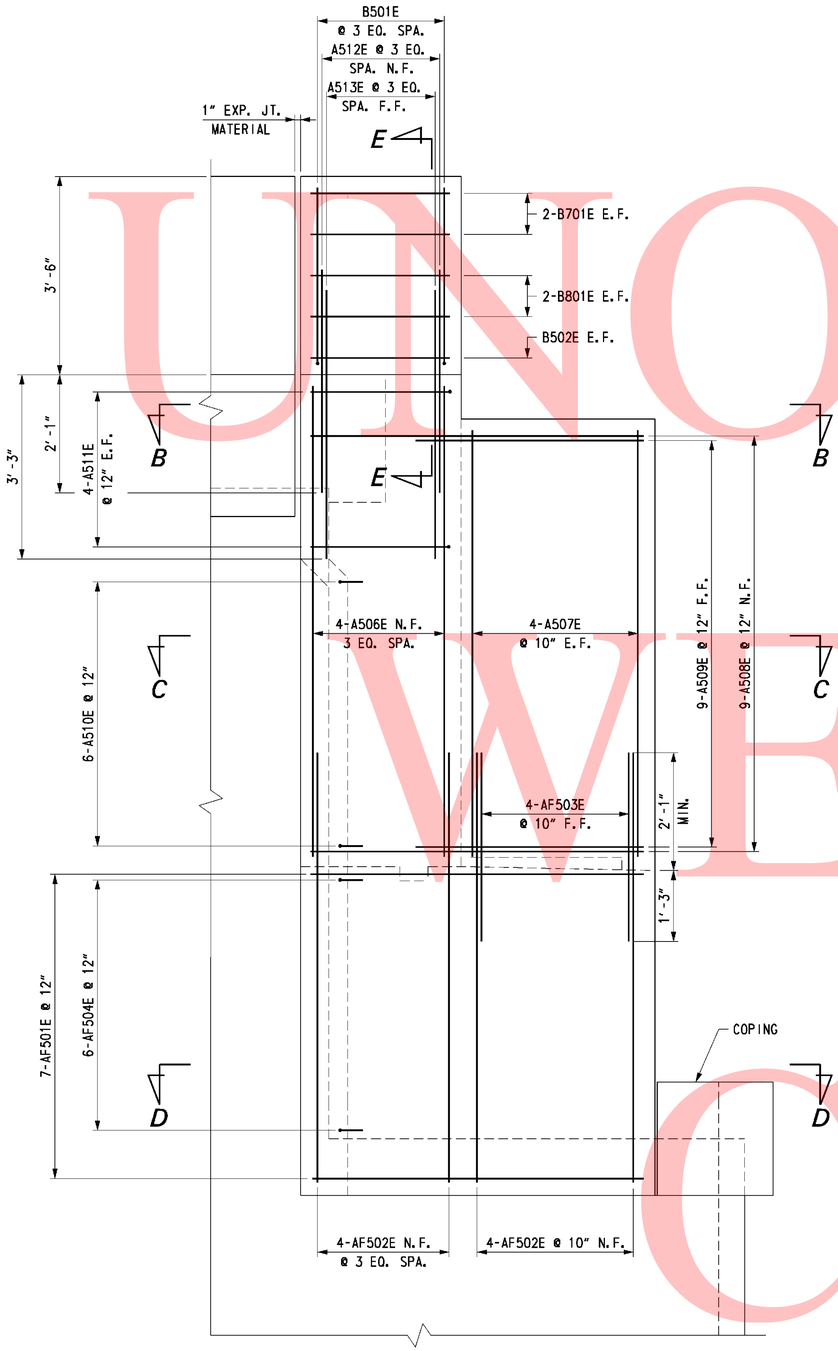

WING WALL I SIDE ELEVATION

SCALE: ¾" = 1'-0"

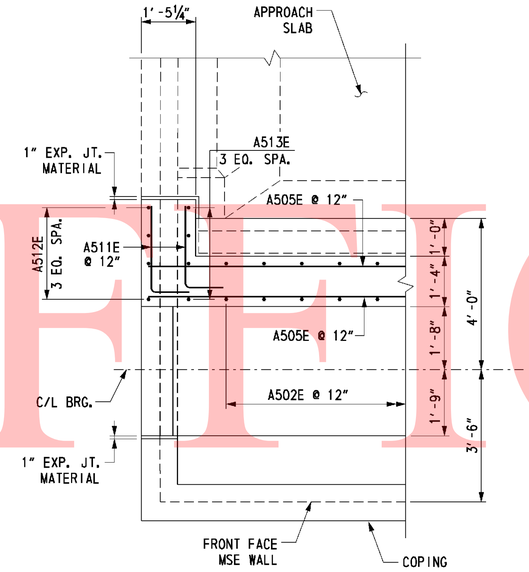

SECTION B-B

SCALE: ½" = 1'-0"

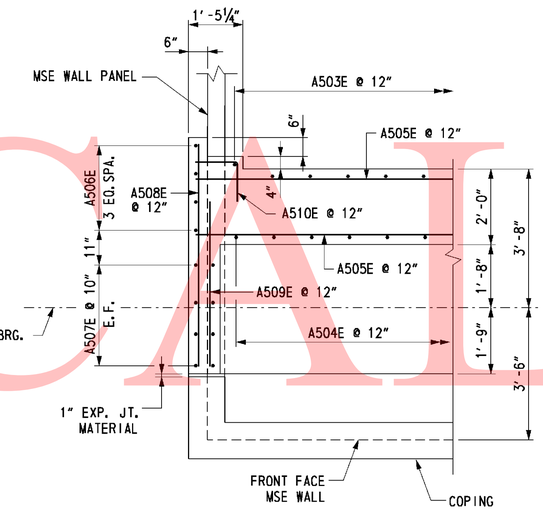

SECTION C-C

SCALE: ½" = 1'-0"

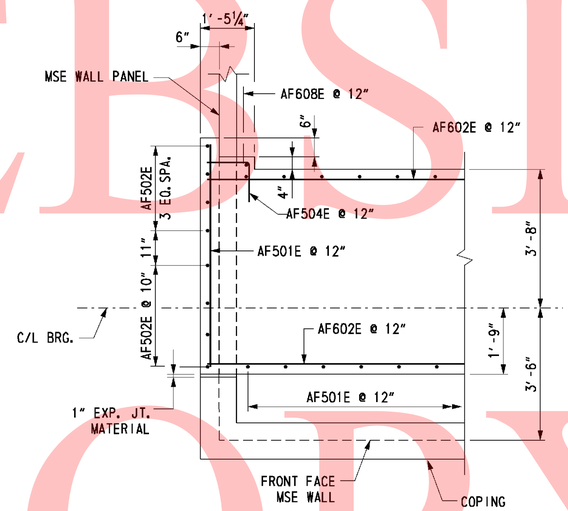

SECTION D-D

SCALE: ½" = 1'-0"

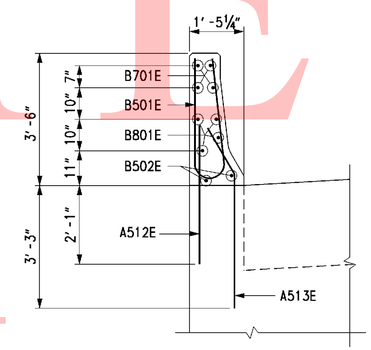

SECTION E-E

SCALE: ½" = 1'-0"

CROSS REFERENCE NOTES:

1. FOR ABUTMENT A PLAN AND ELEVATION, SEE DWG. S6-6.
2. FOR ABUTMENT A ELEVATION REINFORCEMENT DETAILS, SEE DWG. S6-7.
3. FOR REINFORCING BAR LIST, SEE DWG. S6-15.

UNOFFICIAL WEBSITE COPY

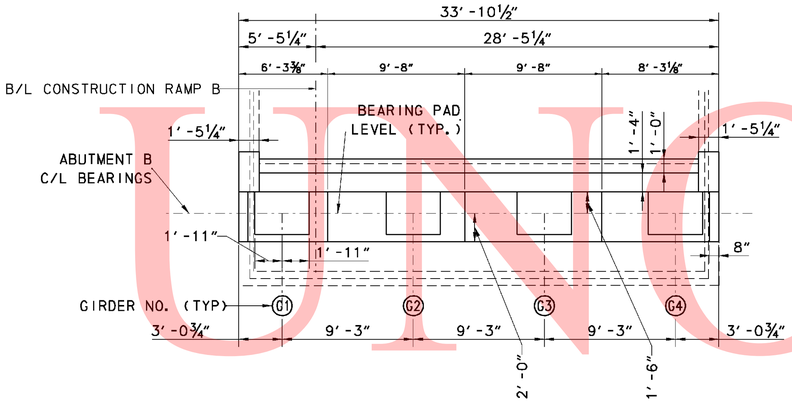

ABUTMENT B PLAN

SCALE: 3/16" = 1'-0"

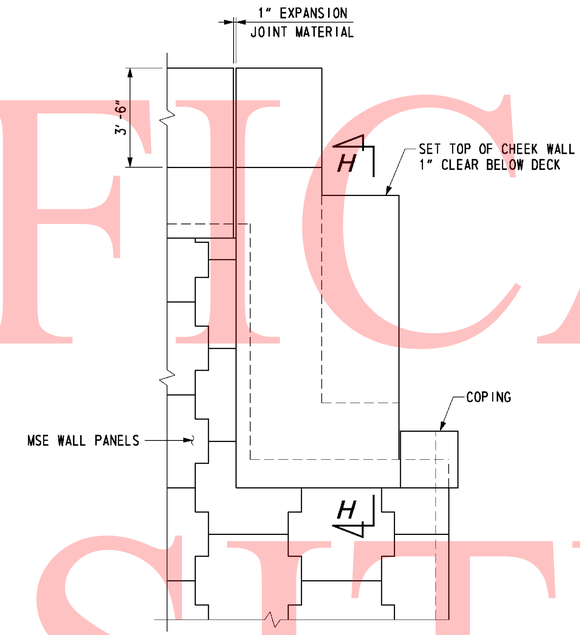

TYPICAL SIDE ELEVATION

SCALE: 3/8" = 1'-0"

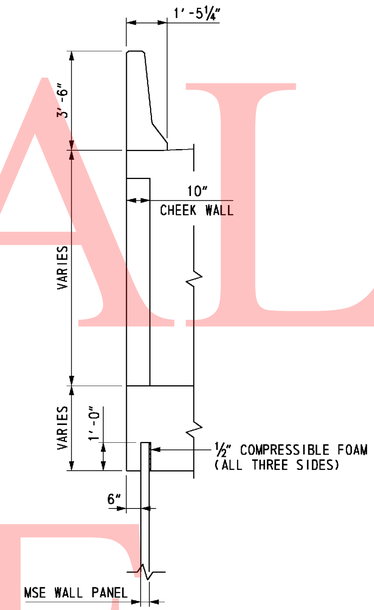

SECTION H-H

SCALE: 3/8" = 1'-0"

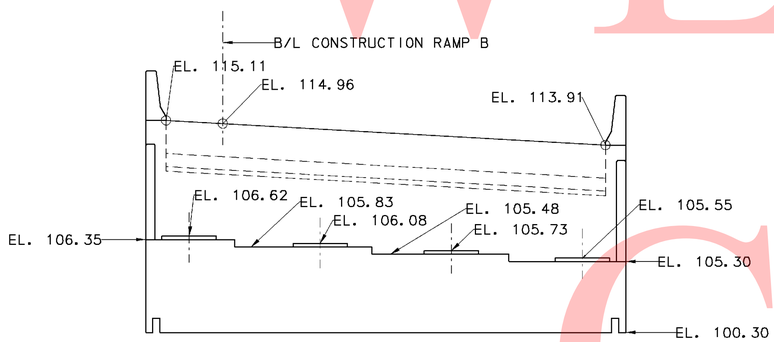

ABUTMENT B ELEVATION

SCALE: 3/16" = 1'-0"

NOTE:

1. MSE WALL AND COPING NOT SHOWN IN ELEVATION VIEW.

CROSS REFERENCE NOTES:

1. FOR BRIDGE PLAN AND ELEVATION, SEE DWG. S6-1.
2. FOR TYPICAL ABUTMENT SECTION, SEE DWG. S6-6.
3. FOR MSE WINGWALLS PLAN AND ELEVATION, SEE DWG. S6-12.
4. FOR ABUTMENT REINFORCEMENT, SEE DWG. S6-7 & S6-8.

UNOFFICAL WEBSITE COPY

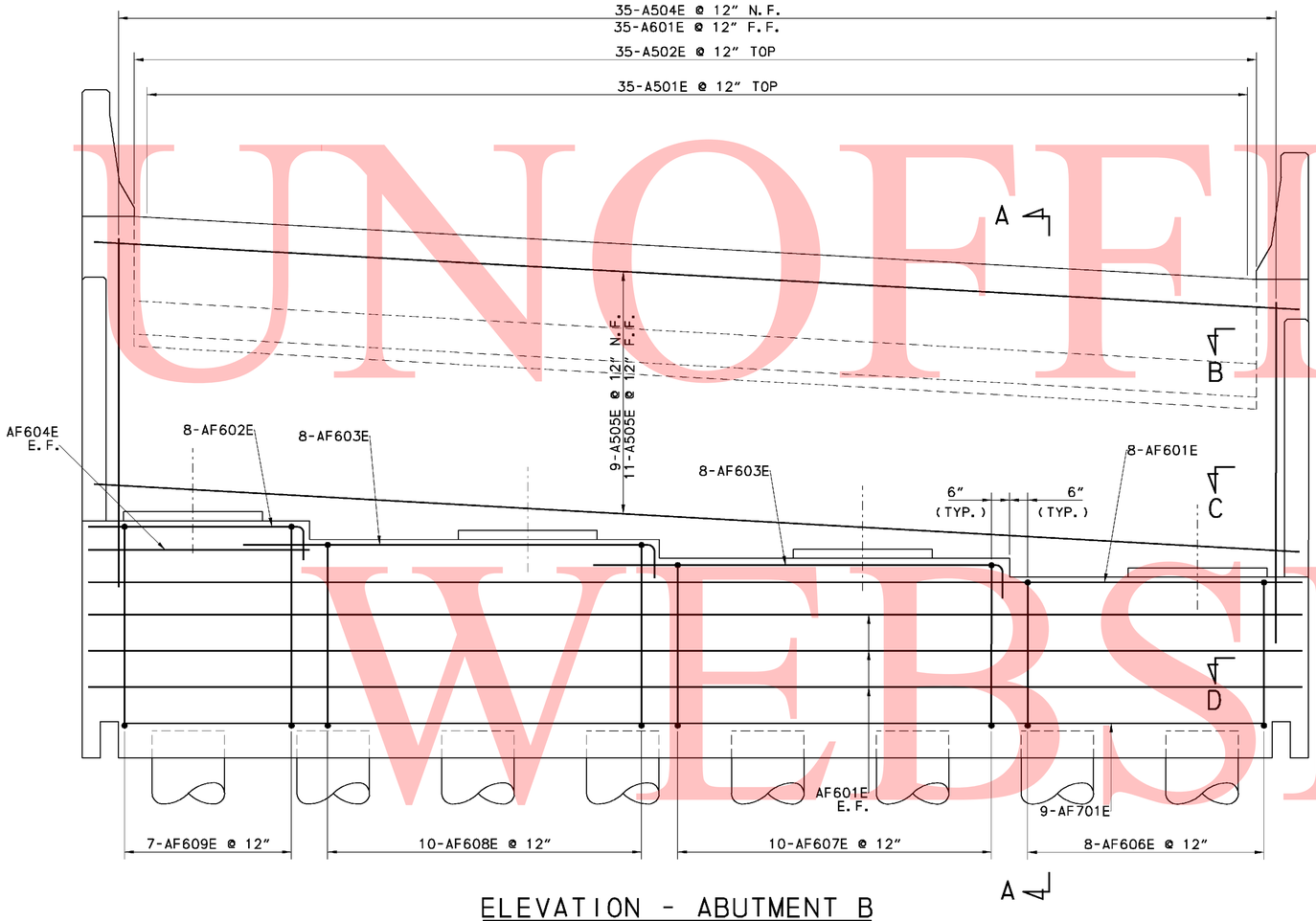

ELEVATION - ABUTMENT B

SCALE: ½" = 1'-0"

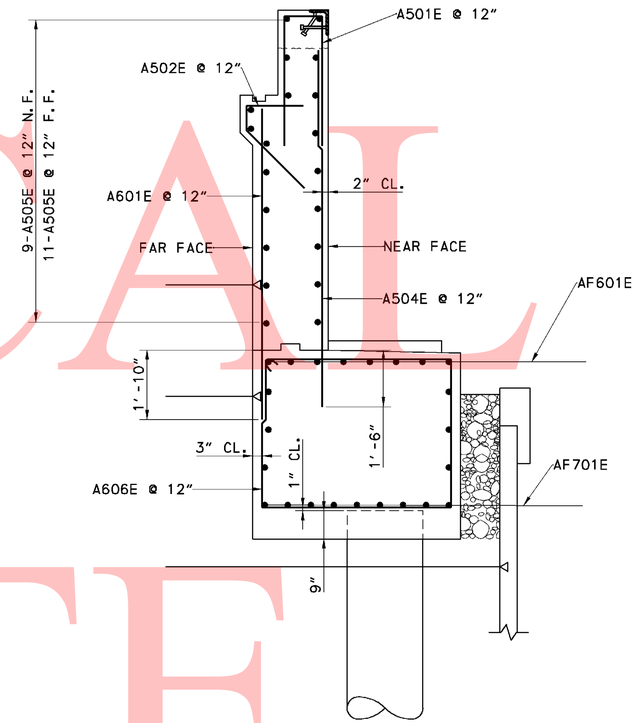

SECTION A-A

SCALE: ½" = 1'-0"

CROSS REFERENCE NOTES:

1. FOR BRIDGE PLAN AND ELEVATION, SEE DWG. S6-1.
2. FOR ABUTMENT B PLAN AND ELEVATION, SEE DWG. S6-9.
3. FOR WINGWALL IV SIDE ELEVATION, SEE DWG. S6-11.
4. FOR SECTIONS B-B, C-C AND D-D, SEE DWG. S6-11.
5. FOR ABUTMENT REINFORCEMENT BAR SCHEDULE, SEE DWG. S6-15.

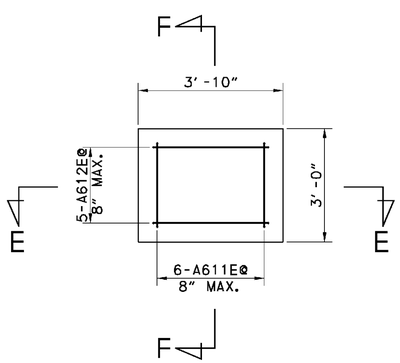

ABUTMENT BEARING PEDESTAL PAD

SCALE: ½" = 1'-0"

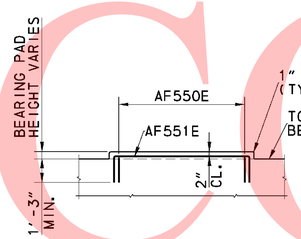

SECTION E-E

SCALE: ½" = 1'-0"

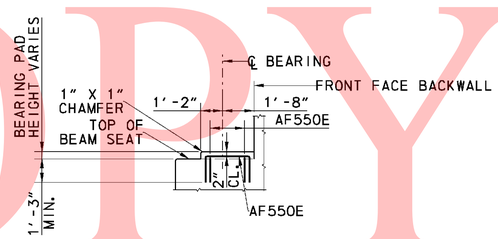

SECTION F-F

SCALE: ½" = 1'-0"

UNOFFICAL WEBSITE COPY

9/6/2010 5:08:54 PM
M:\PROJECTS\2003\03059_DELTRNPK\SR1_MALL\CADD\2809003\PLANS_DGV\AB05_BR-S6_SR1.DGN

DELAWARE DEPARTMENT OF TRANSPORTATION	ADDENDUMS / REVISIONS	SR1/I-95 INTERCHANGE	CONTRACT 28-090-03	BRIDGE NO. 1-268B	RAMP B OVER I-95NB	S6-10	
			COUNTY NEW CASTLE	DESIGNED BY: RMB	ABUTMENT B REINFORCING DETAILS 1	SHEET NO. 457	
				CHECKED BY: DWD		TOTAL SHTS. 803	

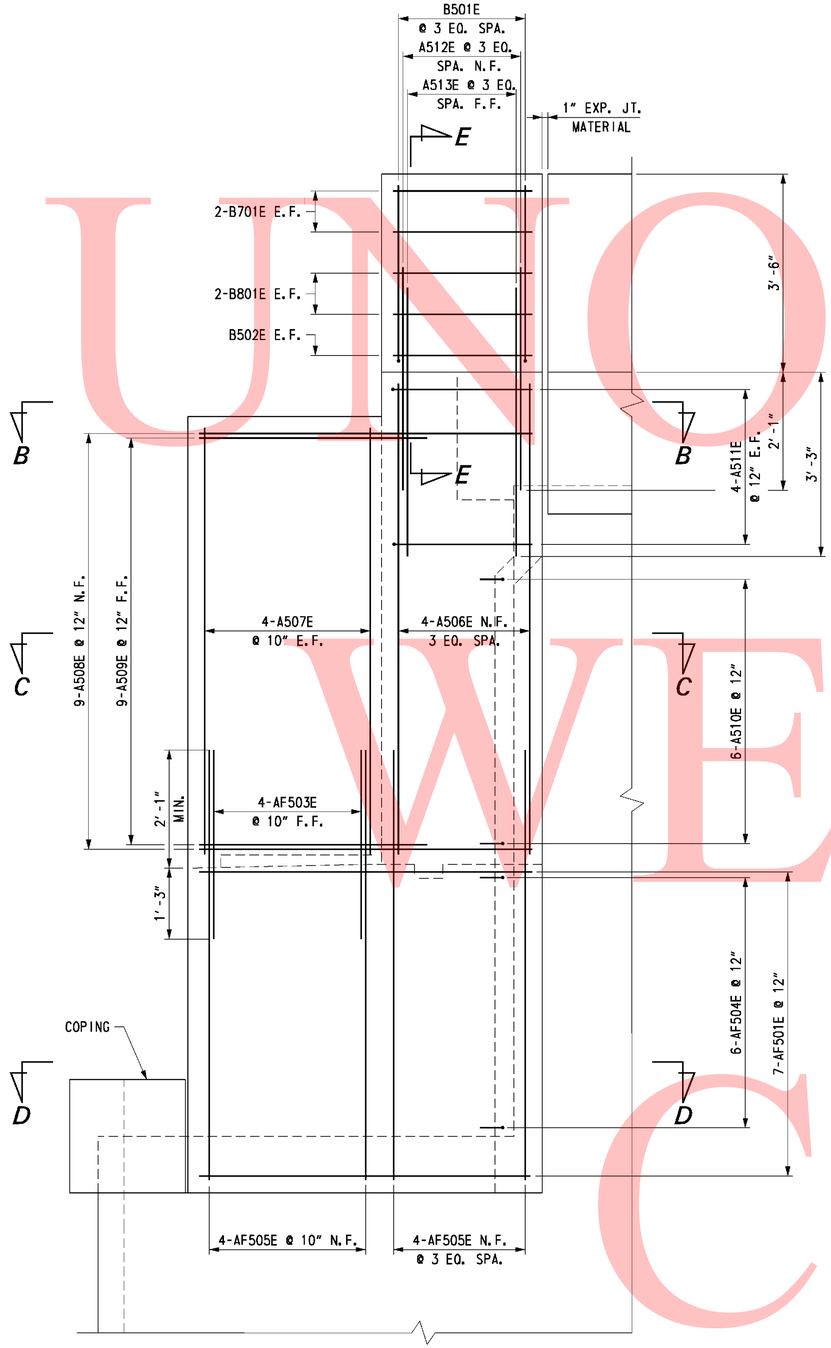

WING WALL II & IV SIDE ELEVATION

SCALE: ¾" = 1'-0"

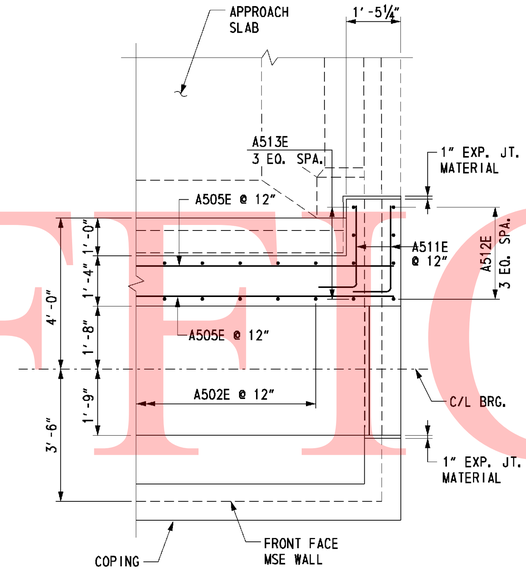

SECTION B-B

SCALE: ½" = 1'-0"

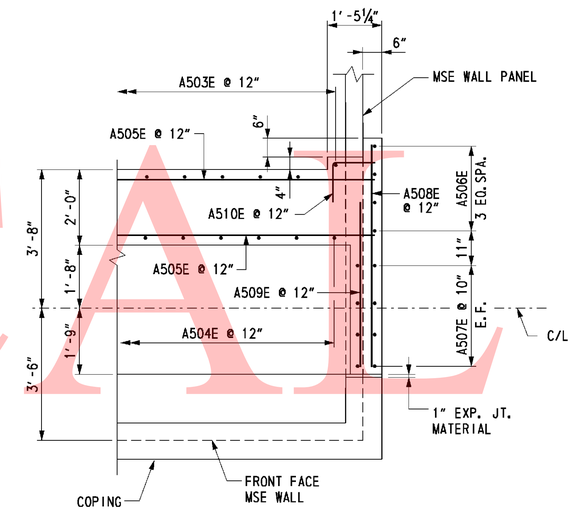

SECTION C-C

SCALE: ½" = 1'-0"

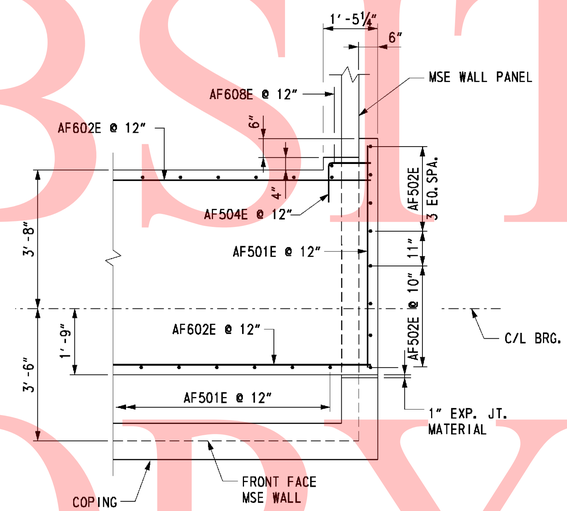

SECTION D-D

SCALE: ½" = 1'-0"

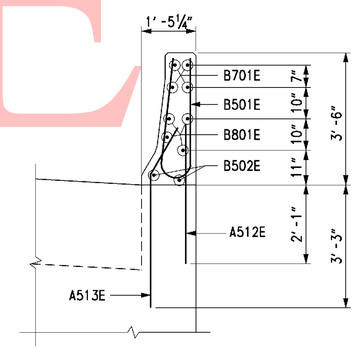

SECTION E-E

SCALE: ½" = 1'-0"

CROSS REFERENCE NOTES:

1. FOR ABUTMENT A PLAN AND ELEVATION, SEE DWG S6-6.
2. FOR ABUTMENT B PLAN AND ELEVATION, SEE DWG. S6-9.
3. FOR ABUTMENT A ELEVATION REINFORCEMENT DETAILS, SEE DWG. S6-7.
4. FOR ABUTMENT B ELEVATION REINFORCEMENT DETAILS, SEE DWG. S6-10.
5. FOR REINFORCING BAR LIST, SEE DWG. S1-13.

UNOFFICIAL WEBSITE COPY

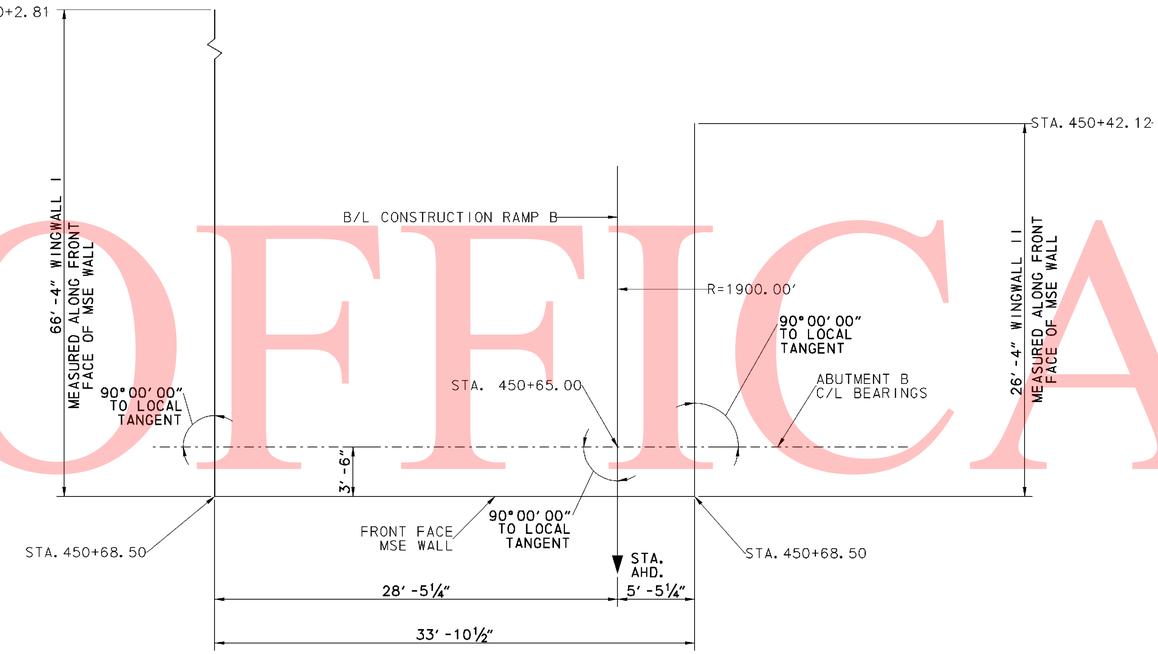

PLAN

SCALE: 3/16" = 1'-0"

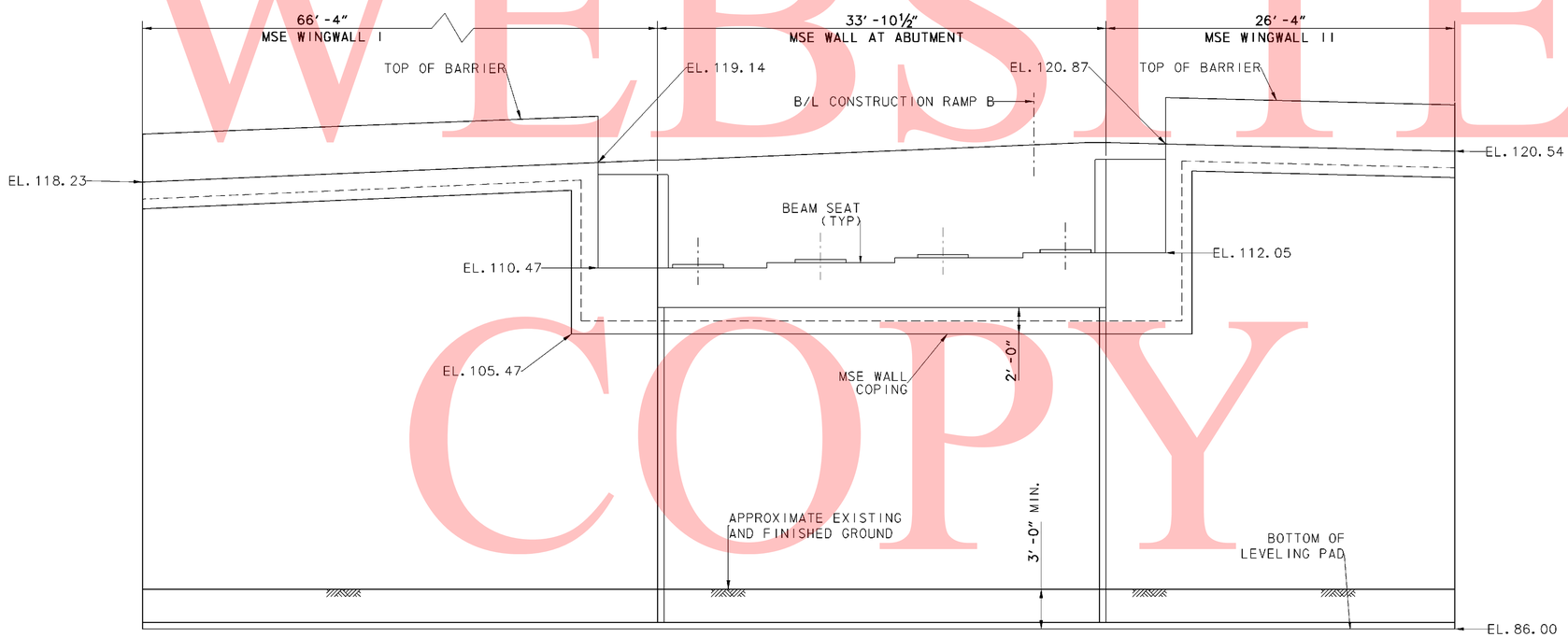

DEVELOPED ELEVATION

SCALE: 3/16" = 1'-0"

CROSS REFERENCE NOTES:

1. FOR BRIDGE PLAN AND ELEVATION, SEE DWG. S6-1.
2. FOR ABUTMENT A PLAN AND ELEVATION, SEE DWG. S6-6.
3. FOR ABUTMENT B PLAN AND ELEVATION, SEE DWG. S6-9.
4. FOR MSE WINGWALL DETAILS, SEE DWG. S6-14.

UNOFFICAL WEBSITE COPY

8/11/2010 9:51:52 AM
M:\PROJECTS\2003\03059_DELTRNPK\SR1_MALL\CADD\2809003\PLANS.DGN\AB07_BR-S6_SR1.DGN

DELAWARE DEPARTMENT OF TRANSPORTATION	ADDENDUMS / REVISIONS	SR1 / I-95 INTERCHANGE	CONTRACT 28-090-03	BRIDGE NO. 1-268B	RAMP B OVER I-95NB	S6-12 SHEET NO. 459
			COUNTY NEW CASTLE	DESIGNED BY: RMB	WINGWALL I AND II PLAN AND ELEVATION	TOTAL SHTS. 803
				CHECKED BY: DWD		

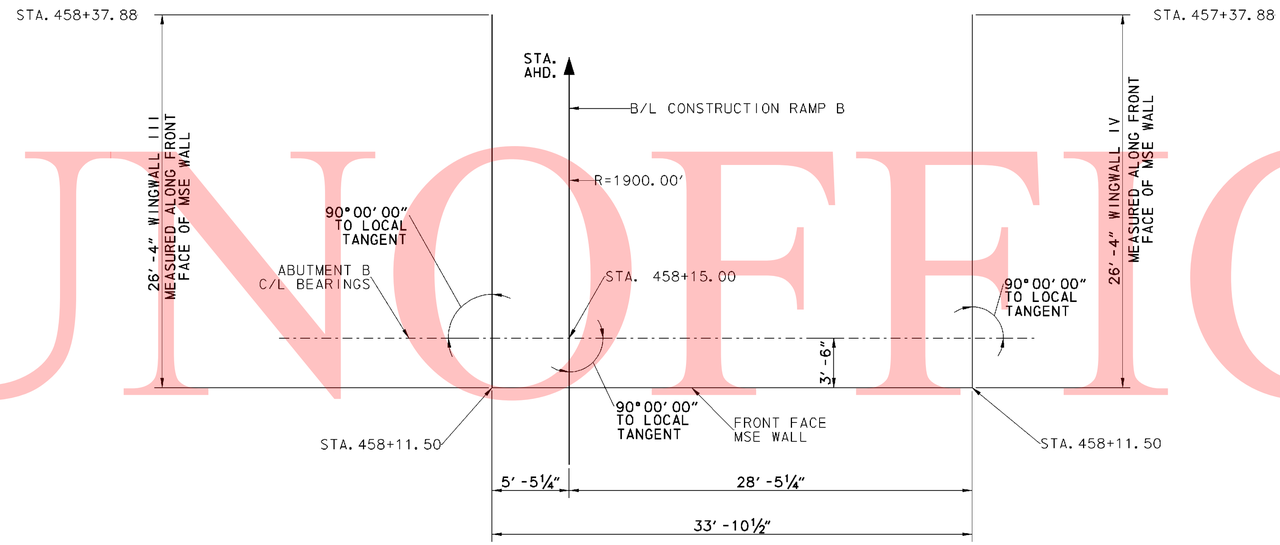

PLAN

SCALE: 3/16" = 1'-0"

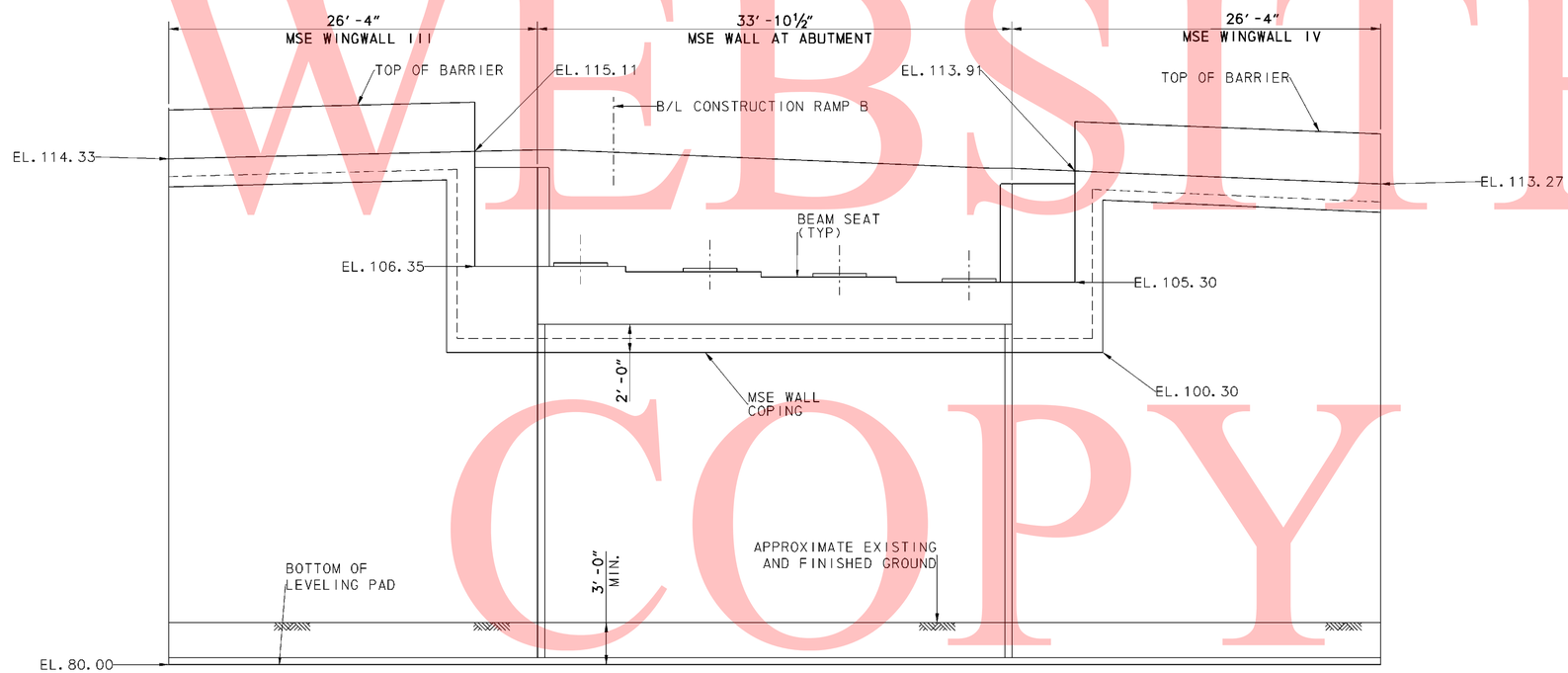

DEVELOPED ELEVATION

SCALE: 3/16" = 1'-0"

CROSS REFERENCE NOTES:

1. FOR BRIDGE PLAN AND ELEVATION, SEE DWG. S6-1.
2. FOR ABUTMENT A PLAN AND ELEVATION, SEE DWG. S6-6.
3. FOR ABUTMENT B PLAN AND ELEVATION, SEE DWG. S6-9.
4. FOR MSE WINGWALL DETAILS, SEE DWG. S6-14.

UNOFFICAL WEBSITE COPY

8/10/2010 7:16:18 PM
M:\PROJECTS\2003\03059_DELTRNPK\SR1_MALL\CADD\2809003\PLANS.DGV\AB08_BR-S6_SR1.DGN

DELAWARE DEPARTMENT OF TRANSPORTATION	ADDENDUMS / REVISIONS	SR1 / I-95 INTERCHANGE	CONTRACT 28-090-03	BRIDGE NO. 1-268B	RAMP B OVER I-95NB WINGWALLS III AND IV PLAN AND ELEVATION	S6-13 SHEET NO. 460
			COUNTY NEW CASTLE	DESIGNED BY: RMB		TOTAL SHTS. 803
				CHECKED BY: DWD		

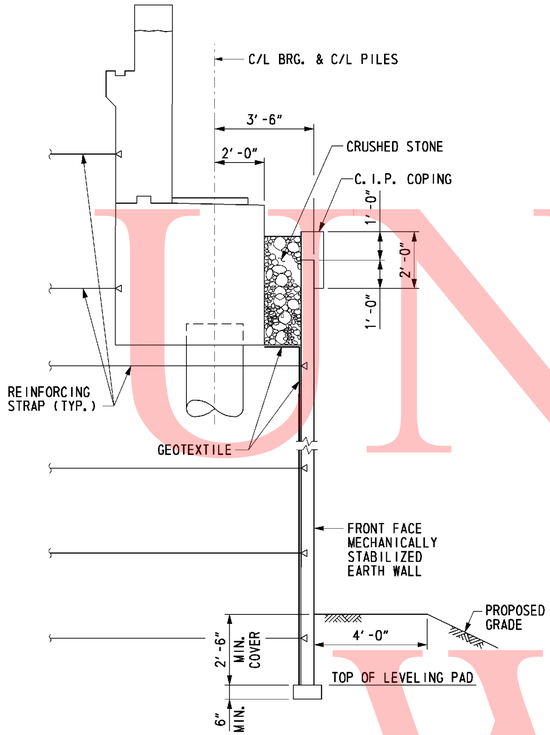

TYPICAL MSE WALL SECTION AT ABUTMENT

SCALE: 3/8" = 1'-0"

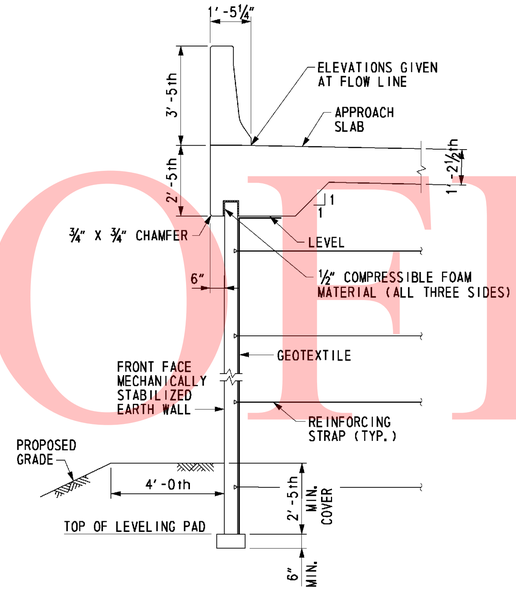

TYPICAL WINGWALL SECTION WITH APPROACH SLAB

SCALE: 3/8" = 1'-0"

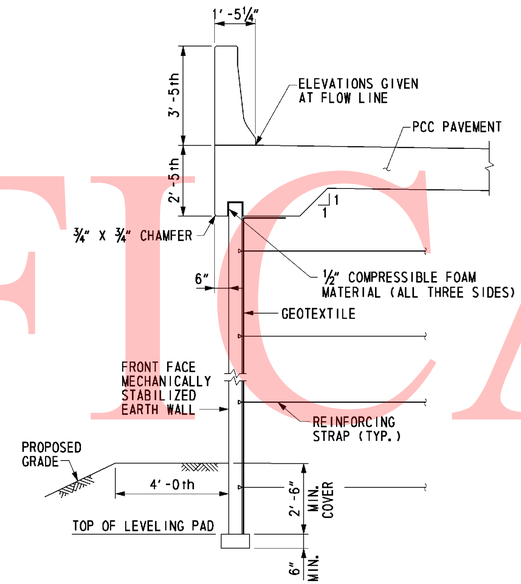

TYPICAL WINGWALL SECTION WITH PCC PAVEMENT

SCALE: 3/8" = 1'-0"

MSE WALL NOTES

SPECIFICATIONS: PROPRIETARY MSE WALLS SHALL BE DESIGNED IN ACCORDANCE WITH THE FOLLOWING:
- AASHTO LRFD BRIDGE DESIGN SPECIFICATIONS, 4TH EDITION WITH ALL CURRENT REVISIONS.
- FEDERAL HIGHWAY ADMINISTRATION PUBLICATION NO. FHWA-NHI-10-024 AND FHWA-NHI-025, "DESIGN AND CONSTRUCTION OF MECHANICALLY STABILIZED EARTH WALLS AND REINFORCED SOIL SLOPES", VOLUME I AND VOLUME II. "MECHANICALLY STABILIZED EARTH WALLS AND REINFORCED SOIL SLOPES DESIGN AND CONSTRUCTION GUIDELINES"

CONCRETE: CONCRETE DESIGN SHALL BE PERFORMED USING THE LOAD AND RESISTANCE FACTOR DESIGN METHOD.

ALL CONCRETE FOR ROADWAY BARRIERS SHALL BE 4,500 PSI. LEVELING PAD CONCRETE SHALL BE 3,500 PSI. MIX REQUIREMENTS SHALL CONFORM TO SECTION 812 OF THE DELAWARE DEPARTMENT OF TRANSPORTATION STANDARD SPECIFICATIONS.

CHAMFERS: ALL EXPOSED CORNERS OF CONCRETE SHALL BE CHAMFERED WITH ¾" x ¾" MILLED CHAMFER STRIPS, UNLESS OTHERWISE NOTED, EXCEPT ON UNEXPOSED FOOTINGS OR WHERE INDICATED BY THE FOLLOWING NOTATION ON THE PLANS: "DO NOT CHAMFER".

REINFORCING STEEL: REINFORCING STEEL SHALL CONFORM TO ASTM A 615, GRADE 60. ALL SPLICES, NOT SHOWN, SHALL BE LAPPED AS PER THE LRFD BRIDGE DESIGN SPECIFICATIONS. MINIMUM COVER FOR ANY BAR SHALL BE 2" UNLESS OTHERWISE NOTED.

FOR TIES AND STIRRUPS, STANDARD ACI BENDING TOLERANCES ARE MODIFIED TO PLUS (+) ZERO INCHES, MINUS (-) NORMAL ACI BENDING TOLERANCE.

ONLY GRADE 60 CAN BE USED ON THIS PROJECT.

ALL REINFORCING STEEL IN THE BARRIER SHALL BE EPOXY COATED, AND SHALL CONFORM TO ASTM D3936.

ALL KEYS ARE NOMINAL SIZE.

THE MSE WALL MANUFACTURER MAY SUBSTITUTE ALTERNATE REINFORCING CONFIGURATIONS AND SUBMIT FOR APPROVAL.

EXPANSION AND CONTRACTION JOINTS: THE LOCATION OF THE EXPANSION AND CONTRACTION JOINTS IN THE BARRIER SHOWN ON THE PLANS MAY BE ADJUSTED TO ACCOMMODATE THE PANEL TYPE USED IN THE PROJECT. ANY CHANGE TO THESE JOINT LOCATIONS SHALL BE SUBMITTED TO THE ENGINEER FOR APPROVAL.

LEVELING PAD: THE PROPRIETARY WALL MANUFACTURER MAY RELOCATE THE LEVELING PAD STEPS AT THEIR DISCRETION PROVIDED THAT THE MINIMUM EMBEDMENT IS MAINTAINED. ANY CHANGE TO THE STEP LOCATIONS SHALL BE SUBMITTED TO THE ENGINEER FOR APPROVAL.

ROADWAY LIMITS: THE PROPRIETARY WALL MANUFACTURER SHALL ASSURE THAT PROPOSED PROPRIETARY WALL COMPONENTS ARE POSITIONED SUCH THAT THE DESIGNATED ROADWAY LIMITS ARE NOT ENCROACHED UPON.

TRAFFIC BARRIER JOINTS: TRAFFIC BARRIER FOOTING SHALL HAVE CONSTRUCTION JOINTS TO COINCIDE WITH THE BARRIER JOINTS.

COORDINATION: CONTRACTOR AND PROPRIETARY WALL MANUFACTURER SHALL COORDINATE LOCATIONS OF INLETS AND PIPES WITH LOCATIONS OF PROPRIETARY WALL TIE BACK SYSTEM AND MOMENT SLAB.

ARCHITECTURAL FINISH: THE MSE WALL PANELS SHALL RECEIVE AN ARCHITECTURAL FINISH.

SERVICE LIFE: ALL RETAINING WALL COMPONENTS SHALL BE DESIGNED FOR A MINIMUM SERVICE LIFE OF 100 YEARS.

WALL SYSTEM: ONLY ONE MSE WALL SYSTEM MAY BE USED ON THIS PROJECT.

ROADWAY SUPERELEVATION: FOR ROADWAY SUPERELEVATION, SEE SUPERELEVATION TABLES.

MSE WALL BACKFILL: MSE WALL BACKFILL SHALL CONSIST OF SPECIFIED BACKFILL AS SHOWN ON SOIL PROFILE SECTION.

REINFORCING STRAPS: SET REINFORCING STRAPS TO CLEAR PILE CASING, 2" MIN. CLEARANCE. MAXIMUM IN-FIELD SKEW OF 15 DEGREES. IF GREATER SKEW ANGLE IS REQUIRED, CONTACT MSE WALL FIELD REPRESENTATIVE PRIOR TO INSTALLATION.

SOIL PROPERTIES

SOIL TYPE	UNIT WEIGHT (PCF)	DRAINED ANGLE OF FRICTION (DEGREES)
SELECT FILL	125	34
COMMON BORROW	130	38
FOUNDATION SOIL		

FOUNDATION NOTES:

THE FACTORED BEARING RESISTANCE SHALL BE VERIFIED PRIOR TO CONSTRUCTION OF THE MSE WALL.

THE INTERNAL STABILITY OF THE MSE WALL SHALL BE DESIGNED BY THE CONTRACTOR USING THE SOIL PARAMETERS PROVIDED FOR EACH STRUCTURE LOCATION. THE INTERNAL STABILITY CALCULATIONS SHOULD BE SIGNED AND SEALED BY A PROFESSIONAL ENGINEER LICENSED IN THE STATE OF DELAWARE AS INDICATED IN THE PROJECT SPECIFICATIONS.

ISOLATED AREAS OF UNDERCUTTING OF EXISTING FILL MAY BE ENCOUNTERED DURING CONSTRUCTION OF THIS RETAINING WALL.

A QUARANTINE PERIOD OF APPROXIMATELY 60-DAYS IS REQUIRED AFTER CONSTUCTION OF THE FULL HEIGHT OF THE MSE WALL IS ACHIEVED. THE ENGINEER SHALL APPROVE THE COMPLETION OF THE QUARANTINE PERIOD PRIOR TO CONSTUCTION OF ANY MOMENT SLABS OR PARAPETS. THE LENGTH OF QUARANTINE PERIOD MAY BE ADJUSTED BY THE ENGINEER BASED ON THE RESULTS OF INSTRUMENTATION MONITORING PROGRAM ITEMS 202505, 202514 AND 202518.

CROSS REFERENCE NOTES:

1. FOR BRIDGE PLAN AND ELEVATION, SEE DWG. S6-1.

2. FOR WINGWALLS PLAN AND ELEVATION, SEE DWGS. S6-12 & 13.

UNOFFICAL WEBSITE COPY

REINFORCING BAR LIST

ABUTMENT A

MARK	LENGTH	NO. BARS	TYPE	A	B	C	D	E	G	H	J	K	O	R	REMARKS
A501E	3′-9″	35	16		1′-6″	0′-10″	1′-5″								
A502E	7′-2″	35	17		3′-1″	1′-0″	3′-1″								
A504E	9′ - 3″	35	STR.												
A505E	33′-7″	20	STR.												
A601E	7′-0″	35	STR.												
AF601E	33′-6″	14	STR.												
AF602E	6′-10″	16	36	11″	5′-11″										
AF603E	12′-3″	8	36	11″	11′-4″										
AF604E	6′-2″	2	STR.												
AF606E	19′-8″	8	T2	1′-0″	5′-0″	3′-10″	5′-0″	3′-11″	1′-0″						
AF607E	20′-8″	10	T2	1′-0″	5′-0″	4′-4″	5′-0″	4′-5″	1′-0″						
AF608E	21′-10″	10	T2	1′-0″	5′-0″	4′-11″	5′-0″	5′-0″	1′-0″						
AF609E	22′-10″	6	T2	1′-0″	5′-0″	5′-5″	5′-0″	5′-6″	1′-0″						
AF701E	31′-6″	9	STR.												
AF501E	5′-4″	13	STR.												
AF502E	6′-10″	8	STR.												
AF503E	3′-4″	8	STR.												
AF504E	2′-2″	13	36	1′-1″	1′-1″										
AF505E	8′-5″	8	STR.												
A506E	9′-2″	8	STR.												
A507E	8′-4″	16	STR.												
A508E	6′-0″	18	STR.												
A509E	4′-7″	18	STR.												
A510E	2′-2″	12	36	1′-1″	1′-1″										
A511E	3′-3″	16	36	1′-0″	2′-3″										
A512E	3′-10″	8	STR.												
A513E	4′-8″	8	16			3′ -5	1′-3″			1′-0¼″		0′-8¾″			
B501E	6′-9″	8	H1		2′-9 1/2″	1′-2″	2′-9½″			0′-5″			0′-4½″		
B502E	2′-0″	4	STR.												
B701E	2′-0″	8	STR.												
B801E	2′-0″	8	STR.												
AP401	6′-5″	64	T3									1′-6″	1′-7″		
AP801	8′-5″	64	37	0′-11″	7′-6″						0′-8″				
A611E	4′-8″	24	2	1′-0″	2′-8″				1′-0″						
A612E	5′-6″	20	2	1′-0″	3′-6″				1′-0″						

ABUTMENT B

MARK	LENGTH	NO. BARS	TYPE	A	B	C	D	E	G	H	J	K	O	R	REMARKS
A501E	3′-9″	35	16		1′-6″	0′-10″	1′-5″								
A502E	7′-2″	35	17		3′-1″	1′-0″	3′-1″								
A504E	9′ - 3″	35	STR.												
A505E	33′-7″	20	STR.												
A601E	7′-0″	35	STR.												
AF601E	33′-6″	14	STR.												
AF602E	6′-10″	16	36	11″	5′-11″										
AF603E	12′-3″	8	36	11″	11′-4″										
AF604E	6′-2″	2	STR.												
AF606E	19′-8″	8	T2	1′-0″	5′-0″	3′-10″	5′-0″	3′-11″	1′-0″						
AF607E	20′-8″	10	T2	1′-0″	5′-0″	4′-4″	5′-0″	4′-5″	1′-0″						
AF608E	21′-10″	10	T2	1′-0″	5′-0″	4′-11″	5′-0″	5′-0″	1′-0″						
AF609E	22′-10″	6	T2	1′-0″	5′-0″	5′-5″	5′-0″	5′-6″	1′-0″						
AF701E	31′-6″	9	STR.												
AF501E	5′-4″	13	STR.												
AF502E	6′-10″	8	STR.												
AF503E	3′-4″	8	STR.												
AF504E	2′-2″	13	36	1′-1″	1′-1″										
AF505E	8′-5″	8	STR.												
A506E	9′-2″	8	STR.												
A507E	8′-4″	16	STR.												
A508E	6′-0″	18	STR.												
A509E	4′-7″	18	STR.												
A510E	2′-2″	12	36	1′-1″	1′-1″										
A511E	3′-3″	16	36	1′-0″	2′-3″										
A512E	3′-10″	8	STR.												
A513E	4′-8″	8	16			3′ -5	1′-3″			1′-0¼″		0′-8¾″			
B501E	6′-9″	8	H1		2′-9 1/2″	1′-2″	2′-9½″			0′-5″			0′-4½″		
B502E	2′-0″	4	STR.												
B701E	2′-0″	8	STR.												
B801E	2′-0″	8	STR.												
AP401	6′-5″	64	T3									1′-6″	1′-7″		
AP801	8′-5″	64	37	0′-11″	7′-6″						0′-8″				
A611E	4′-8″	24	2	1′-0″	2′-8″				1′-0″						
A612E	5′-6″	20	2	1′-0″	3′-6″				1′-0″						

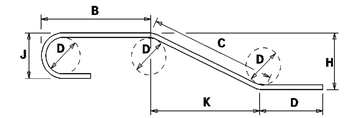

NOTES:

1. FIGURES SHOWN IN CIRCLES REPRESENT BAR BEND TYPES.
2. STANDARD BAR BENDS INCLUDE ONLY TYPES 1-32, S1-S12, AND T1-T16.
3. ALL DIMENSIONS ARE OUT-TO-OUT OF BAR EXCEPT "A" AND "G" ON STANDARD 180^ AND 135^ HOOKS.
4. "J" DIMENSIONS ON 180^ HOOKS TO BE SHOWN ONLY WHERE NECESSARY TO RESTRICT HOOK SIZE, OTHERWISE STANDARD HOOKS ARE TO BE USED.
5. WHERE "J" IS NOT SHOWN, "J" WILL BE KEPT EQUAL TO OR LESS THAN "H" ON TRUSS BARS. WHERE "J" CAN EXCEED "H", IT SHALL BE SHOWN.
6. "H" DIMENSIONS OF STIRRUPS TO BE SHOWN WHERE NECESSARY TO FIT WITHIN THE CONCRETE.
7. UNLESS OTHERWISE NOTED, DIAMETER "D" IS THE SAME FOR ALL BENDS AND HOOKS ON A BAR.
8. WHERE SLOPE DIFFERS FROM 45^ OFFSET, "H" AND "K" MUST BE SHOWN.
9. WHERE BARS ARE TO BE BENT MORE ACCURATELY THAN STANDARD BENDING TOLERANCES, BENDING DIMENSIONS WHICH REQUIRE CLOSER FABRICATION SHOULD HAVE LIMITS INDICATED.
10. FOR RECOMMENDED DIAMETER "D", OF BENDS, HOOKS, ETC., REFER TO TABLE AT RIGHT, 'CRSI' OR 'ACI' TABLES.
11. TYPE S1-S12, T1-T16 APPLY TO BAR SIZES 3 THROUGH 6.

ASTM STANDARD ENGLISH REINFORCING BARS				RECOMMENDED END HOOKS, APPLICABLE TO ALL GRADES			
	NOMINAL DIMENSIONS				180° HOOKS		90° HOOKS
BAR SIZE	DIAMETER (inches)	AREA (inches²)	WEIGHT (lbs./ft.)	D	A OR G	J	A OR G
3	0.375	0.110	0.376	2″*	5″	3″	6″
4	0.500	0.200	0.668	3″	6″	4″	8″
5	0.625	0.310	1.043	3″*	7″	5″	10″
6	0.750	0.440	1.502	4″*	8″	6″	1′-0″
7	0.875	0.600	2.044	5″*	10″	7″	1′-2″
8	1.000	0.790	2.670	6″	11″	8″	1′-4″
9	1.128	1.000	3.400	9″*	1′-3″	11″*	1′-7″
10	1.270	1.270	4.303	10″*	1′-5″	1′-1″*	1′-10″
11	1.410	1.560	5.313	1′-0″	1′-7″	1′-2″*	2′-0″
14	1.693	2.250	7.650	1′-6″*	2′-3″	1′-9″*	2′-7″
18	2.257	4.000	13.600	2′-0″	3′-0″	2′-4″*	3′-5″

STANDARD BAR BENDS

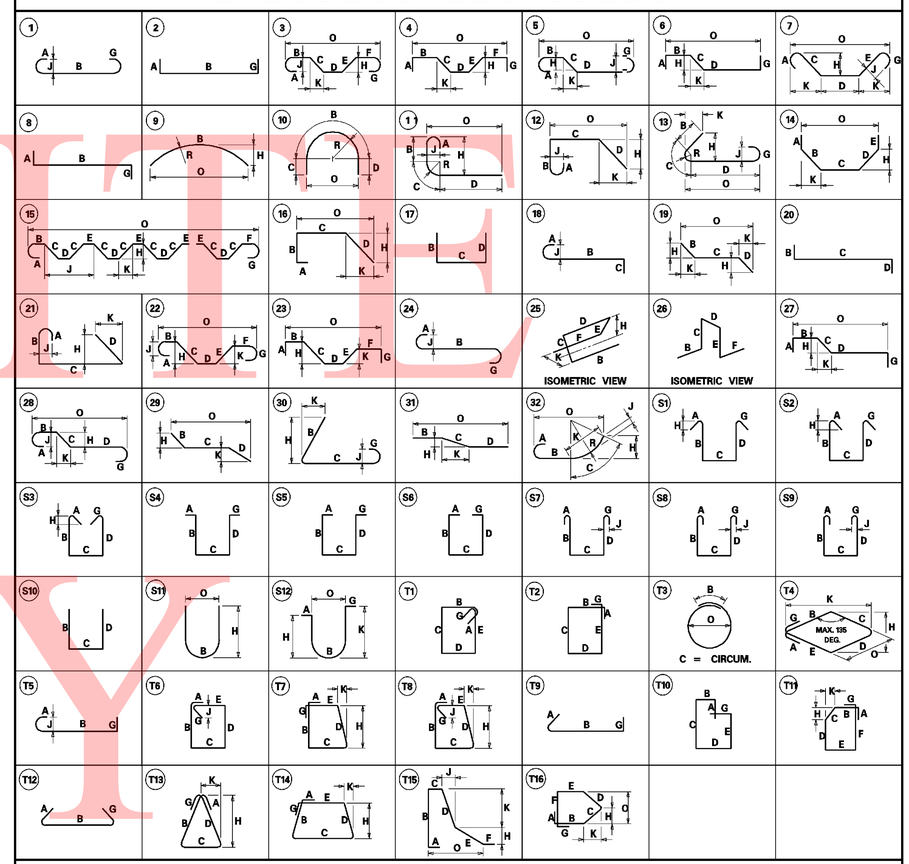

SPECIAL BAR BENDS

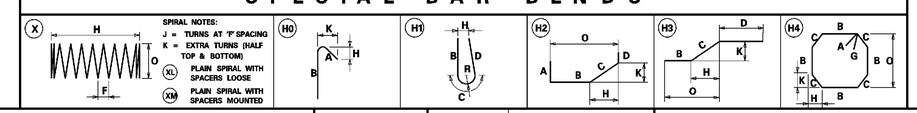

UNOFFICIAL WEBSITE COPY

8/13/2010 9:49:07 AM
M:\PROJECTS\2003\03059_DELTRNPK\SR1_MALL\CADD\2809003\PLANS.DGV\BR01_BR-S6_SR1.DGN

DELAWARE DEPARTMENT OF TRANSPORTATION

ADDENDUMS / REVISIONS	

SR1 / I-95 INTERCHANGE

CONTRACT	BRIDGE NO.	1-268B
28-090-03	DESIGNED BY:	
COUNTY		
NEW CASTLE	CHECKED BY:	

RAMP B OVER I-95NB

ABUTMENT REINFORCEMENT BAR SCHEDULE

S6- 15	
SHEET NO.	462
TOTAL SHTS.	803

CROSS REFERENCE NOTES:

1. FOR BRIDGE PLAN AND ELEVATION, SEE DWG. S6-1.
2. FOR PIER FOUNDATION DETAILS, SEE DWG. S6-17.
3. FOR PILE DETAILS, SEE DWG S6-18.

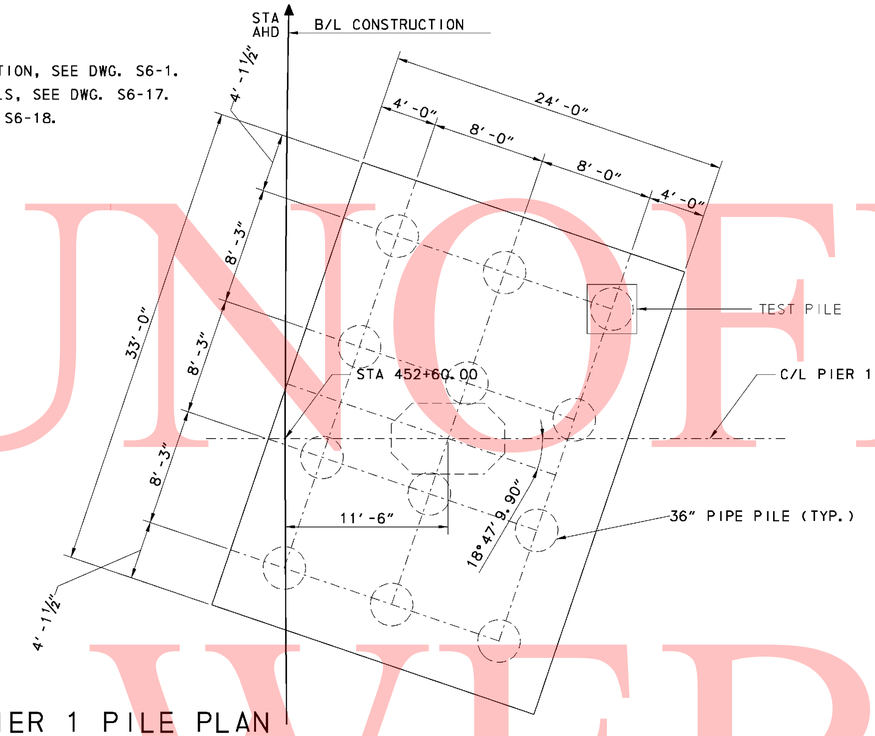

PIER 1 PILE PLAN

SCALE: 3/16" = 1'-0"

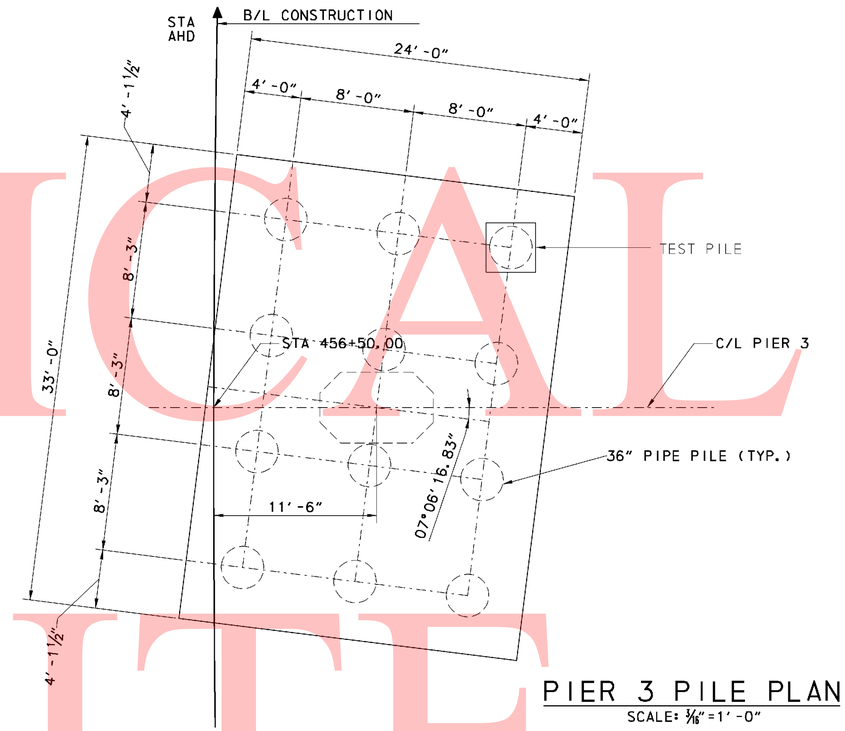

PIER 3 PILE PLAN

SCALE: 3/16" = 1'-0"

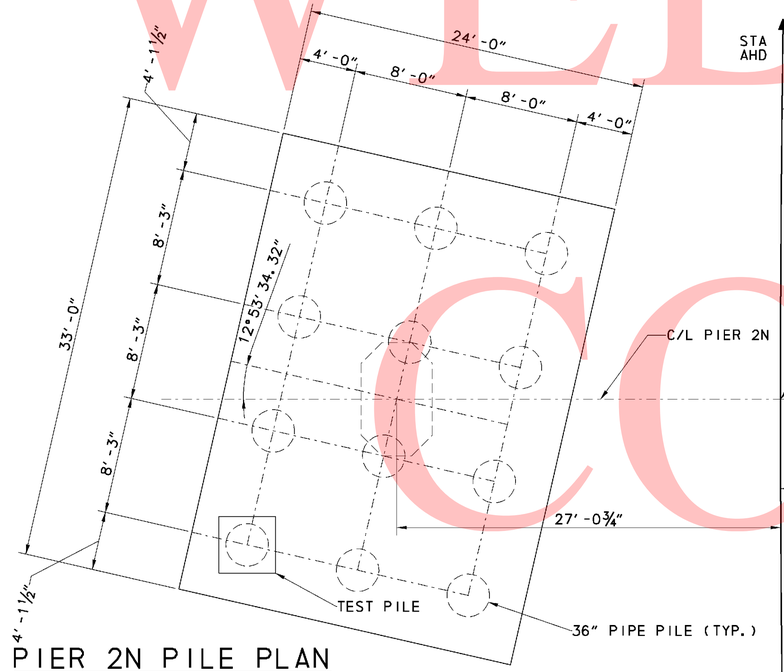

PIER 2N PILE PLAN

SCALE: 3/16" = 1'-0"

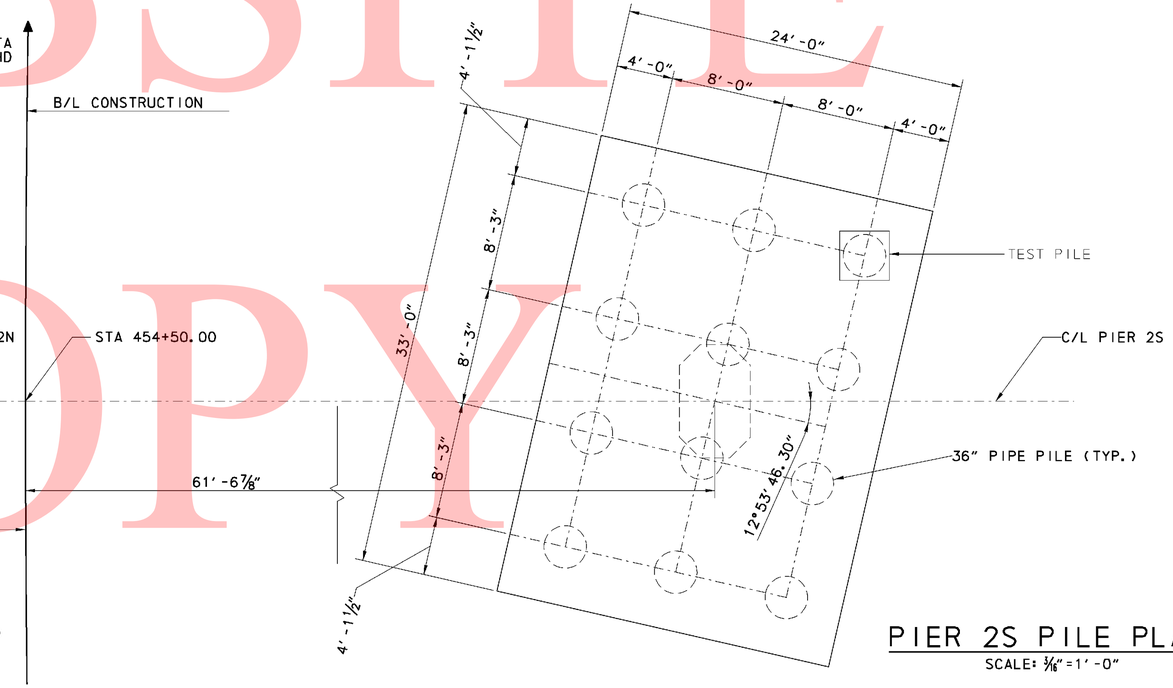

PIER 2S PILE PLAN

SCALE: 3/16" = 1'-0"

UNOFFICAL WEBSITE COPY

7/28/2010 3:08:49 PM
M:\PROJECTS\2003\03059_DELTRNPK\SR1_MALL\CADD\2809003\PLANS.DGN\VFT03_BR_S6_SR1.DGN

DELAWARE DEPARTMENT OF TRANSPORTATION	ADDENDUMS / REVISIONS	SR1 / I-95 INTERCHANGE	CONTRACT 28-090-03	BRIDGE NO. 1-268B	RAMP B OVER I-95NB	S6-16 SHEET NO.	
			COUNTY NEW CASTLE	DESIGNED BY: RMB	PIER FOUNDATION PLANS	463 TOTAL SHTS.	
				CHECKED BY: DWD		803	

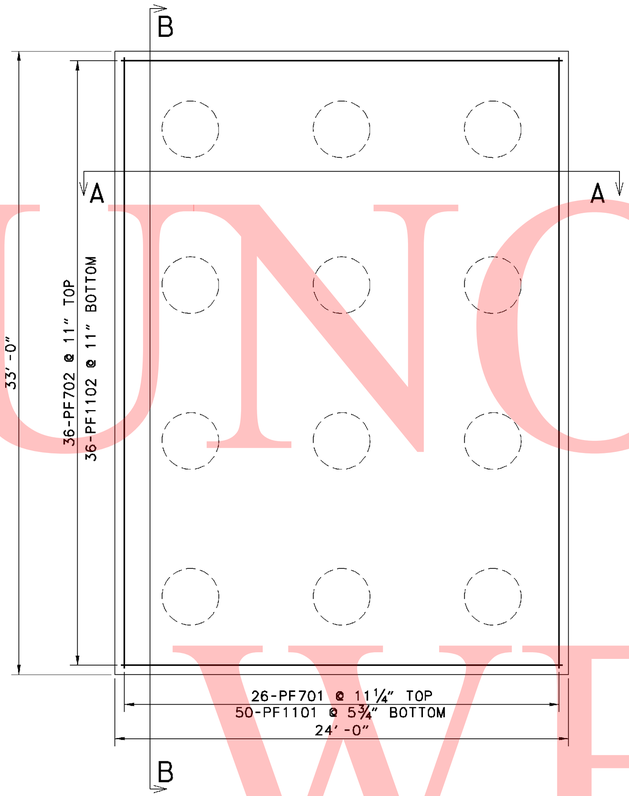

BOTTOM MAT REINFORCING PLAN

SCALE: ¼"=1'-0"

NOTE:

1. PIER FOUNDATION DETAILS ARE FOR PIERS 1, 2N, 2S AND 3.

CROSS REFERENCE NOTES:

1. FOR BRIDGE PLAN AND ELEVATION, SEE DWG. S6-1.
2. FOR PIER FOUNDATION PLAN, SEE DWG. S6-16.
3. FOR PIER 1 PLAN AND ELEVATION, SEE DWG. S6-19.
   FOR PIER 2N AND2S PLAN AND ELEVATION, SEE DWG. S6-21.
   FOR PIER 3 PLAN AND ELEVATION, SEE DWG. S6-26.
4. FOR REINFORCEMENT SCHEDULES, SEE DWG. S6-30.

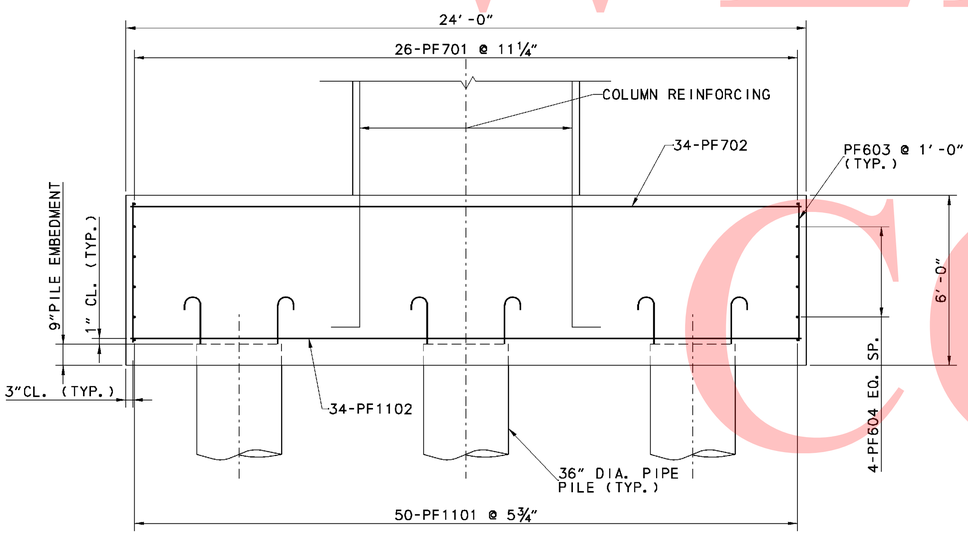

SECTION A-A

SCALE: ⅜"=1'-0"

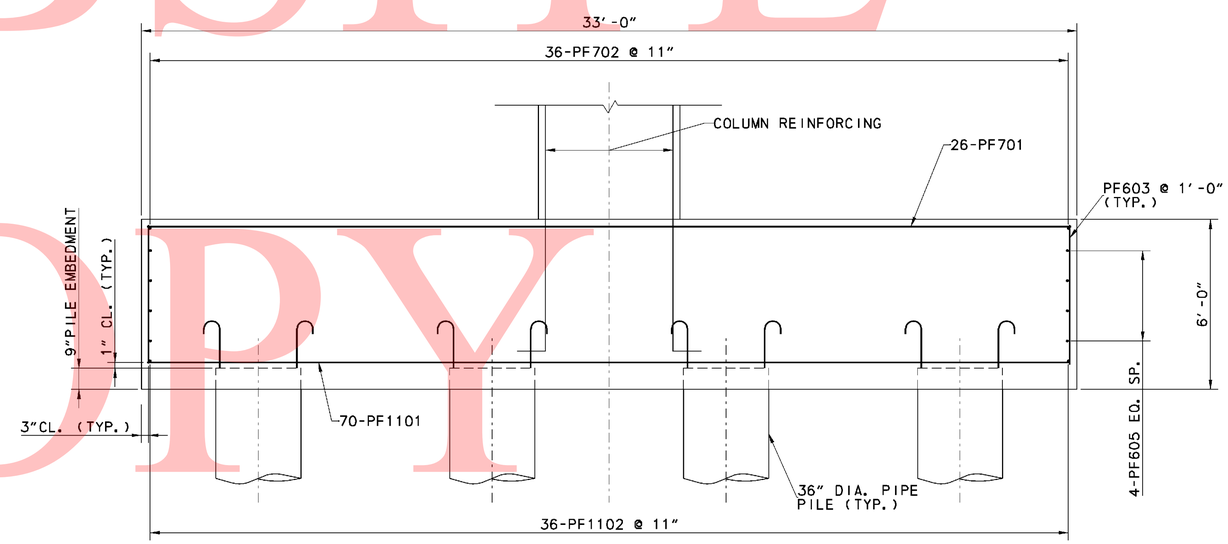

SECTION B-B

SCALE: ⅜"=1'-0"

UNOFFICAL WEBSITE COPY

DELAWARE DEPARTMENT OF TRANSPORTATION	ADDENDUMS / REVISIONS	SR1 / I-95 INTERCHANGE	CONTRACT 28-090-03	BRIDGE NO. 1-268B	RAMP B OVER I-95NB PIER FOUNDATION DETAILS	S6-17 SHEET NO. 464
			COUNTY NEW CASTLE	DESIGNED BY: RMB		TOTAL SHTS. 803
				CHECKED BY: DWD		

7/29/2010 3:08:59 PM
M:\PROJECTS\2003\03059_DELTRNPK\SR1_MALL\CADD\2809003\PLANS.DGV\FT04_BR-S6_SR1.DGN

PILE INSTALLATION DATA

SUBSTRUCTURE UNIT	DESIGN DATA: PILE SIZE (INCHES)	PILE THICKNESS (Inches)	NOMINAL DRIVING RESISTANCE (KIPS)	ESTIMATED PILE TIP ELEVATION	MINIMUM PILE TIP ELEVATION	ACTUAL FIELD DATA: AVERAGE ACTUAL MINIMUM TIP ELEVATION	AVERAGE ACTUAL MAXIMUM TIP ELEVATION
ABUTMENT A	24	0.50	382	+10	+15		
PIER 1	36	0.625	758	+12	+13		
PIER 2 N	36	0.625	435	+34	+36		
PIER 2 S	36	0.625	435	+34	+35		
PIER 3	36	0.625	758	+9	+12		
ABUTMENT B	24	0.50	382	+10	+15		

1. THE ABUTMENT PILES INCLUDE AN ESTIMATED 35-FT STICKUP FOR THE MSE WALL.

CROSS REFERENCE NOTES:

1. FOR PIER REINFORCEMENT SCHEDULE, SEE DWG. S6-30.
2. FOR ABUTMENT REINFORCMENT SCHEDULE, SEE DWG. S6-15.

ABUTMENT A PILE DRIVING INFORMATION

PILE SIZE AND TYPE:
ACTUAL BEARING OBTAINED:
HAMMER TYPE:
PILE HAMMER ENERGY:
SPECIAL DRIVING CONDITIONS AND COMMENTS:

PIER 1 PILE DRIVING INFORMATION

PILE SIZE AND TYPE:
ACTUAL BEARING OBTAINED:
HAMMER TYPE:
PILE HAMMER ENERGY:
SPECIAL DRIVING CONDITIONS AND COMMENTS:

PIER 2 N PILE DRIVING INFORMATION

PILE SIZE AND TYPE:
ACTUAL BEARING OBTAINED:
HAMMER TYPE:
PILE HAMMER ENERGY:
SPECIAL DRIVING CONDITIONS AND COMMENTS:

PIER 2 S PILE DRIVING INFORMATION

PILE SIZE AND TYPE:
ACTUAL BEARING OBTAINED:
HAMMER TYPE:
PILE HAMMER ENERGY:
SPECIAL DRIVING CONDITIONS AND COMMENTS:

PIER 3 PILE DRIVING INFORMATION

PILE SIZE AND TYPE:
ACTUAL BEARING OBTAINED:
HAMMER TYPE:
PILE HAMMER ENERGY:
SPECIAL DRIVING CONDITIONS AND COMMENTS:

ABUTMENT B PILE DRIVING INFORMATION

PILE SIZE AND TYPE:
ACTUAL BEARING OBTAINED:
HAMMER TYPE:
PILE HAMMER ENERGY:
SPECIAL DRIVING CONDITIONS AND COMMENTS:

PILE INSTALLATION NOTES:

1. ALL PILES SHALL BE PIPE PILES (ASTM A 252), GRADE 50. PILES SHALL NOT BE COATED OR CASED.
2. ALL PILES SHALL BE DRIVEN TO THE NOMINAL PILE DRIVING RESISTANCE (Rndr) LISTED IN THE PILE INSTALLATION DATA TABLE.
3. THE CONTRACTOR SHALL BE RESPONSIBLE FOR SUBMITTING A WAVE EQUATION ANALYSIS AND ALL OTHER INCIDENTALS IN ACCORDANCE WITH THE PROJECT SPECIFICATIONS. THE WAVE EQUATION AND HIGH-STRAIN DYNAMIC PILE TESTING MUST BE SIGNED AND STAMPED BY A PROFESSIONAL ENGINEER LISENCED IN THE STATE OF DELAWARE IN ACCORDANCE WITH THE PROJECT SPECIFICATIONS.
4. UPON COMPLETION OF THE HIGH-STRAIN DYNAMIC PILE TESTING THE CONTRACTOR SHALLSUBMIT A CAPWAP ANALYSIS OR OTHER SIMILAR APPROVED SIGNAL MATCHING TECHNIQUE TO THE ENGINEER FOR REVIEW AND APPROVAL IN ACCORDANCE WITH THE PROJECT SPECIFICATIONS.
5. A QUARANTINE PERIOD OF APPROXIMATELY 60 DAYS IS REQUIRED AFTER THE CONSTRUCTION OF THE FULL HEIGHT OF THE FILL AT THE ABUTMENTS IS ACHIEVED. THE ENGINEER SHALL APPROVE THE COMPLETION OF THE WAITING PERIOD, BASED ON RESULTS OF INSTRUMENTATION.
6. PILES MAY NOT BE DRIVEN UNTIL AFTER THE COMPLETION OF THE 60 DAY QUARANTINE PERIOD.
7. SEE THE SPECIAL PROVISIONS FOR SETTLEMENT MONITORING LOCATIONS AND REQUIREMENTS.
8. PILE LENGTHS FOR ORDERING PURPOSES SHALL BE DETERMINED BY TEST PILES. A MINIMUM OF ONE PILE PER SUBSTRUCTURE, AS SHOWN ON THE PLANS, SHALL BE DYNAMICALLY TESTED BY THE CONTRACTOR IN ACCORDANCE WITH SPECIAL PROVISIONS 619519. TEST AND PRODUCTION PILE RE-STRIKES WILL BE PAID AS FOLLOWS:

A). ALL TEST PILE(S) WILL BE RESTRUCK AND DYNAMICALLY TESTED BY THE CONTRACTOR. THE TEST PILE RESTRIKES SHALL BE INCIDENTAL TO ITEM NO. 619519 DYNAMIC PILE TESTING BY CONTRACTOR PROVIDE THAT THEY ARE PERFORMED WITHIN FIVE CALANDAR DAYS FROM INITIAL DRIVE.

B). AN ADDITIONAL PAYMENT WILL BE MADE TO THE CONTRACTOR IF HE IS DIRECTED BY THE ENGINEER TO WAIT AND RESTRIKE THE TEST PILE MORE THAT FIVE CALENDAR DAYS AFTER INITIAL DRIVE. THE CONTRACTOR SHALL BE COMPENSATED AT THE FIXED PRICE OF $1,000.00 PER CALENDAR DAY FOR EVERY DAY, AFTER THE FIFTH CALENDAR DAY, UNDER ITEM NO. 619502 TEST PILE RESTRIKE. MULTIPLE TEST PILE RESTRIKES OCCURRING ON THE SAME DAY WILL ONLY BE PAID FOR AS ONE CALENDAR DAY. NO ADDITIONAL COMPENSATION WILL BE MADE REGARDLESS OF THE NUMBER OF TEST PILE RESTRIKES PERFORMED THAT DAY.

C). RESTRIKES ON PRODUCTION PILES WHICH ARE DESIGNATED TO BE DYNAMICALLY TESTED WILL NO BE PAID UNDER ITEM NO. 619501 PRODUCTION PILE RESTRIKE. THESE PRODUCTION PILE RESTRIKES ARE INCIDENTAL TO ITEM NO. 61519 DYNAMIC PILE TESTING BY CONTRACTOR.

D). THE FIRST 12 PRODUCTION PILE RESTRIKES FOR THE MALL BRIDGE SHALL BE PERFORMED AT NO COST TO THE DEPARTMENT SUBSEQUENT RESTRIKES SHALL BE UNDER ITEM NO. 619501 PRODUCTION PILE RESTRIKES AT THE FIXED PRICE OF $500.00 EACH.

THE DEPARTMENT RESERVE THE RIGHT TO PERFORM DYNAMIC TESTING OF RESTRIKES.

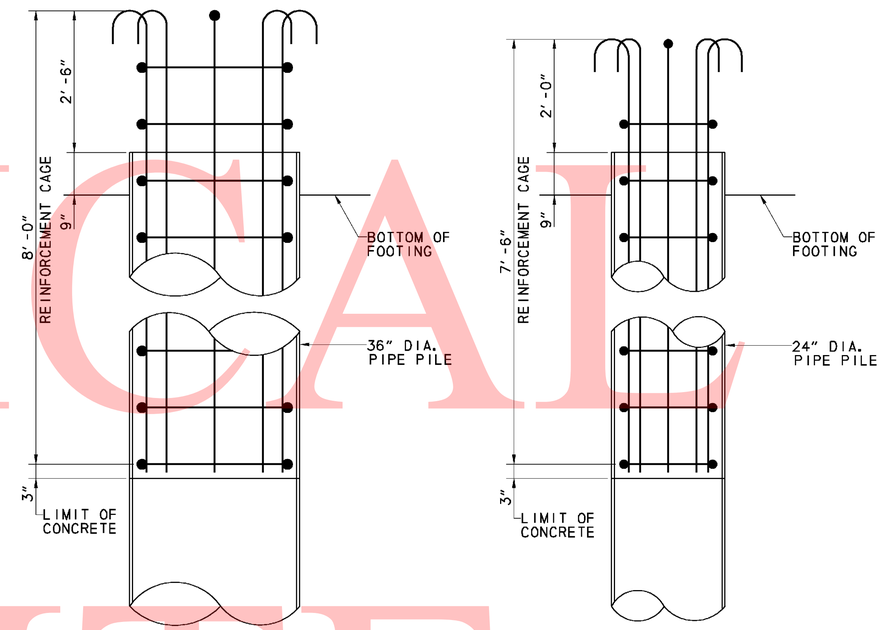

ELEVATION A & B
SCALE: 3/4"=1'-0"

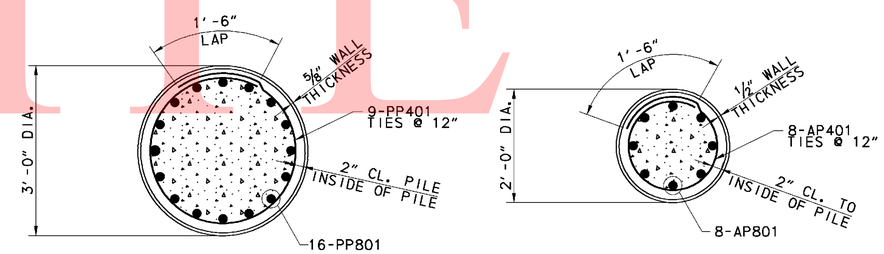

SECTION A & B
SCALE: 3/4"=1'-0"

UNOFFICIAL WEBSITE COPY

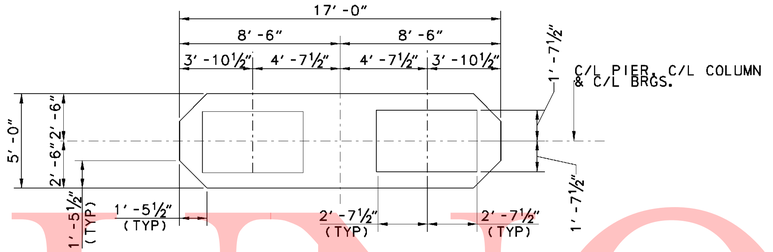

PLAN

SCALE: ¼"=1' -0"

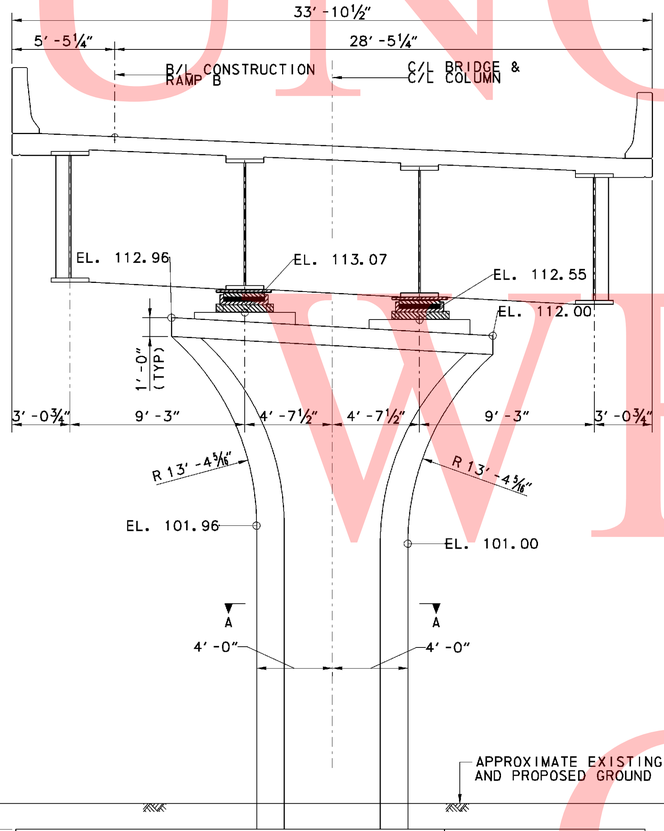

ELEVATION-PIER 1

SCALE: ¼"=1' -0"

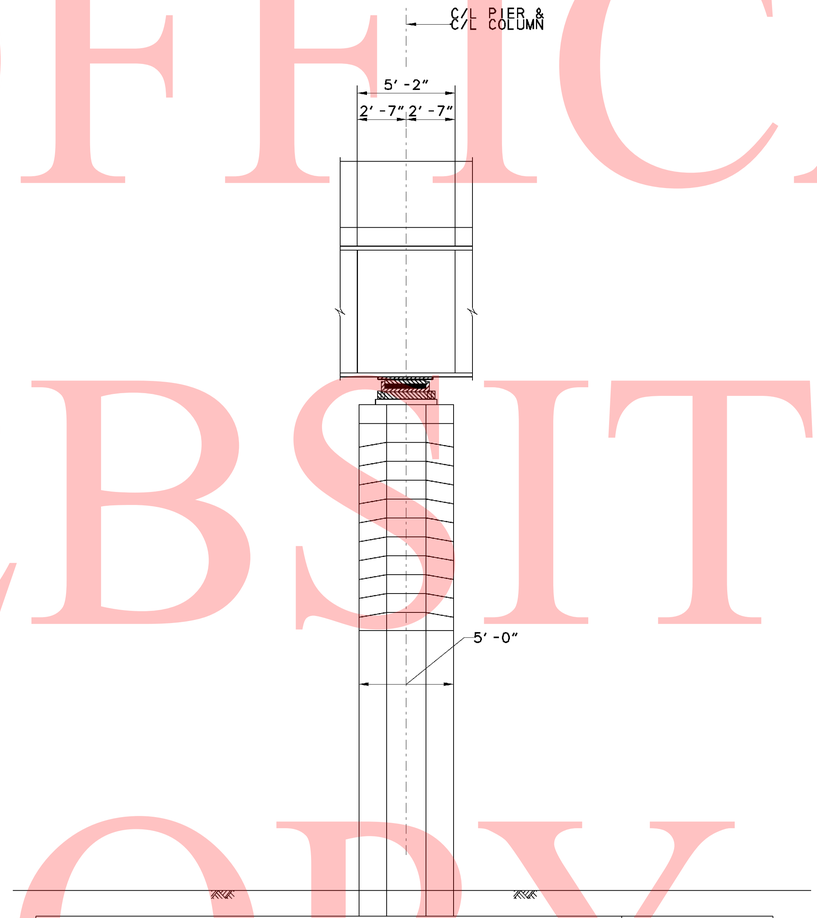

END VIEW

SCALE: ¼"=1' -0"

CROSS REFERENCE NOTES:

1. FOR BRIDGE PLAN AND ELEVATION, SEE DWG. S6-1.
2. FOR PIER FOUNDATION PLAN, SEE DWG. S6-16.
3. FOR INTEGRAL PIER CAP, REINFORCEMENT DETAILS, SEE DWG. S6-28 & S6-29.
4. FOR PIER FOOTING AND COLUMN REINFORCEMENT DETAILS, SEE DWG. S6-17 & S6-20.

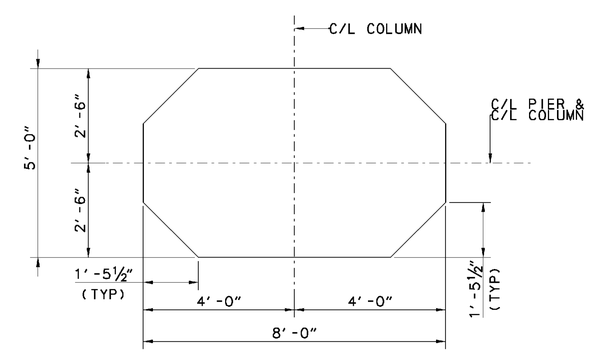

SECTION A-A

SCALE: ¼"=1' -0"

UNOFFICAL WEBSITE COPY

8/13/2010 11:30:59 AM
M:\PROJECTS\2003\03059_DELTRNPK\SR1_MALL\CADD\2809003\PLANS.DGN\PRO1_BR-S6_SR1.DGN

DELAWARE DEPARTMENT OF TRANSPORTATION	ADDENDUMS / REVISIONS	SR1 / I-95 INTERCHANGE	CONTRACT 28-090-03	BRIDGE NO. 1-268B	RAMP B OVER I-95NB PIER 1 PLAN AND ELEVATION	S6-19 SHEET NO. 466 TOTAL SHTS. 803
			COUNTY NEW CASTLE	DESIGNED BY: RMB		
				CHECKED BY: DWD		

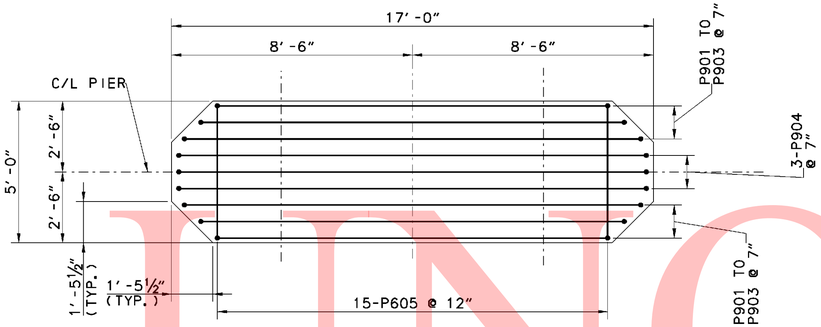

PLAN

SCALE: ⅜"=1'-0"

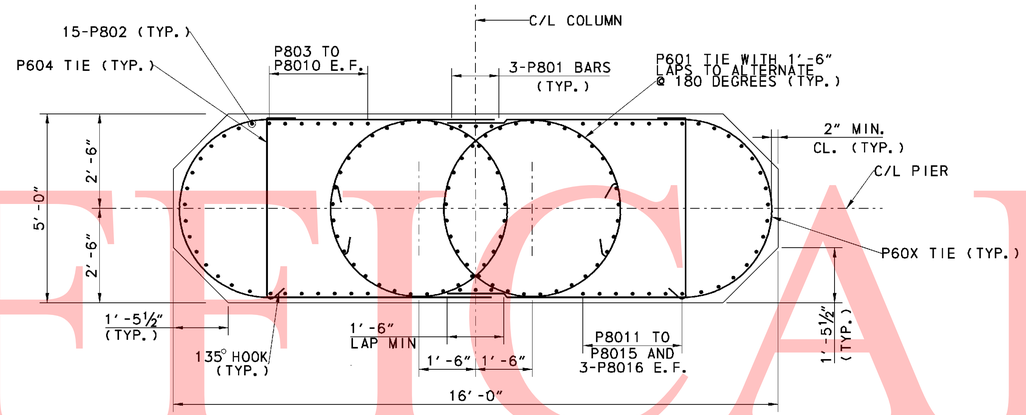

SECTION C-C

SCALE: ½"=1'-0"

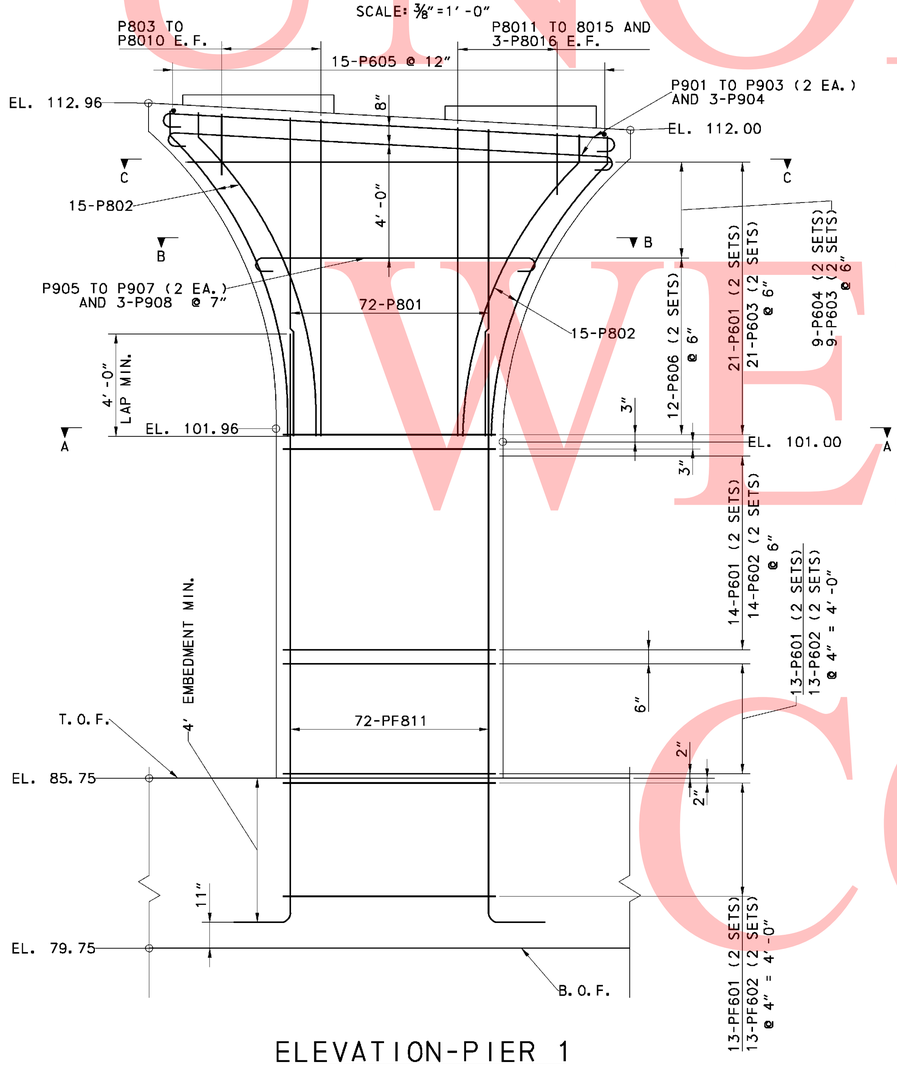

ELEVATION-PIER 1

SCALE: ⅜"=1'-0"

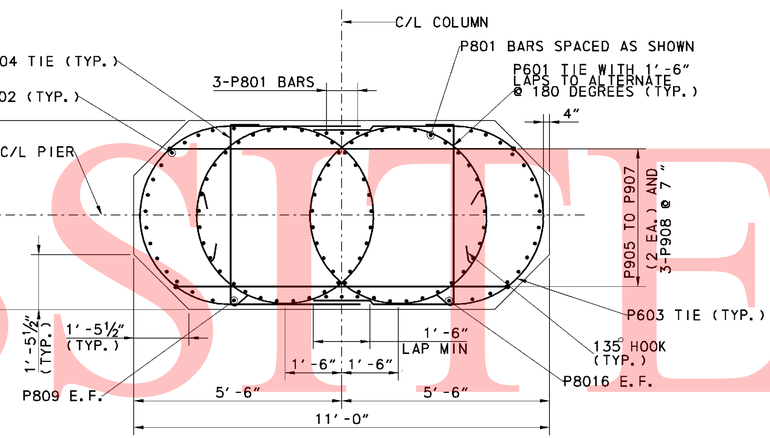

SECTION B-B

SCALE: ½"=1'-0"

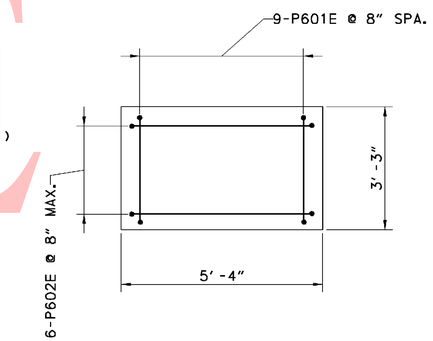

PEDESTAL REINFORCING PLAN

SCALE: ½"=1'-0"

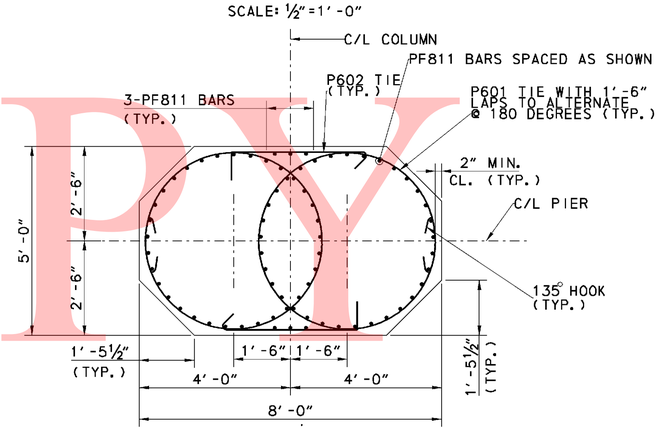

SECTION A-A

SCALE: ½"=1'-0"

CROSS REFERENCE NOTES:

1. FOR BRIDGE PLAN AND ELEVATION, SEE DWG. S6-1.
2. FOR PIER PLAN AND ELEVATION, SEE DWG. S6-19.
3. FOR PIER FOUNDATION PLAN, SEE DWG. S6-16.
4. FOR PIER FOUNDATION DETAILS, SEE DWG. S6-17.

UNOFFICIAL WEBSITE COPY

8/6/2010 8:47:46 AM
M:\PROJECTS\2003\03059_DELTRNPK\SR1_MALLY\CADD\2809003\PLANS.DGV\PR02_BR-S6_SR1.DGN

DELAWARE DEPARTMENT OF TRANSPORTATION	ADDENDUMS / REVISIONS	SR1 / I-95 INTERCHANGE	CONTRACT 28-090-03	BRIDGE NO. 1-268B	RAMP B OVER I-95NB PIER 1 REINFORCING DETAILS	S6-20 SHEET NO. 467
			COUNTY NEW CASTLE	DESIGNED BY: RMB		TOTAL SHTS. 803
				CHECKED BY: DWD		

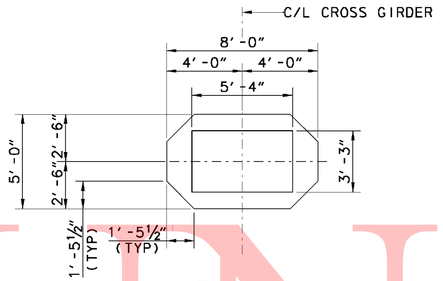

PLAN

SCALE: ¼"=1'-0"

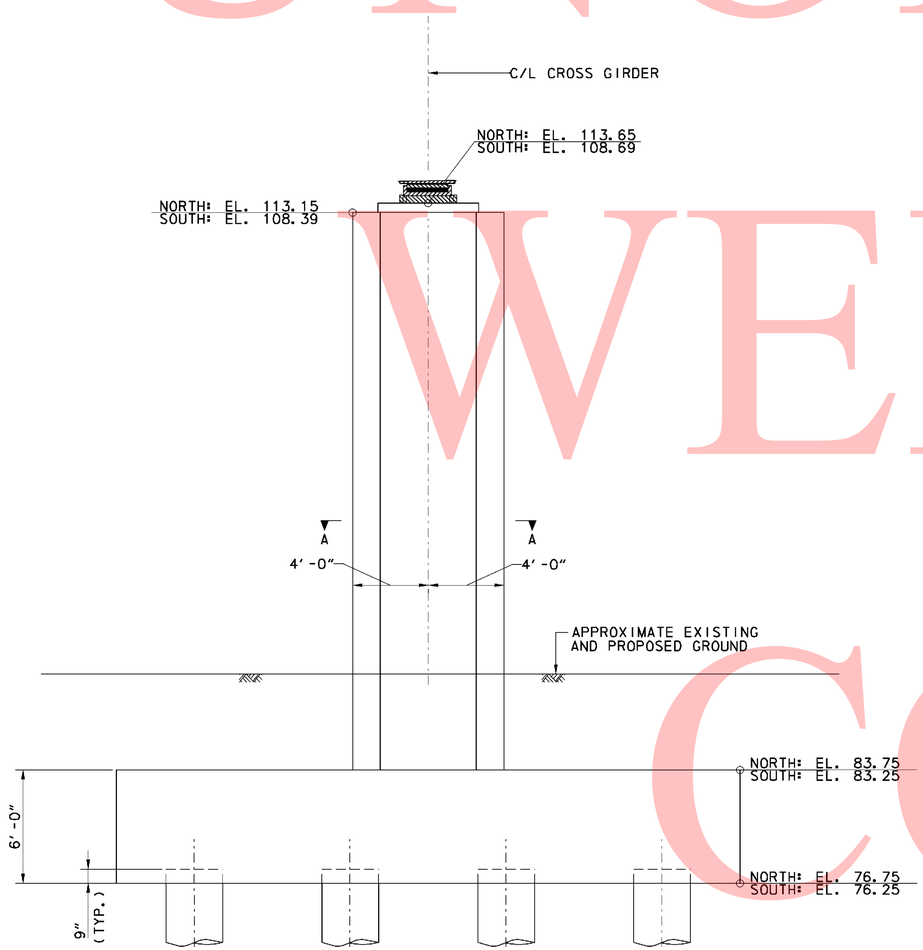

ELEVATION-PIER 2

SCALE: ¼"=1'-0"

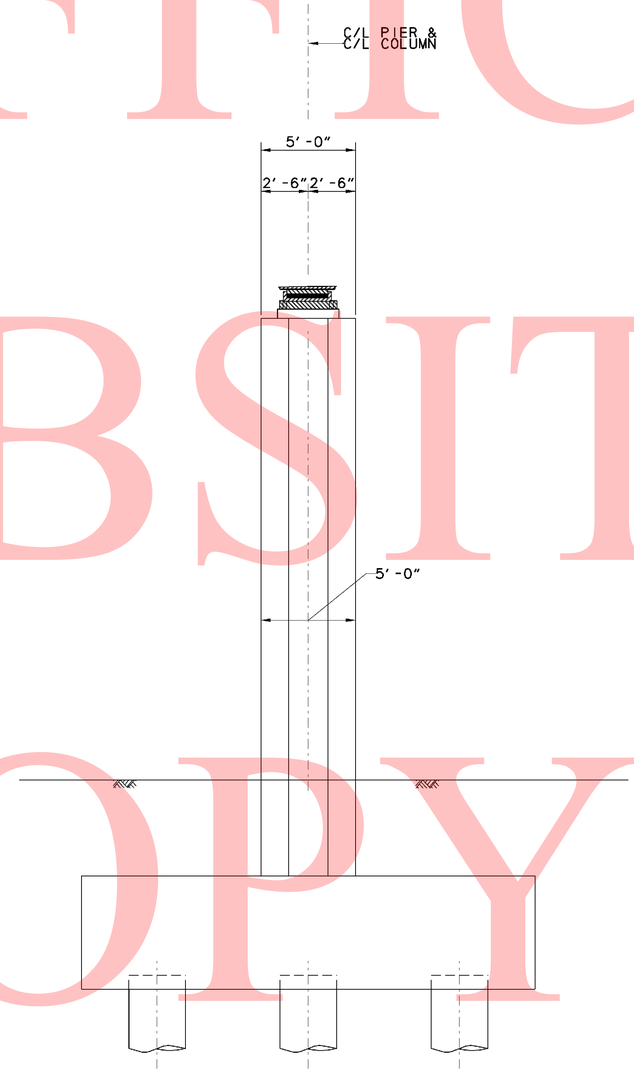

END VIEW

SCALE: ¼"=1'-0"

CROSS REFERENCE NOTES:

1. FOR BRIDGE PLAN AND ELEVATION, SEE DWG. S6-1.
2. FOR PIER FOUNDATION PLAN, SEE DWG. S6-16.
3. FOR CROSSGIRDER DETAILS, SEE DWG. S6-23, S6-24 & S6-25.
4. FOR PIER COLUMN AND FOOTING REINFORCEMENT DETAILS, SEE DWG. S6-22 & S6-17.

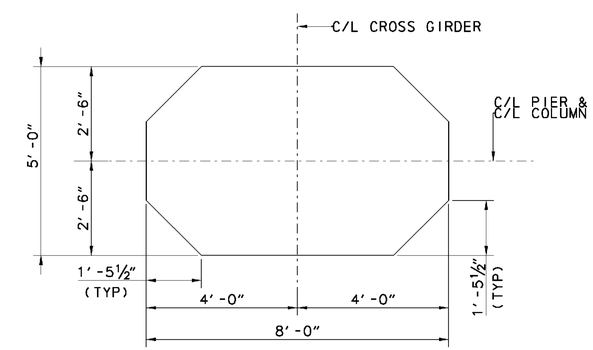

SECTION A-A

SCALE: ¼"=1'-0"

UNOFFICAL WEBSITE COPY

8/6/2010 8:47:53 AM
M:\PROJECTS\2003\03059_DELTRNPK\SR1_MALL\CADD\2809003\PLANS.DGV\PR03_BR-S6_SR1.DGN

DELAWARE DEPARTMENT OF TRANSPORTATION	ADDENDUMS / REVISIONS	SR1 / I-95 INTERCHANGE	CONTRACT 28-090-03	BRIDGE NO. 1-268B	RAMP B OVER I-95NB PIER 2 PLAN AND ELEVATION	S6-21 SHEET NO. 468
			COUNTY NEW CASTLE	DESIGNED BY: RMB		TOTAL SHTS. 803
				CHECKED BY: DWD		

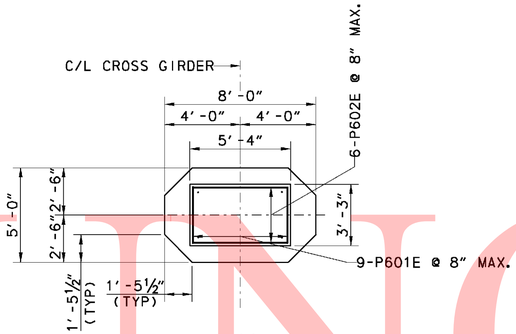

PLAN

SCALE: ¼"=1'-0"

CROSS REFERENCE NOTES:

1. FOR BRIDGE PLAN AND ELEVATION, SEE DWG. S6-1.
2. FOR PIER PLAN AND ELEVATION, SEE DWG. S6-21.
3. FOR PIER FOUNDATION PLAN, SEE DWG. S6-16.
4. FOR PIER FOUNDATION DETAILS, SEE DWG. S6-17.
5. FOR CROSSGIRDER DETAILS, SEE DWG. S6-23, S6-24 & S6-25.

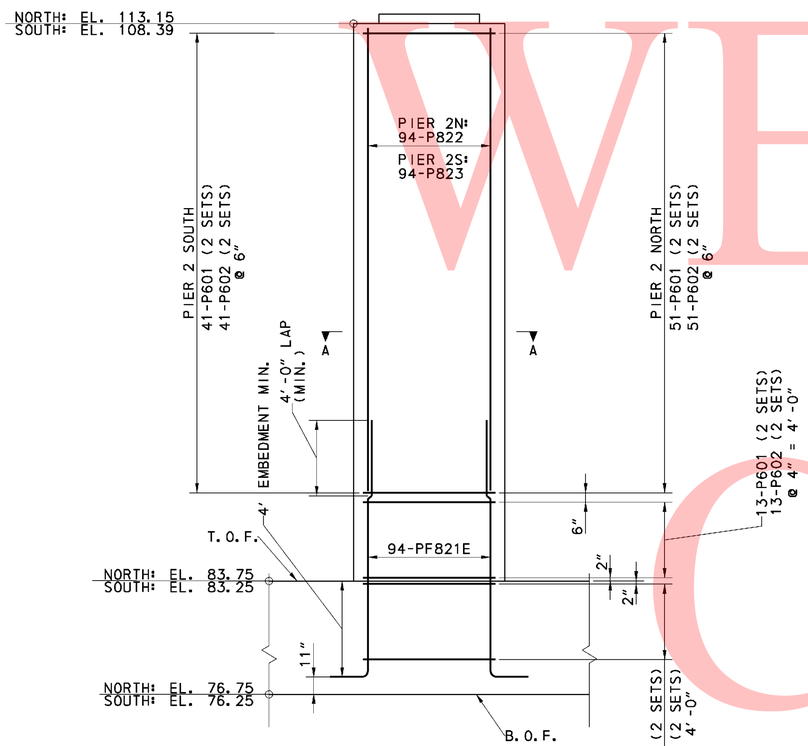

ELEVATION-PIER 2

SCALE: ¼"=1'-0"

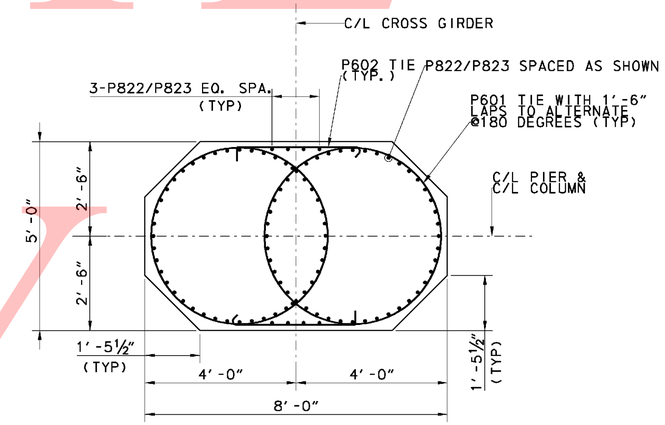

SECTION A-A

SCALE: ¼"=1'-0"

UNOFFICAL WEBSITE COPY

9/6/2010 2:45:48 PM
M:\PROJECTS\2003\03059_DELTRNPK\SR1_MALL\CADD\2809003\PLANS.DGV\PRO4_BR-S6_SR1.DGN

DELAWARE DEPARTMENT OF TRANSPORTATION	ADDENDUMS / REVISIONS	SR1 / I-95 INTERCHANGE	CONTRACT 28-090-03	BRIDGE NO. 1-268B	RAMP B OVER I-95NB PIER 2 REINFORCING DETAILS	S6-22 SHEET NO. 469
			COUNTY NEW CASTLE	DESIGNED BY: RMB		TOTAL SHTS. 803
				CHECKED BY: DWD		

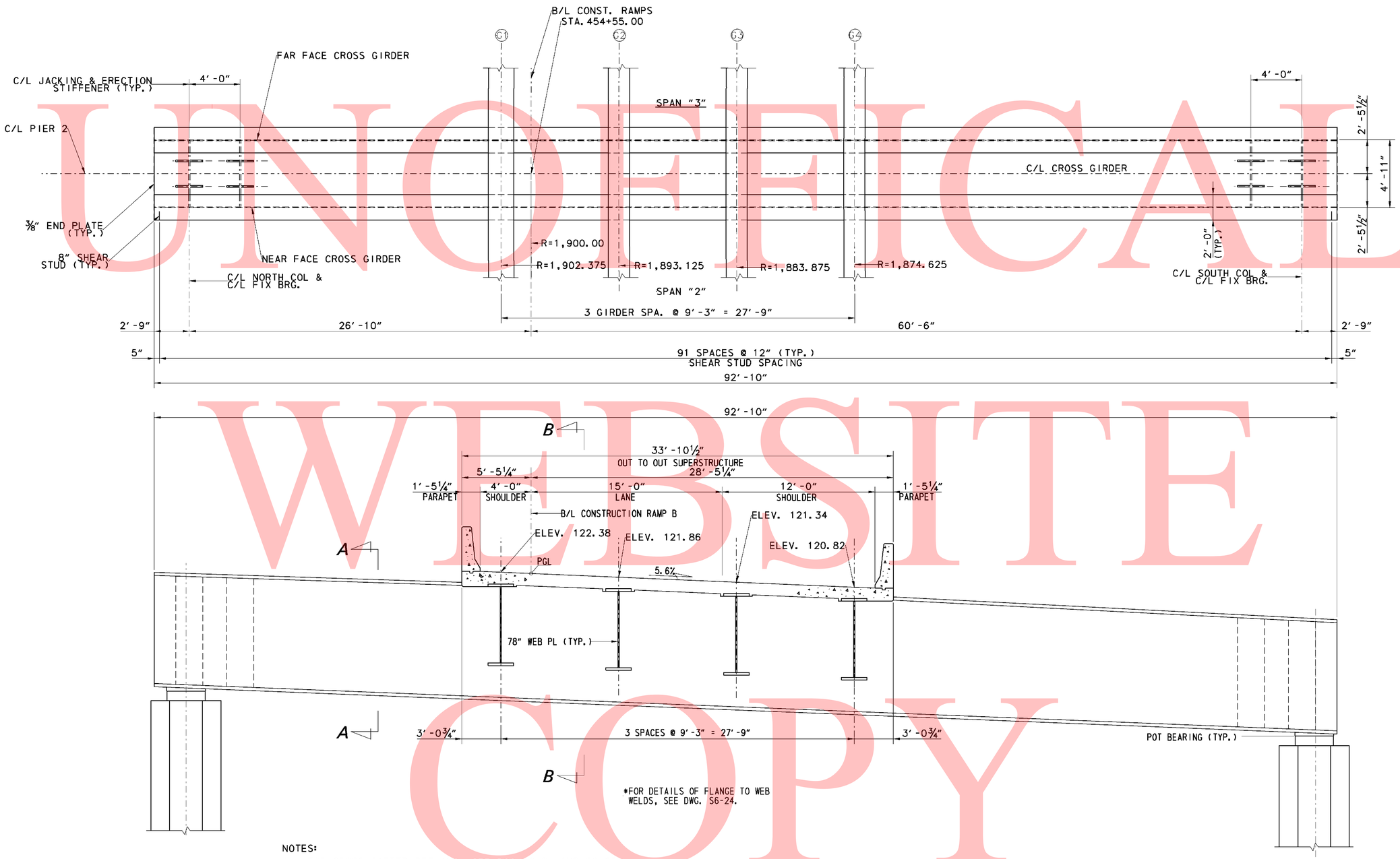

NOTES:

1. FOR CROSS-GIRDER DETAILS, SEE DWG S6-24 AND S6-25.
2. FOR TOP OF PIER ELEVATIONS, SEE DWG S6-22.
3. REINFORCING DETAILS OF CROSS GIRDER, SEE DWG S6-26.
4. REFER TO SHEET S6-25 FOR SHEAR STUD DETAILS.
5. SHIP CROSS GIRDER WITH LONGITUDINAL DIAPHRAGMS.

UNOFFICIAL WEBSITE COPY

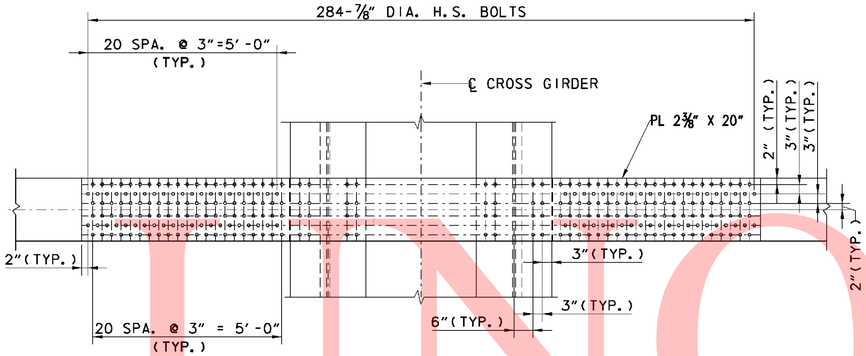

TOP FLANGE SPLICE PLATE

SCALE: ½"=1'-0"
(GIRDERS G2, G3 & G4)

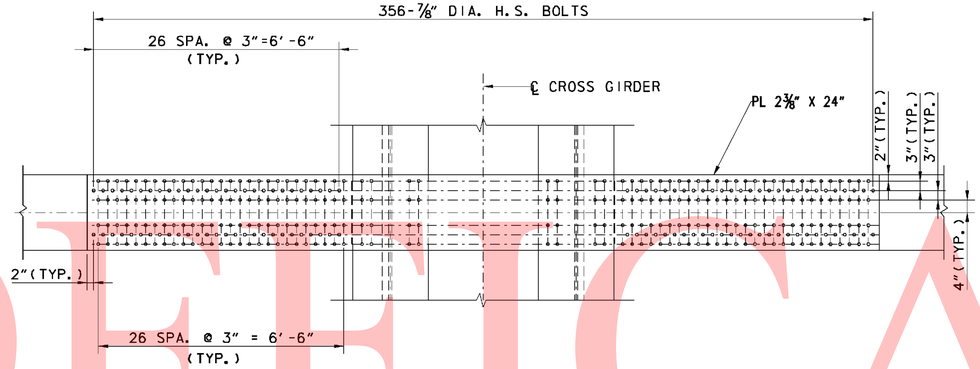

TOP FLANGE SPLICE PLATE

SCALE: ½"=1'-0"
(GIRDER G1)

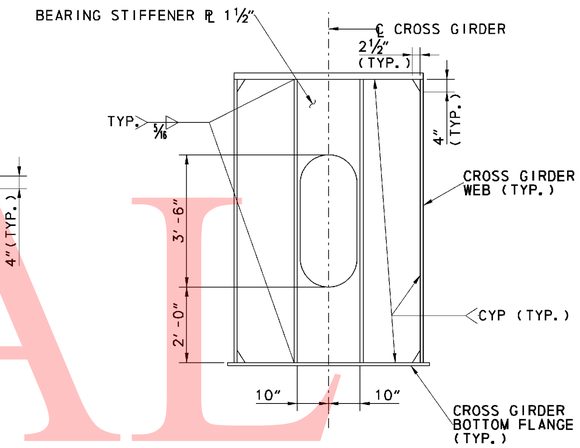

BEARING STIFFENER

SCALE: ½"=1'-0"

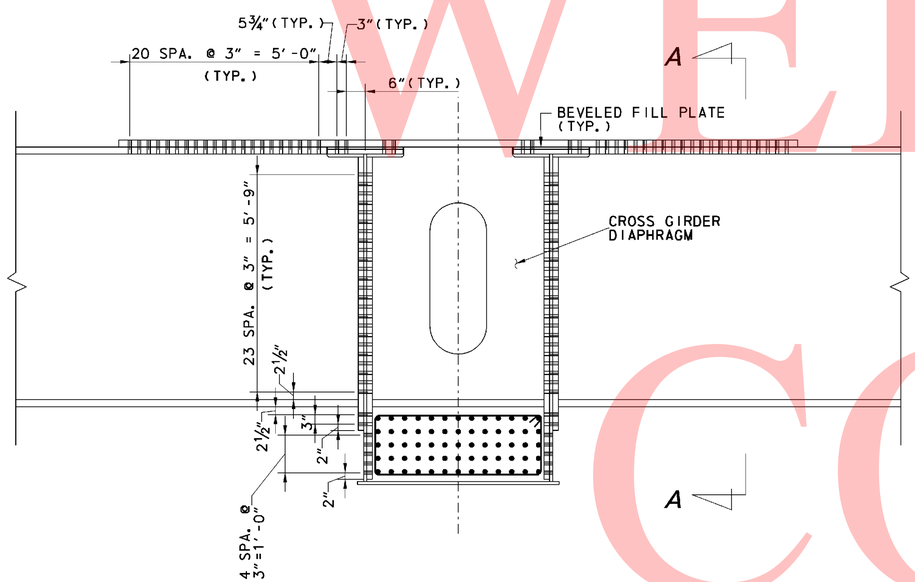

REINFORCING NOT SHOWN FOR CLARITY

CROSS GIRDER CONNECTION

SCALE: ½"=1'-0"
(G2, G3, G4 SHOWN, G1 SIMILAR)

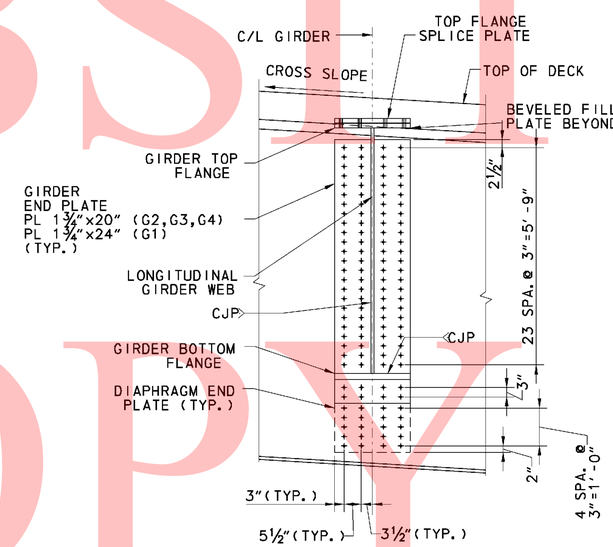

SECTION A-A

SCALE: ½"=1'-0"

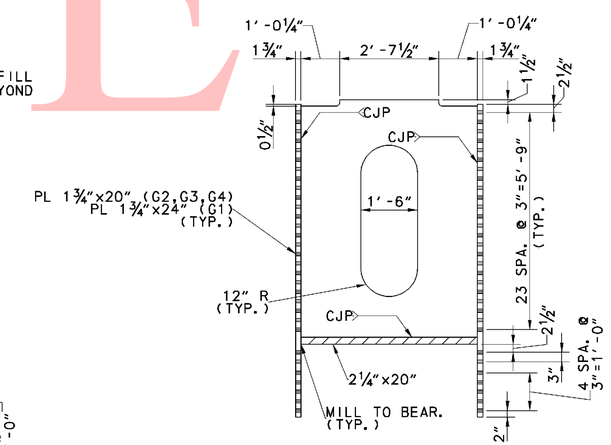

CROSS GIRDER DIAPHRAM

SCALE: ½"=1'-0"

UNOFFICAL WEBSITE COPY

8/13/2010 11:51:54 AM
M:\PROJECTS\2003\03059_DELTRNPK\SR1_MALL\CADD\2809003\PLANS_DOV\PR06_BR-S6_SR1.DGN

DELAWARE DEPARTMENT OF TRANSPORTATION	ADDENDUMS / REVISIONS		SR1 / I-95 INTERCHANGE	CONTRACT 28-090-03	BRIDGE NO. 1-268B	RAMP B OVER I-95NB	S6-24 SHEET NO. 471
				COUNTY NEW CASTLE	DESIGNED BY:		TOTAL SHTS. 803
					CHECKED BY:		

CROSS GIRDER CONSTRUCTION SEQUENCE:

1. ERECT CROSS GIRDER AND PROVIDE TEMPORARY CONNECTION TO PIERS 2N & 2S.
2. ERECT LONGITUDINAL GIRDERS AND CONNECT TO CROSS GIRDER. TOP FLANGE SPLICE PLATES AND END PLATE, CROSS GIRDER DIAGRAM SHALL BE FULLY CONNECTED PRIOR TO ANY CONCRETE POUR.
3. PLACE CONCRETE IN CROSS GIRDER TO TOP FLANGE OF CROSS GIRDER. CONCRETE SHALL ATTAIN 80% OF THE 28 DAY STRENGTH PRIOR TO PLACING DECK CONCRETE. AFTER 28 DAY STRENGTH IS ATTAINED, CROSS GIRDER IS ACTING FULLY COMPOSITE.
4. PLACE CONCRETE DECK ACCORDING TO DECK POUR SEQUENCE AS SHOWN ON DWG. S6-42, 43, 44 & 45.
5. PLACE CONCRETE PARAPET ACCORDING TO DELDOT STD SPECIFICATIONS.
6. CROSS GIRDER COVER PLATE SHALL BE PLACED UPON COMPLETION OF CONCRETE PARAPET PLACEMENT. THE COVER PLATE IS NOT CONSIDERED A STRUCTURAL MEMBER AND IS NOT INCLUDED IN THE SECTION PROPERTIES OF THE CROSS GIRDER.

CROSS GIRDER NOTES:

1. REINFORCING STEEL MAY BE PLACED AT PLANT.
2. ALL BOLTS IN THE CROSS GIRDER AND CONNECTIONS OF THE LONGITUDINAL GIRDERS SHALL 7/8" DIA. A325.
3. SHEAR STUDS INSIDE CROSS GIRDER SHALL NOT BE FIELD WELDED.
4. OVERSIZED OR SLOTTED HOLES WILL NOT BE PERMITTED.
5. THE LENGTH SHOWN FOR WEB PLATE, TOP AND BOTTOM FLANGE PLATES ARE HORIZONTAL DIMENSIONS.
6. TOP OF SLAB ELEVATIONS SHOWN ARE AT THE CENTERLINE OF CROSS GIRDER.
7. FOR PIER COLUMN DETAILS SEE DWG S6-21 AND S6-22.
8. SEE DWG S6-57 FOR PROPOSED ERECTION SEQUENCE.
9. PROVIDE GRADE 75 ALL-THREAD REBAR-ASTM A615 FOR LONGITUDINAL REINFORCING IN CROSS GIRDER.
10. PROVIDE MECHANICAL COUPLERS TO SPLICE LONGITUDINAL REINFORCING. MECHANICAL COUPLERS ARE INCIDENTAL TO ITEM 604000.
11. PROVIDE ANCHORAGE OF ALL-THREAD REBAR TO END PLATE.

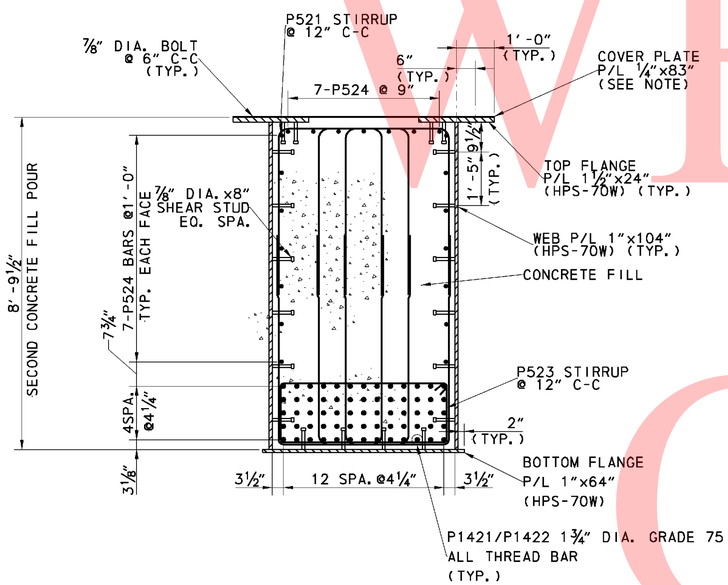

SECTION A-A
SCALE: 1/2"=1'-0"

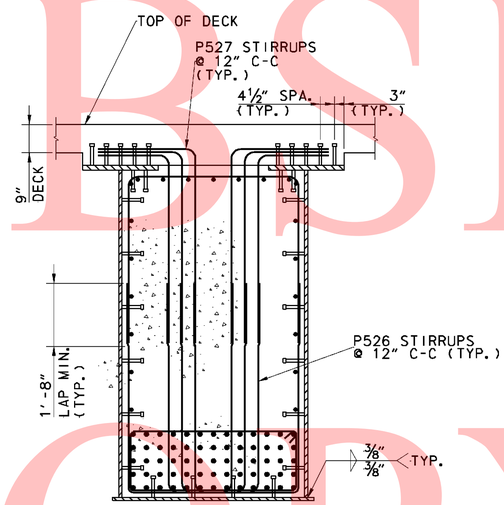

SECTION B-B
SCALE: 1/2"=1'-0"

NOTE: COVER PLATE TO BE INSTALLED FOLLOWING COMPLETION OF CONCRETE FILL.

UNOFFICIAL WEBSITE COPY

10/18/2010 4:05:43 PM
M:\PROJECTS\2003\03059_DELTRNPK\SR1_MALL\CADD\2809003\PLANS_DOV\PR07_BR-S6_SR1.DGN

DELAWARE DEPARTMENT OF TRANSPORTATION	ADDENDUMS / REVISIONS		SR1 / I-95 INTERCHANGE	CONTRACT 28-090-03	BRIDGE NO. 1-268B	RAMP B OVER I-95NB	S6-25 SHEET NO. 472
				COUNTY NEW CASTLE	DESIGNED BY:	CROSS GIRDER DETAILS 3	TOTAL SHTS. 803
					CHECKED BY:		

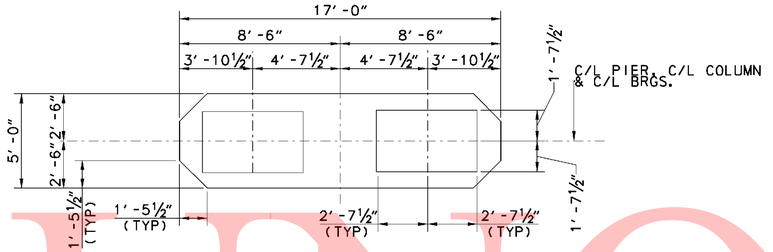

PLAN

SCALE: ¼"=1' -0"

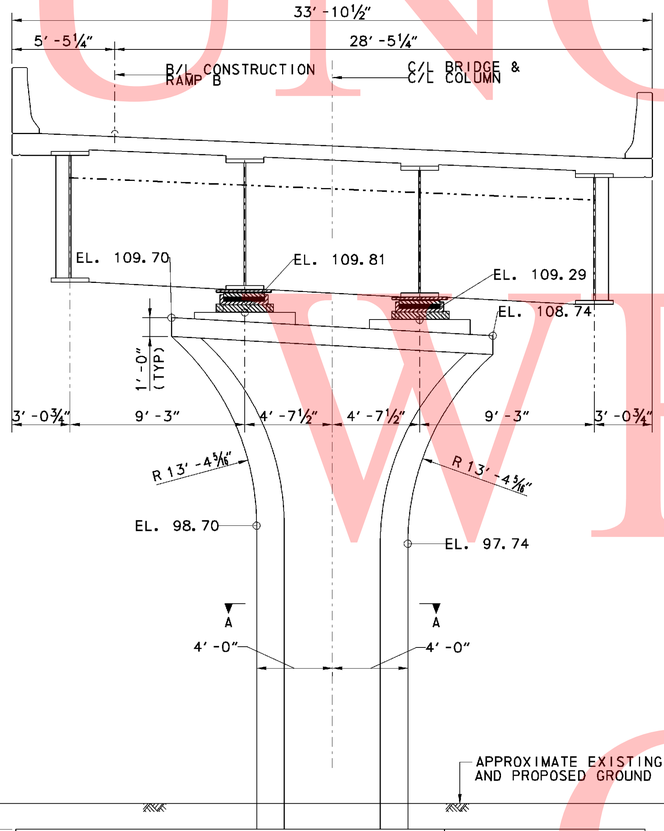

ELEVATION-PIER 1

SCALE: ¼"=1' -0"

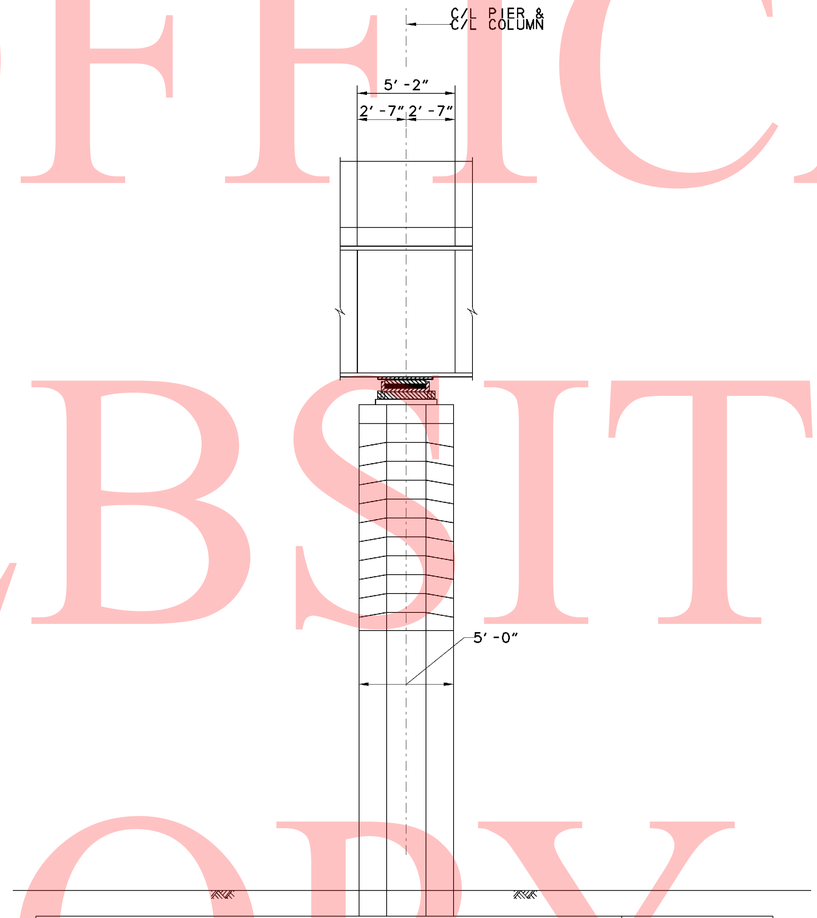

END VIEW

SCALE: ¼"=1' -0"

CROSS REFERENCE NOTES:

1. FOR BRIDGE PLAN AND ELEVATION, SEE DWG. S6-1.
2. FOR PIER FOUNDATION PLAN, SEE DWG. S6-16.
3. FOR INTEGRAL PIER CAP, REINFORCEMENT DETAILS, SEE DWG. S6-28 & S6-29.
4. FOR PIER COLUMN AND FOOTING REINFORCEMENT DETAILS, SEE DWG. S6-27 & S6-17.

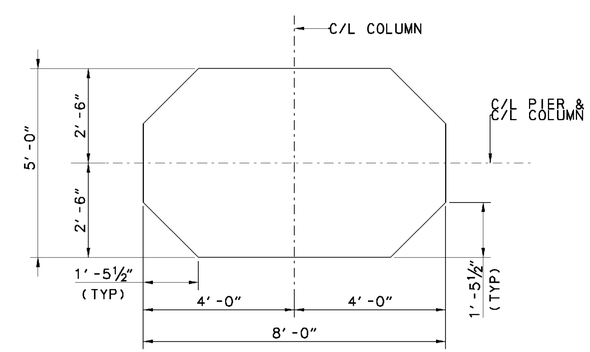

SECTION A-A

SCALE: ¼"=1' -0"

UNOFFICAL WEBSITE COPY

8/13/2010 11:32:02 AM
M:\PROJECTS\2003\03059_DELTRNPK\SR1_MALL\CADD\2809003\PLANS.DGN\PR08_BR-S6_SR1.DGN

DELAWARE DEPARTMENT OF TRANSPORTATION	ADDENDUMS / REVISIONS	SR1 / I-95 INTERCHANGE	CONTRACT 28-090-03	BRIDGE NO. 1-268B	RAMP B OVER I-95NB PIER 3 PLAN AND ELEVATION	S6-26 SHEET NO. 473 TOTAL SHTS. 803
			COUNTY NEW CASTLE	DESIGNED BY: RMB		
				CHECKED BY: DWD		

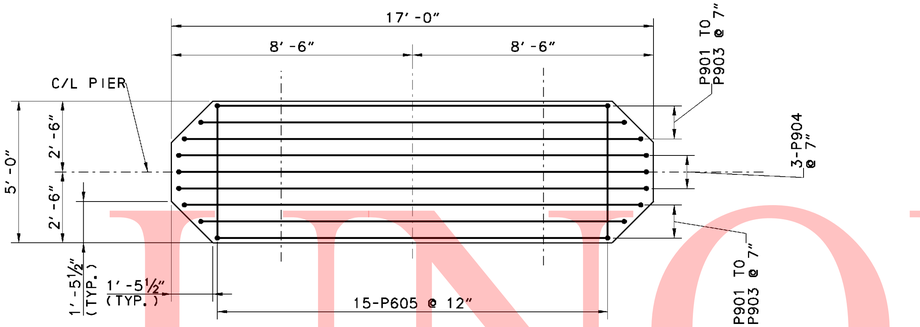

PLAN

SCALE: ⅜"=1'-0"

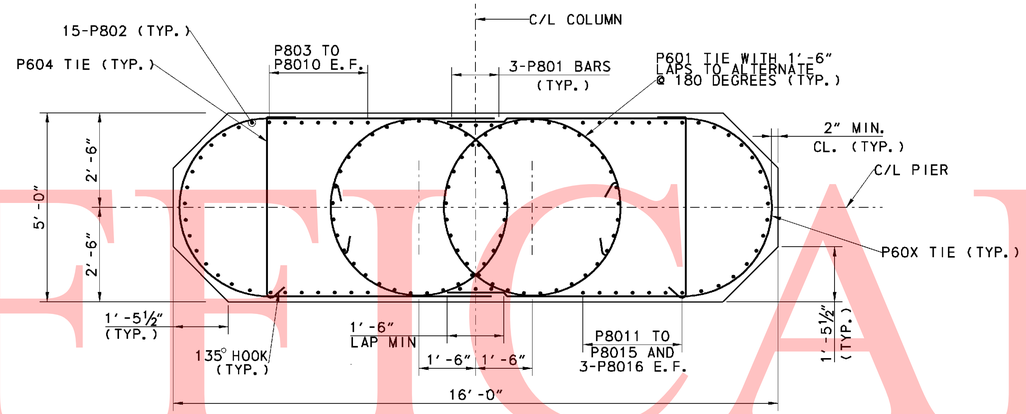

SECTION C-C

SCALE: ½"=1'-0"

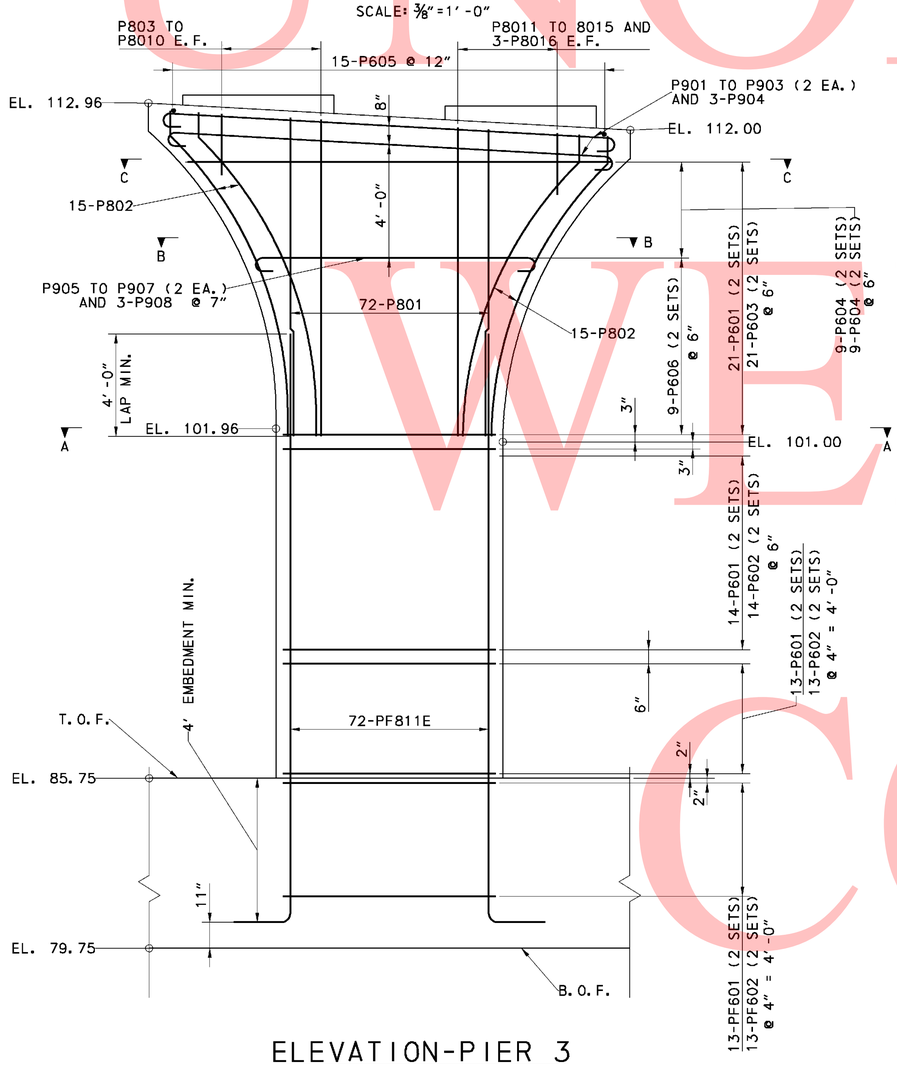

ELEVATION-PIER 3

SCALE: ⅜"=1'-0"

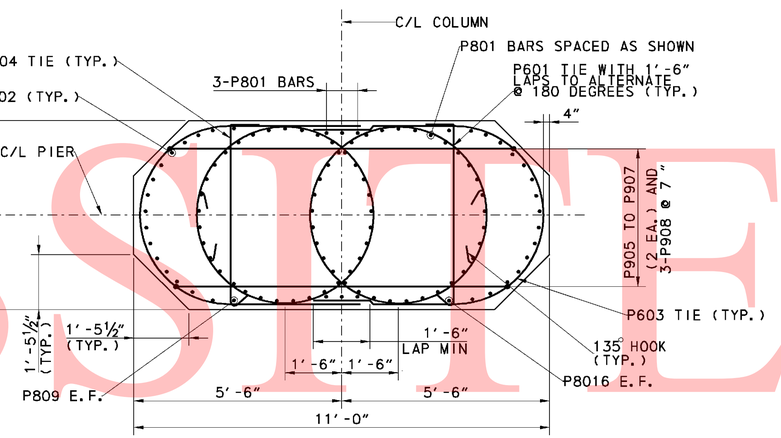

SECTION B-B

SCALE: ½"=1'-0"

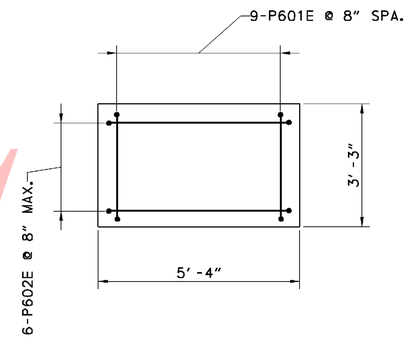

PEDESTAL REINFORCING PLAN

SCALE: ½"=1'-0"

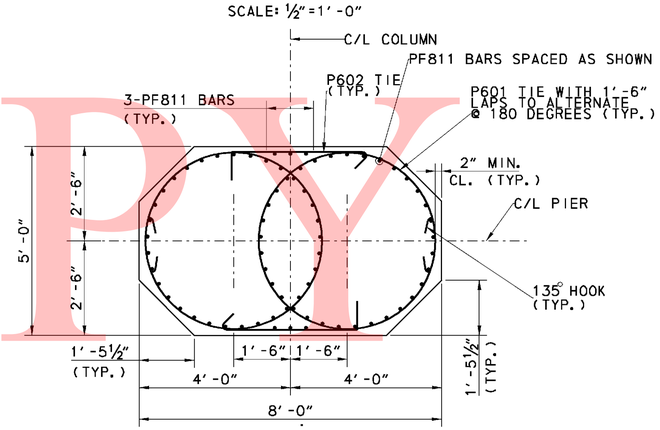

SECTION A-A

SCALE: ½"=1'-0"

CROSS REFERENCE NOTES:

1. FOR BRIDGE PLAN AND ELEVATION, SEE DWG. S6-1.
2. FOR PIER PLAN AND ELEVATION, SEE DWG. S6-26.
3. FOR PIER FOUNDATION PLAN, SEE DWG. S6-16.
4. FOR PIER FOUNDATION DETAILS, SEE DWG. S6-17.

UNOFFICIAL WEBSITE COPY

9/6/2010 2:46:40 PM
M:\PROJECTS\2003\03059_DELTRNPK\SR1_MALL\CADD\2809003\PLANS.DGV\PR09_BR-S6_SR1.DGN

DELAWARE DEPARTMENT OF TRANSPORTATION

ADDENDUMS / REVISIONS	

SR1 / I-95 INTERCHANGE

CONTRACT	BRIDGE NO.	1-268B
28-090-03	DESIGNED BY:	RMB
COUNTY	CHECKED BY:	DWD
NEW CASTLE		

RAMP B OVER I-95NB
PIER 3 REINFORCING DETAILS

S6-27

SHEET NO.	TOTAL SHTS.
474	803

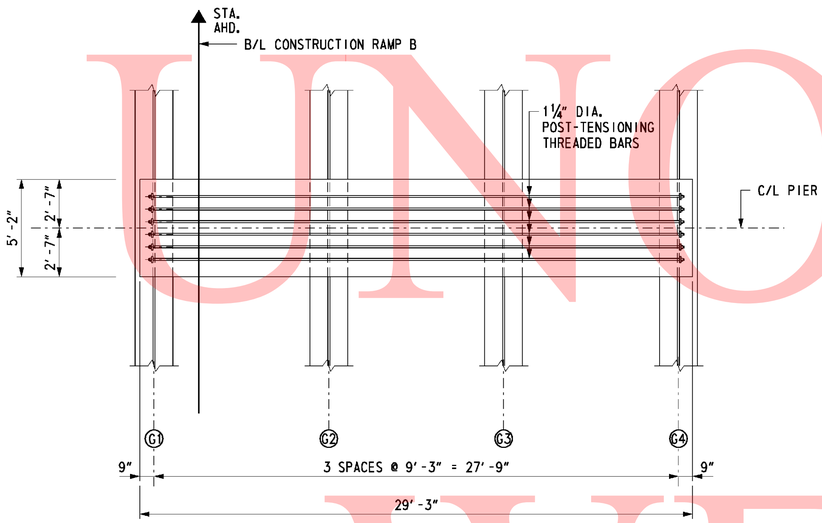

POST TENSIONING PLAN

SCALE: ¼" = 1'-0"

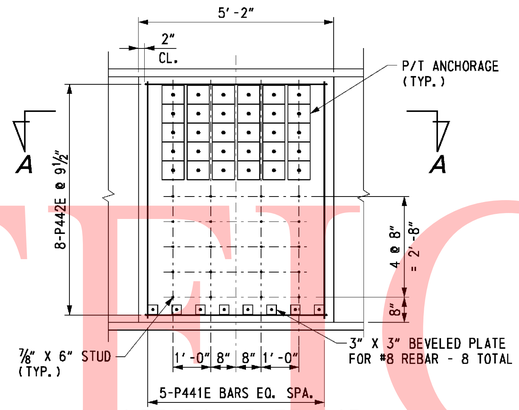

INTEGRAL PIER CAP ANCHORAGE COVER

SCALE: ½" = 1'-0"

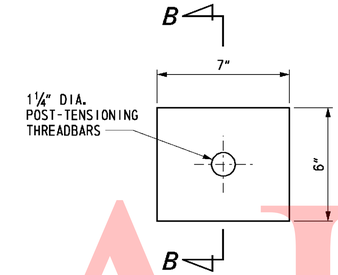

ANCHOR PLATE DETAIL

SCALE: 3" = 1'-0"

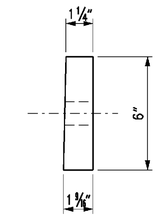

SECTION B-B

SCALE: 3" = 1'-0"

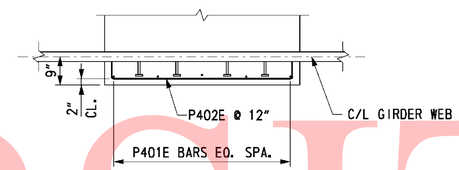

SECTION A-A

SCALE: ½" = 1'-0"

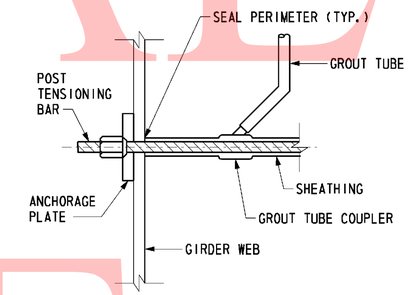

POST-TENSIONING ASSEMBLY DETAIL

NOT TO SCALE

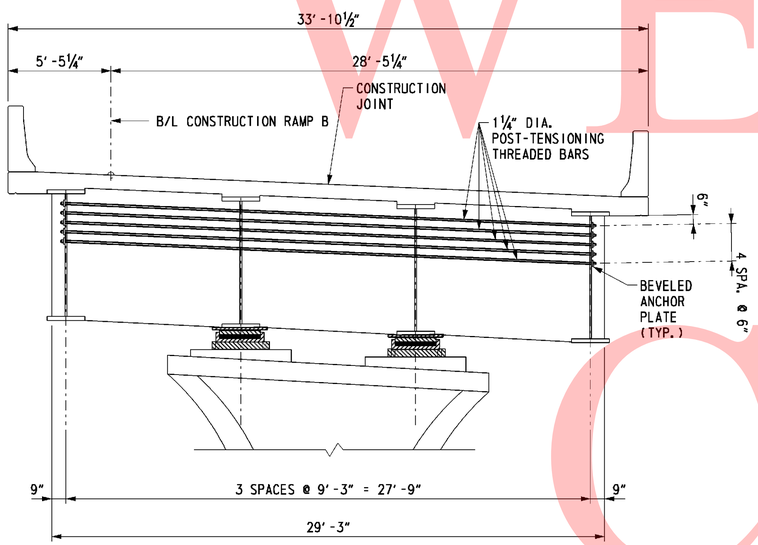

POST TENSIONING SECTION

SCALE: ¼" = 1'-0"

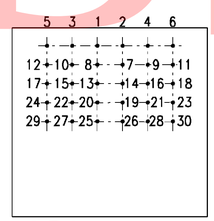

POST-TENSION STRESSING SEQUENCE

NOT TO SCALE

SEQUENCE OF CONSTRUCTION:

1. CONSTRUCT PIER FOUNDATION AND COLUMN.
2. AFTER THE FOUNDATION AND COLUMNS HAVE ATTAINED AT LEAST 80% OF THEIR DESIGN COMPRESSIVE STRENGTH, CONSTRUCT TEMPORARY SHORING TO SUPPORT SUPERSTRUCTURE GIRDERS. PIER CAP AND GIRDERS SHALL BE SUPPORTED ON TEMPORARY SHORING FRAMES UNTIL DECK SLAB AND PARAPETS HAVE BEEN CONSTRUCTED AND POST-TENSIONING OPERATIONS HAVE BEEN COMPLETED.
3. ERECT SUPERSTRUCTURE GIRDERS ON TEMPORARY SHORING.
4. POUR DECK IN POSITIVE MOMENT REGIONS AS SHOWN ON THE POURING SEQUENCE PLANS POUR NO. 1. THIS WILL ALLOW THE GIRDERS TO DEFLECT DUE TO THE DECK WEIGHT WITHOUT ANY RESTRAINT AT THE INTEGRAL PIER LOCATIONS.
5. POUR CONCRETE FOR THE INTEGRAL PIER CAP.
6. POUR REMAINING DECK CONCRETE IN NEGATIVE MOMENT REGIONS AFTER PIER CAPS HAVE REACHED A MINIMUM COMPRESSIVE STRENGTH OF 4500 PSI.
7. CONSTUCT CONCRETE PARAPETS.
8. AFTER DECK CONCRETE HAS ATTAINED ITS 28 DAY COMPRESSIVE STRENGTH, POST-TENSIONING OPERATIONS MAY COMMENCE. BARS SHALL BE STRESSED FROM ONE END OF THE PIER CAP IN THE ORDER SHOWN. CONTRACTOR MAY PROPOSE AN ALTERNATE STRESSING SEQUENCE AND SUBMIT TO THE ENGINEER FOR APPROVAL.
9. DURING THE POST TENSIONING OPERATION, THE GIRDERS SHALL BE SHIMMED AS NECESSARY TO MAINTAIN FULL SUPPORT FROM THE TEMPORARY SHORING.
10. WHEN POST TENSIONING IS COMPLETE, DUCTS SHALL BE GROUTED.
11. CONSTRUCT CONCRETE END COVER AT ENDS OF PIER CAP.
12. REMOVE TEMPORARY SHORING.

NOTES:

1. MATERIAL PROPERTIES:

   CONCRETE CAP: f'c = 6000 psi
   f'ci = 4500 psi
   Ec = 4270 ksi

   PRESTRESSING STEEL:

   THREADBARS-ASTM A722, GRADE 150, TYPE II, 1¼" DIAMETER EPOXY COATED

   MODULUS OF ELASTICITY: 29,700 ksi
   JACKING STRESS: 110,000 psi
   ANCHORING STRESS: 104,000 psi
   WOBBLE COEFFICIENT: 0.0002
   ANCHOR SET: ¼"

CROSS REFERENCE NOTES:

1. FOR PIER 1 PLAN AND ELEVATION, SEE DWG. S6-19.
   FOR PIER 3 PLAN AND ELEVATION, SEE DWG. S6-26.
2. FOR PIER CAP REINFORCEMENT DETAILS, SEE DWG. S6-29.
3. FOR PIER 1 COLUMN REINFORCEMENT DETAILS, SEE DWG. S6-20.
   FOR PIER 3 COLUMN REINFORCEMENT DETAILS, SEE DWG. S6-22.
4. FOR PIER FOOTING REINFORCEMENT DETAILS, SEE DWG. S6-17.
5. FOR BRIDGE DECK POURING SEQUENCE, SEE DWG. S6-42, S6-43, S6-44 AND S6-45.

UNOFFICIAL WEBSITE COPY

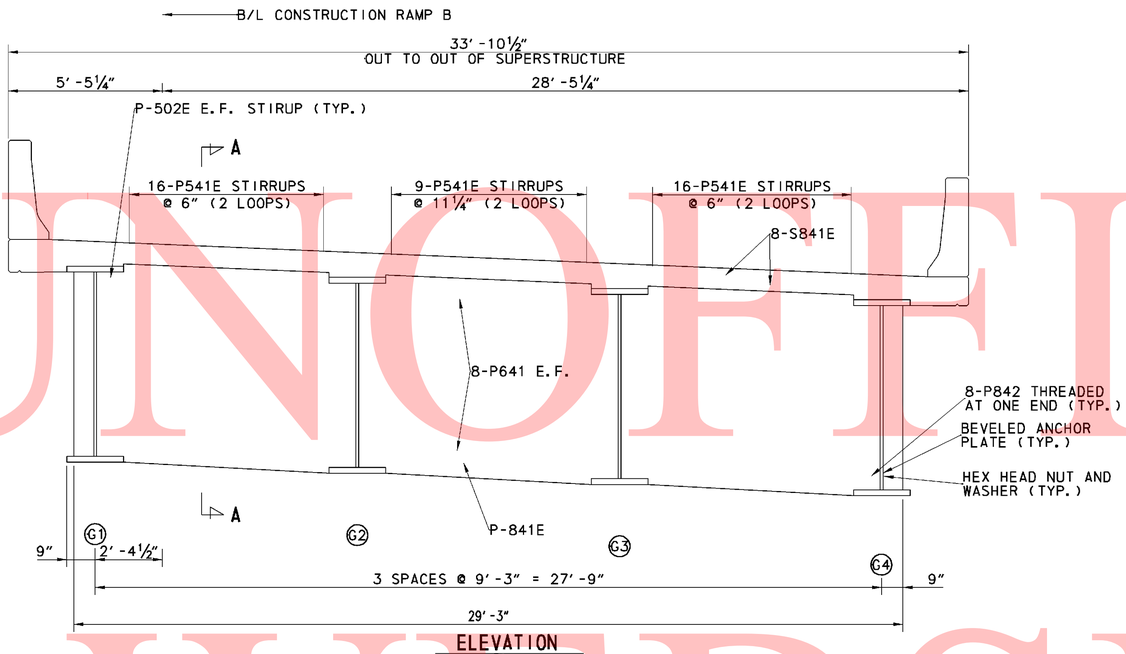

ELEVATION

SCALE: ⅜" = 1'-0"

CROSS REFERENCE NOTES:

1. FOR PIER 1 PLAN AND ELEVATION, SEE DWG S6-16
2. FOR PIER 3 PLAN AND ELEVATION, SEE DWG S6-26
3. FOR PIER CAP POST-TENSIONING REINFORCEMENT, SEE DWG S6-28.
4. FOR PIER 1 COLUMN REINFORCEMENT DETAILS, SEE DWG S6-20.
5. FOR PIER 3 COLUMN REINFORCEMENT DETAILS, SEE DWG S6-27.
4. FOR PIER FOOTING REINFORCEMENT DETAILS, SEE DWG S6-17.

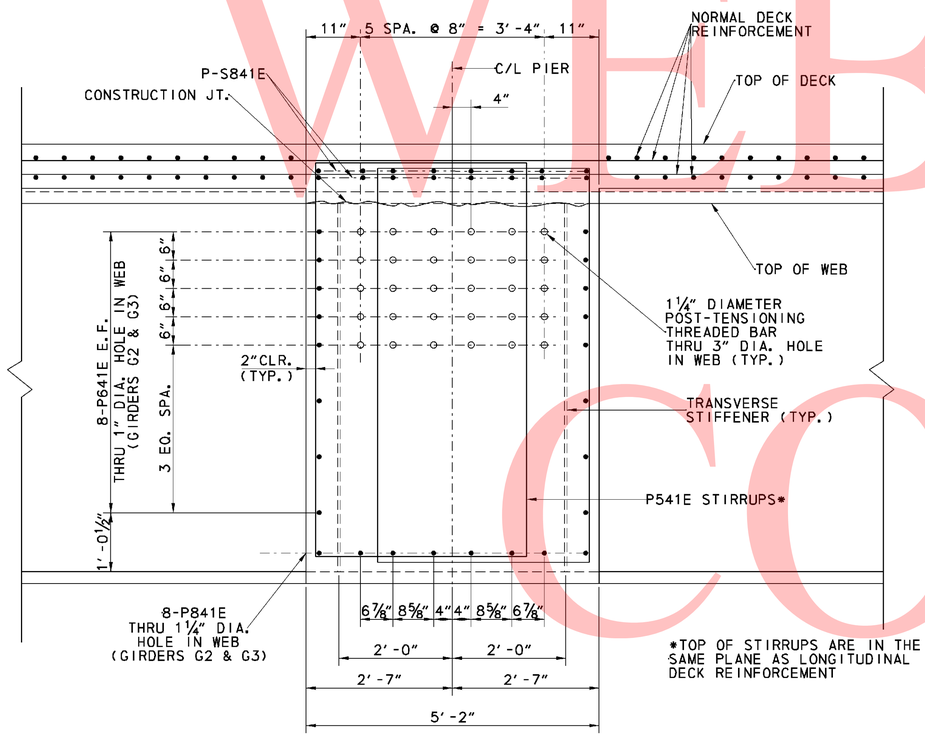

*TOP OF STIRRUPS ARE IN THE SAME PLANE AS LONGITUDINAL DECK REINFORCEMENT

SECTION A-A

SCALE: ¾" = 1'-0"

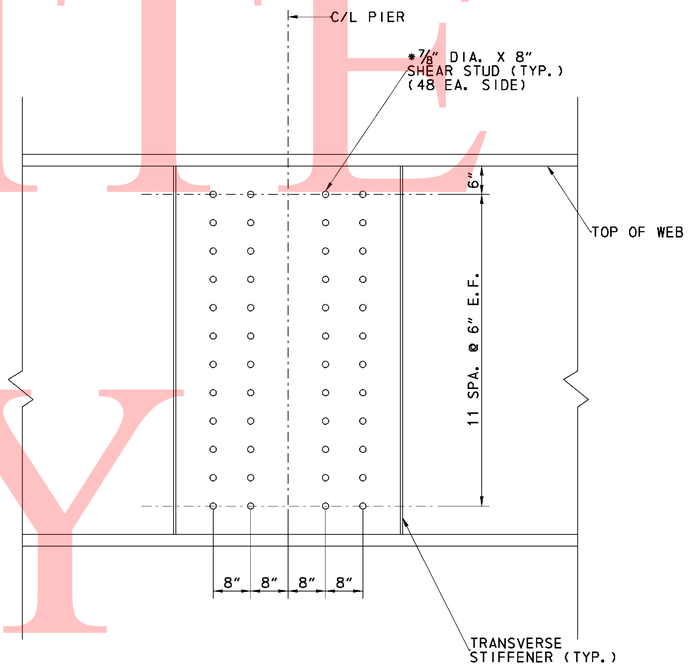

SHEAR STUDS

SCALE: ¾" = 1'-0"

*FOR SHEAR STUDS ON OUTSIDE OF GIRDERS G1 & G4, SEE ANCHORAGE COVER DETAIL ON POST-TENSIONING REINFORCEMENT SHEET.

UNOFFICIAL WEBSITE COPY

REINFORCING BAR LIST

PIER 1

MARK	LENGTH	NO. BARS	TYPE	A	B	C	D	E	G	H	J	K	O	R	REMARKS
PF601	18'-3"	26	T3									2'-7"	4'-6½"		
PF602	5'-8"	26	T9	0'-8"	4'-0"				1'-0"	0'-4½"					
PF603	4'-11"	118	STR.												
PF604	32'-6"	8	STR.												
PF605	23'-6"	8	STR.												
PF701	32'-6"	26	STR.												
PF702	23'-6"	34	STR.												
PF811	26'-5"	72	36	1'-0"	25'-5"										
PF1101	32'-6"	50	STR.												
PF1102	23'-6"	36	STR.												
PP401	9'-7"	108	T3									1'-6"	2'-6¾"		
PP801	8'-11"	192	39	0'-11"	8'-0"						0'-11"				
P601	17'-2"	96	T3									1'-6"	4'-6½"		
P602	5'-8"	96	T9	0'-8"	4'-0"				1'-0"	0'-4½"					
P603	19'-8"	18	10	6'-3"	7'-2"	6'-3"								2'-3¼"	
P604	6'-2"	18	T9	0'-8"	4'-8"				1'-0"	0'-4½"					
P605	4'-8"	15	STR.												
P606	14'-8"	24	10	3'-9"	7'-2"	3'-9"								2'-3¼"	
P801	11'-4"	72	STR.												
P802	12'-1"	30	9S		11'-4"		0'-9"	0'-3¾"					11'-0"	13'-4¼"	
P803	2'-11"	4	STR.												
P804	3'-7"	4	STR.												
P805	4'-4"	4	STR.												
P806	5'-3"	4	STR.												
P807	6'-5"	4	STR.												
P808	8'-3"	4	STR.												
P809	6'-11"	4	STR.												
P8010	11'-3"	4	STR.												
P8011	3'-5"	4	STR.												
P8012	4'-3"	4	STR.												
P8013	5'-4"	4	STR.												
P8014	6'-4"	4	STR.												
P8015	7'-10"	4	STR.												
P8016	10'-10"	6	STR.												
P901	15'-5"	4	1	1'-0"	13'-5"				1'-0"		0'-6"				
P902	16'-7"	4	1	1'-0"	14'-7"				1'-0"		0'-6"				
P903	17'-9"	4	1	1'-0"	15'-9"				1'-0"		0'-6"				
P904	18'-2"	6	1	1'-0"	16'-2"				1'-0"		0'-6"				
P905	9'-5"	2	1	1'-0"	7'-5"				1'-0"		0'-6"				
P906	10'-7"	2	1	1'-0"	8'-7"				1'-0"		0'-6"				
P907	11'-9"	2	1	1'-0"	9'-9"				1'-0"		0'-6"				
P908	12'-2"	3	1	1'-0"	10'-2"				1'-0"		0'-6"				
P441E	6'-2"	10	STR.												
P442E	5'-7"	16	2	0'-4½"	4'-10"				0'-4½"						
P541E	22'-9"	82	11	0'-5½"	3'-8"	7'-3"	3'-8"	7'-3"	0'-5½"						
P542E	8'-10"	16	41	0'-5½"	5'-11"				0'-5½"	0'-3¾"					
P641E	27'-5"	16	STR.												
P841E	27'-5"	8	STR.												
P842	4'-6"	8	STR.												ALL THREAD BAR
S841E	33'-6½"	16	STR.												
P601E	4'-9"	18	2	1'-0"	2'-9"				1'-0"						
P602E	7'-0"	12	2	1'-0"	5'-0"				1'-0"						

PIER 2 (NORTH AND SOUTH)

MARK	LENGTH	NO. BARS	TYPE	A	B	C	D	E	G	H	J	K	O	R	REMARKS
PF601	18'-3"	26	T3									2'-7"	4'-6½"		
PF602	5'-8"	26	T9	0'-8"	4'-0"				1'-0"	0'-4½"					
PF603	4'-11"	118	STR.												
PF604	32'-6"	8	STR.												
PF605	23'-6"	8	STR.												
PF701	32'-6"	26	STR.												
PF702	23'-6"	34	STR.												
PF821	14'-4"	188	36	1'-0"	13'-4"										
PF1101	32'-6"	50	STR.												
PF1102	23'-6"	36	STR.												
PP401	9'-7"	108	T3									1'-6"	2'-6¾"		
PP801	8'-11"	192	39	0'-11"	8'-0"						0'-11"				
P601	17'-2"	128	T3									1'-6"	4'-6½"		
P602	5'-8"	128	T9	0'-8"	4'-0"				1'-0"	0'-4½"					
P822	25'-4"	188	STR.												
P823	20'-10"	188	STR.												
P521	11'-9"		17		4'-6"	2'-9"	4'-6"								
P522	13'-11"		17		5'-7"	2'-9"	5'-7"								
P523	13'-4"		T2	0'-7"	4'-6"	1'-7"			0'-7"						
P524	60'-0"	21	STR.												
P525	34'-9"	21	STR.												
P526	12'-10"		17		5'-7"	1'-8"	5'-7"								
P527	7'-0"		36	1'-10"	5'-2"										
P1421	60'-0"	65	STR.												GRADE 75, ALL THREAD BAR
P1422	32'-7"	65	STR.												GRADE 75, ALL THREAD BAR
P601E	4'-9"	18	2	1'-0"	2'-9"				1'-0"						
P602E	7'-0"	12	2	1'-0"	5'-0"				1'-0"						

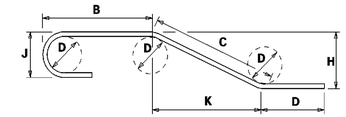

NOTES:

1. FIGURES SHOWN IN CIRCLES REPRESENT BAR BEND TYPES.
2. STANDARD BAR BENDS INCLUDE ONLY TYPES 1-32, S1-S12, AND T1-T16.
3. ALL DIMENSIONS ARE OUT-TO-OUT OF BAR EXCEPT "A" AND "G" ON STANDARD 180^ AND 135^ HOOKS.
4. "J" DIMENSIONS ON 180^ HOOKS TO BE SHOWN ONLY WHERE NECESSARY TO RESTRICT HOOK SIZE, OTHERWISE STANDARD HOOKS ARE TO BE USED.
5. WHERE "J" IS NOT SHOWN, "J" WILL BE KEPT EQUAL TO OR LESS THAN "H" ON TRUSS BARS. WHERE "J" CAN EXCEED "H", IT SHALL BE SHOWN.
6. "H" DIMENSIONS OF STIRRUPS TO BE SHOWN WHERE NECESSARY TO FIT WITHIN THE CONCRETE.
7. UNLESS OTHERWISE NOTED, DIAMETER "D" IS THE SAME FOR ALL BENDS AND HOOKS ON A BAR.
8. WHERE SLOPE DIFFERS FROM 45^ OFFSET, "H" AND "K" MUST BE SHOWN.
9. WHERE BARS ARE TO BE BENT MORE ACCURATELY THAN STANDARD BENDING TOLERANCES, BENDING DIMENSIONS WHICH REQUIRE CLOSER FABRICATION SHOULD HAVE LIMITS INDICATED.
10. FOR RECOMMENDED DIAMETER "D", OF BENDS, HOOKS, ETC., REFER TO TABLE AT RIGHT, 'CRSI' OR 'ACI' TABLES.
11. TYPE S1-S12, T1-T16 APPLY TO BAR SIZES 3 THROUGH 6.

ASTM STANDARD ENGLISH REINFORCING BARS				RECOMMENDED END HOOKS, APPLICABLE TO ALL GRADES			
	NOMINAL DIMENSIONS			180° HOOKS			90° HOOKS
BAR SIZE	DIAMETER (inches)	AREA (inches²)	WEIGHT (lbs./ft.)	D	A OR G	J	A OR G
3	0.375	0.110	0.376	2½"	5"	3"	6"
4	0.500	0.200	0.668	3"	6"	4"	8"
5	0.625	0.310	1.043	3½"	7"	5"	10"
6	0.750	0.440	1.502	4½"	8"	6"	1'-0"
7	0.875	0.600	2.044	5½"	10"	7"	1'-2"
8	1.000	0.790	2.670	6"	11"	8"	1'-4"
9	1.128	1.000	3.400	9½"	1'-3"	11½"	1'-7"
10	1.270	1.270	4.303	10½"	1'-5"	1'-1½"	1'-10"
11	1.410	1.560	5.313	1'-0"	1'-7"	1'-2½"	2'-0"
14	1.693	2.250	7.650	1'-6½"	2'-3"	1'-9½"	2'-7"
18	2.257	4.000	13.600	2'-0"	3'-0"	2'-4½"	3'-5"

STANDARD BAR BENDS

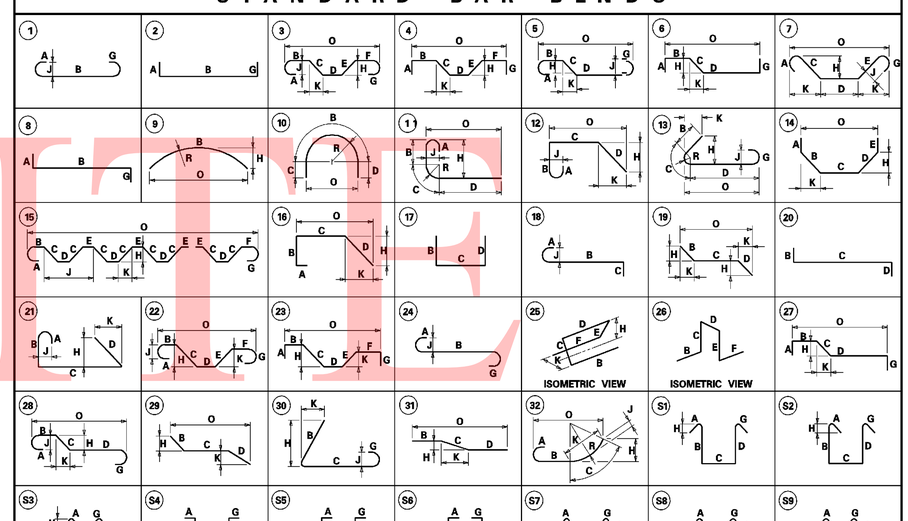

SPECIAL BAR BENDS

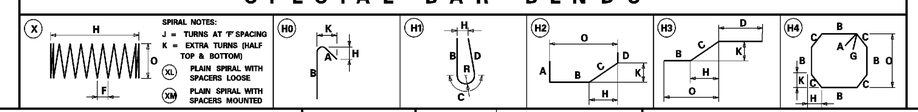

UNOFFICIAL WEBSITE COPY

DELAWARE DEPARTMENT OF TRANSPORTATION

ADDENDUMS / REVISIONS

SR1 / I-95 INTERCHANGE

CONTRACT	BRIDGE NO.	1-268B
28-090-03	DESIGNED BY:	
COUNTY		
NEW CASTLE	CHECKED BY:	

RAMP B OVER I-95NB

PIER REINFORCEMENT BAR SCHEDULE-1

S6-30

SHEET NO. 477

TOTAL SHTS. 803

8/13/2010 12:14:23 PM
M:\PROJECTS\2003\03059_DELTRNPK\SR1_MALL\CADD\2809003\PLANS.DGN\BR02_BR-S6_SR1.DGN

PIER 3

MARK	LENGTH	NO. BARS	TYPE	A	B	C	D	E	G	H	J	K	O	R	REMARKS
PF601	18'-3"	26	T3									2'-7"	4'-6½"		
PF602	5'-8"	26	T9	0'-8"	4'-0"				1'-0"	0'-4½"					
PF603	4'-11"	118	STR.												
PF604	32'-6"	8	STR.												
PF605	23'-6"	8	STR.												
PF701	32'-6"	26	STR.												
PF702	23'-6"	34	STR.												
PF831	26'-8"	66	36	1'-0"	25'-8"										
PF1101	32'-6"	50	STR.												
PF1102	23'-6"	36	STR.												
PP401	9'-7"	108	T3									1'-6"	2'-6¾"		
PP801	8'-11"	192	39	0'-11"	8'-0"						0'-11"				
P601	17'-2"	96	T3									1'-6"	4'-6½"		
P602	5'-8"	96	T9	0'-8"	4'-0"				1'-0"	0'-4½"					
P603	19'-8"	18	10	6'-3"	7'-2"	6'-3"								2'-3¼"	
P604	6'-2"	18	T9	0'-8"	4'-8"				1'-0"	0'-4½"					
P605	4'-8"	15	STR.												
P606	14'-8"	24	10	3'-9"	7'-2"	3'-9"								2'-3¼"	
P801	11'-4"	72	STR.												
P802	12'-1"	30	9S		11'-4"		0'-9"	0'-3¾"					11'-0"	13'-4¼"	
P803	2'-11"	4	STR.												
P804	3'-7"	4	STR.												
P805	4'-4"	4	STR.												
P806	5'-3"	4	STR.												
P807	6'-5"	4	STR.												
P808	8'-3"	4	STR.												
P809	6'-11"	4	STR.												
P8010	11'-3"	4	STR.												
P8011	3'-5"	4	STR.												
P8012	4'-3"	4	STR.												
P8013	5'-4"	4	STR.												
P8014	6'-4"	4	STR.												
P8015	7'-10"	4	STR.												
P8016	10'-10"	6	STR.												
P901	15'-5"	4	1	1'-0"	13'-5"				1'-0"		0'-6"				
P902	16'-7"	4	1	1'-0"	14'-7"				1'-0"		0'-6"				
P903	17'-9"	4	1	1'-0"	15'-9"				1'-0"		0'-6"				
P904	18'-2"	6	1	1'-0"	16'-2"				1'-0"		0'-6"				
P905	9'-5"	2	1	1'-0"	7'-5"				1'-0"		0'-6"				
P906	10'-7"	2	1	1'-0"	8'-7"				1'-0"		0'-6"				
P907	11'-9"	2	1	1'-0"	9'-9"				1'-0"		0'-6"				
P908	12'-2"	3	1	1'-0"	10'-2"				1'-0"		0'-6"				
P441E	6'-2"	10	STR.												
P442E	5'-9"	16	2	0'-4½"	4'-10"				0'-4½"						
P541E	22'-9"	82	11	0'-5½"	3'-8"	7'-3"	3'-8"	7'-3"	0'-5½"						
P542E	6'-10"	12	41	0'-5½"	5'-11"				0'-5½"	0'-3¾"					
P641E	27'-5"	16	STR.												
P841E	27'-5"	8	STR.												
P842	4'-6"	8	STR.												ALL THREAD BAR
S841E	33'-6½"	16	STR.												
P601E	4'-9"	18	2	1'-0"	2'-9"				1'-0"						
P602E	7'-0"	12	2	1'-0"	5'-0"				1'-0"						

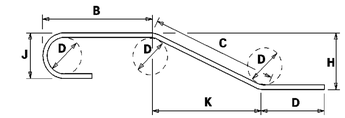

NOTES:

1. FIGURES SHOWN IN CIRCLES REPRESENT BAR BEND TYPES.
2. STANDARD BAR BENDS INCLUDE ONLY TYPES 1-32, S1-S12, AND T1-T16.
3. ALL DIMENSIONS ARE OUT-TO-OUT OF BAR EXCEPT "A" AND "G" ON STANDARD 180^ AND 135^ HOOKS.
4. "J" DIMENSIONS ON 180^ HOOKS TO BE SHOWN ONLY WHERE NECESSARY TO RESTRICT HOOK SIZE, OTHERWISE STANDARD HOOKS ARE TO BE USED.
5. WHERE "J" IS NOT SHOWN, "J" WILL BE KEPT EQUAL TO OR LESS THAN "H" ON TRUSS BARS. WHERE "J" CAN EXCEED "H", IT SHALL BE SHOWN.
6. "H" DIMENSIONS OF STIRRUPS TO BE SHOWN WHERE NECESSARY TO FIT WITHIN THE CONCRETE.
7. UNLESS OTHERWISE NOTED, DIAMETER "D" IS THE SAME FOR ALL BENDS AND HOOKS ON A BAR.
8. WHERE SLOPE DIFFERS FROM 45^ OFFSET, "H" AND "K" MUST BE SHOWN.
9. WHERE BARS ARE TO BE BENT MORE ACCURATELY THAN STANDARD BENDING TOLERANCES, BENDING DIMENSIONS WHICH REQUIRE CLOSER FABRICATION SHOULD HAVE LIMITS INDICATED.
10. FOR RECOMMENDED DIAMETER "D", OF BENDS, HOOKS, ETC., REFER TO TABLE AT RIGHT, 'CRSI' OR 'ACI' TABLES.
11. TYPE S1-S12, T1-T16 APPLY TO BAR SIZES 3 THROUGH 6.

ASTM STANDARD ENGLISH REINFORCING BARS				RECOMMENDED END HOOKS, APPLICABLE TO ALL GRADES			
	NOMINAL DIMENSIONS			180° HOOKS			90° HOOKS
BAR SIZE	DIAMETER (inches)	AREA (inches²)	WEIGHT (lbs./ft.)	D	A OR G	J	A OR G
3	0.375	0.110	0.376	2½"	5"	3"	6"
4	0.500	0.200	0.668	3"	6"	4"	8"
5	0.625	0.310	1.043	3½"	7"	5"	10"
6	0.750	0.440	1.502	4½"	8"	6"	1'-0"
7	0.875	0.600	2.044	5½"	10"	7"	1'-2"
8	1.000	0.790	2.670	6"	11"	8"	1'-4"
9	1.128	1.000	3.400	9½"	1'-3"	11½"	1'-7"
10	1.270	1.270	4.303	10½"	1'-5"	1'-1½"	1'-10"
11	1.410	1.560	5.313	1'-0"	1'-7"	1'-2½"	2'-0"
14	1.693	2.250	7.650	1'-6½"	2'-3"	1'-9½"	2'-7"
18	2.257	4.000	13.600	2'-0"	3'-0"	2'-4½"	3'-5"

STANDARD BAR BENDS

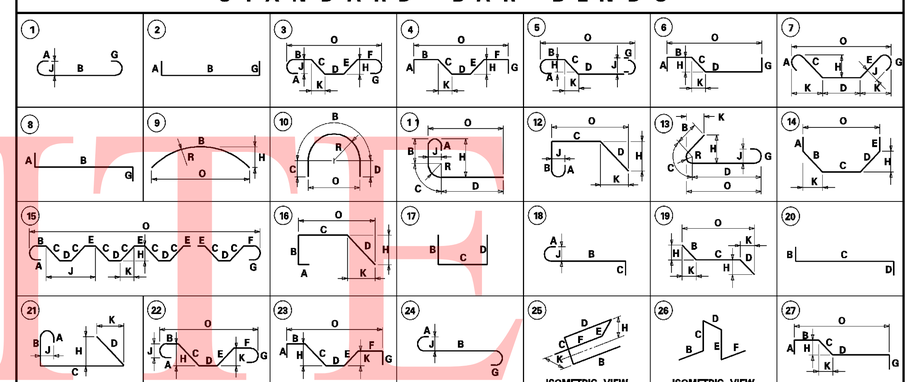

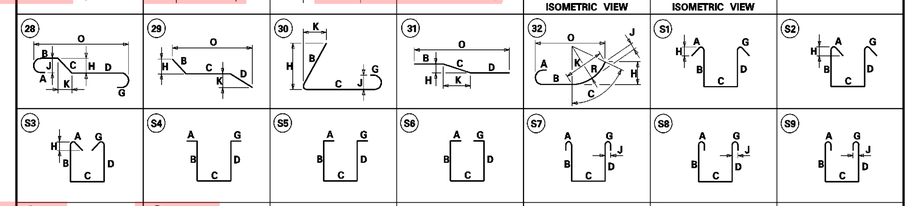

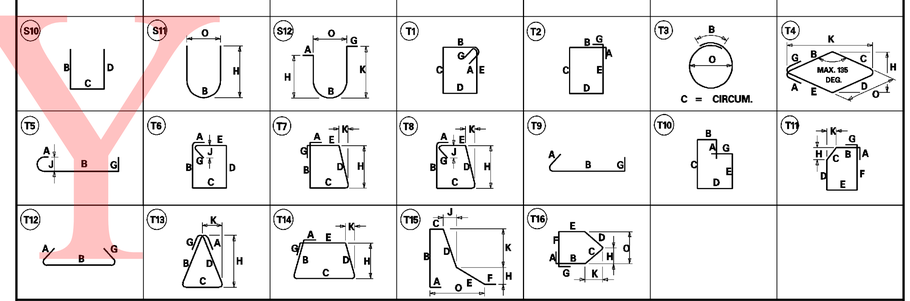

SPECIAL BAR BENDS

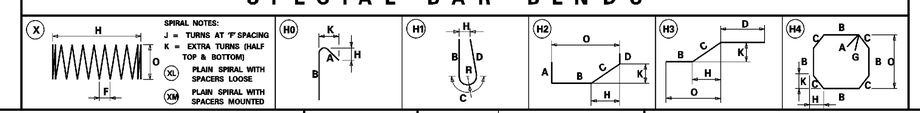

UNOFFICIAL WEBSITE COPY

8/13/2010 2:28:49 PM
M:\PROJECTS\2003\03059_DELTRNPK\SR1_MALL\CADD\2809003\PLANS\DOV\BR05_ER-S6_SR1.DGN

DELAWARE DEPARTMENT OF TRANSPORTATION

ADDENDUMS / REVISIONS

SR1 / I-95 INTERCHANGE

CONTRACT	BRIDGE NO.	1-268B
28-090-03	DESIGNED BY:	
COUNTY		
NEW CASTLE	CHECKED BY:	

RAMP B OVER I-95NB

PIER REINFORCEMENT BAR SCHEDULE-2

S6-30A

SHEET NO. 477A

TOTAL SHTS. 803

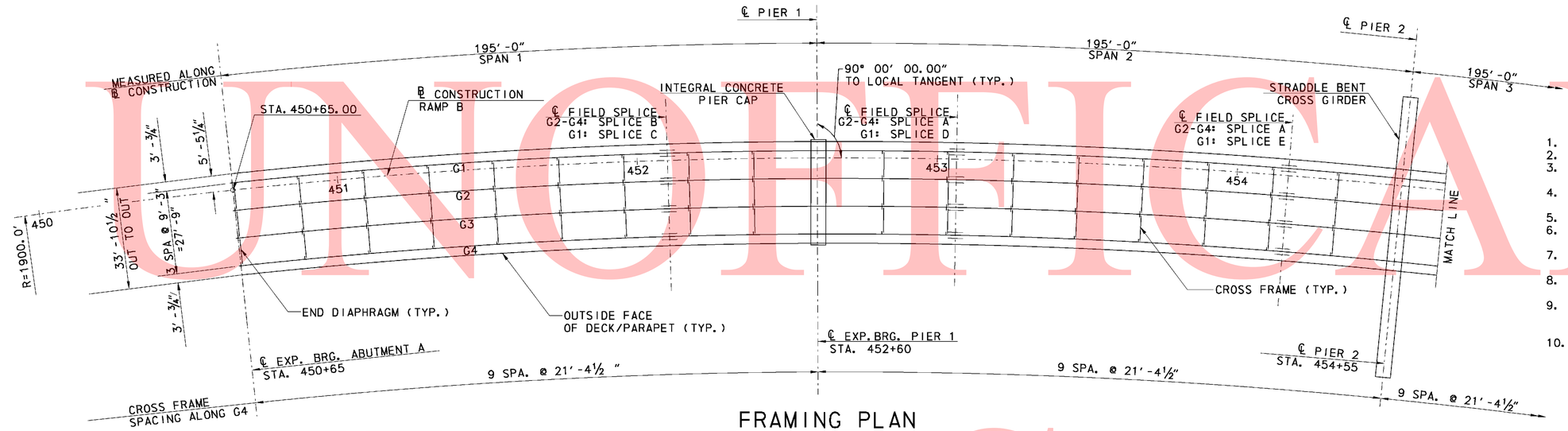

FRAMING PLAN

SCALE: 1" = 20'-0"

1. FOR GENERAL NOTES, SEE DWG. S6-02.
2. FOR TYPICAL SECTION, SEE DWG. S6-03.
3. FOR INTEGRAL PIER CAP DETAILS, SEE DWG. S6-028 AND S6-29.
4. FOR CROSS GIRDER DETAILS, SEE DWG. S6-23 THRU S6-25.
5. FOR DIAPHRAGM DETAILS, SEE DWG. S6-35.
6. FOR INTERMEDIATE CROSS FRAME DETAILS, SEE DWG. S6-35.
7. FOR GIRDER FIELD SPLICE DETAILS, SEE DWG. S6-33 AND S6-34.
8. FOR BEARING TYPES AND LOCATIONS, SEE DWG. S6-38.
9. THERE SHALL BE NO FIELD WELDING TO THE TOP FLANGE, EXCEPT FOR SHEAR STUDS, IN THE TENSION AND STRESS REVERSAL AREAS.
10. SHEAR STUDS SHALL BE SPACED TO CLEAR SPLICE BOLTS.

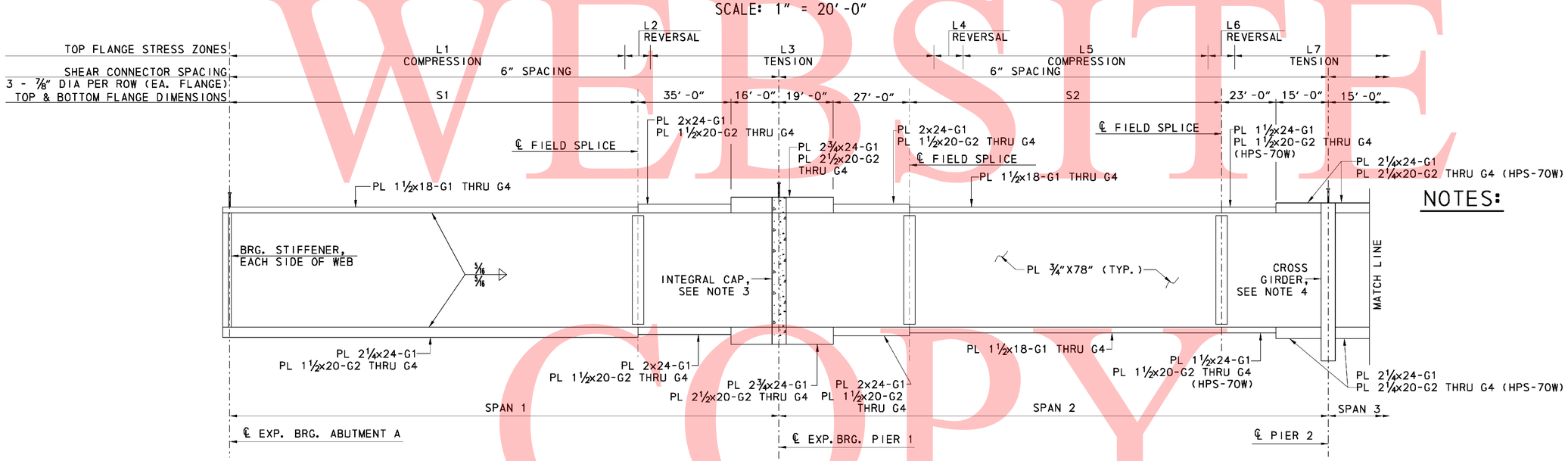

GIRDER ELEVATION

NOT TO SCALE

NOTES:

UNOFFICIAL WEBSITE COPY

8/6/2010 8:39:22 AM
M:\PROJECTS\2003\03059_DELTRNPK\SR1_MAIL\CADD\2809003\PLANS.DGV\FR01_BR-S6_SR1.DGN

DELAWARE DEPARTMENT OF TRANSPORTATION	ADDENDUMS / REVISIONS		SR1 / I-95 INTERCHANGE	CONTRACT 28-090-03	BRIDGE NO. 1-268B	RAMP B OVER I-95NB FRAMING PLAN AND GIRDER ELEVATION 1	SHEET NO. S6- 31	
				COUNTY NEW CASTLE	DESIGNED BY: MDM		TOTAL SHTS. 478	
					CHECKED BY: DWD		803	

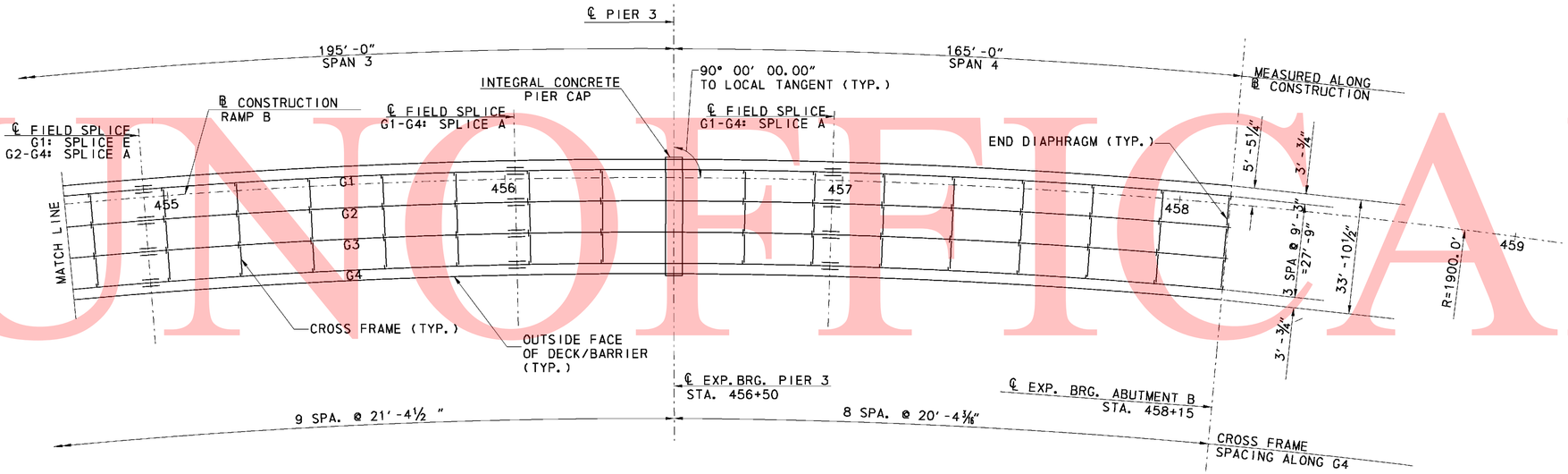

FRAMING PLAN

SCALE: 1" = 20'-0"

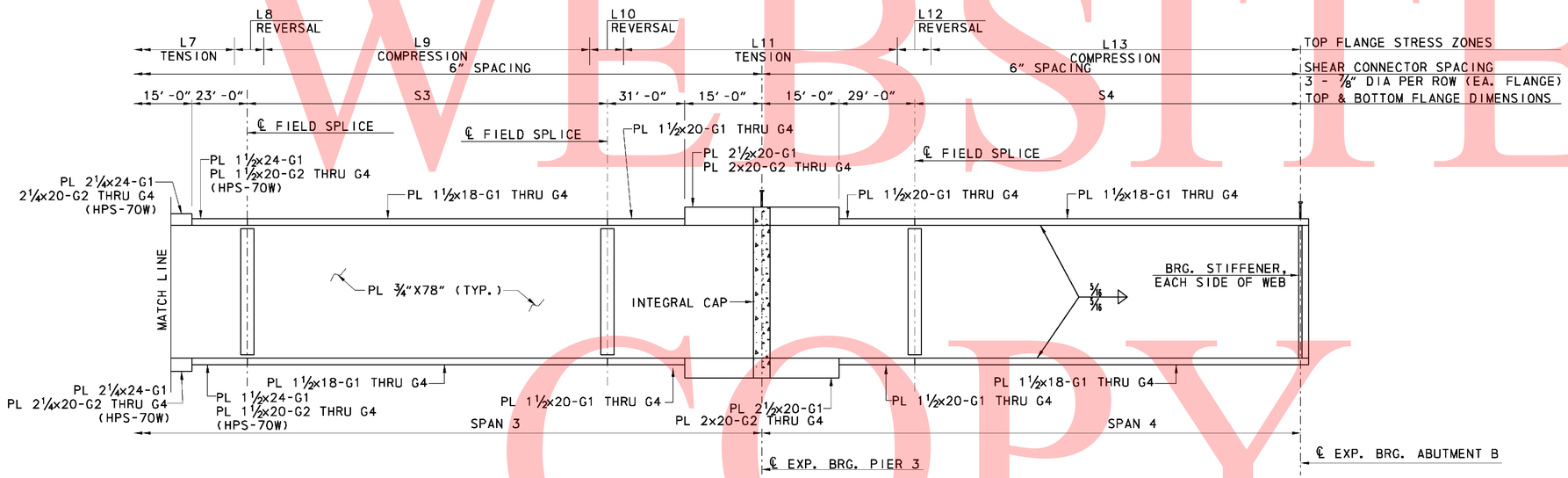

GIRDER ELEVATION

NOT TO SCALE

NOTES:

1. FOR FRAMING PLAN AND GIRDER ELEVATION NOTES, SEE DWG. S6-31 .
2. FOR GIRDER CAMBER TABLE, SEE DWG. S6-32.

UNOFFICIAL WEBSITE COPY

DELAWARE DEPARTMENT OF TRANSPORTATION	ADDENDUMS / REVISIONS	SR1 / I-95 INTERCHANGE	CONTRACT 28-090-03	BRIDGE NO. 1-268B	RAMP B OVER I-95NB FRAMING PLAN AND GIRDER ELEVATION 2	S6-32 SHEET NO. 479	
			COUNTY NEW CASTLE	DESIGNED BY: MDM		TOTAL SHTS. 803	
				CHECKED BY: DWD			

9/6/2010 2:49:00 PM
M:\PROJECTS\2003\03059_DELTRNPK\SR1_MALL\CADD\2809003\PLANS_DOV\FR02_BR-S6_SR1.DGN

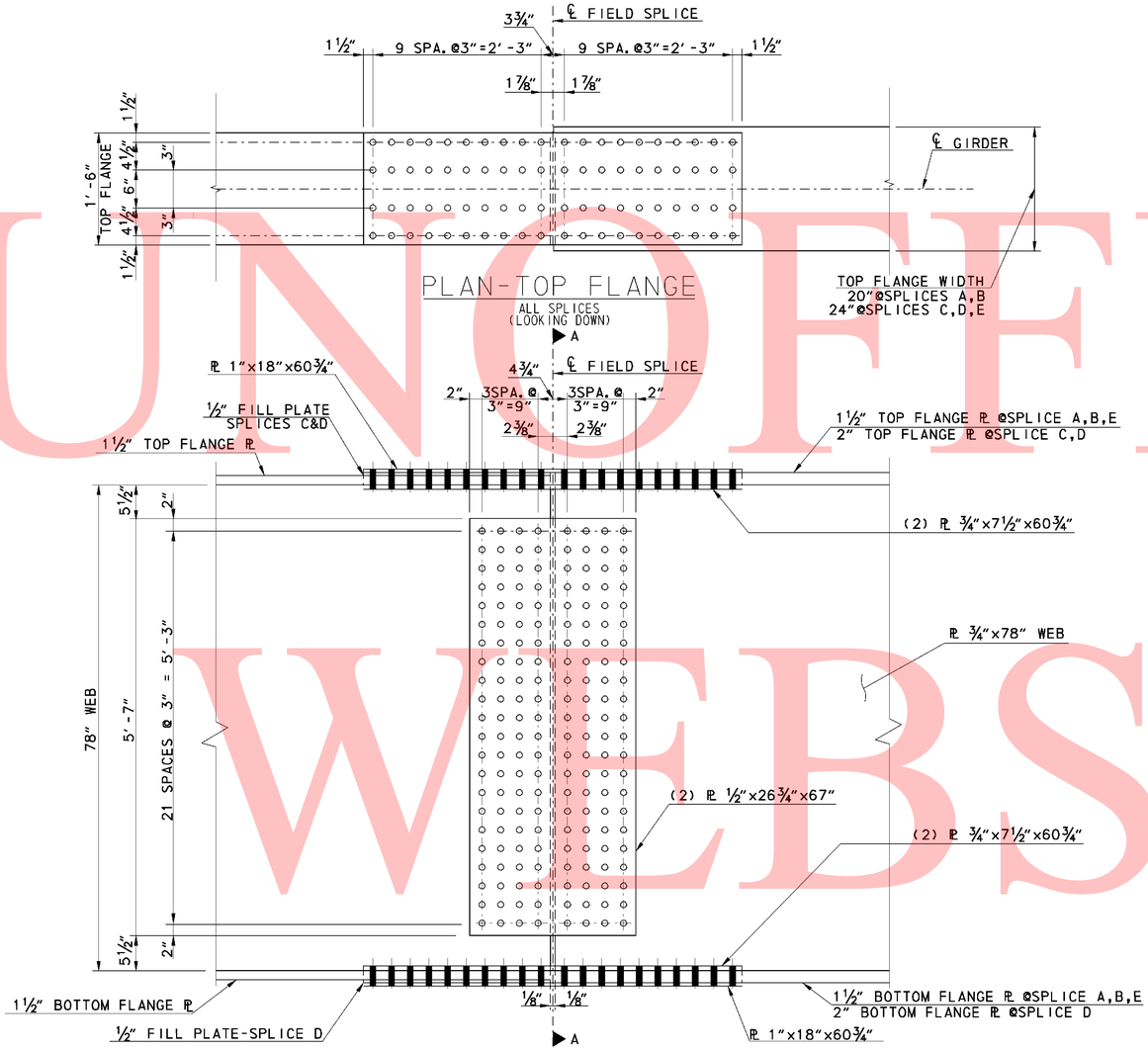

ELEVATION-TYPICAL WEB SPLICE

NOTE: BOTTOM FLANGE TYPICAL FOR SPLICES A,B,D,E
SEE ADDITIONAL DETAILS FOR SPICE C

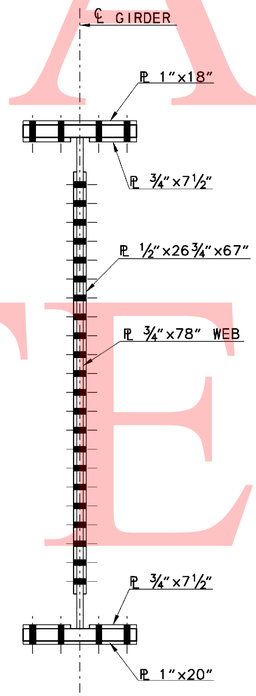

TYPICAL WEB SPLICE
SECTION A-A

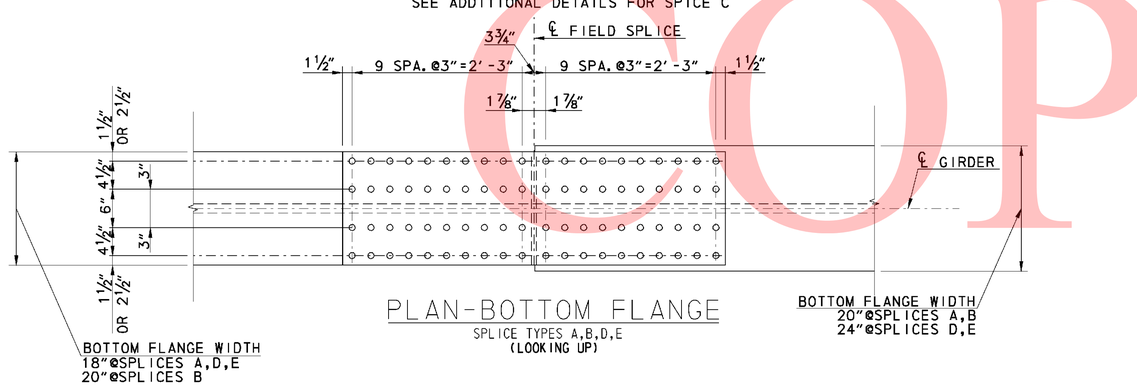

UNOFFICAL WEBSITE COPY

8/5/2010 4:27:53 PM
M:\PROJECTS\2003\03059_DELTRNPK\SR1_MALL\CADD\2809003\PLANS.DOV\BM01_BR-S6_SR1.DGN

DELAWARE DEPARTMENT OF TRANSPORTATION	ADDENDUMS / REVISIONS		SR1 / I-95 INTERCHANGE	CONTRACT 28-090-03	BRIDGE NO. 1-268B	RAMP B OVER I-95NB GIRDER FIELD SPLICE DETAILS 1	S6-33 SHEET NO. 480
				COUNTY NEW CASTLE	DESIGNED BY: MDM		TOTAL SHTS. 803
					CHECKED BY: DWD		

UNOFFICAL WEBSITE COPY

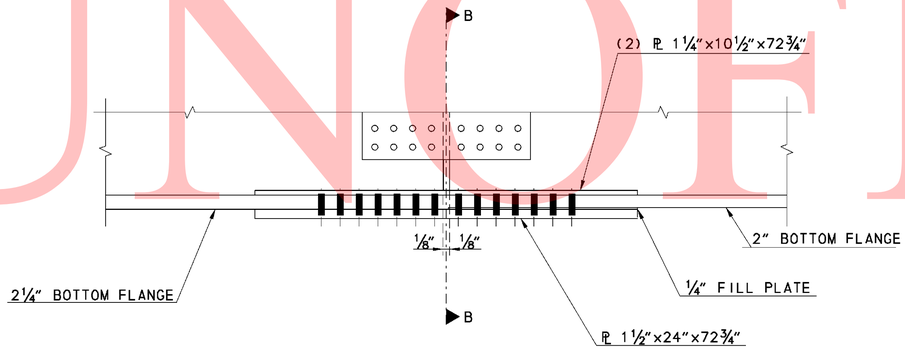

ELEVATION-WEB SPICE
BOTTOM FLANGE SPLICE C

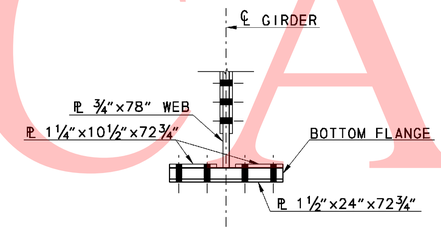

SECTION B-B
BOTTOM FLANGE-SPLICE
TYPE C

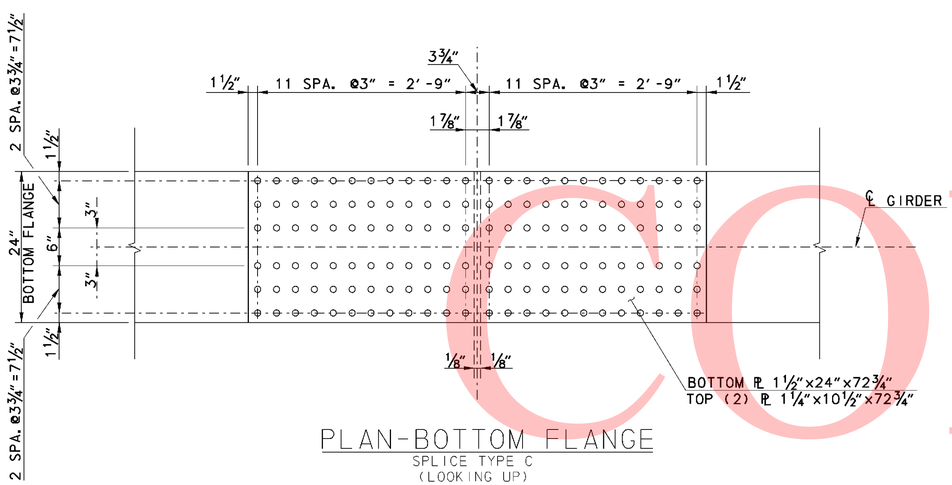

PLAN-BOTTOM FLANGE
SPLICE TYPE C
(LOOKING UP)

8/5/2010 4:30:28 PM
M:\PROJECTS\2003\03059_DELTRNPK\SR1_MALL\CADD\2809003\PLANS.DGV\BM02_BR-S6_SR1.DGN

DELAWARE DEPARTMENT OF TRANSPORTATION	ADDENDUMS / REVISIONS	SR1 / I-95 INTERCHANGE	CONTRACT 28-090-03	BRIDGE NO.	1-268B	RAMP B OVER I-95NB	S6-34 SHEET NO.	
			COUNTY NEW CASTLE	DESIGNED BY:	MDM	GIRDER FIELD SPLICE DETAILS 2	481	
				CHECKED BY:	DWD		TOTAL SHTS. 803	

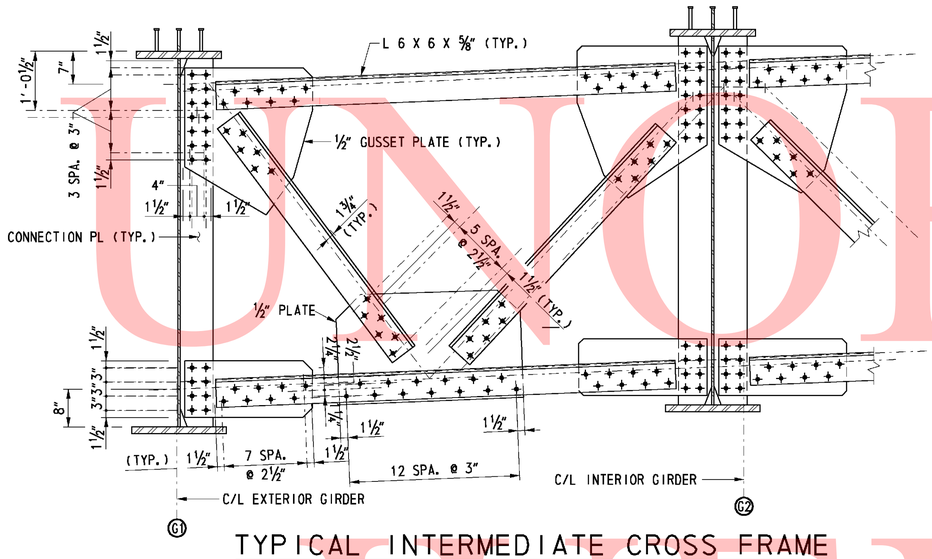

TYPICAL INTERMEDIATE CROSS FRAME

SCALE: 3/4" = 1'-0"

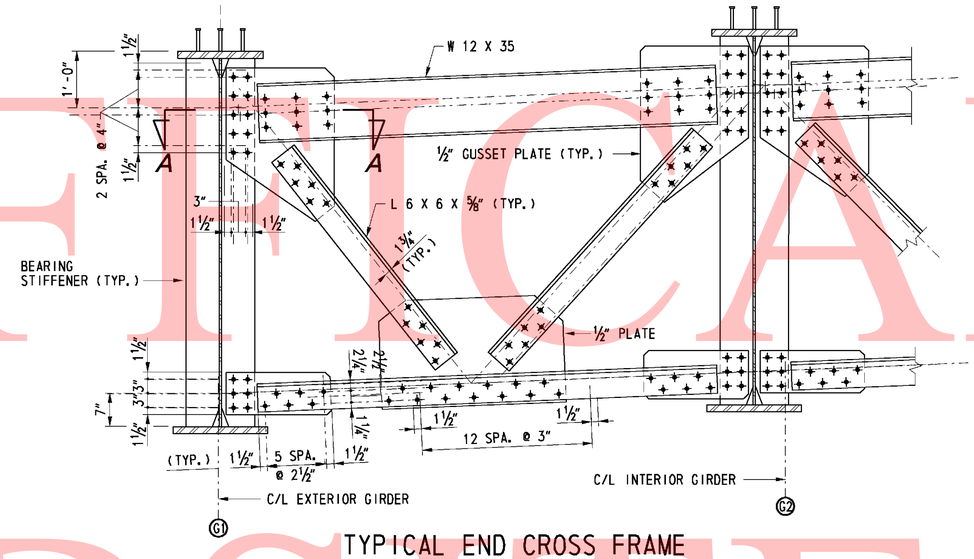

TYPICAL END CROSS FRAME

SCALE: 3/4" = 1'-0"

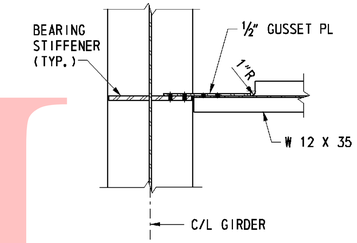

SECTION A-A

SCALE: 3/4" = 1'-0"

NOTES:

1. CROSS FRAMES SHALL BE DETAILED TO FIT IN THE FULL DEAD LOAD CONDITION.

CROSS REFERENCE NOTES:

1. FOR GENERAL NOTES, SEE DWG S6-2.
2. FOR FRAMING PLAN, SEE DWG S6-31 & S6-32.

UNOFFICIAL WEBSITE COPY

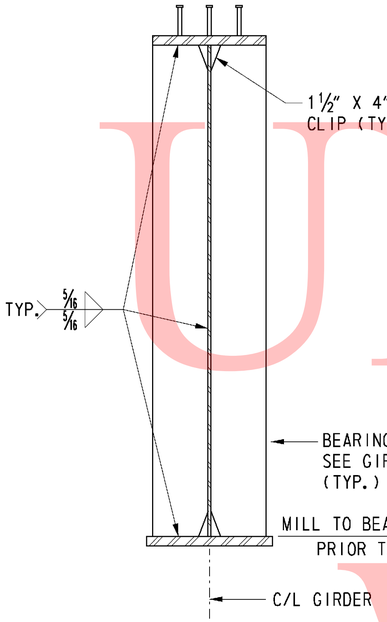

BEARING STIFFENER

SCALE: ¾" = 1'-0"

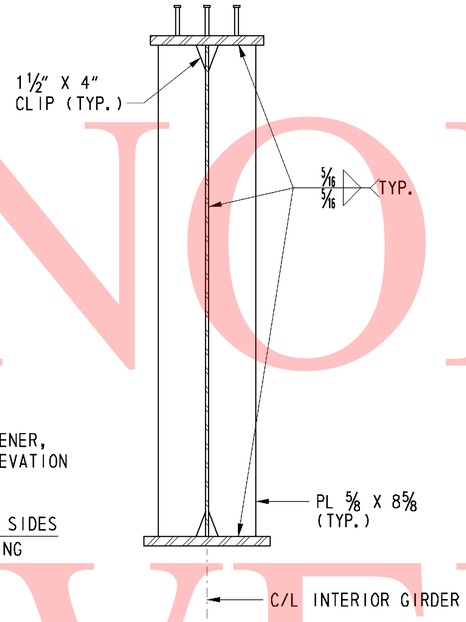

CONNECTION PLATE

SCALE: ¾" = 1'-0"

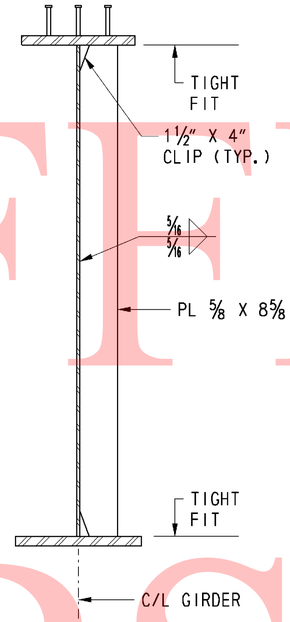

TRANSVERSE STIFFENER

SCALE: ¾" = 1'-0"

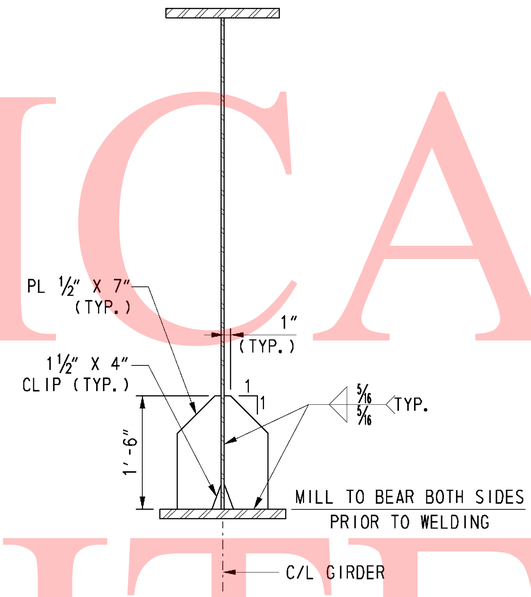

JACKING STIFFENER

SCALE: ¾" = 1'-0"

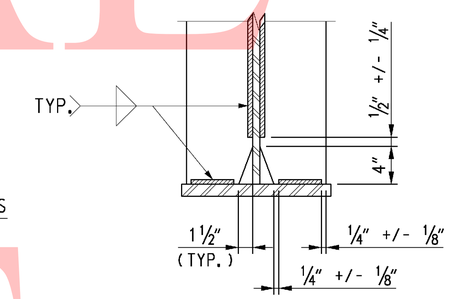

STIFFENER & CONNECTION PLATE WELD TERMINATION

NOT TO SCALE

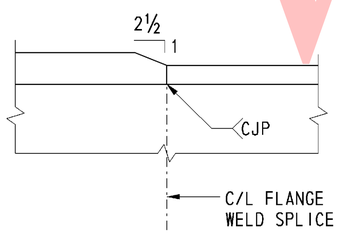

FLANGE PLATE THICKNESS TRANSITION

NOT TO SCALE

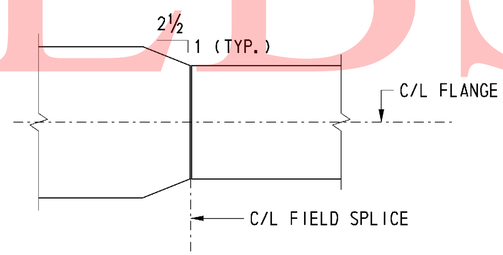

BOTTOM FLANGE PLATE WIDTH TRANSITION

NOT TO SCALE

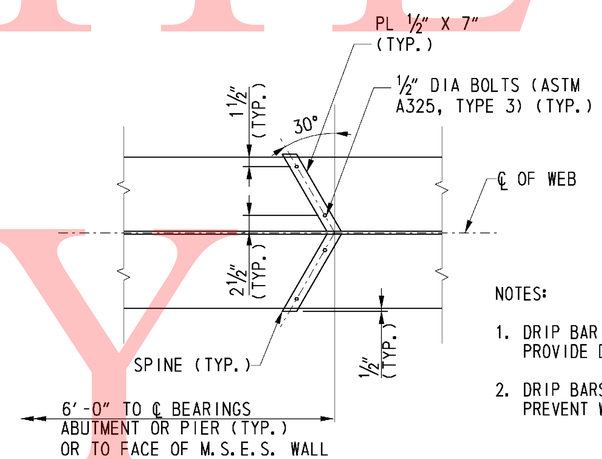

NOTES:

1. DRIP BAR DETAIL SHALL BE PLACED ON BOTTOM FLANGE PROVIDE DRIP BAR FOR GIRDER G1 AND G4 ONLY.
2. DRIP BARS ARE PLACED ADJACENT TO SUPPORTS TO PREVENT WATER FLOW ONTO SUPPORT.

DRIP BAR DETAIL

NOT TO SCALE

CROSS REFERENCE NOTES:

1. FOR GENERAL NOTES, SEE DWG. S6-2.
2. FOR FRAMING PLAN, SEE DWG. S6-31 & S6-32.
3. FOR CROSS FRAMING DETAILS, SEE DWG. S6-35.

UNOFFICAL WEBSITE COPY

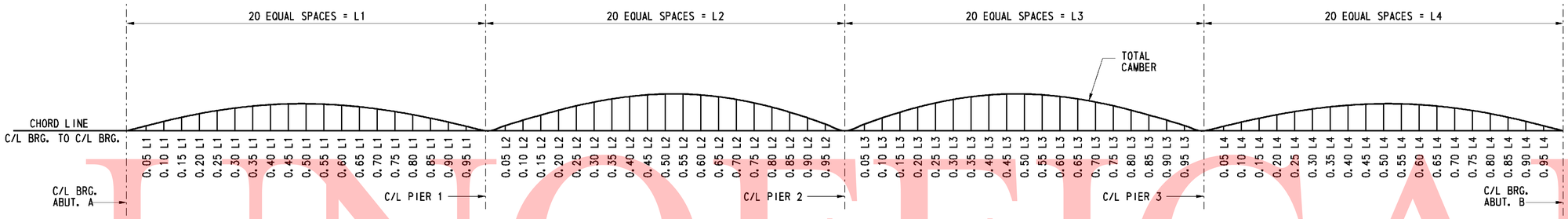

SCHEMATIC CAMBER DIAGRAM

LEGEND

DLS - DENOTES DEFLECTION DUE TO STRUCTURAL STEEL GIRDER.

DLC - DENOTES DEFLECTION DUE TO DECK SLAB, HAUNCH AND S.I.P. FORMS

SDL - DENOTES DEFLECTION DUE TO BARRIER

TDC - DENOTES TOTAL DEAD LOAD DEFLECTION AND CAMBER

VCO - DENOTES CAMBER FOR VERTICAL CURVE ORDINATE DUE TO ROADWAY PROFILE

TDC+VCO - DENOTES TOTAL CAMBER

ALL GIRDERS SHALL BE CAMBERED FOR DEAD LOAD DEFLECTION ORDINATES TO THE TO THE DIMENSIONS SHOWN ON THESE PLANS. THE CAMBER TOLERANCE IS NOTHING UNDER TO THREE QUARTERS (¾) INCH OVER.

CAMBER ORDINATE

GIRDER NO.	POINT	CL BRG	SPAN 1 0.05L	0.10L	0.15L	0.20L	0.25L	0.30L	0.35L	0.40L	0.45L	0.50L	0.55L	0.60L	0.65L	0.70L	0.75L	0.80L	0.85L	0.90L	0.95L	CL PIER 1
G1	DLS	0	1/2	15/16	1 3/8	1 3/4	2 1/16	2 5/16	2 1/2	2 9/16	2 5/8	2 9/16	2 7/16	2 1/4	1 15/16	1 11/16	1 3/8	1 1/16	11/16	7/16	3/16	0
	DLC	0	7/8	1 5/8	2 1/2	3	3 3/4	3 15/16	4 1/2	4 3/8	4 11/16	4 1/4	4 5/16	3 5/8	3 1/2	2 11/16	2 3/8	1 5/8	1 3/16	5/8	5/16	0
	SDL	0	1/8	1/4	3/8	1/2	5/8	11/16	3/4	3/4	3/4	3/4	11/16	5/8	9/16	1/2	3/8	5/16	3/16	1/8	1/16	0
	TDC	0	1 1/2	2 13/16	4 1/4	5 1/4	6 7/16	6 15/16	7 3/4	7 11/16	8 1/16	7 9/16	7 7/16	6 1/2	6	4 7/8	4 1/8	2 15/16	2 1/8	1 3/16	9/16	0
	VCO	0	0	0	0	0	9/16	1 1/16	1 7/16	1 13/16	2 1/16	2 1/4	2 5/16	2 3/8	2 5/16	2 1/4	2 1/16	1 13/16	1 7/16	1 1/16	9/16	0
	TDC+VCO	0	1 1/2	2 13/16	4 1/4	5 1/4	7	7 15/16	9 3/16	9 1/2	10 1/8	9 3/4	9 3/4	8 7/8	8 3/8	7 1/8	6 3/16	4 3/4	3 9/16	2 1/4	1 1/8	0
G2	DLS	0	7/16	7/8	1 1/4	1 5/8	1 15/16	2 1/8	2 5/16	2 3/8	2 7/16	2 3/8	2 1/4	2 1/16	1 13/16	1 9/16	1 1/4	15/16	5/8	3/8	3/16	0
	DLC	0	7/8	1 9/16	2 7/16	2 15/16	3 5/8	3 13/16	4 3/8	4 1/4	4 9/16	4 1/8	4 3/16	3 9/16	3 3/8	2 5/8	2 5/16	1 9/16	1 3/16	5/8	5/16	0
	SDL	0	1/8	1/4	3/8	1/2	9/16	5/8	11/16	11/16	3/4	11/16	11/16	5/8	9/16	1/2	3/8	5/16	3/16	1/8	1/16	0
	TDC	0	1 7/16	2 11/16	4 1/8	5	6 1/8	6 5/8	7 3/8	7 3/8	7 11/16	7 3/16	7 1/8	6 1/4	5 3/4	4 5/8	3 15/16	2 13/16	2	1 1/16	1/2	0
	VCO	0	0	0	0	0	9/16	1 1/16	1 7/16	1 13/16	2 1/16	2 1/4	2 5/16	2 3/8	2 5/16	2 1/4	2 1/16	1 13/16	1 7/16	1 1/16	9/16	0
	TDC+VCO	0	1 7/16	2 11/16	4 1/8	5	6 11/16	7 11/16	8 13/16	9 1/8	9 3/4	9 7/16	9 7/16	8 5/8	8 1/8	6 7/8	6	4 9/16	3 7/16	2 1/8	1 1/16	0
G3	DLS	0	7/16	13/16	1 3/16	1 1/2	1 3/4	2	2 1/8	2 3/16	2 3/16	2 3/16	2 1/16	1 7/8	1 5/8	1 3/8	1 1/8	7/8	9/16	5/16	1/8	0
	DLC	0	13/16	1 9/16	2 3/8	2 13/16	3 9/16	3 3/4	4 1/4	4 1/8	4 7/16	4	4 1/16	3 7/16	3 5/16	2 1/2	2 1/4	1 1/2	1 1/8	9/16	1/4	0
	SDL	0	1/8	1/4	3/8	7/16	9/16	5/8	11/16	11/16	11/16	11/16	5/8	5/8	1/2	7/16	3/8	1/4	3/16	1/8	1/16	0
	TDC	0	1 3/8	2 9/16	3 7/8	4 13/16	5 7/8	6 5/16	7	7	7 5/16	6 13/16	6 3/4	5 7/8	5 1/2	4 3/8	3 11/16	2 5/8	1 7/8	1	7/16	0
	VCO	0	0	0	0	0	9/16	1 1/16	1 7/16	1 13/16	2 1/16	2 1/4	2 5/16	2 3/8	2 5/16	2 1/4	2 1/16	1 13/16	1 7/16	1 1/16	9/16	0
	TDC+VCO	0	1 3/8	2 9/16	3 7/8	4 13/16	6 7/16	7 3/8	8 1/2	8 13/16	9 3/8	9 1/16	9 1/8	8 1/4	7 13/16	6 5/8	5 3/4	4 3/8	3 5/16	2 1/16	1	0
G4	DLS	0	3/8	3/4	1 1/16	1 3/8	1 5/8	1 13/16	1 15/16	2	2	1 15/16	1 13/16	1 11/16	1 1/2	1 1/4	1	3/4	1/2	5/16	1/8	0
	DLC	0	13/16	1 1/2	2 1/4	2 3/4	3 7/16	3 9/16	4 1/8	3 15/16	4 1/4	3 7/8	3 15/16	3 5/16	3 3/16	2 7/16	2 1/8	1 7/16	1 1/16	1/2	1/4	0
	SDL	0	1/8	1/4	3/8	7/16	1/2	9/16	5/8	11/16	11/16	5/8	5/8	9/16	1/2	7/16	3/8	1/4	3/16	1/8	1/16	0
	TDC	0	1 5/16	2 7/16	3 11/16	4 1/2	5 9/16	5 15/16	6 5/8	6 5/8	6 15/16	6 7/16	6 3/8	5 9/16	5 1/8	4 1/16	3 7/16	2 7/16	1 11/16	7/8	7/16	0
	VCO	0	0	0	0	0	9/16	1 1/16	1 7/16	1 13/16	2 1/16	2 1/4	2 5/16	2 3/8	2 5/16	2 1/4	2 1/16	1 13/16	1 7/16	1 1/16	9/16	0
	TDC+VCO	0	1 5/16	2 7/16	3 11/16	4 1/2	6 1/8	7	8 1/8	8 3/8	8 15/16	8 11/16	8 11/16	7 15/16	7 1/2	6 5/16	5 1/2	4 3/16	3 3/16	1 15/16	1	0

CAMBER ORDINATE

GIRDER NO.	POINT	CL PIER 2	SPAN 2 0.05L	0.10L	0.15L	0.20L	0.25L	0.30L	0.35L	0.40L	0.45L	0.50L	0.55L	0.60L	0.65L	0.70L	0.75L	0.80L	0.85L	0.90L	0.95L	CL PIER 3
G1	DLS	0	1/16	3/16	3/16	5/16	7/16	9/16	11/16	13/16	13/16	7/8	13/16	3/4	11/16	9/16	7/16	1/4	1/8	1/16	0	0
	DLC	0	1/16	3/16	3/8	11/16	15/16	1 3/16	1 7/16	1 9/16	1 3/4	1 11/16	1 11/16	1 7/16	1 3/8	1	7/8	7/16	5/16	0	0	0
	SDL	0	0	1/16	1/16	1/8	3/16	1/4	1/4	5/16	5/16	5/16	5/16	5/16	1/4	1/4	3/16	1/8	1/16	0	0	0
	TDC	0	1/8	5/16	11/16	1 1/8	1 9/16	2	2 7/16	2 11/16	2 7/8	2 13/16	2 7/8	2 1/2	2 5/16	1 3/4	1 7/16	13/16	9/16	1/8	0	0
	VCO	0	11/16	1 5/16	1 7/8	2 3/8	2 13/16	3 1/8	3 3/8	3 9/16	3 11/16	3 11/16	3 11/16	3 9/16	3 3/8	3 1/8	2 13/16	2 3/8	1 7/8	1 5/16	11/16	0
	TDC+VCO	0	13/16	1 11/16	2 9/16	3 1/2	4 3/8	5 1/8	5 13/16	6 1/4	6 9/16	6 9/16	6 9/16	6 1/16	5 11/16	4 7/8	4 1/4	3 3/16	2 7/16	1 7/16	11/16	0
G2	DLS	0	0	1/16	3/16	5/16	7/16	9/16	11/16	3/4	13/16	13/16	13/16	3/4	11/16	9/16	7/16	5/16	3/16	1/16	0	0
	DLC	0	1/16	3/16	3/8	11/16	15/16	1 3/16	1 7/16	1 9/16	1 11/16	1 5/8	1 11/16	1 7/16	1 3/8	1	7/8	1/2	3/8	1/16	0	0
	SDL	0	0	1/16	1/16	1/8	3/16	1/4	1/4	5/16	5/16	5/16	5/16	5/16	1/4	1/4	3/16	1/8	1/16	0	0	0
	TDC	0	1/8	5/16	11/16	1 1/8	1 9/16	2	2 3/8	2 5/8	2 7/8	2 13/16	2 13/16	2 1/2	2 5/16	1 3/4	1 1/2	7/8	9/16	3/16	1/16	0
	VCO	0	11/16	1 5/16	1 7/8	2 3/8	2 13/16	3 1/8	3 3/8	3 9/16	3 11/16	3 11/16	3 11/16	3 9/16	3 3/8	3 1/8	2 13/16	2 3/8	1 7/8	1 5/16	11/16	0
	TDC+VCO	0	13/16	1 11/16	2 9/16	3 1/2	4 3/8	5 1/8	5 3/4	6 3/16	6 1/2	6 1/2	6 1/2	6 1/16	5 11/16	4 7/8	4 1/4	3 1/4	2 1/2	1 1/2	3/4	0
G3	DLS	0	0	1/16	3/16	5/16	7/16	9/16	11/16	3/4	13/16	13/16	13/16	3/4	11/16	9/16	7/16	5/16	3/16	1/16	0	0
	DLC	0	1/16	3/16	3/8	11/16	15/16	1 3/16	1 7/16	1 9/16	1 11/16	1 5/8	1 11/16	1 7/16	1 3/8	1	7/8	1/2	3/8	1/8	1/16	0
	SDL	0	0	1/16	1/16	1/8	3/16	1/4	1/4	5/16	5/16	5/16	5/16	5/16	1/4	1/4	3/16	1/8	1/16	1/16	0	0
	TDC	0	1/8	5/16	11/16	1 1/8	1 9/16	2	2 5/16	2 9/16	2 13/16	2 3/4	2 3/4	2 1/2	2 5/16	1 3/4	1 1/2	15/16	5/8	3/16	1/16	0
	VCO	0	11/16	1 5/16	1 7/8	2 3/8	2 13/16	3 1/8	3 3/8	3 9/16	3 11/16	3 11/16	3 11/16	3 9/16	3 3/8	3 1/8	2 13/16	2 3/8	1 7/8	1 5/16	11/16	0
	TDC+VCO	0	13/16	1 11/16	2 9/16	3 1/2	4 5/16	5 1/8	5 3/4	6 1/8	6 1/2	6 1/2	6 7/16	6 1/16	5 11/16	4 15/16	4 1/4	3 5/16	2 1/2	1 9/16	3/4	0
G4	DLS	0	0	1/16	3/16	5/16	7/16	9/16	11/16	3/4	13/16	3/4	5/8	9/16	7/16	5/16	3/16	1/16	0	0	0	0
	DLC	0	1/16	3/16	3/8	11/16	7/8	1 3/16	1 3/8	1 1/2	1 5/8	1 5/8	1 5/8	1 7/16	1 3/8	1 1/16	7/8	9/16	3/8	1/8	1/16	0
	SDL	0	0	1/16	1/16	1/8	3/16	1/4	1/4	5/16	5/16	5/16	5/16	1/4	1/4	3/16	3/16	1/8	1/16	1/16	0	0
	TDC	0	1/8	5/16	5/8	1 1/16	1 1/2	1 15/16	2 1/4	2 1/2	2 11/16	2 11/16	2 11/16	2 7/16	2 1/4	1 13/16	1 1/2	15/16	5/8	1/4	1/16	0
	VCO	0	11/16	1 5/16	1 7/8	2 3/8	2 13/16	3 1/8	3 3/8	3 9/16	3 11/16	3 11/16	3 11/16	3 9/16	3 3/8	3 1/8	2 13/16	2 3/8	1 7/8	1 5/16	11/16	0
	TDC+VCO	0	13/16	1 5/8	2 9/16	3 1/2	4 5/16	5 1/16	5 5/8	6 1/16	6 3/8	6 7/16	6 3/8	6	5 5/8	4 7/8	4 1/4	3 5/16	2 1/2	1 9/16	3/4	0

CAMBER ORDINATE

GIRDER NO.	POINT	CL PIER 3	SPAN 3 0.05L	0.10L	0.15L	0.20L	0.25L	0.30L	0.35L	0.40L	0.45L	0.50L	0.55L	0.60L	0.65L	0.70L	0.75L	0.80L	0.85L	0.90L	0.95L	CL PIER 1
G1	DLS	0	1/16	1/8	1/4	3/8	9/16	11/16	7/8	1	1 1/16	1 3/16	1 3/16	1 3/16	1 3/16	1 1/8	1	13/16	11/16	7/16	1/4	0
	DLC	0	1/8	5/16	1/2	15/16	1 1/8	1 5/8	1 13/16	2 1/4	2 5/16	2 5/8	2 9/16	2 11/16	2 1/2	2 7/16	2 1/16	1 7/8	1 3/8	1	1/2	0
	SDL	0	0	1/16	1/16	1/8	3/16	1/4	5/16	5/16	3/8	3/8	7/16	7/16	3/8	3/8	5/16	1/4	1/4	1/8	1/16	0
	TDC	0	3/16	1/2	7/8	1 1/2	1 7/8	2 9/16	2 15/16	3 9/16	3 3/4	4 3/16	4 3/16	4 5/16	4 1/16	3 15/16	3 7/16	3	2 1/4	1 5/8	13/16	0
	VCO	0	1/2	15/16	1 3/8	1 11/16	2	2 1/4	2 7/16	2 9/16	2 5/8	2 11/16	2 5/8	2 9/16	2 7/16	2 1/4	2	1 11/16	1 3/8	15/16	1/2	0
	TDC+VCO	0	11/16	1 7/16	2 3/16	3 1/16	3 7/8	4 13/16	5 3/8	6 1/8	6 3/8	6 11/16	6 1/2	6 7/8	6 1/2	6 1/16	5 3/8	4 11/16	3 5/8	2 9/16	1 5/16	0
G2	DLS	0	1/16	1/8	1/4	3/8	1/2	11/16	13/16	15/16	1	1 1/16	1 1/8	1 1/8	1 1/8	1	15/16	13/16	5/8	7/16	1/4	0
	DLC	0	1/8	5/16	1/2	7/8	1 1/16	1 1/2	1 11/16	2 1/16	2 1/8	2 7/16	2 3/8	2 1/2	2 5/16	2 1/4	1 15/16	1 11/16	1 5/16	15/16	7/16	0
	SDL	0	0	1/16	1/16	1/8	3/16	1/4	1/4	5/16	5/16	3/8	3/8	3/8	3/8	5/16	5/16	1/4	3/16	1/8	1/16	0
	TDC	0	3/16	1/2	13/16	1 3/8	1 3/4	2 7/16	2 3/4	3 5/16	3 1/2	3 7/8	3 7/8	4	3 3/4	3 5/8	3 3/16	2 3/4	2 1/8	1 1/2	3/4	0
	VCO	0	1/2	15/16	1 3/8	1 11/16	2	2 1/4	2 7/16	2 9/16	2 5/8	2 11/16	2 5/8	2 9/16	2 7/16	2 1/4	2	1 11/16	1 3/8	15/16	1/2	0
	TDC+VCO	0	11/16	1 7/16	2 3/16	3 1/16	3 3/4	4 5/8	5 3/16	5 7/8	6 1/8	6 9/16	6 1/2	6 9/16	6 3/16	5 7/8	5 3/16	4 7/16	3 1/2	2 7/16	1 1/4	0
G3	DLS	0	1/16	1/8	3/16	3/8	1/2	5/8	3/4	7/8	15/16	1	1 1/16	1 1/16	1	15/16	7/8	3/4	9/16	3/8	3/16	0
	DLC	0	1/16	1/4	7/16	13/16	1	1 3/8	1 9/16	1 7/8	2	2 1/4	2 3/16	2 5/16	2 1/8	2 1/16	1 13/16	1 9/16	1 3/16	7/8	7/16	0
	SDL	0	0	1/16	1/16	1/8	3/16	3/16	1/4	5/16	5/16	5/16	3/8	3/8	5/16	5/16	1/4	1/4	3/16	1/8	1/16	0
	TDC	0	1/8	5/16	11/16	1 1/8	1 9/16	2	2 5/16	2 9/16	2 13/16	2 3/4	2 3/4	2 1/2	2 5/16	1 3/4	1 1/2	15/16	5/8	3/16	1/16	0
	VCO	0	11/16	1 5/16	1 7/8	2 3/8	2 13/16	3 1/8	3 3/8	3 9/16	3 11/16	3 11/16	3 11/16	3 9/16	3 3/8	3 1/8	2 13/16	2 3/8	1 7/8	1 5/16	11/16	0
	TDC+VCO	0	13/16	1 11/16	2 9/16	3 1/2	4 5/16	5 1/16	5 5/8	6 1/16	6 3/8	6 7/16	6 3/8	6	5 5/8	4 7/8	4 1/4	3 5/16	2 1/2	1 9/16	3/4	0
G4	DLS	0	1/16	1/8	3/16	5/16	7/16	9/16	11/16	13/16	7/8	15/16	15/16	15/16	15/16	7/8	13/16	11/16	1/2	3/8	3/16	0
	DLC	0	1/16	1/4	3/8	11/16	15/16	1 1/4	1 7/16	1 3/4	1 13/16	2	2	2 1/16	1 15/16	1 7/8	1 5/8	1 7/16	1 1/8	3/4	3/8	0
	SDL	0	0	1/16	1/16	1/8	3/16	1/4	1/4	5/16	5/16	5/16	5/16	5/16	1/4	3/16	3/16	1/8	1/16	1/16	0	0
	TDC	0	1/8	3/8	11/16	1 1/8	1 1/2	2	2 5/16	2 3/4	3	3 1/4	3 5/16	3 3/8	3 3/16	3 1/16	2 11/16	2 5/16	1 7/8	1 1/16	5/8	0
	VCO	0	1/2	15/16	1 3/8	1 11/16	2	2 1/4	2 7/16	2 9/16	2 5/8	2 11/16	2 5/8	2 9/16	2 7/16	2 1/4	2	1 11/16	1 3/8	15/16	1/2	0
	TDC+VCO	0	5/8	1 5/16	2	2 13/16	3 1/2	4 1/4	4 3/4	5 5/16	5 5/8	5 15/16	5 15/16	5 15/16	5 5/8	5 1/4	4 11/16	4	3 1/8	2 3/16	1 1/8	0

CROSS REFERENCE NOTES:

1. FOR GENERAL NOTES, SEE DWG. S6-1.
2. FOR VERTICAL CURVE DATA, SEE DWG. S6-1.
3. FOR GIRDER ELEVATION, SEE DWG. S6-31 & S6-32.

UNOFFICIAL WEB COPY

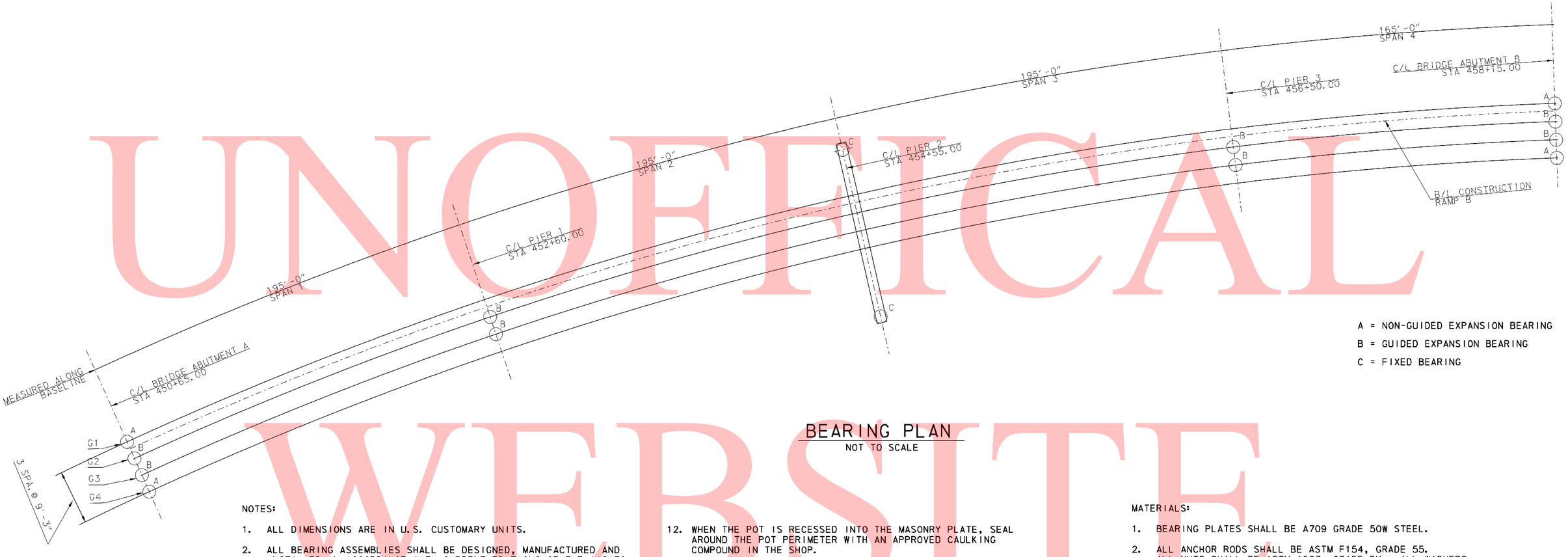

A = NON-GUIDED EXPANSION BEARING

B = GUIDED EXPANSION BEARING

C = FIXED BEARING

BEARING PLAN

NOT TO SCALE

NOTES:

1. ALL DIMENSIONS ARE IN U.S. CUSTOMARY UNITS.
2. ALL BEARING ASSEMBLIES SHALL BE DESIGNED, MANUFACTURED AND INSTALLED IN ACCORDANCE WITH CURRENT EDITIONS OF THE AASHTO LRFD DESIGN SPECIFICATIONS AND THE BEARING MANUFACTURER'S RECOMMENDATIONS.
3. ROUND ALL PTFE CORNERS TO ACCOMMODATE THE MACHINED RECESS IN STEEL GUIDE PLATE/PISTON.
4. ETCH PTFE ON ONE SIDE FOR BONDING INTO THE MACHINED RECESS.
5. PTFE ON THE SIDE OF GUIDE PLATE MUST BE PIGMENTED.
6. PRIOR TO THE APPLICATION OF ADHESIVE, CLEAN ALL MATING STEEL AND PTFE SURFACES BY GRIT BLASTING AND DECREASING. APPLY ADHESIVE AS PER THE MANUFACTURER'S RECOMMENDATION.
7. LUBRICATE ALL SURFACES OF NEOPRENE DISC WITH SILICONE GREASE IN ACCORDANCE WITH MILITARY SPECIFICATION MIL-S-8660.
8. CUT FLAT BRASS SEALING RING ENDS AT 45 DEGREE ANGLE WITH A MAXIMUM GAP OF 0.05 INCHES. STAGGER THE OPENINGS IN THE BRASS RINGS 120 DEGREES APART.
9. MARK THE THICKER EDGE OF THE SOLE PLATE AS SUCH FOR THE PURPOSE OF FIELD IDENTIFICATION. PLACE MARK ON THE EDGE OF SOLE PLATE SO THAT IT WILL BE VISIBLE AFTER BEARING INSTALLATION. IN THE CASE OF A SOLE PLATE WITH A COMPOUND BEVEL, PLACE THE MARK ON EITHER EDGE OF THE THICKEST SOLE PLATE CORNER.
10. MARK CENTERLINE OF GUIDED AND NON-GUIDED POT BEARINGS ON THE SIDES OF MASONRY PLATE AND SOLE PLATE. THE CENTERLINE IDENTIFICATION MARKS WILL BE USEFUL TO LOCATED OFFSET DISTANCES IN THE FIELD. USE INDELIBLE INK TO PLACE ALL MARKS.
11. MARK EACH BEARING WITH THE NAME OF THE MANUFACTURER AND TYPE OR MODEL NUMBER. PLACE THE IDENTIFICATION MARK IN A PERMANENT MANNER AND LOCATION SO THAT IT IS VISIBLE AFTER ERECTION.
12. WHEN THE POT IS RECESSED INTO THE MASONRY PLATE, SEAL AROUND THE POT PERIMETER WITH AN APPROVED CAULKING COMPOUND IN THE SHOP.
13. ANCHOR RODS SHALL BE INSTALLED PRIOR TO ERECTION OF STRUCTURAL STEEL.
14. FILL HOLES AROUND ANCHOR RODS WITH A NONHARDENING CAULKING COMPOUND.
15. PLATES SHALL BE SHIPPED AS UNITS.
16. DESIGN SERVICE LIMIT STATE ELASTOMER & PTFE BEARING PRESSURE IS 3.50 KSI, MINIMUM IS 0.7 KSI.
17. DESIGN ROTATION = 0.03 RADIANS
    DESIGN COEFFICIENT OF FRICTION BETWEEN PTFE AND STAINLESS STEEL = 0.05.
18. GUIDED AND NON-GUIDED BEARINGS AT ABUTMENTS ARE DESIGNED FOR A TOTAL LONGITUDINAL MOVEMENT OF 5" PLUS 1" OF CONSTRUCTION TOLERANCE IN EACH LONGITUDINAL DIRECTION.
    GUIDED BEARINGS AT PIERS 1 AND 3 ARE DESIGNED FOR A TOTAL LONGITUDINAL MOVEMENT OF 3" PLUS 1" OF CONSTRUCTION TOLERANCE IN EACH LONGITUDINAL DIRECTION.
19. AS AN ALTERNATE TO BEARING DETAILS SHOWN ON THESE PLANS, BEARINGS MAY BE DESIGNED BY BEARING MANUFACTURER USING LOADS, MOVEMENTS, ROTATIONS, AND OTHER CRITERIA SPECIFIED ON THESE PLANS. IF THIS ALTERNATE IS SELECTED CONTRACTOR SHALL COORDINATE ANY REVISIONS TO ANCHOR ROD LAYOUT, BEARING PAD ELEVATIONS, ETC.

MATERIALS:

1. BEARING PLATES SHALL BE A709 GRADE 50W STEEL.
2. ALL ANCHOR RODS SHALL BE ASTM F154, GRADE 55. ALL NUTS SHALL BE ASTM A563, GRADE DH. ALL WASHERS SHALL BE ASTM F436, TYPE 1. GALVANIZE BOLTS, NUTS AND WASHERS.
3. STAINLESS STEEL: ASTM A167 OR A264, TYPE 304 WITH A SURFACE FINISH OF 8.0 IN RMS OR BETTER.
4. FLAT BRASS SEALING RINGS: ASTM B36 (HALF HARD) SPECIFICATION.
5. ELASTOMERIC DISC: VIRGIN PLAIN NEOPRENE OR NATURAL RUBBER WITH HARDNESS OF BETWEEN 50 AND 60 DUROMETER.
6. PTFE SHEET: (UNFILLED, DIMPLED AND LUBRICATED) MADE FROM VIRGIN PTFE RESIN PER ASTM D4894. DIMPLES MUST HAVE A MINIMUM EDGE DISTANCE OF 0.5 INCHES AND CONFORM TO AASHTO LRFD SECTION 14.
7. BEDDING MATERIAL : 1/8" NEOPRENE PAD.

UNOFFICAL WEBSITE COPY

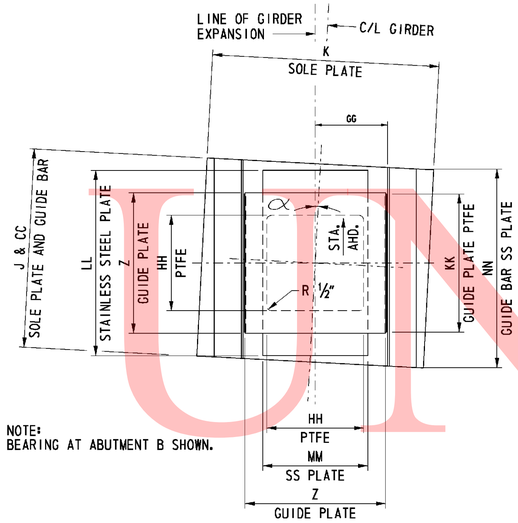

NOTE:
BEARING AT ABUTMENT B SHOWN.

SECTION A-A
NOT TO SCALE

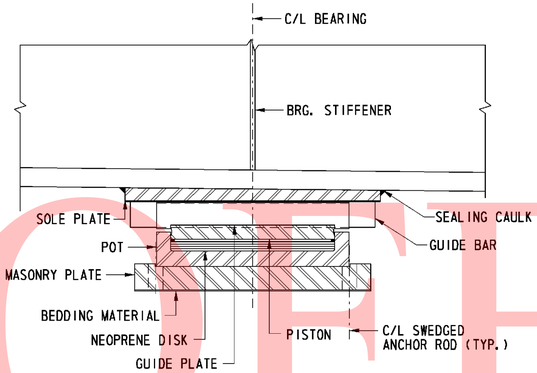

SIDE VIEW
NOT TO SCALE

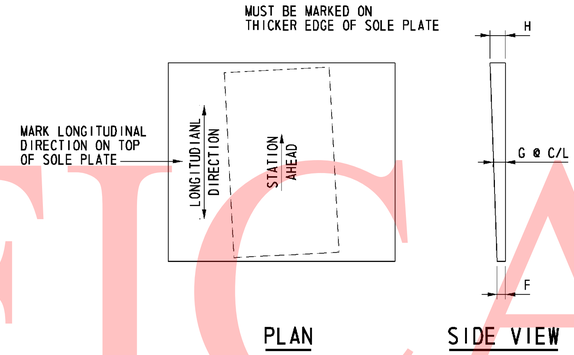

PLAN

SIDE VIEW

SOLE PLATE DETAIL
NOT TO SCALE

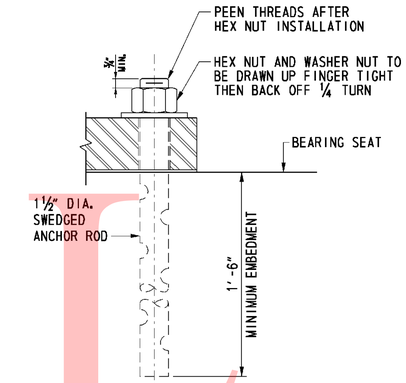

ANCHOR ROD DETAIL
NOT TO SCALE

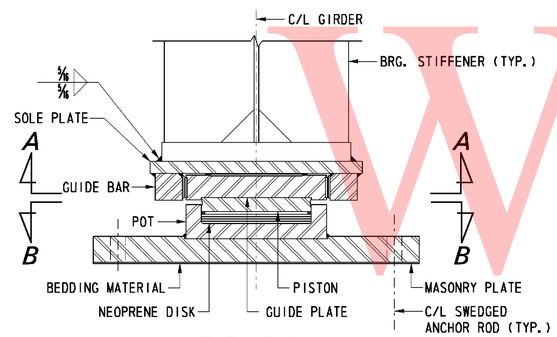

ELEVATION
NOT TO SCALE

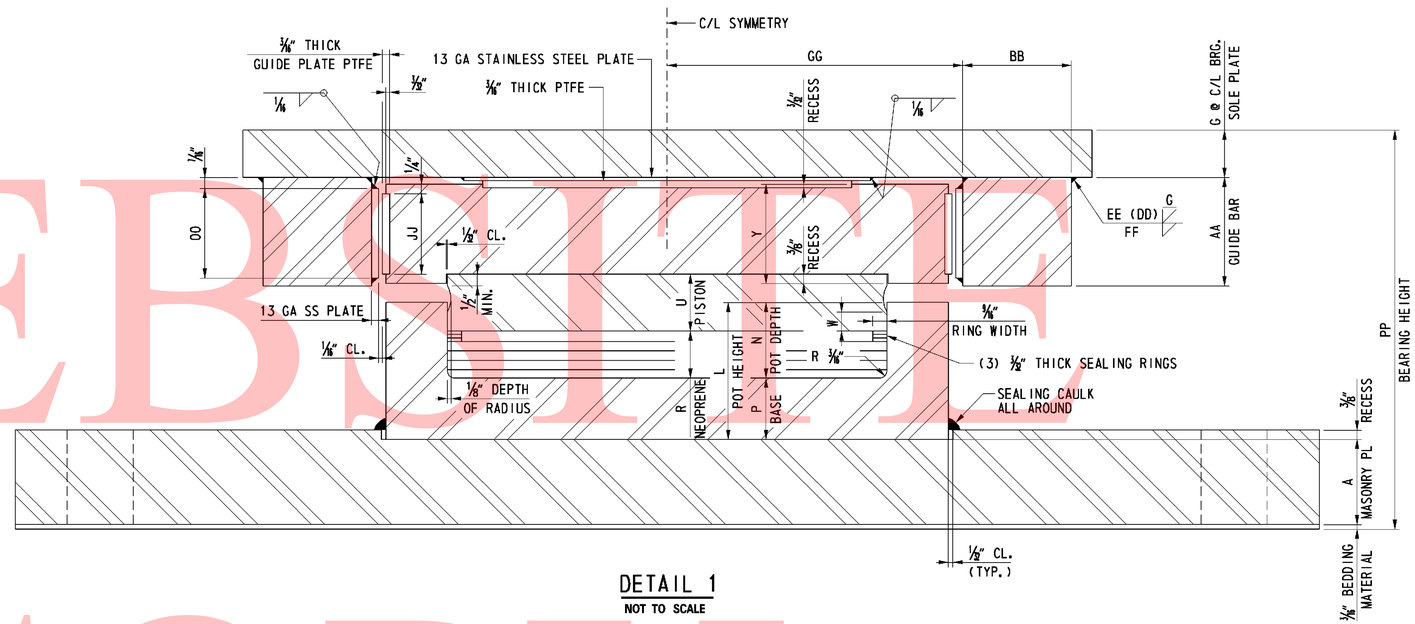

DETAIL 1
NOT TO SCALE

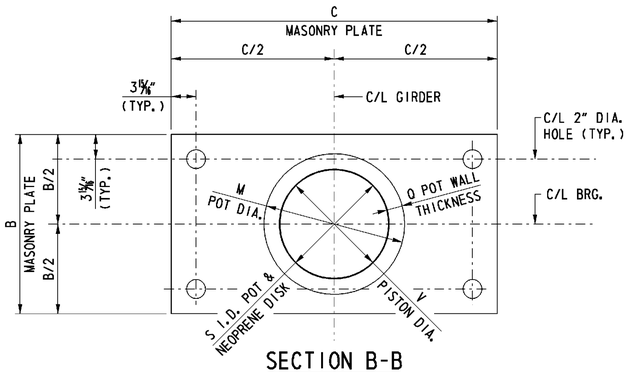

SECTION B-B
NOT TO SCALE

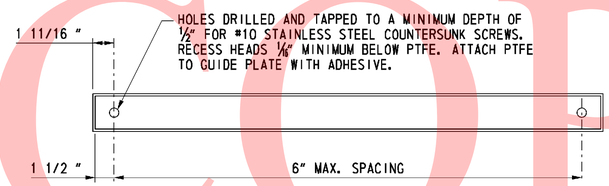

GUIDE PLATE PTFE DETAIL
NOT TO SCALE

LOCATION	SERVICE VERTICAL LOAD (kips)	STRENGTH VERTICAL LOAD (kips)	STRENGTH HORIZONTAL LOAD (kips)	α	MASONRY PLATE A	MASONRY PLATE B	MASONRY PLATE C	SOLE PLATE F	SOLE PLATE G	SOLE PLATE H	SOLE PLATE J	SOLE PLATE K
ABUTMENT A - G2-G3	350	450	100		2½"	19"	37½"	100	1⅜"	1 15/16"	24"	27"
ABUTMENT B - G2-G3	350	450	100		2½"	19"	37½"	100	1⅜"	1 15/16"	24"	27"
PIER 1 - G2 - G3	1500	2200	450		3 15/16"	33⅜"	56⅞"	4¼"	2"	1 13/16"	35¼"	43⅜"
PIER 3 - G2 - G3	1500	2200	450		3 15/16"	33⅜"	56⅞"	4¼"	2"	1 13/16"	35¼"	43⅜"

LOCATION	POT L	POT M	POT N	POT P	POT Q	NEOPRENE DISC R	NEOPRENE DISC S	PISTON U	PISTON V	PISTON W	GUIDE PLATE Y	GUIDE PLATE Z
ABUTMENT A - G2-G3	3⅝"	14⅞"	2"	100	1⅝"	1¼"	11⅝"	1½"	11.585	½"	2⅝"	14⅞"
ABUTMENT B - G2-G3	3⅝"	14⅞"	2"	100	1⅝"	1¼"	11⅝"	1½"	11.585	½"	2⅝"	14⅞"
PIER 1 - G2 - G3	5¼"	30⅜"	3 3/16"	⅜"	3⅜"	2⅜"	23⅝"	2⅝"	23.585	1"	4 13/16"	30⅜"
PIER 3 - G2 - G3	5¼"	30⅜"	3 3/16"	⅜"	3⅜"	2⅜"	23⅝"	2⅝"	23.585	1"	4 13/16"	30⅜"

LOCATION	GUIDE BARS AA	GUIDE BARS BB	GUIDE BARS CC	GUIDE BARS DD	GUIDE BARS EE	GUIDE BARS FF	GUIDE BARS GG	PTFE HH	PTFE JJ	PTFE KK	STAINLESS STEEL LL	STAINLESS STEEL MM	STAINLESS STEEL NN	STAINLESS STEEL OO	* BEARING HEIGHT PP
ABUTMENT A - G2-G3	2⅞"	2⅞"	24"	5/16"	7/16"	5/16"	7.684	10⅛"	2⅛"	14⅝"	21⅝"	11⅛"	23¾"	2⅜"	10 15/16"
ABUTMENT B - G2-G3	2⅞"	2⅞"	24"	5/16"	7/16"	5/16"	7.684	10⅛"	2⅛"	14⅝"	21⅝"	11⅛"	23¾"	2⅜"	10 15/16"
PIER 1 - G2 - G3	5⅛"	5⅛"	35¼"	¾"	⅞"	¾"	15.465	20¾"	4⅜"	30⅛"	35⅛"	21¾"	35⅛"	4⅝"	16 13/16"
PIER 3 - G2 - G3	5⅛"	5⅛"	35¼"	¾"	⅞"	¾"	15.465	20¾"	4⅜"	30⅛"	35⅛"	21¾"	35⅛"	4⅝"	16 13/16"

* BEARING HEIGHT INCLUDES ⅛" BEDDING MATERIAL.
BEARING HEIGHT MEASURED AT C/L BEARING

UNOFFICIAL WEBSITE COPY

DELAWARE DEPARTMENT OF TRANSPORTATION

ADDENDUMS / REVISIONS

SR1 / I-95 INTERCHANGE

CONTRACT	BRIDGE NO.	1-268B
28-090-03	DESIGNED BY:	RMB
COUNTY	CHECKED BY:	DWD
NEW CASTLE		

RAMP B OVER I-95NB
GUIDED EXPANSION BEARING DETAILS

S6- 39
SHEET NO. 486
TOTAL SHTS. 803

8/5/2010 3:44:01 PM
M:\PROJECTS\2003\03059_DELTRNPK\SR1_MAL\CADD\2809003\PLANS_DOV\BD02_BR-S6_SR1.DGN

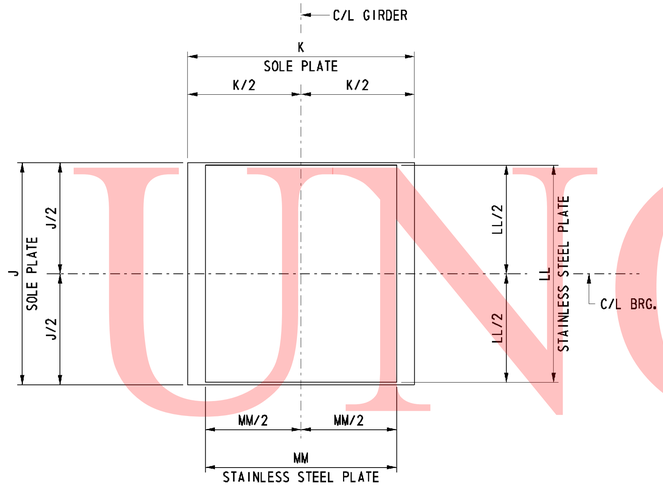

SECTION A-A
NOT TO SCALE

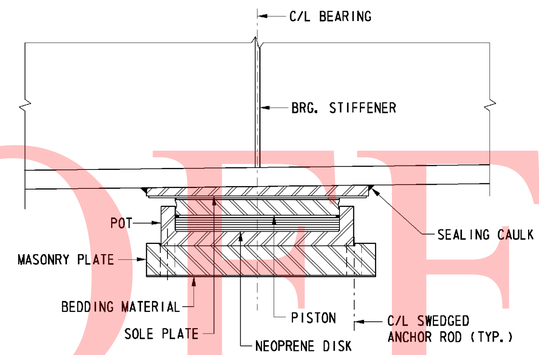

SIDE VIEW
NOT TO SCALE

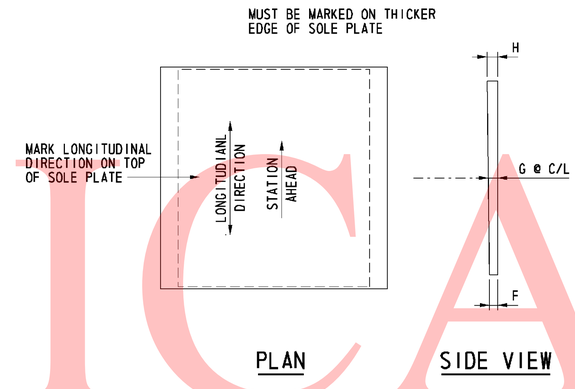

PLAN

SIDE VIEW

SOLE PLATE DETAIL
NOT TO SCALE

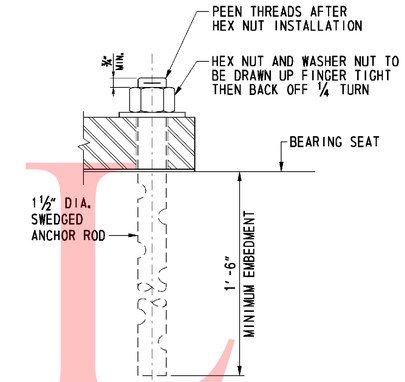

ANCHOR ROD DETAIL
NOT TO SCALE

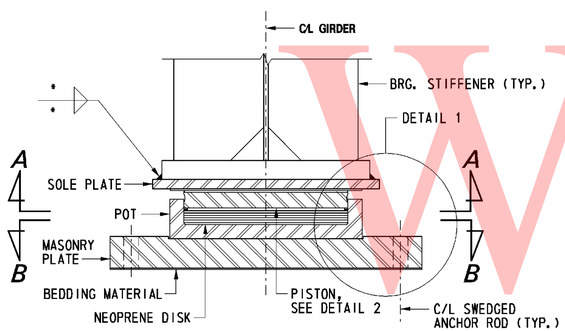

ELEVATION
NOT TO SCALE

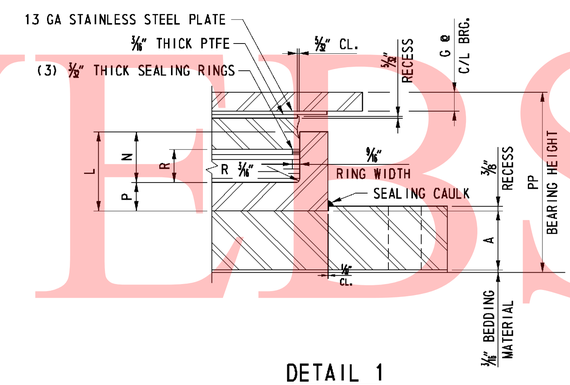

DETAIL 1
NOT TO SCALE

LOCATION	SERVICE VERTICAL LOAD (kips)	STRENGTH VERTICAL LOAD (kips)	MASONRY PLATE				SOLE PLATE					POT				
			A	B	C	D	F	G	H	J	K	L	M	N	P	Q
ABUTMENT A - G1 & G4	350	450	2 1/4"	19"	34 1/2"	2 5/8"	7/8"	1 1/4"	1 5/8"	21"	24"	3 5/8"	14 7/8"	2"	1 5/8"	1 5/8"
ABUTMENT B - G1 & G4	350	450	2 1/4"	19"	34 1/2"	2 5/8"	1 1/8"	1 1/4"	1 3/8"	21"	24"	3 5/8"	14 7/8"	2"	1 5/8"	1 5/8"

LOCATION	NEOPRENE DISC		PISTON			PTFE	STAINLESS STEEL		ANCHOR ROD		* BEARING HEIGHT
	R	S	U	V	W	HH	LL	MM	QTY.	DIA.	PP
ABUTMENT A - G1 & G4	1 1/4"	11 5/8"	1 1/2"	11.585"	1/2"	11 3/8"	17 1/4"	14 1/2"	4	1 1/2"	8 3/16"
ABUTMENT B - G1 & G4	1 1/4"	11 5/8"	1 1/2"	11.585"	1/2"	11 3/8"	17 1/4"	14 1/2"	4	1 1/2"	8 3/16"

* BEARING HEIGHT INCLUDES 1/8" BEDDING MATERIAL.
BEARING HEIGHT MEASURED AT C/L BEARING.

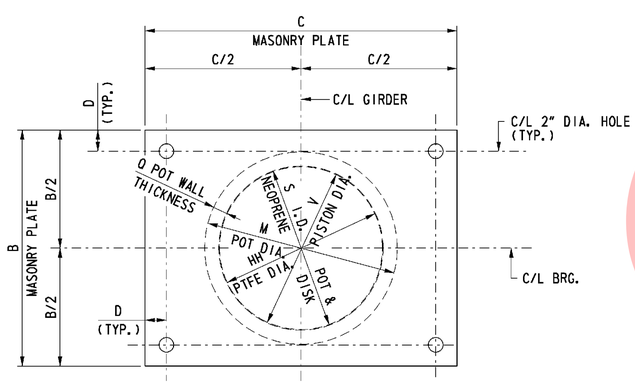

SECTION B-B
NOT TO SCALE

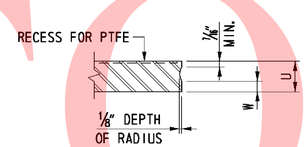

DETAIL 2
NOT TO SCALE

UNOFFICIAL WEBSITE COPY

8/5/2010 3:55:36 PM
M:\PROJECTS\2003\03059_DELTRNPK\SR1_MALL\CADD\2809003\PLANS. DOV\BD03_BR-S6_SR1.DGN

DELAWARE DEPARTMENT OF TRANSPORTATION

ADDENDUMS / REVISIONS

SR1 / I-95 INTERCHANGE

CONTRACT	BRIDGE NO.	1-268B
28-090-03	DESIGNED BY:	RMB
COUNTY		
NEW CASTLE	CHECKED BY:	DWD

RAMP B OVER I-95NB
NON-GUIDED EXPANSION BEARING DETAILS

S6- 40
SHEET NO. 487
TOTAL SHTS. 803

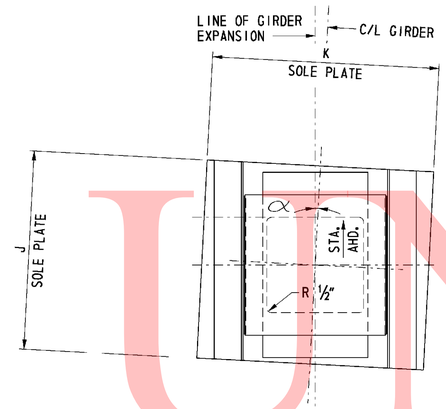

NOTE:
BEARING AT ABUTMENT B SHOWN.

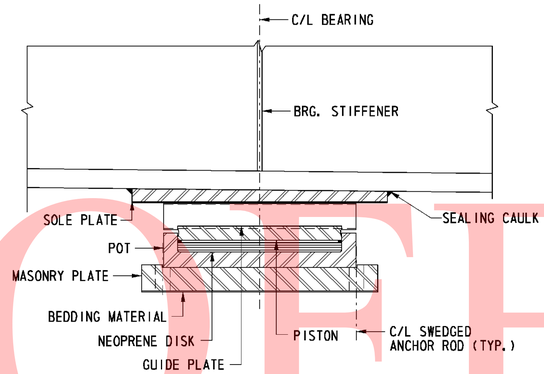

SIDE VIEW
NOT TO SCALE

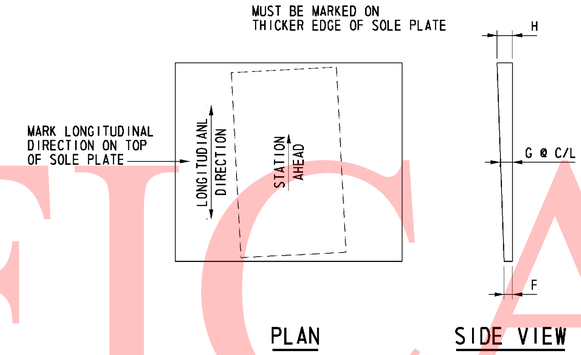

PLAN

SIDE VIEW

SOLE PLATE DETAIL
NOT TO SCALE

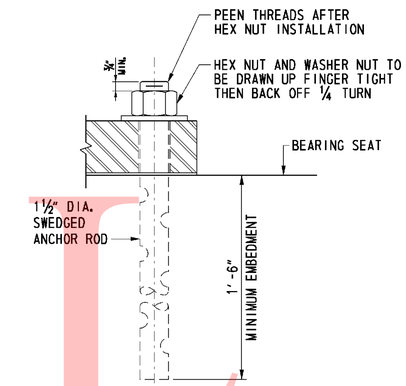

ANCHOR ROD DETAIL
NOT TO SCALE

SECTION A-A
NOT TO SCALE

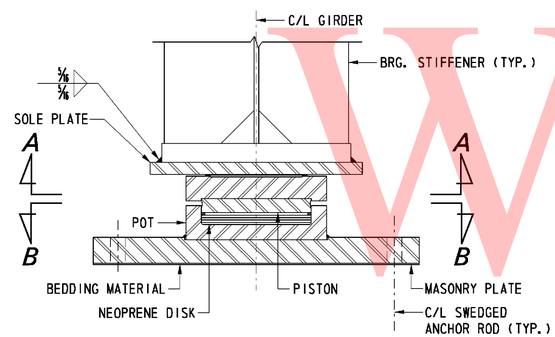

ELEVATION
NOT TO SCALE

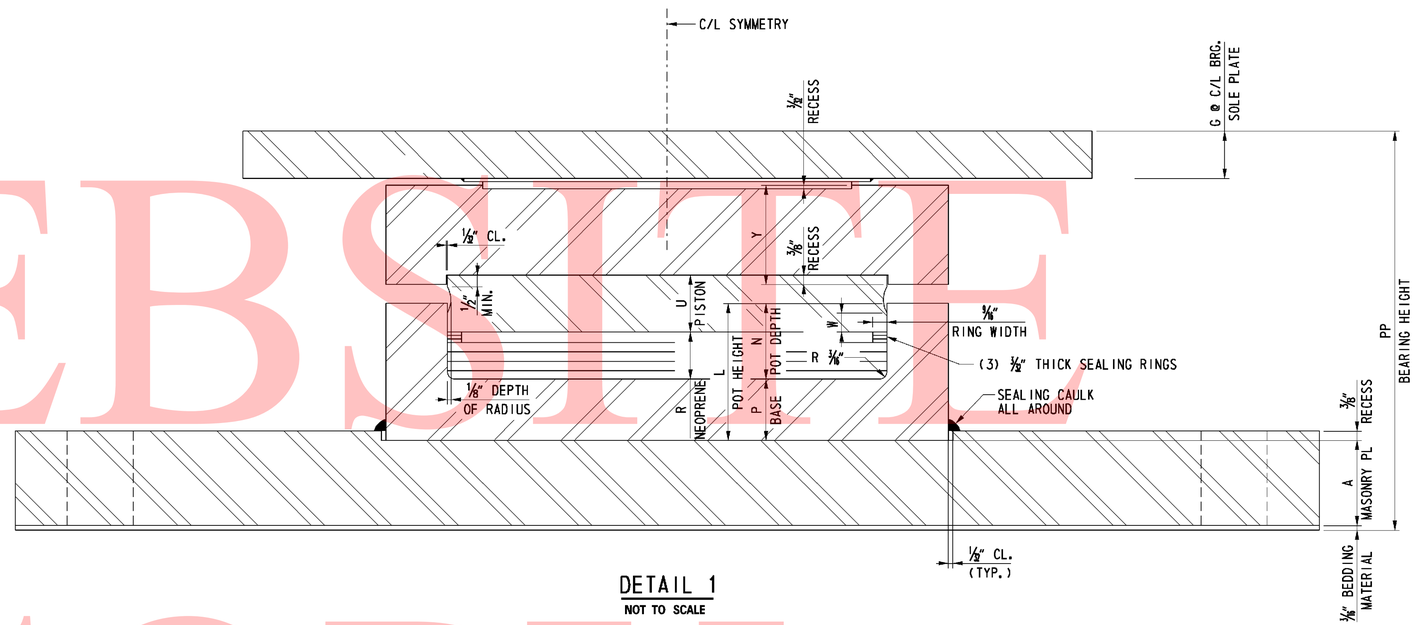

DETAIL 1
NOT TO SCALE

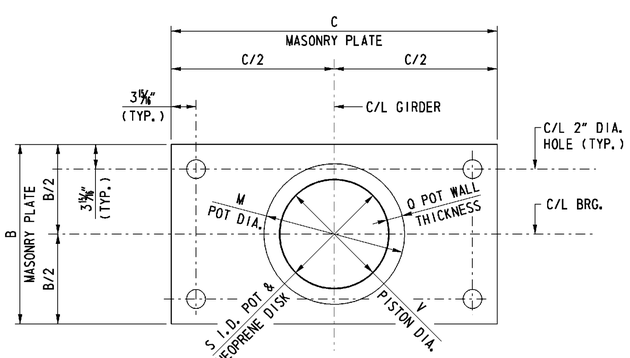

SECTION B-B
NOT TO SCALE

LOCATION	SERVICE VERTICAL LOAD (kips)	STRENGTH VERTICAL LOAD (kips)	STRENGTH HORIZONTAL LOAD (kips)	α	MASONRY PLATE A	MASONRY PLATE B	MASONRY PLATE C	SOLE PLATE F	SOLE PLATE G	SOLE PLATE H	SOLE PLATE J	SOLE PLATE K
PIER 2 COL. N & S	1200	2000	360	2°-51'-53" RT	2 3/16"	29 1/8"	40 3/4"	5"	2"	15/16"	27 1/4"	27 1/4"

LOCATION	POT L	POT M	POT N	POT P	POT Q	NEOPRENE DISC R	NEOPRENE DISC S	PISTON U	PISTON V	PISTON W	BEARING HEIGHT PP
PIER 2 COL. N & S	4 7/16"	27 1/4"	3 7/16"	3/16"	3"	2 1/8"	21 1/4"	2 1/4"	21.210	7/8"	8 5/8"

* BEARING HEIGHT INCLUDES ⅛" BEDDING MATERIAL.
BEARING HEIGHT MEASURED AT C/L BEARING

UNOFFICIAL WEBSITE COPY

8/5/2010 4:23:52 PM
M:\PROJECTS\2003\03059_DELTRNPK\SR1_MALL\CADD\2809003\PLANS.DGV\BD04_BR-S6_SR1.DGN

DELAWARE DEPARTMENT OF TRANSPORTATION

ADDENDUMS / REVISIONS

SR1 / I-95 INTERCHANGE

CONTRACT	BRIDGE NO.	1-268B
28-090-03	DESIGNED BY:	RMB
COUNTY	CHECKED BY:	DWD
NEW CASTLE		

RAMP B OVER I-95NB
FIXED BEARING DETAILS

S6- 41
SHEET NO. 488
TOTAL SHTS. 803

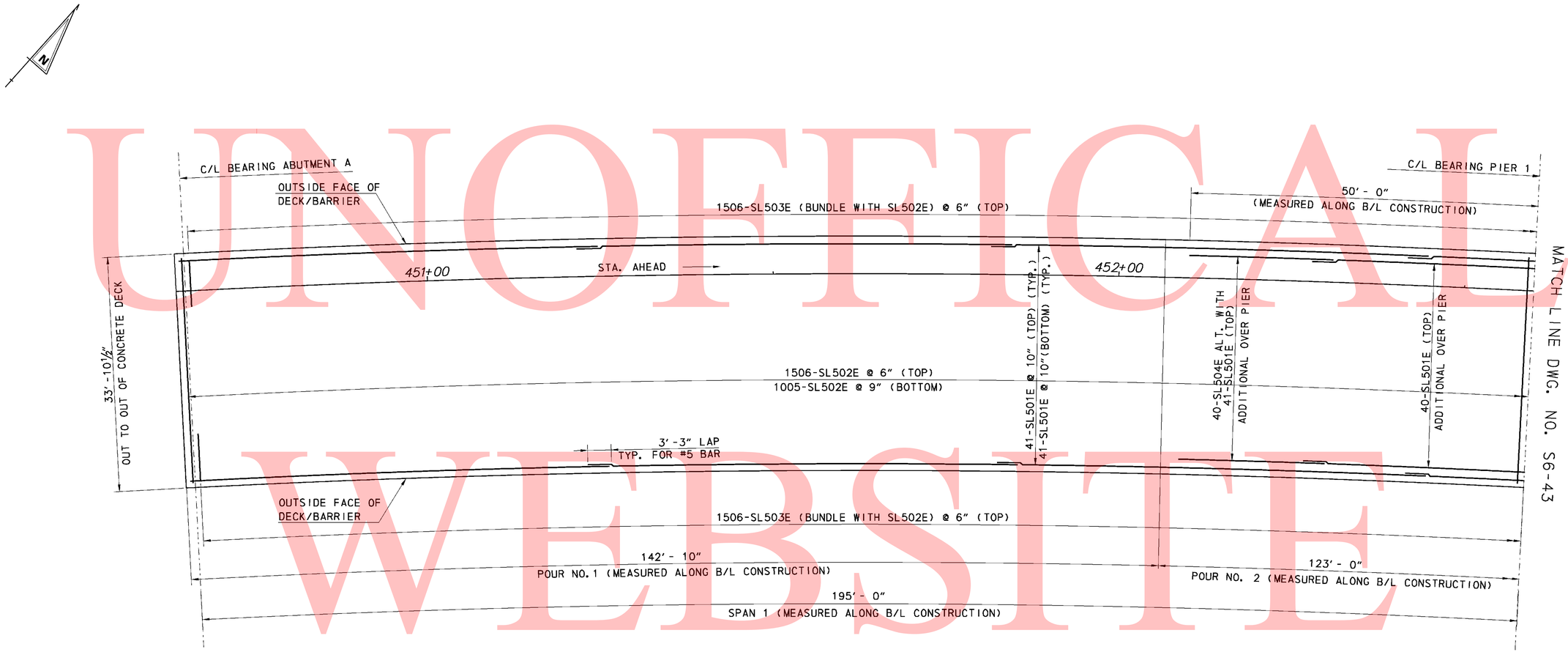

DECK SLAB PLAN - SPAN 1

SCALE: ⅛"=1'-0"

NOTE:
REINFORCING IN BARRIER NOT SHOWN FOR CLARITY. SEE SHEET S6-47.

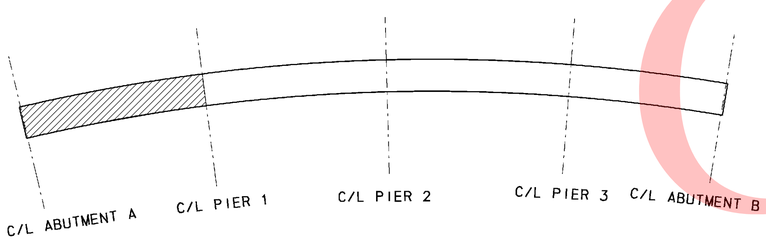

KEY PLAN

CROSS REFERENCE NOTES:

1. FOR GENERAL NOTES, SEE DWG. S6-2.
2. FOR TYPICAL SECTION, SEE DWG. S6-3.
3. FOR REINFORCING BAR LIST, SEE DWG. S6-48.

UNOFFICAL WEBSITE COPY

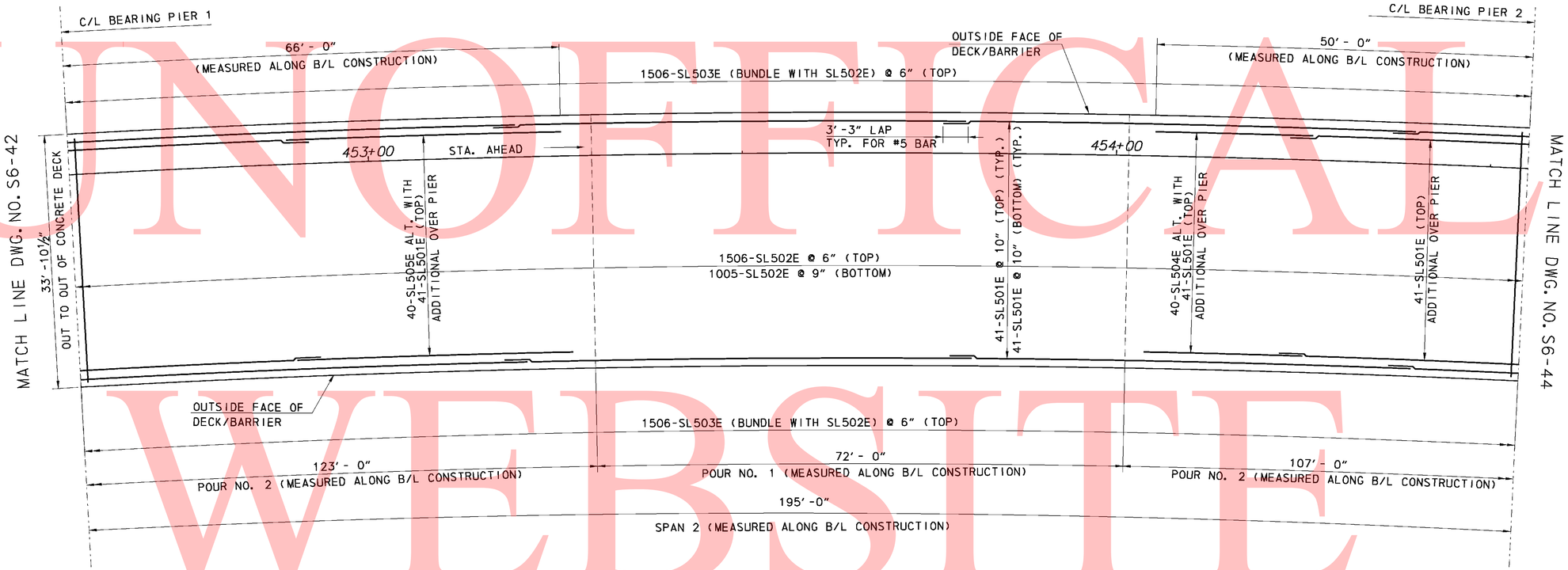

DECK SLAB PLAN - SPAN 2

SCALE: ⅛"=1'-0"

NOTE:
REINFORCING IN BARRIER NOT SHOWN FOR CLARITY. SEE SHEET S6-47.

CROSS REFERENCE NOTES:

1. FOR GENERAL NOTES, SEE DWG. S6-2.
2. FOR TYPICAL SECTION, SEE DWG. S6-3.
3. FOR REINFORCING BAR LIST, SEE DWG. S6-48.

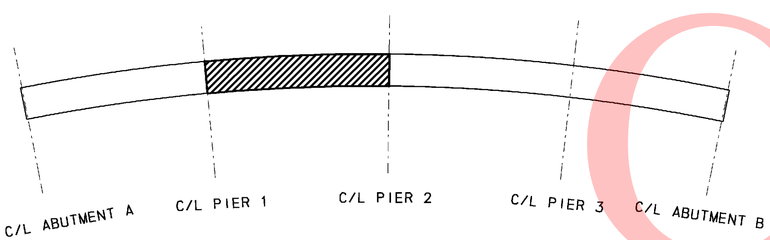

KEY PLAN

UNOFFICAL WEBSITE COPY

UNOFFICAL WEBSITE COPY

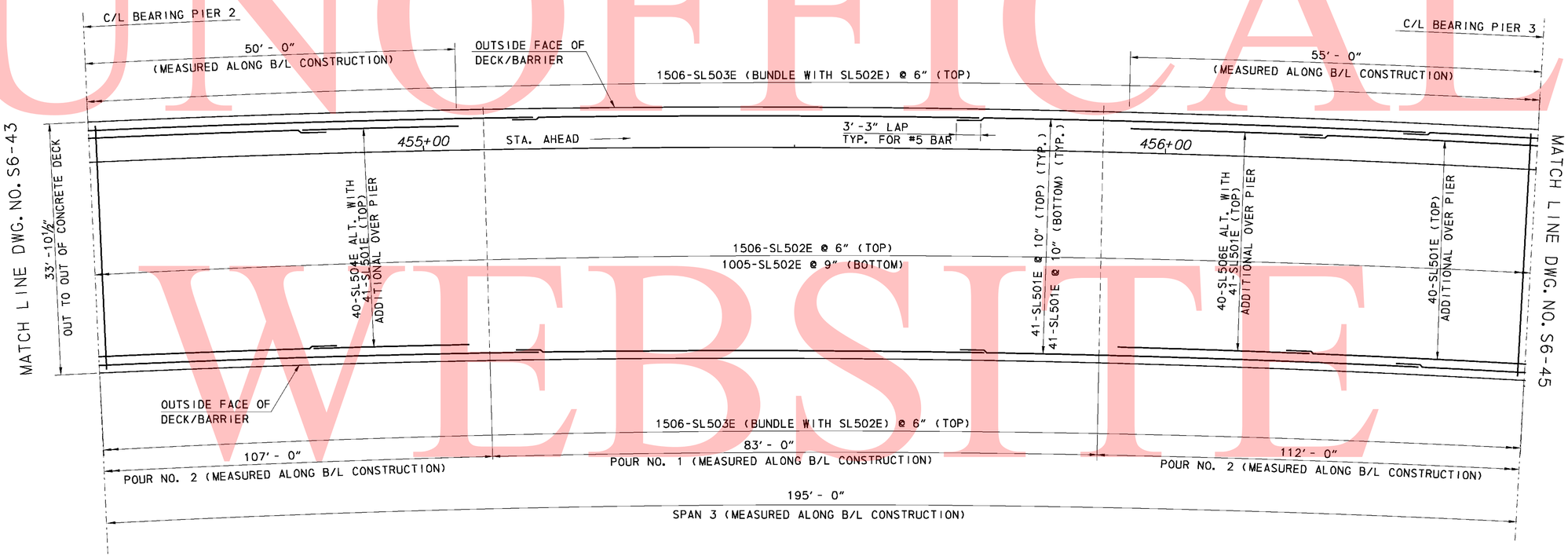

DECK SLAB PLAN - SPAN 3

SCALE: ⅛"=1'-0"

NOTE:
REINFORCING IN BARRIER NOT SHOWN FOR CLARITY. SEE SHEET S6-47.

CROSS REFERENCE NOTES:

1. FOR GENERAL NOTES, SEE DWG. S6-2.
2. FOR TYPICAL SECTION, SEE DWG. S6-3.
3. FOR REINFORCING BAR LIST, SEE DWG. S6-48.

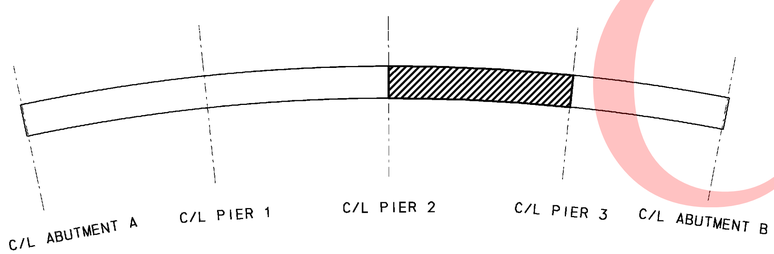

KEY PLAN

DELAWARE DEPARTMENT OF TRANSPORTATION	ADDENDUMS / REVISIONS		SR1 / I-95 INTERCHANGE	CONTRACT 28-090-03	BRIDGE NO.	1-268B	RAMP B OVER I-95NB DECK SLAB PLAN SPAN 3	S6- 44 SHEET NO. 491
				COUNTY NEW CASTLE	DESIGNED BY:	RMB		TOTAL SHTS. 803
					CHECKED BY:	DWD		

962010 3:59:14 PM
M:\PROJECTS\2003\03059_DELTRNPK\SR1_MAIL\CADD\2809003\PLANS\DOV\DK03_ER-S6_SR1.DGN

UNOFFICAL WEBSITE COPY

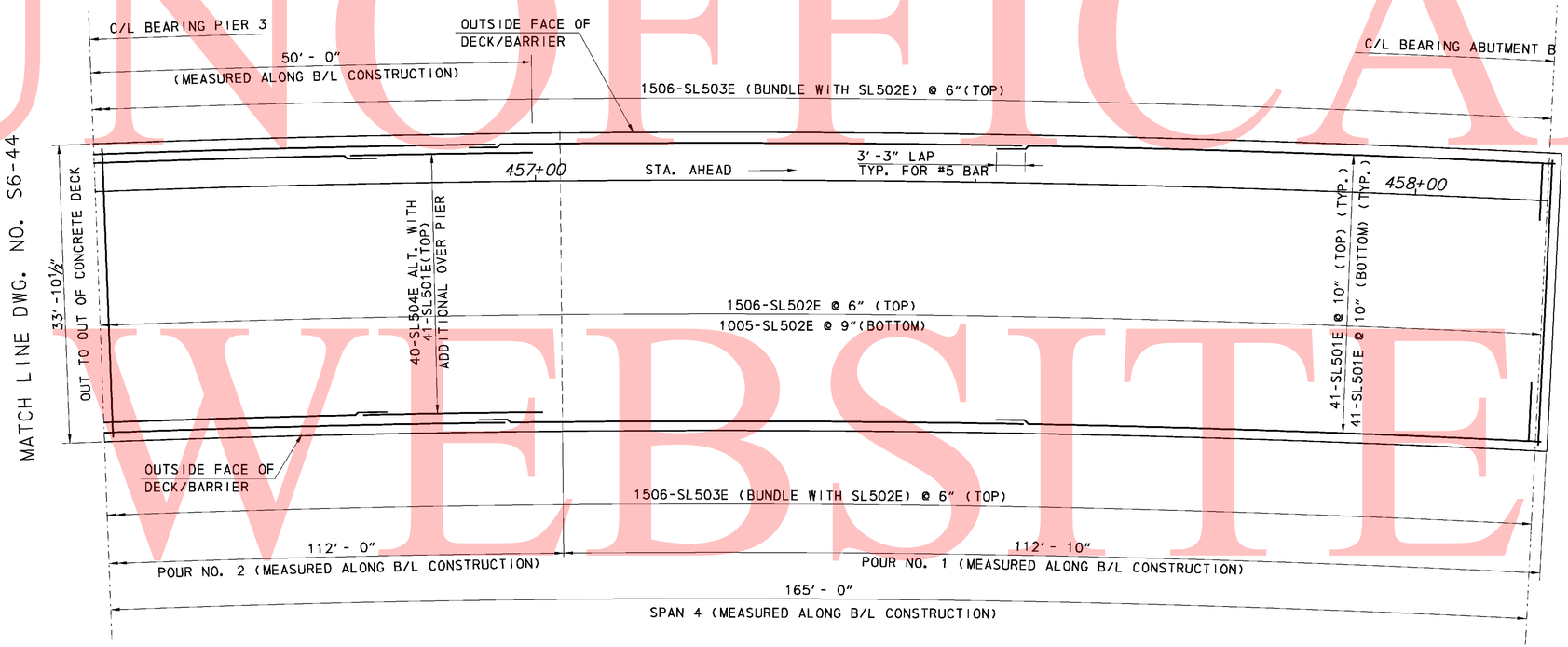

DECK SLAB PLAN - SPAN 4

SCALE: ⅛"=1'-0"

NOTE:
REINFORCING IN BARRIER NOT SHOWN FOR CLARITY. SEE SHEET S6-47.

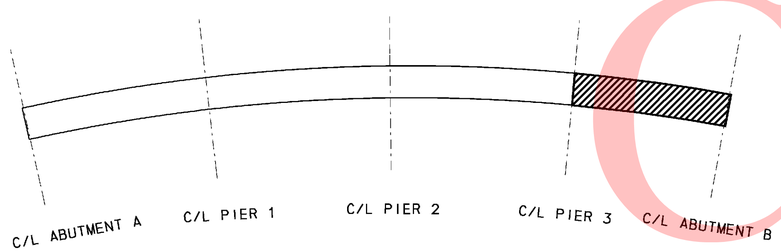

KEY PLAN

CROSS REFERENCE NOTES:

1. FOR GENERAL NOTES, SEE DWG. S6-2.
2. FOR TYPICAL SECTION, SEE DWG. S6-3.
3. FOR REINFORCING BAR LIST, SEE DWG. S6-48.

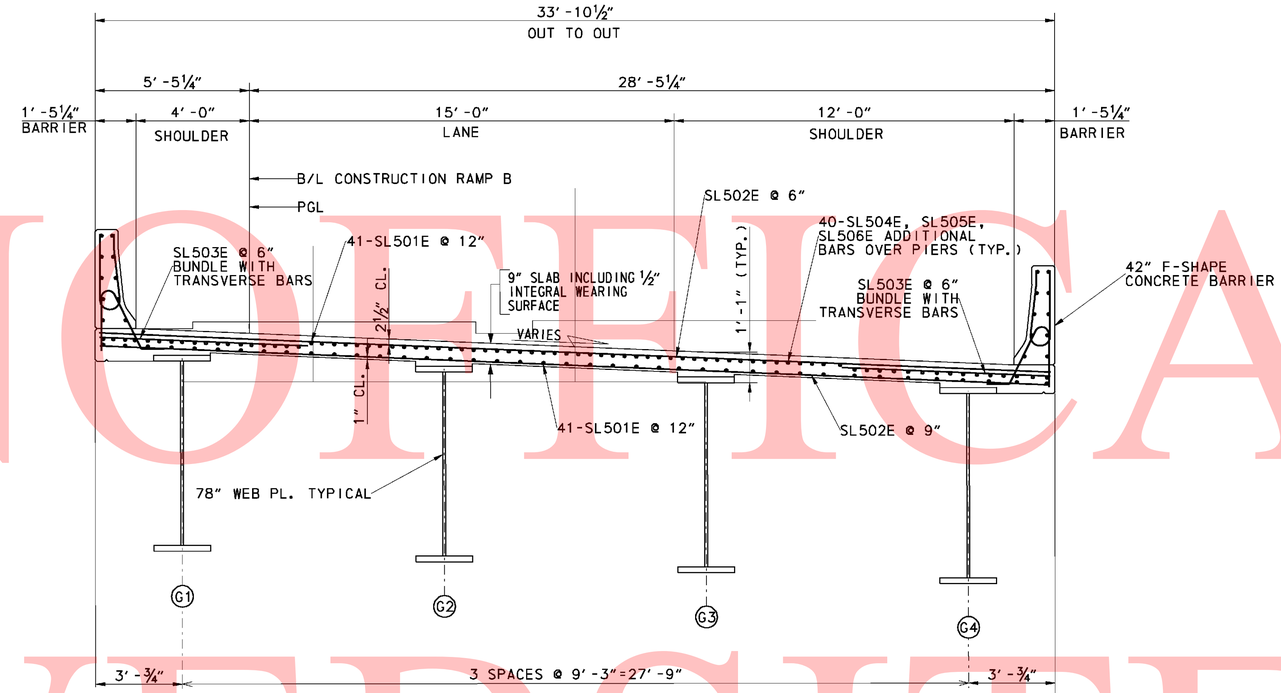

TYPICAL SECTION - RAMP B OVER I-95NB

SCALE: ⅜" = 1'-0"

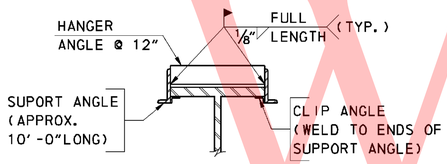

TENSION FLANGE FOR SIP FORMS

SCALE: NTS

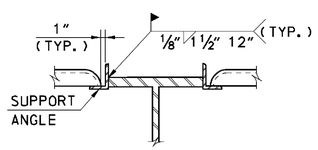

COMPRESSION FLANGE FOR SIP FORMS

SCALE: NTS

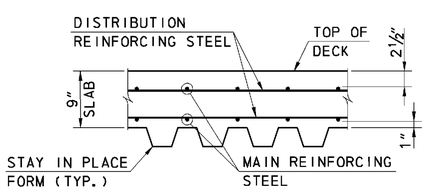

STEEL FORM SECTION

SCALE: NTS

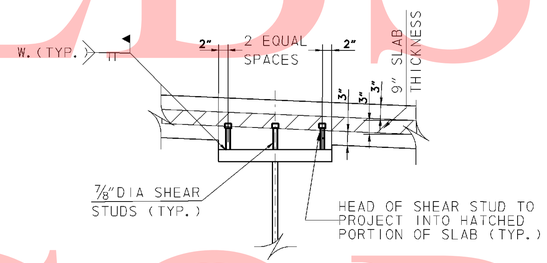

SHEAR STUD DETAIL

SCALE: NTS

NOTE: SIP FORM DETAILS NOT SHOWN

0 2 4 8

SCALE: ⅜"=1'-0"

UNOFFICIAL WEBSITE COPY

9/6/2010 4:01:26 PM
M:\PROJECTS\2003\03059_DELTRNPK\SR1_MALL\CADD\2809003\PLANS.DOV\DK05_BR-S6_SR1.DGN

DELAWARE DEPARTMENT OF TRANSPORTATION	ADDENDUMS / REVISIONS	SR1 / I-95 INTERCHANGE	CONTRACT 28-090-03	BRIDGE NO. 1-268B	RAMP B OVER I-95NB DECK SECTIONS AND DETAILS	S6-46	
			COUNTY NEW CASTLE	DESIGNED BY: RMB		SHEET NO. 493	
				CHECKED BY: DWD		TOTAL SHTS. 803	

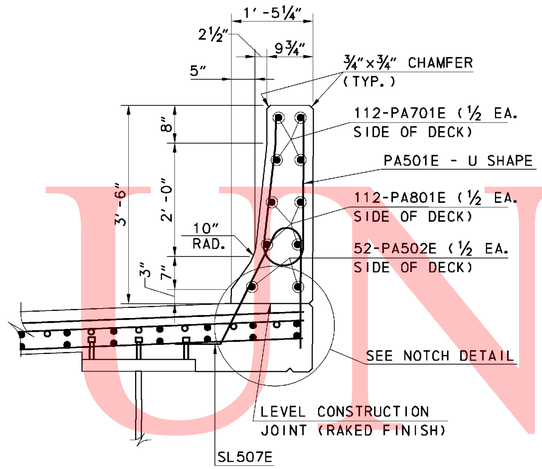

TYPICAL BARRIER REINFORCEMENT

SCALE: ¾"=1'-0"

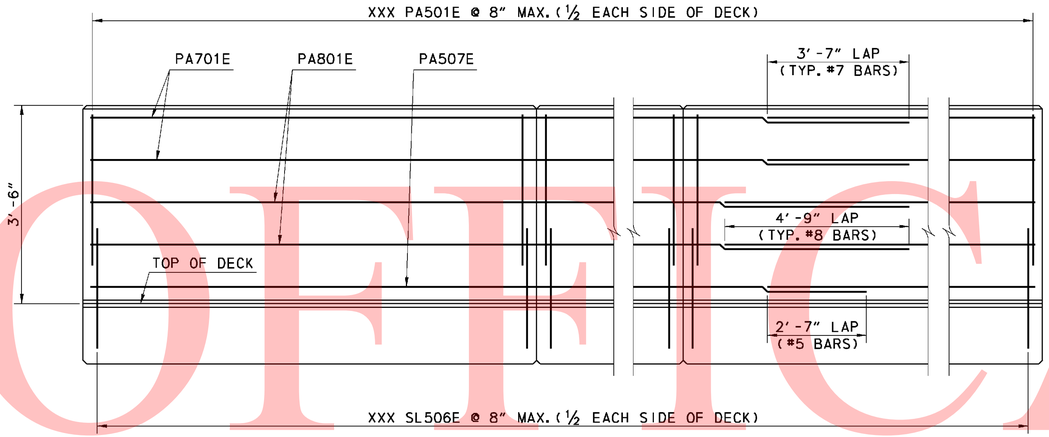

ELEVATION A-A - BRIDGE BARRIER

SCALE: ¾"=1'-0"

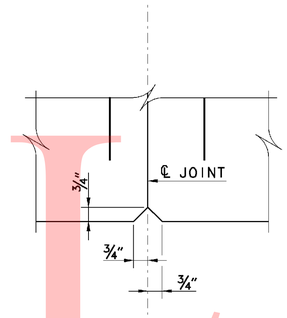

BARRIER CONTRACTION JOINT DETAIL

NO SCALE

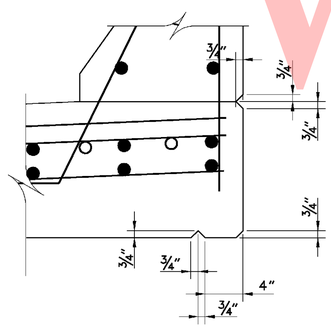

NOTCH DETAIL

SCALE: 1½"=1'-0"

CROSS REFERENCE NOTES:

1. FOR BARRIER CONTRACTION JOINT SPACING, SEE GENERAL PLAN & ELEVATION.
2. FOR TYPICAL DECK REINFORCING AND DETAILS, SEE SHEET S6-41.

0 1 4
.5 2

SCALE: ¾"=1'-0"

UNOFFICIAL WEBSITE COPY

9/6/2010 4:02:22 PM
M:\PROJECTS\2003\03059_DELTRNPK\SR1_MALL\CADD\2809003\PLANS.DGV\PAOI_BR-S6_SR1.DGN

DELAWARE DEPARTMENT OF TRANSPORTATION	ADDENDUMS / REVISIONS		SR1 / I-95 INTERCHANGE	CONTRACT 28-090-03	BRIDGE NO. 1-268B	RAMP B OVER I-95NB PARAPET DETAILS	SHEET NO. S6-47
				COUNTY NEW CASTLE	DESIGNED BY: MDM		494
					CHECKED BY: DWD		TOTAL SHTS. 803

REINFORCING BAR LIST
BRIDGE DECK SLAB AND BARRIER

MARK	LENGTH	NO. BARS	TYPE	A	B	C	D	E	G	H	J	K	O	R	REMARKS
SL501E	60′-0″	1268	STR.												
SL502E	33′-6″	2511	STR.												
SL503E	7′-6″	3012	STR.												
SL504E	23′-3″	160	STR.												
SL505E	39′-3″	40	STR.												
SL506E	28′-3″	40	STR.												
SL507E		2246													
PA501E	6′-8 1/4″	2246	H1		2′-10″	1′-0 1/4″	2′-10″			0′-5″					
PA502E	60′-0″	52	STR.												
PA503E	45′-0″	4	STR.												
PA701E	60′-0″	112	STR.												
PA702E	20′-0″	8	STR.												
PA801E	60′-0″	112	STR.												
PA802E	50′-0″	8	STR.												

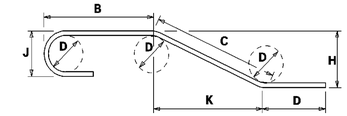

NOTES:

1. FIGURES SHOWN IN CIRCLES REPRESENT BAR BEND TYPES.
2. STANDARD BAR BENDS INCLUDE ONLY TYPES 1–32, S1–S12, AND T1–T16.
3. ALL DIMENSIONS ARE OUT-TO-OUT OF BAR EXCEPT "A" AND "G" ON STANDARD 180° AND 135° HOOKS.
4. "J" DIMENSIONS ON 180° HOOKS TO BE SHOWN ONLY WHERE NECESSARY TO RESTRICT HOOK SIZE, OTHERWISE STANDARD HOOKS ARE TO BE USED.
5. WHERE "J" IS NOT SHOWN, "J" WILL BE KEPT EQUAL TO OR LESS THAN "H" ON TRUSS BARS. WHERE "J" CAN EXCEED "H", IT SHALL BE SHOWN.
6. "H" DIMENSIONS OF STIRRUPS TO BE SHOWN WHERE NECESSARY TO FIT WITHIN THE CONCRETE.
7. UNLESS OTHERWISE NOTED, DIAMETER "D" IS THE SAME FOR ALL BENDS AND HOOKS ON A BAR.
8. WHERE SLOPE DIFFERS FROM 45° OFFSET, "H" AND "K" MUST BE SHOWN.
9. WHERE BARS ARE TO BE BENT MORE ACCURATELY THAN STANDARD BENDING TOLERANCES, BENDING DIMENSIONS WHICH REQUIRE CLOSER FABRICATION SHOULD HAVE LIMITS INDICATED.
10. FOR RECOMMENDED DIAMETER "D", OF BENDS, HOOKS, ETC., REFER TO TABLE AT RIGHT, 'CRSI' OR 'ACI' TABLES.
11. TYPE S1–S12, T1–T16 APPLY TO BAR SIZES 3 THROUGH 6.

ASTM STANDARD ENGLISH REINFORCING BARS				RECOMMENDED END HOOKS, APPLICABLE TO ALL GRADES			
	NOMINAL DIMENSIONS				180° HOOKS		90° HOOKS
BAR SIZE	DIAMETER (inches)	AREA (inches²)	WEIGHT (lbs./ft.)	D	A OR G	J	A OR G
3	0.375	0.110	0.376	2″*	5″	3″	6″
4	0.500	0.200	0.668	3″	6″	4″	8″
5	0.625	0.310	1.043	3″*	7″	5″	10″
6	0.750	0.440	1.502	4″*	8″	6″	1′-0″
7	0.875	0.600	2.044	5″*	10″	7″	1′-2″
8	1.000	0.790	2.670	6″	11″	8″	1′-4″
9	1.128	1.000	3.400	9″*	1′-3″	11″*	1′-7″
10	1.270	1.270	4.303	10″*	1′-5″	1′-1″*	1′-10″
11	1.410	1.560	5.313	1′-0″	1′-7″	1′-2″*	2′-0″
14	1.693	2.250	7.650	1′-6″*	2′-3″	1′-9″*	2′-7″
18	2.257	4.000	13.600	2′-0″	3′-0″	2′-4″*	3′-5″

STANDARD BAR BENDS

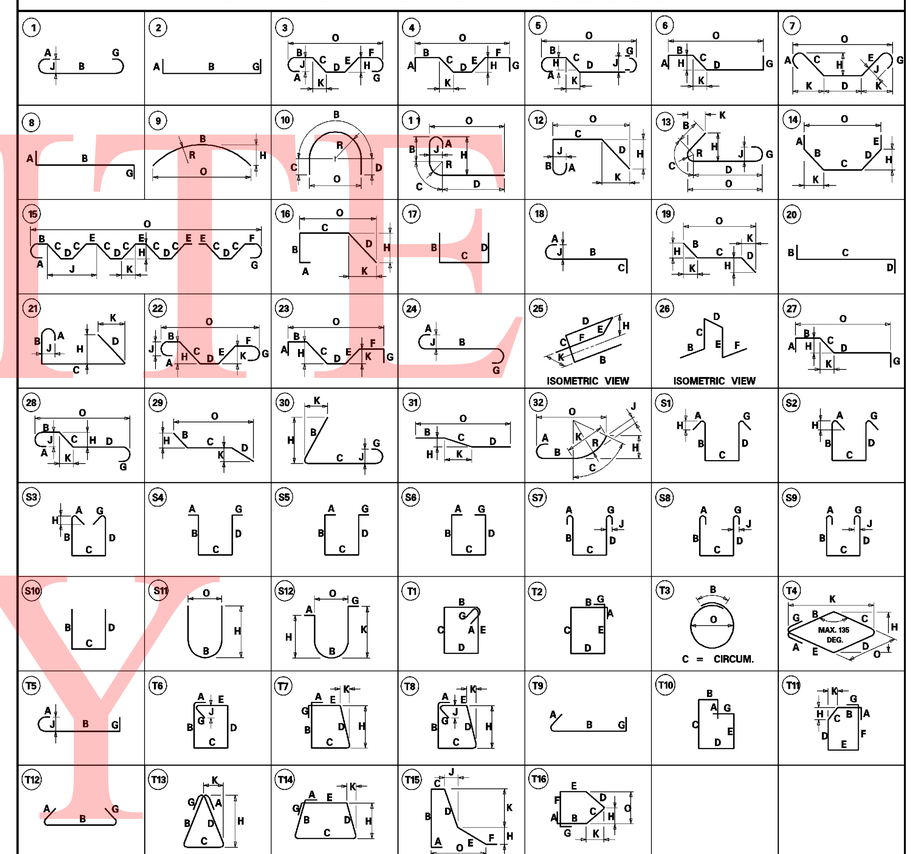

SPECIAL BAR BENDS

UNOFFICIAL WEBSITE COPY

DELAWARE DEPARTMENT OF TRANSPORTATION

ADDENDUMS / REVISIONS

SR1 / I-95 INTERCHANGE

CONTRACT	BRIDGE NO.	1-268B
28-090-03	DESIGNED BY:	
COUNTY	CHECKED BY:	
NEW CASTLE		

RAMP B OVER I-95NB
BRIDGE DECK & BARRIER
REINFORCMENT BAR
SCHEDULE

S6-48
SHEET NO. 495
TOTAL SHTS. 803

8/13/2010 9:49:38 AM
M:\PROJECTS\2003\03059_DELTRNPK\SR1_MALL\CADD\2809003\PLANS\DOV\BR03_BR-S6_SR1.DGN

UNOFFICAL WEBSITE COPY

FINISHED DECK ELEVATIONS SCHEDULE

STATION	LOCATION	A	B	C	D	E	F	G
450+65.00	CL BRG. ABUTMENT A	120.87	120.78	120.65	120.26	119.75	119.23	119.14
450+74.75	0.05	121.02	120.92	120.79	120.41	119.89	119.37	119.28
450+84.50	0.10	121.16	121.07	120.93	120.55	120.03	119.51	119.42
450+94.25	0.15	121.30	121.21	121.08	120.69	120.17	119.65	119.56
451+04.00	0.20	121.44	121.35	121.22	120.83	120.31	119.80	119.71
451+13.75	0.25	121.58	121.49	121.35	120.97	120.45	119.93	119.84
451+23.50	0.30	121.71	121.62	121.49	121.10	120.58	120.06	119.97
451+33.25	0.35	121.83	121.74	121.61	121.22	120.71	120.19	120.10
451+43.00	0.40	121.95	121.86	121.73	121.34	120.83	120.31	120.22
451+52.75	0.45	122.06	121.97	121.84	121.46	120.94	120.42	120.33
451+62.50	0.50	122.17	122.08	121.95	121.56	121.04	120.52	120.43
451+72.25	0.55	122.27	122.18	122.05	121.66	121.14	120.62	120.53
451+82.00	0.60	122.36	122.27	122.14	121.75	121.24	120.72	120.63
451+91.75	0.65	122.45	122.36	122.23	121.84	121.32	120.81	120.71
452+01.50	0.70	122.53	122.44	122.31	121.92	121.40	120.89	120.80
452+11.25	0.75	122.61	122.52	122.38	122.00	121.48	120.96	120.87
452+21.00	0.80	122.67	122.58	122.45	122.07	121.55	121.03	120.94
452+30.75	0.85	122.74	122.65	122.51	122.13	121.61	121.09	121.00
452+40.50	0.90	122.79	122.70	122.57	122.18	121.67	121.15	121.06
452+50.25	0.95	122.84	122.75	122.62	122.23	121.72	121.20	121.11
452+60.00	CL BRG. PIER 1	122.89	122.80	122.66	122.28	121.76	121.24	121.15
452+69.75	0.05	122.93	122.83	122.70	122.32	121.80	121.28	121.19
452+79.50	0.10	122.96	122.87	122.73	122.35	121.83	121.31	121.22
452+89.25	0.15	122.98	122.89	122.76	122.37	121.86	121.34	121.25
452+99.00	0.20	123.00	122.91	122.78	122.39	121.87	121.36	121.27
453+08.75	0.25	123.01	122.92	122.79	122.41	121.89	121.37	121.28
453+18.50	0.30	123.02	122.93	122.80	122.41	121.89	121.38	121.29
453+28.25	0.35	123.02	122.93	122.80	122.41	121.89	121.38	121.29
453+38.00	0.40	123.02	122.93	122.79	122.41	121.89	121.37	121.28
453+47.75	0.45	123.00	122.91	122.78	122.40	121.88	121.36	121.27
453+57.50	0.50	122.99	122.90	122.76	122.38	121.86	121.34	121.25
453+67.25	0.55	122.96	122.87	122.74	122.35	121.84	121.32	121.23
453+77.00	0.60	122.93	122.84	122.71	122.32	121.81	121.29	121.20
453+86.75	0.65	122.90	122.80	122.67	122.29	121.77	121.25	121.16
453+96.50	0.70	122.85	122.76	122.63	122.24	121.73	121.21	121.12
454+06.25	0.75	122.80	122.71	122.58	122.19	121.68	121.16	121.07
454+16.00	0.80	122.75	122.66	122.52	122.14	121.62	121.10	121.01
454+25.75	0.85	122.69	122.60	122.46	122.08	121.56	121.04	120.95
454+35.50	0.90	122.62	122.53	122.40	122.01	121.49	120.97	120.88
454+45.25	0.95	122.55	122.45	122.32	121.94	121.42	120.90	120.81
454+55.00	CL BRG. PIER 2	122.47	122.38	122.24	121.86	121.34	120.82	120.73
454+64.75	0.05	122.38	122.29	122.16	121.77	121.25	120.73	120.64
454+74.50	0.10	122.29	122.20	122.06	121.68	121.16	120.64	120.55
454+84.25	0.15	122.19	122.10	121.97	121.58	121.06	120.54	120.45
454+94.00	0.20	122.08	121.99	121.86	121.48	120.96	120.44	120.35
455+03.75	0.25	121.97	121.88	121.75	121.36	120.85	120.33	120.24
455+13.50	0.30	121.86	121.77	121.63	121.25	120.73	120.21	120.12
455+23.25	0.35	121.73	121.64	121.51	121.12	120.61	120.09	120.00
455+33.00	0.40	121.60	121.51	121.38	120.99	120.48	119.96	119.87
455+42.75	0.45	121.47	121.38	121.24	120.86	120.34	119.82	119.73
455+52.50	0.50	121.33	121.24	121.10	120.72	120.20	119.68	119.59
455+62.25	0.55	121.18	121.09	120.95	120.57	120.05	119.53	119.44
455+72.00	0.60	121.02	120.93	120.80	120.42	119.90	119.38	119.29
455+81.75	0.65	120.86	120.77	120.64	120.25	119.74	119.22	119.13
455+91.50	0.70	120.70	120.61	120.47	120.09	119.57	119.05	118.96
456+01.25	0.75	120.52	120.43	120.30	119.92	119.40	118.88	118.79
456+11.00	0.80	120.35	120.25	120.12	119.74	119.22	118.70	118.61
456+20.75	0.85	120.16	120.07	119.94	119.55	119.03	118.52	118.42
456+30.50	0.90	119.97	119.88	119.74	119.36	118.84	118.32	118.23
456+40.25	0.95	119.77	119.68	119.55	119.16	118.64	118.13	118.04
456+50.00	CL BRG. PIER 3	119.57	119.48	119.34	118.96	118.44	117.92	117.83
456+58.25	0.05	119.39	119.30	119.17	118.78	118.26	117.75	117.65
456+66.50	0.10	119.21	119.12	118.98	118.60	118.08	117.56	117.47
456+74.75	0.15	119.02	118.93	118.80	118.41	117.90	117.38	117.29
456+83.00	0.20	118.83	118.74	118.61	118.22	117.70	117.19	117.10
456+91.25	0.25	118.64	118.55	118.41	118.03	117.51	116.99	116.90
456+99.50	0.30	118.44	118.35	118.21	117.83	117.31	116.79	116.70
457+07.75	0.35	118.23	118.14	118.01	117.62	117.11	116.59	116.50
457+16.00	0.40	118.03	117.93	117.80	117.42	116.90	116.38	116.29
457+24.25	0.45	117.81	117.72	117.59	117.20	116.69	116.17	116.08
457+32.50	0.50	117.60	117.50	117.37	116.99	116.47	115.95	115.86
457+40.75	0.55	117.37	117.28	117.15	116.76	116.25	115.73	115.64
457+49.00	0.60	117.15	117.06	116.92	116.54	116.02	115.50	115.41
457+57.25	0.65	116.91	116.82	116.69	116.31	115.81	115.30	115.21
457+65.50	0.70	116.67	116.58	116.46	116.10	115.61	115.12	115.04
457+73.75	0.75	116.42	116.34	116.22	115.87	115.41	114.95	114.87
457+82.00	0.80	116.17	116.09	115.98	115.65	115.21	114.77	114.69
457+90.25	0.85	115.91	115.83	115.73	115.42	115.00	114.58	114.51
457+98.50	0.90	115.65	115.58	115.47	115.18	114.79	114.39	114.32
458+06.75	0.95	115.38	115.31	115.22	114.94	114.57	114.20	114.13
458+15.00	CL BRG. ABUTMENT B	115.11	115.05	114.96	114.70	114.35	113.98	113.91

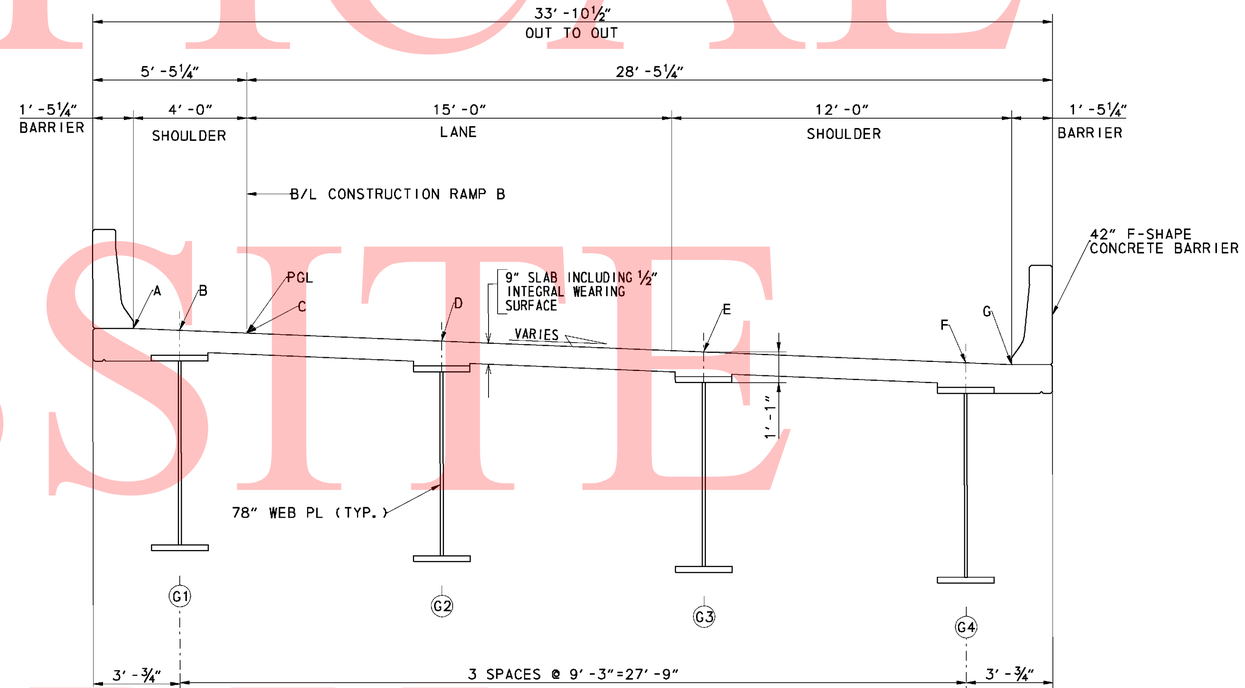

TYPICAL SECTION - RAMP B OVER I-95NB

SCALE: ⅜″ = 1′-0″

RAMP B CROSS-SLOPES			
STATION	LT. SHLD.	LANES	RT. SHLD.
450+50.00	5.600%	-5.600%	-5.600%
457+54.08	5.600%	-5.600%	-5.600%
458+07.42	4.000%	-4.000%	-4.000%
458+16.30	3.730%	-3.730%	-4.000%

NOTES:

1. CONTRACTOR SHALL CONSIDER SOME MEANS OF EROSION CONTROL DURING CONSTRUCTION IN ORDER TO PREVENT BRIDGE DRAINAGE FROM WASHING OUT ABUTMENT/WINGWALL EMBANKMENT AREA.
2. ELEVATIONS ARE GIVEN AT THE TOP OF THE CONCRETE DECK.

9/6/2010 4:03:38 PM
M:\PROJECTS\2003\03059_DELTRNPK\SR1_MALL\CADD\2809003\PLANS.DOV\FD01_BR-S6_SR1.DGN

DELAWARE DEPARTMENT OF TRANSPORTATION

ADDENDUMS / REVISIONS

SR1/I-95 INTERCHANGE

CONTRACT	BRIDGE NO.	1-268B
28-090-03	DESIGNED BY:	RMB
COUNTY		
NEW CASTLE	CHECKED BY:	DWD

RAMP B OVER I-95NB
FINISHED DECK ELEVATIONS

S6-49
SHEET NO. 496
TOTAL SHTS. 803

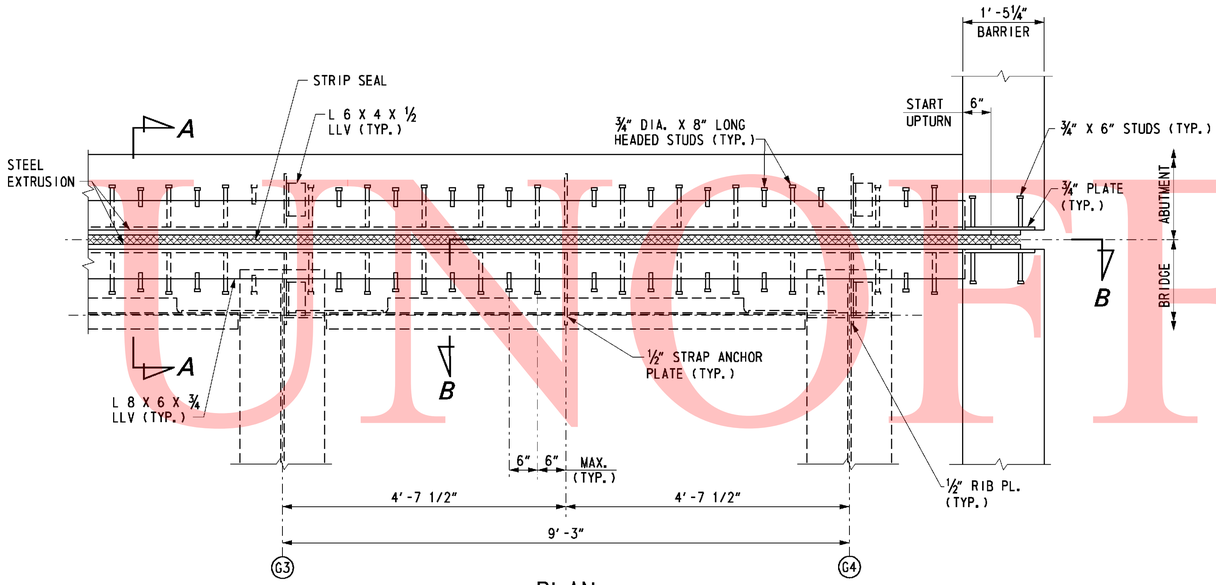

PLAN

SCALE: ¾" = 1'-0"

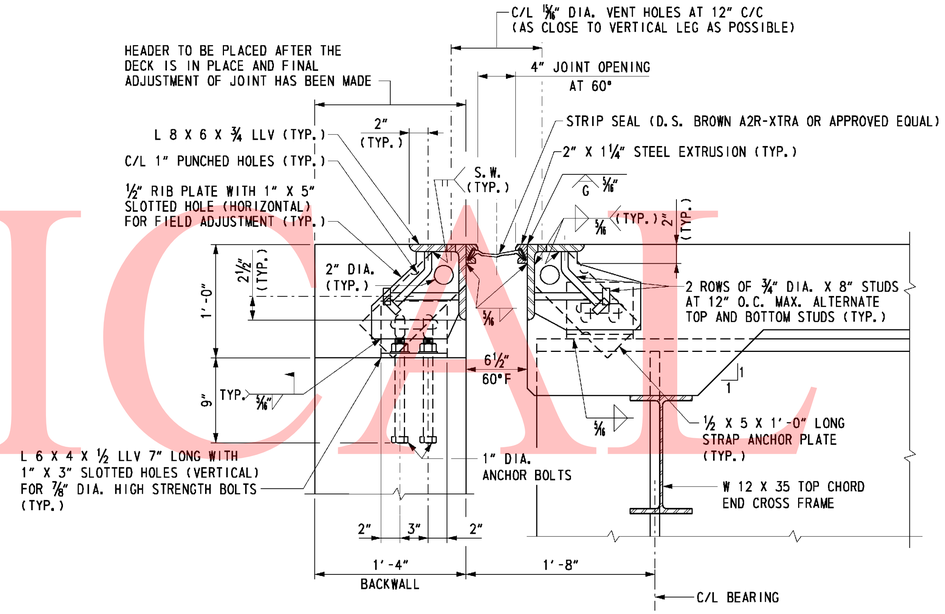

SECTION A-A

SCALE: 1½" = 1'-0"

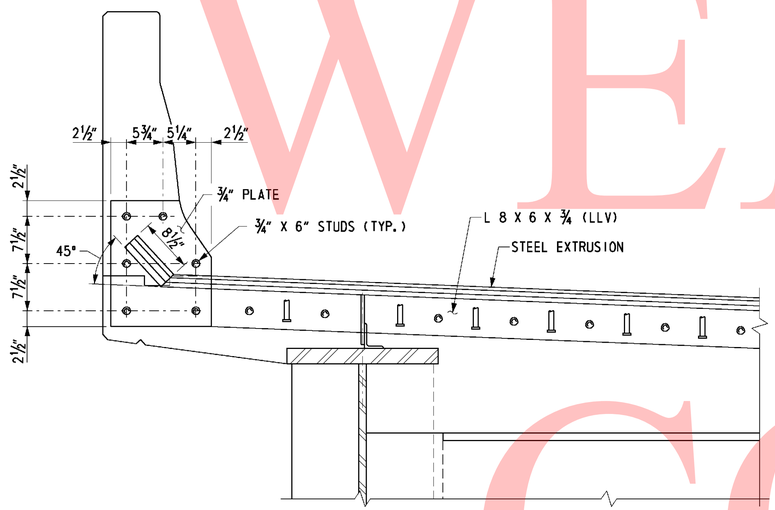

SECTION B-B

SCALE: 1" = 1'-0"

JOINT OPENING (INCH)

LOCATION	TEMPERATURE (°F)											MOVEMENT CLASSIFICATION
	0	10	20	30	40	50	60	70	80	90	100	
ABUTMENT A	6¼	5⅞	5½	5⅛	4¾	4⅜	4	3⅝	3¼	2⅞	2⅝	5"
ABUTMENT B	6¼	5⅞	5½	5⅛	4¾	4⅜	4	3⅝	3¼	2⅞	2⅝	5"

NOTES:

1. STRUCTURAL STEEL FOR DECK JOINTS SHALL CONFORM TO AASHTO M270, GRADE 36.
2. STEEL EXTRUSIONS FOR DECK JOINTS SHALL CONFORM TO AASHTO M270, GRADE 36.
3. HOLES SHALL BE PLACED IN THE ½" RIB PLATES AND THE STRAP ANCHOR PLATES FOR BAR REINFORCEMENT. IF THE HOLES ARE DRILLED IN THE FIELD, AN APPROVED EPOXY BONDED PAINT SHALL BE APPLIED TO TOUCH UP THE HOLES.
4. THE NEOPRENE STRIP SEAL SHALL BE PROVIDED CONTINUOUS THROUGHOUT THE LIMITS OF THE DECK. SPLICING OF THE NEOPRENE STRIP SEAL IS NOT PERMITTED.
5. COST FOR MATERIALS, FABRICATION AND INSTALLATION OF STRIP SEAL EXPANSION JOINTS, 5" MOVEMENT CLASSIFICATION, WITH STEEL ELEMENTS INCLUDING STUDS AND STEEL EXTRUSIONS, SHALL BE PAID FOR UNDER ITEM 605513.

UNOFFICIAL WEBSITE COPY

NOTES:
1. NO CONCRETE DESIGNATED TO BE PAID FOR UNDER "APPROACH SLAB" ITEM IS TO BE PLACED UNTIL AFTER THE ABUTMENTS BACKWALL SECTION ABUTING THAT PARTICULAR APPROACH SLAB HAS BEEN COMPLETELY PLACED.
2. ALL APPROACH SLAB CONCRETE SHALL BE FINISHED ONLY BY A DEPARTMENT APPROVED MECHANICAL FINISHING MACHINE SUPORTED ON SCREED RAILS OR CONTROLLED BY STRING LINES AND SENSORS.

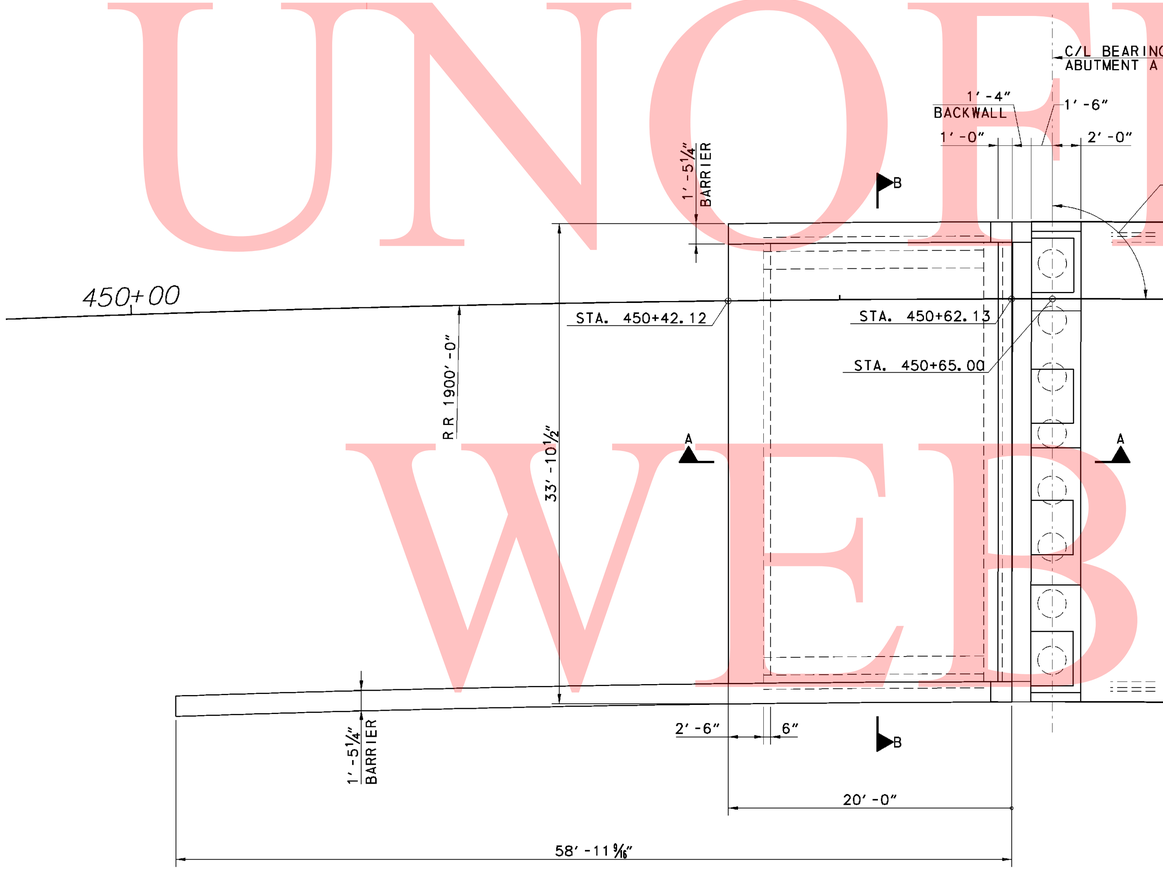

APPROACH SLAB A PLAN

SCALE: 3/16" = 1'-0"

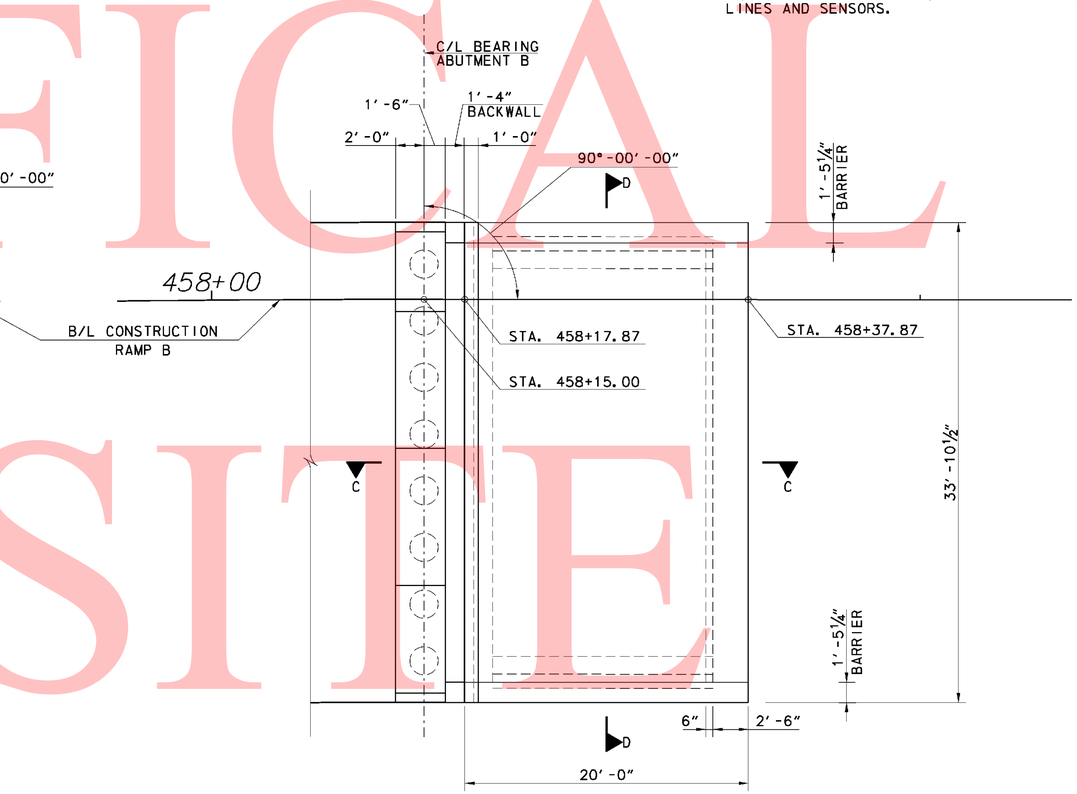

APPROACH SLAB B PLAN

SCALE: 3/16" = 1'-0"

CROSS REFERENCE NOTES:
1. FOR APPROACH SLAB REINFORCING DETAILS DETAILS, SEE SHEET S6-52.
2. FOR APPROACH SLAB BARRIER REINFORCING DETAILS, SEE SHEET S6-53.
3. FOR SECTIONS B-B AND D-D, SEE SHEET S6-53.
4. FOR SECTIONS A-A AND C-C, SEE SHEET S6-54.

0 4 16
2 8
SCALE: 3/16" = 1'-0"

UNOFFICIAL WEBSITE COPY

9/6/2010 4:12:53 PM
M:\PROJECTS\2003\03059_DELTRNPK\SR1_MALL\CADD\2809003\PLANS\DOV\AS01_BR-S6_SR1.DGN

DELAWARE DEPARTMENT OF TRANSPORTATION	ADDENDUMS / REVISIONS		SR1 / I-95 INTERCHANGE	CONTRACT 28-090-03	BRIDGE NO. 1-268B	RAMP B OVER I-95NB APPROACH SLAB DETAILS GENERAL PLANS	S6-51
				COUNTY NEW CASTLE	DESIGNED BY: RMB		SHEET NO. 498
					CHECKED BY:		TOTAL SHTS. 803

NOTES:
1. NO CONCRETE DESIGNATED TO BE PAID FOR UNDER "APPROACH SLAB" ITEM IS TO BE PLACED UNTIL AFTER THE ABUTMENTS BACKWALL SECTION ABUTING THAT PARTICULAR APPROACH SLAB HAS BEEN COMPLETELY PLACED.
2. ALL APPROACH SLAB CONCRETE SHALL BE FINISHED ONLY BY A DEPARTMENT APPROVED MECHANICAL FINISHING MACHINE SUPORTED ON SCREED RAILS OR CONTROLLED BY STRING LINES AND SENSORS.

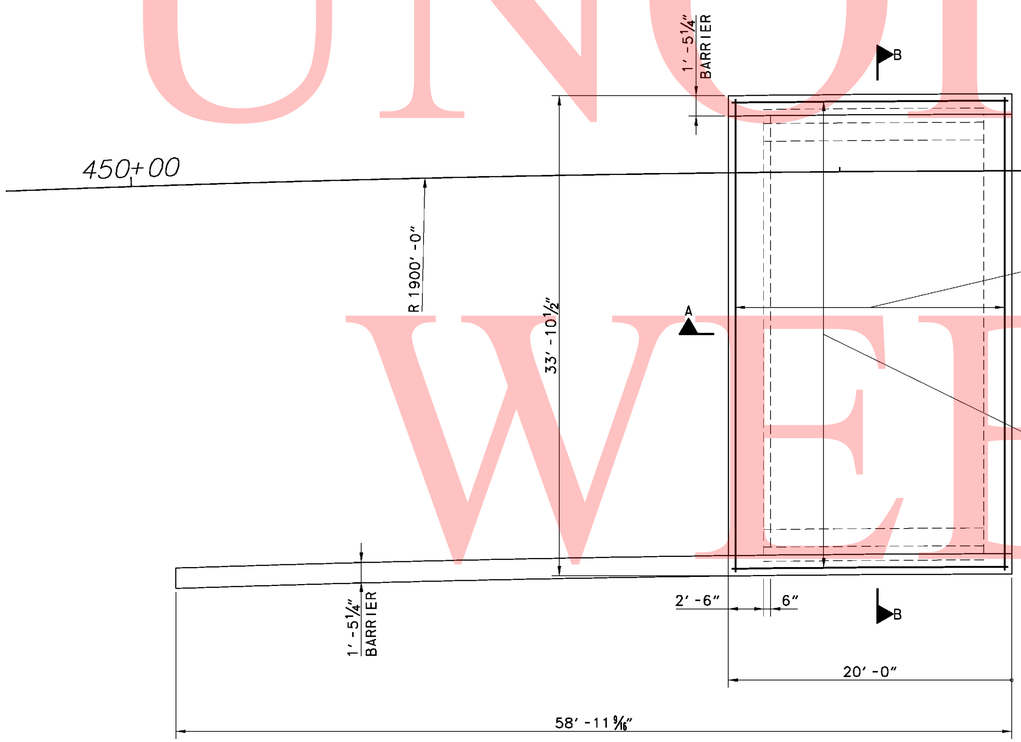

APPROACH SLAB A REINFORCING PLAN

SCALE: 3/16" = 1'-0"

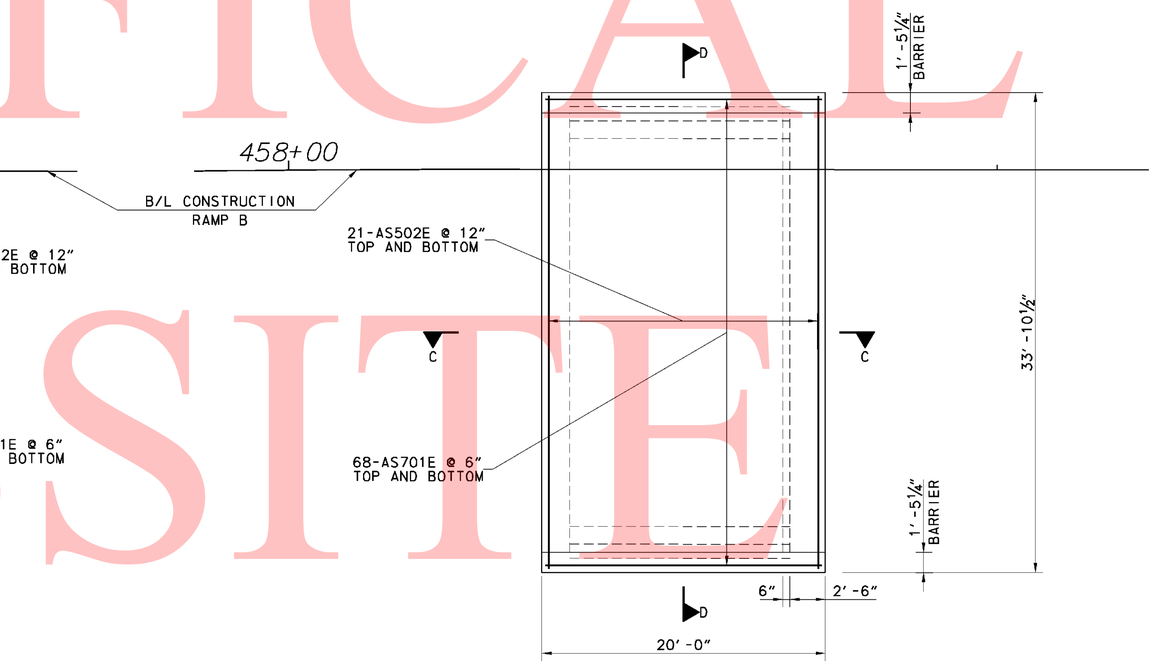

APPROACH SLAB B REINFORCING PLAN

SCALE: 3/16" = 1'-0"

CROSS REFERENCE NOTES:
1. FOR APPROACH SLAB REINFORCING DETAILS DETAILS, SEE SHEET S6-52.
2. FOR APPROACH SLAB BARRIER REINFORCING DETAILS, SEE SHEET S6-53.
3. FOR SECTIONS B-B AND D-D, SEE SHEET S6-53.
4. FOR SECTIONS A-A AND C-C, SEE SHEET S6-54.

0 2 4 8 16

SCALE: 3/16" = 1'-0"

UNOFFICAL WEBSITE COPY

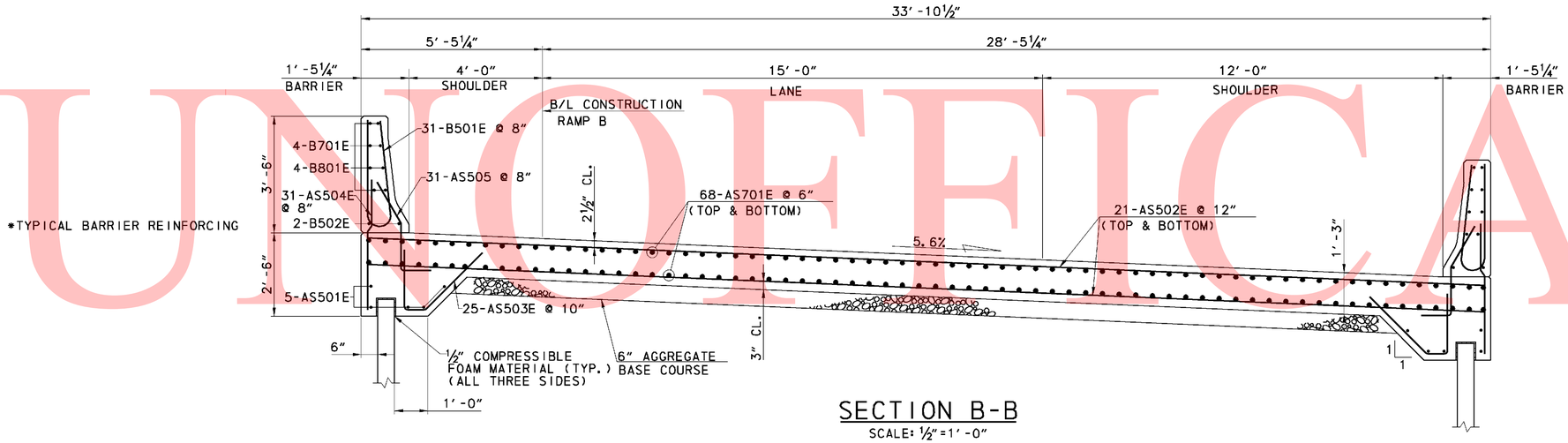

SECTION B-B

SCALE: ½"=1' -0"

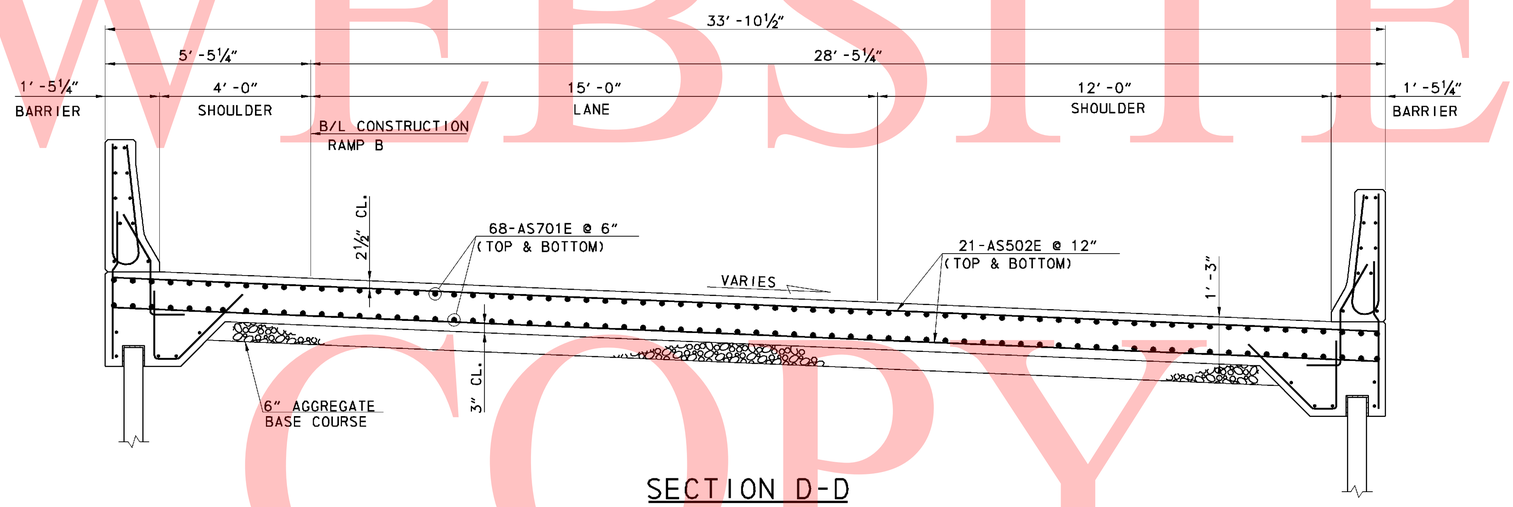

SECTION D-D

SCALE: ½"=1' -0"

UNOFFICAL WEBSITE COPY

9/6/2010 4:15:13 PM
M:\PROJECTS\2003\03059_DELTRNPK\SR1_MALL\CADD\2809003\PLANS.DOV\AS03_BR-S6_SR1.DGN

DELAWARE DEPARTMENT OF TRANSPORTATION	ADDENDUMS / REVISIONS		SR1 / I-95 INTERCHANGE	CONTRACT 28-090-03	BRIDGE NO. 1-268B	RAMP B OVER I-95NB	S6-53 SHEET NO.	
				COUNTY NEW CASTLE	DESIGNED BY: RMB	APPROACH SLAB DETAILS 1	500 TOTAL SHTS.	
					CHECKED BY:		803	

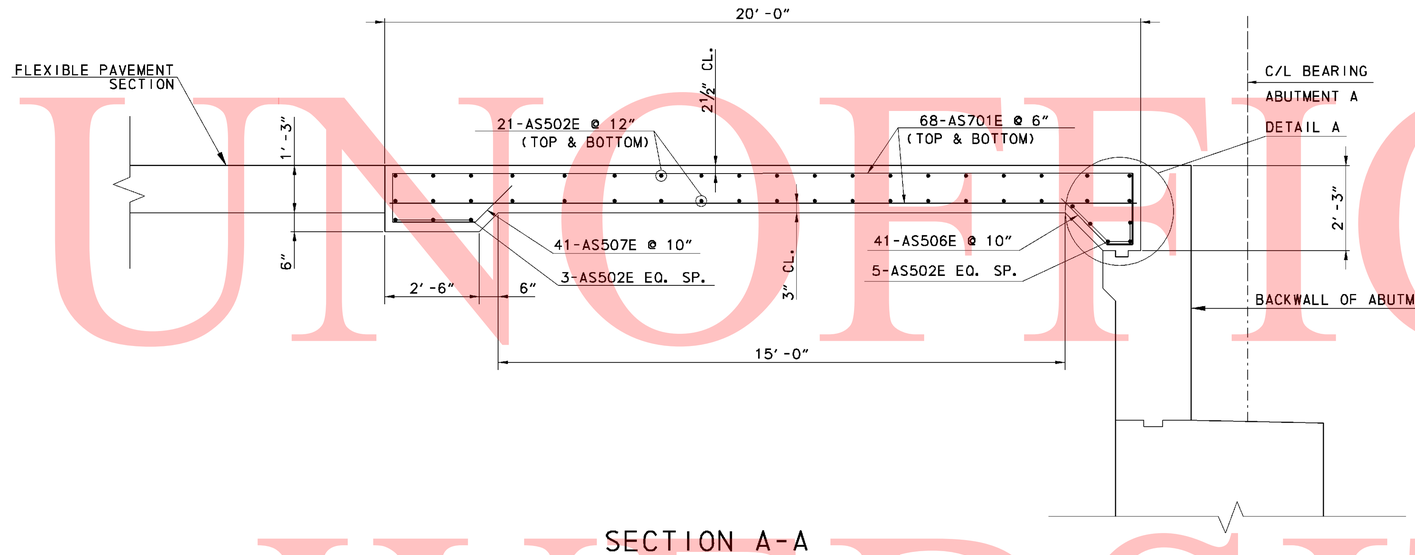

SECTION A-A

SCALE: ½"=1'-0"

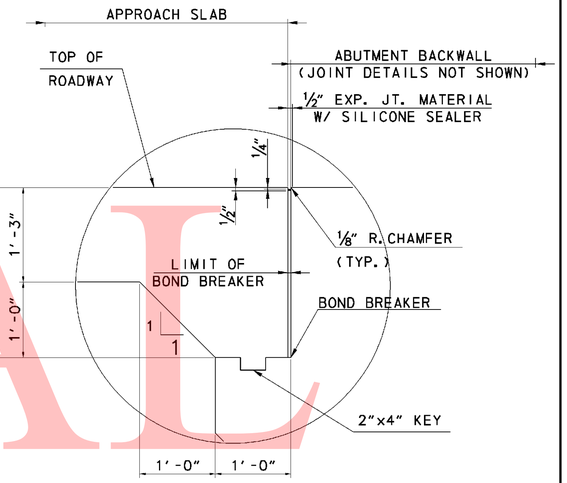

DETAIL A

(DETAIL B SIMILAR BUT OPPOSITE HAND)

SCALE: 1"=1'-0"

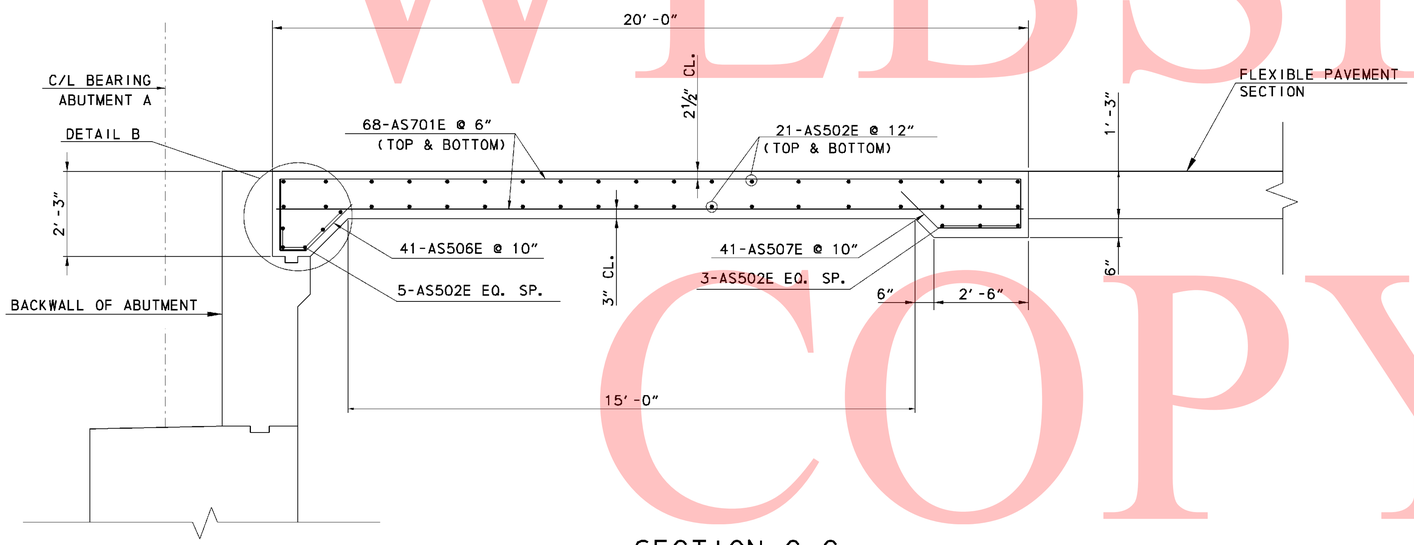

SECTION C-C

SCALE: ½"=1'-0"

UNOFFICIAL WEBSITE COPY

8/5/2010 3:27:44 PM
M:\PROJECTS\2003\03059_DELTRNPK\SR1_MALL\CADD\2809003\PLANS.DGV\AS04_BR-S6_SR1.DGN

DELAWARE DEPARTMENT OF TRANSPORTATION	ADDENDUMS / REVISIONS	SR1 / I-95 INTERCHANGE	CONTRACT 28-090-03	BRIDGE NO. 1-268B	RAMP B OVER I-95NB APPROACH SLAB DETAILS 2	S6-54 SHEET NO. 501
			COUNTY NEW CASTLE	DESIGNED BY: RMB		TOTAL SHTS. 803
				CHECKED BY:		

REINFORCING BAR LIST

APPROACH SLAB A

MARK	LENGTH	NO. BARS	TYPE	A	B	C	D	E	G	H	J	K	O	R	REMARKS
AS501E	19'-8"	10	STR.												
AS502E	33'-6½"	50	STR.												
AS503E	5'-2"	50	4	1'-11"	0-8"	2'-7"				1'-10"		1'-10"			
AS504E	4'-0"	62	STR.												
AS505E	3'-9"	62	4S	0'-11"	1'-5"	1'-5"				0'-8½"		1'-3"			
AS506E	4'-3"	41	4	1'-10½"	0-8"	1'-9"				1'-3"		1'-3"			
AS507E	4'-11"	41	4	1'-3½"	2'-2"	1'-5"				1'-0"		1'-0"			
AS701E	19'-8"	136	STR.												
B501E	6'-9"	62	H1		2'-9½"	1'-2"	2'-9½"			0'-5"				0'-4½"	
B502E	19'-8"	4	STR.												
B701E	19'-8"	8	STR.												
B801E	19'-8"	8	STR.												

APPROACH SLAB A

MARK	LENGTH	NO. BARS	TYPE	A	B	C	D	E	G	H	J	K	O	R	REMARKS
AS501E	19'-8"	10	STR.												
AS502E	33'-6½"	50	STR.												
AS503E	5'-2"	50	4	1'-11"	0-8"	2'-7"				1'-10"		1'-10"			
AS504E	4'-0"	62	STR.												
AS505E	3'-9"	62	4S	0'-11"	1'-5"	1'-5"				0'-8½"		1'-3"			
AS506E	4'-3"	41	4	1'-10½"	0-8"	1'-9"				1'-3"		1'-3"			
AS507E	4'-11"	41	4	1'-3½"	2'-2"	1'-5"				1'-0"		1'-0"			
AS701E	19'-8"	136	STR.												
B501E	6'-9"	62	H1		2'-9½"	1'-2"	2'-9½"			0'-5"				0'-4½"	
B502E	19'-8"	4	STR.												
B701E	19'-8"	8	STR.												
B801E	19'-8"	8	STR.												

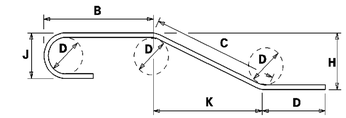

NOTES:

1. FIGURES SHOWN IN CIRCLES REPRESENT BAR BEND TYPES.
2. STANDARD BAR BENDS INCLUDE ONLY TYPES 1-32, S1-S12, AND T1-T16.
3. ALL DIMENSIONS ARE OUT-TO-OUT OF BAR EXCEPT "A" AND "G" ON STANDARD 180^ AND 135^ HOOKS.
4. "J" DIMENSIONS ON 180^ HOOKS TO BE SHOWN ONLY WHERE NECESSARY TO RESTRICT HOOK SIZE, OTHERWISE STANDARD HOOKS ARE TO BE USED.
5. WHERE "J" IS NOT SHOWN, "J" WILL BE KEPT EQUAL TO OR LESS THAN "H" ON TRUSS BARS. WHERE "J" CAN EXCEED "H", IT SHALL BE SHOWN.
6. "H" DIMENSIONS OF STIRRUPS TO BE SHOWN WHERE NECESSARY TO FIT WITHIN THE CONCRETE.
7. UNLESS OTHERWISE NOTED, DIAMETER "D" IS THE SAME FOR ALL BENDS AND HOOKS ON A BAR.
8. WHERE SLOPE DIFFERS FROM 45^ OFFSET, "H" AND "K" MUST BE SHOWN.
9. WHERE BARS ARE TO BE BENT MORE ACCURATELY THAN STANDARD BENDING TOLERANCES, BENDING DIMENSIONS WHICH REQUIRE CLOSER FABRICATION SHOULD HAVE LIMITS INDICATED.
10. FOR RECOMMENDED DIAMETER "D", OF BENDS, HOOKS, ETC., REFER TO TABLE AT RIGHT, 'CRSI' OR 'ACI' TABLES.
11. TYPE S1-S12, T1-T16 APPLY TO BAR SIZES 3 THROUGH 6.

ASTM STANDARD ENGLISH REINFORCING BARS				RECOMMENDED END HOOKS, APPLICABLE TO ALL GRADES			
	NOMINAL DIMENSIONS				180° HOOKS		90° HOOKS
BAR SIZE	DIAMETER (inches)	AREA (inches²)	WEIGHT (lbs./ft.)	D	A OR G	J	A OR G
3	0.375	0.110	0.376	2"*	5"	3"	6"
4	0.500	0.200	0.668	3"	6"	4"	8"
5	0.625	0.310	1.043	3"*	7"	5"	10"
6	0.750	0.440	1.502	4"*	8"	6"	1'-0"
7	0.875	0.600	2.044	5"*	10"	7"	1'-2"
8	1.000	0.790	2.670	6"	11"	8"	1'-4"
9	1.128	1.000	3.400	9"*	1'-3"	11"*	1'-7"
10	1.270	1.270	4.303	10"*	1'-5"	1'-1"*	1'-10"
11	1.410	1.560	5.313	1'-0"	1'-7"	1'-2"*	2'-0"
14	1.693	2.250	7.650	1'-6"*	2'-3"	1'-9"*	2'-7"
18	2.257	4.000	13.600	2'-0"	3'-0"	2'-4"*	3'-5"

STANDARD BAR BENDS

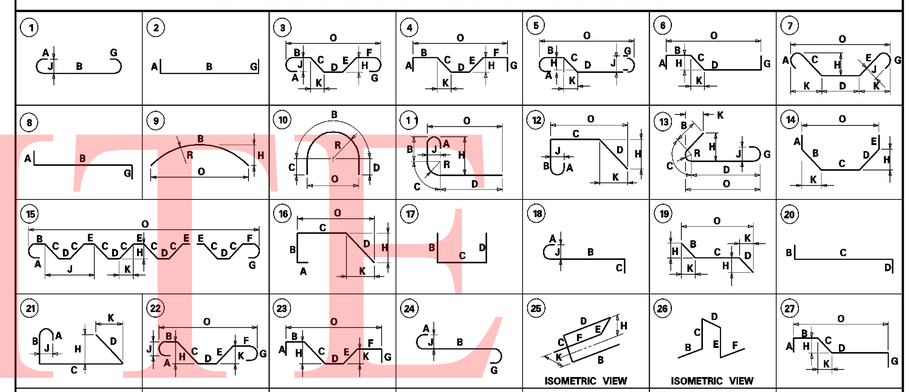

SPECIAL BAR BENDS

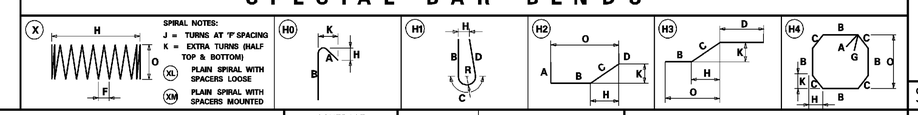

UNOFFICIAL WEBSITE COPY

DELAWARE DEPARTMENT OF TRANSPORTATION

ADDENDUMS / REVISIONS

SR1 / I-95 INTERCHANGE

CONTRACT	BRIDGE NO.	1-268B
28-090-03	DESIGNED BY:	
COUNTY	CHECKED BY:	
NEW CASTLE		

RAMP B OVER I-95NB
APPROACH SLABS
REINFORCMENT BAR
SCHEDULE

S6-55

SHEET NO. 502

TOTAL SHTS. 803

8/13/2010 9:50:17 AM
M:\PROJECTS\2003\03059_DELTRNPK\SR1_MALL\CADD\2809003\PLANS\DOV\BR04_BR-S6_SR1.DGN

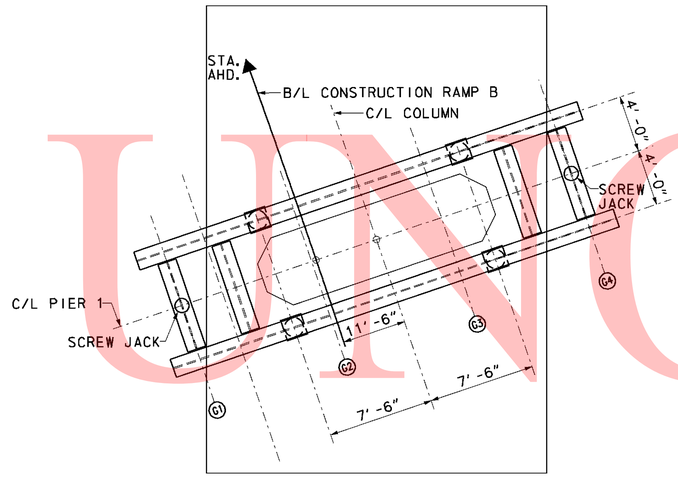

PIER 1 - TEMPORARY SHORING PLAN

SCALE: 1/4" = 1'-0"

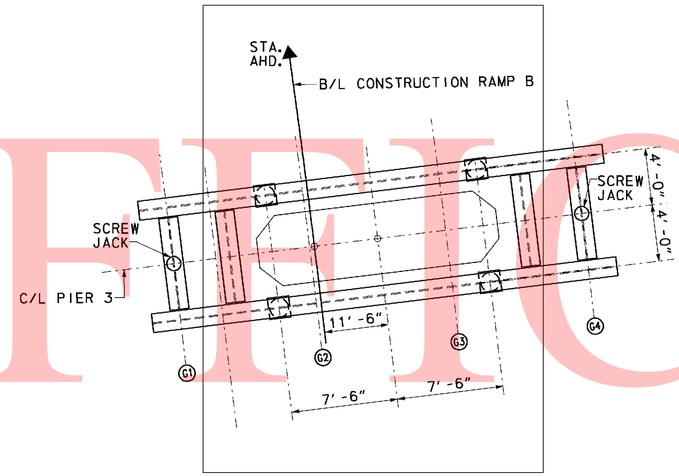

PIER 3 - TEMPORARY SHORING PLAN

SCALE: 1/4" = 1'-0"

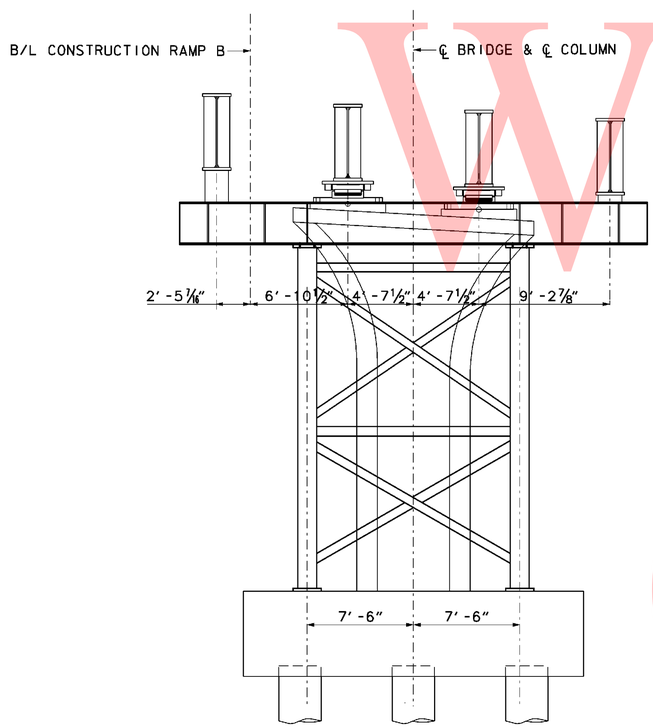

PIER ELEVATION

SCALE: 1/4" = 1'-0"

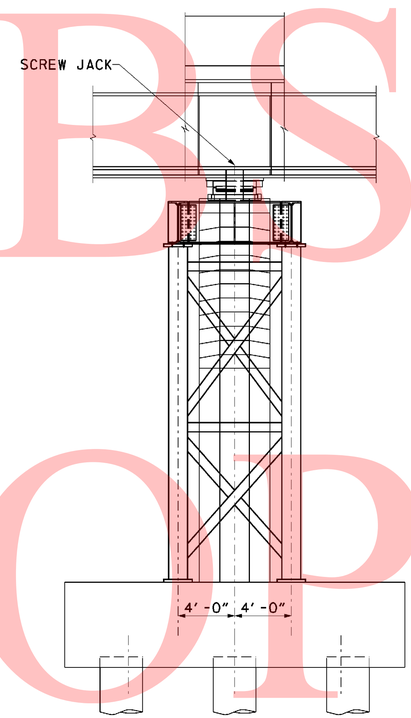

END VIEW

SCALE: 1/4" = 1'-0"

NOTES:

1. MAXIMUM UNFACTORED GIRDER REACTION AT PIER 1 SHORES IS 452K.
2. MAXIMUM UNFACTORED GIRDER REACTION AT PIER 3 SHORES IS 380K.
3. GIRDER REACTIONS INCLUDE WEIGHT OF STRUCTURAL STEEL FRAMING, DECK AND INTEGRAL CAP.
4. STEEL ERECTION SHOWN, SHORING TO REMAIN IN PLACE UNTIL DECK AND INTEGRAL CAP HAVE BEEN PLACED AND POST-TENSIONING FORCE APPLIED.
5. SHORING GIRDERS SHALL BE CAMBERED TO ACCOUNT FOR DEAD LOAD DEFLECTIONS.
6. ACTUAL SHORING TOWERS PROVIDED SHALL BE DESIGNED BY THE CONTRACTOR. SHOP DRAWINGS AND CALCULATIONS SIGNED AND SEALED BY A PROFESSIONAL ENGINEER REGISTERED IN THE STATE OF DELAWARE SHALL BE SUBMITTED FOR APPROVAL.

UNOFFICAL WEBSITE COPY

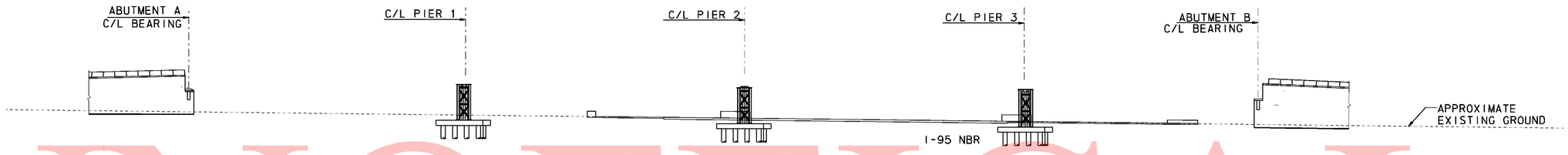

DEVELOPED ELEVATION - ERECTION STAGE 1

SCALE: 1"= 40'-0"

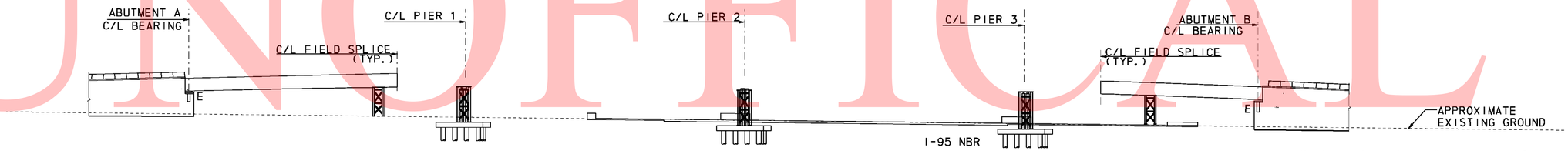

NOTE: 1. WHEN ERECTING LONGITUDINAL GIRDERS PROVIDE FOR JACKING LONGITUDINAL GIRDERS TO CLOSE CONNECTION WITH CROSS GIRDER IN STAGE 5.

DEVELOPED ELEVATION - ERECTION STAGE 2

SCALE: 1"= 40'-0"

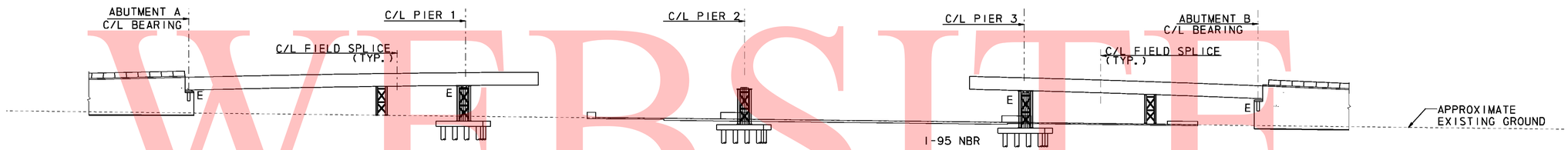

DEVELOPED ELEVATION - ERECTION STAGE 3

SCALE: 1"= 40'-0"

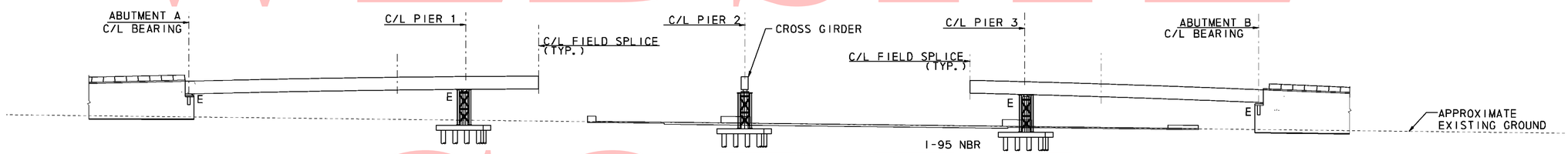

NOTE: 1. CROSS GIRDER MUST BE STABILIZED WITH HOLDING CRANE UNIL ONE LINE OF LONGITUDINAL GIRDERS IN COMPLETE.

DEVELOPED ELEVATION - ERECTION STAGE 4

SCALE: 1"= 40'-0"

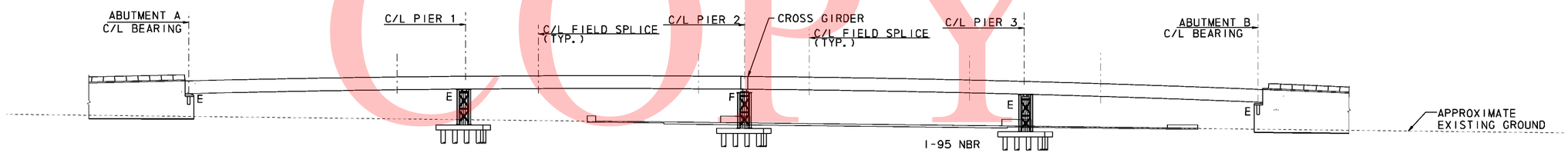

NOTE: 1. GIRDER LINES SHALL BE COMPLETED PRIOR TO ERECTING NEXT LINE OF GIRDERS. ERECT G4, THEN G3 THROUGH G1. REFER TO S6-23 FOR DETAILS.

DEVELOPED ELEVATION - ERECTION STAGE 5

SCALE: 1"= 40'-0"

UNOFFICAL WEBSITE COPY

10/15/2010 9:08:00 AM
M:\PROJECTS\2003\03059_DELTRNPK\SR1_MALL\CADD\2809003\PLANS.DOV\CS02_BR-S6_SR1.DGN

DELAWARE DEPARTMENT OF TRANSPORTATION

ADDENDUMS / REVISIONS

SR1 / I-95 INTERCHANGE

CONTRACT	BRIDGE NO.	1-268B
28-090-03	DESIGNED BY:	DWD
COUNTY	CHECKED BY:	
NEW CASTLE		

RAMP B OVER I-95NB

DEVELOPED ELEVATION
ERECTION SEQUENCE

SHEET NO.	TOTAL SHTS.
S6-57	504
	803

UNOFFICAL WEBSITE COPY

DELAWARE DEPARTMENT OF TRANSPORTATION
AASHTO CLASSIFICATION OF SOILS AND SOIL-AGGREGATE MIXTURES

General Classification		Granular Materials (35% or Less Passing 0.075 mm)							Silt-Clay Materials (More than 35% Passing 0.075 mm)					Organic Soils
Group Classification	Group	A-1		A-3	A-2				A-4	A-5	A-6	A-7		A-8
	Sub-Group	A-1-a	A-1-b		A-2-4	A-2-5	A-2-6	A-2-7				A-7-5	A-7-6	
	Graphic	A	B			5		7				5		
Sieve Analysis, % Passing														
2.00 mm (No. 10)		50 Max	-	-	-	-	-	-	-	-	-	-	-	See Note 1
0.425 mm (No. 40)		30 Max	50 Max	51 Min	-	-	-	-	-	-	-	-	-	
0.075 mm (No. 200)		15 Max	25 Max	10 Max	35 Max	35 Max	35 Max	35 Max	36 Min	36 Min	36 Min	36 Min	36 Min	
Characteristics of Fraction Passing 0.425 mm (No. 40)		-		-	-	-	-	-	-	-	-	-	-	See Note 1
Liquid Limit		-		-	40 Max	41 Min	40 Max	41 Min	40 Max	41 Min	41 Max	41 Min	41 Min	
Plasticity Index		6 Max		NP	10 Max	10 Max	11 Min	11 Min	10 Max	10 Max	11 Min	11 Min	11 Min	
Usual Types of Significant Constituent Materials		Stone Fragments, Gravel and Sand		Fine Sand	Silty or Clayey Gravel and Sand				Silty Soils		Clayey Soils			Organic Soils

Plasticity Index of A-7-5 Subgroup Is Equal to or Less Than LL Minus 30

Plasticity Index of A-7-6 Subgroup Is Greater Than LL Minus 30

Note 1-Classification Based on Visual Inspection and not on Sieve Analysis or Atterberg Limits

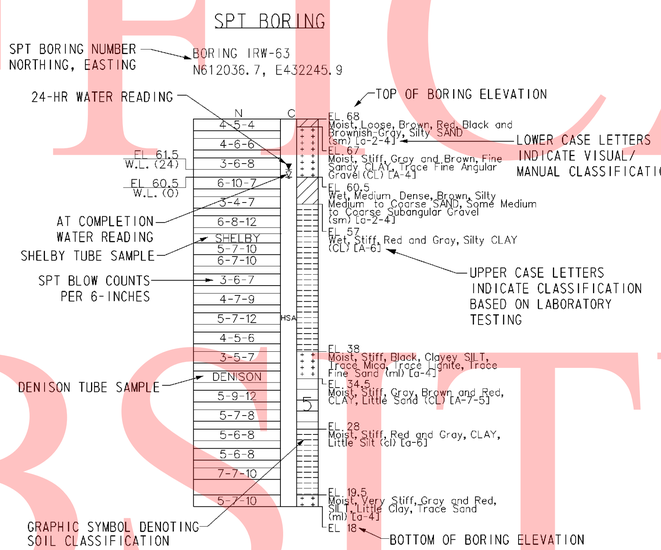

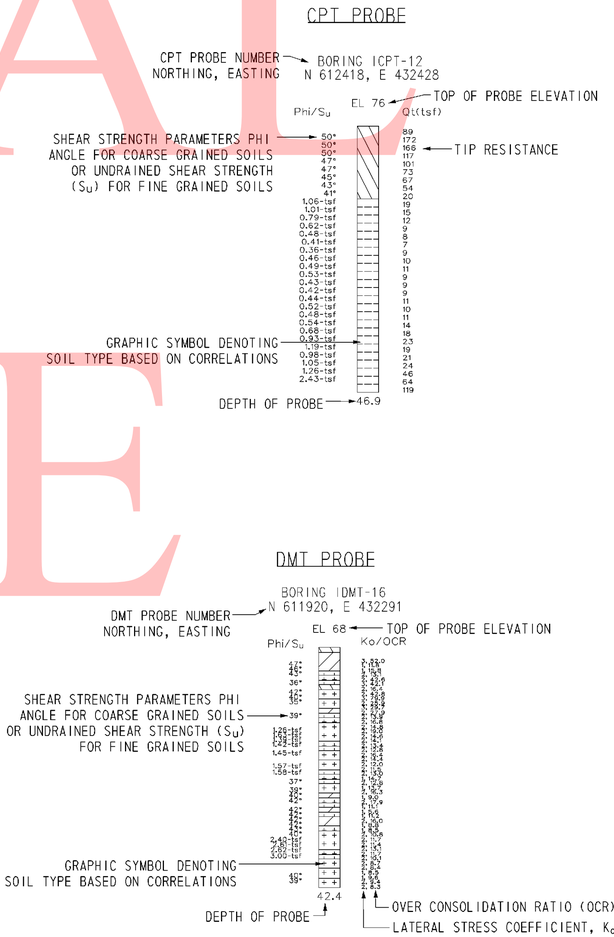

NOTES:

1. THE BORINGS AND DRIVE TEST WERE CONDUCTED IN MULTIPLE PHASES BY THE ROBERT B. BALTER COMPANY, THE WALTON CORPORATION, AND FINDLING, INC. BETWEEN AUGUST 2004 AND OCTOBER 2008.

2. THE SOIL SYMBOLS REFLECT ONLY THE MAJOR SOIL CONSTITUENT, FOR MORE COMPLETE SOIL CHARACTERISTIC REFER TO THE SOIL LOGS CONTAINED WITHIN THE FINAL FOUNDATION REPORTS DATED FEBRUARY 2009.

3. THE FIELD BORING LOGS RECORD SAMPLE SPOON RECOVERY. THE BORING LOGS AND LABORATORY TESTING RESUTS ARE AVAILABLE UPON REQUEST.

4. N = BLOWS ON A 2 INCH OD SAMPLING SPOON BY 140 LB DRIVE- WEIGHT FALLING 30 INCHES INDICATING SUCCESSIVE 6 INCH INCREMENTS OF PENETRATION. PENETRATIONS GREATER THAN 6-INCHES OR LESS THAN 6-INCHES ARE INDICATED BY WOH, WOR, OR THE DEPTH OF THE PENETRATION TO THE NEAREST INCH.

   WOH= STATIC WEIGHT OF SAMPLING SPOON DRIVE-WEIGHT ASSEMBLY, DRIVE-WEIGHT,ANVIL (WHEN AUTOMATIC HAMMER IS USED), DRILL ROD(S), AND SAMPLING SPOONS.

   WOR= STATIC WEIGHT OF DRILL ROD AND SAMPLING SPOON

5. FIELD BORINGS AND SOIL SAMPLING WERE PERFORMED IN ACCORDANCE TO AASHTO T-206, T-225 AND T-306.

6. USCS AND AASHTO DESIGNATIONS INDICATED IN UPPER CASE HAVE BEEN CONFIRMED USING LAB SOIL CLASSIFICATION TESTS. USCS AND AASHTO DESIGNATIONS INDICATED IN LOWER CASE ARE BASED ON VISUAL CLASSIFICATION TECHNIQUES ACCORDING TO ASTM D 2488 AND AASHTO M 145 BY RK&K GEOLOGIST OR ENGINEER.

7. CPT AND DMT PROBES WERE DRILLED BY IN-SITU SOIL TESTING, L.C AND CONETEC, INC.

   CPT = CONE PENETRATION TESTING
   DMT = FLAT- PLATE DILATOMETER

8. C= DEPTH OF HOLLOW STEM CONTINUOUS FLIGHT AUGER (HSA) WITH A 3-3/8 INCH ID, AND LIMIT OF MUD ROTARY (MD).

9. FOR BORING LOCATIONS, SEE CONSTRUCTION PLAN SHEETS 182 THROUGH 186.

10. FOR ADDITIONAL BORING & DRIVE TESTS SEE BORING & DRIVE TESTS SHEETS FOR OTHER STRUCTURES.

11. FOR ALL OTHER BORING & DRIVE TESTS SEE SHEETS 744 THROUGH 792.

12. FOR ADDITIONAL LABORATORY TEST RESULTS OF UNDISTURBED TUBE SAMPLES AND INDEX TESTING SEE, SHEETS 793 THROUGH 803.

13. FOR GROUNDWATER MONITORING DATA, SEE SHEET XXX OF XXX.

14. LL= LIQUID LIMIT

15. PL = PLASTIC LIMIT

16. PI = PLASTICITY INDEX

17. UC = UNCONFINED COMPRESSION

18. DS = DIRECT SHEAR

19. CONS = CONSOLIDATION

20. UU = UNCONSOLIDATED- UNDRAINED TRIAXIAL TEST

21. CIUC = CONSOLIDATED ISOTROPIC UNDRAINED COMPRESSION TRIAXIAL TEST

22. AASHTO = AMERICAN ASSOCIATION OF STATE HIGHWAY TRANSPORTATION OFFICIALS

8/2/2010 4:49:32 PM
M:\PROJECTS\2003\03059_DELTRNPK\SRMALL\CADD\2809003\PLANS\B0015_S6_SR1.DGN

DELAWARE DEPARTMENT OF TRANSPORTATION

ADDENDUMS / REVISIONS

SR1 / I-95 INTERCHANGE

CONTRACT	BRIDGE NO.	1-268B
28-090-03	DESIGNED BY:	JLT
COUNTY		
NEW CASTLE	CHECKED BY:	EMK

RAMP B OVER I-95NB
STA. 450+65.00 TO STA. 458+15.00
BORING NOTES & LEGEND

S6-58

SHEET NO.	TOTAL SHTS.
505	803

UNOFFICIAL WEBSITE COPY

SUMMARY OF LABORATORY TEST RESULTS OF TUBE SAMPLES

BORING NO.	TOP SAMPLE DEPTH (FT)	NATURAL MOISTURE CONTENT (%)	LL	PL	PI	PERCENT PASSING NO. 200	AASHTO	UNDISTURBED TUBE TESTING	TOTAL UNIT WEIGHT (pcf)	UNCONFINED COMPRESSION (psf)	TOTAL STRESS COHESION (psf)	TOTAL STRESS FRICTION ANGLE (deg)	EFFECTIVE STRESS COHESION (psf)	EFFECTIVE STRESS FRICTION ANGLE (deg)	UNDRAINED SHEAR (psf)	INITIAL VOID RATIO	PRECONSOLIDATION STRESS MAX (psf)	PRECONSOLIDATION STRESS MIN (psf)	C_c	C_r	pH	RESISTIVITY (ohm-cm)
IBR-32	50.0	16.7	31	18	13	96.0	A-6	CONS	132.7	-	-	-	-	-	-	0.52	6760	6000	0.16	0.05	4.95	3300
IBR-55	36.0	19.6	39	21	18	98.7	A-6(19)	UU	-	-	4816	-	-	-	2	-	-	-	-	-	-	-
IBR-57	26.0	20.5	36	20	16	93.6	A-6	UU	135.3	-	-	-	-	-	2516	-	-	-	-	-	-	-
IBR-58	1.5	2.7	22	NP	NP	16.0	A-1-b	DS	135.2	-	-	-	534	19.4	-	-	-	-	-	-	-	-
IBR-60	18.0	-	-	-	-	-	-	CONS	-	-	-	-	-	-	-	0.52	3660	3940	0.13	0.03	-	-
IBR-60	18.0	20.7	30	19	11	81.7	A-6(8)	UC	-	2338	-	-	-	-	1169	-	-	-	-	-	-	-
IBR-60	18.0	19.5	36	18	18	65.1	A-6(9)	UU	-	-	-	-	-	-	1514	-	-	-	-	-	-	-
IBR-60	44.0	22.2	41	22	19	91.7	A-6(18)	CONS	-	-	-	-	-	-	-	0.60	4000	2460	0.16	0.04	-	-
IBR-60	46.0	18.0	36	21	16	91.2	A-6(17)	UU	-	-	1986	-	-	-	1986	-	-	-	-	-	-	-
IBR-61	14.0	-	-	-	-	-	-	CONS	-	-	-	-	-	-	-	0.75	5820	3700	0.24	0.05	-	-
IBR-61	14.0	24.2	34	21	13	98.8	A-6(13)	UC	-	3418	-	-	-	-	1709	-	-	-	-	-	-	-
IBR-61	59.0	31.2	46	24	22	85.9	A-7-6(20)	CONS	-	-	-	-	-	-	-	0.84	5000	1380	0.22	0.06	-	-
IBR-61	59.0	37.4	48	23	25	90.6	A-7-6(25)	DS	-	-	-	-	58	18.0	-	-	-	-	-	-	-	-
ICPT-15A	18.0	-	-	-	-	-	-	CONS	-	-	-	-	-	-	-	0.67	6200	4600	0.12	0.03	-	-
ICPT-15A	18.0	24.4	49	23	26	100.0	-	UC	125.5	4052	-	-	-	-	2026	-	-	-	-	-	-	-
ICPT-15A	28.0	-	-	-	-	-	-	CONS	-	-	-	-	-	-	-	1.33	24000	22000	0.15	0.02	-	-
ICPT-15A	28.0	36.7	50	24	26	89.8	-	UC	109.4	6218	-	-	-	-	3109	-	-	-	-	-	-	-
ICPT-15A	44.0	-	-	-	-	-	-	CONS	-	-	-	-	-	-	-	0.74	7000	4400	0.12	0.04	-	-
ICPT-15A	44.0	22.3	53	22	31	92.6	-	UC	129.2	4636	-	-	-	-	2318	-	-	-	-	-	-	-
IRW-64	25.0	19.5	35	20	15	92.0	A-6	CIUC	-	-	700	12.2	570	20.9	-	-	-	-	-	-	-	-
IRW-64	40.0	24.9	32	19	13	78.0	A-6	UU	116.5	-	-	-	-	-	810	-	-	-	-	-	-	-
URS-2	72.0	24.6	51	27	24	90.7	A-7-6(25)	UU	-	-	-	-	-	-	663	-	-	-	-	-	-	-
URS-2	82.0	22.0	50	31	19	93.0	A-7-5(22)	UU	-	-	-	-	-	-	5800	-	-	-	-	-	-	-
URS-2	102.0	16.8	33	21	12	52.3	A-6(4)	UU	-	-	-	-	-	-	5871	-	-	-	-	-	-	-
URS-3	35.0	26.1	40	22	18	98.6	A-6(20)	CONS	132.3	-	-	-	-	-	-	0.61	5180	4800	0.20	0.07	-	-
URS-3	35.0	20.7	40	22	18	98.6	A-6	UC	133.3	4732	-	-	-	-	2366	-	-	-	-	-	-	-
URS-3	50.0	42.8	-	-	-	-	-	CONS	117.0	-	-	-	-	-	-	0.99	2400	1680	0.27	0.08	-	-
URS-3	50.0	26.6	51	24	27	97.2	A-7-6	UC	123.9	2408	-	-	-	-	1204	-	-	-	-	-	-	-
URS-4	35.0	26.9	-	-	-	-	-	CONS	131.2	-	-	-	-	-	-	0.46	2240	2020	0.20	0.06	-	-

NOTES:

1. LL= LIQUID LIMIT
2. PL = PLASTIC LIMIT
3. PI = PLASTICITY INDEX
4. AASHTO = AMERICAN ASSOCIATION OF STATE AND HIGHWAY TRANSPORTATION OFFICIALS
5. UC = UNCONFINED COMPRESSION
6. DS = DIRECT SHEAR
7. CONS = CONSOLIDATION
8. UU = UNCONSOLIDATED- UNDRAINED TRIAXIAL TEST
9. CIUC = CONSOLIDATED ISOTROPIC UNDRAINED COMPRESSION TRIAXIAL TEST

8/2/2010 4:50:03 PM
M:\PROJECTS\2003\03059_DELTRNPK\SR1MALL\CADD\2809003\PLANS\B0016_S6_SR1.DGN

DELAWARE
DEPARTMENT OF TRANSPORTATION

ADDENDUMS / REVISIONS

SR1 / I-95 INTERCHANGE

CONTRACT	BRIDGE NO.	1-268B
28-090-03	DESIGNED BY:	JLT
COUNTY		
NEW CASTLE	CHECKED BY:	EMK

RAMP B OVER I-95NB
STA. 450+65.00 TO STA. 458+15.00
LABORATORY DATA

S6-59
SHEET NO. 506
TOTAL SHTS. 803

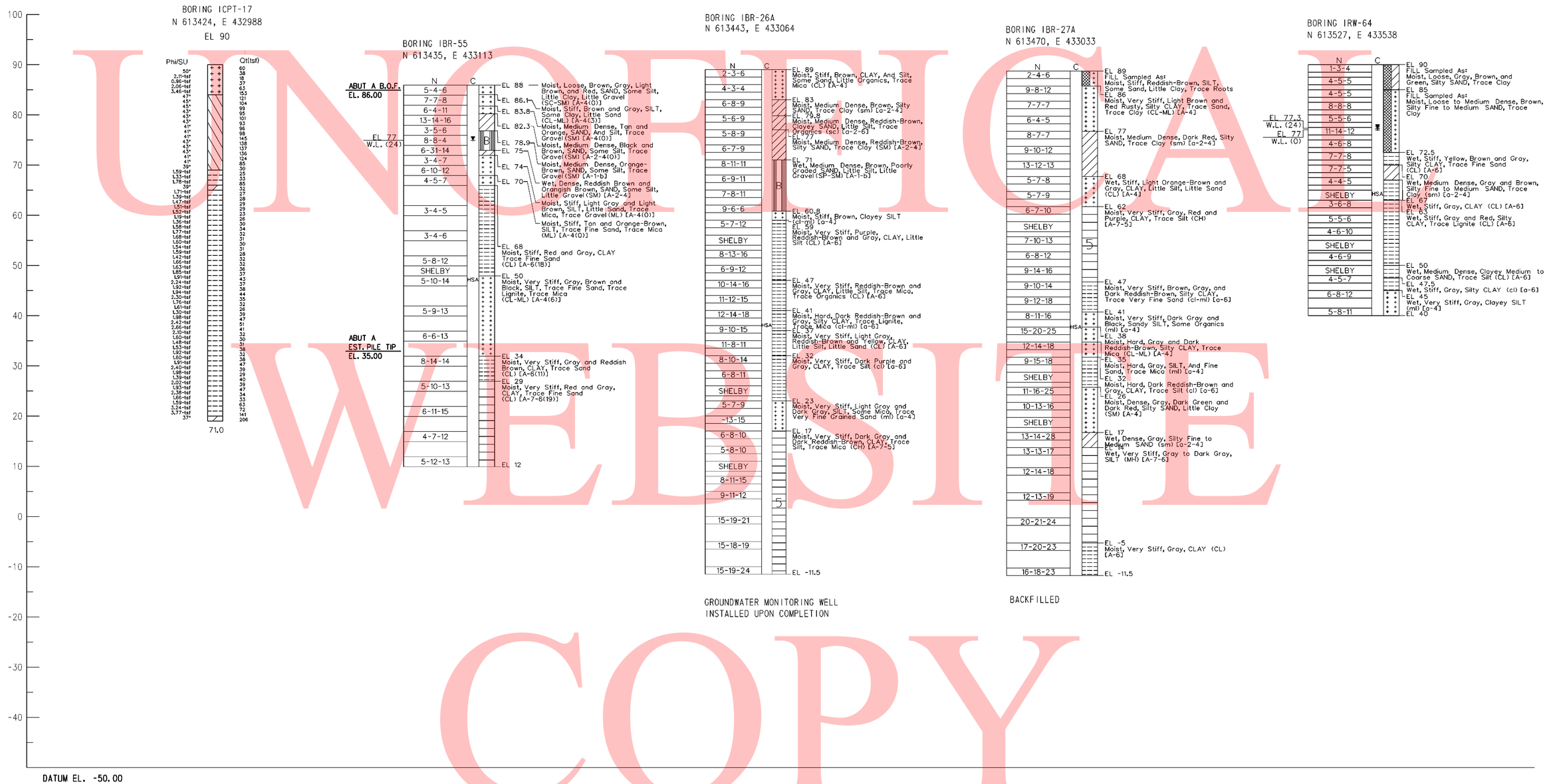

UNOFFICIAL WEBSITE COPY

NOTES:

1. FOR BORING NOTES AND INFORMATION SEE DWG. NO. S6-58 AND S6-59.
2. FOR BORING LOCATIONS SEE CONSTRUCTION PLAN SHEETS.

12/3/2008 4:57:28 PM
M:\PROJECTS\2003\03059_DELTRNPK\SRIMALL\CADD\2809003\PLANS\SB00_SR1.DGN

DELAWARE DEPARTMENT OF TRANSPORTATION	ADDENDUMS / REVISIONS	SCALE 0 10 20 30 FEET	SR1 / I-95 INTERCHANGE	CONTRACT 28-090-03	BRIDGE NO. 1-268B	RAMP B OVER I-95NB STA. 450+65.00 TO STA. 458+15.00 BORING & DRIVE TESTS
				COUNTY NEW CASTLE	DESIGNED BY: JLT	
					CHECKED BY: EMK	

S6-60

SHEET NO.	TOTAL SHTS.
507	803

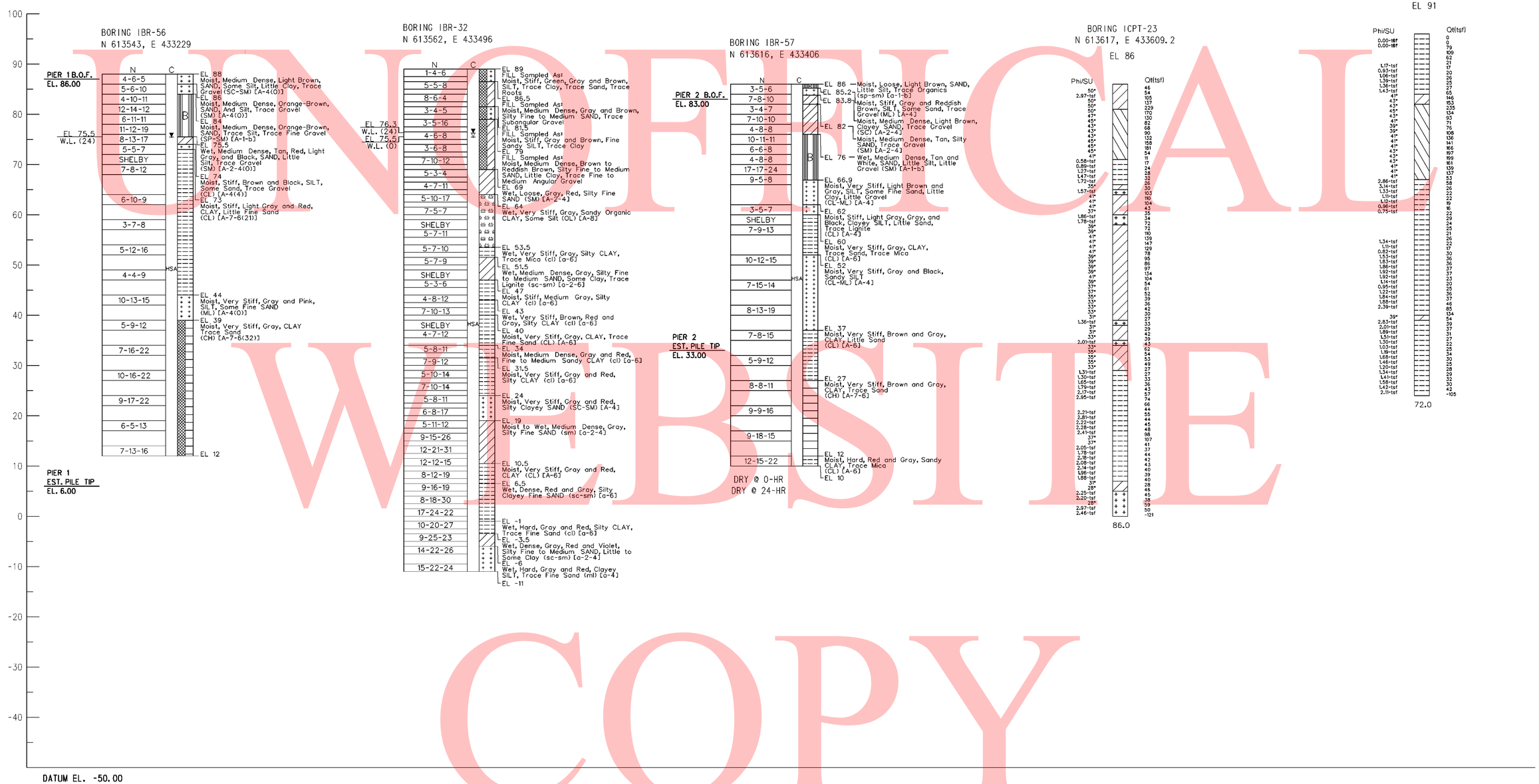

UNOFFICIAL WEBSITE COPY

NOTES:

1. FOR BORING NOTES AND INFORMATION SEE DWG. NO. S6-58 AND S6-59.
2. FOR BORING LOCATIONS SEE CONSTRUCTION PLAN SHEETS.

S6-61

DELAWARE DEPARTMENT OF TRANSPORTATION	ADDENDUMS / REVISIONS	SCALE 0 10 20 30 FEET	SR1 / I-95 INTERCHANGE	CONTRACT 28-090-03	BRIDGE NO. 1-268B	RAMP B OVER I-95NB STA. 450+65.00 TO STA. 458+15.00 BORING & DRIVE TESTS
				COUNTY NEW CASTLE	DESIGNED BY: JLT	SHEET NO. 508
					CHECKED BY: EMK	TOTAL SHTS. 803

8/2/2010 10:45:08 AM
M:\PROJECTS\2003\03059_DELTRNPK\SRIMALL\CADD\2809003\PLANS\B0018_S6_SR1.DGN

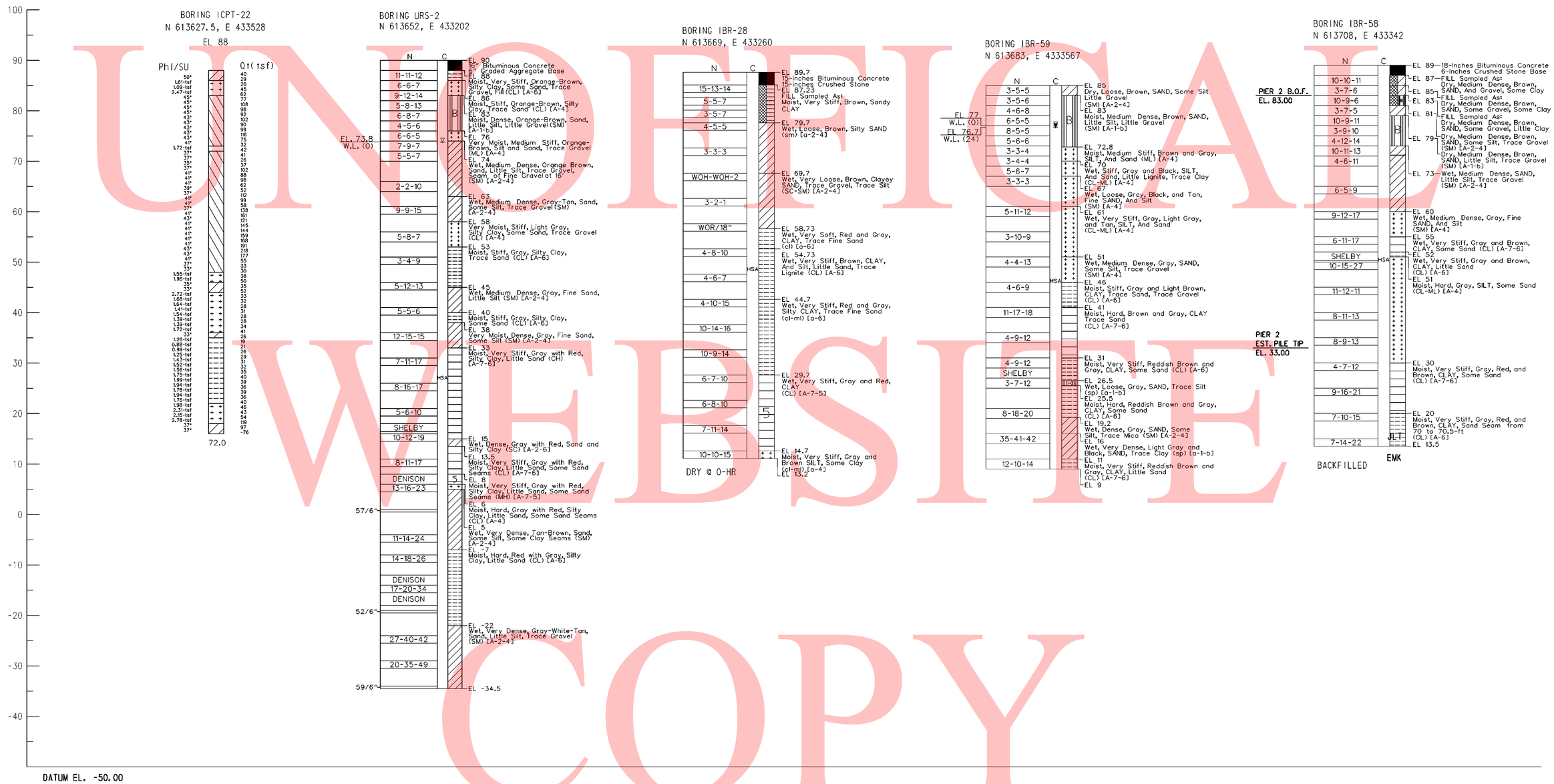

NOTES:

1. FOR BORING NOTES AND INFORMATION SEE DWG. NO. SX-XX
2. FOR BORING LOCATIONS SEE CONSTRUCTION PLAN SHEETS.

UNOFFICIAL WEBSITE COPY

9/10/2010 2:15:52 PM
M:\PROJECTS\2003\03059_DELTRNPK\SRIMALL\CADD\2809003\PLANS\B0019_S6_SR1.DGN

DELAWARE DEPARTMENT OF TRANSPORTATION

ADDENDUMS / REVISIONS

SCALE 0 10 20 30 FEET

SR1 / I-95 INTERCHANGE

CONTRACT	BRIDGE NO.	1-268B
28-090-03	DESIGNED BY:	JLT
COUNTY	CHECKED BY:	EMK
NEW CASTLE		

RAMP B OVER I-95NB
STA. 450+65.00 TO STA. 458+15.00
BORING & DRIVE TESTS

S6-62
SHEET NO.
509
TOTAL SHTS.
803

UNOFFICIAL WEBSITE COPY

NOTES:

1. FOR BORING NOTES AND INFORMATION SEE DWG. NO. S6-58 AND S6-59.
2. FOR BORING LOCATIONS SEE CONSTRUCTION PLAN SHEETS.

DELAWARE DEPARTMENT OF TRANSPORTATION	ADDENDUMS / REVISIONS	SCALE 0 10 20 30 FEET	SR1 / I-95 INTERCHANGE	CONTRACT 28-090-03	BRIDGE NO. 1-268B	RAMP B OVER I-95NB STA. 450+65.00 TO STA. 458+15.00 BORING & DRIVE TESTS	S6-63 SHEET NO.
				COUNTY NEW CASTLE	DESIGNED BY: JLT		510 TOTAL SHTS.
					CHECKED BY: EMK		803

8/2/2010 10:49:53 AM
M:\PROJECTS\2003\03059_DELTRNPK\SR1MALL\CADD\2809003\PLANS\B0020_S6_SR1.DGN

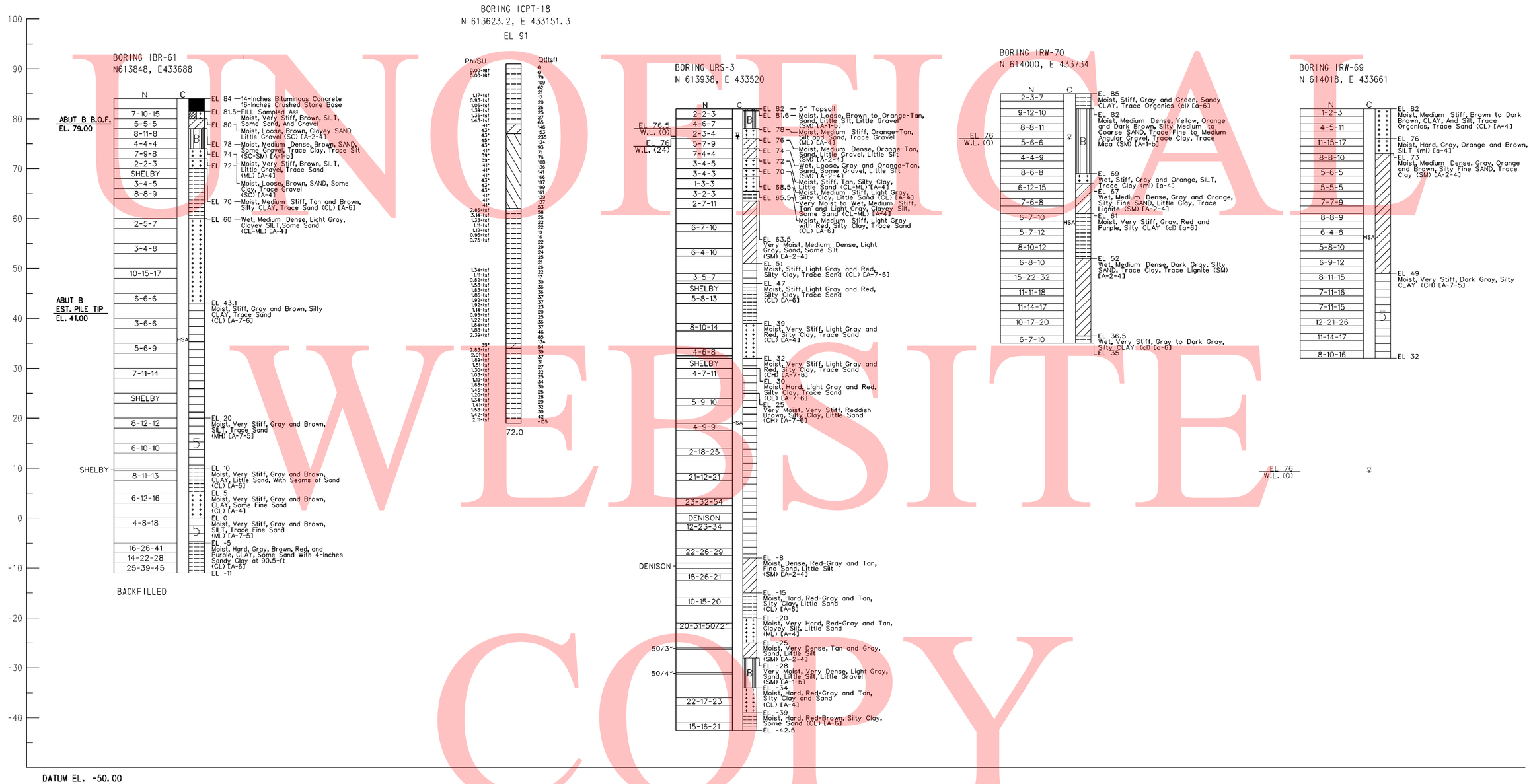

UNOFFICIAL WEBSITE COPY

NOTES:

1. FOR BORING NOTES AND INFORMATION SEE DWG. NO. S6-58 AND S6-59.
2. FOR BORING LOCATIONS SEE CONSTRUCTION PLAN SHEETS.

DELAWARE DEPARTMENT OF TRANSPORTATION	ADDENDUMS / REVISIONS	SCALE 0 10 20 30 FEET	SR1 / I-95 INTERCHANGE	CONTRACT 28-090-03	BRIDGE NO. 1-268B	RAMP B OVER I-95NB STA. 450+65.00 TO STA. 458+15.00 BORING & DRIVE TESTS	S6-64 SHEET NO.
				COUNTY NEW CASTLE	DESIGNED BY: JLT		511 TOTAL SHTS.
					CHECKED BY: EMK		803

8/2/2010 10:50:52 AM
M:\PROJECTS\2003\03059_DELTRNPK\SR1MALL\CADD\2809003\PLANS\B0021_S6_SR1.DGN

UNOFFICAL WEBSITE COPY

NOTES:

1. FOR BORING NOTES AND INFORMATION SEE DWG. NO. S6-58 AND S6-59.
2. FOR BORING LOCATIONS SEE CONSTRUCTION PLAN SHEETS.

S6-65

DELAWARE DEPARTMENT OF TRANSPORTATION	ADDENDUMS / REVISIONS	SCALE 0 10 20 30 FEET	SR1 / I-95 INTERCHANGE	CONTRACT 28-090-03	BRIDGE NO. 1-268B	RAMP B OVER I-95NB STA. 450+65.00 TO STA. 458+15.00 BORING & DRIVE TESTS	SHEET NO. 512
				COUNTY NEW CASTLE	DESIGNED BY: JLT		TOTAL SHTS. 803
					CHECKED BY: EMK		

8/2/2010 10:51:40 AM
M:\PROJECTS\2003\03059_DELTRNPK\SRMALL\CADD\2809003\PLANS\B0022_S6_SR1.DGN

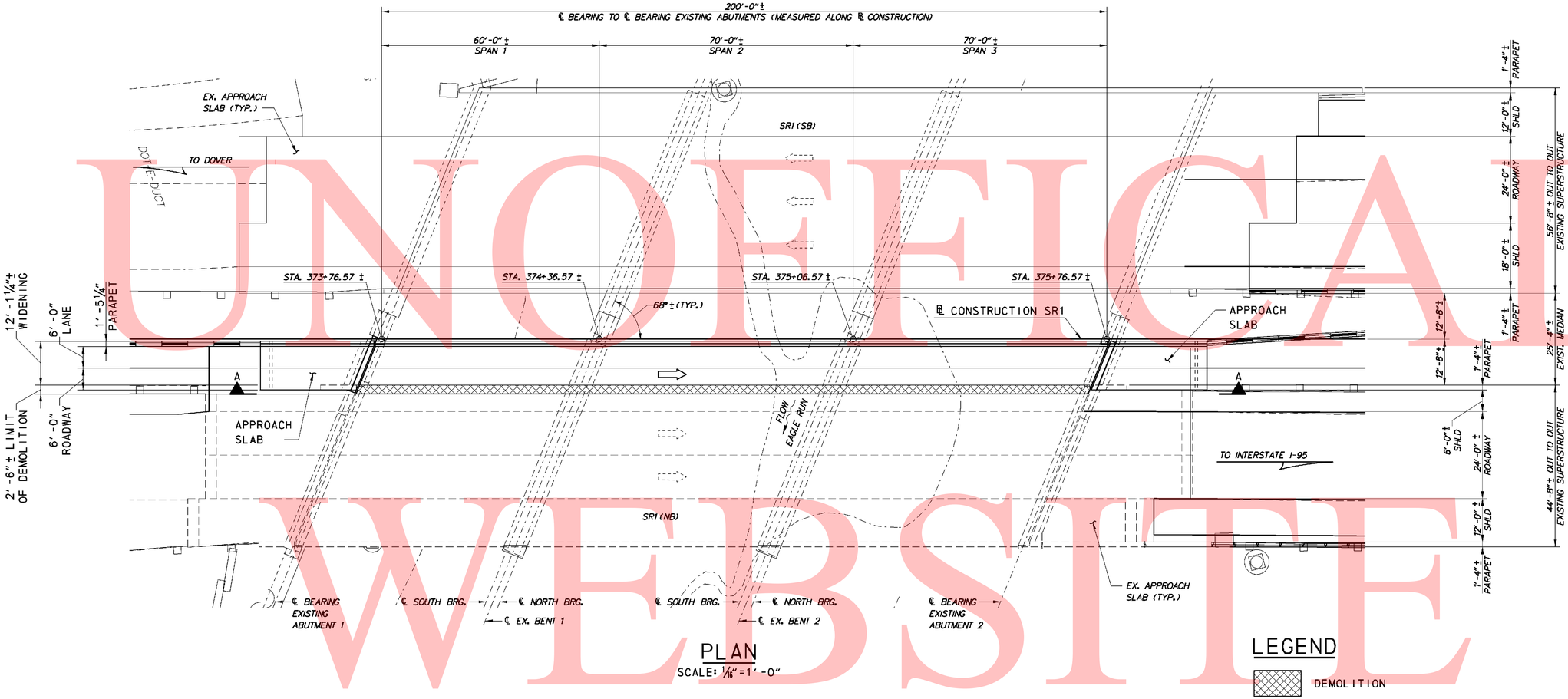

PLAN

SCALE: 1/16" = 1'-0"

LEGEND

DEMOLITION

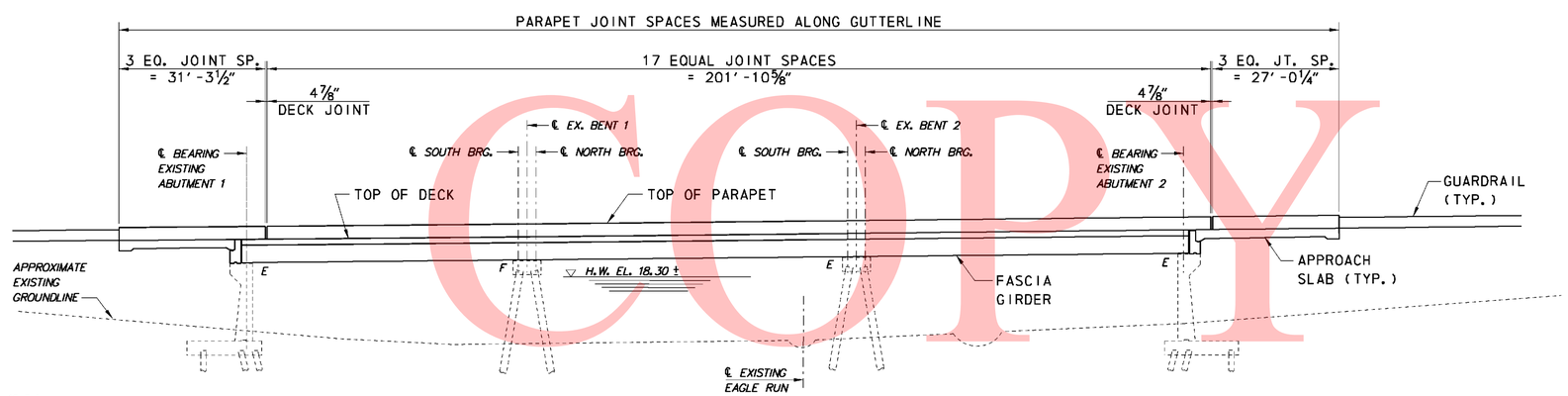

SECTION A-A

SCALE: 1/16" = 1'-0"

CROSS REFERENCE NOTES:

1. FOR GENERAL NOTES AND PROFILES, SEE SHEET S8-2.
2. FOR SEQUENCE OF CONSTRUCTION, SEE SHEET S8-4.

0 8 32
4 16
SCALE: 1/16" = 1'-0"

UNOFFICIAL WEBSITE COPY

DELAWARE DEPARTMENT OF TRANSPORTATION	ADDENDUMS / REVISIONS	SR1 / I-95 INTERCHANGE	CONTRACT 28-090-03	BRIDGE NO. 331N	SR1 OVER EAGLE RUN GENERAL PLAN AND ELEVATION	S8-1
			COUNTY NEW CASTLE	DESIGNED BY: MDM		SHEET NO. 513
				CHECKED BY:		TOTAL SHTS. 803

7/1/2010 2:11:32 PM
M:\PROJECTS\2003\03059_DELTRNPK\SR1MALL\CADD\2809003\PLANS\PE01_BR-S8_SR1.DGN

GENERAL NOTES:

1. DESIGN SPECIFICATIONS
   AASHTO LRFD BRIDGE DESIGN SPECIFICATIONS, 2007, 4TH EDITION WITH ALL CURRENT REVISIONS
   DELAWARE DEPARTMENT OF TRANSPORTATION BRIDGE DESIGN MANUAL
   ANSI/AASHTO/AWS D1.5 BRIDGE WELDING CODE.
2. LOADING
   UNIT WEIGHTS OF MATERIALS ARE IN ACCORDANCE WITH THE DELAWARE DESIGN MANUAL. FUTURE OVERLAY ALLOWANCE IS 25 PSF. STEEL BRIDGE DECK FORMS WHICH STAY IN PLACE (INCLUDING CONCRETE IN FORM CORRUGATIONS) IS 15 PSF. VEHICLE LIVE LOAD IS HL-93, WHICH CONSISTS OF A DESIGN TRUCK OR TANDEM WITH DYNAMIC LOAD ALLOWANCE AND A LANE LOAD RATING, WILL USE ALL DELAWARE LEGAL LOADS SPECIFIED IN THE BRIDGE DESIGN MANUAL. FATIGUE DESIGN SHALL BE BASED ON THE FOLLOWING ONE DIRECTIONAL TRAFFIC VOLUMES:
   DESIGN YEAR 2030 ADT = 74,443, DESIGN ADTT = 6,700
   FOR THERMAL LOADS, CONSIDER THE MODERATE TEMPERATURE RANGE AS STIPULATED IN THE AASHTO LRFD DESIGN SPECIFICATIONS. THE NORMAL TEMPERATURE IS CONSIDERED TO BE 60F. FOR SEISMIC LOADS, THE PROJECT SITE IS LOCATED WITHIN SEISMIC PERFORMANCE ZONE 2, WITH AN ACCELERATION COEFFICIENT=0.1, SOIL PROFILE TYPE II AND IMPORTANCE CATEGORY - ESSENTIAL.
3. PORTLAND CEMENT CONCRETE
   PORTLAND CEMENT CONCRETE FOR CAST-IN-PLACE ELEMENTS SHALL BE AS FOLLOWS:
   (28 DAY COMPRESSIVE STRENGTH)
   - ITEM NO. 602001 (CLASS A, F'C=4500 PSI) - ABUTMENT
   - ITEM NO. 602007 (CLASS A, F'C=4500 PSI) - PIER ABOVE FOOTING
   - ITEM NO. 602013 (CLASS D, F'C=4500 PSI) - DECK
   - ITEM NO. 602014 (CLASS D, F'C=4500 PSI) - APPROACH SLAB
   - ITEM NO. 602017 (CLASS A, F'C=4500 PSI) - PARAPET

   MIX REQUIREMENTS SHALL CONFORM TO SECTION 812 OF THE DELAWARE DEPARTMENT OF TRANSPORTATION STANDARD SPECIFICATIONS. ALL EXPOSED CORNERS OF CONCRETE SHALL BE CHAMFERED WITH 3/4" X 3/4" MILLED CHAMFER STRIPS UNLESS NOTED OTHERWISE, EXCEPT ON UNEXPOSED FOOTINGS OR WHERE INDICATED BY THE NOTATION ON THE PLANS, "DO NOT CHAMFER". NO SLIP-FORMING OF PARAPETS IS PERMITTED.
4. BAR REINFORCEMENT
   REINFORCING STEEL SHALL CONFORM TO AASHTO M31 (ASTM A615), GRADE 60. ALL REINFORCING STEEL SHALL HAVE A CLEAR COVER OF 2" UNLESS OTHERWISE SPECIFIED ON THE PLANS. EPOXY COATED REINFORCING STEEL SHALL CONFORM TO AASHTO M284 (ASTM D3963), AND IS DENOTED WITH A SUFFIX "E" IN THE BAR MARKS. EPOXY COATED REINFORCING STEEL IS USED IN THE FOLLOWING LOCATIONS:
   - APPROACH SLABS
   - DECK SLAB
   - PARAPETS AND BARRIERS
   - BEARING SEAT PADS
   - ABUTMENT BEARING SEAT REGIONS
   - ABUTMENT BACKWALLS
   - PARAPET PORTION OF WINGWALLS

   DO NOT WELD GRADE 60 REINFORCING STEEL.

GENERAL NOTES CONT'D:

5. SERVICEABILITY
   LIVE LOAD DEFLECTION SHALL BE LIMITED TO L/800. FOR REINFORCEMENT DISTRIBUTION REQUIREMENTS, CONSIDER CLASS 2 EXPOSURE CRITERIA. ACCOMODATION TO JACK GIRDERS FOR FUTURE BEARING REPLACEMENT SHALL BE CONSIDERED IN THE DESIGN.
6. CONSTRUCTION JOINTS
   KEYED CONSTRUCTION JOINTS SHALL BE 2"X4" OR AS NOTED. ALL EXPOSED CONSTRUCTION JOINT EDGES SHALL HAVE A 3/4" V-NOTCH.
7. SHEETING AND SHORING
   SHORING SHALL BE REQUIRED FOR ANY EXCAVATION EXCEEDING FIVE (5) FEET IN HEIGHT, THE COST OF SHORING SHALL BE PAID UNDER ITEM NO. 207501. IN LIEU OF SHORING, THE CONTRACTOR MAY USE A 2:1 CUT SLOPE. NO PAYMENT SHALL BE MADE FOR ADDITIONAL EXCAVATION OR FILL OUTSIDE THE LIMITS AS DEFINED IN SECTION 207 OF THE STANDARD SPECIFICATIONS.
8. EXISTING STRUCTURES
   ALL DIMENSIONS AFFECTED BY THE GEOMETRICS AND/OR LOCATION OF EXISTING STRUCTURES SHALL BE CHECKED IN THE FIELD BY THE CONTRACTOR BEFORE ANY CONSTRUCTION IS DONE, AND BEFORE ANY REINFORCING STEEL, ETC., IS ORDERED OR FABRICATED. IT SHALL BE THE RESPONSIBILITY OF THE CONTRACTOR TO SUPPLY THE ENGINEER WITH ALL FIELD DIMENSIONS REQUIRED TO CHECK DETAIL DRAWINGS. THE + MARKS SHOWN WITH DIMENSIONS DO NOT INDICATE ANY DEGREE OF PRECISION. THESE MARKS (+) INDICATE EXISTING DIMENSIONS THAT MAY VARY AND DO REQUIRE FIELD VERIFICATION BY THE CONTRACTOR.

PVI STA. 370+00
EL. 22.95
VC=1000'

SR 1 (NB) PROFILE

NOT TO SCALE

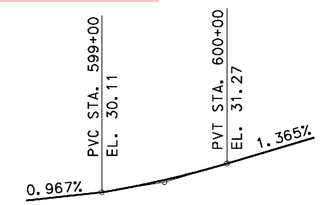

PVI STA. 599+50
EL. 30.59
VC=100'

SR 7 (NB) PROFILE

NOT TO SCALE

UNOFFICIAL WEBSITE COPY

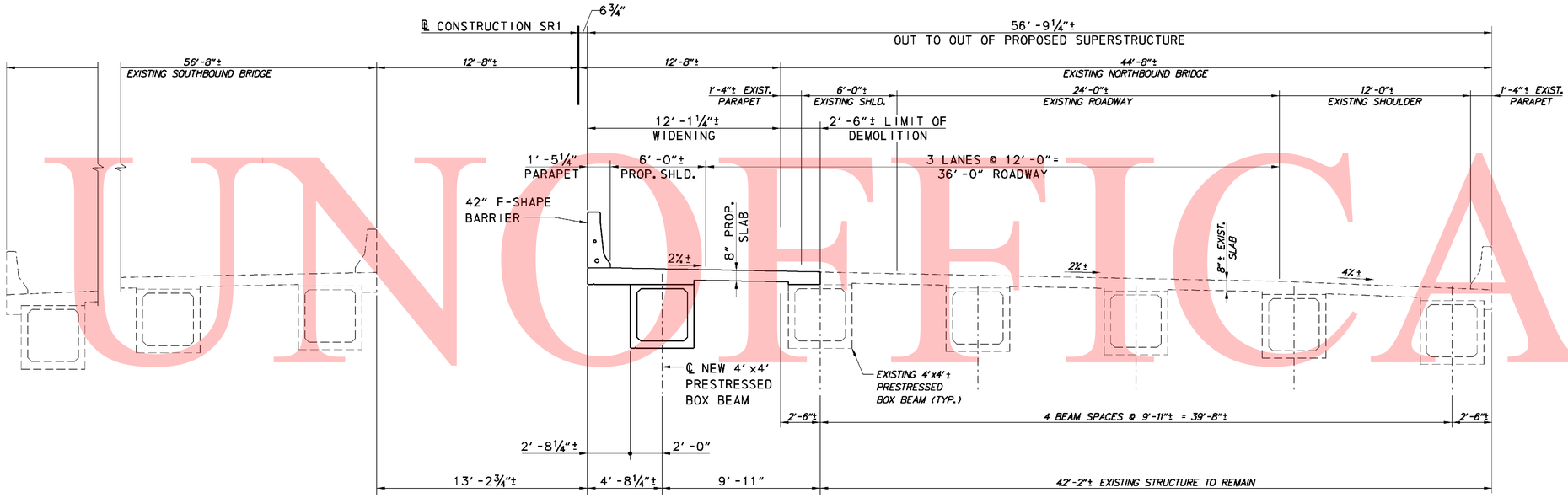

TYPICAL SECTION

SCALE: ¼" = 1'-0"

UNOFFICAL WEBSITE COPY

CROSS REFERENCE NOTES:

1. FOR GIRDER DETAILS, SEE SHEETS S8-10 AND S8-11.
2. FOR DIAPHRAGM DETAILS, SEE SHEET S8-12.
3. FOR DECK REINFORCING PLAN AND DETAILS, SEE SHEET S8-13.
4. FOR PARAPET DETAILS, SEE SHEET S8-14.
5. FOR EXPANSION JOINT DETAILS, SEE SHEET S8-16.

0 2 8
1 4
SCALE: ¼"=1'-0"

8/9/2010 7:47:02 AM
M:\PROJECTS\2003\03059_DELTRNPK\SRMALL\CADD\2809003\PLANS\ST01_BR-S8_SR1.DGN

DELAWARE DEPARTMENT OF TRANSPORTATION	ADDENDUMS / REVISIONS		SR1 / I-95 INTERCHANGE	CONTRACT 28-090-03	BRIDGE NO. 331N	SR1 OVER EAGLE RUN TYPICAL SECTION	SHEET NO. S8-3
				COUNTY NEW CASTLE	DESIGNED BY: MDM		515
					CHECKED BY:		TOTAL SHTS. 803

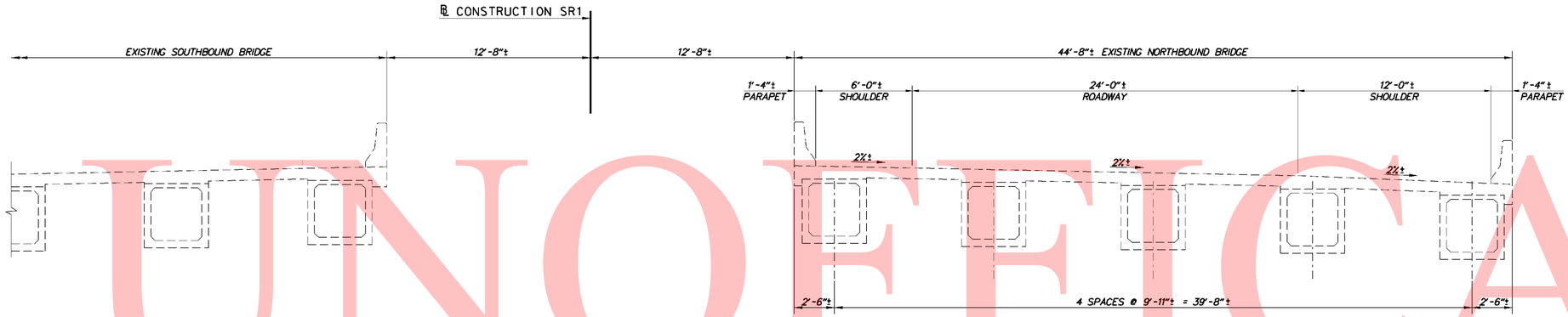

EXISTING CONDITION

SCALE: 1/4"=1'-0"

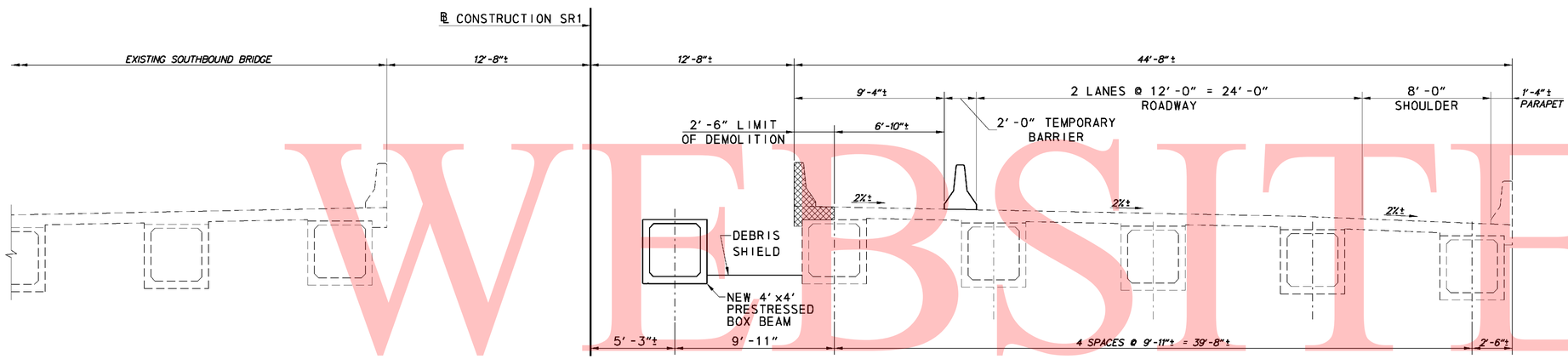

PHASE 1 CONSTRUCTION

SCALE: 1/4"=1'-0"

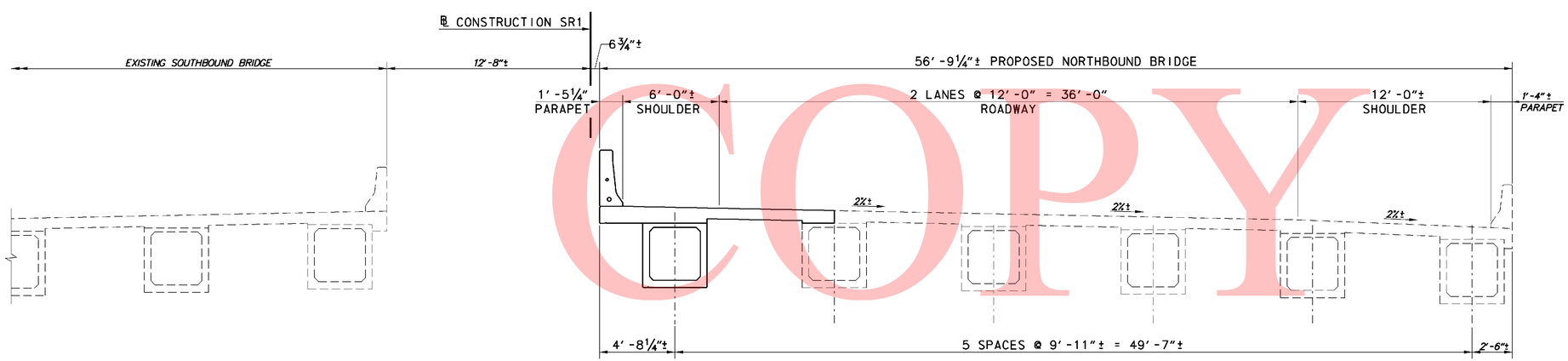

FINAL CONDITION

SCALE: 1/4"=1'-0"

LEGEND

DEMOLITION

CROSS REFERENCE NOTES:

1. FOR TYPICAL SECTION, SEE SHEET S8-3.
2. FOR ABUTMENT DEMOLITION DETAILS, SEE SHEET S8-5.
3. FOR ABUTMENT CONSTRUCTION DETAILS, SEE SHEET S8-6.
4. FOR BENT CONSTRUCTION DETAILS, SEE SHEET S8-7.
5. FOR FRAMING PLAN, SEE SHEET S8-9.

0 2 8
1 4
SCALE: 1/4"=1'-0"

UNOFFICAL WEBSITE COPY

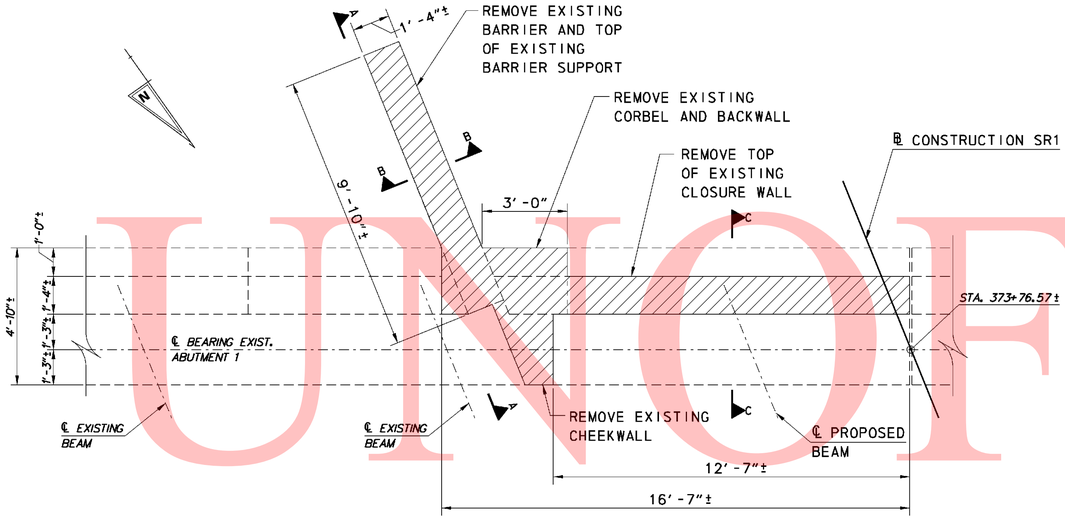

PLAN

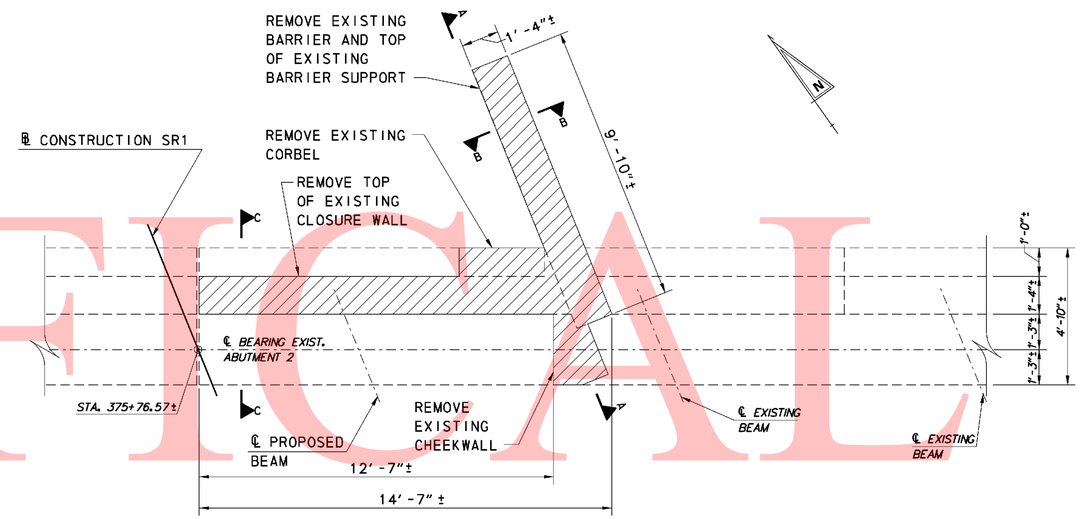

PLAN

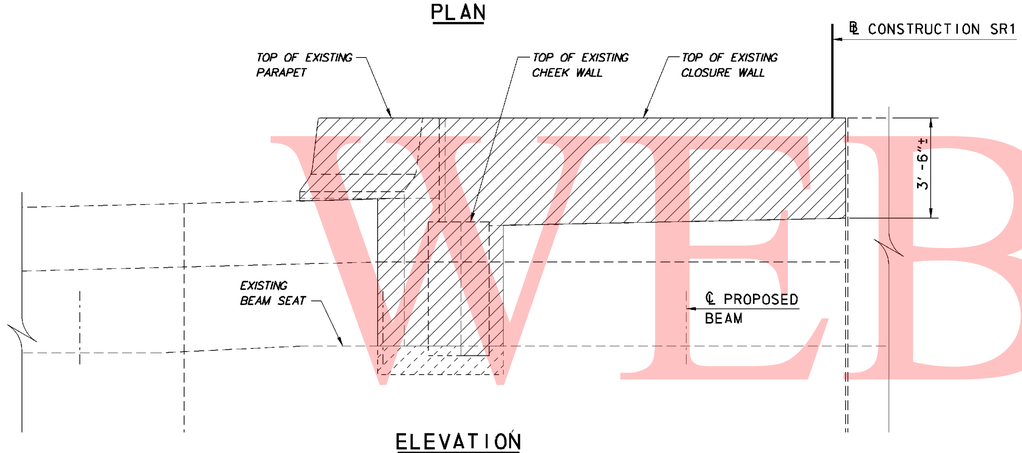

ELEVATION

ABUTMENT 1 DEMOLITION

SCALE: 3/8"=1'-0"

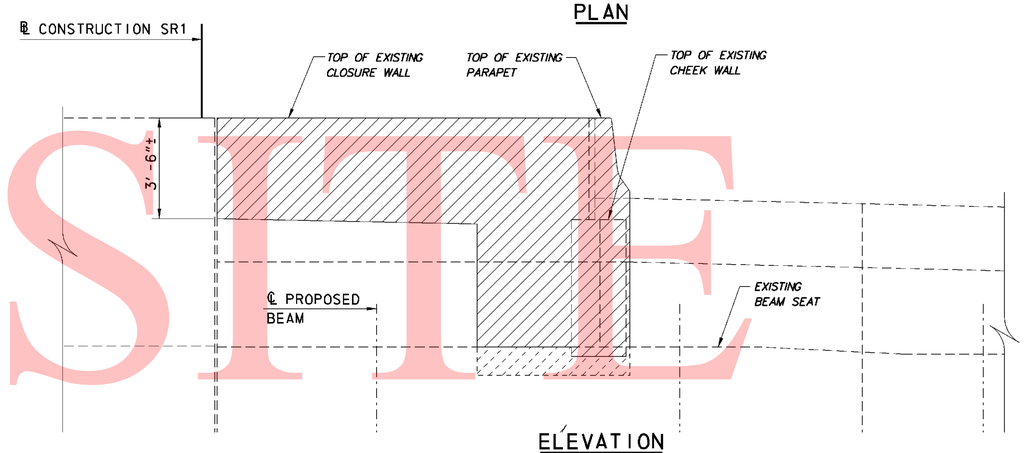

ELEVATION

ABUTMENT 2 DEMOLITION

SCALE: 3/8"=1'-0"

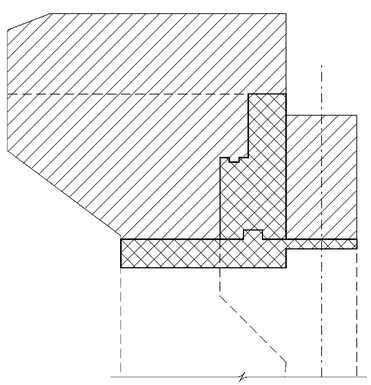

SECTION A-A

SCALE: 3/8"=1'-0"

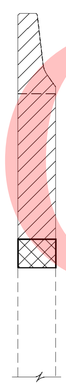

SECTION B-B

SCALE: 3/8"=1'-0"

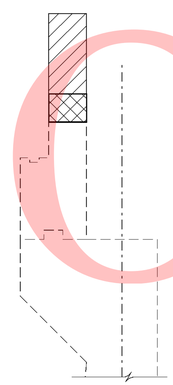

SECTION C-C

SCALE: 3/8"=1'-0"

CROSS REFERENCE NOTES:
1. FOR SEQUENCE OF CONSTRUCTION, SEE SHEET S8-4.
2. FOR ABUTMENT CONSTRUCTION DETAILS, SEE SHEET S8-6.

0 1 2 4 8

SCALE: 3/8"=1'-0"

UNOFFICIAL WEBSITE COPY

DELAWARE DEPARTMENT OF TRANSPORTATION	ADDENDUMS / REVISIONS	SR1 / I-95 INTERCHANGE	CONTRACT 28-090-03	BRIDGE NO. 331N	SR1 OVER EAGLE RUN ABUTMENTS DEMOLITION DETAILS	S8-5
			COUNTY NEW CASTLE	DESIGNED BY: MDM		SHEET NO. 517
				CHECKED BY:		TOTAL SHTS. 803

8/9/2010 7:17:16 AM
M:\PROJECTS\2003\03059_DELTRNPK\SRIMALL\CADD\2809003\PLANS\AB01_BR-S8_SR1.DGN

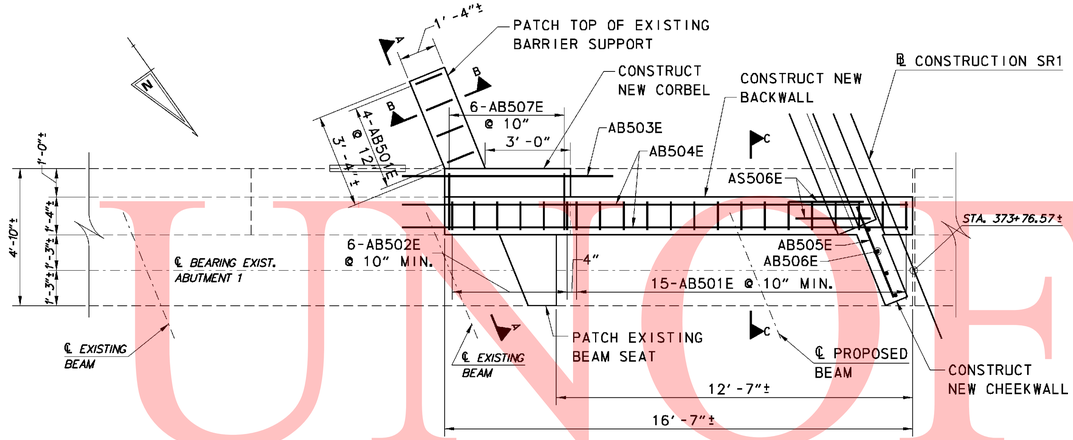

PLAN

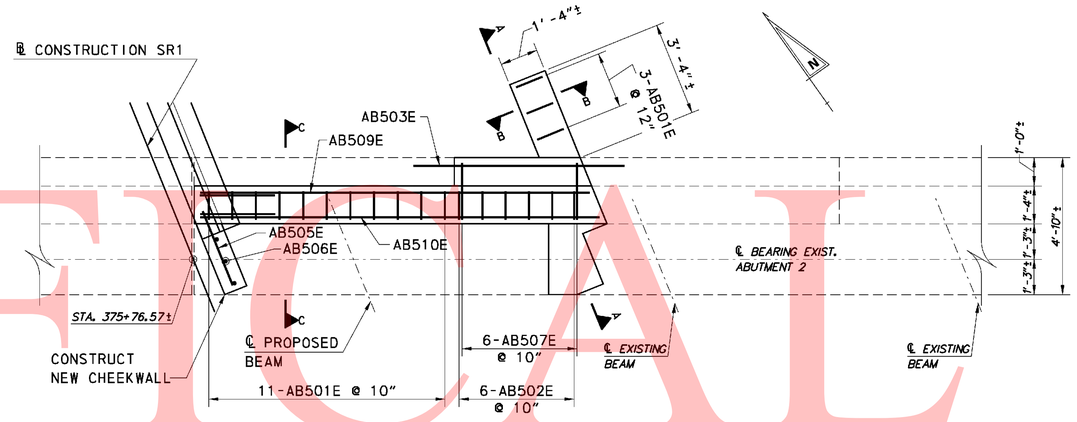

PLAN

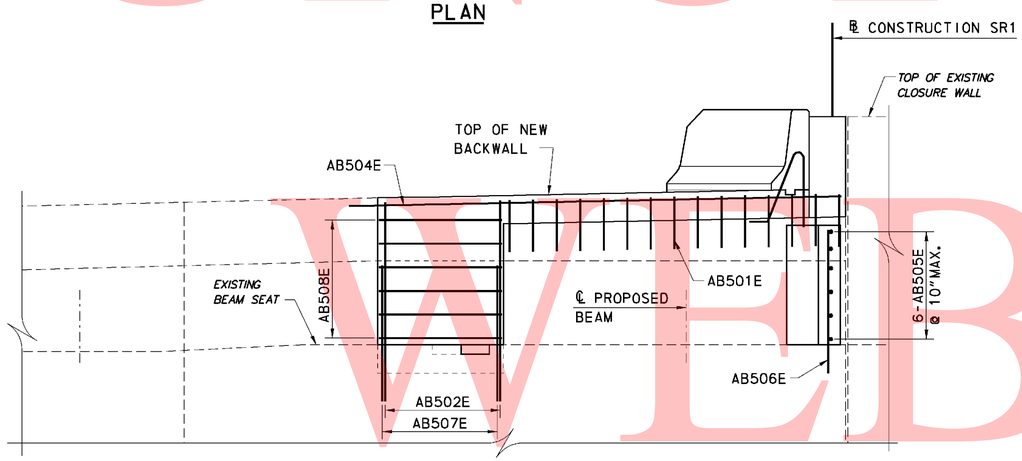

ELEVATION

ABUTMENT 1 CONSTRUCTION

SCALE: 3/8"=1'-0"

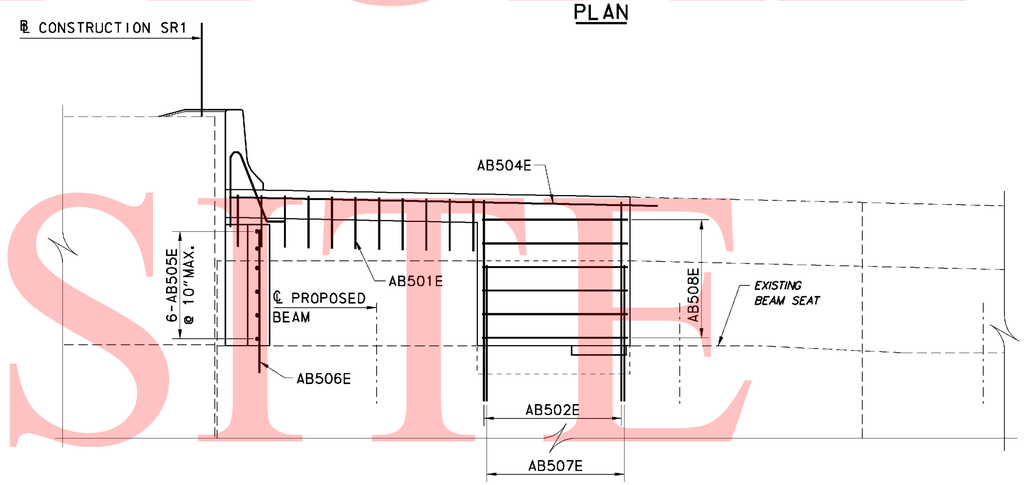

ELEVATION

ABUTMENT 2 CONSTRUCTION

SCALE: 3/8"=1'-0"

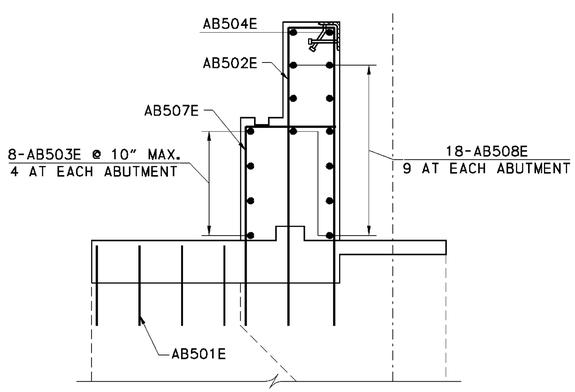

SECTION A-A

SCALE: 1/2"=1'-0"

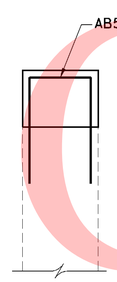

SECTION B-B

SCALE: 3/4"=1'-0"

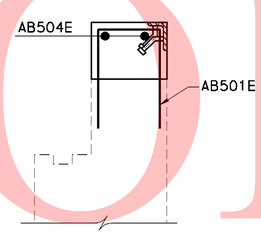

SECTION C-C

SCALE: 3/4"=1'-0"

CROSS REFERENCE NOTES:

1. FOR SEQUENCE OF CONSTRUCTION, SEE SHEET S8-4.
2. FOR ABUTMENT DEMOLITION DETAILS, SEE SHEET S8-5.
3. FOR EXPANSION JOINT DETAILS, SEE SHEET S8-16.
4. FOR APPROACH SLAB DETAILS, SEE SHEETS S8-17 TO S8-19.

0 2 8
1 4
SCALE: 3/8"=1'-0"

UNOFFICIAL WEBSITE COPY

9/10/2010 12:57:11 PM
M:\PROJECTS\2003\03059_DELTRNPK\SR1MALL\CADD\2809003\PLANS\AB02_BR-S8_SR1.DGN

DELAWARE DEPARTMENT OF TRANSPORTATION

ADDENDUMS / REVISIONS

SR1 / I-95 INTERCHANGE

CONTRACT	BRIDGE NO.	331N
28-090-03	DESIGNED BY:	MDM
COUNTY	CHECKED BY:	
NEW CASTLE		

SR1 OVER EAGLE RUN ABUTMENTS CONSTRUCTION DETAILS

SHEET NO.	TOTAL SHTS.
S8-6	803
518	

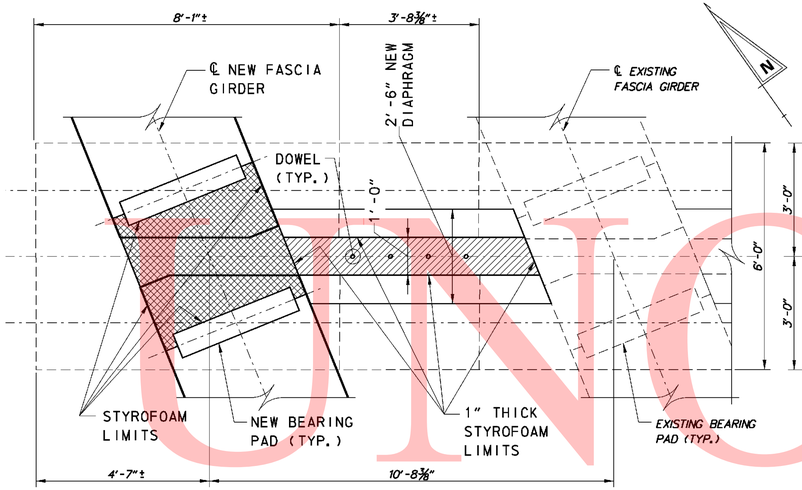

BENT 1 - PLAN

SCALE: ½"=1'-0"

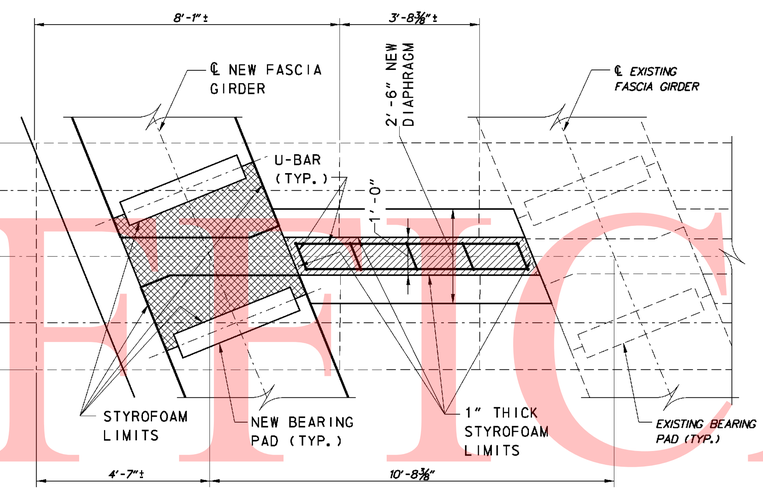

BENT 2 - PLAN

SCALE: ½"=1'-0"

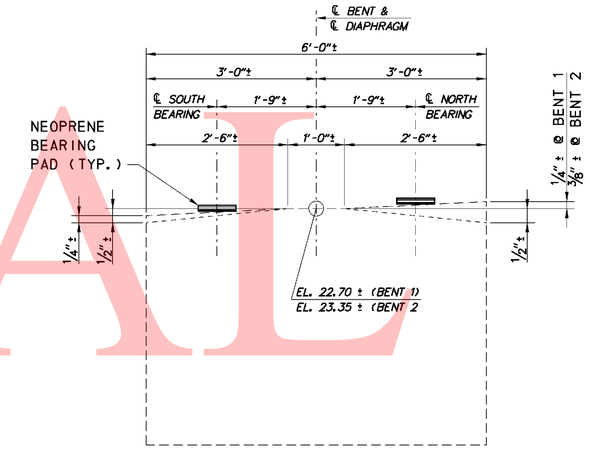

TYPICAL SECTION AT NEW GIRDER

N. T. S.

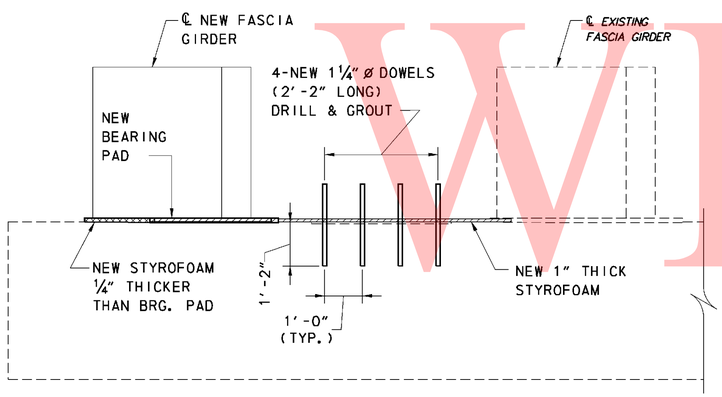

BENT 1 - ELEV

SCALE: ½"=1'-0"

NOTE: DIAPHRAGM NOT SHOWN.

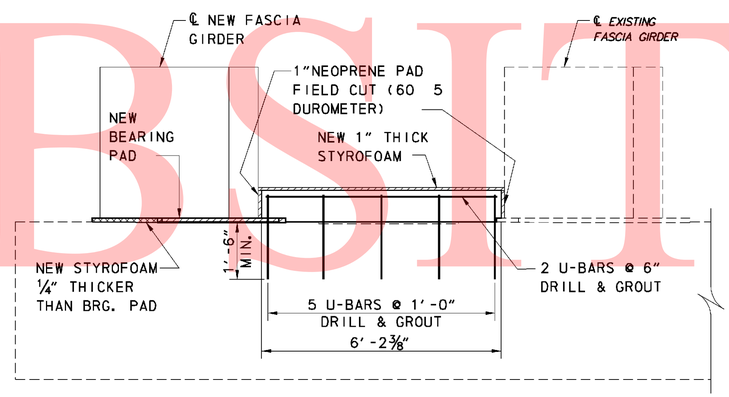

BENT 2 - ELEV

SCALE: ½"=1'-0"

NOTE: DIAPHRAGM NOT SHOWN.

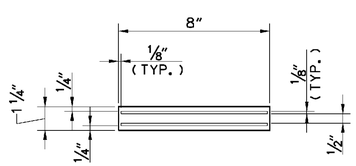

BENT 1

BEARING PAD NOTES:

1. NEOPRENE BEARING PADS HAVE A SURFACE AREA OF 8"x40" (50 DUROMETER).
2. BEARING PADS LOCATED ON BENT 1 ARE 1 ¼" THICK.
3. BEARING PADS LOCATED ON BENT 2 ARE 1 ⅞" THICK.
4. ALL BEARING PADS ARE NORMAL TO ℄ GIRDERS.

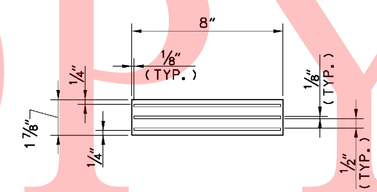

BENT 2

BEARING PAD - TYPICAL SECTION

SCALE: 3"=1'-0"

CROSS REFERENCE NOTES:

1. FOR SEQUENCE OF CONSTRUCTION, SEE SHEET S8-4.
2. FOR FRAMING PLAN, SEE SHEET S8-9.
3. FOR GIRDER DETAILS, SEE SHEETS S8-10 AND S8-11.
4. FOR DIAPHRAGM DETAILS, SEE SHEET S8-12.

0 ¼ ½ 1

SCALE: 3"=1'-0"

0 ½ 1 2 4

SCALE: ½"=1'-0"

UNOFFICIAL WEBSITE COPY

DELAWARE DEPARTMENT OF TRANSPORTATION	ADDENDUMS / REVISIONS		SR1 / I-95 INTERCHANGE	CONTRACT 28-090-03	BRIDGE NO. 331N	SR1 OVER EAGLE RUN BENTS CONSTRUCTION DETAILS	S8-7
				COUNTY NEW CASTLE	DESIGNED BY: MDM		SHEET NO. 519
					CHECKED BY:		TOTAL SHTS. 803

7/29/2010 3:15:17 PM
M:\PROJECTS\2003\03059_DELTRNPK\SRIMALL\CADD\2809003\PLANS\PR01_BR-S8_SR1.DGN

REINFORCING BAR LIST

SUBSTRUCTURE

MARK	LENGTH	NO. BARS	TYPE	A	B	C	D	E	G	H	J	K	O	R	REMARKS
AB501E	4'-10"	33	17		1'-10 1/2"	1'-1"	1'-10 1/2"								
AB502E	15'-1"	12	17		7'-0"	1'-1"	7'-0"								
AB503E	7'-6"	8	STR.												
AB504E	17'-10"	2	STR.												
AB505E	3'-0"	12	STR.												
AB506E	5'-1"	7	STR.												
AB507E	11'-5"	12	17		4'-8"	2'-1"	4'-8"								
AB508E	4-2"	18	STR.												
AB509E	13'-8"	1	STR.												
AB510E	14'-2"	1	STR.												

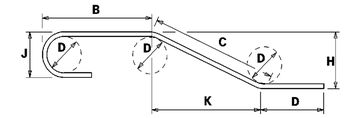

NOTES:

1. FIGURES SHOWN IN CIRCLES REPRESENT BAR BEND TYPES.
2. STANDARD BAR BENDS INCLUDE ONLY TYPES 1-32, S1-S12, AND T1-T16.
3. ALL DIMENSIONS ARE OUT-TO-OUT OF BAR EXCEPT "A" AND "G" ON STANDARD 180° AND 135° HOOKS.
4. "J" DIMENSIONS ON 180° HOOKS TO BE SHOWN ONLY WHERE NECESSARY TO RESTRICT HOOK SIZE, OTHERWISE STANDARD HOOKS ARE TO BE USED.
5. WHERE "J" IS NOT SHOWN, "J" WILL BE KEPT EQUAL TO OR LESS THAN "H" ON TRUSS BARS. WHERE "J" CAN EXCEED "H", IT SHALL BE SHOWN.
6. "H" DIMENSIONS OF STIRRUPS TO BE SHOWN WHERE NECESSARY TO FIT WITHIN THE CONCRETE.
7. UNLESS OTHERWISE NOTED, DIAMETER "D" IS THE SAME FOR ALL BENDS AND HOOKS ON A BAR.
8. WHERE SLOPE DIFFERS FROM 45° OFFSET, "H" AND "K" MUST BE SHOWN.
9. WHERE BARS ARE TO BE BENT MORE ACCURATELY THAN STANDARD BENDING TOLERANCES, BENDING DIMENSIONS WHICH REQUIRE CLOSER FABRICATION SHOULD HAVE LIMITS INDICATED.
10. FOR RECOMMENDED DIAMETER "D", OF BENDS, HOOKS, ETC., REFER TO TABLE AT RIGHT, 'CRSI' OR 'ACI' TABLES.
11. TYPE S1-S12, T1-T16 APPLY TO BAR SIZES 3 THROUGH 6.

ASTM STANDARD ENGLISH REINFORCING BARS				RECOMMENDED END HOOKS, APPLICABLE TO ALL GRADES			
	NOMINAL DIMENSIONS				180° HOOKS		90° HOOKS
BAR SIZE	DIAMETER (inches)	AREA (inches²)	WEIGHT (lbs./ft.)	D	A OR G	J	A OR G
3	0.375	0.110	0.376	2"	5"	3"	6"
4	0.500	0.200	0.668	3"	6"	4"	8"
5	0.625	0.310	1.043	3"	7"	5"	10"
6	0.750	0.440	1.502	4"	8"	6"	1'-0"
7	0.875	0.600	2.044	5"	10"	7"	1'-2"
8	1.000	0.790	2.670	6"	11"	8"	1'-4"
9	1.128	1.000	3.400	9"	1'-3"	11"	1'-7"
10	1.270	1.270	4.303	10"	1'-5"	1'-1"	1'-10"
11	1.410	1.560	5.313	1'-0"	1'-7"	1'-2"	2'-0"
14	1.693	2.250	7.650	1'-6"	2'-3"	1'-9"	2'-7"
18	2.257	4.000	13.600	2'-0"	3'-0"	2'-4"	3'-5"

STANDARD BAR BENDS

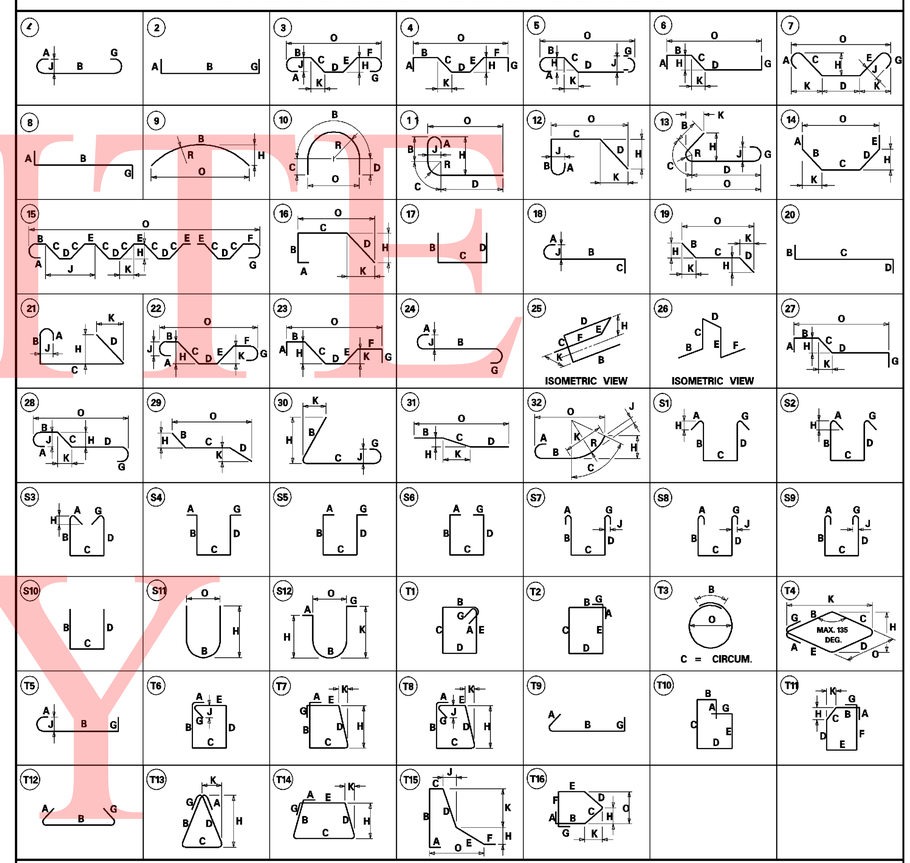

SPECIAL BAR BENDS

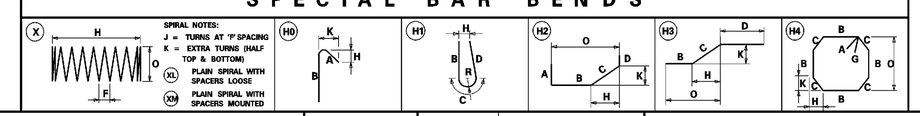

UNOFFICIAL WEBSITE COPY

9/10/2010 1:13:50 PM
M:\PROJECTS\2003\03059_DELTRNPK\SRWALL\CADD\2809003\PLANS\BR01_BR-S8_SR1.DGN

DELAWARE DEPARTMENT OF TRANSPORTATION

ADDENDUMS / REVISIONS

SR1 / I-95 INTERCHANGE

CONTRACT	BRIDGE NO.	331N
28-090-03	DESIGNED BY: MDM	
COUNTY	CHECKED BY:	
NEW CASTLE		

SR1 OVER EAGLE RUN SUBSTRUCTURE REINFORCING SCHEDULE

S8-8

SHEET NO. 520

TOTAL SHTS. 803

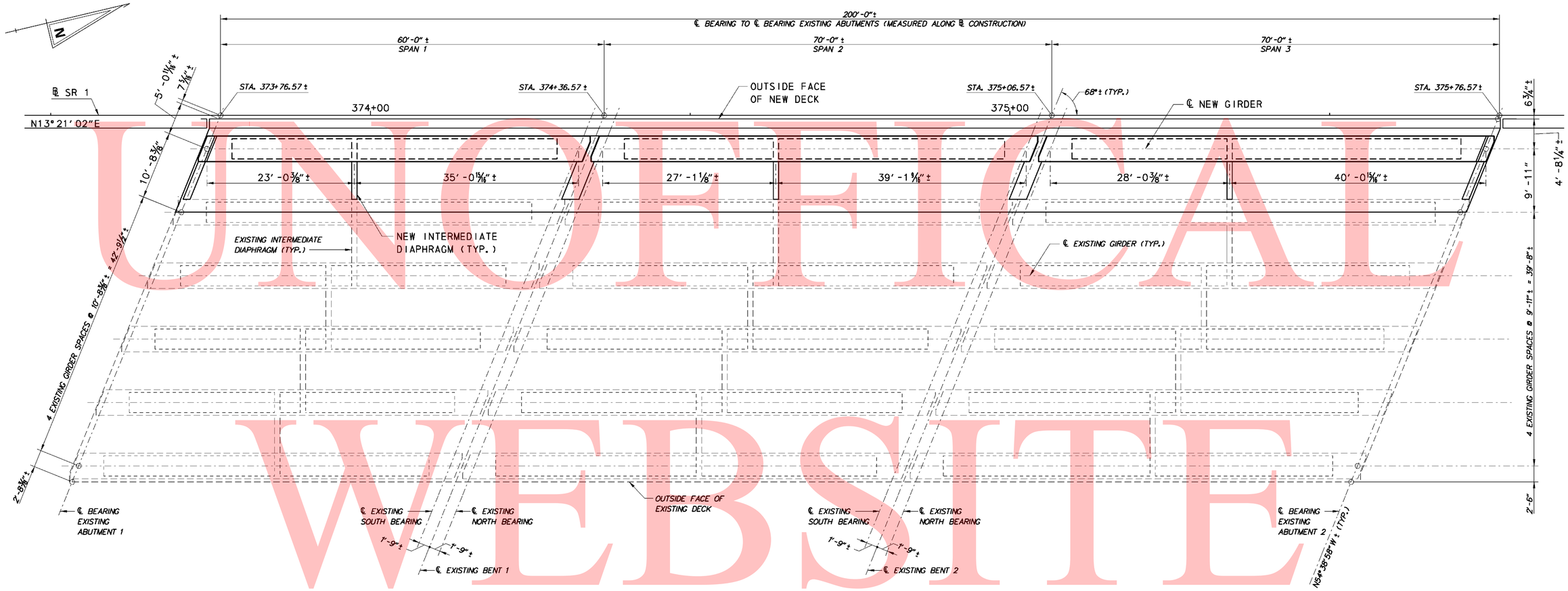

FRAMING PLAN - N.B.

SCALE: 1/8" = 1'-0"

UNOFFICIAL WEBSITE COPY

CROSS REFERENCE NOTES:

1. FOR ABUTMENT CONSTRUCTION DETAILS, SEE SHEET S8-6.
2. FOR BENT CONSTRUCTION DETAILS, SEE SHEET S8-7.
3. FOR GIRDER DETAILS, SEE SHEETS S8-10 AND S8-11.
4. FOR DIAPHRAGM DETAILS, SEE SHEET S8-12.

0 4 16
2 8
SCALE: 1/8" = 1'-0"

DELAWARE DEPARTMENT OF TRANSPORTATION	ADDENDUMS / REVISIONS	SR1 / I-95 INTERCHANGE	CONTRACT 28-090-03	BRIDGE NO. 331N	SR1 OVER EAGLE RUN FRAMING PLAN	S8-9 SHEET NO.
			COUNTY NEW CASTLE	DESIGNED BY: MDM		521 TOTAL SHTS.
				CHECKED BY:		803

7/29/2010 3:20:40 PM
M:\PROJECTS\2003\03059_DELTRNPK\SR1MALL\CADD\2809003\PLANS\FR01_BR-S8_SR.DGN

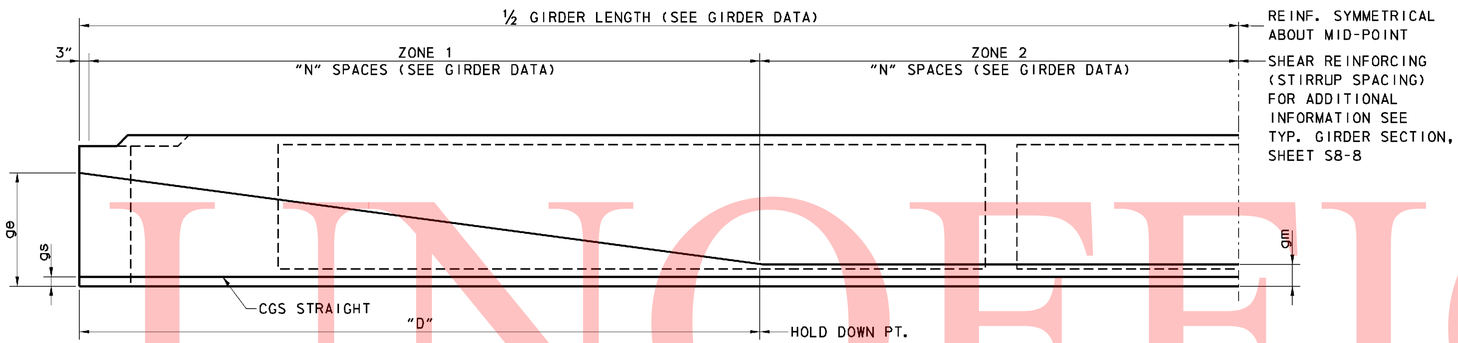

TYPICAL GIRDER HALF SECTION

N. T. S.

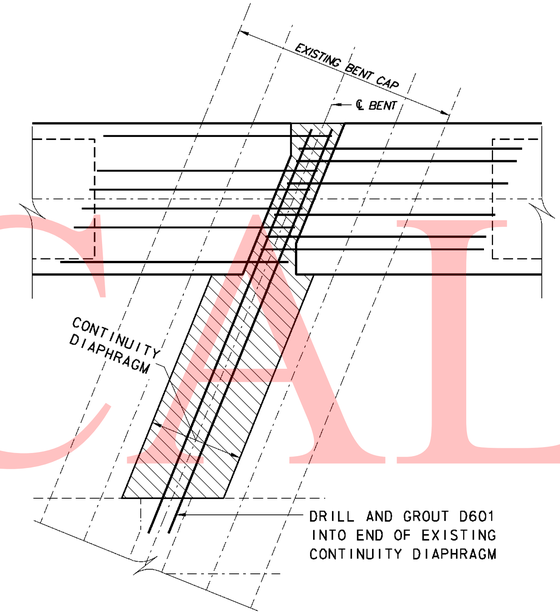

GIRDER END PLAN VIEW @ BENTS

SCALE: ½" = 1'-0"

GIRDER DATA

SPAN	GIRDER LENGTH	STRAND DATA						CONC. DATA		SHEAR REINF.				CAMBER DEFLECTION		
		STRAIGHT		DRAPED STRANDS				F'ci (PSI)	F'c (PSI)	ZONE 1		ZONE 2				
		P/S FORCE	gs	P/S FORCE	gm	ge	"D"			"N"	MAX. SPA.	"N"	MAX. SPA.	A	B	C
1	60'-3"	636.17	3.00	115.67	7.00	40	18'-0"	5100	6000	34	5"	8	24"	1.33	0.28	1.05
2	68'-11"	809.68	3.00	173.50	8.00	40	21'-0"	5100	6000	35	5"	10	24"	2.50	0.52	1.98
3	70'-3"	867.51	3.00	173.50	8.00	40	21'-0"	5100	6000	36	5"	10	24"	2.32	0.52	1.80

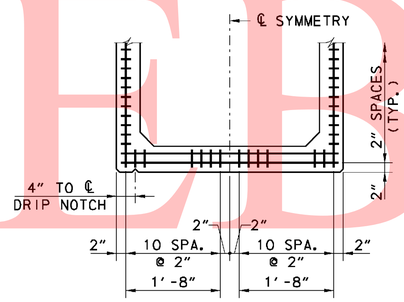

TYPICAL STRAND PATTERN

SCALE: ¾" = 1'-0"

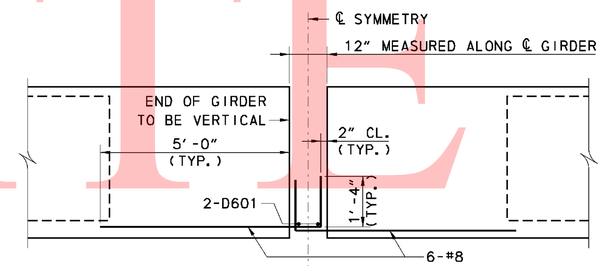

POSITIVE MOMENT CONNECTION DETAIL AT BENTS

SCALE: ½" = 1'-0"

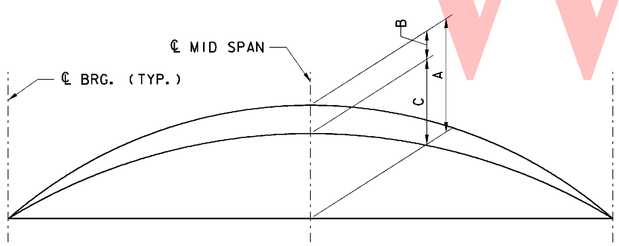

TYPICAL CAMBER DIAGRAM

N. T. S.

CAMBER NOTES:

A = CAMBER LESS DEFLECTION DUE TO DEAD LOAD OF GIRDER TIMES CREEP FACTOR OF 2.0.

B = DEFLECTION DUE TO DEAD LOAD OF SLAB, PERMANENT METAL DECK FORMS AND PARAPET.

C = A - B = NET FINAL CAMBER

1. BEARING SEAT ELEVATION AND SLOPE AND HAUNCH DEPTH ARE CALCULATED CONSIDERING THE VALUE OF C.
2. THE THICKNESS OF HAUNCH ON GIRDERS IS TO BE VARIED TO COMPENSATE FOR ANY INACCURACIES IN THE CAMBER OF GIRDERS.
3. A AND B ARE THEORETICAL VALUES AND MAY VARY WITH ACTUAL CONCRETE STRENGTH AGE, VARIOUS PRESTRESSING CONDITIONS, CREEP FACTOR AND PRESTRESS LOSSES.
4. CAMBER & DEFLECTION VALUES A, B & C ARE GIVEN IN INCHES.

PRESTRESS NOTES:

1. F'CI = COMPRESSIVE STRENGTH OF CONCRETE AT RELEASE.
2. F'C = COMPRESSIVE STRENGTH OF CONCRETE AT 28 DAYS.
3. P/S FORCE - PRESTRESSING FORCE @ RELEASE IN KIPS (DRAPED & STRAIGHT GIVEN SEPARATELY).
4. PRESTRESSING STEEL SHALL BE SEVEN WIRE 1/2" DIA. LOW RELAXATION STRANDS CONFORMING TO ASTM A416 (GRADE 270).
5. INITIAL PRESTRESS PER STRAND SHALL BE 189 KSI.
6. CREEP AND SHRINKAGE FOR CONTINUOUS SPAN EFFECT IS BASED ON:
   (A) RELEASE OF PRESTRESS AT 1 DAY.
   (B) TIME BETWEEN BEAM CASTING AND MOVEMENT CONNECTION OF 60 DAYS.
   (C) RELATIVE HUMIDITY - 70%
7. ALL GIRDER REINFORCEMENT THAT PROJECTS INTO THE DECK SLAB SHALL BE EPOXY COATED.
8. ALL GIRDERS ENDS ARE TO BE FABRICATED NORMAL TO THE CENTERLINE OF GIRDER AND VERTICAL UNDER DEAD LOADS.
9. THE CONCRETE SURFACE OF THE TOP FLANGE WHICH COMES IN CONTACT WITH THE DECK SLAB IS TO RECEIVE A STIFF BROOM FINISH.

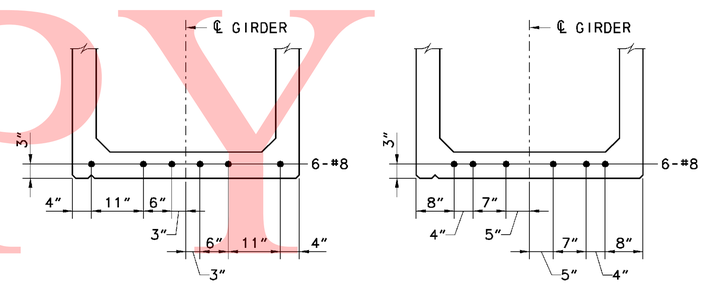

SPANS 1 & 3 | SPAN 2

POSITIVE MOMENT REINF. LOCATIONS

SCALE: ¾" = 1'-0"

CROSS REFERENCE NOTES:

1. FOR GENERAL NOTES AND PROFILES, SEE SHEET S8-2.
2. FOR TYPICAL SECTION, SEE SHEET S8-3.
3. FOR FRAMING PLAN, SEE SHEET S8-9.
4. FOR GIRDER REINFORCING DETAILS, SEE SHEET S8-11.
5. FOR DIAPHRAGM DETAILS, SEE SHEET S8-12.

0 1 4
½ 2
SCALE: ½"=1'-0"

0 1 4
½ 2
SCALE: ¾"=1'-0"

UNOFFICIAL WEBSITE COPY

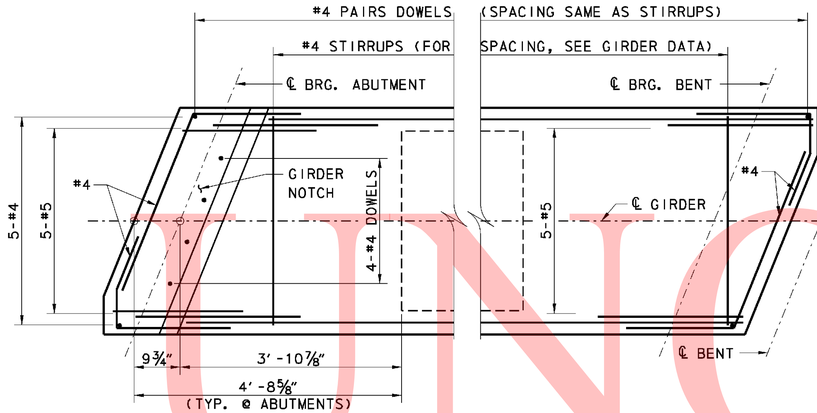

PLAN

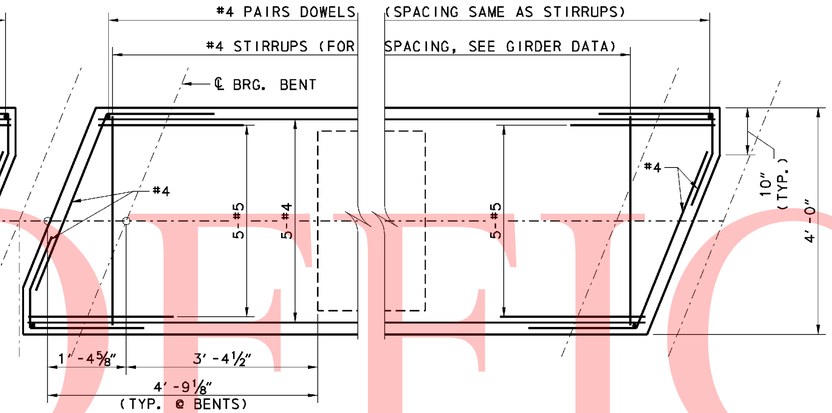

PLAN

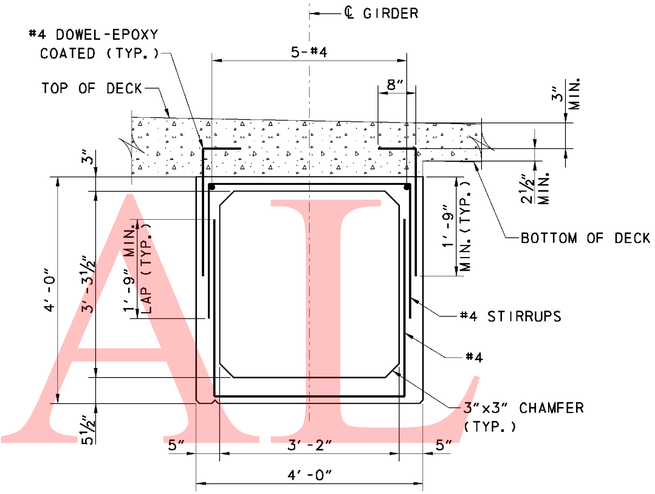

TYPICAL GIRDER SECTION

SCALE: ¾" = 1'-0"

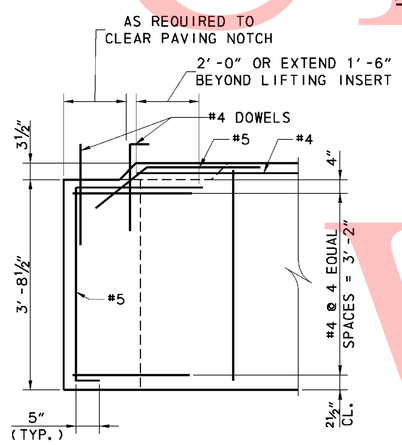

ELEVATION

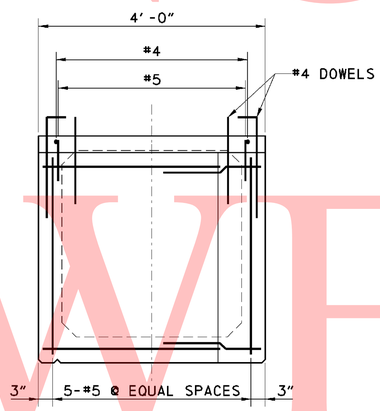

END VIEW - ABUTMENT

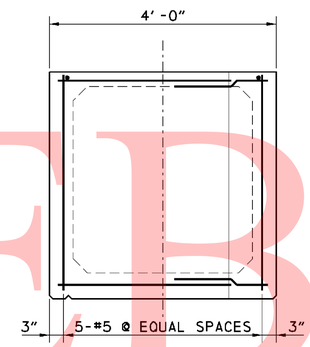

END VIEW - BENT

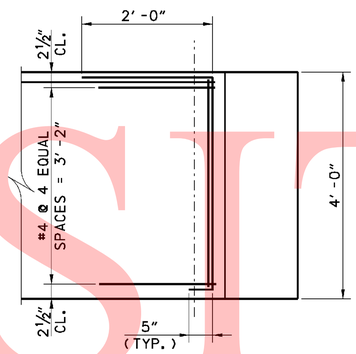

ELEVATION

NOTE: DRIP NOTCH IS ON FASCIA SIDE ONLY.

GIRDER REINFORCEMENT SPANS 1 & 3

SCALE: ¾" = 1'-0"

GIRDER REINFORCEMENT SPAN 2

SCALE: ¾" = 1'-0"

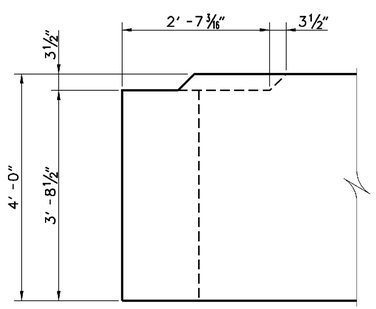

GIRDER PAVING NOTCH DETAIL

SCALE: ¾" = 1'-0"

CROSS REFERENCE NOTES:

1. FOR GENERAL NOTES AND PROFILES, SEE SHEET S8-2.
2. FOR TYPICAL SECTION, SEE SHEET S8-3.
3. FOR FRAMING PLAN, SEE SHEET S8-9.
4. FOR GIRDER DATA, SEE SHEET S8-10.
5. FOR DIAPHRAGM DETAILS, SEE SHEET S8-12.

0 ½ 1 2 4

SCALE: ¾" = 1'-0"

UNOFFICIAL WEBSITE COPY

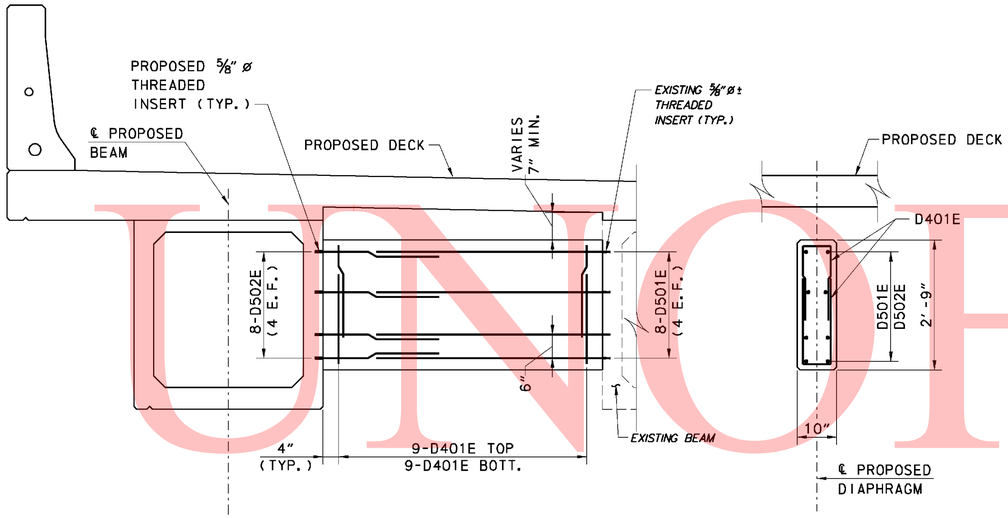

ELEVATION SECTION

INTERMEDIATE DIAPHRAGM

SCALE: 5/8" = 1'-0"

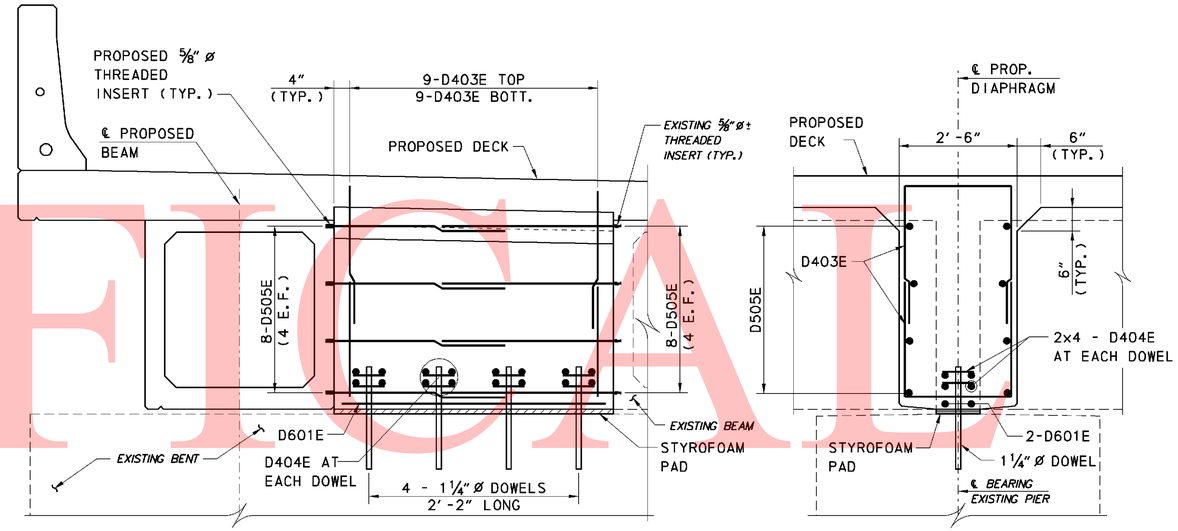

ELEVATION SECTION

CONTINUITY DIAPHRAGM AT BENT 1

SCALE: 5/8" = 1'-0"

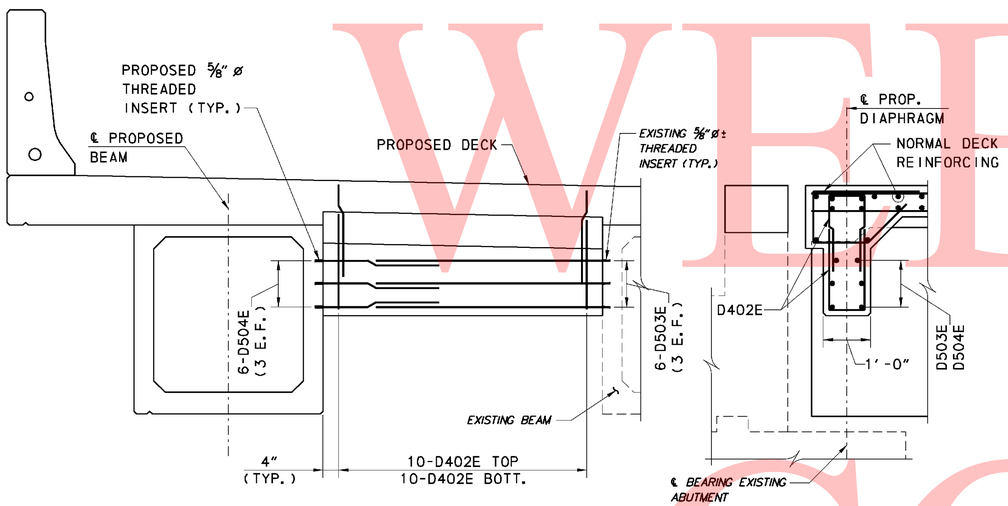

ELEVATION SECTION

END DIAPHRAGM AT ABUTMENTS

SCALE: 5/8" = 1'-0"

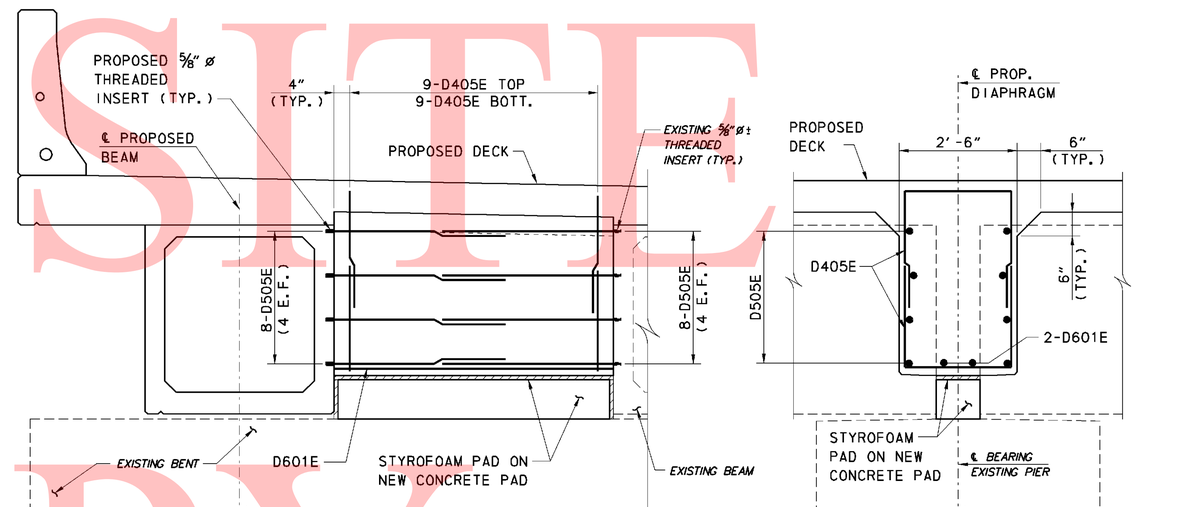

ELEVATION SECTION

CONTINUITY DIAPHRAGM AT BENT 2

SCALE: 5/8" = 1'-0"

NOTES:
1. CONTRACTOR TO VERIFY LOCATION OF EXISTING THREADED INSERTS PRIOR TO NEW GIRDER FABRICATION.

CROSS REFERENCE NOTES:
1. FOR ABUTMENT CONSTRUCTION DETAILS, SEE SHEET S8-6.
2. FOR BENT CONSTRUCTION DETAILS, SEE SHEET S8-7.
3. FOR FRAMING PLAN, SEE SHEET S8-9.
4. FOR GIRDER DETAILS, SEE SHEETS S8-10 AND S8-11.
5. FOR DECK REINFORCING PLAN AND DETAILS, SEE SHEET S8-13.

0 1 4
1/2 2
SCALE: 5/8" = 1'-0"

UNOFFICIAL WEBSITE COPY

8/9/2010 7:48:46 AM
M:\PROJECTS\2003\03059_DELTRNPK\SR1MALL\CADD\2809003\PLANS\BM03_BR-S8_SR1.DGN

DELAWARE DEPARTMENT OF TRANSPORTATION	ADDENDUMS / REVISIONS		SR1 / I-95 INTERCHANGE	CONTRACT 28-090-03	BRIDGE NO. 331N	SR1 OVER EAGLE RUN DIAPHRAGM DETAILS	S8-12
				COUNTY NEW CASTLE	DESIGNED BY: MDM		SHEET NO. 524
					CHECKED BY:		TOTAL SHTS. 803

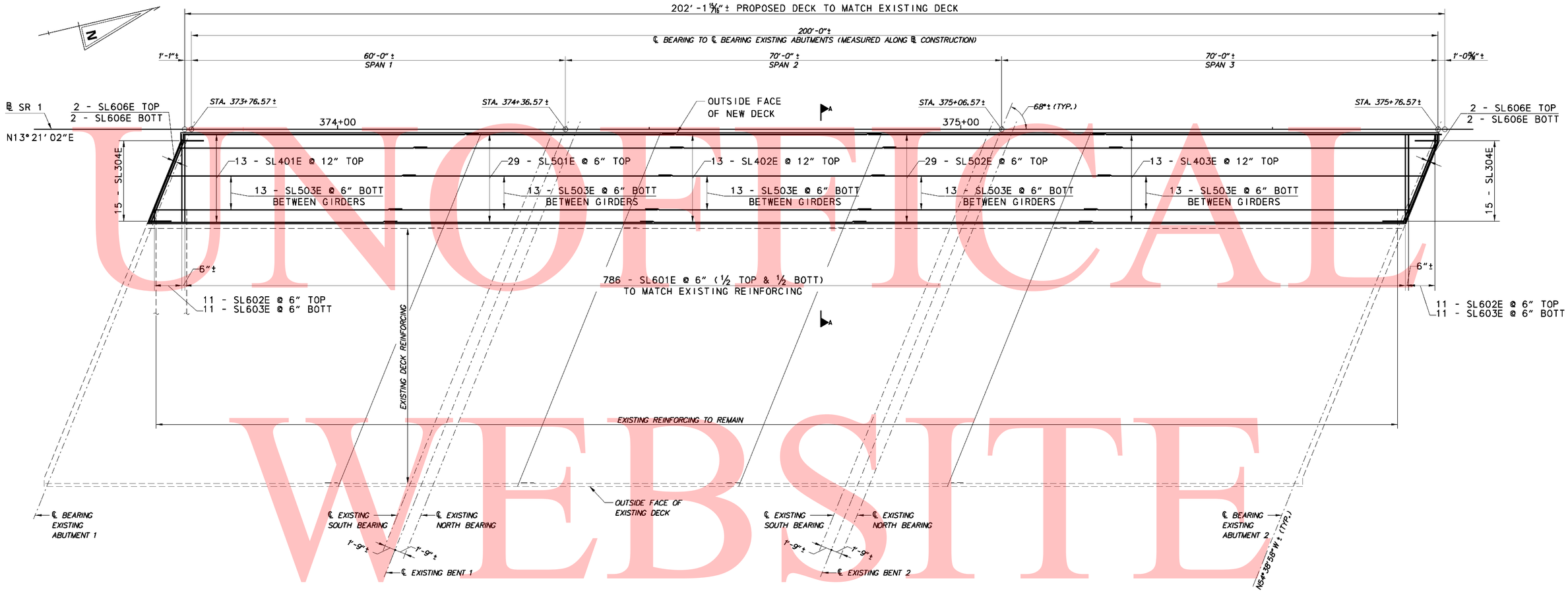

DECK REINFORCING PLAN

SCALE: 1/8" = 1'-0"

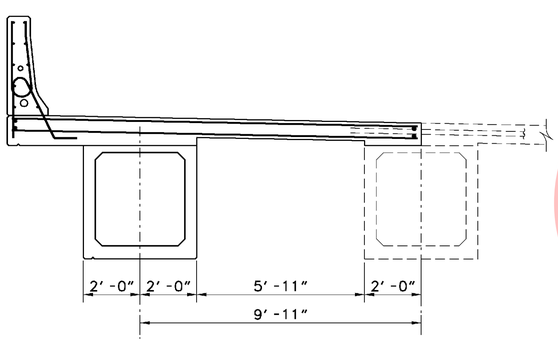

DECK SECTION A-A

SCALE: 3/8" = 1'-0"

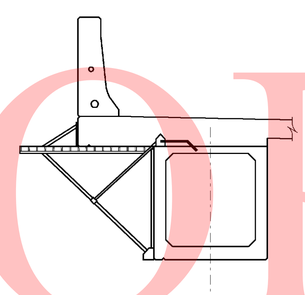

OVERHANG FORM SCHEMATIC DETAIL

N. T. S.

CROSS REFERENCE NOTES:

1. FOR TYPICAL SECTION, SEE SHEET S8-3.
2. FOR FRAMING PLAN, SEE SHEET S8-9.
3. FOR PARAPET DETAILS, SEE SHEET S8-14.

0 4 16
2 8
SCALE: 1/8" = 1'-0"

0 2 8
1 4
SCALE: 3/8" = 1'-0"

UNOFFICIAL WEBSITE COPY

8/12/2010 2:21:55 PM
M:\PROJECTS\2003\03059_DELTR\PK\SRIMALL\CADD\2809003\PLANS\DK01_BR-S8_SR1.DGN

DELAWARE DEPARTMENT OF TRANSPORTATION	ADDENDUMS / REVISIONS	SR1 / I-95 INTERCHANGE	CONTRACT 28-090-03	BRIDGE NO. 331N	SR1 OVER EAGLE RUN DECK REINFORCING PLAN & DETAILS	S8-13
			COUNTY NEW CASTLE	DESIGNED BY: MDM		SHEET NO. 525
				CHECKED BY:		TOTAL SHTS. 803

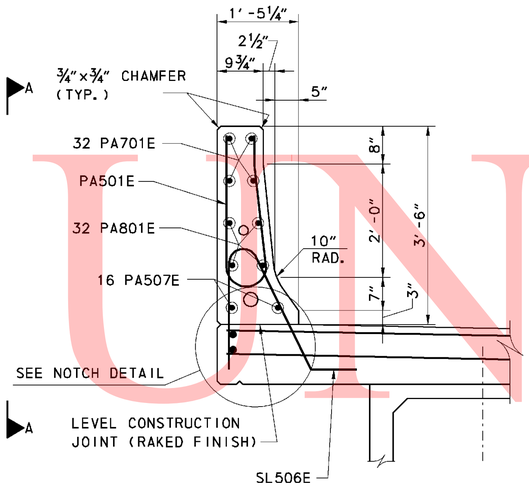

TYPICAL BARRIER REINFORCEMENT

SCALE: ¾"=1'-0"

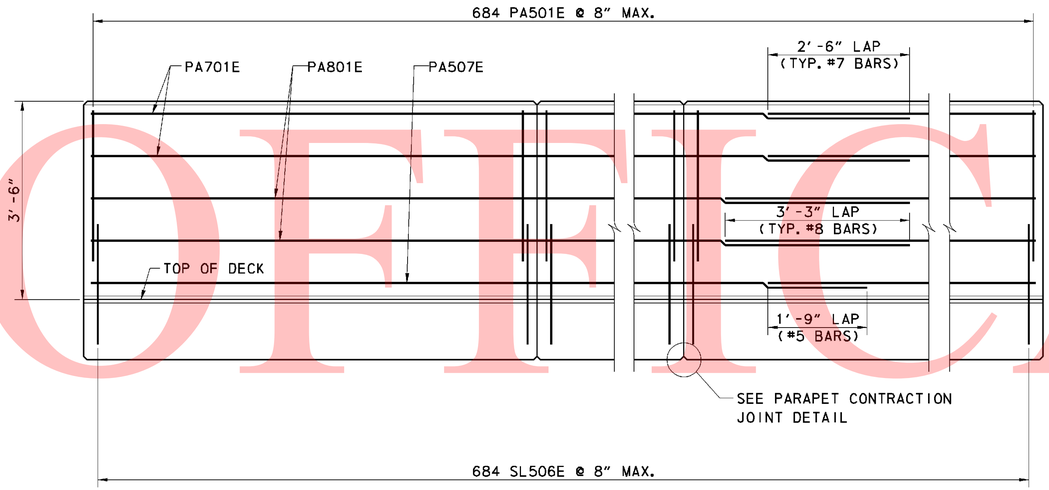

ELEVATION A-A - BRIDGE PARAPET

SCALE: ¾"=1'-0"

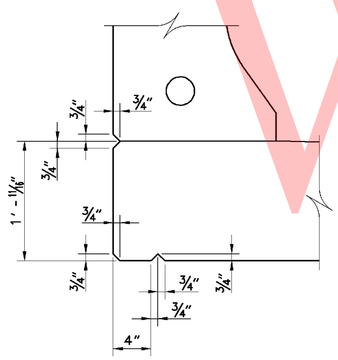

NOTCH DETAIL

NO SCALE

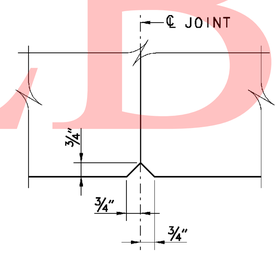

PARAPET CONTRACTION JOINT DETAIL (ELEVATION)

NO SCALE

CROSS REFERENCE NOTES:

1. FOR GENERAL PLAN AND ELEVATION, SEE SHEET S8-1.
2. FOR DECK REINFORCING PLAN AND DETAILS, SEE SHEET S8-13.

0 1 4
.5 2

SCALE: ¾"=1'-0"

UNOFFICAL WEBSITE COPY

7/30/2010 8:03:45 AM
M:\PROJECTS\2003\03059_DELTRNPK\SRIMALL\CADD\2809003\PLANS\PA01_BR-S8_SR.DGN

DELAWARE DEPARTMENT OF TRANSPORTATION	ADDENDUMS / REVISIONS		SR1 / I-95 INTERCHANGE	CONTRACT 28-090-03	BRIDGE NO. 331N	SR1 OVER EAGLE RUN PARAPET DETAILS	S8-14 SHEET NO.
				COUNTY NEW CASTLE	DESIGNED BY: MDM		526 TOTAL SHTS.
					CHECKED BY:		803

REINFORCING BAR LIST

SUPERSTRUCTURE

MARK	LENGTH	NO. BARS	TYPE	A	B	C	D	E	G	H	J	K	O	R	REMARKS
D401E	4'-11"	54	17		2'-2"	0'-7"	2'-2"								
D501E	5'-6"	24	STR.												
D502E	2'-0"	24	STR.												
D402E	5'-1"	40	17		2'-2"	0'-9"	2'-2"								
D503E	5'-10"	12	STR.												
D504E	2'-2"	12	STR.												
D403E	7'-9"	18	17		2'-9"	2'-3"	2'-9"								
D404E	2'-3"	20	17		0'-9"	0'-9"	0'-9"								
D505E	4'-0"	16	STR.												
D601E	11'-6"	2	STR.												
D405E	6'-11"	18	17		2'-4"	2'-3"	2'-4"								
D505E	4'-0"	16	STR.												
D601E	11'-6"	2	STR.												
SL401E	47'-3"	15	STR.												
SL402E	35'-0"	15	STR.												
SL403E	56'-0"	15	STR.												
SL405E	42'-4"	5	STR.												
SL501E	35'-3"	29	STR.												
SL502E	40'-0"	29	STR.												
SL503E	42'-4"	75	STR.												
SL504E	6'-9"	30	STR.												
SL506E		301													
SL601E	35'-0"	786	STR.												
SL602E	3'-2" TO 15'-3"	22	2	0'-8"	2'-6"						0'-6"				2 EA., VARY B BY 1' - 2½"
SL603E	2'-6" TO 14'-7"	22	STR.												2 EA., VARY BY 1' - 2½"
SL606E	15'-0"	8	STR.												
PA501E	6'-9"	301	H1		2'-9½"	1'-2"	2'-9½"			0'-5"				0'-4½"	
PA507E	60'-0"	16	STR.												
PA701E	60'-0"	16	STR.												
PA801E	60'-0"	16	STR.												

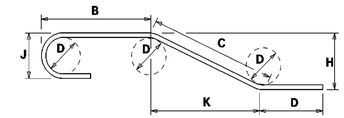

NOTES:

1. FIGURES SHOWN IN CIRCLES REPRESENT BAR BEND TYPES.
2. STANDARD BAR BENDS INCLUDE ONLY TYPES 1-32, S1-S12, AND T1-T16.
3. ALL DIMENSIONS ARE OUT-TO-OUT OF BAR EXCEPT "A" AND "G" ON STANDARD 180° AND 135° HOOKS.
4. "J" DIMENSIONS ON 180° HOOKS TO BE SHOWN ONLY WHERE NECESSARY TO RESTRICT HOOK SIZE, OTHERWISE STANDARD HOOKS ARE TO BE USED.
5. WHERE "J" IS NOT SHOWN, "J" WILL BE KEPT EQUAL TO OR LESS THAN "H" ON TRUSS BARS. WHERE "J" CAN EXCEED "H", IT SHALL BE SHOWN.
6. "H" DIMENSIONS OF STIRRUPS TO BE SHOWN WHERE NECESSARY TO FIT WITHIN THE CONCRETE.
7. UNLESS OTHERWISE NOTED, DIAMETER "D" IS THE SAME FOR ALL BENDS AND HOOKS ON A BAR.
8. WHERE SLOPE DIFFERS FROM 45° OFFSET, "H" AND "K" MUST BE SHOWN.
9. WHERE BARS ARE TO BE BENT MORE ACCURATELY THAN STANDARD BENDING TOLERANCES, BENDING DIMENSIONS WHICH REQUIRE CLOSER FABRICATION SHOULD HAVE LIMITS INDICATED.
10. FOR RECOMMENDED DIAMETER "D", OF BENDS, HOOKS, ETC., REFER TO TABLE AT RIGHT, 'CRSI' OR 'ACI' TABLES.
11. TYPE S1-S12, T1-T16 APPLY TO BAR SIZES 3 THROUGH 6.

ASTM STANDARD ENGLISH REINFORCING BARS				RECOMMENDED END HOOKS, APPLICABLE TO ALL GRADES			
	NOMINAL DIMENSIONS				180° HOOKS		90° HOOKS
BAR SIZE	DIAMETER (inches)	AREA (inches²)	WEIGHT (lbs./ft.)	D	A OR G	J	A OR G
3	0.375	0.110	0.376	2"*	5"	3"	6"
4	0.500	0.200	0.668	3"	6"	4"	8"
5	0.625	0.310	1.043	3"*	7"	5"	10"
6	0.750	0.440	1.502	4"*	8"	6"	1'-0"
7	0.875	0.600	2.044	5"*	10"	7"	1'-2"
8	1.000	0.790	2.670	6"	11"	8"	1'-4"
9	1.128	1.000	3.400	9"*	1'-3"	11"*	1'-7"
10	1.270	1.270	4.303	10"*	1'-5"	1'-1"*	1'-10"
11	1.410	1.560	5.313	1'-0"	1'-7"	1'-2"*	2'-0"
14	1.693	2.250	7.650	1'-6"*	2'-3"	1'-9"*	2'-7"
18	2.257	4.000	13.600	2'-0"	3'-0"	2'-4"*	3'-5"

STANDARD BAR BENDS

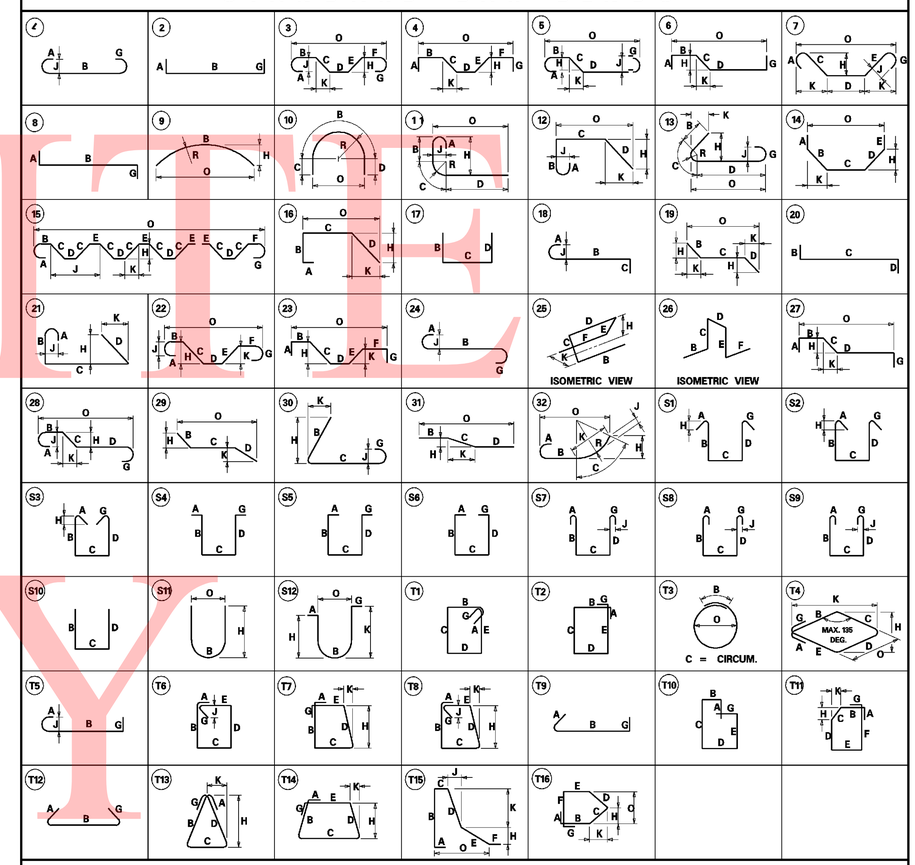

SPECIAL BAR BENDS

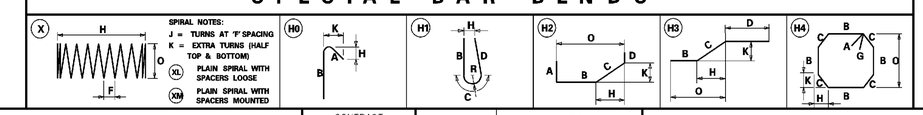

UNOFFICIAL WEBSITE COPY

DELAWARE DEPARTMENT OF TRANSPORTATION

ADDENDUMS / REVISIONS

SR1 / I-95 INTERCHANGE

CONTRACT	BRIDGE NO.	331N
28-090-03	DESIGNED BY:	MDM
COUNTY	CHECKED BY:	
NEW CASTLE		

SR1 OVER EAGLE RUN SUPERSTRUCTURE REINFORCING SCHEDULE

S8-15

SHEET NO. 527

TOTAL SHTS. 803

8/12/2010 2:32:31 PM
M:\PROJECTS\2003\03059_DELTRNPK\SR1MALL\CADD\2809003\PLANS\BR02_BR_S8_SR1.DGN

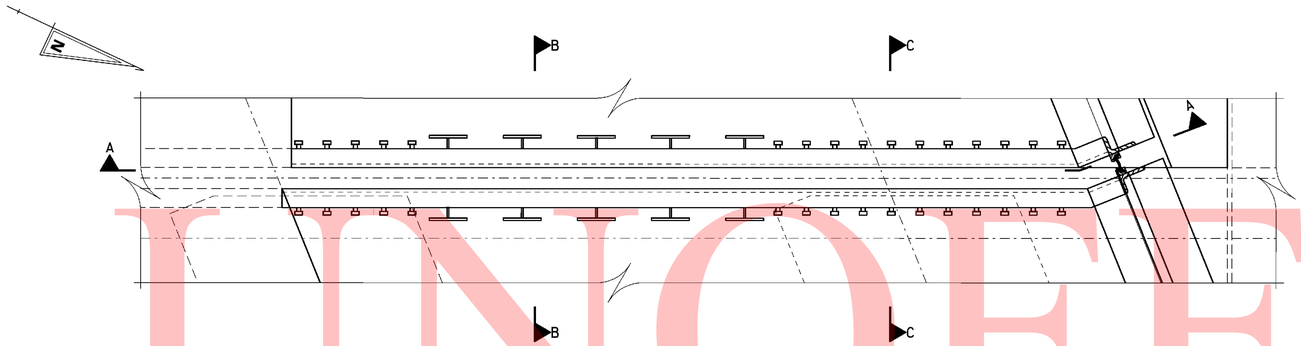

ABUTMENT JOINT PLAN

SCALE: ¾"=1'-0"

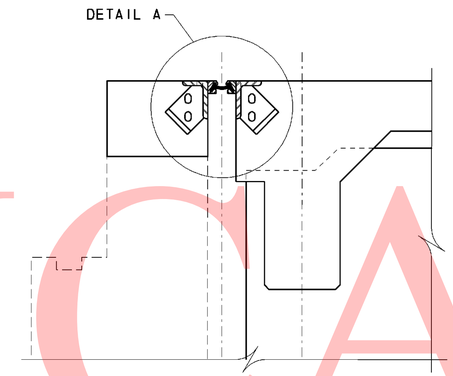

SECTION B-B (AT DIAPHRAGM)

SCALE: 1"=1'-0"

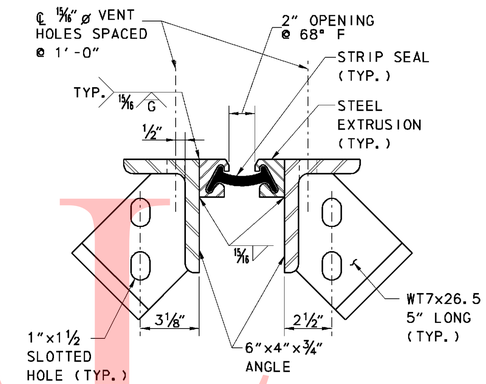

DETAIL A

SCALE: 3"=1'-0"

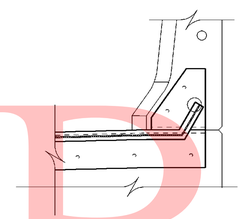

SECTION A-A

SCALE: 1½"=1'-0"

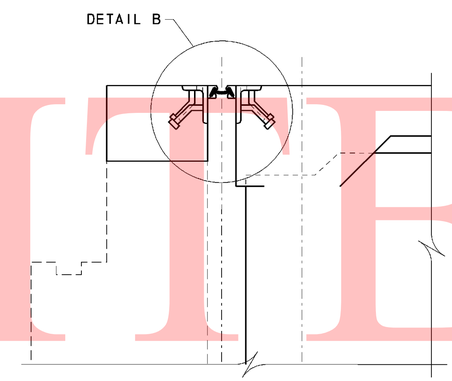

SECTION C-C (AT GIRDER)

SCALE: 1"=1'-0"

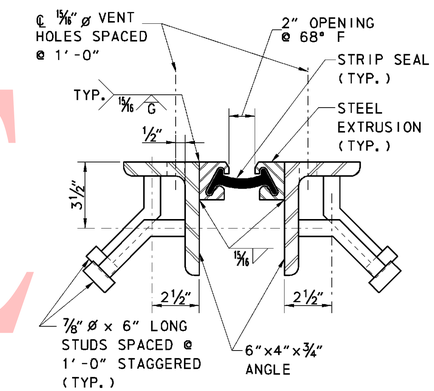

DETAIL B

SCALE: 3"=1'-0"

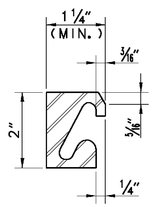

STEEL EXTRUSION DETAIL

NO SCALE

STRIP SEAL DETAIL

NO SCALE

NOTES:

1. ALL STEEL SHAPES, BOLTS, STRIP SEALS AND APPURTENANCES SHALL BE PAID FOR UNDER STRIP SEAL EXPANSION JOINTS, 3".
2. JOINT ASSEMBLY MAY BE BURNED TO ALLOW TRANSVERSE DECK REINFORCING TO PASS THROUGH.

CROSS REFERENCE NOTES:

1. FOR GENERAL PLAN AND ELEVATION, SEE SHEET S8-1.
2. FOR GENERAL NOTES AND PROFILES, SEE SHEET S8-2.
3. FOR TYPICAL SECTION, SEE SHEET S8-3.
4. FOR ABUTMENT CONSTRUCTION DETAILS, SEE SHEET S8-6.
5. FOR FRAMING PLAN, SEE SHEET S8-9.
6. FOR PARAPET DETAILS, SEE SHEET S8-14.

0 ½ 1 2 4
SCALE: ¾"=1'-0"

0 ½ 1 2
SCALE: 1"=1'-0"

0 ¼ ½ 1
SCALE: 3"=1'-0"

UNOFFICIAL WEBSITE COPY

8/9/2010 7:57:51 AM
M:\PROJECTS\2003\03059_DELTRNPK\SRIMALL\CADD\2809003\PLANS\EX01_BR-S8_SR1.DGN

DELAWARE DEPARTMENT OF TRANSPORTATION	ADDENDUMS / REVISIONS	SR1 / I-95 INTERCHANGE	CONTRACT 28-090-03	BRIDGE NO. 331N	SR1 OVER EAGLE RUN EXPANSION JOINT DETAILS	S8-16 SHEET NO. 528
			COUNTY NEW CASTLE	DESIGNED BY: MDM		TOTAL SHTS. 803
				CHECKED BY:		

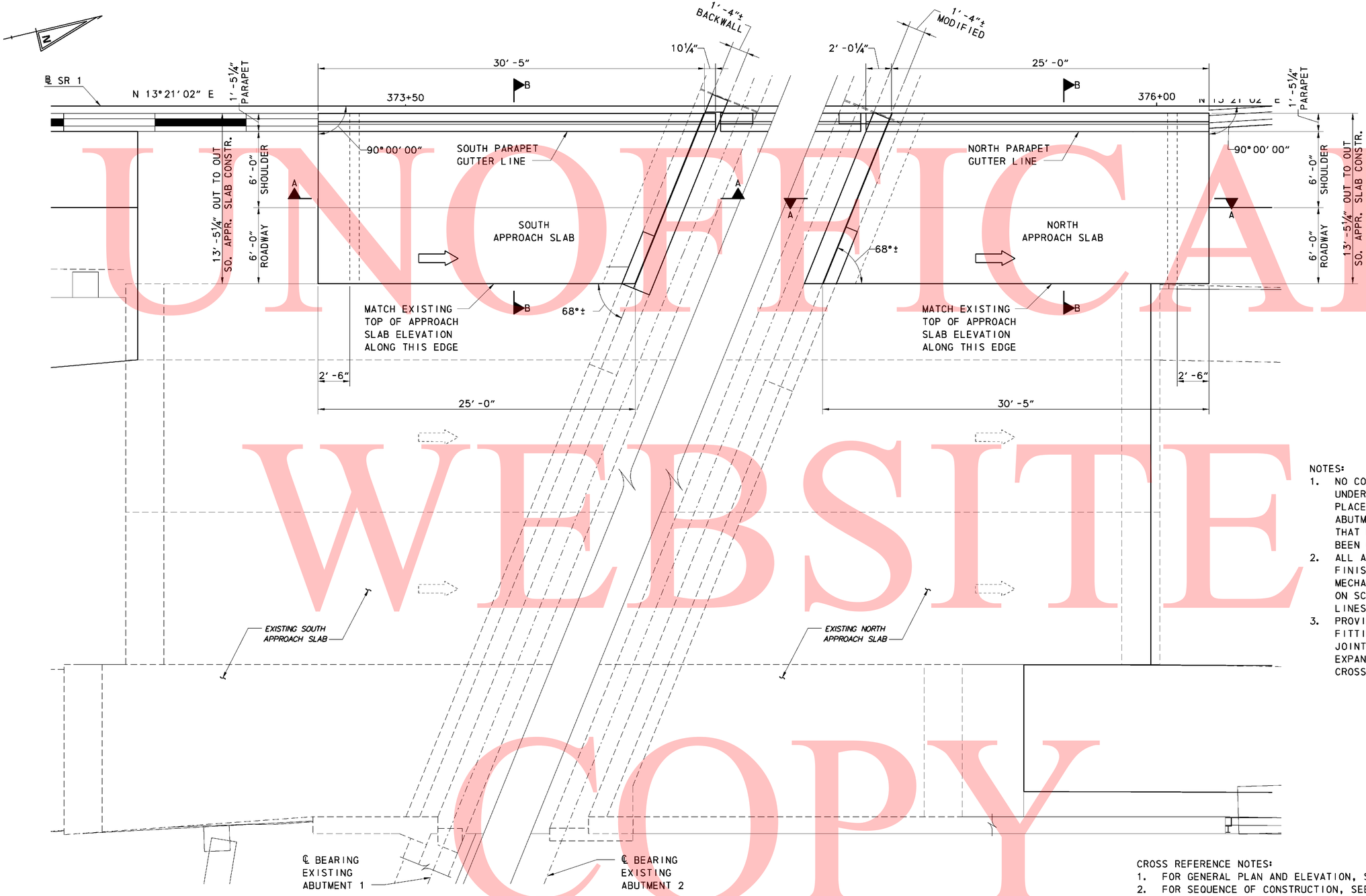

SOUTH APPROACH

NORTH APPROACH

NOTES:

1. NO CONCRETE DESIGNATED TO BE PAID FOR UNDER "APPROACH SLAB" ITEM IS TO BE PLACED UNTIL AFTER ANY WORK ON THE ABUTMENT BACKWALL SECTION ABUTING THAT PARTICULAR APPROACH SLAB HAS BEEN COMPLETED.
2. ALL APPROACH SLAB CONCRETE SHALL BE FINISHED ONLY BY A DEPARTMENT APPROVED MECHANICAL FINISHING MACHINE SUPPORTED ON SCREED RAILS OR CONTROLLED BY STRING LINES AND SENSORS.
3. PROVIDE CONDUIT EXPANSION/DEFLECTION FITTINGS ON ALL CONDUITS CROSSING OPEN JOINTS ON THE BRIDGE. PROVIDE CONDUIT EXPANSION FITTINGS ON ALL CONDUITS CROSSING EXPANSION JOINTS ON THE BRIDGE.

CROSS REFERENCE NOTES:

1. FOR GENERAL PLAN AND ELEVATION, SEE SHEET S8-1.
2. FOR SEQUENCE OF CONSTRUCTION, SEE SHEET S8-4.
3. FOR ABUTMENT CONSTRUCTION DETAILS, SEE SHEET S8-6.
4. FOR APPROACH SLAB AND PARAPET REINFORCING PLANS, SEE SHEET S8-18.
5. FOR SECTIONS A-A AND B-B, SEE SHEET S8-19.

APPROACH SLABS - GENERAL PLAN

SCALE: ¼″=1′-0″

0 2 8
1 4
SCALE: ¼″=1′-0″

UNOFFICIAL WEBSITE COPY

8/9/2010 7:27:04 AM
M:\PROJECTS\2003\03059_DELTRNPK\SRIMALL\CADD\2809003\PLANS\AS01_BR-S8_SR1.DGN

DELAWARE DEPARTMENT OF TRANSPORTATION	ADDENDUMS / REVISIONS	SR1 / I-95 INTERCHANGE	CONTRACT 28-090-03	BRIDGE NO. 331N	SR1 OVER EAGLE RUN APPROACH SLABS GENERAL PLANS	S8-17	
			COUNTY NEW CASTLE	DESIGNED BY: MDM		SHEET NO. 529	
				CHECKED BY:		TOTAL SHTS. 803	

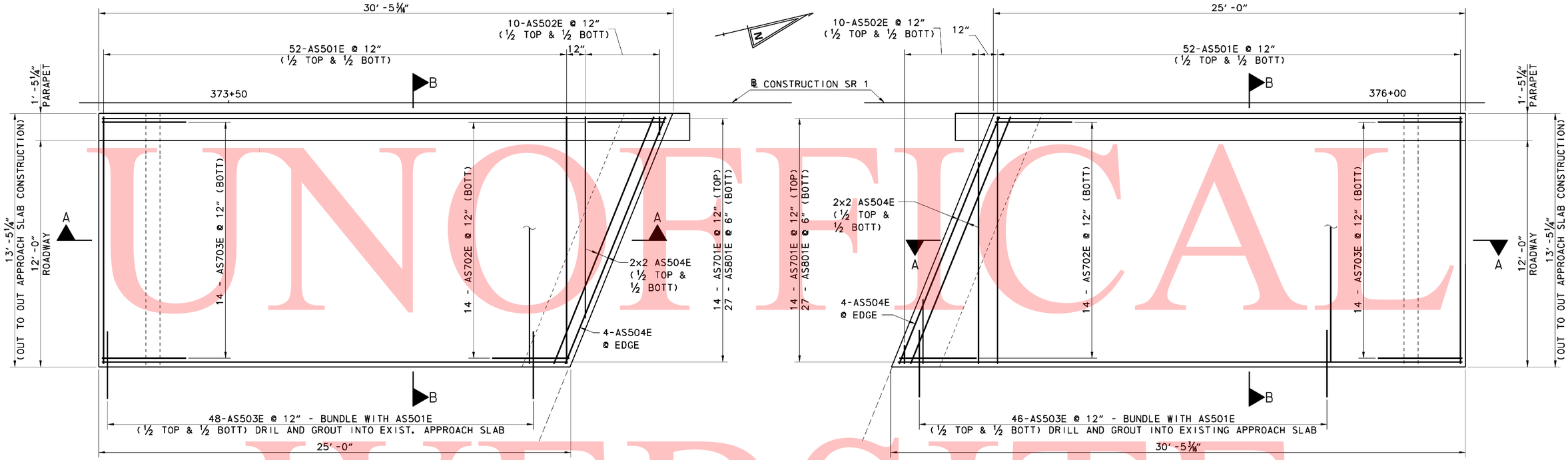

APPROACH SLABS - REINFORCING PLAN

SCALE: 3/8″=1′-0″

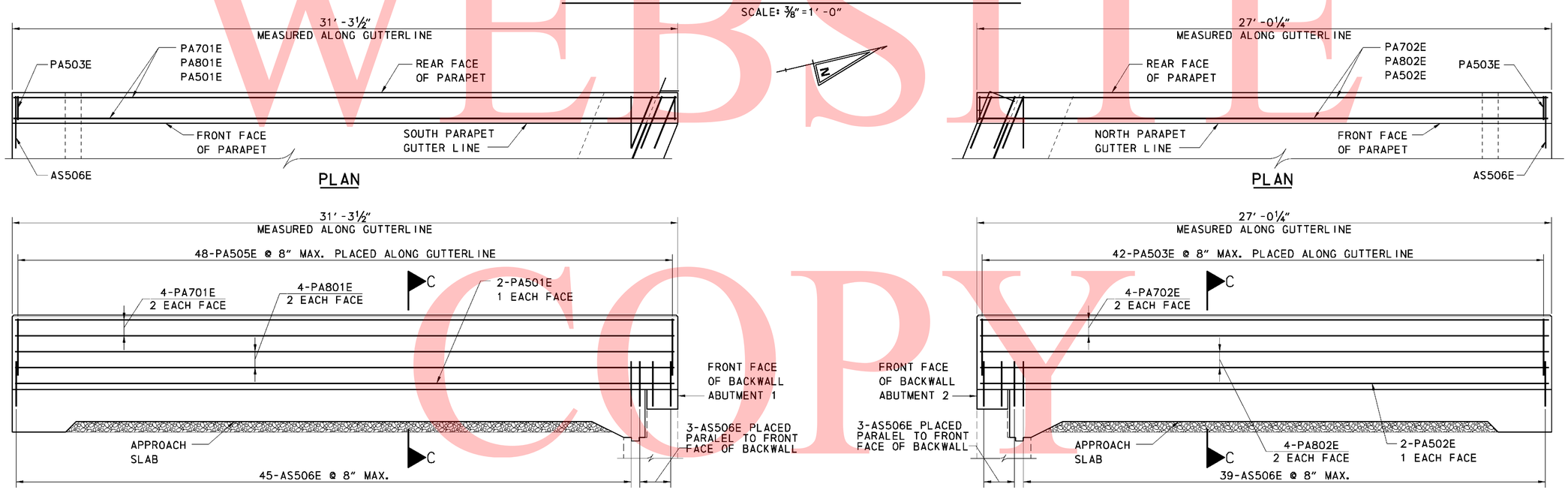

CROSS REFERENCE NOTES:

1. FOR GENERAL PLAN AND ELEVATION, SEE SHEET S8-1.
2. FOR ABUTMENT CONSTRUCTION DETAILS, SEE SHEET S8-6.
3. FOR EXPANSION JOINT DETAILS, SEE SHEET S8-16.
4. FOR APPROACH SLAB PLANS, SEE SHEET S8-17.
5. FOR SECTIONS A-A, B-B AND C-C, SEE SHEET S8-19.

APPROACH SLABS - PARAPET REINFORCING

SCALE: 3/8″=1′-0″

0 2 8
1 4
SCALE: 3/8″=1′-0″

UNOFFICAL WEBSITE COPY

DELAWARE DEPARTMENT OF TRANSPORTATION	ADDENDUMS / REVISIONS	SR1 / I-95 INTERCHANGE	CONTRACT 28-090-03	BRIDGE NO. 331N	SR1 OVER EAGLE RUN APPROACH SLABS REINFORCING PLANS & DETAILS	S8-18
			COUNTY NEW CASTLE	DESIGNED BY: MDM		SHEET NO. 530
				CHECKED BY:		TOTAL SHTS. 803

8/12/2010 2:58:03 PM
M:\PROJECTS\2003\03059_DELTRNPK\SR1MAIL\CADD\2809003\PLANS\AS02_BR-S8_SR1.DGN

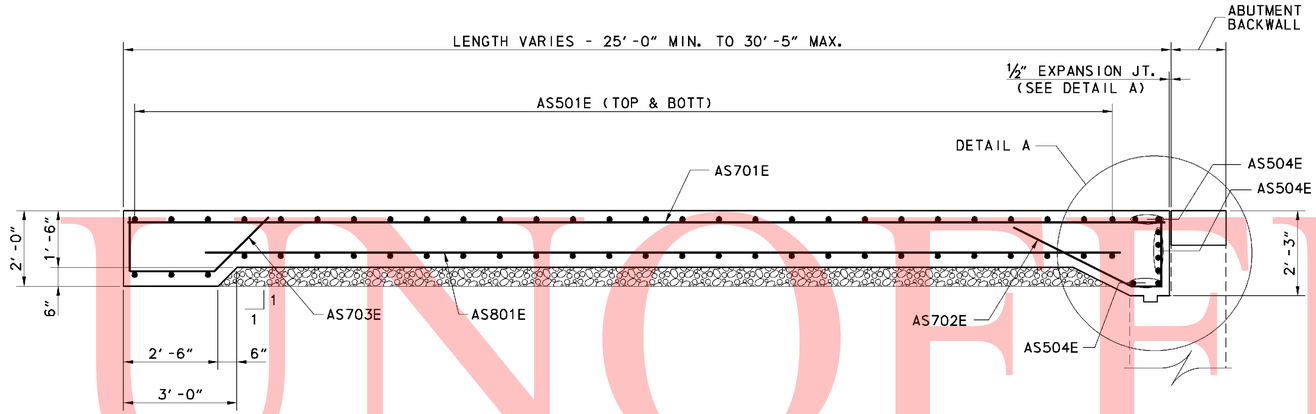

SECTION A-A

SCALE: ½"=1'-0"

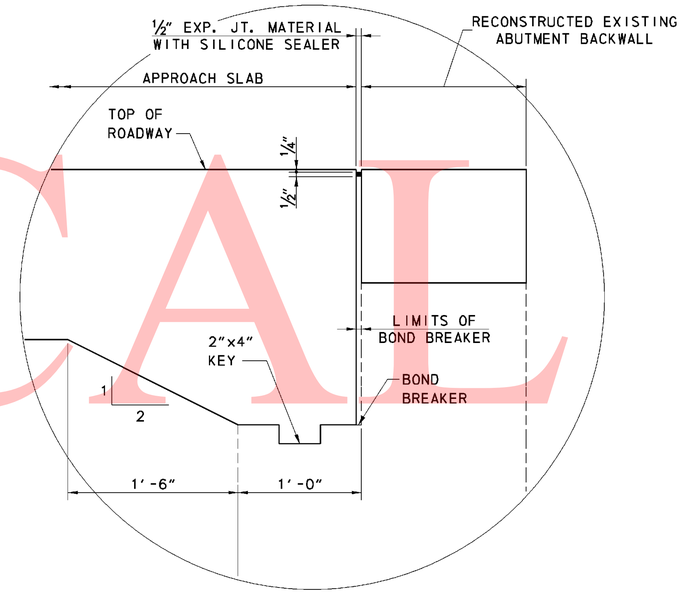

DETAIL A

SCALE: 1½"=1'-0"

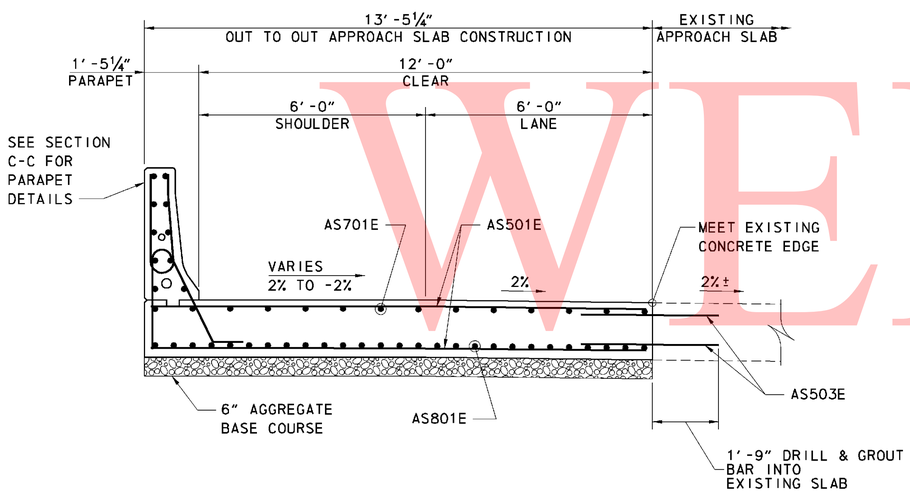

SECTION B-B

SCALE: ½"=1'-0"

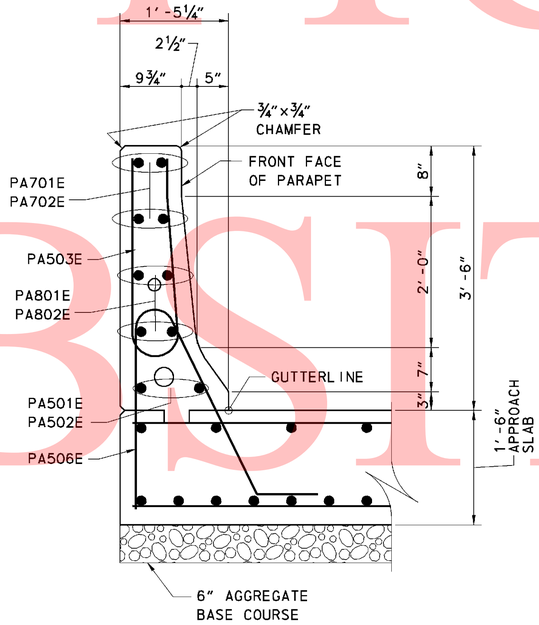

SECTION C-C

SCALE: 1"=1'-0"

UNOFFICAL WEBSITE COPY

CROSS REFERENCE NOTES:

1. FOR ABUTMENT CONSTRUCTION DETAILS, SEE SHEET S8-6.
2. FOR APPROACH SLAB PLANS, SEE SHEET S8-17.
3. FOR APPROACH SLAB REINFORCING PLANS, SEE SHEET S8-18.

0 ½ 1 2
SCALE: 1½"=1'-0"

0 ½ 1 2
SCALE: 1"=1'-0"

0 ½ 1 2 4
SCALE: ½"=1'-0"

DELAWARE DEPARTMENT OF TRANSPORTATION	ADDENDUMS / REVISIONS	SR1 / I-95 INTERCHANGE	CONTRACT 28-090-03	BRIDGE NO. 331N	SR1 OVER EAGLE RUN APPROACH SLABS SECTIONS & DETAILS	S8-19
			COUNTY NEW CASTLE	DESIGNED BY: MDM		SHEET NO. 531
				CHECKED BY:		TOTAL SHTS. 803

8/12/2010 2:40:36 PM
M:\PROJECTS\2003\03059_DELTRNPK\SRIMALL\CADD\2809003\PLANS\AS03_BR-S8_SR1.DGN

REINFORCING BAR LIST

APPROACH SLABS

MARK	LENGTH	NO. BARS	TYPE	A	B	C	B	E	G	H	J	K	O	R	REMARKS
AS501E	13′-1″	104	STR.												
AS502E		20	STR.												
AS503E	3′-8″	94	STR.												
AS504E	14′-1″	16	STR.												
AS506E		90	STR.												
AS701E	29′-10″	28	STR.												
AS702E		28													
AS703E		28													
AS801E	25′-2″	54	STR.												
PA501E	30′-11 1/2″	4	STR.												
PA502E	26′-8″	4	STR.												
PA503E	6′-9″	90	H1		2′-9½″	1′-2″	2′-9½″			0′-5″				0′-4½″	
PA701E	30′-11 1/2″	8	STR.												
PA702E	26′-8″	8	STR.												
PA801E	30′-11 1/2″	8	STR.												
PA802E	26′-8″	8	STR.												

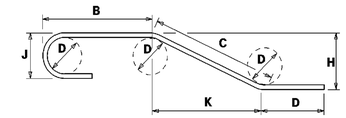

NOTES:

1. FIGURES SHOWN IN CIRCLES REPRESENT BAR BEND TYPES.
2. STANDARD BAR BENDS INCLUDE ONLY TYPES 1-32, S1-S12, AND T1-T16.
3. ALL DIMENSIONS ARE OUT-TO-OUT OF BAR EXCEPT "A" AND "G" ON STANDARD 180° AND 135° HOOKS.
4. "J" DIMENSIONS ON 180° HOOKS TO BE SHOWN ONLY WHERE NECESSARY TO RESTRICT HOOK SIZE, OTHERWISE STANDARD HOOKS ARE TO BE USED.
5. WHERE "J" IS NOT SHOWN, "J" WILL BE KEPT EQUAL TO OR LESS THAN "H" ON TRUSS BARS. WHERE "J" CAN EXCEED "H", IT SHALL BE SHOWN.
6. "H" DIMENSIONS OF STIRRUPS TO BE SHOWN WHERE NECESSARY TO FIT WITHIN THE CONCRETE.
7. UNLESS OTHERWISE NOTED, DIAMETER "D" IS THE SAME FOR ALL BENDS AND HOOKS ON A BAR.
8. WHERE SLOPE DIFFERS FROM 45° OFFSET, "H" AND "K" MUST BE SHOWN.
9. WHERE BARS ARE TO BE BENT MORE ACCURATELY THAN STANDARD BENDING TOLERANCES, BENDING DIMENSIONS WHICH REQUIRE CLOSER FABRICATION SHOULD HAVE LIMITS INDICATED.
10. FOR RECOMMENDED DIAMETER "D", OF BENDS, HOOKS, ETC., REFER TO TABLE AT RIGHT, 'CRSI' OR 'ACI' TABLES.
11. TYPE S1-S12, T1-T16 APPLY TO BAR SIZES 3 THROUGH 6.

ASTM STANDARD ENGLISH REINFORCING BARS				RECOMMENDED END HOOKS, APPLICABLE TO ALL GRADES			
	NOMINAL DIMENSIONS				180° HOOKS		90° HOOKS
BAR SIZE	DIAMETER (inches)	AREA (inches²)	WEIGHT (lbs./ft.)	D	A OR G	J	A OR G
3	0.375	0.110	0.376	2″*	5″	3″	6″
4	0.500	0.200	0.668	3″	6″	4″	8″
5	0.625	0.310	1.043	3″*	7″	5″	10″
6	0.750	0.440	1.502	4″*	8″	6″	1′-0″
7	0.875	0.600	2.044	5″*	10″	7″	1′-2″
8	1.000	0.790	2.670	6″	11″	8″	1′-4″
9	1.128	1.000	3.400	9″*	1′-3″	11″*	1′-7″
10	1.270	1.270	4.303	10″*	1′-5″	1′-1″*	1′-10″
11	1.410	1.560	5.313	1′-0″	1′-7″	1′-2″*	2′-0″
14	1.693	2.250	7.650	1′-6″*	2′-3″	1′-9″*	2′-7″
18	2.257	4.000	13.600	2′-0″	3′-0″	2′-4″*	3′-5″

STANDARD BAR BENDS

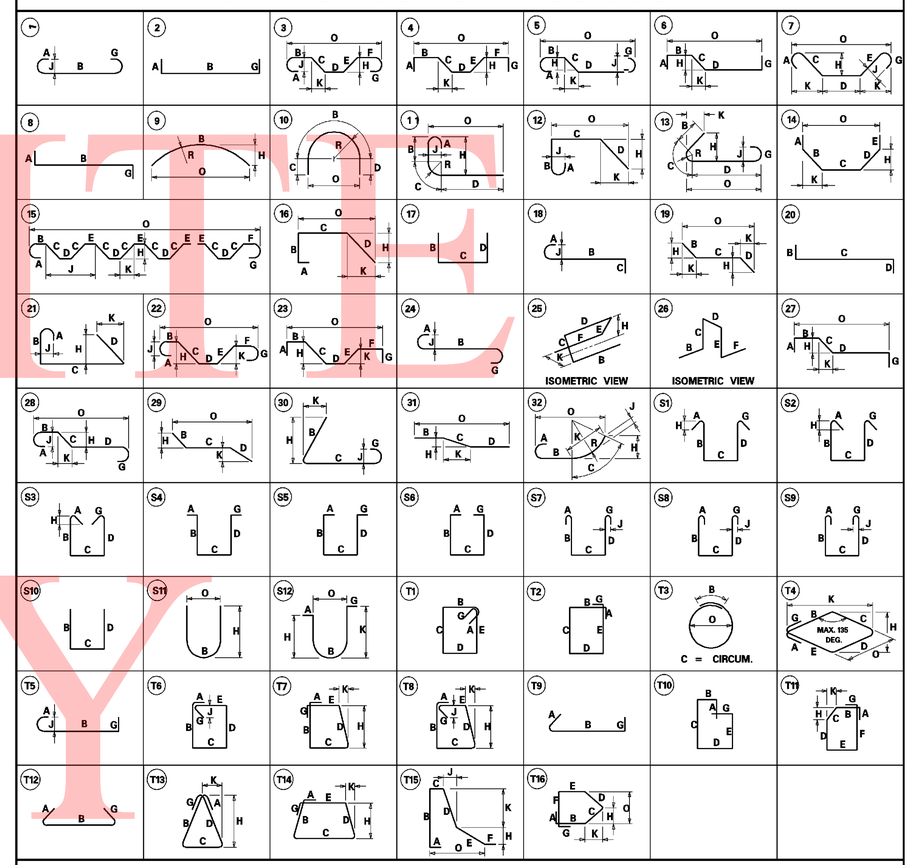

SPECIAL BAR BENDS

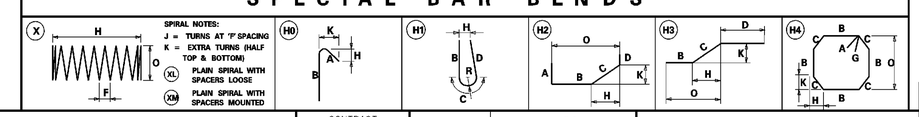

UNOFFICIAL WEBSITE COPY

DELAWARE DEPARTMENT OF TRANSPORTATION

ADDENDUMS / REVISIONS

SR1 / I-95 INTERCHANGE

CONTRACT	BRIDGE NO.	331N
28-090-03	DESIGNED BY:	MDM
COUNTY	CHECKED BY:	
NEW CASTLE		

SR1 OVER EAGLE RUN APPROACH SLABS REINFORCING SCHEDULE

S8-20

SHEET NO. 532

TOTAL SHTS. 803

8/12/2010 2:23:54 PM
M:\PROJECTS\2003\03059_DELTRNPK\SR1MALL\CADD\2809003\PLANS\BR03_BR-S8_SR1.DGN

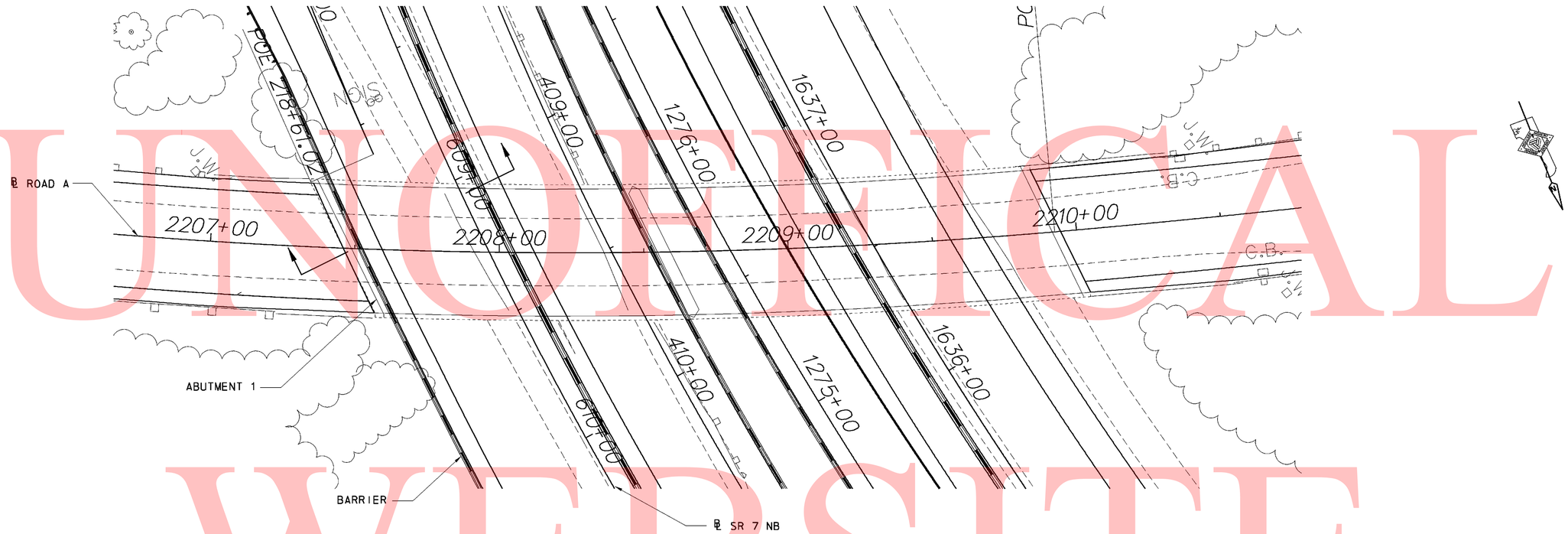

PLAN

SCALE: 1" = 20'-0"

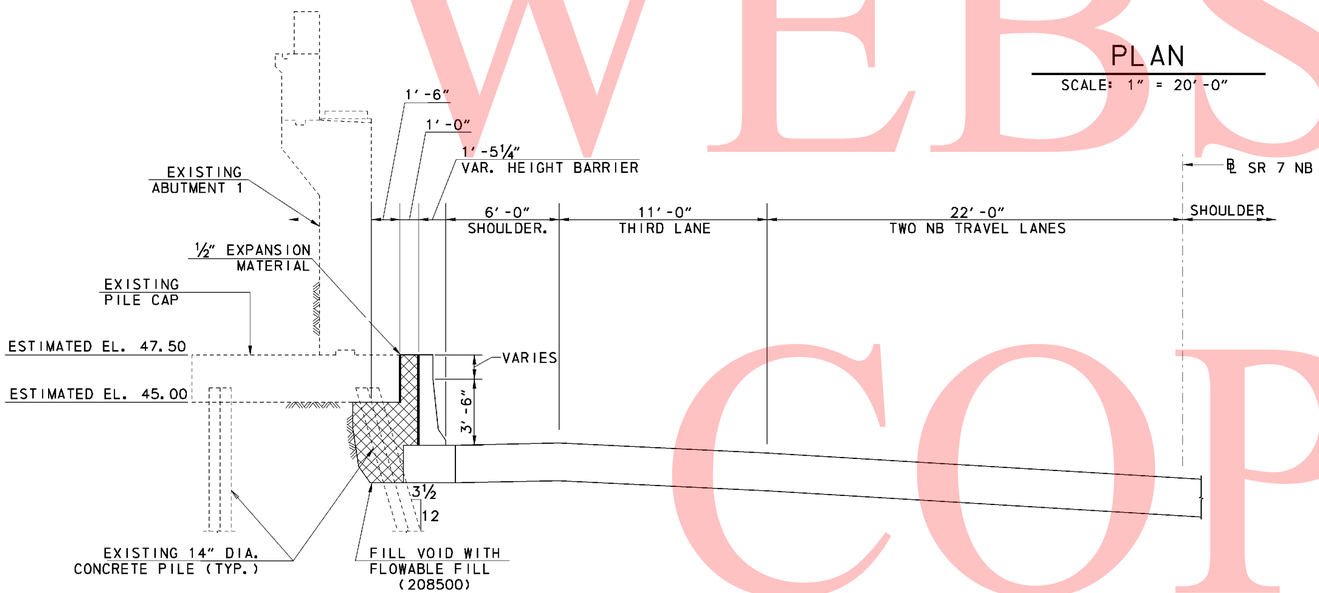

TYPICAL SECTION - ABUTMENT 1 AND RTE. 7 NB

SCALE: ¼" = 1'-0"

GENERAL NOTES:

1. EXISTING STRUCTURES
   ALL DIMENSIONS AFFECTED BY THE GEOMETRICS AND/OR LOCATION OF EXISTING STRUCTURES SHALL BE CHECKED IN THE FIELD BY THE CONTRACTOR BEFORE ANY CONSTRUCTION IS DONE, AND BEFORE ANY REINFORCING STEEL, ETC., IS ORDERED OR FABRICATED. IT SHALL BE THE RESPONSIBILITY OF THE CONTRACTOR TO SUPPLY THE ENGINEER WITH ALL FIELD DIMENSIONS REQUIRED TO CHECK DETAIL DRAWINGS. THE + MARKS SHOWN WITH DIMENSIONS DO NOT INDICATE ANY DEGREE OF PRECISION. THESE MARKS (+) INDICATE EXISTING DIMENSIONS THAT MAY VARY AND DO REQUIRE FIELD VERIFICATION BY THE CONTRACTOR.
2. COST OF EXPANSION MATERIAL IS INCIDENTAL TO ITEM 208500.

UNOFFICIAL WEBSITE COPY

8/13/2010 12:18:13 PM
M:\PROJECTS\2003\03059_DELTRNPK\SR1_MALL\CADD\2809003\PLANS_DOV\PE01_BR-S9_SR1.DGN

DELAWARE DEPARTMENT OF TRANSPORTATION	ADDENDUMS / REVISIONS	SR1 / I-95 INTERCHANGE	CONTRACT 28-090-03	BRIDGE NO. BR1-222	ROAD A OVER RTE 7 GENERAL PLAN AND ABUTMENT REPAIR	SHEET NO. S9-1
			COUNTY NEW CASTLE	DESIGNED BY: MDM		532A
				CHECKED BY: DWD		TOTAL SHTS. 803

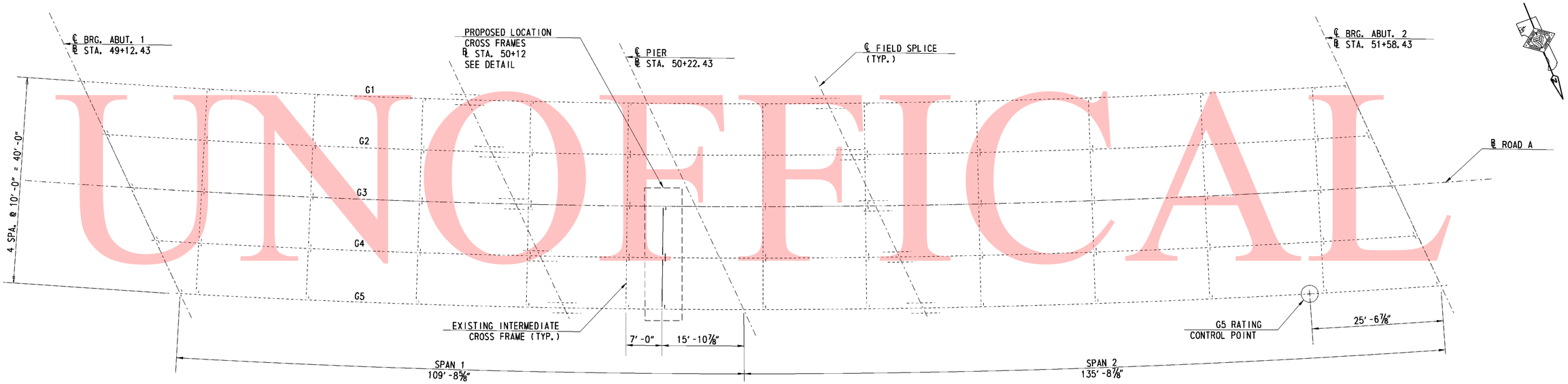

FRAMING PLAN

SCALE: 1" = 10'-0"

GIRDER G5 RATING SUMMARY

TRUCK LOADING	CONTROL* POINT (FT)	OPERATING RATING FACTOR	OPERATING LOAD RATING (TON)	INVENTORY RATING FACTOR	CONTROL* POINT (FT)	INVENTORY LOAD RATING (TON)
HS-20	219.89	1.60 M	57.60	0.96 M	219.89	SAY 36
S220	219.89	2.78 M	55.60	---	---	---
S327	219.89	2.13 M	57.51	---	---	---
S335	219.89	1.62 M	56.70	---	---	---
S437	219.89	1.54 M	56.98	---	---	---
T330	219.89	2.13 M	63.90	---	---	---
T435	219.89	1.79 M	62.65	---	---	---
T540	219.89	1.59 M	63.60	---	---	---

*CONTROL POINT MEASURED ALONG GIRDER G5, FROM L BRG. ABUTMENT 1

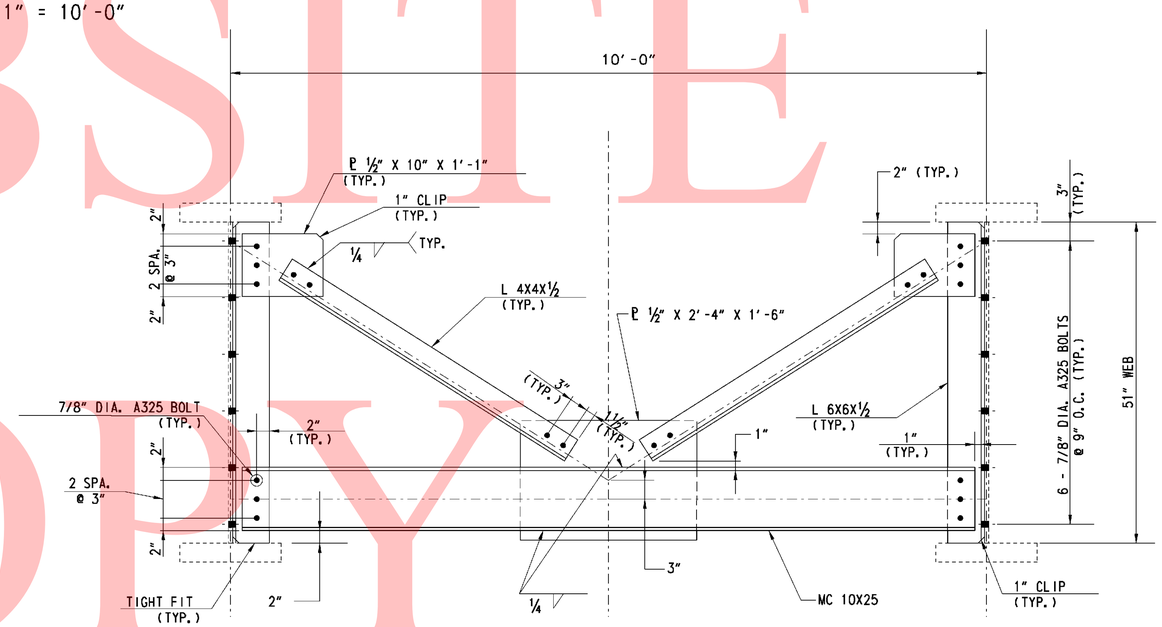

INTERMEDIATE CROSS FRAME DETAIL

SCALE: 1" = 1'-0"

GENERAL NOTES:

1. ALL MATERIALS AND FABRICATION SHALL CONFORM TO DELDOT STANDARD SPECIFICATIONS FOR ROAD AND BRIDGE CONSTRUCTION, 2001.
2. DESIGN PERFORMED USING AASHTO STANDARD SPECIFICATION LOAD FACTOR DESIGN.
3. ALL STRUCTURAL STEEL SHALL CONFORM TO ASTM A 709, GRADE 50.
4. ALL BOLTS SHALL CONFORM TO ASTM A325.
5. ALL NEW STEEL SHALL BE PAINTED TO MATCH EXISTING. FIELD PAINTING SHALL CONFORM TO DELDOT STANDARD SPECIFICATIONS FOR ROAD AND BRIDGE CONSTRUCTION SECTION 605.35. IN ADDITION TO COST OF PAINTING SHALL BE INCIDENTAL TO ITEM 605002.
6. ALL WELDING SHALL CONFORM TO AWS D1.1. NO FIELD WELDING SHALL BE PERMITTED.
7. EXISTING STRUCTURES
   ALL DIMENSIONS AFFECTED BY THE GEOMETRICS AND/OR LOCATION OF EXISTING STRUCTURES SHALL BE CHECKED IN THE FIELD BY THE CONTRACTOR BEFORE ANY CONSTRUCTION IS DONE, AND BEFORE ANY REINFORCING STEEL, ETC., IS ORDERED OR FABRICATED. IT SHALL BE THE RESPONSIBILITY OF THE CONTRACTOR TO SUPPLY THE ENGINEER WITH ALL FIELD DIMENSIONS REQUIRED TO CHECK DETAIL DRAWINGS. THE + MARKS SHOWN WITH DIMENSIONS DO NOT INDICATE ANY DEGREE OF PRECISION. THESE MARKS (+) INDICATE EXISTING DIMENSIONS THAT MAY VARY AND DO REQUIRE FIELD VERIFICATION BY THE CONTRACTOR.

UNOFFICAL WEBSITE COPY

GENERAL NOTES

SPECIFICATIONS: PROPRIETARY MSE WALLS SHALL BE DESIGNED IN ACCORDANCE WITH THE FOLLOWING:
- AASHTO LRFD BRIDGE DESIGN SPECIFICATIONS, 4TH EDITION WITH ALL CURRENT REVISIONS.
- FEDERAL HIGHWAY ADMINISTRATION PUBLICATION NOS. FHWA-NHI-10-024 AND FHWA-NHI-025, "DESIGN AND CONSTRUCTION OF MECHANICALLY STABILIZED EARTH WALLS AND REINFORCED SOIL SLOPES", VOLUME I AND VOLUME II.

CONCRETE DESIGN SHALL BE PERFORMED USING THE LOAD AND RESISTANCE FACTOR DESIGN METHOD.

CONCRETE: ALL CONCRETE FOR ROADWAY BARRIERS SHALL BE 4,500 PSI. LEVELING PAD CONCRETE SHALL BE 3,500 PSI. MIX REQUIREMENTS SHALL CONFORM TO SECTION 812 OF THE DELAWARE DEPARTMENT OF TRANSPORTATION STANDARD SPECIFICATIONS.

CHAMFERS: ALL EXPOSED CORNERS OF CONCRETE SHALL BE CHAMFERED WITH ¾" x ¾" MILLED CHAMFER STRIPS, UNLESS OTHERWISE NOTED, EXCEPT ON UNEXPOSED FOOTINGS OR WHERE INDICATED BY THE FOLLOWING NOTATION ON THE PLANS: "DO NOT CHAMFER".

REINFORCING STEEL: REINFORCING STEEL SHALL CONFORM TO ASTM A 615, GRADE 60. ALL SPLICES, NOT SHOWN, SHALL BE LAPPED AS PER THE LRFD BRIDGE DESIGN SPECIFICATIONS. MINIMUM COVER FOR ANY BAR SHALL BE 2" UNLESS OTHERWISE NOTED.

FOR TIES AND STIRRUPS, STANDARD ACI BENDING TOLERANCES ARE MODIFIED TO PLUS (+) ZERO INCHES, MINUS (-) NORMAL ACI BENDING TOLERANCE.

ONLY GRADE 60 CAN BE USED ON THIS PROJECT.

ALL REINFORCING STEEL IN THE BARRIER SHALL BE EPOXY COATED, AND SHALL CONFORM TO ASTM D3936.

ALL KEYS ARE NOMINAL SIZE.

THE MSE WALL MANUFACTURER MAY SUBSTITUTE ALTERNATE REINFORCING CONFIGURATIONS AND SUBMIT FOR APPROVAL.

EXPANSION AND CONTRACTION JOINTS: THE LOCATION OF THE EXPANSION AND CONTRACTION JOINTS IN THE BARRIER SHOWN ON THE PLANS MAY BE ADJUSTED TO ACCOMMODATE THE PANEL TYPE USED IN THE PROJECT. ANY CHANGE TO THESE JOINT LOCATIONS SHALL BE SUBMITTED TO THE ENGINEER FOR APPROVAL.

LEVELING PAD: THE PROPRIETARY WALL MANUFACTURER MAY RELOCATE THE LEVELING PAD STEPS AT THEIR DISCRETION PROVIDED THAT THE MINIMUM EMBEDMENT IS MAINTAINED. ANY CHANGE TO THE STEP LOCATIONS SHALL BE SUBMITTED TO THE ENGINEER FOR APPROVAL.

ROADWAY LIMITS: THE PROPRIETARY WALL MANUFACTURER SHALL ASSURE THAT PROPOSED PROPRIETARY WALL COMPONENTS ARE POSITIONED SUCH THAT THE DESIGNATED ROADWAY LIMITS ARE NOT ENCROACHED UPON.

TRAFFIC BARRIER JOINTS: TRAFFIC BARRIER FOOTING SHALL HAVE CONSTRUCTION JOINTS TO COINCIDE WITH THE BARRIER JOINTS.

COORDINATION: CONTRACTOR AND PROPRIETARY WALL MANUFACTURER SHALL COORDINATE LOCATIONS OF INLETS AND PIPES WITH LOCATIONS OF PROPRIETARY WALL TIE BACK SYSTEM.

ARCHITECTURAL FINISH: THE MSE WALL PANELS SHALL RECEIVE AN ARCHITECTURAL FINISH.

SERVICE LIFE: ALL RETAINING WALL COMPONENTS SHALL BE DESIGNED FOR A MINIMUM SERVICE LIFE OF 100 YEARS.

WALL SYSTEM: ONLY ONE MSE WALL SYSTEM MAY BE USED ON THIS PROJECT.

ROADWAY SUPERELEVATION: FOR ROADWAY SUPERELEVATION, SEE SUPERELEVATION TABLES.

MSE WALL BACKFILL: MSE WALL BACKFILL SHALL CONSIST OF SPECIFIED BACKFILL.

SOIL PROPERTIES

SOIL TYPE	UNIT WEIGHT (PCF)	DRAINED ANGLE OF FRICTION (DEGREES)	UNDRAINED SHEAR (PSF)
SELECT FILL	125	34	-
FOUNDATION SOIL	105	28	1400

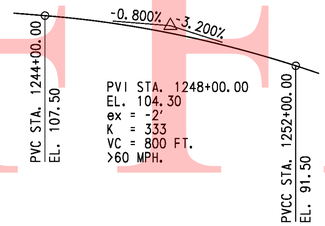

RAMP A
VERTICAL CURVE DATA

NOT TO SCALE

PI STA. 1254+08.88
Δ = 48°19'31.68" LT
Dc = 3°05'49.45"
R = 1,850.0000'
T = 829.98'
L = 1,560.36'

RAMP A
HORIZONTAL CURVE NO. 14 DATA

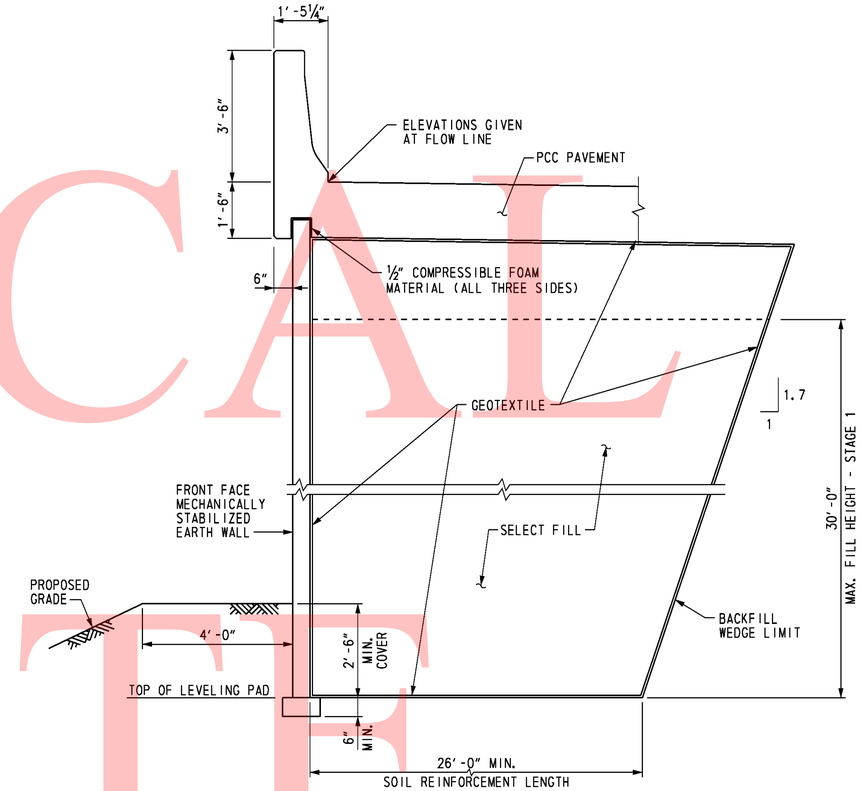

TYPICAL SECTION

SCALE: ½" = 1'-0"

FOUNDATION NOTES:

THE FACTORED BEARING RESISTANCE SHALL BE VERIFIED PRIOR TO CONSTRUCTION OF THE MSE WALL.

THE INTERNAL STABILITY OF THE MSE WALL SHALL BE DESIGNED BY THE CONTRACTOR USING THE SOIL PARAMETERS PROVIDED FOR EACH STRUCTURE LOCATION. THE INTERNAL STABILITY CALCULATIONS SHOULD BE SIGNED AND SEALED BY A PROFESSIONAL ENGINEER LICENSED IN THE STATE OF DELAWARE AS INDICATED IN THE PROJECT SPECIFICATIONS.

ISOLATED AREAS OF UNDERCUTTING OF EXISTING FILL MAY BE ENCOUNTERED DURING CONSTRUCTION OF THIS RETAINING WALL.

A QUARANTINE PERIOD OF APPROXIMATELY THIRTY (30) DAYS IS REQUIRED AFTER CONSTRUCTION OF THE FULL HEIGHT OF THE MSE WALL IS ACHIEVED. THE ENGINEER SHALL APPROVE THE COMPLETION OF THE QUARANTINE PERIOD PRIOR TO CONSTRUCTION OF ANY PAVEMENT OR BARRIER. A TOTAL ESTIMTED SETTLEMENT OF APPROXIMATELY FOUR (4) INCHES IS ANTICIPATED.

UNOFFICAL WEBSITE COPY

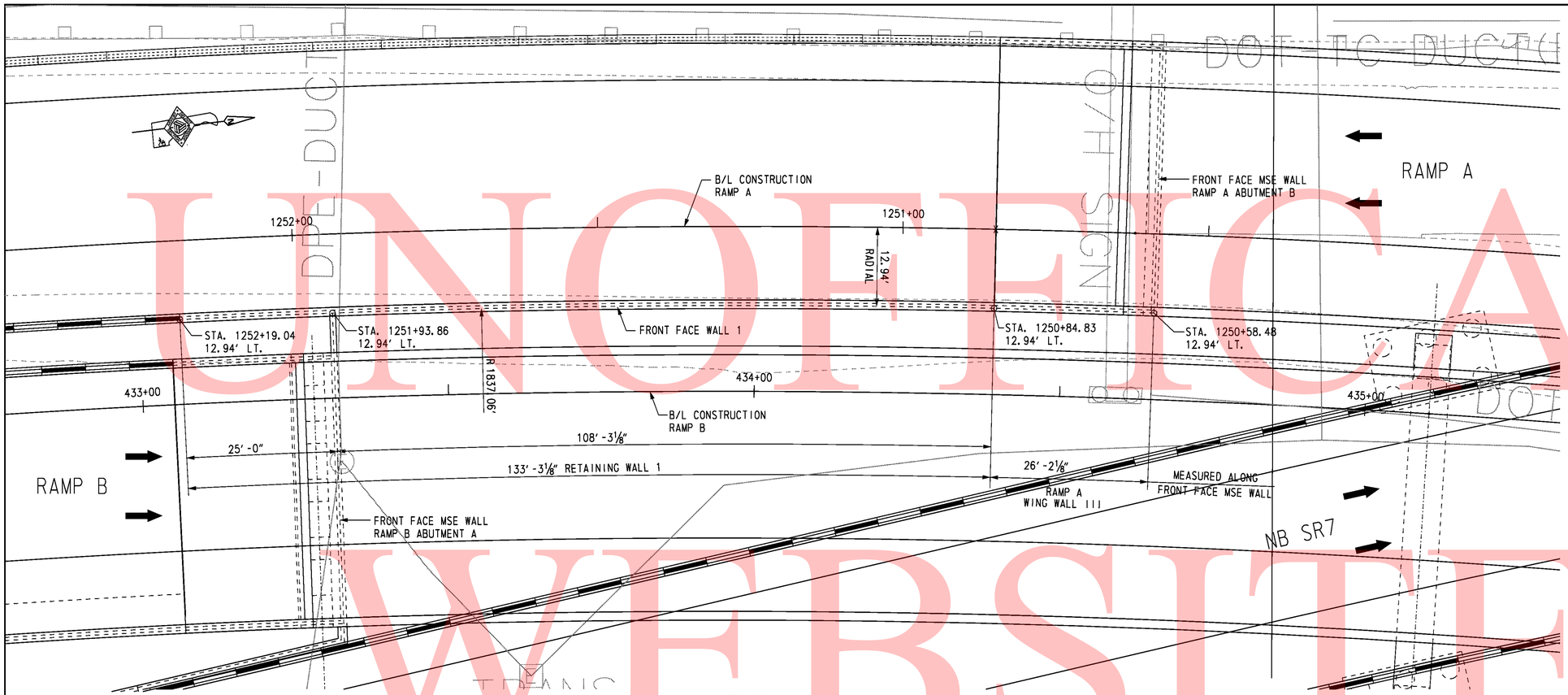

PLAN

SCALE: 1" = 10'-0"

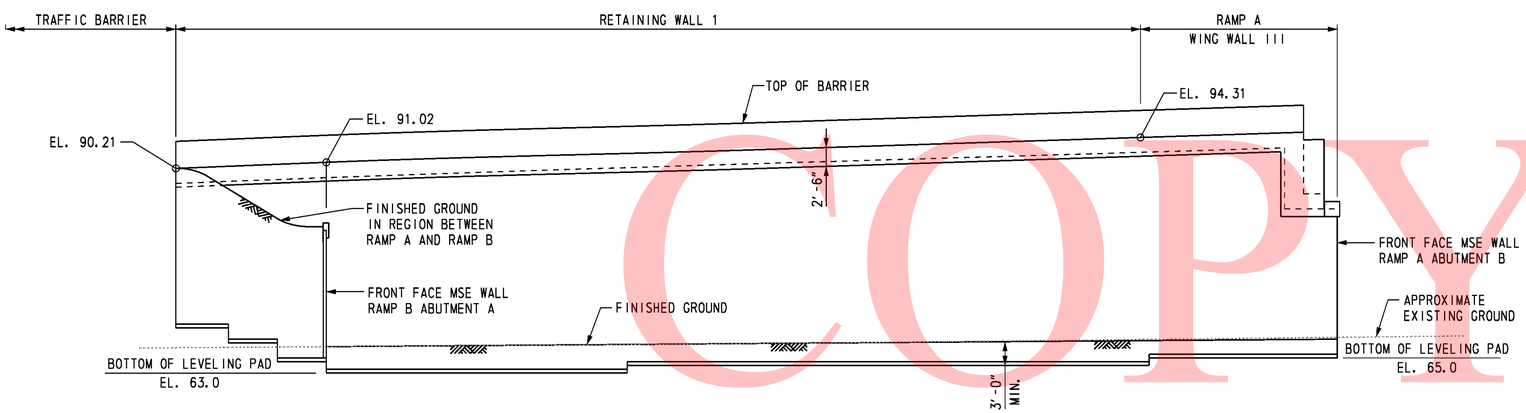

DEVELOPED ELEVATION

SCALE: 1" = 10'-0"

CROSS REFERENCE NOTES:

1. FOR GENERAL NOTES, SEE DWG. R1-1.
2. FOR TYPICAL WALL SECTION, SEE DWG. R1-1.

UNOFFICAL WEBSITE COPY

O:\20832687-XM\CAD\Bridge\pe01_RW-1_srf.dgn 10/29/2010 Steve_Lambert

DELAWARE DEPARTMENT OF TRANSPORTATION	ADDENDUMS / REVISIONS		SR1 / I-95 INTERCHANGE	CONTRACT 28-090-03	BRIDGE NO.	RETAINING WALL 1 PLAN AND ELEVATION	R1-2 SHEET NO. 534
				COUNTY NEW CASTLE	DESIGNED BY: R. F. KIRCHNER		TOTAL SHTS. 803
					CHECKED BY: G. P. MISTRY		

SUMMARY OF LABORATORY TEST RESULTS OF TUBE SAMPLES

BORING NO.	TOP SAMPLE DEPTH (FT)	NATURAL MOISTURE CONTENT (%)	LL	PL	PI	PERCENT PASSING NO. 200	AASHTO	UNDISTURBED TUBE TESTING	TOTAL UNIT WEIGHT (pcf)	UNCONFINED COMPRESSION (psf)	TOTAL STRESS COHESION (psf)	TOTAL STRESS FRICTION ANGLE (deg)	EFFECTIVE STRESS COHESION (psf)	EFFECTIVE STRESS FRICTION ANGLE (deg)	UNDRAINED SHEAR (psf)	INITIAL VOID RATIO	PRECONSOLIDATION STRESS MAX (psf)	PRECONSOLIDATION STRESS MIN (psf)	C_c	C_r	pH	RESISTIVITY (ohm-cm)
URS-5	35.5	29.9	55	30	25	97.4	A-7-5(29)	CONS	-	-	-	-	-	-	-	0.786	4020	3200	0.23	0.09	-	-
URS-5	35.5	-	-	-	-	-	-	UC	2430	-	-	-	-	-	1215	-	-	-	-	-	-	-

UNOFFICAL WEBSITE COPY

DELAWARE DEPARTMENT OF TRANSPORTATION
AASHTO CLASSIFICATION OF SOILS AND SOIL-AGGREGATE MIXTURES

General Classification		Granular Materials (35% or Less Passing 0.075 mm)							Silt-Clay Materials (More than 35% Passing 0.075 mm)					Organic Soils
Group Classification	Group	A-1		A-3	A-2				A-4	A-5	A-6	A-7		A-8
	Sub-Group	A-1-a	A-1-b		A-2-4	A-2-5	A-2-6	A-2-7				A-7-5	A-7-6	
	Graphic	A	B			5		7				5		
Sieve Analysis, % Passing														
	2.00 mm (No. 10)	50 Max	-	-	-	-	-	-	-	-	-	-	-	See Note 1
	0.425 mm (No. 40)	30 Max	50 Max	51 Min	-	-	-	-	-	-	-	-	-	
	0.075 mm (No. 200)	15 Max	25 Max	10 Max	35 Max	35 Max	35 Max	35 Max	36 Min	36 Min	36 Min	36 Min	36 Min	
Characteristics of Fraction		-		-	-	-	-	-	-	-	-	-	-	See Note 1
	Passing 0.425 mm (No. 40)	-		-	-	-	-	-	-	-	-	-	-	
	Liquid Limit	-		-	40 Max	41 Min	40 Max	41 Min	40 Max	41 Min	41 Max	41 Min	41 Min	
	Plasticity Index	6 Max		NP	10 Max	10 Max	11 Min	11 Min	10 Max	10 Max	11 Min	11 Min	11 Min	
Usual Types of Significant Constituent Materials		Stone Fragments, Gravel and Sand		Fine Sand	Silty or Clayey Gravel and Sand				Silty Soils		Clayey Soils			Organic Soils

Plasticity Index of A-7-5 Subgroup Is Equal to or Less Than LL Minus 30

Plasticity Index of A-7-6 Subgroup Is Greater Than LL Minus 30

Note 1-Classification Based on Visual Inspection and not on Sieve Analysis or Atterberg Limits

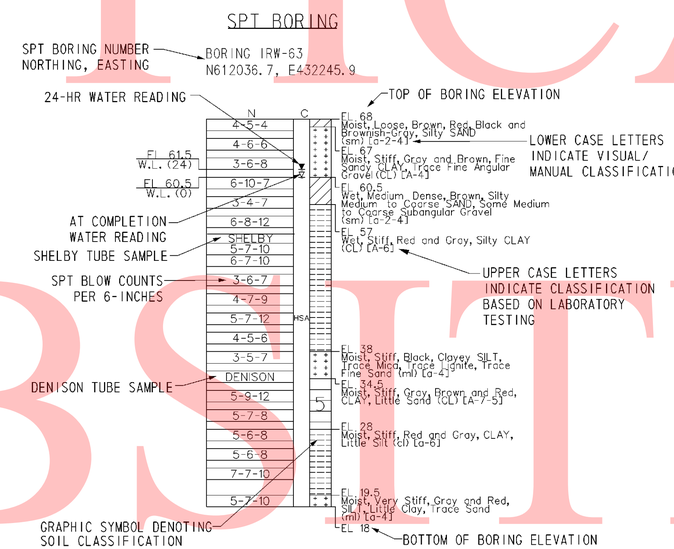

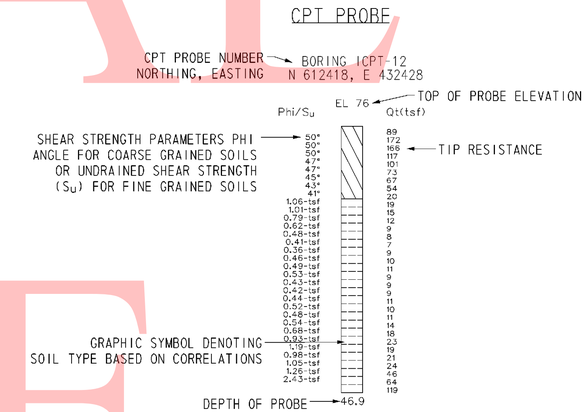

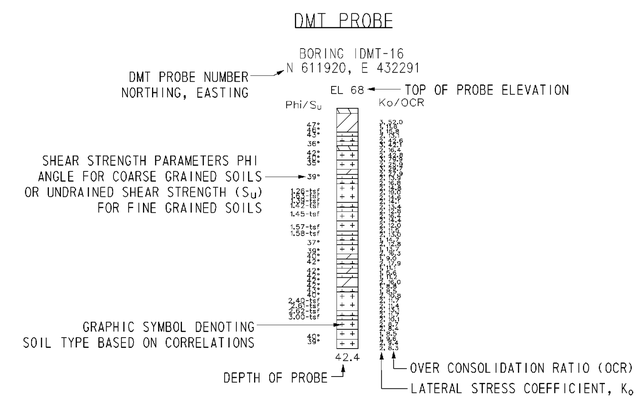

NOTES:

1. THE BORINGS AND DRIVE TEST WERE CONDUCTED IN MULTIPLE PHASES BY THE ROBERT B. BALTER COMPANY, THE WALTON CORPORATION, AND FINDLING, INC. BETWEEN AUGUST 2004 AND OCTOBER 2008.

2. THE SOIL SYMBOLS REFLECT ONLY THE MAJOR SOIL CONSTITUENT, FOR MORE COMPLETE SOIL CHARACTERISTIC REFER TO THE SOIL LOGS CONTAINED WITHIN THE FINAL FOUNDATION REPORTS DATED FEBRUARY 2009.

3. THE FIELD BORING LOGS RECORD SAMPLE SPOON RECOVERY. THE BORING LOGS AND LABORATORY TESTING RESUTS ARE AVAILABLE UPON REQUEST.

4. N = BLOWS ON A 2 INCH OD SAMPLING SPOON BY 140 LB DRIVE- WEIGHT FALLING 30 INCHES INDICATING SUCCESSIVE 6 INCH INCREMENTS OF PENETRATION. PENETRATIONS GREATER THAN 6-INCHES OR LESS THAN 6-INCHES ARE INDICATED BY WOH, WOR, OR THE DEPTH OF THE PENETRATION TO THE NEAREST INCH.

   WOH= STATIC WEIGHT OF SAMPLING SPOON DRIVE-WEIGHT ASSEMBLY, DRIVE-WEIGHT,ANVIL (WHEN AUTOMATIC HAMMER IS USED), DRILL ROD(S), AND SAMPLING SPOONS.

   WOR= STATIC WEIGHT OF DRILL ROD AND SAMPLING SPOON

5. FIELD BORINGS AND SOIL SAMPLING WERE PERFORMED IN ACCORDANCE TO AASHTO T-206, T-225 AND T-306.

6. USCS AND AASHTO DESIGNATIONS INDICATED IN UPPER CASE HAVE BEEN CONFIRMED USING LAB SOIL CLASSIFICATION TESTS. USCS AND AASHTO DESIGNATIONS INDICATED IN LOWER CASE ARE BASED ON VISUAL CLASSIFICATION TECHNIQUES ACCORDING TO ASTM D 2488 AND AASHTO M 145 BY RK&K GEOLOGIST OR ENGINEER.

7. CPT AND DMT PROBES WERE DRILLED BY IN-SITU SOIL TESTING, L.C AND CONETEC, INC.

   CPT = CONE PENETRATION TESTING
   DMT = FLAT- PLATE DILATOMETER

8. C= DEPTH OF HOLLOW STEM CONTINUOUS FLIGHT AUGER (HSA) WITH A 3-3/8 INCH ID, AND LIMIT OF MUD ROTARY (MD).

9. FOR BORING LOCATIONS, SEE CONSTRUCTION PLAN SHEETS 182 THROUGH 186.

10. FOR ADDITIONAL BORING & DRIVE TESTS SEE BORING & DRIVE TESTS SHEETS FOR OTHER STRUCTURES.

11. FOR ALL OTHER BORING & DRIVE TESTS SEE SHEETS 744 THROUGH 792.

12. FOR ADDITIONAL LABORATORY TEST RESULTS OF UNDISTURBED TUBE SAMPLES AND INDEX TESTING SEE, SHEETS 793 THROUGH 803.

13. FOR GROUNDWATER MONITORING DATA, SEE SHEET XXX OF XXX.

14. LL= LIQUID LIMIT

15. PL = PLASTIC LIMIT

16. PI = PLASTICITY INDEX

17. UC = UNCONFINED COMPRESSION

18. DS = DIRECT SHEAR

19. CONS = CONSOLIDATION

20. UU = UNCONSOLIDATED- UNDRAINED TRIAXIAL TEST

21. CIUC = CONSOLIDATED ISOTROPIC UNDRAINED COMPRESSION TRIAXIAL TEST

22. AASHTO = AMERICAN ASSOCIATION OF STATE HIGHWAY TRANSPORTATION OFFICIALS

DATUM EL. -80.00

NOTES:

1. FOR BORING NOTES AND INFORMATION SEE SHEET NO. 535 OF 803.
2. FOR BORING LOCATIONS SEE CONSTRUCTION PLAN SHEETS.

UNOFFICIAL WEBSITE COPY

DELAWARE DEPARTMENT OF TRANSPORTATION	ADDENDUMS / REVISIONS	SCALE 0 10 20 30 FEET	SR1 / I-95 INTERCHANGE	CONTRACT 28-090-03	BRIDGE NO.	RETAINING WALL 1 BORING & DRIVE TESTS	R1-4
				COUNTY NEW CASTLE	DESIGNED BY: JLT		SHEET NO. 536
					CHECKED BY: EMK		TOTAL SHTS. 803

3/2/2010 11:35:44 AM
M:\PROJECTS\2003\03059_DELTRNPK\SRIMALL\CADD\2809003\PLANS\B0028_R1_SR1.DGN

GENERAL NOTES

SPECIFICATIONS: PROPRIETARY MSE WALLS SHALL BE DESIGNED IN ACCORDANCE WITH THE FOLLOWING:
- AASHTO LRFD BRIDGE DESIGN SPECIFICATIONS, 4TH EDITION WITH ALL CURRENT REVISIONS.
- FEDERAL HIGHWAY ADMINISTRATION PUBLICATION NOS. FHWA-NHI-10-024 AND FHWA-NHI-025, "DESIGN AND CONSTRUCTION OF MECHANICALLY STABILIZED EARTH WALLS AND REINFORCED SOIL SLOPES", VOLUME I AND VOLUME II.

CONCRETE DESIGN SHALL BE PERFORMED USING THE LOAD AND RESISTANCE FACTOR DESIGN METHOD.

CONCRETE: ALL CONCRETE FOR BARRIERS, MOMENT SLABS, AND ROADWAY BARRIERS SHALL BE 4,500 PSI. LEVELING PAD CONCRETE SHALL BE 3,500 PSI. MIX REQUIREMENTS SHALL CONFORM TO SECTION 812 OF THE DELAWARE DEPARTMENT OF TRANSPORTATION STANDARD SPECIFICATIONS.

CHAMFERS: ALL EXPOSED CORNERS OF CONCRETE SHALL BE CHAMFERED WITH ¾" x ¾" MILLED CHAMFER STRIPS, UNLESS OTHERWISE NOTED, EXCEPT ON UNEXPOSED FOOTINGS OR WHERE INDICATED BY THE FOLLOWING NOTATION ON THE PLANS: "DO NOT CHAMFER".

REINFORCING STEEL: REINFORCING STEEL SHALL CONFORM TO ASTM A 615, GRADE 60. ALL SPLICES, NOT SHOWN, SHALL BE LAPPED AS PER THE LRFD BRIDGE DESIGN SPECIFICATIONS. MINIMUM COVER FOR ANY BAR SHALL BE 2" UNLESS OTHERWISE NOTED.

FOR TIES AND STIRRUPS, STANDARD ACI BENDING TOLERANCES ARE MODIFIED TO PLUS (+) ZERO INCHES, MINUS (-) NORMAL ACI BENDING TOLERANCE.

ONLY GRADE 60 CAN BE USED ON THIS PROJECT.

ALL REINFORCING STEEL IN THE BARRIER AND MOMENT SLAB SHALL BE EPOXY COATED, AND SHALL CONFORM TO ASTM D3936.

ALL KEYS ARE NOMINAL SIZE.

THE MSE WALL MANUFACTURER MAY SUBSTITUTE ALTERNATE REINFORCING CONFIGURATIONS AND SUBMIT FOR APPROVAL.

EXPANSION AND CONTRACTION JOINTS: THE LOCATION OF THE EXPANSION AND CONTRACTION JOINTS IN THE BARRIER/MOMENT SLAB SHOWN ON THE PLANS MAY BE ADJUSTED TO ACCOMMODATE THE PANEL TYPE USED IN THE PROJECT. ANY CHANGE TO THESE JOINT LOCATIONS SHALL BE SUBMITTED TO THE ENGINEER FOR APPROVAL.

LEVELING PAD: THE PROPRIETARY WALL MANUFACTURER MAY RELOCATE THE LEVELING PAD STEPS AT THEIR DISCRETION PROVIDED THAT THE MINIMUM EMBEDMENT IS MAINTAINED. ANY CHANGE TO THE STEP LOCATIONS SHALL BE SUBMITTED TO THE ENGINEER FOR APPROVAL.

ROADWAY LIMITS: THE PROPRIETARY WALL MANUFACTURER SHALL ASSURE THAT PROPOSED PROPRIETARY WALL COMPONENTS ARE POSITIONED SUCH THAT THE DESIGNATED ROADWAY LIMITS ARE NOT ENCROACHED UPON.

MOMENT SLAB: THE MOMENT SLAB IS DESIGNED IN ACCORDANCE WITH THE SAME CRITERIA SPECIFIED FOR MECHANICALLY STABILIZED EARTH WALLS IN SECTION 11.10.10.2 OF AASHTO LRFD BRIDGE DESIGN SPECIFICATIONS, 4TH. EDITION.

TRAFFIC BARRIER JOINTS: TRAFFIC BARRIER FOOTING/ MOMENT SLAB SHALL HAVE CONSTRUCTION JOINTS TO COINCIDE WITH THE BARRIER JOINTS.

COORDINATION: CONTRACTOR AND PROPRIETARY WALL MANUFACTURER SHALL COORDINATE LOCATIONS OF INLETS AND PIPES WITH LOCATIONS OF PROPRIETARY WALL TIE BACK SYSTEM AND MOMENT SLAB.

ARCHITECTURAL FINISH: THE MSE WALL PANELS SHALL RECEIVE AN ARCHITECTURAL FINISH.

SERVICE LIFE: ALL RETAINING WALL COMPONENTS SHALL BE DESIGNED FOR A MINIMUM SERVICE LIFE OF 100 YEARS.

WALL SYSTEM: ONLY ONE MSE WALL SYSTEM MAY BE USED ON THIS PROJECT.

ROADWAY SUPERELEVATION: FOR ROADWAY SUPERELEVATION, SEE SUPERELEVATION TABLES.

MSE WALL BACKFILL: MSE WALL BACKFILL SHALL CONSIST OF SPECIFIED BACKFILL.

SOIL PROPERTIES

SOIL TYPE	UNIT WEIGHT (PCF)	DRAINED ANGLE OF FRICTION (DEGREES)	UNDRAINED SHEAR (PSF)
SELECT FILL	125	34	-
LWEF	40	38	-
NO. 57 STONE	105	38	-
FOUNDATION SOIL	120	27	1250

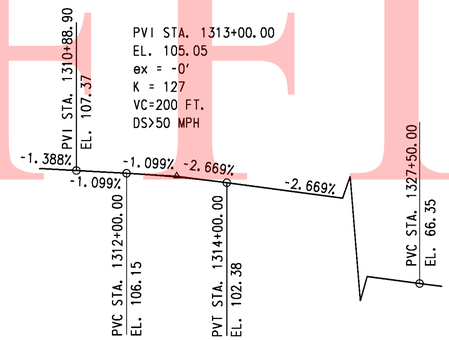

RAMP G1
VERTICAL CURVE DATA

NOT TO SCALE

PI STA. 1310+72.06
Δ = 4°47'24.25" RT
Dc = 2°17'30.59"
R = 2,500.0000'
T = 104.56'
L = 209.01'

RAMP G1
HORIZONTAL CURVE NO. 38 DATA

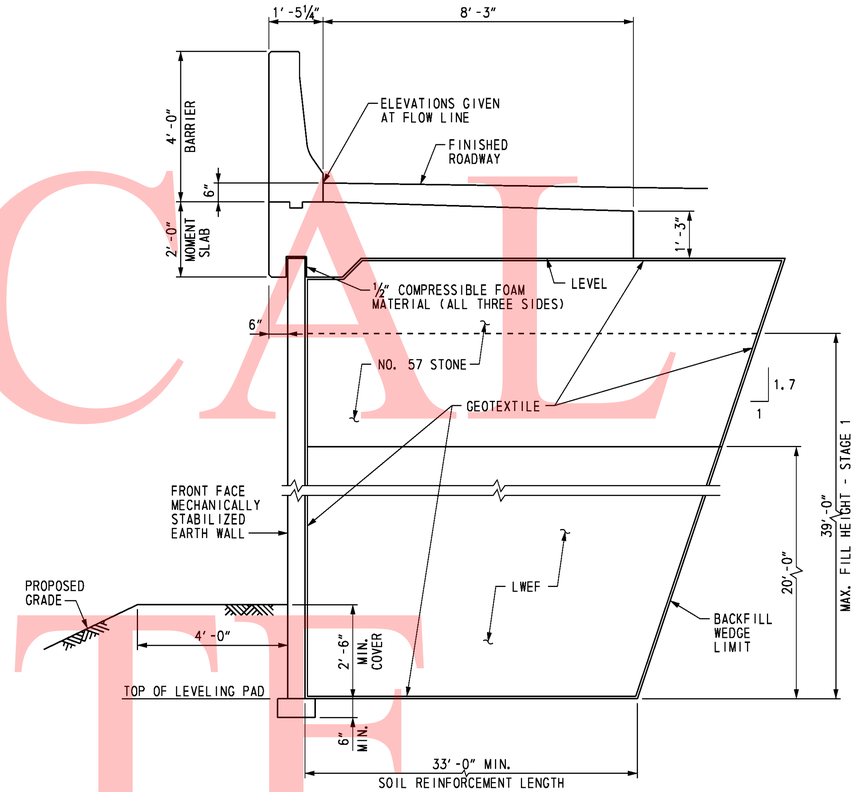

TYPICAL SECTION

SCALE: ½" = 1'-0"

FOUNDATION NOTES:

THE FACTORED BEARING RESISTANCE SHALL BE VERIFIED PRIOR TO CONSTRUCTION OF THE MSE WALL.

THE INTERNAL STABILITY OF THE MSE WALL SHALL BE DESIGNED BY THE CONTRACTOR USING THE SOIL PARAMETERS PROVIDED FOR EACH STRUCTURE LOCATION. THE INTERNAL STABILITY CALCULATIONS SHOULD BE SIGNED AND SEALED BY A PROFESSIONAL ENGINEER LICENSED IN THE STATE OF DELAWARE AS INDICATED IN THE PROJECT SPECIFICATIONS.

ISOLATED AREAS OF UNDERCUTTING OF EXISTING FILL MAY BE ENCOUNTERED DURING CONSTRUCTION OF THIS RETAINING WALL.

A QUARANTINE PERIOD OF APPROXIMATELY THIRTY (30) DAYS IS REQUIRED AFTER CONSTRUCTION OF THE FULL HEIGHT OF THE MSE WALL IS ACHIEVED. THE ENGINEER SHALL APPROVE THE COMPLETION OF THE QUARANTINE PERIOD PRIOR TO CONSTRUCTION OF ANY PAVEMENT OR BARRIER. A TOTAL ESTIMTED SETTLEMENT OF APPROXIMATELY FOUR (4) INCHES IS ANTICIPATED.

UNOFFICIAL WEBSITE COPY

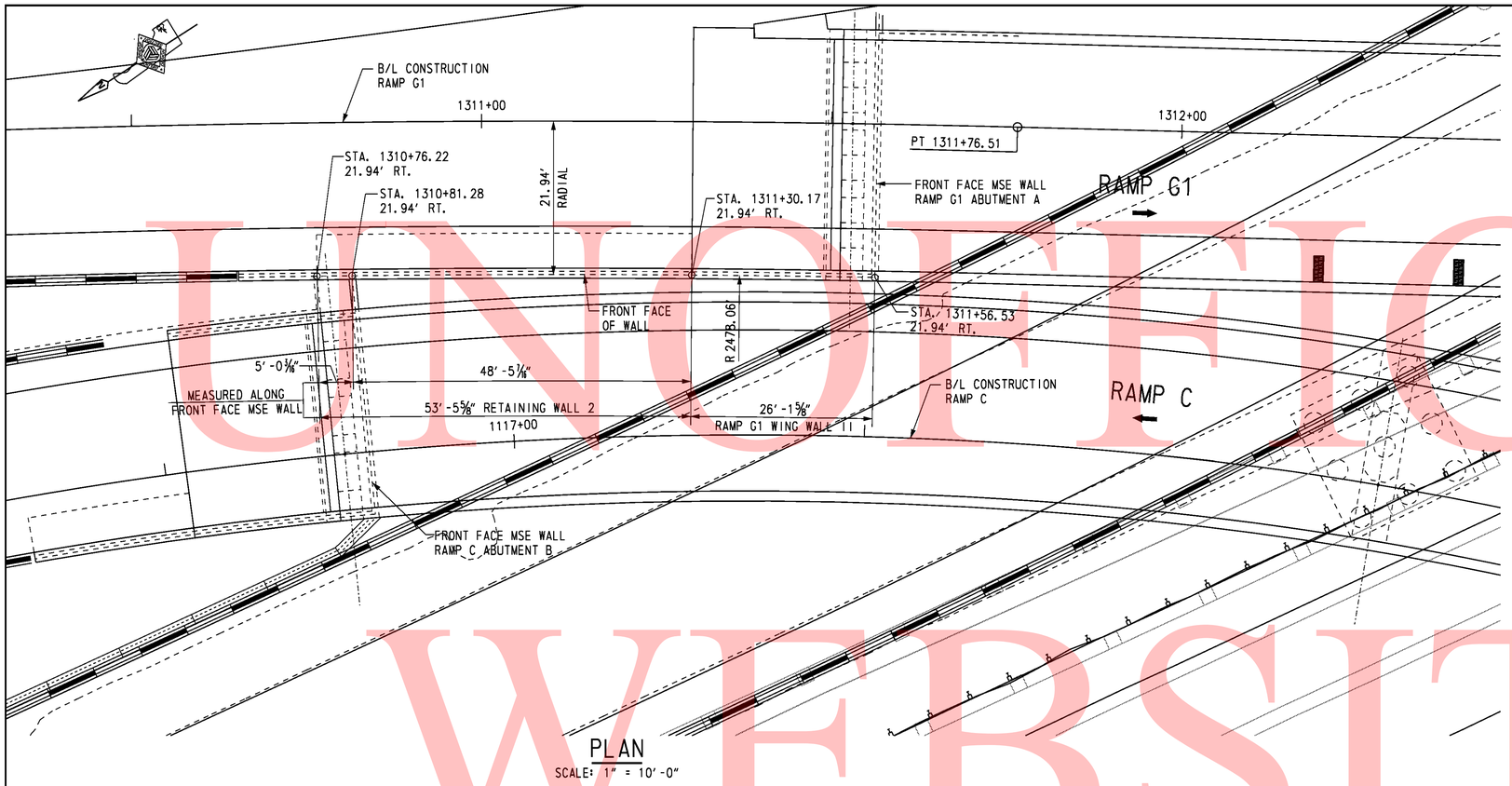

PLAN

SCALE: 1" = 10'-0"

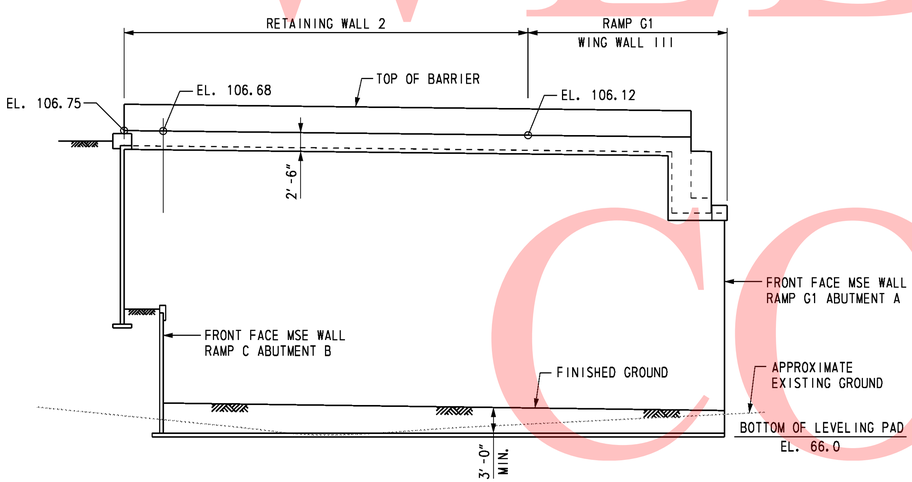

DEVELOPED ELEVATION

SCALE: 1" = 10'-0"

CROSS REFERENCE NOTES:

1. FOR GENERAL NOTES, SEE DWG. R2-1.
2. FOR TYPICAL WALL SECTION, SEE DWG. R2-1.

UNOFFICIAL WEBSITE COPY

DELAWARE DEPARTMENT OF TRANSPORTATION	ADDENDUMS / REVISIONS	SR1 / I-95 INTERCHANGE	CONTRACT 28-090-03	BRIDGE NO.	RETAINING WALL 2 PLAN AND ELEVATION	R2-2 SHEET NO. 538
			COUNTY NEW CASTLE	DESIGNED BY: R. F. KIRCHNER		TOTAL SHTS. 803
				CHECKED BY: G. P. MISTRY		

Steve_Lambert 10/29/2010 O:\20832687-XM\CAD\Bridge\pc01_RW-2_sr1.dgn

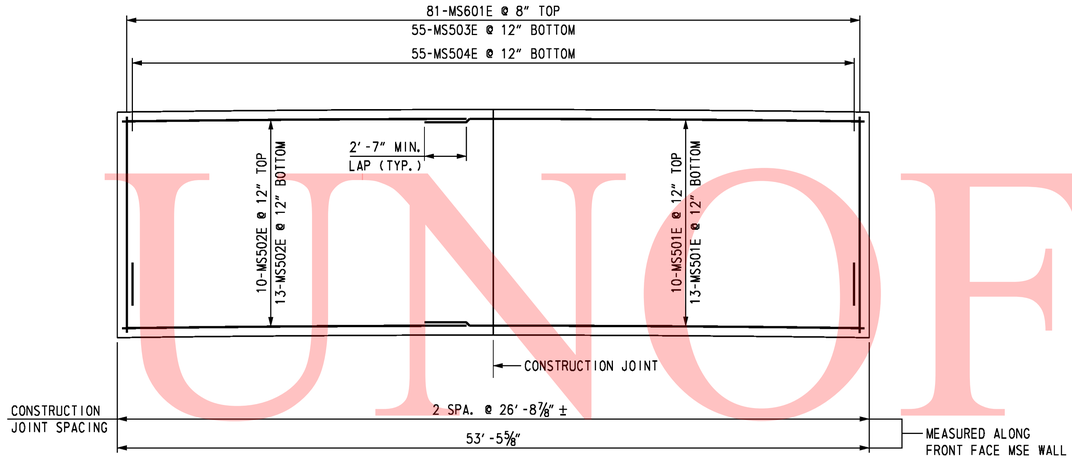

MOMENT SLAB PLAN

NOT TO SCALE

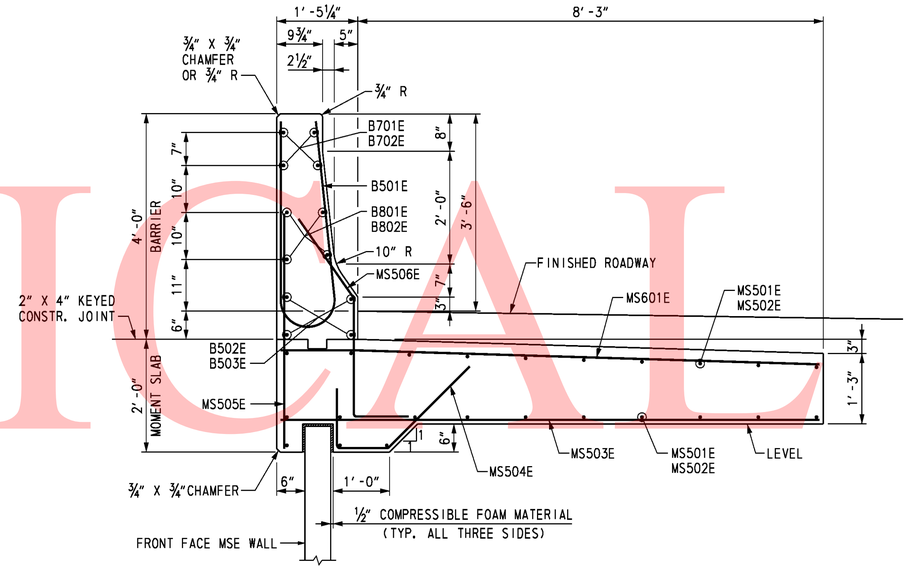

MOMENT SLAB SECTION

SCALE: ¾" = 1'-0"

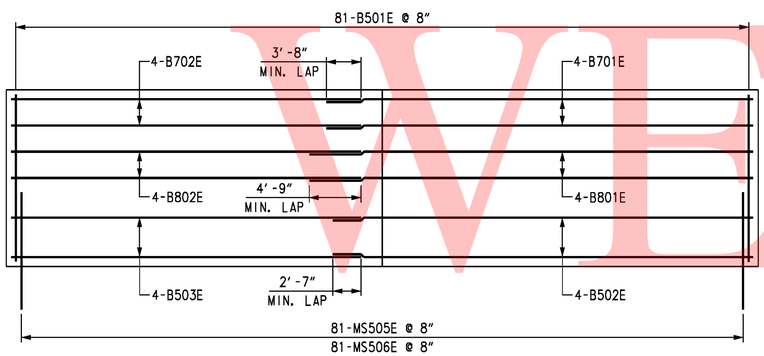

BARRIER ELEVATION

NOT TO SCALE

REINFORCING BAR LIST

RETAINING WALL 2 SCHEDULE

MARK	LENGTH	NO. BARS	TYPE	A	B	C	D	H	K	O	R	REMARKS
MS501E	29'-5"	23	STR									
MS502E	26'-6"	23	STR									
MS503E	9'-4"	55	STR									
MS504E	3'-3"	55	4	11½"	9⅜"	1'-6⅜"		1'-1"	1'-1"			
MS505E	3'-10"	81	STR									
MS506E	4'-6½"	81	4S	1'-0"	2'-0½"	1'-6"		10¼"	1'-2⅞"			
MS601E	9'-4"	81	STR									
B501E	7'-9½"	81	H1		3'-3⅞"	1'-3⅛"	3'-3⅞"				4⅞"	
B502E	29'-4"	4	STR									
B503E	26'-5"	4	STR									
B701E	30'-5"	4	STR									
B702E	26'-5"	4	STR									
B801E	31'-6"	4	STR									
B802E	26'-5"	4	STR									

BENDING DIAGRAMS

ALL DIMENSIONS ARE FROM OUT TO OUT.

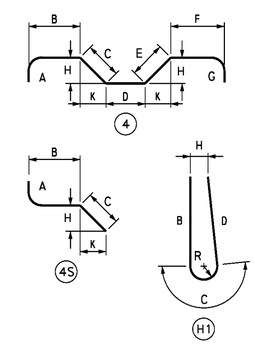

UNOFFICIAL WEBSITE COPY

DELAWARE DEPARTMENT OF TRANSPORTATION

ADDENDUMS / REVISIONS

SR1 / I-95 INTERCHANGE

CONTRACT	BRIDGE NO.
28-090-03	DESIGNED BY: R. F. KIRCHNER
COUNTY	CHECKED BY: J. S. LI
NEW CASTLE	

RETAINING WALL 2

MOMENT SLAB AND BARRIER REINFORCING

R2-3

SHEET NO. 539

TOTAL SHTS. 803

Steve_Lambert 10/29/2010 O:\20832687-XM\CAD\Bridge\vd02_RW-2_srf.dgn

DELAWARE DEPARTMENT OF TRANSPORTATION
AASHTO CLASSIFICATION OF SOILS AND SOIL-AGGREGATE MIXTURES

General Classification	Granular Materials (35% or Less Passing 0.075 mm)							Silt-Clay Materials (More than 35% Passing 0.075 mm)					Organic Soils
Group Classification: Group	A-1		A-3	A-2				A-4	A-5	A-6	A-7		A-8
Sub-Group	A-1-a	A-1-b		A-2-4	A-2-5	A-2-6	A-2-7				A-7-5	A-7-6	
Graphic	A	B			5		7				5		
Sieve Analysis, % Passing													
2.00 mm (No. 10)	50 Max	-	-	-	-	-	-	-	-	-	-	-	See Note 1
0.425 mm (No. 40)	30 Max	50 Max	51 Min	-	-	-	-	-	-	-	-	-	
0.075 mm (No. 200)	15 Max	25 Max	10 Max	35 Max	35 Max	35 Max	35 Max	36 Min	36 Min	36 Min	36 Min	36 Min	
Characteristics of Fraction	-		-	-	-	-	-	-	-	-	-	-	See Note 1
Passing 0.425 mm (No. 40)	-		-	-	-	-	-	-	-	-	-	-	
Liquid Limit	-		-	40 Max	41 Min	40 Max	41 Min	40 Max	41 Min	41 Max	41 Min	41 Min	
Plasticity Index	6 Max		NP	10 Max	10 Max	11 Min	11 Min	10 Max	10 Max	11 Min	11 Min	11 Min	
Usual Types of Significant Constituent Materials	Stone Fragments, Gravel and Sand		Fine Sand	Silty or Clayey Gravel and Sand				Silty Soils		Clayey Soils			Organic Soils

Plasticity Index of A-7-5 Subgroup Is Equal to or Less Than LL Minus 30

Plasticity Index of A-7-6 Subgroup Is Greater Than LL Minus 30

Note 1-Classification Based on Visual Inspection and not on Sieve Analysis or Atterberg Limits

SPT BORING

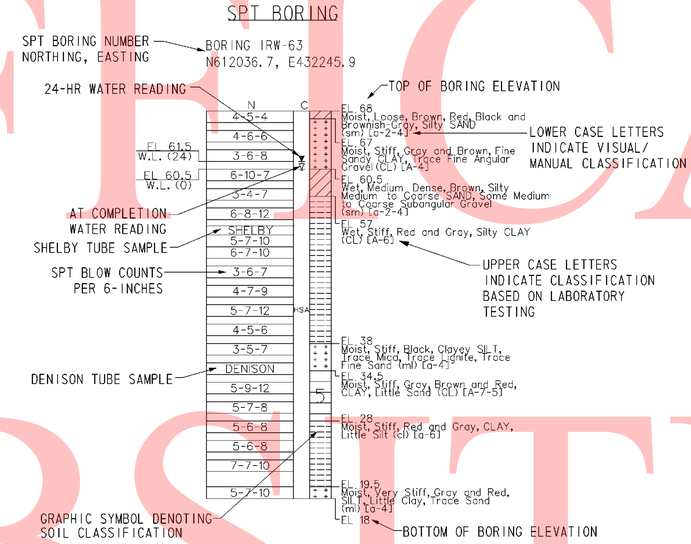

CPT PROBE

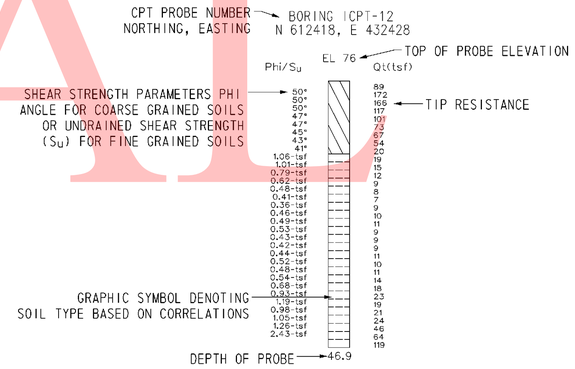

DMT PROBE

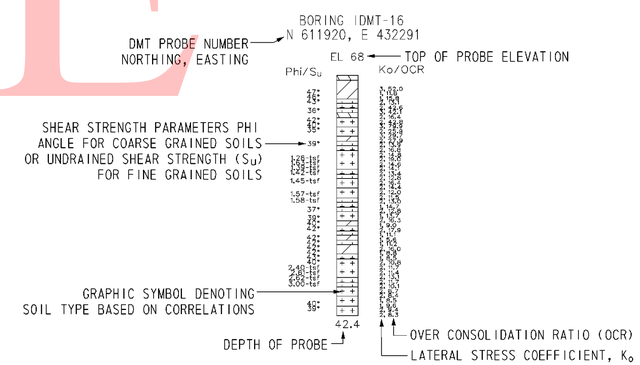

NOTES:

1. THE BORINGS AND DRIVE TEST WERE CONDUCTED IN MULTIPLE PHASES BY THE ROBERT B. BALTER COMPANY, THE WALTON CORPORATION, AND FINDLING, INC. BETWEEN AUGUST 2004 AND OCTOBER 2008.

2. THE SOIL SYMBOLS REFLECT ONLY THE MAJOR SOIL CONSTITUENT, FOR MORE COMPLETE SOIL CHARACTERISTIC REFER TO THE SOIL LOGS CONTAINED WITHIN THE FINAL FOUNDATION REPORTS DATED FEBRUARY 2009.

3. THE FIELD BORING LOGS RECORD SAMPLE SPOON RECOVERY. THE BORING LOGS AND LABORATORY TESTING RESUTS ARE AVAILABLE UPON REQUEST.

4. N = BLOWS ON A 2 INCH OD SAMPLING SPOON BY 140 LB DRIVE- WEIGHT FALLING 30 INCHES INDICATING SUCCESSIVE 6 INCH INCREMENTS OF PENETRATION. PENETRATIONS GREATER THAN 6-INCHES OR LESS THAN 6-INCHES ARE INDICATED BY WOH, WOR, OR THE DEPTH OF THE PENETRATION TO THE NEAREST INCH.

   WOH= STATIC WEIGHT OF SAMPLING SPOON DRIVE-WEIGHT ASSEMBLY, DRIVE-WEIGHT,ANVIL (WHEN AUTOMATIC HAMMER IS USED), DRILL ROD(S), AND SAMPLING SPOONS.

   WOR= STATIC WEIGHT OF DRILL ROD AND SAMPLING SPOON

5. FIELD BORINGS AND SOIL SAMPLING WERE PERFORMED IN ACCORDANCE TO AASHTO T-206, T-225 AND T-306.

6. USCS AND AASHTO DESIGNATIONS INDICATED IN UPPER CASE HAVE BEEN CONFIRMED USING LAB SOIL CLASSIFICATION TESTS. USCS AND AASHTO DESIGNATIONS INDICATED IN LOWER CASE ARE BASED ON VISUAL CLASSIFICATION TECHNIQUES ACCORDING TO ASTM D 2488 AND AASHTO M 145 BY RK&K GEOLOGIST OR ENGINEER.

7. CPT AND DMT PROBES WERE DRILLED BY IN-SITU SOIL TESTING, L.C AND CONETEC, INC.

   CPT = CONE PENETRATION TESTING
   DMT = FLAT- PLATE DILATOMETER

8. C= DEPTH OF HOLLOW STEM CONTINUOUS FLIGHT AUGER (HSA) WITH A 3-3/8 INCH ID, AND LIMIT OF MUD ROTARY (MD).

9. FOR BORING LOCATIONS, SEE CONSTRUCTION PLAN SHEETS 182 THROUGH 186.

10. FOR ADDITIONAL BORING & DRIVE TESTS SEE BORING & DRIVE TESTS SHEETS FOR OTHER STRUCTURES.

11. FOR ALL OTHER BORING & DRIVE TESTS SEE SHEETS 744 THROUGH 792.

12. FOR ADDITIONAL LABORATORY TEST RESULTS OF UNDISTURBED TUBE SAMPLES AND INDEX TESTING SEE, SHEETS 793 THROUGH 803.

13. FOR GROUNDWATER MONITORING DATA, SEE SHEET XXX OF XXX.

14. LL= LIQUID LIMIT

15. PL = PLASTIC LIMIT

16. PI = PLASTICITY INDEX

17. UC = UNCONFINED COMPRESSION

18. DS = DIRECT SHEAR

19. CONS = CONSOLIDATION

20. UU = UNCONSOLIDATED- UNDRAINED TRIAXIAL TEST

21. CIUC = CONSOLIDATED ISOTROPIC UNDRAINED COMPRESSION TRIAXIAL TEST

22. AASHTO = AMERICAN ASSOCIATION OF STATE HIGHWAY TRANSPORTATION OFFICIALS

UNOFFICIAL WEBSITE COPY

DELAWARE DEPARTMENT OF TRANSPORTATION	ADDENDUMS / REVISIONS	SR1 / I-95 INTERCHANGE	CONTRACT 28-090-03	BRIDGE NO.	RETAINING WALL 2 BORING NOTES & LEGEND	R2-4 SHEET NO. 540
			COUNTY NEW CASTLE	DESIGNED BY: JLT		TOTAL SHTS. 803
				CHECKED BY: EMK		

7/26/2010 11:11:51 AM
M:\PROJECTS\2003\03059_DELTRNPK\SR1MAIN\CADD\2809003\PLANS\B0029_R2_SR1.DGN

DATUM EL. -60.00

NOTES:

1. FOR BORING NOTES AND INFORMATION SEE SHEET NO. 540 OF 803.
2. FOR BORING LOCATIONS SEE CONSTRUCTION PLAN SHEETS.

UNOFFICAL WEBSITE COPY

DELAWARE DEPARTMENT OF TRANSPORTATION	ADDENDUMS / REVISIONS	SCALE 0 10 20 30 FEET	SR1 / I-95 INTERCHANGE	CONTRACT 28-090-03	BRIDGE NO.	RETAINING WALL 2 BORING & DRIVE TESTS	R2-5 SHEET NO.
				COUNTY NEW CASTLE	DESIGNED BY: JLT		541 TOTAL SHTS.
					CHECKED BY: EMK		803

3/3/2010 6:55:02 AM
M:\PROJECTS\2003\03059_DELTRNPK\SR1MALL\CADD\2809003\PLANS\B0030_R2_SR1.DGN

GENERAL NOTES

SPECIFICATIONS: PROPRIETARY MSE WALLS SHALL BE DESIGNED IN ACCORDANCE WITH THE FOLLOWING:
- AASHTO LRFD BRIDGE DESIGN SPECIFICATIONS, 4TH EDITION WITH ALL CURRENT REVISIONS.
- FEDERAL HIGHWAY ADMINISTRATION PUBLICATION NOS. FHWA-NHI-10-024 AND FHWA-NHI-025, "DESIGN AND CONSTRUCTION OF MECHANICALLY STABILIZED EARTH WALLS AND REINFORCED SOIL SLOPES", VOLUME I AND VOLUME II.

CONCRETE DESIGN SHALL BE PERFORMED USING THE LOAD AND RESISTANCE FACTOR DESIGN METHOD.

CONCRETE: ALL CONCRETE FOR ROADWAY BARRIERS SHALL BE 4,500 PSI. LEVELING PAD CONCRETE SHALL BE 3,500 PSI. MIX REQUIREMENTS SHALL CONFORM TO SECTION 812 OF THE DELAWARE DEPARTMENT OF TRANSPORTATION STANDARD SPECIFICATIONS.

CHAMFERS: ALL EXPOSED CORNERS OF CONCRETE SHALL BE CHAMFERED WITH ¾" x ¾" MILLED CHAMFER STRIPS, UNLESS OTHERWISE NOTED, EXCEPT ON UNEXPOSED FOOTINGS OR WHERE INDICATED BY THE FOLLOWING NOTATION ON THE PLANS: "DO NOT CHAMFER".

REINFORCING STEEL: REINFORCING STEEL SHALL CONFORM TO ASTM A 615, GRADE 60. ALL SPLICES, NOT SHOWN, SHALL BE LAPPED AS PER THE LRFD BRIDGE DESIGN SPECIFICATIONS. MINIMUM COVER FOR ANY BAR SHALL BE 2" UNLESS OTHERWISE NOTED.

FOR TIES AND STIRRUPS, STANDARD ACI BENDING TOLERANCES ARE MODIFIED TO PLUS (+) ZERO INCHES, MINUS (-) NORMAL ACI BENDING TOLERANCE.

ONLY GRADE 60 CAN BE USED ON THIS PROJECT.

ALL REINFORCING STEEL IN THE BARRIER SHALL BE EPOXY COATED, AND SHALL CONFORM TO ASTM D3936.

ALL KEYS ARE NOMINAL SIZE.

THE MSE WALL MANUFACTURER MAY SUBSTITUTE ALTERNATE REINFORCING CONFIGURATIONS AND SUBMIT FOR APPROVAL.

EXPANSION AND CONTRACTION JOINTS: THE LOCATION OF THE EXPANSION AND CONTRACTION JOINTS IN THE BARRIER SHOWN ON THE PLANS MAY BE ADJUSTED TO ACCOMMODATE THE PANEL TYPE USED IN THE PROJECT. ANY CHANGE TO THESE JOINT LOCATIONS SHALL BE SUBMITTED TO THE ENGINEER FOR APPROVAL.

LEVELING PAD: THE PROPRIETARY WALL MANUFACTURER MAY RELOCATE THE LEVELING PAD STEPS AT THEIR DISCRETION PROVIDED THAT THE MINIMUM EMBEDMENT IS MAINTAINED. ANY CHANGE TO THE STEP LOCATIONS SHALL BE SUBMITTED TO THE ENGINEER FOR APPROVAL.

ROADWAY LIMITS: THE PROPRIETARY WALL MANUFACTURER SHALL ASSURE THAT PROPOSED PROPRIETARY WALL COMPONENTS ARE POSITIONED SUCH THAT THE DESIGNATED ROADWAY LIMITS ARE NOT ENCROACHED UPON.

TRAFFIC BARRIER JOINTS: TRAFFIC BARRIER FOOTING SHALL HAVE CONSTRUCTION JOINTS TO COINCIDE WITH THE BARRIER JOINTS.

COORDINATION: CONTRACTOR AND PROPRIETARY WALL MANUFACTURER SHALL COORDINATE LOCATIONS OF INLETS AND PIPES WITH LOCATIONS OF PROPRIETARY WALL TIE BACK SYSTEM.

ARCHITECTURAL FINISH: THE MSE WALL PANELS SHALL RECEIVE AN ARCHITECTURAL FINISH.

SERVICE LIFE: ALL RETAINING WALL COMPONENTS SHALL BE DESIGNED FOR A MINIMUM SERVICE LIFE OF 100 YEARS.

WALL SYSTEM: ONLY ONE MSE WALL SYSTEM MAY BE USED ON THIS PROJECT.

ROADWAY SUPERELEVATION: FOR ROADWAY SUPERELEVATION, SEE SUPERELEVATION TABLES.

MSE WALL BACKFILL: MSE WALL BACKFILL SHALL CONSIST OF SPECIFIED BACKFILL.

SOIL PROPERTIES

SOIL TYPE	UNIT WEIGHT (PCF)	DRAINED ANGLE OF FRICTION (DEGREES)	UNDRAINED SHEAR (PSF)
SELECT FILL	125	34	-
LWEF	40	38	-
NO. 57 STONE	105	38	-
FOUNDATION SOIL	105	28	1250

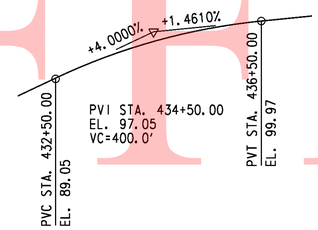

RAMP B
VERTICAL CURVE DATA

NOT TO SCALE

PI STA. 432+05.12
Δ = 49°15'06.54" RT
Dc = 3°08'22.18"
R = 1,825.0000'
T = 836.55'
L = 1,568.78'

RAMP B
HORIZONTAL CURVE NO. 18 DATA

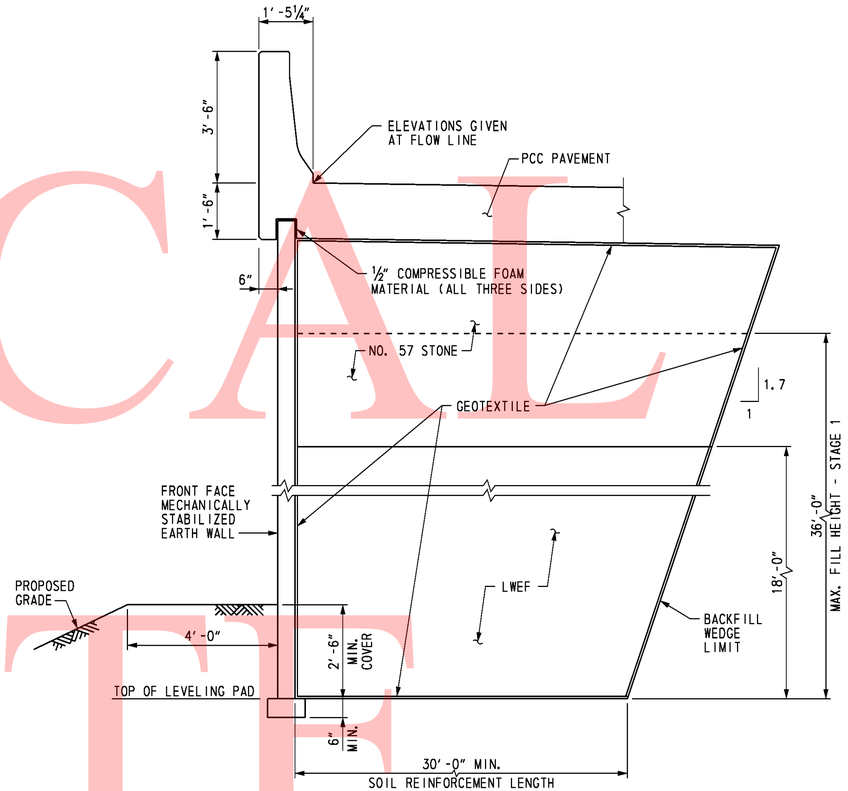

TYPICAL SECTION

SCALE: ½" = 1'-0"

FOUNDATION NOTES:

THE FACTORED BEARING RESISTANCE SHALL BE VERIFIED PRIOR TO CONSTRUCTION OF THE MSE WALL.

THE INTERNAL STABILITY OF THE MSE WALL SHALL BE DESIGNED BY THE CONTRACTOR USING THE SOIL PARAMETERS PROVIDED FOR EACH STRUCTURE LOCATION. THE INTERNAL STABILITY CALCULATIONS SHOULD BE SIGNED AND SEALED BY A PROFESSIONAL ENGINEER LICENSED IN THE STATE OF DELAWARE AS INDICATED IN THE PROJECT SPECIFICATIONS.

ISOLATED AREAS OF UNDERCUTTING OF EXISTING FILL MAY BE ENCOUNTERED DURING CONSTRUCTION OF THIS RETAINING WALL.

A QUARANTINE PERIOD OF APPROXIMATELY THIRTY (30) DAYS IS REQUIRED AFTER CONSTRUCTION OF THE FULL HEIGHT OF THE MSE WALL IS ACHIEVED. THE ENGINEER SHALL APPROVE THE COMPLETION OF THE QUARANTINE PERIOD PRIOR TO CONSTRUCTION OF ANY PAVEMENT OR BARRIER. A TOTAL ESTIMTED SETTLEMENT OF APPROXIMATELY FOUR (4) INCHES IS ANTICIPATED.

UNOFFICAL WEBSITE COPY

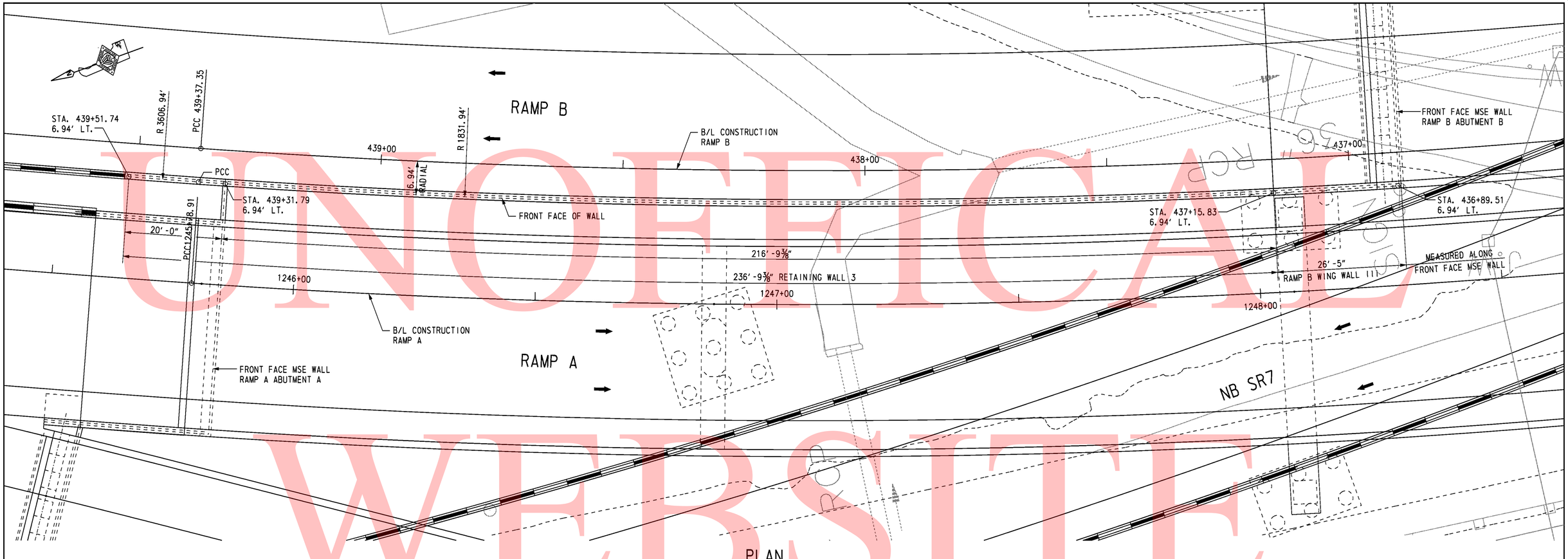

PLAN

SCALE: 1" = 10'-0"

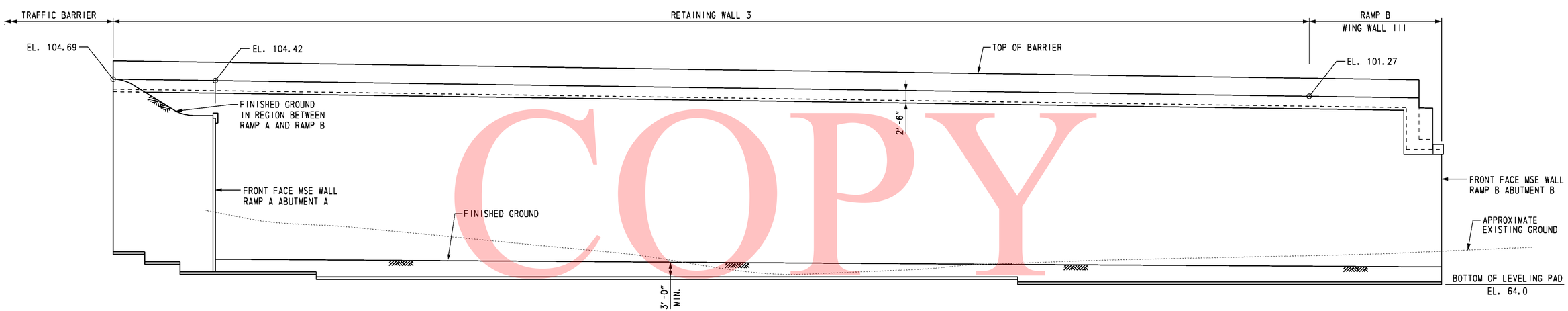

DEVELOPED ELEVATION

SCALE: 1" = 10'-0"

CROSS REFERENCE NOTES:

1. FOR GENERAL NOTES, SEE DWG. R3-1.
2. FOR TYPICAL WALL SECTION, SEE DWG. R3-1.

UNOFFICIAL WEBSITE COPY

DELAWARE DEPARTMENT OF TRANSPORTATION	ADDENDUMS / REVISIONS	SR1 / I-95 INTERCHANGE	CONTRACT 28-090-03	BRIDGE NO.	RETAINING WALL 3 PLAN AND ELEVATION	R3-2 SHEET NO. 543
			COUNTY NEW CASTLE	DESIGNED BY: R. F. KIRCHNER		TOTAL SHTS. 803
				CHECKED BY: G. P. MISTRY		

O:\20832687-XM\CAD\Bridge\pc01_RW-3_sr1.dgn 10/29/2010 Steve_Lambert

SUMMARY OF LABORATORY TEST RESULTS OF TUBE SAMPLES

BORING NO.	TOP SAMPLE DEPTH (FT)	NATURAL MOISTURE CONTENT (%)	LL	PL	PI	PERCENT PASSING NO. 200	AASHTO	UNDISTURBED TUBE TESTING	TOTAL UNIT WEIGHT (pcf)	UNCONFINED COMPRESSION (psf)	TOTAL STRESS COHESION (psf)	TOTAL STRESS FRICTION ANGLE (deg)	EFFECTIVE STRESS COHESION (psf)	EFFECTIVE STRESS FRICTION ANGLE (deg)	UNDRAINED SHEAR (psf)	INITIAL VOID RATIO	PRECONSOLIDATION STRESS MAX (psf)	PRECONSOLIDATION STRESS MIN (psf)	C_c	C_r	pH	RESISTIVITY (ohm-cm)
URS-4	22.0	34.7	53	28	25	99.8	A-7-6(30)	CONS	123.9	-	-	-	-	-	-	0.85	6200	3560	0.25	0.09	-	-
URS-4	35.0	26.9	-	-	-	-	-	CONS	131.2	-	-	-	-	-	-	0.46	2240	2020	0.20	0.06	-	-

UNOFFICAL WEBSITE COPY

DELAWARE DEPARTMENT OF TRANSPORTATION
AASHTO CLASSIFICATION OF SOILS AND SOIL-AGGREGATE MIXTURES

General Classification	Granular Materials (35% or Less Passing 0.075 mm)							Silt-Clay Materials (More than 35% Passing 0.075 mm)					Organic Soils
Group Classification: Group	A-1		A-3	A-2				A-4	A-5	A-6	A-7		A-8
Sub-Group	A-1-a	A-1-b		A-2-4	A-2-5	A-2-6	A-2-7				A-7-5	A-7-6	
Graphic	A	B			5		7				5		
Sieve Analysis, % Passing													
2.00 mm (No. 10)	50 Max	-	-	-	-	-	-	-	-	-	-	-	See Note 1
0.425 mm (No. 40)	30 Max	50 Max	51 Min	-	-	-	-	-	-	-	-	-	
0.075 mm (No. 200)	15 Max	25 Max	10 Max	35 Max	35 Max	35 Max	35 Max	36 Min	36 Min	36 Min	36 Min	36 Min	
Characteristics of Fraction	-		-	-	-	-	-	-	-	-	-	-	See Note 1
Passing 0.425 mm (No. 40)	-		-	-	-	-	-	-	-	-	-	-	
Liquid Limit	-		-	40 Max	41 Min	40 Max	41 Min	40 Max	41 Min	41 Max	41 Min	41 Min	
Plasticity Index	6 Max		NP	10 Max	10 Max	11 Min	11 Min	10 Max	10 Max	11 Min	11 Min	11 Min	
Usual Types of Significant Constituent Materials	Stone Fragments, Gravel and Sand		Fine Sand	Silty or Clayey Gravel and Sand				Silty Soils		Clayey Soils			Organic Soils

Plasticity Index of A-7-5 Subgroup Is Equal to or Less Than LL Minus 30

Plasticity Index of A-7-6 Subgroup Is Greater Than LL Minus 30

Note 1-Classification Based on Visual Inspection and not on Sieve Analysis or Atterberg Limits

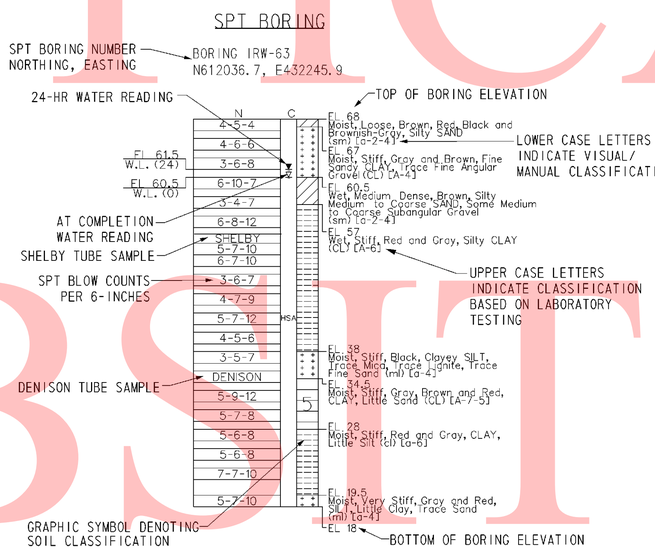

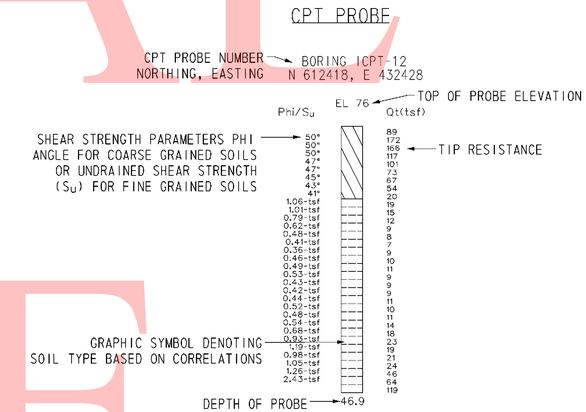

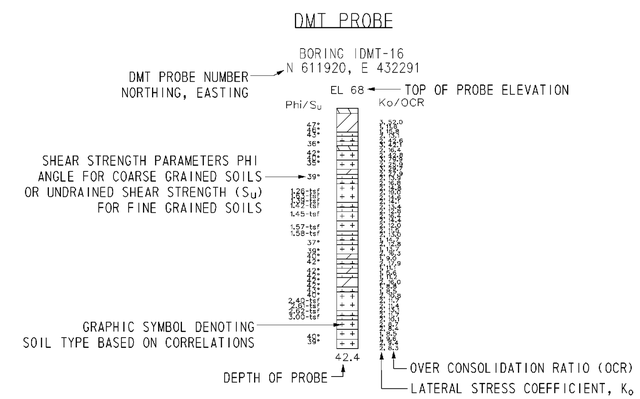

NOTES:

1. THE BORINGS AND DRIVE TEST WERE CONDUCTED IN MULTIPLE PHASES BY THE ROBERT B. BALTER COMPANY, THE WALTON CORPORATION, AND FINDLING, INC. BETWEEN AUGUST 2004 AND OCTOBER 2008.

2. THE SOIL SYMBOLS REFLECT ONLY THE MAJOR SOIL CONSTITUENT, FOR MORE COMPLETE SOIL CHARACTERISTIC REFER TO THE SOIL LOGS CONTAINED WITHIN THE FINAL FOUNDATION REPORTS DATED FEBRUARY 2009.

3. THE FIELD BORING LOGS RECORD SAMPLE SPOON RECOVERY. THE BORING LOGS AND LABORATORY TESTING RESUTS ARE AVAILABLE UPON REQUEST.

4. N = BLOWS ON A 2 INCH OD SAMPLING SPOON BY 140 LB DRIVE- WEIGHT FALLING 30 INCHES INDICATING SUCCESSIVE 6 INCH INCREMENTS OF PENETRATION. PENETRATIONS GREATER THAN 6-INCHES OR LESS THAN 6-INCHES ARE INDICATED BY WOH, WOR, OR THE DEPTH OF THE PENETRATION TO THE NEAREST INCH.

   WOH= STATIC WEIGHT OF SAMPLING SPOON DRIVE-WEIGHT ASSEMBLY, DRIVE-WEIGHT,ANVIL (WHEN AUTOMATIC HAMMER IS USED), DRILL ROD(S), AND SAMPLING SPOONS.

   WOR= STATIC WEIGHT OF DRILL ROD AND SAMPLING SPOON

5. FIELD BORINGS AND SOIL SAMPLING WERE PERFORMED IN ACCORDANCE TO AASHTO T-206, T-225 AND T-306.

6. USCS AND AASHTO DESIGNATIONS INDICATED IN UPPER CASE HAVE BEEN CONFIRMED USING LAB SOIL CLASSIFICATION TESTS. USCS AND AASHTO DESIGNATIONS INDICATED IN LOWER CASE ARE BASED ON VISUAL CLASSIFICATION TECHNIQUES ACCORDING TO ASTM D 2488 AND AASHTO M 145 BY RK&K GEOLOGIST OR ENGINEER.

7. CPT AND DMT PROBES WERE DRILLED BY IN-SITU SOIL TESTING, L.C AND CONETEC, INC.

   CPT = CONE PENETRATION TESTING
   DMT = FLAT- PLATE DILATOMETER

8. C= DEPTH OF HOLLOW STEM CONTINUOUS FLIGHT AUGER (HSA) WITH A 3-3/8 INCH ID, AND LIMIT OF MUD ROTARY (MD).

9. FOR BORING LOCATIONS, SEE CONSTRUCTION PLAN SHEETS 182 THROUGH 186.

10. FOR ADDITIONAL BORING & DRIVE TESTS SEE BORING & DRIVE TESTS SHEETS FOR OTHER STRUCTURES.

11. FOR ALL OTHER BORING & DRIVE TESTS SEE SHEETS 744 THROUGH 792.

12. FOR ADDITIONAL LABORATORY TEST RESULTS OF UNDISTURBED TUBE SAMPLES AND INDEX TESTING SEE, SHEETS 793 THROUGH 803.

13. FOR GROUNDWATER MONITORING DATA, SEE SHEET XXX OF XXX.

14. LL= LIQUID LIMIT

15. PL = PLASTIC LIMIT

16. PI = PLASTICITY INDEX

17. UC = UNCONFINED COMPRESSION

18. DS = DIRECT SHEAR

19. CONS = CONSOLIDATION

20. UU = UNCONSOLIDATED- UNDRAINED TRIAXIAL TEST

21. CIUC = CONSOLIDATED ISOTROPIC UNDRAINED COMPRESSION TRIAXIAL TEST

22. AASHTO = AMERICAN ASSOCIATION OF STATE HIGHWAY TRANSPORTATION OFFICIALS

UNOFFICAL WEBSITE COPY

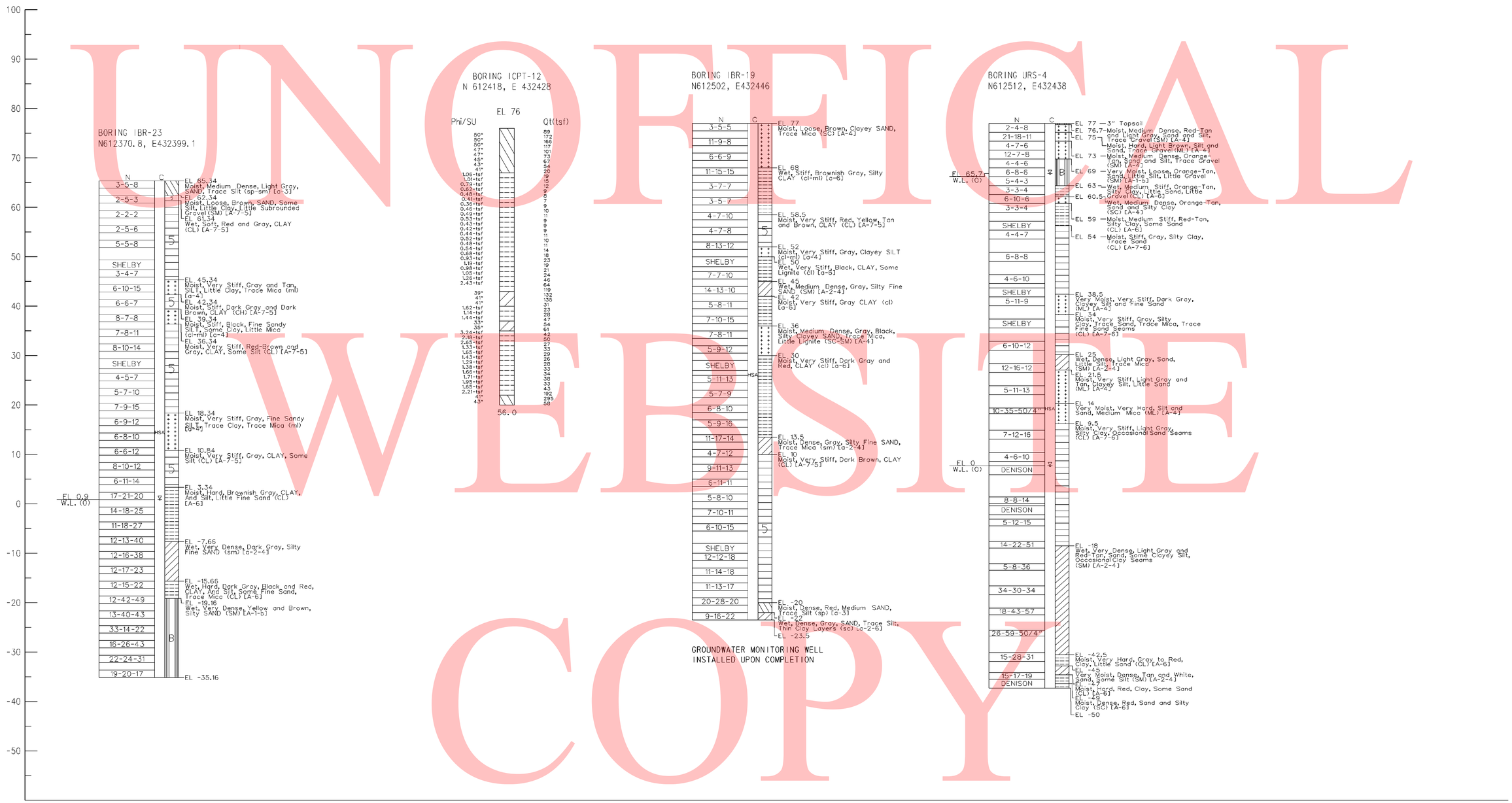

DATUM EL. -60.00

NOTES:

1. FOR BORING NOTES AND INFORMATION SEE SHEET NO. 544 OF 803.
2. FOR BORING LOCATIONS SEE CONSTRUCTION PLAN SHEETS.

3/3/2010 7:12:54 AM
M:\PROJECTS\2003\03059_DELTRNPK\SRIMALL\CADD\2809003\PLANS\B0032_R3_SR1.DGN

DELAWARE DEPARTMENT OF TRANSPORTATION	ADDENDUMS / REVISIONS	SCALE 0 10 20 30 FEET	SR1 / I-95 INTERCHANGE	CONTRACT 28-090-03	BRIDGE NO.	RETAINING WALL 3 BORING & DRIVE TESTS	R3-4
				COUNTY NEW CASTLE	DESIGNED BY: JLT		SHEET NO. 545
					CHECKED BY: EMK		TOTAL SHTS. 803

GENERAL NOTES

SPECIFICATIONS: PROPRIETARY MSE WALLS SHALL BE DESIGNED IN ACCORDANCE WITH THE FOLLOWING:
- AASHTO LRFD BRIDGE DESIGN SPECIFICATIONS, 4TH EDITION WITH ALL CURRENT REVISIONS.
- FEDERAL HIGHWAY ADMINISTRATION PUBLICATION NO. FHWA-NHI-00-043, "MECHANICALLY STABILIZED EARTH WALLS AND REINFORCED SOIL SLOPES DESIGN AND CONSTRUCTION GUIDELINES"

CONCRETE: CONCRETE DESIGN SHALL BE PERFORMED USING THE LOAD AND RESISTANCE FACTOR DESIGN METHOD.

COPING CONCRETE SHALL BE 3500 PSI. MIX REQUIREMENTS SHALL CONFORM TO SECTION 812 OF THE DELAWARE DEPARTMENT OF TRANSPORTATION STANDARD SPECIFICATIONS.

CHAMFERS: ALL EXPOSED CORNERS OF CONCRETE SHALL BE CHAMFERED WITH ¾" x ¾" MILLED CHAMFER STRIPS, UNLESS OTHERWISE NOTED EXCEPT ON UNEXPOSED FOOTINGS OR WHERE INDICATED BY THE FOLLOWING NOTATION ON THE PLANS: "DO NOT CHAMFER".

REINFORCING STEEL: REINFORCING STEEL SHALL CONFORM TO ASTM A 615, GRADE 60. MINIMUM COVER FOR ANY BAR SHALL BE 2" UNLESS OTHERWISE NOTED.

FOR TIES AND STIRRUPS, STANDARD ACI BENDING TOLERANCES ARE MODIFIED TO PLUS (+) ZERO INCHES, MINUS (-) NORMAL ACI BENDING TOLERANCE.

ONLY GRADE 60 CAN BE USED ON THIS PROJECT.

ALL REINFORCING STEEL IN THE COPING SHALL BE EPOXY COATED.

ALL KEYS ARE NOMINAL SIZE.

THE MSE WALL MANUFACTURER MAY SUBSTITUTE ALTERNATE REINFORCING CONFIGURATIONS AND SUBMIT FOR APPROVAL.

EXPANSION AND CONTRACTION JOINTS: THE LOCATION OF THE EXPANSION AND CONTRACTION JOINTS IN THE COPING SHOWN ON THE PLANS MAY BE ADJUSTED TO ACCOMMODATE THE PANEL TYPE USED IN THE PROJECT. ANY CHANGE TO THESE JOINT LOCATIONS SHALL BE SUBMITTED TO THE ENGINEER FOR APPROVAL. EXPANSION JOINTS ARE LABELED "EJ".

LEVELING PAD: THE PROPRIETARY WALL MANUFACTURER MAY RELOCATE THE LEVELING PAD STEPS AT THEIR DISCRETION PROVIDED THAT THE MINIMUM EMBEDMENT IS MAINTAINED. ANY CHANGE TO THE STEP LOCATIONS SHALL BE SUBMITTED TO THE ENGINEER FOR APPROVAL.

ROADWAY LIMITS: THE PROPRIETARY WALL MANUFACTURER SHALL ASSURE THAT PROPOSED PROPRIETARY WALL COMPONENTS ARE POSITIONED SUCH THAT THE DESIGNATED ROADWAY LIMITS ARE NOT ENCROACHED UPON.

COPING JOINTS: COPING SHALL HAVE CONSTRUCTION JOINTS.

COORDINATION: CONTRACTOR AND PROPRIETARY WALL MANUFACTURER SHALL COORDINATE LOCATIONS OF INLETS AND PIPES WITH LOCATIONS OF PROPRIETARY WALL TIEBACK SYSTEM.

ARCHITECTURAL FINISH: THE MSE WALL PANELS SHALL RECEIVE AN ARCHITECTURAL FINISH.

SERVICE LIFE: ALL RETAINING WALL COMPONENTS SHALL BE DESIGNED FOR A MINIMUM SERVICE LIFE OF 75 YEARS.

WALL SYSTEM: ONLY ONE MSE WALL SYSTEM MAY BE USED ON THIS PROJECT.

ROADWAY SUPERELEVATION: FOR ROADWAY SUPERELEVATION, SEE SUPERELEVATION TABLES.

MSE WALL BACKFILL: MSE WALL BACKFILL SHALL CONSIST OF SPECIFIED BACKFILL.

PAY ITEMS: MECHANICALLY STABILIZED EARTH WALLS (602772)
PCC MASONRY FOR MSE WALLS (602773)
BAR REINFORCEMENT, EPOXY COATED (604000)

FOUNDATION NOTES

THE FACTORED BEARING RESISTANCE SHALL BE VERIFIED PRIOR TO CONSTRUCTION OF THE MSE WALL.

THE INTERNAL STABILITY OF THE MSE WALL SHALL BE DESIGNED BY THE CONTRACTOR USING THE SOIL PARAMETERS PROVIDED. THE INTERNAL STABILITY SHOULD BE SIGNED AND SEALED BY A PROFESSIONAL ENGINEER LICENSED IN THE STATE OF DELAWARE AS INDICATED IN THE PROJECT SPECIFICATIONS. THE FACTORED APPLIED BEARING STRESS SHALL NOT EXCEED THE FACTORED BEARING RESISTANCE.

ISOLATED AREAS OF UNDERCUTTING OF SOFT SOIL OR EXISTING FILL MAY BE ENCOUNTERED DURING CONSTRUCTION OF THIS RETAINING WALL.

GROUNDWATER MAY BE ENCOUNTERED DURING EXCAVATION TO THE LEVELING PAD AND DURING CONSTRUCTION OF THIS RETAINING WALL. IT IS THE CONTRACTOR'S RESPONSIBILITY TO PROVIDE A RELATIVELY DRY EXCAVATION, INCLUDING DETERMINING APPROPRIATE DEWATERING METHODS DURING CONSTRUCTION.

A QUARANTINE PERIOD OF APPROXIMATELY 30-DAYS IS REQUIRED AFTER CONSTRUCTION OF THE FULL HEIGHT OF THE MSE WALL IS ACHIEVED. THE ENGINEER SHALL APPROVE THE COMPLETION OF THE QUARANTINE PERIOD PRIOR TO CONSTRUCTION OF ANY COPING.

THE DESIGN UNIT WEIGHT INDICATED IN SOIL PROPERTIES TABLE HAS BEEN ADJUSTED DUE TO THE PRESENCE OF SHALLOW GROUNDWATER.

SOIL PROPERTIES FOR DESIGN

SOIL TYPE	UNIT WEIGHT (PCF)	ANGLE OF FRICTION (DEGREES)
SELECT FILL	125	34
NO. 57 STONE	105	38
FOUNDATION SOIL	68	24

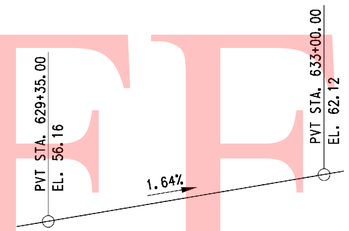

SR7 (NB) VERTICAL CURVE DATA

NO SCALE

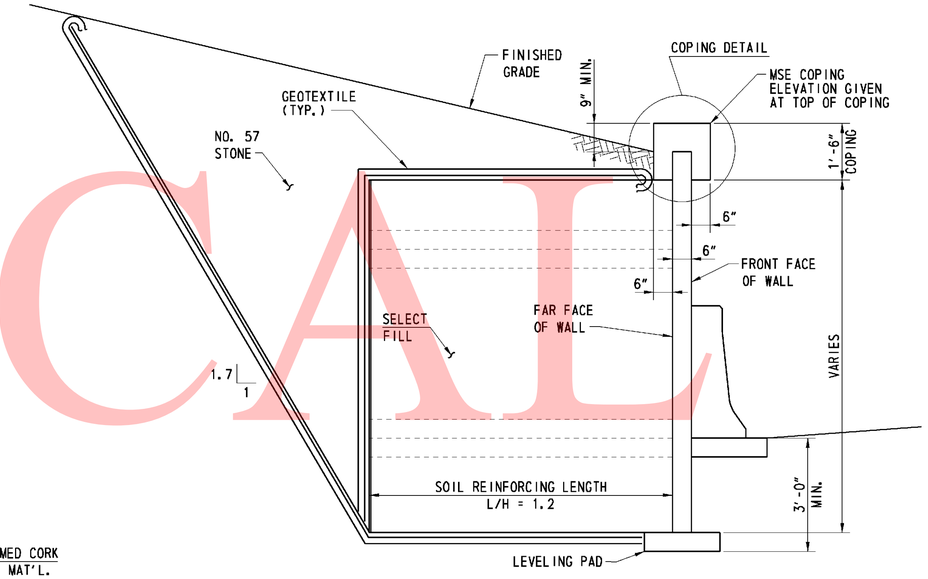

TYPICAL SECTION

(LOOKING AHEAD STATION)
SCALE: ½" = 1'-0"

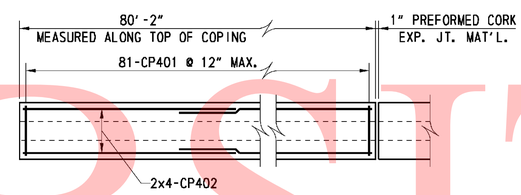

TYPE 1 PANEL (1 REQUIRED)

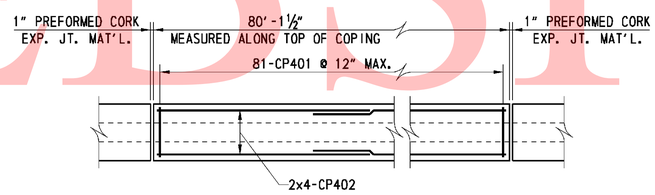

TYPE 2 PANEL (2 REQUIRED)

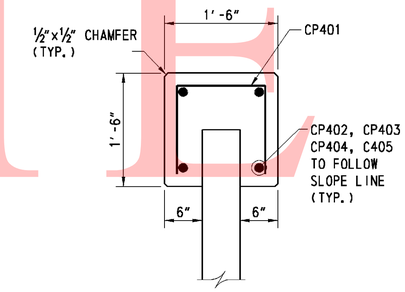

COPING DETAIL

SCALE: 1" = 1'-0"

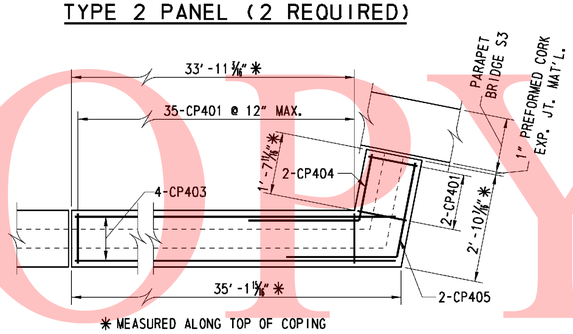

TYPE 3 PANEL (1 REQUIRED)

COPING REINFORCING PLANS

SCALE: ½" = 1'-0"

	SPECIFICATIONS					BENDING DIMENSIONS (FEET-INCHES /QUARTER INCH)						
	QTY.	SIZE	LENGTH	MARK	TYPE	A	B	C	D	H	K	O
COPING	280	4	3-6	CP401	17		1-2	1-2	1-2			
	24	4	41-4 1/2	CP402	STR							
	4	4	34-9 15/16	CP403	STR							
	2	4	4-6 3/4	CP404	12	0	0	2-11	1-7 3/4	1-7 3/8	0-3 7/8	3-2 7/8
	2	4	5-5 7/16	CP405	12	0	0	2-11	2-6 7/16	2-5 7/8	0-6	3-5

SEE SHEET R7-07 FOR BAR BEND NOTES

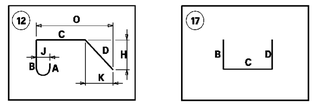

0 1 4
½ 2
SCALE: ½" = 1'-0"

0 1
½ 2
SCALE: 1" = 1'-0"

UNOFFICIAL WEBSITE COPY

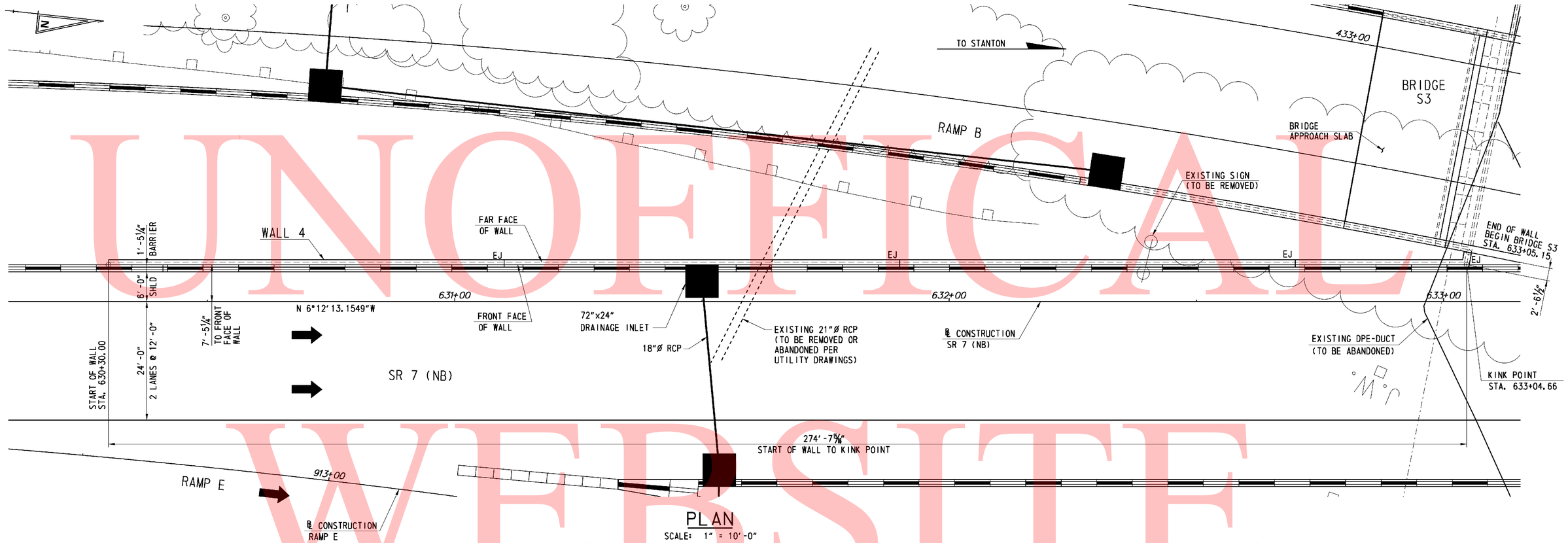

PLAN

SCALE: 1" = 10'-0"

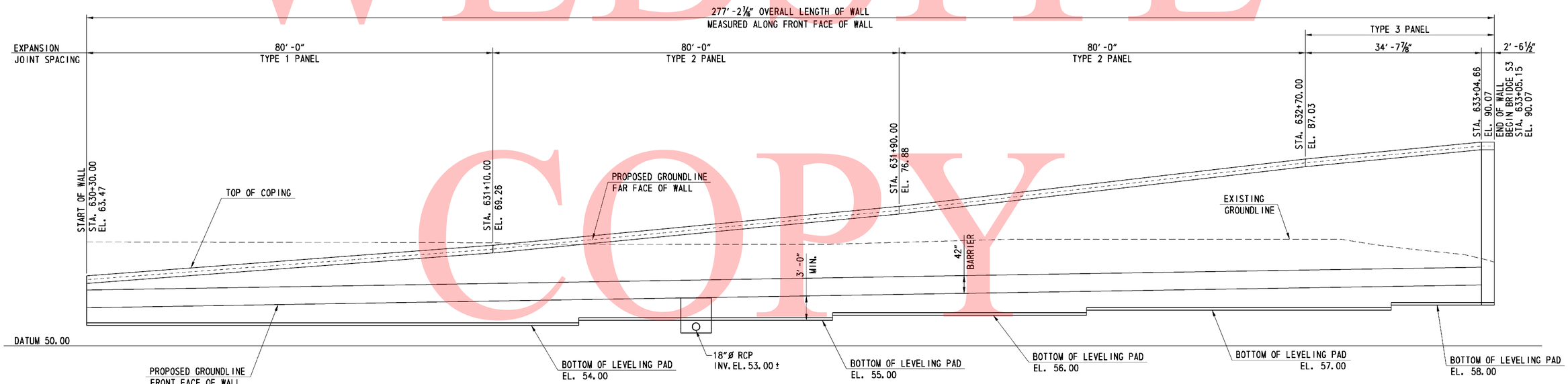

ELEVATION

SCALE: 1" = 10'-0"

0 10 20 30

SCALE: 1"= 10'-0"

UNOFFICIAL WEBSITE COPY

9/8/2010 9:31:02 AM
M:\PROJECTS\2003\03059_DELTRNPK\SRIMALL\CADD\2809003\PLANS\RD02_WALL-04_SR1.DGN

DELAWARE DEPARTMENT OF TRANSPORTATION	ADDENDUMS / REVISIONS	SR1 / I-95 INTERCHANGE	CONTRACT 28-090-03	BRIDGE NO.	RETAINING WALL 4 GENERAL PLAN AND ELEVATION	R4-02
			COUNTY NEW CASTLE	DESIGNED BY: JMS		SHEET NO. 547
				CHECKED BY: JSW		TOTAL SHTS. 803

SUMMARY OF LABORATORY TEST RESULTS OF TUBE SAMPLES

BORING NO.	TOP SAMPLE DEPTH (FT)	NATURAL MOISTURE CONTENT (%)	LL	PL	PI	PERCENT PASSING NO. 200	AASHTO	UNDISTURBED TUBE TESTING	TOTAL UNIT WEIGHT (pcf)	UNCONFINED COMPRESSION (psf)	TOTAL STRESS COHESION (psf)	TOTAL STRESS FRICTION ANGLE (deg)	EFFECTIVE STRESS COHESION (psf)	EFFECTIVE STRESS FRICTION ANGLE (deg)	UNDRAINED SHEAR (psf)	INITIAL VOID RATIO	PRECONSOLIDATION STRESS MAX (psf)	PRECONSOLIDATION STRESS MIN (psf)	C_c	C_r	pH	RESISTIVITY (ohm-cm)
IBR-08	29.0	29.1	53	27	26	100.0	A-7-5	UC	125.4	2650	-	-	-	-	1325	-	-	-	-	-	-	-
IBR-08	29.0	20.8	-	-	-	-	-	DS	129.5	-	985	11.18	-	-	-	-	-	-	-	-	-	-

DELAWARE DEPARTMENT OF TRANSPORTATION
AASHTO CLASSIFICATION OF SOILS AND SOIL-AGGREGATE MIXTURES

General Classification	Granular Materials (35% or Less Passing 0.075 mm)							Silt-Clay Materials (More than 35% Passing 0.075 mm)					Organic Soils
Group Classification: Group	A-1		A-3	A-2				A-4	A-5	A-6	A-7		A-8
Sub-Group	A-1-a	A-1-b		A-2-4	A-2-5	A-2-6	A-2-7				A-7-5	A-7-6	
Graphic	A	B			5		7				5		
Sieve Analysis, % Passing													
2.00 mm (No. 10)	50 Max	-	-	-	-	-	-	-	-	-	-	-	See Note 1
0.425 mm (No. 40)	30 Max	50 Max	51 Min	-	-	-	-	-	-	-	-	-	
0.075 mm (No. 200)	15 Max	25 Max	10 Max	35 Max	35 Max	35 Max	35 Max	36 Min	36 Min	36 Min	36 Min	36 Min	
Characteristics of Fraction Passing 0.425 mm (No. 40)													
Liquid Limit	-		-	40 Max	41 Min	40 Max	41 Min	40 Max	41 Min	41 Max	41 Min	41 Min	See Note 1
Plasticity Index	6 Max		NP	10 Max	10 Max	11 Min	11 Min	10 Max	10 Max	11 Min	11 Min	11 Min	
Usual Types of Significant Constituent Materials	Stone Fragments, Gravel and Sand		Fine Sand	Silty or Clayey Gravel and Sand				Silty Soils		Clayey Soils			Organic Soils

Plasticity Index of A-7-5 Subgroup Is Equal to or Less Than LL Minus 30

Plasticity Index of A-7-6 Subgroup Is Greater Than LL Minus 30

Note 1-Classification Based on Visual Inspection and not on Sieve Analysis or Atterberg Limits

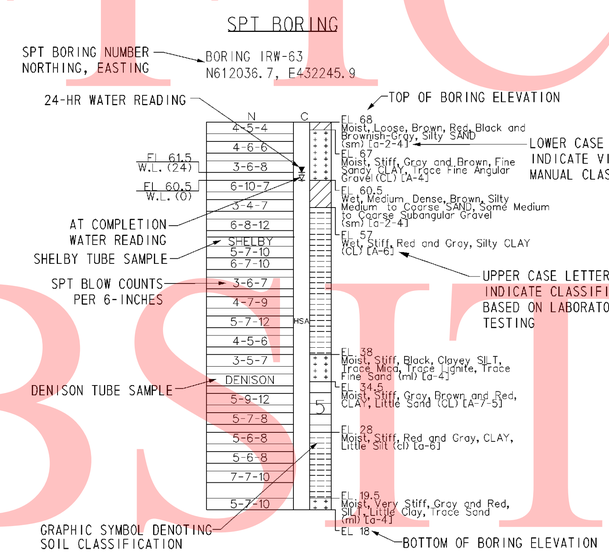

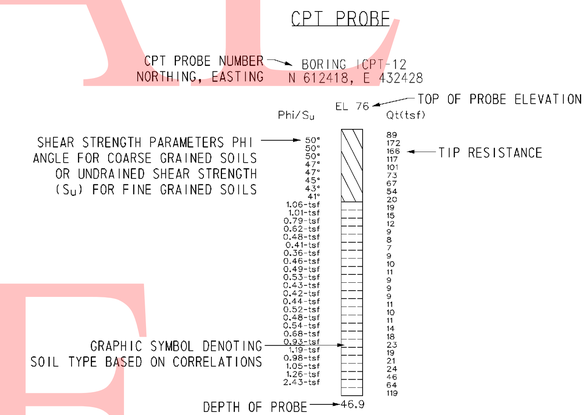

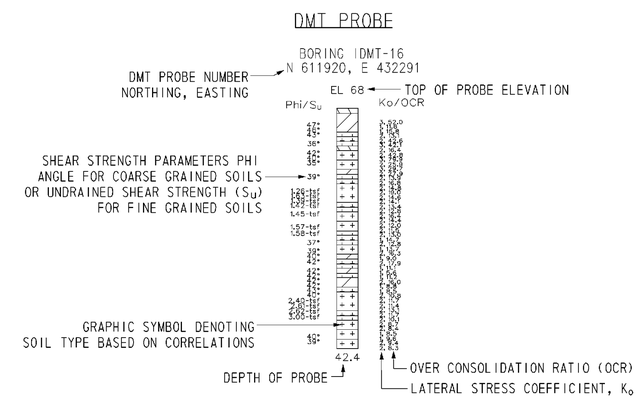

NOTES:

1. THE BORINGS AND DRIVE TEST WERE CONDUCTED IN MULTIPLE PHASES BY THE ROBERT B. BALTER COMPANY, THE WALTON CORPORATION, AND FINDLING, INC. BETWEEN AUGUST 2004 AND OCTOBER 2008.

2. THE SOIL SYMBOLS REFLECT ONLY THE MAJOR SOIL CONSTITUENT, FOR MORE COMPLETE SOIL CHARACTERISTIC REFER TO THE SOIL LOGS CONTAINED WITHIN THE FINAL FOUNDATION REPORTS DATED FEBRUARY 2009.

3. THE FIELD BORING LOGS RECORD SAMPLE SPOON RECOVERY. THE BORING LOGS AND LABORATORY TESTING RESUTS ARE AVAILABLE UPON REQUEST.

4. N = BLOWS ON A 2 INCH OD SAMPLING SPOON BY 140 LB DRIVE- WEIGHT FALLING 30 INCHES INDICATING SUCCESSIVE 6 INCH INCREMENTS OF PENETRATION. PENETRATIONS GREATER THAN 6-INCHES OR LESS THAN 6-INCHES ARE INDICATED BY WOH, WOR, OR THE DEPTH OF THE PENETRATION TO THE NEAREST INCH.

   WOH= STATIC WEIGHT OF SAMPLING SPOON DRIVE-WEIGHT ASSEMBLY, DRIVE-WEIGHT,ANVIL (WHEN AUTOMATIC HAMMER IS USED), DRILL ROD(S), AND SAMPLING SPOONS.

   WOR= STATIC WEIGHT OF DRILL ROD AND SAMPLING SPOON

5. FIELD BORINGS AND SOIL SAMPLING WERE PERFORMED IN ACCORDANCE TO AASHTO T-206, T-225 AND T-306.

6. USCS AND AASHTO DESIGNATIONS INDICATED IN UPPER CASE HAVE BEEN CONFIRMED USING LAB SOIL CLASSIFICATION TESTS. USCS AND AASHTO DESIGNATIONS INDICATED IN LOWER CASE ARE BASED ON VISUAL CLASSIFICATION TECHNIQUES ACCORDING TO ASTM D 2488 AND AASHTO M 145 BY RK&K GEOLOGIST OR ENGINEER.

7. CPT AND DMT PROBES WERE DRILLED BY IN-SITU SOIL TESTING, L.C AND CONETEC, INC.

   CPT = CONE PENETRATION TESTING
   DMT = FLAT- PLATE DILATOMETER

8. C= DEPTH OF HOLLOW STEM CONTINUOUS FLIGHT AUGER (HSA) WITH A 3-3/8 INCH ID, AND LIMIT OF MUD ROTARY (MD).

9. FOR BORING LOCATIONS, SEE CONSTRUCTION PLAN SHEETS 182 THROUGH 186.

10. FOR ADDITIONAL BORING & DRIVE TESTS SEE BORING & DRIVE TESTS SHEETS FOR OTHER STRUCTURES.

11. FOR ALL OTHER BORING & DRIVE TESTS SEE SHEETS 744 THROUGH 792.

12. FOR ADDITIONAL LABORATORY TEST RESULTS OF UNDISTURBED TUBE SAMPLES AND INDEX TESTING SEE, SHEETS 793 THROUGH 803.

13. FOR GROUNDWATER MONITORING DATA, SEE SHEET XXX OF XXX.

14. LL= LIQUID LIMIT

15. PL = PLASTIC LIMIT

16. PI = PLASTICITY INDEX

17. UC = UNCONFINED COMPRESSION

18. DS = DIRECT SHEAR

19. CONS = CONSOLIDATION

20. UU = UNCONSOLIDATED- UNDRAINED TRIAXIAL TEST

21. CIUC = CONSOLIDATED ISOTROPIC UNDRAINED COMPRESSION TRIAXIAL TEST

22. AASHTO = AMERICAN ASSOCIATION OF STATE HIGHWAY TRANSPORTATION OFFICIALS

UNOFFICAL WEBSITE COPY

UNOFFICAL WEBSITE COPY

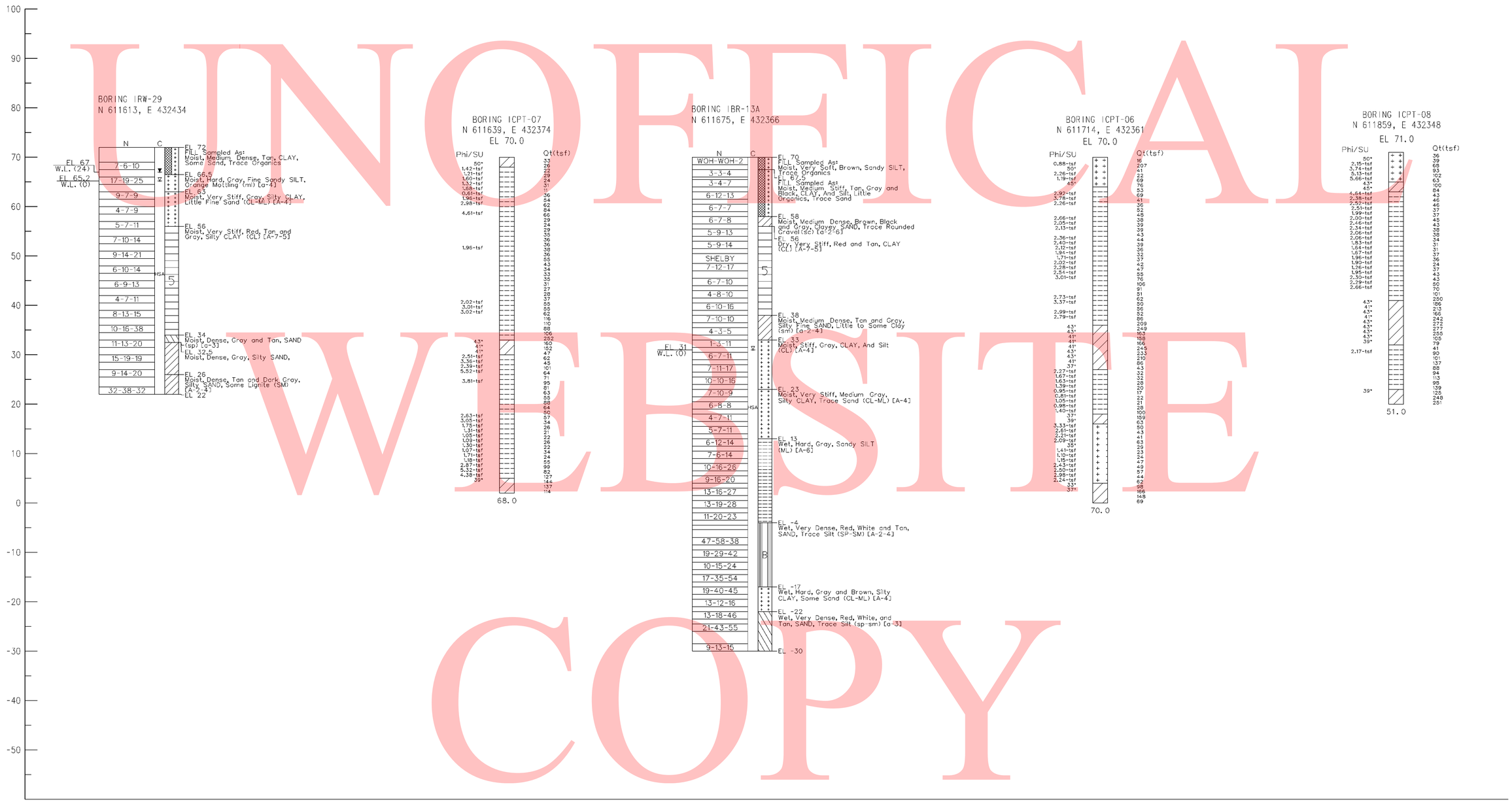

DATUM EL. -60.00

NOTES:

1. FOR BORING NOTES AND INFORMATION SEE SHEET NO. 548 OF 803.
2. FOR BORING LOCATIONS SEE CONSTRUCTION PLAN SHEETS.

3/3/2010 7:19:00 AM
M:\PROJECTS\2003\03059_DELTRNPK\SRIMALL\CADD\2809003\PLANS\B0034_R4_SR1.DGN

DELAWARE DEPARTMENT OF TRANSPORTATION	ADDENDUMS / REVISIONS	SCALE 0 10 20 30 FEET	SR1 / I-95 INTERCHANGE	CONTRACT 28-090-03	BRIDGE NO.	RETAINING WALL 4 BORING & DRIVE TESTS
				COUNTY NEW CASTLE	DESIGNED BY: JLT	
					CHECKED BY: EMK	

R4-4

SHEET NO.	TOTAL SHTS.
549	803

DATUM EL. -60.00

NOTES:

1. FOR BORING NOTES AND INFORMATION SEE SHEET NO. 548 OF 803.
2. FOR BORING LOCATIONS SEE CONSTRUCTION PLAN SHEETS.

UNOFFICAL WEBSITE COPY

DELAWARE DEPARTMENT OF TRANSPORTATION	ADDENDUMS / REVISIONS	SCALE 0 10 20 30 FEET	SR1 / I-95 INTERCHANGE	CONTRACT 28-090-03	BRIDGE NO.	RETAINING WALL 4 BORING & DRIVE TESTS	R4-5
				COUNTY NEW CASTLE	DESIGNED BY: JLT		SHEET NO. 550
					CHECKED BY: EMK		TOTAL SHTS. 803

3/3/2010 7:17:14 AM
M:\PROJECTS\2003\03059_DELTRNPK\SRIMALL\CADD\2809003\PLANS\B0035_R4_SR1.DGN

GENERAL NOTES

SPECIFICATIONS: PROPRIETARY MSE WALLS SHALL BE DESIGNED IN ACCORDANCE WITH THE FOLLOWING:
- AASHTO LRFD BRIDGE DESIGN SPECIFICATIONS, 4TH EDITION WITH ALL CURRENT REVISIONS.
- FEDERAL HIGHWAY ADMINISTRATION PUBLICATION NO. FHWA-NHI-00-043, "MECHANICALLY STABILIZED EARTH WALLS AND REINFORCED SOIL SLOPES DESIGN AND CONSTRUCTION GUIDELINES"

CONCRETE: CONCRETE DESIGN SHALL BE PERFORMED USING THE LOAD AND RESISTANCE FACTOR DESIGN METHOD.

COPING CONCRETE SHALL BE 3500 PSI. MIX REQUIREMENTS SHALL CONFORM TO SECTION 812 OF THE DELAWARE DEPARTMENT OF TRANSPORTATION STANDARD SPECIFICATIONS.

CHAMFERS: ALL EXPOSED CORNERS OF CONCRETE SHALL BE CHAMFERED WITH ¾" x ¾" MILLED CHAMFER STRIPS, UNLESS OTHERWISE NOTED EXCEPT ON UNEXPOSED FOOTINGS OR WHERE INDICATED BY THE FOLLOWING NOTATION ON THE PLANS: "DO NOT CHAMFER".

REINFORCING STEEL: REINFORCING STEEL SHALL CONFORM TO ASTM A 615, GRADE 60. MINIMUM COVER FOR ANY BAR SHALL BE 2" UNLESS OTHERWISE NOTED.

FOR TIES AND STIRRUPS, STANDARD ACI BENDING TOLERANCES ARE MODIFIED TO PLUS (+) ZERO INCHES, MINUS (-) NORMAL ACI BENDING TOLERANCE.

ONLY GRADE 60 CAN BE USED ON THIS PROJECT.

ALL REINFORCING STEEL IN THE COPING SHALL BE EPOXY COATED.

ALL KEYS ARE NOMINAL SIZE.

THE MSE WALL MANUFACTURER MAY SUBSTITUTE ALTERNATE REINFORCING CONFIGURATIONS AND SUBMIT FOR APPROVAL.

EXPANSION AND CONTRACTION JOINTS: THE LOCATION OF THE EXPANSION AND CONTRACTION JOINTS IN THE COPING SHOWN ON THE PLANS MAY BE ADJUSTED TO ACCOMMODATE THE PANEL TYPE USED IN THE PROJECT. ANY CHANGE TO THESE JOINT LOCATIONS SHALL BE SUBMITTED TO THE ENGINEER FOR APPROVAL. EXPANSION JOINTS ARE LABELED "EJ".

LEVELING PAD: THE PROPRIETARY WALL MANUFACTURER MAY RELOCATE THE LEVELING PAD STEPS AT THEIR DISCRETION PROVIDED THAT THE MINIMUM EMBEDMENT IS MAINTAINED. ANY CHANGE TO THE STEP LOCATIONS SHALL BE SUBMITTED TO THE ENGINEER FOR APPROVAL.

ROADWAY LIMITS: THE PROPRIETARY WALL MANUFACTURER SHALL ASSURE THAT PROPOSED PROPRIETARY WALL COMPONENTS ARE POSITIONED SUCH THAT THE DESIGNATED ROADWAY LIMITS ARE NOT ENCROACHED UPON.

COPING JOINTS: COPING SHALL HAVE CONSTRUCTION JOINTS.

COORDINATION: CONTRACTOR AND PROPRIETARY WALL MANUFACTURER SHALL COORDINATE LOCATIONS OF INLETS AND PIPES WITH LOCATIONS OF PROPRIETARY WALL TIEBACK SYSTEM.

ARCHITECTURAL FINISH: THE MSE WALL PANELS SHALL RECEIVE AN ARCHITECTURAL FINISH.

SERVICE LIFE: ALL RETAINING WALL COMPONENTS SHALL BE DESIGNED FOR A MINIMUM SERVICE LIFE OF 75 YEARS.

WALL SYSTEM: ONLY ONE MSE WALL SYSTEM MAY BE USED ON THIS PROJECT.

ROADWAY SUPERELEVATION: FOR ROADWAY SUPERELEVATION, SEE SUPERELEVATION TABLES.

MSE WALL BACKFILL: MSE WALL BACKFILL SHALL CONSIST OF SPECIFIED BACKFILL.

PAY ITEMS: PCC MASONRY, PARAPET, CLASS A (602017)
MECHANICALLY STABILIZED EARTH WALLS (602772)
PCC MASONRY FOR MSE WALLS (602773)
BAR REINFORCEMENT, EPOXY COATED (604000)

FOUNDATION NOTES

THE FACTORED BEARING RESISTANCE SHALL BE VERIFIED PRIOR TO CONSTRUCTION OF THE MSE WALL.

THE INTERNAL STABILITY OF THE MSE WALL SHALL BE DESIGNED BY THE CONTRACTOR USING THE SOIL PARAMETERS PROVIDED. THE INTERNAL STABILITY SHOULD BE SIGNED AND SEALED BY A PROFESSIONAL ENGINEER LICENSED IN THE STATE OF DELAWARE AS INDICATED IN THE PROJECT SPECIFICATIONS. THE FACTORED APPLIED BEARING STRESS SHALL NOT EXCEED THE FACTORED BEARING RESISTANCE.

ISOLATED AREAS OF UNDERCUTTING OF SOFT SOIL OR EXISTING FILL MAY BE ENCOUNTERED DURING CONSTRUCTION OF THIS RETAINING WALL.

GROUNDWATER MAY BE ENCOUNTERED DURING EXCAVATION TO THE LEVELING PAD AND DURING CONSTRUCTION OF THIS RETAINING WALL. IT IS THE CONTRACTOR'S RESPONSIBILITY TO PROVIDE A RELATIVELY DRY EXCAVATION, INCLUDING DETERMINING APPROPRIATE DEWATERING METHODS DURING CONSTRUCTION.

A QUARANTINE PERIOD OF APPROXIMATELY 30-DAYS IS REQUIRED AFTER CONSTRUCTION OF THE FULL HEIGHT OF THE MSE WALL IS ACHIEVED. THE ENGINEER SHALL APPROVE THE COMPLETION OF THE QUARANTINE PERIOD PRIOR TO CONSTRUCTION OF ANY COPING OR PARAPETS.

THE DESIGN UNIT WEIGHT INDICATED IN SOIL PROPERTIES TABLE HAS BEEN ADJUSTED DUE TO THE PRESENCE OF SHALLOW GROUNDWATER.

THE WALL SUPPLIER SHALL PERFORM A DETAILED SEISMIC ANALYSIS FOR BACK TO BACK MSE WALLS WITH L/H LESS THAN 1.1, IF NECESSARY, AS REQUIRED BY FHWA PUBLICATION NO. FHWA-NHI-00-043.

SOIL PROPERTIES FOR DESIGN

SOIL TYPE	UNIT WEIGHT (PCF)	ANGLE OF FRICTION (DEGREES)
SELECT FILL	125	34
COMMON BORROW	130	28
FOUNDATION SOIL	63	29

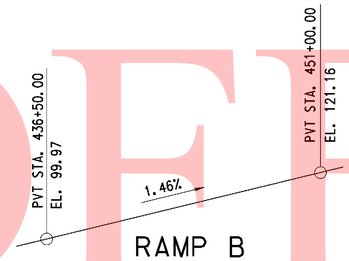

RAMP B
VERTICAL CURVE DATA

NO SCALE

CURVE NO. 20

P.I. STA.	453+31.90
Δ	29°54'47.21" RT
DC	3°00'56.04"
R	1900.00'
TANGENT	507.56'
LENGTH	991.96'

RAMP B
HORIZONTAL CURVE DATA

NO SCALE

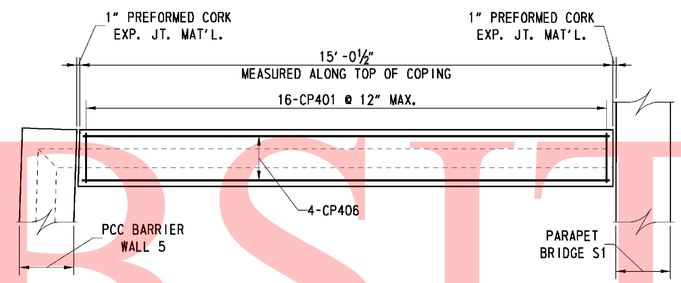

COPING REINFORCING PLAN

SCALE: ½" = 1'-0"

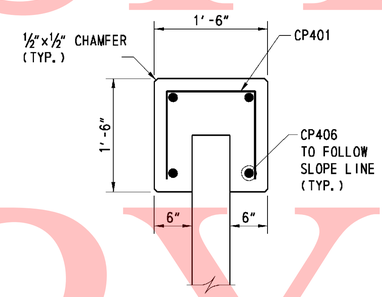

COPING DETAIL

SCALE: 1"= 1'-0"

	SPECIFICATIONS					BENDING DIMENSIONS (FEET-INCHES /QUARTER INCH)							
	QTY.	SIZE	LENGTH	MARK	TYPE	A	B	C	D	H	K	O	REMARKS
COPING	16	4	3-6	CP401	17		1-2	1-2	1-2				
	4	4	14-8 1/2	CP406	STR								BEND BARS IN FIELD AS NEEDED

SEE SHEET R7-07 FOR BAR BEND NOTES

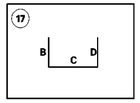

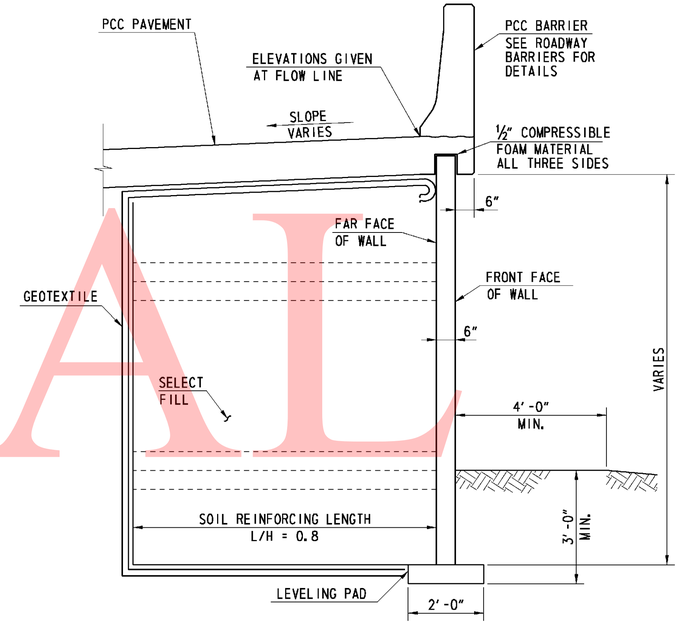

TYPICAL SECTION
STA. 449+22.48 TO STA. 450+42.00

(LOOKING BACK STATION)
SCALE: ½" = 1'-0"

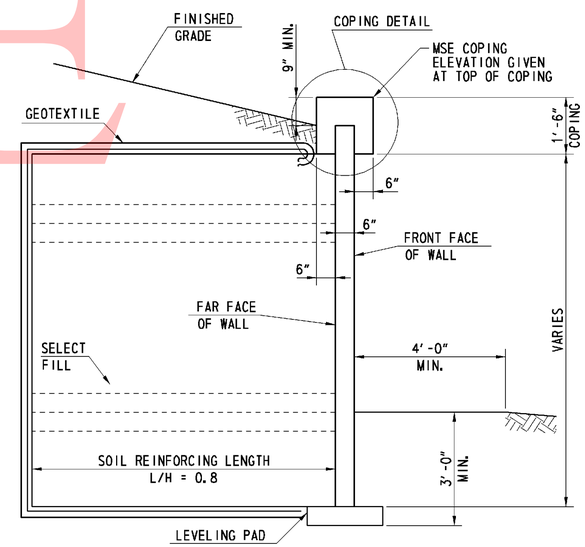

TYPICAL SECTION
STA. 449+22.01 TO STA. 449+22.48

SCALE: ½" = 1'-0"

0 1 4
½ 2
SCALE: ½"=1'-0"

0 1
½ 2
SCALE: 1"=1'-0"

UNOFFICIAL WEBSITE COPY

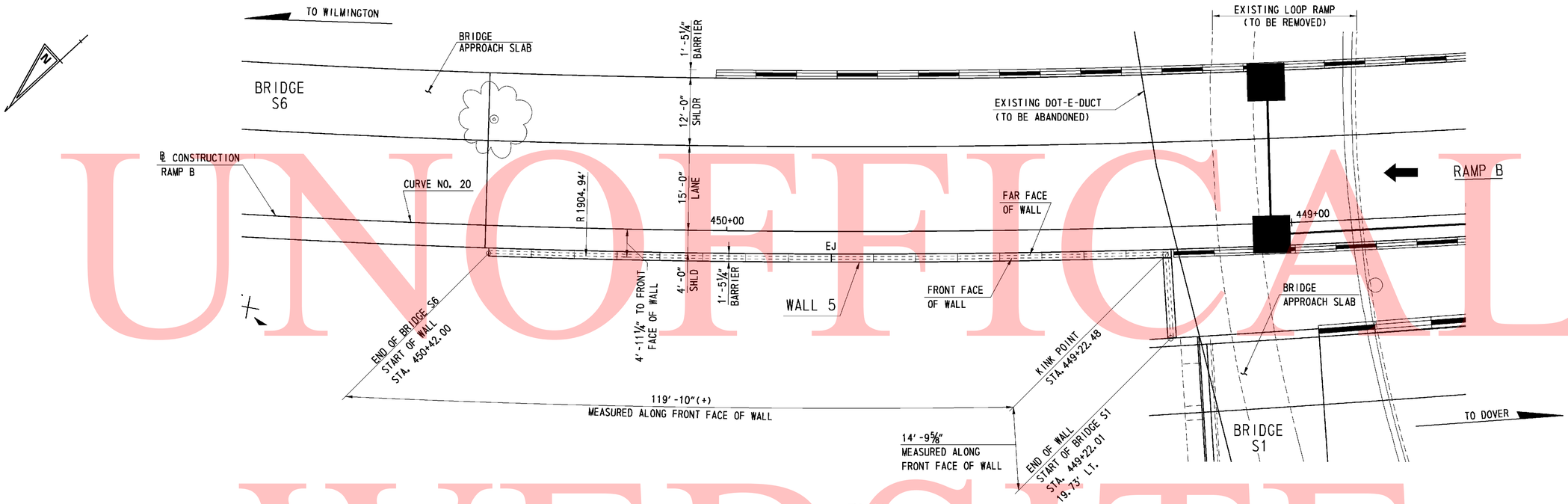

PLAN

SCALE: 1"= 10'-0"

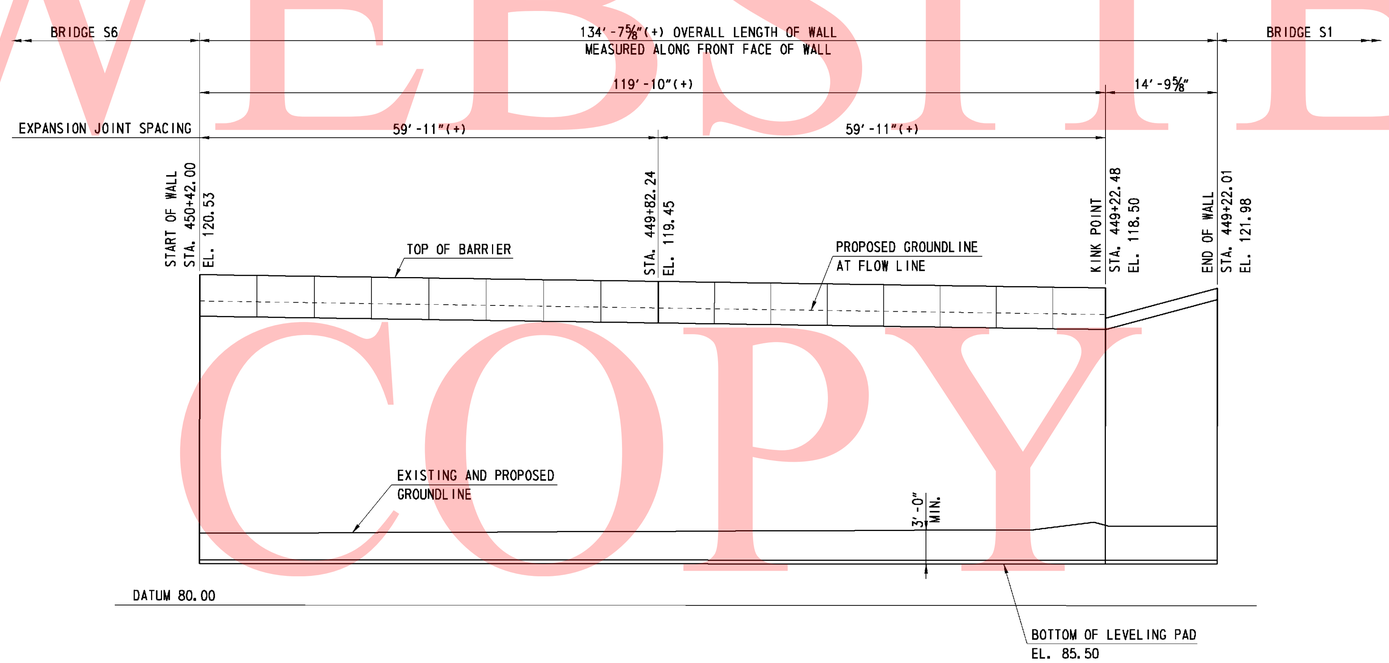

ELEVATION

SCALE: 1"= 10'-0"

0 10 20 30

SCALE: 1"= 10'-0"

R5-02

DELAWARE DEPARTMENT OF TRANSPORTATION	ADDENDUMS / REVISIONS	SR1 / I-95 INTERCHANGE	CONTRACT 28-090-03	BRIDGE NO.	RETAINING WALL 5 GENERAL PLAN AND ELEVATION	SHEET NO. 552
			COUNTY NEW CASTLE	DESIGNED BY: JMS		TOTAL SHTS. 803
				CHECKED BY: JSW		

9/3/2010 9:05:05 AM
M:\PROJECTS\2003\03059_DELTRNPK\SRIMALL\CADD\2809003\PLANS\RD04_WALL-05_SR1.DGN

UNOFFICAL WEBSITE COPY

SUMMARY OF LABORATORY TEST RESULTS OF TUBE SAMPLES

BORING NO.	TOP SAMPLE DEPTH (FT)	NATURAL MOISTURE CONTENT (%)	LL	PL	PI	PERCENT PASSING NO. 200	AASHTO	UNDISTURBED TUBE TESTING	TOTAL UNIT WEIGHT (pcf)	UNCONFINED COMPRESSION (psf)	TOTAL STRESS COHESION (psf)	TOTAL STRESS FRICTION ANGLE (deg)	EFFECTIVE STRESS COHESION (psf)	EFFECTIVE STRESS FRICTION ANGLE (deg)	UNDRAINED SHEAR (psf)	INITIAL VOID RATIO	PRECONSOLIDATION STRESS MAX (psf)	PRECONSOLIDATION STRESS MIN (psf)	C_c	C_r	pH	RESISTIVITY (ohm-cm)
IBR-42A	39.0	20.4	-	-	-	-	-	DS	129.7	-	925	12	-	-	-	-	-	-	-	-	-	-
IBR-42A	39.0	-	-	-	-	-	-	UC	131.3	4347	-	-	-	-	2174	-	-	-	-	-	-	-
IBR-42A	39.0	19.9	34	20	14	99.0	A-6	UU	136.5	-	-	-	-	-	2070	-	-	-	-	-	-	-
IBR-42A	60.0	-	-	-	-	-	-	DS	126.7	-	490	18.04	-	-	-	-	-	-	-	-	-	-
IBR-42A	60.0	24.3	51	27	24	98.0	A-7-5	UU	125.5	-	-	-	-	-	3810	-	-	-	-	-	-	-
IRW-16	20.0	19.0	35	20	15	90.0	A-6	DS	131.5	-	255	26.01	-	-	-	-	-	-	-	-	-	-

DELAWARE DEPARTMENT OF TRANSPORTATION
AASHTO CLASSIFICATION OF SOILS AND SOIL-AGGREGATE MIXTURES

General Classification	Granular Materials (35% or Less Passing 0.075 mm)							Silt-Clay Materials (More than 35% Passing 0.075 mm)					Organic Soils
Group Classification: Group	A-1		A-3	A-2				A-4	A-5	A-6	A-7		A-8
Sub-Group	A-1-a	A-1-b		A-2-4	A-2-5	A-2-6	A-2-7				A-7-5	A-7-6	
Graphic	A	B			5		7				5		
Sieve Analysis, % Passing													
2.00 mm (No. 10)	50 Max	-	-	-	-	-	-	-	-	-	-	-	See Note 1
0.425 mm (No. 40)	30 Max	50 Max	51 Min	-	-	-	-	-	-	-	-	-	
0.075 mm (No. 200)	15 Max	25 Max	10 Max	35 Max	35 Max	35 Max	35 Max	36 Min	36 Min	36 Min	36 Min	36 Min	
Characteristics of Fraction	-		-	-	-	-	-	-	-	-	-	-	See Note 1
Passing 0.425 mm (No. 40)	-		-	-	-	-	-	-	-	-	-	-	
Liquid Limit	-		-	40 Max	41 Min	40 Max	41 Min	40 Max	41 Min	41 Max	41 Min	41 Min	
Plasticity Index	6 Max		NP	10 Max	10 Max	11 Min	11 Min	10 Max	10 Max	11 Min	11 Min	11 Min	
Usual Types of Significant Constituent Materials	Stone Fragments, Gravel and Sand		Fine Sand	Silty or Clayey Gravel and Sand				Silty Soils		Clayey Soils			Organic Soils

Plasticity Index of A-7-5 Subgroup Is Equal to or Less Than LL Minus 30

Plasticity Index of A-7-6 Subgroup Is Greater Than LL Minus 30

Note 1-Classification Based on Visual Inspection and not on Sieve Analysis or Atterberg Limits

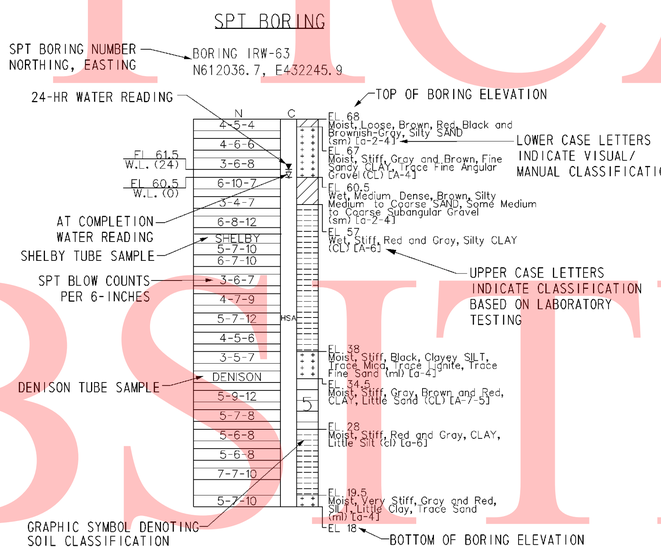

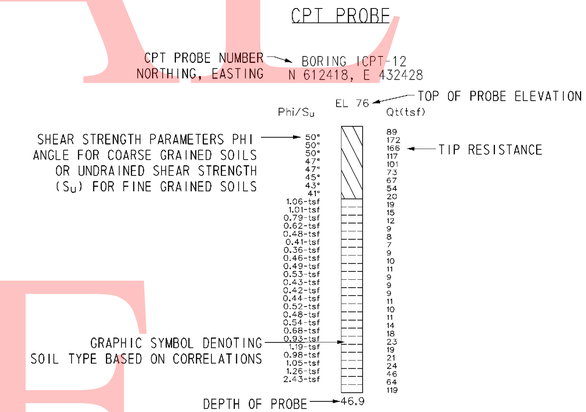

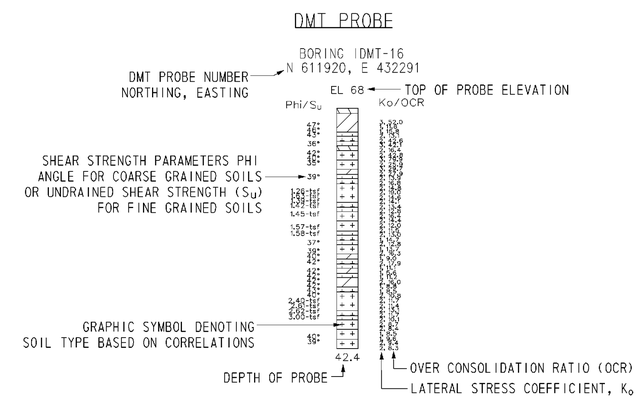

NOTES:

1. THE BORINGS AND DRIVE TEST WERE CONDUCTED IN MULTIPLE PHASES BY THE ROBERT B. BALTER COMPANY, THE WALTON CORPORATION, AND FINDLING, INC. BETWEEN AUGUST 2004 AND OCTOBER 2008.

2. THE SOIL SYMBOLS REFLECT ONLY THE MAJOR SOIL CONSTITUENT, FOR MORE COMPLETE SOIL CHARACTERISTIC REFER TO THE SOIL LOGS CONTAINED WITHIN THE FINAL FOUNDATION REPORTS DATED FEBRUARY 2009.

3. THE FIELD BORING LOGS RECORD SAMPLE SPOON RECOVERY. THE BORING LOGS AND LABORATORY TESTING RESUTS ARE AVAILABLE UPON REQUEST.

4. N = BLOWS ON A 2 INCH OD SAMPLING SPOON BY 140 LB DRIVE- WEIGHT FALLING 30 INCHES INDICATING SUCCESSIVE 6 INCH INCREMENTS OF PENETRATION. PENETRATIONS GREATER THAN 6-INCHES OR LESS THAN 6-INCHES ARE INDICATED BY WOH, WOR, OR THE DEPTH OF THE PENETRATION TO THE NEAREST INCH.

   WOH= STATIC WEIGHT OF SAMPLING SPOON DRIVE-WEIGHT ASSEMBLY, DRIVE-WEIGHT,ANVIL (WHEN AUTOMATIC HAMMER IS USED), DRILL ROD(S), AND SAMPLING SPOONS.

   WOR= STATIC WEIGHT OF DRILL ROD AND SAMPLING SPOON

5. FIELD BORINGS AND SOIL SAMPLING WERE PERFORMED IN ACCORDANCE TO AASHTO T-206, T-225 AND T-306.

6. USCS AND AASHTO DESIGNATIONS INDICATED IN UPPER CASE HAVE BEEN CONFIRMED USING LAB SOIL CLASSIFICATION TESTS. USCS AND AASHTO DESIGNATIONS INDICATED IN LOWER CASE ARE BASED ON VISUAL CLASSIFICATION TECHNIQUES ACCORDING TO ASTM D 2488 AND AASHTO M 145 BY RK&K GEOLOGIST OR ENGINEER.

7. CPT AND DMT PROBES WERE DRILLED BY IN-SITU SOIL TESTING, L.C AND CONETEC, INC.

   CPT = CONE PENETRATION TESTING
   DMT = FLAT- PLATE DILATOMETER

8. C= DEPTH OF HOLLOW STEM CONTINUOUS FLIGHT AUGER (HSA) WITH A 3-3/8 INCH ID, AND LIMIT OF MUD ROTARY (MD).

9. FOR BORING LOCATIONS, SEE CONSTRUCTION PLAN SHEETS 182 THROUGH 186.

10. FOR ADDITIONAL BORING & DRIVE TESTS SEE BORING & DRIVE TESTS SHEETS FOR OTHER STRUCTURES.

11. FOR ALL OTHER BORING & DRIVE TESTS SEE SHEETS 744 THROUGH 792.

12. FOR ADDITIONAL LABORATORY TEST RESULTS OF UNDISTURBED TUBE SAMPLES AND INDEX TESTING SEE, SHEETS 793 THROUGH 803.

13. FOR GROUNDWATER MONITORING DATA, SEE SHEET XXX OF XXX.

14. LL= LIQUID LIMIT

15. PL = PLASTIC LIMIT

16. PI = PLASTICITY INDEX

17. UC = UNCONFINED COMPRESSION

18. DS = DIRECT SHEAR

19. CONS = CONSOLIDATION

20. UU = UNCONSOLIDATED- UNDRAINED TRIAXIAL TEST

21. CIUC = CONSOLIDATED ISOTROPIC UNDRAINED COMPRESSION TRIAXIAL TEST

22. AASHTO = AMERICAN ASSOCIATION OF STATE HIGHWAY TRANSPORTATION OFFICIALS

UNOFFICIAL WEBSITE COPY

UNOFFICIAL WEBSITE COPY

DATUM EL. -50.00

NOTES:

1. FOR BORING NOTES AND INFORMATION SEE SHEET NO. 553 OF 803.
2. FOR BORING LOCATIONS SEE CONSTRUCTION PLAN SHEETS.

3/3/2010 7:16:01 AM
M:\PROJECTS\2003\03059_DELTRNPK\SRIMALL\CADD\2809003\PLANS\B0037_R5_SR1.DGN

DELAWARE DEPARTMENT OF TRANSPORTATION	ADDENDUMS / REVISIONS	SCALE 0 10 20 30 FEET	SR1 / I-95 INTERCHANGE	CONTRACT 28-090-03	BRIDGE NO.	RETAINING WALL 5 BORING & DRIVE TESTS	R5-4 SHEET NO. 554
				COUNTY NEW CASTLE	DESIGNED BY: JLT		TOTAL SHTS. 803
					CHECKED BY: EMK		

GENERAL NOTES

SPECIFICATIONS: PROPRIETARY MSE WALLS SHALL BE DESIGNED IN ACCORDANCE WITH THE FOLLOWING:
- AASHTO LRFD BRIDGE DESIGN SPECIFICATIONS, 4TH EDITION WITH ALL CURRENT REVISIONS.
- FEDERAL HIGHWAY ADMINISTRATION PUBLICATION NO. FHWA-NHI-00-043, "MECHANICALLY STABILIZED EARTH WALLS AND REINFORCED SOIL SLOPES DESIGN AND CONSTRUCTION GUIDELINES"

CONCRETE: CONCRETE DESIGN SHALL BE PERFORMED USING THE LOAD AND RESISTANCE FACTOR DESIGN METHOD.

COPING CONCRETE SHALL BE 3500 PSI. MIX REQUIREMENTS SHALL CONFORM TO SECTION 812 OF THE DELAWARE DEPARTMENT OF TRANSPORTATION STANDARD SPECIFICATIONS.

CHAMFERS: ALL EXPOSED CORNERS OF CONCRETE SHALL BE CHAMFERED WITH ¾" x ¾" MILLED CHAMFER STRIPS, UNLESS OTHERWISE NOTED EXCEPT ON UNEXPOSED FOOTINGS OR WHERE INDICATED BY THE FOLLOWING NOTATION ON THE PLANS: "DO NOT CHAMFER".

REINFORCING STEEL: REINFORCING STEEL SHALL CONFORM TO ASTM A 615, GRADE 60. MINIMUM COVER FOR ANY BAR SHALL BE 2" UNLESS OTHERWISE NOTED.

FOR TIES AND STIRRUPS, STANDARD ACI BENDING TOLERANCES ARE MODIFIED TO PLUS (+) ZERO INCHES, MINUS (-) NORMAL ACI BENDING TOLERANCE.

ONLY GRADE 60 CAN BE USED ON THIS PROJECT.

ALL REINFORCING STEEL IN THE COPING SHALL BE EPOXY COATED.

ALL KEYS ARE NOMINAL SIZE.

THE MSE WALL MANUFACTURER MAY SUBSTITUTE ALTERNATE REINFORCING CONFIGURATIONS AND SUBMIT FOR APPROVAL.

EXPANSION AND CONTRACTION JOINTS: THE LOCATION OF THE EXPANSION AND CONTRACTION JOINTS IN THE COPING SHOWN ON THE PLANS MAY BE ADJUSTED TO ACCOMMODATE THE PANEL TYPE USED IN THE PROJECT. ANY CHANGE TO THESE JOINT LOCATIONS SHALL BE SUBMITTED TO THE ENGINEER FOR APPROVAL. EXPANSION JOINTS ARE LABELED "EJ".

LEVELING PAD: THE PROPRIETARY WALL MANUFACTURER MAY RELOCATE THE LEVELING PAD STEPS AT THEIR DISCRETION PROVIDED THAT THE MINIMUM EMBEDMENT IS MAINTAINED. ANY CHANGE TO THE STEP LOCATIONS SHALL BE SUBMITTED TO THE ENGINEER FOR APPROVAL.

ROADWAY LIMITS: THE PROPRIETARY WALL MANUFACTURER SHALL ASSURE THAT PROPOSED PROPRIETARY WALL COMPONENTS ARE POSITIONED SUCH THAT THE DESIGNATED ROADWAY LIMITS ARE NOT ENCROACHED UPON.

COPING JOINTS: COPING SHALL HAVE CONSTRUCTION JOINTS.

COORDINATION: CONTRACTOR AND PROPRIETARY WALL MANUFACTURER SHALL COORDINATE LOCATIONS OF INLETS AND PIPES WITH LOCATIONS OF PROPRIETARY WALL TIEBACK SYSTEM.

ARCHITECTURAL FINISH: THE MSE WALL PANELS SHALL RECEIVE AN ARCHITECTURAL FINISH.

SERVICE LIFE: ALL RETAINING WALL COMPONENTS SHALL BE DESIGNED FOR A MINIMUM SERVICE LIFE OF 75 YEARS.

WALL SYSTEM: ONLY ONE MSE WALL SYSTEM MAY BE USED ON THIS PROJECT.

ROADWAY SUPERELEVATION: FOR ROADWAY SUPERELEVATION, SEE SUPERELEVATION TABLES.

MSE WALL BACKFILL: MSE WALL BACKFILL SHALL CONSIST OF SPECIFIED BACKFILL.

PAY ITEMS: MECHANICALLY STABILIZED EARTH WALLS (602772)
PCC MASONRY FOR MSE WALLS (602773)
BAR REINFORCEMENT, EPOXY COATED (604000)

SOIL PROPERTIES FOR DESIGN

SOIL TYPE	UNIT WEIGHT (PCF)	ANGLE OF FRICTION (DEGREES)
SELECT FILL	125	34
NO. 57 STONE	130	28
FOUNDATION SOIL	125	32

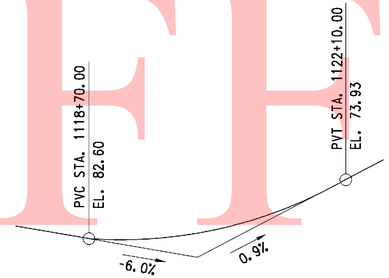

RAMP C
VERTICAL CURVE DATA

NO SCALE

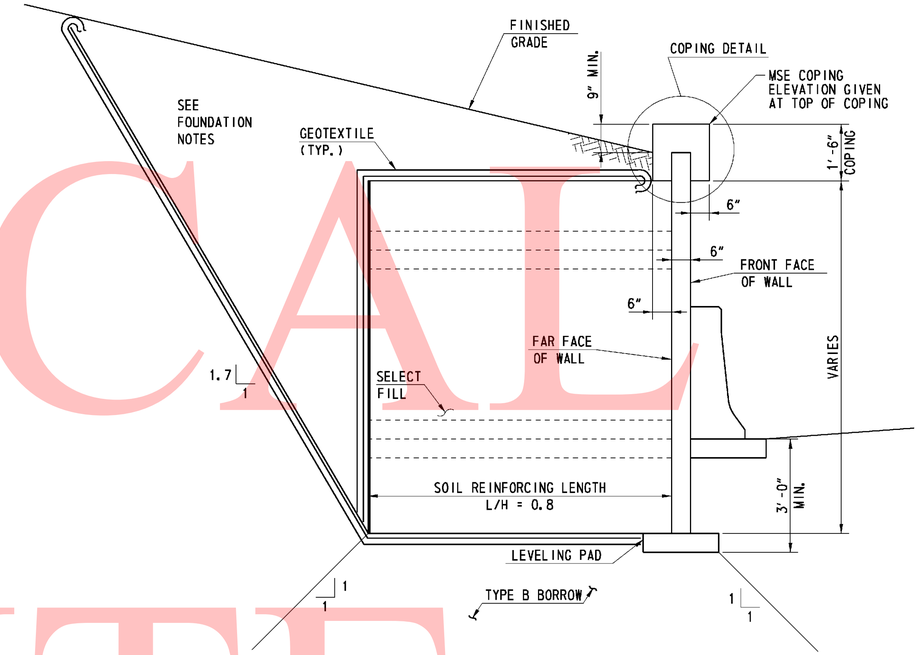

TYPICAL SECTION

(LOOKING BACK STATION)
SCALE: ½" = 1'-0"

CURVE NO. 30

P.I. STA.	1118+29.56
Δ	39°23'47.64" LT
DC	9°32'57.47"
R	600.00'
TANGENT	214.81'
LENGTH	412.56'

RAMP C
HORIZONTAL CURVE DATA

NO SCALE

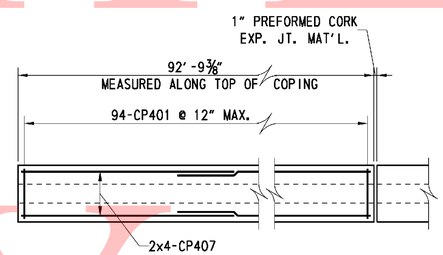

COPING REINFORCING PLAN

(2 REQUIRED)
SCALE: ½" = 1'-0"

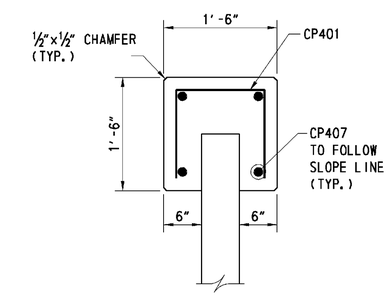

COPING DETAIL

SCALE: 1" = 1'-0"

FOUNDATION NOTES

THE FACTORED BEARING RESISTANCE SHALL BE VERIFIED PRIOR TO CONSTRUCTION OF THE MSE WALL.

THE INTERNAL STABILITY OF THE MSE WALL SHALL BE DESIGNED BY THE CONTRACTOR USING THE SOIL PARAMETERS PROVIDED. THE INTERNAL STABILITY SHOULD BE SIGNED AND SEALED BY A PROFESSIONAL ENGINEER LICENSED IN THE STATE OF DELAWARE AS INDICATED IN THE PROJECT SPECIFICATIONS. THE FACTORED APPLIED BEARING STRESS SHALL NOT EXCEED THE FACTORED BEARING RESISTANCE.

A QUARANTINE PERIOD OF APPROXIMATELY 30-DAYS IS REQUIRED AFTER CONSTRUCTION OF THE FULL HEIGHT OF THE MSE WALL IS ACHIEVED. THE ENGINEER SHALL APPROVE THE COMPLETION OF THE QUARANTINE PERIOD PRIOR TO CONSTRUCTION OF ANY COPING.

RETAINING WALL 6 MUST BE CONSTRUCTED ON SELECT FILL FOUNDATION SOIL.

RETAINING WALL 6 FROM RAMP C STATION 1117+47.08 TO 1117+75 CAN BE CONSTRUCTED WITH SELECT FILL IN THE MSE REINFORCEMENT ZONE AND WITH COMMON BORROW IN THE RETAINED WEDGE. FROM STATION 1117+75 TO STATION 1119+25, SELECT FILL MUST BE USED IN THE MSE REINFORCEMENT ZONE AND IN THE RETAINED WEDGE.

THE WALL SUPPLIER SHAL PERFORM A DETAILED SEISMIC ANALYSIS FOR BACK TO BACK MSE WALLS WITH L/H LESS THAN 1.1, IF NECESSARY, AS REQUIRED BY FHWA PUBLICATION NO. FHWA-NHI-00-043.

	SPECIFICATIONS					BENDING DIMENSIONS (FEET-INCHES /QUARTER INCH)							
	QTY.	SIZE	LENGTH	MARK	TYPE	A	B	C	D	H	K	O	REMARKS
COPING	188	4	3-6	CP401	17		1-2	1-2	1-2				
	16	4	47-10 3/16	CP407	STR								BEND BARS IN FIELD AS NEEDED

SEE SHEET R7-07 FOR BAR BEND NOTES

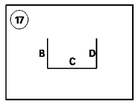

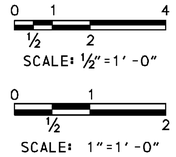

UNOFFICAL WEBSITE COPY

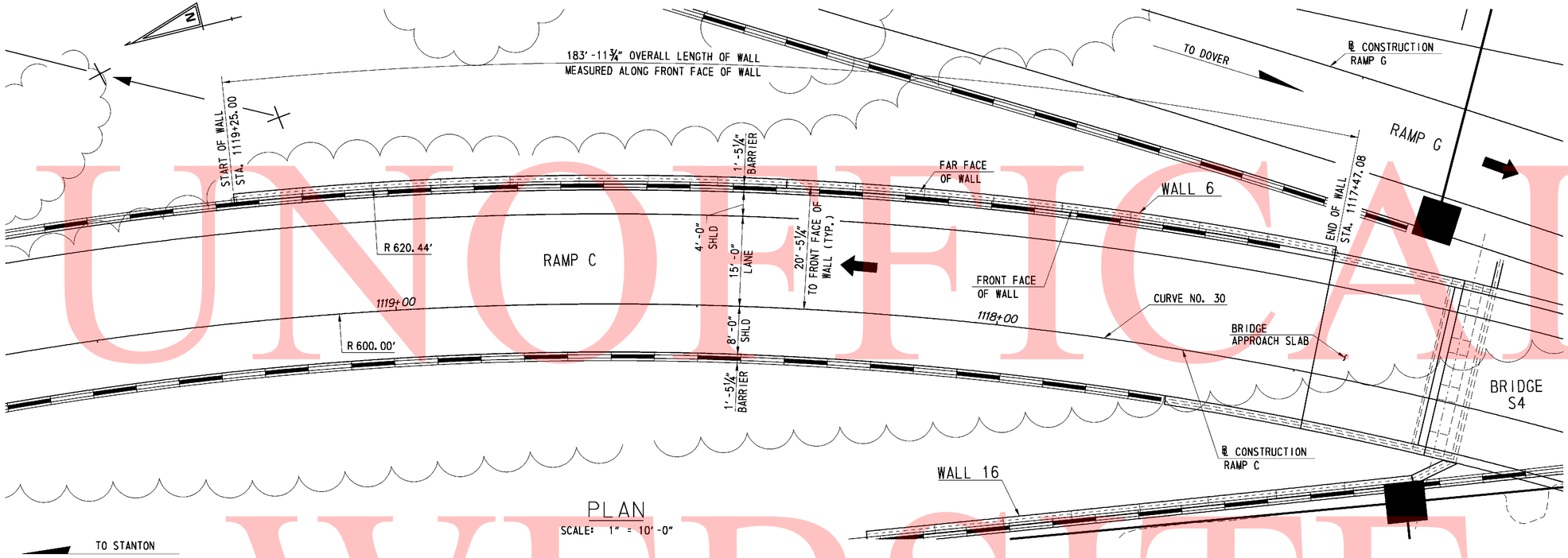

PLAN

SCALE: 1" = 10'-0"

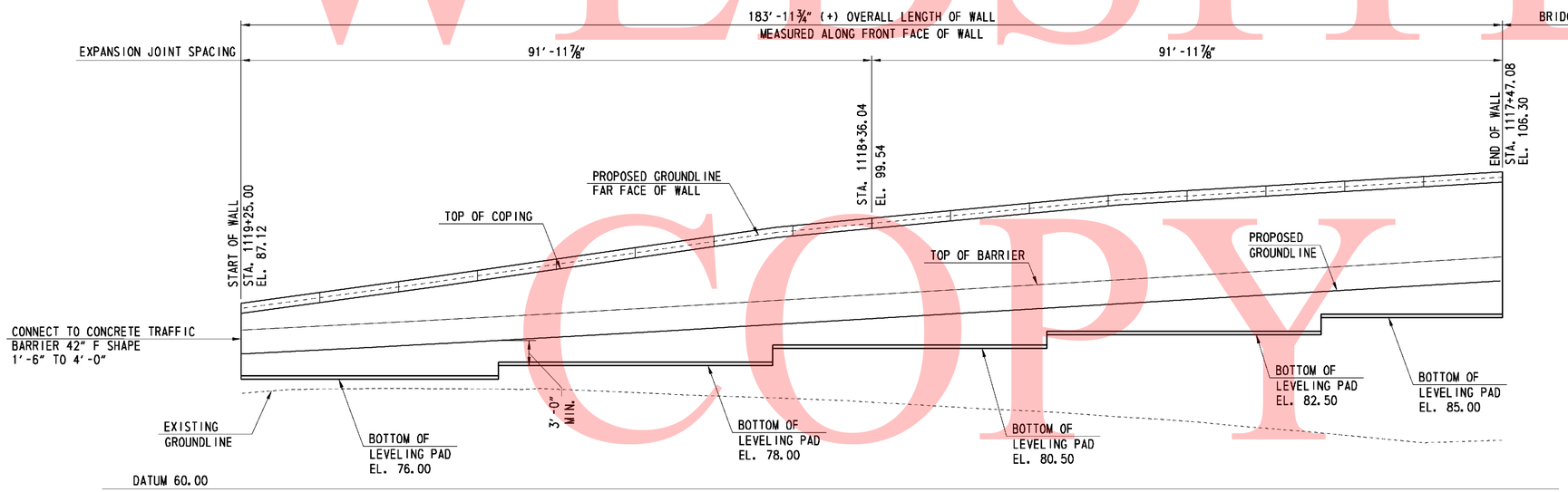

ELEVATION

SCALE: 1" = 10'-0"

0 10 20 30

SCALE: 1"= 10'-0"

UNOFFICIAL WEBSITE COPY

DELAWARE DEPARTMENT OF TRANSPORTATION	ADDENDUMS / REVISIONS	SR1 / I-95 INTERCHANGE	CONTRACT 28-090-03	BRIDGE NO.	RETAINING WALL 6 GENERAL PLAN AND ELEVATION	SHEET NO. 556	R6-02
			COUNTY NEW CASTLE	DESIGNED BY: JMS		TOTAL SHTS. 803	
				CHECKED BY: JSW			

11/8/2010 3:40:56 PM
M:\PROJECTS\2003\03059_DELTRNPK\SR1MAIN\CADD\2809003\PLANS\RD06_WALL-06_SR1.DGN

DELAWARE DEPARTMENT OF TRANSPORTATION
AASHTO CLASSIFICATION OF SOILS AND SOIL-AGGREGATE MIXTURES

General Classification		Granular Materials (35% or Less Passing 0.075 mm)							Silt-Clay Materials (More than 35% Passing 0.075 mm)					Organic Soils
Group Classification	Group	A-1		A-3	A-2				A-4	A-5	A-6	A-7		A-8
	Sub-Group	A-1-a	A-1-b		A-2-4	A-2-5	A-2-6	A-2-7				A-7-5	A-7-6	
	Graphic	A	B			5	7					5		
Sieve Analysis, % Passing														
2.00 mm (No. 10)		50 Max	-	-	-	-	-	-	-	-	-	-	-	See Note 1
0.425 mm (No. 40)		30 Max	50 Max	51 Min	-	-	-	-	-	-	-	-	-	
0.075 mm (No. 200)		15 Max	25 Max	10 Max	35 Max	35 Max	35 Max	35 Max	36 Min	36 Min	36 Min	36 Min	36 Min	
Characteristics of Fraction Passing 0.425 mm (No. 40)		-		-	-	-	-	-	-	-	-	-	-	See Note 1
Liquid Limit		-		-	40 Max	41 Min	40 Max	41 Min	40 Max	41 Min	41 Max	41 Min	41 Min	
Plasticity Index		6 Max		NP	10 Max	10 Max	11 Min	11 Min	10 Max	10 Max	11 Min	11 Min	11 Min	
Usual Types of Significant Constituent Materials		Stone Fragments, Gravel and Sand		Fine Sand	Silty or Clayey Gravel and Sand				Silty Soils		Clayey Soils			Organic Soils

Plasticity Index of A-7-5 Subgroup Is Equal to or Less Than LL Minus 30

Plasticity Index of A-7-6 Subgroup Is Greater Than LL Minus 30

Note 1-Classification Based on Visual Inspection and not on Sieve Analysis or Atterberg Limits

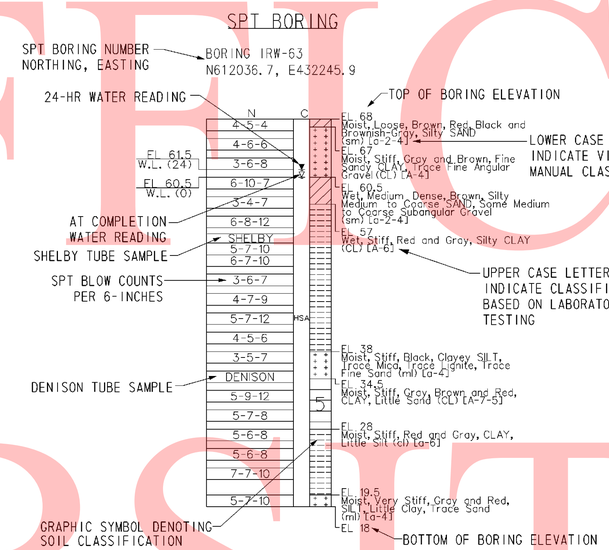

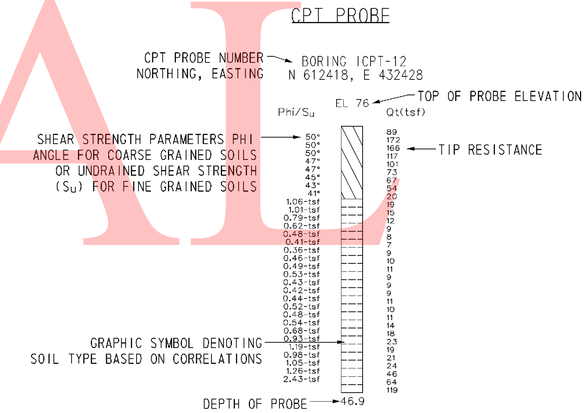

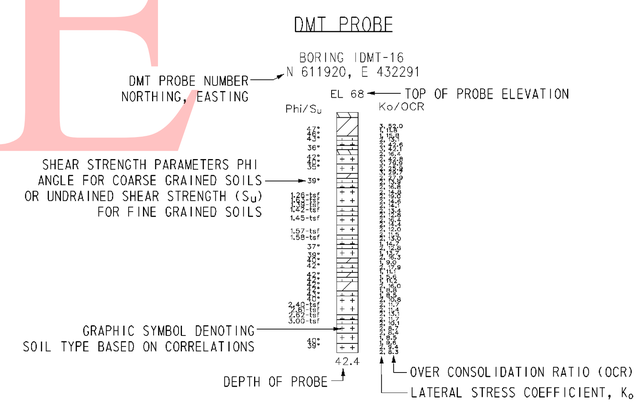

NOTES:

1. THE BORINGS AND DRIVE TEST WERE CONDUCTED IN MULTIPLE PHASES BY THE ROBERT B. BALTER COMPANY, THE WALTON CORPORATION, AND FINDLING, INC. BETWEEN AUGUST 2004 AND OCTOBER 2008.

2. THE SOIL SYMBOLS REFLECT ONLY THE MAJOR SOIL CONSTITUENT, FOR MORE COMPLETE SOIL CHARACTERISTIC REFER TO THE SOIL LOGS CONTAINED WITHIN THE FINAL FOUNDATION REPORTS DATED FEBRUARY 2009.

3. THE FIELD BORING LOGS RECORD SAMPLE SPOON RECOVERY. THE BORING LOGS AND LABORATORY TESTING RESUTS ARE AVAILABLE UPON REQUEST.

4. N = BLOWS ON A 2 INCH OD SAMPLING SPOON BY 140 LB DRIVE- WEIGHT FALLING 30 INCHES INDICATING SUCCESSIVE 6 INCH INCREMENTS OF PENETRATION. PENETRATIONS GREATER THAN 6-INCHES OR LESS THAN 6-INCHES ARE INDICATED BY WOH, WOR, OR THE DEPTH OF THE PENETRATION TO THE NEAREST INCH.

   WOH= STATIC WEIGHT OF SAMPLING SPOON DRIVE-WEIGHT ASSEMBLY, DRIVE-WEIGHT,ANVIL (WHEN AUTOMATIC HAMMER IS USED), DRILL ROD(S), AND SAMPLING SPOONS.

   WOR= STATIC WEIGHT OF DRILL ROD AND SAMPLING SPOON

5. FIELD BORINGS AND SOIL SAMPLING WERE PERFORMED IN ACCORDANCE TO AASHTO T-206, T-225 AND T-306.

6. USCS AND AASHTO DESIGNATIONS INDICATED IN UPPER CASE HAVE BEEN CONFIRMED USING LAB SOIL CLASSIFICATION TESTS. USCS AND AASHTO DESIGNATIONS INDICATED IN LOWER CASE ARE BASED ON VISUAL CLASSIFICATION TECHNIQUES ACCORDING TO ASTM D 2488 AND AASHTO M 145 BY RK&K GEOLOGIST OR ENGINEER.

7. CPT AND DMT PROBES WERE DRILLED BY IN-SITU SOIL TESTING, L.C AND CONETEC, INC.

   CPT = CONE PENETRATION TESTING
   DMT = FLAT- PLATE DILATOMETER

8. C= DEPTH OF HOLLOW STEM CONTINUOUS FLIGHT AUGER (HSA) WITH A 3-3/8 INCH ID, AND LIMIT OF MUD ROTARY (MD).

9. FOR BORING LOCATIONS, SEE CONSTRUCTION PLAN SHEETS 182 THROUGH 186.

10. FOR ADDITIONAL BORING & DRIVE TESTS SEE BORING & DRIVE TESTS SHEETS FOR OTHER STRUCTURES.

11. FOR ALL OTHER BORING & DRIVE TESTS SEE SHEETS 744 THROUGH 792.

12. FOR ADDITIONAL LABORATORY TEST RESULTS OF UNDISTURBED TUBE SAMPLES AND INDEX TESTING SEE, SHEETS 793 THROUGH 803.

13. FOR GROUNDWATER MONITORING DATA, SEE SHEET XXX OF XXX.

14. LL= LIQUID LIMIT

15. PL = PLASTIC LIMIT

16. PI = PLASTICITY INDEX

17. UC = UNCONFINED COMPRESSION

18. DS = DIRECT SHEAR

19. CONS = CONSOLIDATION

20. UU = UNCONSOLIDATED- UNDRAINED TRIAXIAL TEST

21. CIUC = CONSOLIDATED ISOTROPIC UNDRAINED COMPRESSION TRIAXIAL TEST

22. AASHTO = AMERICAN ASSOCIATION OF STATE HIGHWAY TRANSPORTATION OFFICIALS

UNOFFICIAL WEBSITE COPY

7/26/2010 11:25:28 AM
M:\PROJECTS\2003\03059_DELTRNPK\SRIMALL\CADD\2809003\PLANS\B0038_R6_SR1.DGN

DELAWARE DEPARTMENT OF TRANSPORTATION

ADDENDUMS / REVISIONS

SR1 / I-95 INTERCHANGE

CONTRACT	BRIDGE NO.	
28-090-03	DESIGNED BY:	JLT
COUNTY	CHECKED BY:	EMK
NEW CASTLE		

RETAINING WALL 6
BORING NOTES & LEGEND

R6-3

SHEET NO.	TOTAL SHTS.
557	803

DATUM EL. -60.00

NOTES:

1. FOR BORING NOTES AND INFORMATION SEE SHEET NO. 557 OF 803.
2. FOR BORING LOCATIONS SEE CONSTRUCTION PLAN SHEETS.

UNOFFICIAL WEBSITE COPY

3/3/2010 7:15:27 AM
M:\PROJECTS\2003\03059_DELTRNPK\SR1MALL\CADD\2809003\PLANS\B0039_R6_SR1.DGN

DELAWARE DEPARTMENT OF TRANSPORTATION	ADDENDUMS / REVISIONS	SCALE 0 10 20 30 FEET	SR1 / I-95 INTERCHANGE	CONTRACT 28-090-03	BRIDGE NO.	RETAINING WALL 6 BORING & DRIVE TESTS
				COUNTY NEW CASTLE	DESIGNED BY: JLT	
					CHECKED BY: EMK	

R6-4	
SHEET NO.	558
TOTAL SHTS.	803

GENERAL NOTES

SPECIFICATIONS: PROPRIETARY MSE WALLS SHALL BE DESIGNED IN ACCORDANCE WITH THE FOLLOWING:
- AASHTO LRFD BRIDGE DESIGN SPECIFICATIONS, 4TH EDITION WITH ALL CURRENT REVISIONS.
- FEDERAL HIGHWAY ADMINISTRATION PUBLICATION NO. FHWA-NHI-00-043, "MECHANICALLY STABILIZED EARTH WALLS AND REINFORCED SOIL SLOPES DESIGN AND CONSTRUCTION GUIDELINES"

CONCRETE DESIGN SHALL BE PERFORMED USING THE LOAD AND RESISTANCE FACTOR DESIGN METHOD.

CONCRETE: ALL CONCRETE FOR BARRIER AND MOMENT SLABS SHALL BE 4500 PSI. LEVELING PAD CONCRETE SHALL BE 3500 PSI. MIX REQUIREMENTS SHALL CONFORM TO SECTION 812 OF THE DELAWARE DEPARTMENT OF TRANSPORTATION STANDARD SPECIFICATIONS.

CHAMFERS: ALL EXPOSED CORNERS OF CONCRETE SHALL BE CHAMFERED WITH ¾" x ¾" MILLED CHAMFER STRIPS, UNLESS OTHERWISE NOTED EXCEPT ON UNEXPOSED FOOTINGS OR WHERE INDICATED BY THE FOLLOWING NOTATION ON THE PLANS: "DO NOT CHAMFER".

REINFORCING STEEL: REINFORCING STEEL SHALL CONFORM TO ASTM A 615, GRADE 60. MINIMUM COVER FOR ANY BAR SHALL BE 2" UNLESS OTHERWISE NOTED.

FOR TIES AND STIRRUPS, STANDARD ACI BENDING TOLERANCES ARE MODIFIED TO PLUS (+) ZERO INCHES, MINUS (-) NORMAL ACI BENDING TOLERANCE.

ONLY GRADE 60 CAN BE USED ON THIS PROJECT.

ALL REINFORCING STEEL IN THE PARAPET AND MOMENT SLAB SHALL BE EPOXY COATED.

ALL KEYS ARE NOMINAL SIZE.

THE MSE WALL MANUFACTURER MAY SUBSTITUTE ALTERNATE REINFORCING CONFIGURATIONS AND SUBMIT FOR APPROVAL.

EXPANSION AND CONTRACTION JOINTS: THE LOCATION OF THE EXPANSION AND CONTRACTION JOINTS IN THE BARRIER/MOMENT SLAB SHOWN ON THE PLANS MAY BE ADJUSTED TO ACCOMMODATE THE PANEL TYPE USED IN THE PROJECT. ANY CHANGE TO THESE JOINT LOCATIONS SHALL BE SUBMITTED TO THE ENGINEER FOR APPROVAL. EXPANSION JOINTS ARE LABELED "EJ".

LEVELING PAD: THE PROPRIETARY WALL MANUFACTURER MAY RELOCATE THE LEVELING PAD STEPS AT THEIR DISCRETION PROVIDED THAT THE MINIMUM EMBEDMENT IS MAINTAINED. ANY CHANGE TO THE STEP LOCATIONS SHALL BE SUBMITTED TO THE ENGINEER FOR APPROVAL.

ROADWAY LIMITS: THE PROPRIETARY WALL MANUFACTURER SHALL ASSURE THAT PROPOSED PROPRIETARY WALL COMPONENTS ARE POSITIONED SUCH THAT THE DESIGNATED ROADWAY LIMITS ARE NOT ENCROACHED UPON.

TRAFFIC BARRIER JOINTS: TRAFFIC BARRIER/MOMENT SLAB SHALL HAVE CONSTRUCTION JOINTS.

COORDINATION: CONTRACTOR AND PROPRIETARY WALL MANUFACTURER SHALL COORDINATE LOCATIONS OF INLETS AND PIPES WITH LOCATIONS OF PROPRIETARY WALL TIEBACK SYSTEM AND MOMENT SLAB.

ARCHITECTURAL FINISH: THE MSE WALL PANELS SHALL RECEIVE AN ARCHITECTURAL FINISH.

SERVICE LIFE: ALL RETAINING WALL COMPONENTS SHALL BE DESIGNED FOR A MINIMUM SERVICE LIFE OF 75 YEARS.

WALL SYSTEM: ONLY ONE MSE WALL SYSTEM MAY BE USED ON THIS PROJECT.

ROADWAY SUPERELEVATION: FOR ROADWAY SUPERELEVATION, SEE SUPERELEVATION TABLES.

MSE WALL BACKFILL: MSE WALL BACKFILL SHALL CONSIST OF SPECIFIED BACKFILL.

MOMENT SLAB: THE MOMENT SLAB IS DESIGNED IN ACCORDANCE WITH THE SAME CRITERIA SPECIFIED FOR MECHANICALLY STABILIZED EARTH WALLS IN SECTION 11.10.10.2 OF THE AASHTO LRFD BRIDGE DESIGN SPECIFICATIONS, 4TH ED.

PAY ITEMS: PCC MASONRY, PARAPET, CLASS A (602017)
MECHANICALLY STABILIZED EARTH WALLS (602772)
BAR REINFORCEMENT, EPOXY COATED (604000)

SOIL PROPERTIES FOR DESIGN

SOIL TYPE	UNIT WEIGHT (PCF)	ANGLE OF FRICTION (DEGREES)
SELECT FILL	125	34
COMMON BORROW	130	38
FOUNDATION SOIL	68	24

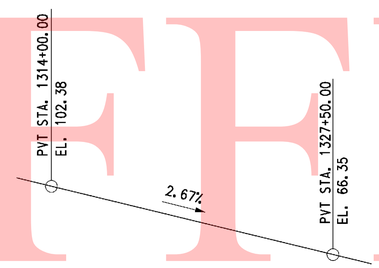

RAMP G1 VERTICAL CURVE DATA

NO SCALE

CURVE NO. 39		CURVE NO. 40	
P.I. STA.	1315+87.20	P.I. STA.	1321+39.36
Δ	28°50′21.32″ LT	Δ	11°37′48.17″ LT
DC	6°51′42.37″	DC	1°41′01.26″
R	835.00′	R	3403.00′
TANGENT	214.70′	TANGENT	346.57′
LENGTH	420.29′	LENGTH	690.75′

RAMP G1 HORIZONTAL CURVE DATA

NO SCALE

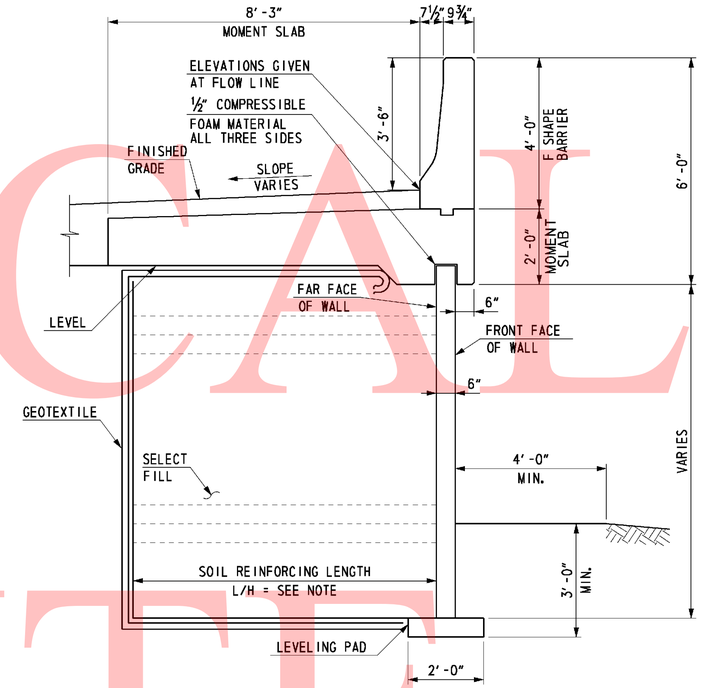

TYPICAL SECTION

(LOOKING AHEAD STATIONS)
SCALE: ½″ = 1′-0″

FOUNDATION NOTES

THE FACTORED BEARING RESISTANCE SHALL BE VERIFIED PRIOR TO CONSTRUCTION OF THE MSE WALL.

THE INTERNAL STABILITY OF THE MSE WALL SHALL BE DESIGNED BY THE CONTRACTOR USING THE SOIL PARAMETERS PROVIDED FOR EACH STRUCTURE LOCATION. THE INTERNAL STABILITY SHOULD BE SIGNED AND SEALED BY A PROFESSIONAL ENGINEER LICENSED IN THE STATE OF DELAWARE AS INDICATED IN THE PROJECT SPECIFICATIONS. THE FACTORED APPLIED BEARING STRESS SHALL NOT EXCEED THE FACTORED BEARING RESISTANCE.

GROUNDWATER MAY BE ENCOUNTERED DURING EXCAVATION TO THE LEVELING PAD AND DURING CONSTRUCTION OF THIS RETAINING WALL. IT IS THE CONTRACTOR'S RESPONSIBILITY TO PROVIDE A RELATIVELY DRY EXCAVATION, INCLUDING DETERMINING APPROPRIATE DEWATERING METHODS DURING CONSTRUCTION.

A QUARANTINE PERIOD OF APPROXIMATELY 30-DAYS IS REQUIRED AFTER CONSTRUCTION OF THE FULL HEIGHT OF THE MSE WALL IS ACHIEVED. THE ENGINEER SHALL APPROVE THE COMPLETION OF THE QUARANTINE PERIOD PRIOR TO CONSTRUCTION OF ANY MOMENT SLABS OR PARAPETS.

RETAINING WALL 7 FROM RAMP G1 STA 1317+60.83 TO STA 1318+00 MAY BE CONSTRUCTED WITH SELECT FILL FOR THE FULL HEIGHT OF THE RETAINING WALL. THERE WILL BE NO BACKFILL BETWEEN THE WALLS. THE MINIMUM REINFORCEMENT LENGTH TO HEIGHT RATIO FOR RETAINING WALL 7 IS L/H=0.9. FROM RAMP G1 STA 1318+00 TO STA 1356+88 (END OF WALL), THE REINFORCEMENT LENGTH TO HEIGHT RATIO MUST BE L/H = 1.1. COMMON BORROW MAY BE USED AS BACKFILL BEHIND THE REINFORCEMENT ZONE.

THE DESIGN UNIT WEIGHT INDICATED IN SOIL PROPERTIES TABLE HAS BEEN ADJUSTED DUE TO THE PRESENCE OF SHALLOW GROUNDWATER.

THE WALL SUPPLIER SHAL PERFORM A DETAILED SEISMIC ANALYSIS FOR BACK TO BACK MSE WALLS WITH L/H LESS THAN 1.1, IF NECESSARY, AS REQUIRED BY FHWA PUBLICATION NO. FHWA-NHI-00-043..

0 1 4
½ 2
SCALE: ½″=1′-0″

UNOFFICAL WEBSITE COPY

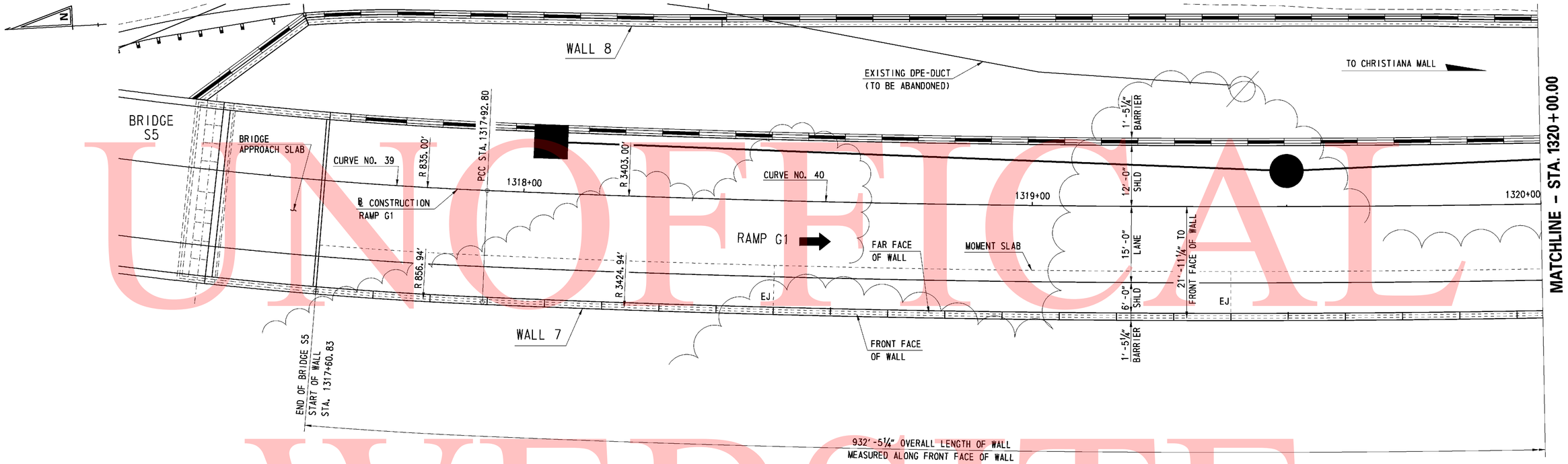

PLAN

SCALE: 1"= 10'-0"

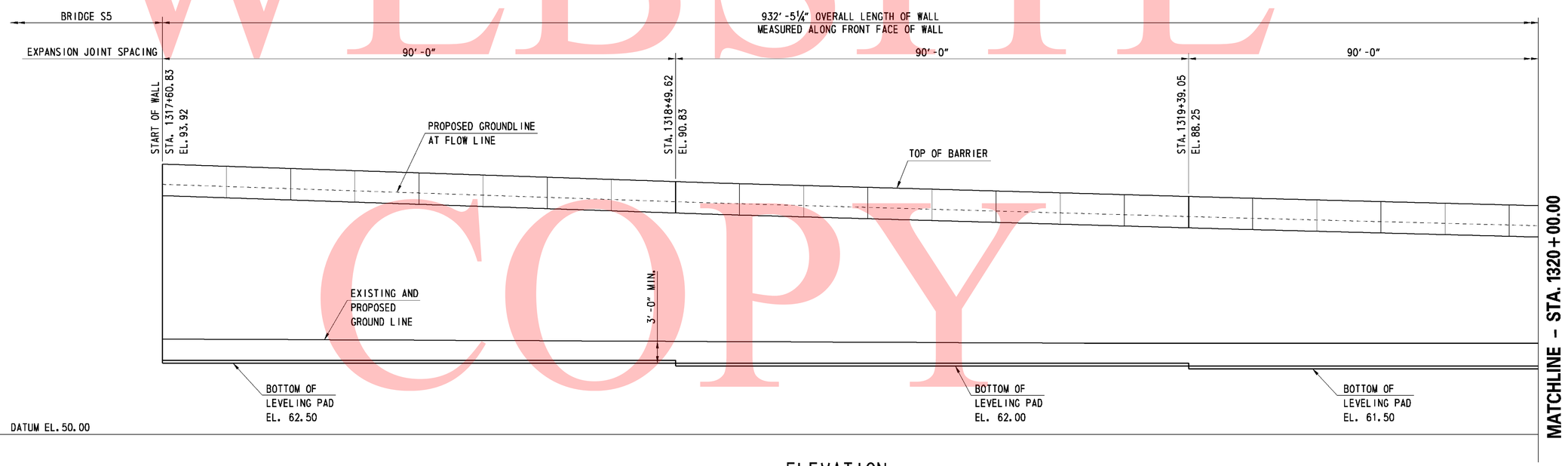

ELEVATION

SCALE: 1"= 10'-0"

0 10 20 30

SCALE: 1"= 10'-0"

UNOFFICIAL WEBSITE COPY

9/2/2010 2:27:51 PM
M:\PROJECTS\2003\03059_DELTRNPK\SR1MALL\CADD\2809003\PLANS\RD08_WALL-07_SR1.DGN

DELAWARE DEPARTMENT OF TRANSPORTATION	ADDENDUMS / REVISIONS	SR1 / I-95 INTERCHANGE	CONTRACT 28-090-03	BRIDGE NO.	RETAINING WALL 7 GENERAL PLAN AND ELEVATION - 1	R7-02	
			COUNTY NEW CASTLE	DESIGNED BY: JMS		SHEET NO. 560	
				CHECKED BY: JSW		TOTAL SHTS. 803	

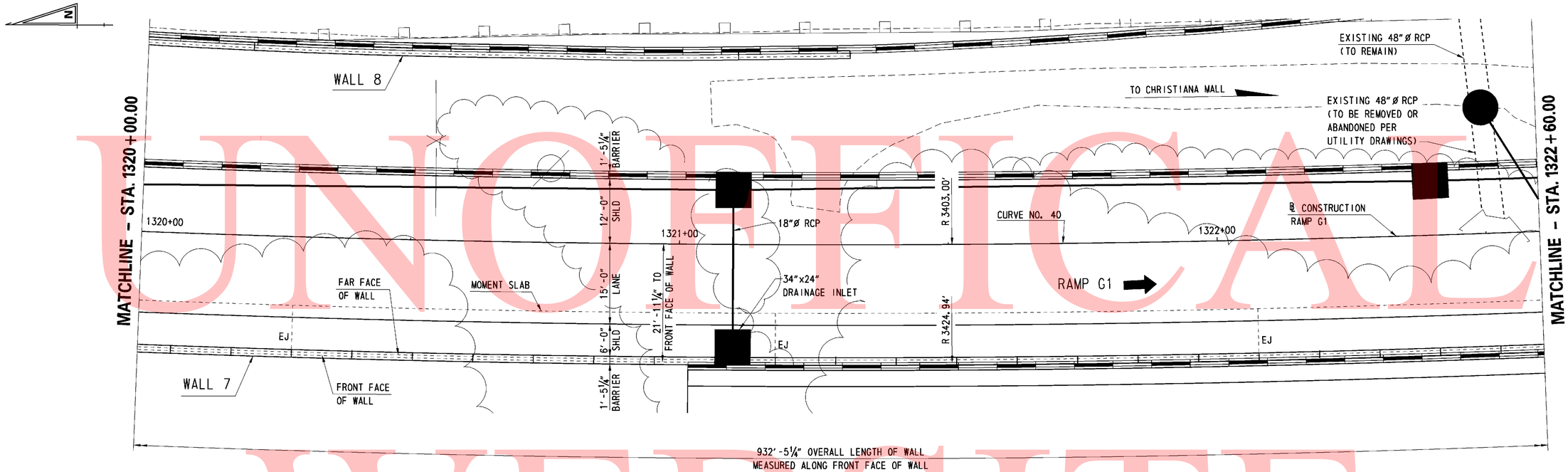

PLAN

SCALE: 1"= 10'-0"

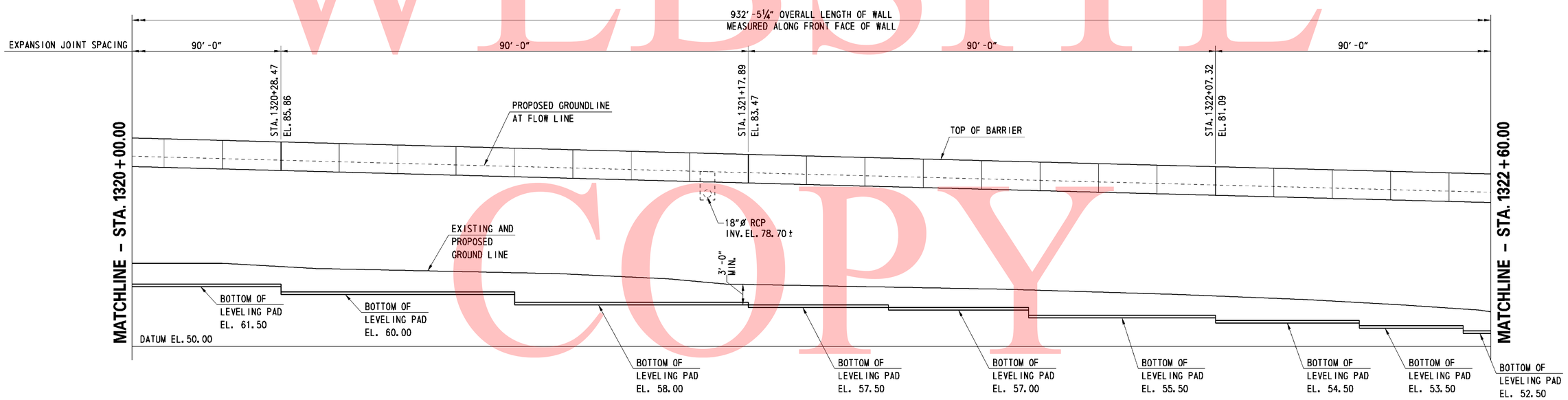

ELEVATION

SCALE: 1"= 10'-0"

0 10 20 30

SCALE: 1"= 10'-0"

UNOFFICIAL WEBSITE COPY

11/11/2010 8:04:10 AM
M:\PROJECTS\2003\03059_DELTRNPK\SR1MAIL\CADD\2809003\PLANS\RD09_WALL-07_SR1.DGN

DELAWARE DEPARTMENT OF TRANSPORTATION	ADDENDUMS / REVISIONS		SR1 / I-95 INTERCHANGE	CONTRACT 28-090-03	BRIDGE NO.	RETAINING WALL 7 GENERAL PLAN AND ELEVATION – 2	R7-03	SHEET NO. 561
				COUNTY NEW CASTLE	DESIGNED BY: JMS			TOTAL SHTS. 803
					CHECKED BY: JSW			

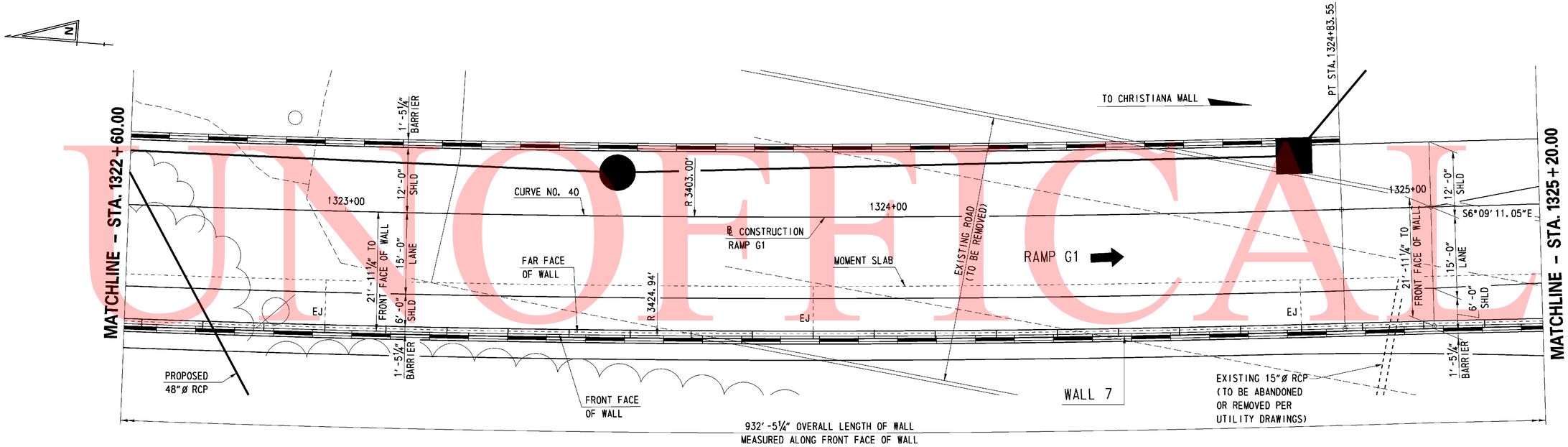

PLAN

SCALE: 1"= 10'-0"

NOTE:
1. LANE VARIES FROM 15'-0" TO 12'-0" FROM STATION 1325+00.00 TO 1326+50.00. MEASUREMENT TO FRONT FACE OF WALL VARIES FROM 21-11¼" TO 22'-11¼" FROM STATION 1325+00.00 TO 1326+50.00

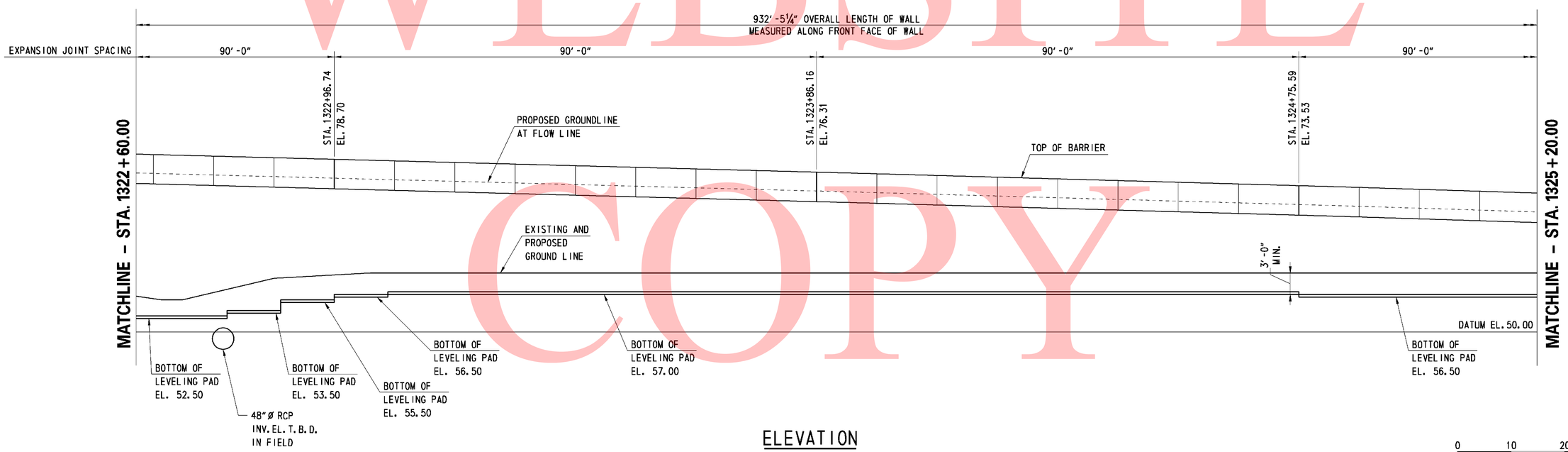

ELEVATION

SCALE: 1"= 10'-0"

0 10 20 30
SCALE: 1"= 10'-0"

UNOFFICAL WEBSITE COPY

11/11/2010 8:12:40 AM
M:\PROJECTS\2003\03059_DELTRNPK\SR1MAIN\CADD\2809003\PLANS\RD10_WALL-07_SR1.DGN

DELAWARE DEPARTMENT OF TRANSPORTATION	ADDENDUMS / REVISIONS	SR1 / I-95 INTERCHANGE	CONTRACT 28-090-03	BRIDGE NO.	RETAINING WALL 7 GENERAL PLAN AND ELEVATION – 3	SHEET NO. 562	R7-04
			COUNTY NEW CASTLE	DESIGNED BY: JMS		TOTAL SHTS. 803	
				CHECKED BY: JSW			

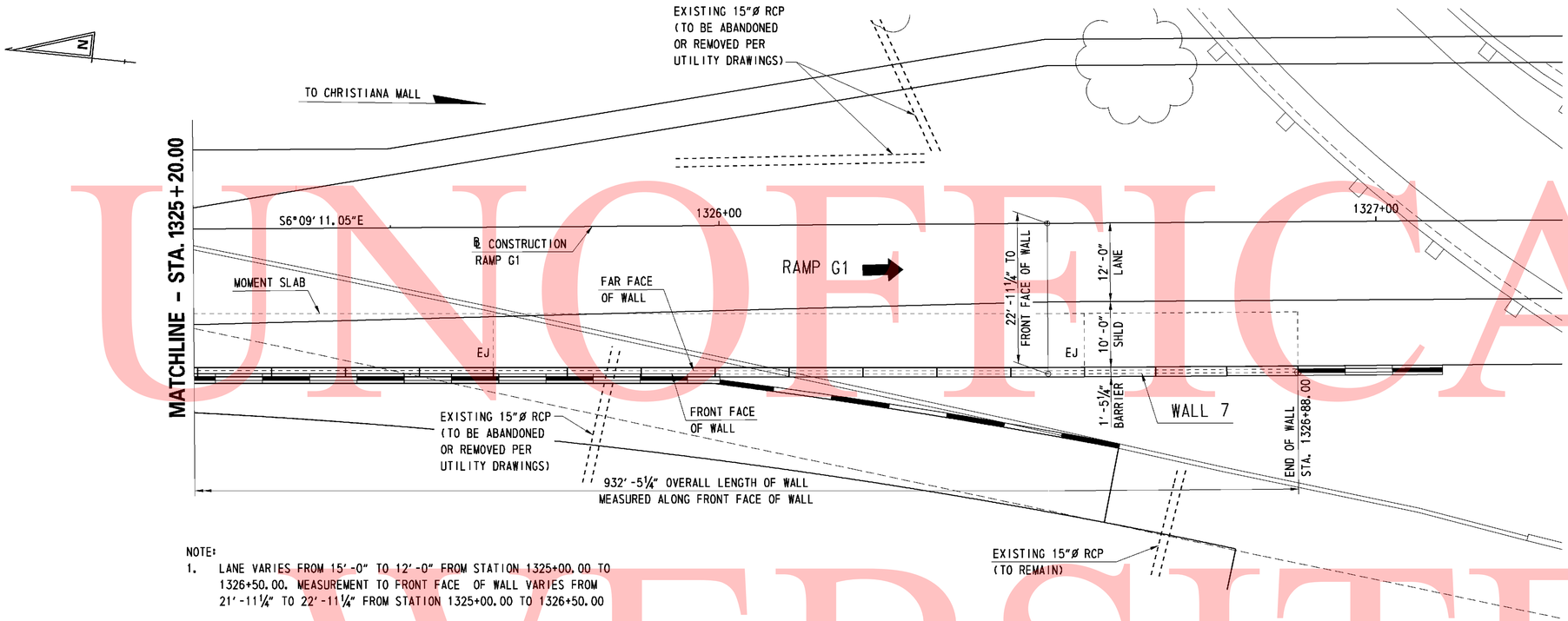

NOTE:

1. LANE VARIES FROM 15'-0" TO 12'-0" FROM STATION 1325+00.00 TO 1326+50.00. MEASUREMENT TO FRONT FACE OF WALL VARIES FROM 21'-11¼" TO 22'-11¼" FROM STATION 1325+00.00 TO 1326+50.00

PLAN

SCALE: 1"= 10'-0"

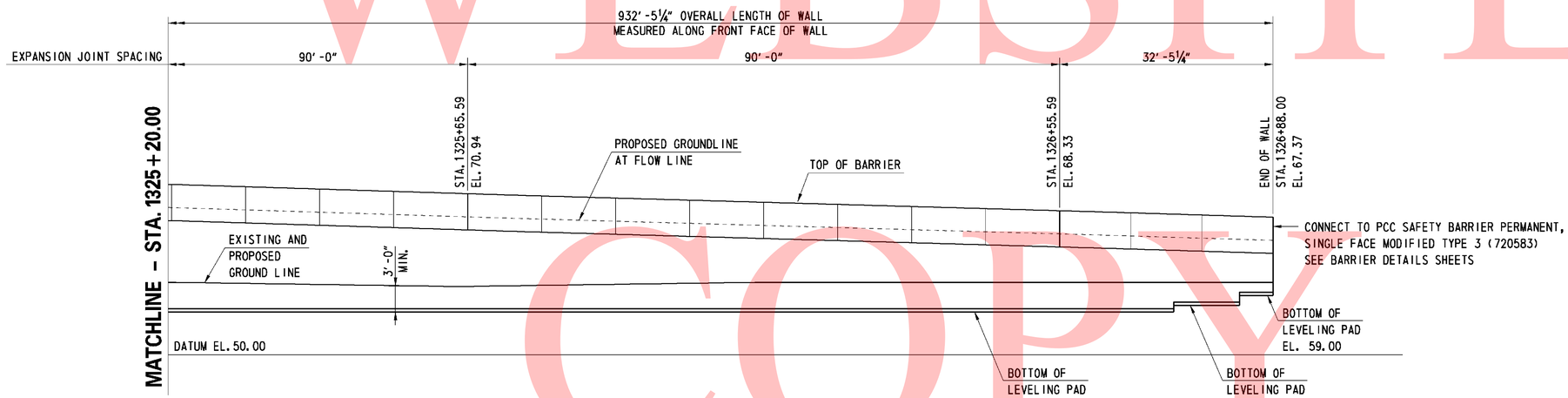

ELEVATION

SCALE: 1"= 10'-0"

0 10 20 30

SCALE: 1"= 10'-0"

UNOFFICAL WEBSITE COPY

11/11/2010 9:57:20 AM
M:\PROJECTS\2003\03059_DELTRNPK\SR1MALL\CADD\2809003\PLANS\RD11_WALL-07_SR1.DGN

DELAWARE DEPARTMENT OF TRANSPORTATION	ADDENDUMS / REVISIONS		SR1 / I-95 INTERCHANGE	CONTRACT 28-090-03	BRIDGE NO.	RETAINING WALL 7 GENERAL PLAN AND ELEVATION - 4	R7-05 SHEET NO. 563
				COUNTY NEW CASTLE	DESIGNED BY: JMS		TOTAL SHTS. 803
					CHECKED BY: JSW		

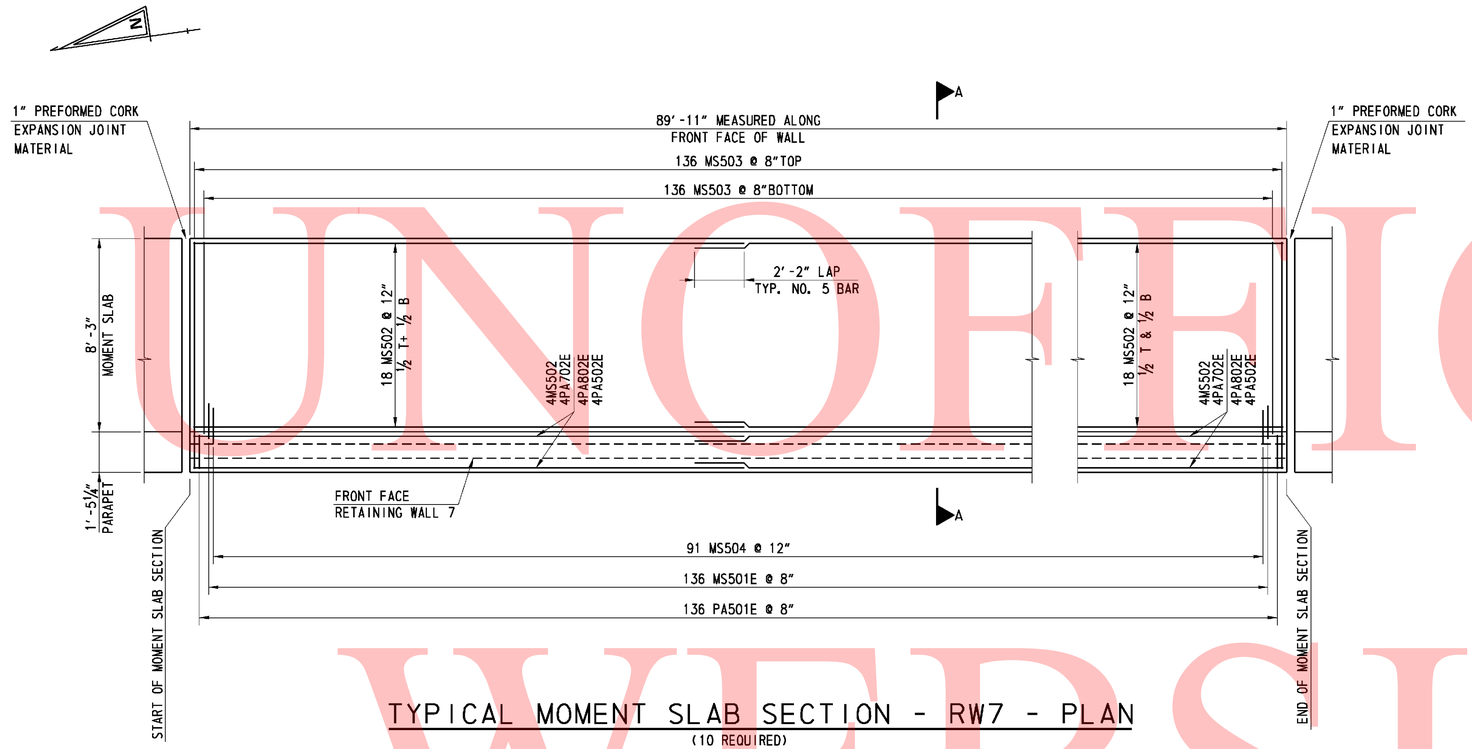

TYPICAL MOMENT SLAB SECTION - RW7 - PLAN

(10 REQUIRED)
NOT TO SCALE

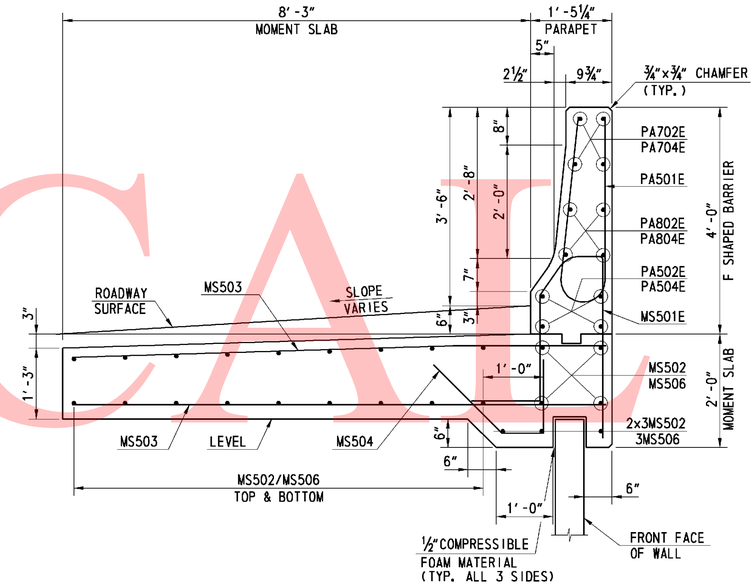

SECTION A-A

SCALE: ¾" = 1'-0"

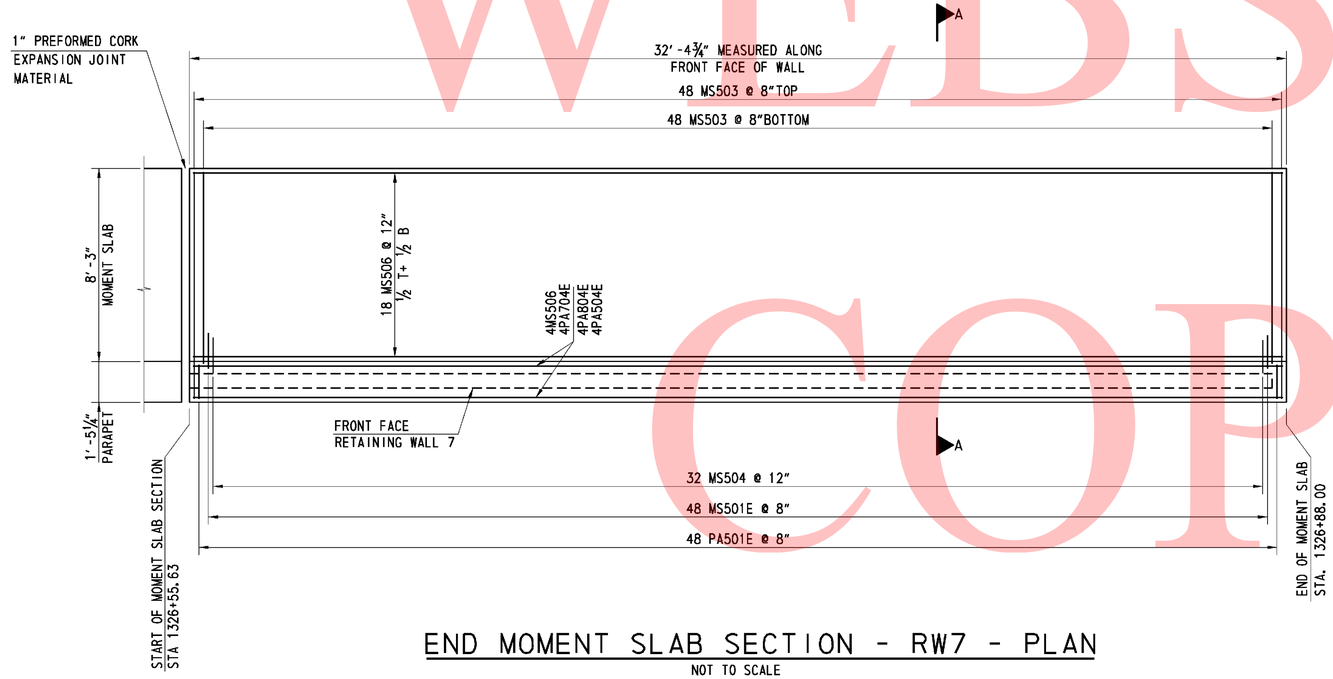

END MOMENT SLAB SECTION - RW7 - PLAN

NOT TO SCALE

0 1 4
½ 2
SCALE: ¾" = 1'-0"

UNOFFICAL WEBSITE COPY

9/2/2010 11:24:54 AM
M:\PROJECTS\2003\03059_DELTRNPK\SRIMALL\CADD\2809003\PLANS\RD40_WALL-07_DET_SR1.DGN

DELAWARE DEPARTMENT OF TRANSPORTATION	ADDENDUMS / REVISIONS		SR1 / I-95 INTERCHANGE	CONTRACT 28-090-03	BRIDGE NO.	RETAINING WALL 7 MOMENT SLAB AND BARRIER REINFORCING	R7-06
				COUNTY NEW CASTLE	DESIGNED BY: JMS		SHEET NO. 564
					CHECKED BY: JSW		TOTAL SHTS. 803

(1) ANY MARK NUMBER WITH SUFFIX 'E' DENOTES EPOXY-COATED REINFORCING STEEL.

(2) ALL MARK 'LOCATION PREFIXES' SHALL CONSIST OF TWO LETTERS AND ARE AS FOLLOWS:

MS = MOMENT SLAB, PA = BARRIER/PARAPET

RETAINING WALL 7

SPECIFICATIONS					BENDING DIMENSIONS (FEET-INCHES /QUARTER INCH)											
QTY.	SIZE	LENGTH	MARK	TYPE	A	B	C	D	E	F/R	G	H	J	K	O	REMARKS
1408	5	7-7 5/16	PA501E	H1		3-3	1-1 3/16	3-3 1/8		0-4 3/16		0-5				
80	5	45-10 1/2	PA502E	STR												BEND BARS IN FIELD AS NEEDED
80	7	46-8	PA702E	STR												BEND BARS IN FIELD AS NEEDED
4	7	32-2	PA704E	STR												BEND BARS IN FIELD AS NEEDED
80	8	47-3	PA802E	STR												BEND BARS IN FIELD AS NEEDED
4	8	32-2	PA804E	STR												BEND BARS IN FIELD AS NEEDED
4	5	32-2	PA504E	STR												BEND BARS IN FIELD AS NEEDED
1408	5	7-8 15/16	MS501E	T15	0	2-9	0-8 3/8	0-8 1/2	2-7	1-0		2-7	0-4 7/8	0-7	1-1 1/4	
440	5	45-10 1/2	MS502	STR												BEND BARS IN FIELD AS NEEDED
2816	5	9-4 1/4	MS503	STR												
942	5	3-5	MS504	16	0	1-0	1-0	1-5				1-0	1-0			
25	5	32-2	MS506	STR												BEND BARS IN FIELD AS NEEDED

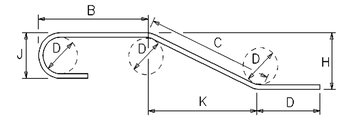

NOTES:

1. FIGURES SHOWN IN CIRCLES REPRESENT BAR BEND TYPES.
2. STANDARD BAR BENDS INCLUDE ONLY TYPES 1-32, S1-S12, AND T1-T16.
3. ALL DIMENSIONS ARE OUT-TO-OUT OF BAR EXCEPT "A" AND "G" ON STANDARD 180° AND 135° HOOKS.
4. "J" DIMENSIONS ON 180° HOOKS TO BE SHOWN ONLY WHERE NECESSARY TO RESTRICT HOOK SIZE, OTHERWISE STANDARD HOOKS ARE TO BE USED.
5. WHERE "J" IS NOT SHOWN, "J" WILL BE KEPT EQUAL TO OR LESS THAN "H" ON TRUSS BARS. WHERE "J" CAN EXCEED "H", IT SHALL BE SHOWN.
6. "H" DIMENSIONS OF STIRRUPS TO BE SHOWN WHERE NECESSARY TO FIT WITHIN THE CONCRETE.
7. UNLESS OTHERWISE NOTED, DIAMETER "D" IS THE SAME FOR ALL BENDS AND HOOKS ON A BAR.
8. WHERE SLOPE DIFFERS FROM 45° OFFSET, "H" AND "K" MUST BE SHOWN.
9. WHERE BARS ARE TO BE BENT MORE ACCURATELY THAN STANDARD BENDING TOLERANCES, BENDING DIMENSIONS WHICH REQUIRE CLOSER FABRICATION SHOULD HAVE LIMITS INDICATED.
10. FOR RECOMMENDED DIAMETER "D", OF BENDS, HOOKS, ETC., REFER TO TABLE AT RIGHT, 'CRSI' OR 'ACI' TABLES.
11. TYPE S1-S12, T1-T16 APPLY TO BAR SIZES 3 THROUGH 6.

ASTM STANDARD ENGLISH REINFORCING BARS				RECOMMENDED END HOOKS, APPLICABLE TO ALL GRADES			
	NOMINAL DIMENSIONS				180° HOOKS		90° HOOKS
BAR SIZE	DIAMETER (inches)	AREA (inches²)	WEIGHT (lbs./ft.)	D	A OR G	J	A OR G
3	0.375	0.110	0.376	2"	5"	3"	6"
4	0.500	0.200	0.668	3"	6"	4"	8"
5	0.625	0.310	1.043	3"	7"	5"	10"
6	0.750	0.440	1.502	4"	8"	6"	1'-0"
7	0.875	0.600	2.044	5"	10"	7"	1'-2"
8	1.000	0.790	2.670	6"	11"	8"	1'-4"
9	1.128	1.000	3.400	9"	1'-3"	11"	1'-7"
10	1.270	1.270	4.303	10"	1'-5"	1'-1"	1'-10"
11	1.410	1.560	5.313	1'-0"	1'-7"	1'-2"	2'-0"
14	1.693	2.250	7.650	1'-6"	2'-3"	1'-9"	2'-7"
18	2.257	4.000	13.600	2'-0"	3'-0"	2'-4"	3'-5"

STANDARD BAR BENDS

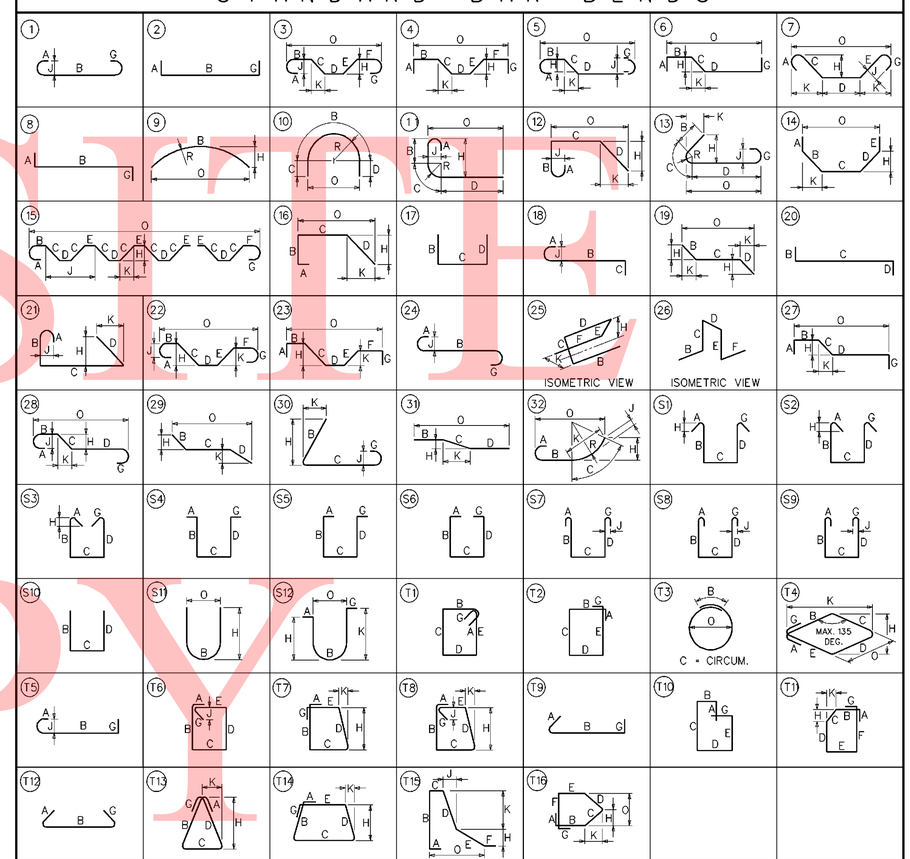

SPECIAL BAR BENDS

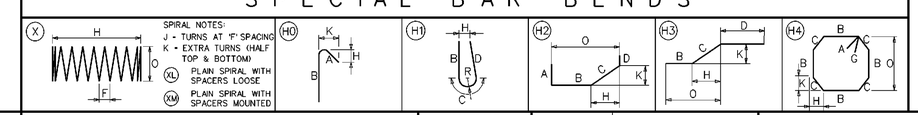

UNOFFICIAL WEBSITE COPY

9/2/2010 2:37:48 PM
M:\PROJECTS\2003\03059_DELTRNPK\SRTMALL\CADD\2809003\PLANS\RD41_WALL-07_BAR_SR1.DGN

DELAWARE DEPARTMENT OF TRANSPORTATION

ADDENDUMS / REVISIONS

SR1 / I-95 INTERCHANGE

CONTRACT	BRIDGE NO.	
28-090-03	DESIGNED BY:	JMS
COUNTY	CHECKED BY:	JSW
NEW CASTLE		

RETAINING WALL 7
REINFORCING BAR LIST

R7-07

SHEET NO. 565

TOTAL SHTS. 803

SUMMARY OF LABORATORY TEST RESULTS OF TUBE SAMPLES

BORING NO.	TOP SAMPLE DEPTH (FT)	NATURAL MOISTURE CONTENT (%)	LL	PL	PI	PERCENT PASSING NO. 200	AASHTO	UNDISTURBED TUBE TESTING	TOTAL UNIT WEIGHT (pcf)	UNCONFINED COMPRESSION (psf)	TOTAL STRESS COHESION (psf)	TOTAL STRESS FRICTION ANGLE (deg)	EFFECTIVE STRESS COHESION (psf)	EFFECTIVE STRESS FRICTION ANGLE (deg)	UNDRAINED SHEAR (psf)	INITIAL VOID RATIO	PRECONSOLIDATION STRESS MAX (psf)	PRECONSOLIDATION STRESS MIN (psf)	C_c	C_r	pH	RESISTIVITY (ohm-cm)
IRW-21	19.5	20.5	50	28	22	95.0	A-7-5	UC	134.0	4946	-	-	-	-	2473	-	-	-	-	-	-	-
IBR-05	31.5	-	-	-	-	-	-	CONS	119.0	-	-	-	-	-	-	0.66	9500	5400	0.15	0.02	-	-
IBR-05	31.5	20.8	-	-	-	-	-	DS	128.7	-	935	15.62	-	-	-	-	-	-	-	-	-	-
IBR-05	31.5	16	21	18	3	65.0	A-4	UC	132.9	4084	-	-	-	-	2042	-	-	-	-	-	-	-
IRW-19	19.5	19.1	39	22	17	99.0	A-6	UC	133.2	7084	-	-	-	-	3542	-	-	-	-	-	-	-
IRW-19	38.5	22	49	22	27	81.0	A-7-5	CIUC	-	-	430	7.5	570	8.3	-	-	-	-	-	-	4.29	4000

DELAWARE DEPARTMENT OF TRANSPORTATION
AASHTO CLASSIFICATION OF SOILS AND SOIL-AGGREGATE MIXTURES

General Classification	Granular Materials (35% or Less Passing 0.075 mm)							Silt-Clay Materials (More than 35% Passing 0.075 mm)					Organic Soils
Group Classification: Group	A-1		A-3	A-2				A-4	A-5	A-6	A-7		A-8
Sub-Group	A-1-a	A-1-b		A-2-4	A-2-5	A-2-6	A-2-7				A-7-5	A-7-6	
Graphic	A	B			5		7				5		
Sieve Analysis, % Passing													
2.00 mm (No. 10)	50 Max	-	-	-	-	-	-	-	-	-	-	-	See Note 1
0.425 mm (No. 40)	30 Max	50 Max	51 Min	-	-	-	-	-	-	-	-	-	
0.075 mm (No. 200)	15 Max	25 Max	10 Max	35 Max	35 Max	35 Max	35 Max	36 Min	36 Min	36 Min	36 Min	36 Min	
Characteristics of Fraction													
Passing 0.425 mm (No. 40)	-		-	-	-	-	-	-	-	-	-	-	See Note 1
Liquid Limit	-		-	40 Max	41 Min	40 Max	41 Min	40 Max	41 Min	41 Max	41 Min	41 Min	
Plasticity Index	6 Max		NP	10 Max	10 Max	11 Min	11 Min	10 Max	10 Max	11 Min	11 Min	11 Min	
Usual Types of Significant Constituent Materials	Stone Fragments, Gravel and Sand		Fine Sand	Silty or Clayey Gravel and Sand				Silty Soils		Clayey Soils			Organic Soils

Plasticity Index of A-7-5 Subgroup Is Equal to or Less Than LL Minus 30

Plasticity Index of A-7-6 Subgroup Is Greater Than LL Minus 30

Note 1-Classification Based on Visual Inspection and not on Sieve Analysis or Atterberg Limits

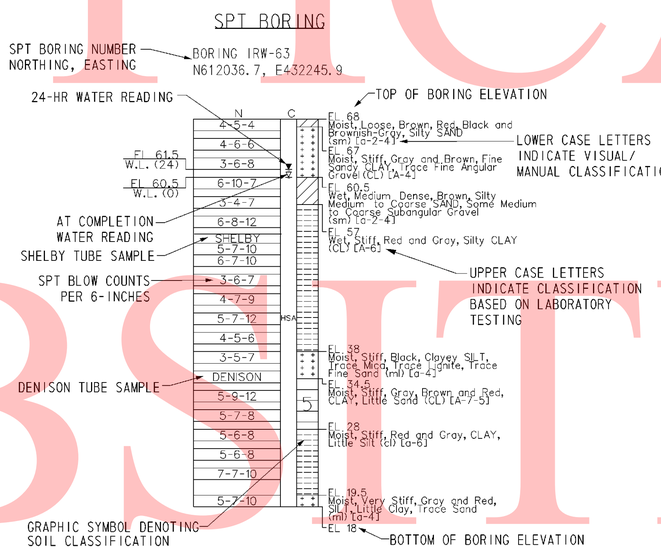

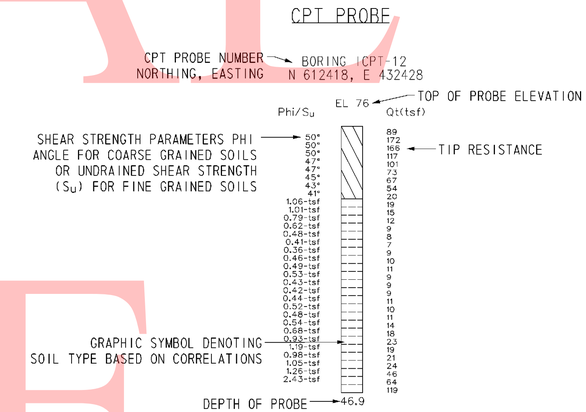

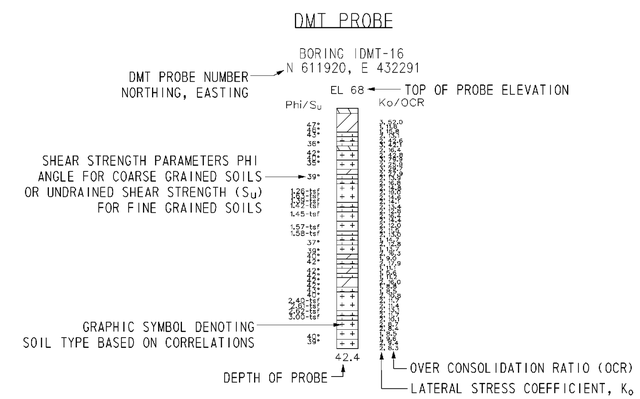

NOTES:

1. THE BORINGS AND DRIVE TEST WERE CONDUCTED IN MULTIPLE PHASES BY THE ROBERT B. BALTER COMPANY, THE WALTON CORPORATION, AND FINDLING, INC. BETWEEN AUGUST 2004 AND OCTOBER 2008.

2. THE SOIL SYMBOLS REFLECT ONLY THE MAJOR SOIL CONSTITUENT, FOR MORE COMPLETE SOIL CHARACTERISTIC REFER TO THE SOIL LOGS CONTAINED WITHIN THE FINAL FOUNDATION REPORTS DATED FEBRUARY 2009.

3. THE FIELD BORING LOGS RECORD SAMPLE SPOON RECOVERY. THE BORING LOGS AND LABORATORY TESTING RESUTS ARE AVAILABLE UPON REQUEST.

4. N = BLOWS ON A 2 INCH OD SAMPLING SPOON BY 140 LB DRIVE- WEIGHT FALLING 30 INCHES INDICATING SUCCESSIVE 6 INCH INCREMENTS OF PENETRATION. PENETRATIONS GREATER THAN 6-INCHES OR LESS THAN 6-INCHES ARE INDICATED BY WOH, WOR, OR THE DEPTH OF THE PENETRATION TO THE NEAREST INCH.

   WOH= STATIC WEIGHT OF SAMPLING SPOON DRIVE-WEIGHT ASSEMBLY, DRIVE-WEIGHT,ANVIL (WHEN AUTOMATIC HAMMER IS USED), DRILL ROD(S), AND SAMPLING SPOONS.

   WOR= STATIC WEIGHT OF DRILL ROD AND SAMPLING SPOON

5. FIELD BORINGS AND SOIL SAMPLING WERE PERFORMED IN ACCORDANCE TO AASHTO T-206, T-225 AND T-306.

6. USCS AND AASHTO DESIGNATIONS INDICATED IN UPPER CASE HAVE BEEN CONFIRMED USING LAB SOIL CLASSIFICATION TESTS. USCS AND AASHTO DESIGNATIONS INDICATED IN LOWER CASE ARE BASED ON VISUAL CLASSIFICATION TECHNIQUES ACCORDING TO ASTM D 2488 AND AASHTO M 145 BY RK&K GEOLOGIST OR ENGINEER.

7. CPT AND DMT PROBES WERE DRILLED BY IN-SITU SOIL TESTING, L.C AND CONETEC, INC.

   CPT = CONE PENETRATION TESTING
   DMT = FLAT- PLATE DILATOMETER

8. C= DEPTH OF HOLLOW STEM CONTINUOUS FLIGHT AUGER (HSA) WITH A 3-3/8 INCH ID, AND LIMIT OF MUD ROTARY (MD).

9. FOR BORING LOCATIONS, SEE CONSTRUCTION PLAN SHEETS 182 THROUGH 186.

10. FOR ADDITIONAL BORING & DRIVE TESTS SEE BORING & DRIVE TESTS SHEETS FOR OTHER STRUCTURES.

11. FOR ALL OTHER BORING & DRIVE TESTS SEE SHEETS 744 THROUGH 792.

12. FOR ADDITIONAL LABORATORY TEST RESULTS OF UNDISTURBED TUBE SAMPLES AND INDEX TESTING SEE, SHEETS 793 THROUGH 803.

13. FOR GROUNDWATER MONITORING DATA, SEE SHEET XXX OF XXX.

14. LL= LIQUID LIMIT

15. PL = PLASTIC LIMIT

16. PI = PLASTICITY INDEX

17. UC = UNCONFINED COMPRESSION

18. DS = DIRECT SHEAR

19. CONS = CONSOLIDATION

20. UU = UNCONSOLIDATED- UNDRAINED TRIAXIAL TEST

21. CIUC = CONSOLIDATED ISOTROPIC UNDRAINED COMPRESSION TRIAXIAL TEST

22. AASHTO = AMERICAN ASSOCIATION OF STATE HIGHWAY TRANSPORTATION OFFICIALS

UNOFFICIAL WEBSITE COPY

UNOFFICAL WEBSITE COPY

DATUM EL. -60.00

NOTES:

1. FOR BORING NOTES AND INFORMATION SEE SHEET NO. 566 OF 803.
2. FOR BORING LOCATIONS SEE CONSTRUCTION PLAN SHEETS.

R7-9

DELAWARE DEPARTMENT OF TRANSPORTATION	ADDENDUMS / REVISIONS	SCALE 0 10 20 30 FEET	SR1 / I-95 INTERCHANGE	CONTRACT 28-090-03	BRIDGE NO.	RETAINING WALL 7 BORING & DRIVE TESTS	SHEET NO. 567
				COUNTY NEW CASTLE	DESIGNED BY: JLT		TOTAL SHTS. 803
					CHECKED BY: EMK		

7/26/2010 12:08:33 PM
M:\PROJECTS\2003\03059_DELTRNPK\SRIMALL\CADD\2809003\PLANS\B0041_R7_SR1.DGN

UNOFFICAL WEBSITE COPY

DATUM EL. -60.00

NOTES:

1. FOR BORING NOTES AND INFORMATION SEE SHEET NO. 566 OF 803.
2. FOR BORING LOCATIONS SEE CONSTRUCTION PLAN SHEETS.

R7-10

DELAWARE DEPARTMENT OF TRANSPORTATION	ADDENDUMS / REVISIONS	SCALE 0 10 20 30 FEET	SR1 / I-95 INTERCHANGE	CONTRACT 28-090-03	BRIDGE NO.	RETAINING WALL 7 BORING & DRIVE TESTS	SHEET NO. 568
				COUNTY NEW CASTLE	DESIGNED BY: JLT		TOTAL SHTS. 803
					CHECKED BY: EMK		

7/26/2010 12:09:17 PM
M:\PROJECTS\2003\03059_DELTRNPK\SRMALL\CADD\2809003\PLANS\B0042_R7_SR1.DGN

UNOFFICAL WEBSITE COPY

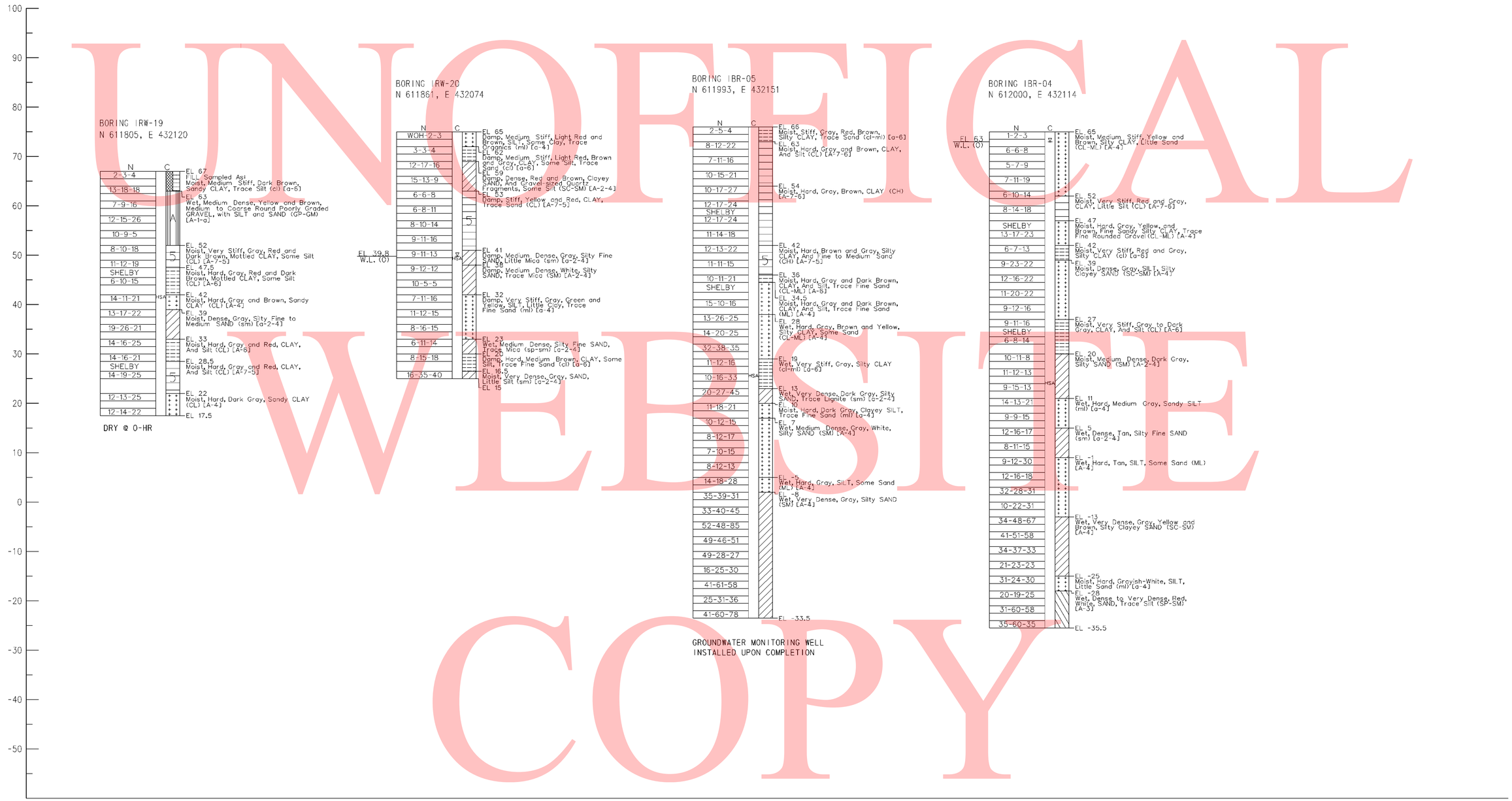

NOTES:

1. FOR BORING NOTES AND INFORMATION SEE SHEET NO. 566 OF 803.
2. FOR BORING LOCATIONS SEE CONSTRUCTION PLAN SHEETS.

DELAWARE DEPARTMENT OF TRANSPORTATION	ADDENDUMS / REVISIONS	SCALE 0 10 20 30 FEET	SR1 / I-95 INTERCHANGE	CONTRACT 28-090-03	BRIDGE NO.	RETAINING WALL 7 BORING & DRIVE TESTS	R7-11
				COUNTY NEW CASTLE	DESIGNED BY: JLT		SHEET NO. 569
					CHECKED BY: EMK		TOTAL SHTS. 803

7/26/2010 12:10:03 PM
M:\PROJECTS\2003\03059_DELTRNPK\SR1MAIL\CADD\2809003\PLANS\B0043_R7_SR1.DGN

GENERAL NOTES

SPECIFICATIONS: PROPRIETARY MSE WALLS SHALL BE DESIGNED IN ACCORDANCE WITH THE FOLLOWING:
- AASHTO LRFD BRIDGE DESIGN SPECIFICATIONS, 4TH EDITION WITH ALL CURRENT REVISIONS.
- FEDERAL HIGHWAY ADMINISTRATION PUBLICATION NO. FHWA-NHI-00-043, "MECHANICALLY STABILIZED EARTH WALLS AND REINFORCED SOIL SLOPES DESIGN AND CONSTRUCTION GUIDELINES"

CONCRETE: CONCRETE DESIGN SHALL BE PERFORMED USING THE LOAD AND RESISTANCE FACTOR DESIGN METHOD.

COPING CONCRETE SHALL BE 3500 PSI. MIX REQUIREMENTS SHALL CONFORM TO SECTION 812 OF THE DELAWARE DEPARTMENT OF TRANSPORTATION STANDARD SPECIFICATIONS.

CHAMFERS: ALL EXPOSED CORNERS OF CONCRETE SHALL BE CHAMFERED WITH ¾" x ¾" MILLED CHAMFER STRIPS, UNLESS OTHERWISE NOTED EXCEPT ON UNEXPOSED FOOTINGS OR WHERE INDICATED BY THE FOLLOWING NOTATION ON THE PLANS: "DO NOT CHAMFER".

REINFORCING STEEL: REINFORCING STEEL SHALL CONFORM TO ASTM A 615, GRADE 60. MINIMUM COVER FOR ANY BAR SHALL BE 2" UNLESS OTHERWISE NOTED.

FOR TIES AND STIRRUPS, STANDARD ACI BENDING TOLERANCES ARE MODIFIED TO PLUS (+) ZERO INCHES, MINUS (-) NORMAL ACI BENDING TOLERANCE.

ONLY GRADE 60 CAN BE USED ON THIS PROJECT.

ALL REINFORCING STEEL IN THE COPING SHALL BE EPOXY COATED.

ALL KEYS ARE NOMINAL SIZE.

THE MSE WALL MANUFACTURER MAY SUBSTITUTE ALTERNATE REINFORCING CONFIGURATIONS AND SUBMIT FOR APPROVAL.

EXPANSION AND CONTRACTION JOINTS: THE LOCATION OF THE EXPANSION AND CONTRACTION JOINTS IN THE COPING SHOWN ON THE PLANS MAY BE ADJUSTED TO ACCOMMODATE THE PANEL TYPE USED IN THE PROJECT. ANY CHANGE TO THESE JOINT LOCATIONS SHALL BE SUBMITTED TO THE ENGINEER FOR APPROVAL. EXPANSION JOINTS ARE LABELED "EJ".

LEVELING PAD: THE PROPRIETARY WALL MANUFACTURER MAY RELOCATE THE LEVELING PAD STEPS AT THEIR DISCRETION PROVIDED THAT THE MINIMUM EMBEDMENT IS MAINTAINED. ANY CHANGE TO THE STEP LOCATIONS SHALL BE SUBMITTED TO THE ENGINEER FOR APPROVAL.

ROADWAY LIMITS: THE PROPRIETARY WALL MANUFACTURER SHALL ASSURE THAT PROPOSED PROPRIETARY WALL COMPONENTS ARE POSITIONED SUCH THAT THE DESIGNATED ROADWAY LIMITS ARE NOT ENCROACHED UPON.

COPING JOINTS: COPING SHALL HAVE CONSTRUCTION JOINTS.

COORDINATION: CONTRACTOR AND PROPRIETARY WALL MANUFACTURER SHALL COORDINATE LOCATIONS OF INLETS AND PIPES WITH LOCATIONS OF PROPRIETARY WALL TIEBACK SYSTEM.

ARCHITECTURAL FINISH: THE MSE WALL PANELS SHALL RECEIVE AN ARCHITECTURAL FINISH.

SERVICE LIFE: ALL RETAINING WALL COMPONENTS SHALL BE DESIGNED FOR A MINIMUM SERVICE LIFE OF 75 YEARS.

WALL SYSTEM: ONLY ONE MSE WALL SYSTEM MAY BE USED ON THIS PROJECT.

ROADWAY SUPERELEVATION: FOR ROADWAY SUPERELEVATION, SEE SUPERELEVATION TABLES.

MSE WALL BACKFILL: MSE WALL BACKFILL SHALL CONSIST OF SPECIFIED BACKFILL.

PAY ITEMS: MECHANICALLY STABILIZED EARTH WALLS (602772)
PCC MASONRY FOR MSE WALLS (602773)
BAR REINFORCEMENT, EPOXY COATED (604000)

FOUNDATION NOTES

THE FACTORED BEARING RESISTANCE SHALL BE VERIFIED PRIOR TO CONSTRUCTION OF THE MSE WALL.

THE INTERNAL STABILITY OF THE MSE WALL SHALL BE DESIGNED BY THE CONTRACTOR USING THE SOIL PARAMETERS PROVIDED FOR EACH STRUCTURE LOCATION. THE INTERNAL STABILITY SHOULD BE SIGNED AND SEALED BY A PROFESSIONAL ENGINEER LICENSED IN THE STATE OF DELAWARE AS INDICATED IN THE PROJECT SPECIFICATIONS. THE FACTORED APPLIED BEARING STRESS SHALL NOT EXCEED THE FACTORED BEARING RESISTANCE.

ISOLATED AREAS OF UNDERCUTTING OF EXISTING FILL MAY BE ENCOUNTERED DURING CONSTRUCTION OF THIS RETAINING WALL.

GROUNDWATER MAY BE ENCOUNTERED DURING EXCAVATION TO THE LEVELING PAD AND DURING CONSTRUCTION OF THIS RETAINING WALL. IT IS THE CONTRACTOR'S RESPONSIBILITY TO PROVIDE A RELATIVELY DRY EXCAVATION, INCLUDING DETERMINING APPROPRIATE DEWATERING METHODS DURING CONSTRUCTION.

A QUARANTINE PERIOD OF APPROXIMATELY 30-DAYS IS REQUIRED AFTER CONSTRUCTION OF THE FULL HEIGHT OF THE MSE WALL IS ACHIEVED. THE ENGINEER SHALL APPROVE THE COMPLETION OF THE QUARANTINE PERIOD PRIOR TO CONSTRUCTION OF ANY COPING.

RETAINING WALL 8 FROM RAMP C1 STA 1815+58.62 TO STA 1816+35 MAY BE CONSTRUCTED WITH SELECT FILL FOR THE FULL HEIGHT OF THE RETAINING WALL. THERE WILL BE NO BACKFILL BETWEEN THE WALLS. THE MINIMUM REINFORCEMENT LENGTH TO HEIGHT RATIO FOR RETAINING WALL 8 IS L/H=1.2. FROM RAMP C1 STA 1816+35 TO SR 7 (SB) STA 1615+60, THE REINFORCEMENT LENGTH TO HEIGHT RATIO MUST BE L/H = 1.2. NO.57 STONE SHOULD BE USED AS BACKFILL BEHIND THE REINFORCEMENT ZONE BETWEEN THESE STATIONS.

THE DESIGN UNIT WEIGHT INDICATED IN SOIL PROPERTIES TABLE HAS BEEN ADJUSTED DUE TO THE PRESENCE OF SHALLOW GROUNDWATER.

THE WALL SUPPLIER SHAL PERFORM A DETAILED SEISMIC ANALYSIS FOR BACK TO BACK MSE WALLS WITH L/H LESS THAN 1.1, IF NECESSARY, AS REQUIRED BY FHWA PUBLICATION NO. FHWA-NHI-00-043.

SOIL PROPERTIES FOR DESIGN

SOIL TYPE	UNIT WEIGHT (PCF)	ANGLE OF FRICTION (DEGREES)
SELECT FILL	125	34
NO. 57 STONE	105	38
FOUNDATION SOIL	68	24

SEE SHEETS 53 & 57 FOR RAMP C1 VERTICAL CURVE DATA.

RAMP C1
VERTICAL CURVE DATA

CURVE NO. 33

P.I. STA.	1815+13.61
△	46°23'34.62" RT
DC	22°55'05.92"
R	250.00'
TANGENT	107.13'
LENGTH	202.42'

RAMP C1
HORIZONTAL CURVE DATA

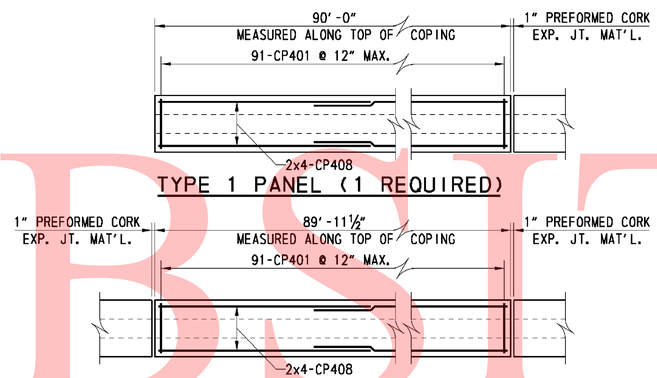

TYPE 1 PANEL (1 REQUIRED)

TYPE 2 PANEL (2 REQUIRED)

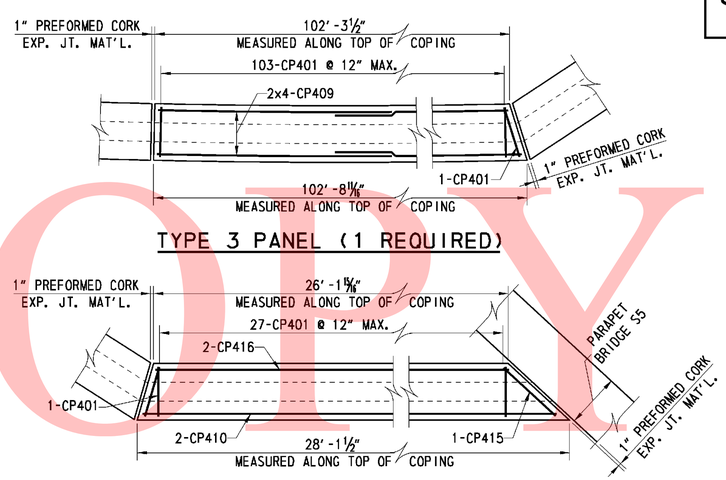

TYPE 3 PANEL (1 REQUIRED)

TYPE 4 PANEL (1 REQUIRED)

COPING REINFORCING PLANS

SCALE: ½" = 1'-0"

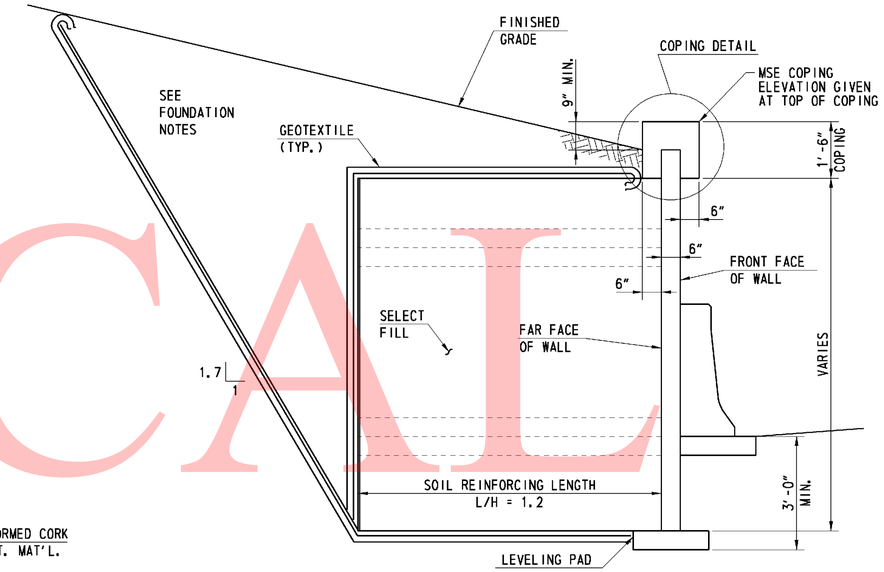

TYPICAL SECTION

(LOOKING BACK STATION)
SCALE: ½" = 1'-0"

COPING	SPECIFICATIONS					BENDING DIMENSIONS (FEET-INCHES /QUARTER INCH)							
	QTY.	SIZE	LENGTH	MARK	TYPE	A	B	C	D	H	K	O	REMARKS
	405	4	3-6	CP401	17		1-2	1-2	1-2				
	24	4	46-5 12	CP408	STR								BEND BARS IN FIELD AS NEEDED
	8	4	52-7 7/8	CP409	STR								BEND BARS IN FIELD AS NEEDED
	2	4	27-9 12	CP410	STR								BEND BARS IN FIELD AS NEEDED
	1	4	4-2 12	CP415	17		1-2	1-10 12	1-2				
	2	4	25-9 15/16	CP416	STR								BEND BARS IN FIELD AS NEEDED

SEE SHEET R7-07 FOR BAR BEND NOTES

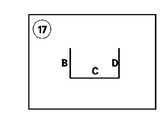

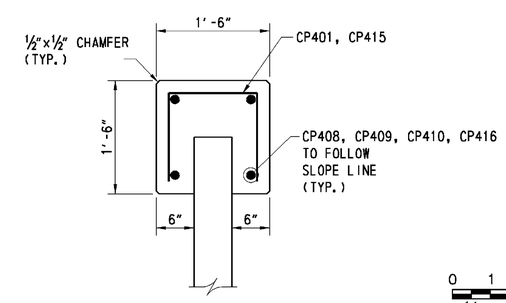

COPING DETAIL

SCALE: 1" = 1'-0"

0 1 4
½ 2
SCALE: ½" = 1'-0"

0 1
½ 2
SCALE: 1" = 1'-0"

UNOFFICIAL WEBSITE COPY

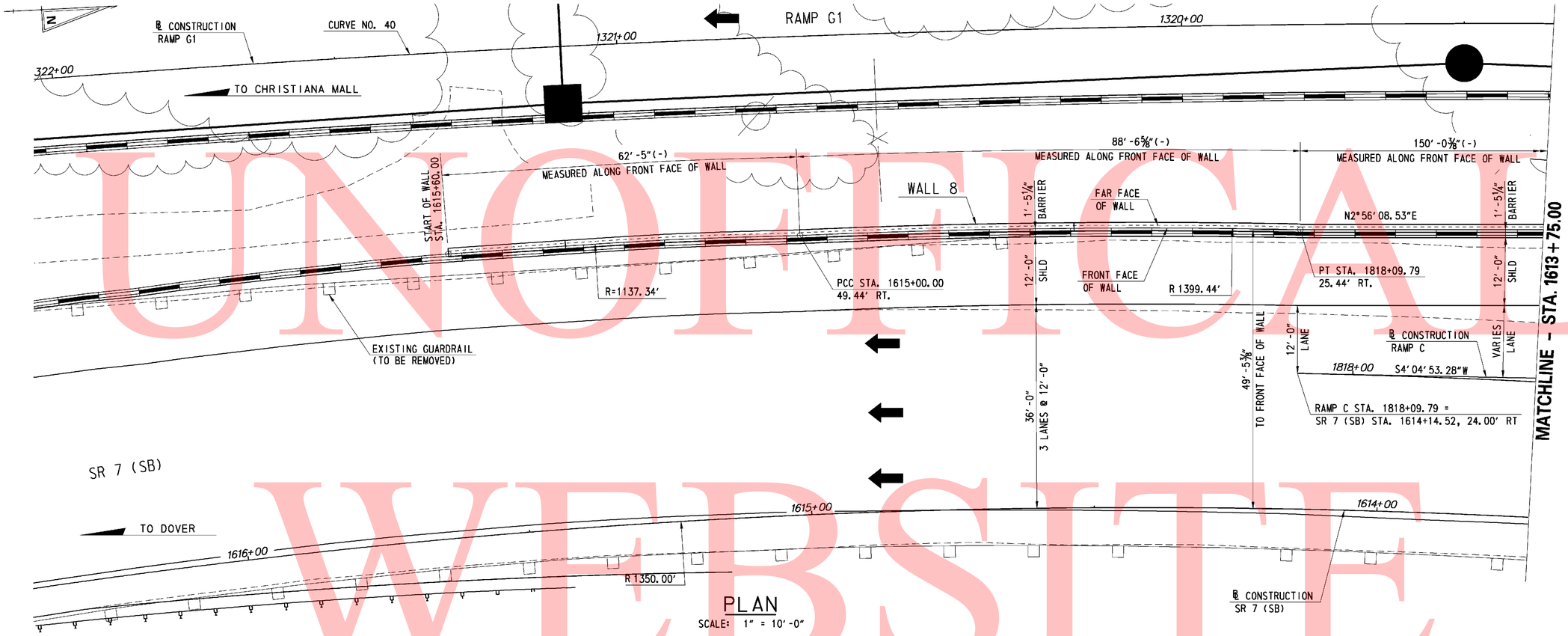

PLAN
SCALE: 1" = 10'-0"

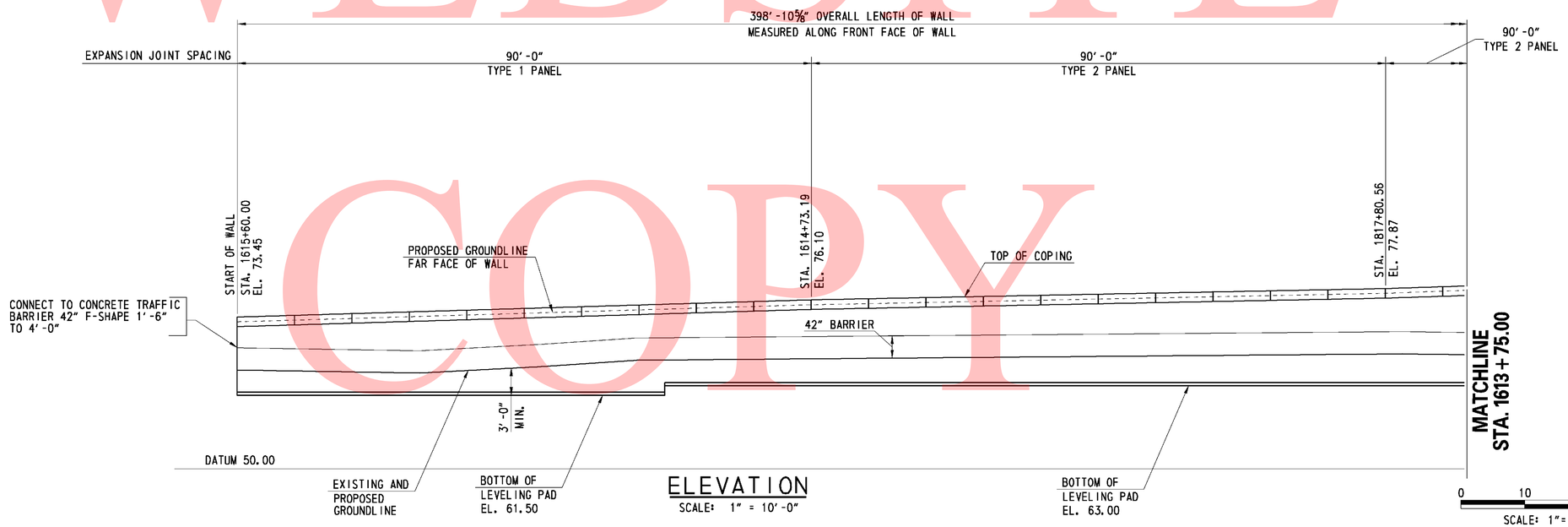

ELEVATION
SCALE: 1" = 10'-0"

0 10 20 30
SCALE: 1"= 10'-0"

UNOFFICIAL WEBSITE COPY

11/11/2010 10:06:55 AM
M:\PROJECTS\2003\03059_DELTRNPK\SR1MALL\CADD\2809003\PLANS\RD13_WALL-08_SR1.DGN

DELAWARE DEPARTMENT OF TRANSPORTATION	ADDENDUMS / REVISIONS	SR1 / I-95 INTERCHANGE	CONTRACT 28-090-03	BRIDGE NO.	RETAINING WALL 8 GENERAL PLAN AND ELEVATION – 1	R8-02	
			COUNTY NEW CASTLE	DESIGNED BY: JMS		SHEET NO. 571	
				CHECKED BY: JSW		TOTAL SHTS. 803	

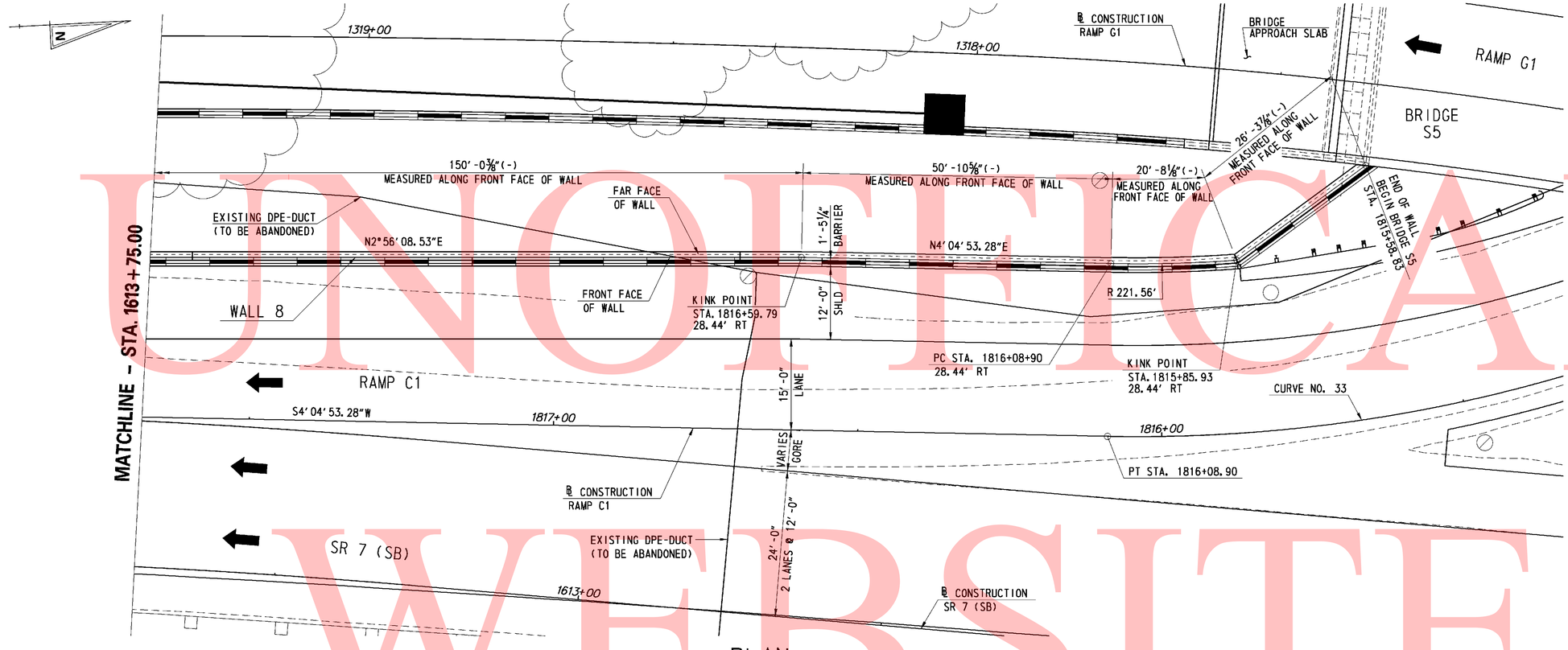

PLAN

SCALE: 1" = 10'-0"

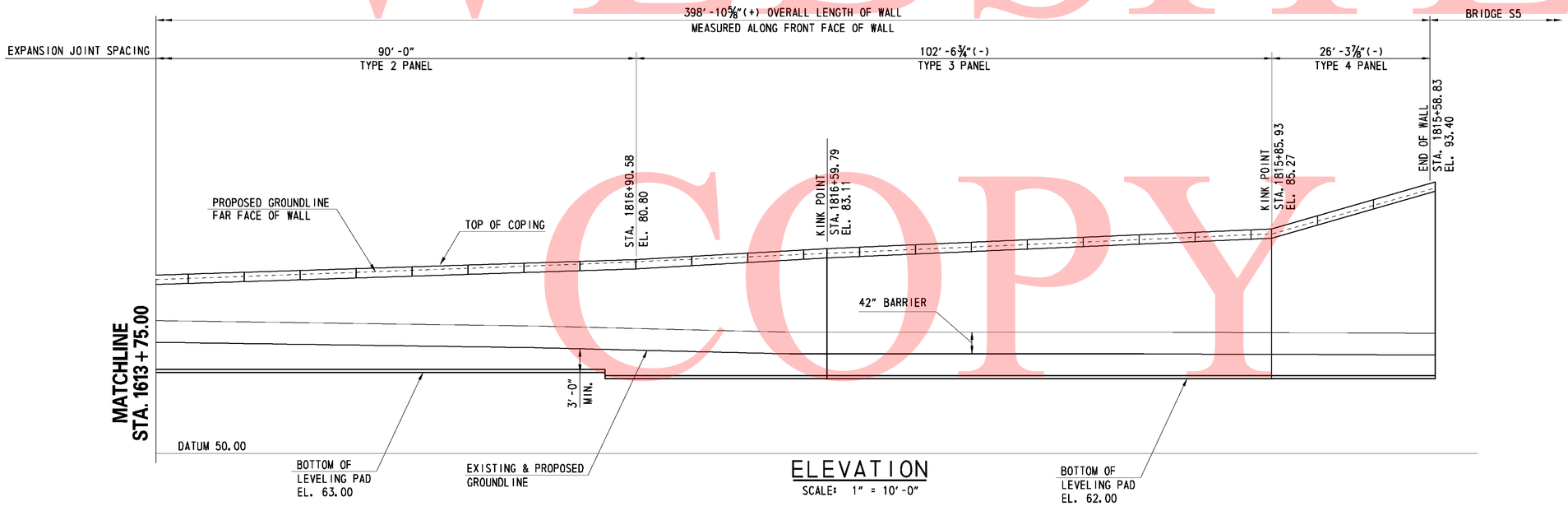

ELEVATION

SCALE: 1" = 10'-0"

0 10 20 30

SCALE: 1"= 10'-0"

UNOFFICIAL WEBSITE COPY

11/11/2010 9:08:15 AM
M:\PROJECTS\2003\03059_DELTRNPK\SRMALL\CADD\2809003\PLANS\RD14_WALL-08_SR1.DGN

DELAWARE DEPARTMENT OF TRANSPORTATION	ADDENDUMS / REVISIONS	SR1 / I-95 INTERCHANGE	CONTRACT 28-090-03	BRIDGE NO.	RETAINING WALL 8 GENERAL PLAN AND ELEVATION - 2	R8-03	
			COUNTY NEW CASTLE	DESIGNED BY: JMS		SHEET NO. 572	
				CHECKED BY: JSW		TOTAL SHTS. 803	

SUMMARY OF LABORATORY TEST RESULTS OF TUBE SAMPLES

BORING NO.	TOP SAMPLE DEPTH (FT)	NATURAL MOISTURE CONTENT (%)	LL	PL	PI	PERCENT PASSING NO. 200	AASHTO	UNDISTURBED TUBE TESTING	TOTAL UNIT WEIGHT (pcf)	UNCONFINED COMPRESSION (psf)	TOTAL STRESS COHESION (psf)	TOTAL STRESS FRICTION ANGLE (deg)	EFFECTIVE STRESS COHESION (psf)	EFFECTIVE STRESS FRICTION ANGLE (deg)	UNDRAINED SHEAR (psf)	INITIAL VOID RATIO	PRECONSOLIDATION STRESS MAX (psf)	PRECONSOLIDATION STRESS MIN (psf)	C_c	C_r	pH	RESISTIVITY (ohm-cm)
IBR-05	31.5	-	-	-	-	-	-	CONS	119.0	-	-	-	-	-	-	0.66	9500	5400	0.15	0.02	-	-
IBR-05	31.5	20.8	-	-	-	-	-	DS	128.7	-	935	15.62	-	-	-	-	-	-	-	-	-	-
IBR-05	31.5	16.0	21	18	3	65.0	A-4	UC	132.9	4084	-	-	-	-	2042	-	-	-	-	-	-	-
IRW-19	19.5	19.1	39	22	17	99.0	A-6	UC	133.2	7084	-	-	-	-	3542	-	-	-	-	-	-	-
IRW-19	38.5	22.0	49	22	27	81.0	A-7-5	CIUC	-	-	430	7.5	570	8.3	-	-	-	-	-	-	4.29	4000

DELAWARE DEPARTMENT OF TRANSPORTATION
AASHTO CLASSIFICATION OF SOILS AND SOIL-AGGREGATE MIXTURES

General Classification	Granular Materials (35% or Less Passing 0.075 mm)							Silt-Clay Materials (More than 35% Passing 0.075 mm)					Organic Soils
Group Classification: Group	A-1		A-3	A-2				A-4	A-5	A-6	A-7		A-8
Sub-Group	A-1-a	A-1-b		A-2-4	A-2-5	A-2-6	A-2-7				A-7-5	A-7-6	
Graphic	A	B			5		7				5		
Sieve Analysis, % Passing													
2.00 mm (No. 10)	50 Max	-	-	-	-	-	-	-	-	-	-	-	See Note 1
0.425 mm (No. 40)	30 Max	50 Max	51 Min	-	-	-	-	-	-	-	-	-	
0.075 mm (No. 200)	15 Max	25 Max	10 Max	35 Max	35 Max	35 Max	35 Max	36 Min	36 Min	36 Min	36 Min	36 Min	
Characteristics of Fraction	-		-	-	-	-	-	-	-	-	-	-	See Note 1
Passing 0.425 mm (No. 40)	-		-	-	-	-	-	-	-	-	-	-	
Liquid Limit	-		-	40 Max	41 Min	40 Max	41 Min	40 Max	41 Min	41 Max	41 Min	41 Min	
Plasticity Index	6 Max		NP	10 Max	10 Max	11 Min	11 Min	10 Max	10 Max	11 Min	11 Min	11 Min	
Usual Types of Significant Constituent Materials	Stone Fragments, Gravel and Sand		Fine Sand	Silty or Clayey Gravel and Sand				Silty Soils		Clayey Soils			Organic Soils

Plasticity Index of A-7-5 Subgroup is Equal to or Less Than LL Minus 30

Plasticity Index of A-7-6 Subgroup is Greater Than LL Minus 30

Note 1-Classification Based on Visual Inspection and not on Sieve Analysis or Atterberg Limits

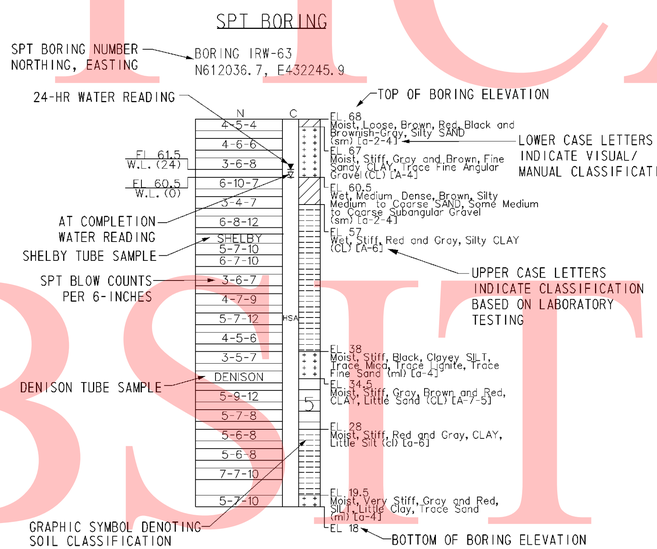

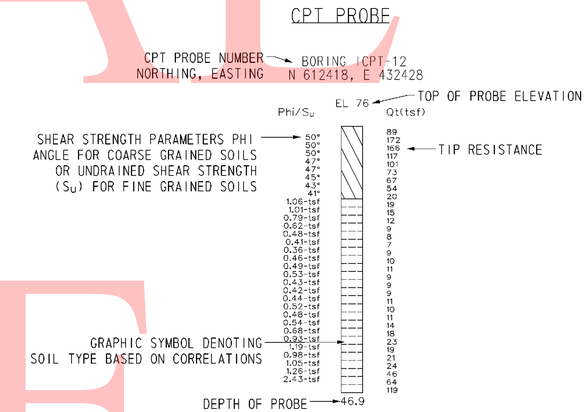

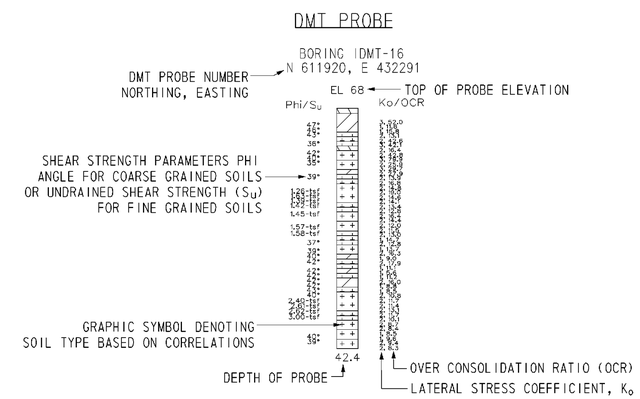

NOTES:

1. THE BORINGS AND DRIVE TEST WERE CONDUCTED IN MULTIPLE PHASES BY THE ROBERT B. BALTER COMPANY, THE WALTON CORPORATION, AND FINDLING, INC. BETWEEN AUGUST 2004 AND OCTOBER 2008.

2. THE SOIL SYMBOLS REFLECT ONLY THE MAJOR SOIL CONSTITUENT, FOR MORE COMPLETE SOIL CHARACTERISTIC REFER TO THE SOIL LOGS CONTAINED WITHIN THE FINAL FOUNDATION REPORTS DATED FEBRUARY 2009.

3. THE FIELD BORING LOGS RECORD SAMPLE SPOON RECOVERY. THE BORING LOGS AND LABORATORY TESTING RESUTS ARE AVAILABLE UPON REQUEST.

4. N = BLOWS ON A 2 INCH OD SAMPLING SPOON BY 140 LB DRIVE- WEIGHT FALLING 30 INCHES INDICATING SUCCESSIVE 6 INCH INCREMENTS OF PENETRATION. PENETRATIONS GREATER THAN 6-INCHES OR LESS THAN 6-INCHES ARE INDICATED BY WOH, WOR, OR THE DEPTH OF THE PENETRATION TO THE NEAREST INCH.

   WOH= STATIC WEIGHT OF SAMPLING SPOON DRIVE-WEIGHT ASSEMBLY, DRIVE-WEIGHT,ANVIL (WHEN AUTOMATIC HAMMER IS USED), DRILL ROD(S), AND SAMPLING SPOONS.

   WOR= STATIC WEIGHT OF DRILL ROD AND SAMPLING SPOON

5. FIELD BORINGS AND SOIL SAMPLING WERE PERFORMED IN ACCORDANCE TO AASHTO T-206, T-225 AND T-306.

6. USCS AND AASHTO DESIGNATIONS INDICATED IN UPPER CASE HAVE BEEN CONFIRMED USING LAB SOIL CLASSIFICATION TESTS. USCS AND AASHTO DESIGNATIONS INDICATED IN LOWER CASE ARE BASED ON VISUAL CLASSIFICATION TECHNIQUES ACCORDING TO ASTM D 2488 AND AASHTO M 145 BY RK&K GEOLOGIST OR ENGINEER.

7. CPT AND DMT PROBES WERE DRILLED BY IN-SITU SOIL TESTING, L.C AND CONETEC, INC.

   CPT = CONE PENETRATION TESTING
   DMT = FLAT- PLATE DILATOMETER

8. C= DEPTH OF HOLLOW STEM CONTINUOUS FLIGHT AUGER (HSA) WITH A 3-3/8 INCH ID, AND LIMIT OF MUD ROTARY (MD).

9. FOR BORING LOCATIONS, SEE CONSTRUCTION PLAN SHEETS 182 THROUGH 186.

10. FOR ADDITIONAL BORING & DRIVE TESTS SEE BORING & DRIVE TESTS SHEETS FOR OTHER STRUCTURES.

11. FOR ALL OTHER BORING & DRIVE TESTS SEE SHEETS 744 THROUGH 792.

12. FOR ADDITIONAL LABORATORY TEST RESULTS OF UNDISTURBED TUBE SAMPLES AND INDEX TESTING SEE, SHEETS 793 THROUGH 803.

13. FOR GROUNDWATER MONITORING DATA, SEE SHEET XXX OF XXX.

14. LL= LIQUID LIMIT

15. PL = PLASTIC LIMIT

16. PI = PLASTICITY INDEX

17. UC = UNCONFINED COMPRESSION

18. DS = DIRECT SHEAR

19. CONS = CONSOLIDATION

20. UU = UNCONSOLIDATED- UNDRAINED TRIAXIAL TEST

21. CIUC = CONSOLIDATED ISOTROPIC UNDRAINED COMPRESSION TRIAXIAL TEST

22. AASHTO = AMERICAN ASSOCIATION OF STATE HIGHWAY TRANSPORTATION OFFICIALS

UNOFFICIAL WEBSITE COPY

UNOFFICAL WEBSITE COPY

DATUM EL. -70.00

NOTES:

1. FOR BORING NOTES AND INFORMATION SEE SHEET NO. 573 OF 803.
2. FOR BORING LOCATIONS SEE CONSTRUCTION PLAN SHEETS.

8/6/2010 1:22:58 PM
M:\PROJECTS\2003\03059_DELTRNPK\SRIMALL\CADD\2809003\PLANS\B0045_R8_SR1.DGN

DELAWARE DEPARTMENT OF TRANSPORTATION	ADDENDUMS / REVISIONS	SCALE 0 10 20 30 FEET	SR1 / I-95 INTERCHANGE	CONTRACT 28-090-03	BRIDGE NO.	RETAINING WALL 8 BORING & DRIVE TESTS	R8-5 SHEET NO.
				COUNTY NEW CASTLE	DESIGNED BY: JLT		574 TOTAL SHTS.
					CHECKED BY: EMK		803

GENERAL NOTES

SPECIFICATIONS: PROPRIETARY MSE WALLS SHALL BE DESIGNED IN ACCORDANCE WITH THE FOLLOWING:
- AASHTO LRFD BRIDGE DESIGN SPECIFICATIONS, 4TH EDITION WITH ALL CURRENT REVISIONS.
- FEDERAL HIGHWAY ADMINISTRATION PUBLICATION NO. FHWA-NHI-00-043, "MECHANICALLY STABILIZED EARTH WALLS AND REINFORCED SOIL SLOPES DESIGN AND CONSTRUCTION GUIDELINES"

CONCRETE DESIGN SHALL BE PERFORMED USING THE LOAD AND RESISTANCE FACTOR DESIGN METHOD.

CONCRETE: CONCRETE FOR BARRIERS SHALL BE 4500 PSI. LEVELING PAD CONCRETE SHALL BE 3500 PSI. MIX REQUIREMENTS SHALL CONFORM TO SECTION 812 OF THE DELAWARE DEPARTMENT OF TRANSPORTATION STANDARD SPECIFICATIONS.

CHAMFERS: ALL EXPOSED CORNERS OF CONCRETE SHALL BE CHAMFERED WITH ¾" x ¾" MILLED CHAMFER STRIPS, UNLESS OTHERWISE NOTED EXCEPT ON UNEXPOSED FOOTINGS OR WHERE INDICATED BY THE FOLLOWING NOTATION ON THE PLANS: "DO NOT CHAMFER".

REINFORCING STEEL: REINFORCING STEEL SHALL CONFORM TO ASTM A 615, GRADE 60. MINIMUM COVER FOR ANY BAR SHALL BE 2" UNLESS OTHERWISE NOTED.

FOR TIES AND STIRRUPS, STANDARD ACI BENDING TOLERANCES ARE MODIFIED TO PLUS (+) ZERO INCHES, MINUS (-) NORMAL ACI BENDING TOLERANCE.

ONLY GRADE 60 CAN BE USED ON THIS PROJECT.

ALL REINFORCING STEEL IN THE PARAPET SHALL BE EPOXY COATED.

ALL KEYS ARE NOMINAL SIZE.

THE MSE WALL MANUFACTURER MAY SUBSTITUTE ALTERNATE REINFORCING CONFIGURATIONS AND SUBMIT FOR APPROVAL.

EXPANSION AND CONTRACTION JOINTS: THE LOCATION OF THE EXPANSION AND CONTRACTION JOINTS IN THE BARRIER SHOWN ON THE PLANS MAY BE ADJUSTED TO ACCOMMODATE THE PANEL TYPE USED IN THE PROJECT. ANY CHANGE TO THESE JOINT LOCATIONS SHALL BE SUBMITTED TO THE ENGINEER FOR APPROVAL. EXPANSION JOINTS ARE LABELED "EJ".

LEVELING PAD: THE PROPRIETARY WALL MANUFACTURER MAY RELOCATE THE LEVELING PAD STEPS AT THEIR DISCRETION PROVIDED THAT THE MINIMUM EMBEDMENT IS MAINTAINED. ANY CHANGE TO THE STEP LOCATIONS SHALL BE SUBMITTED TO THE ENGINEER FOR APPROVAL.

ROADWAY LIMITS: THE PROPRIETARY WALL MANUFACTURER SHALL ASSURE THAT PROPOSED PROPRIETARY WALL COMPONENTS ARE POSITIONED SUCH THAT THE DESIGNATED ROADWAY LIMITS ARE NOT ENCROACHED UPON.

TRAFFIC BARRIER JOINTS: TRAFFIC BARRIER SHALL HAVE CONSTRUCTION JOINTS.

COORDINATION: CONTRACTOR AND PROPRIETARY WALL MANUFACTURER SHALL COORDINATE LOCATIONS OF INLETS AND PIPES WITH LOCATIONS OF PROPRIETARY WALL TIEBACK SYSTEM.

ARCHITECTURAL FINISH: THE MSE WALL PANELS SHALL RECEIVE AN ARCHITECTURAL FINISH.

SERVICE LIFE: ALL RETAINING WALL COMPONENTS SHALL BE DESIGNED FOR A MINIMUM SERVICE LIFE OF 75 YEARS.

WALL SYSTEM: ONLY ONE MSE WALL SYSTEM MAY BE USED ON THIS PROJECT.

ROADWAY SUPERELEVATION: FOR ROADWAY SUPERELEVATION, SEE SUPERELEVATION TABLES.

MSE WALL BACKFILL: MSE WALL BACKFILL SHALL CONSIST OF SPECIFIED BACKFILL.

PAY ITEMS: PCC MASONRY, PARAPET, CLASS A, (602017)
BAR REINFORCEMENT, EPOXY COATED (604000)
MECHANICALLY STABILIZED EARTH WALLS (602772)

SOIL PROPERTIES FOR DESIGN

SOIL TYPE	UNIT WEIGHT (PCF)	ANGLE OF FRICTION (DEGREES)
SELECT FILL	125	34
NO. 57 STONE	130	28
FOUNDATION SOIL 1250+84.83 TO 1252+14	92	24
FOUNDATION SOIL 1252+14 TO 1259+50	85	24

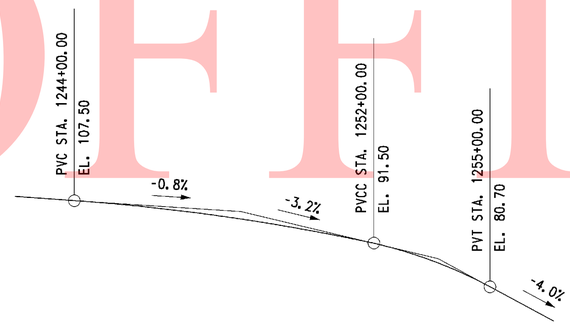

RAMP A VERTICAL CURVE DATA

NO SCALE

CURVE NO. 14

P.I. STA.	1254+08.88
Δ	48°19'31.68" LT
DC	3°05'48.45"
R	1850.00
TANGENT	829.98
LENGTH	1560.36

RAMP A HORIZONTAL CURVE DATA

NO SCALE

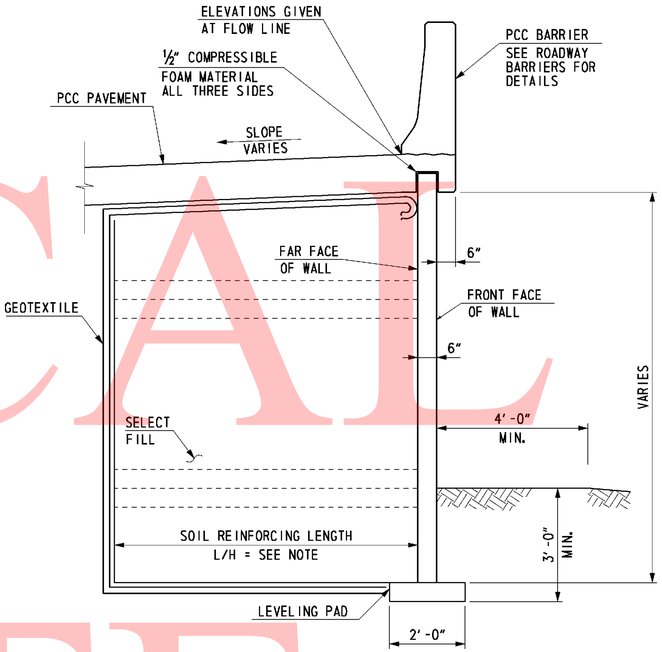

TYPICAL SECTION

(LOOKING AHEAD STATION)
SCALE: ½" = 1'-0"

FOUNDATION NOTES

THE FACTORED BEARING RESISTANCE SHALL BE VERIFIED PRIOR TO CONSTRUCTION OF THE MSE WALL.

THE INTERNAL STABILITY OF THE MSE WALL SHALL BE DESIGNED BY THE CONTRACTOR USING THE SOIL PARAMETERS PROVIDED FOR EACH STRUCTURE LOCATION. THE INTERNAL STABILITY SHOULD BE SIGNED AND SEALED BY A PROFESSIONAL ENGINEER LICENSED IN THE STATE OF DELAWARE AS INDICATED IN THE PROJECT SPECIFICATIONS. THE FACTORED APPLIED BEARING STRESS SHALL NOT EXCEED THE FACTORED BEARING RESISTANCE.

ISOLATED AREAS OF UNDERCUTTING OF EXISTING FILL MAY BE ENCOUNTERED DURING CONSTRUCTION OF THIS RETAINING WALL.

GROUNDWATER MAY BE ENCOUNTERED DURING EXCAVATION TO THE LEVELING PAD AND DURING CONSTRUCTION OF THIS RETAINING WALL. IT IS THE CONTRACTOR'S RESPONSIBILITY TO PROVIDE A RELATIVELY DRY EXCAVATION, INCLUDING DETERMINING APPROPRIATE DEWATERING METHODS DURING CONSTRUCTION.

A QUARANTINE PERIOD OF APPROXIMATELY 30-DAYS IS REQUIRED AFTER CONSTRUCTION OF THE FULL HEIGHT OF THE MSE WALL IS ACHIEVED. THE ENGINEER SHALL APPROVE THE COMPLETION OF THE QUARANTINE PERIOD PRIOR TO CONSTRUCTION OF ANY PARAPETS.

RETAINING WALL 9 FROM RAMP A STA 1250+84.83 TO STA 1252+14 MAY BE CONSTRUCTED WITH SELECT FILL FOR THE FULL HEIGHT OF THE RETAINING WALL. THE MINIMUM REINFORCEMENT LENGTH TO HEIGHT RATIO FOR RETAINING WALL 9 IS L/H=0.7. FROM RAMP A STA 1252+14 TO STA 1259+50, THE REINFORCEMENT LENGTH TO HEIGHT RATIO MUST BE L/H = 1.0. COMMON BORROW MAY BE USED AS BACKFILL BEHIND THE REINFORCEMENT ZONE.

THE DESIGN UNIT WEIGHT INDICATED IN SOIL PROPERTIES TABLE HAS BEEN ADJUSTED DUE TO THE PRESENCE OF SHALLOW GROUNDWATER.

0 1 4
½ 2
SCALE: ½"=1'-0"

UNOFFICAL WEBSITE COPY

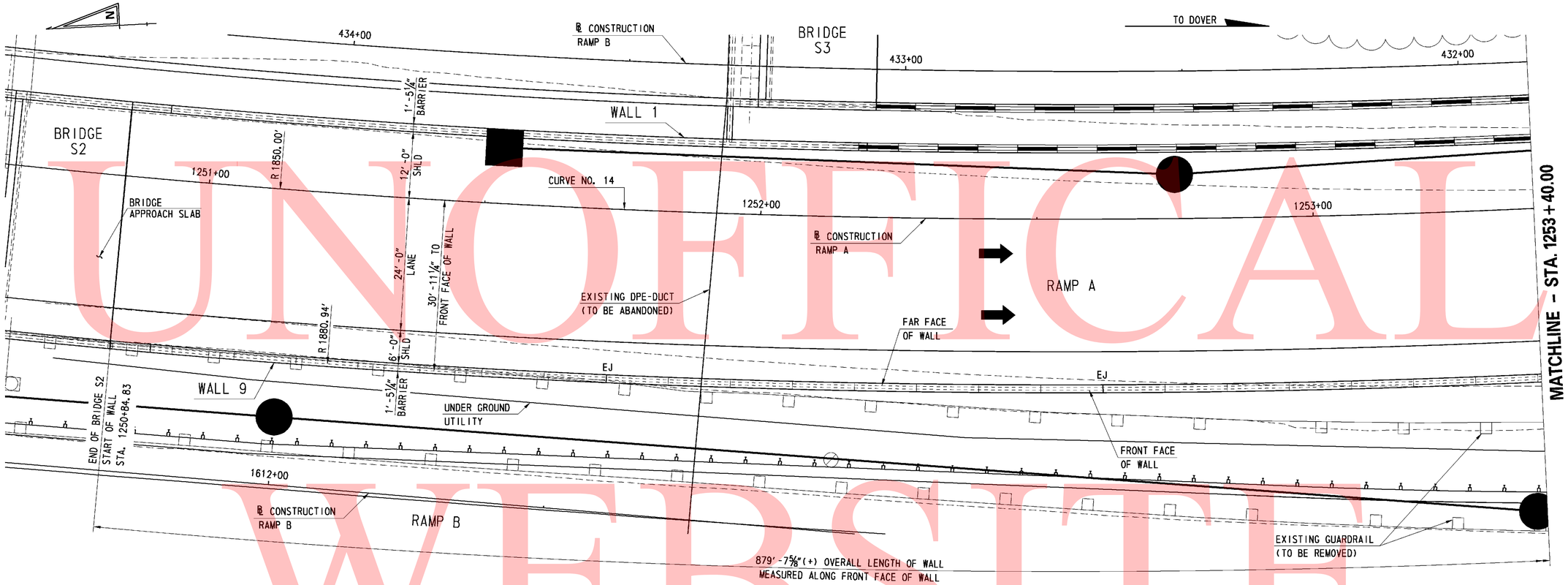

PLAN

SCALE: 1"= 10'-0"

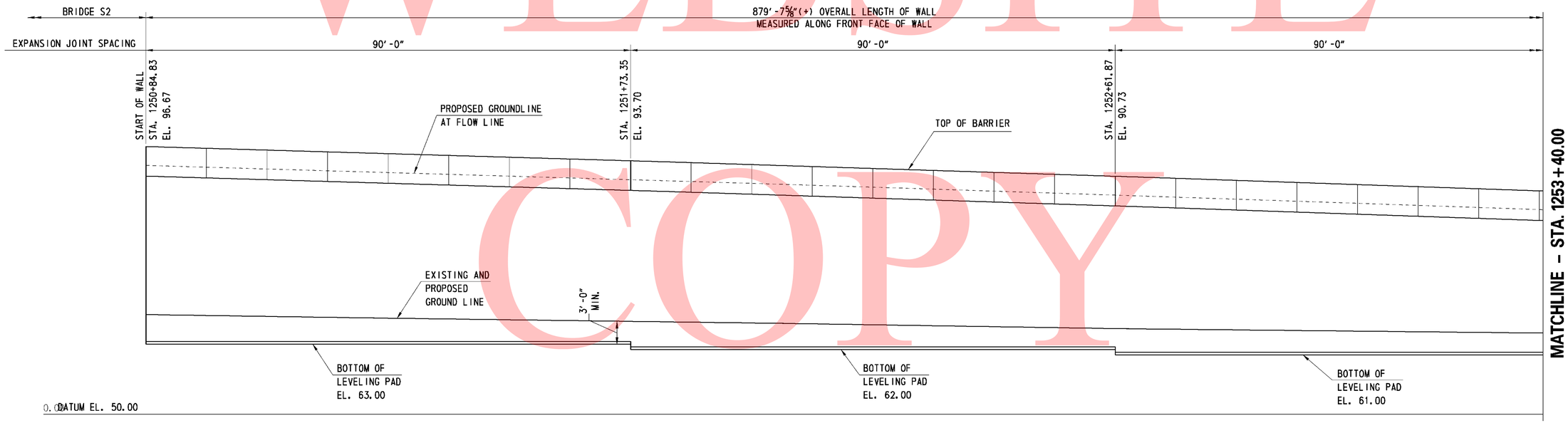

ELEVATION

SCALE: 1"= 10'-0"

0 10 20 30

SCALE: 1"= 10'-0"

UNOFFICAL WEBSITE COPY

11/11/2010 9:21:54 AM
M:\PROJECTS\2003\03059_DELTRNPK\SR1MALL\CADD\2809003\PLANS\RD16_WALL-09_SR1.DGN

DELAWARE DEPARTMENT OF TRANSPORTATION	ADDENDUMS / REVISIONS		SR1 / I-95 INTERCHANGE	CONTRACT 28-090-03	BRIDGE NO.	RETAINING WALL 9 GENERAL PLAN AND ELEVATION – 1	R9-02
				COUNTY NEW CASTLE	DESIGNED BY: JMS		SHEET NO. 576
					CHECKED BY: JSW		TOTAL SHTS. 803

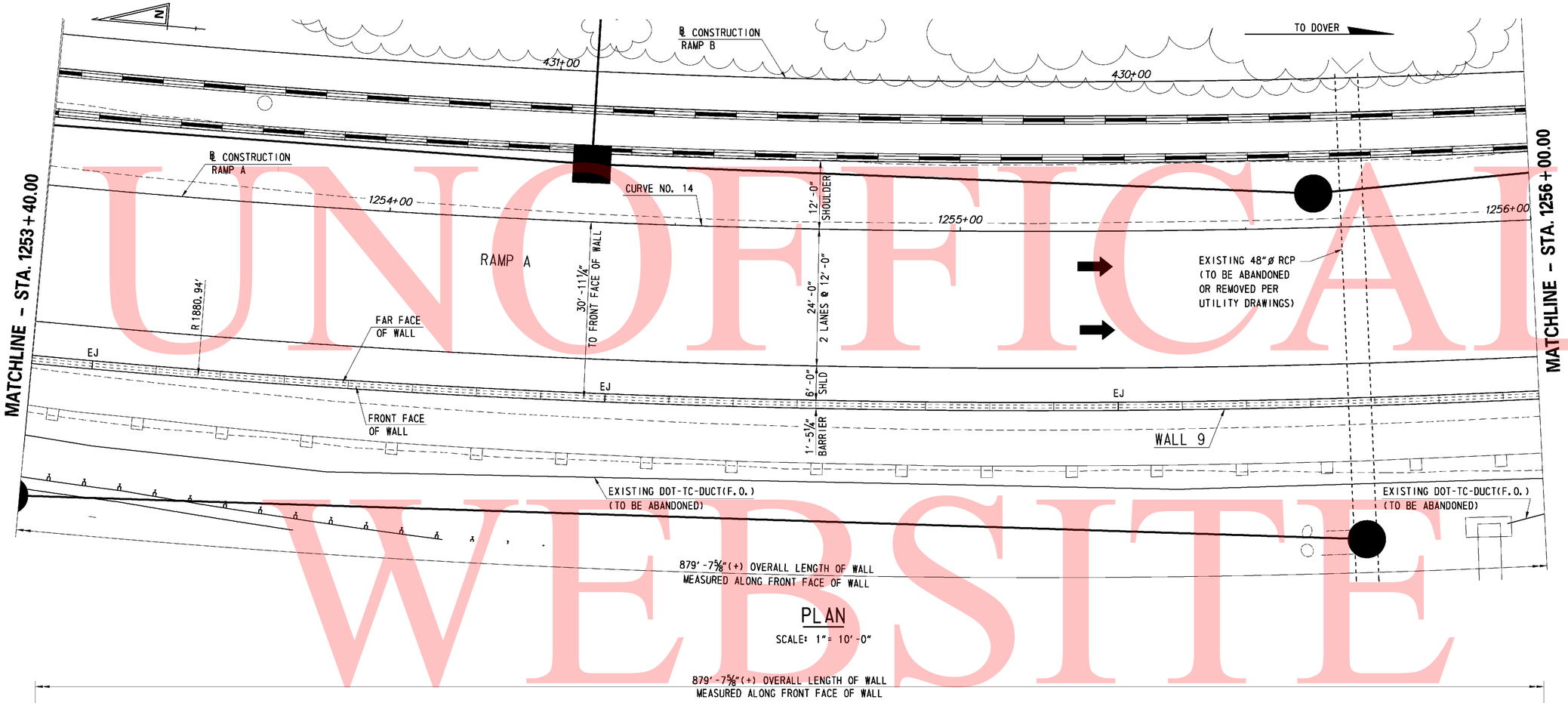

PLAN

SCALE: 1"= 10'-0"

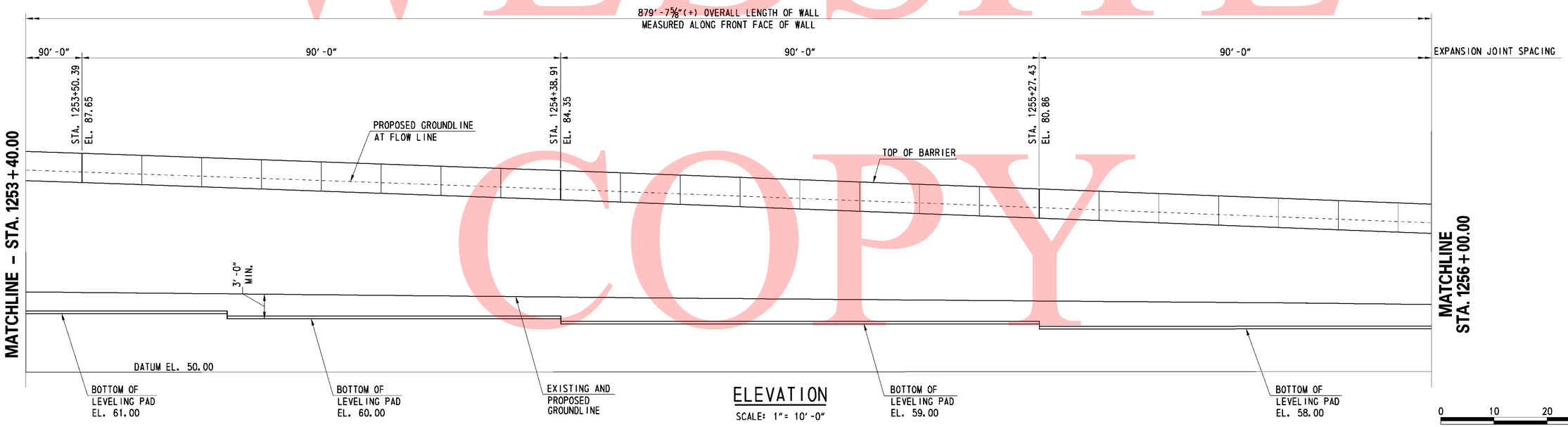

ELEVATION

SCALE: 1"= 10'-0"

0 10 20 30

SCALE: 1"= 10'-0"

UNOFFICIAL WEBSITE COPY

11/11/2010 9:32:31 AM
M:\PROJECTS\2003\03059_DELTRNPK\SR1MALL\CADD\2809003\PLANS\RD17_WALL-09_SR1.DGN

DELAWARE DEPARTMENT OF TRANSPORTATION	ADDENDUMS / REVISIONS		SR1 / I-95 INTERCHANGE	CONTRACT 28-090-03	BRIDGE NO.	RETAINING WALL 9 GENERAL PLAN AND ELEVATION - 2	R9-03
				COUNTY NEW CASTLE	DESIGNED BY: JMS		SHEET NO. 577
					CHECKED BY: JSW		TOTAL SHTS. 803

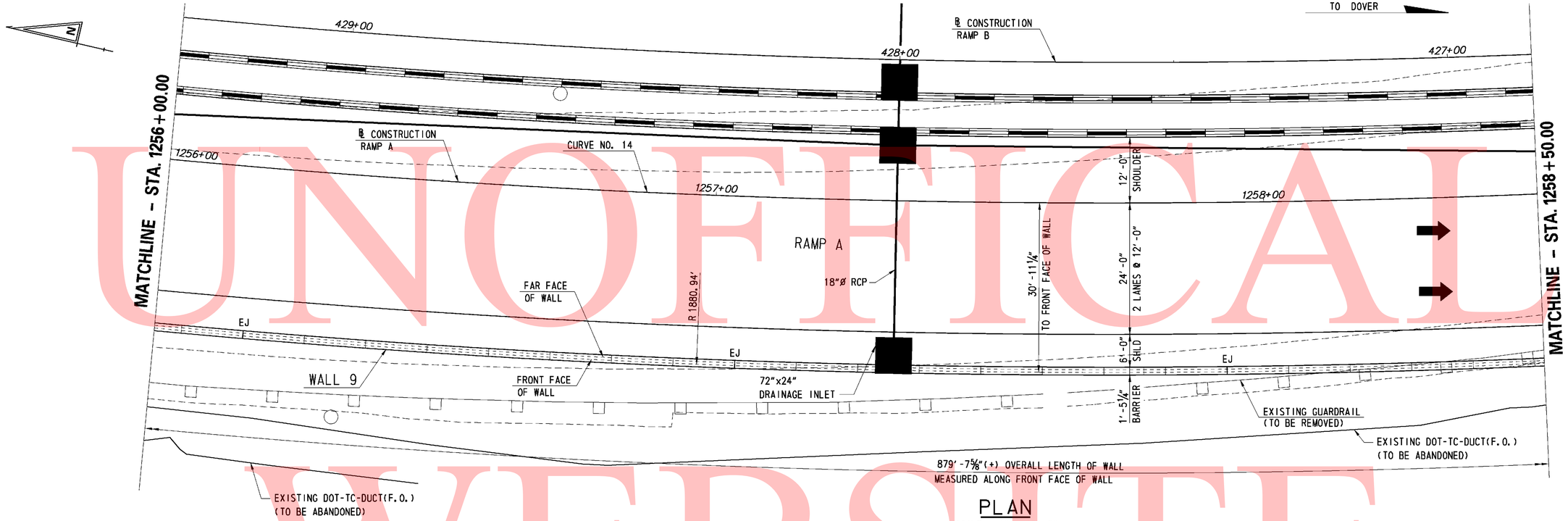

PLAN

SCALE: 1" = 10'-0"

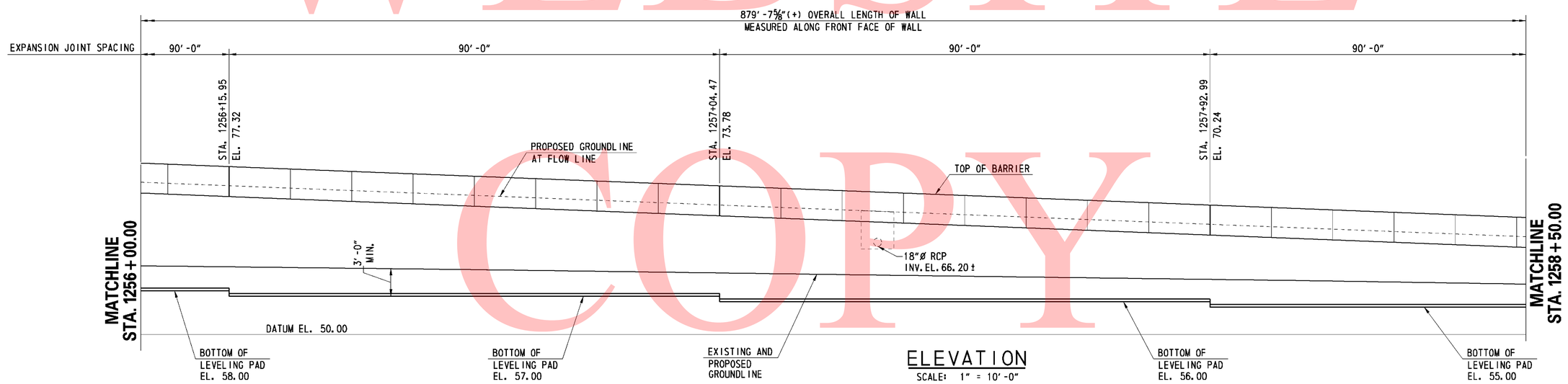

ELEVATION

SCALE: 1" = 10'-0"

0 10 20 30

SCALE: 1"= 10'-0"

UNOFFICIAL WEBSITE COPY

DELAWARE DEPARTMENT OF TRANSPORTATION	ADDENDUMS / REVISIONS	SR1 / I-95 INTERCHANGE	CONTRACT 28-090-03	BRIDGE NO.	RETAINING WALL 9 GENERAL PLAN AND ELEVATION - 3	SHEET NO. 578	R9-04
			COUNTY NEW CASTLE	DESIGNED BY: JMS		TOTAL SHTS. 803	
				CHECKED BY: JSW			

11/11/2010 9:44:04 AM
M:\PROJECTS\2003\03059_DELTRNPK\SR1MALL\CADD\2809003\PLANS\RD18_WALL-09_SR1.DGN

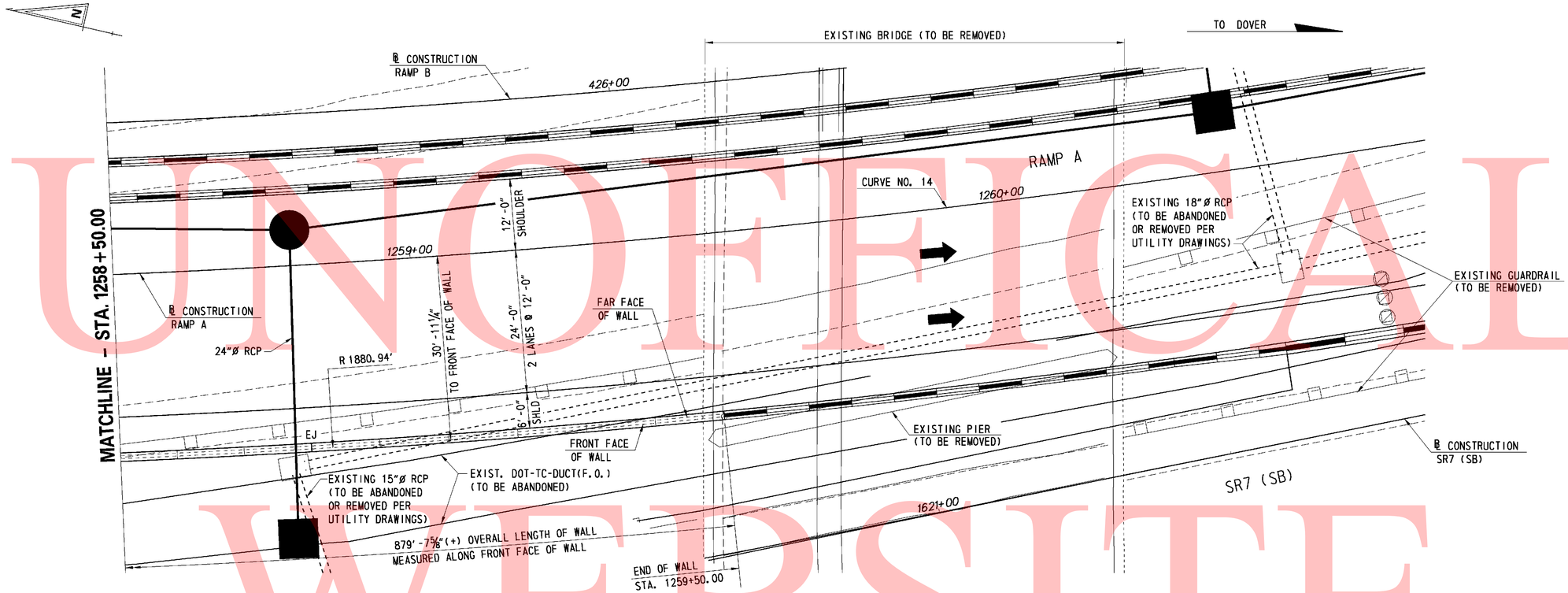

PLAN

SCALE: 1" = 10'-0"

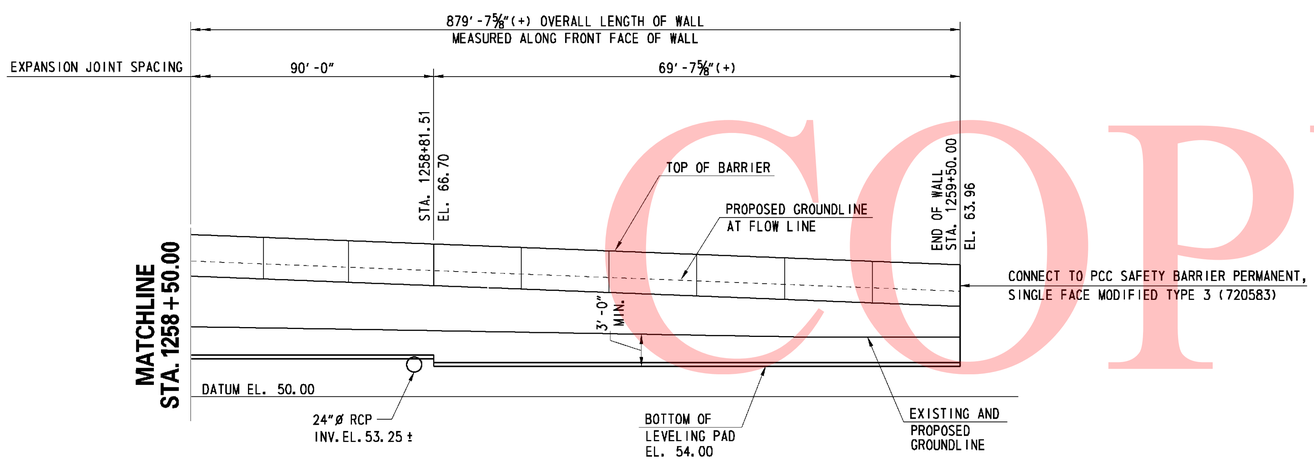

ELEVATION

SCALE: 1" = 10'-0"

0 10 20 30

SCALE: 1"= 10'-0"

UNOFFICAL WEBSITE COPY

11/11/2010 10:22:35 AM
M:\PROJECTS\2003\03059_DELTRNPK\SR1MAL\CADD\2809003\PLANS\RD19_WALL-09_SR1.DGN

DELAWARE DEPARTMENT OF TRANSPORTATION	ADDENDUMS / REVISIONS	SR1 / I-95 INTERCHANGE	CONTRACT 28-090-03	BRIDGE NO.	RETAINING WALL 9 GENERAL PLAN AND ELEVATION - 4	R9-05 SHEET NO. 579
			COUNTY NEW CASTLE	DESIGNED BY: JMS		TOTAL SHTS. 803
				CHECKED BY: JSW		

DELAWARE DEPARTMENT OF TRANSPORTATION
AASHTO CLASSIFICATION OF SOILS AND SOIL-AGGREGATE MIXTURES

General Classification		Granular Materials (35% or Less Passing 0.075 mm)							Silt-Clay Materials (More than 35% Passing 0.075 mm)					Organic Soils
Group Classification	Group	A-1		A-3	A-2				A-4	A-5	A-6	A-7		A-8
	Sub-Group	A-1-a	A-1-b		A-2-4	A-2-5	A-2-6	A-2-7				A-7-5	A-7-6	
	Graphic	A	B			5		7				5		
Sieve Analysis, % Passing														
2.00 mm (No. 10)		50 Max	-	-	-	-	-	-	-	-	-	-	-	See Note 1
0.425 mm (No. 40)		30 Max	50 Max	51 Min	-	-	-	-	-	-	-	-	-	
0.075 mm (No. 200)		15 Max	25 Max	10 Max	35 Max	35 Max	35 Max	35 Max	36 Min	36 Min	36 Min	36 Min	36 Min	
Characteristics of Fraction Passing 0.425 mm (No. 40)		-		-	-	-	-	-	-	-	-	-	-	See Note 1
		-		-	-	-	-	-	-	-	-	-	-	
Liquid Limit		-		-	40 Max	41 Min	40 Max	41 Min	40 Max	41 Min	41 Max	41 Min	41 Min	
Plasticity Index		6 Max		NP	10 Max	10 Max	11 Min	11 Min	10 Max	10 Max	11 Min	11 Min	11 Min	
Usual Types of Significant Constituent Materials		Stone Fragments, Gravel and Sand		Fine Sand	Silty or Clayey Gravel and Sand				Silty Soils		Clayey Soils			Organic Soils

Plasticity Index of A-7-5 Subgroup Is Equal to or Less Than LL Minus 30

Plasticity Index of A-7-6 Subgroup Is Greater Than LL Minus 30

Note 1-Classification Based on Visual Inspection and not on Sieve Analysis or Atterberg Limits

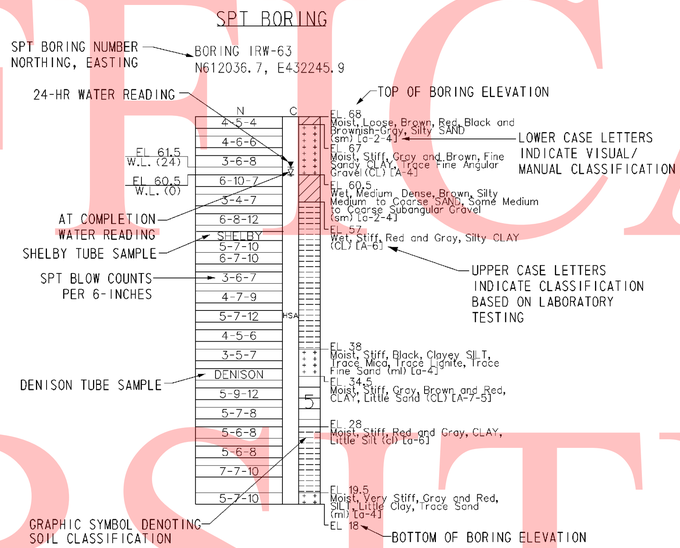

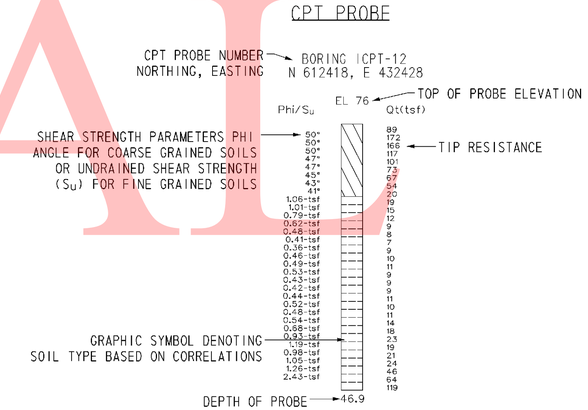

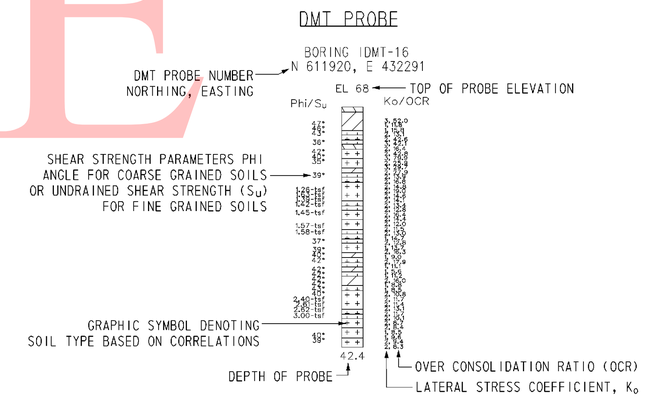

NOTES:

1. THE BORINGS AND DRIVE TEST WERE CONDUCTED IN MULTIPLE PHASES BY THE ROBERT B. BALTER COMPANY, THE WALTON CORPORATION, AND FINDLING, INC. BETWEEN AUGUST 2004 AND OCTOBER 2008.

2. THE SOIL SYMBOLS REFLECT ONLY THE MAJOR SOIL CONSTITUENT, FOR MORE COMPLETE SOIL CHARACTERISTIC REFER TO THE SOIL LOGS CONTAINED WITHIN THE FINAL FOUNDATION REPORTS DATED FEBRUARY 2009.

3. THE FIELD BORING LOGS RECORD SAMPLE SPOON RECOVERY. THE BORING LOGS AND LABORATORY TESTING RESUTS ARE AVAILABLE UPON REQUEST.

4. N = BLOWS ON A 2 INCH OD SAMPLING SPOON BY 140 LB DRIVE- WEIGHT FALLING 30 INCHES INDICATING SUCCESSIVE 6 INCH INCREMENTS OF PENETRATION. PENETRATIONS GREATER THAN 6-INCHES OR LESS THAN 6-INCHES ARE INDICATED BY WOH, WOR, OR THE DEPTH OF THE PENETRATION TO THE NEAREST INCH.

   WOH= STATIC WEIGHT OF SAMPLING SPOON DRIVE-WEIGHT ASSEMBLY, DRIVE-WEIGHT,ANVIL (WHEN AUTOMATIC HAMMER IS USED), DRILL ROD(S), AND SAMPLING SPOONS.

   WOR= STATIC WEIGHT OF DRILL ROD AND SAMPLING SPOON

5. FIELD BORINGS AND SOIL SAMPLING WERE PERFORMED IN ACCORDANCE TO AASHTO T-206, T-225 AND T-306.

6. USCS AND AASHTO DESIGNATIONS INDICATED IN UPPER CASE HAVE BEEN CONFIRMED USING LAB SOIL CLASSIFICATION TESTS. USCS AND AASHTO DESIGNATIONS INDICATED IN LOWER CASE ARE BASED ON VISUAL CLASSIFICATION TECHNIQUES ACCORDING TO ASTM D 2488 AND AASHTO M 145 BY RK&K GEOLOGIST OR ENGINEER.

7. CPT AND DMT PROBES WERE DRILLED BY IN-SITU SOIL TESTING, L.C AND CONETEC, INC.

   CPT = CONE PENETRATION TESTING
   DMT = FLAT- PLATE DILATOMETER

8. C= DEPTH OF HOLLOW STEM CONTINUOUS FLIGHT AUGER (HSA) WITH A 3-3/8 INCH ID, AND LIMIT OF MUD ROTARY (MD).

9. FOR BORING LOCATIONS, SEE CONSTRUCTION PLAN SHEETS 182 THROUGH 186.

10. FOR ADDITIONAL BORING & DRIVE TESTS SEE BORING & DRIVE TESTS SHEETS FOR OTHER STRUCTURES.

11. FOR ALL OTHER BORING & DRIVE TESTS SEE SHEETS 744 THROUGH 792.

12. FOR ADDITIONAL LABORATORY TEST RESULTS OF UNDISTURBED TUBE SAMPLES AND INDEX TESTING SEE, SHEETS 793 THROUGH 803.

13. FOR GROUNDWATER MONITORING DATA, SEE SHEET XXX OF XXX.

14. LL= LIQUID LIMIT

15. PL = PLASTIC LIMIT

16. PI = PLASTICITY INDEX

17. UC = UNCONFINED COMPRESSION

18. DS = DIRECT SHEAR

19. CONS = CONSOLIDATION

20. UU = UNCONSOLIDATED- UNDRAINED TRIAXIAL TEST

21. CIUC = CONSOLIDATED ISOTROPIC UNDRAINED COMPRESSION TRIAXIAL TEST

22. AASHTO = AMERICAN ASSOCIATION OF STATE HIGHWAY TRANSPORTATION OFFICIALS

UNOFFICIAL WEBSITE COPY

UNOFFICAL WEBSITE COPY

DATUM EL. -60.00

NOTES:

1. FOR BORING NOTES AND INFORMATION SEE SHEET NO. 580 OF 803.
2. FOR BORING LOCATIONS SEE CONSTRUCTION PLAN SHEETS.

R9-7

DELAWARE DEPARTMENT OF TRANSPORTATION	ADDENDUMS / REVISIONS	SCALE 0 10 20 30 FEET	SR1 / I-95 INTERCHANGE	CONTRACT 28-090-03	BRIDGE NO.	RETAINING WALL 9 BORING & DRIVE TESTS	SHEET NO. 581
				COUNTY NEW CASTLE	DESIGNED BY: JLT		TOTAL SHTS. 803
					CHECKED BY: EMK		

3/2/2010 12:18:46 PM
M:\PROJECTS\2003\03059_DELTRNPK\SR1MALL\CADD\2809003\PLANS\B0047_R9_SR1.DGN

UNOFFICAL WEBSITE COPY

NOTES:

1. FOR BORING NOTES AND INFORMATION SEE SHEET NO. 580 OF 803.
2. FOR BORING LOCATIONS SEE CONSTRUCTION PLAN SHEETS.

DELAWARE DEPARTMENT OF TRANSPORTATION	ADDENDUMS / REVISIONS	SCALE 0 10 20 30 FEET	SR1 / I-95 INTERCHANGE	CONTRACT 28-090-03	BRIDGE NO.	RETAINING WALL 9 BORING & DRIVE TESTS	R9-8 SHEET NO. 582
				COUNTY NEW CASTLE	DESIGNED BY: JLT		TOTAL SHTS. 803
					CHECKED BY: EMK		

3/2/2010 12:20:30 PM
M:\PROJECTS\2003\03059_DELTRNPK\SR1MALL\CADD\2809003\PLANS\B0048_R9_SR1.DGN

GENERAL NOTES

SPECIFICATIONS: PROPRIETARY MSE WALLS SHALL BE DESIGNED IN ACCORDANCE WITH THE FOLLOWING:
- AASHTO LRFD BRIDGE DESIGN SPECIFICATIONS, 4TH EDITION WITH ALL CURRENT REVISIONS.
- FEDERAL HIGHWAY ADMINISTRATION PUBLICATION NO. FHWA-NHI-00-043, "MECHANICALLY STABILIZED EARTH WALLS AND REINFORCED SOIL SLOPES DESIGN AND CONSTRUCTION GUIDELINES"

CONCRETE DESIGN SHALL BE PERFORMED USING THE LOAD AND RESISTANCE FACTOR DESIGN METHOD.

CONCRETE: ALL CONCRETE FOR BARRIERS AND MOMENT SLABS SHALL BE 4500 PSI. LEVELING PAD CONCRETE SHALL BE 3500 PSI. MIX REQUIREMENTS SHALL CONFORM TO SECTION 812 OF THE DELAWARE DEPARTMENT OF TRANSPORTATION STANDARD SPECIFICATIONS.

CHAMFERS: ALL EXPOSED CORNERS OF CONCRETE SHALL BE CHAMFERED WITH ¾" x ¾" MILLED CHAMFER STRIPS, UNLESS OTHERWISE NOTED EXCEPT ON UNEXPOSED FOOTINGS OR WHERE INDICATED BY THE FOLLOWING NOTATION ON THE PLANS: "DO NOT CHAMFER".

REINFORCING STEEL: REINFORCING STEEL SHALL CONFORM TO ASTM A 615, GRADE 60. MINIMUM COVER FOR ANY BAR SHALL BE 2" UNLESS OTHERWISE NOTED.

FOR TIES AND STIRRUPS, STANDARD ACI BENDING TOLERANCES ARE MODIFIED TO PLUS (+) ZERO INCHES, MINUS (-) NORMAL ACI BENDING TOLERANCE.

ONLY GRADE 60 CAN BE USED ON THIS PROJECT.

ALL REINFORCING STEEL IN THE PARAPET AND MOMENT SLAB SHALL BE EPOXY COATED.

ALL KEYS ARE NOMINAL SIZE.

THE MSE WALL MANUFACTURER MAY SUBSTITUTE ALTERNATE REINFORCING CONFIGURATIONS AND SUBMIT FOR APPROVAL.

EXPANSION AND CONTRACTION JOINTS: THE LOCATION OF THE EXPANSION AND CONTRACTION JOINTS IN THE BARRIER/MOMENT SLAB SHOWN ON THE PLANS MAY BE ADJUSTED TO ACCOMMODATE THE PANEL TYPE USED IN THE PROJECT. ANY CHANGE TO THESE JOINT LOCATIONS SHALL BE SUBMITTED TO THE ENGINEER FOR APPROVAL. EXPANSION JOINTS ARE LABELED "EJ".

LEVELING PAD: THE PROPRIETARY WALL MANUFACTURER MAY RELOCATE THE LEVELING PAD STEPS AT THEIR DISCRETION PROVIDED THAT THE MINIMUM EMBEDMENT IS MAINTAINED. ANY CHANGE TO THE STEP LOCATIONS SHALL BE SUBMITTED TO THE ENGINEER FOR APPROVAL.

ROADWAY LIMITS: THE PROPRIETARY WALL MANUFACTURER SHALL ASSURE THAT PROPOSED PROPRIETARY WALL COMPONENTS ARE POSITIONED SUCH THAT THE DESIGNATED ROADWAY LIMITS ARE NOT ENCROACHED UPON.

TRAFFIC BARRIER JOINTS: TRAFFIC BARRIER/MOMENT SLAB SHALL HAVE CONSTRUCTION JOINTS.

COORDINATION: CONTRACTOR AND PROPRIETARY WALL MANUFACTURER SHALL COORDINATE LOCATIONS OF INLETS AND PIPES WITH LOCATIONS OF PROPRIETARY WALL TIEBACK SYSTEM AND MOMENT SLAB.

ARCHITECTURAL FINISH: THE MSE WALL PANELS SHALL RECEIVE AN ARCHITECTURAL FINISH.

SERVICE LIFE: ALL RETAINING WALL COMPONENTS SHALL BE DESIGNED FOR A MINIMUM SERVICE LIFE OF 75 YEARS.

WALL SYSTEM: ONLY ONE MSE WALL SYSTEM MAY BE USED ON THIS PROJECT.

ROADWAY SUPERELEVATION: FOR ROADWAY SUPERELEVATION, SEE SUPERELEVATION TABLES.

MSE WALL BACKFILL: MSE WALL BACKFILL SHALL CONSIST OF SPECIFIED BACKFILL.

MOMENT SLAB: THE MOMENT SLAB IS DESIGNED IN ACCORDANCE WITH THE SAME CRITERIA SPECIFIED FOR MECHANICALLY STABILIZED EARTH WALLS IN SECTION 11.10.10.2 OF THE AASHTO LRFD BRIDGE DESIGN SPECIFICATIONS, 4TH ED.

PAY ITEMS: PCC MASONRY, PARAPET, CLASS A (602017)
MECHANICALLY STABILIZED EARTH WALLS (602772)
BAR REINFORCEMENT, EPOXY COATED (604000)

SOIL PROPERTIES FOR DESIGN

SOIL TYPE	UNIT WEIGHT (PCF)	ANGLE OF FRICTION (DEGREES)
SELECT FILL	125	34
NO. 57 STONE	105	38
FOUNDATION SOIL	68	24

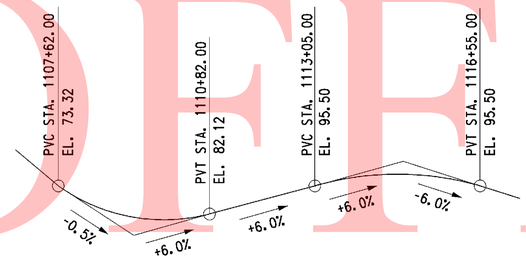

RAMP C VERTICAL CURVE DATA

NO SCALE

CURVE NO. 30

P.I. STA.	1113+47.25
Δ	77°59'15.14" LT
DC	11°48'48.82"
R	485.00'
TANGENT	392.66'
LENGTH	660.15'

RAMP C HORIZONTAL CURVE DATA

NO SCALE

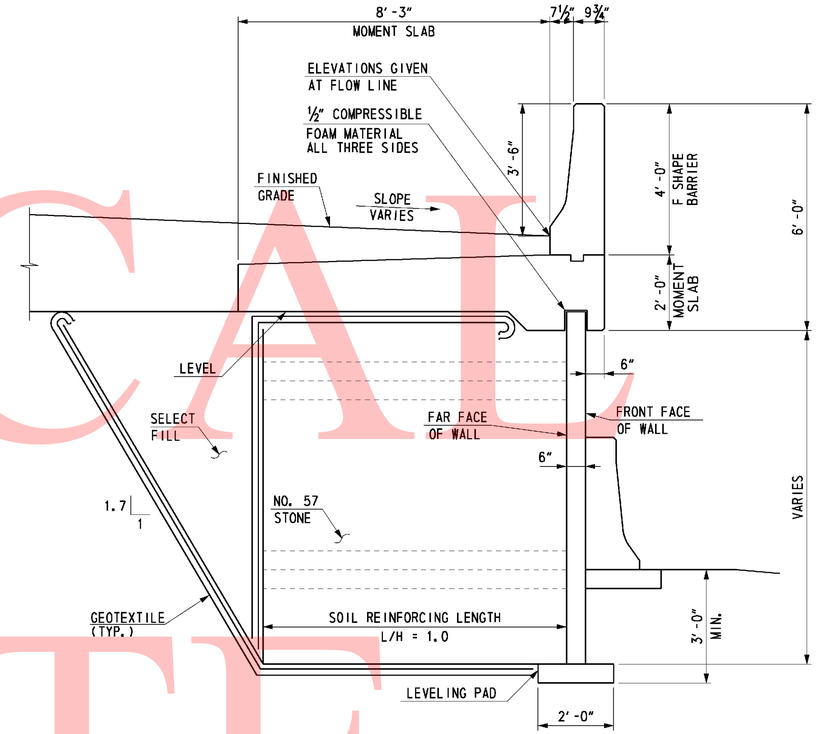

TYPICAL SECTION

(LOOKING BACK STATION)
SCALE: ½" = 1'-0"

FOUNDATION NOTES

THE FACTORED BEARING RESISTANCE SHALL BE VERIFIED PRIOR TO CONSTRUCTION OF THE MSE WALL.

THE INTERNAL STABILITY OF THE MSE WALL SHALL BE DESIGNED BY THE CONTRACTOR USING THE SOIL PARAMETERS PROVIDED FOR EACH STRUCTURE LOCATION. THE INTERNAL STABILITY SHOULD BE SIGNED AND SEALED BY A PROFESSIONAL ENGINEER LICENSED IN THE STATE OF DELAWARE AS INDICATED IN THE PROJECT SPECIFICATIONS. THE FACTORED APPLIED BEARING STRESS SHALL NOT EXCEED THE FACTORED BEARING RESISTANCE.

GROUNDWATER MAY BE ENCOUNTERED DURING EXCAVATION TO THE LEVELING PAD AND DURING CONSTRUCTION OF THIS RETAINING WALL. IT IS THE CONTRACTOR'S RESPONSIBILITY TO PROVIDE A RELATIVELY DRY EXCAVATION, INCLUDING DETERMINING APPROPRIATE DEWATERING METHODS DURING CONSTRUCTION.

A QUARANTINE PERIOD OF APPROXIMATELY 30-DAYS IS REQUIRED AFTER CONSTRUCTION OF THE FULL HEIGHT OF THE MSE WALL IS ACHIEVED. THE ENGINEER SHALL APPROVE THE COMPLETION OF THE QUARANTINE PERIOD PRIOR TO CONSTRUCTION OF ANY MOMENT SLABS OR PARAPETS.

THE DESIGN UNIT WEIGHT INDICATED IN SOIL PROPERTIES TABLE HAS BEEN ADJUSTED DUE TO THE PRESENCE OF SHALLOW GROUNDWATER.

THE WALL SUPPLIER SHAL PERFORM A DETAILED SEISMIC ANALYSIS FOR BACK TO BACK MSE WALLS WITH L/H LESS THAN 1.1, IF NECESSARY, AS REQUIRED BY FHWA PUBLICATION NO. FHWA-NHI-00-043.

0 1 4
½ 2
SCALE: ½"=1'-0"

UNOFFICAL WEBSITE COPY

NOTE:
TEST PIT IN AREA TO DETERMINE ELEVATION. ADJUST MSE WALL FOOTING TO BRIDGE OVER TOP OF DUCT BANK. IF BOTTOM OF LEVELING PAD IS LESS THAN 3" DEEP FROM PROPOSED GRADE DROP LEVELING PAD BELOW DUCT BANK.
SUPPORT ALL UTILITIES DURING CONSTRUCTION.

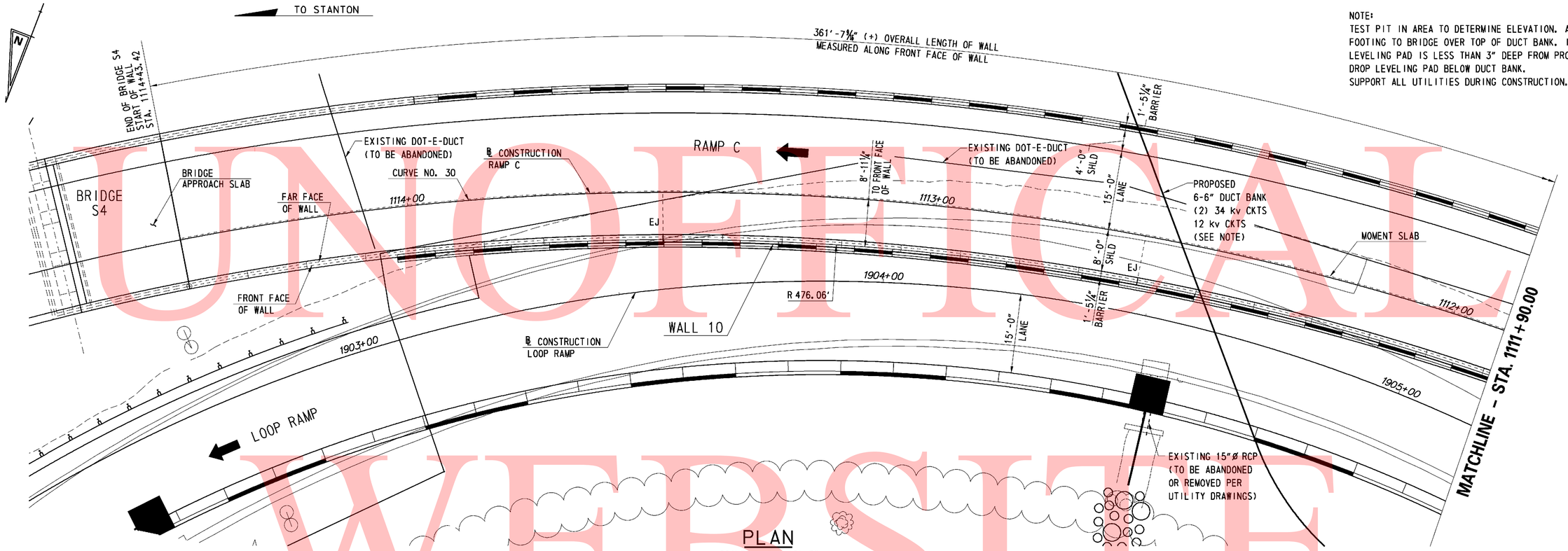

PLAN
SCALE: 1" = 10'-0"

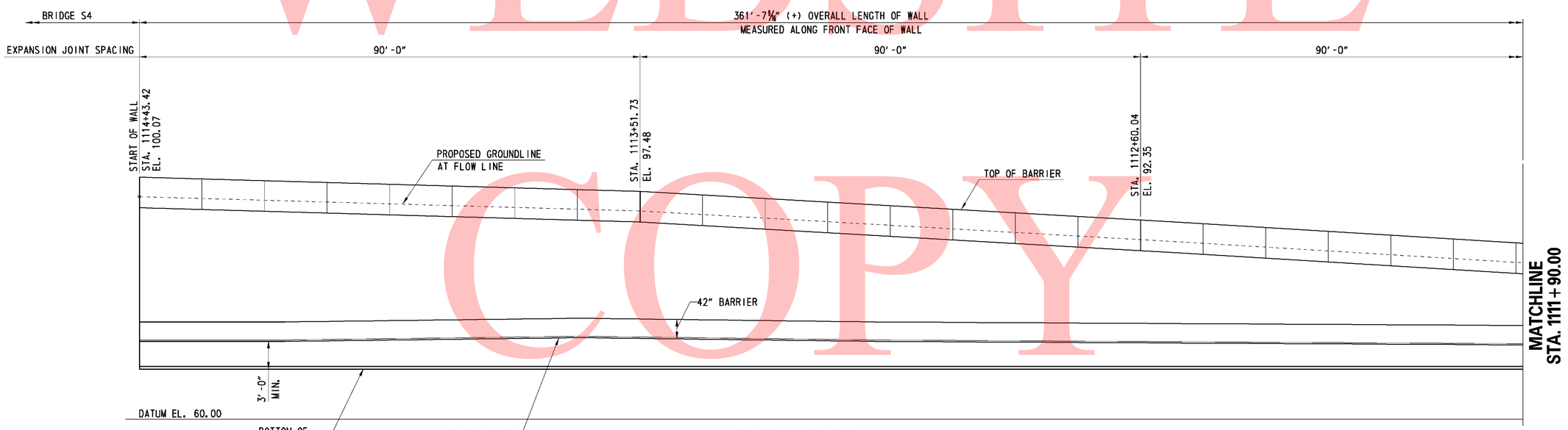

ELEVATION
SCALE: 1" = 10'-0"

0 10 20 30
SCALE: 1"= 10'-0"

UNOFFICIAL WEBSITE COPY

9/8/2010 9:47:16 AM
M:\PROJECTS\2003\03059_DELTR\PK\SRIMALL\CADD\2809003\PLANS\RD21_WALL-10_SR1.DGN

DELAWARE DEPARTMENT OF TRANSPORTATION	ADDENDUMS / REVISIONS	SR1 / I-95 INTERCHANGE	CONTRACT 28-090-03	BRIDGE NO.	RETAINING WALL 10 GENERAL PLAN AND ELEVATION - 1	SHEET NO. 584
			COUNTY NEW CASTLE	DESIGNED BY: JMS		TOTAL SHTS. 803
				CHECKED BY: JSW		R10-02

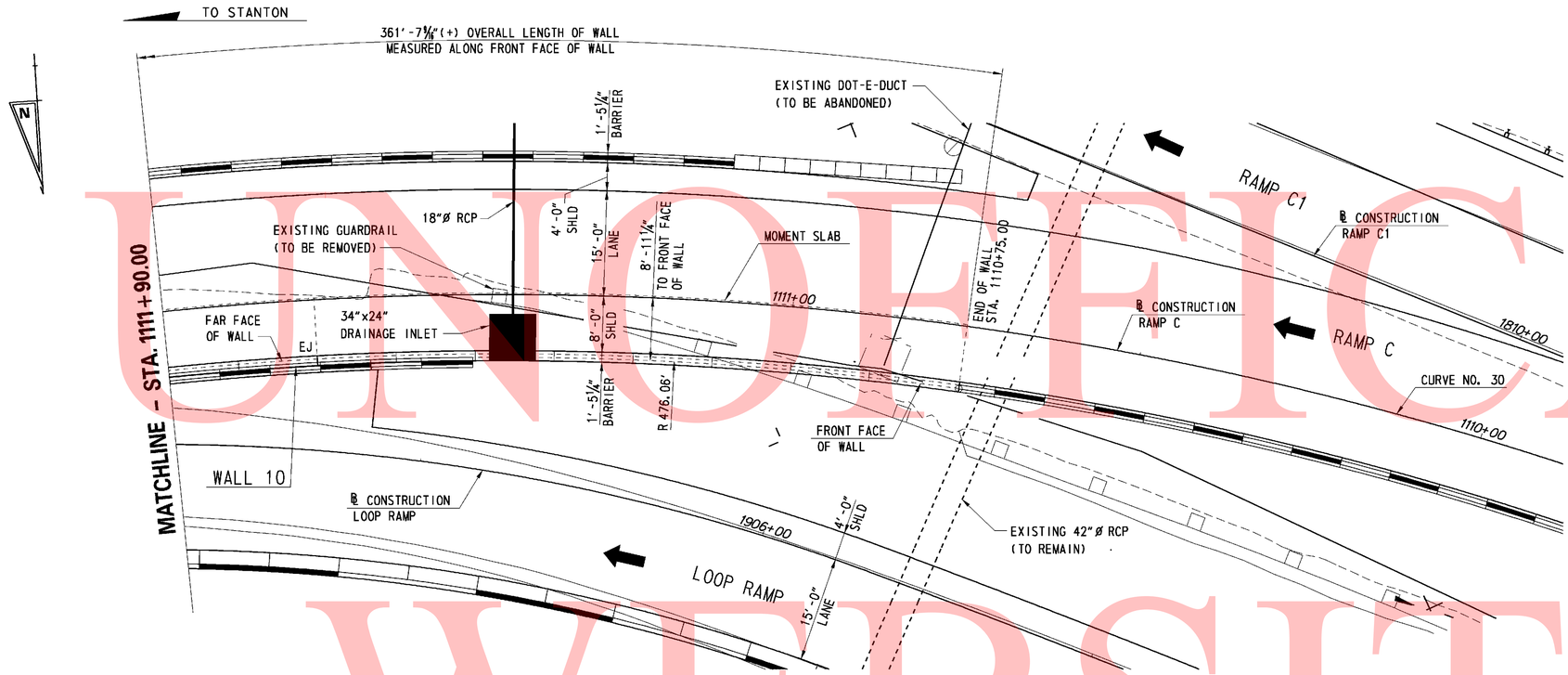

PLAN

SCALE: 1" = 10'-0"

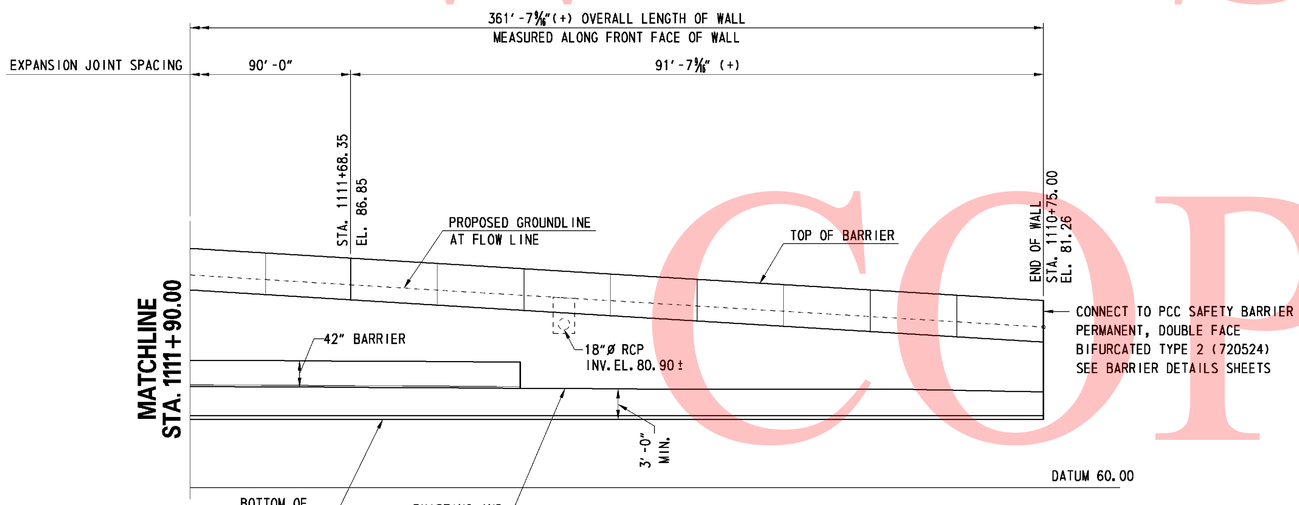

ELEVATION

SCALE: 1" = 10'-0"

0 10 20 30

SCALE: 1"= 10'-0"

UNOFFICIAL WEBSITE COPY

DELAWARE DEPARTMENT OF TRANSPORTATION	ADDENDUMS / REVISIONS	SR1 / I-95 INTERCHANGE	CONTRACT 28-090-03	BRIDGE NO.	RETAINING WALL 10 GENERAL PLAN AND ELEVATION - 2	SHEET NO. 585	R10-03
			COUNTY NEW CASTLE	DESIGNED BY: JMS		TOTAL SHTS. 803	
				CHECKED BY: JSW			

9/8/2010 9:48:24 AM
M:\PROJECTS\2003\03059_DELTRNPK\SRMALL\CADD\2809003\PLANS\RD22_WALL-10_SR1.DGN

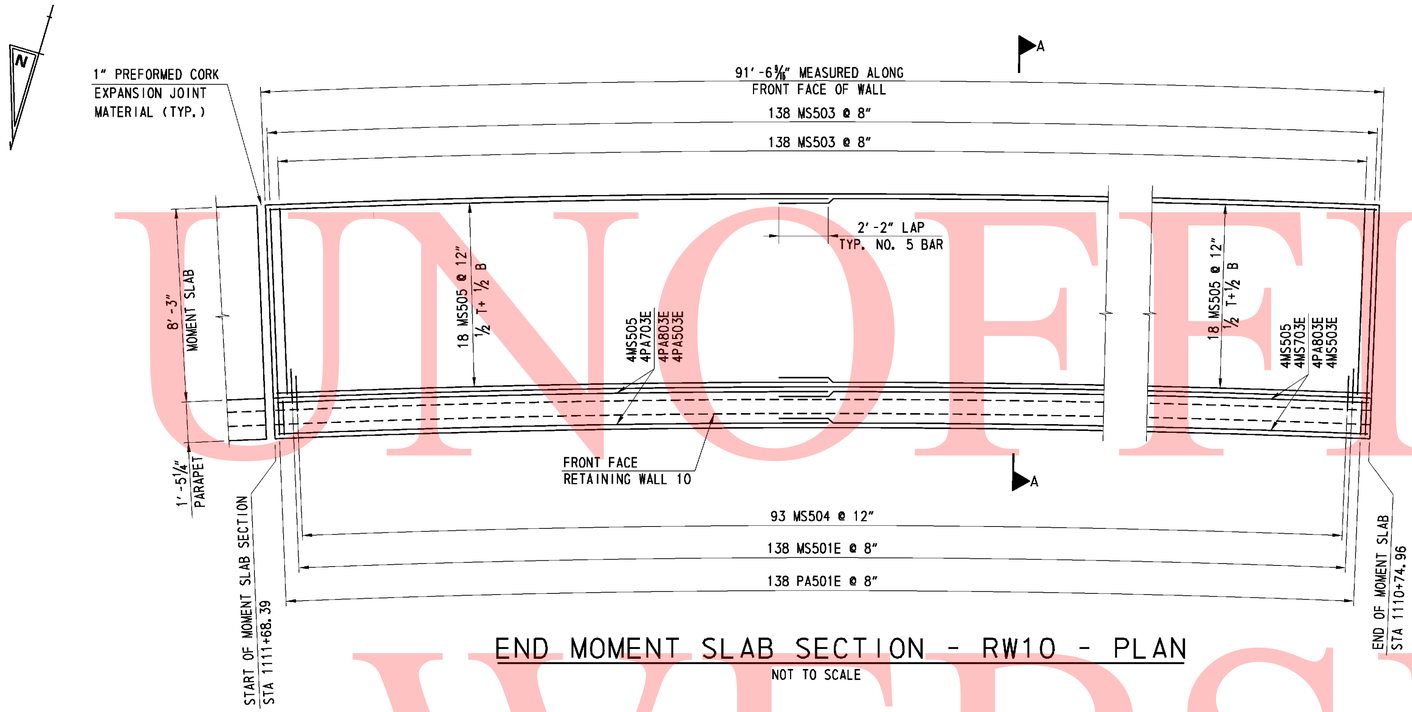

END MOMENT SLAB SECTION - RW10 - PLAN

NOT TO SCALE

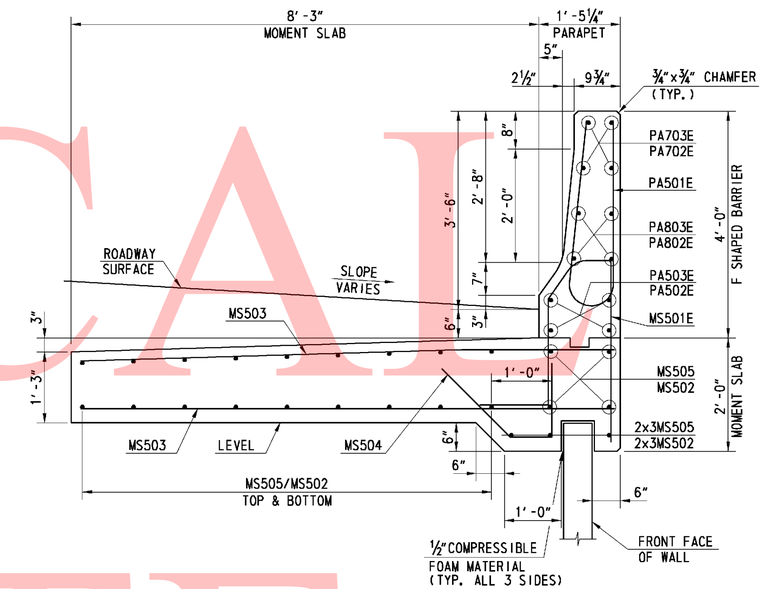

SECTION A-A

SCALE: ¾" = 1'-0"

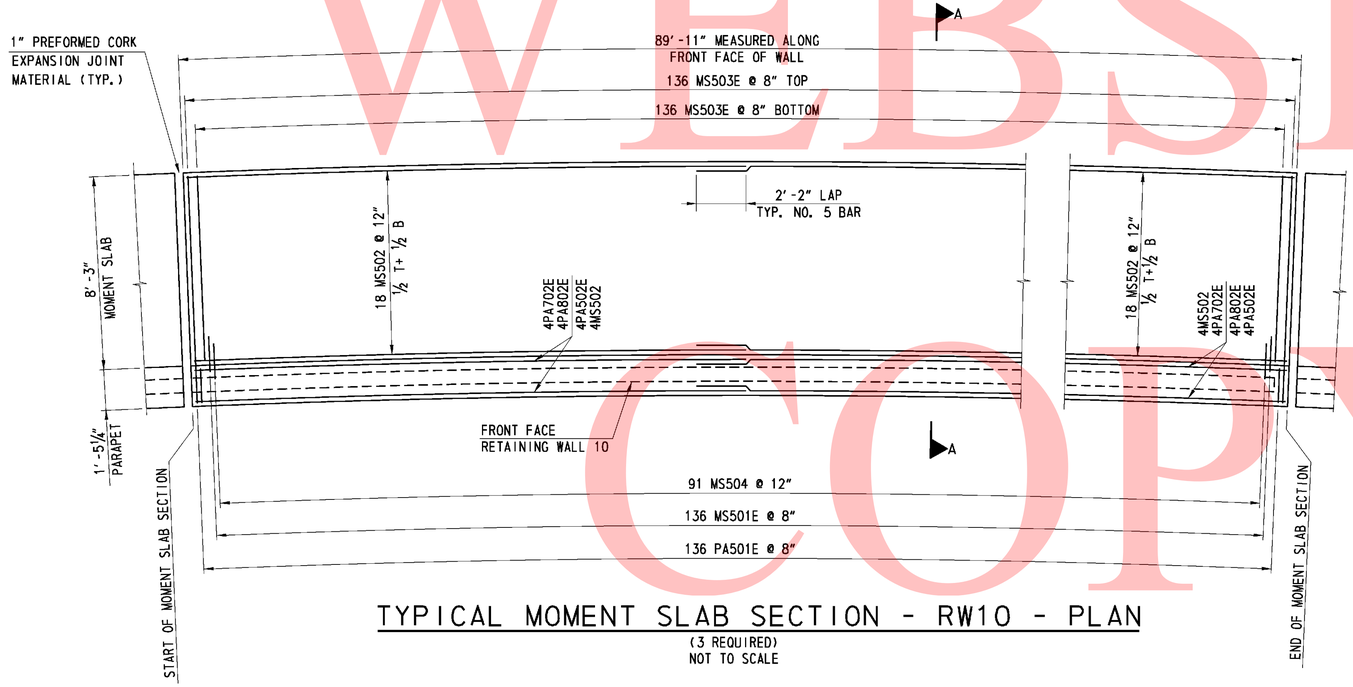

TYPICAL MOMENT SLAB SECTION - RW10 - PLAN

(3 REQUIRED)
NOT TO SCALE

0 1 4
½ 2
SCALE: ¾" = 1'-0"

UNOFFICAL WEBSITE COPY

9/2/2010 11:28:51 AM
M:\PROJECTS\2003\03059_DELTRNPK\SR1MALL\CADD\2809003\PLANS\RD42_WALL-10_DET_SR1.DGN

DELAWARE DEPARTMENT OF TRANSPORTATION	ADDENDUMS / REVISIONS		SR1 / I-95 INTERCHANGE	CONTRACT 28-090-03	BRIDGE NO.	RETAINING WALL 10 MOMENT SLAB AND BARRIER REINFORCING	R10-04
				COUNTY NEW CASTLE	DESIGNED BY: JMS		SHEET NO. 586
					CHECKED BY: JSW		TOTAL SHTS. 803

(1) ANY MARK NUMBER WITH SUFFIX 'E' DENOTES EPOXY-COATED REINFORCING STEEL.

(2) ALL MARK 'LOCATION PREFIXES' SHALL CONSIST OF TWO LETTERS AND ARE AS FOLLOWS:

MS = MOMENT SLAB, PA = BARRIER/PARAPET

RETAINING WALL 10

SPECIFICATIONS					BENDING DIMENSIONS (FEET-INCHES /QUARTER INCH)											
QTY.	SIZE	LENGTH	MARK	TYPE	A	B	C	D	E	F/R	G	H	J	K	O	REMARKS
546	5	7-7 5/16	PA501E	H1		3-3	1-1 3/16	3-3 1/8		0-4 3/16		0-5				
24	5	45-10 1/2	PA502E	STR												BEND BARS IN FIELD AS NEEDED
8	5	46-8 1/4	PA503E	STR												BEND BARS IN FIELD AS NEEDED
24	7	46-8	PA702E	STR												BEND BARS IN FIELD AS NEEDED
8	7	47-5 11/16	PA703E	STR												BEND BARS IN FIELD AS NEEDED
24	8	47-3	PA802E	STR												BEND BARS IN FIELD AS NEEDED
8	8	48-0 11/16	PA803E	STR												BEND BARS IN FIELD AS NEEDED
546	5	7-8 15/16	MS501E	T15	0	2-9	0-8 3/8	0-8 1/2	2-7	1-0		2-7	0-4 7/8	0-7	1-1 1/4	
132	5	45-10 1/2	MS502	STR												BEND BARS IN FIELD AS NEEDED
548	5	9-4 1/4	MS503	STR												
1092	5	3-5	MS504	16	0	1-0	1-0	1-5				1-0	1-0			
50	5	46-8 15/16	MS505	STR												BEND BARS IN FIELD AS NEEDED

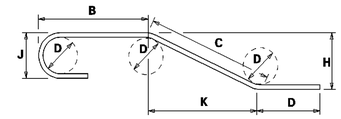

NOTES:

1. FIGURES SHOWN IN CIRCLES REPRESENT BAR BEND TYPES.
2. STANDARD BAR BENDS INCLUDE ONLY TYPES 1-32, S1-S12, AND T1-T16.
3. ALL DIMENSIONS ARE OUT-TO-OUT OF BAR EXCEPT "A" AND "G" ON STANDARD 180° AND 135° HOOKS.
4. "J" DIMENSIONS ON 180° HOOKS TO BE SHOWN ONLY WHERE NECESSARY TO RESTRICT HOOK SIZE, OTHERWISE STANDARD HOOKS ARE TO BE USED.
5. WHERE "J" IS NOT SHOWN, "J" WILL BE KEPT EQUAL TO OR LESS THAN "H" ON TRUSS BARS. WHERE "J" CAN EXCEED "H", IT SHALL BE SHOWN.
6. "H" DIMENSIONS OF STIRRUPS TO BE SHOWN WHERE NECESSARY TO FIT WITHIN THE CONCRETE.
7. UNLESS OTHERWISE NOTED, DIAMETER "D" IS THE SAME FOR ALL BENDS AND HOOKS ON A BAR.
8. WHERE SLOPE DIFFERS FROM 45° OFFSET, "H" AND "K" MUST BE SHOWN.
9. WHERE BARS ARE TO BE BENT MORE ACCURATELY THAN STANDARD BENDING TOLERANCES, BENDING DIMENSIONS WHICH REQUIRE CLOSER FABRICATION SHOULD HAVE LIMITS INDICATED.
10. FOR RECOMMENDED DIAMETER "D", OF BENDS, HOOKS, ETC., REFER TO TABLE AT RIGHT, 'CRSI' OR 'ACI' TABLES.
11. TYPE S1-S12, T1-T16 APPLY TO BAR SIZES 3 THROUGH 6.

ASTM STANDARD ENGLISH REINFORCING BARS				RECOMMENDED END HOOKS, APPLICABLE TO ALL GRADES			
	NOMINAL DIMENSIONS				180° HOOKS		90° HOOKS
BAR SIZE	DIAMETER (inches)	AREA (inches²)	WEIGHT (lbs./ft.)	D	A OR G	J	A OR G
3	0.375	0.110	0.376	2"	5"	3"	6"
4	0.500	0.200	0.668	3"	6"	4"	8"
5	0.625	0.310	1.043	3"	7"	5"	10"
6	0.750	0.440	1.502	4"	8"	6"	1'-0"
7	0.875	0.600	2.044	5"	10"	7"	1'-2"
8	1.000	0.790	2.670	6"	11"	8"	1'-4"
9	1.128	1.000	3.400	9"	1'-3"	11"	1'-7"
10	1.270	1.270	4.303	10"	1'-5"	1'-1"	1'-10"
11	1.410	1.560	5.313	1'-0"	1'-7"	1'-2"	2'-0"
14	1.693	2.250	7.650	1'-6"	2'-3"	1'-9"	2'-7"
18	2.257	4.000	13.600	2'-0"	3'-0"	2'-4"	3'-5"

STANDARD BAR BENDS

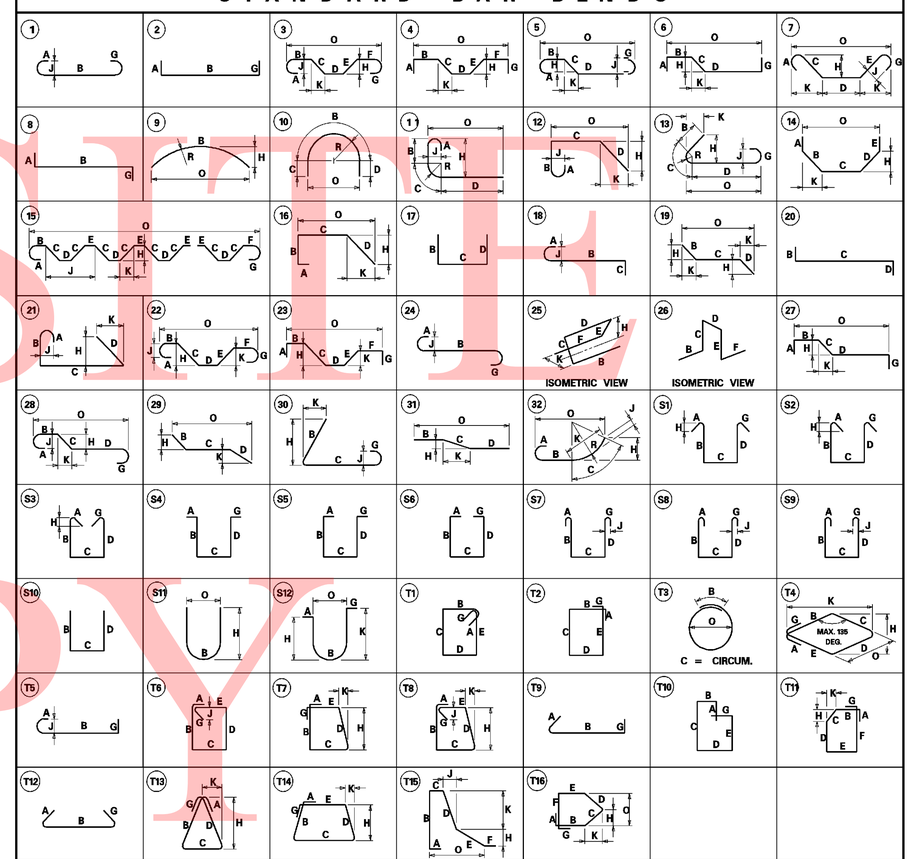

SPECIAL BAR BENDS

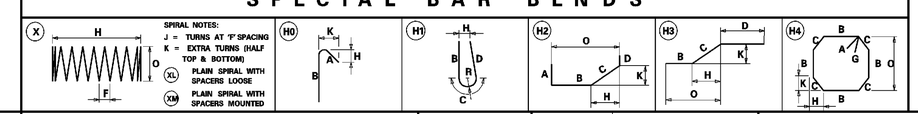

UNOFFICIAL WEBSITE COPY

9/2/2010 2:39:06 PM
M:\PROJECTS\2003\03059_DELTRNPK\SRTMALL\CADD\2809003\PLANS\RD43_WALL-10_BAR_SR1.DGN

DELAWARE DEPARTMENT OF TRANSPORTATION

ADDENDUMS / REVISIONS

SR1 / I-95 INTERCHANGE

CONTRACT	BRIDGE NO.	
28-090-03	DESIGNED BY:	JMS
COUNTY	CHECKED BY:	JSW
NEW CASTLE		

RETAINING WALL 10
REINFORCING BAR LIST

R10-05

SHEET NO. 587

TOTAL SHTS. 803

SUMMARY OF LABORATORY TEST RESULTS OF TUBE SAMPLES

BORING NO.	TOP SAMPLE DEPTH (FT)	NATURAL MOISTURE CONTENT (%)	LL	PL	PI	PERCENT PASSING NO. 200	AASHTO	UNDISTURBED TUBE TESTING	TOTAL UNIT WEIGHT (pcf)	UNCONFINED COMPRESSION (psf)	TOTAL STRESS COHESION (psf)	TOTAL STRESS FRICTION ANGLE (deg)	EFFECTIVE STRESS COHESION (psf)	EFFECTIVE STRESS FRICTION ANGLE (deg)	UNDRAINED SHEAR (psf)	INITIAL VOID RATIO	PRECONSOLIDATION STRESS MAX (psf)	PRECONSOLIDATION STRESS MIN (psf)	C_c	C_r	pH	RESISTIVITY (ohm-cm)
URS-1	24.0	19.5	48	24	24	-	A-7-6(23)	UC	134	1926	-	-	-	-	963	-	-	-	-	-	-	-
URS-1	24.5	33.5	48	24	24	-	A-6(12)	CONS	126	-	-	-	-	-	-	0.79	1400	1280	0.23	0.07	-	-

DELAWARE DEPARTMENT OF TRANSPORTATION
AASHTO CLASSIFICATION OF SOILS AND SOIL-AGGREGATE MIXTURES

General Classification	Granular Materials (35% or Less Passing 0.075 mm)							Silt-Clay Materials (More than 35% Passing 0.075 mm)					Organic Soils
Group Classification: Group	A-1		A-3	A-2				A-4	A-5	A-6	A-7		A-8
Sub-Group	A-1-a	A-1-b		A-2-4	A-2-5	A-2-6	A-2-7				A-7-5	A-7-6	
Graphic	A	B			5		7				5		
Sieve Analysis, % Passing													
2.00 mm (No. 10)	50 Max	-	-	-	-	-	-	-	-	-	-	-	See Note 1
0.425 mm (No. 40)	30 Max	50 Max	51 Min	-	-	-	-	-	-	-	-	-	
0.075 mm (No. 200)	15 Max	25 Max	10 Max	35 Max	35 Max	35 Max	35 Max	36 Min	36 Min	36 Min	36 Min	36 Min	
Characteristics of Fraction Passing 0.425 mm (No. 40)	-		-	-	-	-	-	-	-	-	-	-	See Note 1
Liquid Limit	-		-	40 Max	41 Min	40 Max	41 Min	40 Max	41 Min	41 Max	41 Min	41 Min	
Plasticity Index	6 Max		NP	10 Max	10 Max	11 Min	11 Min	10 Max	10 Max	11 Min	11 Min	11 Min	
Usual Types of Significant Constituent Materials	Stone Fragments, Gravel and Sand		Fine Sand	Silty or Clayey Gravel and Sand				Silty Soils		Clayey Soils			Organic Soils

Plasticity Index of A-7-5 Subgroup Is Equal to or Less Than LL Minus 30

Plasticity Index of A-7-6 Subgroup Is Greater Than LL Minus 30

Note 1-Classification Based on Visual Inspection and not on Sieve Analysis or Atterberg Limits

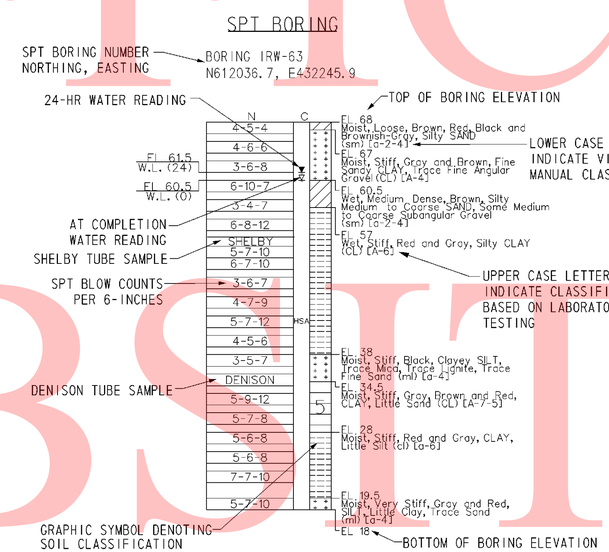

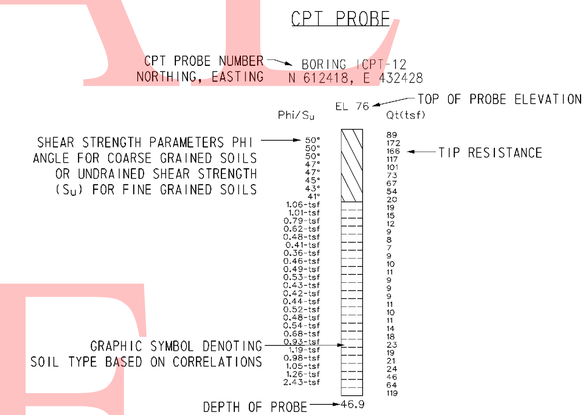

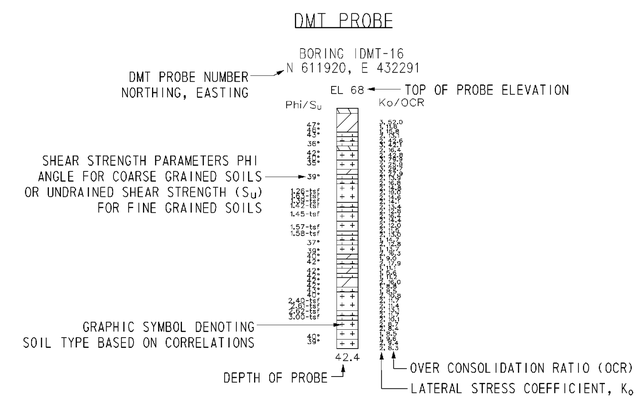

NOTES:

1. THE BORINGS AND DRIVE TEST WERE CONDUCTED IN MULTIPLE PHASES BY THE ROBERT B. BALTER COMPANY, THE WALTON CORPORATION, AND FINDLING, INC. BETWEEN AUGUST 2004 AND OCTOBER 2008.

2. THE SOIL SYMBOLS REFLECT ONLY THE MAJOR SOIL CONSTITUENT, FOR MORE COMPLETE SOIL CHARACTERISTIC REFER TO THE SOIL LOGS CONTAINED WITHIN THE FINAL FOUNDATION REPORTS DATED FEBRUARY 2009.

3. THE FIELD BORING LOGS RECORD SAMPLE SPOON RECOVERY. THE BORING LOGS AND LABORATORY TESTING RESUTS ARE AVAILABLE UPON REQUEST.

4. N = BLOWS ON A 2 INCH OD SAMPLING SPOON BY 140 LB DRIVE- WEIGHT FALLING 30 INCHES INDICATING SUCCESSIVE 6 INCH INCREMENTS OF PENETRATION. PENETRATIONS GREATER THAN 6-INCHES OR LESS THAN 6-INCHES ARE INDICATED BY WOH, WOR, OR THE DEPTH OF THE PENETRATION TO THE NEAREST INCH.

   WOH= STATIC WEIGHT OF SAMPLING SPOON DRIVE-WEIGHT ASSEMBLY, DRIVE-WEIGHT,ANVIL (WHEN AUTOMATIC HAMMER IS USED), DRILL ROD(S), AND SAMPLING SPOONS.

   WOR= STATIC WEIGHT OF DRILL ROD AND SAMPLING SPOON

5. FIELD BORINGS AND SOIL SAMPLING WERE PERFORMED IN ACCORDANCE TO AASHTO T-206, T-225 AND T-306.

6. USCS AND AASHTO DESIGNATIONS INDICATED IN UPPER CASE HAVE BEEN CONFIRMED USING LAB SOIL CLASSIFICATION TESTS. USCS AND AASHTO DESIGNATIONS INDICATED IN LOWER CASE ARE BASED ON VISUAL CLASSIFICATION TECHNIQUES ACCORDING TO ASTM D 2488 AND AASHTO M 145 BY RK&K GEOLOGIST OR ENGINEER.

7. CPT AND DMT PROBES WERE DRILLED BY IN-SITU SOIL TESTING, L.C AND CONETEC, INC.

   CPT = CONE PENETRATION TESTING
   DMT = FLAT- PLATE DILATOMETER

8. C= DEPTH OF HOLLOW STEM CONTINUOUS FLIGHT AUGER (HSA) WITH A 3-3/8 INCH ID, AND LIMIT OF MUD ROTARY (MD).

9. FOR BORING LOCATIONS, SEE CONSTRUCTION PLAN SHEETS 182 THROUGH 186.

10. FOR ADDITIONAL BORING & DRIVE TESTS SEE BORING & DRIVE TESTS SHEETS FOR OTHER STRUCTURES.

11. FOR ALL OTHER BORING & DRIVE TESTS SEE SHEETS 744 THROUGH 792.

12. FOR ADDITIONAL LABORATORY TEST RESULTS OF UNDISTURBED TUBE SAMPLES AND INDEX TESTING SEE, SHEETS 793 THROUGH 803.

13. FOR GROUNDWATER MONITORING DATA, SEE SHEET XXX OF XXX.

14. LL= LIQUID LIMIT

15. PL = PLASTIC LIMIT

16. PI = PLASTICITY INDEX

17. UC = UNCONFINED COMPRESSION

18. DS = DIRECT SHEAR

19. CONS = CONSOLIDATION

20. UU = UNCONSOLIDATED- UNDRAINED TRIAXIAL TEST

21. CIUC = CONSOLIDATED ISOTROPIC UNDRAINED COMPRESSION TRIAXIAL TEST

22. AASHTO = AMERICAN ASSOCIATION OF STATE HIGHWAY TRANSPORTATION OFFICIALS

UNOFFICAL WEBSITE COPY

UNOFFICIAL WEBSITE COPY

DATUM EL. -60.00

NOTES:

1. FOR BORING NOTES AND INFORMATION SEE SHEET NO. 588 OF 803.
2. FOR BORING LOCATIONS SEE CONSTRUCTION PLAN SHEETS.

R10-7

DELAWARE DEPARTMENT OF TRANSPORTATION	ADDENDUMS / REVISIONS	SCALE 0 10 20 30 FEET	SR1 / I-95 INTERCHANGE	CONTRACT 28-090-03	BRIDGE NO.	RETAINING WALL 10 BORING & DRIVE TESTS	SHEET NO. 589
				COUNTY NEW CASTLE	DESIGNED BY: JLT		TOTAL SHTS. 803
					CHECKED BY: EMK		

3/2/2010 12:23:09 PM
M:\PROJECTS\2003\03059_DELTRNPK\SRIMALL\CADD\2809003\PLANS\B0050_R10_SR.DGN

GENERAL NOTES

SPECIFICATIONS: PROPRIETARY MSE WALLS SHALL BE DESIGNED IN ACCORDANCE WITH THE FOLLOWING:
- AASHTO LRFD BRIDGE DESIGN SPECIFICATIONS, 4TH EDITION WITH ALL CURRENT REVISIONS.
- FEDERAL HIGHWAY ADMINISTRATION PUBLICATION NO. FHWA-NHI-00-043, "MECHANICALLY STABILIZED EARTH WALLS AND REINFORCED SOIL SLOPES DESIGN AND CONSTRUCTION GUIDELINES"

CONCRETE DESIGN SHALL BE PERFORMED USING THE LOAD AND RESISTANCE FACTOR DESIGN METHOD.

CONCRETE: LEVELING PAD CONCRETE SHALL BE 3500 PSI. MIX REQUIREMENTS SHALL CONFORM TO SECTION 812 OF THE DELAWARE DEPARTMENT OF TRANSPORTATION STANDARD SPECIFICATIONS.

CHAMFERS: ALL EXPOSED CORNERS OF CONCRETE SHALL BE CHAMFERED WITH ¾" x ¾" MILLED CHAMFER STRIPS, UNLESS OTHERWISE NOTED EXCEPT ON UNEXPOSED FOOTINGS OR WHERE INDICATED BY THE FOLLOWING NOTATION ON THE PLANS: "DO NOT CHAMFER".

REINFORCING STEEL: REINFORCING STEEL SHALL CONFORM TO ASTM A 615, GRADE 60. MINIMUM COVER FOR ANY BAR SHALL BE 2" UNLESS OTHERWISE NOTED.

FOR TIES AND STIRRUPS, STANDARD ACI BENDING TOLERANCES ARE MODIFIED TO PLUS (+) ZERO INCHES, MINUS (-) NORMAL ACI BENDING TOLERANCE.

ONLY GRADE 60 CAN BE USED ON THIS PROJECT.

ALL REINFORCING STEEL IN THE PARAPET SHALL BE EPOXY COATED.

ALL KEYS ARE NOMINAL SIZE.

THE MSE WALL MANUFACTURER MAY SUBSTITUTE ALTERNATE REINFORCING CONFIGURATIONS AND SUBMIT FOR APPROVAL.

EXPANSION AND CONTRACTION JOINTS: THE LOCATION OF THE EXPANSION AND CONTRACTION JOINTS IN THE BARRIER SHOWN ON THE PLANS MAY BE ADJUSTED TO ACCOMMODATE THE PANEL TYPE USED IN THE PROJECT. ANY CHANGE TO THESE JOINT LOCATIONS SHALL BE SUBMITTED TO THE ENGINEER FOR APPROVAL. EXPANSION JOINTS ARE LABELED "EJ".

LEVELING PAD: THE PROPRIETARY WALL MANUFACTURER MAY RELOCATE THE LEVELING PAD STEPS AT THEIR DISCRETION PROVIDED THAT THE MINIMUM EMBEDMENT IS MAINTAINED. ANY CHANGE TO THE STEP LOCATIONS SHALL BE SUBMITTED TO THE ENGINEER FOR APPROVAL.

ROADWAY LIMITS: THE PROPRIETARY WALL MANUFACTURER SHALL ASSURE THAT PROPOSED PROPRIETARY WALL COMPONENTS ARE POSITIONED SUCH THAT THE DESIGNATED ROADWAY LIMITS ARE NOT ENCROACHED UPON.

TRAFFIC BARRIER JOINTS: TRAFFIC BARRIER SHALL HAVE CONSTRUCTION JOINTS.

COORDINATION: CONTRACTOR AND PROPRIETARY WALL MANUFACTURER SHALL COORDINATE LOCATIONS OF INLETS AND PIPES WITH LOCATIONS OF PROPRIETARY WALL TIEBACK SYSTEM.

ARCHITECTURAL FINISH: THE MSE WALL PANELS SHALL RECEIVE AN ARCHITECTURAL FINISH.

SERVICE LIFE: ALL RETAINING WALL COMPONENTS SHALL BE DESIGNED FOR A MINIMUM SERVICE LIFE OF 75 YEARS.

WALL SYSTEM: ONLY ONE MSE WALL SYSTEM MAY BE USED ON THIS PROJECT.

ROADWAY SUPERELEVATION: FOR ROADWAY SUPERELEVATION, SEE SUPERELEVATION TABLES.

MSE WALL BACKFILL: MSE WALL BACKFILL SHALL CONSIST OF SPECIFIED BACKFILL.

PAY ITEMS: PCC MASONRY, PARAPET, CLASS A (602017)
BAR REINFORCEMENT, EPOXY COATED (604000)
MECHANICALLY STABILIZED EARTH WALLS (602772)

SOIL PROPERTIES FOR DESIGN

SOIL TYPE	UNIT WEIGHT (PCF)	ANGLE OF FRICTION (DEGREES)
SELECT FILL	125	34
COMMON BORROW	130	28
FOUNDATION SOIL	68	32

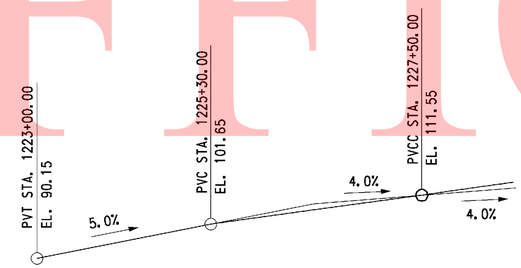

RAMP A VERTICAL CURVE DATA

NO SCALE

CURVE NO. 12

P.I. STA.	1226+68.24
Δ	27°44'07.64" LT
DC	03°05'49.45"
R	1850.00'
TANGENT	456.72'
LENGTH	895.54'

RAMP A HORIZONTAL CURVE DATA

NO SCALE

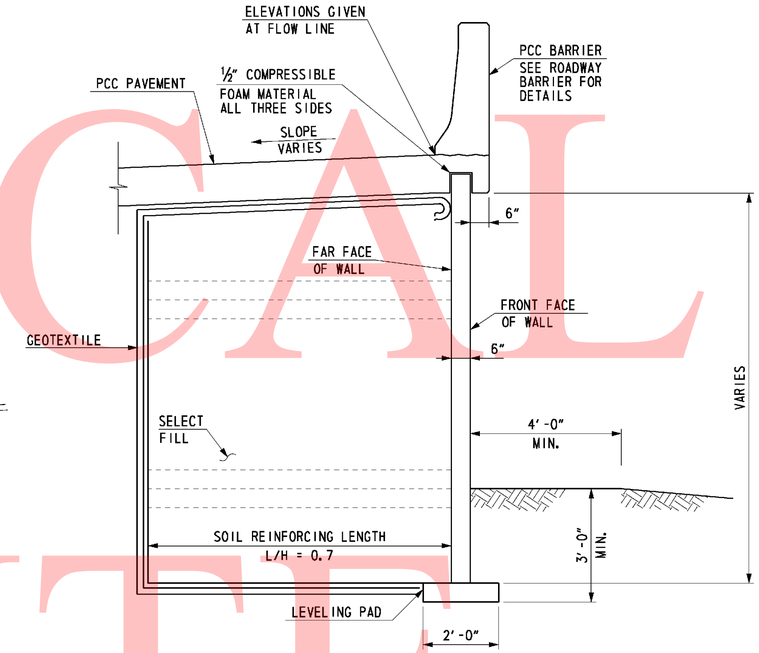

TYPICAL SECTION

(LOOKING AHEAD STATIONS)
SCALE: ½" = 1'-0"

FOUNDATION NOTES

THE FACTORED BEARING RESISTANCE SHALL BE VERIFIED PRIOR TO CONSTRUCTION OF THE MSE WALL.

THE INTERNAL STABILITY OF THE MSE WALL SHALL BE DESIGNED BY THE CONTRACTOR USING THE SOIL PARAMETERS PROVIDED FOR EACH STRUCTURE LOCATION. THE INTERNAL STABILITY SHOULD BE SIGNED AND SEALED BY A PROFESSIONAL ENGINEER LICENSED IN THE STATE OF DELAWARE AS INDICATED IN THE PROJECT SPECIFICATIONS. THE FACTORED APPLIED BEARING STRESS SHALL NOT EXCEED THE FACTORED BEARING RESISTANCE.

ISOLATED AREAS OF UNDERCUTTING OF EXISTING FILL MAY BE ENCOUNTERED DURING CONSTRUCTION OF THIS RETAINING WALL.

IT IS THE CONTRACTOR'S RESPONSIBILITY TO PROVIDE A RELATIVELY DRY EXCAVATION, INCLUDING DETERMINING APPROPRIATE DEWATERING METHODS DURING CONSTRUCTION IF NECESSARY.

A QUARANTINE PERIOD OF APPROXIMATELY 30-DAYS IS REQUIRED AFTER CONSTRUCTION OF THE FULL HEIGHT OF THE MSE WALL IS ACHIEVED. THE ENGINEER SHALL APPROVE THE COMPLETION OF THE QUARANTINE PERIOD PRIOR TO CONSTRUCTION OF ANY PARAPETS.

THE DESIGN UNIT WEIGHT INDICATED IN SOIL PROPERTIES TABLE HAS BEEN ADJUSTED DUE TO THE PRESENCE OF SHALLOW GROUNDWATER.

THE WALL SUPPLIER SHAL PERFORM A DETAILED SEISMIC ANALYSIS FOR BACK TO BACK MSE WALLS WITH L/H LESS THAN 1.1, IF NECESSARY, AS REQUIRED BY FHWA PUBLICATION NO. FHWA-NHI-00-043.

0 1 4
½ 2
SCALE: ½"=1'-0"

UNOFFICAL WEBSITE COPY

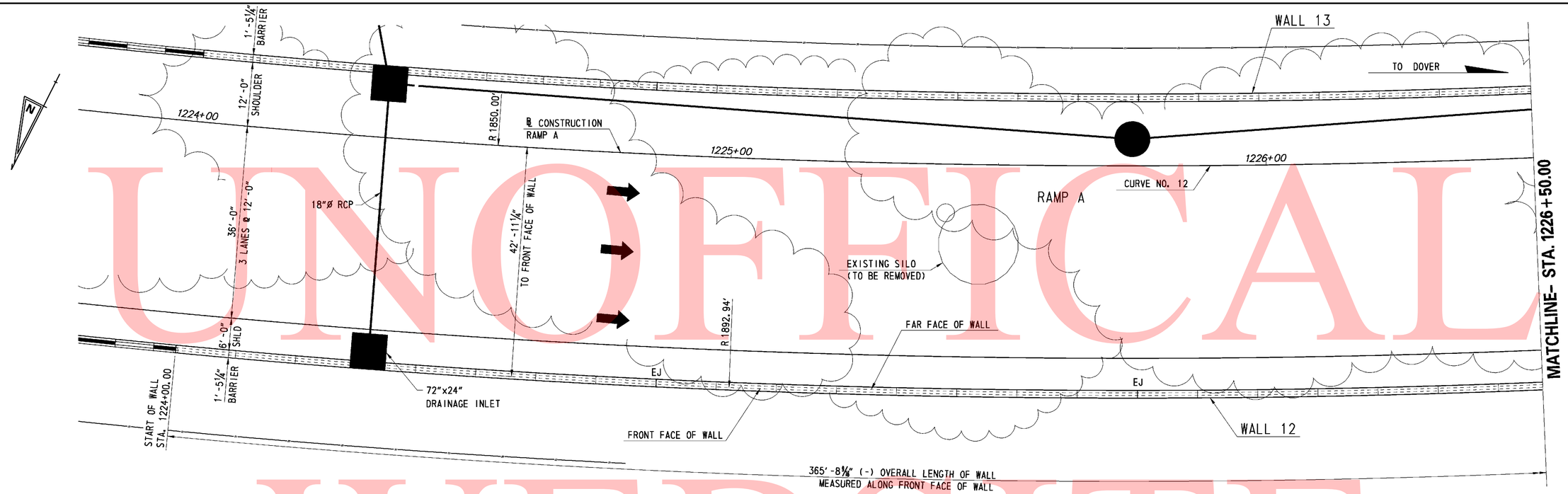

PLAN

SCALE: 1" = 10'-0"

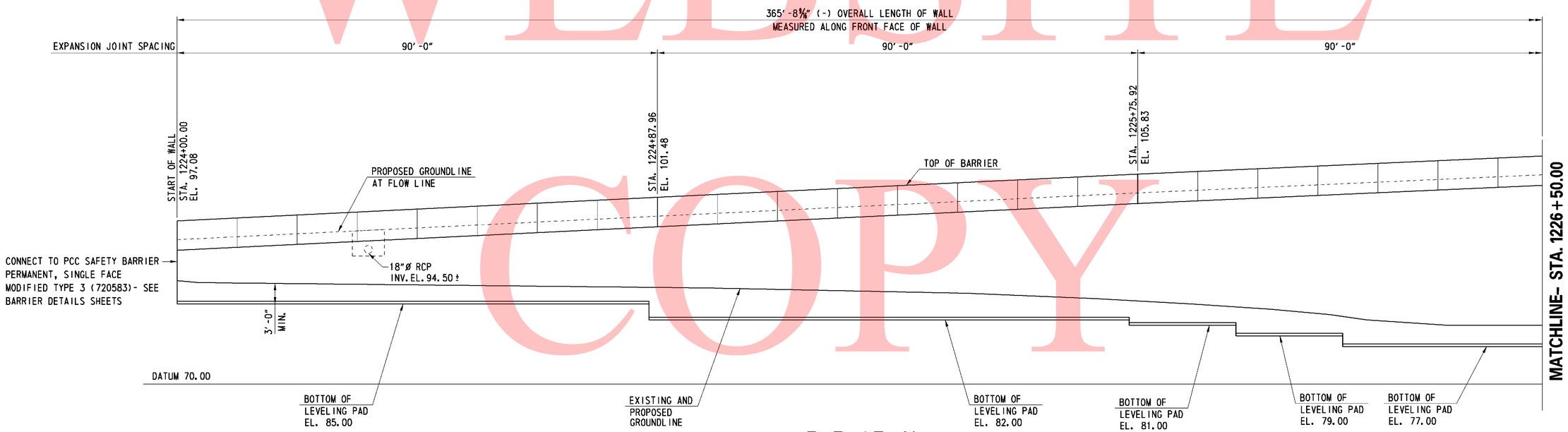

ELEVATION

SCALE: 1" = 10'-0"

0 10 20 30

SCALE: 1"= 10'-0"

UNOFFICAL WEBSITE COPY

9/8/2010 9:51:25 AM
M:\PROJECTS\2003\03059_DELTRNPK\SR1MAIN\CADD\2809003\PLANS\RD24_WALL-12_SR1.DGN

DELAWARE DEPARTMENT OF TRANSPORTATION	ADDENDUMS / REVISIONS	SR1 / I-95 INTERCHANGE	CONTRACT 28-090-03	BRIDGE NO.	RETAINING WALL 12 GENERAL PLAN AND ELEVATION – 1	SHEET NO. 591	R12-02
			COUNTY NEW CASTLE	DESIGNED BY: JMS		TOTAL SHTS. 803	
				CHECKED BY: JSW			

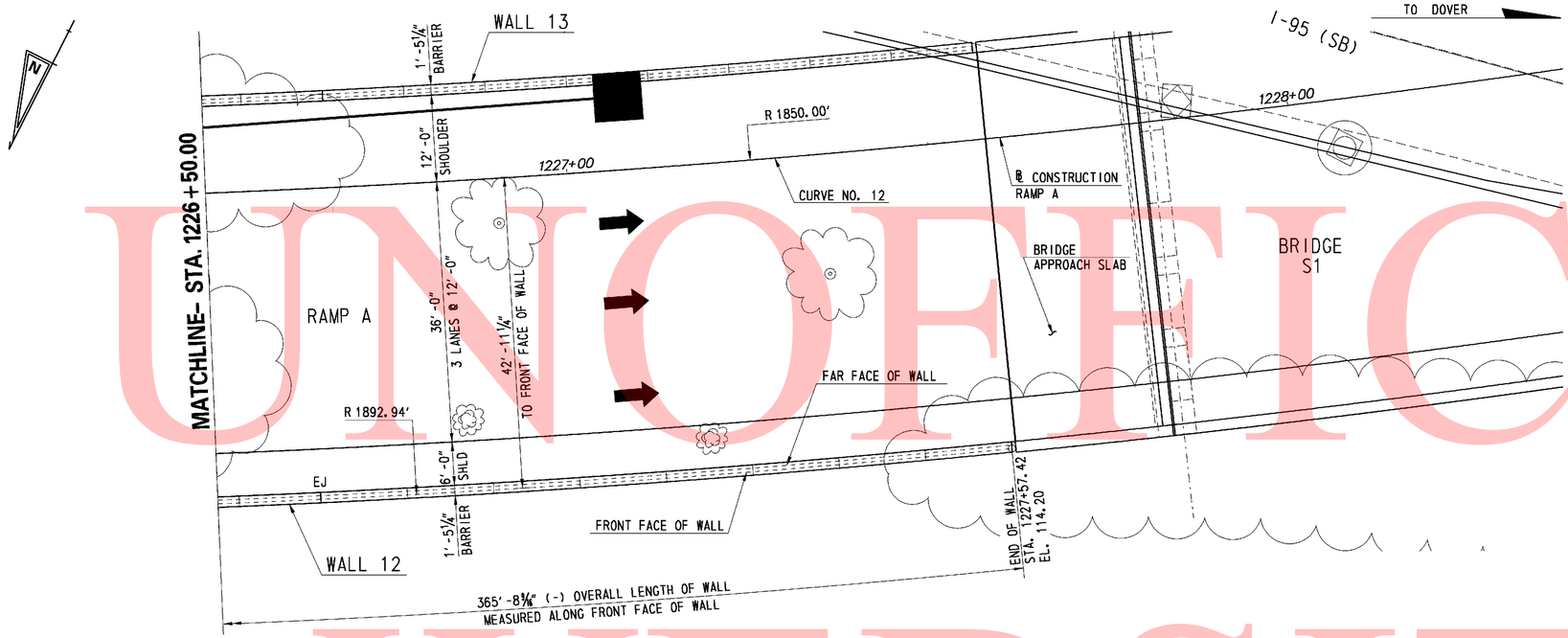

PLAN

SCALE: 1" = 10'-0"

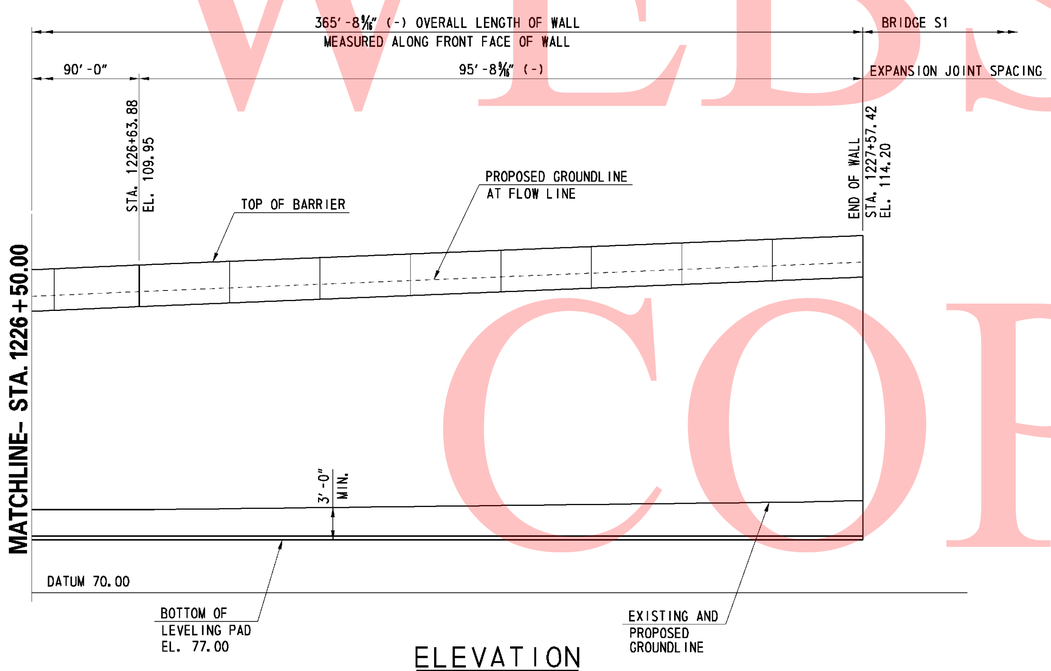

ELEVATION

SCALE: 1" = 10'-0"

0 10 20 30

SCALE: 1"= 10'-0"

UNOFFICAL WEBSITE COPY

8/26/2010 10:49:21 AM
M:\PROJECTS\2003\03059_DELTRNPK\SR1MAIN\CADD\2809003\PLANS\RD25_WALL-12_SR1.DGN

DELAWARE DEPARTMENT OF TRANSPORTATION	ADDENDUMS / REVISIONS	SR1 / I-95 INTERCHANGE	CONTRACT 28-090-03	BRIDGE NO.	RETAINING WALL 12 GENERAL PLAN AND ELEVATION – 2	SHEET NO. 592
			COUNTY NEW CASTLE	DESIGNED BY: JMS		TOTAL SHTS. 803
				CHECKED BY: JSW		R12-03

SUMMARY OF LABORATORY TEST RESULTS OF TUBE SAMPLES

BORING NO.	TOP SAMPLE DEPTH (FT)	NATURAL MOISTURE CONTENT (%)	LL	PL	PI	PERCENT PASSING NO. 200	AASHTO	UNDISTURBED TUBE TESTING	TOTAL UNIT WEIGHT (pcf)	UNCONFINED COMPRESSION (psf)	TOTAL STRESS COHESION (psf)	TOTAL STRESS FRICTION ANGLE (deg)	EFFECTIVE STRESS COHESION (psf)	EFFECTIVE STRESS FRICTION ANGLE (deg)	UNDRAINED SHEAR (psf)	INITIAL VOID RATIO	PRECONSOLIDATION STRESS MAX (psf)	PRECONSOLIDATION STRESS MIN (psf)	C_c	C_r	pH	RESISTIVITY (ohm-cm)
IRW-71	27.0	17.5	22	17	5	67.0	A-4	UU	134.2	-	-	-	-	-	8230	-	-	-	-	-	-	-
URS-3	35.0	26.1	40	22	18	98.6	A-6(20)	CONS	132.3	-	-	-	-	-	-	0.61	5180	4800	0.20	0.07	-	-
URS-3	35.0	20.7	40	22	18	98.6	A-6	UC	133.3	4732	-	-	-	-	2366	-	-	-	-	-	-	-
URS-3	50.0	42.8	-	-	-	-	-	CONS	117.0	-	-	-	-	-	-	0.99	2400	1680	0.27	0.08	-	-
URS-3	50.0	26.6	51	24	27	97.2	A-7-6	UC	123.9	2408	-	-	-	-	1204	-	-	-	-	-	-	-

DELAWARE DEPARTMENT OF TRANSPORTATION
AASHTO CLASSIFICATION OF SOILS AND SOIL-AGGREGATE MIXTURES

General Classification	Granular Materials (35% or Less Passing 0.075 mm)							Silt-Clay Materials (More than 35% Passing 0.075 mm)					Organic Soils
Group Classification: Group	A-1		A-3	A-2				A-4	A-5	A-6	A-7		A-8
Sub-Group	A-1-a	A-1-b		A-2-4	A-2-5	A-2-6	A-2-7				A-7-5	A-7-6	
Graphic	A	B			5		7				5		
Sieve Analysis, % Passing													
2.00 mm (No. 10)	50 Max	-	-	-	-	-	-	-	-	-	-	-	See Note 1
0.425 mm (No. 40)	30 Max	50 Max	51 Min	-	-	-	-	-	-	-	-	-	
0.075 mm (No. 200)	15 Max	25 Max	10 Max	35 Max	35 Max	35 Max	35 Max	36 Min	36 Min	36 Min	36 Min	36 Min	
Characteristics of Fraction	-		-	-	-	-	-	-	-	-	-	-	See Note 1
Passing 0.425 mm (No. 40)	-		-	-	-	-	-	-	-	-	-	-	
Liquid Limit	-		-	40 Max	41 Min	40 Max	41 Min	40 Max	41 Min	41 Max	41 Min	41 Min	
Plasticity Index	6 Max		NP	10 Max	10 Max	11 Min	11 Min	10 Max	10 Max	11 Min	11 Min	11 Min	
Usual Types of Significant Constituent Materials	Stone Fragments, Gravel and Sand		Fine Sand	Silty or Clayey Gravel and Sand				Silty Soils		Clayey Soils			Organic Soils

Plasticity Index of A-7-5 Subgroup Is Equal to or Less Than LL Minus 30

Plasticity Index of A-7-6 Subgroup Is Greater Than LL Minus 30

Note 1-Classification Based on Visual Inspection and not on Sieve Analysis or Atterberg Limits

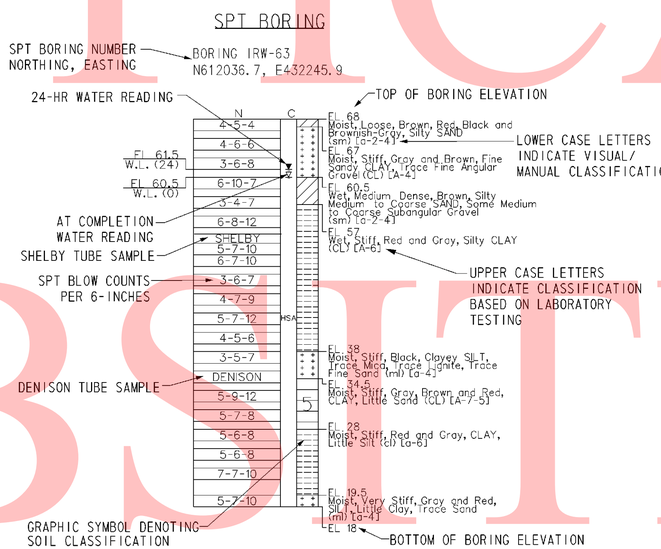

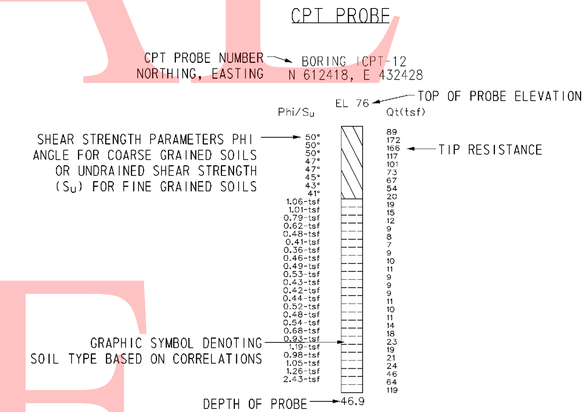

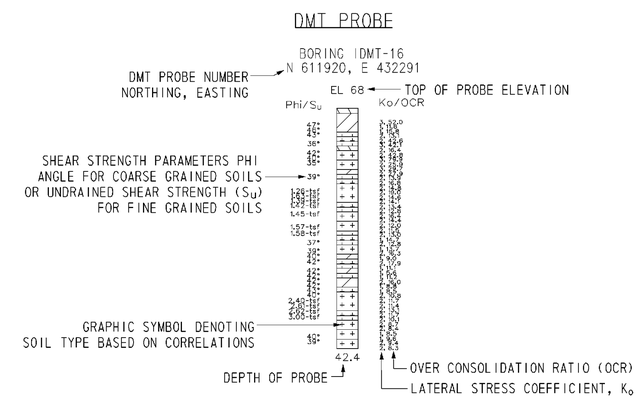

NOTES:

1. THE BORINGS AND DRIVE TEST WERE CONDUCTED IN MULTIPLE PHASES BY THE ROBERT B. BALTER COMPANY, THE WALTON CORPORATION, AND FINDLING, INC. BETWEEN AUGUST 2004 AND OCTOBER 2008.

2. THE SOIL SYMBOLS REFLECT ONLY THE MAJOR SOIL CONSTITUENT, FOR MORE COMPLETE SOIL CHARACTERISTIC REFER TO THE SOIL LOGS CONTAINED WITHIN THE FINAL FOUNDATION REPORTS DATED FEBRUARY 2009.

3. THE FIELD BORING LOGS RECORD SAMPLE SPOON RECOVERY. THE BORING LOGS AND LABORATORY TESTING RESUTS ARE AVAILABLE UPON REQUEST.

4. N = BLOWS ON A 2 INCH OD SAMPLING SPOON BY 140 LB DRIVE- WEIGHT FALLING 30 INCHES INDICATING SUCCESSIVE 6 INCH INCREMENTS OF PENETRATION. PENETRATIONS GREATER THAN 6-INCHES OR LESS THAN 6-INCHES ARE INDICATED BY WOH, WOR, OR THE DEPTH OF THE PENETRATION TO THE NEAREST INCH.

   WOH= STATIC WEIGHT OF SAMPLING SPOON DRIVE-WEIGHT ASSEMBLY, DRIVE-WEIGHT,ANVIL (WHEN AUTOMATIC HAMMER IS USED), DRILL ROD(S), AND SAMPLING SPOONS.

   WOR= STATIC WEIGHT OF DRILL ROD AND SAMPLING SPOON

5. FIELD BORINGS AND SOIL SAMPLING WERE PERFORMED IN ACCORDANCE TO AASHTO T-206, T-225 AND T-306.

6. USCS AND AASHTO DESIGNATIONS INDICATED IN UPPER CASE HAVE BEEN CONFIRMED USING LAB SOIL CLASSIFICATION TESTS. USCS AND AASHTO DESIGNATIONS INDICATED IN LOWER CASE ARE BASED ON VISUAL CLASSIFICATION TECHNIQUES ACCORDING TO ASTM D 2488 AND AASHTO M 145 BY RK&K GEOLOGIST OR ENGINEER.

7. CPT AND DMT PROBES WERE DRILLED BY IN-SITU SOIL TESTING, L.C AND CONETEC, INC.

   CPT = CONE PENETRATION TESTING
   DMT = FLAT- PLATE DILATOMETER

8. C= DEPTH OF HOLLOW STEM CONTINUOUS FLIGHT AUGER (HSA) WITH A 3-3/8 INCH ID, AND LIMIT OF MUD ROTARY (MD).

9. FOR BORING LOCATIONS, SEE CONSTRUCTION PLAN SHEETS 182 THROUGH 186.

10. FOR ADDITIONAL BORING & DRIVE TESTS SEE BORING & DRIVE TESTS SHEETS FOR OTHER STRUCTURES.

11. FOR ALL OTHER BORING & DRIVE TESTS SEE SHEETS 744 THROUGH 792.

12. FOR ADDITIONAL LABORATORY TEST RESULTS OF UNDISTURBED TUBE SAMPLES AND INDEX TESTING SEE, SHEETS 793 THROUGH 803.

13. FOR GROUNDWATER MONITORING DATA, SEE SHEET XXX OF XXX.

14. LL= LIQUID LIMIT

15. PL = PLASTIC LIMIT

16. PI = PLASTICITY INDEX

17. UC = UNCONFINED COMPRESSION

18. DS = DIRECT SHEAR

19. CONS = CONSOLIDATION

20. UU = UNCONSOLIDATED- UNDRAINED TRIAXIAL TEST

21. CIUC = CONSOLIDATED ISOTROPIC UNDRAINED COMPRESSION TRIAXIAL TEST

22. AASHTO = AMERICAN ASSOCIATION OF STATE HIGHWAY TRANSPORTATION OFFICIALS

UNOFFICAL WEBSITE COPY

DATUM EL. -60.00

NOTES:

1. FOR BORING NOTES AND INFORMATION SEE SHEET NO. 250 OF 803.
2. FOR BORING LOCATIONS SEE CONSTRUCTION PLAN SHEETS.

UNOFFICIAL WEBSITE COPY

DELAWARE DEPARTMENT OF TRANSPORTATION	ADDENDUMS / REVISIONS	SCALE 0 10 20 30 FEET	SR1 / I-95 INTERCHANGE	CONTRACT 28-090-03	BRIDGE NO.	RETAINING WALL 12 BORING & DRIVE TESTS	R12-5
				COUNTY NEW CASTLE	DESIGNED BY: JLT		SHEET NO. 594
					CHECKED BY: EMK		TOTAL SHTS. 803

3/2/2010 12:26:36 PM
M:\PROJECTS\2003\03059_DELTRNPK\SRIMALL\CADD\2809003\PLANS\B0052_R12_SR1.DGN

UNOFFICAL WEBSITE COPY

NOTES:

1. FOR BORING NOTES AND INFORMATION SEE SHEET NO. 250 OF 803.
2. FOR BORING LOCATIONS SEE CONSTRUCTION PLAN SHEETS.

R12-6

DELAWARE DEPARTMENT OF TRANSPORTATION	ADDENDUMS / REVISIONS	SCALE 0 10 20 30 FEET	SR1 / I-95 INTERCHANGE	CONTRACT 28-090-03	BRIDGE NO.	RETAINING WALL 12 BORING & DRIVE TESTS	SHEET NO. 595
				COUNTY NEW CASTLE	DESIGNED BY: JLT		TOTAL SHTS. 803
					CHECKED BY: EMK		

3/2/2010 12:28:34 PM
M:\PROJECTS\2003\03059_DELTRNPK\SRIMALL\CADD\2809003\PLANS\B0053_R12_SR1.DGN

GENERAL NOTES

SPECIFICATIONS: PROPRIETARY MSE WALLS SHALL BE DESIGNED IN ACCORDANCE WITH THE FOLLOWING:
- AASHTO LRFD BRIDGE DESIGN SPECIFICATIONS, 4TH EDITION WITH ALL CURRENT REVISIONS.
- FEDERAL HIGHWAY ADMINISTRATION PUBLICATION NO. FHWA-NHI-00-043, "MECHANICALLY STABILIZED EARTH WALLS AND REINFORCED SOIL SLOPES DESIGN AND CONSTRUCTION GUIDELINES"

CONCRETE DESIGN SHALL BE PERFORMED USING THE LOAD AND RESISTANCE FACTOR DESIGN METHOD.

CONCRETE: ALL CONCRETE FOR PARAPETS, AND ROADWAY BARRIERS SHALL BE 4500 PSI. LEVELING PAD CONCRETE SHALL BE 3500 PSI. MIX REQUIREMENTS SHALL CONFORM TO SECTION 812 OF THE DELAWARE DEPARTMENT OF TRANSPORTATION STANDARD SPECIFICATIONS.

CHAMFERS: ALL EXPOSED CORNERS OF CONCRETE SHALL BE CHAMFERED WITH ¾" x ¾" MILLED CHAMFER STRIPS, UNLESS OTHERWISE NOTED EXCEPT ON UNEXPOSED FOOTINGS OR WHERE INDICATED BY THE FOLLOWING NOTATION ON THE PLANS: "DO NOT CHAMFER".

REINFORCING STEEL: REINFORCING STEEL SHALL CONFORM TO ASTM A 615, GRADE 60. MINIMUM COVER FOR ANY BAR SHALL BE 2" UNLESS OTHERWISE NOTED.

FOR TIES AND STIRRUPS, STANDARD ACI BENDING TOLERANCES ARE MODIFIED TO PLUS (+) ZERO INCHES, MINUS (-) NORMAL ACI BENDING TOLERANCE.

ONLY GRADE 60 CAN BE USED ON THIS PROJECT.

ALL REINFORCING STEEL IN THE PARAPET SHALL BE EPOXY COATED.

ALL KEYS ARE NOMINAL SIZE.

THE MSE WALL MANUFACTURER MAY SUBSTITUTE ALTERNATE REINFORCING CONFIGURATIONS AND SUBMIT FOR APPROVAL.

EXPANSION AND CONTRACTION JOINTS: THE LOCATION OF THE EXPANSION AND CONTRACTION JOINTS IN THE BARRIER SHOWN ON THE PLANS MAY BE ADJUSTED TO ACCOMMODATE THE PANEL TYPE USED IN THE PROJECT. ANY CHANGE TO THESE JOINT LOCATIONS SHALL BE SUBMITTED TO THE ENGINEER FOR APPROVAL. EXPANSION JOINTS ARE LABELED "EJ".

LEVELING PAD: THE PROPRIETARY WALL MANUFACTURER MAY RELOCATE THE LEVELING PAD STEPS AT THEIR DISCRETION PROVIDED THAT THE MINIMUM EMBEDMENT IS MAINTAINED. ANY CHANGE TO THE STEP LOCATIONS SHALL BE SUBMITTED TO THE ENGINEER FOR APPROVAL.

ROADWAY LIMITS: THE PROPRIETARY WALL MANUFACTURER SHALL ASSURE THAT PROPOSED PROPRIETARY WALL COMPONENTS ARE POSITIONED SUCH THAT THE DESIGNATED ROADWAY LIMITS ARE NOT ENCROACHED UPON.

TRAFFIC BARRIER JOINTS: TRAFFIC BARRIER SHALL HAVE CONSTRUCTION JOINTS.

COORDINATION: CONTRACTOR AND PROPRIETARY WALL MANUFACTURER SHALL COORDINATE LOCATIONS OF INLETS AND PIPES WITH LOCATIONS OF PROPRIETARY WALL TIEBACK SYSTEM.

ARCHITECTURAL FINISH: THE MSE WALL PANELS SHALL RECEIVE AN ARCHITECTURAL FINISH.

SERVICE LIFE: ALL RETAINING WALL COMPONENTS SHALL BE DESIGNED FOR A MINIMUM SERVICE LIFE OF 75 YEARS.

WALL SYSTEM: ONLY ONE MSE WALL SYSTEM MAY BE USED ON THIS PROJECT.

ROADWAY SUPERELEVATION: FOR ROADWAY SUPERELEVATION, SEE SUPERELEVATION TABLES.

MSE WALL BACKFILL: MSE WALL BACKFILL SHALL CONSIST OF SPECIFIED BACKFILL.

PAY ITEMS: PCC MASONRY, PARAPET, CLASS A (602017)
BAR REINFORCEMENT, EPOXY COATED (604000)
MECHANICALLY STABILIZED EARTH WALLS (602772)

SOIL PROPERTIES FOR DESIGN

SOIL TYPE	UNIT WEIGHT (PCF)	ANGLE OF FRICTION (DEGREES)
SELECT FILL	125	34
COMMON BORROW	130	28
FOUNDATION SOIL	68	32

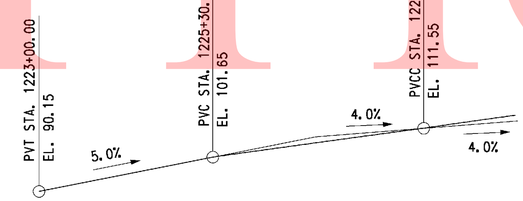

RAMP A VERTICAL CURVE DATA

NO SCALE

CURVE NO. 12

P. I. STA.	1226+68.24
Δ	27°44'07.64" LT
DC	03°05'49.45"
R	1850.00'
TANGENT	456.72'
LENGTH	895.54'

RAMP A HORIZONTAL CURVE DATA

NO SCALE

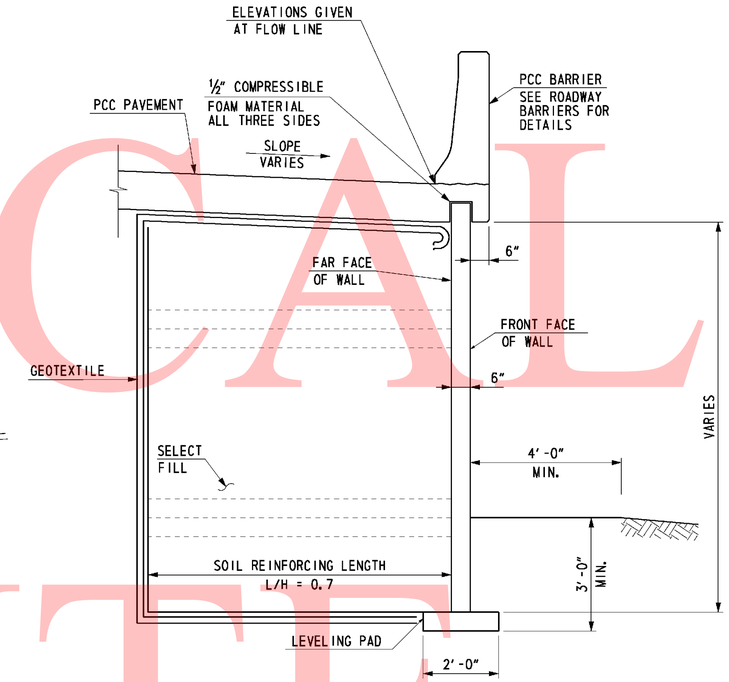

TYPICAL SECTION

(LOOKING BACK STATIONS)
SCALE: ½" = 1'-0"

FOUNDATION NOTES

THE FACTORED BEARING RESISTANCE SHALL BE VERIFIED PRIOR TO CONSTRUCTION OF THE MSE WALL.

THE INTERNAL STABILITY OF THE MSE WALL SHALL BE DESIGNED BY THE CONTRACTOR USING THE SOIL PARAMETERS PROVIDED FOR EACH STRUCTURE LOCATION. THE INTERNAL STABILITY SHOULD BE SIGNED AND SEALED BY A PROFESSIONAL ENGINEER LICENSED IN THE STATE OF DELAWARE AS INDICATED IN THE PROJECT SPECIFICATIONS. THE FACTORED APPLIED BEARING STRESS SHALL NOT EXCEED THE FACTORED BEARING RESISTANCE.

ISOLATED AREAS OF UNDERCUTTING OF EXISTING FILL MAY BE ENCOUNTERED DURING CONSTRUCTION OF THIS RETAINING WALL.

IT IS THE CONTRACTOR'S RESPONSIBILITY TO PROVIDE A RELATIVELY DRY EXCAVATION, INCLUDING DETERMINING APPROPRIATE DEWATERING METHODS DURING CONSTRUCTION IF NECESSARY.

A QUARANTINE PERIOD OF APPROXIMATELY 30-DAYS IS REQUIRED AFTER CONSTRUCTION OF THE FULL HEIGHT OF THE MSE WALL IS ACHIEVED. THE ENGINEER SHALL APPROVE THE COMPLETION OF THE QUARANTINE PERIOD PRIOR TO CONSTRUCTION OF ANY PARAPETS.

THE DESIGN UNIT WEIGHT INDICATED IN SOIL PROPERTIES TABLE HAS BEEN ADJUSTED DUE TO THE PRESENCE OF SHALLOW GROUNDWATER.

THE WALL SUPPLIER SHAL PERFORM A DETAILED SEISMIC ANALYSIS FOR BACK TO BACK MSE WALLS WITH L/H LESS THAN 1.1, IF NECESSARY, AS REQUIRED BY FHWA PUBLICATION NO. FHWA-NHI-00-043.

0 1 4
½ 2
SCALE: ½"=1'-0"

UNOFFICAL WEBSITE COPY

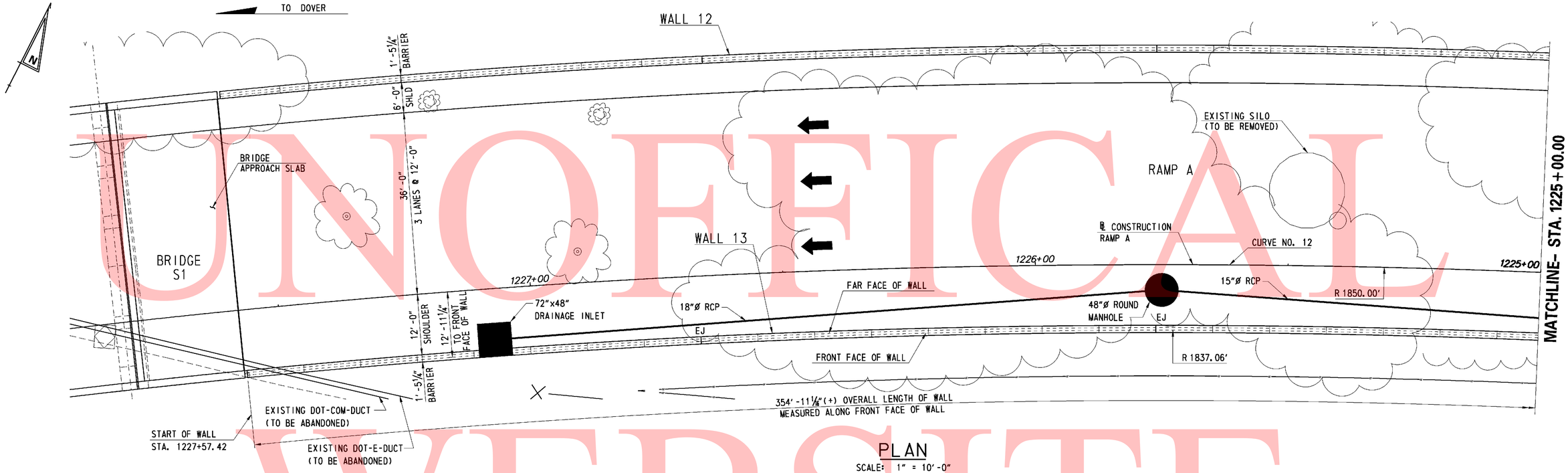

PLAN

SCALE: 1" = 10'-0"

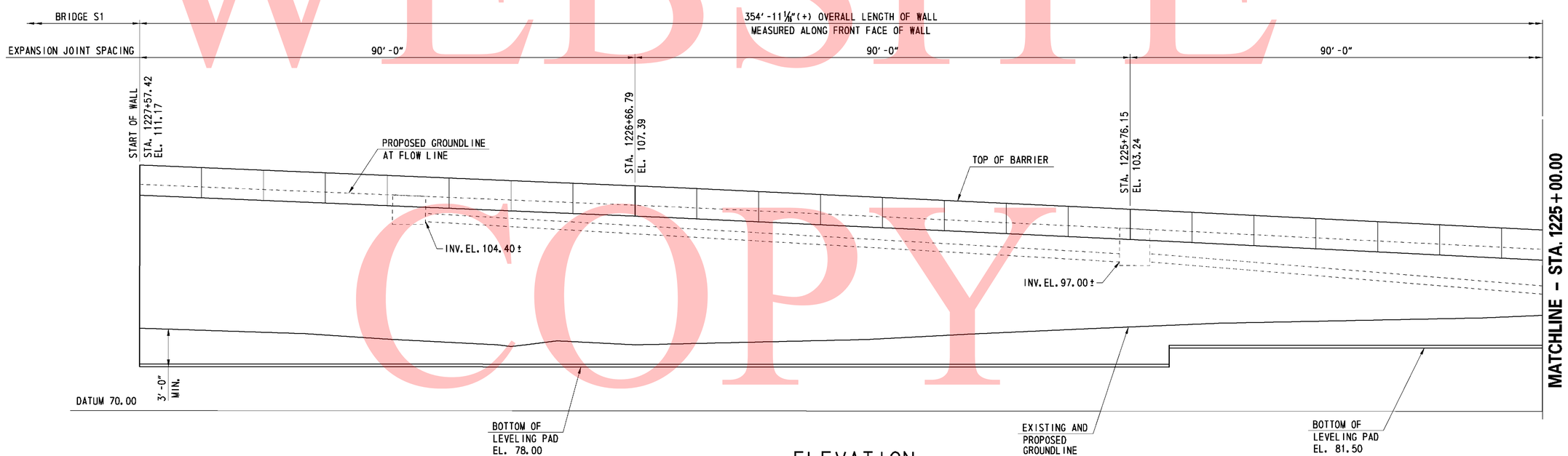

ELEVATION

SCALE: 1" = 10'-0"

0 10 20 30

SCALE: 1"= 10'-0"

UNOFFICAL WEBSITE COPY

9/8/2010 10:25:23 AM
M:\PROJECTS\2003\03059_DELTRNPK\SRIWALL\CADD\2809003\PLANS\RD27_WALL-13_SR1.DGN

DELAWARE DEPARTMENT OF TRANSPORTATION	ADDENDUMS / REVISIONS	SR1 / I-95 INTERCHANGE	CONTRACT 28-090-03	BRIDGE NO.	RETAINING WALL 13 GENERAL PLAN AND ELEVATION – 1	R13-02	
			COUNTY NEW CASTLE	DESIGNED BY: JMS		SHEET NO. 597	
				CHECKED BY: JSW		TOTAL SHTS. 803	

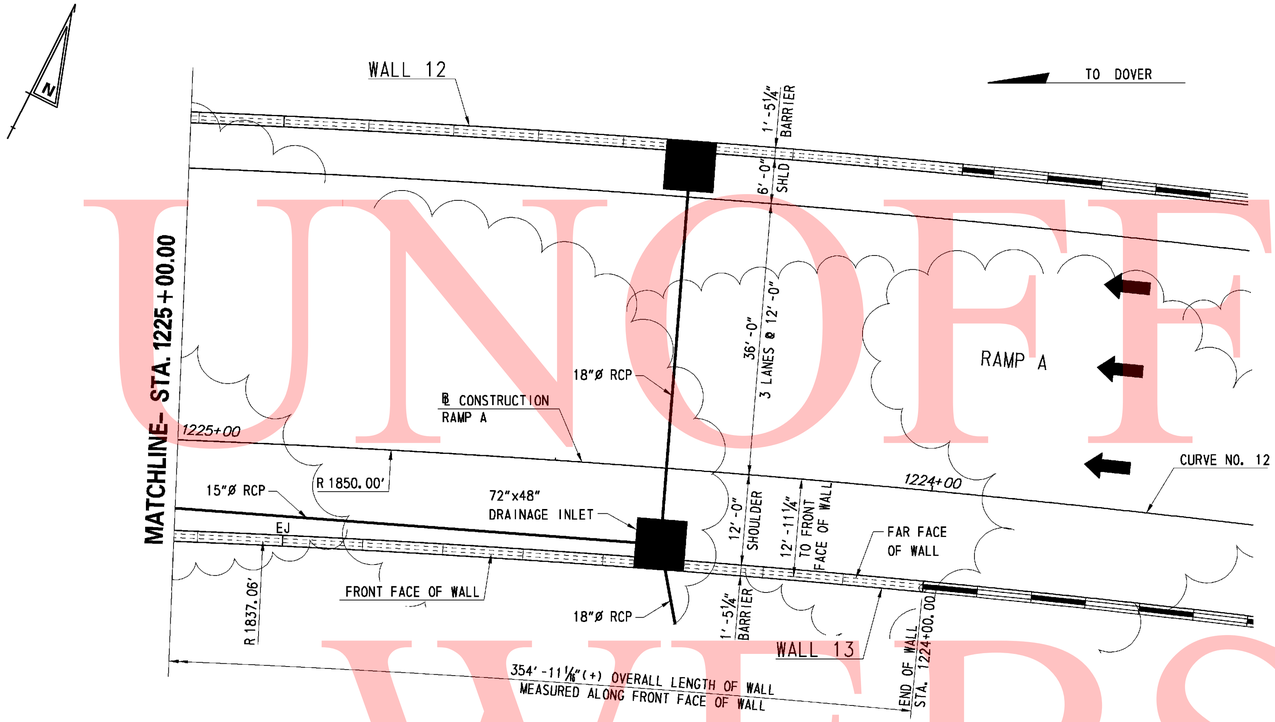

PLAN

SCALE: 1" = 10'-0"

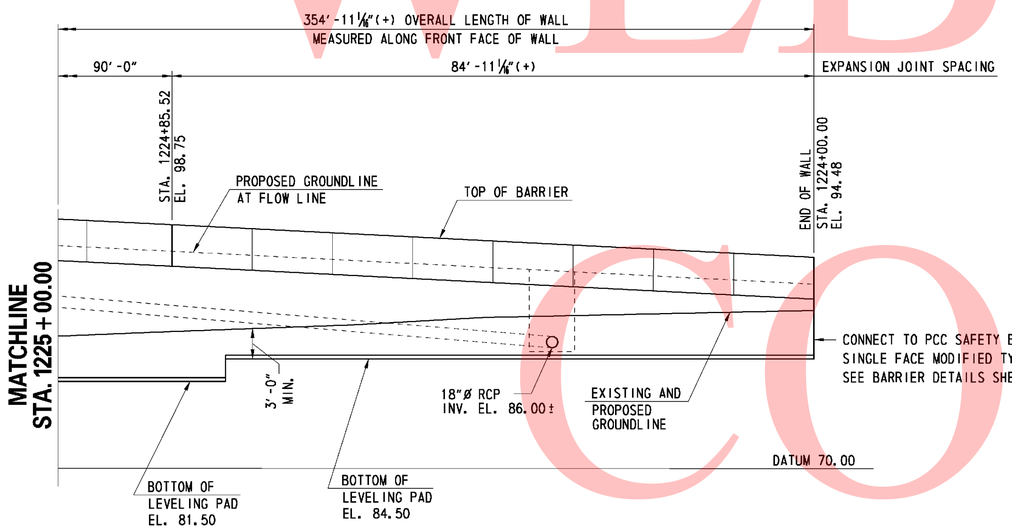

ELEVATION

SCALE: 1" = 10'-0"

0 ½ 1 2

SCALE: 1"=1'-0"

0 10 20 30

SCALE: 1"= 10'-0"

UNOFFICAL WEBSITE COPY

9/8/2010 1:33:43 PM
M:\PROJECTS\2003\03059_DELTRNPK\SR1MALL\CADD\2809003\PLANS\RD28_WALL-13_SR1.DGN

DELAWARE DEPARTMENT OF TRANSPORTATION	ADDENDUMS / REVISIONS		SR1 / I-95 INTERCHANGE	CONTRACT 28-090-03	BRIDGE NO.	RETAINING WALL 13 GENERAL PLAN AND ELEVATION - 2	R13-03 SHEET NO. 598
				COUNTY NEW CASTLE	DESIGNED BY: JMS		TOTAL SHTS. 803
					CHECKED BY: JSW		

SUMMARY OF LABORATORY TEST RESULTS OF TUBE SAMPLES

BORING NO.	TOP SAMPLE DEPTH (FT)	NATURAL MOISTURE CONTENT (%)	LL	PL	PI	PERCENT PASSING NO. 200	AASHTO	UNDISTURBED TUBE TESTING	TOTAL UNIT WEIGHT (pcf)	UNCONFINED COMPRESSION (psf)	TOTAL STRESS COHESION (psf)	TOTAL STRESS FRICTION ANGLE (deg)	EFFECTIVE STRESS COHESION (psf)	EFFECTIVE STRESS FRICTION ANGLE (deg)	UNDRAINED SHEAR (psf)	INITIAL VOID RATIO	PRECONSOLIDATION STRESS MAX (psf)	PRECONSOLIDATION STRESS MIN (psf)	C_c	C_r	pH	RESISTIVITY (ohm-cm)
IRW-71	27.0	17.5	22	17	5	67.0	A-4	UU	134.2	-	-	-	-	-	8230	-	-	-	-	-	-	-
URS-3	35.0	26.1	40	22	18	98.6	A-6(20)	CONS	132.3	-	-	-	-	-	-	0.61	5180	4800	0.20	0.07	-	-
URS-3	35.0	20.7	40	22	18	98.6	A-6	UC	133.3	4732	-	-	-	-	2366	-	-	-	-	-	-	-
URS-3	50.0	42.8	-	-	-	-	-	CONS	117.0	-	-	-	-	-	-	0.99	2400	1680	0.27	0.08	-	-
URS-3	50.0	26.6	51	24	27	97.2	A-7-6	UC	123.9	2408	-	-	-	-	1204	-	-	-	-	-	-	-

DELAWARE DEPARTMENT OF TRANSPORTATION
AASHTO CLASSIFICATION OF SOILS AND SOIL-AGGREGATE MIXTURES

General Classification	Granular Materials (35% or Less Passing 0.075 mm)							Silt-Clay Materials (More than 35% Passing 0.075 mm)					Organic Soils
Group Classification: Group	A-1		A-3	A-2				A-4	A-5	A-6	A-7		A-8
Sub-Group	A-1-a	A-1-b		A-2-4	A-2-5	A-2-6	A-2-7				A-7-5	A-7-6	
Graphic	A	B			5		7				5		
Sieve Analysis, % Passing													
2.00 mm (No. 10)	50 Max	-	-	-	-	-	-	-	-	-	-	-	See Note 1
0.425 mm (No. 40)	30 Max	50 Max	51 Min	-	-	-	-	-	-	-	-	-	
0.075 mm (No. 200)	15 Max	25 Max	10 Max	35 Max	35 Max	35 Max	35 Max	36 Min	36 Min	36 Min	36 Min	36 Min	
Characteristics of Fraction	-		-	-	-	-	-	-	-	-	-	-	See Note 1
Passing 0.425 mm (No. 40)	-		-	-	-	-	-	-	-	-	-	-	
Liquid Limit	-		-	40 Max	41 Min	40 Max	41 Min	40 Max	41 Min	41 Max	41 Min	41 Min	
Plasticity Index	6 Max		NP	10 Max	10 Max	11 Min	11 Min	10 Max	10 Max	11 Min	11 Min	11 Min	
Usual Types of Significant Constituent Materials	Stone Fragments, Gravel and Sand		Fine Sand	Silty or Clayey Gravel and Sand				Silty Soils		Clayey Soils			Organic Soils

Plasticity Index of A-7-5 Subgroup Is Equal to or Less Than LL Minus 30

Plasticity Index of A-7-6 Subgroup Is Greater Than LL Minus 30

Note 1-Classification Based on Visual Inspection and not on Sieve Analysis or Atterberg Limits

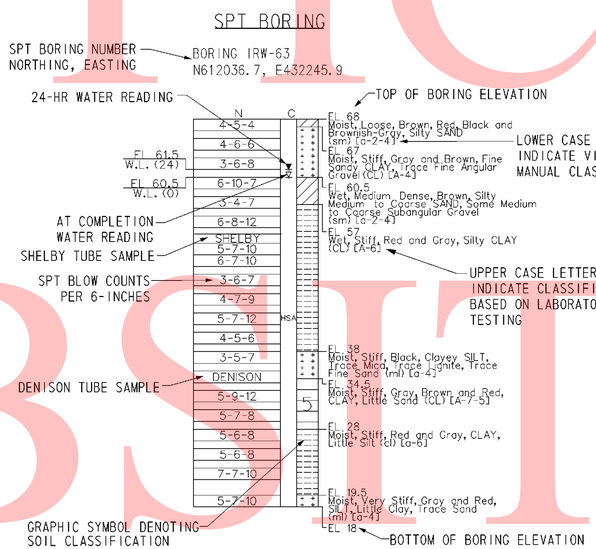

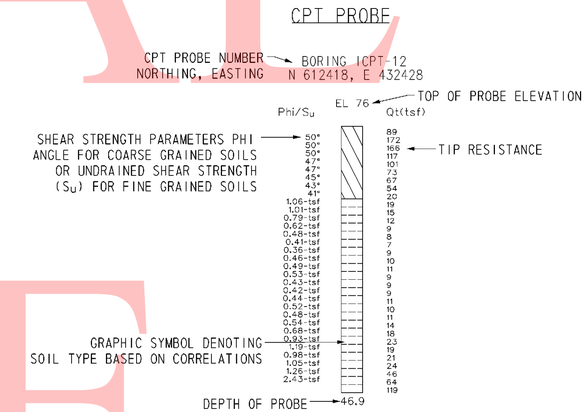

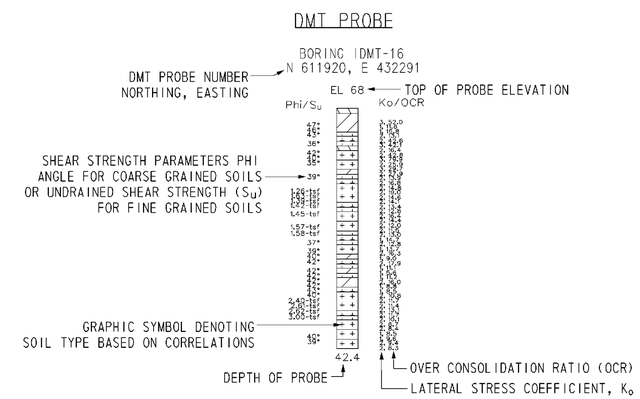

NOTES:

1. THE BORINGS AND DRIVE TEST WERE CONDUCTED IN MULTIPLE PHASES BY THE ROBERT B. BALTER COMPANY, THE WALTON CORPORATION, AND FINDLING, INC. BETWEEN AUGUST 2004 AND OCTOBER 2008.

2. THE SOIL SYMBOLS REFLECT ONLY THE MAJOR SOIL CONSTITUENT, FOR MORE COMPLETE SOIL CHARACTERISTIC REFER TO THE SOIL LOGS CONTAINED WITHIN THE FINAL FOUNDATION REPORTS DATED FEBRUARY 2009.

3. THE FIELD BORING LOGS RECORD SAMPLE SPOON RECOVERY. THE BORING LOGS AND LABORATORY TESTING RESUTS ARE AVAILABLE UPON REQUEST.

4. N = BLOWS ON A 2 INCH OD SAMPLING SPOON BY 140 LB DRIVE- WEIGHT FALLING 30 INCHES INDICATING SUCCESSIVE 6 INCH INCREMENTS OF PENETRATION. PENETRATIONS GREATER THAN 6-INCHES OR LESS THAN 6-INCHES ARE INDICATED BY WOH, WOR, OR THE DEPTH OF THE PENETRATION TO THE NEAREST INCH.

   WOH= STATIC WEIGHT OF SAMPLING SPOON DRIVE-WEIGHT ASSEMBLY, DRIVE-WEIGHT,ANVIL (WHEN AUTOMATIC HAMMER IS USED), DRILL ROD(S), AND SAMPLING SPOONS.

   WOR= STATIC WEIGHT OF DRILL ROD AND SAMPLING SPOON

5. FIELD BORINGS AND SOIL SAMPLING WERE PERFORMED IN ACCORDANCE TO AASHTO T-206, T-225 AND T-306.

6. USCS AND AASHTO DESIGNATIONS INDICATED IN UPPER CASE HAVE BEEN CONFIRMED USING LAB SOIL CLASSIFICATION TESTS. USCS AND AASHTO DESIGNATIONS INDICATED IN LOWER CASE ARE BASED ON VISUAL CLASSIFICATION TECHNIQUES ACCORDING TO ASTM D 2488 AND AASHTO M 145 BY RK&K GEOLOGIST OR ENGINEER.

7. CPT AND DMT PROBES WERE DRILLED BY IN-SITU SOIL TESTING, L.C AND CONETEC, INC.

   CPT = CONE PENETRATION TESTING
   DMT = FLAT- PLATE DILATOMETER

8. C= DEPTH OF HOLLOW STEM CONTINUOUS FLIGHT AUGER (HSA) WITH A 3-3/8 INCH ID, AND LIMIT OF MUD ROTARY (MD).

9. FOR BORING LOCATIONS, SEE CONSTRUCTION PLAN SHEETS 182 THROUGH 186.

10. FOR ADDITIONAL BORING & DRIVE TESTS SEE BORING & DRIVE TESTS SHEETS FOR OTHER STRUCTURES.

11. FOR ALL OTHER BORING & DRIVE TESTS SEE SHEETS 744 THROUGH 792.

12. FOR ADDITIONAL LABORATORY TEST RESULTS OF UNDISTURBED TUBE SAMPLES AND INDEX TESTING SEE, SHEETS 793 THROUGH 803.

13. FOR GROUNDWATER MONITORING DATA, SEE SHEET XXX OF XXX.

14. LL= LIQUID LIMIT

15. PL = PLASTIC LIMIT

16. PI = PLASTICITY INDEX

17. UC = UNCONFINED COMPRESSION

18. DS = DIRECT SHEAR

19. CONS = CONSOLIDATION

20. UU = UNCONSOLIDATED- UNDRAINED TRIAXIAL TEST

21. CIUC = CONSOLIDATED ISOTROPIC UNDRAINED COMPRESSION TRIAXIAL TEST

22. AASHTO = AMERICAN ASSOCIATION OF STATE HIGHWAY TRANSPORTATION OFFICIALS

UNOFFICIAL WEBSITE COPY

DATUM EL. -60.00

NOTES:

1. FOR BORING NOTES AND INFORMATION SEE SHEET NO. 599 OF 803.
2. FOR BORING LOCATIONS SEE CONSTRUCTION PLAN SHEETS.

UNOFFICIAL WEBSITE COPY

DELAWARE DEPARTMENT OF TRANSPORTATION	ADDENDUMS / REVISIONS	SCALE 0 10 20 30 FEET	SR1 / I-95 INTERCHANGE	CONTRACT 28-090-03	BRIDGE NO.	RETAINING WALL 13 BORING & DRIVE TESTS	R13-5 SHEET NO. 600
				COUNTY NEW CASTLE	DESIGNED BY: JLT		TOTAL SHTS. 803
					CHECKED BY: EMK		

8/6/2010 1:26:26 PM
M:\PROJECTS\2003\03059_DELTRNPK\SRIMALL\CADD\2809003\PLANS\B0055_R13_SR1.DGN

DATUM EL. -60.00

NOTES:

1. FOR BORING NOTES AND INFORMATION SEE SHEET NO. 599 OF 803.
2. FOR BORING LOCATIONS SEE CONSTRUCTION PLAN SHEETS.

UNOFFICAL WEBSITE COPY

DELAWARE DEPARTMENT OF TRANSPORTATION	ADDENDUMS / REVISIONS	SCALE 0 10 20 30 FEET	SR1 / I-95 INTERCHANGE	CONTRACT 28-090-03	BRIDGE NO.	RETAINING WALL 13 BORING & DRIVE TESTS	R13-6
				COUNTY NEW CASTLE	DESIGNED BY: JLT		SHEET NO. 601
					CHECKED BY: EMK		TOTAL SHTS. 803

8/6/2010 1:29:39 PM
M:\PROJECTS\2003\03059_DELTRNPK\SRIMALL\CADD\2809003\PLANS\B0056_R13_SR1.DGN

GENERAL NOTES

SPECIFICATIONS: PROPRIETARY MSE WALLS SHALL BE DESIGNED IN ACCORDANCE WITH THE FOLLOWING:
- AASHTO LRFD BRIDGE DESIGN SPECIFICATIONS, 4TH EDITION WITH ALL CURRENT REVISIONS.
- FEDERAL HIGHWAY ADMINISTRATION PUBLICATION NO. FHWA-NHI-00-043, "MECHANICALLY STABILIZED EARTH WALLS AND REINFORCED SOIL SLOPES DESIGN AND CONSTRUCTION GUIDELINES"

CONCRETE DESIGN SHALL BE PERFORMED USING THE LOAD AND RESISTANCE FACTOR DESIGN METHOD.

CONCRETE: ALL CONCRETE FOR PARAPETS AND ROADWAY BARRIERS SHALL BE 4500 PSI. LEVELING PAD CONCRETE SHALL BE 3500 PSI. MIX REQUIREMENTS SHALL CONFORM TO SECTION 812 OF THE DELAWARE DEPARTMENT OF TRANSPORTATION STANDARD SPECIFICATIONS.

CHAMFERS: ALL EXPOSED CORNERS OF CONCRETE SHALL BE CHAMFERED WITH ¾" x ¾" MILLED CHAMFER STRIPS, UNLESS OTHERWISE NOTED EXCEPT ON UNEXPOSED FOOTINGS OR WHERE INDICATED BY THE FOLLOWING NOTATION ON THE PLANS: "DO NOT CHAMFER".

REINFORCING STEEL: REINFORCING STEEL SHALL CONFORM TO ASTM A 615, GRADE 60. MINIMUM COVER FOR ANY BAR SHALL BE 2" UNLESS OTHERWISE NOTED.

FOR TIES AND STIRRUPS, STANDARD ACI BENDING TOLERANCES ARE MODIFIED TO PLUS (+) ZERO INCHES, MINUS (-) NORMAL ACI BENDING TOLERANCE.

ONLY GRADE 60 CAN BE USED ON THIS PROJECT.

ALL REINFORCING STEEL IN THE PARAPET SHALL BE EPOXY COATED.

ALL KEYS ARE NOMINAL SIZE.

THE MSE WALL MANUFACTURER MAY SUBSTITUTE ALTERNATE REINFORCING CONFIGURATIONS AND SUBMIT FOR APPROVAL.

EXPANSION AND CONTRACTION JOINTS: THE LOCATION OF THE EXPANSION AND CONTRACTION JOINTS IN THE BARRIER SHOWN ON THE PLANS MAY BE ADJUSTED TO ACCOMMODATE THE PANEL TYPE USED IN THE PROJECT. ANY CHANGE TO THESE JOINT LOCATIONS SHALL BE SUBMITTED TO THE ENGINEER FOR APPROVAL. EXPANSION JOINTS ARE LABELED "EJ".

LEVELING PAD: THE PROPRIETARY WALL MANUFACTURER MAY RELOCATE THE LEVELING PAD STEPS AT THEIR DISCRETION PROVIDED THAT THE MINIMUM EMBEDMENT IS MAINTAINED. ANY CHANGE TO THE STEP LOCATIONS SHALL BE SUBMITTED TO THE ENGINEER FOR APPROVAL.

ROADWAY LIMITS: THE PROPRIETARY WALL MANUFACTURER SHALL ASSURE THAT PROPOSED PROPRIETARY WALL COMPONENTS ARE POSITIONED SUCH THAT THE DESIGNATED ROADWAY LIMITS ARE NOT ENCROACHED UPON.

TRAFFIC BARRIER JOINTS: TRAFFIC BARRIER SHALL HAVE CONSTRUCTION JOINTS.

COORDINATION: CONTRACTOR AND PROPRIETARY WALL MANUFACTURER SHALL COORDINATE LOCATIONS OF INLETS AND PIPES WITH LOCATIONS OF PROPRIETARY WALL TIEBACK SYSTEM.

ARCHITECTURAL FINISH: THE MSE WALL PANELS SHALL RECEIVE AN ARCHITECTURAL FINISH.

SERVICE LIFE: ALL RETAINING WALL COMPONENTS SHALL BE DESIGNED FOR A MINIMUM SERVICE LIFE OF 75 YEARS.

WALL SYSTEM: ONLY ONE MSE WALL SYSTEM MAY BE USED ON THIS PROJECT.

ROADWAY SUPERELEVATION: FOR ROADWAY SUPERELEVATION, SEE SUPERELEVATION TABLES.

MSE WALL BACKFILL: MSE WALL BACKFILL SHALL CONSIST OF SPECIFIED BACKFILL.

PAY ITEMS: PCC MASONRY, PARAPET, CLASS A (602017)
BAR REINFORCEMENT, EPOXY COATED (604000)
MECHANICALLY STABILIZED EARTH WALLS (602772)

SOIL PROPERTIES FOR DESIGN

SOIL TYPE	UNIT WEIGHT (PCF)	ANGLE OF FRICTION (DEGREES)
SELECT FILL	125	34
FOUNDATION SOIL	68	24

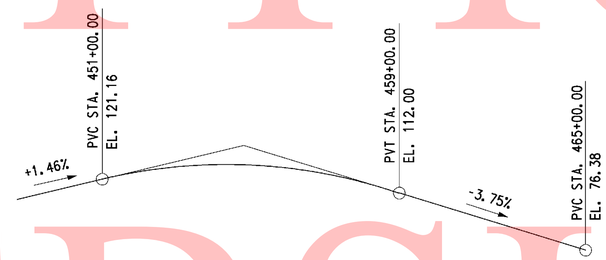

RAMP B
VERTICAL CURVE DATA
NO SCALE

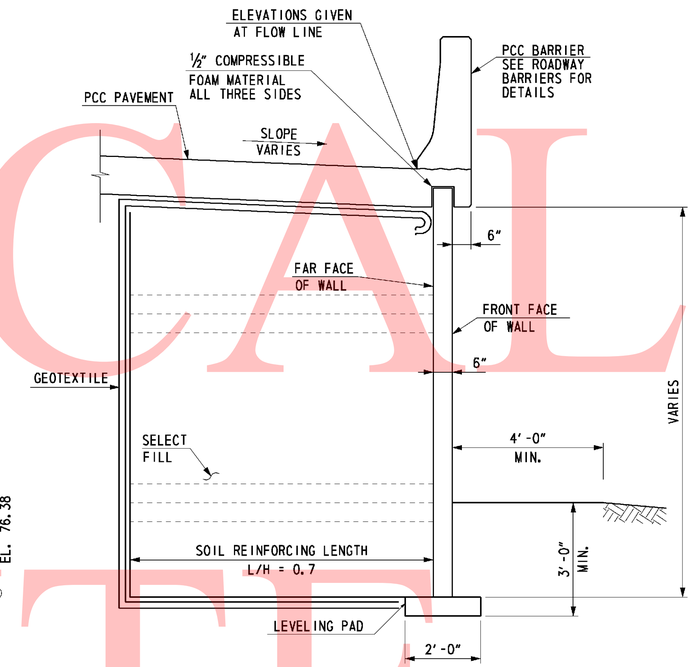

TYPICAL SECTION
(LOOKING AHEAD STATIONS)
SCALE: ½" = 1'-0"

FOUNDATION NOTES

THE FACTORED BEARING RESISTANCE SHALL BE VERIFIED PRIOR TO CONSTRUCTION OF THE MSE WALL.

THE INTERNAL STABILITY OF THE MSE WALL SHALL BE DESIGNED BY THE CONTRACTOR USING THE SOIL PARAMETERS PROVIDED FOR EACH STRUCTURE LOCATION. THE INTERNAL STABILITY SHOULD BE SIGNED AND SEALED BY A PROFESSIONAL ENGINEER LICENSED IN THE STATE OF DELAWARE AS INDICATED IN THE PROJECT SPECIFICATIONS. THE FACTORED APPLIED BEARING STRESS SHALL NOT EXCEED THE FACTORED BEARING RESISTANCE.

GROUNDWATER MAY BE ENCOUNTERED DURING EXCAVATION TO THE LEVELING PAD AND DURING CONSTRUCTION OF THIS RETAINING WALL. IT IS THE CONTRACTOR'S RESPONSIBILITY TO PROVIDE A RELATIVELY DRY EXCAVATION, INCLUDING DETERMINING APPROPRIATE DEWATERING METHODS DURING CONSTRUCTION.

A QUARANTINE PERIOD OF APPROXIMATELY 30-DAYS IS REQUIRED AFTER CONSTRUCTION OF THE FULL HEIGHT OF THE MSE WALL IS ACHIEVED. THE ENGINEER SHALL APPROVE THE COMPLETION OF THE QUARANTINE PERIOD PRIOR TO CONSTRUCTION OF ANY PARAPETS.

THE DESIGN UNIT WEIGHT INDICATED IN SOIL PROPERTIES TABLE HAS BEEN ADJUSTED DUE TO THE PRESENCE OF SHALLOW GROUNDWATER.

THE WALL SUPPLIER SHAL PERFORM A DETAILED SEISMIC ANALYSIS FOR BACK TO BACK MSE WALLS WITH L/H LESS THAN 1.1, IF NECESSARY, AS REQUIRED BY FHWA PUBLICATION NO. FHWA-NHI-00-043.

0 1 4
½ 2
SCALE: ½"=1'-0"

UNOFFICAL WEBSITE COPY

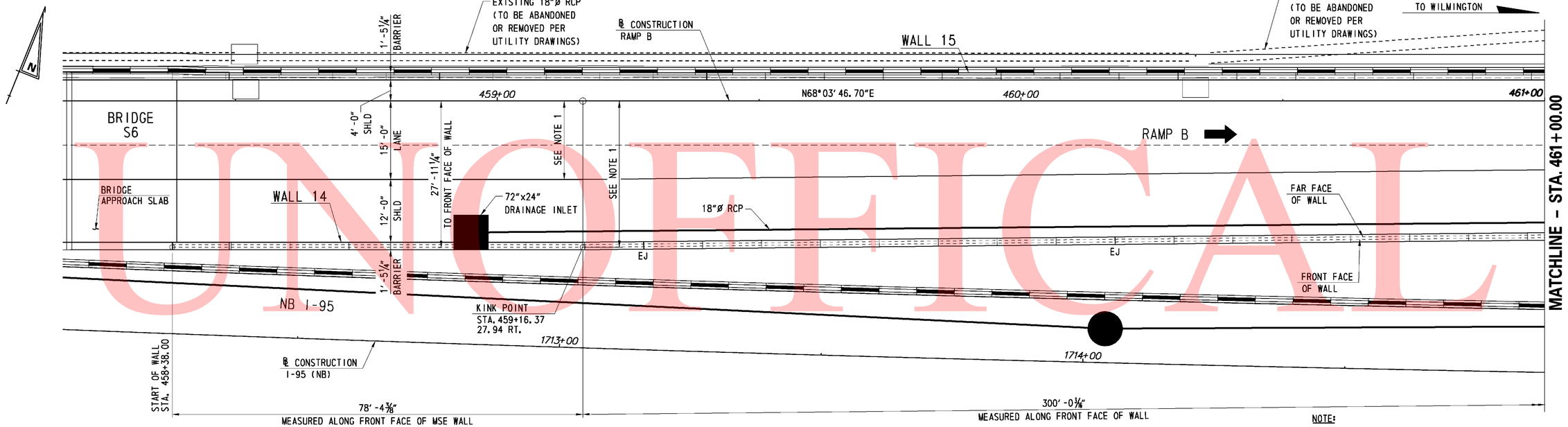

PLAN

SCALE: 1"=10'-0"

NOTE:

1. LANE VARIES FROM 15'-0" TO 12'-0" FROM STATION 459+16.37 TO 462+16.37. MEASUREMENT TO FRONT FACE OF WALL VARIES FROM 27'-11¼" TO 24'-11¼" FROM STATION 459+16.37 TO 462+16.37.

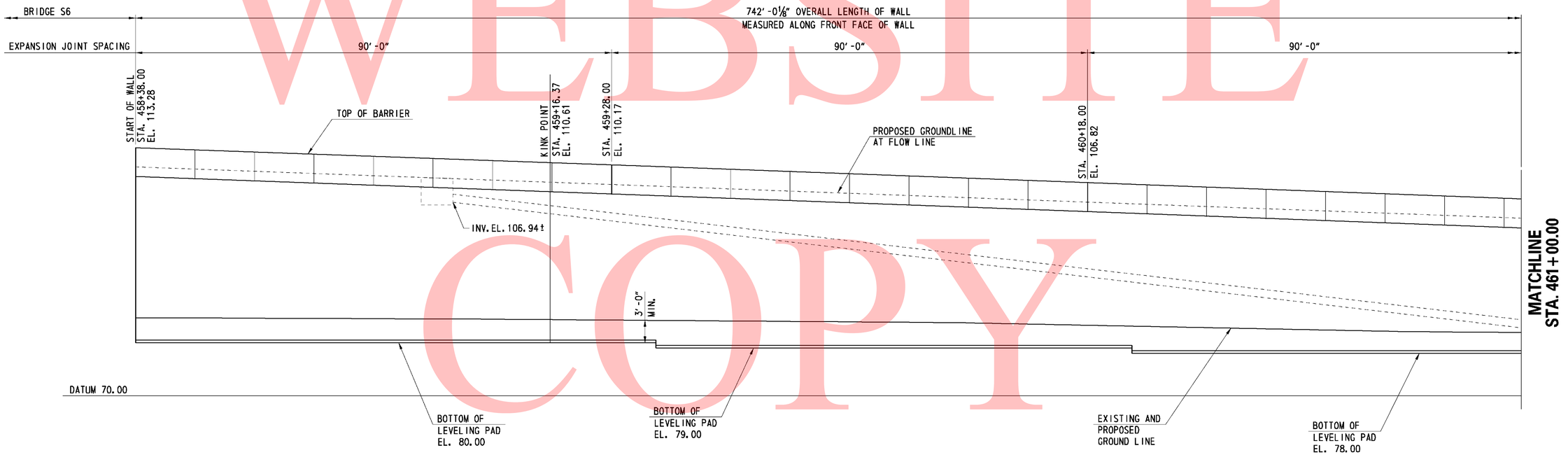

ELEVATION

SCALE: 1"=10'-0"

603 10 20 30

SCALE: 1"= 10'-0"

UNOFFICAL WEBSITE COPY

9/9/2010 7:38:11 AM
M:\PROJECTS\2003\03059_DELTRNPK\SRIMALL\CADD\2809003\PLANS\RD30_WALL-14_SR1.DGN

DELAWARE DEPARTMENT OF TRANSPORTATION	ADDENDUMS / REVISIONS	SR1 / I-95 INTERCHANGE	CONTRACT 28-090-03	BRIDGE NO.	RETAINING WALL 14 GENERAL PLAN AND ELEVATION - 1	R14-02 SHEET NO. 603
			COUNTY NEW CASTLE	DESIGNED BY: JMS		TOTAL SHTS. 803
				CHECKED BY: JSW		

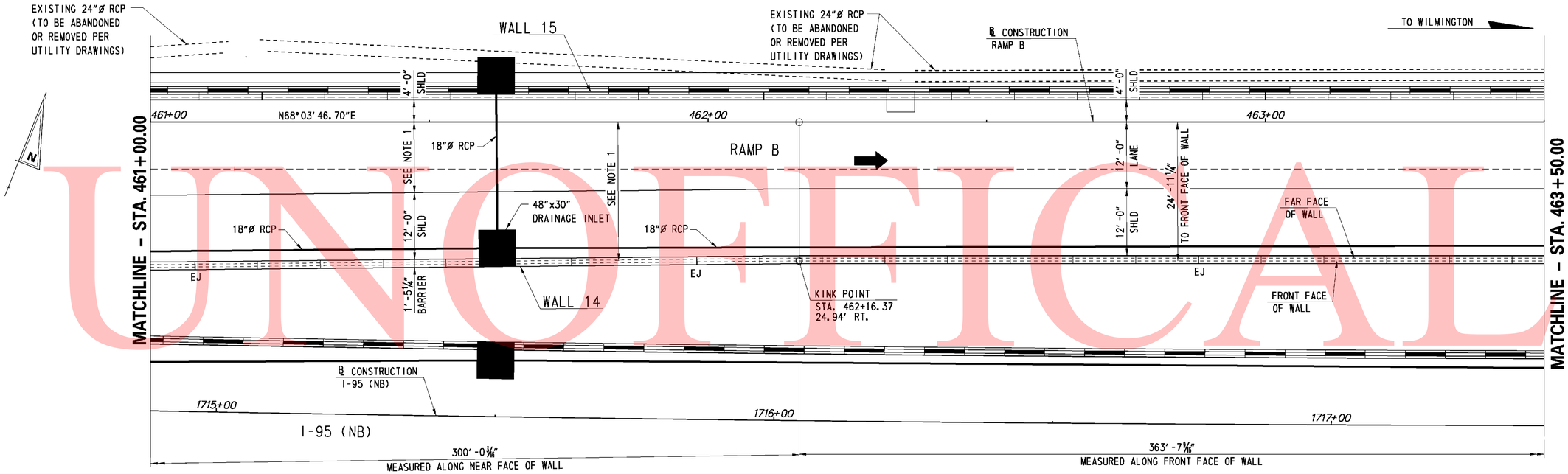

PLAN

SCALE: 1" = 10'-0"

NOTE:

1. LANE VARIES FROM 15'-0" TO 12'-0" FROM STATION 459+16.37 TO 462+16.37. MEASUREMENT TO FRONT FACE OF WALL VARIES FROM 27'-11¼" TO 24'-11¼" FROM STATION 459+16.37 TO 462+16.37.

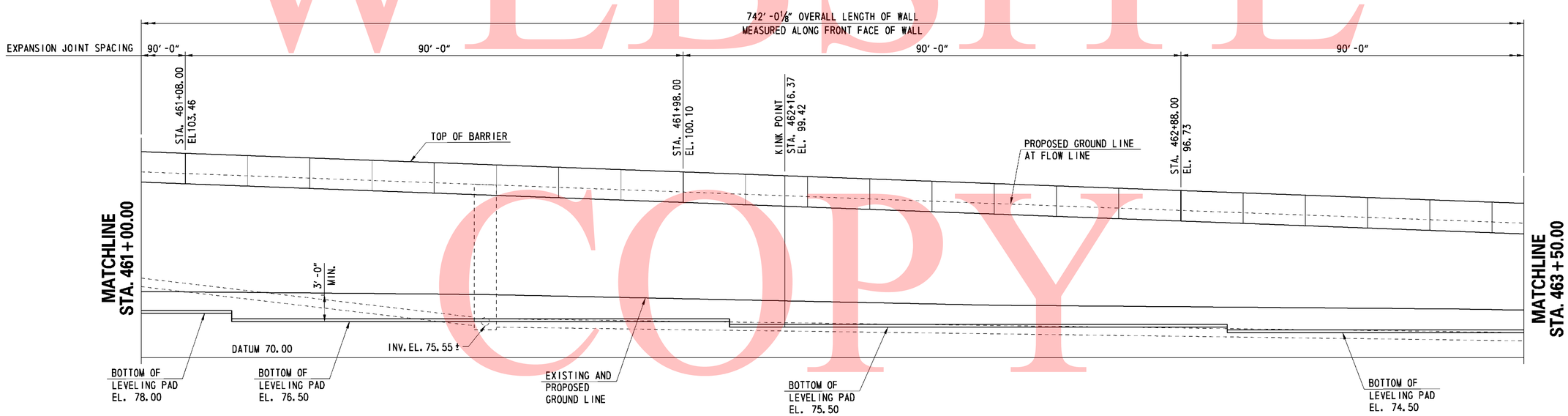

ELEVATION

SCALE: 1" = 10'-0"

0 10 20 30

SCALE: 1"= 10'-0"

UNOFFICAL WEBSITE COPY

DELAWARE DEPARTMENT OF TRANSPORTATION	ADDENDUMS / REVISIONS	SR1 / I-95 INTERCHANGE	CONTRACT 28-090-03	BRIDGE NO.	RETAINING WALL 14 GENERAL PLAN AND ELEVATION - 2	R14-03 SHEET NO. 604
			COUNTY NEW CASTLE	DESIGNED BY: JMS		TOTAL SHTS. 803
				CHECKED BY: JSW		

11/11/2010 10:43:02 AM
M:\PROJECTS\2003\03059_DELTRNPK\SR1MALL\CADD\2809003\PLANS\RD31_WALL-14_SR1.DGN

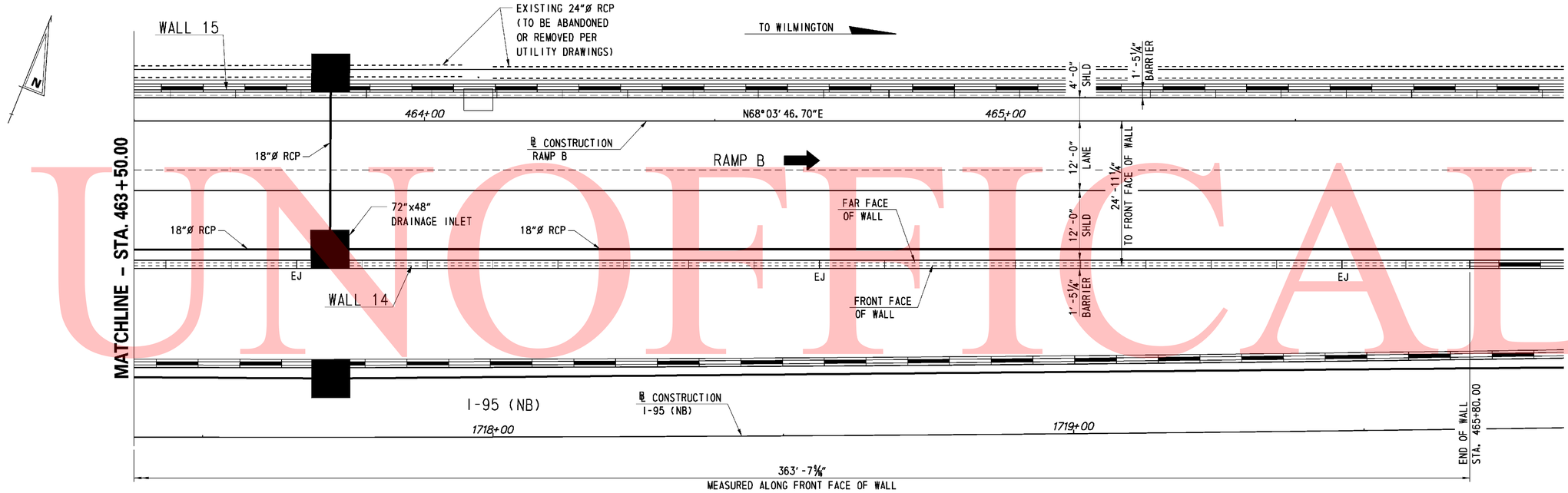

PLAN

SCALE: 1" = 10'-0"

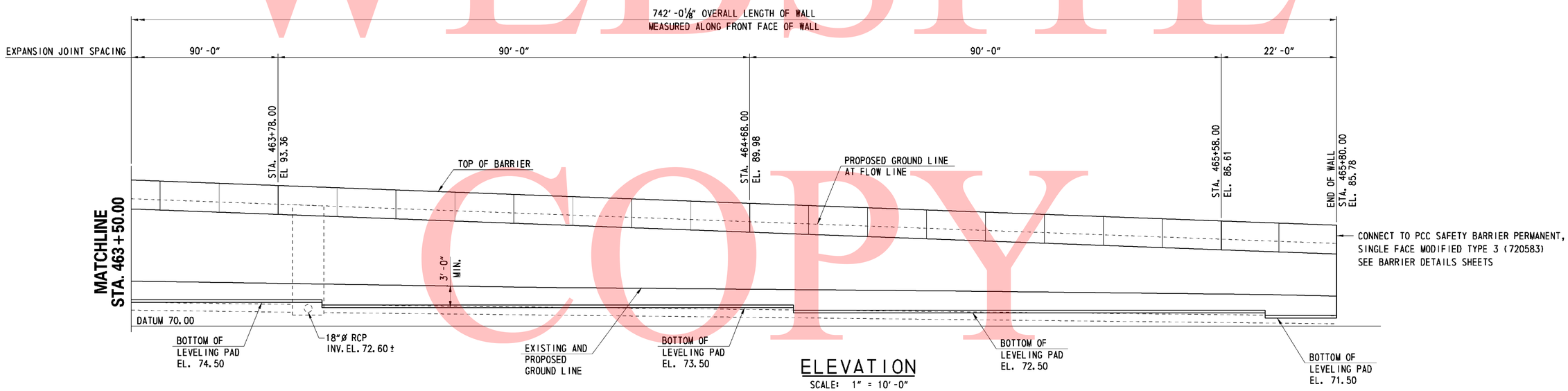

ELEVATION

SCALE: 1" = 10'-0"

0 10 20 30

SCALE: 1"= 10'-0"

UNOFFICAL WEBSITE COPY

9/8/2010 9:56:28 AM
M:\PROJECTS\2003\03059_DELTRNPK\SR1WALL\CADD\2809003\PLANS\RD32_WALL-14_SR1.DGN

DELAWARE DEPARTMENT OF TRANSPORTATION	ADDENDUMS / REVISIONS		SR1 / I-95 INTERCHANGE	CONTRACT 28-090-03	BRIDGE NO.	RETAINING WALL 14 GENERAL PLAN AND ELEVATION – 3	R14-04	
				COUNTY NEW CASTLE	DESIGNED BY: JMS		SHEET NO. 605	
					CHECKED BY: JSW		TOTAL SHTS. 803	

SUMMARY OF LABORATORY TEST RESULTS OF TUBE SAMPLES

BORING NO.	TOP SAMPLE DEPTH (FT)	NATURAL MOISTURE CONTENT (%)	LL	PL	PI	PERCENT PASSING NO. 200	AASHTO	UNDISTURBED TUBE TESTING	TOTAL UNIT WEIGHT (pcf)	UNCONFINED COMPRESSION (psf)	TOTAL STRESS COHESION (psf)	TOTAL STRESS FRICTION ANGLE (deg)	EFFECTIVE STRESS COHESION (psf)	EFFECTIVE STRESS FRICTION ANGLE (deg)	UNDRAINED SHEAR (psf)	INITIAL VOID RATIO	PRECONSOLIDATION STRESS MAX (psf)	PRECONSOLIDATION STRESS MIN (psf)	C_c	C_r	pH	RESISTIVITY (ohm-cm)
IRW-90	41.0	24.9	49	25	24	86.2	A-7-6(22)	DS	-	-	-	-	214	19	-	-	-	-	-	-	-	-
ML-90	21.0	16.9	31	16	15	86.0	A-6	DS	-	-	595	26.6	-	-	-	-	-	-	-	-	-	-
ML-90	21.0	-	-	-	-	-	-	UC	150.0	5050	-	-	-	-	2525	-	-	-	-	-	-	-

DELAWARE DEPARTMENT OF TRANSPORTATION
AASHTO CLASSIFICATION OF SOILS AND SOIL-AGGREGATE MIXTURES

General Classification	Granular Materials (35% or Less Passing 0.075 mm)							Silt-Clay Materials (More than 35% Passing 0.075 mm)					Organic Soils
Group Classification: Group	A-1		A-3	A-2				A-4	A-5	A-6	A-7		A-8
Sub-Group	A-1-a	A-1-b		A-2-4	A-2-5	A-2-6	A-2-7				A-7-5	A-7-6	
Graphic	A	B			5		7				5		
Sieve Analysis, % Passing													
2.00 mm (No. 10)	50 Max	-	-	-	-	-	-	-	-	-	-	-	See Note 1
0.425 mm (No. 40)	30 Max	50 Max	51 Min	-	-	-	-	-	-	-	-	-	
0.075 mm (No. 200)	15 Max	25 Max	10 Max	35 Max	35 Max	35 Max	35 Max	36 Min	36 Min	36 Min	36 Min	36 Min	
Characteristics of Fraction													
Passing 0.425 mm (No. 40)	-		-	-	-	-	-	-	-	-	-	-	See Note 1
Liquid Limit	-		-	40 Max	41 Min	40 Max	41 Min	40 Max	41 Min	41 Max	41 Min	41 Min	
Plasticity Index	6 Max		NP	10 Max	10 Max	11 Min	11 Min	10 Max	10 Max	11 Min	11 Min	11 Min	
Usual Types of Significant Constituent Materials	Stone Fragments, Gravel and Sand		Fine Sand	Silty or Clayey Gravel and Sand				Silty Soils		Clayey Soils			Organic Soils

Plasticity Index of A-7-5 Subgroup Is Equal to or Less Than LL Minus 30

Plasticity Index of A-7-6 Subgroup Is Greater Than LL Minus 30

Note 1-Classification Based on Visual Inspection and not on Sieve Analysis or Atterberg Limits

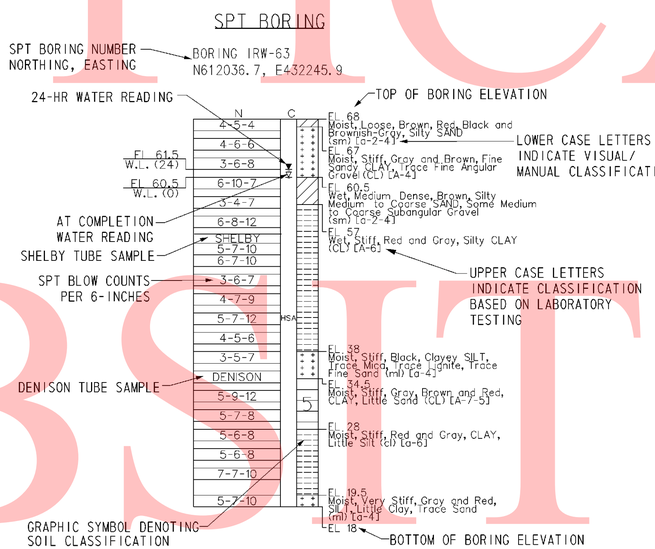

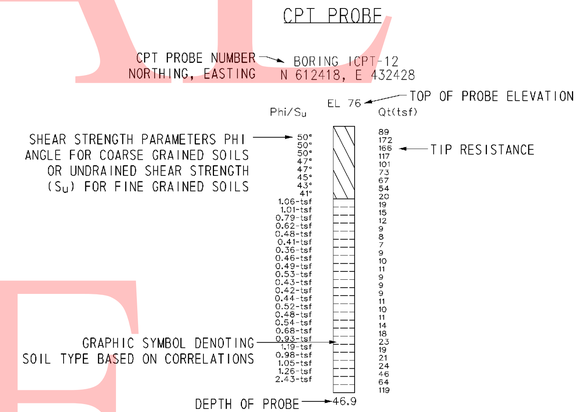

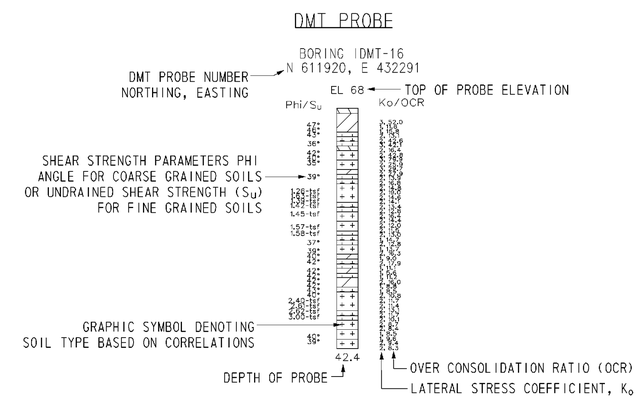

NOTES:

1. THE BORINGS AND DRIVE TEST WERE CONDUCTED IN MULTIPLE PHASES BY THE ROBERT B. BALTER COMPANY, THE WALTON CORPORATION, AND FINDLING, INC. BETWEEN AUGUST 2004 AND OCTOBER 2008.

2. THE SOIL SYMBOLS REFLECT ONLY THE MAJOR SOIL CONSTITUENT, FOR MORE COMPLETE SOIL CHARACTERISTIC REFER TO THE SOIL LOGS CONTAINED WITHIN THE FINAL FOUNDATION REPORTS DATED FEBRUARY 2009.

3. THE FIELD BORING LOGS RECORD SAMPLE SPOON RECOVERY. THE BORING LOGS AND LABORATORY TESTING RESUTS ARE AVAILABLE UPON REQUEST.

4. N = BLOWS ON A 2 INCH OD SAMPLING SPOON BY 140 LB DRIVE- WEIGHT FALLING 30 INCHES INDICATING SUCCESSIVE 6 INCH INCREMENTS OF PENETRATION. PENETRATIONS GREATER THAN 6-INCHES OR LESS THAN 6-INCHES ARE INDICATED BY WOH, WOR, OR THE DEPTH OF THE PENETRATION TO THE NEAREST INCH.

   WOH= STATIC WEIGHT OF SAMPLING SPOON DRIVE-WEIGHT ASSEMBLY, DRIVE-WEIGHT,ANVIL (WHEN AUTOMATIC HAMMER IS USED), DRILL ROD(S), AND SAMPLING SPOONS.

   WOR= STATIC WEIGHT OF DRILL ROD AND SAMPLING SPOON

5. FIELD BORINGS AND SOIL SAMPLING WERE PERFORMED IN ACCORDANCE TO AASHTO T-206, T-225 AND T-306.

6. USCS AND AASHTO DESIGNATIONS INDICATED IN UPPER CASE HAVE BEEN CONFIRMED USING LAB SOIL CLASSIFICATION TESTS. USCS AND AASHTO DESIGNATIONS INDICATED IN LOWER CASE ARE BASED ON VISUAL CLASSIFICATION TECHNIQUES ACCORDING TO ASTM D 2488 AND AASHTO M 145 BY RK&K GEOLOGIST OR ENGINEER.

7. CPT AND DMT PROBES WERE DRILLED BY IN-SITU SOIL TESTING, L.C AND CONETEC, INC.

   CPT = CONE PENETRATION TESTING
   DMT = FLAT- PLATE DILATOMETER

8. C= DEPTH OF HOLLOW STEM CONTINUOUS FLIGHT AUGER (HSA) WITH A 3-3/8 INCH ID, AND LIMIT OF MUD ROTARY (MD).

9. FOR BORING LOCATIONS, SEE CONSTRUCTION PLAN SHEETS 182 THROUGH 186.

10. FOR ADDITIONAL BORING & DRIVE TESTS SEE BORING & DRIVE TESTS SHEETS FOR OTHER STRUCTURES.

11. FOR ALL OTHER BORING & DRIVE TESTS SEE SHEETS 744 THROUGH 792.

12. FOR ADDITIONAL LABORATORY TEST RESULTS OF UNDISTURBED TUBE SAMPLES AND INDEX TESTING SEE, SHEETS 793 THROUGH 803.

13. FOR GROUNDWATER MONITORING DATA, SEE SHEET XXX OF XXX.

14. LL= LIQUID LIMIT

15. PL = PLASTIC LIMIT

16. PI = PLASTICITY INDEX

17. UC = UNCONFINED COMPRESSION

18. DS = DIRECT SHEAR

19. CONS = CONSOLIDATION

20. UU = UNCONSOLIDATED- UNDRAINED TRIAXIAL TEST

21. CIUC = CONSOLIDATED ISOTROPIC UNDRAINED COMPRESSION TRIAXIAL TEST

22. AASHTO = AMERICAN ASSOCIATION OF STATE HIGHWAY TRANSPORTATION OFFICIALS

UNOFFICAL WEBSITE COPY

DATUM EL. -60.00

NOTES:

1. FOR BORING NOTES AND INFORMATION SEE SHEET NO. 606 OF 803.
2. FOR BORING LOCATIONS SEE CONSTRUCTION PLAN SHEETS.

UNOFFICAL WEBSITE COPY

3/2/2010 12:44:14 PM
M:\PROJECTS\2003\03059_DELTRNPK\SRMALL\CADD\2809003\PLANS\B0058_R14_SR1.DGN

DELAWARE DEPARTMENT OF TRANSPORTATION	ADDENDUMS / REVISIONS	SCALE 0 10 20 30 FEET	SR1 / I-95 INTERCHANGE	CONTRACT 28-090-03	BRIDGE NO.	RETAINING WALL 14 BORING & DRIVE TESTS	R14-6
				COUNTY NEW CASTLE	DESIGNED BY: JLT		SHEET NO. 607
					CHECKED BY: EMK		TOTAL SHTS. 803

NOTES:

1. FOR BORING NOTES AND INFORMATION SEE SHEET NO. 606 OF 803.
2. FOR BORING LOCATIONS SEE CONSTRUCTION PLAN SHEETS.

UNOFFICIAL WEBSITE COPY

R14-7

DELAWARE DEPARTMENT OF TRANSPORTATION	ADDENDUMS / REVISIONS	SCALE 0 10 20 30 FEET	SR1 / I-95 INTERCHANGE	CONTRACT 28-090-03	BRIDGE NO.	RETAINING WALL 14 BORING & DRIVE TESTS
				COUNTY NEW CASTLE	DESIGNED BY: JLT	SHEET NO. 608
					CHECKED BY: EMK	TOTAL SHTS. 803

3/3/2010 7:07:59 AM
M:\PROJECTS\2003\03059_DELTRNPK\SRIMALL\CADD\2809003\PLANS\B0059_R14_SR.DGN

DATUM EL. -60.00

NOTES:

1. FOR BORING NOTES AND INFORMATION SEE SHEET NO. 606 OF 803.
2. FOR BORING LOCATIONS SEE CONSTRUCTION PLAN SHEETS.

UNOFFICAL WEBSITE COPY

DELAWARE DEPARTMENT OF TRANSPORTATION	ADDENDUMS / REVISIONS	SCALE 0 10 20 30 FEET	SR1 / I-95 INTERCHANGE	CONTRACT 28-090-03	BRIDGE NO.	RETAINING WALL 14 BORING & DRIVE TESTS	R14-8
				COUNTY NEW CASTLE	DESIGNED BY: JLT		SHEET NO. 609
					CHECKED BY: EMK		TOTAL SHTS. 803

3/3/2010 7:14:00 AM
M:\PROJECTS\2003\03059_DELTRNPK\SRIMALL\CADD\2809003\PLANS\B0060_R14_SR.DGN

GENERAL NOTES

SPECIFICATIONS: PROPRIETARY MSE WALLS SHALL BE DESIGNED IN ACCORDANCE WITH THE FOLLOWING:
- AASHTO LRFD BRIDGE DESIGN SPECIFICATIONS, 4TH EDITION WITH ALL CURRENT REVISIONS.
- FEDERAL HIGHWAY ADMINISTRATION PUBLICATION NO. FHWA-NHI-00-043, "MECHANICALLY STABILIZED EARTH WALLS AND REINFORCED SOIL SLOPES DESIGN AND CONSTRUCTION GUIDELINES"

CONCRETE DESIGN SHALL BE PERFORMED USING THE LOAD AND RESISTANCE FACTOR DESIGN METHOD.

CONCRETE: ALL CONCRETE FOR PARAPETS, AND ROADWAY BARRIERS SHALL BE 4500 PSI. LEVELING PAD CONCRETE SHALL BE 3500 PSI. MIX REQUIREMENTS SHALL CONFORM TO SECTION 812 OF THE DELAWARE DEPARTMENT OF TRANSPORTATION STANDARD SPECIFICATIONS.

CHAMFERS: ALL EXPOSED CORNERS OF CONCRETE SHALL BE CHAMFERED WITH ¾" x ¾" MILLED CHAMFER STRIPS, UNLESS OTHERWISE NOTED EXCEPT ON UNEXPOSED FOOTINGS OR WHERE INDICATED BY THE FOLLOWING NOTATION ON THE PLANS: "DO NOT CHAMFER".

REINFORCING STEEL: REINFORCING STEEL SHALL CONFORM TO ASTM A 615, GRADE 60. MINIMUM COVER FOR ANY BAR SHALL BE 2" UNLESS OTHERWISE NOTED.

FOR TIES AND STIRRUPS, STANDARD ACI BENDING TOLERANCES ARE MODIFIED TO PLUS (+) ZERO INCHES, MINUS (-) NORMAL ACI BENDING TOLERANCE.

ONLY GRADE 60 CAN BE USED ON THIS PROJECT.

ALL REINFORCING STEEL IN THE PARAPET SHALL BE EPOXY COATED.

ALL KEYS ARE NOMINAL SIZE.

THE MSE WALL MANUFACTURER MAY SUBSTITUTE ALTERNATE REINFORCING CONFIGURATIONS AND SUBMIT FOR APPROVAL.

EXPANSION AND CONTRACTION JOINTS: THE LOCATION OF THE EXPANSION AND CONTRACTION JOINTS IN THE BARRIER SHOWN ON THE PLANS MAY BE ADJUSTED TO ACCOMMODATE THE PANEL TYPE USED IN THE PROJECT. ANY CHANGE TO THESE JOINT LOCATIONS SHALL BE SUBMITTED TO THE ENGINEER FOR APPROVAL. EXPANSION JOINTS ARE LABELED "EJ".

LEVELING PAD: THE PROPRIETARY WALL MANUFACTURER MAY RELOCATE THE LEVELING PAD STEPS AT THEIR DISCRETION PROVIDED THAT THE MINIMUM EMBEDMENT IS MAINTAINED. ANY CHANGE TO THE STEP LOCATIONS SHALL BE SUBMITTED TO THE ENGINEER FOR APPROVAL.

ROADWAY LIMITS: THE PROPRIETARY WALL MANUFACTURER SHALL ASSURE THAT PROPOSED PROPRIETARY WALL COMPONENTS ARE POSITIONED SUCH THAT THE DESIGNATED ROADWAY LIMITS ARE NOT ENCROACHED UPON.

TRAFFIC BARRIER JOINTS: TRAFFIC BARRIER SHALL HAVE CONSTRUCTION JOINTS.

COORDINATION: CONTRACTOR AND PROPRIETARY WALL MANUFACTURER SHALL COORDINATE LOCATIONS OF INLETS AND PIPES WITH LOCATIONS OF PROPRIETARY WALL TIEBACK SYSTEM.

ARCHITECTURAL FINISH: THE MSE WALL PANELS SHALL RECEIVE AN ARCHITECTURAL FINISH.

SERVICE LIFE: ALL RETAINING WALL COMPONENTS SHALL BE DESIGNED FOR A MINIMUM SERVICE LIFE OF 75 YEARS.

WALL SYSTEM: ONLY ONE MSE WALL SYSTEM MAY BE USED ON THIS PROJECT.

ROADWAY SUPERELEVATION: FOR ROADWAY SUPERELEVATION, SEE SUPERELEVATION TABLES.

MSE WALL BACKFILL: MSE WALL BACKFILL SHALL CONSIST OF SPECIFIED BACKFILL.

PAY ITEMS: PCC MASONRY, PARAPET, CLASS A (602017)
BAR REINFORCEMENT, EPOXY COATED (604000)
MECHANICALLY STABILIZED EARTH WALLS (602772)

SOIL PROPERTIES FOR DESIGN

SOIL TYPE	UNIT WEIGHT (PCF)	ANGLE OF FRICTION (DEGREES)
SELECT FILL	125	34
FOUNDATION SOIL	68	24

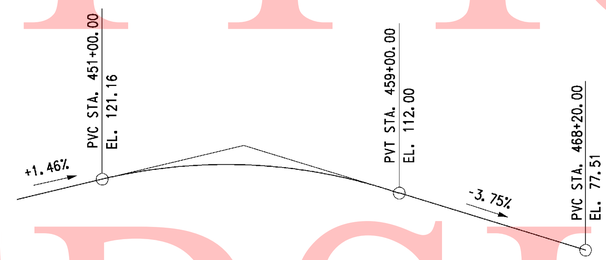

RAMP B VERTICAL CURVE DATA

NO SCALE

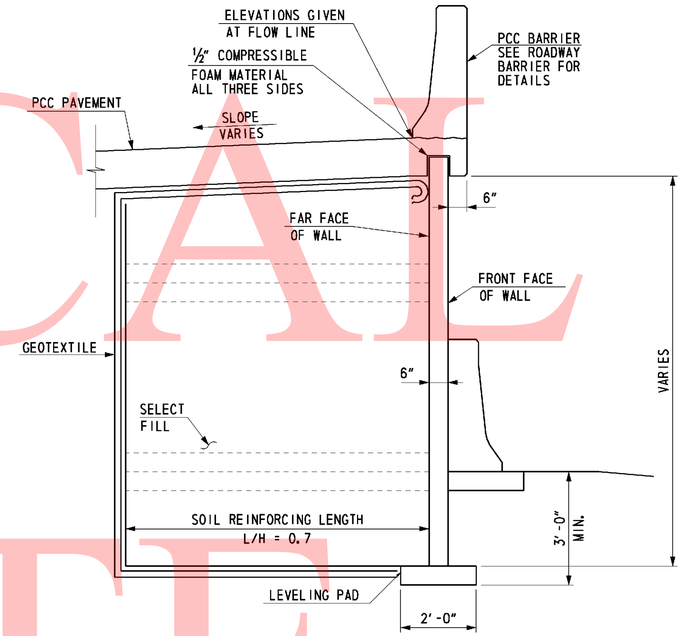

TYPICAL SECTION

(LOOKING BACK STATION)
SCALE: ½" = 1'-0"

FOUNDATION NOTES

THE FACTORED BEARING RESISTANCE SHALL BE VERIFIED PRIOR TO CONSTRUCTION OF THE MSE WALL.

THE INTERNAL STABILITY OF THE MSE WALL SHALL BE DESIGNED BY THE CONTRACTOR USING THE SOIL PARAMETERS PROVIDED FOR EACH STRUCTURE LOCATION. THE INTERNAL STABILITY SHOULD BE SIGNED AND SEALED BY A PROFESSIONAL ENGINEER LICENSED IN THE STATE OF DELAWARE AS INDICATED IN THE PROJECT SPECIFICATIONS. THE FACTORED APPLIED BEARING STRESS SHALL NOT EXCEED THE FACTORED BEARING RESISTANCE.

GROUNDWATER MAY BE ENCOUNTERED DURING EXCAVATION TO THE LEVELING PAD AND DURING CONSTRUCTION OF THIS RETAINING WALL. IT IS THE CONTRACTOR'S RESPONSIBILITY TO PROVIDE A RELATIVELY DRY EXCAVATION, INCLUDING DETERMINING APPROPRIATE DEWATERING METHODS DURING CONSTRUCTION.

A QUARANTINE PERIOD OF APPROXIMATELY 30-DAYS IS REQUIRED AFTER CONSTRUCTION OF THE FULL HEIGHT OF THE MSE WALL IS ACHIEVED. THE ENGINEER SHALL APPROVE THE COMPLETION OF THE QUARANTINE PERIOD PRIOR TO CONSTRUCTION OF ANY PARAPETS.

THE DESIGN UNIT WEIGHT INDICATED IN SOIL PROPERTIES TABLE HAS BEEN ADJUSTED DUE TO THE PRESENCE OF SHALLOW GROUNDWATER.

THE WALL SUPPLIER SHAL PERFORM A DETAILED SEISMIC ANALYSIS FOR BACK TO BACK MSE WALLS WITH L/H LESS THAN 1.1, IF NECESSARY, AS REQUIRED BY FHWA PUBLICATION NO. FHWA-NHI-00-043.

0 1 4
½ 2
SCALE: ½" = 1'-0"

UNOFFICAL WEBSITE COPY

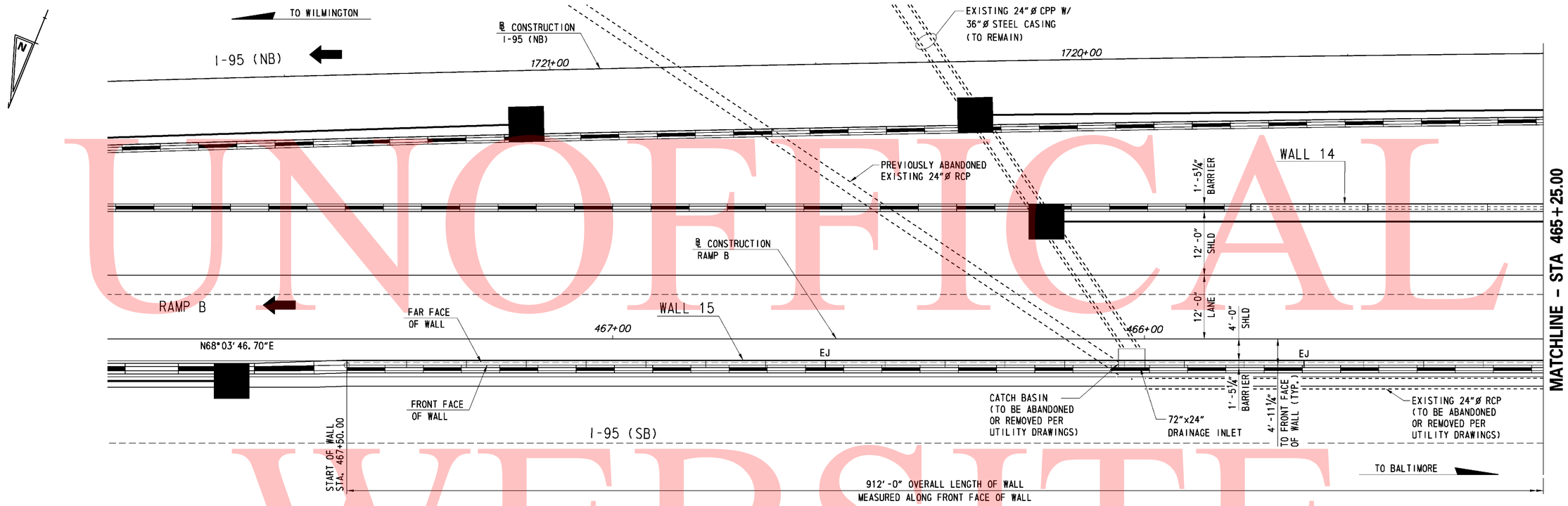

PLAN

SCALE: 1" = 10'-0"

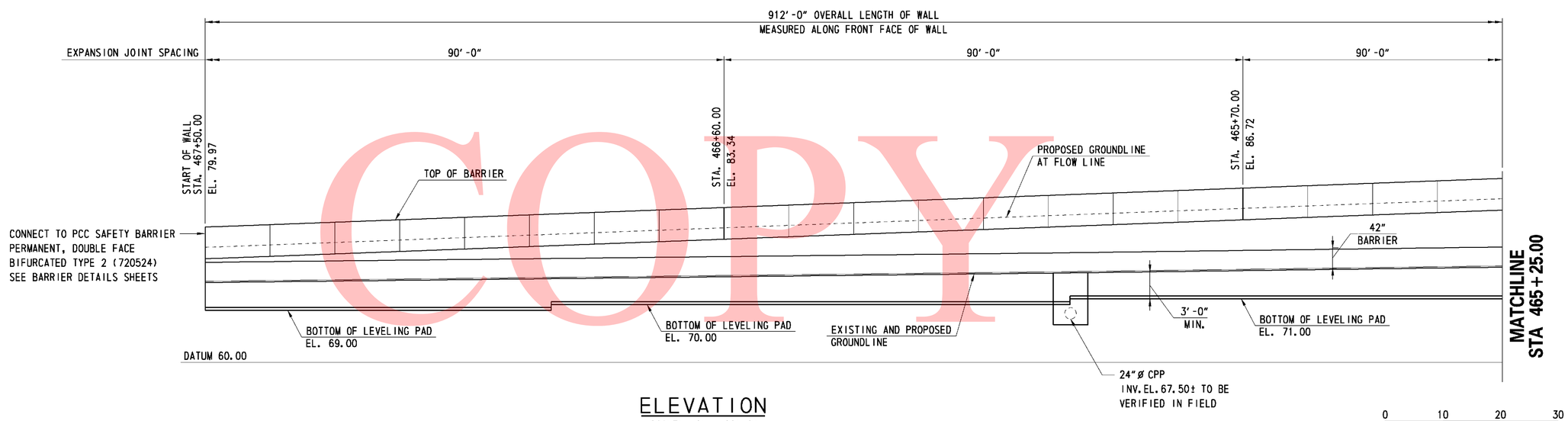

ELEVATION

SCALE: 1" = 10'-0"

0 10 20 30

SCALE: 1"= 10'-0"

UNOFFICAL WEBSITE COPY

11/11/2010 11:08:44 AM
M:\PROJECTS\2003\03059_DELTRNPK\SR1MALL\CADD\2809003\PLANS\RD34_WALL-15_SR1.DGN

DELAWARE DEPARTMENT OF TRANSPORTATION	ADDENDUMS / REVISIONS		SR1 / I-95 INTERCHANGE	CONTRACT 28-090-03	BRIDGE NO.	RETAINING WALL 15 GENERAL PLAN AND ELEVATION - 1	R15-02 SHEET NO. 611
				COUNTY NEW CASTLE	DESIGNED BY: JMS		TOTAL SHTS. 803
					CHECKED BY: JSW		

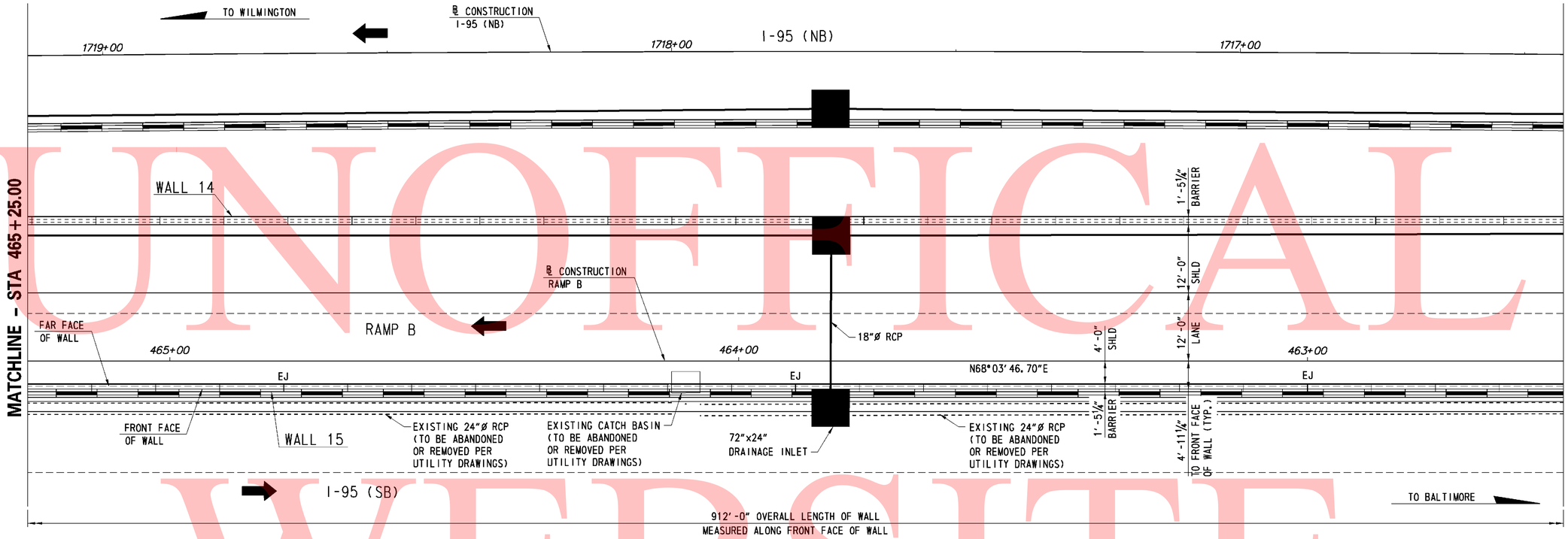

PLAN

SCALE: 1" = 10'-0"

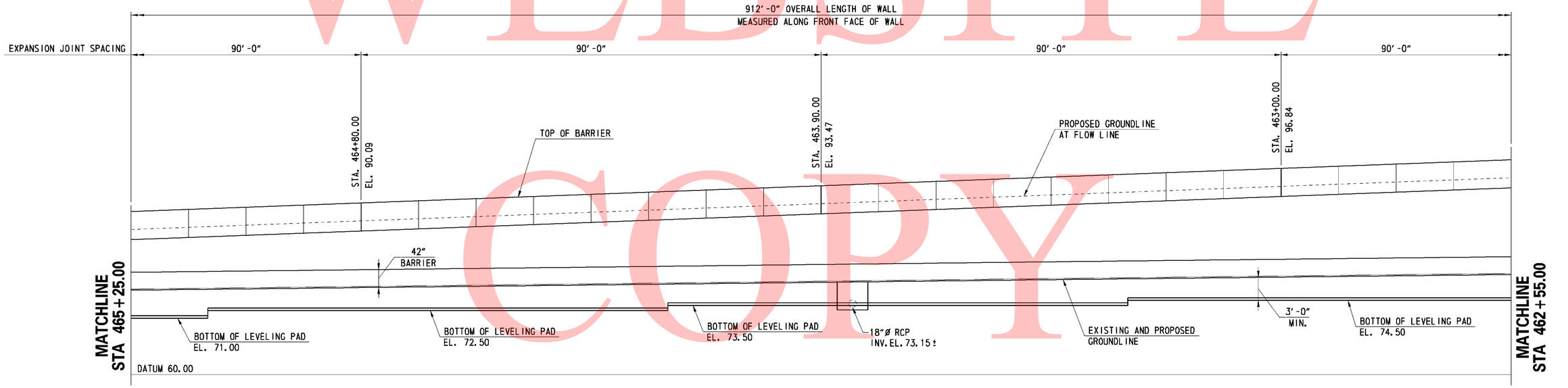

ELEVATION

SCALE: 1" = 10'-0"

0 10 20 30

SCALE: 1"= 10'-0"

UNOFFICAL WEBSITE COPY

11/11/2010 11:14:46 AM
M:\PROJECTS\2003\03059_DELTRNPK\SRMALL\CADD\2809003\PLANS\RD35_WALL-15_SR1.DGN

DELAWARE DEPARTMENT OF TRANSPORTATION	ADDENDUMS / REVISIONS		SR1 / I-95 INTERCHANGE	CONTRACT 28-090-03	BRIDGE NO.	RETAINING WALL 15 GENERAL PLAN AND ELEVATION - 2	R15-03
				COUNTY NEW CASTLE	DESIGNED BY: JMS		SHEET NO. 612
					CHECKED BY: JSW		TOTAL SHTS. 803

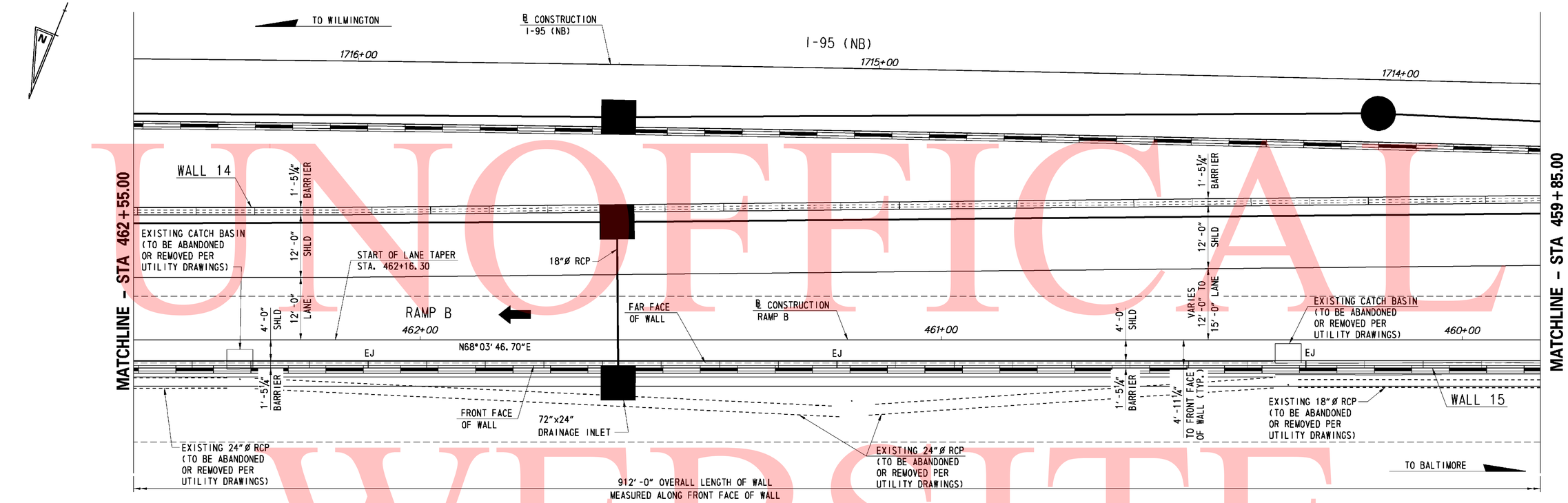

PLAN

SCALE: 1" = 10'-0"

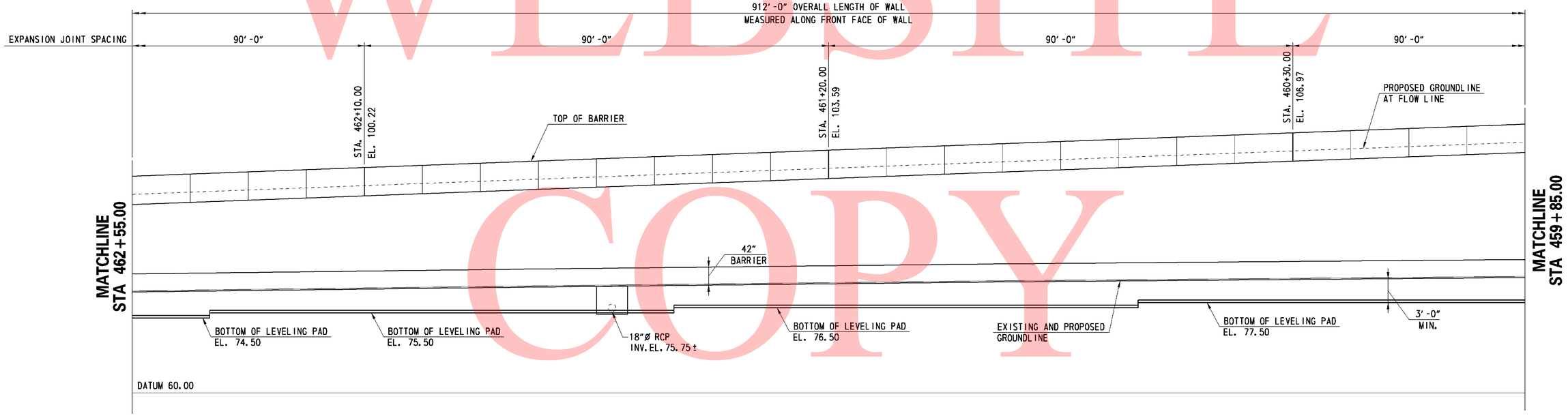

ELEVATION

SCALE: 1" = 10'-0"

0 10 20 30

SCALE: 1"= 10'-0"

UNOFFICAL WEBSITE COPY

DELAWARE DEPARTMENT OF TRANSPORTATION	ADDENDUMS / REVISIONS	SR1 / I-95 INTERCHANGE	CONTRACT 28-090-03	BRIDGE NO.	RETAINING WALL 15 GENERAL PLAN AND ELEVATION - 3	SHEET NO. 613	R15-04
			COUNTY NEW CASTLE	DESIGNED BY: JMS		TOTAL SHTS. 803	
				CHECKED BY: JSW			

9/6/2010 1:40:25 PM
M:\PROJECTS\2003\03059_DELTRNPK\SRMALL\CADD\2809003\PLANS\RD36_WALL-15_SR1.DGN

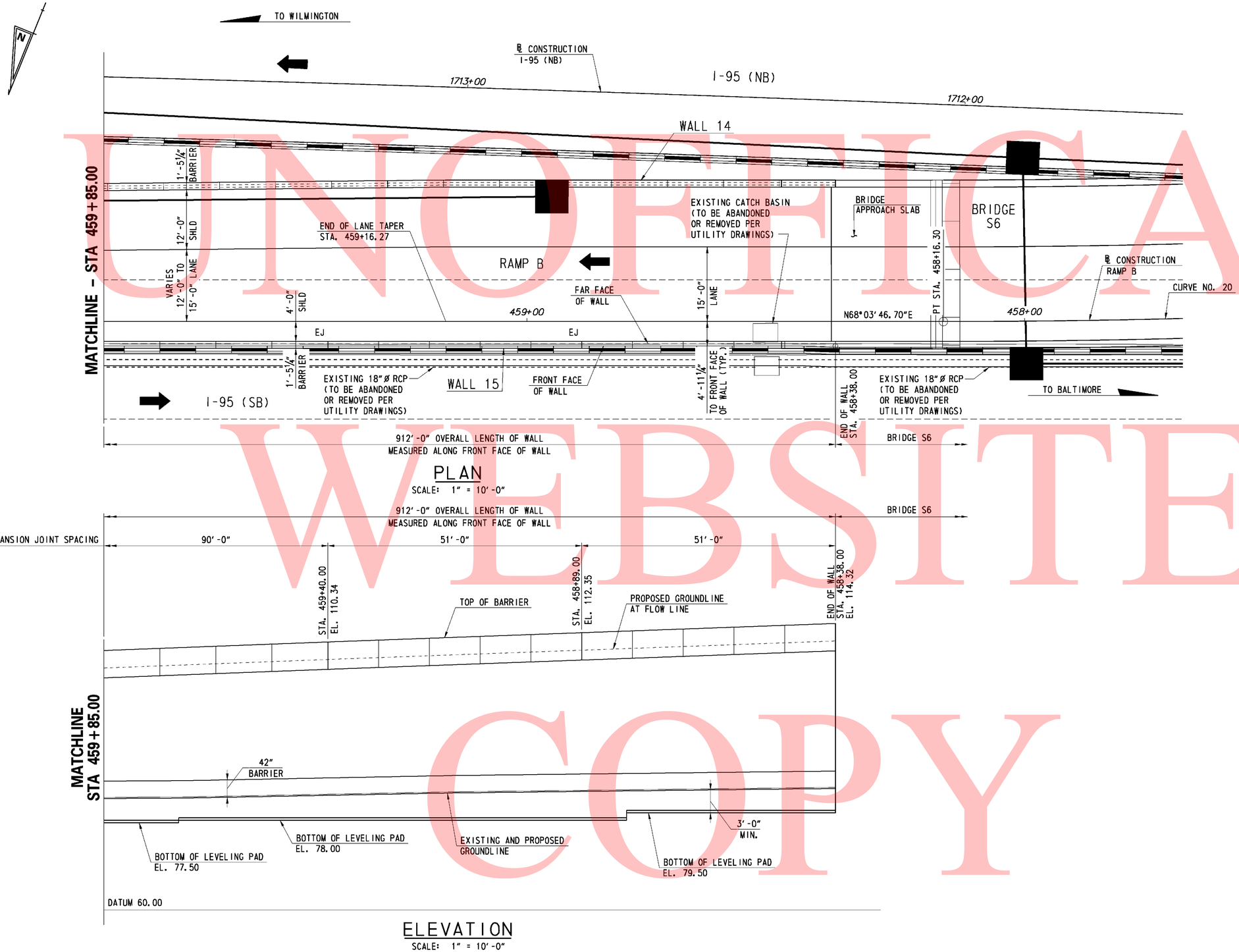

0 10 20 30
SCALE: 1"= 10'-0"

UNOFFICIAL WEBSITE COPY

11/11/2010 11:24:30 AM
M:\PROJECTS\2003\03059_DELTRNPK\SRIMALL\CADD\2809003\PLANS\RD37_WALL-15_SR1.DGN

DELAWARE DEPARTMENT OF TRANSPORTATION	ADDENDUMS / REVISIONS	SR1 / I-95 INTERCHANGE	CONTRACT 28-090-03	BRIDGE NO.	RETAINING WALL 15 GENERAL PLAN AND ELEVATION - 4	R15-05 SHEET NO. 614
			COUNTY NEW CASTLE	DESIGNED BY: JMS		TOTAL SHTS. 803
				CHECKED BY: JSW		

SUMMARY OF LABORATORY TEST RESULTS OF TUBE SAMPLES

BORING NO.	TOP SAMPLE DEPTH (FT)	NATURAL MOISTURE CONTENT (%)	LL	PL	PI	PERCENT PASSING NO. 200	AASHTO	UNDISTURBED TUBE TESTING	TOTAL UNIT WEIGHT (pcf)	UNCONFINED COMPRESSION (psf)	TOTAL STRESS COHESION (psf)	TOTAL STRESS FRICTION ANGLE (deg)	EFFECTIVE STRESS COHESION (psf)	EFFECTIVE STRESS FRICTION ANGLE (deg)	UNDRAINED SHEAR (psf)	INITIAL VOID RATIO	PRECONSOLIDATION STRESS MAX (psf)	PRECONSOLIDATION STRESS MIN (psf)	C_c	C_r	pH	RESISTIVITY (ohm-cm)
IRW-71	27.0	17.5	22	17	5	67.0	A-4	UU	134.2	-	-	-	-	-	8230	-	-	-	-	-	-	-
ML-90	21.0	16.9	31	16	15	86.0	A-6	DS	-	-	595	26.6	-	-	-	-	-	-	-	-	-	-
ML-90	21.0	-	-	-	-	-	-	UC	150.0	5050	-	-	-	-	2525	-	-	-	-	-	-	-

DELAWARE DEPARTMENT OF TRANSPORTATION
AASHTO CLASSIFICATION OF SOILS AND SOIL-AGGREGATE MIXTURES

General Classification	Granular Materials (35% or Less Passing 0.075 mm)							Silt-Clay Materials (More than 35% Passing 0.075 mm)					Organic Soils
Group Classification: Group	A-1		A-3	A-2				A-4	A-5	A-6	A-7		A-8
Sub-Group	A-1-a	A-1-b		A-2-4	A-2-5	A-2-6	A-2-7				A-7-5	A-7-6	
Graphic	A	B			5		7				5		
Sieve Analysis, % Passing													
2.00 mm (No. 10)	50 Max	-	-	-	-	-	-	-	-	-	-	-	See Note 1
0.425 mm (No. 40)	30 Max	50 Max	51 Min	-	-	-	-	-	-	-	-	-	
0.075 mm (No. 200)	15 Max	25 Max	10 Max	35 Max	35 Max	35 Max	35 Max	36 Min	36 Min	36 Min	36 Min	36 Min	
Characteristics of Fraction													
Passing 0.425 mm (No. 40)	-		-	-	-	-	-	-	-	-	-	-	See Note 1
Liquid Limit	-		-	40 Max	41 Min	40 Max	41 Min	40 Max	41 Min	41 Max	41 Min	41 Min	
Plasticity Index	6 Max		NP	10 Max	10 Max	11 Min	11 Min	10 Max	10 Max	11 Min	11 Min	11 Min	
Usual Types of Significant Constituent Materials	Stone Fragments, Gravel and Sand		Fine Sand	Silty or Clayey Gravel and Sand				Silty Soils		Clayey Soils			Organic Soils

Plasticity Index of A-7-5 Subgroup Is Equal to or Less Than LL Minus 30

Plasticity Index of A-7-6 Subgroup Is Greater Than LL Minus 30

Note 1-Classification Based on Visual Inspection and not on Sieve Analysis or Atterberg Limits

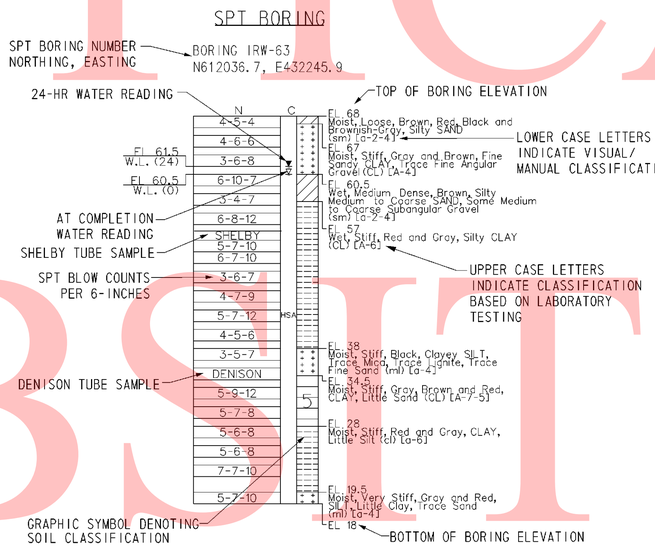

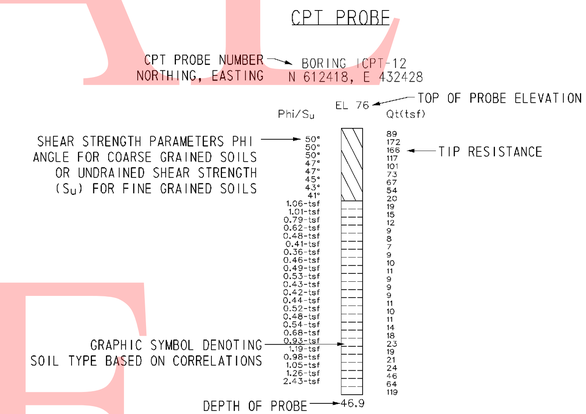

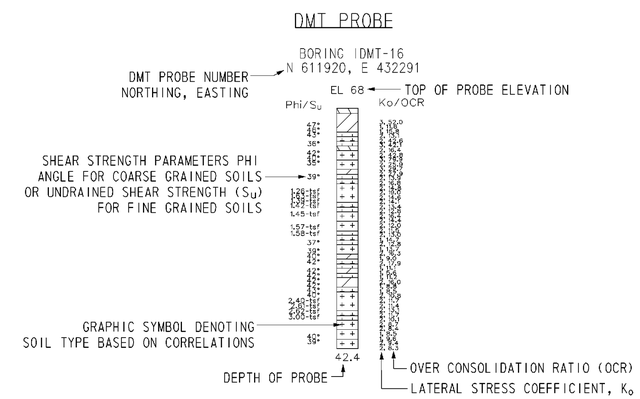

NOTES:

1. THE BORINGS AND DRIVE TEST WERE CONDUCTED IN MULTIPLE PHASES BY THE ROBERT B. BALTER COMPANY, THE WALTON CORPORATION, AND FINDLING, INC. BETWEEN AUGUST 2004 AND OCTOBER 2008.

2. THE SOIL SYMBOLS REFLECT ONLY THE MAJOR SOIL CONSTITUENT, FOR MORE COMPLETE SOIL CHARACTERISTIC REFER TO THE SOIL LOGS CONTAINED WITHIN THE FINAL FOUNDATION REPORTS DATED FEBRUARY 2009.

3. THE FIELD BORING LOGS RECORD SAMPLE SPOON RECOVERY. THE BORING LOGS AND LABORATORY TESTING RESUTS ARE AVAILABLE UPON REQUEST.

4. N = BLOWS ON A 2 INCH OD SAMPLING SPOON BY 140 LB DRIVE- WEIGHT FALLING 30 INCHES INDICATING SUCCESSIVE 6 INCH INCREMENTS OF PENETRATION. PENETRATIONS GREATER THAN 6-INCHES OR LESS THAN 6-INCHES ARE INDICATED BY WOH, WOR, OR THE DEPTH OF THE PENETRATION TO THE NEAREST INCH.

   WOH= STATIC WEIGHT OF SAMPLING SPOON DRIVE-WEIGHT ASSEMBLY, DRIVE-WEIGHT,ANVIL (WHEN AUTOMATIC HAMMER IS USED), DRILL ROD(S), AND SAMPLING SPOONS.

   WOR= STATIC WEIGHT OF DRILL ROD AND SAMPLING SPOON

5. FIELD BORINGS AND SOIL SAMPLING WERE PERFORMED IN ACCORDANCE TO AASHTO T-206, T-225 AND T-306.

6. USCS AND AASHTO DESIGNATIONS INDICATED IN UPPER CASE HAVE BEEN CONFIRMED USING LAB SOIL CLASSIFICATION TESTS. USCS AND AASHTO DESIGNATIONS INDICATED IN LOWER CASE ARE BASED ON VISUAL CLASSIFICATION TECHNIQUES ACCORDING TO ASTM D 2488 AND AASHTO M 145 BY RK&K GEOLOGIST OR ENGINEER.

7. CPT AND DMT PROBES WERE DRILLED BY IN-SITU SOIL TESTING, L.C AND CONETEC, INC.

   CPT = CONE PENETRATION TESTING
   DMT = FLAT- PLATE DILATOMETER

8. C= DEPTH OF HOLLOW STEM CONTINUOUS FLIGHT AUGER (HSA) WITH A 3-3/8 INCH ID, AND LIMIT OF MUD ROTARY (MD).

9. FOR BORING LOCATIONS, SEE CONSTRUCTION PLAN SHEETS 182 THROUGH 186.

10. FOR ADDITIONAL BORING & DRIVE TESTS SEE BORING & DRIVE TESTS SHEETS FOR OTHER STRUCTURES.

11. FOR ALL OTHER BORING & DRIVE TESTS SEE SHEETS 744 THROUGH 792.

12. FOR ADDITIONAL LABORATORY TEST RESULTS OF UNDISTURBED TUBE SAMPLES AND INDEX TESTING SEE, SHEETS 793 THROUGH 803.

13. FOR GROUNDWATER MONITORING DATA, SEE SHEET XXX OF XXX.

14. LL= LIQUID LIMIT

15. PL = PLASTIC LIMIT

16. PI = PLASTICITY INDEX

17. UC = UNCONFINED COMPRESSION

18. DS = DIRECT SHEAR

19. CONS = CONSOLIDATION

20. UU = UNCONSOLIDATED- UNDRAINED TRIAXIAL TEST

21. CIUC = CONSOLIDATED ISOTROPIC UNDRAINED COMPRESSION TRIAXIAL TEST

22. AASHTO = AMERICAN ASSOCIATION OF STATE HIGHWAY TRANSPORTATION OFFICIALS

UNOFFICAL WEBSITE COPY

UNOFFICIAL WEBSITE COPY

DATUM EL. -60.00

NOTES:

1. FOR BORING NOTES AND INFORMATION SEE SHEET NO. 615 OF 803.
2. FOR BORING LOCATIONS SEE CONSTRUCTION PLAN SHEETS.

R15-7

DELAWARE DEPARTMENT OF TRANSPORTATION	ADDENDUMS / REVISIONS	SCALE 0 10 20 30 FEET	SR1 / I-95 INTERCHANGE	CONTRACT 28-090-03 / COUNTY NEW CASTLE	BRIDGE NO. / DESIGNED BY: JLT / CHECKED BY: EMK	RETAINING WALL 15 BORING & DRIVE TESTS	SHEET NO. 616 / TOTAL SHTS. 803

3/2/2010 12:49:25 PM
M:\PROJECTS\2003\03059_DELTRNPK\SRIMALL\CADD\2809003\PLANS\B0062_R15_SR1.DGN

UNOFFICIAL WEBSITE COPY

NOTES:

1. FOR BORING NOTES AND INFORMATION SEE SHEET NO. 615 OF 803.
2. FOR BORING LOCATIONS SEE CONSTRUCTION PLAN SHEETS.

3/2/2010 12:50:52 PM
M:\PROJECTS\2003\03059_DELTRNPK\SR1MALL\CADD\2809003\PLANS\B0063_R15_SR1.DGN

DELAWARE DEPARTMENT OF TRANSPORTATION	ADDENDUMS / REVISIONS	SCALE 0 10 20 30 FEET	SR1 / I-95 INTERCHANGE	CONTRACT 28-090-03	BRIDGE NO.	RETAINING WALL 15 BORING & DRIVE TESTS	R15-8
				COUNTY NEW CASTLE	DESIGNED BY: JLT		SHEET NO. 617
					CHECKED BY: EMK		TOTAL SHTS. 803

DATUM EL. -60.00

NOTES:

1. FOR BORING NOTES AND INFORMATION SEE SHEET NO. 615 OF 803.
2. FOR BORING LOCATIONS SEE CONSTRUCTION PLAN SHEETS.

UNOFFICAL WEBSITE COPY

R15-9

DELAWARE DEPARTMENT OF TRANSPORTATION	ADDENDUMS / REVISIONS	SCALE 0 10 20 30 FEET	SR1 / I-95 INTERCHANGE	CONTRACT 28-090-03	BRIDGE NO.	RETAINING WALL 15 BORING & DRIVE TESTS
				COUNTY NEW CASTLE	DESIGNED BY: JLT	SHEET NO. 618
					CHECKED BY: EMK	TOTAL SHTS. 803

3/2/2010 12:52:15 PM
M:\PROJECTS\2003\03059_DELTRNPK\SRIMALL\CADD\2809003\PLANS\B0064_R15_SR1.DGN

GENERAL NOTES

SPECIFICATIONS: PROPRIETARY MSE WALLS SHALL BE DESIGNED IN ACCORDANCE WITH THE FOLLOWING:
- AASHTO LRFD BRIDGE DESIGN SPECIFICATIONS, 4TH EDITION WITH ALL CURRENT REVISIONS.
- FEDERAL HIGHWAY ADMINISTRATION PUBLICATION NO. FHWA-NHI-00-043, "MECHANICALLY STABILIZED EARTH WALLS AND REINFORCED SOIL SLOPES DESIGN AND CONSTRUCTION GUIDELINES"

CONCRETE: CONCRETE DESIGN SHALL BE PERFORMED USING THE LOAD AND RESISTANCE FACTOR DESIGN METHOD.

COPING CONCRETE SHALL BE 3500 PSI. MIX REQUIREMENTS SHALL CONFORM TO SECTION 812 OF THE DELAWARE DEPARTMENT OF TRANSPORTATION STANDARD SPECIFICATIONS.

CHAMFERS: ALL EXPOSED CORNERS OF CONCRETE SHALL BE CHAMFERED WITH ¾" x ¾" MILLED CHAMFER STRIPS, UNLESS OTHERWISE NOTED EXCEPT ON UNEXPOSED FOOTINGS OR WHERE INDICATED BY THE FOLLOWING NOTATION ON THE PLANS: "DO NOT CHAMFER".

REINFORCING STEEL: REINFORCING STEEL SHALL CONFORM TO ASTM A 615, GRADE 60. MINIMUM COVER FOR ANY BAR SHALL BE 2" UNLESS OTHERWISE NOTED.

FOR TIES AND STIRRUPS, STANDARD ACI BENDING TOLERANCES ARE MODIFIED TO PLUS (+) ZERO INCHES, MINUS (-) NORMAL ACI BENDING TOLERANCE.

ONLY GRADE 60 CAN BE USED ON THIS PROJECT.

ALL REINFORCING STEEL IN THE COPING SHALL BE EPOXY COATED.

ALL KEYS ARE NOMINAL SIZE.

THE MSE WALL MANUFACTURER MAY SUBSTITUTE ALTERNATE REINFORCING CONFIGURATIONS AND SUBMIT FOR APPROVAL.

EXPANSION AND CONTRACTION JOINTS: THE LOCATION OF THE EXPANSION AND CONTRACTION JOINTS IN THE COPING SHOWN ON THE PLANS MAY BE ADJUSTED TO ACCOMMODATE THE PANEL TYPE USED IN THE PROJECT. ANY CHANGE TO THESE JOINT LOCATIONS SHALL BE SUBMITTED TO THE ENGINEER FOR APPROVAL. EXPANSION JOINTS ARE LABELED "EJ".

LEVELING PAD: THE PROPRIETARY WALL MANUFACTURER MAY RELOCATE THE LEVELING PAD STEPS AT THEIR DISCRETION PROVIDED THAT THE MINIMUM EMBEDMENT IS MAINTAINED. ANY CHANGE TO THE STEP LOCATIONS SHALL BE SUBMITTED TO THE ENGINEER FOR APPROVAL.

ROADWAY LIMITS: THE PROPRIETARY WALL MANUFACTURER SHALL ASSURE THAT PROPOSED PROPRIETARY WALL COMPONENTS ARE POSITIONED SUCH THAT THE DESIGNATED ROADWAY LIMITS ARE NOT ENCROACHED UPON.

COPING JOINTS: COPING SHALL HAVE CONSTRUCTION JOINTS.

COORDINATION: CONTRACTOR AND PROPRIETARY WALL MANUFACTURER SHALL COORDINATE LOCATIONS OF INLETS AND PIPES WITH LOCATIONS OF PROPRIETARY WALL TIEBACK SYSTEM.

ARCHITECTURAL FINISH: THE MSE WALL PANELS SHALL RECEIVE AN ARCHITECTURAL FINISH.

SERVICE LIFE: ALL RETAINING WALL COMPONENTS SHALL BE DESIGNED FOR A MINIMUM SERVICE LIFE OF 75 YEARS.

WALL SYSTEM: ONLY ONE MSE WALL SYSTEM MAY BE USED ON THIS PROJECT.

ROADWAY SUPERELEVATION: FOR ROADWAY SUPERELEVATION, SEE SUPERELEVATION TABLES.

MSE WALL BACKFILL: MSE WALL BACKFILL SHALL CONSIST OF SPECIFIED BACKFILL.

PAY ITEMS: MECHANICALLY STABILIZED EARTH WALLS (602772)
PCC MASONRY FOR MSE WALLS (602773)
BAR REINFORCEMENT, EPOXY COATED (604000)

FOUNDATION NOTES

THE FACTORED BEARING RESISTANCE SHALL BE VERIFIED PRIOR TO CONSTRUCTION OF THE MSE WALL.

THE INTERNAL STABILITY OF THE MSE WALL SHALL BE DESIGNED BY THE CONTRACTOR USING THE SOIL PARAMETERS PROVIDED FOR EACH STRUCTURE LOCATION. THE INTERNAL STABILITY SHOULD BE SIGNED AND SEALED BY A PROFESSIONAL ENGINEER LICENSED IN THE STATE OF DELAWARE AS INDICATED IN THE PROJECT SPECIFICATIONS. THE FACTORED APPLIED BEARING STRESS SHALL NOT EXCEED THE FACTORED BEARING RESISTANCE.

ISOLATED AREAS OF UNDERCUTTING OF EXISTING FILL MAY BE ENCOUNTERED DURING CONSTRUCTION OF THIS RETAINING WALL.

GROUNDWATER MAY BE ENCOUNTERED DURING EXCAVATION TO THE LEVELING PAD AND DURING CONSTRUCTION OF THIS RETAINING WALL. IT IS THE CONTRACTOR'S RESPONSIBILITY TO PROVIDE A RELATIVELY DRY EXCAVATION, INCLUDING DETERMINING APPROPRIATE DEWATERING METHODS DURING CONSTRUCTION.

A QUARANTINE PERIOD OF APPROXIMATELY 30-DAYS IS REQUIRED AFTER CONSTRUCTION OF THE FULL HEIGHT OF THE MSE WALL IS ACHIEVED. THE ENGINEER SHALL APPROVE THE COMPLETION OF THE QUARANTINE PERIOD PRIOR TO CONSTRUCTION OF ANY COPING.

THE DESIGN UNIT WEIGHT INDICATED IN SOIL PROPERTIES TABLE HAS BEEN ADJUSTED DUE TO THE PRESENCE OF SHALLOW GROUNDWATER.

THE WALL SUPPLIER SHAL PERFORM A DETAILED SEISMIC ANALYSIS FOR BACK TO BACK MSE WALLS WITH L/H LESS THAN 1.1, IF NECESSARY, AS REQUIRED BY FHWA PUBLICATION NO. FHWA-NHI-00-043.

SOIL PROPERTIES FOR DESIGN

SOIL TYPE	UNIT WEIGHT (PCF)	ANGLE OF FRICTION (DEGREES)
LIGHT WEIGHT ENGINEERED FILL (LWEF)	42	38
FOUNDATION SOIL	68	24

SR7 (NB) VERTICAL CURVE DATA

NO SCALE

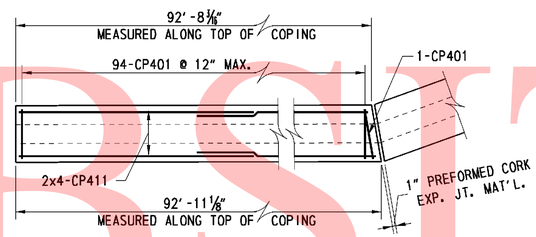

TYPE 1 PANEL (1 REQUIRED)

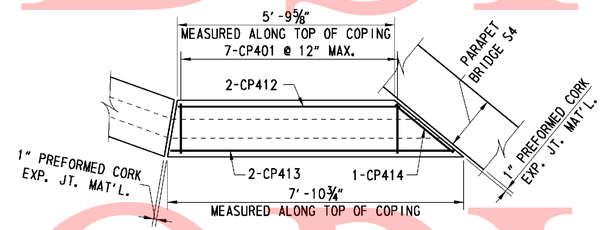

TYPE 2 PANEL (1 REQUIRED)

COPING REINFORCING PLANS

SCALE: ½" = 1'-0"

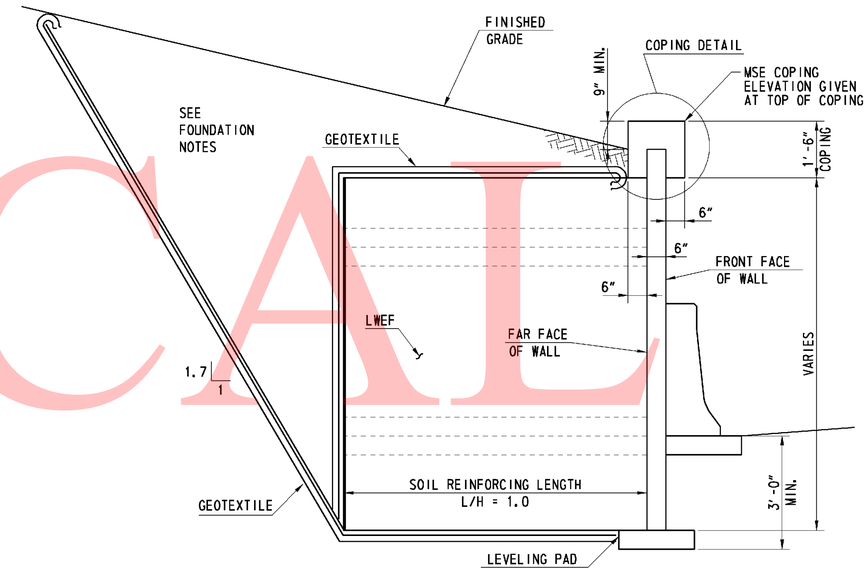

TYPICAL SECTION

(LOOKING BACK STATION)
SCALE: ½" = 1'-0"

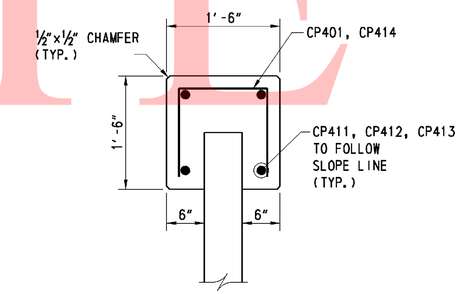

COPING DETAIL

SCALE: 1"= 1'-0"

	SPECIFICATIONS					BENDING DIMENSIONS (FEET-INCHES /QUARTER INCH)						
	QTY.	SIZE	LENGTH	MARK	TYPE	A	B	C	D	H	K	O
COPING	101	4	3-6	CP401	17		1-2	1-2	1-2			
	8	4	47-9 1/16	CP411	STR							
	2	4	5-7	CP412	STR							
	2	4	7-8 1/8	CP413	STR							
	1	4	4-4 5/16	CP414	17		1-2	2-0 5/16	1-2			

SEE SHEET R7-07 FOR BAR BEND NOTES

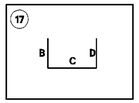

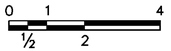

SCALE: ½"=1'-0"

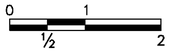

SCALE: 1"=1'-0"

UNOFFICAL WEBSITE COPY

11/11/2010 11:37:07 AM
M:\PROJECTS\2003\03059_DELTRNPK\SR1MALL\CADD\2809003\PLANS\RD38_WALL-16_SR1.DGN

DELAWARE DEPARTMENT OF TRANSPORTATION

ADDENDUMS / REVISIONS

SR1 / I-95 INTERCHANGE

CONTRACT	BRIDGE NO.	
28-090-03	DESIGNED BY:	JMS
COUNTY		
NEW CASTLE	CHECKED BY:	JSW

RETAINING WALL 16
GENERAL NOTES AND TYPICAL SECTION

R16-01
SHEET NO. 619
TOTAL SHTS. 803

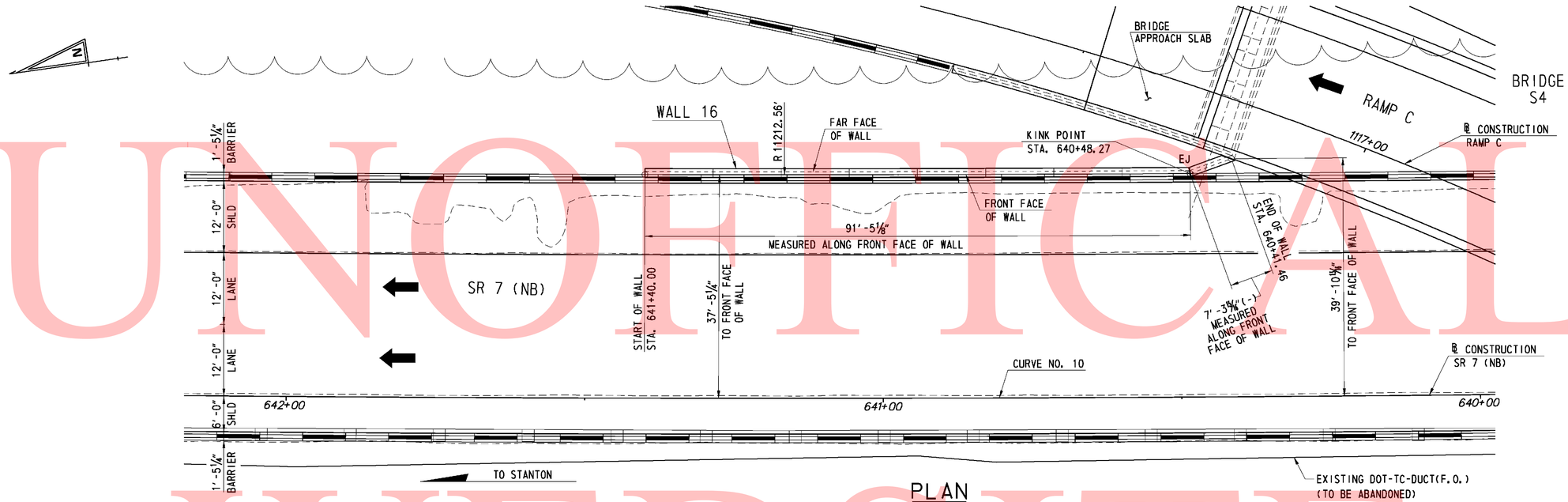

PLAN

SCALE: 1" = 10'-0"

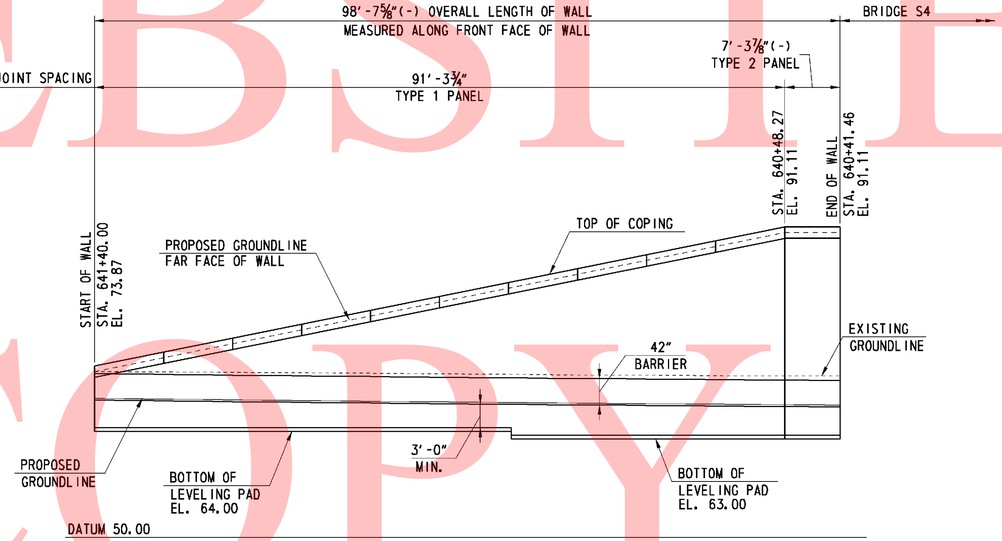

ELEVATION

SCALE: 1" = 10'-0"

0 10 20 30

SCALE: 1"= 10'-0"

UNOFFICIAL WEBSITE COPY

11/11/2010 11:38:35 AM
M:\PROJECTS\2003\03059_DELTRNPK\SRTMALL\CADD\2809003\PLANS\RD39_WALL-16_SR1.DGN

DELAWARE DEPARTMENT OF TRANSPORTATION	ADDENDUMS / REVISIONS		SR1 / I-95 INTERCHANGE	CONTRACT 28-090-03	BRIDGE NO.	RETAINING WALL 16 GENERAL PLAN AND ELEVATION	R16-02 SHEET NO. 620
				COUNTY NEW CASTLE	DESIGNED BY: JMS		TOTAL SHTS. 803
					CHECKED BY: JSW		

SUMMARY OF LABORATORY TEST RESULTS OF TUBE SAMPLES

BORING NO.	TOP SAMPLE DEPTH (FT)	NATURAL MOISTURE CONTENT (%)	LL	PL	PI	PERCENT PASSING NO. 200	AASHTO	UNDISTURBED TUBE TESTING	TOTAL UNIT WEIGHT (pcf)	UNCONFINED COMPRESSION (psf)	TOTAL STRESS COHESION (psf)	TOTAL STRESS FRICTION ANGLE (deg)	EFFECTIVE STRESS COHESION (psf)	EFFECTIVE STRESS FRICTION ANGLE (deg)	UNDRAINED SHEAR (psf)	INITIAL VOID RATIO	PRECONSOLIDATION STRESS MAX (psf)	PRECONSOLIDATION STRESS MIN (psf)	C_c	C_r	pH	RESISTIVITY (ohm-cm)
IRW-97	16.0	21.6	42	23	19	98.6	A-7-6(21)	UU	127.7	-	-	-	-	-	1355	-	-	-	-	-	-	-
IRW-97	41.0	25.2	54	24	30	98.0	A-7-6(34)	DS	126.8	-	-	-	338	17	-	-	-	-	-	-	-	-

DELAWARE DEPARTMENT OF TRANSPORTATION
AASHTO CLASSIFICATION OF SOILS AND SOIL-AGGREGATE MIXTURES

General Classification		Granular Materials (35% or Less Passing 0.075 mm)							Silt-Clay Materials (More than 35% Passing 0.075 mm)					Organic Soils
Group Classification	Group	A-1		A-3	A-2				A-4	A-5	A-6	A-7		A-8
	Sub-Group	A-1-a	A-1-b		A-2-4	A-2-5	A-2-6	A-2-7				A-7-5	A-7-6	
	Graphic	A	B			5		7				5		
Sieve Analysis, % Passing														
2.00 mm (No. 10)		50 Max	-	-	-	-	-	-	-	-	-	-	-	See Note 1
0.425 mm (No. 40)		30 Max	50 Max	51 Min	-	-	-	-	-	-	-	-	-	
0.075 mm (No. 200)		15 Max	25 Max	10 Max	35 Max	35 Max	35 Max	35 Max	36 Min	36 Min	36 Min	36 Min	36 Min	
Characteristics of Fraction		-		-	-	-	-	-	-	-	-	-	-	See Note 1
Passing 0.425 mm (No. 40)		-		-	-	-	-	-	-	-	-	-	-	
Liquid Limit		-		-	40 Max	41 Min	40 Max	41 Min	40 Max	41 Min	41 Max	41 Min	41 Min	
Plasticity Index		6 Max		NP	10 Max	10 Max	11 Min	11 Min	10 Max	10 Max	11 Min	11 Min	11 Min	
Usual Types of Significant Constituent Materials		Stone Fragments, Gravel and Sand		Fine Sand	Silty or Clayey Gravel and Sand				Silty Soils		Clayey Soils			Organic Soils

Plasticity Index of A-7-5 Subgroup Is Equal to or Less Than LL Minus 30

Plasticity Index of A-7-6 Subgroup Is Greater Than LL Minus 30

Note 1-Classification Based on Visual Inspection and not on Sieve Analysis or Atterberg Limits

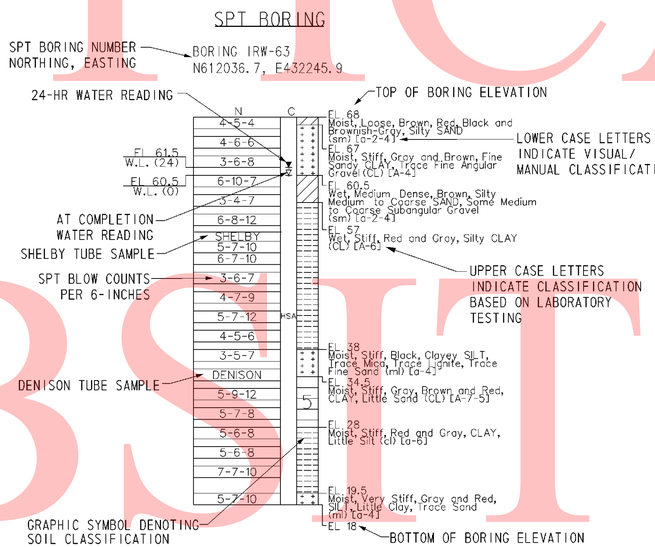

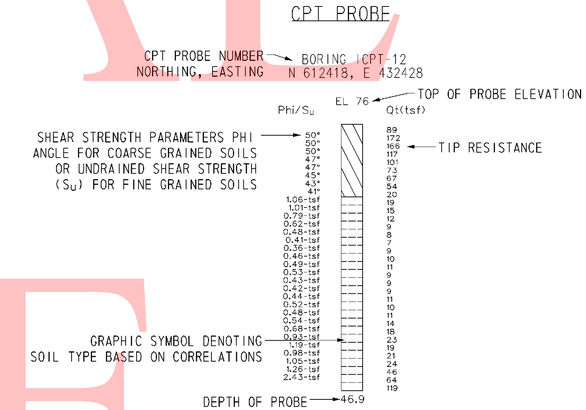

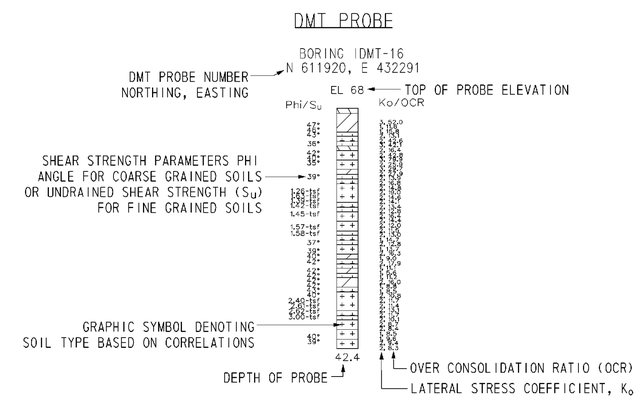

NOTES:

1. THE BORINGS AND DRIVE TEST WERE CONDUCTED IN MULTIPLE PHASES BY THE ROBERT B. BALTER COMPANY, THE WALTON CORPORATION, AND FINDLING, INC. BETWEEN AUGUST 2004 AND OCTOBER 2008.

2. THE SOIL SYMBOLS REFLECT ONLY THE MAJOR SOIL CONSTITUENT, FOR MORE COMPLETE SOIL CHARACTERISTIC REFER TO THE SOIL LOGS CONTAINED WITHIN THE FINAL FOUNDATION REPORTS DATED FEBRUARY 2009.

3. THE FIELD BORING LOGS RECORD SAMPLE SPOON RECOVERY. THE BORING LOGS AND LABORATORY TESTING RESUTS ARE AVAILABLE UPON REQUEST.

4. N = BLOWS ON A 2 INCH OD SAMPLING SPOON BY 140 LB DRIVE- WEIGHT FALLING 30 INCHES INDICATING SUCCESSIVE 6 INCH INCREMENTS OF PENETRATION. PENETRATIONS GREATER THAN 6-INCHES OR LESS THAN 6-INCHES ARE INDICATED BY WOH, WOR, OR THE DEPTH OF THE PENETRATION TO THE NEAREST INCH.

   WOH= STATIC WEIGHT OF SAMPLING SPOON DRIVE-WEIGHT ASSEMBLY, DRIVE-WEIGHT,ANVIL (WHEN AUTOMATIC HAMMER IS USED), DRILL ROD(S), AND SAMPLING SPOONS.

   WOR= STATIC WEIGHT OF DRILL ROD AND SAMPLING SPOON

5. FIELD BORINGS AND SOIL SAMPLING WERE PERFORMED IN ACCORDANCE TO AASHTO T-206, T-225 AND T-306.

6. USCS AND AASHTO DESIGNATIONS INDICATED IN UPPER CASE HAVE BEEN CONFIRMED USING LAB SOIL CLASSIFICATION TESTS. USCS AND AASHTO DESIGNATIONS INDICATED IN LOWER CASE ARE BASED ON VISUAL CLASSIFICATION TECHNIQUES ACCORDING TO ASTM D 2488 AND AASHTO M 145 BY RK&K GEOLOGIST OR ENGINEER.

7. CPT AND DMT PROBES WERE DRILLED BY IN-SITU SOIL TESTING, L.C AND CONETEC, INC.

   CPT = CONE PENETRATION TESTING
   DMT = FLAT- PLATE DILATOMETER

8. C= DEPTH OF HOLLOW STEM CONTINUOUS FLIGHT AUGER (HSA) WITH A 3-3/8 INCH ID, AND LIMIT OF MUD ROTARY (MD).

9. FOR BORING LOCATIONS, SEE CONSTRUCTION PLAN SHEETS 182 THROUGH 186.

10. FOR ADDITIONAL BORING & DRIVE TESTS SEE BORING & DRIVE TESTS SHEETS FOR OTHER STRUCTURES.

11. FOR ALL OTHER BORING & DRIVE TESTS SEE SHEETS 744 THROUGH 792.

12. FOR ADDITIONAL LABORATORY TEST RESULTS OF UNDISTURBED TUBE SAMPLES AND INDEX TESTING SEE, SHEETS 793 THROUGH 803.

13. FOR GROUNDWATER MONITORING DATA, SEE SHEET XXX OF XXX.

14. LL= LIQUID LIMIT

15. PL = PLASTIC LIMIT

16. PI = PLASTICITY INDEX

17. UC = UNCONFINED COMPRESSION

18. DS = DIRECT SHEAR

19. CONS = CONSOLIDATION

20. UU = UNCONSOLIDATED- UNDRAINED TRIAXIAL TEST

21. CIUC = CONSOLIDATED ISOTROPIC UNDRAINED COMPRESSION TRIAXIAL TEST

22. AASHTO = AMERICAN ASSOCIATION OF STATE HIGHWAY TRANSPORTATION OFFICIALS

UNOFFICAL WEBSITE COPY

UNOFFICIAL WEBSITE COPY

BORING IRW-43
N 612649, E 432456
N
C
3-3-4
3-5-6
2-2-3
2-3-3
3-2-4
SHELBY
SHELBY
3-5-7
5-6-8
6-7-11
5-8-10
7-11-19
6-8-12
5-7-10
6-7-10
8-9-13
EL 78
Moist, Loose, Gray, Yellow, Brown and Black, Silty SAND, Trace Rounded Gravel (SM) [A-2-4]
EL 71
Moist, Medium Stiff, Yellow, Gray and Red, CLAY (CL) [A-7-5]
EL 54
Moist, Stiff, Dark Gray, Clayey SILT (ml) [a-4]
EL 45
Wet, Medium Dense, Gray and Dark Gray, Silty Fine to Medium SAND (SM) [A-2-4]
EL 42
Moist, Very Stiff, Dark Gray and Black, Micaceous Silt, Little Clay, Trace Fine Sand, Trace Organics (ml) [a-4]
EL 36
Moist, Very Stiff, Red and Gray, CLAY (CH) [A-7-5]
EL 31.5
EL 31
W.L. (0)
BORING IRW-97
N 612677, E 432386
N
C
16-9-10
24-20-20
3-4-6
11-16-11
4-7-8
14-14-16
5-4-6
4-6-8
SHELBY
8-12-14
8-10-11
6-9-16
9-14-17
9-14-18
SHELBY
8-9-16
15-19-22
10-15-20
33-29-50/6"
EL 63.6
W.L. (0)
EL 71
FILL Sampled As: Moist, Medium Dense, Brown, Silty SAND, Little Gravel
EL 69
FILL Sampled As: Moist, Dense, Brown, Silty SAND, Some Gravel
EL 67
Moist, Stiff, Red, Light Brown, and Gray, CLAY, Little Sand
EL 63
(CL) [A-6]
EL 61
Moist, Stiff, Red, Purple, Light Brown, and Gray, CLAY, Little Sand (CL) [A-7-6]
Moist, Very Stiff, Red, Purple, Light Brown, and Gray, CLAY, Trace Sand (CH) [A-7-5]
EL 59
Moist, Stiff, Red, Purple, Light Brown, and Gray, CLAY, Trace Sand
EL 53
(CL) [A-7-6]
Moist, Very Stiff, Gray, Light Brown, Red, and Black, CLAY, Trace Sand, Trace Lignite
EL 47
(CL) [A-6]
Moist, Very Stiff, Gray, Light Brown, and Black, CLAY, Little Lignite, Trace Sand (CL) [A-4]
EL 32
Moist, Hard, Gray and Brown, Silty CLAY, Trace Sand (CL) [A-6]
EL 30
Moist, Hard, Gray and Brown, CLAY, Trace Sand (CH) [A-7-6]
EL 28
Moist, Hard, Gray and Brown, CLAY, Some Sand (CL) [A-6]
EL 22
Moist, Hard, Red and Gray, CLAY, Trace Sand (ML) [A-7-5]
EL 17
Wet, Hard, Gray, SILT, Some Sand, Little Mica (ML) [A-4]
EL 13
Moist, Very Dense, Gray and Black, SAND, Some Silt, Trace Mica (SM) [A-2-4]
EL 11
BORING IBR-18C
N 612738, E 432442
N
C
2-1-4
4-4-4
9-11-8
6-7-12
6-7-11
SHELBY
10-11-14
9-12-15
26-17-14
7-9-14
12-14-19
9-10-11
7-12-15
SHELBY
11-13-17
10-13-24
16-24-25
13-16-25
20-19-22
15-20-30
15-22-31
33-28-35
51-50/4"
42-38-50/5"
50/5"
42-46-50/5"
EL 3.6
W.L. (0)
EL 71
Moist, Loose, Gray and Brown, Clayey SAND, Little Silt (sc-sm) [a-2-4]
EL 70
Moist, Loose, Gray and Brown, Silty Fine to Medium SAND, Some Clay (sm) [a-2-4]
EL 62
Wet, Very Stiff, Gray, Red and Yellow, CLAY, Some Sand, Some Silt (CL) [A-7-5]
EL 54
Wet, Very Stiff, Gray and Brown, CLAY, And Silt, Little Lignite, Trace Sand (CL) [A-6]
EL 38
Wet, Very Stiff, Gray and Red, SILT, And Clay (MH) [A-7-6]
EL 22
Wet, Dense, Red and Gray, Silty SAND, Little Clay (SM) [A-2-4]
EL 11
Wet, Hard, Red and Gray to Dark Gray, Clayey SILT, Trace Fine Sand (ml) [a-4]
EL 7
Wet, Dense, Gray to Dark Gray, Silty Fine to Medium SAND, Trace Clay (sp-sm) [a-2-4]
EL -3
Wet, Hard, Gray, CLAY, And Silt (CL) [A-4]
EL -8
Wet, Very Dense, Brown, Well-graded SAND, Trace Silt (SW-SM) [A-2-4]
EL -29.5
BORING IDWT-20
N 612744, E 432489
EL 79.0
Phi/SU
Ko/OCR
44°
28
43°
31
43°
43°
42°
42°
42°
43°
48°
47°
42°
48°
45°
41°
0.61-tsf
0.66-tsf
33°
0.88-tsf
0.93-tsf
0.98-tsf
1.08-tsf
1.09-tsf
46.6
4.1
2.5
2.6
2.9
2.7
2.7
2.6
2.6
2.6

DATUM EL. -60.00

NOTES:

1. FOR BORING NOTES AND INFORMATION SEE SHEET NO. 278 OF 803.
2. FOR BORING LOCATIONS SEE CONSTRUCTION PLAN SHEETS.

UNOFFICAL WEBSITE COPY

3/2/2010 12:55:49 PM
M:\PROJECTS\2003\03059_DELTRNPK\SR1MALL\CADD\2809003\PLANS\BO067_R16_SR1.DGN

DELAWARE DEPARTMENT OF TRANSPORTATION	ADDENDUMS / REVISIONS	SCALE 0 10 20 30 FEET	SR1 / I-95 INTERCHANGE	CONTRACT 28-090-03	BRIDGE NO.	RETAINING WALL 16 BORING & DRIVE TESTS	R16-5 SHEET NO. 623
				COUNTY NEW CASTLE	DESIGNED BY: JLT		TOTAL SHTS. 803
					CHECKED BY: EMK		

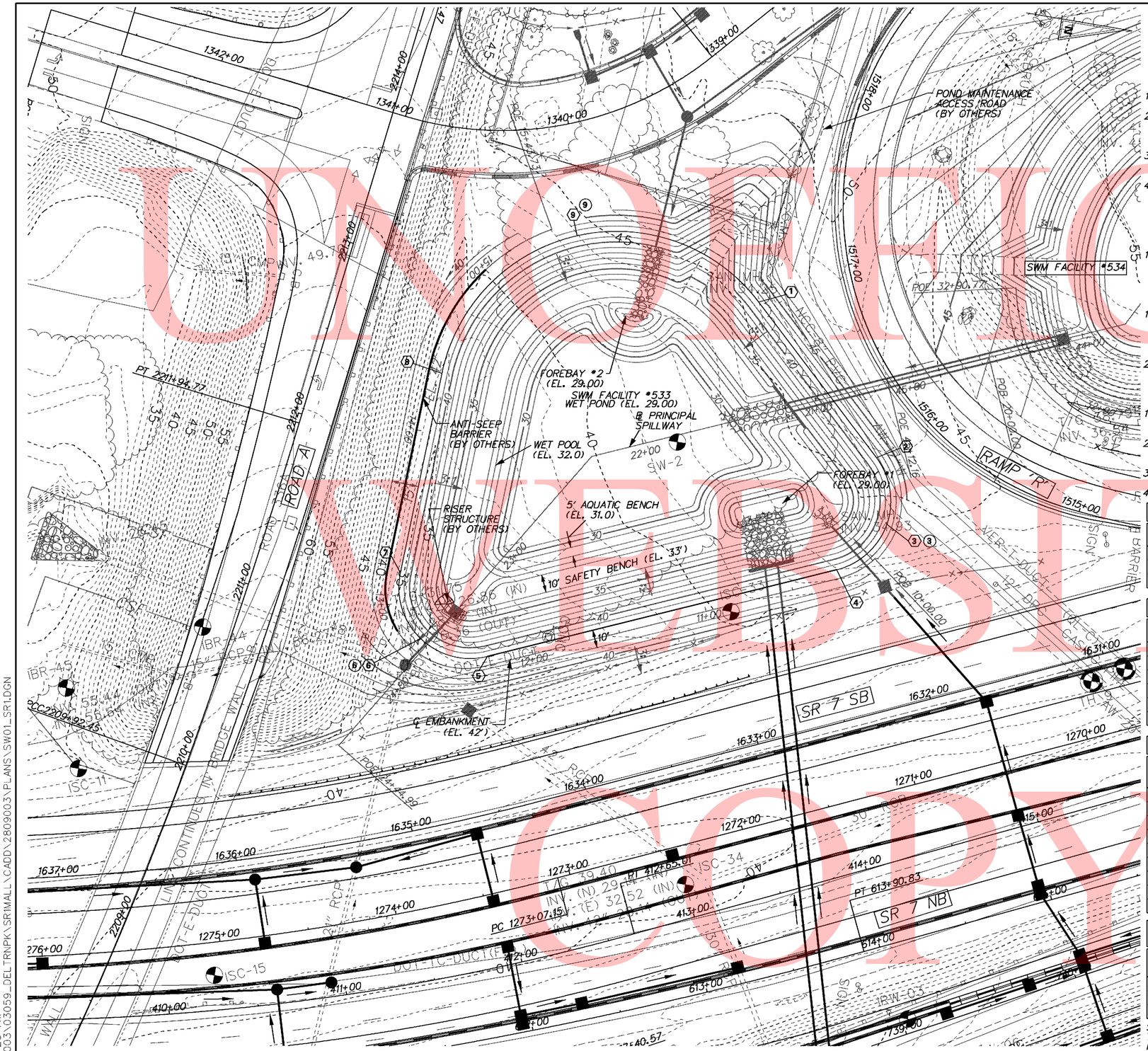

PLAN – SWM FACILITY NO. 533

NOTE:

CONSTRUCTION OF DelDOT FACILITY #533 SHALL BE COMPLETED, BY OTHERS, UNDER CONTRACT NO. T201009004 AND LEFT AS A SEDIMENT BASIN. CONVERSION OF THE FACILITY TO A PERMANENT STORMWATER MANAGEMENT FACILITY SHALL BE PAID FOR UNDER ITEM 271001 (STORMWATER MANAGEMENT POND).

GENERAL

1. THE STORMWATER MANAGEMENT POND SHALL FUNCTION AS A SEDIMENT BASIN DURING CONSTRUCTION.
2. THE POND SHALL BE CONSTRUCTED IN ACCORDANCE WITH THE FOLLOWING SECTIONS OF THE STANDARD SPECIFICATIONS:
   SECTION 271 - STORMWATER MANAGEMENT POND
3. UPON COMPLETION OF POND CONSTRUCTION, AS-BUILT PLANS OF THE BASIN CONTOURS SHALL BE SUBMITTED TO THE DELDOT STORMWATER ENGINEER.
4. ANY DISTURBANCE TO THE POND BASIN SHALL BE REPAIRED IN ACCORDANCE WITH THE FOLLOWING:
   - SOIL RETENTION BLANKET MULCH, TYPE 4 (734015) ABOVE ELEV. 32.0
   - PERMANENT GRASS SEED WET GROUND (734015) FROM ELEV. 32.0 TO ELEV. 33.0.
   - PERMANENT GRASS SEED DRY GROUND (734013) ABOVE ELEV 33.0.

CONSTRUCTION SEQUENCE

1. INSPECT PERIMETER SEDIMENT CONTROLS AND SKIMMER DEWATERING DEVICE INSTALLED DURING CONTRACT NO. T201009004. REPLACE AND/OR REPAIR THESE MEASURES AS NEEDED.

MAINTENANCE OF POND AS A SEDIMENT BASIN

1. CONTRACTOR SHALL MAINTAIN OR REPLACE THE CLEAN OUT STAKE PLACED DURING CONTRACT NO. T201009004. THE STAKE SHALL CLEARLY MARK THE CLEAN OUT ELEVATION AND SHALL BE DRIVEN INTO THE GROUND AT A LOCATION CLEARLY VISIBLE FROM THE EMBANKMENT. SEDIMENT REMOVED FROM THE BASIN SHALL BE DISPOSED OF AT A LOCATION APPROVED BY THE ENGINEER.
2. INSPECT THE BASIN IMMEDIATELY AFTER EVERY RAIN AND MAKE REPAIRS AS NECESSARY.

CONVERSION TO PERMANENT STORMWATER MANAGEMENT POND

1. CONVERT THE BASIN INTO THE PERMANENT STORMWATER MANAGEMENT POND AFTER ALL AREAS DRAINING TO THE POND HAVE BEEN PERMANENTLY STABILIZED AND THE ENGINEER HAS APPROVED THE CONVERSION.
2. REMOVE EXCESS ACCUMULATED SEDIMENT, IF ANY, TO THE SPECIFIED FINISHED LINES AND GRADES SHOWN IN THE PLAN AND DISPOSE SEDIMENT AT A LOCATION APPROVED BY THE ENGINEER.
3. COMPLETE STABILIZATION OF ALL BARE AREAS.
4. REMOVE EROSION AND SEDIMENT CONTROL MEASURES AND DE-ACTIVATE SKIMMER DEWATERING DEVICE.

SEDIMENT CLEANOUT:

WHEN POND IS FUNCTIONING AS A SEDIMENT BASIN, CLEANOUT SHALL OCCUR WHEN SEDIMENT HAS FILLED UP TO ELEVATION 31.00.

BASELINE PRINCIPAL SPILLWAY

STATION	NORTHING	EASTING
POB 20+00.00	610,119.7	432,585.3
PI 22+29.78	609,909.2	432,677.5
POE 24+44.99	609,797.0	462,861.1

BASELINE POND EMBANKMENT

STATION / RADIUS	NORTHING	EASTING
POB 10+00 / 45.0'	610,075.5	432,707.1
PT 10+23.27	610,057.5	432,721.4
PC 12+27.76 / 45.0'	609,870.2	432,803.5
PT 13+18.61	609,807.1	432,760.7
PC 14+33.99 / 107.39'	609,811.2	462,645.4
POE 15+43.73	609,865.8	432,555.6

POND FACILITY BASELINE STAKEOUT

@ SWM NO. 533 STA. / OFFSET	NORTHING	EASTING	CURVE NO.	RADIUS
1 21+17.95, 61.59 RT.	609,986.9	432,576.2		
2 20+74.84, 39.00 LT.	610,066.8	432,651.0		
3 20+78.21, 76.78 LT.	610,078.8	432,687.0	3	40'
4 21+11.60, 94.76 LT.	610,055.5	432,716.8	6	40'
5 23+52.61, 29.83 LT.	609,870.6	432,797.8	9	100'
6 23+69.67, 4.89 RT.	609,832.1	432,794.3		
7 23+49.36, 37.82 RT.	609,814.6	432,759.8		
8 22+49.85, 93.91 RT.	609,818.6	432,645.6		
9 22+07.70, 122.17 RT.	609,880.4	432,556.7		

POND FACILITY DESIGN SUMMARY

DESIGN STORM	FACILITY INFLOW	FACILITY DISCHARGE	WATER SURFACE EL.	STORAGE VOLUME
2-YEAR	84.07 CFS	29.48 CFS	35.59 FT.	2.185 AC.-FT.
10-YEAR	133.59 CFS	78.53 CFS	37.13 FT.	3.325 AC.-FT.
100-YEAR	256.97 CFS	121.41 CFS	40.81 FT.	6.706 AC.-FT.

STORMWATER MANAGEMENT WET POND SHALL PROVIDE QUALITY MANAGEMENT OF THE FIRST ONE INCH OF RUNOFF. THE POND SHALL ALSO PROVIDE QUANTITY MANAGEMENT FOR THE 2, 10, AND 100 YEAR STORMS.

HAZARD CLASSIFICATION: CLASS A AS PER POND 378 CODE

DRAINAGE AREA TO FACILITIES #533 & 534: 85.79 ACRES

UNOFFICIAL WORKING COPY

DELAWARE DEPARTMENT OF TRANSPORTATION

ADDENDUMS / REVISIONS

SCALE 0 30 60 90 FEET

SR1 / I-95 INTERCHANGE

CONTRACT 28-090-03 | COUNTY NEW CASTLE | BRIDGE NO. | DESIGNED BY: MK | CHECKED BY: REP

STORMWATER MANAGEMENT DETAILS DelDOT SWM FACILITY #533

SHEET NO. 624 | TOTAL SHTS. 803

2/6/2009 10:09:28 AM
M:\PROJECTS\2003\03059_DELTRNPK\SRIMALL\CADD\2809003\PLANS\SW01_SR1.DGN

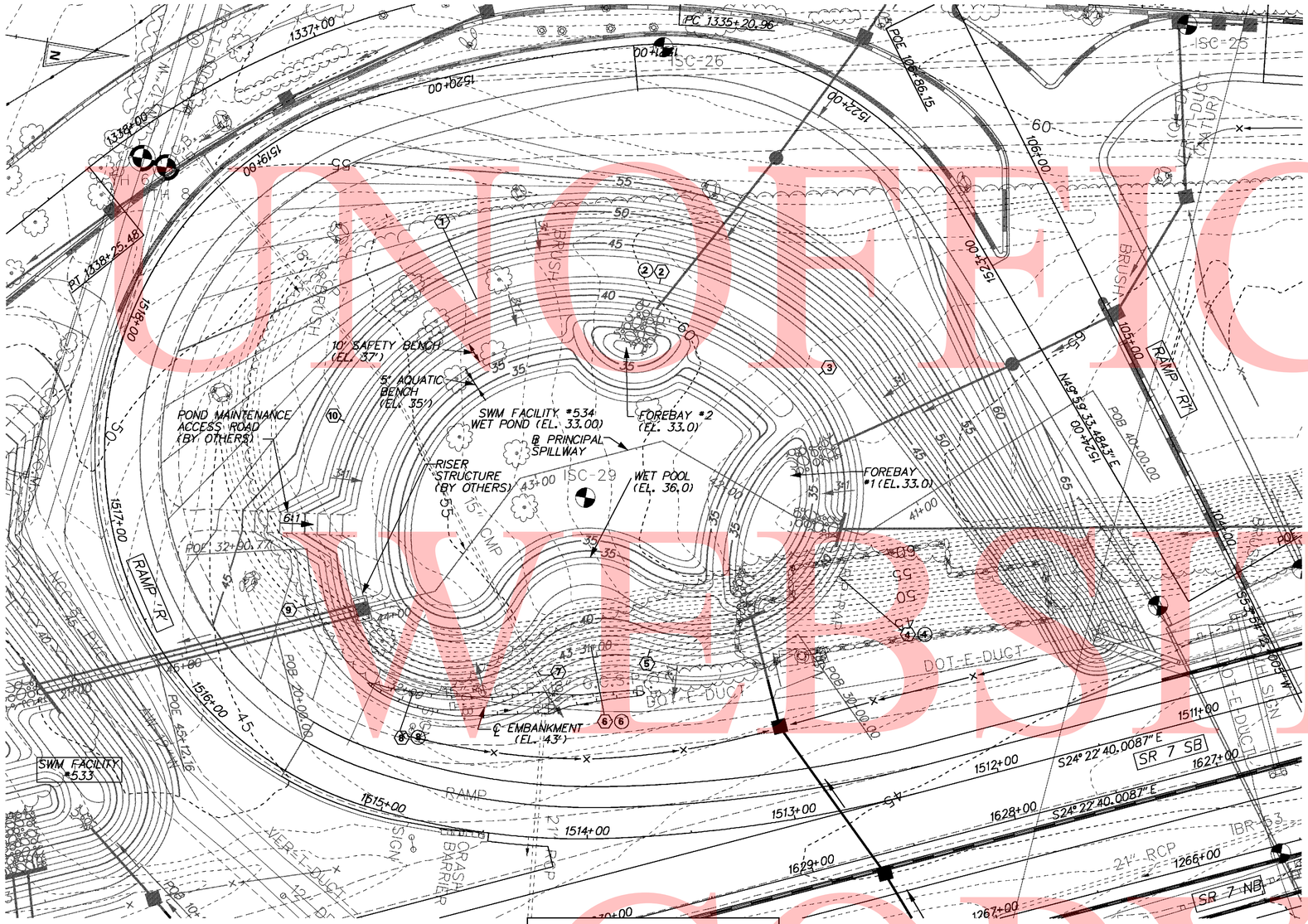

PLAN – SWM FACILITY NO. 534

NOTE:
CONSTRUCTION OF DelDOT FACILITY #534 SHALL BE COMPLETED, BY OTHERS, UNDER CONTRACT NO. T201009004 AND LEFT AS A SEDIMENT BASIN. CONVERSION OF THE FACILITY TO A PERMANENT STORMWATER MANAGEMENT FACILITY SHALL BE PAID FOR UNDER ITEM 271002 (STORMWATER MANAGEMENT POND).

GENERAL

1. THE STORMWATER MANAGEMENT POND SHALL FUNCTION AS A SEDIMENT BASIN DURING CONSTRUCTION.
2. THE POND SHALL BE CONSTRUCTED IN ACCORDANCE WITH THE FOLLOWING SECTIONS OF THE STANDARD SPECIFICATIONS:
   SECTION 271 - STORMWATER MANAGEMENT POND
3. UPON COMPLETION OF POND CONSTRUCTION, AS-BUILT PLANS OF THE BASIN CONTOURS SHALL BE SUBMITTED TO THE DELDOT STORMWATER ENGINEER.
4. ANY DISTURBANCE TO THE POND BASIN SHALL BE REPAIRED IN ACCORDANCE WITH THE FOLLOWING:
   - SOIL RETENTION BLANKET MULCH, TYPE 4 (734015) ABOVE ELEV. 36.0
   - PERMANENT GRASS SEED WET GROUND (734015) FROM ELEV. 36.0 TO ELEV. 37.0.
   - PERMANENT GRASS SEED DRY GROUND (734013) ABOVE ELEV 37.0.

CONSTRUCTION SEQUENCE

1. INSPECT PERIMETER SEDIMENT CONTROLS AND SKIMMER DEWATERING DEVICE INSTALLED DURING CONTRACT NO. T201009004. REPLACE AND/OR REPAIR THESE MEASURES AS NEEDED.

MAINTENANCE OF POND AS A SEDIMENT BASIN

1. CONTRACTOR SHALL MAINTAIN OR REPLACE THE CLEAN OUT STAKE PLACED DURING CONTRACT NO. T201009004. THE STAKE SHALL CLEARLY MARK THE CLEAN OUT ELEVATION AND SHALL BE DRIVEN INTO THE GROUND AT A LOCATION CLEARLY VISIBLE FROM THE EMBANKMENT. SEDIMENT REMOVED FROM THE BASIN SHALL BE DISPOSED OF AT A LOCATION APPROVED BY THE ENGINEER.
2. INSPECT THE BASIN IMMEDIATELY AFTER EVERY RAIN AND MAKE REPAIRS AS NECESSARY.

CONVERSION TO PERMANENT STORMWATER MANAGEMENT POND

1. CONVERT THE BASIN INTO THE PERMANENT STORMWATER MANAGEMENT POND AFTER ALL AREAS DRAINING TO THE POND HAVE BEEN PERMANENTLY STABILIZED AND THE ENGINEER HAS APPROVED THE CONVERSION.
2. REMOVE EXCESS ACCUMULATED SEDIMENT, IF ANY, TO THE SPECIFIED FINISHED LINES AND GRADES SHOWN IN THE PLAN AND DISPOSE SEDIMENT AT A LOCATION APPROVED BY THE ENGINEER.
3. COMPLETE STABILIZATION OF ALL BARE AREAS.
4. REMOVE EROSION AND SEDIMENT CONTROL MEASURES AND DE-ACTIVATE SKIMMER DEWATERING DEVICE.

BASELINE PRINCIPAL SPILLWAY

STATION	NORTHING	EASTING
POB 40+00.00	610,485.8	432,405.7
PI 41+30.14	610,389.0	432,492.7
PI 41+64.90	610,354.4	432,489.1
PI 42+36.73	610,287.0	432,464.4
PI 43+07.50	610,222.5	432,493.6
PI 43+75.16	610,191.6	432,553.8
POE 45+12.16	610,065.9	432,608.2

BASELINE POND EMBANKMENT

STATION / RADIUS	NORTHING	EASTING
POB 30+00 / 85.0'	610,366.4	432,544.6
PRC 30+75.74/ 55.0'	610,297.2	432,568.6
PRC 31+27.91 / 69.0'	610,250.2	432,586.4
PCC 32+64.43 / 127.0'	610,136.2	432,568.9
POE 32+90.77	610,127.8	432,544.0

POND FACILITY BASELINE STAKEOUT

@ SWM NO. 534 STA. / OFFSET	NORTHING	EASTING	CURVE NO.	RADIUS
1 43+05.83, 88.46 RT.	610,187.5	432,412.3	2	148'
2 -	610,272.6	432,390.4	4	80'
3 41+87.82, 64.62 RT.	610,355.1	432,420.5	6	60'
4 41+36.05, 21.98 LT.	610,380.9	432,513.9	8	64'
5 41+92.51, 89.51 LT.	610,297.7	432,563.6	10	122'
6 43+51.35, 75.64 LT.	610,269.8	432,567.2		
7 42+33.93, 125.39 LT.	610,246.5	432,583.1		
8 43+97.08, 44.68 LT.	610,189.3	432,603.5		
9 44+27.00, 8.21 RT.	610,140.9	432,566.8		
10 43+36.12, 83.78 RT.	610,134.9	432,480.7		

POND FACILITY DESIGN SUMMARY

DESIGN STORM	FACILITY INFLOW	FACILITY DISCHARGE	WATER SURFACE EL.	STORAGE VOLUME
2-YEAR	65.98 CFS	22.07 CFS	38.25 FT.	1.318 AC.-FT.
10-YEAR	111.11 CFS	41.54 CFS	39.51 FT.	2.244 AC.-FT.
100-YEAR	200.56 CFS	87.47 CFS	41.51 FT.	3.876 AC.-FT.

STORMWATER MANAGEMENT WET POND SHALL PROVIDE QUALITY MANAGEMENT OF THE FIRST ONE INCH OF RUNOFF. THE POND SHALL ALSO PROVIDE QUANTITY MANAGEMENT FOR THE 2, 10, AND 100 YEAR STORMS.

HAZARD CLASSIFICATION: CLASS A AS PER POND 378 CODE

DRAINAGE AREA TO FACILITIES #533 & 534: 85.79 ACRES

SEDIMENT CLEANOUT:
WHEN POND IS FUNCTIONING AS A SEDIMENT BASIN, CLEANOUT SHALL OCCUR WHEN SEDIMENT HAS FILLED UP TO ELEVATION 34.50.

UNOFFICIAL WEBSITE COPY

DELAWARE DEPARTMENT OF TRANSPORTATION

ADDENDUMS / REVISIONS

SCALE 0 30 60 90 FEET

SR1 / I-95 INTERCHANGE

CONTRACT	BRIDGE NO.	
28-090-03	DESIGNED BY:	MK
COUNTY	CHECKED BY:	REP
NEW CASTLE		

STORMWATER MANAGEMENT DETAILS DelDOT SWM FACILITY #534

SHEET NO. 625
TOTAL SHTS. 803

2/6/2009 10:09:28 AM
M:\PROJECTS\2003\03059_DELTRNPK\SR1MALL\CADD\2809003\PLANS\SW10_SR1.DGN

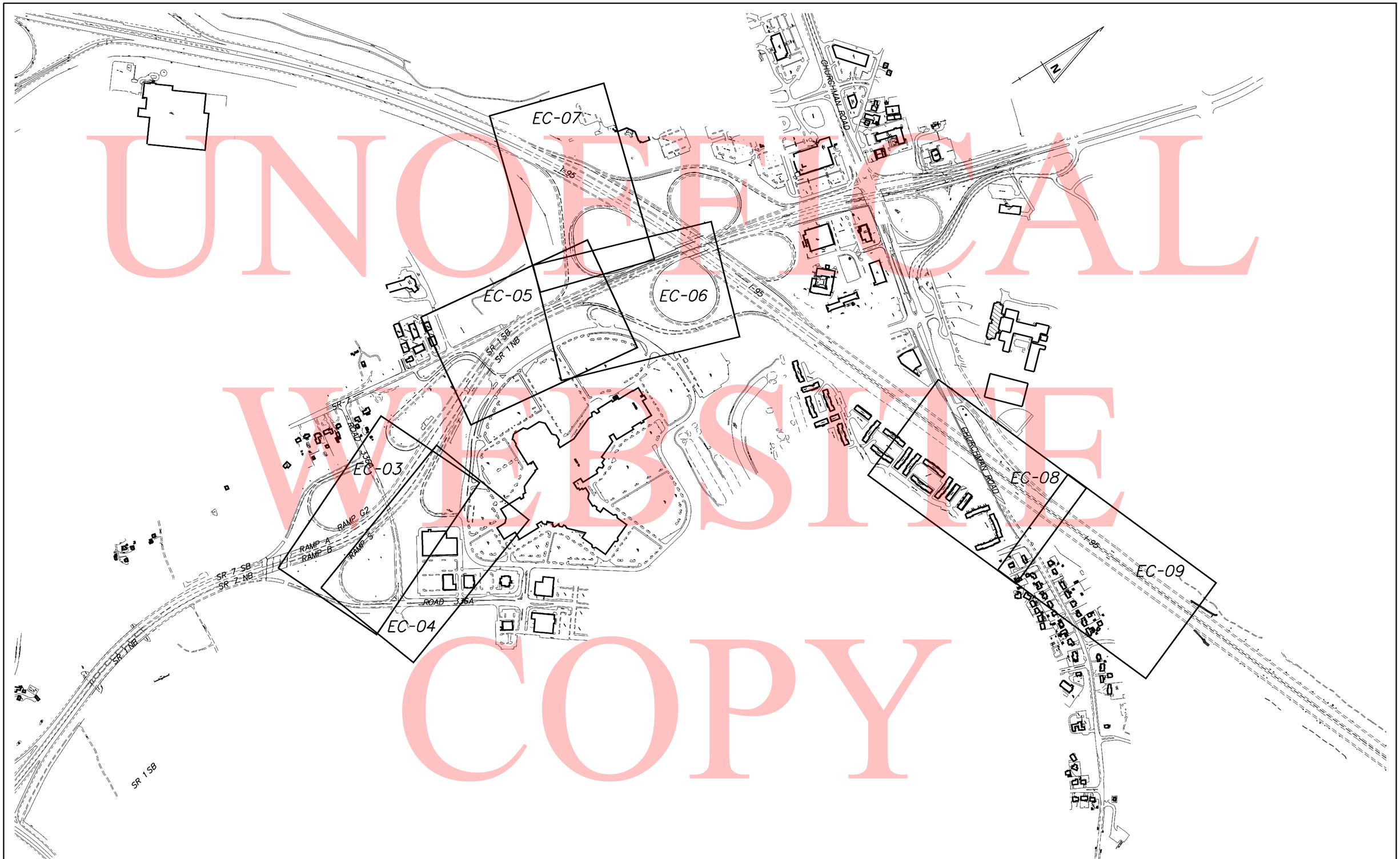

UNOFFICIAL WEBSITE COPY

11/11/2010 11:09:39 AM
M:\PROJECTS\2003\03059_DEL TRNPK\SRIMALL\CADD\2809003\PLANS\CP50_EC_SR1.DGN

DELAWARE DEPARTMENT OF TRANSPORTATION

ADDENDUMS / REVISIONS

SCALE 0 400 800 1200 FEET

SR1 / I-95 INTERCHANGE

CONTRACT	BRIDGE NO.
28-090-03	DESIGNED BY:
COUNTY	
NEW CASTLE	CHECKED BY:

ENVIRONMENTAL COMPLIANCE PLAN

EC-01	SHEET NO.
626	TOTAL SHTS.
803	

ENVIRONMENTAL COMPLIANCE NOTES

1. GENERAL NOTES

A. THE PURPOSE OF THESE ENVIRONMENTAL COMPLIANCE SHEETS IS TO IDENTIFY THOSE ITEMS ASSOCIATED WITH ENVIRONMENTAL COMPLIANCE. IMPACT CALCULATIONS ARE FOR AGENCY REPORTING PURPOSES ONLY AND ARE NOT TO BE USED FOR BIDDING PURPOSES.

B. IF A DEPARTURE FROM THE APPROVED PLANS (WHICH WOULD AFFECT ANY OF THE NATURAL AND/OR CULTURAL RESOURCE ISSUES) IS NECESSARY, THE DelDOT ENVIRONMENTAL STUDIES SECTION SHALL BE CONTACTED AT (302) 760-2264 TO ALLOW THE DEPARTMENT TO COORDINATE WITH THE APPROPRIATE RESOURCE AGENCIES FOR APPROVAL.

C. USE OF THESE SHEETS DOES NOT ALLEVIATE THE CONTRACTOR'S RESPONSIBILITY TO COMPLY WITH ALL CONDITIONS SET FORTH IN THE ENVIRONMENTAL STATEMENT AND PERMITS.

D. ALL CONSTRUCTION ACTIVITIES SHALL OCCUR WITHIN THE L.O.C. AS DESIGNATED ON THE PLAN SHEETS. ANY DEVIATION FROM THIS L.O.C. BY THE CONTRACTOR SHALL REQUIRE APPROVAL OBTAINED BY THE CONTRACTOR FROM A.C.O.E, DNREC, AND SHPO.

E. THE IDENTIFIED PERMANENT AND TEMPORARY IMPACTS TO WETLANDS SHOWN ON THE ENVIROMENTAL COMPLIANCE SHEETS ARE THE ONLY AUTHORIZED IMPACTS. ANY CHANGE IN THE CONTRACT PLANS AFFECTING THESE AREAS WILL REQUIRE REVIEW AND APPROVAL FROM ACOE AND DNREC.

F. CONTACT INFORMATION:
DelDOT, ENVIRONMENTAL STUDIES, TERRY FULMER, 1-302-760-2095
CORPS OF ENGINEERS, REGULATORY, 1-215-656-5583
DNREC, WETLANDS, JOANNE LEE, 1-302-739-9943
DNREC, NATURAL HERITAGE, KAREN BENNETT, 1-302-739-9912
SHPO, HISTORIC PRESERVATION, GWEN DAVIS, 1-302-739-5865

2. NATURAL RESOURCE ISSUES:

A. TEMPORARY WETLAND IMPACTS SHALL BE RESTORED TO ORIGINAL GRADES, AND SEEDED USING THE FOLLOWING SEED MIX (TEMPORARY GRASS SEEDING - WET GROUND 734018).

B. PERMIT REQUIREMENTS / APPROVALS*
ARMY CORPS OF ENGINEERS (ACOE) - INDIVIDUAL PERMIT

INDIVIDUAL PERMIT: CENAP-OP-R-200300700-11**
- APPROVED FEBRUARY 26, 2007; MODIFIED OCTOBER 29, 2007 AND OCTOBER 21, 2008; EXPIRES DECEMBER 31, 2013

DELAWARE DEPARTMENT OF NATURAL RESOURCES AND ENVIRONMENTAL CONTROL (DNREC)

SUBAQUEOUS LAND PERMIT: SP-014/06**
- APPROVED DECEMBER 8, 2006; EXPIRES DECEMBER 8, 2011
WETLANDS PERMIT: WE-388/06**
- APPROVED DECEMBER 8, 2006; EXPIRES DECEMBER 8, 2011
WATER QUALITY CERTIFICATION: WQ-389/06**
- APPROVED DECEMBER 8, 2006; EXPIRES DECEMBER 8, 2011
DELAWARE COASTAL ZONE MANAGEMENT
FEDERAL CONSISTENCY CERTIFICATION- **
APPROVED DECEMBER 12, 2005 AND AUGUST 24, 2006; NO EXPIRATION

* - THE PERMITS / APPROVALS LISTED ARE THOSE REQUIRED FOR THIS PROJECT. THE LISTED PERMITS / APPROVALS SHALL BE DISPLAYED ON-SITE DURING THE ENTIRE CONSTRUCTION PERIOD.

** - THE CONTRACTOR MUST ENSURE THAT THESE PERMITS/APPROVALS (ACOE,DNREC) ARE IN THEIR POSSESSION PRIOR TO THE BEGINNING OF CONSTRUCTION IN THE PERMITTED AREA(S) AND SHALL BE DISPLAYED ON-SITE DURING THE ENTIRE CONSTRUCTION PERIOD.

C. CONSTRUCTION RESTRICTIONS (TIME FRAMES, ETC.) FOR FISHERIES, ENDANGERED SPECIES, MIGRATORY SPECIES WILL BE IN ACCORDANCE WITH PROJECT PERMITS.

ENDANGERED SPECIES: NONE

FISHERIES: NONE

MIGRATORY BIRDS: APRIL 15 - AUGUST 1(INCLUSIVE). EITHER BEGIN CONSTRUCTION ON THE UNDERSIDE OF THE EAGLE RUN STRUCTURE PRIOR TO 4/15 (TO PREVENT BIRDS FROM NESTING) OR WAIT UNTIL AFTER 8/1(AFTER HATCHLING'S HAVE LEFT) TO BEGIN WORK TO UNDERSIDE. IF NEITHER OF THESE OPTIONS IS PRACTICABLE, THEN PRIOR TO 4/14 DETERRENT NETTING WITH 3/4" X 3/4" MAXIMUM OPENINGS (OR SIMILAR DEVICE) SHALL BE INSTALLED HORIZONTALLY UNDERNEATH THE STRUCTURE. THE NETTING SHOULD BE PULLED TAUT AND ATTACHED IN A WAY THAT BIRDS ARE UNABLE TO ENTER THE AREA BETWEEN THE NETTING AND THE STRUCTURE.

D. STREAM CREATION/RESTORATION:

I. THE TOP 300MM OF NATURAL STREAMBED MATERIAL WILL BE STOCKPILED AND REUSED TO CONSTRUCT THE NEW CHANNEL. PAYMENT FOR EXCAVATING, STOCKPILING AND FORMING NEW STREAM CHANNEL WITH NATURAL STREAMBED MATERIAL SHALL BE INCIDENTAL TO 20200, EXCAVATION AND EMBANKMENT.

II. THE CONTRACTOR SHALL FOLLOW THE SPECIAL PROVISIONS OF ITEM *712531 - CHANNEL BED FILL IN REGARDS TO THE SALVAGING OF ON-SITE NATURAL STREAM BOTTOM MATERIAL OR THE FURNISHING OF OFF-SITE MATERIAL. ALL RIPRAP IN THE CHANNEL BOTTOM (I.E. BELOW THE WATER LINE) SHALL BE CHOKED WITH BORROW TYPE 'B' SO THAT ALL OF THE VOIDS IN THE RIPRAP ARE FILLED WITH MATERIAL. PAYMENT UNDER ITEM *2009002 - BORROW TYPE 'B'. THE RIPRAP SHALL THEN BE COVERED WITH CHANNEL BED FILL AS SHOWN ON THE CONSTRUCTION PLAN SHEETS. PAYMENT UNDER ITEM *712531 - CHANNEL BED FILL.

III. OTHER AREAS OF THE CHANNEL BOTTOM AFFECTED BY CONSTRUCTION (INCLUDING, BUT NOT LIMITED TO, THE LOCATION OF SUMP PITS, STABILIZED OUTFALLS, TEMPORARY PIPES AND/OR SANDBAG DIKES AND DIVERSIONS) SHALL BE RESTORED TO EXISTING CONDITIONS. ANY CAVITIES OR SCOUR HOLES RESULTING FROM CONSTRUCTION ACTIVITIES SHALL BE FILLED WITH CHANNEL BED FILL. PAYMENT UNDER ITEM *712531 - CHANNEL BED FILL.

IV. WHEN ALL EROSION AND SEDIMENT CONTROL MEASURES ARE REMOVED AND THE STREAM RETURNS TO ITS NATURAL FLOW CONDITIONS, THE FLOW MUST REMAIN ABOVE GROUND AND ABOVE THE RIPRAP (I.E. THE FLOW CANNOT BE 'LOST' IN THE RIPRAP). IF THIS IS NOT ACHIEVED, THE CONTRACTOR WILL BE REQUIRED TO TAKE CORRECTIVE ACTION AT THE CONTRACTOR'S EXPENSE.

V. RIPRAP TO BE PLACED ON THE SIDESLOPES (ABOVE THE WATER LINE) SHALL BE BACKFILLED WITH TOPSOIL, SEEDED AND MULCHED IN ACCORDANCE WITH THE CONSTRUCTION PLAN SHEETS.

E. PROTECTION OF RESOURCES:

I. WETLAND AND STREAM RESOURCES OCCUR WITHIN AND IN THE VICINITY OF THE PROJECT. ACCESS INTO THESE RESOURCE AREAS WHICH IS NOT SPECIFICALLY AUTHORIZED BY THE ACOE AND DNREC PERMITS (AS ILLUSTRATED ON THESE ENVIRONMENTAL COMPLIANCE SHEETS) IS STRICTLY PROHIBITED.

II. SILT FENCE OR CONSTRUCTION SAFETY FENCE SHALL BE USED ALONG THE LIMITS OF CONSTRUCTION IN ALL AREAS WHERE WATER/WETLANDS ARE BEING IMPACTED (AS SHOWN ON EC SHEETS), AND ALSO IN ANY AREA WHERE WATER/WETLANDS EXIST WITHIN 20 FEET OF THE LOC (AS SHOWN ON CONSTRUCTION PLANS). CONTRACTOR ACCESS BEYOND THE LOC IS STRICTLY PROHIBITED.

3. CULTURAL RESOURCE ISSUES:

A. THERE ARE NO KNOWN SITES WITHIN THE PROJECT LIMITS OF CONSTRUCTION. ANY WORK OUTSIDE THE L.O.C. LIMITS, INCLUDING OFF-SITE DISPOSAL SITES AND STOCKPILE AREAS WILL NEED TO BE IN AN UPLAND (I.E. NON-WETLAND, NON-CORPS JURISDICTIONAL) SITE CLEARED BY THE STATE HISTORICAL PRESERVATION OFFICE (SHPO).

4. WETLAND MITIGATION

A. ALL WETLAND REPLACEMENT OBLIGATIONS HAVE BEEN MET THROUGH THE CATHCART WETLAND MITIGATION SITE.

SHEETS PREPARED BY: RUMMEL, KLEPPER & KAHL, LLP
DATE: MAY 4, 2010

SHEETS UPDATED: MAY 4, 2010

WETLANDS/WATERWAYS DELINEATED BY RUMMEL, KLEPPER & KAHL, LLP
JD APPROVALS JANUARY 5, 2005; MARCH 14, 2006; JANUARY 9, 2007

WETLAND/WATERS BOUNDARIES HAVE BEEN MODIFIED TO ACCURATELY REPRESENT JURISDICTIONAL RESOURCES REMAINING FOLLOWING CONSTRUCTION OF THE MAINLINE WIDENING PHASE OF THE PROJECT.

ALL IDENTIFIED WATERS/WETLANDS ON THESE ENVIRONMENTAL COMPLIANCE SHEETS ARE ACOE JURISDICTIONAL. DNREC JURISDICTION IS IDENTIFIED ON THE RESPECTIVE SHEETS.

PERMANENT WETLAND IMPACTS

IDENTIFIER	IMPACT	AREA (SF)	AREA (AC)	VOLUME (CY)	WETLAND NAME
4-W1	FILL	451	0.0104	114	WAH
5-W1	FILL	329	0.0076	233	WE
5-W2	FILL	2,039	0.0468	1,888	WA1
5-W3	FILL	2,351	0.0540	1,235	WE & WT
6-W1	FILL	1,228	0.0282	712	WE & WT
6-W2	FILL	2,448	0.0562	1,194	WD
6-W3	FILL	2,751	0.0632	1,406	WD
6-W4	FILL	724	0.0166	142	WU
6-W5	RIPRAP	353	0.0081	24	WU
7-W1	FILL	45	0.0010	2	WQ
8-W1	EXCAVATION	907	0.0208	N/A	NW9-2B
9-W1	EXCAVATION	228	0.0052	N/A	NW9-2C
9-W2	EXCAVATION	1,131	0.0260	N/A	NW9-2D
TOTAL PERMANENT WETLAND IMPACTS		14,985	0.3441	6,950	

PERMANENT OPEN WATERS IMPACTS

IDENTIFIER	IMPACT	AREA (SF)	AREA (AC)	VOLUME (CY)	WETLAND NAME
3-01	HYDROLOGY LOSS	373	0.0086	N/A	WAG
3-02	FILL	76	0.0017	4	WAG
4-01	FILL	1,867	0.0429	920	WAG
4-02	HYDROLOGY LOSS	80	0.0018	N/A	WAG
5-01	RIPRAP	805	0.0185	157	WF-4
5-02	FILL	1,184	0.0272	170	WF-4
TOTAL PERMANENT OPEN WATER IMPACTS		4,385	0.1007	1,251	

TEMPORARY WETLAND IMPACTS

IDENTIFIER	IMPACT	AREA (SF)	AREA (AC)	VOLUME (CY)	WETLAND NAME
3-WT1	E&S AREA	1,259	0.0289	N/A	WAE
3-WT2	E&S AREA	119	0.0027	N/A	WC
3-WT3	E&S AREA	189	0.0043	N/A	WC
4-WT1	E&S AREA	65	0.0015	N/A	WAH
5-WT1	E&S AREA	2,838	0.0651	N/A	WA1
6-WT1	E&S AREA	70	0.0016	N/A	WU
7-WT1	E&S AREA	922	0.0212	N/A	WQ
TOTAL TEMPORARY WETLAND IMPACTS		5,462	0.1253	N/A	

TEMPORARY OPEN WATER IMPACTS

IDENTIFIER	IMPACT	AREA (SF)	AREA (AC)	VOLUME (CY)	WETLAND NAME
3-OT3	E&S AREA	44	0.0010	N/A *	WA
5-OT1	E&S AREA	221	0.0051	N/A *	WF-4
TOTAL TEMPORARY OPEN WATER IMPACTS		265	0.0061	N/A	

*TEMPORARY IMPACT DUE TO SILT FENCE PLACEMENT, VOLUME DOES NOT APPLY.

UNOFFICIAL WEBSITE COPY

LEGEND

	TEMPORARY IMPACT AREA
	PERMANENT IMPACT AREA
WL	WETLAND BOUNDARY
OHW/WL	ORD. HIGH WATER / WETLAND
OHW	ORDINARY HIGH WATER

XX / XX — IMPACT AREA TYPE ID. (SEE BELOW) / IMPACT AREA ID. AND/OR NUMBER

T = TEMPORARY IMPACT

W = FEDERALLY REGULATED WATERS OF THE U.S. (WETLANDS)

O = FEDERALLY REGULATED WATERS OF THE U.S. (AREA OTHER THAN WETLANDS)

NOTE:
WATERS WA AND WK ON THIS SHEET ARE DNREC JURISDICTIONAL.

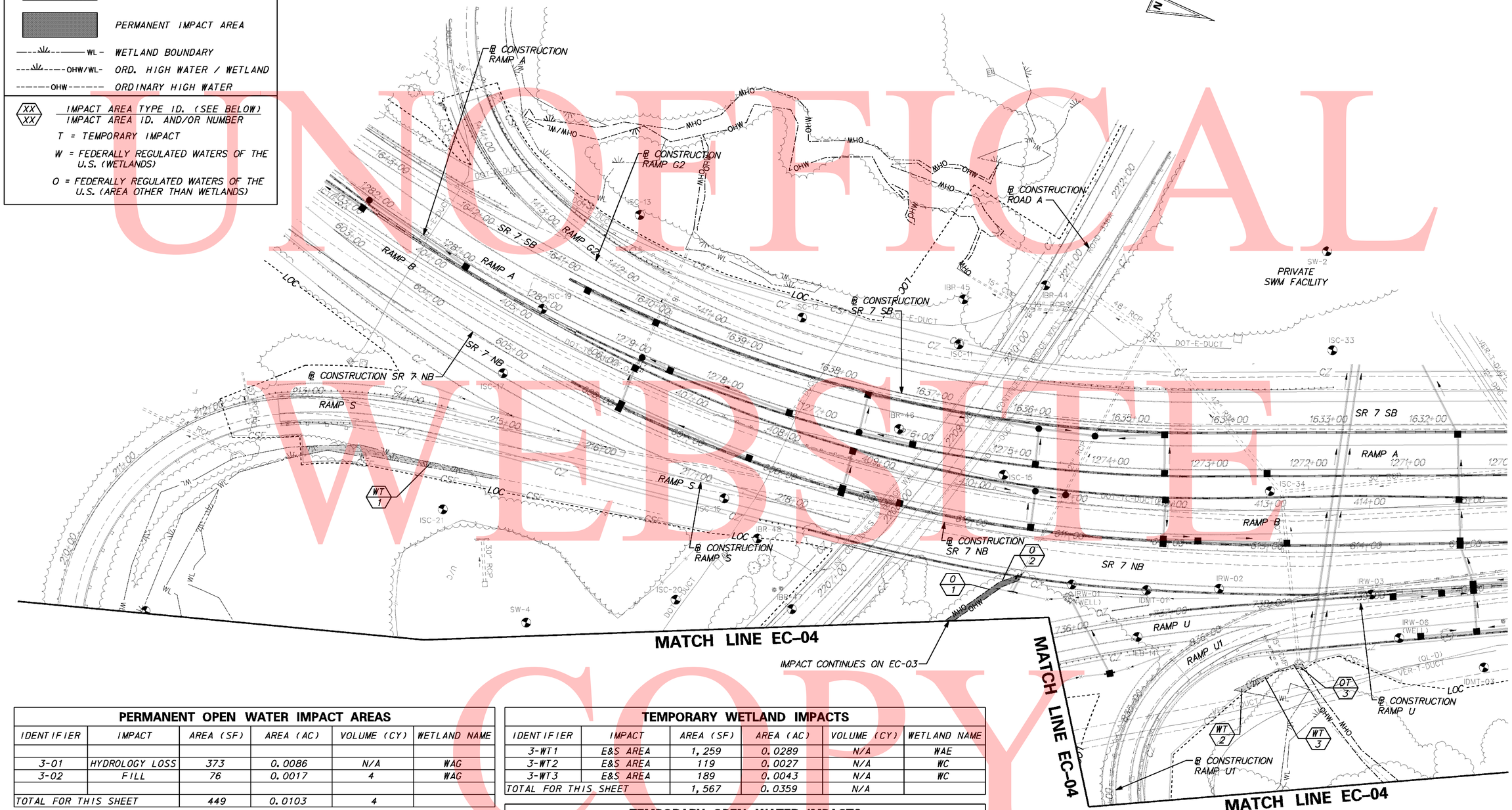

PERMANENT OPEN WATER IMPACT AREAS

IDENTIFIER	IMPACT	AREA (SF)	AREA (AC)	VOLUME (CY)	WETLAND NAME
3-01	HYDROLOGY LOSS	373	0.0086	N/A	WAG
3-02	FILL	76	0.0017	4	WAG
TOTAL FOR THIS SHEET		449	0.0103	4	

TEMPORARY WETLAND IMPACTS

IDENTIFIER	IMPACT	AREA (SF)	AREA (AC)	VOLUME (CY)	WETLAND NAME
3-WT1	E&S AREA	1,259	0.0289	N/A	WAE
3-WT2	E&S AREA	119	0.0027	N/A	WC
3-WT3	E&S AREA	189	0.0043	N/A	WC
TOTAL FOR THIS SHEET		1,567	0.0359	N/A	

TEMPORARY OPEN WATER IMPACTS

IDENTIFIER	IMPACT	AREA (SF)	AREA (AC)	VOLUME (CY)	WETLAND NAME
3-OT3	E&S AREA	44	0.0010	N/A *	WA
TOTAL FOR THIS SHEET		44	0.0010	N/A	

*TEMPORARY IMPACT DUE TO SILT FENCE PLACEMENT, VOLUME DOES NOT APPLY.

UNOFFICIAL WEBSITE COPY

8/20/2010 2:19:17 PM
M:\PROJECTS\2003\03059_DELTRIPK\SRIMALL\CADD\2809003\PLANS\GP52_EC_SR1.DGN

DELAWARE DEPARTMENT OF TRANSPORTATION

ADDENDUMS / REVISIONS

SCALE 0 50 100 150 FEET

SR1 / I-95 INTERCHANGE

CONTRACT	BRIDGE NO.
28-090-03	DESIGNED BY:
COUNTY	
NEW CASTLE	CHECKED BY:

ENVIRONMENTAL COMPLIANCE PLAN

	EC-03
SHEET NO.	628
TOTAL SHTS.	803

PERMANENT WETLAND IMPACTS					
IDENTIFIER	IMPACT	AREA (SF)	AREA (AC)	VOLUME (CY)	WETLAND NAME
4-W1	FILL	451	0.0104	114	WAH
TOTAL FOR THIS SHEET		451	0.0104	114	

PERMANENT OPEN WATERS IMPACTS					
IDENTIFIER	IMPACT	AREA (SF)	AREA (AC)	VOLUME (CY)	WETLAND NAME
4-01	FILL	1,867	0.0429	920	WAG
4-02	HYDROLOGY LOSS	80	0.0018	N/A	WAG
TOTAL FOR THIS SHEET		1,947	0.0447	920	

TEMPORARY WETLAND IMPACTS					
IDENTIFIER	IMPACT	AREA (SF)	AREA (AC)	VOLUME (CY)	WETLAND NAME
4-WT1	E&S AREA	65	0.0015	N/A	WAH
TOTAL FOR THIS SHEET		65	0.0015	N/A	

NOTE: SMALL AREA 3-WT1 WILL REMAIN DUE TO HYDROLOGY INPUT FROM MALL PARKING LOT CATCH BASIN.

LEGEND

- TEMPORARY IMPACT AREA
- PERMANENT IMPACT AREA
- WL - WETLAND BOUNDARY
- OHW/WL - ORD. HIGH WATER / WETLAND
- OHW - ORDINARY HIGH WATER

XX/XX — IMPACT AREA TYPE ID. (SEE BELOW) / IMPACT AREA ID. AND/OR NUMBER

T = TEMPORARY IMPACT

W = FEDERALLY REGULATED WATERS OF THE U.S. (WETLANDS)

O = FEDERALLY REGULATED WATERS OF THE U.S. (AREA OTHER THAN WETLANDS)

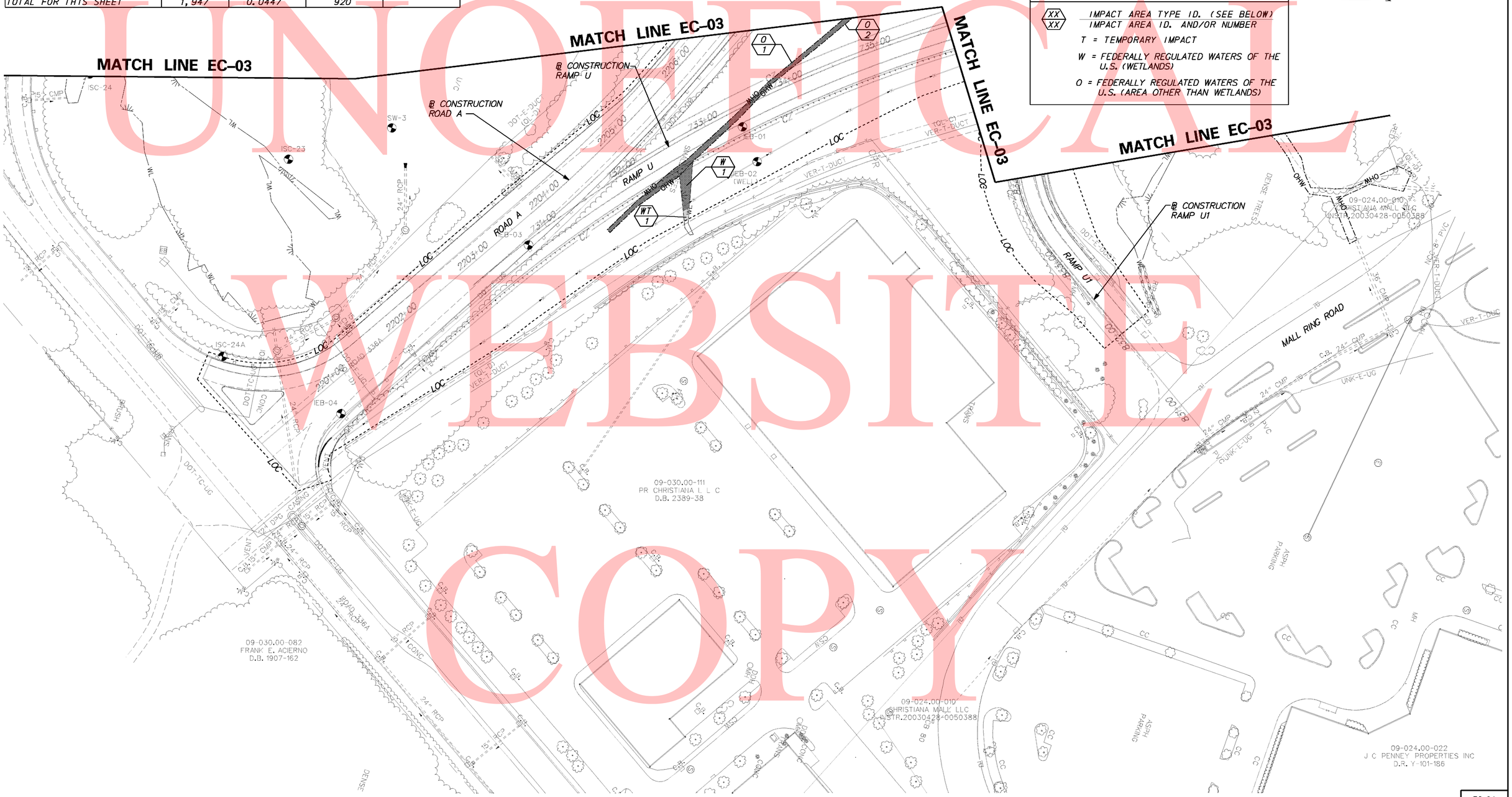

UNOFFICIAL WEBSITE COPY

7/29/2010 6:02:15 PM
M:\PROJECTS\2003\03059_DELTRNPK\SRIMALL\CADD\2809003\PLANS\CP53_EC_SR1.DGN

DELAWARE DEPARTMENT OF TRANSPORTATION

ADDENDUMS / REVISIONS

SCALE 0 50 100 150 FEET

SR1 / I-95 INTERCHANGE

CONTRACT	BRIDGE NO.
28-090-03	DESIGNED BY:
COUNTY	
NEW CASTLE	CHECKED BY:

ENVIRONMENTAL COMPLIANCE PLAN

EC-04
SHEET NO.
629
TOTAL SHTS.
803

PERMANENT WETLAND IMPACTS

IDENTIFIER	IMPACT	AREA (SF)	AREA (AC)	VOLUME (CY)	WETLAND NAME
5-W1	FILL	329	0.0076	233	WE
5-W2	FILL	2,039	0.0468	1,888	WA1
5-W3	FILL	2,351	0.0540	1,235	WE & WT
TOTAL FOR THIS SHEET		4,719	0.1768	3,356	

PERMANENT OPEN WATERS IMPACTS

IDENTIFIER	IMPACT	AREA (SF)	AREA (AC)	VOLUME (CY)	WETLAND NAME
5-01	RIPRAP	805	0.0185	157	WF-4
5-02	FILL	1,184	0.0272	170	WF-4
TOTAL FOR THIS SHEET		1,989	0.0457	327	

LEGEND

- TEMPORARY IMPACT AREA
- PERMANENT IMPACT AREA
- WL - WETLAND BOUNDARY
- OHW/WL - ORD. HIGH WATER / WETLAND
- OHW - ORDINARY HIGH WATER
- XX / XX — IMPACT AREA TYPE ID. (SEE BELOW) / IMPACT AREA ID. AND/OR NUMBER
  - T = TEMPORARY IMPACT
  - W = FEDERALLY REGULATED WATERS OF THE U.S. (WETLANDS)
  - O = FEDERALLY REGULATED WATERS OF THE U.S. (AREA OTHER THAN WETLANDS)

NOTE:
WATERS WF-4 ON THIS SHEET IS DNREC JURISDICTIONAL.

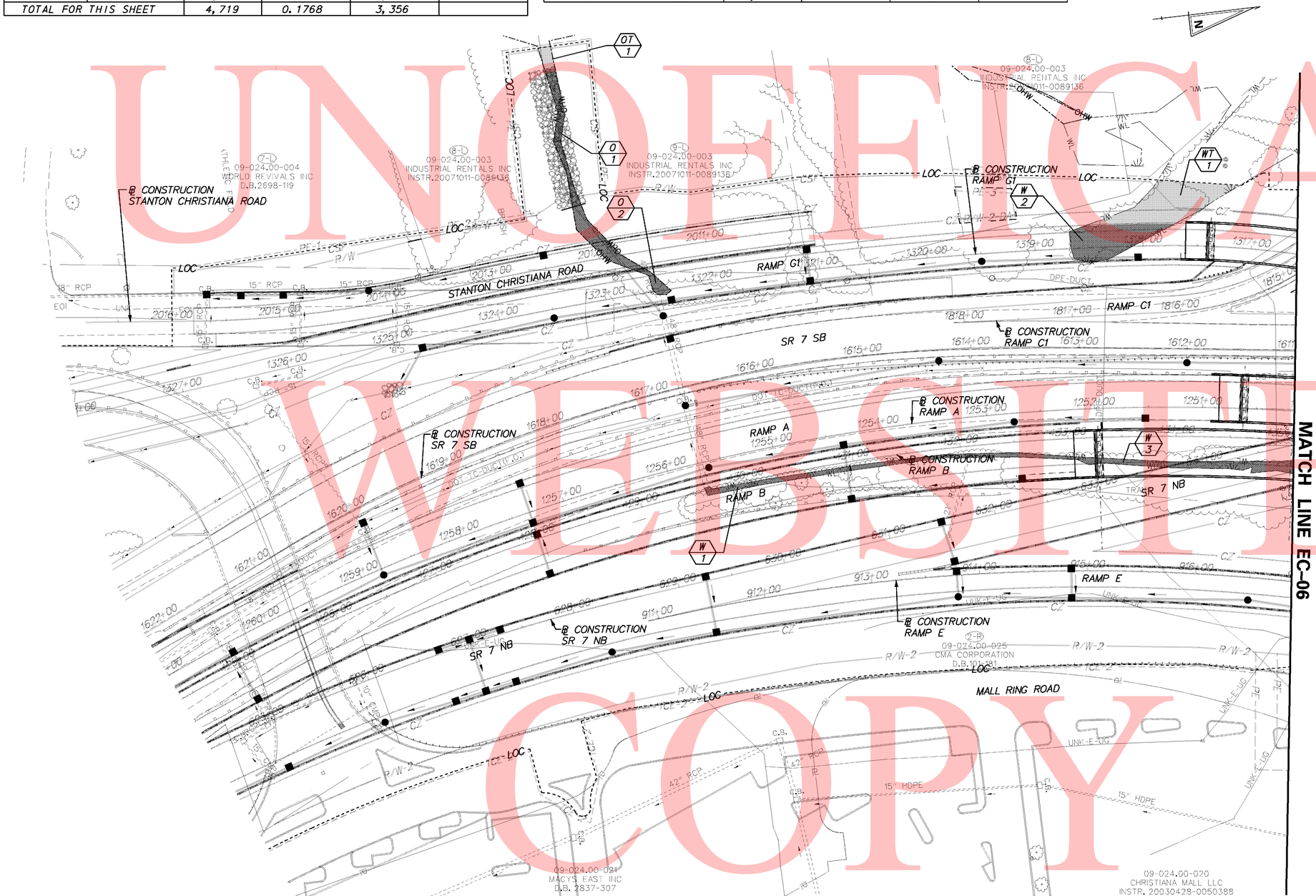

TEMPORARY WETLAND IMPACTS

IDENTIFIER	IMPACT	AREA (SF)	AREA (AC)	VOLUME (CY)	WETLAND NAME
5-WT1	E&S	2,838	0.0651	N/A	WA1
TOTAL FOR THIS SHEET		2,838	0.0651	N/A	

TEMPORARY OPEN WATER IMPACTS

IDENTIFIER	IMPACT	AREA (SF)	AREA (AC)	VOLUME (CY)	WETLAND NAME
5-OT1	E&S	221	0.0051	N/A *	WF-4
TOTAL FOR THIS SHEET		221	0.0051	N/A	

*TEMPORARY IMPACT DUE TO SILT FENCE PLACEMENT, VOLUME DOES NOT APPLY.

UNOFFICIAL WEBSITE COPY

9/15/2010 11:56:33 AM
M:\PROJECTS\2003\03059_DELTRNPK\SRIMALL\CADD\2809003\PLANS\CP54_EC_SR1.DGN

DELAWARE DEPARTMENT OF TRANSPORTATION

ADDENDUMS / REVISIONS

SCALE 0 50 100 150 FEET

SR1 / I-95 INTERCHANGE

CONTRACT	BRIDGE NO.
28-090-03	DESIGNED BY:
COUNTY	
NEW CASTLE	CHECKED BY:

ENVIRONMENTAL COMPLIANCE PLAN

EC-05
SHEET NO. 630
TOTAL SHTS. 803

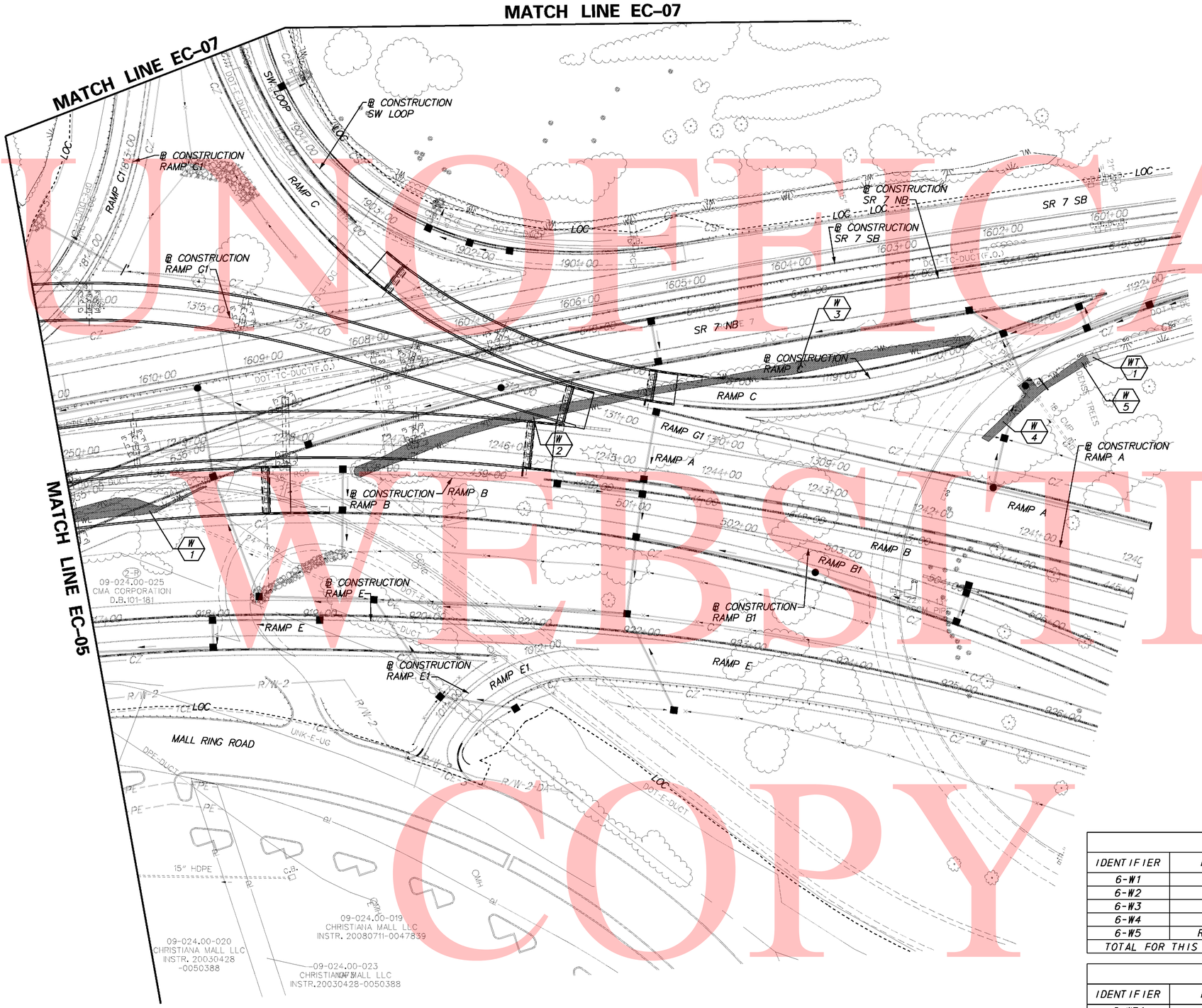

LEGEND

- TEMPORARY IMPACT AREA
- PERMANENT IMPACT AREA
- WL - WETLAND BOUNDARY
- OHW/WL - ORD. HIGH WATER / WETLAND
- OHW - ORDINARY HIGH WATER
- XX/XX — IMPACT AREA TYPE ID. (SEE BELOW) / IMPACT AREA ID. AND/OR NUMBER
- T = TEMPORARY IMPACT
- W = FEDERALLY REGULATED WATERS OF THE U.S. (WETLANDS)
- O = FEDERALLY REGULATED WATERS OF THE U.S. (AREA OTHER THAN WETLANDS)

PERMANENT WETLAND IMPACTS

IDENTIFIER	IMPACT	AREA (SF)	AREA (AC)	VOLUME (CY)	WETLAND NAME
6-W1	FILL	1,228	0.0282	712	WE & WT
6-W2	FILL	2,448	0.0562	1,194	WD
6-W3	FILL	2,751	0.0632	1,406	WD
6-W4	FILL	724	0.0166	142	WU
6-W5	RIPRAP	353	0.0081	24	WU
TOTAL FOR THIS SHEET		6,276	0.1441	2,766	

TEMPORARY WETLAND IMPACTS

IDENTIFIER	IMPACT	AREA (SF)	AREA (AC)	VOLUME (CY)	WETLAND NAME
6-WT1	E&S	70	0.0016	N/A	WU
TOTAL FOR THIS SHEET		70	0.0016	N/A	

UNOFFICIAL WEBSITE COPY

7/29/2010 6:11:36 PM
M:\PROJECTS\2003\03059_DELTRNPK\SR1MALL\CADD\2809003\PLANS\CP55_EC_SR1.DGN

DELAWARE DEPARTMENT OF TRANSPORTATION

ADDENDUMS / REVISIONS

SCALE 0 50 100 150 FEET

SR1 / I-95 INTERCHANGE

CONTRACT 28-090-03 | COUNTY NEW CASTLE | BRIDGE NO. | DESIGNED BY: | CHECKED BY:

ENVIRONMENTAL COMPLIANCE PLAN

EC-06 | SHEET NO. 631 | TOTAL SHTS. 803

PERMANENT WETLAND IMPACTS					
IDENTIFIER	IMPACT	AREA (SF)	AREA (AC)	VOLUME (CY)	WETLAND NAME
7-W1	FILL	45	0.0010	2	WO
TOTAL FOR THIS SHEET		45	0.0010	2	

TEMPORARY WETLAND IMPACTS					
IDENTIFIER	IMPACT	AREA (SF)	AREA (AC)	VOLUME (CY)	WETLAND NAME
7-WT1	E&S AREA	922	0.0212	N/A	WO
TOTAL FOR THIS SHEET		922	0.0212	N/A	

LEGEND

- TEMPORARY IMPACT AREA
- PERMANENT IMPACT AREA
- WL – WETLAND BOUNDARY
- OHW/WL – ORD. HIGH WATER / WETLAND
- OHW – ORDINARY HIGH WATER
- XX / XX – IMPACT AREA TYPE ID. (SEE BELOW) / IMPACT AREA ID. AND/OR NUMBER
  - T = TEMPORARY IMPACT
  - W = FEDERALLY REGULATED WATERS OF THE U.S. (WETLANDS)
  - O = FEDERALLY REGULATED WATERS OF THE U.S. (AREA OTHER THAN WETLANDS)

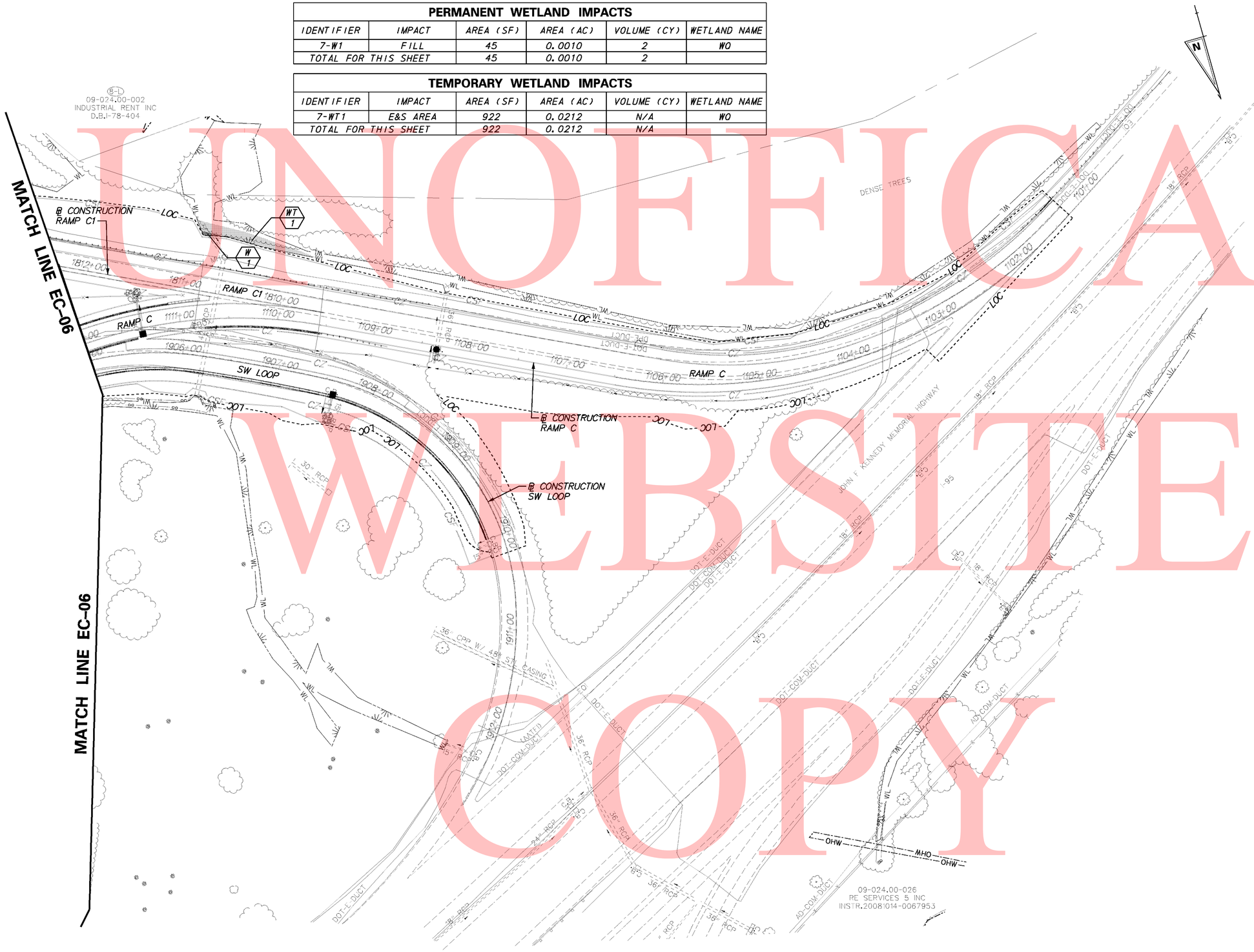

UNOFFICIAL WEBSITE COPY

10/12/2010 9:48:27 AM
M:\PROJECTS\2003\03059_DELTRNPK\SRIMALL\CADD\2809003\PLANS\CP56_EC_SR1.DGN

DELAWARE DEPARTMENT OF TRANSPORTATION

ADDENDUMS / REVISIONS

SCALE 0 50 100 150 FEET

SR1 / I-95 INTERCHANGE

CONTRACT	BRIDGE NO.
28-090-03	DESIGNED BY:
COUNTY	
NEW CASTLE	CHECKED BY:

ENVIRONMENTAL COMPLIANCE PLAN

	EC-07
SHEET NO.	632
TOTAL SHTS.	803

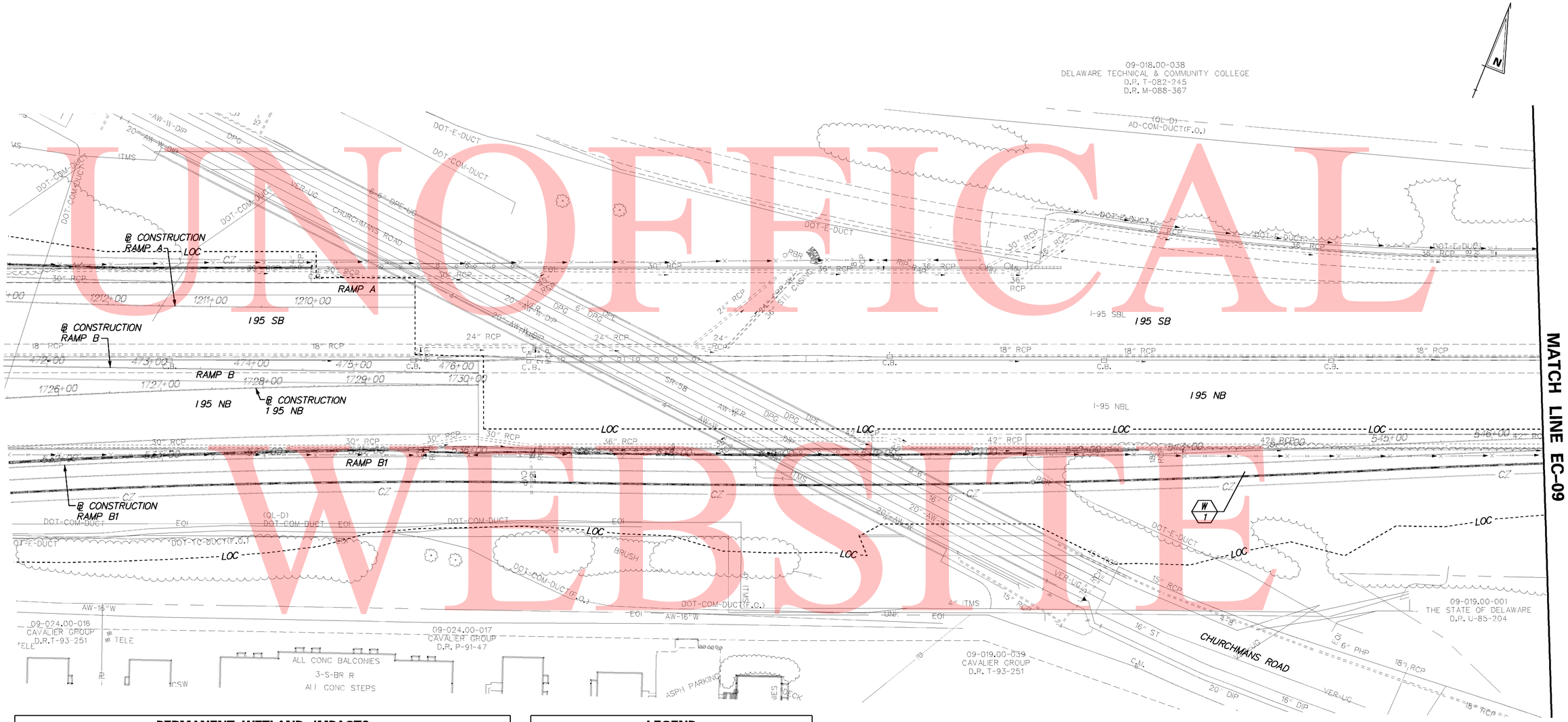

PERMANENT WETLAND IMPACTS					
IDENTIFIER	IMPACT	AREA (SF)	AREA (AC)	VOLUME (CY)	WETLAND NAME
8-W1	EXCAVATION	907	0.0208	N/A	NW9-2B
TOTAL FOR THIS SHEET		907	0.0208	N/A	

LEGEND

- TEMPORARY IMPACT AREA
- PERMANENT IMPACT AREA
- WL - WETLAND BOUNDARY
- OHW/WL - ORD. HIGH WATER / WETLAND
- OHW - ORDINARY HIGH WATER

XX / XX — IMPACT AREA TYPE ID. (SEE BELOW) / IMPACT AREA ID. AND/OR NUMBER

T = TEMPORARY IMPACT

W = FEDERALLY REGULATED WATERS OF THE U.S. (WETLANDS)

O = FEDERALLY REGULATED WATERS OF THE U.S. (AREA OTHER THAN WETLANDS)

UNOFFICAL WEBSITE COPY

9/15/2010 1:51:18 PM
M:\PROJECTS\2003\03059_DELTRNPK\SRIMALL\CADD\2809003\PLANS\CP57_EC_SR1.DGN

DELAWARE DEPARTMENT OF TRANSPORTATION

ADDENDUMS / REVISIONS

SCALE 0 50 100 150 FEET

SR1 / I-95 INTERCHANGE

CONTRACT	BRIDGE NO.
28-090-03	DESIGNED BY:
COUNTY	CHECKED BY:
NEW CASTLE	

ENVIRONMENTAL COMPLIANCE PLAN

	EC-08
SHEET NO.	633
TOTAL SHTS.	803

PERMANENT WETLAND IMPACTS

IDENTIFIER	IMPACT	AREA (SF)	AREA (AC)	VOLUME (CY)	WETLAND NAME
9-W1	EXCAVATION	228	0.0052	N/A	NW9-2C
9-W2	EXCAVATION	1,131	0.0260	N/A	NW9-2D
TOTAL FOR THIS SHEET		1,359	0.0312	N/A	

LEGEND

TEMPORARY IMPACT AREA

PERMANENT IMPACT AREA

WL - WETLAND BOUNDARY

OHW/WL - ORD. HIGH WATER / WETLAND

OHW - ORDINARY HIGH WATER

XX / XX — IMPACT AREA TYPE ID. (SEE BELOW) / IMPACT AREA ID. AND/OR NUMBER

T = TEMPORARY IMPACT

W = FEDERALLY REGULATED WATERS OF THE U.S. (WETLANDS)

O = FEDERALLY REGULATED WATERS OF THE U.S. (AREA OTHER THAN WETLANDS)

UNOFFICAL WEBSITE COPY

9/15/2010 1:52:20 PM
M:\PROJECTS\2003\03059_DELTRNPK\SR1MALL\CADD\2809003\PLANS\CP58_EC_SR1.DGN

DELAWARE DEPARTMENT OF TRANSPORTATION

ADDENDUMS / REVISIONS

SCALE 0 50 100 150 FEET

SR1 / I-95 INTERCHANGE

CONTRACT	BRIDGE NO.
28-090-03	DESIGNED BY:
COUNTY	
NEW CASTLE	CHECKED BY:

ENVIRONMENTAL COMPLIANCE PLAN

EC-09	SHEET NO.
634	TOTAL SHTS.
803	

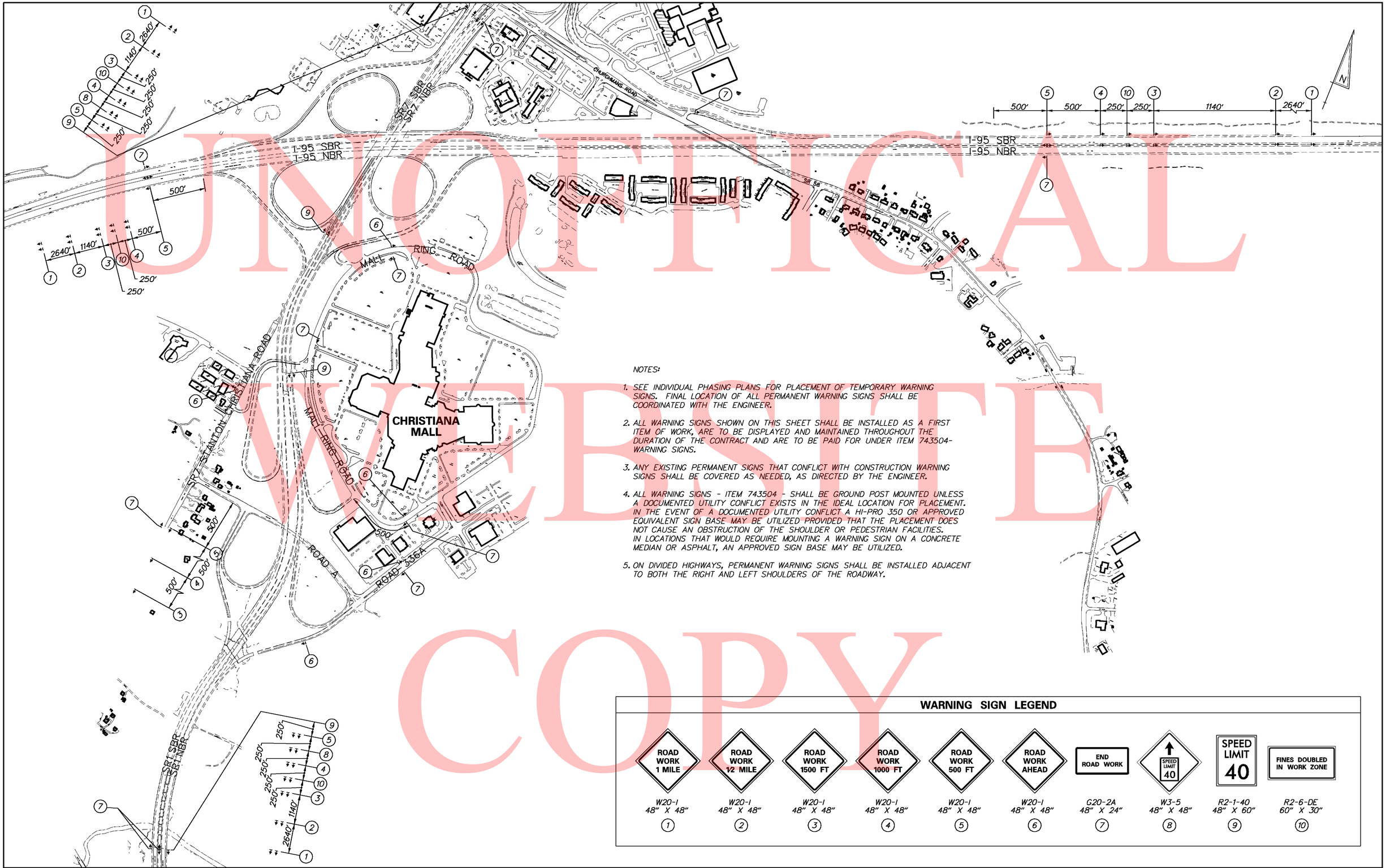

NOTES:

1. SEE INDIVIDUAL PHASING PLANS FOR PLACEMENT OF TEMPORARY WARNING SIGNS. FINAL LOCATION OF ALL PERMANENT WARNING SIGNS SHALL BE COORDINATED WITH THE ENGINEER.
2. ALL WARNING SIGNS SHOWN ON THIS SHEET SHALL BE INSTALLED AS A FIRST ITEM OF WORK, ARE TO BE DISPLAYED AND MAINTAINED THROUGHOUT THE DURATION OF THE CONTRACT AND ARE TO BE PAID FOR UNDER ITEM 743504-WARNING SIGNS.
3. ANY EXISTING PERMANENT SIGNS THAT CONFLICT WITH CONSTRUCTION WARNING SIGNS SHALL BE COVERED AS NEEDED, AS DIRECTED BY THE ENGINEER.
4. ALL WARNING SIGNS - ITEM 743504 - SHALL BE GROUND POST MOUNTED UNLESS A DOCUMENTED UTILITY CONFLICT EXISTS IN THE IDEAL LOCATION FOR PLACEMENT. IN THE EVENT OF A DOCUMENTED UTILITY CONFLICT A HI-PRO 350 OR APPROVED EQUIVALENT SIGN BASE MAY BE UTILIZED PROVIDED THAT THE PLACEMENT DOES NOT CAUSE AN OBSTRUCTION OF THE SHOULDER OR PEDESTRIAN FACILITIES. IN LOCATIONS THAT WOULD REQUIRE MOUNTING A WARNING SIGN ON A CONCRETE MEDIAN OR ASPHALT, AN APPROVED SIGN BASE MAY BE UTILIZED.
5. ON DIVIDED HIGHWAYS, PERMANENT WARNING SIGNS SHALL BE INSTALLED ADJACENT TO BOTH THE RIGHT AND LEFT SHOULDERS OF THE ROADWAY.

WARNING SIGN LEGEND

ROAD WORK 1 MILE	ROAD WORK 1/2 MILE	ROAD WORK 1500 FT	ROAD WORK 1000 FT	ROAD WORK 500 FT	ROAD WORK AHEAD	END ROAD WORK	SPEED LIMIT 40	SPEED LIMIT 40	FINES DOUBLED IN WORK ZONE
W20-1 48" X 48"	W20-1 48" X 48"	W20-1 48" X 48"	W20-1 48" X 48"	W20-1 48" X 48"	W20-1 48" X 48"	G20-2A 48" X 24"	W3-5 48" X 48"	R2-1-40 48" X 60"	R2-6-DE 60" X 30"
1	2	3	4	5	6	7	8	9	10

UNOFFICIAL WEBSITE COPY

DELAWARE DEPARTMENT OF TRANSPORTATION

ADDENDUMS / REVISIONS

SCALE 0 400 800 1200 FEET

SR1 / I-95 INTERCHANGE

CONTRACT	BRIDGE NO.	
28-090-03	DESIGNED BY:	CDW
COUNTY		
NEW CASTLE	CHECKED BY:	EDJ

CONSTRUCTION PHASING, M.O.T., AND EROSION CONTROL PLAN

SHEET NO. 635

TOTAL SHTS. 803

9/30/2010 2:14:47 PM
M:\PROJECTS\2003\03059_DELTRNPK\SR1MALL\CADD\2809003\PLANS\CS01_SR1.DGN

TRAFFIC CONTROL- GENERAL NOTES

1. MAINTENANCE OF TRAFFIC DURING LANE CLOSURES AND LANE SHIFTS SHALL CONFORM TO CASE 5 OR CASE 9 OF THE DELAWARE MUTCD.

2. GRADING AND MAINTAINING HOT-MIX TRM THAT IS BEING USED AS A TRAVELWAY, DRIVEWAY, ACCESS RAMP, ETC. SHALL BE INCIDENTAL TO ITEM 763500 - MAINTENANCE OF TRAFFIC. EXCESS BASE COURSE MATERIAL SHALL BE PUSHED AHEAD AND USED IN THE NEXT SEGMENT AND SHALL BE INCIDENTAL TO THE PARTICULAR BASE COURSE PAY ITEM. NO PAYMENT SHALL BE MADE FOR TEMPORARY ROADWAY MATERIAL (TRM) USED TO PROTECT EDGE DROP-OFFS, UNLESS THE MATERIAL IS EVENTUALLY UTILIZED AS PART OF A PERMANENT ROADWAY AT WHICH TIME THE MATERIAL WOULD BE PAID FOR UNDER THE RESPECTIVE CONTRACT MATERIAL ITEM. CONSTRUCTION OF A PLANNED RUNAROUND OR DETOUR WOULD BE ELIGIBLE FOR PAYMENT AS SPECIFIED IN THE CONTRACT.

3. THIS PROJECT IS CONSIDERED A SIGNIFICANT PROJECT AS DEFINED BY DELDOT'S WORK ZONE MOBILITY PROCEDURES AND GUIDELINES. A TYPE B TRANSPORTATION MANAGEMENT PLAN (TMP) HAS BEEN PREPARED AND IS AVAILABLE FOR VIEWING BY CONTACTING THE DEPARTMENT'S SAFETY PROGRAMS MANAGER AT (302)659-4060. ALL MONITORING REQUIREMENTS OF THE TMP SHALL BE CONDUCTED BY DELDOT FORCES UNLESS OTHERWISE DIRECTED BY THE ENGINEER. MODIFICATIONS TO THE TMP SHALL BE COMPLETED BY THE CONTRACTOR IF CHANGES TO THE TIME RESTRICTIONS OR THE TRAFFIC CONTROL PLAN ARE DESIRED. THE MODIFIED TMP SHALL BE PREPARED BY A PROFESSIONAL ENGINEER, REGISTERED IN THE STATE OF DELAWARE.

4. A TYPE II TRUCK MOUNTED ATTENUATOR (TMA) SHALL BE REQUIRED ON THIS PROJECT DURING THE FOLLOWING PAVEMENT OPERATIONS: TEMPORARY/PERMANENT PAVEMENT MARKINGS, ROADSIDE SPRAYING, PATCHING, MILLING, SWEEPING, TEMPORARY TRAFFIC BARRIER PLACEMENT OR AS DIRECTED BY THE ENGINEER. THE ROLL AHEAD DISTANCE SHALL BE AS PER THE MANUFACTURER'S RECOMMENDATIONS. THE TMA SHALL CONFORM TO THE REQUIREMENTS OF SECTION 6F.82 OF THE DELAWARE MUTCD.

TRAFFIC CONTROL- PROJECT NOTES

1. AS THE FIRST ORDER OF WORK, PRIOR TO ANY CONSTRUCTION, THE ADVANCE SIGNING WILL BE ERECTED AS SHOWN ON THE WARNING SIGN PLAN. THE WARNING SIGNS SHALL REMAIN IN PLACE THROUGHOUT CONSTRUCTION AND MAINTAINED IN SATISFACTORY CONDITION IN ACCORDANCE WITH THE SPECIFICATIONS AND ATSSA'S QUALITY GUIDELINES FOR TEMPORARY TRAFFIC CONTROL DEVICES.

2. THE CONTRACTOR SHALL SUPPLY MESSAGE BOARDS UNDER ITEM 743004 - FURNISH AND MAINTAIN PORTABLE CHANGEABLE MESSAGE SIGN. MOVING THE MESSAGE BOARDS TO DIFFERENT LOCATIONS DURING CONSTRUCTION WILL BE INCIDENTAL TO ITEM 743004. AT A MINIMUM, MESSAGE BOARDS SHALL BE POSTED TWO WEEKS PRIOR TO THE START OF CONSTRUCTION AND CHANGES IN TRAFFIC PATTERNS. SIX PLASTIC DRUMS SHALL BE PLACED IN FRONT OF THE MESSAGE BOARD.

3. ROADWAY AND SHOULDER WORK SHALL BE PERFORMED IN A MANNER SUCH THAT POSITIVE DRAINAGE OF THE ROADWAY SURFACE IS MAINTAINED THROUGHOUT CONSTRUCTION. ALL WORK AND MATERIALS TO PROVIDE AND MAINTAIN THIS DRAINAGE SHALL BE INCIDENTAL TO ITEM 763500 - MAINTENANCE OF TRAFFIC.

4. FLOODLIGHTING SHALL BE PAID AS OUTLINED IN ITEM 743005, FURNISH AND MAINTAIN PORTABLE LIGHT ASSEMBLY-THE ATSSA SUPERVISOR SHALL APPROVE THE POSITION OF THE LIGHT ASSEMBLY. SHOULD THE NIGHT TIME OPERATIONS REQUIRE FLAGGER STATIONS OR LANE TAPERS, THE FLAGGERS AND LANE TAPERS AND WORK AREA SHALL BE ILLUMINATED AS DIRECTED BY THE ENGINEER.

5. ENTRANCE AND SIDE ROAD TIE-IN AREAS SHALL BE CONSTRUCTED ONLY TO THE EXTENT THAT CAN BE PAVED OR TEMPORARILY STABILIZED WITH HOT-MIX TRM AT THE END OF A WORK DAY.

6. THE CONTRACTOR SHALL PLACE A WEDGE OF HOT-MIX AT 20:1 AROUND CONSTRUCTED DRAINAGE INLETS PRIOR TO PLACEMENT OF FINAL HOT-MIX TYPE C PAVING. THE CONTRACTOR SHALL NOTCH DRAINAGE INLETS TO MAINTAIN POSITIVE DRAINAGE CONDITIONS ALONG THE ROADWAY PRIOR TO PLACEMENT OF TYPE C FINAL HOT-MIX PAVING. NOTCHES SHALL BE REPAIRED TO PROPER CONDITION PRIOR TO OVERLAY. COST OF THIS WORK SHALL BE INCIDENTAL TO ITEM 710001 - ADJUSTING AND REPAIRING EXISTING DRAINAGE INLET.

7. ALL TEMPORARY PAVEMENT MARKINGS SHALL BE EPOXY MATERIAL WHEN INSTALLED ON EXISTING OR TEMPORARY PAVEMENT FOR TEMPORARY TRAFFIC PATTERNS, UNLESS OTHERWISE INDICATED ON PLANS OR DIRECTED BY THE ENGINEER. DURING INTERIM MILLING OPERATIONS, TEMPORARY PAINT SHALL BE USED ON MILLED SURFACES. TEMPORARY STRIPING SHALL NOT BE INSTALLED ON THE FINAL SURFACE COURSE OR NEW PAVEMENT UNLESS IT IS REMOVABLE TAPE MATERIAL. WHERE PAVEMENT MARKINGS ARE NOT INDICATED ON THE PLANS, THE PAVEMENT MARKINGS FROM THE PREVIOUS STAGE ARE TO BE MAINTAINED OR THE FINAL PROPOSED PERMANENT MARKINGS ARE TO BE INSTALLED AND MAINTAINED UNLESS OTHERWISE DIRECTED BY THE ENGINEER.

8. ALL EXISTING PUBLIC ROADWAY LIGHTING, PARKING LOT LIGHTING AND PRIVATE LIGHTING WITHIN THE PROJECT LIMITS NOT DIRECTLY IMPACTED BY CONSTRUCTION SHALL REMAIN OPERATIONAL AT ALL TIMES THROUGHOUT THE CONSTRUCTION.

9. TRAFFIC OFFICERS SHALL BE UNIFORMED AND EQUIPPED WITH MARKED DELAWARE STATE POLICE VEHICLES WHICH SHALL INCLUDE A SPEED MEASURING DEVICE. THE ATSSA SUPERVISOR SHALL INFORM THE STATE TROOPER OF THE OVERALL MOT SCHEME, AS WELL AS THE SPECIFICS OF HIS/HER FUNCTION. THE CONTRACTOR SHALL BE REQUIRED TO INSURE THAT A TRAFFIC OFFICER IS ON DUTY DURING ALL PEAK HOURS AND DURING ALL PERIODS OF ANY LANE CLOSURES ON SR 7 OR I-95. PEAK HOURS SHALL BE DEFINED AS 5:00 a.m. - 9:00 a.m. AND 3:00 p.m. - 7:00 p.m. ON WEEKDAYS; 10:00 a.m. - 2:00 p.m. ON SATURDAYS; AND 4:00 p.m. - 8:00 p.m. ON SUNDAYS. THE PEAK HOUR DURATION MAY BE EXTENDED DURING HOLIDAYS AS DIRECTED BY THE ENGINEER.

10. THE CONTRACTOR SHALL REDUCE THE SPEED LIMIT ON SR 1/SR 7 TO 40 MPH, THROUGHOUT THE PROJECT LIMITS FOR THE DURATION OF THE PROJECT OR AS DIRECTED BY THE ENGINEER. THE SPEED ADVISORY SIGN LOCATIONS SHALL BE AS SHOWN ON THE ADVANCE WARNING SIGN PLANS OR AS DIRECTED BY THE ENGINEER. THE PAYMENT SHALL BE FOR EACH SIGN INSTALLED AND ACCEPTED UNDER ITEM 743504, WARNING SIGNS. THE CONTRACTOR SHALL REQUEST THAT THE NORTH DISTRICT OFFICE CONTACT DELDOT'S TRAFFIC SECTION TWO (2) WEEKS PRIOR TO ANY SPEED REDUCTIONS BEING IMPLEMENTED ON THE PROJECT. THE CONTRACTOR SHALL VERIFY THAT A "SPEED REDUCTION RESOLUTION" HAS BEEN PASSED PRIOR TO ERECTING ANY SPEED REDUCTION SIGNS IN THE CONSTRUCTION AREA.

11. THE CONTRACTOR SHALL BE REQUIRED TO RESTORE AREAS UTILIZED AS STAGING AREAS, MATERIALS/ EQUIPMENT STORAGE, FIELD OFFICE, ETC. DURING THE PROJECT'S CONSTRUCTION TO ITS ORIGINAL CONDITION. ALL COSTS SHALL BE INCIDENTAL TO ALL OF THE CONTRACT BID ITEMS.

UNOFFICAL WEBSITE COPY

SEDIMENT & STORMWATER MANAGEMENT NOTES

1. AS-BUILT DRAWINGS. THE CONTRACTOR SHALL PROVIDE "AS-BUILT" DRAWINGS OF ALL STORMWATER MANAGEMENT FACILITIES, SUCH AS PONDS, BIO-FILTRATION SWALES, BIO-RETENTION AREAS, ETC. THE "AS-BUILT" DRAWINGS SHALL SHOW THE ACTUAL FINISHED GROUND CONTOURS, OUTLET STRUCTURE DIMENSIONS AND ELEVATIONS, ETC., AS THEY EXIST AT THE COMPLETION OF THE PROJECT. THESE DRAWINGS SHALL BE SIGNED AND SEALED BY A PROFESSIONAL ENGINEER OR LAND SURVEYOR REGISTERED IN THE STATE OF DELAWARE AND SENT TO DELDOT STORM WATER ENGINEER. ALL COSTS SHALL BE INCLUDED UNDER ITEM 763501, CONSTRUCTION ENGINEERING.

2. DUST CONTROL. DUST IS TO BE CONTROLLED EXCLUSIVELY THROUGH THE USE OF WATER. COSTS ASSOCIATED WITH THE FURNISHING AND APPLICATION OF WATER FOR DUST CONTROL SHALL BE INCIDENTAL TO ALL THE CONTRACT BID ITEMS.

3. CONSTRUCTION ENTRANCES. IT IS INTENDED THAT MUD TRACKING BE ELIMINATED ON ALL STATE MAINTAINED ROADWAYS ADJOINING THE PROJECT. EACH POINT OF INGRESS AND EGRESS FROM THE PROJECT SHALL HAVE INSTALLED A STABILIZED CONSTRUCTION ENTRANCE (SCE), ITEM 268000. ALL PAVED SURFACES ADJOINING THE PROJECT BE LEFT IN A BROOM CLEAN CONDITION AT THE END OF EACH WORKDAY. STABILIZED CONSTRUCTION ENTRANCES SHALL BE WITH TWO (2) INCHES OF CLEAN DE NO. 3 STONES WHEN THE VOIDS BECOME CLOGGED OR AS DIRECTED BY THE ENGINEER. ADDITIONAL STONES REQUIRED TO MAINTAIN THE ENTRANCES SHALL BE PAID UNDER THE SAME ITEM NO. 268000.

4. SEDIMENT TRAPS. WHERE SHOWN IN THE PLANS OR AS DIRECTED BY THE ENGINEER, SEDIMENT TRAPS SHALL BE CONSTRUCTED BEFORE ANY STORMWATER DISCHARGES INTO WATERCOURSES. THE COST FOR INSTALLING SEDIMENT TRAPS SHALL BE PAID UNDER ITEM 255000. SEDIMENT TRAP OUTLET DEVICES SHALL BE PAID FOR SEPARATELY UNDER THE APPROPRIATE ITEMS. SEDIMENT TRAPS SHALL NOT BE EXCAVATED IN EXCESS OF 4 FEET DEEP. SEDIMENT TRAPS HAVING PROPOSED BOTTOM ELEVATIONS GREATER THAN 4 FEET LOWER THAN THE ORIGINAL GRADE SHALL BE EXCAVATED IN STAGES CONCURRENT WITH THE ROADWAY EXCAVATION.

5. SOIL STOCKPILES. STOCKPILES OF SOIL SHALL BE STABILIZED WITH ITEM 734017, TEMPORARY GRASS SEEDING, DRY GROUND AND MULCHED WITH ITEM 735006, MULCHING STRAW.

6. SEDIMENT REMOVAL. SILT FENCE, REINFORCED SILT FENCE, AND SEDIMENT CONTROL DIKES SHALL HAVE SEDIMENT REMOVED WHEN IT REACHES 50 PERCENT OF THE HEIGHT OF THE DIKE OR FENCE. SEDIMENT REMOVAL SHALL BE PAID FOR UNDER ITEM 250000, SEDIMENT REMOVAL. REMOVAL AND BACK FILLING OF TEMPORARY SEDIMENT CONTROLS WHEN THEY ARE NO LONGER NEEDED SHALL BE INCIDENTAL TO THEIR INITIAL CONSTRUCTION.

7. STORMWATER MANAGEMENT PONDS SERVING AS TEMPORARY SEDIMENT BASINS DURING CONSTRUCTION SHALL HAVE SEDIMENT REMOVED AT TIMES DETERMINED BY THE ENGINEER AND AT THE CONCLUSION OF THE PROJECT AFTER ALL AREAS DRAINING TO THE POND HAVE BEEN VEGETATIVELY STABILIZED. COST FOR SEDIMENT REMOVAL SHALL BE PAID FOR UNDER ITEM 250000, SEDIMENT REMOVAL. ACCESS SHALL BE MAINTAINED TO ALL SEDIMENT CONTROL DEVICES REQUIRING MAINTENANCE UNTIL CONSTRUCTION PHASING AND VEGETATIVE STABILIZATION ALLOW THE REMOVAL OF THOSE CONTROLS WHICH ARE NO LONGER REQUIRED.

8. DRAINAGE WATTLES. DURING THE CONSTRUCTION OF MSE WALLS AND BACK FILL OPERATIONS, INSTALL DRAINAGE WATTLES ACROSS THE WIDTH OF THE EXPOSED AREAS IN A MANNER PERPENDICULAR TO THE CONTRIBUTING DRAINAGE FLOW. WATTLES SHALL BE 10 INCHES IN DIAMETER AND INSTALLED USING STAKES SPACED AT 3 FT ON CENTER AS SHOWN IN THE STAKE DETAIL. NO DAYLIGHT SHOULD BE SEEN UNDER THE WATTLE. ABUT ADJACENT WATTLE TIGHTLY, END TO END, WITHOUT OVERLAPING THE ENDS. WATTLE INSTALLATION SHALL BE PAID FOR UNDER ITEM 251001.

TEMPORARY PAVEMENT MARKINGS LEGEND

SYMBOL	ITEM	QUANTITY
A	6" SOLID WHITE TEMPORARY EPOXY RESIN PAVEMENT STRIPING (ITEM 748507)	37,865 LF
B	6" SOLID YELLOW TEMPORARY EPOXY RESIN PAVEMENT STRIPING (ITEM 748507)	20,250 LF
C	6" SOLID DOUBLE YELLOW TEMPORARY EPOXY RESIN PAVEMENT STRIPING (ITEM 748507)	———
D	6" DASHED WHITE TEMPORARY EPOXY RESIN PAVEMENT STRIPING, 3' LINE & 9' GAP (ITEM 748507)	703 LF
E	6" DASHED WHITE TEMPORARY EPOXY RESIN PAVEMENT STRIPING, 10' LINE & 30' GAP (ITEM 748507)	11,448 LF
F	12" SOLID WHITE TEMPORARY EPOXY RESIN PAVEMENT STRIPING (ITEM 748509)	12,000 LF
G	4" SOLID WHITE TEMPORARY TAPE PAVEMENT STRIPING (ITEM 748525)	———
H	4" SOLID YELLOW TEMPORARY TAPE PAVEMENT STRIPING (ITEM 748525)	———
J	4" SOLID DOUBLE YELLOW TEMPORARY TAPE PAVEMENT STRIPING (ITEM 748525)	———
K	4" DASHED WHITE TEMPORARY TAPE PAVEMENT STRIPING, 3' LINE & 9' GAP (ITEM 748525)	———
L	4" DASHED WHITE TEMPORARY TAPE PAVEMENT STRIPING, 10' LINE & 30' GAP (ITEM 748525)	———
M	6" SOLID WHITE TEMPORARY TAPE PAVEMENT STRIPING (ITEM 748526)	1,800 LF
N	6" SOLID YELLOW TEMPORARY TAPE PAVEMENT STRIPING (ITEM 748526)	1,800 LF
P	6" SOLID DOUBLE YELLOW TEMPORARY TAPE PAVEMENT STRIPING (ITEM 748526)	———
O	6" DASHED WHITE TEMPORARY TAPE PAVEMENT STRIPING, 3' LINE & 9' GAP (ITEM 748526)	450 LF
R	6" DASHED WHITE TEMPORARY TAPE PAVEMENT STRIPING, 10' LINE & 30' GAP (ITEM 748526)	900 LF
X	REMOVAL OF PAVEMENT STRIPING (ITEM 748530)	15,125 SF

POSTED SPEED TABLE

ROADWAY	DESIGN SPEED
TEMPORARY SR7/SR1 - PHASE 1	40 MPH
TEMPORARY SR7/SR1 - PHASE 2	40 MPH
TEMPORARY RAMP A	40 MPH
TEMPORARY RAMP C	35 MPH
TEMPORARY RAMP E	35 MPH
TEMPORARY RAMP E1	35 MPH
TEMPORARY RAMP E3	25 MPH
TEMPORARY RAMP E5	35 MPH
TEMPORARY RAMP S	25 MPH
I-95 (NB/SB)	55 MPH
SE LOOP RAMP	25 MPH

CONSTRUCTION PHASING LEGEND

	TEMPORARY FULL DEPTH PAVEMENT WORK AREA THIS PHASE
	TEMPORARY MILL AND OVERLAY PAVEMENT WORK AREA THIS PHASE
	PERMANENT PAVEMENT WORK AREA THIS PHASE
	PREVIOUSLY CONSTRUCTED TEMPORARY PAVEMENT
	PREVIOUSLY CONSTRUCTED PERMANENT PAVEMENT

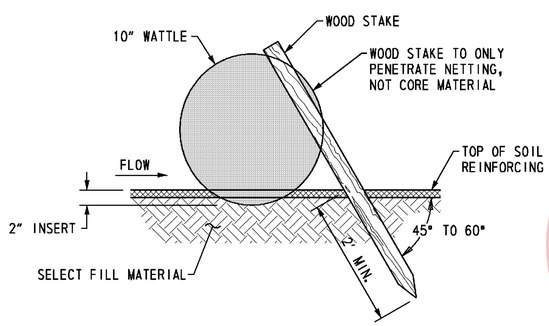

STAKE DETAIL

UNOFFICIAL WEBSITE COPY

TRAFFIC RESTRICTIONS

1. THE MAXIMUM NUMBER OF NIGHTS THAT THE SOUTHBOUND I-95 DETOUR IS IMPLEMENTED SHALL NOT EXCEED 10 NIGHTS.
   THE MAXIMUM NUMBER OF NIGHTS THAT THE NORTHBOUND I-95 DETOUR IS IMPLEMENTED SHALL NOT EXCEED 10 NIGHTS.
   THE MAXIMUM NUMBER OF NIGHTS THAT THE SOUTHBOUND SR 1 DETOUR IS IMPLEMENTED SHALL NOT EXCEED 8 NIGHTS.
   THE MAXIMUM NUMBER OF NIGHTS THAT THE NORTHBOUND SR 1 DETOUR IS IMPLEMENTED SHALL NOT EXCEED 20 NIGHTS.

2. RAMP CLOSURES OR DETOURS TO OR FROM THE MALL OR ROAD A SHALL NOT BE ALLOWED BETWEEN WEDNESDAY PRIOR TO THANKSGIVING AND JANUARY 3.

3. LANE OR RAMP CLOSURES AND DETOURS SHALL NOT BE PERMITTED DURING HOLIDAYS AND MAJOR EVENTS AS LISTED BELOW:
   - DECEMBER 24 THROUGH DECEMBER 27 (CHRISTMAS DAY)
   - DECEMBER 31 THROUGH JANUARY 3 (NEW YEARS DAY)
   - FRIDAY PRIOR TO EASTER THROUGH EASTER SUNDAY
   - THURSDAY PRIOR TO MEMORIAL DAY THROUGH THE TUESDAY FOLLOWING MEMORIAL DAY
   - DOVER INTERNATIONAL SPEEDWAY RACE WEEKENDS (THURSDAY PRIOR TO THE RACE EVENT THROUGH THE DAY AFTER THE RACE EVENT)
   - JULY 3 THROUGH JULY 5 (INDEPENDENCE DAY)
   - THURSDAY PRIOR TO LABOR DAY THROUGH THE TUESDAY FOLLOWING LABOR DAY
   - WEDNESDAY PRIOR TO THANKSGIVING DAY THROUGH THE MONDAY FOLLOWING THANKSGIVING DAY

4. THE FOLLOWING SCHEDULES INDICATE THE ALLOWABLE TIMES WHICH TRAFFIC ON I-95 AND SR 1/7 MAY BE DETOURED OR THE NUMBER OF LANES REDUCED. THE BEGIN SET-UP TO END TIMES ARE THE ENTIRE DURATION THAT LANE CLOSURES MAY BE IN EFFECT. THE END TIME REPRESENTS THE TIME AT WHICH ALL LANES OF TRAFFIC MUST BE FULLY OPERATIONAL.

I-95 SUMMER TIME
MAY 15 THROUGH SEPTEMBER 15

SUMMER TIME PERIOD		3 LANES OPEN: 1 LANE CLOSED	2 LANES OPEN: 2 LANES CLOSED	1 LANE OPEN: 3 LANES CLOSED	DETOURS *
MONDAY PM THROUGH FRIDAY AM	BEGIN SETUP	9:00 PM	10:00 PM	12:00 MID	12:00 MID
	END	5:00 AM	5:00 AM	5:00 AM	5:00 AM
FRIDAY PM THROUGH SATURDAY AM	BEGIN SETUP	10:00 PM	12:00 MID	NOT ALLOWED	NOT ALLOWED
	END	8:00 AM	6:00 AM		
SATURDAY PM THROUGH SUNDAY AM	BEGIN SETUP	8:00 PM	10:00 PM		
	END	8:00 AM	7:00 AM		
SUNDAY PM THROUGH MONDAY AM	BEGIN SETUP	9:00 PM	11:00 PM		
	END	5:00 AM	5:00 AM		

* INCLUDES DETOURS FOR OVERHEAD SIGN REMOVAL/INSTALLATION AND STEEL ERECTION FOR BRIDGE WORK.

I-95 NON-SUMMER TIME
SEPTEMBER 16 THROUGH MAY 14

NON-SUMMER TIME PERIOD		3 LANES OPEN: 1 LANE CLOSED	2 LANES OPEN: 2 LANES CLOSED	1 LANE OPEN: 3 LANES CLOSED	DETOURS *
MONDAY PM THROUGH FRIDAY AM	BEGIN SETUP	7:00 PM	9:00 PM	11:00 PM	11:00 PM
	END	5:00 AM	5:00 AM	5:00 AM	5:00 AM
FRIDAY PM THROUGH SATURDAY AM	BEGIN SETUP	9:00 PM	10:00 PM	12:00 MID	12:00 MID
	END	9:00 AM	7:00 AM	6:00 AM	6:00 AM
SATURDAY PM THROUGH SUNDAY AM	BEGIN SETUP	7:00 PM	10:00 PM	12:00 MID	12:00 MID
	END	10:00 AM	9:00 AM	7:00 AM	7:00 AM
SUNDAY PM THROUGH MONDAY AM	BEGIN SETUP	8:00 PM	10:00 PM	12:00 MID	12:00 MID
	END	5:00 AM	5:00 AM	5:00 AM	5:00 AM

* INCLUDES DETOURS FOR OVERHEAD SIGN REMOVAL/INSTALLATION AND STEEL ERECTION FOR BRIDGE WORK.

SR 1/7 SUMMER TIME
MAY 15 THROUGH SEPTEMBER 15

SUMMER TIME PERIOD		NORTHBOUND		SOUTHBOUND	
		1 LANE OPEN: 1 LANE CLOSED	DETOURS *	1 LANE OPEN: 1 LANE CLOSED	DETOURS *
MONDAY PM THROUGH FRIDAY AM	BEGIN SETUP	10:00 PM	10:00 PM	11:00 PM	11:00 PM
	END	5:00 AM	5:00 AM	6:00 AM	6:00 AM
FRIDAY PM THROUGH SATURDAY AM	BEGIN SETUP	NOT ALLOWED	NOT ALLOWED	NOT ALLOWED	NOT ALLOWED
	END				
SATURDAY PM THROUGH SUNDAY AM	BEGIN SETUP				
	END				
SUNDAY PM THROUGH MONDAY AM	BEGIN SETUP				
	END				

* INCLUDES DETOURS FOR OVERHEAD SIGN REMOVAL/INSTALLATION AND STEEL ERECTION FOR BRIDGE WORK.

SR 1/7 NON-SUMMER TIME
SEPTEMBER 16 THROUGH MAY 14

NON-SUMMER TIME PERIOD		NORTHBOUND		SOUTHBOUND	
		1 LANE OPEN: 1 LANE CLOSED	DETOURS *	1 LANE OPEN: 1 LANE CLOSED	DETOURS *
MONDAY PM THROUGH FRIDAY AM	BEGIN SETUP	9:00 PM	9:00 PM	10:00 PM	10:00 PM
	END	5:00 AM	5:00 AM	6:00 AM	6:00 AM
FRIDAY PM THROUGH SATURDAY AM	BEGIN SETUP	11:00 PM	11:00 PM	12:00 MID	12:00 MID
	END	8:00 AM	8:00 AM	7:00 AM	7:00 AM
SATURDAY PM THROUGH SUNDAY AM	BEGIN SETUP	11:00 PM	11:00 PM	10:00 PM	10:00 PM
	END	9:00 AM	9:00 AM	9:00 AM	9:00 AM
SUNDAY PM THROUGH MONDAY AM	BEGIN SETUP	11:00 PM	11:00 PM	10:00 PM	10:00 PM
	END	5:00 AM	5:00 AM	6:00 AM	6:00 AM

* INCLUDES DETOURS FOR OVERHEAD SIGN REMOVAL/INSTALLATION AND STEEL ERECTION FOR BRIDGE WORK.

5. STRUCTURAL STEEL ERECTION SHALL BE RESTRICTED TO NIGHTTIME CLOSURE HOURS ONLY.

6. CONSTRUCTION VEHICLE ACCESS TO THE I-95 WORK ZONES FROM I-95 MAY NOT DIRECTLY ENTER THE WORK ZONE FROM AN I-95 TRAVEL LANE. CONSTRUCTION VEHICLE ACCESS TO I-95 FROM THE WORK ZONE MAY NOT DIRECTLY ENTER A TRAVEL LANE. THESE VEHICLES MUST FIRST ACCELERATE WITHIN THE EXISTING SHOULDER AND THEN MERGE INTO TRAFFIC.

7. ACCESS TO ALL DELDOT MAINTENANCE ENTRANCES MUST BE MAINTAINED AT ALL TIMES.

8. CONSTRUCTION IMPACTING TRAVEL LANES ON THE MALL RING ROAD OR RAMPS PROVIDING ACCESS TO OR FROM I-95 AND/OR SR 1/7 AND THE MALL ARE NOT PERMITTED BEGINNING THE WEDNESDAY PRIOR TO THANKSGIVING THROUGH JANUARY 3.

9. THE INSIDE AND OUTSIDE SHOULDERS MAY NOT BE CLOSED CONCURRENTLY AT THE SAME LOCATION ALONG THE SAME SIDE OF I-95 AT ANY TIME.

10. NO EXISTING OVERHEAD/CANTILEVER SIGN STRUCTURE MAY BE REMOVED UNTIL AFTER THE NEW REPLACEMENT OVERHEAD/CANTILEVER SIGN STRUCTURE IS INSTALLED AND ACCEPTED, UNLESS NOTED ON THE PLANS OR OTHERWISE APPROVED BY THE ENGINEER.

11. RAMP S, U AND U1 PROVIDE ACCESS FROM THE MALL TO SR 1/7. AT LEAST ONE OF THESE RAMPS NEED TO BE MAINTAINED OPEN TO TRAFFIC AT ALL TIMES THROUGHOUT THE PROJECTS CONSTRUCTION.

UNOFFICIAL WEBSITE COPY

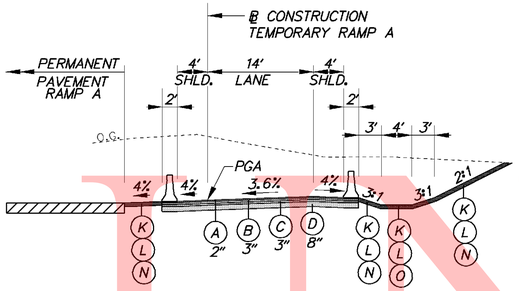

TEMPORARY RAMP A

STA. 4008+00.00 TO STA. 4012+50.00

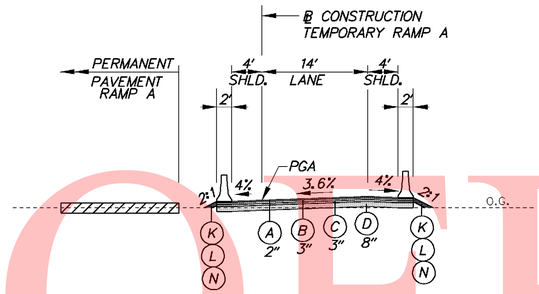

TEMPORARY RAMP A

STA. 4013+00.00 TO STA. 4019+87.63

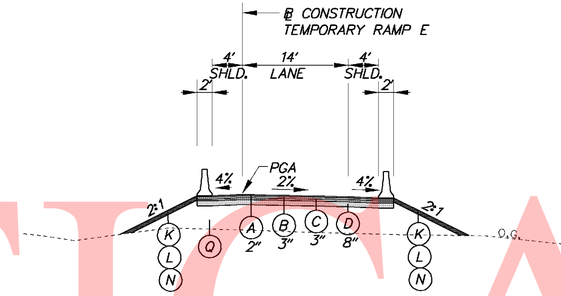

TEMPORARY RAMP E

STA. 4509+00.00 TO STA. 4513+00.00

LEGEND

- (A) ITEM 401708 - SUPERPAVE, TYPE C HOT-MIX, 160 GYRATIONS, PG 70-22 (NON-CARBONATE STONE)
- (B) ITEM 401654 - SUPERPAVE, TYPE B HOT-MIX, 160 GYRATIONS, PG 70-22
- (C) ITEM 401663 - SUPERPAVE, BITUMINOUS CONCRETE BASE COURSE, 160 GYRATIONS, PG 64-22
- (D) ITEM 302007 - GRADED AGGREGATE BASE COURSE, TYPE B
- (E) ITEM 209006 - BORROW, TYPE F OR APPROVED PROJECT EXCAVATION
- (F) ITEM 715001 - PERFORATED PIPE UNDERDRAINS, 6"
- (G) ITEM 760507 - PROFILE MILLING, HOT-MIX
- (H) ITEM 720XXX - FURNISH AND MAINTAIN PORTABLE P.C.C. SAFETY BARRIER/ RELOCATE
- (I) ITEM 401668 - SUPERPAVE, TYPE C HOT-MIX, 160 GYRATIONS, PG 64-22, WEDGE
- (J) ITEM 401669 - SUPERPAVE, TYPE B HOT-MIX, 160 GYRATIONS, PG 64-22, WEDGE
- (K) ITEM 732002 - TOPSOIL, 6" DEPTH
- (L) ITEM 734013 - PERMANENT GRASS SEEDING, DRY GROUND
- (M) ITEM 735533 - SOIL RETENTION BLANKET MULCH, TYPE 3
- (N) ITEM 735534 - SOIL RETENTION BLANKET MULCH, TYPE 4
- (O) ITEM 735535 - SOIL RETENTION BLANKET MULCH, TYPE 5
- (P) ITEM 209001 - BORROW, TYPE A
- (Q) ITEM 209006 - BORROW, TYPE F OR PROJECT EXCAVATION

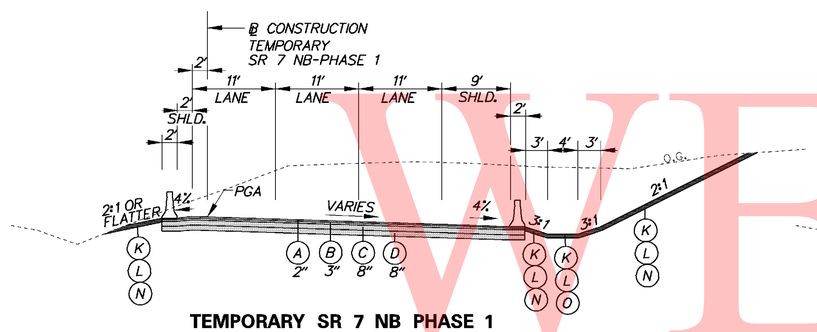

TEMPORARY SR 7 NB PHASE 1

STA. 4630+50.00 TO STA. 4634+70.00

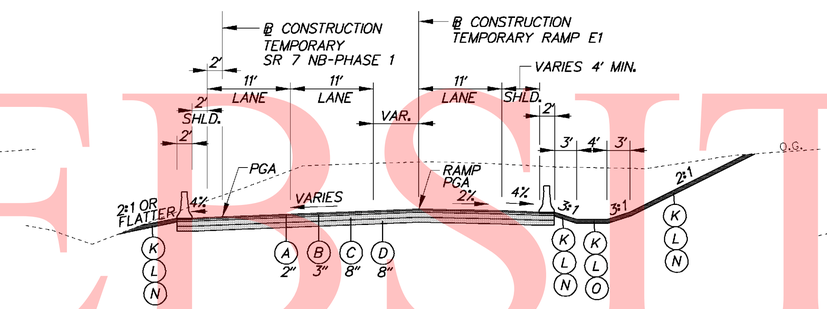

TEMPORARY SR 7 NB PHASE 1

STA. 4634+70.00 TO STA. 4636+00.00

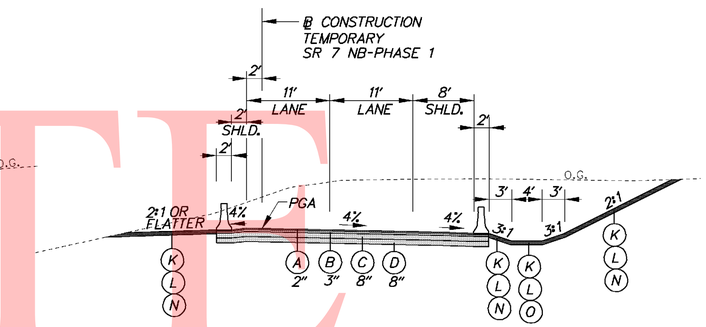

TEMPORARY SR 7 NB PHASE 1

STA. 4637+00.00 TO STA. 4643+50.00

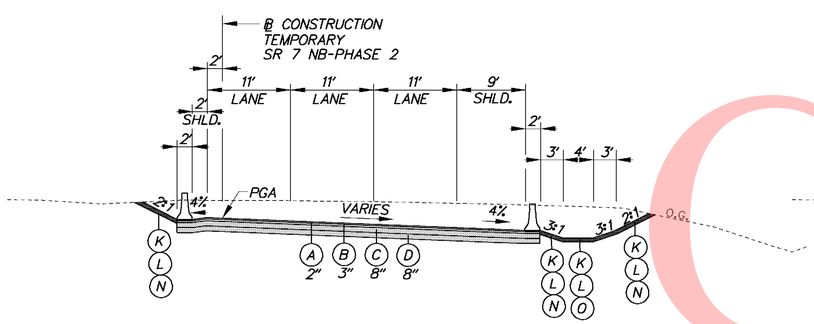

TEMPORARY SR 7 NB PHASE 2

STA. 5631+50.00 TO STA. 5635+00.00

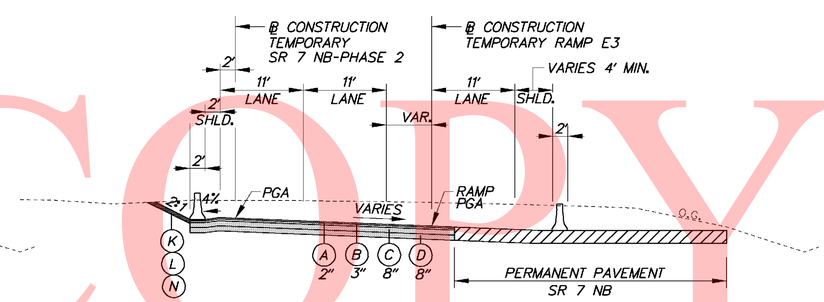

TEMPORARY SR 7 NB PHASE 2

STA. 5635+00.00 TO STA. 5636+00.00

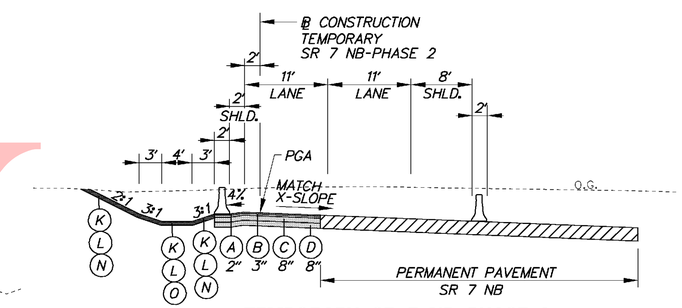

TEMPORARY SR 7 NB PHASE 2

STA. 5636+00.00 TO STA. 5639+00.00

NOTES:

1) THE PGA IS APPLIED TO THE TOP OF THE FINAL PAVEMENT SURFACE.
2) THE CROSS SLOPE BREAK AT THE EDGE OF THE TRAVEL LANE PAVEMENT SHALL NOT EXCEED 8%, REDUCE SHOULDER SLOPE AS REQUIRED TO MAINTAIN THE MAXIMUM ROLLOVER.

PAVEMENT LIFT NOTE:

THE MAXIMUM LIFTS FOR THE INDIVIDUAL PAVING MATERIAL ARE AS FOLLOWS:
SUPERPAVE, TYPE C HOT-MIX - 2"
SUPERPAVE, TYPE B HOT-MIX - 3"
SUPERPAVE, BIT. CONC. BASE COURSE - 6"
GRADED AGGREGATE BASE COURSE - 8"

UNOFFICIAL WEBSITE COPY

UNOFFICAL WEBSITE COPY

LEGEND

- (A) ITEM 401708 - SUPERPAVE, TYPE C HOT-MIX, 160 GYRATIONS, PG 70-22 (NON-CARBONATE STONE)
- (B) ITEM 401654 - SUPERPAVE, TYPE B HOT-MIX, 160 GYRATIONS, PG 70-22
- (C) ITEM 401663 - SUPERPAVE, BITUMINOUS CONCRETE BASE COURSE, 160 GYRATIONS, PG 64-22
- (D) ITEM 302007 - GRADED AGGREGATE BASE COURSE, TYPE B
- (E) ITEM 209006 - BORROW, TYPE F OR APPROVED PROJECT EXCAVATION
- (F) ITEM 715001 - PERFORATED PIPE UNDERDRAINS, 6"
- (G) ITEM 760507 - PROFILE MILLING, HOT-MIX
- (H) ITEM 720XXX - FURNISH AND MAINTAIN PORTABLE P.C.C. SAFETY BARRIER/ RELOCATE
- (I) ITEM 401668 - SUPERPAVE, TYPE C HOT-MIX, 160 GYRATIONS, PG 64-22, WEDGE
- (J) ITEM 401669 - SUPERPAVE, TYPE B HOT-MIX, 160 GYRATIONS, PG 64-22, WEDGE
- (K) ITEM 732002 - TOPSOIL, 6" DEPTH
- (L) ITEM 734013 - PERMANENT GRASS SEEDING, DRY GROUND
- (M) ITEM 735533 - SOIL RETENTION BLANKET MULCH, TYPE 3
- (N) ITEM 735534 - SOIL RETENTION BLANKET MULCH, TYPE 4
- (O) ITEM 735535 - SOIL RETENTION BLANKET MULCH, TYPE 5
- (P) ITEM 209001 - BORROW, TYPE A
- (Q) ITEM 209006 - BORROW, TYPE F OR PROJECT EXCAVATION

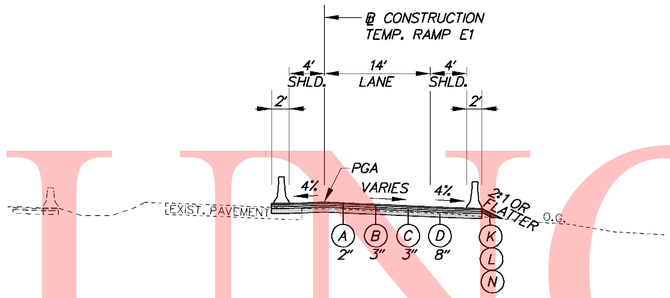

TEMPORARY RAMP E1

STA. 4837+00.00 TO STA. 4837+50.00

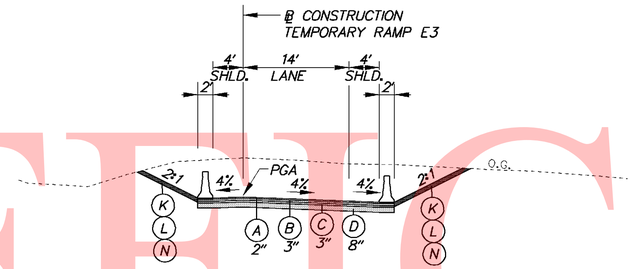

TEMPORARY RAMP E3

STA. 5236+60.00 TO STA. 5239+12.00

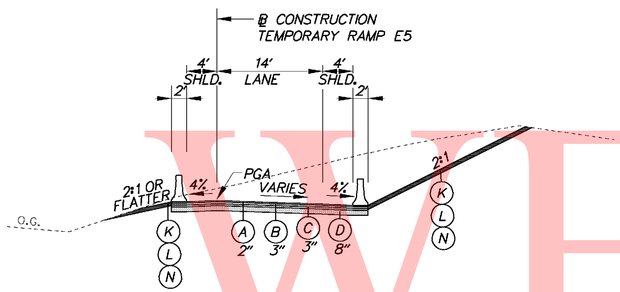

TEMPORARY RAMP E5

STA. 6919+00.00 TO STA. 6920+20.00

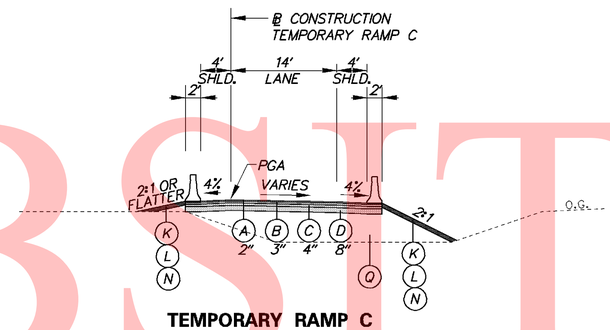

TEMPORARY RAMP C

STA. 4105+50.00 TO STA. 4109+25.00
STA. 4111+50.00 TO STA. 4115+10.00

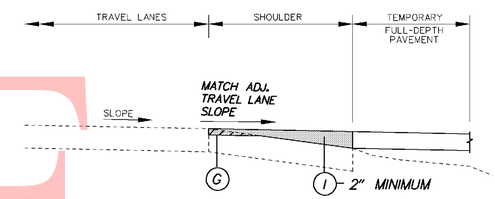

WEDGE AND LEVEL PAVEMENT SECTION

VARIOUS LOCATIONS

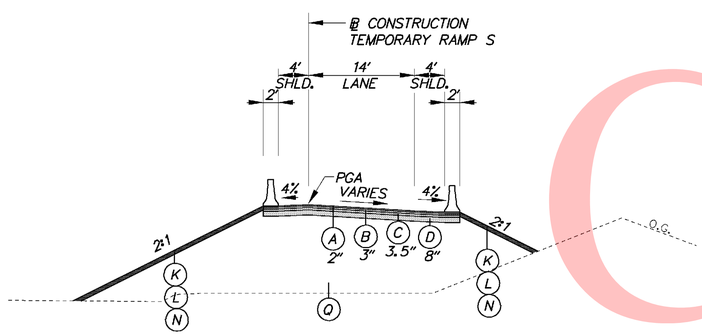

TEMPORARY RAMP S

STA. 4212+10.00 TO STA. 4214+25.00

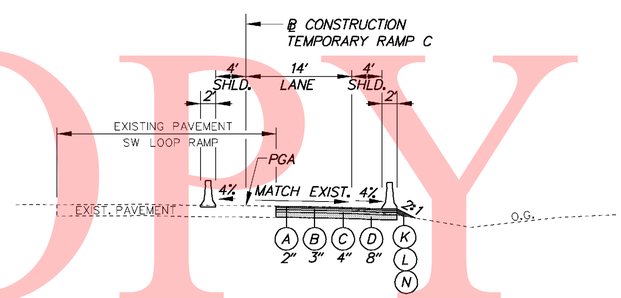

TEMPORARY RAMP C

STA. 4109+25.00 TO STA. 4111+50.00

PAVEMENT LIFT NOTE:

THE MAXIMUM LIFTS FOR THE INDIVIDUAL PAVING MATERIAL ARE AS FOLLOWS:
SUPERPAVE, TYPE C HOT-MIX - 2"
SUPERPAVE, TYPE B HOT-MIX - 3"
SUPERPAVE, BIT. CONC. BASE COURSE - 6"
GRADED AGGREGATE BASE COURSE - 8"

NOTES:

1) THE PGA IS APPLIED TO THE TOP OF THE FINAL PAVEMENT SURFACE.
2) THE CROSS SLOPE BREAK AT THE EDGE OF THE TRAVEL LANE PAVEMENT SHALL NOT EXCEED 8%, REDUCE SHOULDER SLOPE AS REQUIRED TO MAINTAIN THE MAXIMUM ROLLOVER.

10/28/2010 11:35:02 AM
M:\PROJECTS\2003\03059_DELTRNPK\SRIMALL\CADD\2809003\PLANS\CS03C_SR1.DGN

DELAWARE DEPARTMENT OF TRANSPORTATION	ADDENDUMS / REVISIONS	SR1 / I-95 INTERCHANGE	CONTRACT 28-090-03	BRIDGE NO.	CONSTRUCTION PHASING, M.O.T., AND EROSION CONTROL PLAN	SHEET NO. 640
			COUNTY NEW CASTLE	DESIGNED BY: EDJ		TOTAL SHTS. 803
				CHECKED BY: RLS		

SEQUENCE OF CONSTRUCTION

GENERAL NOTES

IN ACCORDANCE WITH PART 6 OF THE DELAWARE MUTCD MANUAL AND BASED ON THE LATEST DESIGN PLANS FOR BOTH THE CHRISTINA MALL ROAD BRIDGE AND THE SR 1/I-95 INTERCHANGE PROJECT. THE SR 1/I-95 INTERCHANGE PROJECT IS EXPECTED TO BE COMPLETED IN SEVEN (7) PHASES OVER THE COURSE OF TIME DETERMINED IN THE CONTRACT PROJECT SCHEDULE AND AS DESCRIBED BELOW. USE CASE 5 AND CASE 9 FOR INSTALLING, REMOVING, AND SHIFTING MAINTENANCE OF TRAFFIC DEVICES DURING TRANSITIONAL ASPECTS OF THE PHASE/STAGE CONSTRUCTION AS REQUIRED. FOR ALL SEQUENCE PHASING DESCRIBED BELOW, INSTALL REQUIRED SEDIMENT AND EROSION CONTROLS AS NOTED ON THE PLANS PRIOR TO COMMENCING CONSTRUCTION ACTIVITY AND STABILIZE AREAS IN ACCORDANCE WITH THE DELAWARE SEDIMENT AND EROSION CONTROL MANUAL BEFORE INITIATING THE NEXT PHASE OF CONSTRUCTION UNLESS OTHERWISE DIRECTED.

CONSTRUCTION PHASE 1

STAGE 1 :SR 1 WORK ZONE - PREVIOUS CONDITIONS
- MAINTAIN EXISTING SEDIMENT AND EROSION CONTROLS PROVIDED FOR THE STORMWATER MANAGEMENT FACILITIES PREVIOUSLY CONSTRUCTED BY OTHERS AND REMOVE SEDIMENT MATERIALS AS REQUIRED.
- MAINTAIN REMAINING TRAFFIC CONTROL DEVICES LEFT IN PLACE FROM CONTRACT T201009004.

STAGE 2 :SR 1 WORK ZONE - SW LOOP RAMP
AS FIRST ORDER OF WORK, USE CASE 14 TO SHIFT TRAFFIC ONTO EXISTING SHOULDER ALONG EXISTING SW LOOP AND CONSTRUCT ROADWAY AND DRAINAGE IMPROVEMENTS. USE MODIFIED DETOUR PLAN 3 TO REPOSITION TRAFFIC DEVICES AND SHIFT TRAFFIC ONTO NEW PAVEMENT. LIKEWISE, INITIATE DETOUR PLAN WHEN THE MINIMUM WIDTH REQUIRED TO MAINTAIN TRAFFIC CANNOT BE MET.

STAGE 3 :I-95 WORK ZONE - RAMP A / TEMPORARY RAMP A
- ALONG SB. I-95, SHIFT TRAFFIC TO REDUCE TRAVEL LANES TO 11 FEET. USE CASE 4 TO CLOSE SHOULDER, INSTALL TEMPORARY BARRIER, AND BEGIN CONSTRUCTION IMPROVEMENTS ON THE SEGMENTS OF RAMP A OUTSIDE OF THE EXISTING PAVEMENT. CONSTRUCT TEMPORARY RAMP A TO FACILITATE FUTURE SOUTHBOUND I-95 TO SOUTHBOUND SR 1 MOVEMENTS. USE CASE 14 MODIFIED TO NARROW LANE ALONG EXISTING OFF-RAMP (SOUTHBOUND I-95 TO SOUTHBOUND SR 1) TO TRANSITION TEMPORARY RAMP A ONTO EXISTING OFF-RAMP.

STAGE 4 :I-95 WORK ZONE - RAMP B1 / TEMPORARY RAMP E
- ALONG NB I-95, SHIFT TRAFFIC TO REDUCE TRAVEL LANES TO 11 FEET. USE CASE 4 TO INSTALL TEMPORARY BARRIER AND BEGIN CONSTRUCTION IMPROVEMENTS ON THE SEGMENTS OF THE PROPOSED RAMP B1 AND RAMP E OUTSIDE OF THE EXISTING PAVEMENT. CONSTRUCT TEMPORARY RAMP E TO FACILITATE FUTURE NORTHBOUND SR 1 TO NORTHBOUND I-95 MOVEMENTS. USE CASE 14 MODIFIED TO NARROW LANE ALONG EXISTING OFF-RAMP (NORTHBOUND SR 1 TO NORTHBOUND I-95) TO TRANSITION TEMPORARY RAMP E ONTO EXISTING OFF-RAMP.

STAGE 5 :SR 1 WORK ZONE - TEMPORARY NB SR 7 - PHASE 1 / TEMPORARY RAMP E1
- CONSTRUCT TEMPORARY NB SR7 AND TEMPORARY RAMP E1 OUTSIDE OF THE EXISTING TRAVEL LANES. USE CASE 9 TO PROVIDE A DOUBLE LANE CLOSURE ON NB SR 1/SR 7 TO TRANSITION TEMPORARY NB SR7 ONTO EXISTING NB SR7. AS A LAST ORDER OF WORK IN THIS STAGE, USE DETOUR PLAN 7 TO CLOSE EXISTING RAMP AND CONSTRUCT NEW TEMPORARY NB SR 7 - PHASE 1 PAVEMENT.
- THIS STAGE WILL REQUIRE THE CLOSURE OF EXISTING RAMP E1, WHICH PROVIDES DIRECT ACCESS FROM THE CHRISTIANA MALL TO NORTHBOUND I-95. THIS RAMP WILL REMAIN CLOSED UNTIL PHASE 6 IS COMPLETED. MALL TRAFFIC DESTINED FOR NORTHBOUND I-95 WILL BE RE-ROUTED TO RAMP U-1 AND RAMP S VIA DETOUR PLAN 7.

CONSTRUCTION PHASE 2

STAGE 1 :I-95 WORK ZONE - RAMP A
- CONTINUE USING CASE 4 ALONG SB I-95 TO MAINTAIN PHASE 1 SHIFTED TRAFFIC IN 11 FOOT REDUCED TRAVEL LANES. SWITCH SOUTHBOUND I-95 TO SOUTHBOUND SR 1 MOVEMENTS ONTO NEW TEMPORARY RAMP A. BEGIN CONSTRUCTING NEXT ROADWAY SEGMENT AND BRIDGE ABUTMENT ON RAMP A.

STAGE 2 :I-95 WORK ZONE - NB I-95
- ALONG NB I-95, REPOSITION TRAFFIC BARRIERS AND EXTEND SHIFTED TRAFFIC IN 11 FOOT REDUCED TRAVEL LANES. USE CASE 4 TO CLOSE SHOULDER TO CONSTRUCT ROADWAY IMPROVEMENTS, AND BRIDGE SUB-STRUCTURE. SWITCH NORTHBOUND SR 1 TO NORTHBOUND I-95 TRAFFIC ONTO NEW TEMPORARY RAMP E / TEMPORARY RAMP E1 TIE-IN TO RAMP B1.

STAGE 3 :SR 1 WORK ZONE - NB SR 7 / TEMPORARY NB SR 7 - PHASE 2
- INSTALL MOT REQUIRED TO SHIFT TRAFFIC ONTO NEW TEMPORARY NB SR 7 - PHASE 1. CONSTRUCT PERMANENT NB SR 7 ROADWAY PAVEMENT, VARIOUS BRIDGE SUBSTRUCTURES, AND THE MODIFICATIONS REQUIRED TO CONSTRUCT TEMPORARY NB SR 7 - PHASE 2 FOR NEXT PHASE OF CONSTRUCTION.

STAGE 4 :SR 1 WORK ZONE - TEMPORARY RAMP C
- USE CASE 14 TO SHIFT TRAFFIC AS REQUIRED TO CONSTRUCT PAVEMENT FOR TEMPORARY RAMP C FROM EXISTING OFF - RAMP TO SB SR 1/SR 7.

CONSTRUCTION PHASE 3

STAGE 1 :I-95 WORK ZONE - RAMP B
- CONTINUE USING CASE 4 ALONG SB I-95 TO MAINTAIN PHASE 1 SHIFTED TRAFFIC IN 11 FOOT REDUCED TRAVEL LANES.
- RELOCATE TEMPORARY BARRIER REQUIRED FOR I-95 MEDIAN WORK. USE CASE 4 FOR SHOULDER CLOSURE ALONG NB I-95 AND SHIFT TRAFFIC ONTO NEW WIDENED I-95 PAVEMENT REDUCING TRAVEL LANES TO 11 FEET. CONSTRUCT ROADWAY IMPROVEMENTS, MSE WALLS, AND BRIDGE SUBSTRUCTURES.
- MAINTAIN MOT DEVICES REQUIRED FOR TEMPORARY RAMP E AND TEMPORARY RAMP A.

STAGE 2 :SR 1 WORK ZONE - TEMPORARY RAMP E3
- SHIFT NORTHBOUND SR 1/ SR 7 TRAFFIC ONTO NEW TEMPORARY NB SR 7 - PHASE 2. THE TEMPORARY NB SR 1 - PHASE 1 ROADWAY SHALL REMAIN PARTIALLY OPERATIONAL TO ONLY FACILITATE THE MOVEMENT FROM SR 1 NORTHBOUND TO I-95 NORTHBOUND VIA TEMPORARY RAMP E1. PORTIONS OF EXISTING TEMPORARY NB SR 7 - PHASE 1 SHALL BE REMOVED AS REQUIRED TO ACCOMANDATE FUTURE STAGE CONSTRUCTION.
- CONSTRUCT TEMPORARY RAMP E3 FOR FUTURE SR 1 NORTHBOUND TO I-95 NORTHBOUND MOVEMENTS.

CONSTRUCTION PHASE 3 CONTINUED

STAGE 3 :SR 1 WORK ZONE - RAMP B
- USE CASE 4 ALONG SOUTHERN MOST NB SR 1 TO CLOSE SHOULDER, SHIFT TRAFFIC TO THE RIGHT, AND CONSTRUCT PROPOSED PAVEMENT FOR RAMP B.

STAGE 4 :SR 1 WORK ZONE - RAMP C / C1 AND RAMP G1
- SHIFT NORTHBOUND I-95 TO SR 1 /SR 7 SOUTHBOUND TRAFFIC MOVEMENTS ONTO NEW TEMPORARY RAMP C. BEGIN CONSTRUCTION ON PROPOSED RAMP C AND RAMP G 1 ROADWAY SEGMENT ALONG WITH BRIDGE ABUTMENT AND MSE WALLS. USE CASE 4 IN ADVANCE OF WORK AREA FOR SHOULDER CLOSURE.

CONSTRUCTION PHASE 4

STAGE 1 :I-95 WORK ZONE
- CONTINUE USING CASE 4 ALONG SB I-95 TO MAINTAIN PHASE 3 SHIFTED TRAFFIC IN 11 FOOT REDUCED TRAVEL LANES.
- CONTINUE USING CASE 4 ALONG NB I-95 TO MAINTAIN PHASE 3 SHIFTED TRAFFIC IN 11 FOOT REDUCED TRAVEL LANES.
- MAINTAIN MOT DEVICES REQUIRED FOR TEMPORARY RAMP E TIE-IN TO I-95 (NORTHBOUND SR 1 TO NORTHBOUND I-95).

STAGE 2 :SR 1 WORK ZONE
- MAINTAIN NORTHBOUND SR 1 / SR 7 TRAFFIC ON TEMPORARY NB SR 7 - PHASE 2. SHIFT NORTHBOUND SR 1 TO NORTHBOUND I-95 TRAFFIC ON TO NEW TEMPORARY RAMP E3 AND REMOVE TEMPORARY NB SR 7 - PHASE 1 PAVEMENT WORK CONSTRUCTED IN EARLIER PHASE.

STAGE 3 :SR 1 WORK ZONE - RAMP A / RAMP B / RAMP C / RAMP G1
- USE CASE 4 ALONG THE EXISTING SE LOOP RAMP TO PROVIDE WORK ZONE PROTECTION FOR THE CONSTRUCTION OF THE BRIDGE APPROACHES AND ABUTMENTS FOR RAMP C1, RAMP G1, RAMP A, AND RAMP B.
- BEGIN CONSTRUCTION FOR PROPOSED BRIDGES ACROSS SR 1 / SR 7:
  - ▶ AT PROPOSED RAMP C-1/RAMP G-1 BRIDGE CROSSING, USE DETOUR PLAN 1 TO DIVERT TRAFFIC OFF NB SR 1/ SR 7 TO SET STEEL GIRDERS ACROSS NORTHBOUND ROADWAY.
  - ▶ AT PROPOSED RAMP C-1/RAMP G-1 BRIDGE CROSSING, USE DETOUR PLAN 2 TO DIVERT TRAFFIC OFF SB SR 1/ SR 7 TO SET STEEL GIRDERS ACROSS SOUTHBOUND ROADWAY.

STAGE 4 :SR 1 WORK ZONE - NB SR 1 / TEMPORARY RAMP S
- USE CASE 4 TO SHIFT NORTHBOUND SR 1 / SR 7 TRAFFIC MOVEMENTS LEFT ONTO NEW PAVEMENT AND CONSTRUCT ROADWAY IMPROVEMENTS ALONG NB SR 1.
- USE CASE 4 TO CONSTRUCT TEMPORARY RAMP S AND TRANSITION PAVEMENT ONTO PROPOSED NB SR 7 ROADWAY.

CONSTRUCTION PHASE 5

STAGE 1 :I-95 WORK ZONE - RAMP A / RAMP B (BRIDGES)
- CONTINUE USING CASE 4 ALONG SB I-95 TO MAINTAIN PHASE 4 SHIFTED TRAFFIC IN 11 FOOT REDUCED TRAVEL LANES.
- CONTINUE USING CASE 4 ALONG NB I-95 TO MAINTAIN PHASE 4 SHIFTED TRAFFIC IN 11 FOOT REDUCED TRAVEL LANES.
- MAINTAIN MOT DEVICES REQUIRED FOR TEMPORARY RAMP E TIE-IN TO I-95 (NORTHBOUND SR 1 TO NORTHBOUND I-95).
- BEGIN CONSTRUCTION REQUIRED FOR PROPOSED BRIDGES ACROSS I-95:
  - ▶ AT EXISTING S.E. LOOP RAMP, USE DETOUR PLAN 5 TO DIVERT TRAFFIC AND PERMANENTLY REMOVE THE EXISTING S.E. LOOP RAMP.
  - ▶ AT PROPOSED RAMP A / PROPOSED RAMP B BRIDGE CROSSING, USE DETOUR PLAN 3 TO DIVERT TRAFFIC OFF NB I-95 TO SET STEEL GIRDERS ACROSS NORTHBOUND ROADWAY.
  - ▶ AT PROPOSED RAMP A BRIDGE CROSSING, USE DETOUR PLAN 4 TO DIVERT TRAFFIC OFF SB I-95 TO SET STEEL GIRDERS ACROSS SOUTHBOUND ROADWAY.

STAGE 2 :I-95 / SR 1 WORK ZONE - RAMP A / RAMP B / RAMP B1 / RAMP G1 / RAMP E (ROADWAY)
- CONSTRUCT ROADWAY IMPROVEMENTS AND MSE WALLS.

STAGE 3 :SR 1 WORK ZONE - NB SR 7 / RAMP E / RAMP S / RAMP U / RAMP U1
- USE CASE 4 AND SHIFT NORTHBOUND SR 1/ SR 7 TRAFFIC MOVEMENTS LEFT ONTO NEW PAVEMENT CONSTRUCTED IN PHASE 3.
- CONSTRUCT ROADWAY IMPROVEMENTS FOR PROPOSED NB SR 7, RAMP S, RAMP U, AND RAMP U1.
  - ▶ DIVERT TRAFFIC TO TEMPORARY RAMP S.
- USE CASE 3 TO CLOSE RIGHT SHOULDER ALONG TEMPORARY RAMP E3 AND CONSTRUCT TEMPORARY RAMP E5 PAVEMENT FROM PROPOSED NB RAMP E TO EXISTING SE RAMP SPUR (NORTHBOUND SR 1 TO NORTHBOUND I-95).

STAGE 4 :SR 1 WORK ZONE - RAMP C
- USE CASE 14 TO CONSTRUCT RAMP C IMPROVEMENTS IN HALVES ALONG I-95 NB.
- USE CASE 13 AND CASE 9 TO CONSTRUCT RAMP C ROADWAY IN SECTIONS ALONG NB SR 7.

STAGE 5 :SR 1 WORK ZONE - RAMP G1 / STANTON CHRISTIANA ROAD
- MAINTAIN BARRICADE PLACEMENT AT RAMP R1 AND CONSTRUCT REMAINING ROADWAY AND MSE WALL SEGMENTS ON RAMP G1.
- REMOVE EXISTING BRIDGE OVER SR 7
  - ▶ USE DETOUR PLAN 1 AND DETOUR PLAN 2 TO DIVERT TRAFFIC OFF SR 1 / SR 7 DURING STEEL GIRDER REMOVAL.

CONSTRUCTION PHASE 6

STAGE 1 :I-95 WORK ZONE
- REMOVE TRAFFIC BARRIER NO LONGER REQUIRED FOR THIS PHASE AND USE CASE 4 TO CLOSE SHOULDER ALONG SOUTHBOUND I-95 TO MAINTAIN ACCESS ONTO TEMPORARY RAMP A.
- REMOVE TRAFFIC BARRIER ALONG NORTHBOUND I-95.

STAGE 2 :SR 1 WORK ZONE - RAMP A / RAMP B
- INSTALL TEMPORARY PAVEMENT TO WIDEN GORE AREA AT RAMP G2 (STA. 1412+67 TO STA. 1414+17). USING CASE 14. SHIFT SB SR 1 TRAFFIC TO PROVIDE THE ROOM REQUIRED TO CONSTRUCT THE SOUTHERN MOST SEGMENT OF RAMP A.
- USE CASE 4 TO CLOSE INSIDE SHOULDER ALONG SOUTHBOUND AND NORTHBOUND SR 1/SR 7 AND CONSTRUCT PROPOSED RAMP A AND PROPOSED RAMP B ROADWAY, MSE WALLS, AND BRIDGE STRUCTURES.
  - ▶ AT PROPOSED RAMP A AND PROPOSED RAMP B BRIDGE CROSSINGS, USE DETOUR PLAN 1 TO DIVERT TRAFFIC OFF NB SR 1/ SR 7 TO SET STEEL GIRDERS ACROSS NORTHBOUND ROADWAY.

STAGE 3 :SR 1 WORK ZONE - RAMP E1
- REOPEN PROPOSED NB SR 7, RAMP S, RAMP U, AND RAMP U1.
- USE CASE 7 TO REDUCE ROADWAY WIDTH, MAINTAINING 11' MINIMUM LANES, AND CONSTRUCT AS MUCH OF THE PROPOSED RAMP E1 AS POSSIBLE. ONLY WHEN ABSOLUTELY NECESSARY, CLOSE RAMP E USING DETOUR PLAN 7 AND CONSTRUCT REMAINING PROPOSED PAVEMENT FOR RAMP E/E1. REMOVE TEMPORARY RAMP E5 AND SHIFT TRAFFIC ONTO NEW ROADWAY.

CONSTRUCTION PHASE 7

STAGE 1 :I-95 WORK ZONE
- USE CASE 5 TO CONSTRUCT SB I-95 SHOULDER AREA AND SHIFT TRAFFIC MOVEMENTS ONTO THE NEW RAMP A SOUTHBOUND.
- USE CASE 9 FOR DOUBLE LANE CLOSERS ALONG NB I-95 REQUIRED FOR MILLING AND RESURFACING OPERATIONS.
- OPEN ROADWAY TO ALLOW TRAFFIC ONTO PROPOSED RAMP E AND PROPOSED RAMP G1.

STAGE 2 :SR 1 WORK ZONE - SB SR 7 / SR 1 / RAMP G2
- USE CASE 9 FOR DOUBLE LANE CLOSURES TO CONSTRUCT SB SR 1/SR 7 SHOULDER AREA AND MILLING AND RESURFACING OPERATIONS.
  - ▶ AT PROPOSED RAMP R-1, USE DETOUR PLAN 6 TO DIVERT TRAFFIC OFF RAMP R1 AND DIVERT TO ROAD A.

STAGE 3 :SR 1 WORK ZONE - ROAD A
- USE CASE 10 THE SHIFT TRAFFIC AS REQUIRED ON ROAD A FOR MILLING AND RESURFACING OPERATIONS.

STAGE 4 :I-95 WORK ZONE - RAMP D
- USE CASE 14 TO CONSTRUCT SB SR 7 SHOULDER AND RAMP AREA FROM STA. 2104+00 TO STA. 2113+00.

LEGEND

- ● SUGGESTED SEQUENCE INSTRUCTION
- ▶ DETOUR PLAN APPLICATION

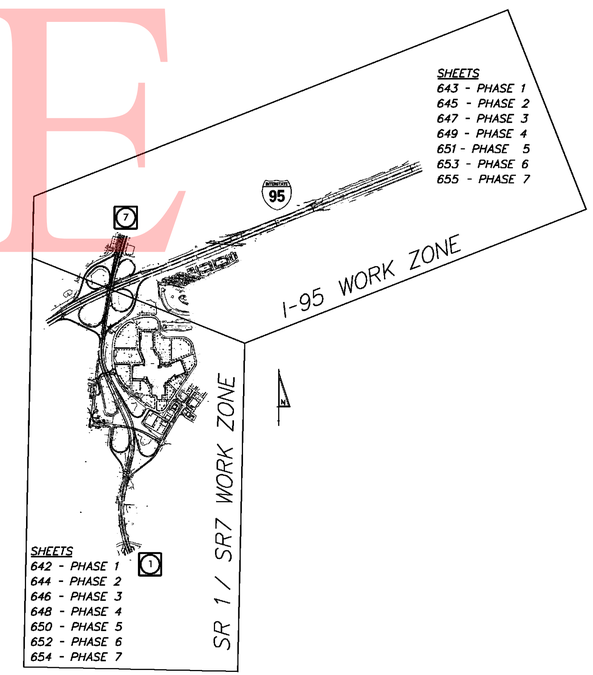

MAINTENANCE OF TRAFFIC
INDEX PLAN

UNOFFICIAL WEBSITE COPY

11/9/2010 12:58:43 AM
M:\PROJECTS\2003\03059_DELTRNPK\SR1MALL\CADD\2809003\PLANS\CS03D_SR1.DGN

DELAWARE DEPARTMENT OF TRANSPORTATION	ADDENDUMS / REVISIONS	NOT TO SCALE	SR1 / I-95 INTERCHANGE	CONTRACT 28-090-03	BRIDGE NO.	CONSTRUCTION PHASING, M.O.T., AND EROSION CONTROL PLAN	SHEET NO. 641
				COUNTY NEW CASTLE	DESIGNED BY: MCS		TOTAL SHTS. 803
					CHECKED BY: EDJ		

UNOFFICAL WEBSITE COPY

CONSTRUCTION PHASING

ID	POSTED SPEED	BUFFER DIST. (FT)	BUFFER # DRUMS	SHOULDER TAPER DIST. (FT)	SHOULDER TAPER # DRUMS
1	SPECIAL	–	PER PLAN	–	PER PLAN
2	25	155	6	45	3
3	35	250	7	85	4
4	40	305	8	110	5
5	55	495	9	220	10

11/5/2010 6:03:36 PM
M:\PROJECTS\2003\03059_DELTRNPK\SR1MALL\CADD\2809003\PLANS\CS04_SR1.DGN

DELAWARE DEPARTMENT OF TRANSPORTATION

ADDENDUMS / REVISIONS

SCALE 0 300 600 900 FEET

SR1 / I-95 INTERCHANGE

CONTRACT	BRIDGE NO.
28-090-03	DESIGNED BY:
COUNTY	
NEW CASTLE	CHECKED BY:

CONSTRUCTION PHASING, M.O.T., AND EROSION CONTROL PLAN – PHASE 1 SR1 CORRIDOR

SHEET NO.
642
TOTAL SHTS.
803

UNOFFICAL VERSIONE COPY

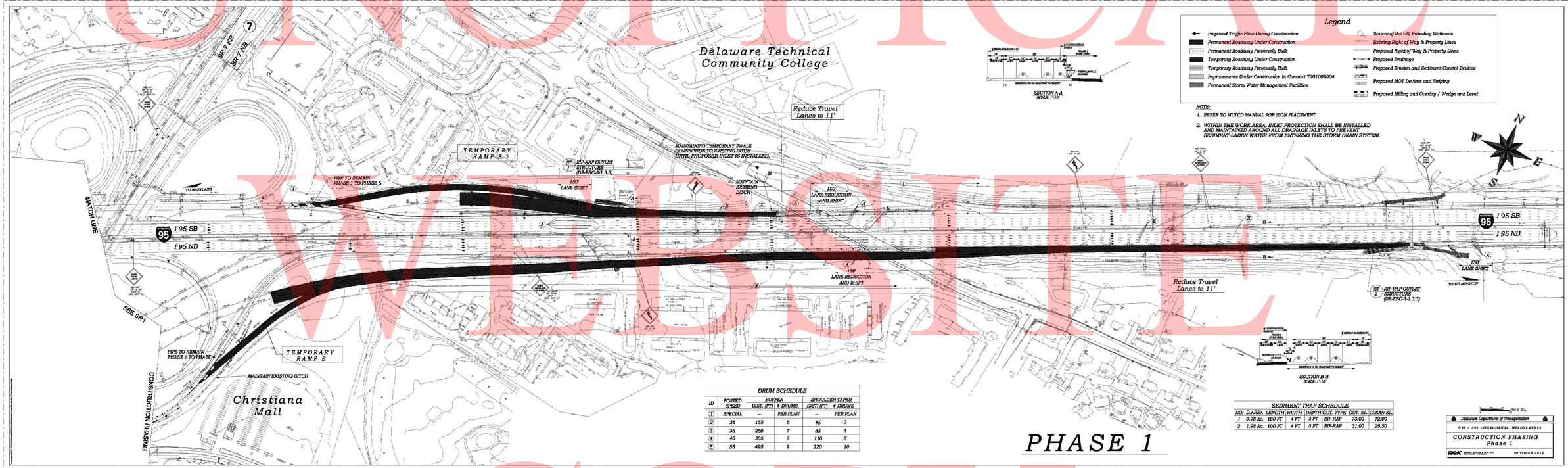

DRUM SCHEDULE

ID	POSTED SPEED	BUFFER DIST. (FT)	BUFFER # DRUMS	SHOULDER TAPER DIST. (FT)	SHOULDER TAPER # DRUMS
1	SPECIAL	--	PER PLAN	--	PER PLAN
2	25	155	6	45	3
3	35	250	7	85	4
4	40	365	8	110	5
5	55	495	9	220	10

SEDIMENT TRAP SCHEDULE

NO.	D.AREA	LENGTH	WIDTH	DEPTH	OUT. TYPE	OUT. EL.	CLEAN EL.
1	0.58 Ac.	100 FT	4 FT	2 FT	RIP-RAP	73.00	72.00
2	1.58 Ac.	100 FT	4 FT	3 FT	RIP-RAP	31.00	29.50

11/5/2010 6:16:43 PM
M:\PROJECTS\2003\03059_DELTRNPK\SRMALL\CADD\2809003\PLANS\CS05_SR1.DGN

DELAWARE DEPARTMENT OF TRANSPORTATION

ADDENDUMS / REVISIONS

SCALE 0 300 600 900 FEET

SR1 / I-95 INTERCHANGE

CONTRACT	BRIDGE NO.	
28-090-03	DESIGNED BY:	
COUNTY		
NEW CASTLE	CHECKED BY:	

CONSTRUCTION PHASING, M.O.T., AND EROSION CONTROL PLAN – PHASE 1 I-95 CORRIDOR

SHEET NO.
643
TOTAL SHTS.
803

UNOFFICAL WEBSITE COPY

DELAWARE DEPARTMENT OF TRANSPORTATION	ADDENDUMS / REVISIONS	SCALE 0 300 600 900 FEET	SR1 / I-95 INTERCHANGE	CONTRACT 28-090-03	BRIDGE NO.	CONSTRUCTION PHASING, M.O.T., AND EROSION CONTROL PLAN – PHASE 2 SR1 CORRIDOR	SHEET NO. 644
				COUNTY NEW CASTLE	DESIGNED BY:		TOTAL SHTS. 803
					CHECKED BY:		

11/5/2010 6:09:30 PM
M:\PROJECTS\2003\03059_DELTRNPK\SRMALL\CADD\2809003\PLANS\CS06_SR1.DGN

UNOFFICAL WEBSITE COPY

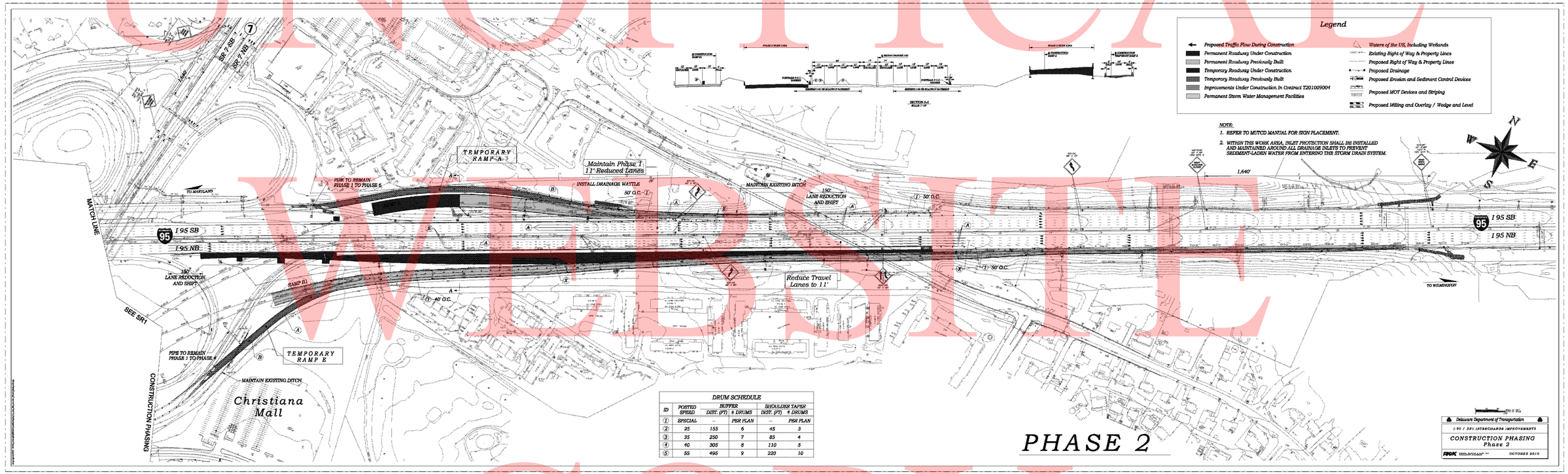

DRUM SCHEDULE

ID	POSTED SPEED	BUFFER DIST. (FT)	BUFFER # DRUMS	SHOULDER TAPER DIST. (FT)	SHOULDER TAPER # DRUMS
1	SPECIAL	–	PER PLAN	–	PER PLAN
2	25	155	6	45	3
3	35	250	7	85	4
4	40	305	8	110	5
5	55	495	9	220	10

DELAWARE DEPARTMENT OF TRANSPORTATION

ADDENDUMS / REVISIONS

SCALE 0 300 600 900 FEET

SR1 / I-95 INTERCHANGE

CONTRACT	BRIDGE NO.	
28-090-03	DESIGNED BY:	
COUNTY		
NEW CASTLE	CHECKED BY:	

CONSTRUCTION PHASING, M.O.T., AND EROSION CONTROL PLAN – PHASE 2 I-95 CORRIDOR

SHEET NO.
645
TOTAL SHTS.
803

11/5/2010 6:17:54 PM
M:\PROJECTS\2003\03059_DELTRNPK\SR1MALL\CADD\2809003\PLANS\CS07_SR1.DGN

UNOFFICAL WEBSITE COPY

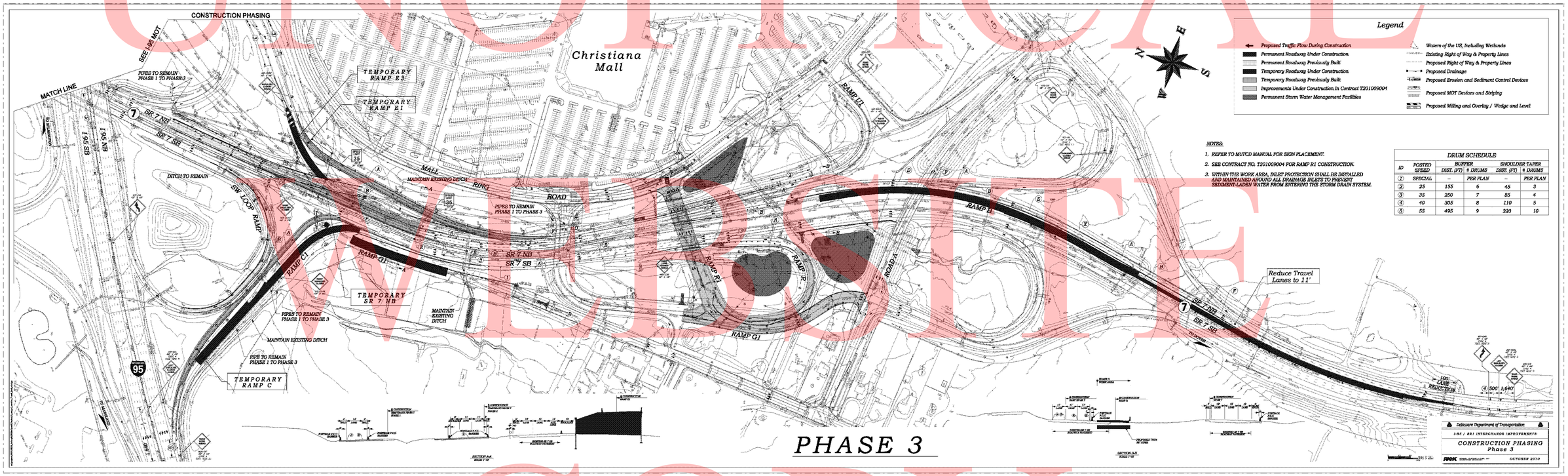

DELAWARE DEPARTMENT OF TRANSPORTATION	ADDENDUMS / REVISIONS	SCALE 0 300 600 900 FEET	SR1 / I-95 INTERCHANGE	CONTRACT 28-090-03	BRIDGE NO.	CONSTRUCTION PHASING, M.O.T., AND EROSION CONTROL PLAN – PHASE 3 SR1 CORRIDOR	SHEET NO. 646
				COUNTY NEW CASTLE	DESIGNED BY:		TOTAL SHTS. 803
					CHECKED BY:		

11/5/2010 6:10:06 PM
M:\PROJECTS\2003\03059_DELTRNPK\SRMALL\CADD\2809003\PLANS\CS08_SR1.DGN

UNOFFICAL WEBSITE COPY

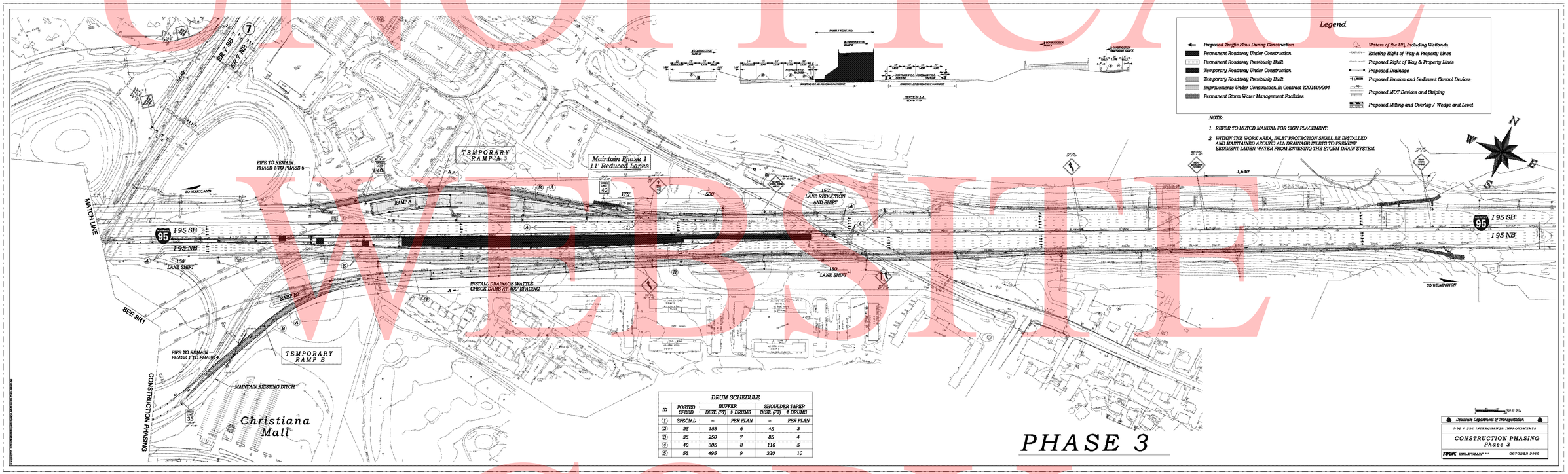

DRUM SCHEDULE

ID	POSTED SPEED	BUFFER DIST. (FT)	BUFFER # DRUMS	SHOULDER TAPER DIST. (FT)	SHOULDER TAPER # DRUMS
1	SPECIAL	--	PER PLAN	--	PER PLAN
2	25	155	6	45	3
3	35	250	7	85	4
4	40	305	8	110	5
5	55	495	9	220	10

11/5/2010 6:18:43 PM
M:\PROJECTS\2003\03059_DELTRNPK\SR1MALL\CADD\2809003\PLANS\CS09_SR1.DGN

DELAWARE DEPARTMENT OF TRANSPORTATION	ADDENDUMS / REVISIONS	SCALE 0 300 600 900 FEET	SR1 / I-95 INTERCHANGE	CONTRACT 28-090-03	BRIDGE NO.	CONSTRUCTION PHASING, M.O.T., AND EROSION CONTROL PLAN – PHASE 3 I-95 CORRIDOR	SHEET NO. 647
				COUNTY NEW CASTLE	DESIGNED BY:		TOTAL SHTS. 803
					CHECKED BY:		

UNOFFICAL WEBSITE COPY

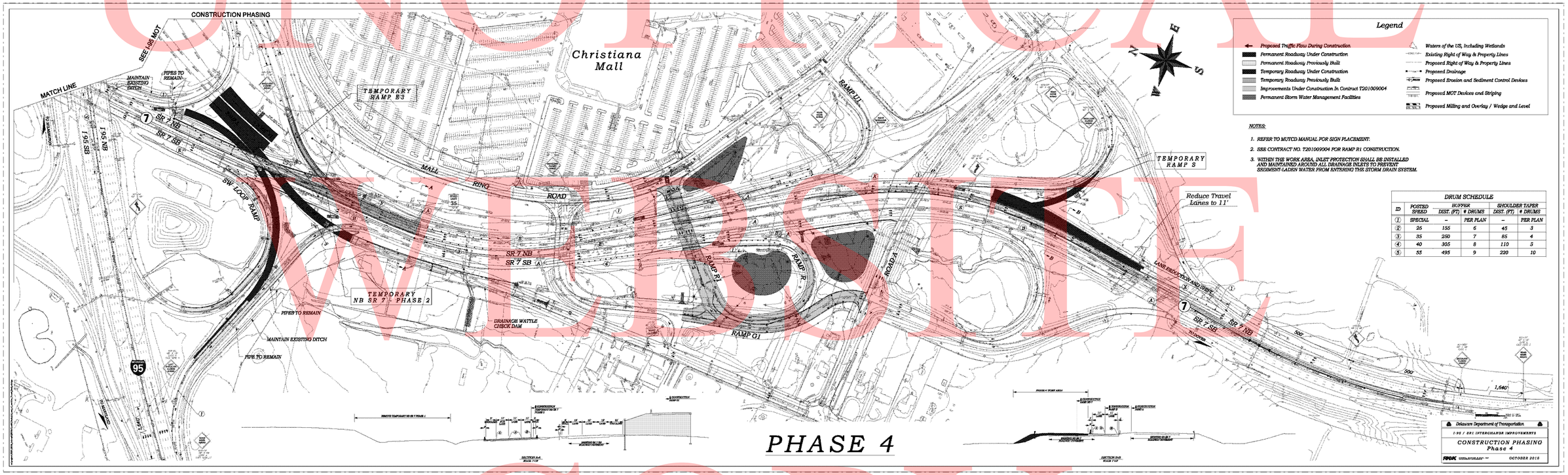

DELAWARE DEPARTMENT OF TRANSPORTATION	ADDENDUMS / REVISIONS	SCALE 0 300 600 900 FEET	SR1 / I-95 INTERCHANGE	CONTRACT 28-090-03	BRIDGE NO.	CONSTRUCTION PHASING, M.O.T., AND EROSION CONTROL PLAN – PHASE 4 SR1 CORRIDOR	SHEET NO. 648
				COUNTY NEW CASTLE	DESIGNED BY:		TOTAL SHTS. 803
					CHECKED BY:		

11/5/2010 6:11:35 PM
M:\PROJECTS\2003\03059_DELTRNPK\SR1MALL\CADD\2809003\PLANS\CS10_SR1.DGN

UNOFFICAL VERSIONS COPY

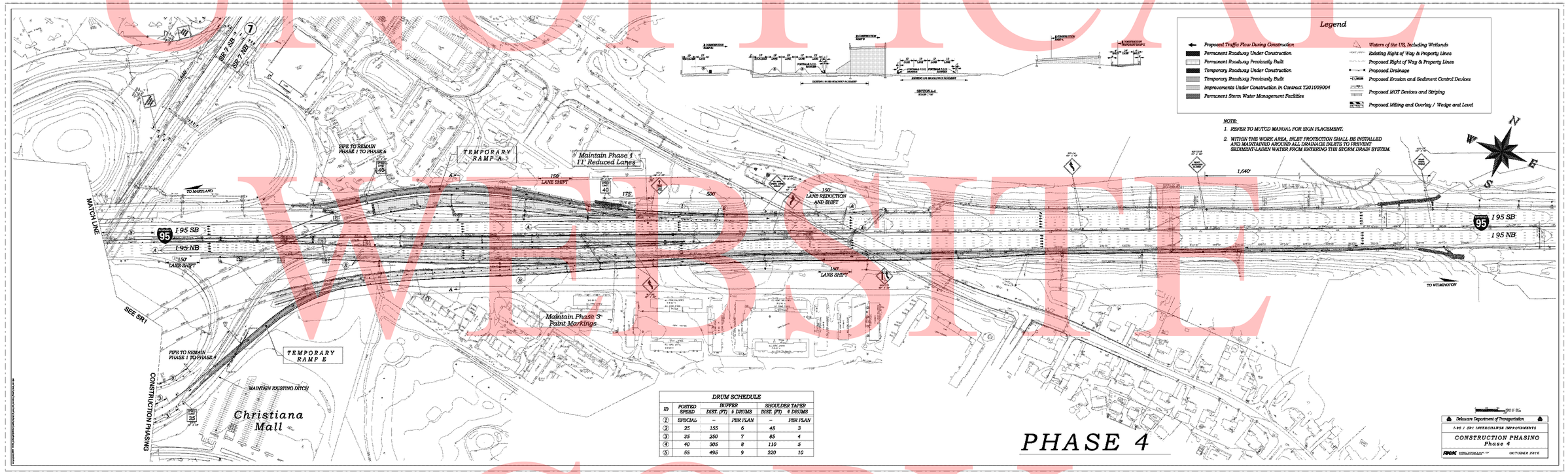

DRUM SCHEDULE

ID	POSTED SPEED	BUFFER DIST. (FT)	BUFFER # DRUMS	SHOULDER TAPER DIST. (FT)	SHOULDER TAPER # DRUMS
1	SPECIAL	--	PER PLAN	--	PER PLAN
2	25	155	6	45	3
3	35	250	7	85	4
4	40	305	8	110	5
5	55	495	9	220	10

11/5/2010 6:19:24 PM
M:\PROJECTS\2003\03059_DELTRNPK\SR1MALL\CADD\2809003\PLANS\CS11_SR1.DGN

DELAWARE DEPARTMENT OF TRANSPORTATION

ADDENDUMS / REVISIONS

SCALE 0 300 600 900 FEET

SR1 / I-95 INTERCHANGE

CONTRACT	BRIDGE NO.	
28-090-03	DESIGNED BY:	
COUNTY		
NEW CASTLE	CHECKED BY:	

CONSTRUCTION PHASING, M.O.T., AND EROSION CONTROL PLAN – PHASE 4 I-95 CORRIDOR

SHEET NO.
649
TOTAL SHTS.
803

UNOFFICAL
WEBSITE
COPY

CONSTRUCTION PHASING

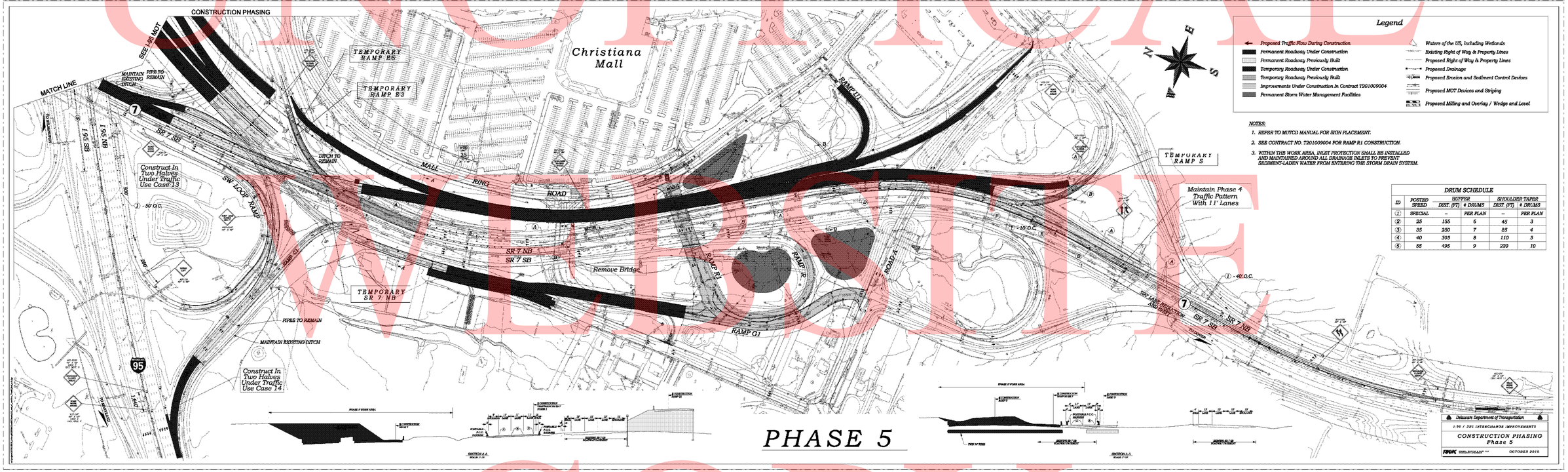

Legend

- Proposed Traffic Flow During Construction
- Permanent Roadway Under Construction
- Permanent Roadway Previously Built
- Temporary Roadway Under Construction
- Temporary Roadway Previously Built
- Improvements Under Construction In Contract T201009004
- Permanent Storm Water Management Facilities
- Waters of the US, Including Wetlands
- Existing Right of Way & Property Lines
- Proposed Right of Way & Property Lines
- Proposed Drainage
- Proposed Erosion and Sediment Control Devices
- Proposed MOT Devices and Striping
- Proposed Milling and Overlay / Wedge and Level

NOTES:

1. REFER TO MUTCD MANUAL FOR SIGN PLACEMENT.
2. SEE CONTRACT NO. T201009004 FOR RAMP R1 CONSTRUCTION.
3. WITHIN THE WORK AREA, INLET PROTECTION SHALL BE INSTALLED AND MAINTAINED AROUND ALL DRAINAGE INLETS TO PREVENT SEDIMENT-LADEN WATER FROM ENTERING THE STORM DRAIN SYSTEM.

DRUM SCHEDULE

ID	POSTED SPEED	BUFFER DIST. (FT)	BUFFER # DRUMS	SHOULDER TAPER DIST. (FT)	SHOULDER TAPER # DRUMS
1	SPECIAL	–	PER PLAN	–	PER PLAN
2	25	155	6	45	3
3	35	250	7	85	4
4	40	305	8	110	5
5	55	495	9	220	10

DELAWARE DEPARTMENT OF TRANSPORTATION

ADDENDUMS / REVISIONS

SCALE 0 300 600 900 FEET

SR1 / I-95 INTERCHANGE

CONTRACT	BRIDGE NO.	CONSTRUCTION PHASING, M.O.T., AND EROSION CONTROL PLAN – PHASE 5 SR1 CORRIDOR	SHEET NO.
28-090-03	DESIGNED BY:		650
COUNTY			TOTAL SHTS.
NEW CASTLE	CHECKED BY:		803

11/5/2010 6:12:38 PM
M:\PROJECTS\2003\03059_DELTRNPK\SRIWALL\CADD\2809003\PLANS\CS12_SR1.DGN

UNOFFICAL VERSION COPY

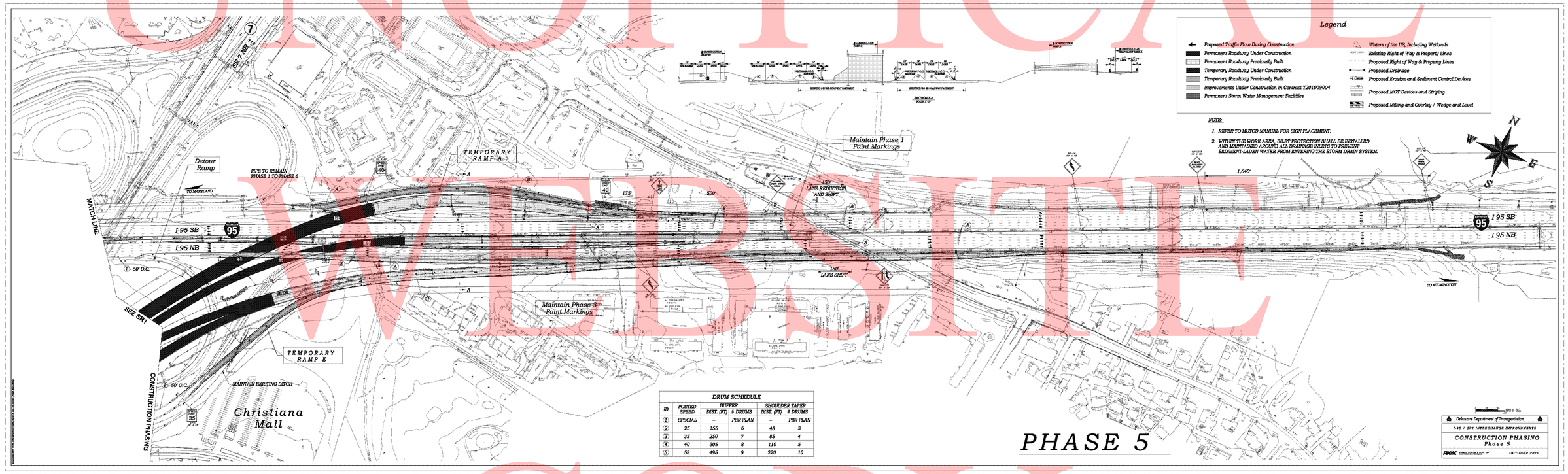

DRUM SCHEDULE

ID	POSTED SPEED	BUFFER DIST. (FT)	BUFFER # DRUMS	SHOULDER TAPER DIST. (FT)	SHOULDER TAPER # DRUMS
1	SPECIAL	--	PER PLAN	--	PER PLAN
2	25	155	6	45	3
3	35	250	7	85	4
4	40	305	8	110	5
5	55	495	9	220	10

11/5/2010 6:20:15 PM
M:\PROJECTS\2003\03059_DELTRNPK\SR1MALL\CADD\2809003\PLANS\CS13_SR1.DGN

DELAWARE DEPARTMENT OF TRANSPORTATION

ADDENDUMS / REVISIONS

SCALE 0 300 600 900 FEET

SR1 / I-95 INTERCHANGE

CONTRACT	BRIDGE NO.		CONSTRUCTION PHASING, M.O.T., AND EROSION CONTROL PLAN – PHASE 5 I-95 CORRIDOR	SHEET NO.
28-090-03	DESIGNED BY:			651
COUNTY				TOTAL SHTS.
NEW CASTLE	CHECKED BY:			803

UNOFFICAL WEBSITE COPY

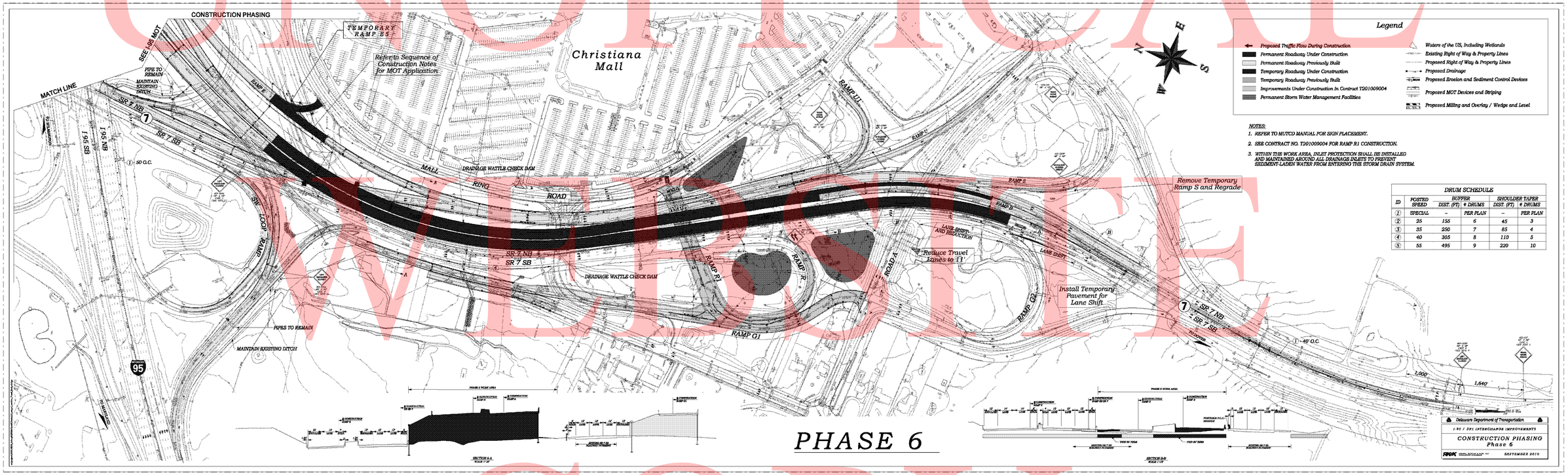

11/5/2010 6:13:46 PM
M:\PROJECTS\2003\03059_DELTRNPK\SR1MALL\CADD\2809003\PLANS\CS14_SR1.DGN

DELAWARE DEPARTMENT OF TRANSPORTATION	ADDENDUMS / REVISIONS	SCALE 0 300 600 900 FEET	SR1 / I-95 INTERCHANGE	CONTRACT 28-090-03	BRIDGE NO.	CONSTRUCTION PHASING, M.O.T., AND EROSION CONTROL PLAN – PHASE 6 SR1 CORRIDOR	SHEET NO. 652
				COUNTY NEW CASTLE	DESIGNED BY:		TOTAL SHTS. 803
					CHECKED BY:		

UNOFFICAL VERSIONE COPY

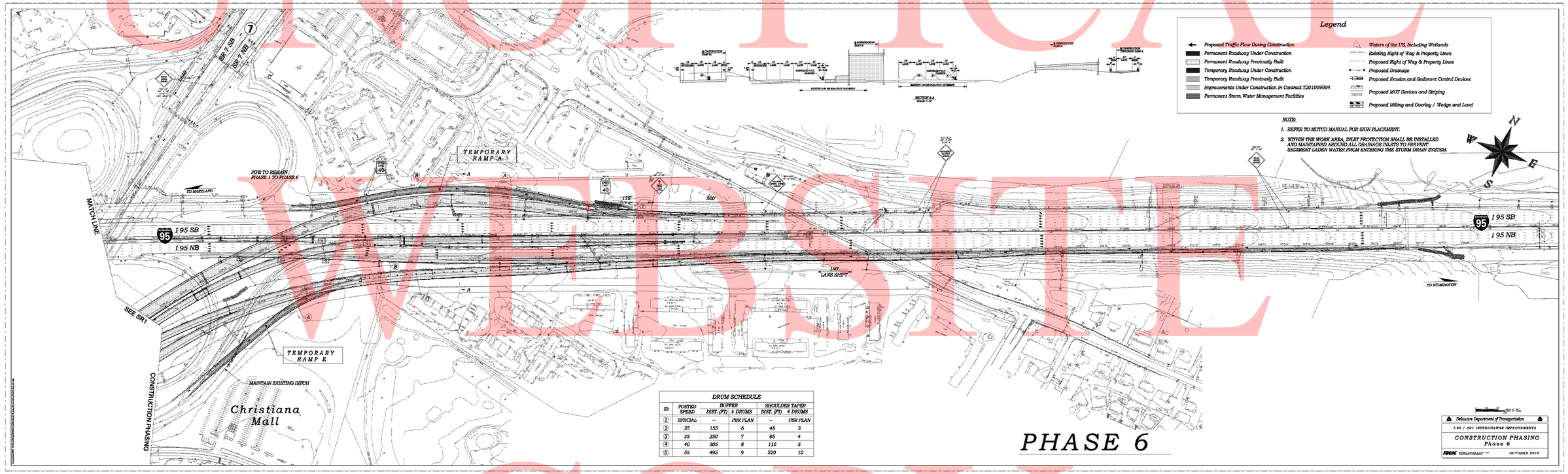

DELAWARE DEPARTMENT OF TRANSPORTATION	ADDENDUMS / REVISIONS	SCALE 0 300 600 900 FEET	SR1 / I-95 INTERCHANGE	CONTRACT 28-090-03	BRIDGE NO.	CONSTRUCTION PHASING, M.O.T., AND EROSION CONTROL PLAN – PHASE 6 I-95 CORRIDOR	SHEET NO. 653
				COUNTY NEW CASTLE	DESIGNED BY:		TOTAL SHTS. 803
					CHECKED BY:		

11/5/2010 6:20:56 PM
M:\PROJECTS\2003\03059_DELTRNPK\SR1MALL\CADD\2809003\PLANS\CS15_SR1.DGN

UNOFFICAL WEBSITE COPY

CONSTRUCTION PHASING

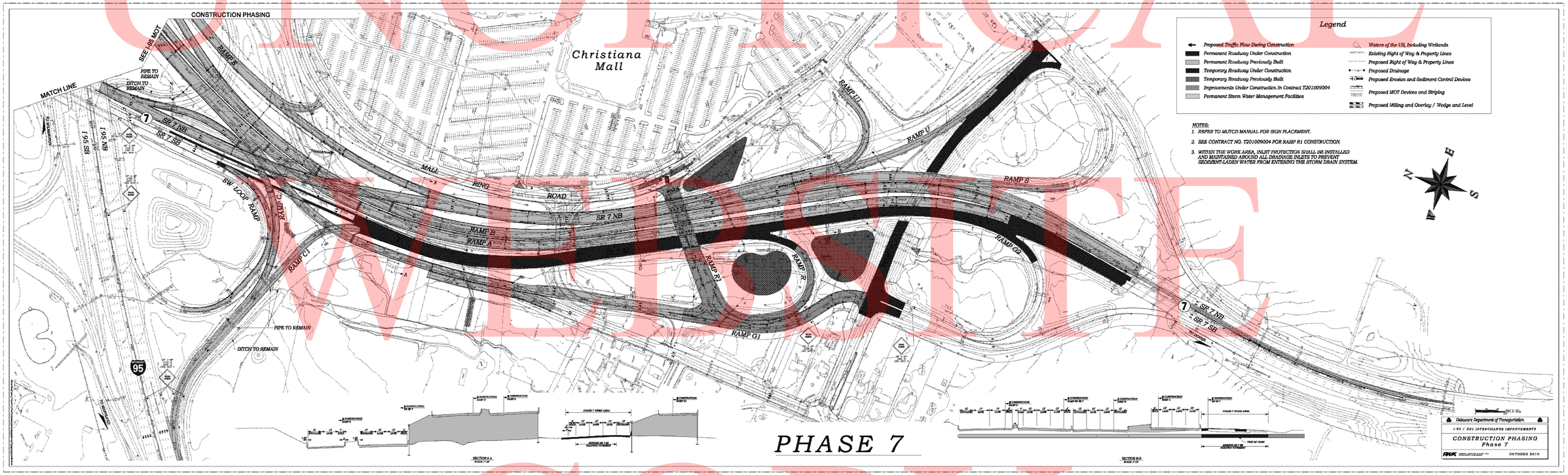

PHASE 7

DELAWARE DEPARTMENT OF TRANSPORTATION	ADDENDUMS / REVISIONS	SCALE 0 300 600 900 FEET	SR1 / I-95 INTERCHANGE	CONTRACT 28-090-03	BRIDGE NO.	CONSTRUCTION PHASING, M.O.T., AND EROSION CONTROL PLAN – PHASE 7 SR1 CORRIDOR	SHEET NO. 654
				COUNTY NEW CASTLE	DESIGNED BY:		TOTAL SHTS. 803
					CHECKED BY:		

11/5/2010 6:15:57 PM
M:\PROJECTS\2003\03059_DELTRNPK\SR1MALL\CADD\2809003\PLANS\CS16_SR1.DGN

UNOFFICAL WEBSITE COPY

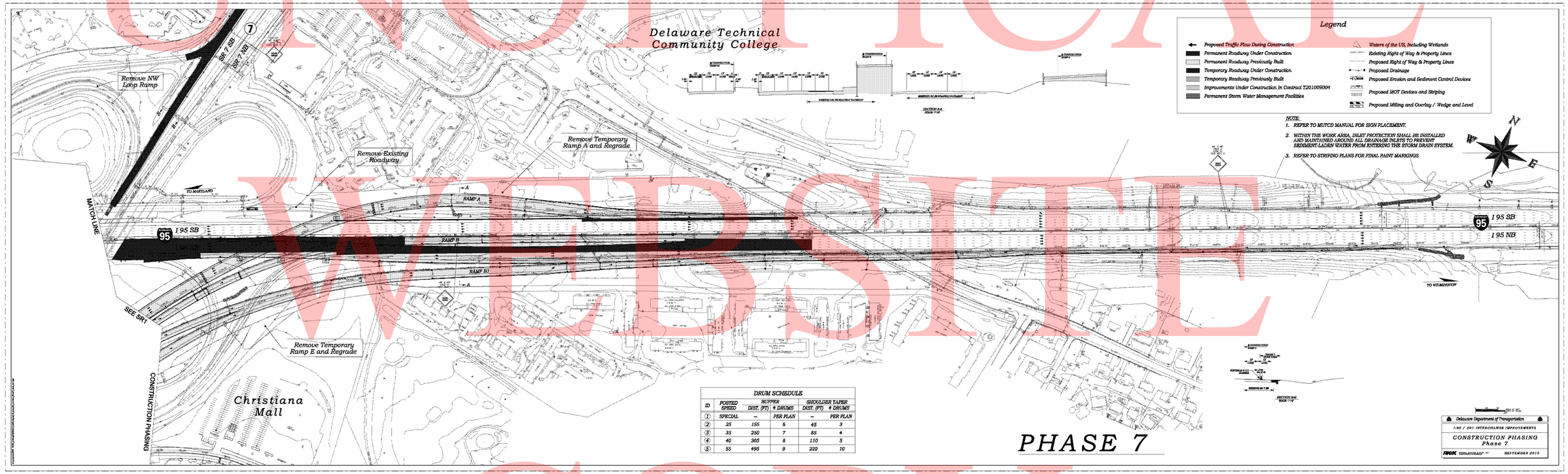

DRUM SCHEDULE

ID	POSTED SPEED	BUFFER DIST. (FT)	BUFFER # DRUMS	SHOULDER TAPER DIST. (FT)	SHOULDER TAPER # DRUMS
1	SPECIAL	–	PER PLAN	–	PER PLAN
2	25	155	6	45	3
3	35	250	7	85	4
4	40	305	8	110	5
5	55	495	9	220	10

11/5/2010 6:21:44 PM
M:\PROJECTS\2003\03059_DELTRNPK\SR1MALL\CADD\2809003\PLANS\CS17_SR1.DGN

DELAWARE DEPARTMENT OF TRANSPORTATION

ADDENDUMS / REVISIONS

SCALE 0 300 600 900 FEET

SR1 / I-95 INTERCHANGE

CONTRACT	BRIDGE NO.	
28-090-03	DESIGNED BY:	
COUNTY		
NEW CASTLE	CHECKED BY:	

CONSTRUCTION PHASING, M.O.T., AND EROSION CONTROL PLAN – PHASE 7 I-95 CORRIDOR

SHEET NO.
655
TOTAL SHTS.
803

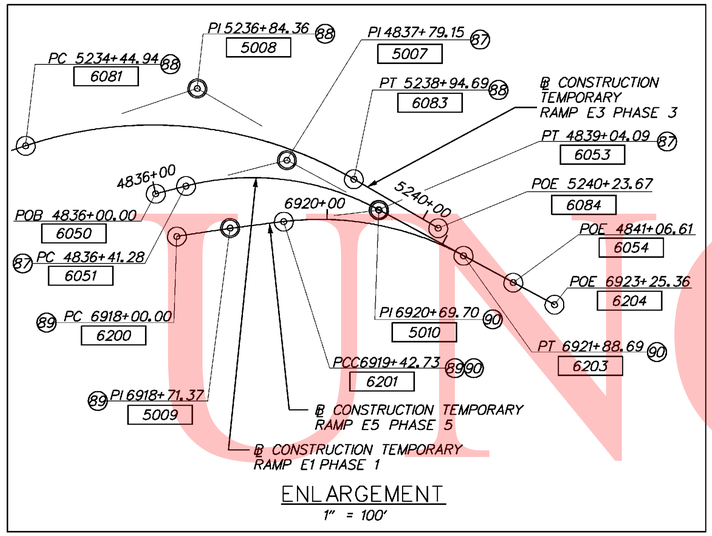

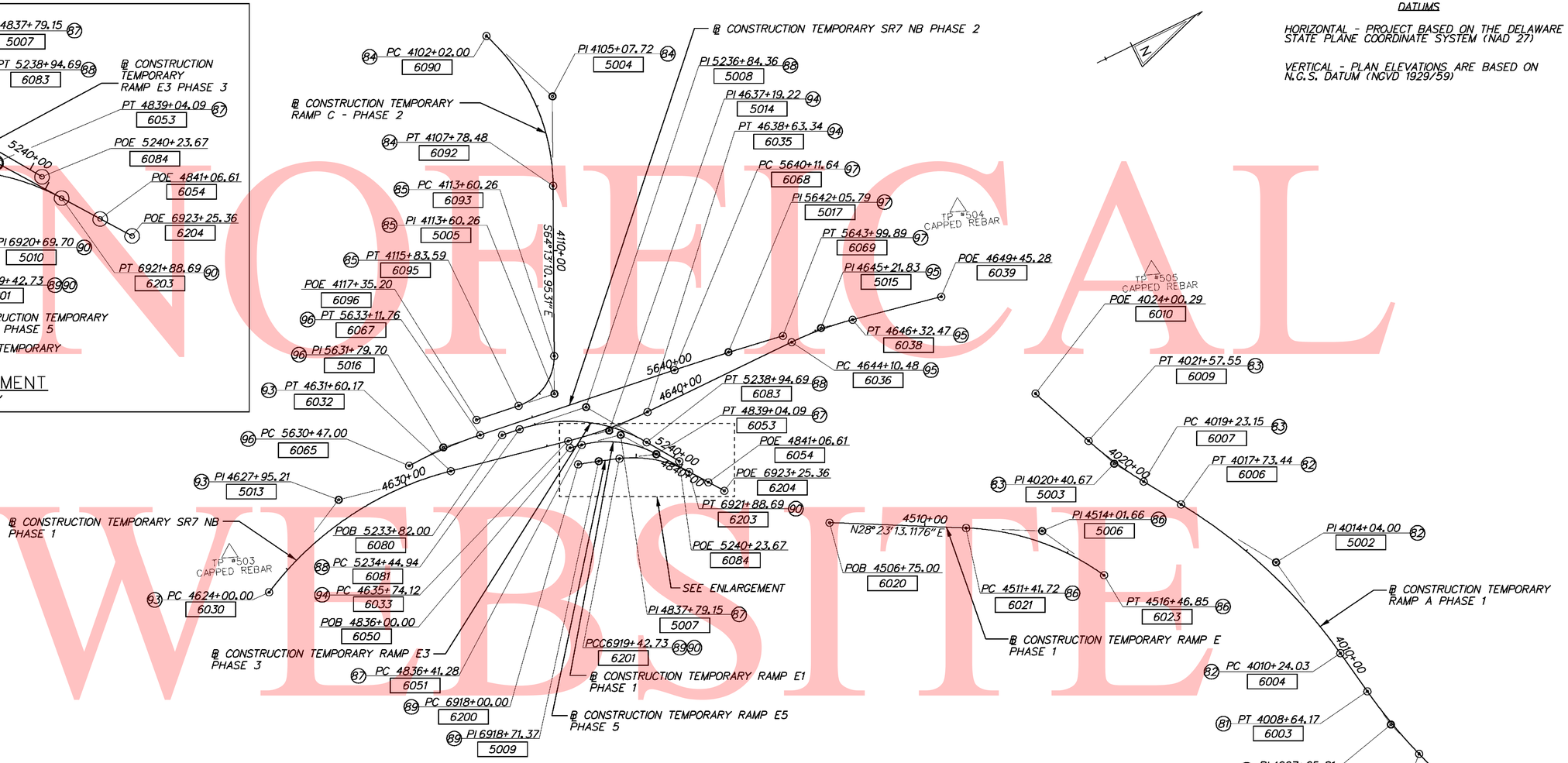

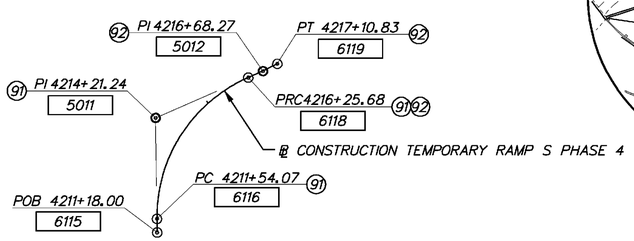

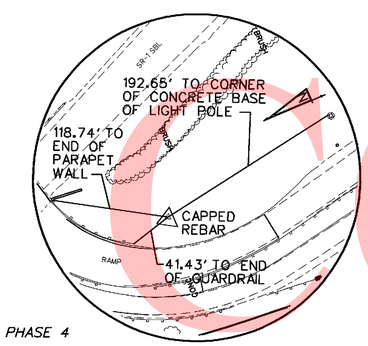

TRAVERSE POINT 503
N 610,979.52
E 432,227.39
ELEV. 75.92'

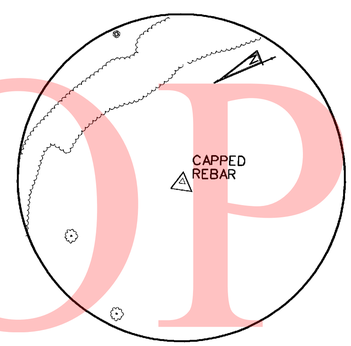

TRAVERSE POINT 504
N 613,733.12
E 432,262.04
ELEV. 103.94'

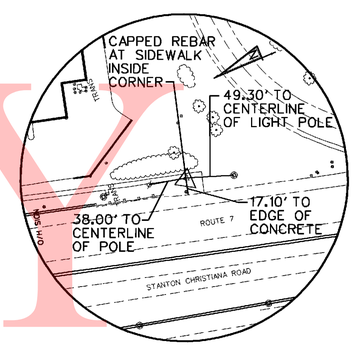

TRAVERSE POINT 505
N 614,232.84
E 432,747.33
ELEV. 78.54'

DATUMS

HORIZONTAL - PROJECT BASED ON THE DELAWARE STATE PLANE COORDINATE SYSTEM (NAD 27)

VERTICAL - PLAN ELEVATIONS ARE BASED ON N.G.S. DATUM (NGVD 1929/59)

INDEX

STATION XXXX — CURVE IDENTIFICATION NO. (X) — POINT NO.

UNOFFICAL WEBSITE COPY

8/23/2010 12:22:02 PM
M:\projects\2003\03059_detrnpk\SR1Mall\Cadd\2809003\Plans\cs18_sr1.dgn

DELAWARE DEPARTMENT OF TRANSPORTATION	ADDENDUMS / REVISIONS	SCALE 0 200 400 600 FEET	SR1 / I-95 INTERCHANGE	CONTRACT 28-090-03	BRIDGE NO.	CONSTRUCTION PHASING HORIZONTAL AND VERTICAL CONTROL PLAN TEMPORARY ROADWAY	SHEET NO. 656
				COUNTY NEW CASTLE	DESIGNED BY: ZJS		TOTAL SHTS. 435
					CHECKED BY: EDJ		

TEMPORARY RAMP A PHASE 1

CIRCULAR CURVE NO. 80

Element: Circular

	STATION	NORTHING	EASTING
PC (6000)	4000+00.00	614519.7392	435190.1411
PI (5000)	4002+93.59	614410.0574	434917.8132
CC (1202)		622007.2651	432174.4919
PCC (6001)	4005+86.91	614320.4488	434638.2369

Radius: 8072.0000
Delta: 4°09'57.4562" Right
Degree of Curvature(Arc): 0°42'35.3123"
Length: 586.9129
Tangent: 293.5858
Chord: 586.7836
Middle Ordinate: 5.3337
External: 5.3372
Tangent Direction: S 68°03'45.2577" W
Radial Direction: N 21°56'14.7423" W
Chord Direction: S 70°08'43.9858" W
Radial Direction: N 17°46'17.2861" W
Tangent Direction: S 72°13'42.7139" W

CIRCULAR CURVE NO. 81

Element: Circular

	STATION	NORTHING	EASTING
PCC (6001)	4005+86.91	614320.4488	434638.2369
PI (5001)	4007+25.81	614278.0555	434505.9708
CC (6002)		616072.6468	434076.6300
PT (6003)	4008+64.17	614255.9978	434368.8395

Radius: 1840.0000
Delta: 8°38'01.1988" Right
Degree of Curvature(Arc): 3°06'50.0438"
Length: 277.2621
Tangent: 138.8939
Chord: 276.9998
Middle Ordinate: 5.2200
External: 5.2348
Tangent Direction: S 72°13'42.7139" W
Radial Direction: N 17°46'17.2861" W
Chord Direction: S 76°32'43.3134" W
Radial Direction: N 9°08'19.0872" W
Tangent Direction: S 80°51'43.9128" W

CIRCULAR CURVE NO. 82

Element: Circular

	STATION	NORTHING	EASTING
PC (6004)	4010+24.03	614230.6116	434211.0154
PI (5002)	4014+04.00	614170.2686	433835.8659
CC (6005)		612413.9626	434503.2248
PT (6006)	4017+73.44	613966.2574	433515.3073

Radius: 1840.0000
Delta: 23°20'09.0591" Left
Degree of Curvature(Arc): 3°06'50.0438"
Length: 749.4088
Tangent: 379.9716
Chord: 744.2398
Middle Ordinate: 38.0214
External: 38.8237
Tangent Direction: S 80°51'43.9128" W
Radial Direction: N 9°08'16.0872" W
Chord Direction: S 69°11'39.3832" W
Radial Direction: N 32°28'25.1463" W
Tangent Direction: S 57°31'34.8537" W

CIRCULAR CURVE NO. 83

Element: Circular

	STATION	NORTHING	EASTING
PRC (6007)	4019+23.15	613885.8738	433389.0022
PI (5003)	4020+40.67	613822.7773	433289.8601
CC (6008)		614982.6037	432691.0170
PT (6009)	4021+57.55	613778.4830	433181.0101

Radius: 1300.0000
Delta: 10°19'50.7320" Right
Degree of Curvature(Arc): 4°24'26.5236"
Length: 234.3975
Tangent: 117.5173
Chord: 234.0801
Middle Ordinate: 5.2793
External: 5.3009
Tangent Direction: S 57°31'34.8537" W
Radial Direction: N 32°28'25.1463" W
Chord Direction: S 62°41'30.2197" W
Radial Direction: N 22°08'34.4143" W
Tangent Direction: S 67°51'25.5857" W

TEMPORARY RAMP C PHASE 2

CIRCULAR CURVE NO. 84

Element: Circular

	STATION	NORTHING	EASTING
PC (6090)	4102+02.00	612554.1832	431032.7425
PI (5004)	4105+07.72	612653.7584	431317.3722
CC (6091)		611890.4675	431288.2160
PT (6092)	4107+78.48	612520.7955	431592.6610

Radius: 700.000
Delta: 47°11'07.9483" Right
Degree of Curvature(Arc): 8°11'06.4009"
Length: 576.4801
Tangent: 305.7173
Chord: 560.3268
Middle Ordinate: 58.5107
External: 63.8475
Tangent Direction: N 68°35'41.0985" E
Radial Direction: S 21°24'18.9015" E
Chord Direction: S 87°48'44.9273" E
Radial Direction: S 25°46'49.0469" W
Tangent Direction: S 64°13'10.9531" E

CIRCULAR CURVE NO. 85

Element: Circular

	STATION	NORTHING	EASTING
PT (6093)	4113+60.26	612267.7661	432116.5371
PI (5005)	4114+89.32	612211.6366	432232.7485
CC (6094)		612107.4827	432039.1211
PT (6095)	4115+83.59	612083.7339	432215.5297

Radius: 178.0000
Delta: 71°53'13.2579" Right
Degree of Curvature(Arc): 32°11'19.1046"
Length: 223.3304
Tangent: 129.0566
Chord: 208.9675
Middle Ordinate: 33.8919
External: 41.8627
Tangent Direction: S 64°13'10.9531" E
Radial Direction: S 25°46'49.0469" W
Chord Direction: S 28°16'34.3242" E
Radial Direction: N 82°19'57.6952" W
Tangent Direction: S 7°40'02.3048" W

TEMPORARY RAMP E PHASE 1

CIRCULAR CURVE NO. 86

Element: Circular

	STATION	NORTHING	EASTING
PC (6021)	4511+41.72	613271.7854	433264.0853
PI (5006)	4514+01.66	613500.4744	433387.6698
CC (6022)		612859.1172	434027.7141
PT (6023)	4516+46.85	613623.5900	433616.6115

Radius: 868.0000
Delta: 33°20'36.4505" Right
Degree of Curvature(Arc): 6°36'03.2265"
Length: 505.1353
Tangent: 259.9457
Chord: 498.0374
Middle Ordinate: 36.4871
External: 38.0882
Tangent Direction: N 28°23'13.1176" E
Radial Direction: S 61°36'46.8824" E
Chord Direction: N 45°03'31.3428" E
Radial Direction: S 28°16'10.4319" E
Tangent Direction: N 61°43'49.5681" E

TEMPORARY RAMP E1 PHASE 1

CIRCULAR CURVE NO. 87

Element: Circular

	STATION	NORTHING	EASTING
PC (6051)	4836+41.28	612218.2090	432430.3529
PI (5007)	4837+79.15	612353.1660	432458.5304
CC (6052)		612146.2666	432774.9226
PT (6053)	4839+04.09	612433.0873	432570.8690

Radius: 352.0000
Delta: 42°46'38.6345" Right
Degree of Curvature(Arc): 16°16'37.9563"
Length: 262.8055
Tangent: 137.8672
Chord: 256.7440
Middle Ordinate: 24.2430
External: 26.0362
Tangent Direction: N 11°47'35.9211" E
Radial Direction: S 78°12'24.0789" E
Chord Direction: N 33°10'55.2384" E
Radial Direction: S 35°25'45.4444" E
Tangent Direction: N 54°34'14.5556" E

TEMPORARY RAMP E3 PHASE 3

CIRCULAR CURVE NO. 88

Element: Circular

	STATION	NORTHING	EASTING
PC (6081)	5234+44.94	612051.3334	432289.1349
PI (5008)	5236+84.36	612288.6149	432321.0457
CC (6082)		611980.6925	432814.4062
PT (6083)	5238+94.69	612421.5246	432520.1834

Radius: 530.0000
Delta: 48°37'13.3673" Right
Degree of Curvature(Arc): 10°48'37.8880"
Length: 449.7504
Tangent: 239.4177
Chord: 436.3770
Middle Ordinate: 46.9951
External: 51.5676
Tangent Direction: N 7°39'34.0003" E
Radial Direction: S 82°20'25.9997" E
Chord Direction: N 31°58'10.6840" E
Radial Direction: S 33°43'12.6324" E
Tangent Direction: N 56°16'47.3676" E

DATUMS

HORIZONTAL - PROJECT BASED ON THE DELAWARE STATE PLANE COORDINATE SYSTEM (NAD 27)

VERTICAL - PLAN ELEVATIONS ARE BASED ON N.G.S. SURVEY DATUM (NGVD 1929/59)

UNOFFICIAL WEBSITE COPY

TEMPORARY RAMP E5 PHASE 5

CIRCULAR CURVE NO. 89

		STATION	NORTHING	EASTING
Element: Circular				
PC	(6200)	6918+00.00	612177.9724	432484.9445
PI	(5009)	6918+71.37	612246.1892	432505.9377
CC	(908)		611120.2806	435921.8768
PCC	(6201)	6919+42.73	612313.5193	432529.6213
Radius:		3596.0000		
Delta:		2°16'26.8807" Right		
Degree of Curvature(Arc):		1°35'35.9512"		
Length:		142.7293		
Tangent:		71.3740		
Chord:		142.7199		
Middle Ordinate:		0.7081		
External:		0.7083		
Tangent Direction:	N	17°06'19.3764" E		
Radial Direction:	S	72°53'40.6236" E		
Chord Direction:	N	18°14'32.8168" E		
Radial Direction:	S	70°37'13.7429" E		
Tangent Direction:	N	19°22'46.2571" E		

CIRCULAR CURVE NO. 90

		STATION	NORTHING	EASTING
Element: Circular				
PCC	(6201)	6919+42.73	612313.5193	432529.6213
PI	(5010)	6920+69.70	612433.2920	432571.7518
CC	(6202)		612180.1261	432908.8445
PT	(6203)	6921+88.69	612507.1379	432675.0343
Radius:		402.0000		
Delta:		35°03'21.9210" Right		
Degree of Curvature(Arc):		14°15'09.6533"		
Length:		245.9614		
Tangent:		126.9665		
Chord:		242.1428		
Middle Ordinate:		18.6650		
External:		19.5738		
Tangent Direction:	N	19°22'46.2571" E		
Radial Direction:	S	70°37'13.7429" E		
Chord Direction:	N	36°54'27.2176" E		
Radial Direction:	S	35°33'51.8218" E		
Tangent Direction:	N	54°26'08.1782" E		

TEMPORARY RAMP S PHASE 4

CIRCULAR CURVE NO. 91

		STATION	NORTHING	EASTING
Element: Circular				
PC	(6116)	4211+54.07	608965.5445	433305.5074
PI	(5011)	4214+21.24	609080.1096	433064.1475
CC	(6117)		609328.7092	433477.8889
PRC	(6118)	4216+25.68	609347.0027	433076.3054
Radius:		402.0000		
Delta:		67°12'58.1396" Right		
Degree of Curvature(Arc):		14°15'09.6533"		
Length:		471.6035		
Tangent:		267.1698		
Chord:		445.0212		
Middle Ordinate:		67.1970		
External:		80.6839		
Tangent Direction:	N	64°36'28.5922" W		
Radial Direction:	N	25°23'31.4078" E		
Chord Direction:	N	30°59'59.5224" W		
Radial Direction:	S	87°23'30.4526" E		
Tangent Direction:	N	2°36'29.5474" E		

TEMPORARY RAMP S PHASE 4

CIRCULAR CURVE NO. 92

		STATION	NORTHING	EASTING
Element: Circular				
RCC	(6118)	4216+25.68	609347.0027	433076.3054
PI	(5012)	4216+68.27	609389.5509	433078.2436
CC	(404)		609408.4359	431727.7039
PT	(6119)	4217+10.83	609432.1367	433077.4958
Radius:		1350.0000		
Delta:		3°36'50.9531" Right		
Degree of Curvature(Arc):		4°14'38.8745"		
Length:		85.1565		
Tangent:		42.5924		
Chord:		85.1424		
Middle Ordinate:		0.6714		
External:		0.6717		
Tangent Direction:	N	2°36'29.5474" E		
Radial Direction:	S	87°23'30.4526" E		
Chord Direction:	N	0°48'04.0708" E		
Radial Direction:	N	88°59'38.5943" E		
Tangent Direction:	N	1°00'21.4057" W		

TEMPORARY SR7 NB PHASE 1

CIRCULAR CURVE NO. 93

		STATION	NORTHING	EASTING
Element: Circular				
PC	(6030)	4624+00.00	611038.1341	432411.7757
PI	(5013)	4627+95.21	611390.6221	432233.0443
CC	(6031)		611547.3581	433416.0500
PT	(6032)	4631+60.17	611777.4920	432313.8185
Radius:		1126.0000		
Delta:		38°40'51.2508" Right		
Degree of Curvature(Arc):		5°05'18.3665"		
Length:		760.1729		
Tangent:		395.2123		
Chord:		745.8188		
Middle Ordinate:		63.5431		
External:		67.3435		
Tangent Direction:	N	26°53'15.3297" W		
Radial Direction:	N	63°06'44.6703" E		
Chord Direction:	N	7°32'49.7043" W		
Radial Direction:	S	78°12'24.0789" E		
Tangent Direction:	N	11°47'35.9211" E		

CIRCULAR CURVE NO. 94

		STATION	NORTHING	EASTING
Element: Circular				
PT	(6033)	4635+74.12	612182.7045	432398.4224
PI	(5014)	4637+19.22	612324.7383	432428.0775
CC	(6034)		612477.0142	430988.8190
PT	(6035)	4638+63.34	612469.8331	432428.8011
Radius:		1440.0000		
Delta:		11°30'27.2932" Left		
Degree of Curvature(Arc):		3°58'43.9449"		
Length:		289.2171		
Tangent:		145.0966		
Chord:		288.7312		
Middle Ordinate:		7.2549		
External:		7.2916		
Tangent Direction:	N	11°47'35.9211" E		
Radial Direction:	S	78°12'24.0789" E		
Chord Direction:	N	6°02'22.2745" E		
Radial Direction:	S	89°42'51.3721" E		
Tangent Direction:	N	0°17'08.6279" E		

TEMPORARY SR7 NB PHASE 1

CIRCULAR CURVE NO. 95

		STATION	NORTHING	EASTING
Element: Circular				
PC	(6036)	4644+10.48	613016.9614	432431.5296
PI	(5015)	4645+21.83	613128.3173	432432.0849
CC	(6037)		613011.3462	433557.5156
PT	(3068)	4646+32.47	613237.4073	432454.4415
Radius:		1126.0000		
Delta:		11°17'45.4353" Right		
Degree of Curvature(Arc):		5°05'18.3665"		
Length:		221.9927		
Tangent:		111.3573		
Chord:		221.6333		
Middle Ordinate:		5.4663		
External:		5.4930		
Tangent Direction:	N	0°17'08.6279" E		
Radial Direction:	S	89°42'51.3721" E		
Chord Direction:	N	5°56'01.3455" E		
Radial Direction:	S	78°25'05.9368" E		
Tangent Direction:	N	11°34'54.0632" E		

TEMPORARY SR7 NB PHASE 2

CIRCULAR CURVE NO. 96

		STATION	NORTHING	EASTING
Element: Circular				
PC	(6065)	5630+47.00	611657.8938	432234.7673
PI	(5016)	5631+79.70	611790.5041	432229.8414
CC	(6066)		611715.4305	433783.6990
PT	(6067)	5633+11.76	611922.0218	432247.5285
Radius:		1550.0000		
Delta:		9°47'12.3995" Right		
Degree of Curvature(Arc):		3°41'47.4069"		
Length:		264.7578		
Tangent:		132.7017		
Chord:		264.4361		
Middle Ordinate:		5.6495		
External:		5.6702		
Tangent Direction:	N	2°07'38.3991" W		
Radial Direction:	N	87°52'21.6009" E		
Chord Direction:	N	2°45'57.8006" E		
Radial Direction:	S	82°20'25.9997" E		
Tangent Direction:	N	7°39'34.0003" E		

CIRCULAR CURVE NO. 97

		STATION	NORTHING	EASTING
Element: Circular				
PC	(6068)	5640+11.64	612615.6614	432340.8123
PI	(5017)	5642+05.79	612808.0723	432366.6886
CC	(614)		611116.2085	443490.4375
PT	(6069)	5643+99.89	612999.4757	432399.1885
Radius:		11250.0000		
Delta:		1°58'38.3817" Right		
Degree of Curvature(Arc):		0°30'33.4649"		
Length:		388.2475		
Tangent:		194.1430		
Chord:		388.2282		
Middle Ordinate:		1.6748		
External:		1.6751		
Tangent Direction:	N	7°39'34.0003" E		
Radial Direction:	S	82°20'25.9997" E		
Chord Direction:	N	8°38'53.1912" E		
Radial Direction:	S	80°21'47.6179" E		
Tangent Direction:	N	9°38'12.3821" E		

UNOFFICIAL WEBSITE COPY

TEMPORARY RAMP A PHASE 1

CONSTRUCTION ALIGNMENT CONTROL				
POINT	STATION	OFFSET	NORTHING	EASTING
6000	4000+00.00	0	614519.7392	435190.1411
5000	4002+93.59	-5.3372	614410.0574	434917.8132
6001	4005+86.91	0	614320.4488	434638.2369
5001	4007+25.81	-5.2348	614278.0555	434505.9708
6003	4008+64.17	0	614255.9978	434368.8395
6004	4010+24.03	0	614230.6116	434211.0154
5002	4014+04.00	38.8237	614170.2686	433835.8659
6006	4017+73.44	0	613966.2574	433515.3073
6007	4019+23.15	0	613885.8738	433389.0022
5003	4020+40.67	-5.3009	613822.7773	433289.8601
6009	4021+57.55	0	613778.4830	433181.0101
6010	4024+00.29	0	613686.9900	432956.1730

TEMPORARY RAMP C PHASE 2

CONSTRUCTION ALIGNMENT CONTROL				
POINT	STATION	OFFSET	NORTHING	EASTING
6090	4102+02.00	0	612542.1832	431032.7425
5004	4105+07.72	-63.8475	612653.7584	431317.3722
6092	4107+78.48	0	612520.7955	431592.6610
6093	4113+60.26	0	612267.7661	432116.5371
5005	4114+89.32	-41.8627	612211.6366	432232.7485
6095	4115+83.59	0	612083.7339	432215.5297
6096	4117+35.20	0	611933.4811	432195.3020

TEMPORARY RAMP E PHASE 1

CONSTRUCTION ALIGNMENT CONTROL				
POINT	STATION	OFFSET	NORTHING	EASTING
6020	4506+75.00	0	612861.1868	433042.1960
6021	4511+41.72	0	613271.7854	433264.0853
5006	4514+01.66	-38.0882	613500.4744	433387.6698
6023	4516+46.85	0	613623.5900	433616.6115

TEMPORARY RAMP E1 PHASE 1

CONSTRUCTION ALIGNMENT CONTROL				
POINT	STATION	OFFSET	NORTHING	EASTING
6050	4836+00.00	0	612177.7993	432421.9158
6051	4836+41.28	0	612218.2090	432430.3529
5007	4837+79.15	-26.0362	612353.1660	432458.5304
6053	4839+04.09	0	612433.0873	432570.8690
6054	4841+06.61	0	612550.4898	432735.8916

TEMPORARY RAMP E3 PHASE 3

CONSTRUCTION ALIGNMENT CONTROL				
POINT	STATION	OFFSET	NORTHING	EASTING
6080	5233+82.00	0	611988.9508	432280.7455
6081	5234+44.94	0	612051.3334	432289.1349
5008	5236+84.36	-51.5676	612288.6149	432321.0457
6083	5238+94.69	0	612421.5246	432520.1834
6084	5240+23.67	0	612493.1260	432627.4634

TEMPORARY RAMP E5 PHASE 5

CONSTRUCTION ALIGNMENT CONTROL				
POINT	STATION	OFFSET	NORTHING	EASTING
6200	6918+00.00	0	612177.9724	432484.9445
5009	6918+71.37	-0.7083	612246.1892	432505.9377
6201	6919+42.73	0	612313.5193	432529.6213
5010	6920+69.70	-19.5738	612433.2920	432571.7518
6203	6921+88.69	0	612507.1379	432675.0343
6204	6923+25.36	0	612586.6259	432786.2078

TEMPORARY RAMP S PHASE 4

CONSTRUCTION ALIGNMENT CONTROL				
POINT	STATION	OFFSET	NORTHING	EASTING
6115	4211+18.00	0	608950.0762	433338.0954
6116	4211+54.07	0	608965.5445	433305.5074
5011	4214+21.24	-80.6839	609080.1096	433064.1475
6118	4216+25.68	0	609347.0027	433076.3054
5012	4216+68.27	0.6717	609389.5509	433078.2436
6119	4217+10.83	0	609432.1367	433077.4958

TEMPORARY SR7 PHASE 1

CONSTRUCTION ALIGNMENT CONTROL				
POINT	STATION	OFFSET	NORTHING	EASTING
6030	4624+00.00	0	611038.1341	432411.7757
5013	4627+95.21	-67.3435	611390.6221	432233.0443
6032	4631+60.17	0	611777.4920	432313.8185
6033	4635+74.12	0	612182.7045	432398.4224
5014	4637+19.22	7.2916	612324.7383	432428.0775
6035	4638+63.34	0	612469.8331	432428.8011
6036	4644+10.48	0	613016.9614	432431.5296
5015	4645+21.83	-5.4930	613128.3173	432432.0849
6038	4646+32.47	0	613237.4073	432454.4415
6039	4649+45.28	0	613543.8478	432517.2427

TEMPORARY SR7 PHASE 2

CONSTRUCTION ALIGNMENT CONTROL				
POINT	STATION	OFFSET	NORTHING	EASTING
6065	5630+47.00	0	611657.8938	432234.7673
5016	5631+79.70	-5.6702	611790.5041	432229.8414
6067	5633+11.76	0	611922.0218	432247.5285
6068	5640+11.64	0	612615.6614	432340.8123
5017	5642+05.79	-1.6751	612808.0723	432366.6886
6069	5643+99.89	0	612999.4757	432399.1885

UNOFFICIAL WEBSITE COPY

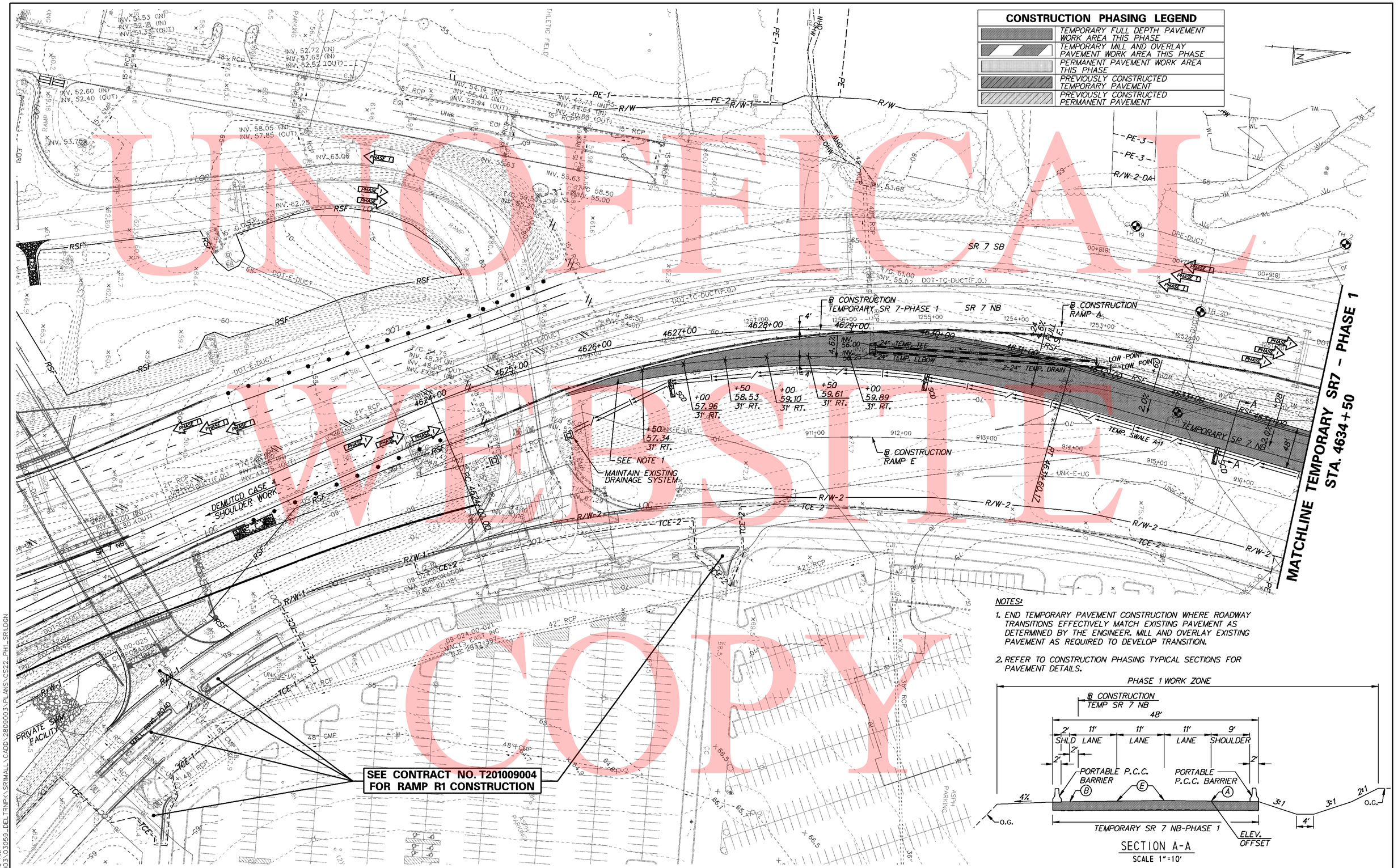

NOTES:

1. END TEMPORARY PAVEMENT CONSTRUCTION WHERE ROADWAY TRANSITIONS EFFECTIVELY MATCH EXISTING PAVEMENT AS DETERMINED BY THE ENGINEER. MILL AND OVERLAY EXISTING PAVEMENT AS REQUIRED TO DEVELOP TRANSITION.
2. REFER TO CONSTRUCTION PHASING TYPICAL SECTIONS FOR PAVEMENT DETAILS.

SECTION A-A
SCALE 1"=10'

DELAWARE DEPARTMENT OF TRANSPORTATION	ADDENDUMS / REVISIONS	SCALE 0 50 100 150 FEET	SR1 / I-95 INTERCHANGE	CONTRACT 28-090-03 / COUNTY NEW CASTLE	BRIDGE NO. / DESIGNED BY: EDJ / CHECKED BY: RLS
CONSTRUCTION PHASING, MOT AND EROSION CONTROL PHASE 1 TEMPORARY ROADWAY	SHEET NO. 660 / TOTAL SHTS. 803				

11/2/2010 9:56:36 AM
M:\PROJECTS\2003\03059_DELTRNPK\SRTMALL\CADD\2809003\PLANS\CS22_PH1_SR1.DGN

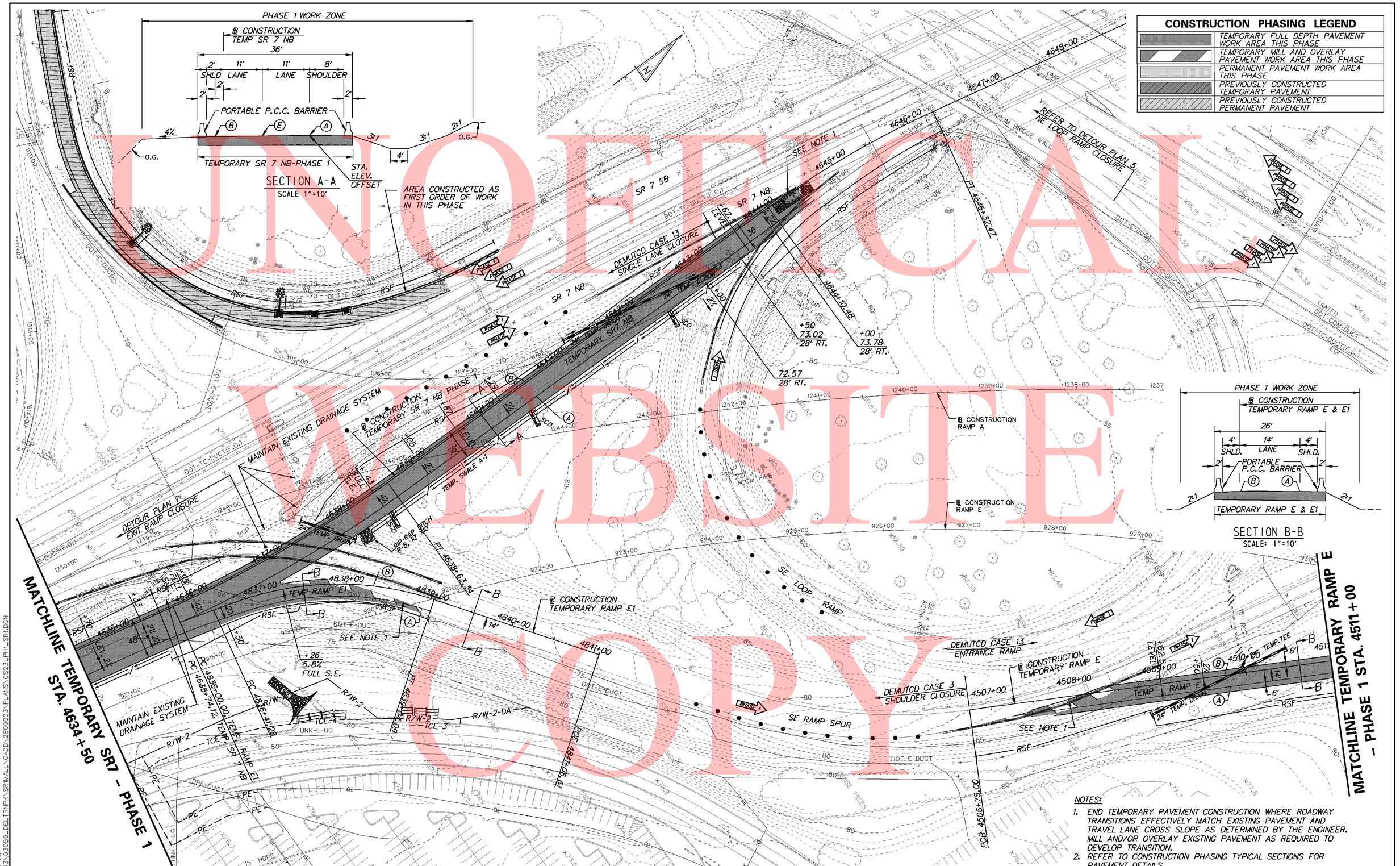

CONSTRUCTION PHASING LEGEND

	TEMPORARY FULL DEPTH PAVEMENT WORK AREA THIS PHASE
	TEMPORARY MILL AND OVERLAY PAVEMENT WORK AREA THIS PHASE
	PERMANENT PAVEMENT WORK AREA THIS PHASE
	PREVIOUSLY CONSTRUCTED TEMPORARY PAVEMENT
	PREVIOUSLY CONSTRUCTED PERMANENT PAVEMENT

NOTES:

1. END TEMPORARY PAVEMENT CONSTRUCTION WHERE ROADWAY TRANSITIONS EFFECTIVELY MATCH EXISTING PAVEMENT AND TRAVEL LANE CROSS SLOPE AS DETERMINED BY THE ENGINEER. MILL AND/OR OVERLAY EXISTING PAVEMENT AS REQUIRED TO DEVELOP TRANSITION.
2. REFER TO CONSTRUCTION PHASING TYPICAL SECTIONS FOR PAVEMENT DETAILS.

UNOFFICIAL WEBSITE COPY

11/2/2010 9:04:22 AM
M:\PROJECTS\2003\03059_DELTRNPK\SRIMALL\CADD\2809003\PLANS\CS23_PH1_SR1.DGN

DELAWARE DEPARTMENT OF TRANSPORTATION

ADDENDUMS / REVISIONS

SCALE 0 50 100 150 FEET

SR1 / I-95 INTERCHANGE

CONTRACT	BRIDGE NO.	
28-090-03	DESIGNED BY:	EDJ
COUNTY	CHECKED BY:	RLS
NEW CASTLE		

CONSTRUCTION PHASING, MOT AND EROSION CONTROL PHASE 1 TEMPORARY ROADWAY

SHEET NO. 661
TOTAL SHTS. 803

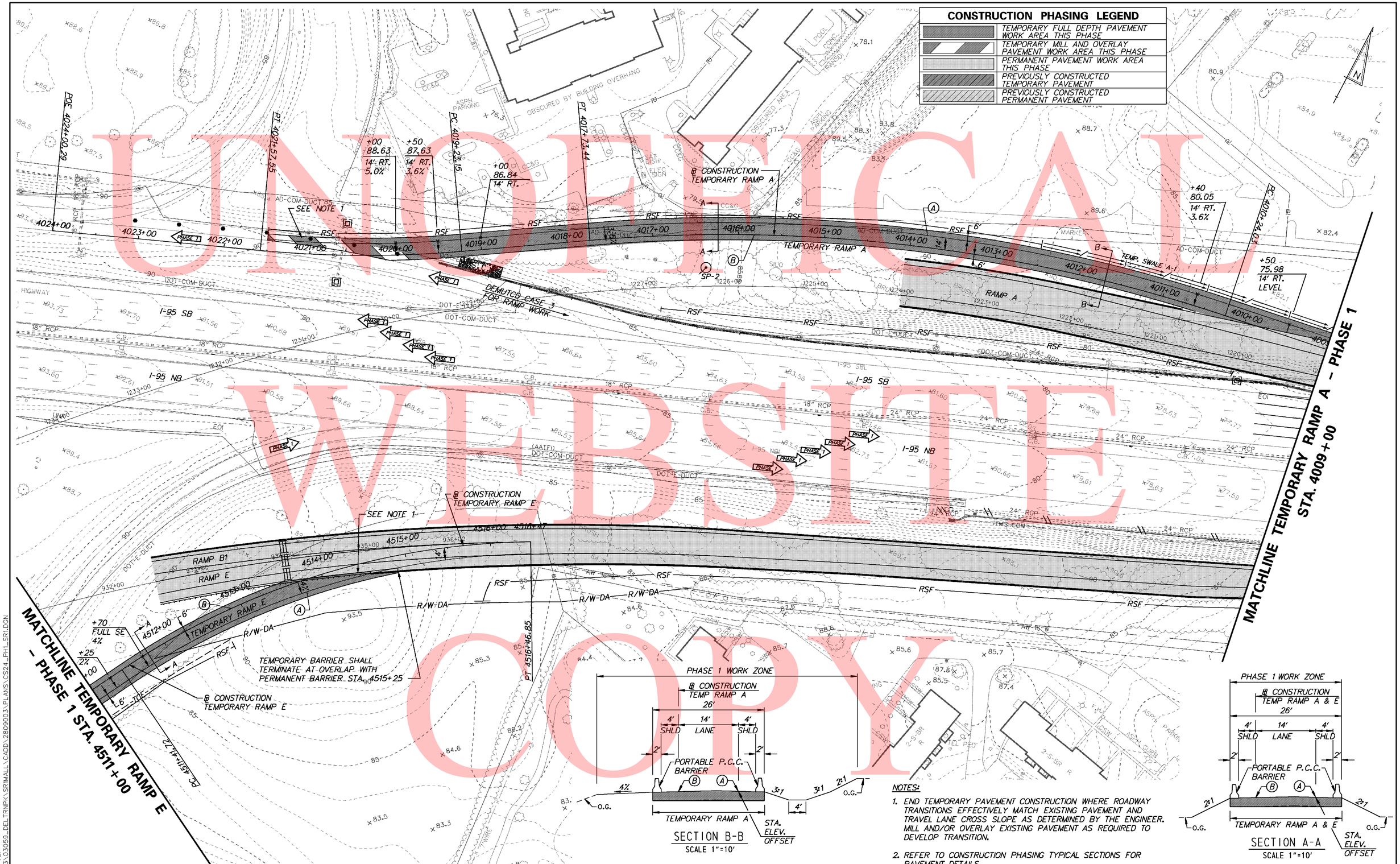

NOTES:

1. END TEMPORARY PAVEMENT CONSTRUCTION WHERE ROADWAY TRANSITIONS EFFECTIVELY MATCH EXISTING PAVEMENT AND TRAVEL LANE CROSS SLOPE AS DETERMINED BY THE ENGINEER. MILL AND/OR OVERLAY EXISTING PAVEMENT AS REQUIRED TO DEVELOP TRANSITION.
2. REFER TO CONSTRUCTION PHASING TYPICAL SECTIONS FOR PAVEMENT DETAILS.

UNOFFICIAL WEBSITE COPY

DELAWARE DEPARTMENT OF TRANSPORTATION	ADDENDUMS / REVISIONS	SCALE 0 50 100 150 FEET	SR1 / I-95 INTERCHANGE	CONTRACT 28-090-03 / COUNTY NEW CASTLE	BRIDGE NO. / DESIGNED BY: EDJ / CHECKED BY: RLS
CONSTRUCTION PHASING, MOT AND EROSION CONTROL PHASE 1 TEMPORARY ROADWAY	SHEET NO. 662 / TOTAL SHTS. 803				

11/2/2010 8:39:03 AM
M:\PROJECTS\2003\03059_DELTRNPK\SRIMALL\CADD\2809003\PLANS\CS24_PH1_SR1.DGN

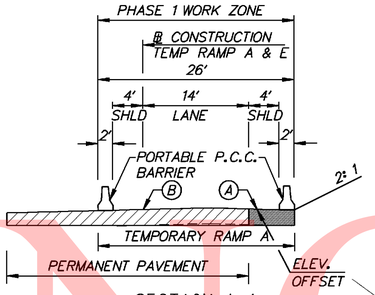

SECTION A-A
SCALE 1"=10'

NOTES:

1. END TEMPORARY PAVEMENT CONSTRUCTION WHERE ROADWAY TRANSITIONS EFFECTIVELY MATCH EXISTING PAVEMENT AND TRAVEL LANE CROSS SLOPE AS DETERMINED BY THE ENGINEER. MILL AND/OR OVERLAY EXISTING PAVEMENT AS REQUIRED TO DEVELOP TRANSITION.
2. REFER TO CONSTRUCTION PHASING TYPICAL SECTIONS FOR PAVEMENT DETAILS.
3. PERMANENT BARRIER CONSTRUCTION BEYOND STA.1216+90 SHALL BE TERMINATED TO ALLOW ACCESS FOR TEMPORARY ROAD A. AN OPENING SHALL BE PROVIDED USING TEMPORARY BARRIER TO ALLOW DRAINAGE TO PASS THROUGH.

CONSTRUCTION PHASING LEGEND

	TEMPORARY FULL DEPTH PAVEMENT WORK AREA THIS PHASE
	TEMPORARY MILL AND OVERLAY PAVEMENT WORK AREA THIS PHASE
	PERMANENT PAVEMENT WORK AREA THIS PHASE
	PREVIOUSLY CONSTRUCTED TEMPORARY PAVEMENT
	PREVIOUSLY CONSTRUCTED PERMANENT PAVEMENT

SEDIMENT TRAP SCHEDULE

NO.	D. AREA	LENGTH	WIDTH	DEPTH	OUT. TYPE	OUT. EL.	CLEAN EL.
1	0.98 Ac.	100 FT	4 FT	2 FT	RIP-RAP	73.00	72.00

UNOFFICAL WEBSITE COPY

DELAWARE DEPARTMENT OF TRANSPORTATION

ADDENDUMS / REVISIONS

SCALE 0 50 100 150 FEET

SR1 / I-95 INTERCHANGE

CONTRACT	BRIDGE NO.	
28-090-03	DESIGNED BY:	EDJ
COUNTY	CHECKED BY:	RLS
NEW CASTLE		

CONSTRUCTION PHASING, MOT AND EROSION CONTROL PHASE 1 TEMPORARY ROADWAY

SHEET NO. 663
TOTAL SHTS. 803

11/2/2010 10:25:03 AM
M:\PROJECTS\2003\03059_DELTRNPK\SRIMALL\CADD\2809003\PLANS\CS25_PH1_SR1.DGN

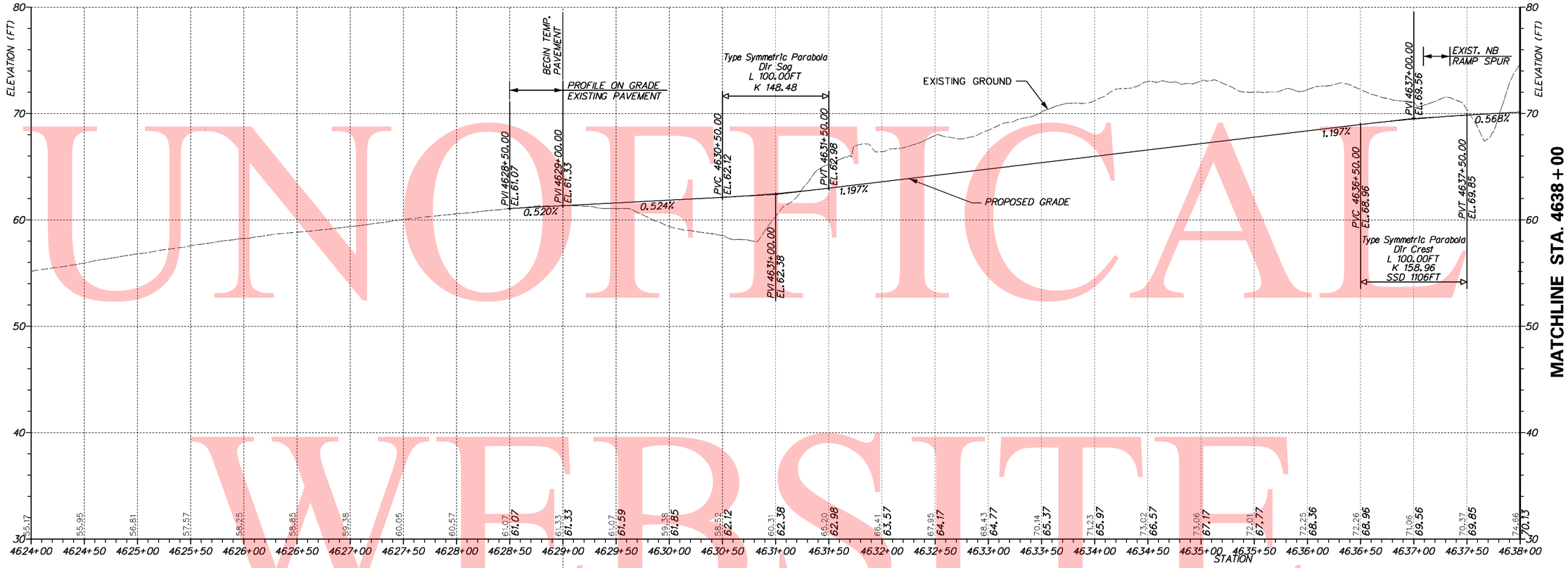

TEMPORARY NB SR7 - PHASE 1

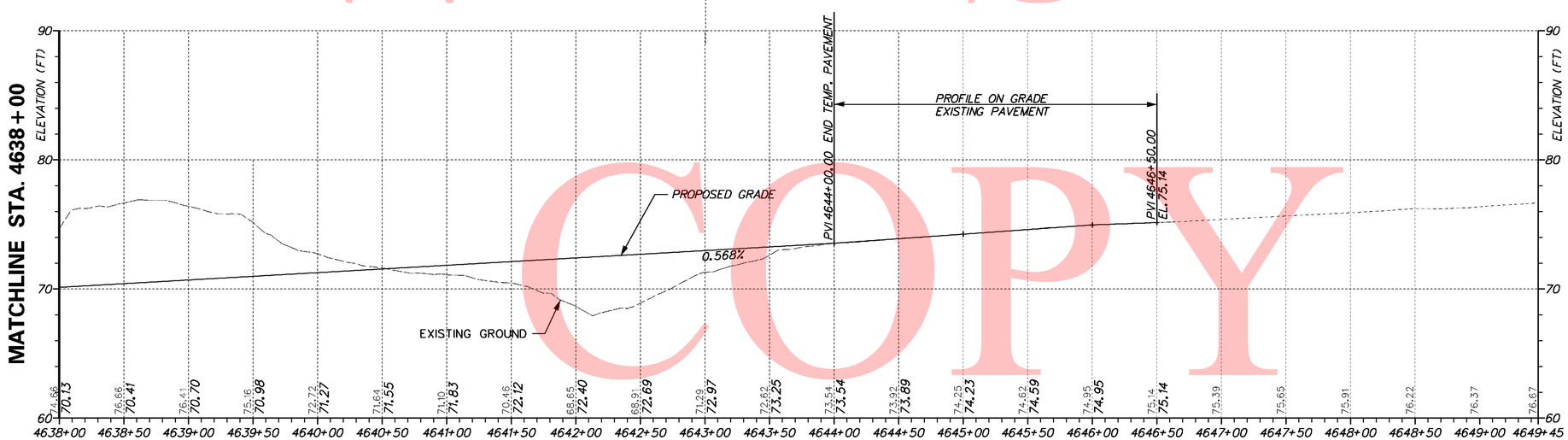

TEMPORARY NB SR7 - PHASE 1

VERTICAL SCALE FEET 0 5 10 15

UNOFFICIAL WEBSITE COPY

11/2/2010 5:06:31 PM
M:\PROJECTS\2003\03059_DELTRNPK\SRIMALL\CADD\2809003\PLANS\CS26_PH1_SR1.DGN

DELAWARE DEPARTMENT OF TRANSPORTATION	ADDENDUMS / REVISIONS	SCALE 0 50 100 150 FEET	SR1 / I-95 INTERCHANGE	CONTRACT 28-090-03	BRIDGE NO.	CONSTRUCTION PHASING, MOT AND EROSION CONTROL PHASE 1 TEMPORARY ROADWAY	SHEET NO. 664
				COUNTY NEW CASTLE	DESIGNED BY: EDJ		TOTAL SHTS. 803
					CHECKED BY: RLS		

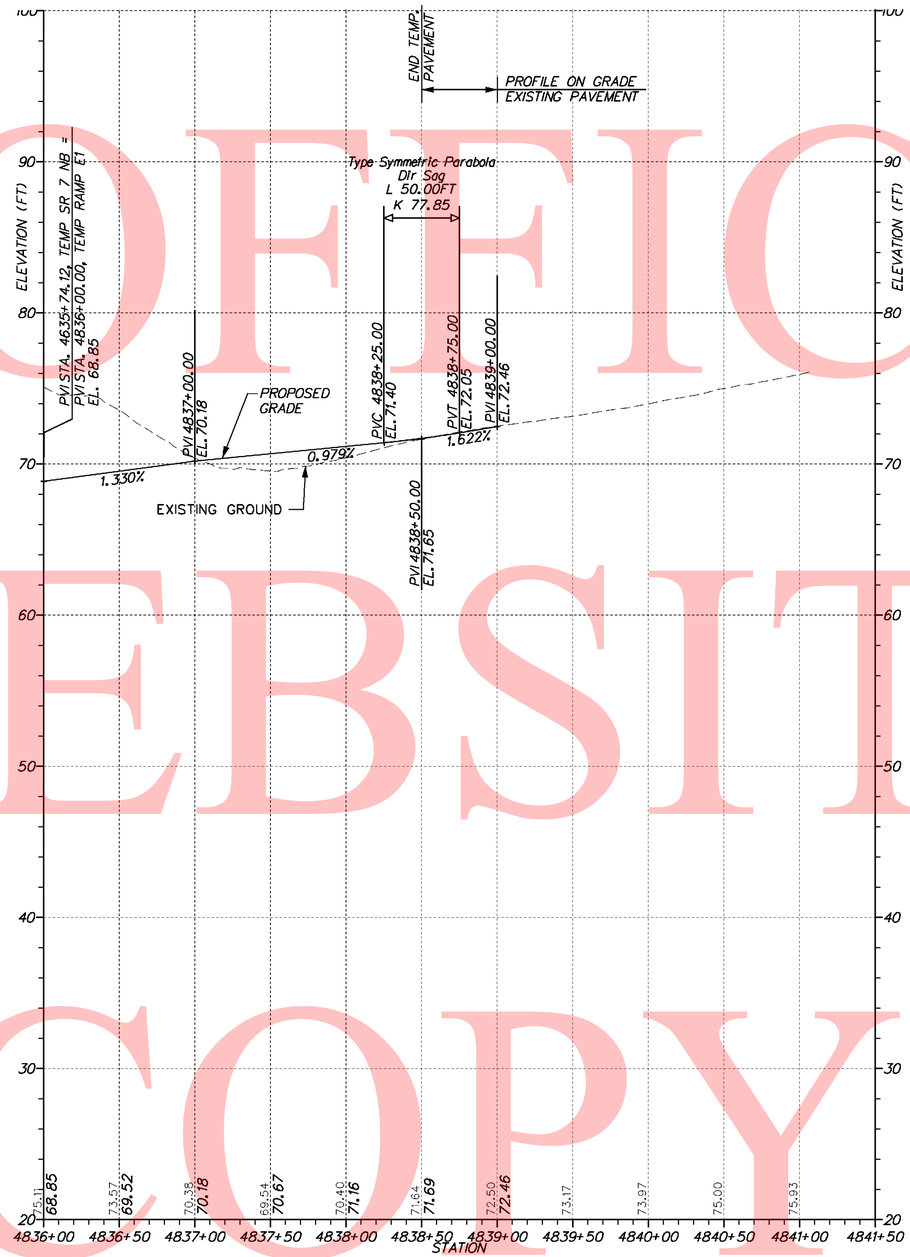

TEMPORARY RAMP E1

VERTICAL SCALE FEET 0 5 10 15

UNOFFICAL WEBSITE COPY

11/3/2010 11:22:04 PM
M:\PROJECTS\2003\03059_DELTRNPK\SRMALL\CADD\2809003\PLANS\CS27_PH1_SR1.DGN

DELAWARE DEPARTMENT OF TRANSPORTATION	ADDENDUMS / REVISIONS	SCALE 0 50 100 150 FEET	SR1 / I-95 INTERCHANGE	CONTRACT 28-090-03	BRIDGE NO.	CONSTRUCTION PHASING, MOT AND EROSION CONTROL PHASE 1 TEMPORARY ROADWAY	SHEET NO. 665
				COUNTY NEW CASTLE	DESIGNED BY: EDJ		TOTAL SHTS. 803
					CHECKED BY: RLS		

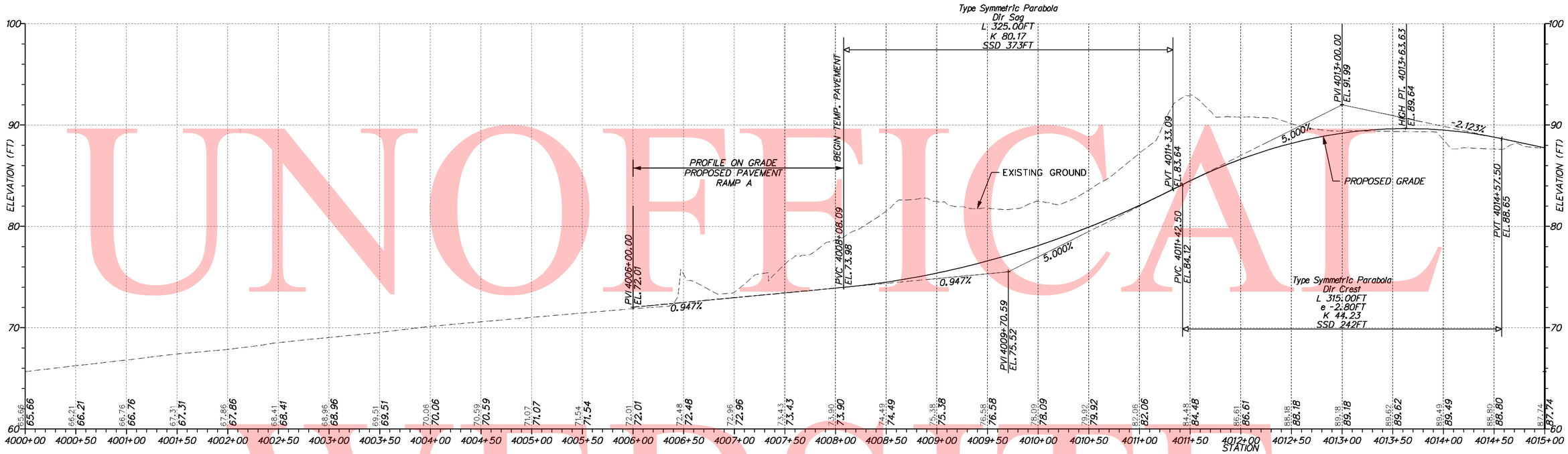

TEMPORARY RAMP A - PHASE 1

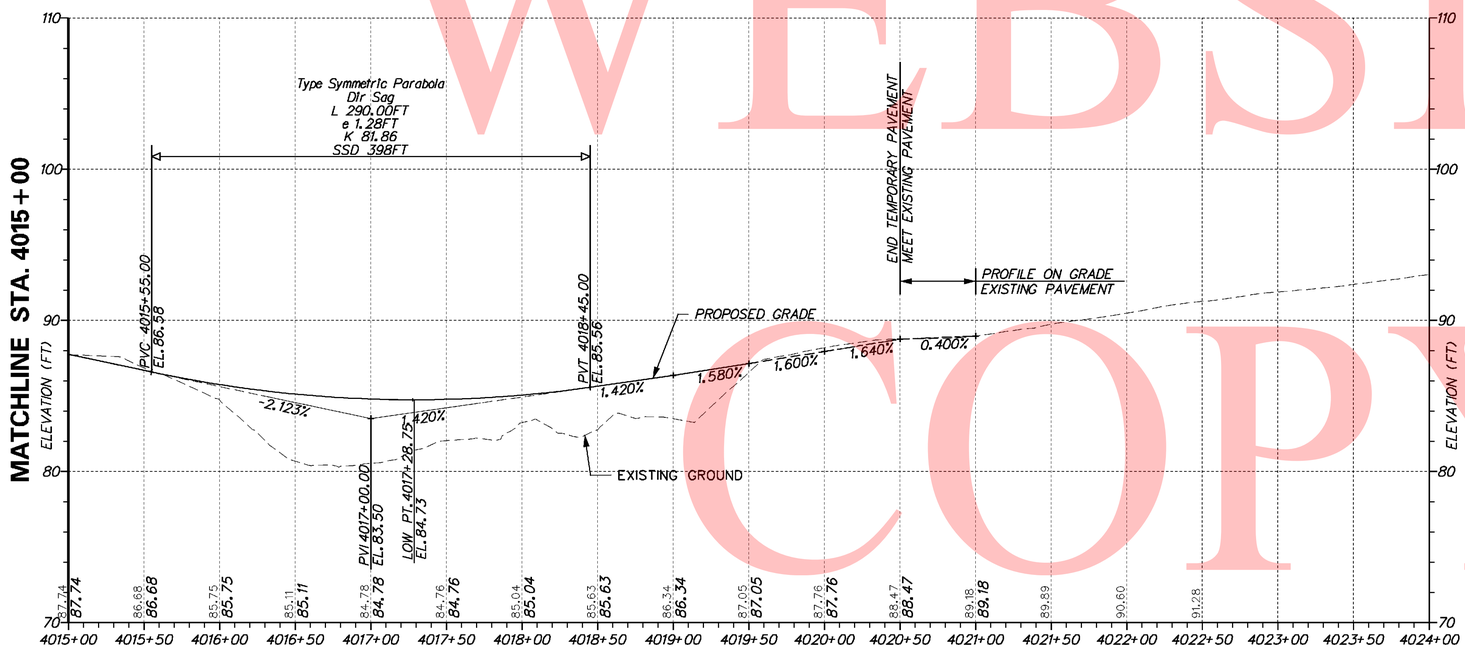

TEMPORARY RAMP A - PHASE 1

VERTICAL SCALE FEET 0 5 10 15

UNOFFICAL WEBSITE COPY

11/3/2010 1:31:58 PM
M:\PROJECTS\2003\03059_DELTRNPK\SRIMALL\CADD\2809003\PLANS\CS28_PH1_SR1.DGN

DELAWARE DEPARTMENT OF TRANSPORTATION	ADDENDUMS / REVISIONS	SCALE 0 50 100 150 FEET	SR1 / I-95 INTERCHANGE	CONTRACT 28-090-03	BRIDGE NO.	CONSTRUCTION PHASING, MOT AND EROSION CONTROL PHASE 1 TEMPORARY ROADWAY	SHEET NO. 666
				COUNTY NEW CASTLE	DESIGNED BY: EDJ		TOTAL SHTS. 803
					CHECKED BY: RLS		

UNOFFICAL WEBSITE COPY

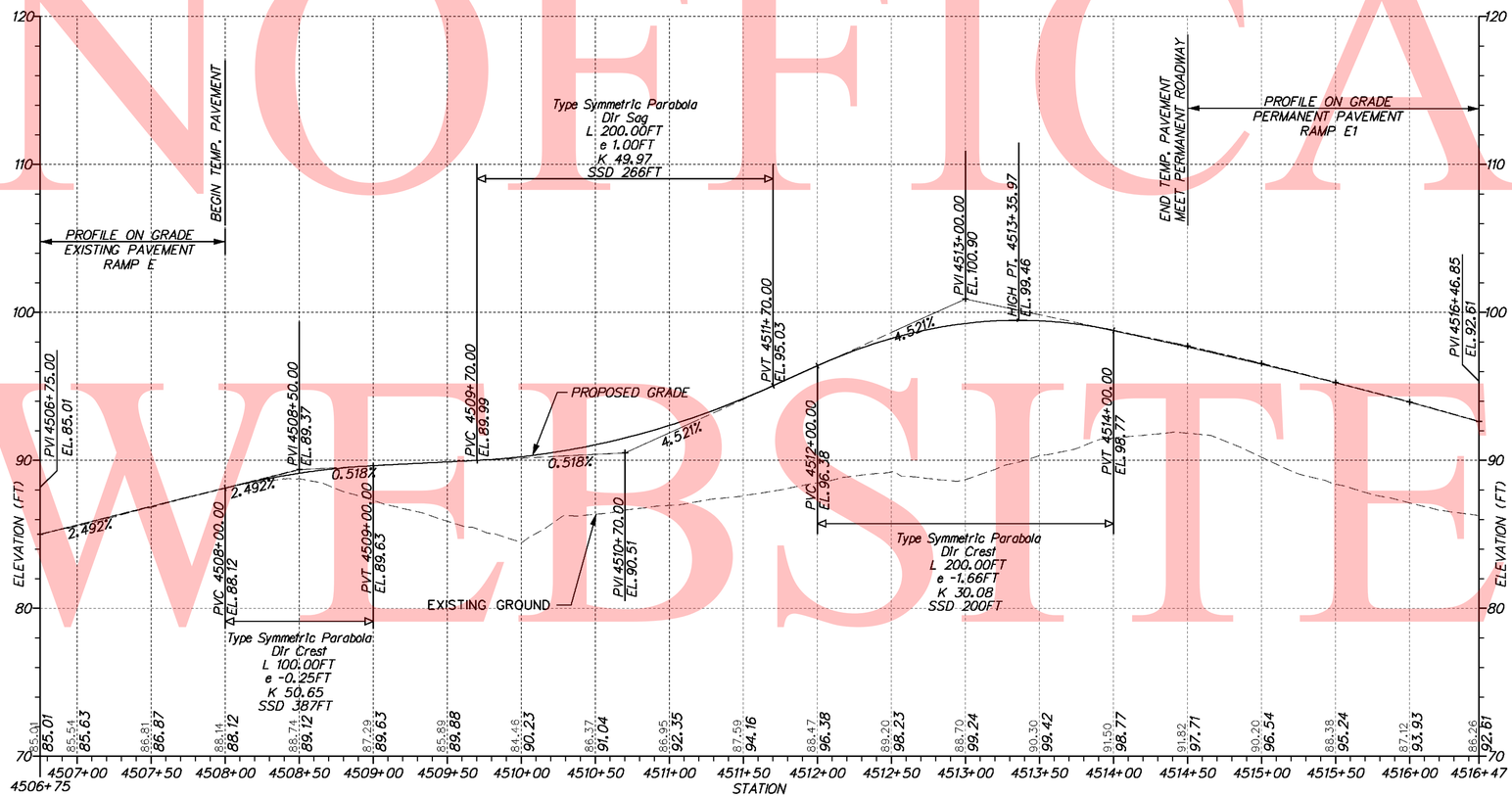

TEMPORARY RAMP E - PHASE 1

VERTICAL SCALE FEET 0 5 10 15

DELAWARE DEPARTMENT OF TRANSPORTATION	ADDENDUMS / REVISIONS	SCALE 0 50 100 150 FEET	SR1 / I-95 INTERCHANGE	CONTRACT 28-090-03	BRIDGE NO.	CONSTRUCTION PHASING, MOT AND EROSION CONTROL PHASE 1 TEMPORARY ROADWAY	SHEET NO. 667
				COUNTY NEW CASTLE	DESIGNED BY: EDJ		TOTAL SHTS. 803
					CHECKED BY: RLS		

11/3/2010 11:36:33 PM
M:\PROJECTS\2003\03059_DELTRNPK\SRIMALL\CADD\2809003\PLANS\CS29_PH1_SR1.DGN

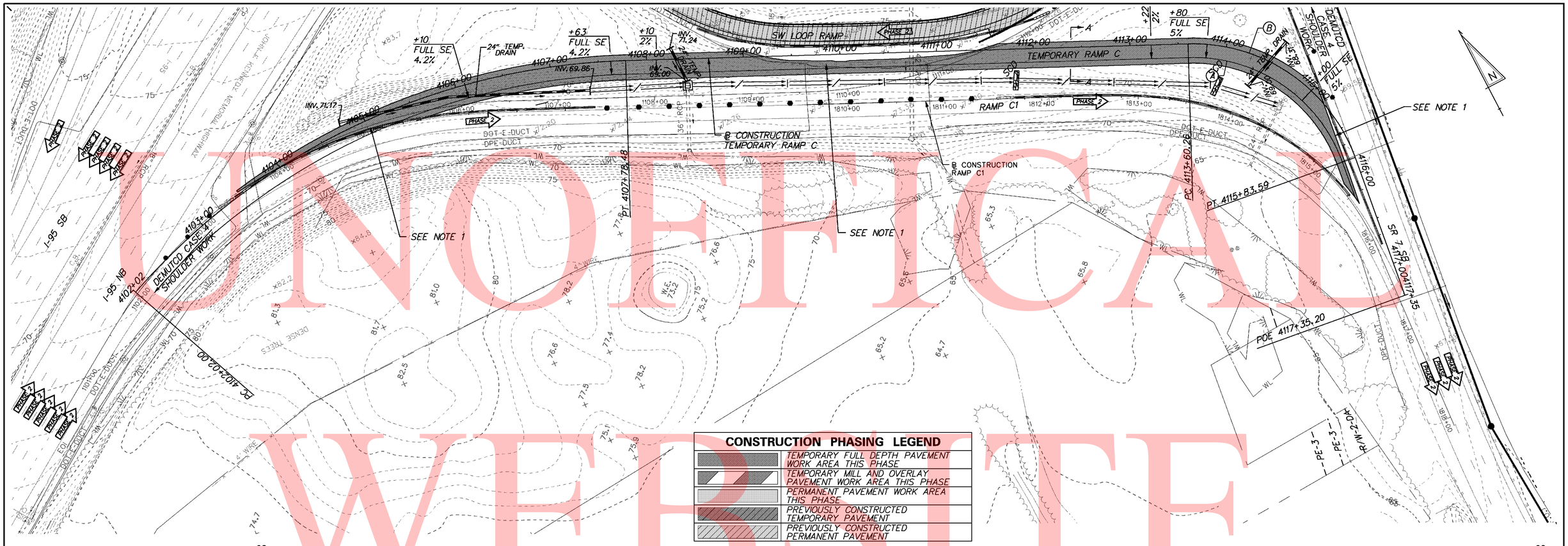

CONSTRUCTION PHASING LEGEND

	TEMPORARY FULL DEPTH PAVEMENT WORK AREA THIS PHASE
	TEMPORARY MILL AND OVERLAY PAVEMENT WORK AREA THIS PHASE
	PERMANENT PAVEMENT WORK AREA THIS PHASE
	PREVIOUSLY CONSTRUCTED TEMPORARY PAVEMENT
	PREVIOUSLY CONSTRUCTED PERMANENT PAVEMENT

NOTES:

1. END TEMPORARY PAVEMENT CONSTRUCTION WHERE ROADWAY TRANSITIONS EFFECTIVELY MATCH EXISTING PAVEMENT AND TRAVEL LANE CROSS SLOPE AS DETERMINED BY THE ENGINEER. MILL AND/OR OVERLAY EXISTING PAVEMENT AS REQUIRED TO DEVELOP TRANSITION.
2. REFER TO CONSTRUCTION PHASING TYPICAL FOR PAVEMENT DETAILS.

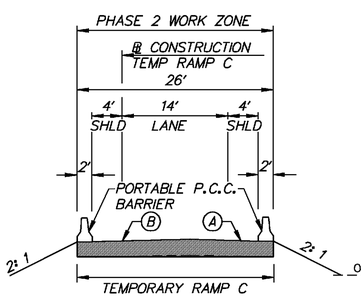

SECTION A-A

SCALE 1"=10'

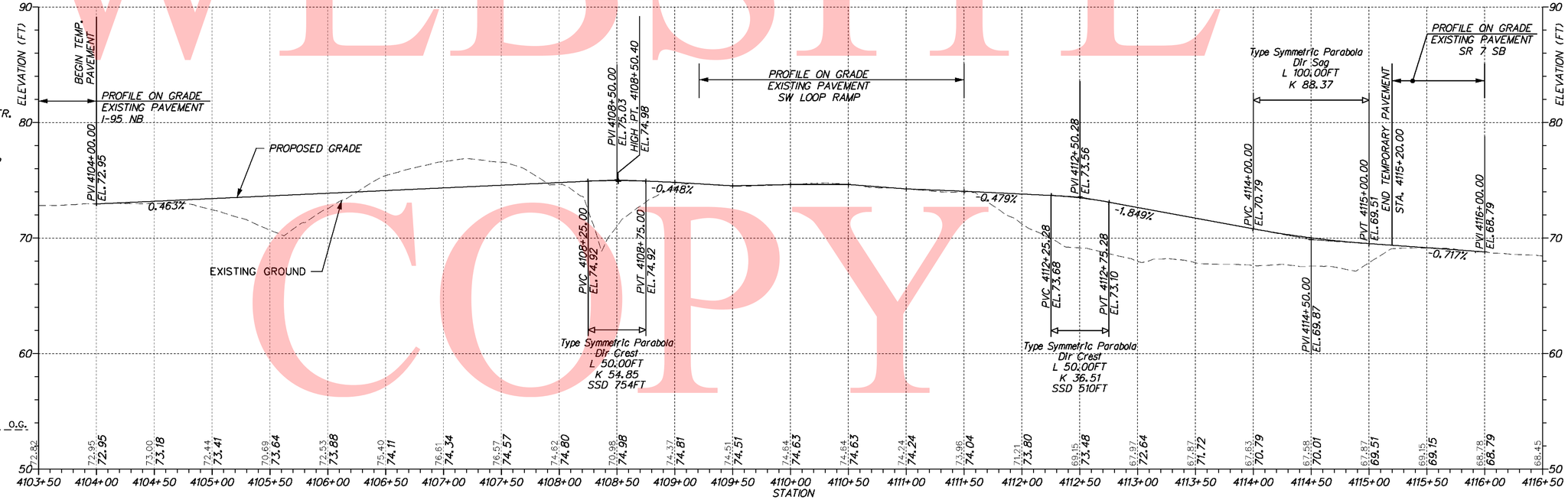

UNOFFICIAL WEBSITE COPY

11/1/2010 4:34:24 PM
M:\PROJECTS\2003\03059_DELTRNPK\SRIMALL\CADD\2809003\PLANS\CS31_PH2_SRI.DGN

DELAWARE DEPARTMENT OF TRANSPORTATION	ADDENDUMS / REVISIONS	SCALE 0 50 100 150 FEET	SR1 / I-95 INTERCHANGE	CONTRACT 28-090-03	BRIDGE NO.	CONSTRUCTION PHASING, MOT AND EROSION CONTROL PHASE 2 TEMPORARY ROADWAY	SHEET NO. 668
				COUNTY NEW CASTLE	DESIGNED BY: EDJ		TOTAL SHTS. 803
					CHECKED BY: RLS		

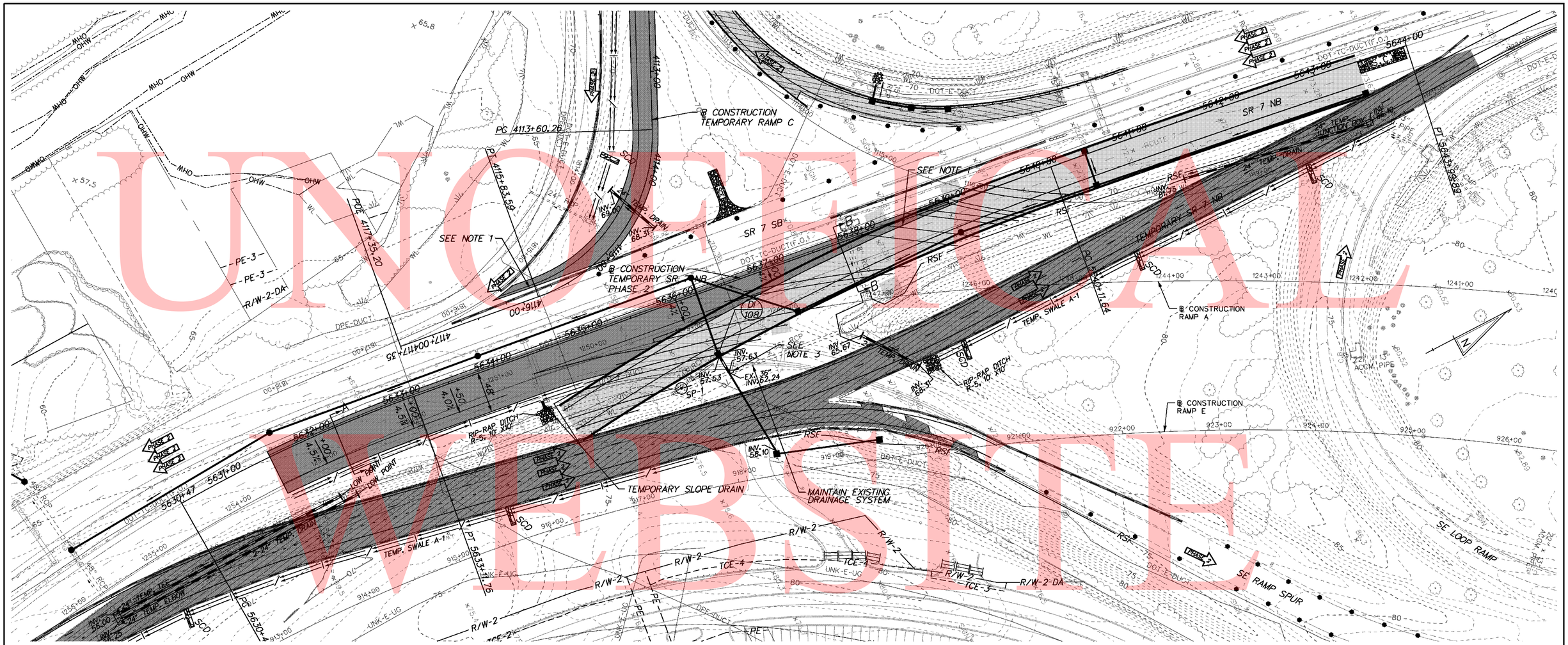

CONSTRUCTION PHASING LEGEND

	TEMPORARY FULL DEPTH PAVEMENT WORK AREA THIS PHASE
	TEMPORARY MILL AND OVERLAY PAVEMENT WORK AREA THIS PHASE
	PERMANENT PAVEMENT WORK AREA THIS PHASE
	PREVIOUSLY CONSTRUCTED TEMPORARY PAVEMENT
	PREVIOUSLY CONSTRUCTED PERMANENT PAVEMENT

NOTES:

1. END TEMPORARY PAVEMENT CONSTRUCTION WHERE ROADWAY TRANSITIONS EFFECTIVELY MATCH EXISTING PAVEMENT AND TRAVEL LANE CROSS SLOPE AS DETERMINED BY THE ENGINEER. MILL AND/OR OVERLAY EXISTING PAVEMENT AS REQUIRED TO DEVELOP TRANSITION.
2. REFER TO CONSTRUCTION PHASING TYPICAL SECTIONS FOR PAVEMENT DETAILS.
3. PROVIDE TEMPORARY 24" PIPE TO CONNECT PROPOSED PIPE (P-107) TO PROPOSED DRAINAGE INLET (DI-108). UTILIZE A 24"X24"X24 TEE AND SECURE A CONNECTION TO THE EXISTING 36" RCP PIPE AS DIRECTED BY THE ENGINEER. USE CASE 7 AND CASE 14 AS REQUIRED TO CONSTRUCT PIPE CROSSING.

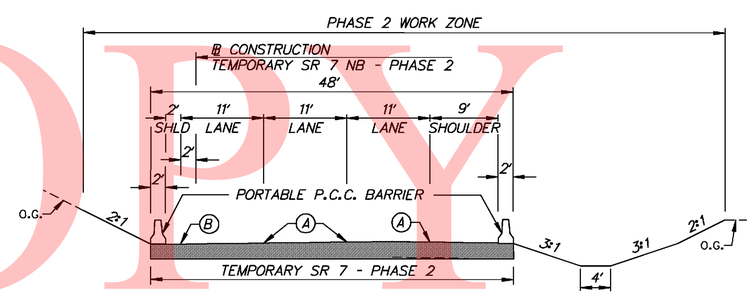

SECTION A-A
SCALE 1"=10'

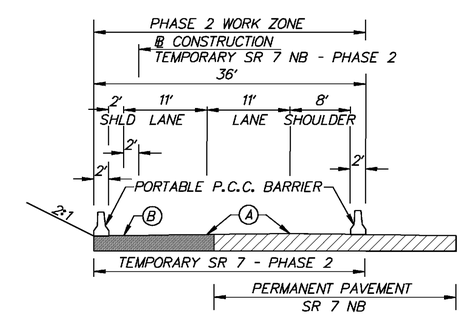

SECTION B-B
SCALE 1"=10'

UNOFFICIAL WEBSITE COPY

11/3/2010 5:03:31 PM
M:\PROJECTS\2003\03059_DELTRNPK\SRTIMALL\CADD\2809003\PLANS\CS32_PH2_SR1.DGN

DELAWARE DEPARTMENT OF TRANSPORTATION

ADDENDUMS / REVISIONS

SCALE 0 50 100 150 FEET

SR1 / I-95 INTERCHANGE

CONTRACT	BRIDGE NO.	
28-090-03	DESIGNED BY:	EDJ
COUNTY	CHECKED BY:	RLS
NEW CASTLE		

CONSTRUCTION PHASING, MOT AND EROSION CONTROL PHASE 2 TEMPORARY ROADWAY

SHEET NO.
669
TOTAL SHTS.
803

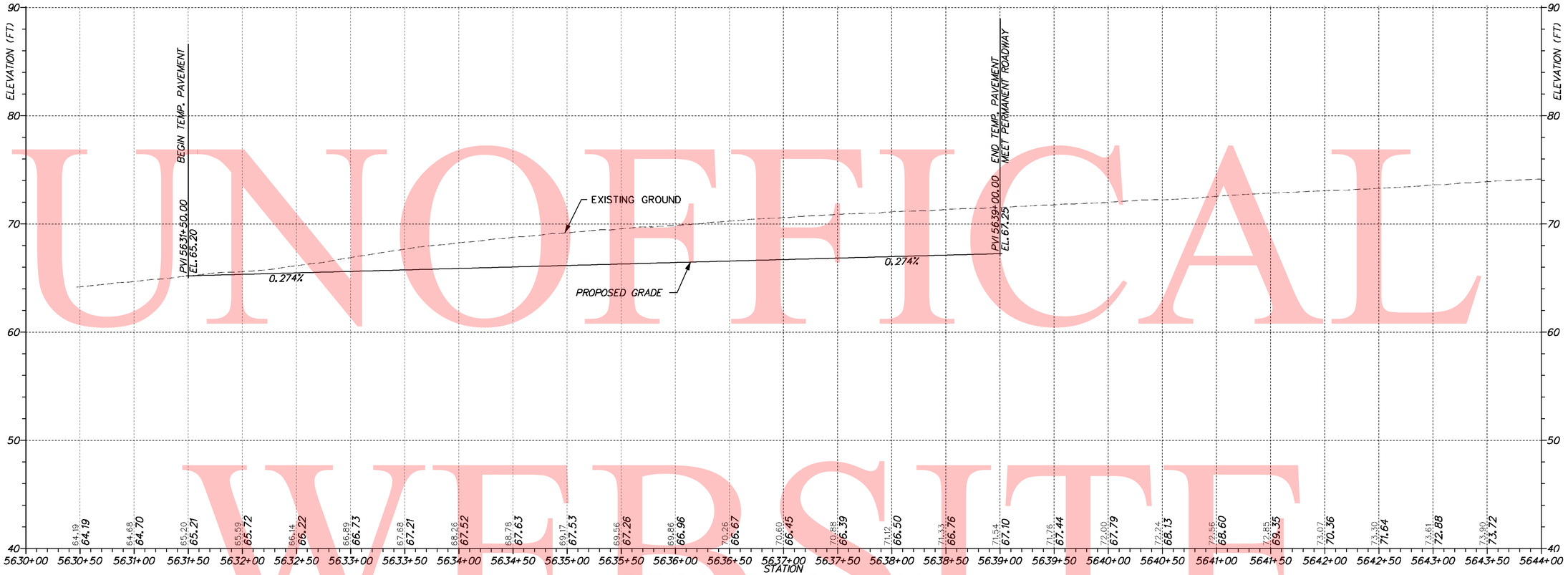

TEMPORARY RAMP SR7 - PHASE 2

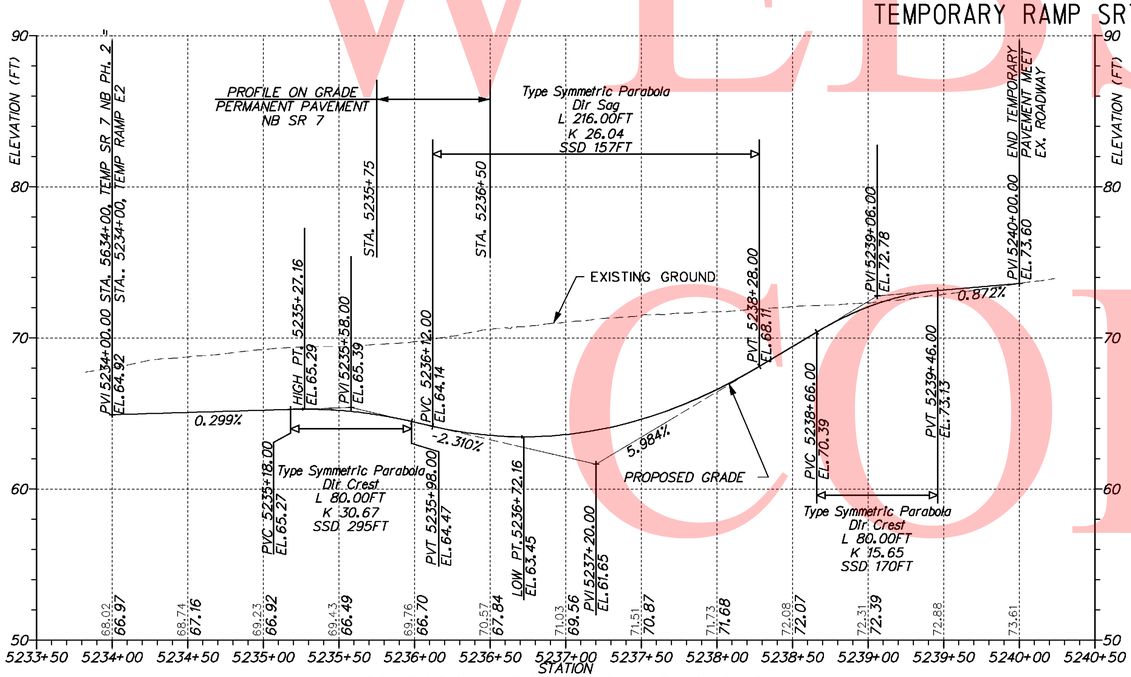

TEMPORARY RAMP E3 - PHASE 3

UNOFFICAL WEBSITE COPY

11/3/2010 11:40:34 PM
M:\PROJECTS\2003\03059_DELTRNPK\SRIMALL\CADD\2809003\PLANS\CS33_PH2_SR1.DGN

DELAWARE DEPARTMENT OF TRANSPORTATION	ADDENDUMS / REVISIONS	SCALE 0 50 100 150 FEET	SR1 / I-95 INTERCHANGE	CONTRACT 28-090-03	BRIDGE NO.	CONSTRUCTION PHASING, MOT AND EROSION CONTROL PHASE 2 TEMPORARY ROADWAY	SHEET NO. 670
				COUNTY NEW CASTLE	DESIGNED BY: EDJ		TOTAL SHTS. 803
					CHECKED BY: RLS		

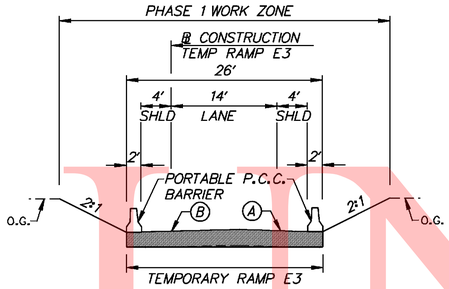

SECTION A-A

SCALE 1"=10'

CONSTRUCTION PHASING LEGEND	
	TEMPORARY FULL DEPTH PAVEMENT WORK AREA THIS PHASE
	TEMPORARY MILL AND OVERLAY PAVEMENT WORK AREA THIS PHASE
	PERMANENT PAVEMENT WORK AREA THIS PHASE
	PREVIOUSLY CONSTRUCTED TEMPORARY PAVEMENT
	PREVIOUSLY CONSTRUCTED PERMANENT PAVEMENT

NOTES:

1. END TEMPORARY PAVEMENT CONSTRUCTION WHERE ROADWAY TRANSITIONS EFFECTIVELY MATCH EXISTING PAVEMENT AND TRAVEL LANE CROSS SLOPE AS DETERMINED BY THE ENGINEER. MILL AND/OR OVERLAY EXISTING PAVEMENT AS REQUIRED TO DEVELOP TRANSITION.
2. REFER TO CONSTRUCTION PHASING TYPICAL SECTIONS FOR PAVEMENT DETAILS.
3. MAINTAIN ACCESS TO TEMPORARY RAMP E1 AND REMOVE TEMPORARY NB SR 7 - PHASE 1 PAVEMENT AS REQUIRED TO CONSTRUCT NEW ROADWAY IMPROVEMENTS IN THIS PHASE.

UNOFFICIAL WEBSITE COPY

DELAWARE DEPARTMENT OF TRANSPORTATION	ADDENDUMS / REVISIONS	SCALE 0 50 100 150 FEET	SR1 / I-95 INTERCHANGE	CONTRACT 28-090-03	BRIDGE NO.	CONSTRUCTION PHASING, MOT AND EROSION CONTROL PHASE 3 TEMPORARY ROADWAY	SHEET NO. 671
				COUNTY NEW CASTLE	DESIGNED BY: EDJ		TOTAL SHTS. 803
					CHECKED BY: RLS		

11/1/2010 5:07:21 PM
M:\PROJECTS\2003\03059_DELTRNPK\SRMALL\CADD\2809003\PLANS\CS35_PH3_SR1.DGN

UNOFFICIAL WEBSITE COPY

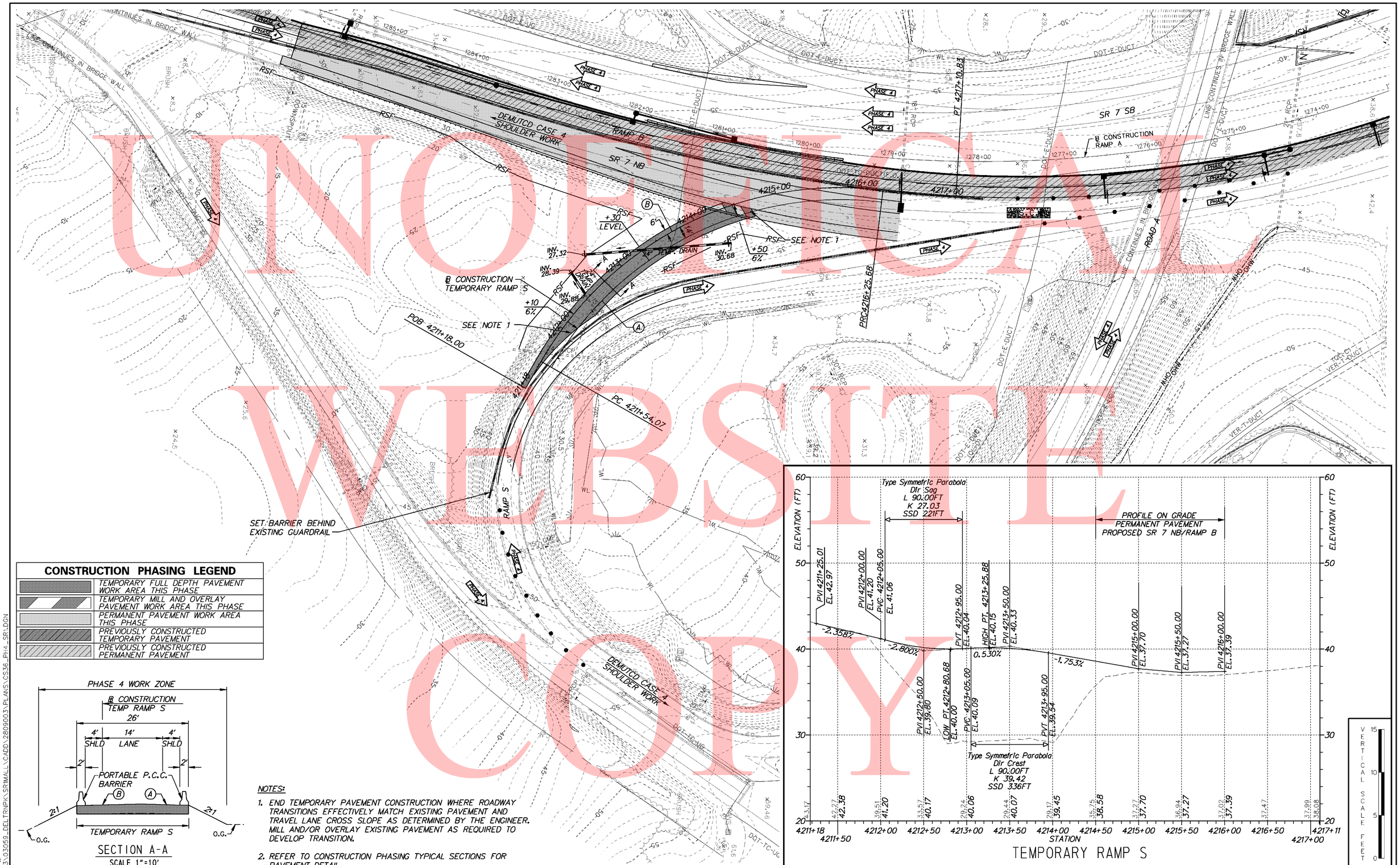

CONSTRUCTION PHASING LEGEND

	TEMPORARY FULL DEPTH PAVEMENT WORK AREA THIS PHASE
	TEMPORARY MILL AND OVERLAY PAVEMENT WORK AREA THIS PHASE
	PERMANENT PAVEMENT WORK AREA THIS PHASE
	PREVIOUSLY CONSTRUCTED TEMPORARY PAVEMENT
	PREVIOUSLY CONSTRUCTED PERMANENT PAVEMENT

SECTION A-A

SCALE 1"=10'

NOTES:

1. END TEMPORARY PAVEMENT CONSTRUCTION WHERE ROADWAY TRANSITIONS EFFECTIVELY MATCH EXISTING PAVEMENT AND TRAVEL LANE CROSS SLOPE AS DETERMINED BY THE ENGINEER. MILL AND/OR OVERLAY EXISTING PAVEMENT AS REQUIRED TO DEVELOP TRANSITION.
2. REFER TO CONSTRUCTION PHASING TYPICAL SECTIONS FOR PAVEMENT DETAIL.

11/1/2010 2:33:01 PM
M:\PROJECTS\2003\03059_DELTRNPK\SRIMALL\CADD\2809003\PLANS\CS36_PH4_SR.DGN

DELAWARE DEPARTMENT OF TRANSPORTATION

ADDENDUMS / REVISIONS

SCALE 0 50 100 150 FEET

SR1 / I-95 INTERCHANGE

CONTRACT	BRIDGE NO.	
28-090-03	DESIGNED BY:	EDJ
COUNTY		
NEW CASTLE	CHECKED BY:	RLS

CONSTRUCTION PHASING, MOT AND EROSION CONTROL PHASE 4 TEMPORARY ROADWAY

SHEET NO.
672
TOTAL SHTS.
803

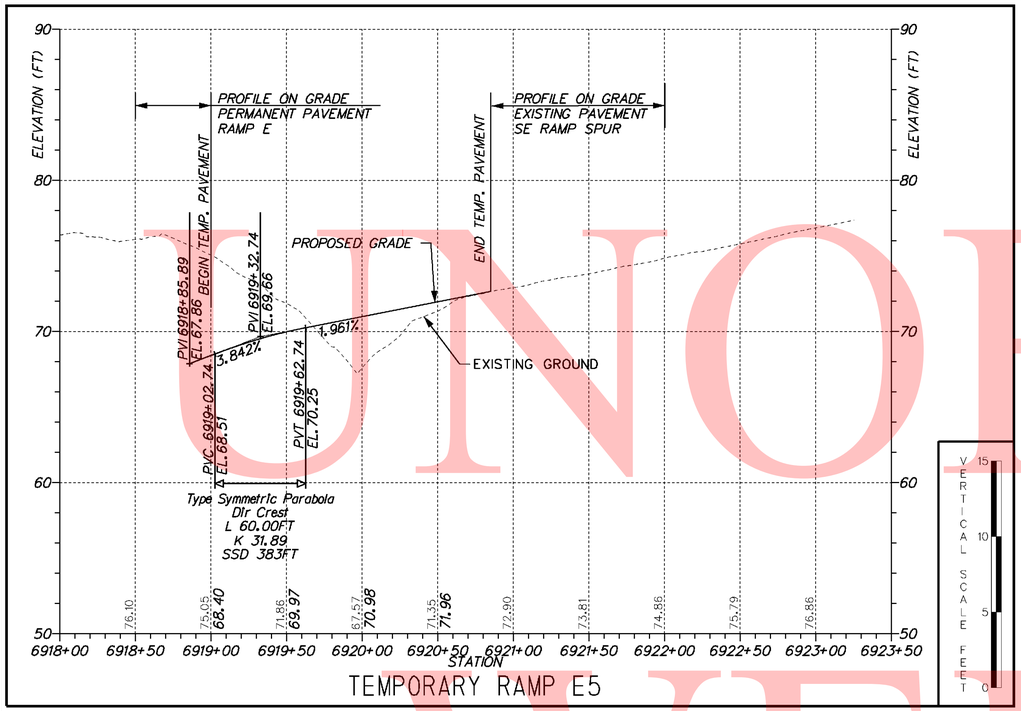

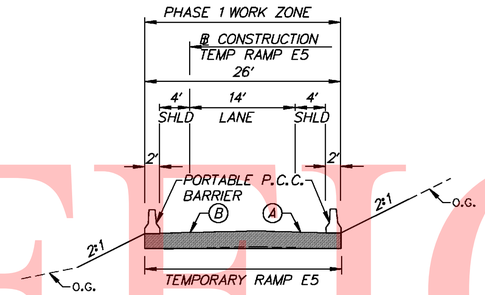

SECTION A-A

SCALE 1"=10'

NOTES:

1. END TEMPORARY PAVEMENT CONSTRUCTION WHERE ROADWAY TRANSITIONS EFFECTIVELY MATCH EXISTING PAVEMENT AND TRAVEL LANE CROSS SLOPE AS DETERMINED BY THE ENGINEER. MILL AND/OR OVERLAY EXISTING PAVEMENT AS REQUIRED TO DEVELOP TRANSITION.
2. REFER TO CONSTRUCTION PHASING TYPICAL SECTIONS FOR PAVEMENT DETAILS.

CONSTRUCTION PHASING LEGEND

	TEMPORARY FULL DEPTH PAVEMENT WORK AREA THIS PHASE
	TEMPORARY MILL AND OVERLAY PAVEMENT WORK AREA THIS PHASE
	PERMANENT PAVEMENT WORK AREA THIS PHASE
	PREVIOUSLY CONSTRUCTED TEMPORARY PAVEMENT
	PREVIOUSLY CONSTRUCTED PERMANENT PAVEMENT

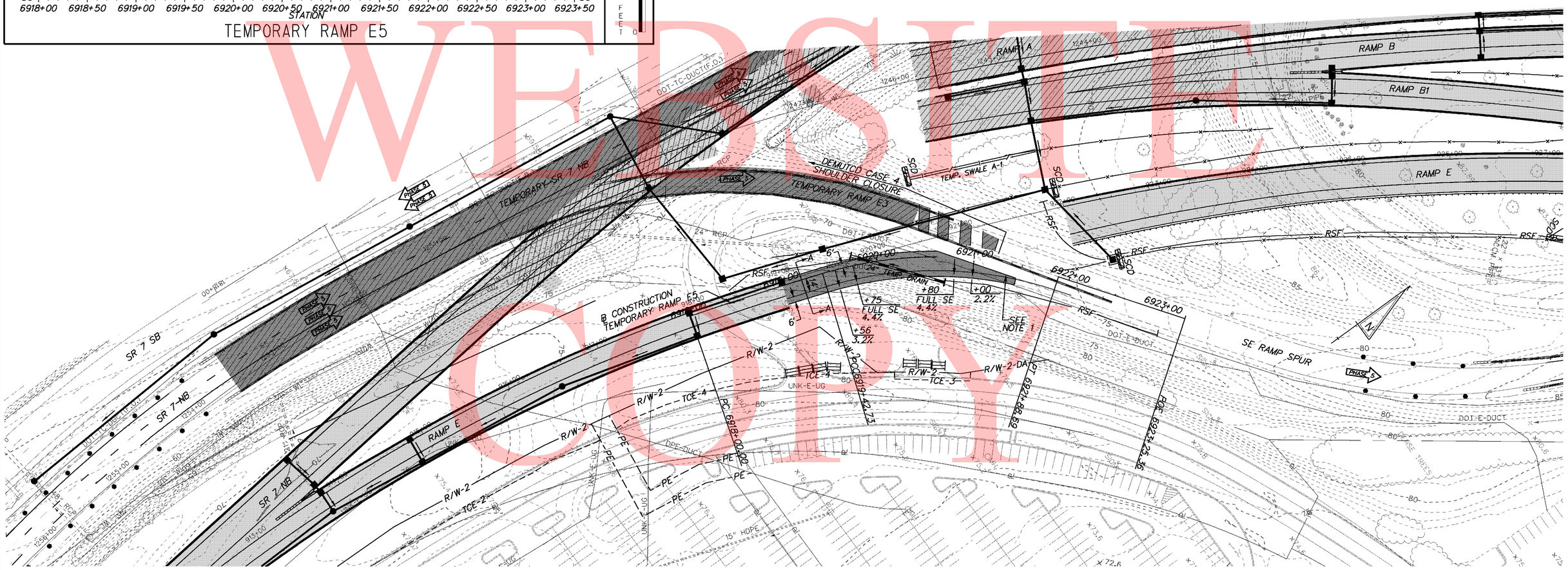

NOTES:

1. THE EROSION AND SEDIMENT CONTROL DEVICES SHOWN ON THIS PLAN WERE INSTALLED UNDER CONTRACT T201009004. THESE DEVICES SHALL BE MAINTAINED BY THE CONTRACTOR THROUGH FINAL STABILIZATION OF THE REGRADED SOIL STOCKPILE AREA.

2. UPON COMPLETION OF FINAL GRADING OF THE STOCKPILE AREA, THE CONTRACTOR SHALL STABILIZE THE AREA WITH 6" OF TOPSOIL (732002), PERMANENT GRASS SEEDING, DRY GROUND (734013) AND SOIL RETENTION BLANKET MULCH, TYPE 4 (735534).

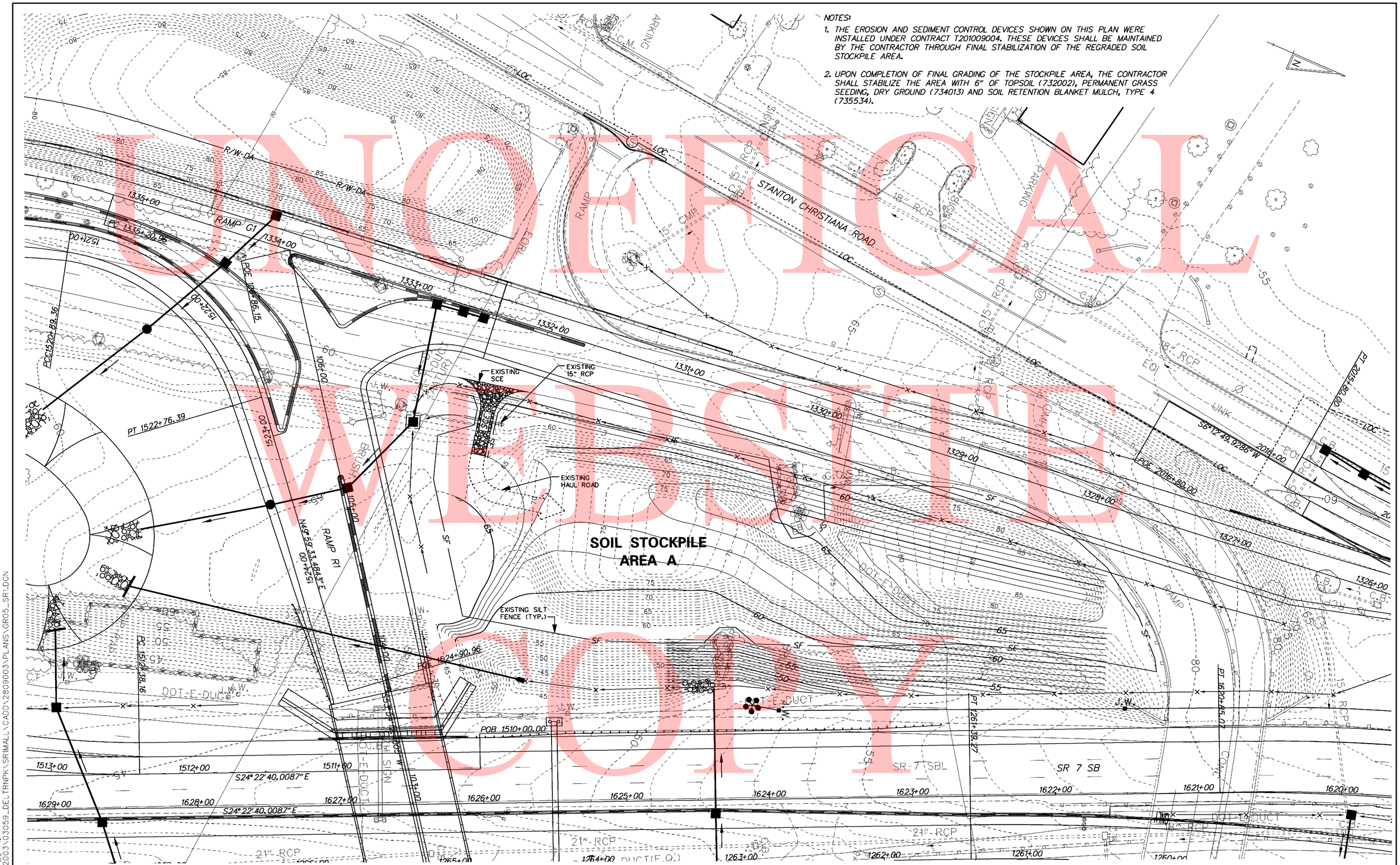

UNOFFICIAL WEBSITE COPY

11/11/2010 1:07:59 PM
M:\PROJECTS\2003\03059_DELTRNPK\SRIMALL\CADD\2809003\PLANS\GR05_SR1.DGN

DELAWARE DEPARTMENT OF TRANSPORTATION	ADDENDUMS / REVISIONS	SCALE 0 30 60 90 FEET	SR1 / I-95 INTERCHANGE	CONTRACT 28-090-03	BRIDGE NO.	GRADING PLAN SOIL STOCKPILE AREA A
				COUNTY NEW CASTLE	DESIGNED BY: ZJS	SHEET NO. 673A
					CHECKED BY: RLS	TOTAL SHTS. 803

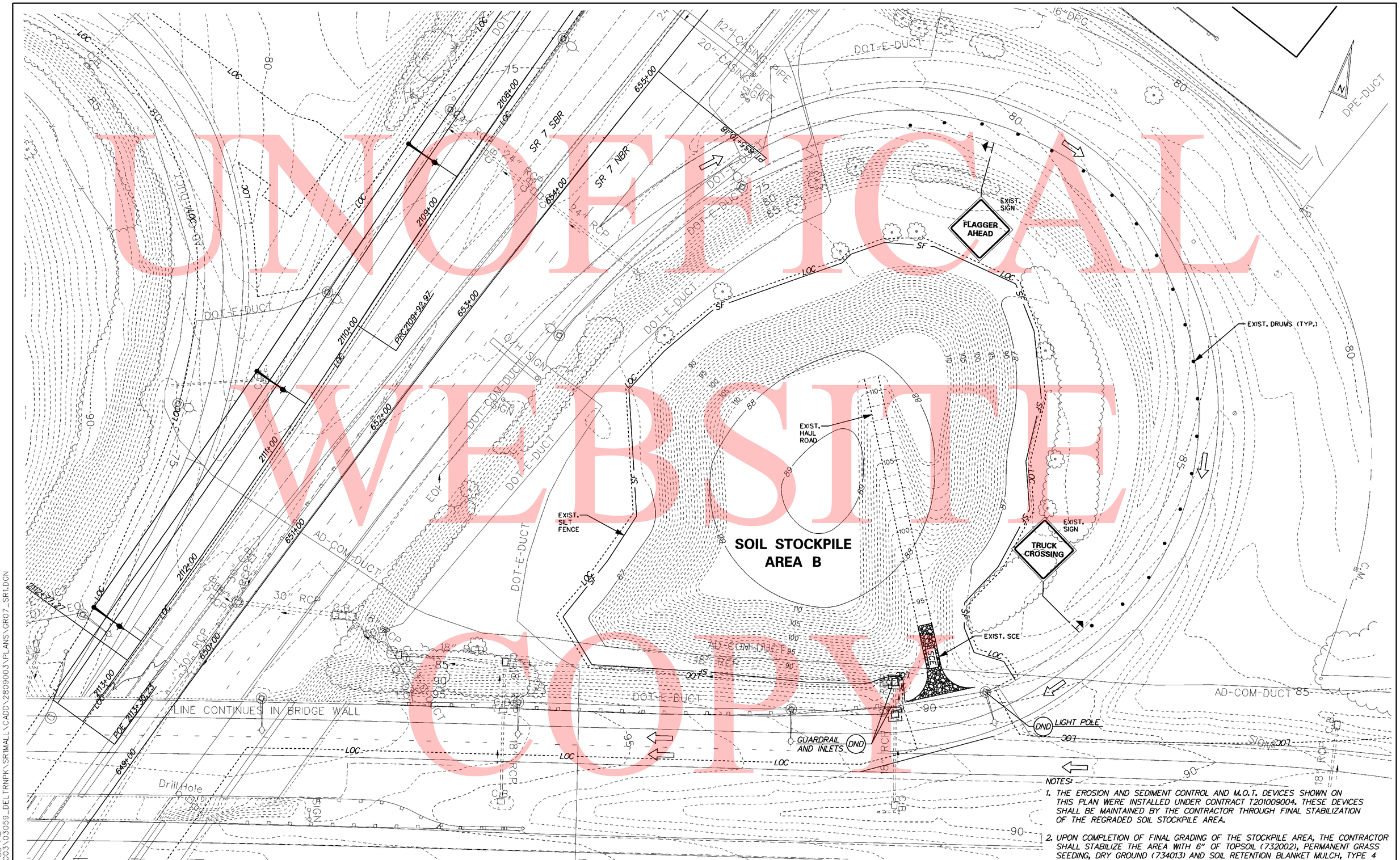

NOTES:

1. THE EROSION AND SEDIMENT CONTROL AND M.O.T. DEVICES SHOWN ON THIS PLAN WERE INSTALLED UNDER CONTRACT T201009004. THESE DEVICES SHALL BE MAINTAINED BY THE CONTRACTOR THROUGH FINAL STABILIZATION OF THE REGRADED SOIL STOCKPILE AREA.

2. UPON COMPLETION OF FINAL GRADING OF THE STOCKPILE AREA, THE CONTRACTOR SHALL STABILIZE THE AREA WITH 6" OF TOPSOIL (732002), PERMANENT GRASS SEEDING, DRY GROUND (734013) AND SOIL RETENTION BLANKET MULCH, TYPE 4 (735534).

UNOFFICIAL WEBSITE COPY

11/11/2010 12:59:33 PM
M:\PROJECTS\2003\03059_DELTRNPK\SRIMALL\CADD\2809003\PLANS\GR07_SR1.DGN

DELAWARE DEPARTMENT OF TRANSPORTATION

ADDENDUMS / REVISIONS

SCALE 0 30 60 90 FEET

SR1 / I-95 INTERCHANGE

CONTRACT	BRIDGE NO.	
28-090-03	DESIGNED BY:	ZJS
COUNTY	CHECKED BY:	RLS
NEW CASTLE		

GRADING PLAN SOIL STOCKPILE AREA B

SHEET NO.
673B
TOTAL SHTS.
803

NOTES:

1. THE EROSION AND SEDIMENT CONTROL DEVICES SHOWN ON THIS PLAN ARE TO BE INSTALLED BY THE CONTRACTOR. THESE DEVICES SHALL BE MAINTAINED BY THE CONTRACTOR THROUGH FINAL STABILIZATION OF THE REGRADED SOIL STOCKPILE AREA.

2. UPON COMPLETION OF FINAL GRADING OF THE STOCKPILE AREA, THE CONTRACTOR SHALL STABILIZE THE AREA WITH 6" OF TOPSOIL (732002), PERMANENT GRASS SEEDING, DRY GROUND (734013), SOIL RETENTION BLANKET MULCH, TYPE 4 (735534) AND SOIL RETENTION BLANKET MULCH, TYPE 5 (735535) IN THE AREA OF THE PROPOSED SWALE.

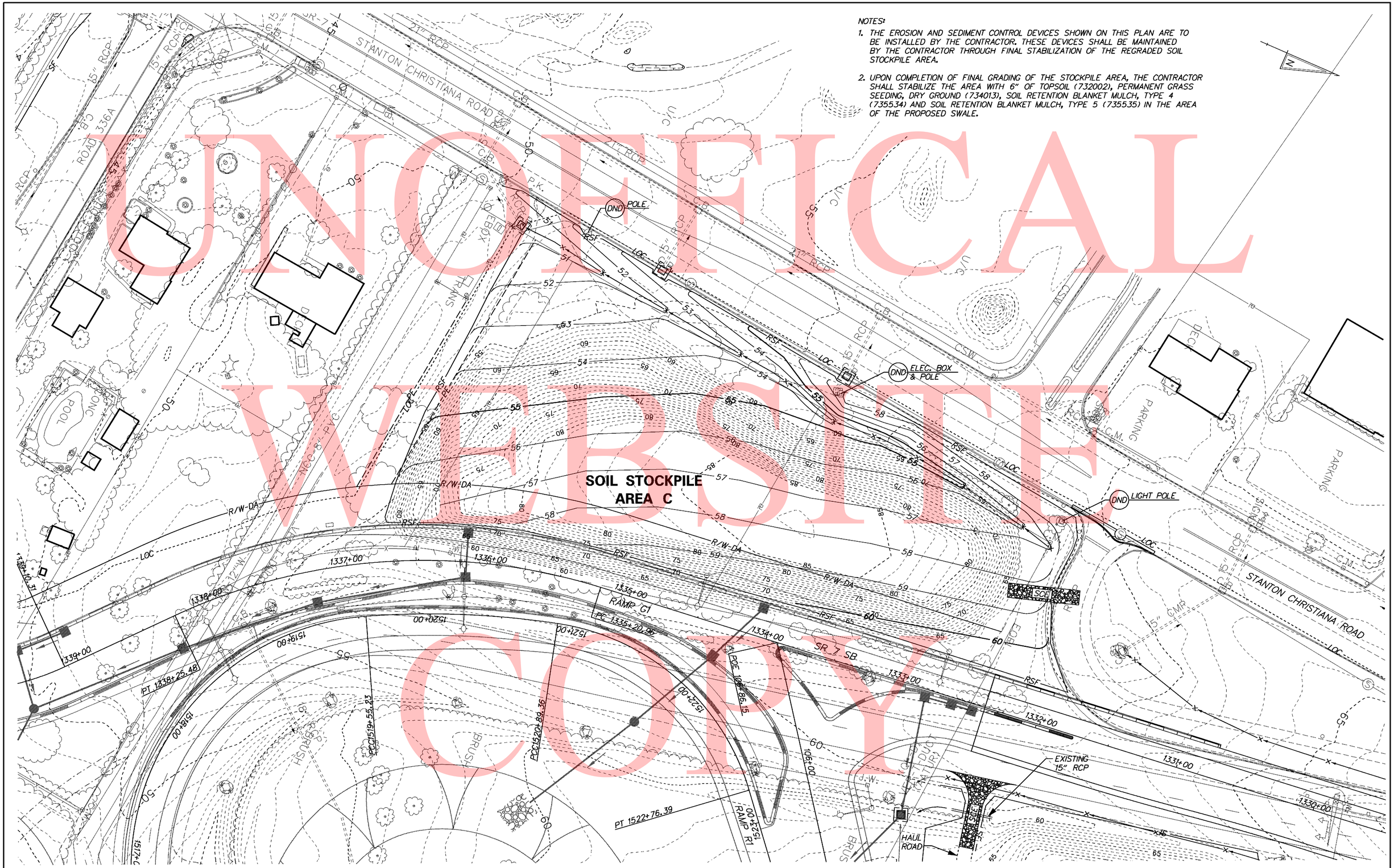

UNOFFICIAL WEBSITE COPY

11/11/2010 2:14:55 PM
M:\PROJECTS\2003\03059_DEL TRNPK\SRIMALL\CADD\2809003\PLANS\GR06_SR1.DGN

DELAWARE DEPARTMENT OF TRANSPORTATION	ADDENDUMS / REVISIONS	SCALE 0 30 60 90 FEET	SR1 / I-95 INTERCHANGE	CONTRACT 28-090-03 / COUNTY NEW CASTLE	BRIDGE NO. / DESIGNED BY: ZJS / CHECKED BY: RLS	GRADING PLAN SOIL STOCKPILE AREA C	SHEET NO. 673C / TOTAL SHTS. 803

CHANGEABLE MESSAGE BOARDS

CMS-1

PRIOR TO DETOUR
(10 DAYS PRIOR TO BEGINNING OF DETOUR)

SR 1 NB CLOSING AT MALL	STARTING XX/XX/XX XXPM-XAM

CMS-1

DURING DETOUR

SR 1 NB CLOSED AT MALL	FOLLOW SR 273 DETOUR

ADDITIONAL NOTES:

1. SIGNS PLACED ON ROADWAYS WITH MORE THAN ONE LANE IN ONE DIRECTION SHALL BE POSTED ON BOTH THE LEFT AND RIGHT SHOULDERS.
2. USE CASE 7 OF THE DE MUTCD TO CLOSE LANES PRIOR TO ROAD CLOSURES.
3. MAINTAIN A SINGLE LANE ON NORTHBOUND SR 1 BETWEEN SR 273 AND MALL ROAD.
4. ALL SIGNS SHOWN ON THIS SHEET, EXCLUDING CHANGEABLE MESSAGE BOARDS, SHALL BE FURNISHED AND INSTALLED UNDER CONTRACT T201009004. THE WARNING SIGNS SHALL BE LEFT IN PLACE AND BECOME THE PROPERTY OF THE T200809003 CONTRACTOR UPON COMPLETION OF THE T201009004 CONTRACT. MAINTENANCE OF THESE SIGNS SHALL BE INCLUDED IN 763500 MAINTENANCE OF TRAFFIC.
5. ALL BARRICADES SHOWN ON THIS SHEET SHALL BE FURNISHED AND INSTALLED UNDER CONTRACT T201009004. THE BARRICADES SHALL BE LEFT IN PLACE AND BECOME THE PROPERTY OF THE T200809003 CONTRACTOR UPON COMPLETION OF THE T201009004 CONTRACT. MAINTENANCE OF THESE BARRICADES SHALL BE INCLUDED IN 763500 MAINTENANCE OF TRAFFIC.

SPECIAL SIGNS

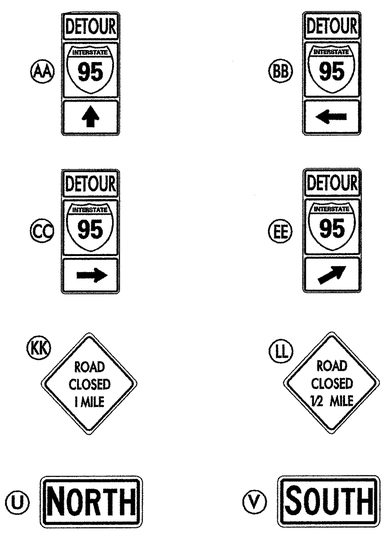

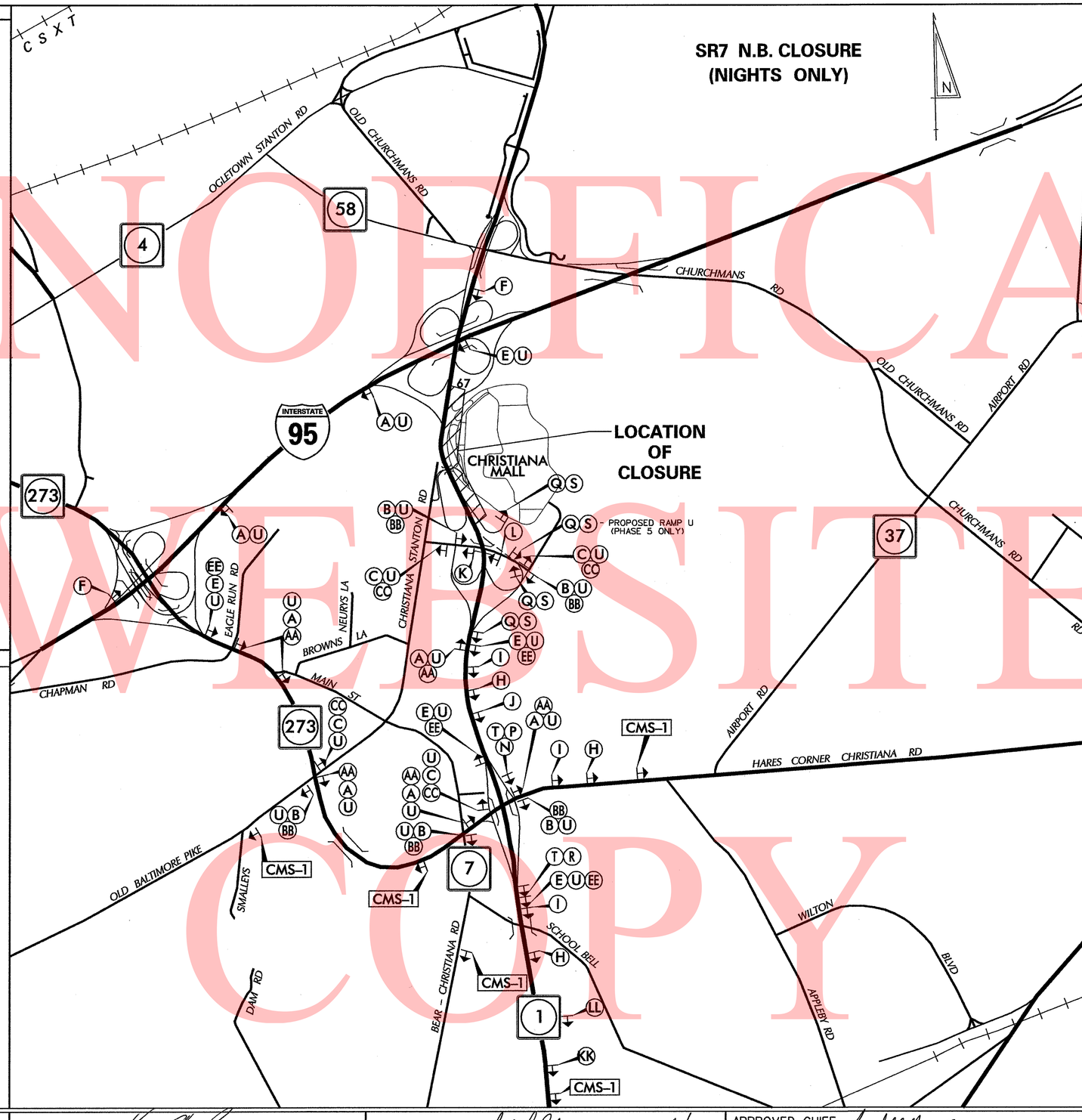

LEGEND

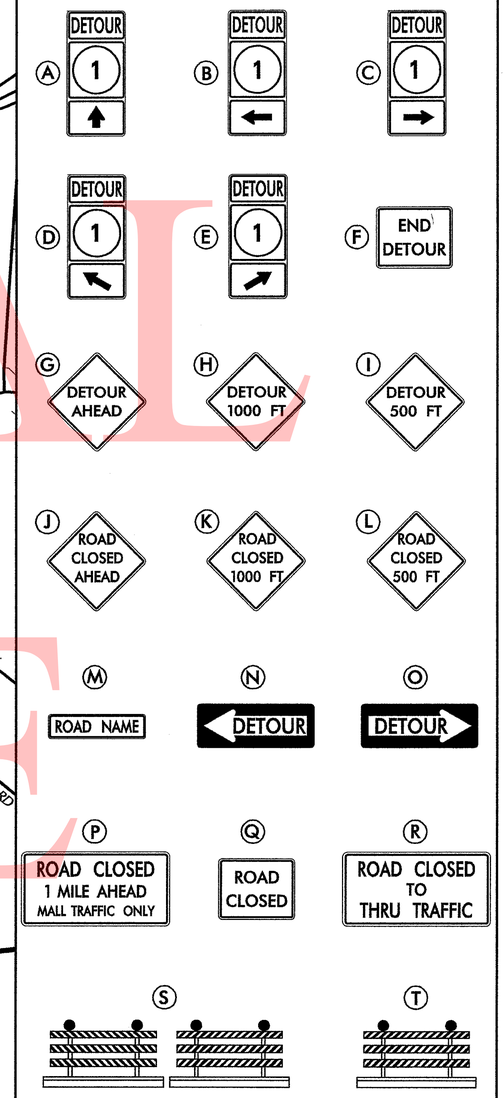

GENERAL NOTES

1. ALL DETOUR SIGNING INCLUDING, TRAILBLAZERS, ARE TO BE SUPPLIED AND MAINTAINED BY THE GENERAL CONTRACTOR IN COMPLIANCE TO THE DE MANUALOF UNIFORM TRAFFIC CONTROL DEVICES.
2. THE CONTRACTOR SHALL COMPLY WITH GUIDELINES IN "THE DELAWARE MANUAL ON UNIFORM TRAFFIC CONTROL DEVICES (DE- MUTCD PART 6) FOR LIGHTS, BARRICADES AND SIGNS.(AS PER LATEST REVISION)
3. FIELD CONDITIONS MAY DICTATE CHANGES AT SOME TIME DURING THE LIFE OF THE CONTRACT. IN THE EVENT OF OMISSIONS OR CORRECTIONS, THE SIGNING PROVISIONS OF THE DELAWARE MANUAL ON UNIFORM TRAFFIC CONTROL DEVICES WILL PREVAIL.
4. SIGNS J THROUGH L AND P THROUGH R ,THE WORD (ROAD) SHOULD BE CHANGED TO RAMP, R/R OR BRIDGE WHERE APPLICABLE.
5. WARNING SIGNS SHOULD BE MOUNTED ON BREAKAWAY POSTS AND HAVE RETROREFLECTIVE FLUORESCENT SHEETING.
6. "S" BARRICADES SHALL COMPLETELY RUN THE FULL WIDTH OF ROADWAY.
7. BARRICADES SHALL BE A MINIMUM OF 6 FEET WIDE UNLESS DIRECTED BY THE ENGINEER.

RECOMMENDED _____ DATE: 10.28.10

RECOMMENDED _____ DATE: 10-28-10

RECOMMENDED _____ DATE: 10/13/10

APPROVED CHIEF SAFETY OFFICER _____ DATE: 11-10-10

APPROVED TRAFFIC ENGINEER _____ DATE: 11/10/10

DELAWARE DEPARTMENT OF TRANSPORTATION

ADDENDUM / REVISIONS

SCALE 0 1000 2000 3000 FEET

SR1 / I-95 INTERCHANGE

CONTRACT	BRIDGE NO.	X
T200809003	DESIGNED BY:	JCR
COUNTY	CHECKED BY:	MCS/JAB
NEW CASTLE		

DETOUR PLAN 1
SR7 N.B. CLOSURE
RAMPS A, B, R1, C1 & G1

SHEET NO. 674
TOTAL SHTS. 803

10/5/2010 2:18:56 PM
M:\projects\2003\03059_deltrnpk\SR1Mall\Cadd\2809003\Plans\dp01_sr1.dgn

UNOFFICAL WEBSITE COPY

CHANGEABLE MESSAGE BOARDS

CMS-1 — PRIOR TO DETOUR (10 DAYS PRIOR TO BEGINNING OF DETOUR)

SR 1 SB CLOSING AT I-95	STARTING XX/XX/XX XXPM-XAM

CMS-1 — DURING DETOUR

SR 1 SB CLOSED AT I-95	FOLLOW DETOUR

CMS-2 — PRIOR TO DETOUR (10 DAYS PRIOR TO BEGINNING OF DETOUR)

RAMP TO SR 1 SB CLOSING	STARTING XX/XX/XX XXPM-XAM

CMS-2 — DURING DETOUR

RAMP TO SR 1 SB CLOSED	USE SR 273 EXIT 3

SPECIAL SIGNS

KK — RAMP CLOSED 1 MILE

LL — RAMP CLOSED 1/2 MILE

V — SOUTH

AA — DETOUR ↑

BB — DETOUR ←

CC — DETOUR →

DD — DETOUR ↖

EE — DETOUR ↗

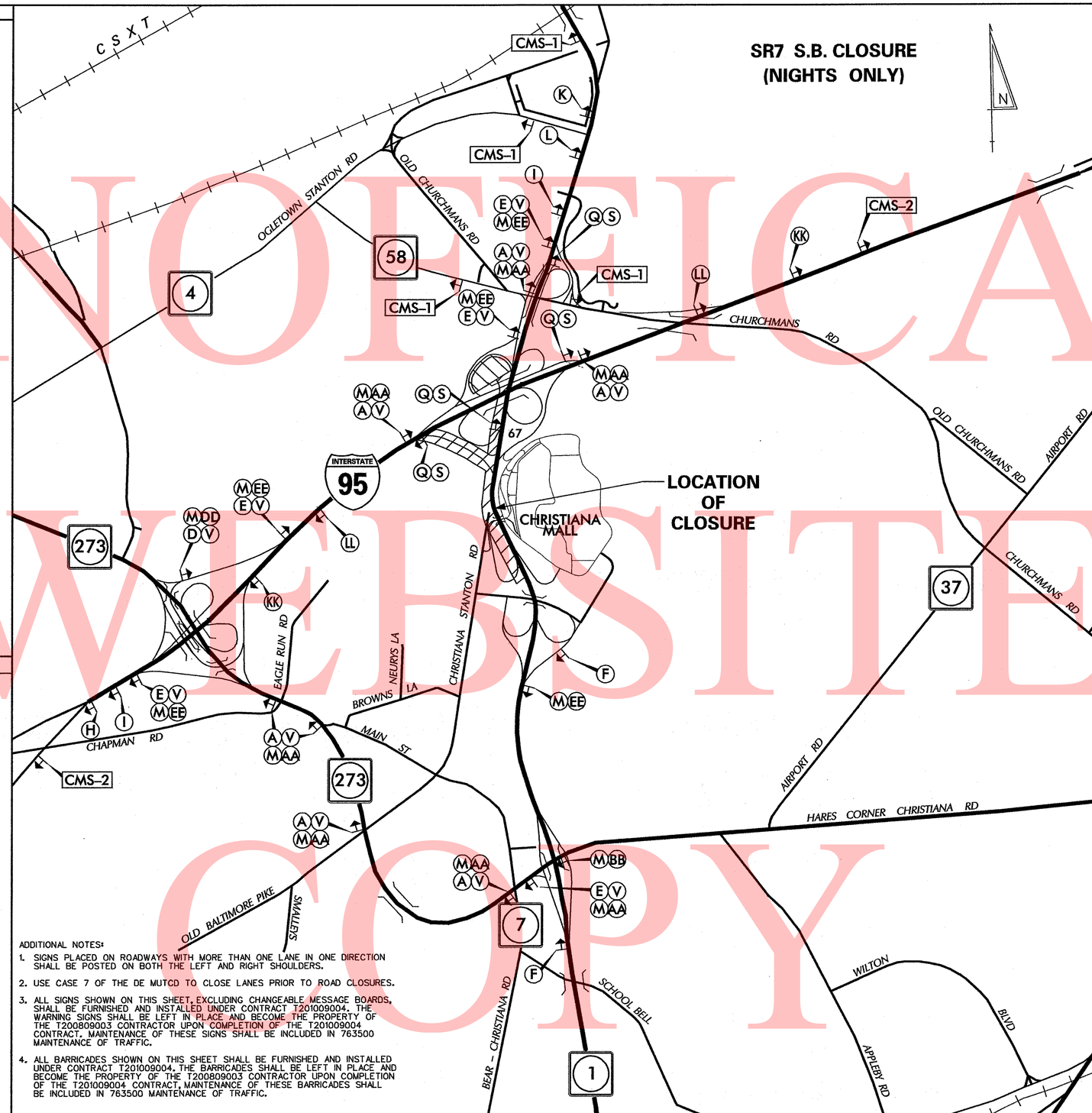

ADDITIONAL NOTES:

1. SIGNS PLACED ON ROADWAYS WITH MORE THAN ONE LANE IN ONE DIRECTION SHALL BE POSTED ON BOTH THE LEFT AND RIGHT SHOULDERS.
2. USE CASE 7 OF THE DE MUTCD TO CLOSE LANES PRIOR TO ROAD CLOSURES.
3. ALL SIGNS SHOWN ON THIS SHEET, EXCLUDING CHANGEABLE MESSAGE BOARDS, SHALL BE FURNISHED AND INSTALLED UNDER CONTRACT T201009004. THE WARNING SIGNS SHALL BE LEFT IN PLACE AND BECOME THE PROPERTY OF THE T200809003 CONTRACTOR UPON COMPLETION OF THE T201009004 CONTRACT. MAINTENANCE OF THESE SIGNS SHALL BE INCLUDED IN 763500 MAINTENANCE OF TRAFFIC.
4. ALL BARRICADES SHOWN ON THIS SHEET SHALL BE FURNISHED AND INSTALLED UNDER CONTRACT T201009004. THE BARRICADES SHALL BE LEFT IN PLACE AND BECOME THE PROPERTY OF THE T200809003 CONTRACTOR UPON COMPLETION OF THE T201009004 CONTRACT. MAINTENANCE OF THESE BARRICADES SHALL BE INCLUDED IN 763500 MAINTENANCE OF TRAFFIC.

LEGEND

A — DETOUR 1 ↑

B — DETOUR 1 ←

C — DETOUR 1 →

D — DETOUR 1 ↖

E — DETOUR 1 ↗

F — END DETOUR

G — DETOUR AHEAD

H — DETOUR 1000 FT

I — DETOUR 500 FT

J — ROAD CLOSED AHEAD

K — ROAD CLOSED 1000 FT

L — ROAD CLOSED 500 FT

M — MALL ROAD

N — ← DETOUR

O — DETOUR →

P — ROAD CLOSED XX MILES AHEAD LOCAL TRAFFIC ONLY

Q — ROAD CLOSED

R — ROAD CLOSED TO THRU TRAFFIC

S

T

GENERAL NOTES

1. ALL DETOUR SIGNING INCLUDING, TRAILBLAZERS, ARE TO BE SUPPLIED AND MAINTAINED BY THE GENERAL CONTRACTOR IN COMPLIANCE TO THE DE MANUAL OF UNIFORM TRAFFIC CONTROL DEVICES.
2. THE CONTRACTOR SHALL COMPLY WITH GUIDELINES IN "THE DELAWARE MANUAL ON UNIFORM TRAFFIC CONTROL DEVICES (DE- MUTCD PART 6) FOR LIGHTS, BARRICADES AND SIGNS.(AS PER LATEST REVISION)
3. FIELD CONDITIONS MAY DICTATE CHANGES AT SOME TIME DURING THE LIFE OF THE CONTRACT. IN THE EVENT OF OMISSIONS OR CORRECTIONS, THE SIGNING PROVISIONS OF THE DELAWARE MANUAL ON UNIFORM TRAFFIC CONTROL DEVICES WILL PREVAIL.
4. SIGNS J THROUGH L AND P THROUGH R ,THE WORD (ROAD) SHOULD BE CHANGED TO RAMP, R/R OR BRIDGE WHERE APPLICABLE.
5. WARNING SIGNS SHOULD BE MOUNTED ON BREAKAWAY POSTS AND HAVE RETROREFLECTIVE FLUORESCENT SHEETING.
6. "S" BARRICADES SHALL COMPLETELY RUN THE FULL WIDTH OF ROADWAY.
7. BARRICADES SHALL BE A MINIMUM OF 6 FEET WIDE UNLESS DIRECTED BY THE ENGINEER.

RECOMMENDED _____ DATE: 11.10.10 | RECOMMENDED _____ DATE: 10-28-10 | RECOMMENDED _____ DATE: 10/13/10 | APPROVED CHIEF SAFETY OFFICER _____ DATE: 11-10-10 | APPROVED TRAFFIC ENGINEER _____ DATE: 11/10/10

DELAWARE DEPARTMENT OF TRANSPORTATION

ADDENDUM / REVISIONS

SCALE 0 1000 2000 3000 FEET

SR1 / I-95 INTERCHANGE

CONTRACT	BRIDGE NO.	X
T200809003	DESIGNED BY:	JCR
COUNTY		
NEW CASTLE	CHECKED BY:	MCS/JAB

DETOUR PLAN 2
SR7 S.B. CLOSURE
RAMPS A, B, R1, C1 & G1

SHEET NO. 675 — TOTAL SHTS. 803

10/12/2010 2:53:51 PM
M:\projects\2003\03059_delturnpk\SR1Mall\Cadd\2809003\Plans\dp02_sr1.dgn

UNOFFICIAL WEBSITE COPY

CHANGEABLE MESSAGE BOARDS

CMS-1 — PRIOR TO DETOUR
(10 DAYS PRIOR TO BEGINNING OF DETOUR)

I-95 NB CLOSING AT SR 1	STARTING XX/XX/XX XXPM-XAM

CMS-1 — DURING DETOUR

I-95 NB CLOSED AT SR1	FOLLOW DETOUR

CMS-2 — PRIOR TO DETOUR
(10 DAYS PRIOR TO BEGINNING OF DETOUR)

RAMP TO I-95 NB CLOSING	STARTING XX/XX/XX XXPM-XAM

CMS-2 — DURING DETOUR

RAMP TO I-95 NB CLOSED	FOLLOW DETOUR

SPECIAL SIGNS

AA DETOUR 7 ↑
CC DETOUR 7 →
EE DETOUR 7 ↗
KK ROAD CLOSED 1 MILE
LL ROAD CLOSED 1/2 MILE
U NORTH

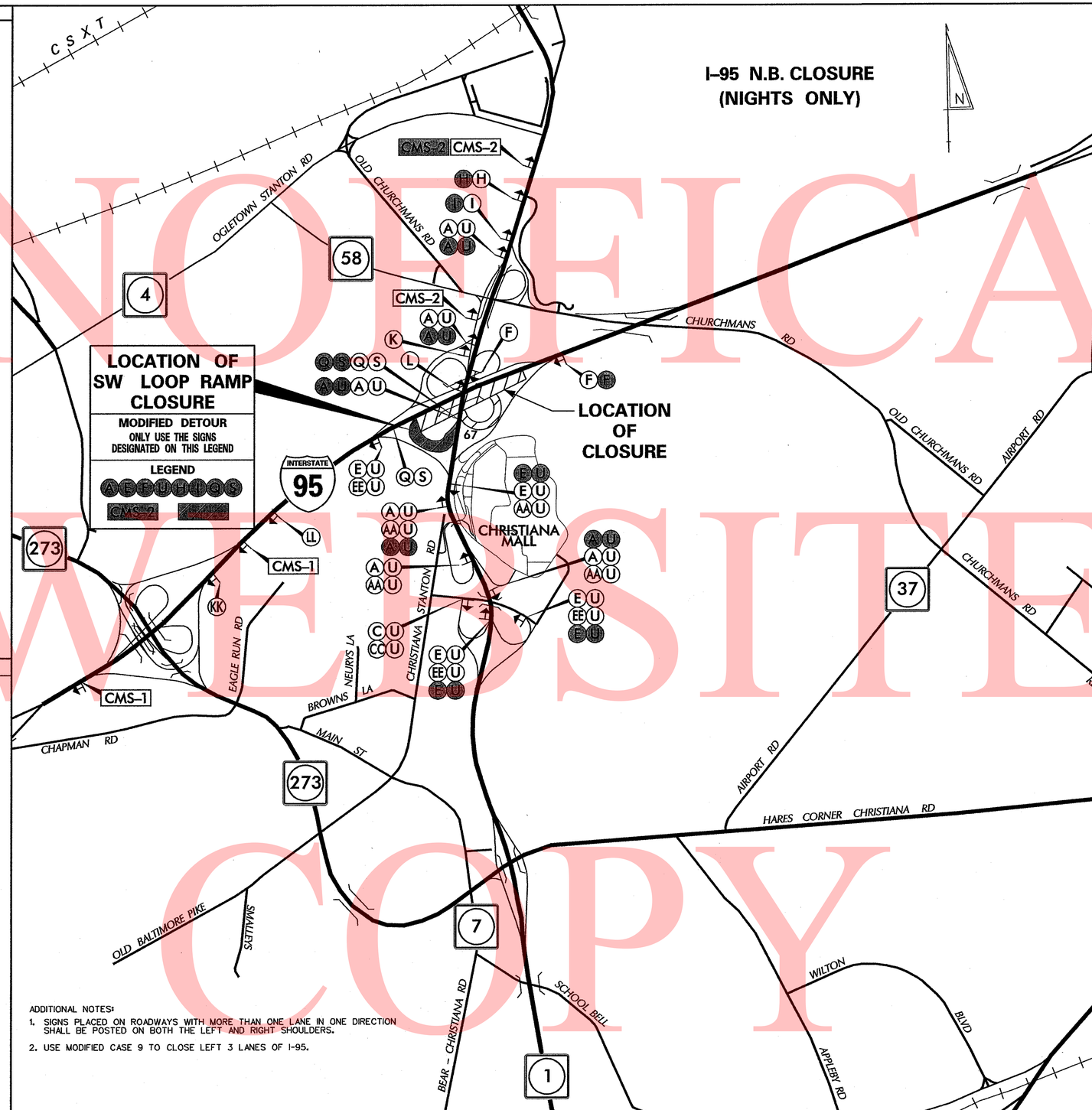

ADDITIONAL NOTES:

1. SIGNS PLACED ON ROADWAYS WITH MORE THAN ONE LANE IN ONE DIRECTION SHALL BE POSTED ON BOTH THE LEFT AND RIGHT SHOULDERS.
2. USE MODIFIED CASE 9 TO CLOSE LEFT 3 LANES OF I-95.

LEGEND

A DETOUR INTERSTATE 95 ↑
B DETOUR INTERSTATE 95 ←
C DETOUR INTERSTATE 95 →
D DETOUR INTERSTATE 95 ↖
E DETOUR INTERSTATE 95 ↗
F END DETOUR
G DETOUR AHEAD
H DETOUR 1000 FT
I DETOUR 500 FT
J ROAD CLOSED AHEAD
K ROAD CLOSED 1000 FT
L ROAD CLOSED 500 FT
M ROAD NAME
N DETOUR ←
O DETOUR →
P ROAD CLOSED XX MILES AHEAD LOCAL TRAFFIC ONLY
Q ROAD CLOSED
R ROAD CLOSED TO THRU TRAFFIC
S
T

GENERAL NOTES

1. ALL DETOUR SIGNING INCLUDING, TRAILBLAZERS, ARE TO BE SUPPLIED AND MAINTAINED BY THE GENERAL CONTRACTOR IN COMPLIANCE TO THE DE MANUAL OF UNIFORM TRAFFIC CONTROL DEVICES.
2. THE CONTRACTOR SHALL COMPLY WITH GUIDELINES IN "THE DELAWARE MANUAL ON UNIFORM TRAFFIC CONTROL DEVICES (DE- MUTCD PART 6) FOR LIGHTS, BARRICADES AND SIGNS.(AS PER LATEST REVISION)
3. FIELD CONDITIONS MAY DICTATE CHANGES AT SOME TIME DURING THE LIFE OF THE CONTRACT. IN THE EVENT OF OMISSIONS OR CORRECTIONS, THE SIGNING PROVISIONS OF THE DELAWARE MANUAL ON UNIFORM TRAFFIC CONTROL DEVICES WILL PREVAIL.
4. SIGNS J THROUGH L AND P THROUGH R ,THE WORD (ROAD) SHOULD BE CHANGED TO RAMP, R/R OR BRIDGE WHERE APPLICABLE.
5. WARNING SIGNS SHOULD BE MOUNTED ON BREAKAWAY POSTS AND HAVE RETROREFLECTIVE FLUORESCENT SHEETING.
6. "S" BARRICADES SHALL COMPLETELY RUN THE FULL WIDTH OF ROADWAY.
7. BARRICADES SHALL BE A MINIMUM OF 6 FEET WIDE UNLESS DIRECTED BY THE ENGINEER.

RECOMMENDED _____ DATE: 11.10.10
RECOMMENDED _____ DATE: 10-28-10
RECOMMENDED _____ DATE: 10/13/10
APPROVED CHIEF SAFETY OFFICER _____ DATE: 11-10-10
APPROVED TRAFFIC ENGINEER _____ DATE: 11/10/10

DELAWARE DEPARTMENT OF TRANSPORTATION

ADDENDUM / REVISIONS

SCALE 0 1000 2000 3000 FEET

SR1 / I-95 INTERCHANGE

CONTRACT	BRIDGE NO.	X
T200809003	DESIGNED BY:	JCR
COUNTY		
NEW CASTLE	CHECKED BY:	MCS/JAB

DETOUR PLAN 3
I-95 N.B. CLOSURE
RAMPS A, B

SHEET NO. 676
TOTAL SHTS. 803

10/5/2010 3:22:10 PM
M:\projects\2003\03059_delt npk\SR1Mall\Cadd\28090003\Plans\dp03_sr1.dgn

UNOFFICIAL WEBSITE COPY

CHANGEABLE MESSAGE BOARDS

PRIOR TO DETOUR
(10 DAYS PRIOR TO BEGINNING OF DETOUR)

CMS-1

I-95 SB CLOSING AT SR 1	STARTING XX/XX/XX XXPM-XAM

DURING DETOUR

CMS-1

I-95 SB CLOSED AT SR1	FOLLOW DETOUR

DURING DETOUR

CMS-2

TO I-95 SB SR1 SB	NEXT LEFT

SPECIAL SIGNS

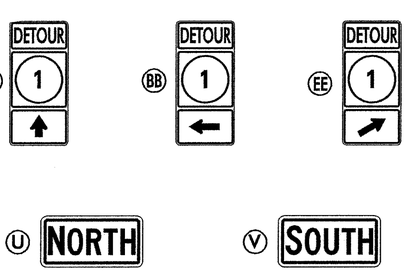

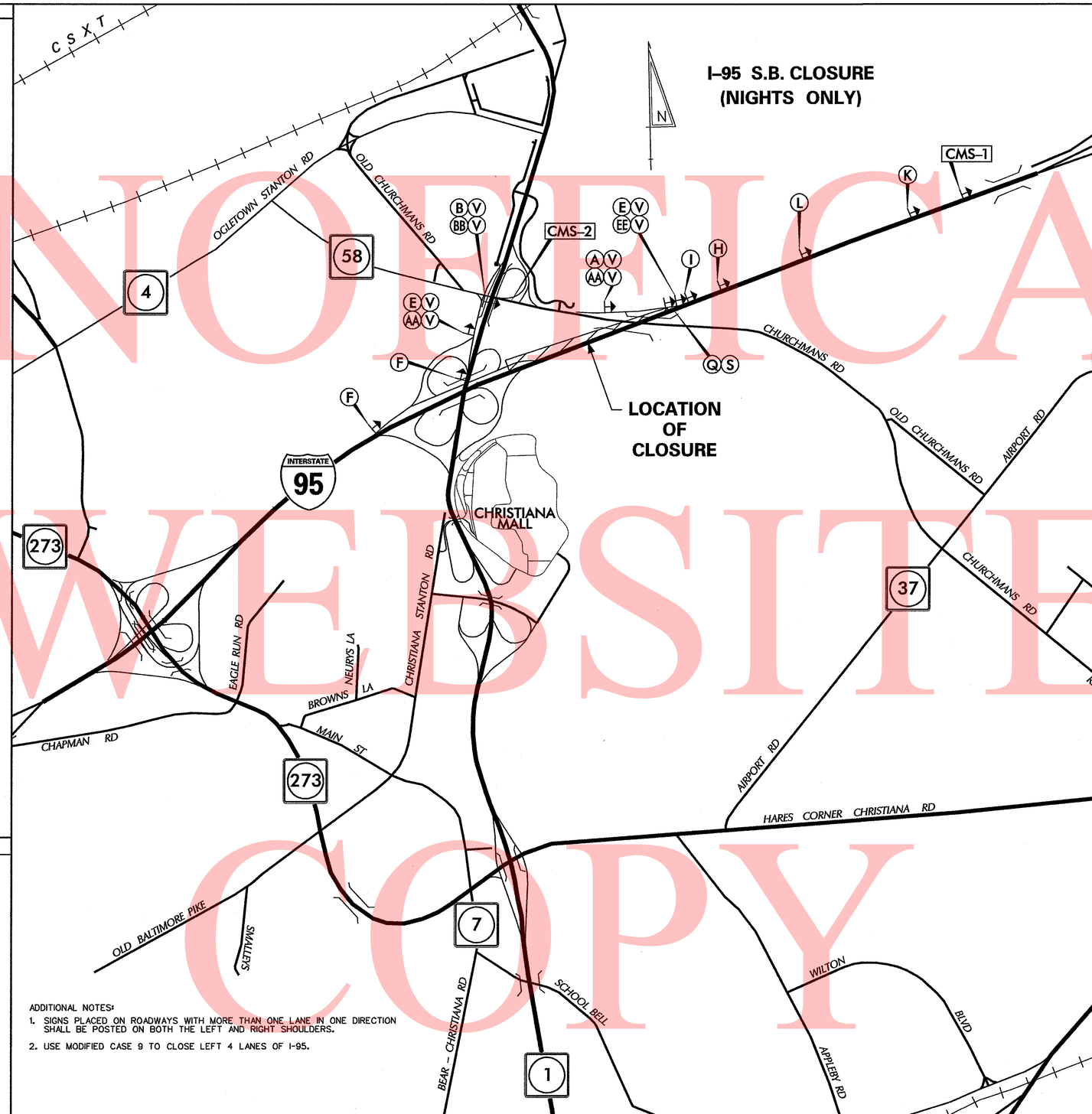

ADDITIONAL NOTES:

1. SIGNS PLACED ON ROADWAYS WITH MORE THAN ONE LANE IN ONE DIRECTION SHALL BE POSTED ON BOTH THE LEFT AND RIGHT SHOULDERS.
2. USE MODIFIED CASE 9 TO CLOSE LEFT 4 LANES OF I-95.

LEGEND

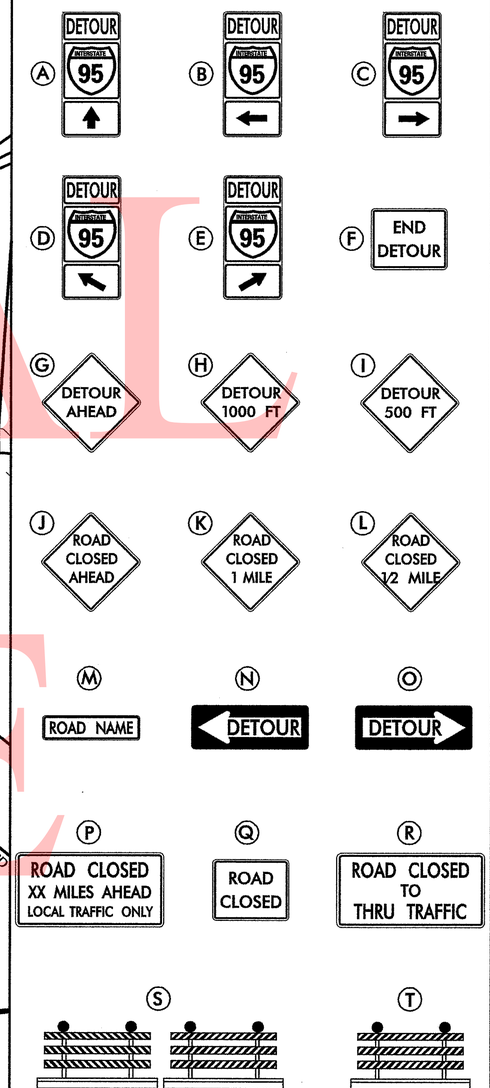

GENERAL NOTES

1. ALL DETOUR SIGNING INCLUDING, TRAILBLAZERS, ARE TO BE SUPPLIED AND MAINTAINED BY THE GENERAL CONTRACTOR IN COMPLIANCE TO THE DE MANUAL OF UNIFORM TRAFFIC CONTROL DEVICES.
2. THE CONTRACTOR SHALL COMPLY WITH GUIDELINES IN "THE DELAWARE MANUAL ON UNIFORM TRAFFIC CONTROL DEVICES (DE- MUTCD PART 6) FOR LIGHTS, BARRICADES AND SIGNS.(AS PER LATEST REVISION)
3. FIELD CONDITIONS MAY DICTATE CHANGES AT SOME TIME DURING THE LIFE OF THE CONTRACT. IN THE EVENT OF OMISSIONS OR CORRECTIONS, THE SIGNING PROVISIONS OF THE DELAWARE MANUAL ON UNIFORM TRAFFIC CONTROL DEVICES WILL PREVAIL.
4. SIGNS J THROUGH L AND P THROUGH R ,THE WORD (ROAD) SHOULD BE CHANGED TO RAMP, R/R OR BRIDGE WHERE APPLICABLE.
5. WARNING SIGNS SHOULD BE MOUNTED ON BREAKAWAY POSTS AND HAVE RETROREFLECTIVE FLUORESCENT SHEETING.
6. "S" BARRICADES SHALL COMPLETELY RUN THE FULL WIDTH OF ROADWAY.
7. BARRICADES SHALL BE A MINIMUM OF 6 FEET WIDE UNLESS DIRECTED BY THE ENGINEER.

RECOMMENDED _____ DATE: 11.10.10
RECOMMENDED _____ DATE: 10-28-10
RECOMMENDED _____ DATE: 10/13/10
APPROVED CHIEF SAFETY OFFICER _____ DATE: 11-10-10
APPROVED TRAFFIC ENGINEER _____ DATE: 11/10/10

DELAWARE DEPARTMENT OF TRANSPORTATION

ADDENDUM / REVISIONS

SCALE 0 1000 2000 3000 FEET

SR1 / I-95 INTERCHANGE

CONTRACT	BRIDGE NO.	X
T200809003	DESIGNED BY: JCR	
COUNTY		
NEW CASTLE	CHECKED BY: MCS/JAB	

DETOUR PLAN 4
I-95 S.B. CLOSURE
RAMPS A, B

SHEET NO. 677
TOTAL SHTS. 803

10/12/2010 3:08:02 PM
M:\projects\2003\03059_deltrnpk\SR1MGII\Cadd\2809003\Plans\dp04_sr1.dgn

UNOFFICAL WEBSITE COPY

CHANGEABLE MESSAGE BOARDS

PRIOR TO DETOUR
(10 DAYS PRIOR TO BEGINNING OF DETOUR)

CMS-1

SR7 NB RAMP CLOSING	STARTING XX/XX

DURING DETOUR

CMS-1

SR7 NB RAMP CLOSED	FOLLOW DETOUR

SPECIAL SIGNS

Ⓤ NORTH Ⓥ H

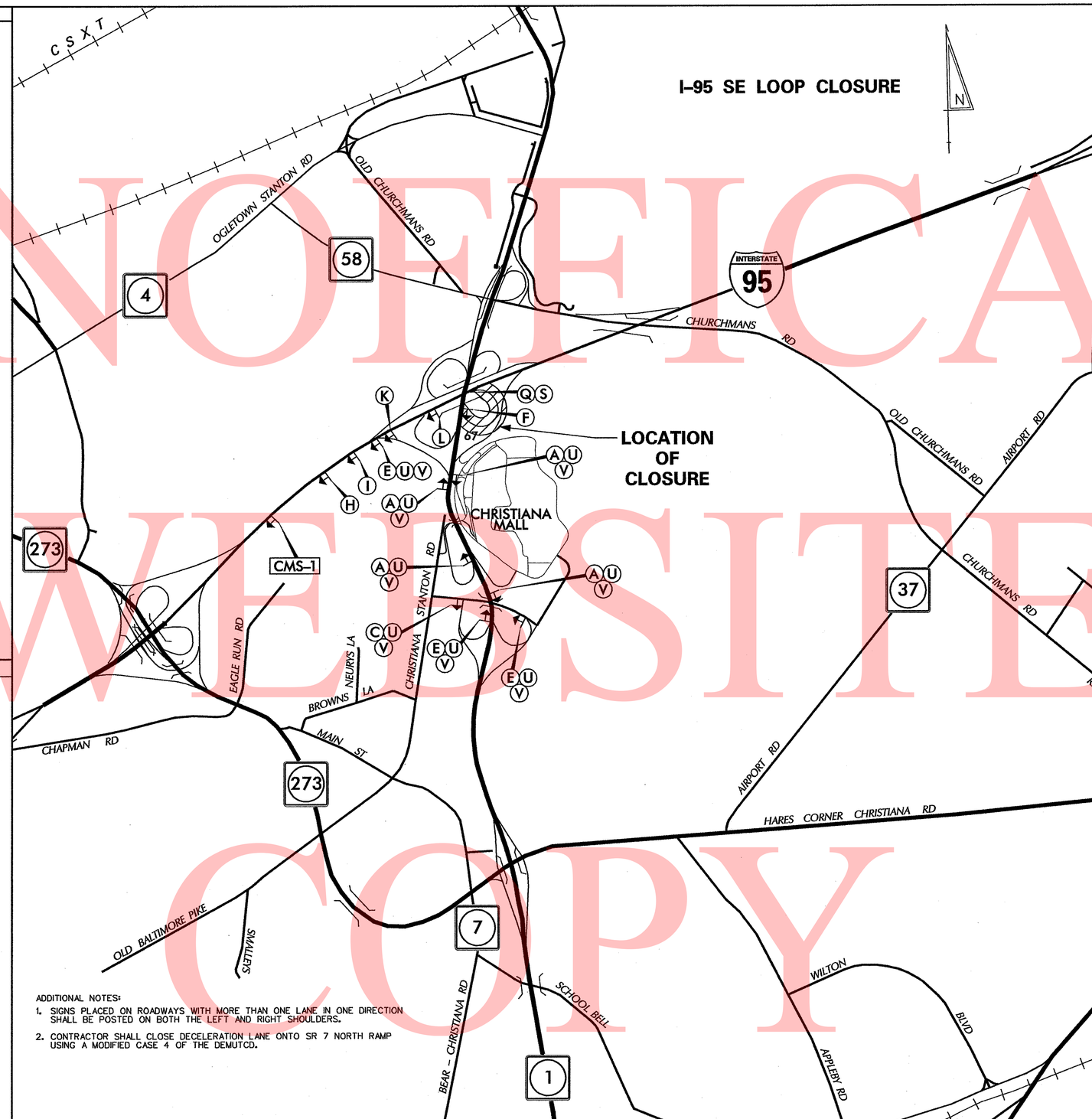

ADDITIONAL NOTES:

1. SIGNS PLACED ON ROADWAYS WITH MORE THAN ONE LANE IN ONE DIRECTION SHALL BE POSTED ON BOTH THE LEFT AND RIGHT SHOULDERS.
2. CONTRACTOR SHALL CLOSE DECELERATION LANE ONTO SR 7 NORTH RAMP USING A MODIFIED CASE 4 OF THE DEMUTCD.

LEGEND

Ⓐ DETOUR 7 ↑
Ⓑ DETOUR 7 ←
Ⓒ DETOUR 7 →
Ⓓ DETOUR 7 ↖
Ⓔ DETOUR 7 ↗
Ⓕ END DETOUR
Ⓖ DETOUR AHEAD
Ⓗ DETOUR 1000 FT
Ⓘ DETOUR 500 FT
Ⓙ ROAD CLOSED AHEAD
Ⓚ RAMP CLOSED 1000 FT
Ⓛ RAMP CLOSED 500 FT
Ⓜ ROAD NAME
Ⓝ ← DETOUR
Ⓞ DETOUR →
Ⓟ ROAD CLOSED XX MILES AHEAD LOCAL TRAFFIC ONLY
Ⓠ ROAD CLOSED
Ⓡ ROAD CLOSED TO THRU TRAFFIC
Ⓢ
Ⓣ

GENERAL NOTES

1. ALL DETOUR SIGNING INCLUDING, TRAILBLAZERS, ARE TO BE SUPPLIED AND MAINTAINED BY THE GENERAL CONTRACTOR IN COMPLIANCE TO THE DE MANUAL OF UNIFORM TRAFFIC CONTROL DEVICES.
2. THE CONTRACTOR SHALL COMPLY WITH GUIDELINES IN "THE DELAWARE MANUAL ON UNIFORM TRAFFIC CONTROL DEVICES (DE- MUTCD PART 6) FOR LIGHTS, BARRICADES AND SIGNS.(AS PER LATEST REVISION)
3. FIELD CONDITIONS MAY DICTATE CHANGES AT SOME TIME DURING THE LIFE OF THE CONTRACT. IN THE EVENT OF OMISSIONS OR CORRECTIONS, THE SIGNING PROVISIONS OF THE DELAWARE MANUAL ON UNIFORM TRAFFIC CONTROL DEVICES WILL PREVAIL.
4. SIGNS J THROUGH L AND P THROUGH R ,THE WORD (ROAD) SHOULD BE CHANGED TO RAMP, R/R OR BRIDGE WHERE APPLICABLE.
5. WARNING SIGNS SHOULD BE MOUNTED ON BREAKAWAY POSTS AND HAVE RETROREFLECTIVE FLUORESCENT SHEETING.
6. "S" BARRICADES SHALL COMPLETELY RUN THE FULL WIDTH OF ROADWAY.
7. BARRICADES SHALL BE A MINIMUM OF 6 FEET WIDE UNLESS DIRECTED BY THE ENGINEER.

RECOMMENDED _____ DATE: 11.10.10
RECOMMENDED _____ DATE: 10-28-10
RECOMMENDED _____ DATE: 10/12/10
APPROVED CHIEF SAFETY OFFICER _____ DATE: 11-10-10
APPROVED TRAFFIC ENGINEER _____ DATE: 11/10/10

DELAWARE DEPARTMENT OF TRANSPORTATION

ADDENDUM / REVISIONS

SCALE 0 1000 2000 3000 FEET

SR1 / I-95 INTERCHANGE

CONTRACT	BRIDGE NO.	X
T200809003	DESIGNED BY: JCR	
COUNTY		
NEW CASTLE	CHECKED BY: MCS/JAB	

DETOUR PLAN 5
I-95 SE LOOP CLOSURE

SHEET NO. 678
TOTAL SHTS. 803

10/12/2010 2:56:59 PM
M:\projects\2003\03059_deltrnpk\SRIMall\Cadd\28090003\Plans\dp05_sr1.dgn

UNOFFICAL WEBSITE COPY

CHANGEABLE MESSAGE BOARDS

PRIOR TO DETOUR
(10 DAYS PRIOR TO BEGINNING OF DETOUR)

CMS-1

MALL RD RAMP CLOSING

STARTING XX/XX

DURING DETOUR

CMS-1

MALL RD RAMP CLOSED

FOLLOW DETOUR

SPECIAL SIGNS

ADDITIONAL NOTES:

1. SIGNS PLACED ON ROADWAYS WITH MORE THAN ONE LANE IN ONE DIRECTION SHALL BE POSTED ON BOTH THE LEFT AND RIGHT SHOULDERS.
2. USE CASE 7 OF THE DE MUTCD TO CLOSE LANES PRIOR TO ROAD CLOSURES.
3. ALL SIGNS SHOWN ON THIS SHEET, EXCLUDING CHANGEABLE MESSAGE BOARDS, SHALL BE FURNISHED AND INSTALLED UNDER CONTRACT T201009004. THE WARNING SIGNS SHALL BE LEFT IN PLACE AND BECOME THE PROPERTY OF THE T200809003 CONTRACTOR UPON COMPLETION OF THE T201009004 CONTRACT. MAINTENANCE OF THESE SIGNS SHALL BE INCLUDED IN 763500 MAINTENANCE OF TRAFFIC.
4. ALL BARRICADES SHOWN ON THIS SHEET SHALL BE FURNISHED AND INSTALLED UNDER CONTRACT T201009004. THE BARRICADES SHALL BE LEFT IN PLACE AND BECOME THE PROPERTY OF THE T200809003 CONTRACTOR UPON COMPLETION OF THE T201009004 CONTRACT, MAINTENANCE OF THESE BARRICADES SHALL BE INCLUDED IN 763500 MAINTENANCE OF TRAFFIC.

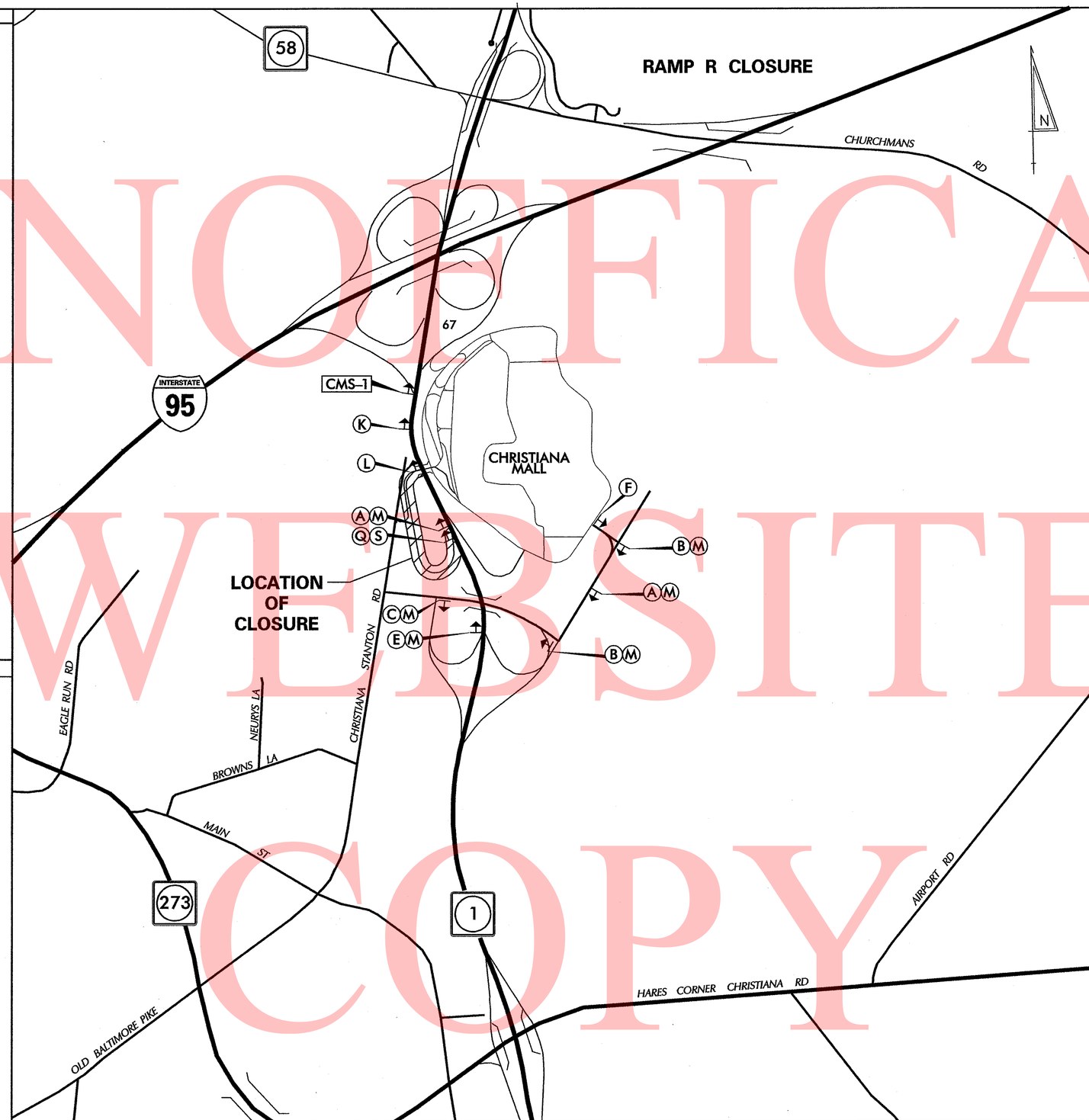

LEGEND

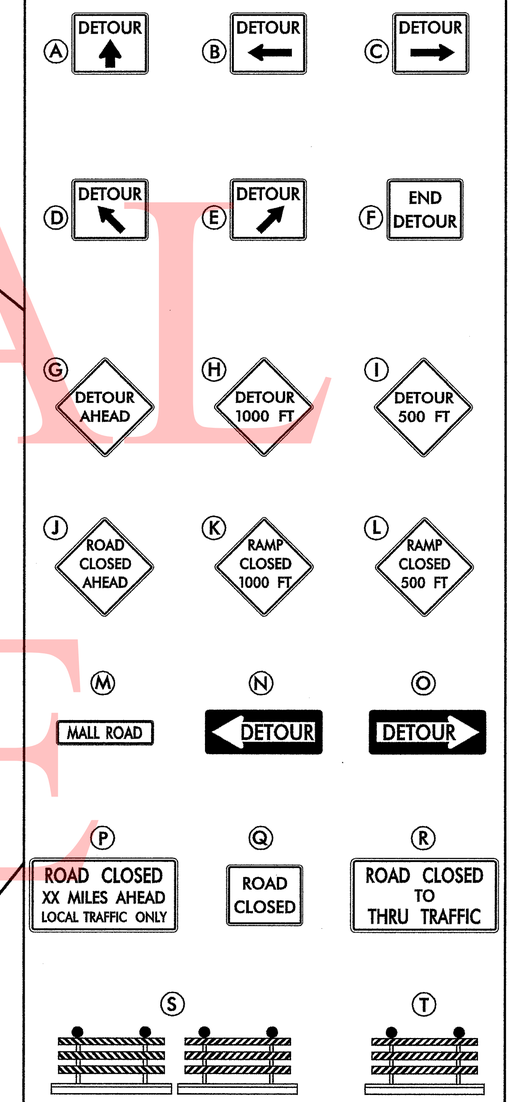

GENERAL NOTES

1. ALL DETOUR SIGNING INCLUDING, TRAILBLAZERS, ARE TO BE SUPPLIED AND MAINTAINED BY THE GENERAL CONTRACTOR IN COMPLIANCE TO THE DE MANUAL OF UNIFORM TRAFFIC CONTROL DEVICES.
2. THE CONTRACTOR SHALL COMPLY WITH GUIDELINES IN "THE DELAWARE MANUAL ON UNIFORM TRAFFIC CONTROL DEVICES (DE- MUTCD PART 6) FOR LIGHTS, BARRICADES AND SIGNS.(AS PER LATEST REVISION)
3. FIELD CONDITIONS MAY DICTATE CHANGES AT SOME TIME DURING THE LIFE OF THE CONTRACT. IN THE EVENT OF OMISSIONS OR CORRECTIONS, THE SIGNING PROVISIONS OF THE DELAWARE MANUAL ON UNIFORM TRAFFIC CONTROL DEVICES WILL PREVAIL.
4. SIGNS J THROUGH L AND P THROUGH R ,THE WORD (ROAD) SHOULD BE CHANGED TO RAMP, R/R OR BRIDGE WHERE APPLICABLE.
5. WARNING SIGNS SHOULD BE MOUNTED ON BREAKAWAY POSTS AND HAVE RETROREFLECTIVE FLUORESCENT SHEETING.
6. "S" BARRICADES SHALL COMPLETELY RUN THE FULL WIDTH OF ROADWAY.
7. BARRICADES SHALL BE A MINIMUM OF 6 FEET WIDE UNLESS DIRECTED BY THE ENGINEER.

RECOMMENDED _____ DATE: 11.10.10

RECOMMENDED _____ DATE: 10-28-10

RECOMMENDED _____ DATE: 10/13/10

APPROVED CHIEF SAFETY OFFICER _____ DATE: 11-10-10

APPROVED TRAFFIC ENGINEER _____ DATE: 11/10/10

DELAWARE DEPARTMENT OF TRANSPORTATION

ADDENDUM / REVISIONS

SCALE 0 1000 2000 3000 FEET

SR1 / I-95 INTERCHANGE

CONTRACT	BRIDGE NO.	X
T200809003	DESIGNED BY:	JCR
COUNTY		
NEW CASTLE	CHECKED BY:	MCS/JAB

DETOUR PLAN 6
RAMP R CLOSURE

SHEET NO.
679
TOTAL SHTS.
803

10/12/2010 2:59:50 PM
M:\projects\2003\03059_deltrnpk\SR1Mall\Cadd\2809003\Plans\dp06_sr1.dgn

UNOFFICAL WEBSITE COPY

CHANGEABLE MESSAGE BOARDS

PRIOR TO DETOUR
(10 DAYS PRIOR TO BEGINNING OF DETOUR)

CMS-1

NB I-95 RAMP CLOSING

STARTING XX/XX XXAM-XXPM

DURING DETOUR

CMS-1

NB I-95 RAMP CLOSED

FOLLOW DETOUR

SPECIAL SIGNS

(AA) DETOUR INTERSTATE 95 ↑

(BB) DETOUR INTERSTATE 95 ←

(CC) DETOUR INTERSTATE 95 →

(EE) DETOUR INTERSTATE 95 ↗

(KK) ROAD CLOSED 1000 FT

(LL) ROAD CLOSED 500 FT

(U) NORTH

(V) SOUTH

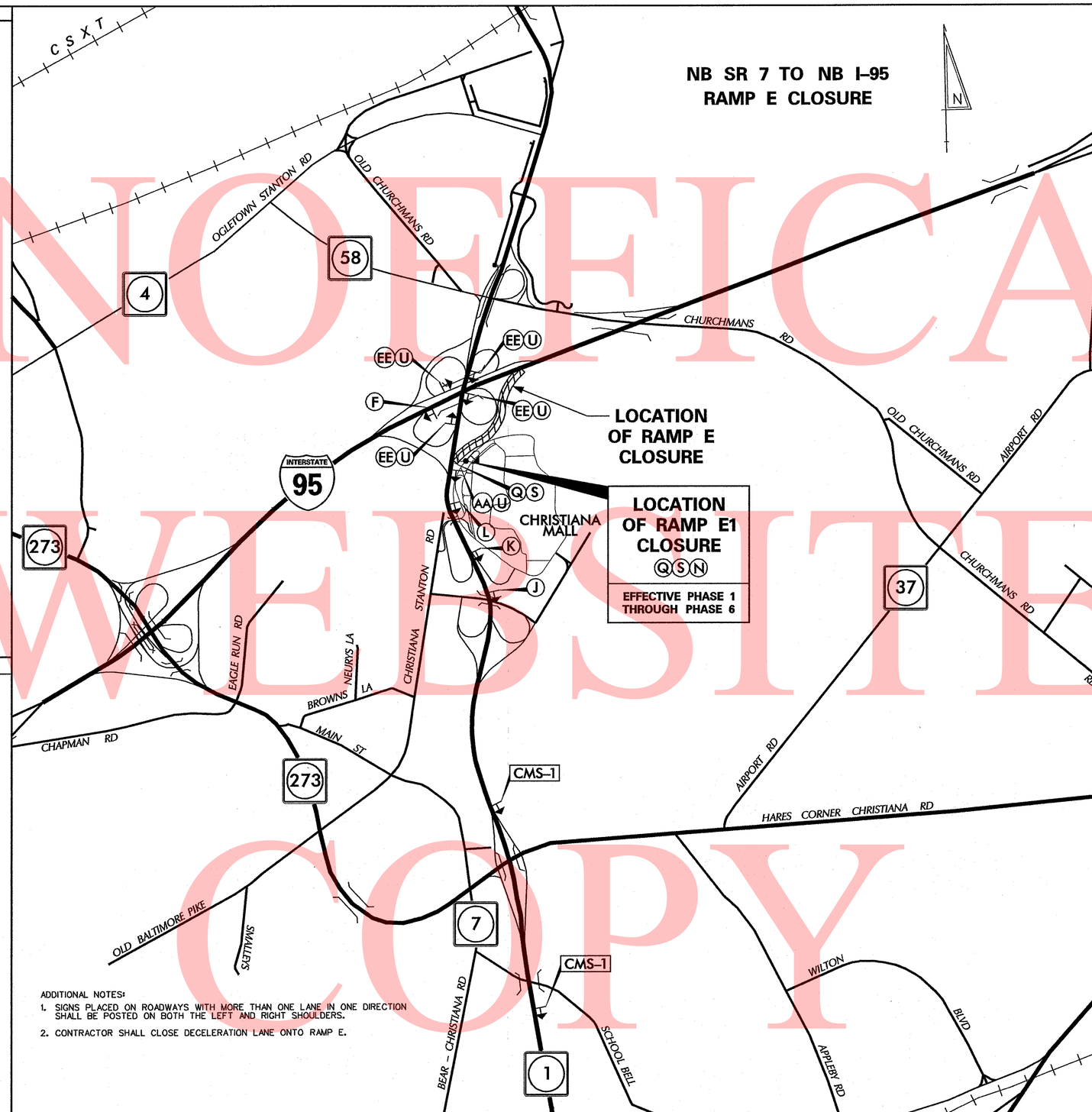

ADDITIONAL NOTES:

1. SIGNS PLACED ON ROADWAYS WITH MORE THAN ONE LANE IN ONE DIRECTION SHALL BE POSTED ON BOTH THE LEFT AND RIGHT SHOULDERS.
2. CONTRACTOR SHALL CLOSE DECELERATION LANE ONTO RAMP E.

LEGEND

(A) DETOUR ↑

(B) DETOUR ←

(C) DETOUR →

(D) DETOUR ↖

(E) DETOUR ↗

(F) END DETOUR

(G) DETOUR AHEAD

(H) DETOUR 1000 FT

(I) DETOUR 500 FT

(J) RAMP CLOSED AHEAD

(K) RAMP CLOSED 1000 FT

(L) RAMP CLOSED 500 FT

(M) MALL ROAD

(N) ← DETOUR

(O) DETOUR →

(P) ROAD CLOSED XX MILES AHEAD LOCAL TRAFFIC ONLY

(Q) ROAD CLOSED

(R) ROAD CLOSED TO THRU TRAFFIC

(S)

(T)

GENERAL NOTES

1. ALL DETOUR SIGNING INCLUDING, TRAILBLAZERS, ARE TO BE SUPPLIED AND MAINTAINED BY THE GENERAL CONTRACTOR IN COMPLIANCE TO THE DE MANUAL OF UNIFORM TRAFFIC CONTROL DEVICES.
2. THE CONTRACTOR SHALL COMPLY WITH GUIDELINES IN "THE DELAWARE MANUAL ON UNIFORM TRAFFIC CONTROL DEVICES (DE- MUTCD PART 6) FOR LIGHTS, BARRICADES AND SIGNS.(AS PER LATEST REVISION)
3. FIELD CONDITIONS MAY DICTATE CHANGES AT SOME TIME DURING THE LIFE OF THE CONTRACT. IN THE EVENT OF OMISSIONS OR CORRECTIONS, THE SIGNING PROVISIONS OF THE DELAWARE MANUAL ON UNIFORM TRAFFIC CONTROL DEVICES WILL PREVAIL.
4. SIGNS J THROUGH L AND P THROUGH R ,THE WORD (ROAD) SHOULD BE CHANGED TO RAMP, R/R OR BRIDGE WHERE APPLICABLE.
5. WARNING SIGNS SHOULD BE MOUNTED ON BREAKAWAY POSTS AND HAVE RETROREFLECTIVE FLUORESCENT SHEETING.
6. "S" BARRICADES SHALL COMPLETELY RUN THE FULL WIDTH OF ROADWAY.
7. BARRICADES SHALL BE A MINIMUM OF 6 FEET WIDE UNLESS DIRECTED BY THE ENGINEER.

RECOMMENDED _____ DATE: 11.10.10

RECOMMENDED _____ DATE: 10-20-10

RECOMMENDED _____ DATE: 10/13/10

APPROVED CHIEF SAFETY OFFICER _____ DATE: 11-10-10

APPROVED TRAFFIC ENGINEER _____ DATE: 11/10/10

DELAWARE DEPARTMENT OF TRANSPORTATION

ADDENDUM / REVISIONS

SCALE 0 1000 2000 3000 FEET

SR1 / I-95 INTERCHANGE

CONTRACT	BRIDGE NO.	
T200809003	DESIGNED BY:	EDJ
COUNTY		
NEW CASTLE	CHECKED BY:	RLS

DETOUR PLAN 7 RAMP E CLOSURE

SHEET NO. 679A

TOTAL SHTS. 803

10/5/2010 3:08:53 PM
H:\projects\2003\03059_deltrnpk\SR1Mall\Cadd\2809003\Plans\dp06A_sr1.dgn

UNOFFICAL WEBSITE COPY

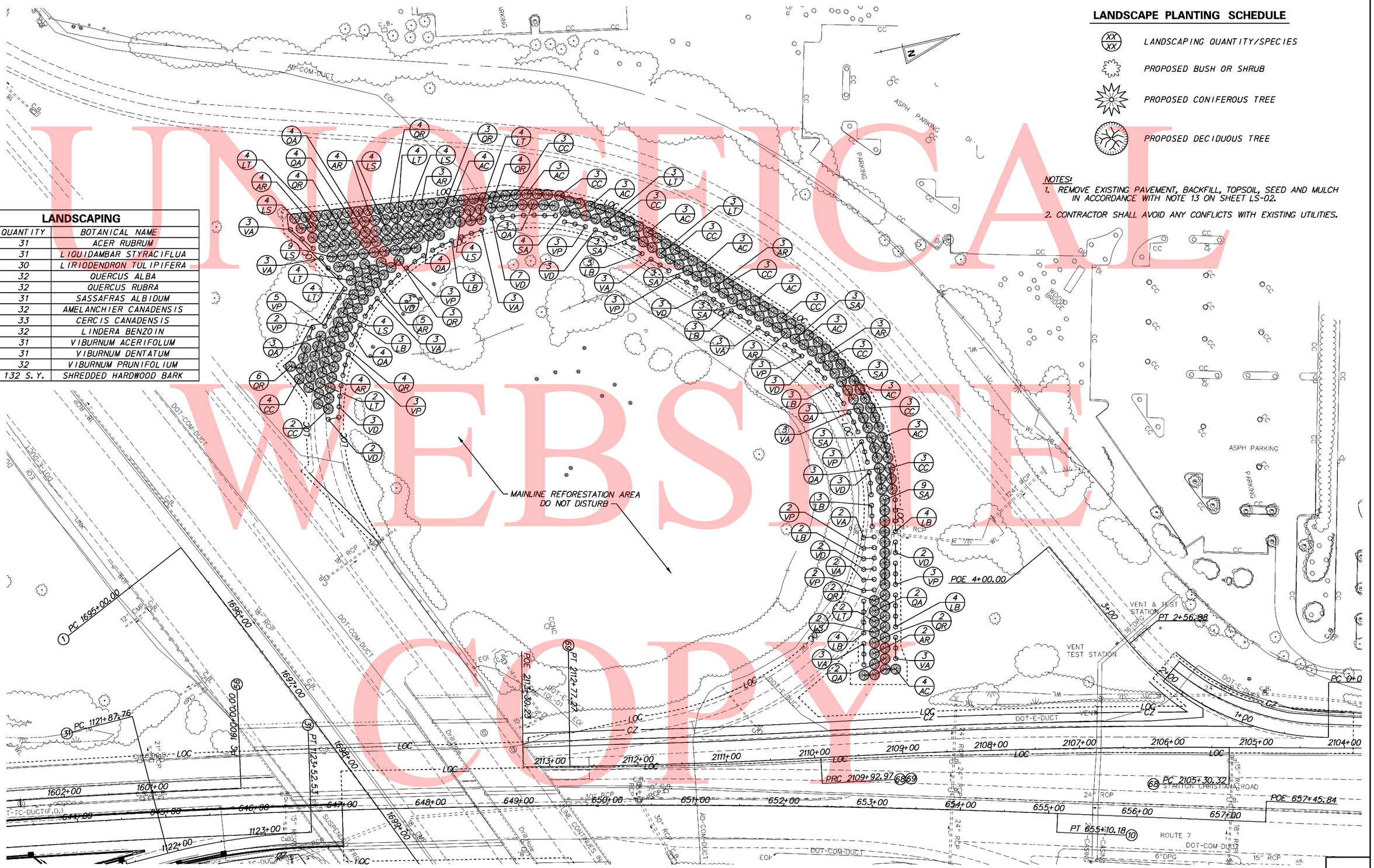

LANDSCAPE PLANTING SCHEDULE

- XX/XX — LANDSCAPING QUANTITY/SPECIES
- PROPOSED BUSH OR SHRUB
- PROPOSED CONIFEROUS TREE
- PROPOSED DECIDUOUS TREE

NOTES:

1. REMOVE EXISTING PAVEMENT, BACKFILL, TOPSOIL, SEED AND MULCH IN ACCORDANCE WITH NOTE 13 ON SHEET LS-02.
2. CONTRACTOR SHALL AVOID ANY CONFLICTS WITH EXISTING UTILITIES.

LANDSCAPING

KEY	QUANTITY	BOTANICAL NAME
AR	31	ACER RUBRUM
LS	31	LIQUIDAMBAR STYRACIFLUA
LT	30	LIRIODENDRON TULIPIFERA
QA	32	QUERCUS ALBA
QR	32	QUERCUS RUBRA
SA	31	SASSAFRAS ALBIDUM
AC	32	AMELANCHIER CANADENSIS
CC	33	CERCIS CANADENSIS
LB	32	LINDERA BENZOIN
VA	31	VIBURNUM ACERIFOLUM
VD	31	VIBURNUM DENTATUM
VP	32	VIBURNUM PRUNIFOLIUM
	132 S.Y.	SHREDDED HARDWOOD BARK

UNOFFICIAL WEBSITE COPY

9/10/2010 3:58:35 PM
M:\PROJECTS\2003\030659_DELTRNPK\SRIMALL\CADD\2809003\PLANS\LS01_SR1.DGN

DELAWARE DEPARTMENT OF TRANSPORTATION

ADDENDUMS / REVISIONS

SCALE 0 50 100 150 FEET

SR1 / I-95 INTERCHANGE

CONTRACT	BRIDGE NO.
28-090-03	DESIGNED BY:
COUNTY	CHECKED BY:
NEW CASTLE	

REFORESTATION PLAN

LS-01	
SHEET NO.	680
TOTAL SHTS.	803

NOTES

GENERAL

1. THIS PLAN WAS PREPARED IN ACCORDANCE WITH THE DELAWARE LANDSCAPING AND REFORESTATION ACT.

2. THE TOTAL SR1 INTERCHANGE/I-95 MAINLINE WIDENING PROJECT REFORESTATION OBLIGATION IS 4.35 ACRES. 0.40 ACRES OF REFORESTATION CREDIT WILL BE APPLIED TO THE CATHCART WETLAND MITIGATION SITE LOCATED ADJACENT TO THE I-95 CHRISTINA RIVER BRIDGE. THREE ACRES OF REFORESTATION WERE ALREADY PLANTED IN THE SR1/I-95 INTERCHANGE LOOP. THE REMAINING OBLIGATION OF 0.95 ACRES IS PROVIDED IN THE LANDSCAPE PLAN.

3. PROTECTION OF EXISTING WORK: THE CONTRACTOR SHALL BE RESPONSIBLE FOR PROTECTING EXISTING PAVEMENT, IMPROVEMENTS AND VEGETATION FROM DAMAGE DURING CONSTRUCTION. THE DEPARTMENT AND THE CONTRACTOR SHALL REVIEW EXISTING SITE CONDITIONS PRIOR TO INITIATION OF WORK AND AGAIN AT COMPLETION. DAMAGE RESULTING FROM OPERATIONS WILL BE REPAIRED AND/OR REPLACED TO THE SATISFACTION OF THE DEPARTMENT WITHIN 14 DAYS OF COMPLETION OF THE PROJECT AT THE CONTRACTOR'S EXPENSE. IT SHALL BE THE CONTRACTOR'S RESPONSIBILITY TO PREVENT THE INTRODUCTION OF FOREIGN MATTER AND/OR SILT INTO STORM DRAINAGE SYSTEMS AS A RESULT OF THIS REFORESTATION WORK. ANY REPAIR INCLUDING CLEANING OF SEWERS AND DRAINAGE SYSTEMS SHALL BE THE CONTRACTOR'S RESPONSIBILITY. THE CONTRACTOR SHALL DISTRIBUTE ALL MATERIALS AND EQUIPMENT AND MAINTAIN STOCKPILES IN SUCH A MANNER AS TO PROTECT EXISTING ROADS, DRIVEWAY APRONS, DRIVES, VEGETATION, ETC., AND SHALL BE RESPONSIBLE FOR THE COST OF SATISFACTORY REPAIR OF ALL DAMAGE IN KIND RESULTING FROM FAILURE TO COMPLY.

4. THE CONTRACTOR SHALL SELECT HAULING, MOWING, SOIL STABILIZATION AND REFORESTATION EQUIPMENT BASED ON PRE-BID SITE INVESTIGATIONS. DIFFICULTIES EXPERIENCED AS A RESULT OF THE CONTRACTOR'S FAILURE TO TAKE SITE CONDITIONS INTO FULL CONSIDERATION WILL NOT BE CONSIDERED A BASIS FOR A CONTRACTOR CLAIM.

5. IF THE CONTRACTOR ELECTS TO USE MATERIALS SUCH AS MATS, GEOTEXTILE OR STONE TO STABILIZE ACCESS ROUTES, ALL SUCH MATERIALS SHALL BE APPROVED BY THE DEPARTMENT PRIOR TO USE AND REMOVED FROM THE SITE BEFORE FINAL ACCEPTANCE OF THE WORK.

6. DURING NON-WORK HOURS ALL EQUIPMENT AND MATERIALS SHALL BE KEPT IN THE DESIGNATED STAGING AREA. FUELING AND ALL MAINTENANCE OF EQUIPMENT SHALL BE LIMITED TO THE STAGING AREA AND SHALL BE MONITORED FOR SPILLAGE. SPILL EQUIPMENT INCLUDING ABSORBENT PADS, SOCKS, AND CONTAINMENT SUPPLIES SHALL BE KEPT ON SITE FOR USE DURING FUELING AND MAINTENANCE. IN THE EVENT THAT FUEL, HYDRAULIC FLUID OR LUBRICANTS ARE SPILLED, CONTAMINATED SOIL SHALL BE IMMEDIATELY EXCAVATED AND DELIVERED TO AN APPROVED DISPOSAL SITE AT NO COST TO THE DEPARTMENT.

7. THE CONTRACTOR SHALL COMPLY WITH ALL REFORESTATION, MOWING, AND SOIL STABILIZATION PRACTICES AS DESCRIBED IN THE CONTRACT DOCUMENTS. TO MINIMIZE LOSS DUE TO NATURAL EVENTS, THE CONTRACTOR SHALL BE RESPONSIBLE FOR CHECKING THE WEATHER FORECAST WHEN PLANNING THEIR DAILY ACTIVITIES.

8. ALL TREE AND SHRUB PLANTING SHALL CONFORM TO THE REQUIREMENTS OF ITEM 737527 - INTERCHANGE TREE PLANTING.

9. STAGING AND STOCKPILING: CONSTRUCTION EQUIPMENT STORAGE OR STOCKPILE AREAS SHALL BE IN A LOCATION APPROVED BY THE DEPARTMENT OUTSIDE OF THE REFORESTATION AREA. NO STOCKPILING, EXCESS EXCAVATION OR OTHER CONSTRUCTION ACTIVITIES SHALL OCCUR OTHER THAN THOSE ACTIVITIES NECESSARY TO COMPLETE THE REFORESTATION WORK.

10. TREE PROTECTION: THE CONTRACTOR SHALL NOT DAMAGE OR REMOVE EXISTING TREES AS SHOWN ON LS01 WITHIN EXISTING TREE/SHRUB LINES. THIS INCLUDES PROTECTION FROM SMOTHERING, FLOODING,STORAGE OF MATERIALS, EXCESSIVE WETTING, ROOT AND SOIL COMPACTION, MECHANICAL DAMAGE, SPILLAGE AND DRAINAGE OF SOLUTIONS CONTAINING MATERIALS WHICH COULD BE HAZARDOUS TO TREE ROOTS.

11. IF ANY EXISTING TREES OR SHRUBS ARE KILLED OR SEVERELY DAMAGED BY NEGLIGENCE ON THE PART OF THE CONTRACTOR, THE CONTRACTOR WILL BE RESPONSIBLE FOR THE COST OF REMOVAL AND REPLACEMENT OF THE TREE OR SHRUB.

12. ALL MOWING SHALL CONFORM TO THE REQUIREMENTS OF ITEM 736502-MOWING. MOWING SHALL OCCUR AT THE END OF THE FIRST GROWING SEASON TO CONTROL RE-SPROUTING OF CROWN VETCH, AS DIRECTED BY THE DEPARTMENT.

13. REMOVE EXISTING PAVEMENT TO BOTTOM OF GABC. REMOVAL OF EXISTING PAVEMENT SHALL CONFORM TO ITEM 202000 - EXCAVATION AND EMBANKMENT. IMMEDIATELY FOLLOWING THE REMOVAL OF THE GABC, THE TRENCH SHALL BE LOOSELY BACKFILLED TO WITHIN 6" OF THE GROUND SURFACE WITH UNCOMPACTED BORROW, TYPE A AND SHALL BE DISKED TO A MINIMUM DEPTH OF 6". INSTALL 6" OF IMPORTED TOPSOIL PLACED IN TWO 3" LIFTS. THE TOPSOIL SHALL BE DISKED DOWN TO A DEPTH OF 6". BACKFILLING PROCEDURES SHALL CONFORM TO ITEM 732002 - TOPSOIL, 6" DEPTH. FOLLOWING TOPSOIL PLACEMENT, THE AREA SHALL BE SEEDED AND STABILIZED. SEEDING SHALL CONFORM TO THE REQUIREMENTS OF ITEM 734013 - PERMANENT GRASS SEDDING - DRY GROUND. STABILIZATION SHALL CONFORM TO THE REQUIREMENTS OF ITEM 735534 - SOIL RETENTION BLANKET MULCH, TYPE 4.

14. ANY DEVIATION FROM THESE PLANS SHALL BE APPROVED BY THE DEPARTMENT.

15. UTILITIES: THE CONTRACTOR SHALL VERIFY EXISTING CONDITIONS AND NOTIFY MISS UTILTY APPROPRIATELY IN ADVANCE OF THE PROPOSED CONSTRUCTION. THE CONTRACTOR IS RESPONSIBLE FOR VERIFYING AND STAKING THE LOCATION OF ALL EXISTING UTILITIES AND PROTECTING THEM DURING THE WORK AND SHALL BEAR ANY COSTS TO REPAIR UTILITIES DAMAGED AS A CONSEQUENCE OF HIS WORK.

MATERIALS

1. PLANT DELIVERY: THE DEPARTMENT OR AN AUTHORIZED REPRESENTATIVE SHALL RECEIVE A SHIPPING LIST FROM THE SUPPLIER. REFER TO SPECIFICATIONS FOR ADDITIONAL DETAILS.

2. PLANT SUBSTITUTIONS: NO SUBSTITUTIONS OF PRODUCTS OR PLANT TYPES OR SIZES SHALL BE MADE WITHOUT WRITTEN APPROVAL FROM THE DEPARTMENT OR AN AUTHORIZED REPRESENTATIVE.

3. CONTAINER GROWN MATERIAL: PLANTS MAY BE REJECTED FOR ANY OF THE FOLLOWING REASONS: 1) PLANT ROOTBALLS THAT ARE LOOSE WITHIN THE CONTAINER; 2) PLANT ROOTBALLS THAT ARE SMALLER THAN THE CONTAINER WHEN REMOVED, OR 3) ROOT-BOUND PLANT MATERIALS.

4. MINIMUM PLANT SIZES: SIZES SPECIFIED IN THE PLANT LIST ARE MINIMUM SIZES TO WHICH THE PLANTS ARE TO BE JUDGED. ALL PLANTS SHALL CONFORM TO THE SIZE SPECIFIED ON THE PLANT LIST. FAILURE TO MEET MINIMUM SIZE WILL RESULT IN REJECTION OF THE PLANTS.

5. PLANT ESTABLISHMENT PERIOD: THE PLANT ESTABLISHMENT PERIOD FOR ALL PLANTING SHALL BEGIN IMMEDIATELY AFTER ALL PLANTING AND REPLACEMENTS ARE COMPLETE AND ACCEPTABLE TO THE DEPARTMENT. THE PLANT ESTABLISHMENT PERIOD CONSISTS OF 1 FULL GROWING SEASON DURING WHICH TIME THE CONTRACTOR SHALL BE RESPONSIBLE FOR ALL WORK NECESSARY TO KEEP THE PLANTS IN A LIVE AND HEALTHY CONDITION AS PER THE SPECIFICATIONS.

CONSTRUCTION SEQUENCE

1. REMOVE EXISTING PAVEMENT, BACKFILL TO WITHIN 6" OF GROUND SURFACE, ADD TOPSOIL, SEED AND MULCH ACCORDING TO NOTE 13 IN THE GENERA NOTES.

2. INSTALL PLANTS PER PLANS AND SPECIFICATIONS.

3. THE CONTRACTOR SHALL REPAIR AND STABILIZE ANY AREAS DISTURBED BY CONSTRUCTION EQUIPMENT EGRESS.

4. UPON INITIAL APPROVAL FROM THE DEPARTMENT, THE PLANT ESTABLISHMENT PERIOD SHALL BEGIN.

5. THE CONTRACTOR SHALL CONDUCT MOWING IN THE APPROPRIATE AREAS AT THE END OF THE FIRST GROWING SEASON, AS DIRECTED BY THE DEPARTMENT. ALL MOWING SHALL CONFORM TO THE REQUIREMENTS OF ITEM 736502 - MOWING.

6. AT THE CONCLUSION OF THE ESTABLISHMENT PERIOD, THE CONTRACTOR MUST REPLACE ALL DEAD OR UNACCEPTABLE PLANTS BEFORE FINAL ACCEPTANCE.

COMPOSITE LANDSCAPE PLANTING SCHEDULE

KEY	QUANTITY	BOTANICAL NAME	COMMON NAME	SIZE	METHOD	COMMENTS
TREES						
AR	31	ACER RUBRUM	RED MAPLE	4-5'	CONT.	12' OC
LS	31	LIQUIDAMBAR STYRACIFLUA	SWEETGUM	4-5'	CONT.	12' OC
OA	32	QUERCUS ALBA	WHITE OAK	4-5'	CONT.	12' OC
OR	32	QUERCUS RUBRA	NORTHERN RED OAK	4-5'	CONT.	12' OC
SA	31	SASSAFRAS ALBIDUM	SASSAFRAS	4-5'	CONT.	12' OC
LT	30	LIRIODENDRON TULIPIFERA	TULIPTREE	4-5'	CONT.	12' OC
UNDERSTORY TREES						
AC	32	AMELANCHIER CANADENSIS	SHADBUSH	4-5'	CONT.	12' OC
CC	33	CERCIS CANADENSIS	REDBUD	4-5'	CONT.	12' OC
SHRUBS						
LB	32	LINDERA BENZOIN	SPICEBUSH	18-24"	CONT.	12' OC
VP	32	VIBURNUM PRUNIFOLIUM	BLACK HAW	18-24"	CONT.	12' OC
VD	31	VIBURNUM DENTATUM	SOUTHERN ARROWWOOD	18-24"	CONT.	12' OC
VA	31	VIBURNUM ACERIFOLIUM	MAPLELEAF VIBURNUM	18-24"	CONT.	12' OC

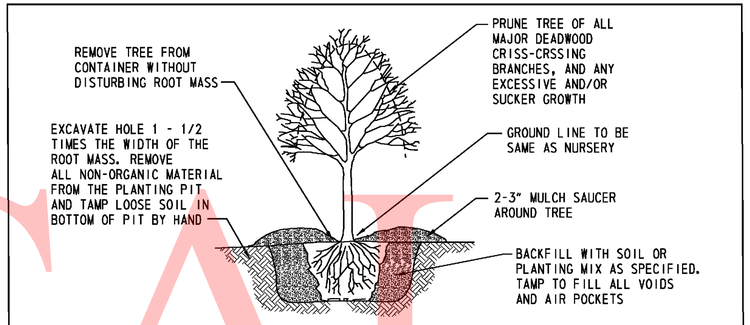

TREE PLANTING - CONTAINER GROWN

NOT TO SCALE

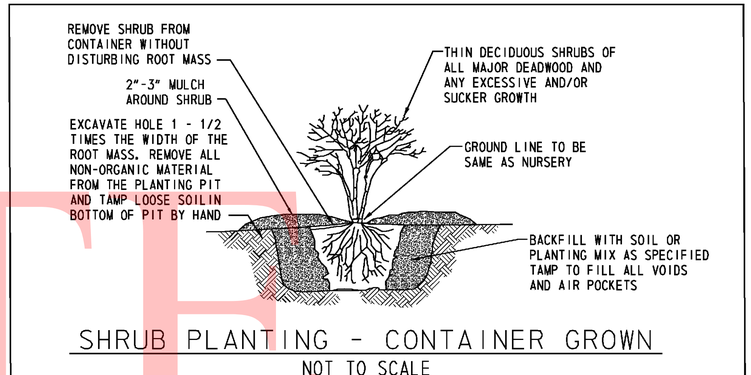

SHRUB PLANTING - CONTAINER GROWN

NOT TO SCALE

UNOFFICIAL WEBSITE COPY

9/10/2010 4:09:19 PM
M:\PROJECTS\2003\03059_DELTRNPK\SRIMALL\CADD\2809003\PLANS\LS02_SR1.DGN

DELAWARE DEPARTMENT OF TRANSPORTATION

ADDENDUMS / REVISIONS

SR1 / I-95 INTERCHANGE

CONTRACT	BRIDGE NO.
28-090-03	DESIGNED BY:
COUNTY	
NEW CASTLE	CHECKED BY:

PLANTING NOTES, DETAILS & SCHEDULE

LS-02
SHEET NO.
681
TOTAL SHTS.
803

GENERAL NOTES

1. ALL ELECTRICAL WORK SHALL BE PERFORMED AND ALL MATERIAL PROVIDED SHALL BE IN ACCORDANCE WITH THE NATIONAL ELECTRIC CODE OF THE NATIONAL FIRE PROTECTION ASSOCIATION, TO ALL LOCAL AND SPECIAL LAWS, AND/OR TO ORDINANCES GOVERNING SUCH MATERIAL. CODE SHALL BE CONSIDERED THE MINIMUM REQUIREMENTS FOR THE ELECTRICAL WORK AND IF THERE IS A CONFLICT BETWEEN THE REQUIREMENTS SPECIFIED IN THE CONTRACT DOCUMENTS AND THE CODE, THE MORE STRINGENT REQUIREMENT WILL APPLY AS DETERMINED AND APPROVED BY THE ENGINEER. WHEN THESE REQUIREMENTS DO NOT GOVERN, AND WHERE NOT OTHERWISE SPECIFIED, ELECTRICAL MATERIALS SHALL CONFORM TO THE STANDARDIZATION RULES OF THE INSTITUTE OF ELECTRICAL ENGINEERS.

2. THE CONTRACTOR SHALL PROVIDE AND SECURE ALL ELECTRICAL INSPECTIONS AS REQUIRED AND PAY FOR THE SAME. THE ELECTRICAL CONTRACTOR SHALL OBTAIN AT HIS EXPENSE ALL NECESSARY PERMITS AND CERTIFICATES AS REQUIRED.

3. THE ELECTRICAL CONTRACTOR SHALL COORDINATE HIS WORK WITH ALL THE CONTRACTORS INVOLVED ON THIS PROJECT. THE ELECTRICAL CONTRACTOR SHALL COORDINATE WITH THE ENGINEER AND THE GENERAL SUPERINTENDENT THE LOCATIONS OF ALL CONDUIT AND POLE BASES TO ELIMINATE CONSTRUCTION CONFLICTS.

4. BURIED ELECTRICAL CABLE AND CONDUIT, AND OTHER UTILITIES MAY EXIST THROUGHOUT THIS PROJECT. THE EXISTING UTILITY LOCATIONS SHOWN ON THE PLANS ARE APPROXIMATE. THE CONTRACTOR SHALL BE RESPONSIBLE FOR LOCATING AND PREVENTING DAMAGE TO THEM, AND MAINTAINING THEM IN SERVICE WHEN AND WHERE REQUIRED. THE CONTRACTOR SHALL VERIFY THE EXACT LOCATIONS PRIOR TO COMMENCING WORK. THE CONTRACTOR SHALL VERIFY THE LOCATION OF ALL EXISTING UTILITIES BY HAND EXCAVATION PRIOR TO TRENCHING BY MACHINE.

5. THE ELECTRICAL CONTRACTOR SHALL GUARANTEE ALL WORK MATERIAL AND LABOR TO BE FREE FROM DEFECTS FOR A ONE YEAR PERIOD FROM THE TIME OF OWNER ACCEPTANCE. ANY DEFECTS OCCURRING DURING THIS PERIOD SHALL BE CORRECTED BY THE ELECTRICAL CONTRACTOR AT NO ADDITIONAL COST TO THE OWNER.

6. SERVICE RUNS ARE SHOWN IN APPROXIMATE LOCATIONS. THE CONTRACTOR SHALL LOCATE THE SERVICE RUNS IN A MANNER THAT AVOIDS CONFLICTS WITH ALL EXISTING AND PROPOSED FEATURES AS FIELD CONDITIONS DICTATE AND AS APPROVED BY THE ENGINEER.

7. TERMINATE ALL CONDUITS WHEN ENTERING ENCLOSURES WITH LOCKNUT AND BONDING BUSHINGS. ALL OTHER CONDUITS SHALL BE PROVIDED WITH BONDING BUSHINGS. ALL CONDUITS SHALL BE BONDED WITH THE GROUND WIRE.

8. COLOR CODING SHALL BE PROVIDED THROUGHOUT THE ENTIRE NETWORK FOR SERVICE,FEEDER, BRANCH AND CONTROL CONDUCTORS. EACH PHASE SHALL BE AN INDEPENDENT COLOR. CONDUCTORS SHALL HAVE FACTORY IMPREGNATED COLOR THROUGHOUT THEIR ENTIRE LENGTH. PHASE TAPING IS NOT PERMITTED.

9. EXISTING LIGHT POLES, JUNCTION WELLS, AND CABINETS TO BE REMOVED SHALL BE SALVAGED AND DELIVERED TO DELDOT NORTH DISTRICT MAINTENANCE SHOP, 39 EAST REGAL BLVD, NEWARK, DELAWARE.

10. ALL LIGHTING POLE BASES TO BE REMOVED SHALL BE REMOVED TO A MINIMUM OF 6 INCHES BELOW GRADE.

11. THE CONTRACTOR SHALL NOTIFY DELMARVA POWER TWO WEEKS IN ADVANCE TO ARRANGE FINAL POWER CONNECTIONS. CONTACT: MR. MARK SMITH 302-454-4138.

12. ALL FUSED CONNECTIONS SHALL BE MADE IN THE POLE BASE. SPLICES IN JUNCTION WELLS, JUNCTION AND PULL BOXES SHALL NOT BE FUSED.

13. THE CONTRACTOR SHALL VERIFY ALL DIMENSIONS AND CONDITIONS AT SITE PRIOR TO WORK.

14. WORK INCLUDES FURNISHING LABOR,MATERIAL,EQUIPMENT AND SERVICE NECESSARY AND INCIDENTAL TO PROPER COMPLETION OF THE ELECTRICAL WORK AS SHOWN. MINOR ITEMS,ACCESSORIES OR DEVICES NECESSARY FOR COMPLETION AND PROPER OPERATION OF ANY SYSTEM SHALL BE PROVIDED WHETHER OR NOT THEY ARE SPECIFICALLY CALLED FOR BY SPECIFICATIONS OR DRAWINGS.

15. USE CAUTION WHEN INSTALLING CONDUITS UNDER EXISTING STORM WATER MANAGEMENT FACILITIES . WHEN COMPLETE, ENSURE ALL STORM WATER MANAGEMENT FACILITIES ARE RESTORED TO EXISTING CONDITIONS.

16. ALL CONDUITS, JUNCTION WELLS, LIGHTING STANDARDS, ETC. SHALL BE STAKED OUT AND EVERY LOCATION APPROVED BY THE ENGINEER BEFORE ANY WORK IS DONE.

17. ALL GROUNDING CONDUCTORS IN PROPOSED UNDERGROUND CONDUITS SHALL BE STRANDED COPPER WITH SIZE AS NOTED IN THE LIGHTING SERVICE SCHEDULE.

18. THE CONTRACTOR SHALL VERIFY THE OPERATING VOLTAGE OF ALL CIRCUITS OF THE EXISTING LIGHTING SYSTEMS THAT ARE BEING TIED INTO TO ENSURE COMPATIBILITY WITH PROPOSED LUMINAIRES.

19. THE CONTRACTOR SHALL VERIFY THE OPERATING CIRCUIT AND PHASE OF ALL EXISTING ROADWAY LIGHTING EQUIPMENT WHERE THE ELECTRICAL SERVICE IS BEING INTERRUPTED. THE EXISTING ROADWAY EQUIPMENT SHALL BE RECONNECTED TO THE SAME CIRCUIT AND PHASE AS IS EXISTING UNLESS OTHERWISE NOTED ON THE PLANS.

20. ALL STATION, OFFSET AND DIMENSION INFORMATION SHOWN FOR PROPOSED LIGHTING STANDARDS IS TO THE CENTER OF THE POLE BASE.

21. THE ELECTRICAL CONTRACTOR SHALL COORDINATE THE INSTALLATION OF LIGHTING CONDUITS WITH ITMS CONDUITS. ITMS AND LIGHTING CONDUITS MAY SHARE A COMMON TRENCH BUT SHALL NOT SHARE COMMON JUNCTION WELLS.

22. EXISTING ROADWAY LIGHTING CONDUITS SHALL BE EXISTING TO REMAIN UNLESS NOTED OTHERWISE ON THE PLANS.

23. SPLICES FOR ALL ROADWAY LIGHTING ELECTRICAL CABLES, INCLUDING RE-CONNECTION OF EXISTING IMPACTED ELECTRICAL CABLES, SHALL BE COMPLETE USING APPROVED SPLICE KITS OR METHODS APPROVED BY THE ENGINEER AND SHALL BE INCIDENTAL TO THE SUPPLY AND INSTALLATION OF VARIOUS ROADWAY LIGHTING ELECTRICAL CABLES.

24. ALL PROPOSED DAVIT ARM LIGHTING STANDARDS SHALL BE INSTALLED WITH BREAKAWAY TRANSFORMER BASES, WHETHER PROTECTED OR UNPROTECTED, UNLESS OTHERWISE NOTED.

25. WHERE INDICATED ON THE PLANS TO REMOVE EXISTING LIGHTING STANDARD, THIS SHALL INCLUDE REMOVAL OF THE EXISTING LIGHTING STANDARD AND FOUNDATION, UNLESS OTHERWISE NOTED. PAYMENT FOR REMOVAL OF EXISTING LIGHT POLES SHALL BE MADE UNDER ITEM 746811. PAYMENT FOR REMOVAL OF EXISTING POLE BASES SHALL BE MADE UNDER ITEM 746830.

26. PAYMENT FOR REMOVAL OF EXISTING JUNCTION WELLS SHALL BE MADE UNDER ITEM 744525.

27. PAYMENT FOR RELOCATION OF EXISTING HIGH MAST LIGHT TOWERS AND ASSOCIATED ELECTRICAL EQUIPMENT SHALL BE MADE UNDER ITEM 746620.

28. PAYMENT FOR THE REMOVAL OF EXISTING HIGH MAST LIGHT TOWERS SHALL BE MADE UNDER ITEM 21100 - REMOVAL OF STRUCTURES AND OBSTRUCTIONS. PAYMENT FOR REMOVAL OF THE EXISTING HIGH MAST ELECTRICAL CABINET AND EQUIPMENT SHALL BE PAID FOR UNDER ITEM 747504 - REMOVAL OF POLE OR POST MOUNTED CABINET.

29. POLE NUMBERS, CIRCUITS AND CABLE SIZES FOR EXISTING ROADWAY LIGHTING OBTAINED FROM DELDOT CONTRACT NOS. 93-101-01, 91-101-04, AND 7072.

30. THE ELECTRICAL CONTRACTOR SHALL FAMILIARIZE HIMSELF WITH ALL THE ELECTRICAL/LIGHTING WORK BEING PERFORMED UNDER CONTRACT T201009004.01. ALL WORK SHALL BE COORDINATED TO ENSURE NO PROLONGER OUTAGES TO THE EXISTING OR PROPOSED LIGHTING SYSTEM.

31. UNDERGROUND CONDUITS SHALL BE SLOPED TO DRAIN TO THE NEAREST JUNCTION WELL. IF THIS CANNOT BE ACCOMPLISHED, PROVIDE A DRAINAGE TEE AT LOW POINT OF CONDUIT RUN. DRAINAGE TEES SHALL BE INCIDENTAL TO ITEM 745526 FOR 3" CONDUIT, 745527 FOR 2.5" CONDUIT AND 745528 FOR 2" CONDUIT.

TEMPORARY LIGHTING

THE EXISTING ROADWAY LIGHTING WILL BE IMPACTED DURING VARIOUS PHASES OF CONSTRUCTION. TEMPORARY LIGHTING SHALL BE USED TO SUPPLEMENT THE EXISTING LIGHTING TO ILLUMINATE THE TRAVEL WAY AS REQUIRED DURING THESE PHASES OF CONSTRUCTION.

ROADWAY LIGHTING SHALL BE PROVIDED AT ALL DECISION POINTS (GORE AREAS, WEAVING AREAS, RAMP TERMINALS, ACCELERATION LANES AND DECELERATION LANES) THROUGHOUT THE DURATION OF CONSTRUCTION. THIS LIGHTING MAY CONSIST OF A COMBINATION OF TEMPORARY LIGHTING UNITS, USE OF EXISTING ROADWAY LIGHTING, USE OF FINAL ROADWAY LIGHTING,TEMPORARY UNDERGROUND OR OVERHEAD WIRING, AND TEMPORARY ELECTRICAL SERVICES. THE CONTRACTOR IS ENCOURAGED TO MAKE OPERATIONAL THE PERMANENT LIGHTING AS SOON AS POSSIBLE TO MINIMIZE THE USE OF TEMPORARY LIGHTING.

TEMPORARY LIGHTING SHALL BE PAID FOR UNDER THE LUMP SUM ITEM 746552 - FURNISH AND INSTALL TEMPORARY LIGHTING.

LEGEND

- LST X / LST X — LIGHTING STANDARD IDENTIFIER (EXISTING AND PROPOSED)
- LSR X / LSR X — LIGHTING SERVICE RUN IDENTIFIER (EXISTING AND PROPOSED)
- JW X / JW X — JUNCTION WELL & TYPE (EXISTING AND PROPOSED)
- HM X / HM X — HIGH MAST TOWER AND LUMINAIRES (EXISTING AND PROPOSED)
- UP X / UP X — UNDERPASS LUMINAIRE (EXISTING AND PROPOSED)
- CA X / CA X — LIGHTING CONTROL CENTER & TYPE (EXISTING AND PROPOSED)
- EXISTING OFFSET LUMINAIRE
- EXISTING LIGHTING STANDARD
- PROPOSED COBRAHEAD LUMINAIRE, SINGLE DAVIT ARM
- CONCRETE SLAB / DIRECTION FOR LOWERING POLE — EXISTING HIGH MAST TOWER, (6) 1000W HPS LUMINAIRES
- EXISTING HIGH MAST TOWER ELECTRICAL CABINET
- PROPOSED HIGHMAST TOWER (5) 1000W HPS LUMINAIRES
- PROPOSED HIGHMAST TOWER (3) 1000W HPS LUMINAIRES
- PROPOSED UNDERPASS LUMINAIRE
- PROPOSED LIGHTING CONTROL CABINET
- EXISTING LIGHTING CONTROL CABINET
- PROPOSED LIGHTING CONDUIT
- J.W. — EXISTING JUNCTION WELL
- J.W. — PROPOSED JUNCTION WELL, TYPE 1
- PROPOSED JUNCTION WELL, TYPE 4
- J.B. — STRUCTURE MOUNTED JUNCTION BOX
- JB — JUNCTION BOX IN CONCRETE BARRIER
- P — PROPOSED SERVICE PEDESTAL - ELECTRIC SERVICE METER
- E — PROPOSED DELMARVA TRANSFORMER
- RM O — REMOVE BY OTHERS
- RM C — REMOVE BY CONTRACTOR
- RL C — RELOCATE BY CONTRACTOR
- AB — ABANDON

UNOFFICIAL WEBSITE COPY

LIGHTING SERVICE SCHEDULE

SERVICE RUN	DISTANCE (L.F.)	# OF CONDUITS	SIZE	DESCRIPTION	INSTALLATION
1	210	1	3.0"	(2)#2 (EX.CCT A), #2 GROUND	TRENCH
2	215	1	3.0"	(3)#2 (EX.CCT A/B), #2 GROUND	TRENCH
3*	30	1	3.0"	(3)#2 (EX.CCT A/B), #2 GROUND	TRENCH

*DISTANCE CONTINUES ON ADJACENT PLAN SHEET.

NOTES: A. SERVICE RUN DISTANCE REFLECTS CONDUIT LENGTH ONLY.

LIGHTING STANDARD SCHEDULE

NO.	CCT NO.	STATION	OFFSET	HEIGHT	ARM	LIGHT STANDARD	DISTR. TYPE	WATTAGE/LAMP TYPE
LST-A-10	EX. A	363+58.0	75.0' RT.	40'	15'	COBRAHEAD, DAVIT ARM POLE	TYPE III	250W HPS
LST-B-9	EX. B	365+70.3	75.1' RT.	40'	15'	COBRAHEAD, DAVIT ARM POLE	TYPE III	250W HPS
LST-A-9	EX. A	367+89.8	75.5' RT.	40'	15'	COBRAHEAD, DAVIT ARM POLE	TYPE III	250W HPS

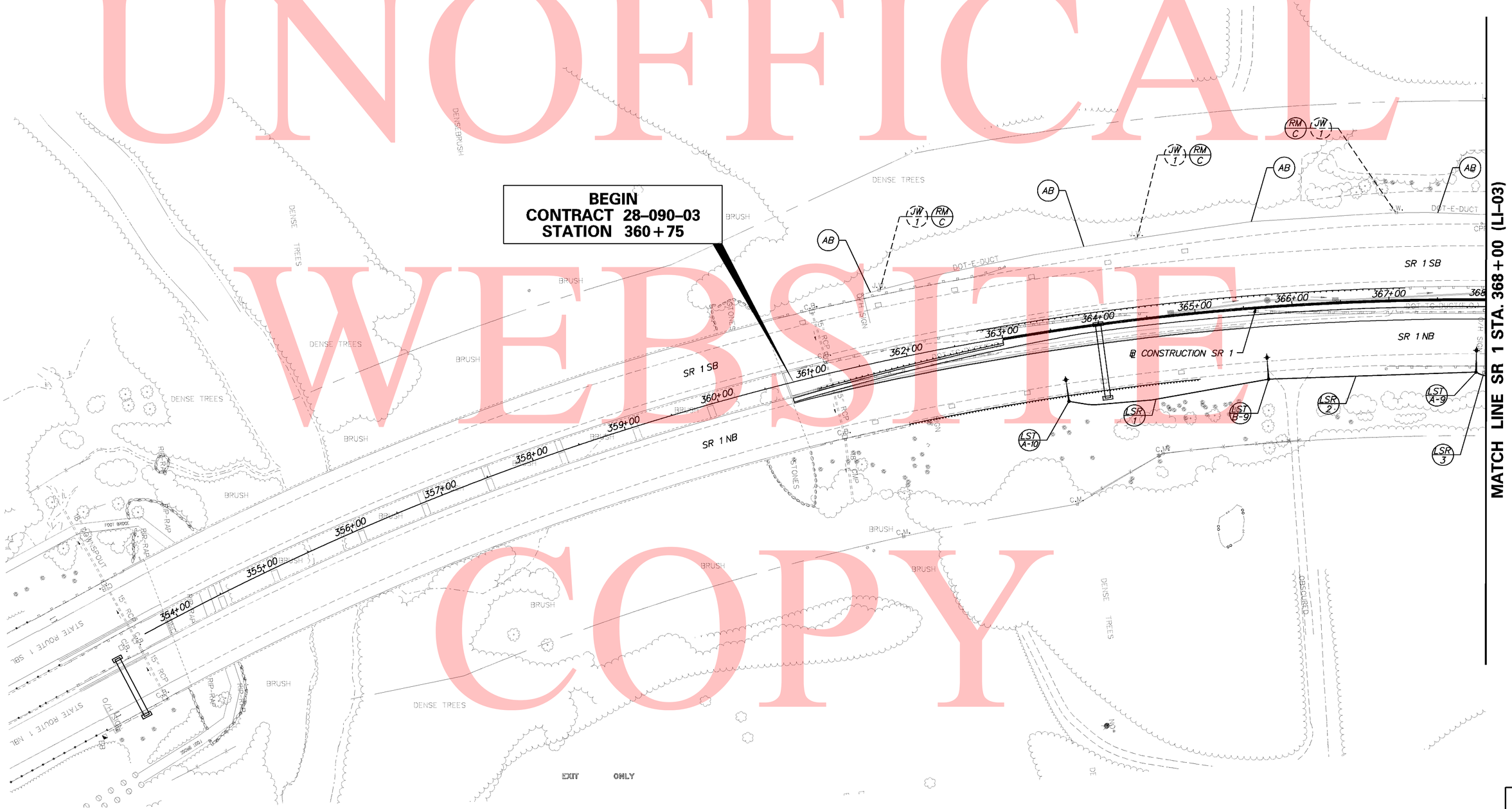

UNOFFICAL WEBSITE COPY

8/27/2010 8:27:19 AM
M:\PROJECTS\2003\03059_DELTRNPK\SRIMALL\CADD\2809003\PLANS\CP61_LI_SR1.DGN

DELAWARE DEPARTMENT OF TRANSPORTATION	ADDENDUMS / REVISIONS	SCALE 0 50 100 150 FEET	SR1 / I-95 INTERCHANGE	CONTRACT 28-090-03	BRIDGE NO.	LIGHTING PLAN	LI-02
				COUNTY NEW CASTLE	DESIGNED BY: SMK		SHEET NO. 683
					CHECKED BY: HEH		TOTAL SHTS. 803

LIGHTING SERVICE SCHEDULE					
SERVICE RUN	DISTANCE (L.F.)	# OF CONDUITS	SIZE	DESCRIPTION	INSTALLATION
3*	30	1	3.0"	(3)#2, #2 GROUND	TRENCH
4*	245	1	3.0"	(3)#2, #2 GROUND	TRENCH
5*	390	1	3.0"	(3)#2, #2 GROUND	TRENCH
152	200	1	3.0"	(3)#2, #2 GROUND	TRENCH
153	25	1	2.0"	(3)#8, #8 GROUND	TRENCH

*DISTANCE CONTINUES ON ADJACENT PLAN SHEET.

NOTES: A. SERVICE RUN DISTANCE REFLECTS CONDUIT LENGTH ONLY.

LIGHTING STANDARD SCHEDULE								
NO.	CCT. NO.	STATION	OFFSET	HEIGHT	ARM	LIGHT STANDARD	DISTR. TYPE	WATTAGE/LAMP TYPE
A-7	EX. A	369+49.2	89.7' LT.	-	-	RELOCATE EX. LIGHTING STANDARD	TYPE III	250W HPS

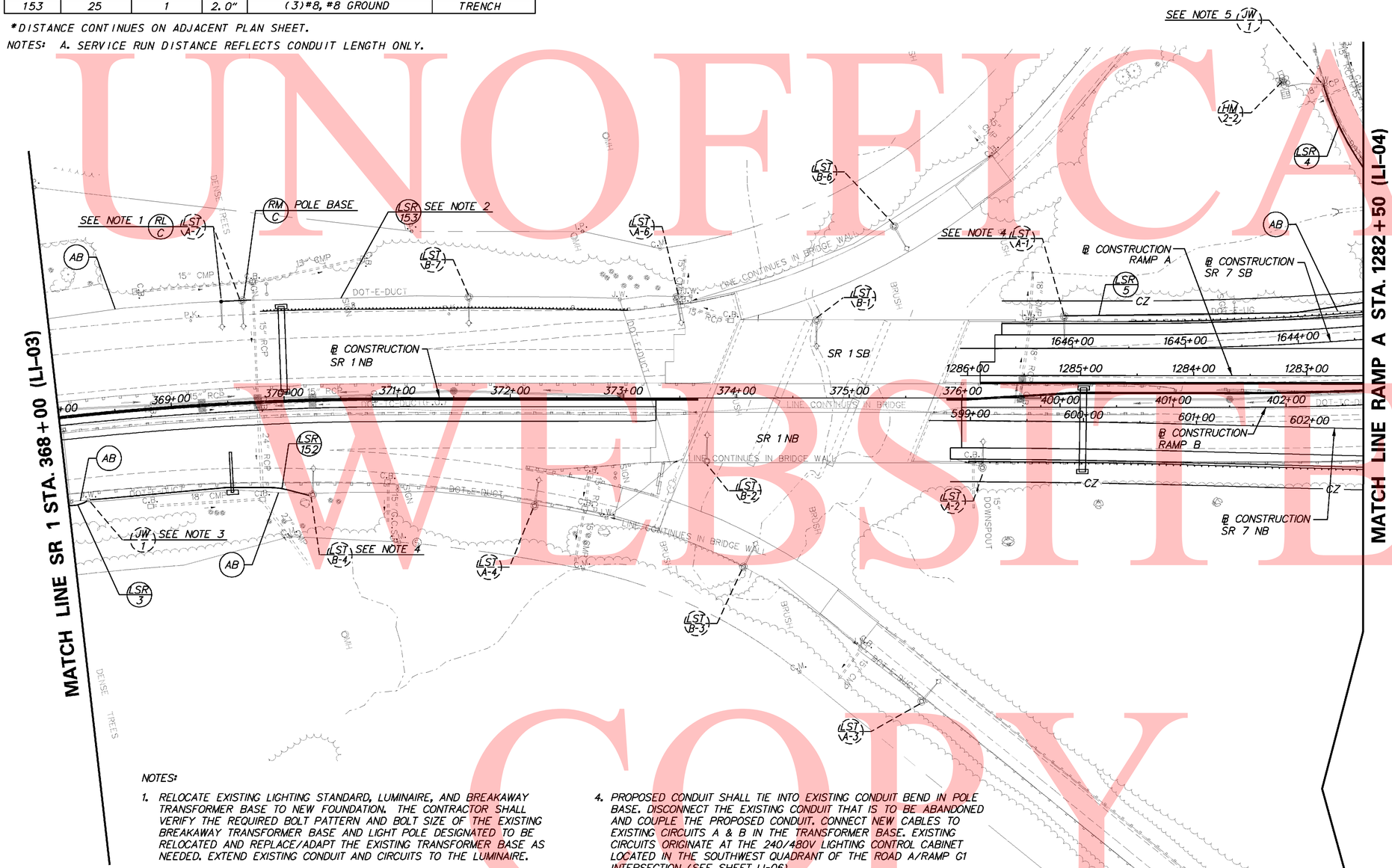

NOTES:

1. RELOCATE EXISTING LIGHTING STANDARD, LUMINAIRE, AND BREAKAWAY TRANSFORMER BASE TO NEW FOUNDATION. THE CONTRACTOR SHALL VERIFY THE REQUIRED BOLT PATTERN AND BOLT SIZE OF THE EXISTING BREAKAWAY TRANSFORMER BASE AND LIGHT POLE DESIGNATED TO BE RELOCATED AND REPLACE/ADAPT THE EXISTING TRANSFORMER BASE AS NEEDED. EXTEND EXISTING CONDUIT AND CIRCUITS TO THE LUMINAIRE.
2. REMOVE CABLES FROM EXISTING CONDUIT. EXTEND EXISTING 2" RGS CONDUIT APPROXIMATELY 25 FEET TO CONNECT THE RELOCATED LUMINAIRE. INSTALL 2-#8 + #8 GROUND IN THE CONDUIT RUN TO RECONNECT LST-A-7 TO CIRCUIT A. MAKE CONNECTIONS IN TRANSFORMER BASES AS REQUIRED.
3. SPLICE PROPOSED ELECTRICAL CABLES IN THE EXISTING JUNCTION WELL.
4. PROPOSED CONDUIT SHALL TIE INTO EXISTING CONDUIT BEND IN POLE BASE. DISCONNECT THE EXISTING CONDUIT THAT IS TO BE ABANDONED AND COUPLE THE PROPOSED CONDUIT. CONNECT NEW CABLES TO EXISTING CIRCUITS A & B IN THE TRANSFORMER BASE. EXISTING CIRCUITS ORIGINATE AT THE 240/480V LIGHTING CONTROL CABINET LOCATED IN THE SOUTHWEST QUADRANT OF THE ROAD A/RAMP G1 INTERSECTION (SEE SHEET LI-06).
5. SPLICE PROPOSED ELECTRICAL CABLES TO EXISTING CIRCUITS C AND D IN THE EXISTING JUNCTION WELL TO MAINTAIN SERVICE TO THE EXISTING HIGH MAST LIGHTS.

UNOFFICAL WEBSITE COPY

8/2/2010 8:42:36 AM
M:\PROJECTS\2003\03059_DELTRNPK\SRIMALL\CADD\2809003\PLANS\CP82_LI_SR1.DGN

DELAWARE DEPARTMENT OF TRANSPORTATION

ADDENDUMS / REVISIONS

SCALE 0 50 100 150 FEET

SR1 / I-95 INTERCHANGE

CONTRACT	BRIDGE NO.	
28-090-03	DESIGNED BY: SMK	
COUNTY		
NEW CASTLE	CHECKED BY: HEH	

LIGHTING PLAN

LI-03
SHEET NO.
684
TOTAL SHTS.
803

LIGHTING SERVICE SCHEDULE

SERVICE RUN	DISTANCE (L.F.)	# OF CONDUITS	SIZE	DESCRIPTION	INSTALLATION
4*	245	1	3.0"	(3)#2, #2 GROUND	TRENCH
5*	390	1	3.0"	(3)#2, #2 GROUND	TRENCH
6	175	1	3.0"	(3)#2, #2 GROUND	BORE
7	45	1	3.0"	(3)#2, #2 GROUND	TRENCH
8	200	1	3.0"	(3)#6, #6 GROUND	TRENCH
9*	105	1	3.0"	(4)#6, #6 GROUND	TRENCH
10	60	1	3.0"	(4)#6, #6 GROUND	TRENCH
11*	175	1	3.0"	(2)#6, #6 GROUND	TRENCH
12	100	1	3.0"	(3)#6, #6 GROUND	TRENCH

*DISTANCE CONTINUES ON ADJACENT PLAN SHEET.

NOTES: A. SERVICE RUN DISTANCE REFLECTS CONDUIT LENGTH ONLY.

LIGHTING SERVICE SCHEDULE (CONT.)

SERVICE RUN	DISTANCE (L.F.)	# OF CONDUITS		DESCRIPTION	INSTALLATION
13	60	1	3.0"	(4)#6, #6 GROUND	TRENCH
14	200	1	3.0"	(4)#6, #6 GROUND	TRENCH
15*	225	1	3.0"	(4)#6, #6 GROUND	TRENCH
137	40	1	1.0"	(3)#8, #8 GROUND	TRENCH/ON STR.
138	10	1	0.75"	(2)#10, #10 GROUND	ON STRUCTURE
139	130	1	1.0"	(3)#8, #8 GROUND	ON STRUCTURE
140	10	1	1.0"	(3)#8, #8 GROUND	ON STRUCTURE
141	10	1	0.75"	(2)#10, #10 GROUND	ON STRUCTURE
142	10	1	0.75"	(2)#10, #10 GROUND	ON STRUCTURE
143	100	1	1.0"	(2)#8, #8 GROUND	ON STRUCTURE
144	10	1	0.75"	(2)#10, #10 GROUND	ON STRUCTURE

*DISTANCE CONTINUES ON ADJACENT PLAN SHEET.

NOTES: A. SERVICE RUN DISTANCE REFLECTS CONDUIT LENGTH ONLY.

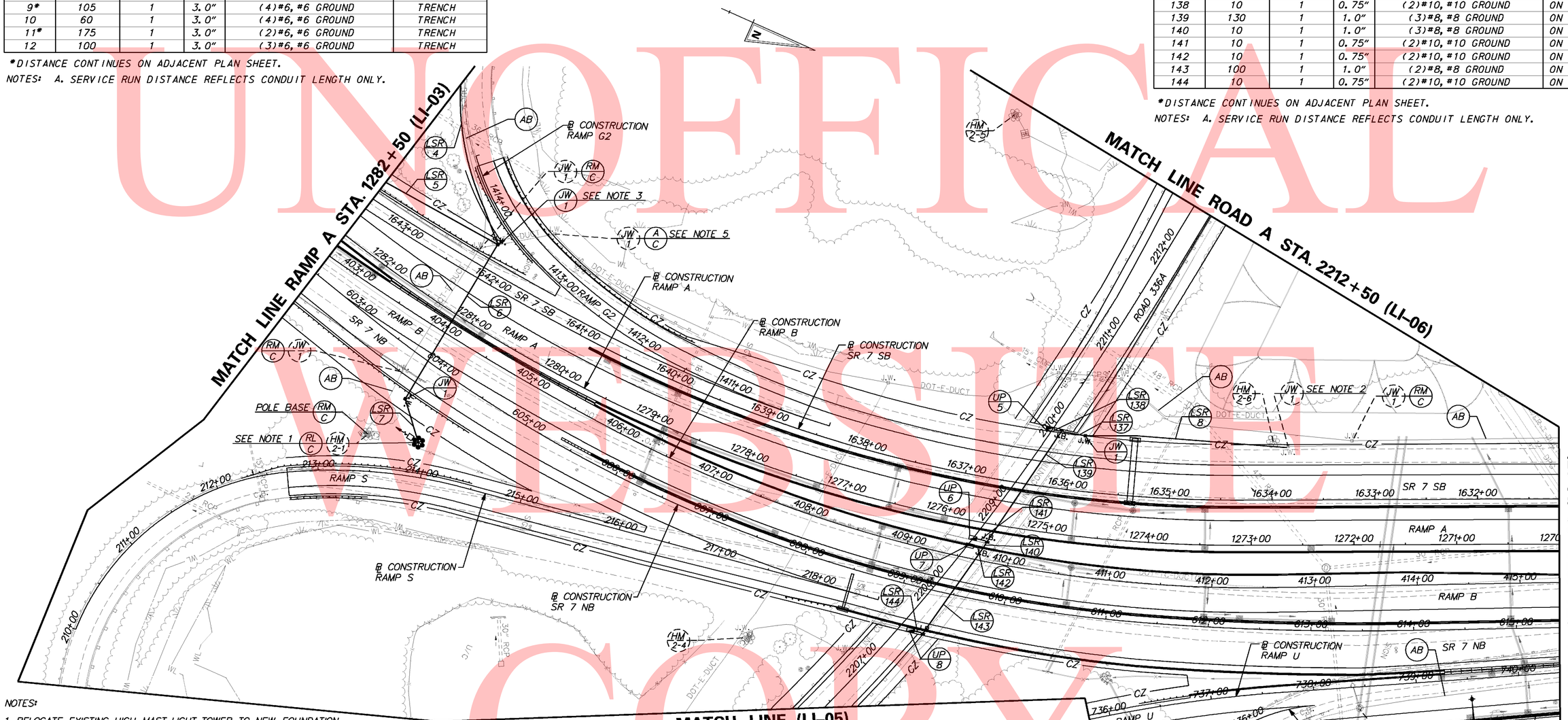

NOTES:

1. RELOCATE EXISTING HIGH MAST LIGHT TOWER TO NEW FOUNDATION PRIOR TO PHASE 5 OF CONSTRUCTION. THE CONTRACTOR SHALL VERIFY THE REQUIRED BOLT PATTERN AND BOLT SIZE OF THE EXISTING HIGH MAST LIGHT TOWER DESIGNATED TO BE RELOCATED AND APPLY TO THE NEW FOUNDATION. RELOCATE EXISTING TOWER CONTROL CABINET AS NEEDED. CONNECT PROPOSED CONDUITS AND CABLES TO THE RELOCATED CONTROL CABINET AND HIGH MAST TOWERS.
2. SPLICE PROPOSED ELECTRICAL CABLES IN THE EXISTING JUNCTION WELL.
3. LOCATE AND INTERCEPT EXISTING CONDUIT WITH A TYPE 1 JUNCTION WELL. CUT AND/OR PULL BACK THE EXISTING CABLES IN THE CONDUIT TO THE PROPOSED JUNCTION WELL SO THAT THE ELECTRICAL SERVICE CAN BE MAINTAINED FOR EXISTING CIRCUITS A, B, C AND D. ENSURE SUFFICIENT CABLE LENGTH IS AVAILABLE FOR SPLICING TO NEW CABLES IN THE PROPOSED CONDUIT RUNS THAT ENTER THIS JUNCTION WELL.
4. UNDERPASS LIGHTS SHALL BE MOUNTED TO THE EXISTING BRIDGE ABUTMENT AND PIER. OFFSETS PROVIDED IN THE LIGHTING STANDARD SCHEDULE ARE APPROXIMATE.
5. ADJUST EXISTING JUNCTION WELL TO FINAL GRADE.

LIGHTING STANDARD SCHEDULE

NO.	CCT. NO.	STATION	OFFSET	HEIGHT	ARM	LIGHT STANDARD	DISTR. TYPE	WATTAGE/LAMP TYPE
LST-10	10	834+27.3	29.3' RT.	40'	15'	COBRAHEAD, DAVIT ARM POLE	TYPE III	250W HPS
LST-11	12	836+17.0	33.0' RT.	40'	15'	COBRAHEAD, DAVIT ARM POLE	TYPE III	250W HPS
LST-12	8	739+53.4	42.1' RT.	35'	15'	COBRAHEAD, DAVIT ARM POLE	TYPE III	250W HPS
HM 2-1	EX. C/D	213+92.5	33.7' LT.	100'	N/A	RELOCATED HIGHMAST TOWER	TYPE V	6-1000W HPS
UP 5	2	1636+24.1	56.4' RT.	16'	N/A	UNDERPASS LIGHT, WALLPACK	TYPE IV	70W HPS
UP 6	4	1275+69.2	18.5' LT.	16'	N/A	UNDERPASS LIGHT, WALLPACK	TYPE IV	70W HPS
UP 7	2	410+59.9	14.1' LT.	16'	N/A	UNDERPASS LIGHT, WALLPACK	TYPE IV	70W HPS
UP 8	4	609+17.3	42.8' RT.	16'	N/A	UNDERPASS LIGHT, WALLPACK	TYPE IV	70W HPS

NOTE: HM 2-1 IS CONNECTED TO THE EXISTING 240/480V SINGLE PHASE LIGHTING LOAD CENTER ALONG ROAD A. ALL OTHER LUMINAIRES IN THIS SCHEDULE ARE CONNECTED TO THE 277/480V THREE PHASE LIGHTING LOAD CENTER ALONG RAMP R1 INSTALLED UNDER CONTRACT 30-090-04.

UNOFFICIAL WEBSITE COPY

8/20/2010 2:38:34 PM
M:\PROJECTS\2003\03059_DELTRNPK\SRIMALL\CADD\2809003\PLANS\CP63_LI_SR1.DGN

DELAWARE DEPARTMENT OF TRANSPORTATION

ADDENDUMS / REVISIONS

SCALE 0 50 100 150 FEET

SR1 / I-95 INTERCHANGE

CONTRACT	BRIDGE NO.	
28-090-03	DESIGNED BY: SMK	
COUNTY		
NEW CASTLE	CHECKED BY: HEH	

LIGHTING PLAN

LI-04
SHEET NO.
685
TOTAL SHTS.
803

LIGHTING SERVICE SCHEDULE

SERVICE RUN	DISTANCE (L.F.)	# OF CONDUITS	SIZE	DESCRIPTION	INSTALLATION
9*	105	1	3.0"	(4)#6, #6 GROUND	TRENCH
11*	175	1	3.0"	(2)#6, #6 GROUND	TRENCH
16	185	1	3.0"	(2)#6, #6 GROUND	TRENCH
17	220	1	3.0"	(3)#6, #6 GROUND	TRENCH
18	10	1	3.0"	(3)#4, #4 GROUND	TRENCH
19	80	1	3.0"	(3)#4, #4 GROUND	TRENCH
146	220	1	3.0"	(3)#6, #6 GROUND	TRENCH

*DISTANCE CONTINUES ON ADJACENT PLAN SHEET.

NOTES: A. SERVICE RUN DISTANCE REFLECTS CONDUIT LENGTH ONLY.

LIGHTING STANDARD SCHEDULE

NO.	CCT NO.	STATION	OFFSET	HEIGHT	ARM	LIGHT STANDARD	DISTR. TYPE	WATTAGE/LAMP TYPE
LST-13	8	832+30.3	30.0' RT.	40'	15'	COBRAHEAD, DAVIT ARM POLE	TYPE III	250W HPS
LST-14	8	735+63.2	33.0' RT.	40'	15'	COBRAHEAD, DAVIT ARM POLE	TYPE III	250W HPS
LST-15	12	731+12.0	33.5' RT.	40'	15'	COBRAHEAD, DAVIT ARM POLE	TYPE III	250W HPS
LST-16	10	2202+06.3	51.0' RT.	40'	15'	COBRAHEAD, DAVIT ARM POLE	TYPE III	250W HPS

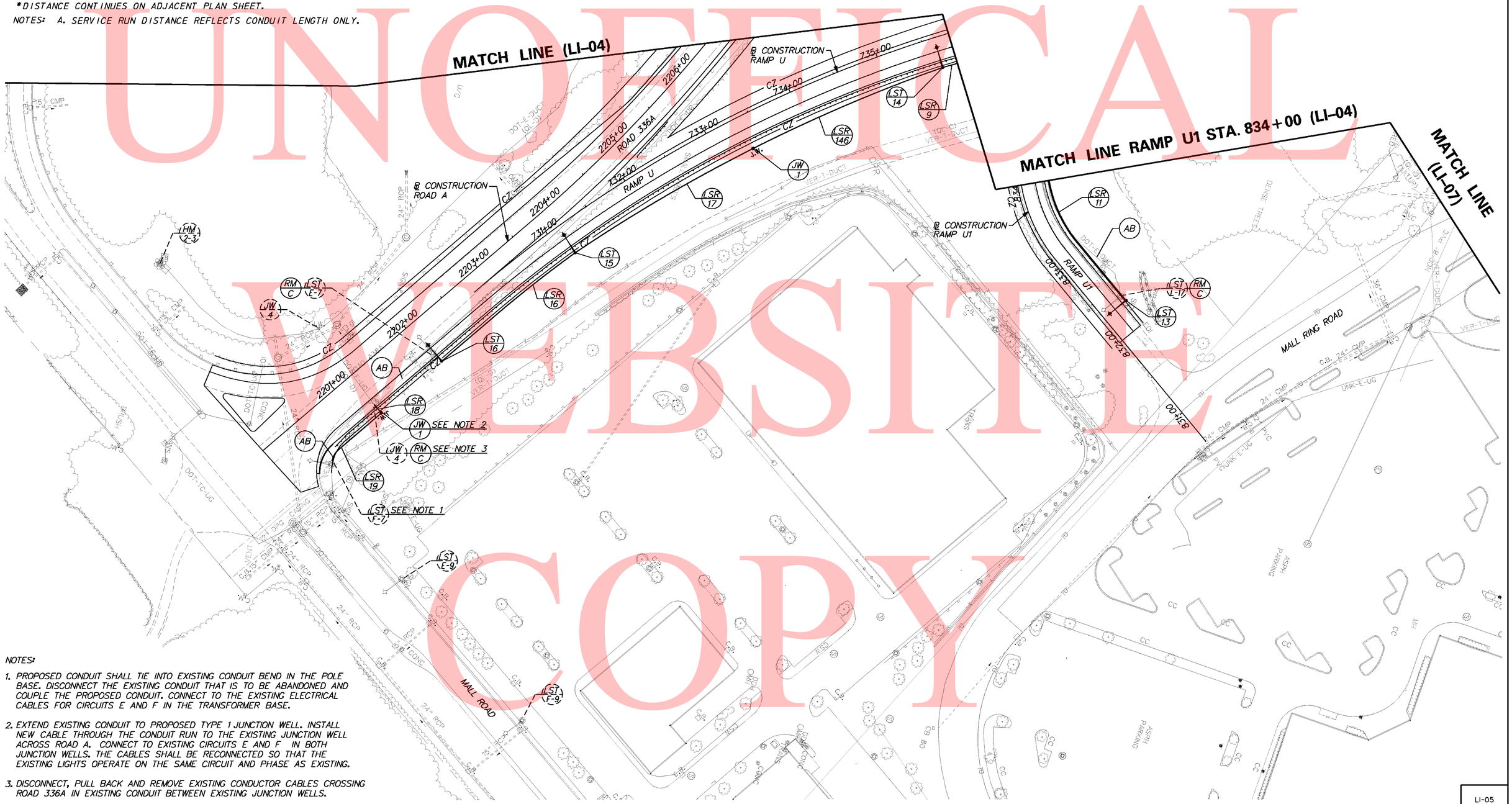

NOTES:

1. PROPOSED CONDUIT SHALL TIE INTO EXISTING CONDUIT BEND IN THE POLE BASE. DISCONNECT THE EXISTING CONDUIT THAT IS TO BE ABANDONED AND COUPLE THE PROPOSED CONDUIT. CONNECT TO THE EXISTING ELECTRICAL CABLES FOR CIRCUITS E AND F IN THE TRANSFORMER BASE.

2. EXTEND EXISTING CONDUIT TO PROPOSED TYPE 1 JUNCTION WELL. INSTALL NEW CABLE THROUGH THE CONDUIT RUN TO THE EXISTING JUNCTION WELL ACROSS ROAD A. CONNECT TO EXISTING CIRCUITS E AND F IN BOTH JUNCTION WELLS. THE CABLES SHALL BE RECONNECTED SO THAT THE EXISTING LIGHTS OPERATE ON THE SAME CIRCUIT AND PHASE AS EXISTING.

3. DISCONNECT, PULL BACK AND REMOVE EXISTING CONDUCTOR CABLES CROSSING ROAD 336A IN EXISTING CONDUIT BETWEEN EXISTING JUNCTION WELLS.

UNOFFICIAL WEBSITE COPY

8/2/2010 11:22:42 AM
M:\PROJECTS\2003\03059_DELTRIP\SRIMALL\CADD\2809003\PLANS\CP64_LI_SR1.DGN

DELAWARE DEPARTMENT OF TRANSPORTATION

ADDENDUMS / REVISIONS

SCALE 0 50 100 150 FEET

SR1 / I-95 INTERCHANGE

CONTRACT	BRIDGE NO.	
28-090-03	DESIGNED BY: SMK	
COUNTY		
NEW CASTLE	CHECKED BY: HEH	

LIGHTING PLAN

LI-05
SHEET NO.
686
TOTAL SHTS.
803

UNOFFICAL WEBSITE COPY

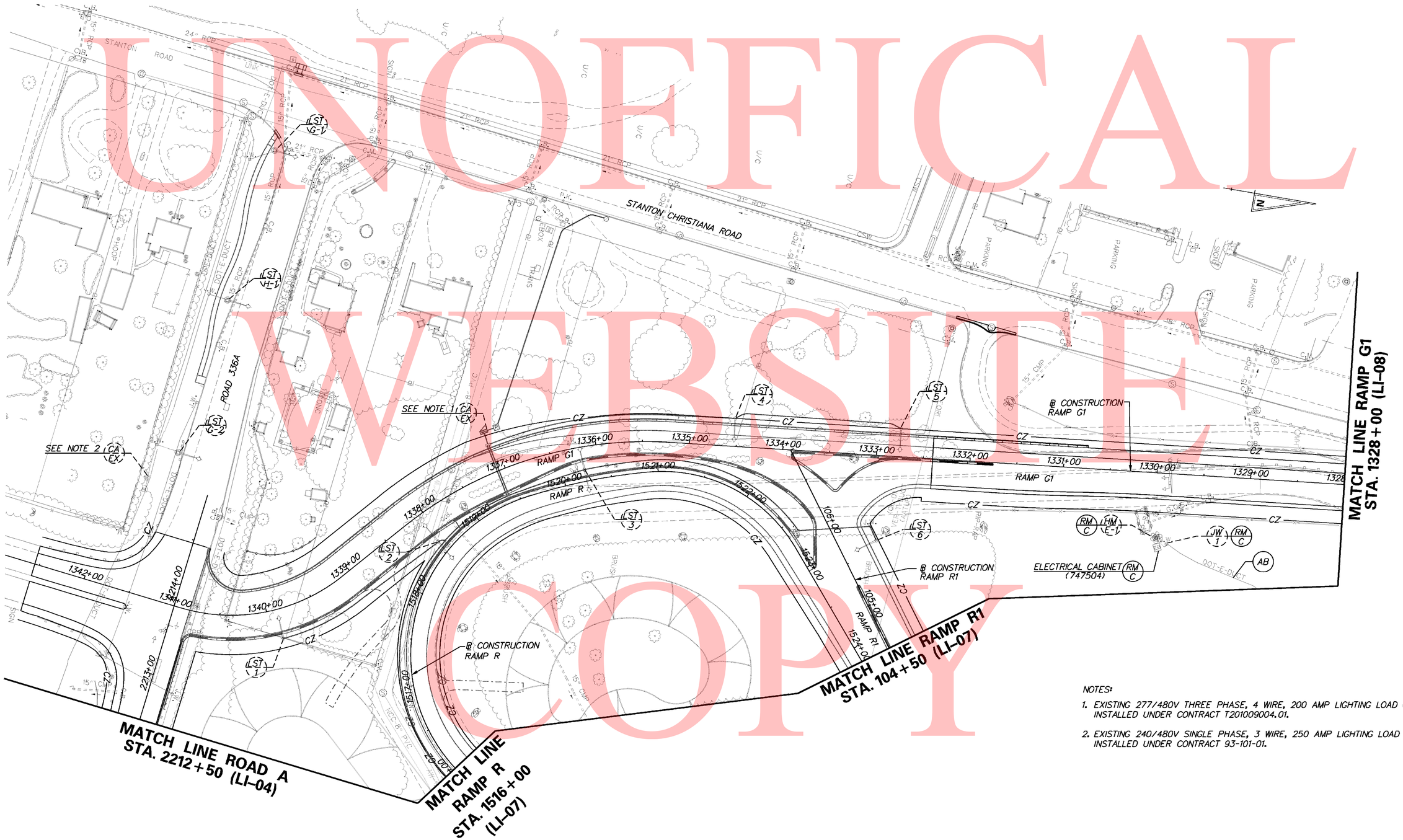

NOTES:

1. EXISTING 277/480V THREE PHASE, 4 WIRE, 200 AMP LIGHTING LOAD CENTER INSTALLED UNDER CONTRACT T201009004.01.
2. EXISTING 240/480V SINGLE PHASE, 3 WIRE, 250 AMP LIGHTING LOAD CENTER INSTALLED UNDER CONTRACT 93-101-01.

9/9/2010 3:37:23 PM
M:\PROJECTS\2003\03059_DELTRIP\SRIMALL\CADD\2809003\PLANS\CP65_LI_SR1.DGN

DELAWARE DEPARTMENT OF TRANSPORTATION	ADDENDUMS / REVISIONS	SCALE 0 50 100 150 FEET	SR1 / I-95 INTERCHANGE	CONTRACT 28-090-03	BRIDGE NO.	LIGHTING PLAN
				COUNTY NEW CASTLE	DESIGNED BY: SMK	
					CHECKED BY: HEH	

	LI-06
SHEET NO.	687
TOTAL SHTS.	803

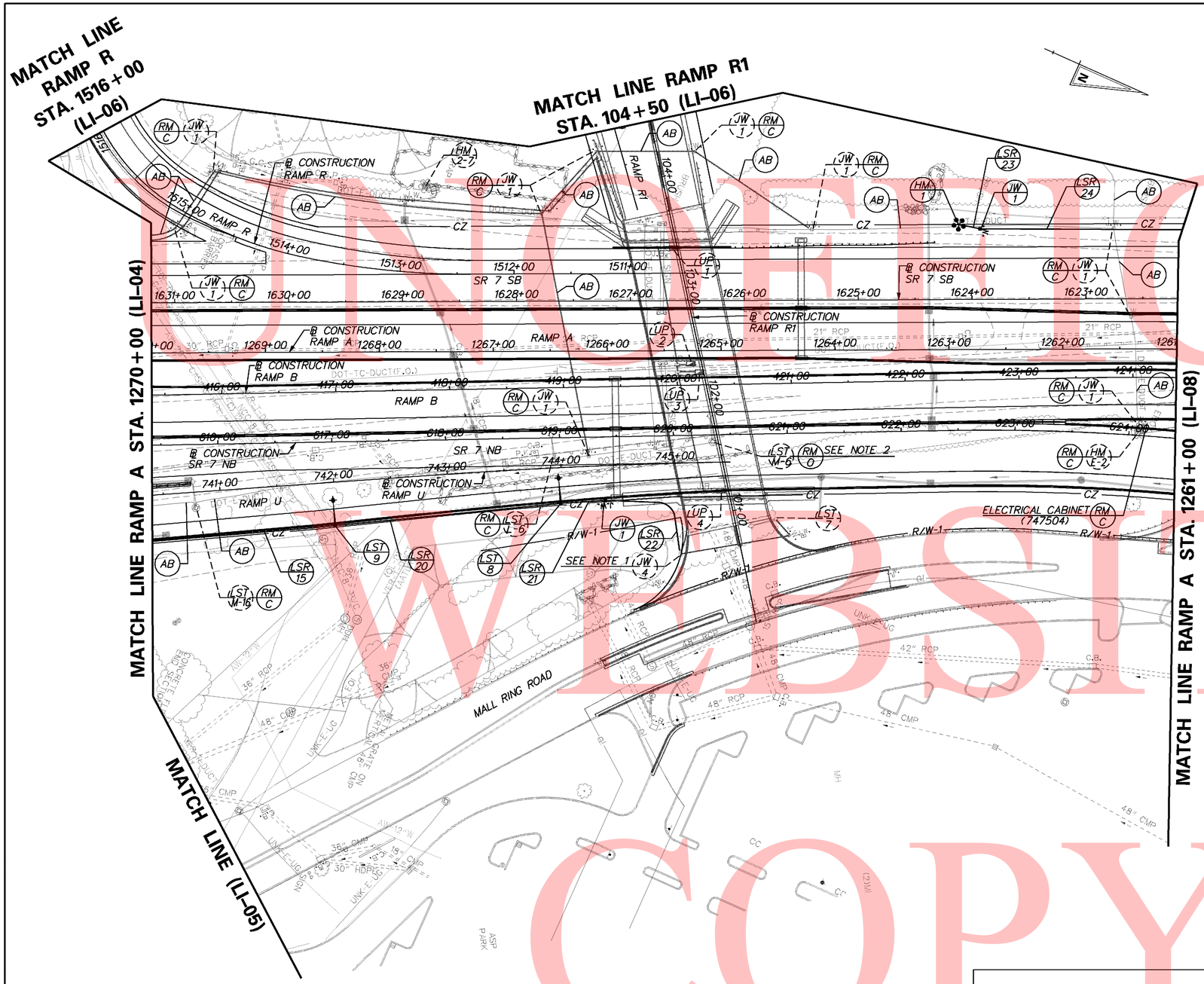

LIGHTING SERVICE SCHEDULE					
SERVICE RUN	DISTANCE (L.F.)	# OF CONDUITS	SIZE	DESCRIPTION	INSTALLATION
15*	225	1	3.0"	(4)#6, #6 GROUND	TRENCH
20	220	1	3.0"	(4)#6, #6 GROUND	TRENCH
21	40	1	3.0"	(4)#6, #6 GROUND	TRENCH
22	100	1	3.0"	(4)#6, #6 GROUND	TRENCH
23	20	1	3.0"	(4)#4, #4 GROUND	TRENCH
24*	245	1	3.0"	(4)#4, #4 GROUND	TRENCH

*DISTANCE CONTINUES ON ADJACENT PLAN SHEET.

NOTES: A. SERVICE RUN DISTANCE REFLECTS CONDUIT LENGTH ONLY.

NOTES:

1. CONNECT TO CABLES FOR CIRCUITS 8,10 AND 12. INSTALLED IN JUNCTION WELL UNDER CONTRACT T201009004.01.
2. EXISTING LIGHT STANDARD, REMOVED BY OTHERS UNDER CONTRACT NO. T201009004.01. FOR ALL LIGHTING EQUIPMENT REMOVED OR RELOCATED UNDER CONTRACT NO. T201009004.01, REFER TO THAT CONTRACT'S PLANS.

LIGHTING STANDARD SCHEDULE								
NO.	CCT. NO.	STATION	OFFSET	HEIGHT	ARM	LIGHT STANDARD	DISTR. TYPE	WATTAGE/LAMP TYPE
LST-8	12	743+99.2	31.4' RT.	35'	15'	COBRAHEAD, DAVIT ARM POLE	TYPE III	250W HPS
LST-9	10	741+98.1	38.0' RT.	35'	15'	COBRAHEAD, DAVIT ARM POLE	TYPE III	250W HPS
HM-1	1, 3, 5	1624+11.3	66.0' RT.	120'	N/A	HIGHMAST	TYPE V	5-1000W HPS

NOTE: LST-11 AND LST-12 ARE CONNECTED TO THE RAMP R1 LIGHTING LOAD CENTER, INSTALLED UNDER CONTRACT T201009004.01. HM-1 IS CONNECTED TO THE RAMP G1 LIGHTING LOAD CENTER.

UNOFFICIAL WEBSITE COPY

9/9/2010 3:47:22 PM
M:\PROJECTS\2003\03059_DELTRNPK\SRTMALL\CADD\2809003\PLANS\CP66_LI_SR1.DGN

DELAWARE DEPARTMENT OF TRANSPORTATION

ADDENDUMS / REVISIONS

SCALE 0 50 100 150 FEET

SR1 / I-95 INTERCHANGE

CONTRACT 28-090-03
COUNTY NEW CASTLE
BRIDGE NO.
DESIGNED BY: SMK
CHECKED BY: HEH

LIGHTING PLAN

LI-07
SHEET NO. 688
TOTAL SHTS. 803

LIGHTING STANDARD SCHEDULE

NO.	CCT. NO.	STATION	OFFSET	HEIGHT	ARM	LIGHT STANDARD	DISTR. TYPE	WATTAGE/LAMP TYPE
LST-17	7	632+60.2	38.5' RT.	35'	15'	COBRAHEAD, DAVIT ARM POLE	TYPE III	250W HPS
LST-18	9	633+98.3	38.5' RT.	35'	15'	COBRAHEAD, DAVIT ARM POLE	TYPE III	250W HPS
HM-2	2, 4, 6	1619+32.1	63.8' RT.	120'	N/A	HIGHMAST	TYPE V	5-1000W HPS
HM-3	1, 3, 5	1614+14.6	22.3' LT.	120'	N/A	HIGHMAST	TYPE V	5-1000W HPS

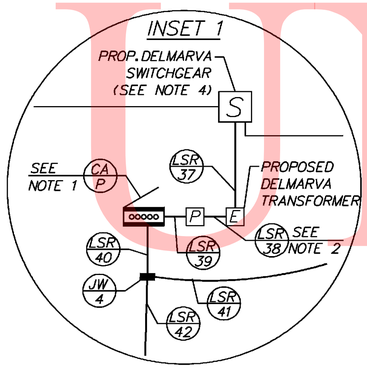

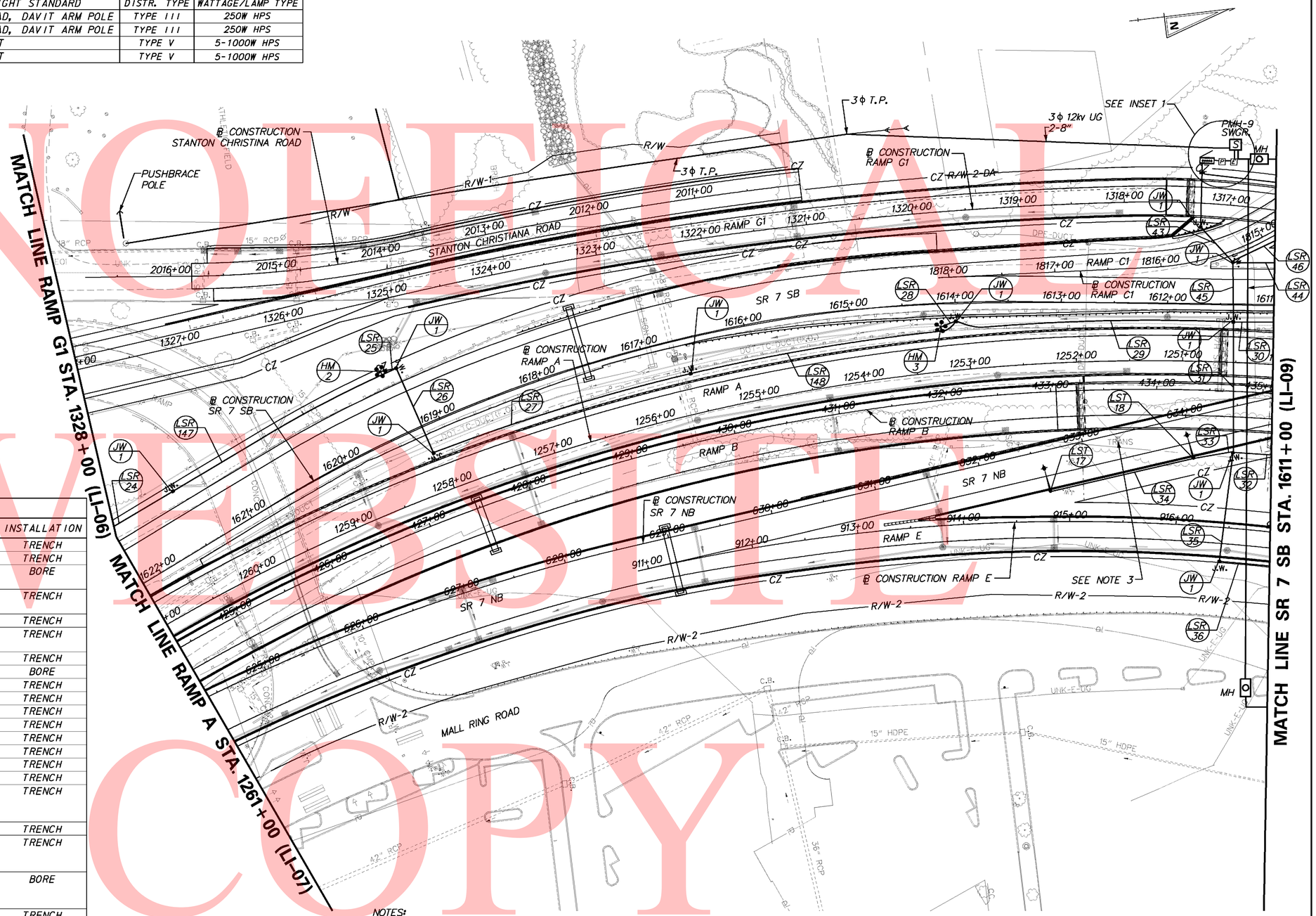

LIGHTING SERVICE SCHEDULE

SERVICE RUN	DISTANCE (L.F.)	# OF CONDUITS	SIZE	DESCRIPTION	INSTALLATION
24*	245	1	3.0"	(4)#4, #4 GROUND	TRENCH
25	15	1	3.0"	(4)#6, #6 GROUND	TRENCH
26	90	1	3.0"	(4)#4 (CCT 1, 3, 5), (4)#6 (CCT 2, 4, 6), #4 GND	BORE
27	255	1	3.0"	(4)#4 (CCT 1, 3, 5), (4)#6 (CCT 2, 4, 6), #4 GND	TRENCH
28	20	1	3.0"	(4)#6, #6 GROUND	TRENCH
29	260	1	3.0"	(4)#4 (CCT 1, 3, 5), (4)#6 (CCT 2, 4, 6), #4 GND	TRENCH
30*	235	1	3.0"	(4)#6, #6 GROUND	TRENCH
31	125	1	3.0"	(4)#6, #6 GROUND	BORE
32*	310	1	3.0"	(4)#6, #6 GROUND	TRENCH
33	40	1	3.0"	(3)#6, #6 GROUND	TRENCH
34	140	1	3.0"	(2)#6, #6 GROUND	TRENCH
35	110	1	3.0"	(4)#6, #6 GROUND	TRENCH
36*	400	1	3.0"	(4)#6, #6 GROUND	TRENCH
37	10	1	3.0"	EMPTY FOR DELMARVA USE	TRENCH
38	10	1	3.0"	(4)#4/0, #2 GROUND	TRENCH
39	10	1	3.0"	(4)#4/0, #2 GROUND	TRENCH
40	15	2	3.0"	(4)#4 (CCT 1, 3, 5), (12)#6 (CCT 2, 4, 6, 7, 9, 11, 8, 10, 12), (4)#8 (CCT 13, 15, 17), #4 GND	TRENCH
41*	265	1	3.0"	(4)#8, #8 GROUND	TRENCH
42	55	1	3.0"	(4)#4 (CCT 1, 3, 5), (12)#6 (CCT 2, 4, 6, 7, 9, 11, 8, 10, 12), #4 GROUND	TRENCH
43	45	1	3.0"	(4)#4 (CCT 1, 3, 5), (8)#6 (CCT 2, 4, 6, 7, 9, 11), #4 GROUND	BORE
44*	245	1	3.0"	(4)#6, #6 GROUND	TRENCH
45	60	1	3.0"	(4)#4 (CCT 1, 3, 5), (8)#6 (CCT 2, 4, 6, 7, 9, 11), #4 GROUND	BORE
46*	110	1	1.0"	(2)#8, #8 GROUND	TRENCH/ON STR.
147	240	1	3.0"	(4)#4, #4 GROUND	TRENCH
148	255	1	3.0"	(4)#4 (CCT 1, 3, 5), (4)#6 (CCT 2, 4, 6), #4 GND	TRENCH

*DISTANCE CONTINUES ON ADJACENT PLAN SHEET.
NOTES: A. SERVICE RUN DISTANCE REFLECTS CONDUIT LENGTH ONLY.

NOTES:

1. INSTALL 277/480V, THREE PHASE, 200 AMP LIGHTING CONTROL CENTER. INSTALL CABINET BASE PER STD. T-4 WITH 3" CONDUIT SWEEPS. UNUSED CONDUIT BENDS SHALL BE CAPPED. SEE SHEET LI-21 FOR PANELBOARD WIRING DIAGRAM AND ELECTRICAL SERVICE PEDESTAL AND LIGHITNG CONTROL & DISTRIBUTION ENCLOSURE DETAILS. SEE SHEET LI-22 FOR PANELBOARD SCHEDULE.
2. INSTALL PROPOSED SERVICE RUN NO. 38 FROM THE PROPOSED ELECTRICAL SERVICE ON PEDESTAL TO THE PROPOSED TRANSFORMER. CAP AND MARK CONDUIT 2 FEET ABOVE GRADE FOR USE BY DELMARVA POWER FORCES. THE CONTRACTOR SHALL COORDINATE WITH DELMARVA POWER FOR THE ELECTRICAL SERVICE CONNECTION.
3. EXISTING TRANSFORMER TO BE REMOVED BY DELMARVA POWER. COORDINATE WITH MARK SMITH AT 302-454-4138 OR ANGEL COLLAZO AT 302-454-4370.
4. REFER TO UTILITY RELOCATION PLANS FOR DETAILS OF PROPOSED DP&L FACILITIES.

UNOFFICIAL WEBSITE COPY

9/9/2010 3:52:56 PM
M:\PROJECTS\2003\03059_DELTRNPK\SR1MALL\CADD\2809003\PLANS\CP67_LI_SR.DGN

DELAWARE DEPARTMENT OF TRANSPORTATION

ADDENDUMS / REVISIONS

SCALE 0 50 100 150 FEET

SR1 / I-95 INTERCHANGE

CONTRACT	BRIDGE NO.
28-090-03	DESIGNED BY: SMK
COUNTY	CHECKED BY: HEH
NEW CASTLE	

LIGHTING PLAN

LI-08

SHEET NO. 689
TOTAL SHTS. 803

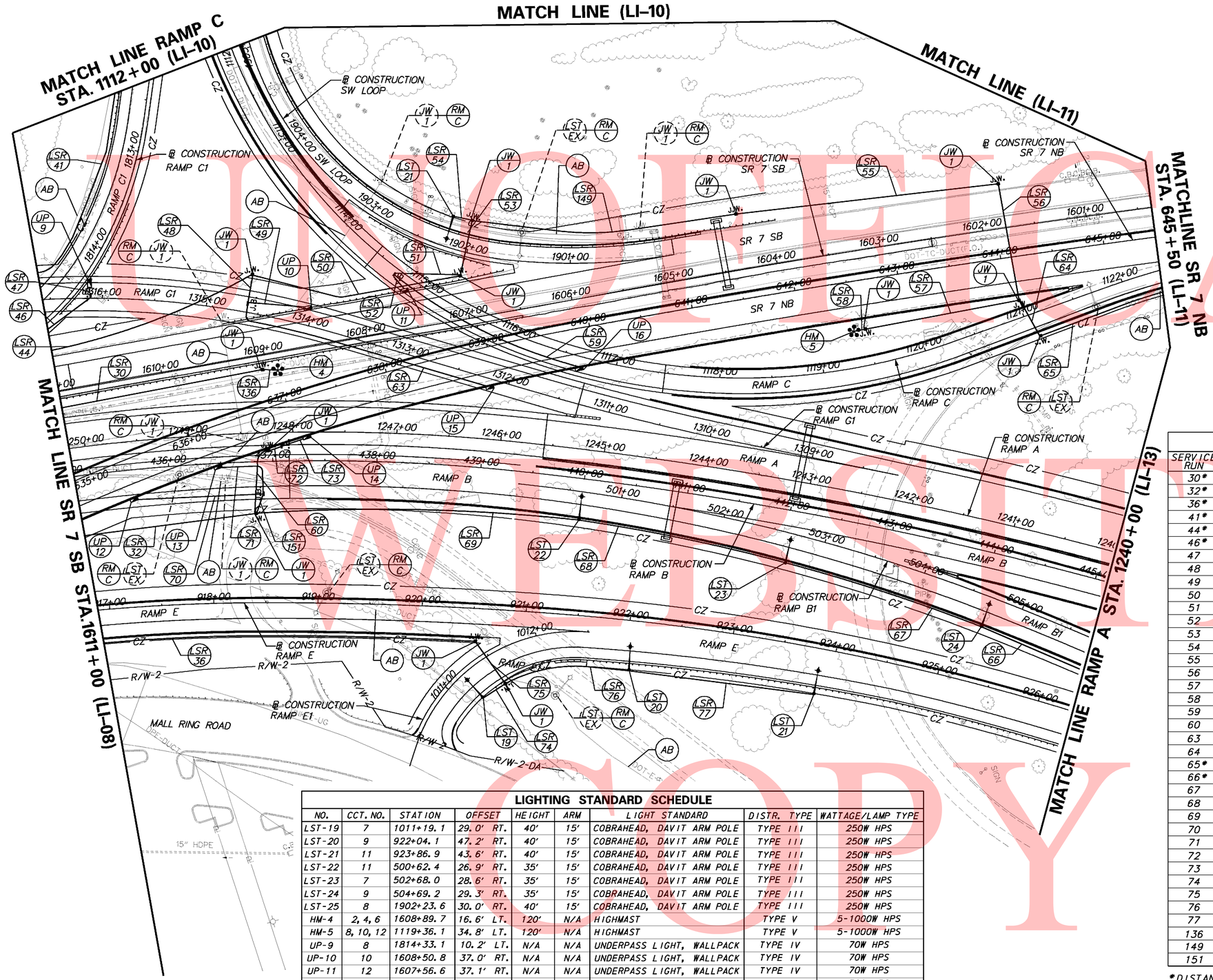

NOTES:

1. REFER TO STRUCTURE PLANS FOR UNDERPASS LIGHT MOUNTING DETAILS. CONDUIT ROUTING TO UNDERPASS LIGHTS SHOWN ON THESE PLANS IS SCHEMATIC.

LIGHTING SERVICE SCHEDULE

SERVICE RUN	DISTANCE (L.F.)	# OF CONDUITS	SIZE	DESCRIPTION	INSTALLATION
30*	235	1	3.0"	(4)#6, #6 GROUND	TRENCH
32*	310	1	3.0"	(4)#6, #6 GROUND	TRENCH
36*	400	1	3.0"	(4)#6, #6 GROUND	TRENCH
41*	265	1	3.0"	(4)#8, #8 GROUND	TRENCH
44*	245	1	3.0"	(4)#6, #6 GROUND	TRENCH
46*	110	1	1.0"	(2)#8, #8 GROUND	TRENCH/ON STR.
47	15	1	0.75"	(2)#10, #10 GROUND	ON STRUCTURE
48	45	1	1.0"	(2)#8, #8 GROUND	TRENCH/ON STR.
49	60	1	0.75"	(2)#10, #10 GROUND	ON STRUCTURE
50	205	1	3.0"	(4)#6, #6 GROUND	TRENCH
51	85	1	1.0"	(2)#8, #8 GROUND	TRENCH/ON STR.
52	20	1	0.75"	(2)#10, #10 GROUND	ON STRUCTURE
53	55	1	3.0"	(4)#6, #6 GROUND	BORE
54	15	1	3.0"	(2)#6, #6 GROUND	TRENCH
55	260	1	3.0"	(4)#6, #6 GROUND	TRENCH
56	115	1	3.0"	(4)#6, #6 GROUND	BORE
57	150	1	3.0"	(4)#6, #6 GROUND	TRENCH
58	10	1	3.0"	(4)#6, #6 GROUND	TRENCH
59	200	1	1.0"	(2)#8, #8 GROUND	ON STRUCTURE
60	65	1	3.0"	(2)#8, #8 GROUND	TRENCH
63	260	1	1.0"	(2)#8, #8 GROUND	ON STRUCTURE
64	40	1	3.0"	(2)#6, #6 GROUND	TRENCH
65*	205	1	3.0"	(2)#6, #6 GROUND	TRENCH
66*	140	1	3.0"	(4)#6, #6 GROUND	TRENCH
67	200	1	3.0"	(4)#6, #6 GROUND	TRENCH
68	205	1	3.0"	(4)#6, #6 GROUND	TRENCH
69	310	1	3.0"	(4)#6, #6 GROUND	TRENCH
70	125	1	0.75"	(2)#10, #10 GROUND	ON STRUCTURE
71	65	1	0.75"	(2)#10, #10 GROUND	ON STRUCTURE
72	40	1	1.0"	(2)#8, #8 GROUND	TRENCH/ON STR.
73	25	1	0.75"	(2)#10, #10 GROUND	ON STRUCTURE
74	25	1	3.0"	(2)#6, #6 GROUND	TRENCH
75	50	1	3.0"	(4)#6, #6 GROUND	TRENCH
76	120	1	3.0"	(3)#6, #6 GROUND	TRENCH
77	180	1	3.0"	(2)#6, #6 GROUND	TRENCH
136	15	1	3.0"	(4)#6, #6 GROUND	TRENCH
149	260	1	3.0"	(4)#6, #6 GROUND	TRENCH
151	45	1	1.0"	(3)#8, #8 GROUND	TRENCH/ON STR.

*DISTANCE CONTINUES ON ADJACENT PLAN SHEET.

NOTES: A. SERVICE RUN DISTANCE REFLECTS CONDUIT LENGTH ONLY.

LIGHTING STANDARD SCHEDULE

NO.	CCT. NO.	STATION	OFFSET	HEIGHT	ARM	LIGHT STANDARD	DISTR. TYPE	WATTAGE/LAMP TYPE
LST-19	7	1011+19.1	29.0' RT.	40'	15'	COBRAHEAD, DAVIT ARM POLE	TYPE III	250W HPS
LST-20	9	922+04.1	47.2' RT.	40'	15'	COBRAHEAD, DAVIT ARM POLE	TYPE III	250W HPS
LST-21	11	923+86.9	43.6' RT.	40'	15'	COBRAHEAD, DAVIT ARM POLE	TYPE III	250W HPS
LST-22	11	500+62.4	26.9' RT.	35'	15'	COBRAHEAD, DAVIT ARM POLE	TYPE III	250W HPS
LST-23	7	502+68.0	28.6' RT.	35'	15'	COBRAHEAD, DAVIT ARM POLE	TYPE III	250W HPS
LST-24	9	504+69.2	29.3' RT.	35'	15'	COBRAHEAD, DAVIT ARM POLE	TYPE III	250W HPS
LST-25	8	1902+23.6	30.0' RT.	40'	15'	COBRAHEAD, DAVIT ARM POLE	TYPE III	250W HPS
HM-4	2, 4, 6	1608+89.7	16.6' LT.	120'	N/A	HIGHMAST	TYPE V	5-1000W HPS
HM-5	8, 10, 12	1119+36.1	34.8' LT.	120'	N/A	HIGHMAST	TYPE V	5-1000W HPS
UP-9	8	1814+33.1	10.2' LT.	N/A	N/A	UNDERPASS LIGHT, WALLPACK	TYPE IV	70W HPS
UP-10	10	1608+50.8	37.0' RT.	N/A	N/A	UNDERPASS LIGHT, WALLPACK	TYPE IV	70W HPS
UP-11	12	1607+56.6	37.1' RT.	N/A	N/A	UNDERPASS LIGHT, WALLPACK	TYPE IV	70W HPS
UP-12	11	635+29.1	38.1' RT.	N/A	N/A	UNDERPASS LIGHT, WALLPACK	TYPE IV	70W HPS
UP-13	7	636+16.9	38.0' RT.	N/A	N/A	UNDERPASS LIGHT, WALLPACK	TYPE IV	70W HPS
UP-14	9	637+08.6	38.0' RT.	N/A	N/A	UNDERPASS LIGHT, WALLPACK	TYPE IV	70W HPS
UP-15	10	638+93.6	38.0' RT.	N/A	N/A	UNDERPASS LIGHT, WALLPACK	TYPE IV	70W HPS
UP-16	12	639+82.7	38.3' RT.	N/A	N/A	UNDERPASS LIGHT, WALLPACK	TYPE IV	70W HPS

UNOFFICIAL WEBSITE COPY

LIGHTING STANDARD SCHEDULE

NO.	CCT. NO.	STATION	OFFSET	HEIGHT	ARM	LIGHT STANDARD	DISTR. TYPE	WATTAGE/LAMP TYPE
LST-26	13	1911+19.5	22.0' RT.	40'	8'	COBRAHEAD, DAVIT ARM POLE	TYPE III	250W HPS
LST-27	13	1105+49.6	34.7' RT.	40'	15'	COBRAHEAD, DAVIT ARM POLE	TYPE III	250W HPS
LST-28	13	1100+83.5	26.1' RT.	40'	15'	COBRAHEAD, DAVIT ARM POLE	TYPE III	250W HPS
LST-29	15	50+98.0	90.1' RT.	40'	15'	COBRAHEAD, DAVIT ARM POLE	TYPE III	250W HPS
HM-6	13, 15, 17	1109+31.6	18.5' LT.	120'	N/A	HIGHMAST	TYPE V	3-1000W HPS
E-1	17	1103+04.2	32.6' RT.	40'	15'	RELOCATED LIGHT STANDARD	TYPE III	250W HPS

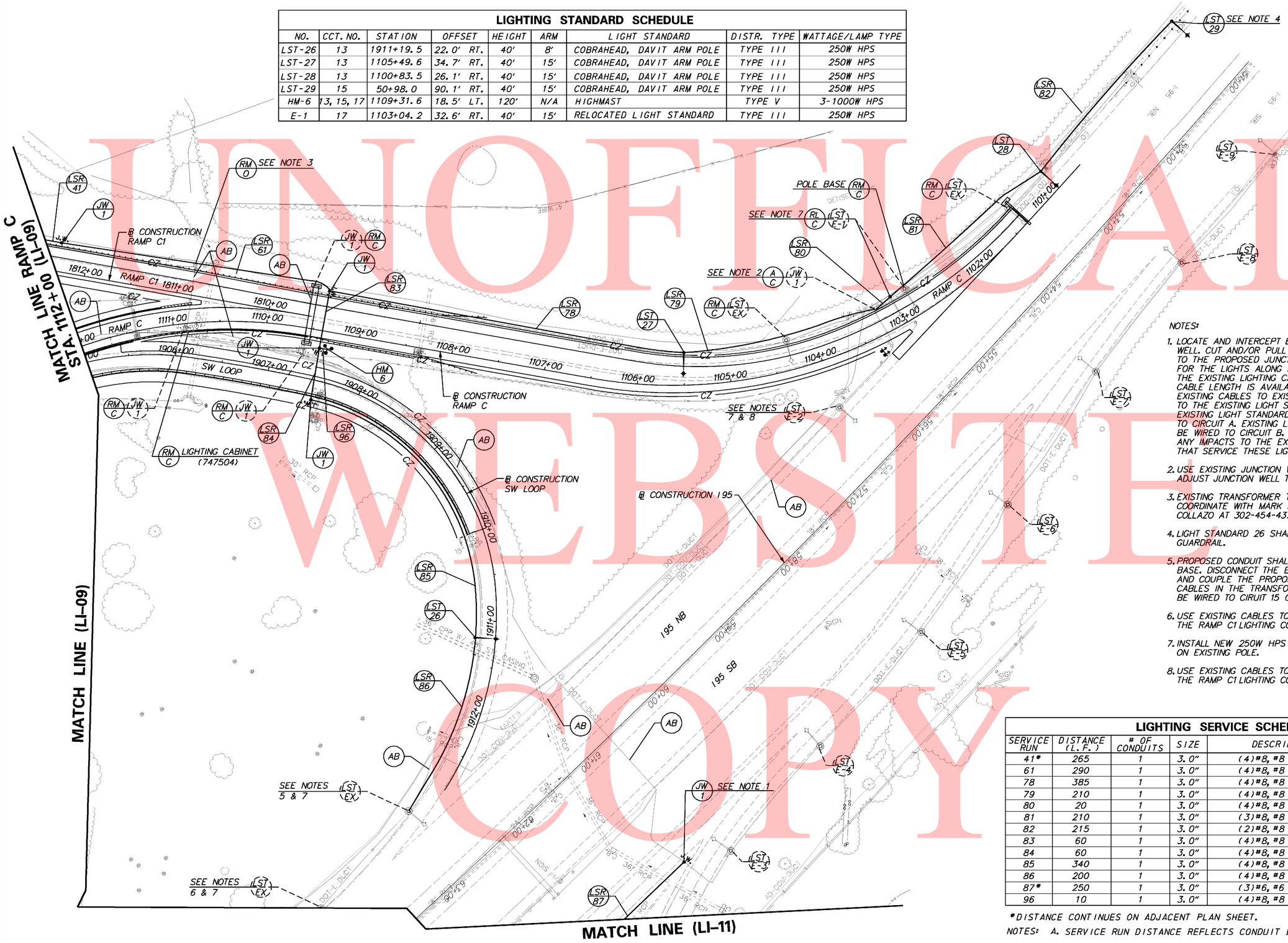

NOTES:

1. LOCATE AND INTERCEPT EXISTING CONDUIT WITH A TYPE 1 JUNCTION WELL. CUT AND/OR PULL BACK EXISTING CABLES IN THE CONDUIT TO THE PROPOSED JUNCTION WELL SO THAT THE ELECTRICAL SERVICE FOR THE LIGHTS ALONG SB I-95 C-D ROAD CAN BE CONNECTED TO THE EXISTING LIGHTING CABINET ON SHEET LI-13. ENSURE SUFFICIENT CABLE LENGTH IS AVAILABLE FOR SPLICING TO NEW CABLES. SPLICE EXISTING CABLES TO EXISTING CIRCUITS A AND B TO MAINTAIN SERVICE TO THE EXISTING LIGHT STANDARDS ALONG THE I-95 C-D ROAD. EXISTING LIGHT STANDARDS E-3, E-5, E-7 AND E-9 SHALL BE WIRED TO CIRCUIT A. EXISTING LIGHT STANDARDS E-4, E-6, AND E-8 SHALL BE WIRED TO CIRCUIT B. THIS WORK SHALL BE COMPLETED PRIOR TO ANY IMPACTS TO THE EXISTING TRANSFORMERS AND CONTROL CABINET THAT SERVICE THESE LIGHTS.
2. USE EXISTING JUNCTION WELL TO PROVIDE SERVICE TO LST E-2. ADJUST JUNCTION WELL TO FINAL GRADE.
3. EXISTING TRANSFORMER TO BE REMOVED BY DELMARVA POWER. COORDINATE WITH MARK SMITH AT 302-454-4138 OR ANGEL COLLAZO AT 302-454-4370.
4. LIGHT STANDARD 26 SHALL BE LOCATED 6' BEHIND THE EXISTING GUARDRAIL.
5. PROPOSED CONDUIT SHALL TIE INTO EXISTING CONDUIT BEND IN POLE BASE. DISCONNECT THE EXISTING CONDUIT THAT IS TO BE ABANDONED AND COUPLE THE PROPOSED CONDUIT TO CONNECT TO THE EXISTING CABLES IN THE TRANSFORMER BASE. EXISTING LIGHT STANDARD SHALL BE WIRED TO CIRUIT 15 OF THE RAMP C1 LIGHTING CONTROL CENTER.
6. USE EXISTING CABLES TO CONNECT EXISTING LIGHT TO CIRCUIT 17 OF THE RAMP C1 LIGHTING CONTROL CENTER.
7. INSTALL NEW 250W HPS CUTOFF LUMINAIRE WITH MULTI-TAP BALLAST ON EXISTING POLE.
8. USE EXISTING CABLES TO CONNECT EXISTING LIGHT E-2 TO CIRCUIT 15 OF THE RAMP C1 LIGHTING CONTROL CENTER.

LIGHTING SERVICE SCHEDULE

SERVICE RUN	DISTANCE (L.F.)	# OF CONDUITS	SIZE	DESCRIPTION	INSTALLATION
41*	265	1	3.0"	(4)#8, #8 GROUND	TRENCH
61	290	1	3.0"	(4)#8, #8 GROUND	TRENCH
78	385	1	3.0"	(4)#8, #8 GROUND	TRENCH
79	210	1	3.0"	(4)#8, #8 GROUND	TRENCH
80	20	1	3.0"	(4)#8, #8 GROUND	TRENCH
81	210	1	3.0"	(3)#8, #8 GROUND	TRENCH
82	215	1	3.0"	(2)#8, #8 GROUND	TRENCH
83	60	1	3.0"	(4)#8, #8 GROUND	BORE
84	60	1	3.0"	(4)#8, #8 GROUND	BORE
85	340	1	3.0"	(4)#8, #8 GROUND	TRENCH
86	200	1	3.0"	(4)#8, #8 GROUND	TRENCH
87*	250	1	3.0"	(3)#6, #6 GROUND	TRENCH
96	10	1	3.0"	(4)#8, #8 GROUND	TRENCH

*DISTANCE CONTINUES ON ADJACENT PLAN SHEET.

NOTES: A. SERVICE RUN DISTANCE REFLECTS CONDUIT LENGTH ONLY.

UNOFFICIAL WEBSITE COPY

DELAWARE DEPARTMENT OF TRANSPORTATION

ADDENDUMS / REVISIONS

SCALE 0 50 100 150 FEET

SR1 / I-95 INTERCHANGE

CONTRACT 28-090-03 | COUNTY NEW CASTLE | BRIDGE NO. | DESIGNED BY: SMK | CHECKED BY: HEH

LIGHTING PLAN

LI-10 | SHEET NO. 691 | TOTAL SHTS. 803

9/9/2010 3:57:50 PM
M:\PROJECTS\2003\03059_DELTRNPK\SR1WALL\CADD\2809003\PLANS\CP69_LI_SR1.DGN

NOTES:

1. LOCATE AND INTERCEPT EXISTING CONDUIT WITH A TYPE 1 JUNCTION WELL. CUT AND/OR PULL BACK THE EXISTING CABLES IN THE CONDUIT TO THE PROPOSED JUNCTION WELL SO THAT THE ELECTRICAL SERVICE FOR CIRCUITS A-7, A-8, AND A-9 ARE MAINTAINED. ENSURE SUFFICIENT CABLE LENGTH IS AVAILABLE FOR SPLICING TO NEW CABLES.

2. PROPOSED CONDUIT SHALL TIE INTO EXISTING CONDUIT BEND IN POLE BASE. DISCONNECT THE EXISTING CONDUIT THAT IS TO BE ABANDONED AND COUPLE THE PROPOSED CONDUIT. CONNECT TO THE EXISTING CABLES IN THE TRANSFORMER BASE. LIGHT STANDARD SHALL BE WIRED TO THE SAME CIRCUIT AND PHASE AS EXISTING CONDITION.

3. USE EXISTING JUNCTION WELL TO SPLICE TO EXISTING CABLES IN LSR-93.

LIGHTING STANDARD SCHEDULE

NO.	CCT. NO.	STATION	OFFSET	HEIGHT	ARM	LIGHT STANDARD	DISTR. TYPE	WATTAGE/LAMP TYPE
A-25	EX. A-7	2104+99.3	55.6' RT.	40'	15'	COBRAHEAD, DAVIT ARM POLE	TYPE III	250W HPS
A-26	EX. A-8	2106+67.8	41.0' RT.	40'	15'	COBRAHEAD, DAVIT ARM POLE	TYPE III	250W HPS
A-27	EX. A-9	2108+67.9	41.0' RT.	40'	15'	COBRAHEAD, DAVIT ARM POLE	TYPE III	250W HPS
A-28	EX. A-7	2110+58.8	41.0' RT.	40'	15'	COBRAHEAD, DAVIT ARM POLE	TYPE III	250W HPS
A-29	EX. A-8	2112+60.8	40.5' RT.	40'	15'	COBRAHEAD, DAVIT ARM POLE	TYPE III	250W HPS
LST-30	12	646+26.6	43.9' RT.	35'	8'	COBRAHEAD, DAVIT ARM POLE	TYPE III	250W HPS
LST-31	NOT USED							

LIGHTING SERVICE SCHEDULE

SERVICE RUN	DISTANCE (L.F.)	# OF CONDUITS	SIZE	DESCRIPTION	INSTALLATION
65*	205	1	3.0"	(2)#6, #6 GROUND	TRENCH
87*	250	1	3.0"	(3)#6, #6 GROUND	TRENCH
88	285	1	3.0"	(3)#6, #6 GROUND	BORE
89	200	1	2.5"	(2)#6, #6 GROUND	TRENCH
90	195	1	2.5"	(4)#6, #6 GROUND	TRENCH
91	200	1	2.5"	(6)#6, #6 GROUND	TRENCH
92	70	1	2.5"	(6)#6, #6 GROUND	TRENCH
93	55	1	2.5"	EXIST. (6)#6, #6 GROUND	EX. CONDUIT
94	80	1	2.5"	(6)#6, #6 GROUND	TRENCH
95*	160	1	2.5"	(6)#6, #6 GROUND	TRENCH
150	250	1	3.0"	(3)#6, #6 GROUND	TRENCH

*DISTANCE CONTINUES ON ADJACENT PLAN SHEET.

NOTES: A. SERVICE RUN DISTANCE REFLECTS CONDUIT LENGTH ONLY.

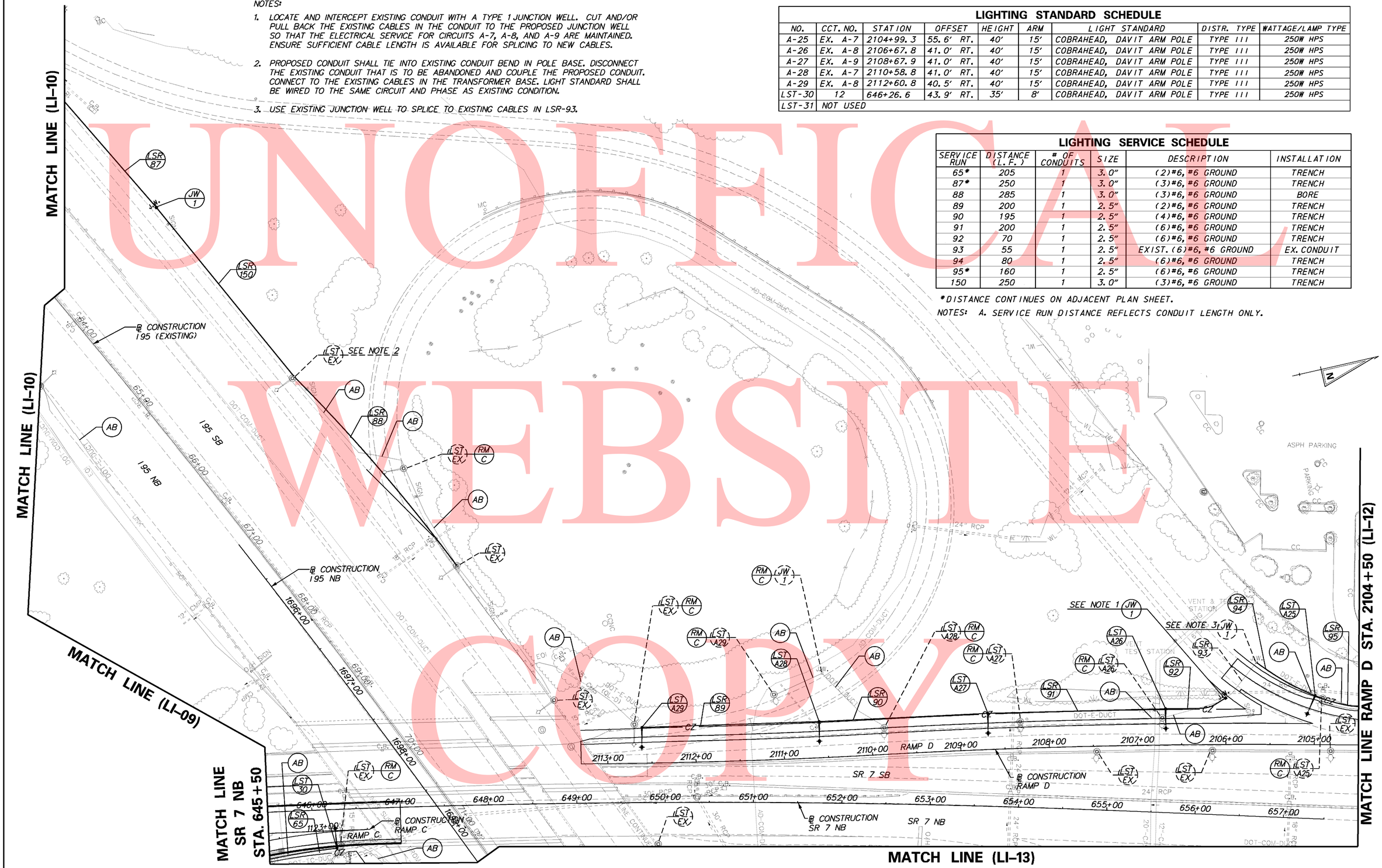

UNOFFICIAL WEBSITE COPY

9/9/2010 4:02:24 PM
M:\PROJECTS\2003\03059_DELTRNPK\SRIMALL\CADD\2809003\PLANS\CP70_LI_SR1.DGN

DELAWARE DEPARTMENT OF TRANSPORTATION

ADDENDUMS / REVISIONS

SCALE 0 50 100 150 FEET

SR1 / I-95 INTERCHANGE

CONTRACT	BRIDGE NO.
28-090-03	DESIGNED BY: SMK
COUNTY	CHECKED BY: HEH
NEW CASTLE	

LIGHTING PLAN

LI-11	
SHEET NO.	692
TOTAL SHTS.	803

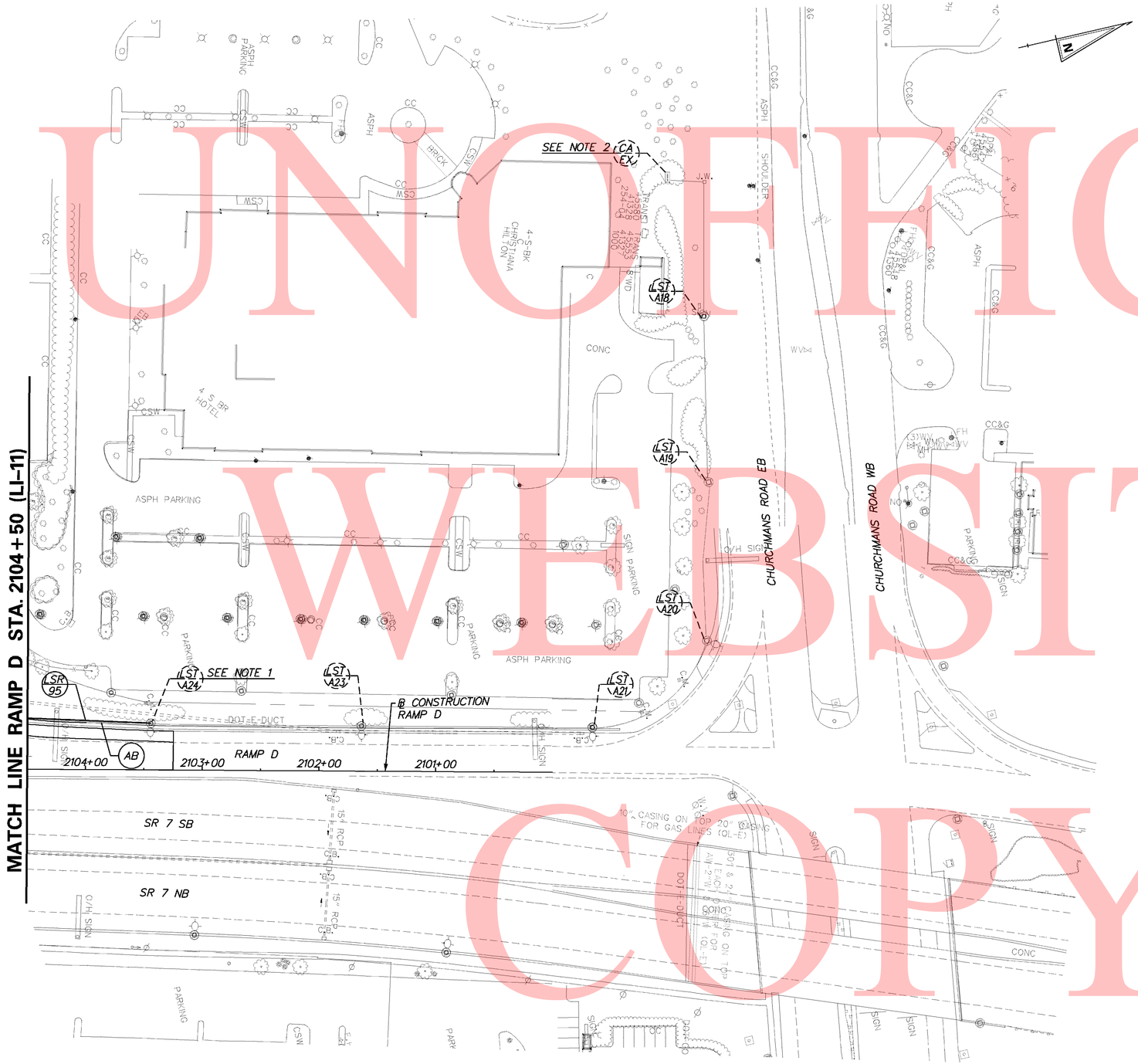

LIGHTING SERVICE SCHEDULE					
SERVICE RUN	DISTANCE (L.F.)	# OF CONDUITS	SIZE	DESCRIPTION	INSTALLATION
95*	160	1	2.5"	(6)#6, #6 GROUND	TRENCH

*DISTANCE CONTINUES ON ADJACENT PLAN SHEET.

NOTES: A.SERVICE RUN DISTANCE REFLECTS CONDUIT LENGTH ONLY.

NOTES:

1. PROPOSED CONDUIT SHALL TIE INTO EXISTING CONDUIT BEND IN THE POLE BASE. DISCONNECT THE EXISTING CONDUIT THAT IS TO BE ABANDONED AND COUPLE THE PROPOSED CONDUIT TO THE EXISTING CONDUIT BEND. SPLICE THE PROPOSED ELECTRICAL CABLES TO EXISTING ELECTRICAL CABLES FOR CIRCUITS A-7, A-8, AND A-9 IN THE TRANSFORMER BASE.

2. EXISTING LIGHTING CONTROL CENTER 'A', 120/240V, SINGLE PHASE, 3 WIRE. LIGHTS SERVICED FROM THIS CABINET OPERATE ON 240 V.

UNOFFICIAL WEBSITE COPY

7/28/2010 5:18:05 PM
M:\PROJECTS\2003\03059_DELTRNPK\SRIMALL\CADD\2809003\PLANS\CP70A_LI_SR1.DGN

DELAWARE DEPARTMENT OF TRANSPORTATION

ADDENDUMS / REVISIONS

SCALE 0 50 100 150 FEET

SR1 / I-95 INTERCHANGE

CONTRACT	BRIDGE NO.	
28-090-03	DESIGNED BY: SMK	
COUNTY		
NEW CASTLE	CHECKED BY: HEH	

LIGHTING PLAN

LI-12	
SHEET NO.	693
TOTAL SHTS.	803

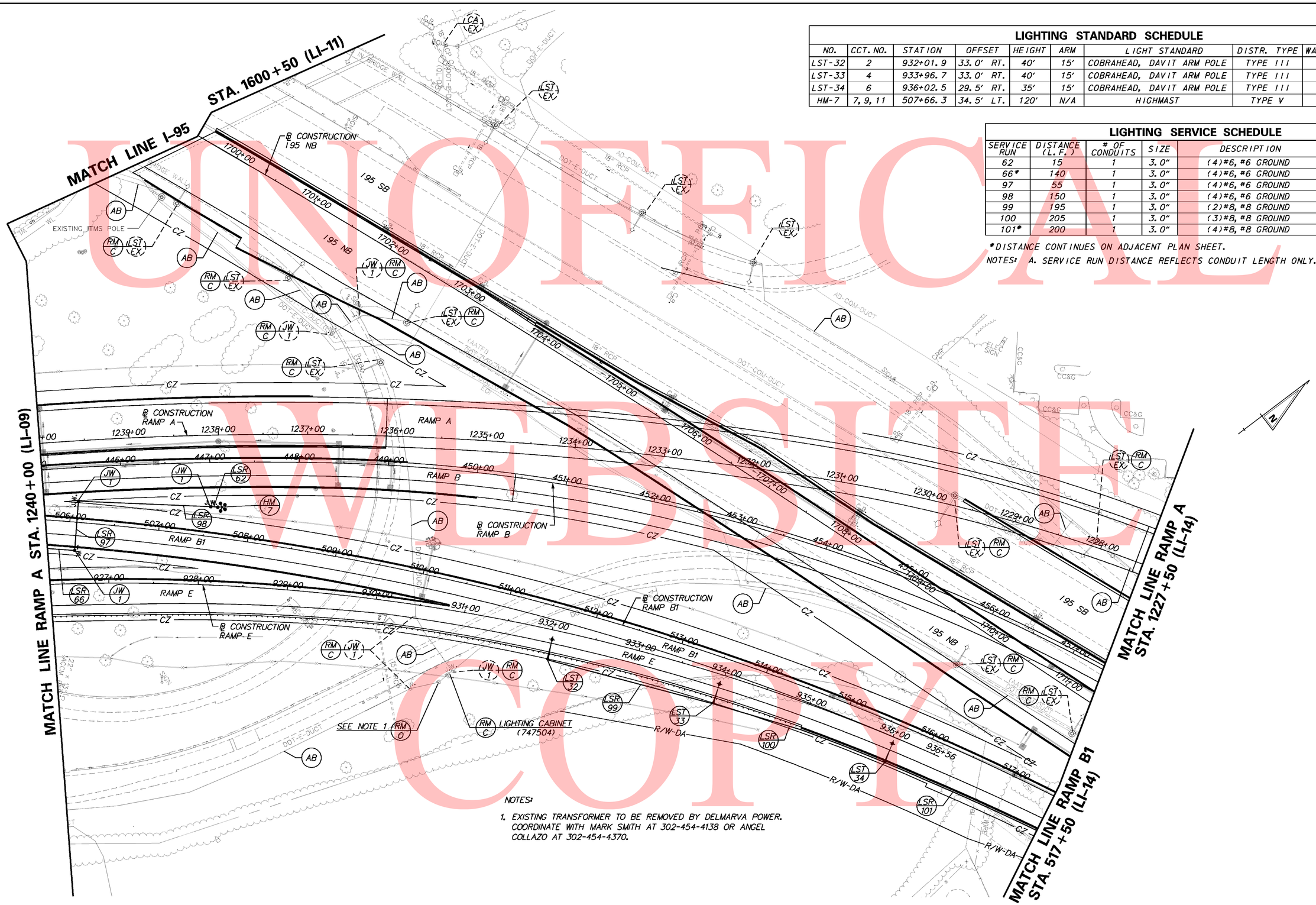

LIGHTING STANDARD SCHEDULE

NO.	CCT. NO.	STATION	OFFSET	HEIGHT	ARM	LIGHT STANDARD	DISTR. TYPE	WATTAGE/LAMP TYPE
LST-32	2	932+01.9	33.0' RT.	40'	15'	COBRAHEAD, DAVIT ARM POLE	TYPE III	250W HPS
LST-33	4	933+96.7	33.0' RT.	40'	15'	COBRAHEAD, DAVIT ARM POLE	TYPE III	250W HPS
LST-34	6	936+02.5	29.5' RT.	35'	15'	COBRAHEAD, DAVIT ARM POLE	TYPE III	250W HPS
HM-7	7, 9, 11	507+66.3	34.5' LT.	120'	N/A	HIGHMAST	TYPE V	5-1000W HPS

LIGHTING SERVICE SCHEDULE

SERVICE RUN	DISTANCE (L.F.)	# OF CONDUITS	SIZE	DESCRIPTION	INSTALLATION
62	15	1	3.0"	(4)#6, #6 GROUND	TRENCH
66*	140	1	3.0"	(4)#6, #6 GROUND	TRENCH
97	55	1	3.0"	(4)#6, #6 GROUND	TRENCH
98	150	1	3.0"	(4)#6, #6 GROUND	TRENCH
99	195	1	3.0"	(2)#8, #8 GROUND	TRENCH
100	205	1	3.0"	(3)#8, #8 GROUND	TRENCH
101*	200	1	3.0"	(4)#8, #8 GROUND	TRENCH

*DISTANCE CONTINUES ON ADJACENT PLAN SHEET.

NOTES: A. SERVICE RUN DISTANCE REFLECTS CONDUIT LENGTH ONLY.

NOTES:

1. EXISTING TRANSFORMER TO BE REMOVED BY DELMARVA POWER. COORDINATE WITH MARK SMITH AT 302-454-4138 OR ANGEL COLLAZO AT 302-454-4370.

UNOFFICIAL WEBSITE COPY

8/24/2010 1:20:01 PM
M:\PROJECTS\2003\03059_DELTRNPK\SRIMALL\CADD\2809003\PLANS\CP71_LI_SR1.DGN

DELAWARE DEPARTMENT OF TRANSPORTATION

ADDENDUMS / REVISIONS

SCALE 0 50 100 150 FEET

SR1 / I-95 INTERCHANGE

CONTRACT	BRIDGE NO.
28-090-03	
COUNTY	DESIGNED BY: SMK
NEW CASTLE	CHECKED BY: HEH

LIGHTING PLAN

LI-13
SHEET NO.
694
TOTAL SHTS.
803

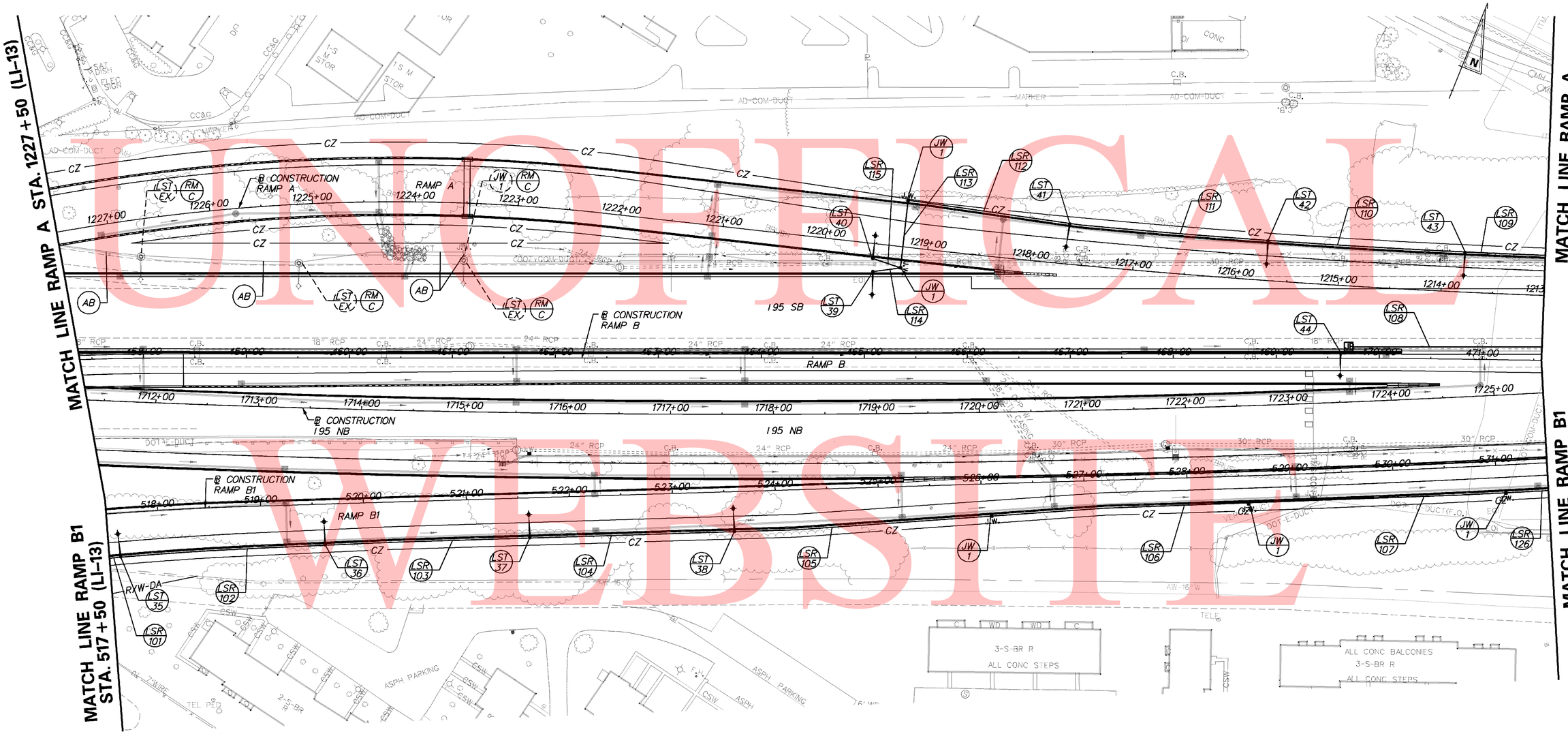

UNOFFICIAL WEBSITE COPY

LIGHTING SERVICE SCHEDULE

SERVICE RUN	DISTANCE (L.F.)	# OF CONDUITS	SIZE	DESCRIPTION	INSTALLATION
101*	200	1	3.0"	(4)#8, #8 GROUND	TRENCH
102	200	1	3.0"	(4)#8, #8 GROUND	TRENCH
103	200	1	3.0"	(4)#8, #8 GROUND	TRENCH
104	200	1	3.0"	(4)#8, #8 GROUND	TRENCH
105	250	1	3.0"	(4)#8, #8 GROUND	TRENCH
106	250	1	3.0"	(4)#8, #8 GROUND	TRENCH
107	250	1	3.0"	(4)#8, #8 GROUND	TRENCH
108*	200	1	3.0"	(2)#8, #8 GROUND	BARRIER
109*	195	1	3.0"	(4)#8, #8 GROUND	TRENCH
110	195	1	3.0"	(4)#8, #8 GROUND	TRENCH
111	195	1	3.0"	(4)#8, #8 GROUND	TRENCH
112	160	1	3.0"	(3)#8, #8 GROUND	TRENCH
113	70	1	3.0"	(3)#8, #8 GROUND	TRENCH
114	30	1	3.0"	(2)#8, #8 GROUND	TRENCH
115	30	1	3.0"	(2)#8, #8 GROUND	TRENCH
126*	255	1	3.0"	(4)#8, #8 GROUND	TRENCH

*DISTANCE CONTINUES ON ADJACENT PLAN SHEET.

NOTES: A. SERVICE RUN DISTANCE REFLECTS CONDUIT LENGTH ONLY.

LIGHTING STANDARD SCHEDULE

NO.	CCT. NO.	STATION	OFFSET	HEIGHT	ARM	LIGHT STANDARD	DISTR. TYPE	WATTAGE/LAMP TYPE
LST-35	2	517+60.8	42.4' RT.	35'	15'	COBRAHEAD, DAVIT ARM POLE	TYPE III	250W HPS
LST-36	4	519+61.6	39.5' RT.	35'	15'	COBRAHEAD, DAVIT ARM POLE	TYPE III	250W HPS
LST-37	6	521+60.5	38.5' RT.	35'	15'	COBRAHEAD, DAVIT ARM POLE	TYPE III	250W HPS
LST-38	2	523+59.1	38.5' RT.	35'	15'	COBRAHEAD, DAVIT ARM POLE	TYPE III	250W HPS
LST-39	1	1219+50.6	27.2' LT.	35'	15'	COBRAHEAD, DAVIT ARM POLE	TYPE III	250W HPS
LST-40	3	1219+52.1	14.5' LT.	35'	15'	COBRAHEAD, DAVIT ARM POLE	TYPE III	250W HPS
LST-41	5	1217+65.1	39.0' RT.	35'	15'	COBRAHEAD, DAVIT ARM POLE	TYPE III	250W HPS
LST-42	1	1215+70.9	38.5' RT.	35'	15'	COBRAHEAD, DAVIT ARM POLE	TYPE III	250W HPS
LST-43	3	1213+78.4	38.5' RT.	35'	15'	COBRAHEAD, DAVIT ARM POLE	TYPE III	250W HPS
LST-44	5	469+62.4	SEE NOTE	35'	6'	COBRAHEAD, DAVIT ARM POLE	TYPE III	250W HPS

NOTE: LS-44 SHALL BE BARRIER MOUNTED.

8/2/2010 10:28:15 AM
M:\PROJECTS\2003\03059_DELTRNPK\SRIMALL\CADD\2809003\PLANS\CP72_LI_SR1.DGN

DELAWARE DEPARTMENT OF TRANSPORTATION

ADDENDUMS / REVISIONS

SCALE 0 50 100 150 FEET

SR1 / I-95 INTERCHANGE

CONTRACT	BRIDGE NO.
28-090-03	DESIGNED BY: SMK
COUNTY	CHECKED BY: HEH
NEW CASTLE	

LIGHTING PLAN

LI-14

SHEET NO.
695
TOTAL SHTS.
803

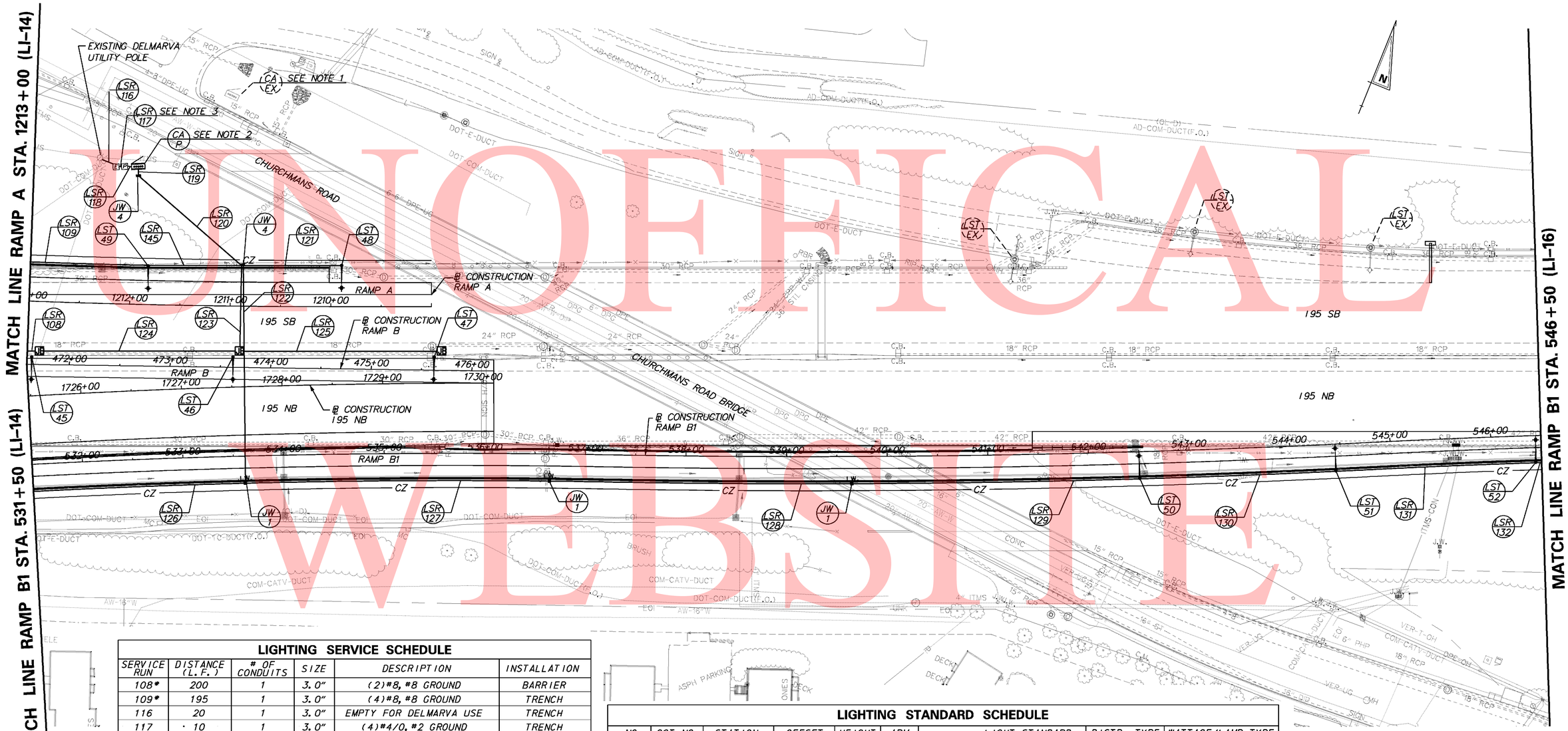

UNOFFICIAL WEBSITE COPY

LIGHTING SERVICE SCHEDULE

SERVICE RUN	DISTANCE (L.F.)	# OF CONDUITS	SIZE	DESCRIPTION	INSTALLATION
108*	200	1	3.0"	(2)#8, #8 GROUND	BARRIER
109*	195	1	3.0"	(4)#8, #8 GROUND	TRENCH
116	20	1	3.0"	EMPTY FOR DELMARVA USE	TRENCH
117	10	1	3.0"	(4)#4/0, #2 GROUND	TRENCH
118	15	1	3.0"	(4)#4/0, #2 GROUND	TRENCH
119	10	1	3.0"	(12)#8, #8 GROUND	TRENCH
120	135	1	3.0"	(12)#8, #8 GROUND	TRENCH
121	100	1	3.0"	(2)#8, #8 GROUND	TRENCH
122	220	1	3.0"	(8)#8, #8 GROUND	BORE
123	95	1	3.0"	(4)#8, #8 GROUND	BORE
124	200	1	3.0"	(3)#8, #8 GROUND	BARRIER
125	200	1	3.0"	(2)#8, #8 GROUND	BARRIER
126*	255	1	3.0"	(4)#8, #8 GROUND	TRENCH
127	305	1	3.0"	(4)#8, #8 GROUND	TRENCH
128	300	1	3.0"	(4)#8, #8 GROUND	TRENCH
129	290	1	3.0"	(4)#8, #8 GROUND	TRENCH
130	195	1	3.0"	(4)#8, #8 GROUND	TRENCH
131	200	1	3.0"	(4)#8, #8 GROUND	TRENCH
132*	200	1	3.0"	(4)#8, #8 GROUND	TRENCH
145	95	1	3.0"	(4)#8, #8 GROUND	TRENCH

*DISTANCE CONTINUES ON ADJACENT PLAN SHEET.

NOTES: A. SERVICE RUN DISTANCE REFLECTS CONDUIT LENGTH ONLY.

LIGHTING STANDARD SCHEDULE

NO.	CCT. NO.	STATION	OFFSET	HEIGHT	ARM	LIGHT STANDARD	DISTR. TYPE	WATTAGE/LAMP TYPE
LST-45	1	471+62.4	SEE NOTE 4	35'	6'	COBRAHEAD, DAVIT ARM POLE	TYPE III	250W HPS
LST-46	3	473+62.4	SEE NOTE 4	35'	10'	COBRAHEAD, DAVIT ARM POLE	TYPE III	250W HPS
LST-47	5	475+62.4	SEE NOTE 4	35'	10'	COBRAHEAD, DAVIT ARM POLE	TYPE III	250W HPS
LST-48	1	1209+89.2	41.0' RT.	35'	15'	COBRAHEAD, DAVIT ARM POLE	TYPE III	250W HPS
LST-49	5	1211+82.4	38.5' RT.	35'	15'	COBRAHEAD, DAVIT ARM POLE	TYPE III	250W HPS
LST-50	7	542+50.3	26.5' RT.	35'	15'	COBRAHEAD, DAVIT ARM POLE	TYPE III	250W HPS
LST-51	9	544+44.8	26.5' RT.	35'	15'	COBRAHEAD, DAVIT ARM POLE	TYPE III	250W HPS
LST-52	11	546+44.1	26.5' RT.	35'	15'	COBRAHEAD, DAVIT ARM POLE	TYPE III	250W HPS

NOTES:

1. EXISTING 240/480V, SINGLE PHASE LIGHTING CONTROL CENTER. PROVIDES SERVICE TO LIGHTS ON CHURCHMANS ROAD AND THE SB I-95 EXIT RAMP TO CHURCHMANS ROAD.
2. INSTALL 277/480V, THREE PHASE, 200 AMP LIGHTING CONTROL CENTER. INSTALL CABINET BASE PER STD. T-4 WITH 3" CONDUIT SWEEPS. UNUSED CONDUIT BENDS SHALL BE CAPPED. SEE SHEET LI-21 FOR PANELBOARD WIRING DIAGRAM AND ELECTRICAL SERVICE PEDESTAL AND LIGHTING CONTROL & DISTRIBUTION ENCLOSURE DETAILS. SEE SHEET LI-22 FOR PANELBOARD SCHEDULE.
3. INSTALL PROPOSED SERVICE RUN NO. 117 FROM THE PROPOSED ELECTRICAL SERVICE ON PEDESTAL TO THE PROPOSED TRANSFORMER. CAP AND MARK CONDUIT 2 FEET ABOVE GRADE FOR USE BY DELMARVA POWER FORCES. THE CONTRACTOR SHALL COORDINATE WITH DELMARVA POWER FOR THE ELECTRICAL SERVICE CONNECTION.
4. LST-45, LST-46, AND LST-47 SHALL BE BARRIER MOUNTED.

8/2/2010 10:29:31 AM
M:\PROJECTS\2003\03059_DELTRNPK\SRTMALL\CADD\2809003\PLANS\CP73_LI_SR1.DGN

DELAWARE DEPARTMENT OF TRANSPORTATION	ADDENDUMS / REVISIONS	SCALE 0 50 100 150 FEET	SR1 / I-95 INTERCHANGE	CONTRACT 28-090-03	BRIDGE NO.	LIGHTING PLAN
				COUNTY NEW CASTLE	DESIGNED BY: SMK	
					CHECKED BY: HEH	

LI-15
SHEET NO. 696
TOTAL SHTS. 803

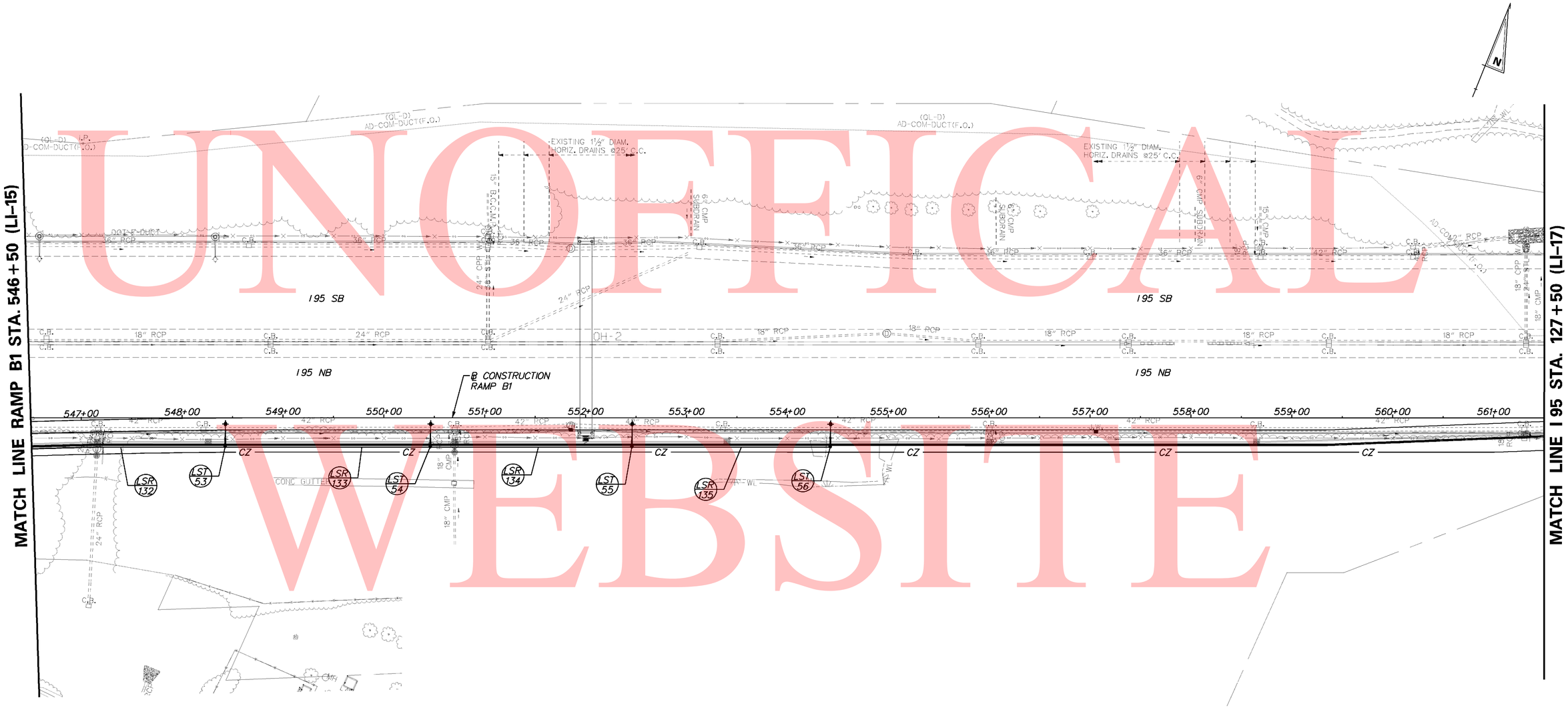

UNOFFICAL WEBSITE COPY

LIGHTING SERVICE SCHEDULE

SERVICE RUN	DISTANCE (L.F.)	# OF CONDUITS	SIZE	DESCRIPTION	INSTALLATION
132*	200	1	3.0"	(4)#8, #8 GROUND	TRENCH
133	205	1	3.0"	(4)#8, #8 GROUND	TRENCH
134	200	1	3.0"	(3)#8, #8 GROUND	TRENCH
135	200	1	3.0"	(2)#8, #8 GROUND	TRENCH

*DISTANCE CONTINUES ON ADJACENT PLAN SHEET.

NOTES: A. SERVICE RUN DISTANCE REFLECTS CONDUIT LENGTH ONLY.

LIGHTING STANDARD SCHEDULE

NO.	CCT. NO.	STATION	OFFSET	HEIGHT	ARM	LIGHT STANDARD	DISTR. TYPE	WATTAGE/LAMP TYPE
LST-53	7	548+42.4	28.3' RT.	35'	15'	COBRAHEAD, DAVIT ARM POLE	TYPE III	250W HPS
LST-54	9	550+46.0	28.5' RT.	35'	15'	COBRAHEAD, DAVIT ARM POLE	TYPE III	250W HPS
LST-55	11	552+45.7	28.5' RT.	35'	15'	COBRAHEAD, DAVIT ARM POLE	TYPE III	250W HPS
LST-56	7	554+42.4	28.5' RT.	35'	15'	COBRAHEAD, DAVIT ARM POLE	TYPE III	250W HPS

7/28/2010 5:22:38 PM
M:\PROJECTS\2003\03059_DELTRNPK\SRIMALL\CADD\2809003\PLANS\CP74_LI_SR1.DGN

DELAWARE DEPARTMENT OF TRANSPORTATION

ADDENDUMS / REVISIONS

SCALE 0 50 100 150 FEET

SR1 / I-95 INTERCHANGE

CONTRACT 28-090-03
COUNTY NEW CASTLE
BRIDGE NO.
DESIGNED BY: SMK
CHECKED BY: HEH

LIGHTING PLAN

LI-16
SHEET NO. 697
TOTAL SHTS. 803

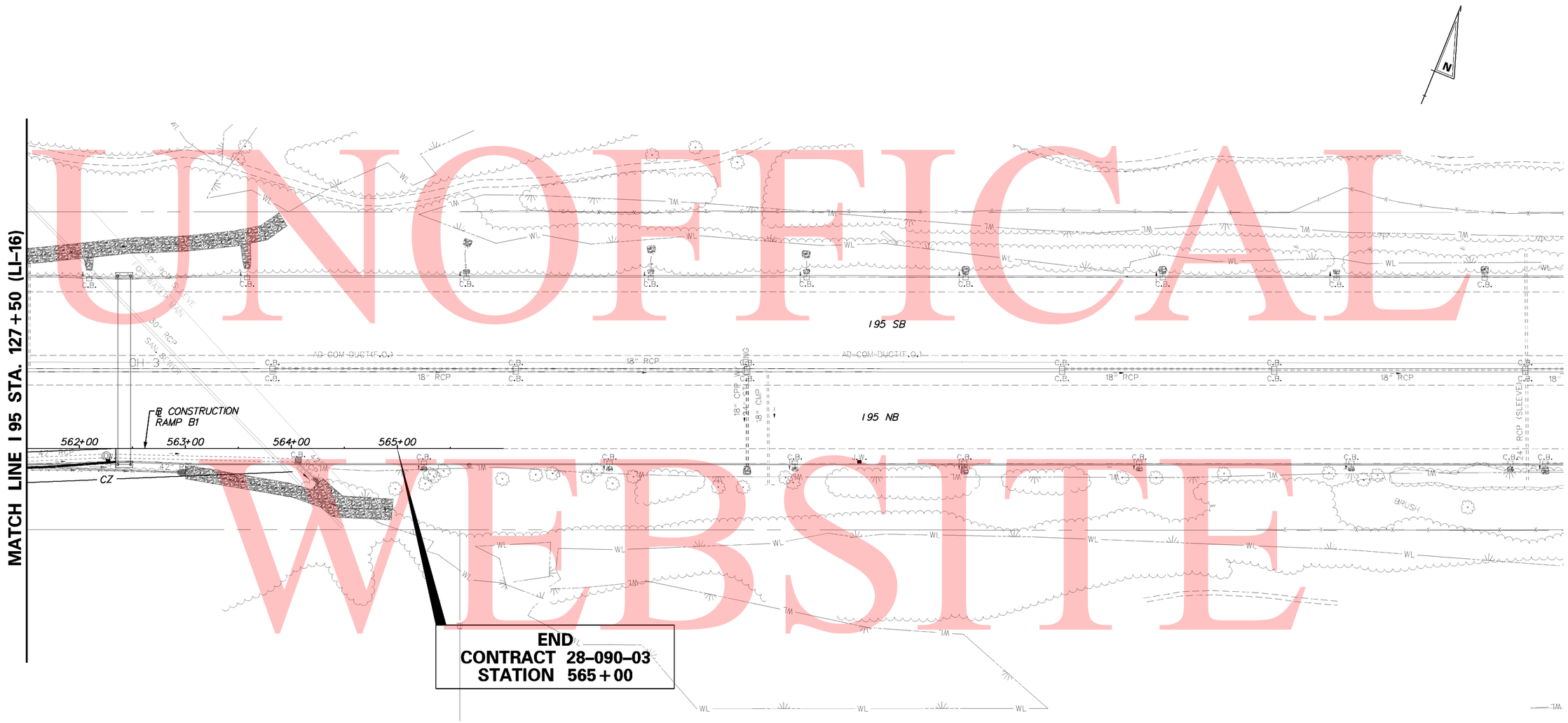

NO PROPOSED WORK FOR THIS SEGMENT OF I-95.
THIS SEGMENT SHOWN FOR CONTINUITY.

UNOFFICAL WEBSITE COPY

7/28/2010 5:23:07 PM
M:\PROJECTS\2003\03059_DELTRNPK\SR1MALL\CADD\2809003\PLANS\CP75_LI_SR1.DGN

DELAWARE DEPARTMENT OF TRANSPORTATION	ADDENDUMS / REVISIONS	SCALE 0 50 100 150 FEET	SR1 / I-95 INTERCHANGE	CONTRACT 28-090-03	BRIDGE NO.	LIGHTING PLAN	LI-17
				COUNTY NEW CASTLE	DESIGNED BY: SMK		SHEET NO. 698
					CHECKED BY: HEH		TOTAL SHTS. 803

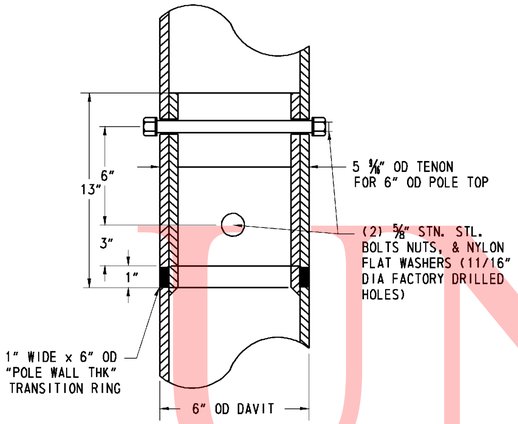

FLUSH JOINT DETAIL

NOT TO SCALE

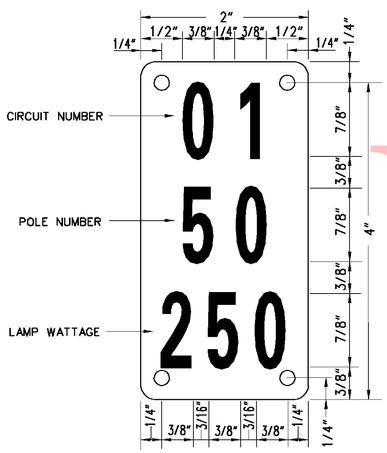

TYPICAL POLE I.D. TAG

NOT TO SCALE

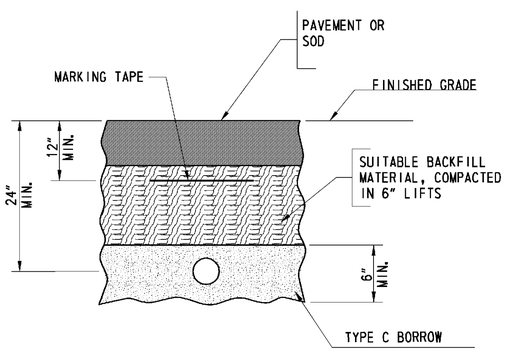

BURIED CONDUIT DETAIL

NOT TO SCALE

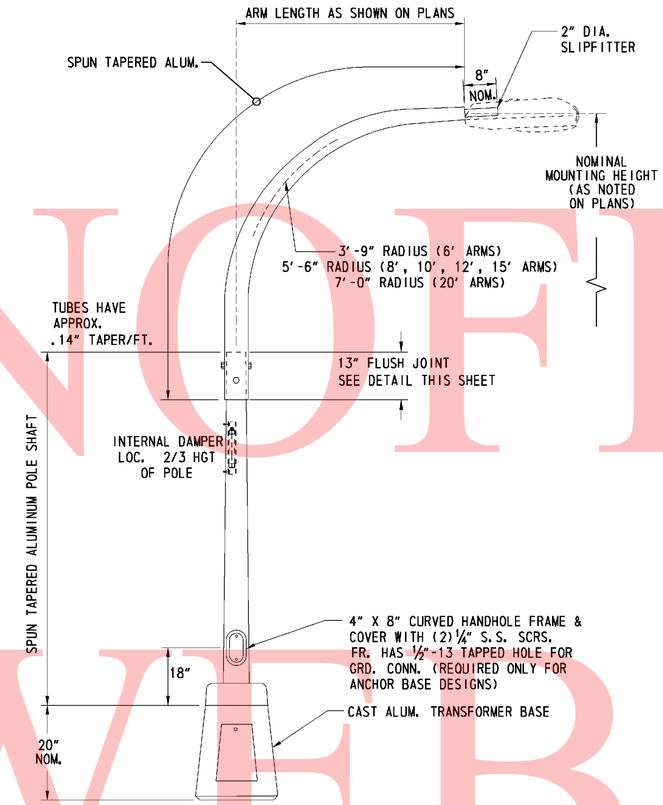

DAVIT ARM LIGHT POLE DETAIL

NOT TO SCALE

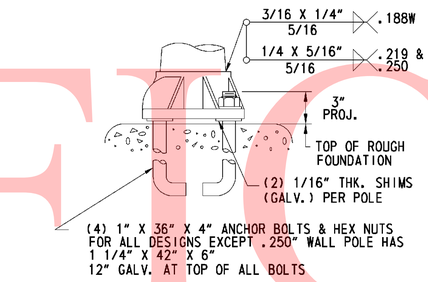

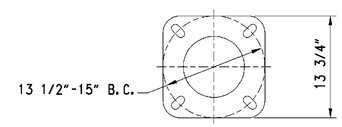

ANCHOR BASE DETAIL

NOT TO SCALE

NOTES: 1. ANCHOR BASES SHALL BE USED AT ALL LOCATIONS WHERE LIGHT POLES ARE MOUNTED ON TOP OF CONCRETE MEDIAN BARRIER.

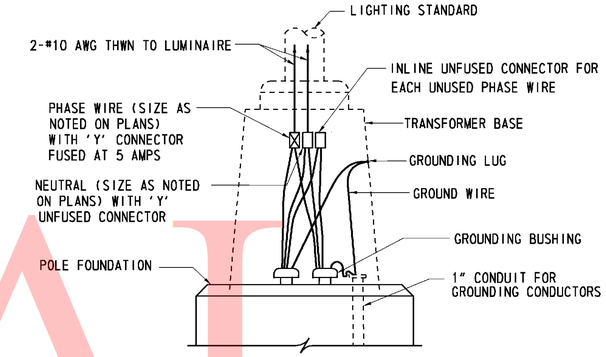

TYPICAL LUMINAIRE CONNECTION 240/480V

NOT TO SCALE

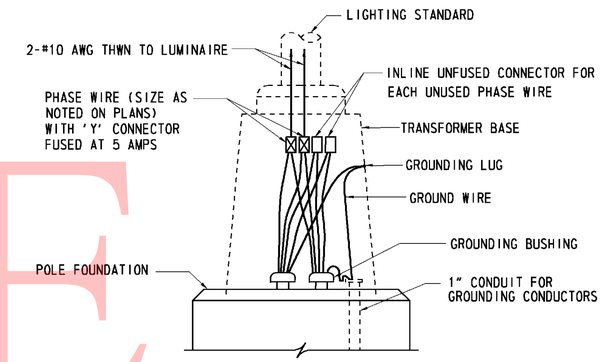

TYPICAL LUMINAIRE CONNECTION 120/240V

NOT TO SCALE

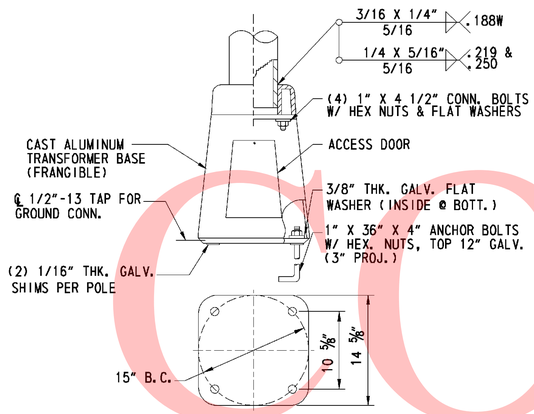

TRANSFORMER BASE DETAIL

NOT TO SCALE

NOTES: 1. TRANSFORMER BASE SHALL BE PROVIDED WITH ALL LIGHT POLES, WHETHER PROTECTED OR UNPROTECTED, UNLESS OTHERWISE NOTED.
2. REFER TO NOTES FOR THE ANCHOR BASE DETAIL FOR CONDITIONS WHERE AN ANCHOR BASE IS REQUIRED.

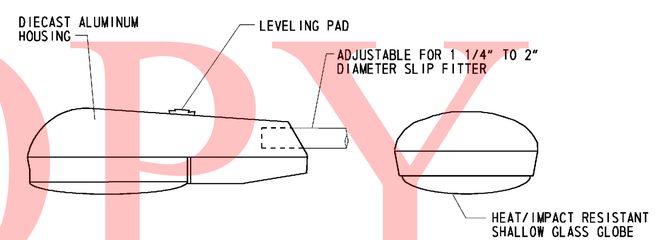

COBRAHEAD LUMINAIRE DETAIL

NOT TO SCALE

NOTES: 1. COBRAHEAD STYLE ROADWAY LUMINAIRES SHALL BE HIGH PRESSURE SODIUM WITH CUTOFF OPTICS. HORIZONTAL DISTRIBUTION TYPE AND WATTAGE SHALL BE AS SPECIFIED ON PLANS. ALL LUMINAIRES SHALL BE MOUNTED AT A ZERO DEGREE TILT ANGLE. PHOTOCONTROL SHALL BE LOCATED AT THE LIGHTING CONTROL CENTER ENCLOSURE, UNLESS OTHERWISE NOTED.

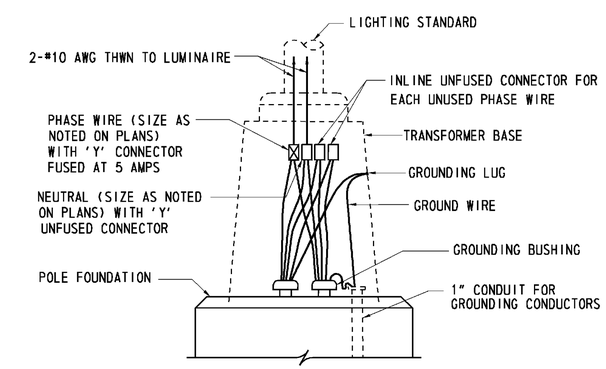

TYPICAL LUMINAIRE CONNECTION 277/480V

NOT TO SCALE

UNOFFICIAL WEBSITE COPY

8/2/2010 11:06:30 AM
M:\PROJECTS\2003\03059_DELTRNPK\SR1MALL\CADD\2809003\PLANS\CP76_LI_SR1.DGN

DELAWARE DEPARTMENT OF TRANSPORTATION	ADDENDUMS / REVISIONS	NOT TO SCALE	SR1 / I-95 INTERCHANGE	CONTRACT 28-090-03	BRIDGE NO.	LIGHTING DETAILS
				COUNTY NEW CASTLE	DESIGNED BY: SMK	
					CHECKED BY: HEH	

	LI-18
SHEET NO.	699
TOTAL SHTS.	803

UNOFFICIAL WEBSITE COPY

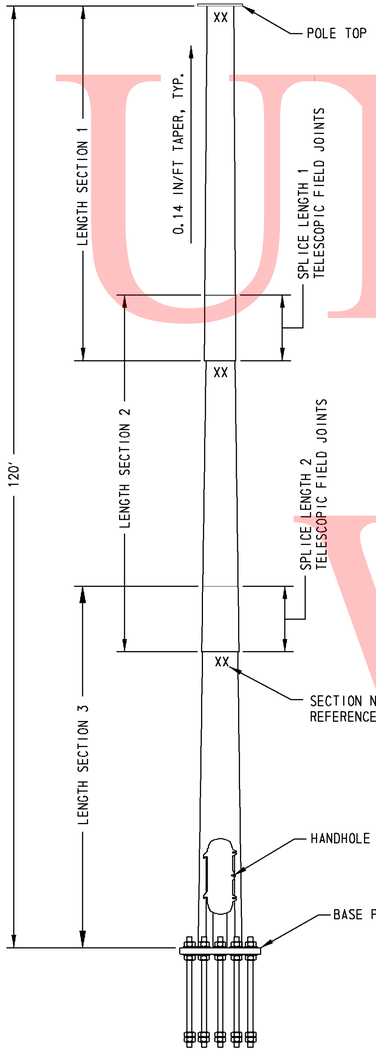

HIGH MAST TOWER POLE ASSEMBLY (3 SECTION)

ELEVATION VIEW

STRUCTURAL REQUIREMENTS FOR LIGHT POLE															
SECTION 1 (TOP)						SECTION 2					SECTION 3				
HEIGHT	LENGTH	THICKNESS	MAX SPLICE LENGTH	TIP DIA. (F-F)	BASE DIA. (F-F)	LENGTH	THICKNESS	MAX SPLICE LENGTH	TIP DIA. (F-F)	BASE DIA. (F-F)	LENGTH	THICKNESS	MAX SPLICE LENGTH	TIP DIA. (F-F)	BASE DIA. (F-F)
120'	44'-9"	0.250"	2'-0"	6.25"	12.531"	40'-0"	0.250"	2'-9"	11.688"	17.313"	40'-0"	0.313"	---	16.375"	22.000"

STRUCTURAL REQUIREMENTS FOR LIGHT POLE							
BASE PLATE & BOLTS TABLE							
BASE PLATE DIA.	BASE PLATE THK.	"TW"	"BW"	BOLT CIRCLE DIA.	NO. BOLTS	BOLT DIA.	BOLT EMBED.
36.0"	2.750"	0.375"	0.250"	29.0"	8	1.75"	45"

NOTE: STRUCTURAL REQUIREMENTS ARE BASED ON 110 MPH DESIGN WIND SPEED.

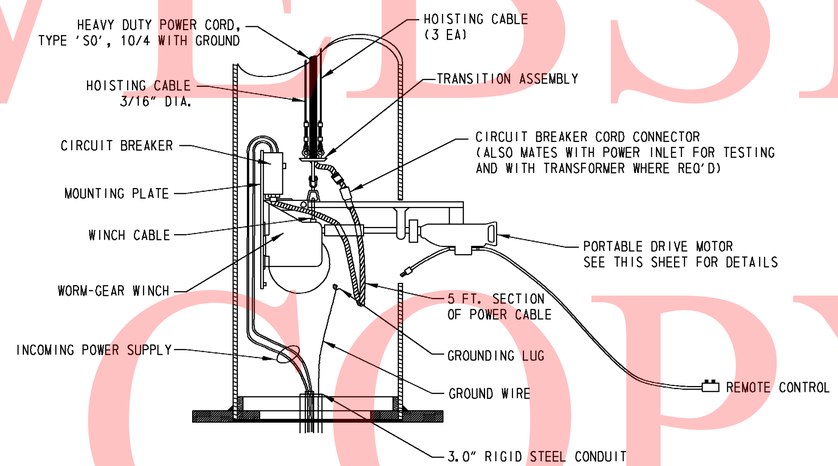

POLE BASE DETAIL

PORTABLE DRIVE MOTOR

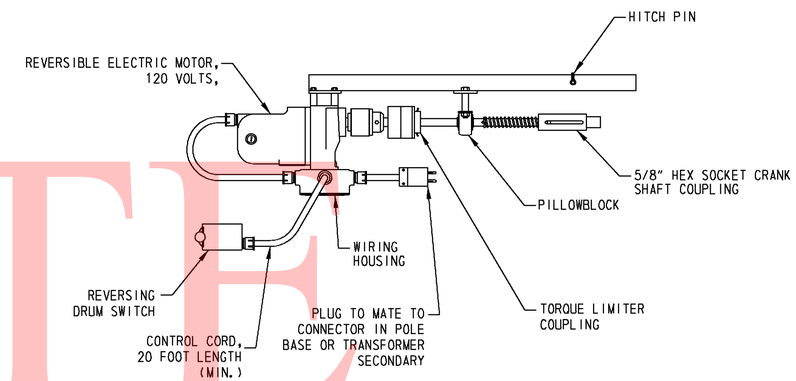

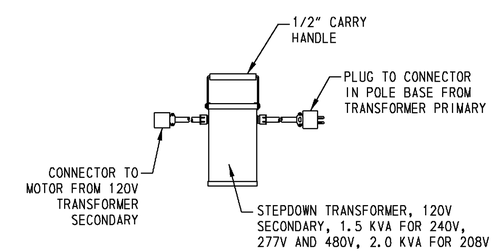

THE CONTRACTOR MAY, AT HIS OPTION, SUBMIT FOR APPROVAL ALTERNATE DESIGNS FOR HIGH-MAST LIGHT POLES AND ANCHOR BOLTS. ALL ALTERNATE DESIGNS SHALL BE SUBSTANTIATED WITH DESIGN CALCULATIONS.

9/8/2010 3:48:59 PM
M:\PROJECTS\2003\03059_DELTRNPK\SRMALL\CADD\2809003\PLANS\CP77_LI_SR1.DGN

DELAWARE DEPARTMENT OF TRANSPORTATION	ADDENDUMS / REVISIONS	NOT TO SCALE	SR1 / I-95 INTERCHANGE	CONTRACT 28-090-03 / COUNTY NEW CASTLE	BRIDGE NO. / DESIGNED BY: SMK / CHECKED BY: HEH	LIGHTING DETAILS

LI-19
SHEET NO. 700
TOTAL SHTS. 803

UNOFFICAL WEBSITE COPY

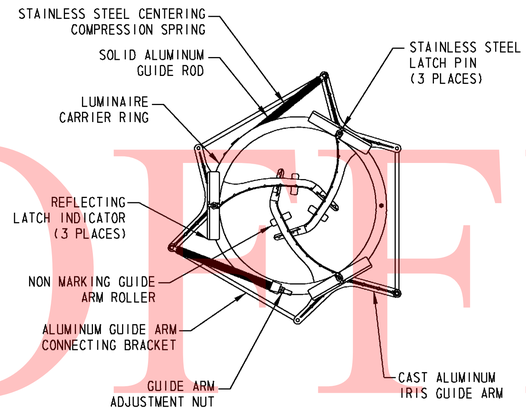

RING ASSEMBLY

PLAN VIEW

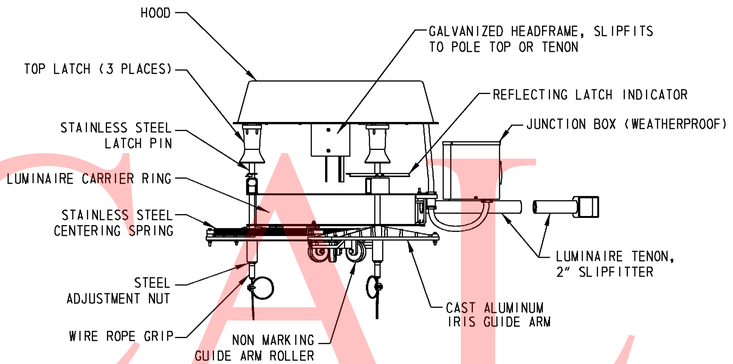

HEADFRAME AND RING ASSEMBLY

ELEVATION VIEW

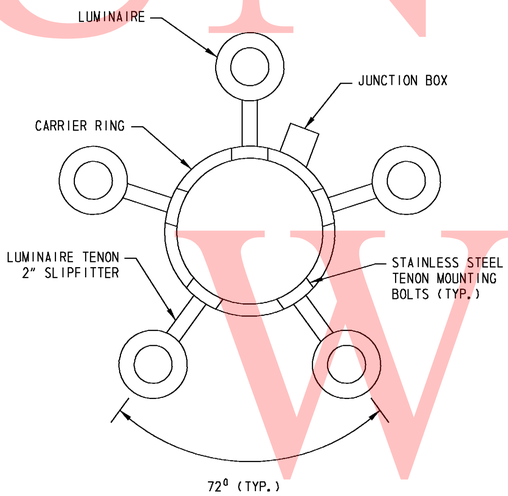

FIVE LUMINAIRE ARRAY

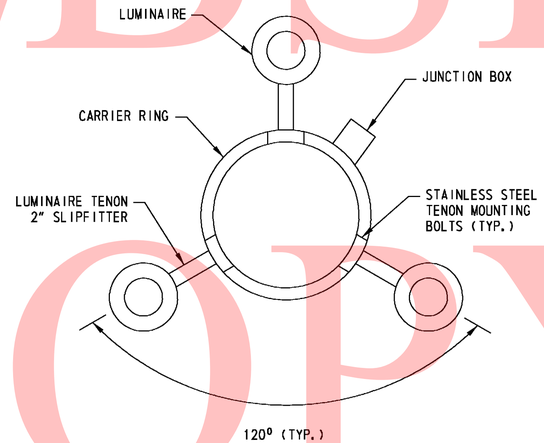

THREE LUMINAIRE ARRAY

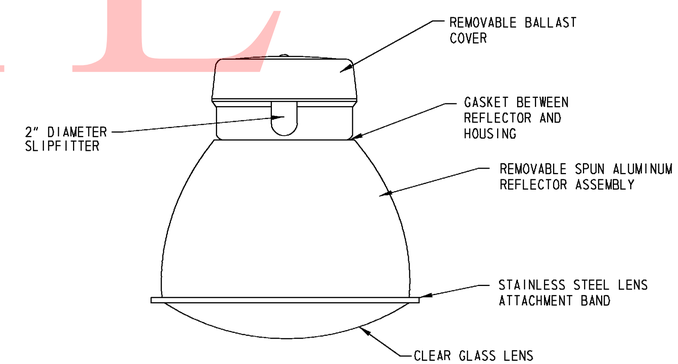

HIGH MAST LUMINAIRE

NOTES:

1. LUMINAIRES SHALL BE 1000W H.P.S. WITH CUTOFF OPTICS, TYPE V HORIZONTAL DISTRIBUTION, AND SHORT VERTICAL DISTRIBUTION.

9/9/2010 4:07:08 PM
M:\PROJECTS\2003\03059_DELTRNPK\SR1MALL\CADD\2809003\PLANS\CP77A_LI_SR1.DGN

DELAWARE DEPARTMENT OF TRANSPORTATION	ADDENDUMS / REVISIONS	NOT TO SCALE	SR1 / I-95 INTERCHANGE	CONTRACT 28-090-03	BRIDGE NO.	LIGHTING DETAILS	LI-20
				COUNTY NEW CASTLE	DESIGNED BY: SMK		SHEET NO. 700A
					CHECKED BY: HEH		TOTAL SHTS. 803

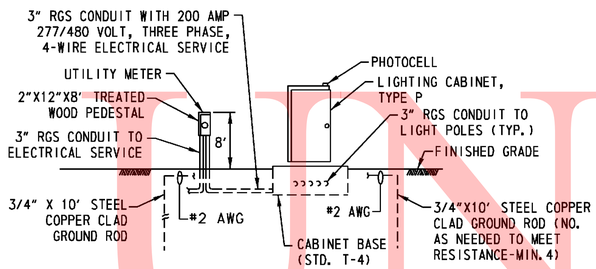

ELECTRICAL SERVICE ON PEDESTAL AND LIGHTING CONTROL AND DISTRIBUTION ENCLOSURE (FRONT VIEW)

NOT TO SCALE

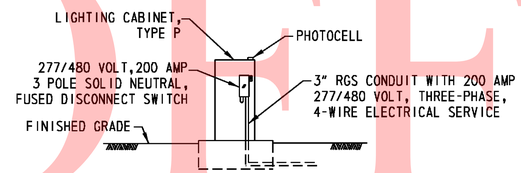

LIGHTING CONTROL AND DISTRIBUTION ENCLOSURE (REAR VIEW)

NOT TO SCALE

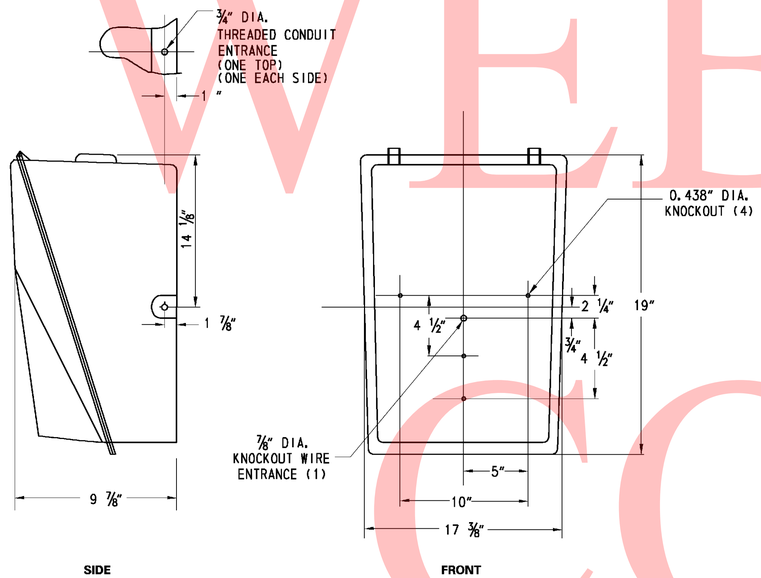

UNDERPASS LIGHTING DETAIL

NOT TO SCALE

UNDERPASS LIGHTING DETAIL NOTES:

1. UNDERPASS LIGHT SHALL BE EQUIPPED WITH A 70 WATT HIGH PRESSURE SODIUM LAMP.

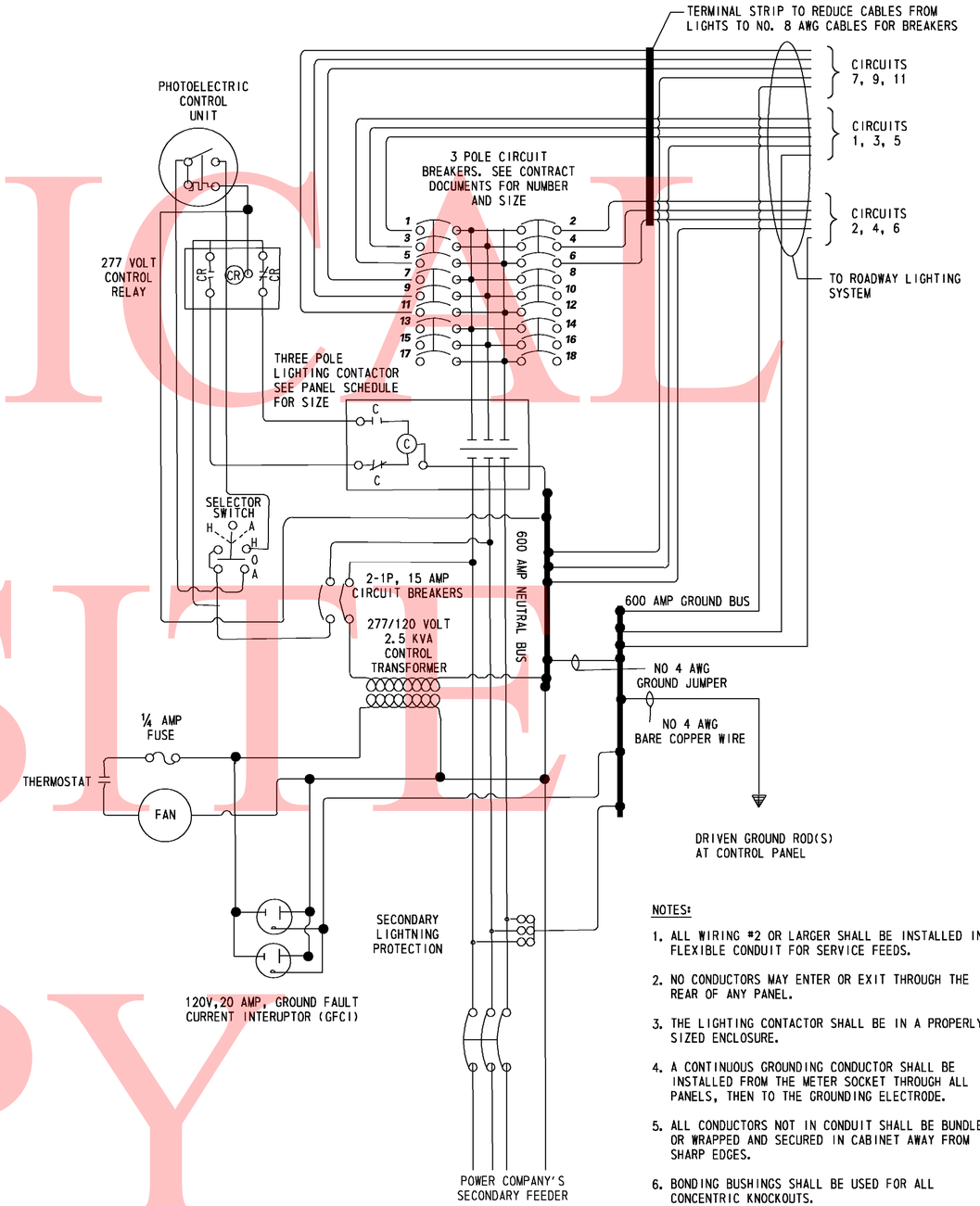

LIGHTING CONTROL CENTER WIRING DIAGRAM

NOT TO SCALE

NOTES:

1. ALL WIRING #2 OR LARGER SHALL BE INSTALLED IN FLEXIBLE CONDUIT FOR SERVICE FEEDS.
2. NO CONDUCTORS MAY ENTER OR EXIT THROUGH THE REAR OF ANY PANEL.
3. THE LIGHTING CONTACTOR SHALL BE IN A PROPERLY SIZED ENCLOSURE.
4. A CONTINUOUS GROUNDING CONDUCTOR SHALL BE INSTALLED FROM THE METER SOCKET THROUGH ALL PANELS, THEN TO THE GROUNDING ELECTRODE.
5. ALL CONDUCTORS NOT IN CONDUIT SHALL BE BUNDLED OR WRAPPED AND SECURED IN CABINET AWAY FROM SHARP EDGES.
6. BONDING BUSHINGS SHALL BE USED FOR ALL CONCENTRIC KNOCKOUTS.
7. ALL CABLES SHALL MEET AMPACITY REQUIREMENTS OF THE NATIONAL ELECTRIC CODE. THE MINIMUM CABLE SIZE WITHIN THE CONTROL CENTER SHALL BE NO. 12 AWG.
8. REFER TO PANEL SCHEDULE FOR NUMBER AND SIZE OF CIRCUIT BREAKERS.

UNOFFICIAL WEBSITE COPY

DELAWARE DEPARTMENT OF TRANSPORTATION	ADDENDUMS / REVISIONS	NOT TO SCALE	SR1 / I-95 INTERCHANGE	CONTRACT 28-090-03	BRIDGE NO.	LIGHTING DETAILS	LI-21
				COUNTY NEW CASTLE	DESIGNED BY: SMK		SHEET NO. 701
					CHECKED BY: HEH		TOTAL SHTS. 803

8/2/2010 10:58:44 AM
M:\PROJECTS\2003\03059_DELTRNPK\SR1MALL\CADD\2809003\PLANS\CP78_LI_SR1.DGN

PROPOSED RAMP C1 LIGHTING LOAD CENTER

277/480V
3 PHASE, 4 WIRE + GND
200 AMP M.C.B.

600 AMP BUS
200 AMP, 3P CONTACTOR
LUMINAIRE VOLTAGE: 277 VOLTS

CKT. NO.	EQUIPMENT SERVED	CONNECTED LOAD KW	CONNECTED LOAD AMPS	PHASE AND VOLTS	BRANCH CIRCUIT BREAKERS NUMBER OF POLES	BRANCH CIRCUIT BREAKERS FRAME SIZE	BRANCH CIRCUIT BREAKERS TRIP SIZE	REMARKS	CKT. NO.	EQUIPMENT SERVED	CONNECTED LOAD KW	CONNECTED LOAD AMPS	PHASE AND VOLTS	BRANCH CIRCUIT BREAKERS NUMBER OF POLES	BRANCH CIRCUIT BREAKERS FRAME SIZE	BRANCH CIRCUIT BREAKERS TRIP SIZE	REMARKS
1	HM-1 HM-3	4.432	16.0	1/277	3	100	20	4-1000W HPS	2	HM-2 HM-4	4.432	16.0	1/277	3	100	20	4-1000W HPS
3	HM-1 HM-3	3.324	12.0	2/277				3-1000W HPS	4	HM-2 HM-4	3.324	12.0	2/277				3-1000W HPS
5	HM-1 HM-3	3.324	12.0	3/277				3-1000W HPS	6	HM-2 HM-4	3.324	12.0	3/277				3-1000W HPS
7	LST-13, LST-15, LST-19 HM-7, UP-13	3.296	11.9	1/277	3	100	20	1-70W HPS 3-250W HPS 2-1000W HPS	8	LST-21 HM-5, UP-9	1.524	5.5	1/277	3	100	20	1-70W HPS 1-250W HPS 1-1000W HPS
9	LST-14, LST-16, LST-20 HM-7, UP-14	2.188	7.9	2/277				1-70W HPS 3-250W HPS 1-1000W HPS	10	HM-5 UP-10 UP-15	2.382	8.6	2/277				2-70W HPS 2-1000W HPS
11	LST-17, LST-18 HM-7, UP-12	2.964	10.7	3/277				1-70W HPS 2-250W HPS 2-1000W HPS	12	HM-5 UP-11, UP-16	1.274	4.6	3/277				2-70W HPS 2-1000W HPS
13	LST-22, LST-23, LST-24 HM-6	2.105	7.6	1/277	3	100	20	3-250W HPS 1-1000W HPS	14	SPARE				3	100	20	SPARE
15	LST-EX, LST-E-2, LST-25 HM-6	2.105	7.6	2/277				3-250W HPS 1-1000W HPS	18	SPARE							
17	LST-EX, LST-E-1 HM-6	1.773	6.4	3/277				2-250W HPS 1-1000W HPS	20	SPARE							

PROPOSED CHUCHMAN'S ROAD LIGHTING LOAD CENTER

277/480V
3 PHASE, 4 WIRE + GND
200 AMP M.C.B.

600 AMP BUS
200 AMP, 3P CONTACTOR
LUMINAIRE VOLTAGE: 277 VOLTS

CKT. NO.	EQUIPMENT SERVED	CONNECTED LOAD KW	CONNECTED LOAD AMPS	PHASE AND VOLTS	BRANCH CIRCUIT BREAKERS NUMBER OF POLES	BRANCH CIRCUIT BREAKERS FRAME SIZE	BRANCH CIRCUIT BREAKERS TRIP SIZE	REMARKS	CKT. NO.	EQUIPMENT SERVED	CONNECTED LOAD KW	CONNECTED LOAD AMPS	PHASE AND VOLTS	BRANCH CIRCUIT BREAKERS NUMBER OF POLES	BRANCH CIRCUIT BREAKERS FRAME SIZE	BRANCH CIRCUIT BREAKERS TRIP SIZE	REMARKS
1	LST-39, LST-42 LST-45, LST-48	1.330	4.8	1/277	3	100	20	4-250W HPS	2	LST-32, LST-35 LST-38	0.997	3.6	1/277	3	100	20	3-250W HPS
3	LST-40, LST-43 LST-46	0.997	3.6	2/277				3-250W HPS	4	LST-33, LST-36	0.665	2.4	2/277				2-250W HPS
5	LST-41, LST-44 LST-47, LST-49	1.330	4.8	3/277				4-250W HPS	6	LST-34, LST-37	0.665	2.4	3/277				2-250W HPS
7	LST-50, LST-53 LST-56	0.997	3.6	1/277	3	100	20	3-250W HPS	8	SPARE				3	100	20	SPARE
9	LST-51, LST-53	0.665	2.4	2/277				2-250W HPS	10	SPARE							
11	LST-52, LST-55	0.665	2.4	3/277				2-250W HPS	12	SPARE							

UNOFFICIAL WEBSITE COPY

9/9/2010 4:12:17 PM
M:\PROJECTS\2003\03059_DELTRNPK\SRMALL\CADD\2809003\PLANS\CP78A_LI_SR.DGN

DELAWARE
DEPARTMENT OF TRANSPORTATION

ADDENDUMS / REVISIONS

NOT TO SCALE

SR1 / I-95 INTERCHANGE

CONTRACT 28-090-03
COUNTY NEW CASTLE
BRIDGE NO.
DESIGNED BY: SMK
CHECKED BY: HEH

LIGHTING DETAILS

LI-22
SHEET NO. 702
TOTAL SHTS. 803

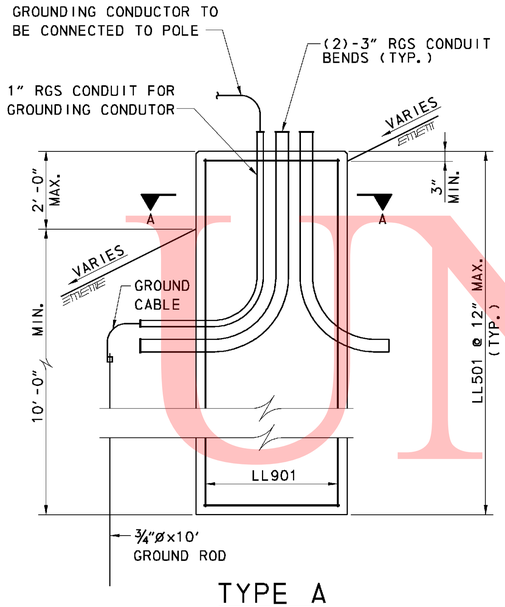

TYPE A

SCALE: NTS

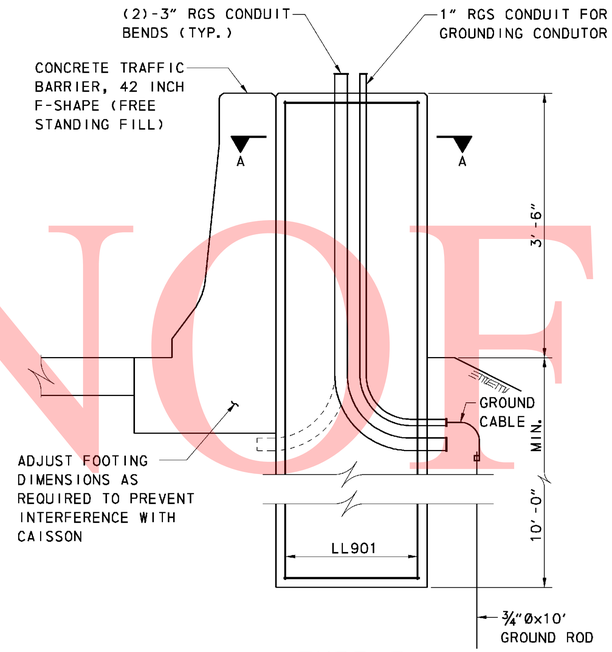

TYPE B

SCALE: NTS

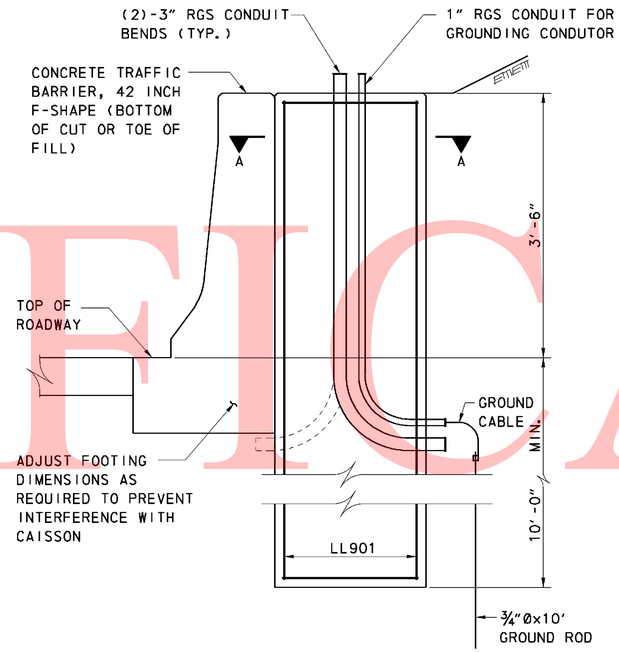

TYPE C

SCALE: NTS

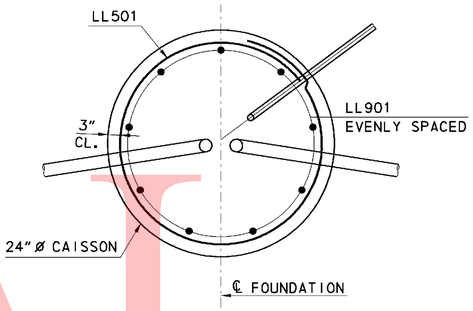

SECTION A-A

LOW LEVEL LIGHTING FOUNDATION

SCALE: 1½"=1'-0"

GENERAL NOTES

SPECIFICATIONS: DELDOT STANDARD SPECIFICATIONS, AUGUST 2001 AND ALL CURRENT INTERIMS.

STANDARD SPECIFICATIONS FOR STRUCTURAL SUPPORTS FOR HIGHWAY SIGNS, LUMINAIRES AND TRAFFIC SIGNALS, 4TH EDITION, 2001, AND ALL CURRENT INTERIMS.

PORTLAND CEMENT CONCRETE: CONCRETE SHALL CONFORM TO SECTION 812, CLASS B.

REINFORCEMENT: REINFORCEMENT SHALL CONFORM TO SECTION 603, GRADE 60.

ANCHOR BOLTS: ANCHOR BOLTS SHALL BE HOT-DIPPED GALVANIZED AND MEET THE REQUIREMENTS OF AASHTO M 314. ANCHOR BOLTS SHALL HAVE A MINIMUM YIELD STRENGTH OF 55,000 PSI.

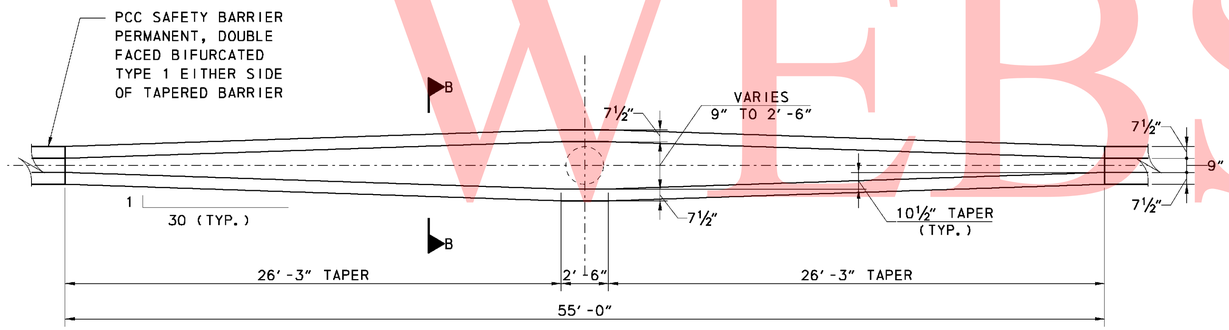

PLAN

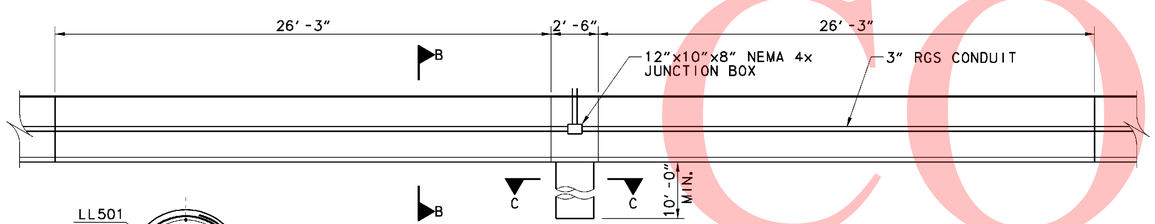

ELEVATION

TYPE D

SCALE: NTS

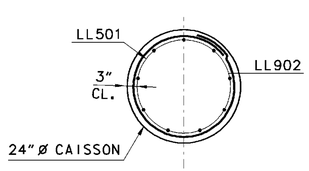

SECTION C-C

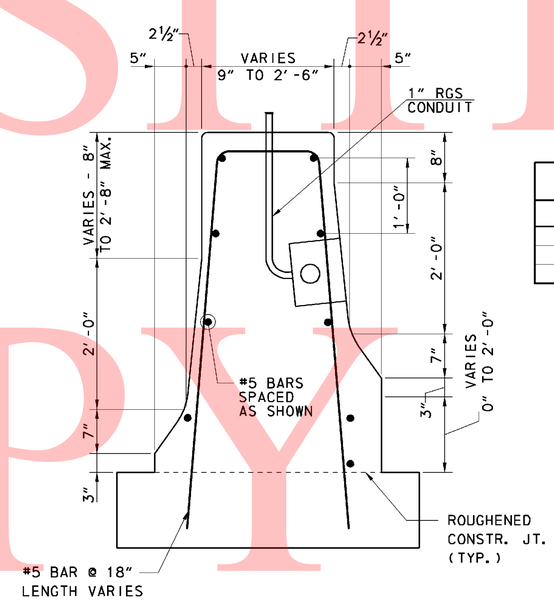

SECTION B-B

SCALE: NTS

REINFORCING BAR CHART

QTY	SIZE	LENGTH	MARK	TYPE	B	C	O
914	5	6'-2 9/16"	LL501	T3	1'-6"	4'-8 9/16"	1'-6"
522	9	13'-6"	LL901	STR			
36	9	11'-6"	LL902	STR			

NOTES:

1. COORDINATE ANCHOR BOLT PLACEMENT AND EMBEDMENT LENGTH WITH LOW LEVEL POLE MANUFACTURER.
2. PAYMENT FOR LOW LIGHTING FOUNDATIONS SHALL BE PAID FOR UNDER ITEM 602774 - PCC MASONRY FOR LIGHT POLE FOUNDATION.

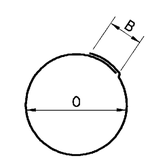

C= CIRCUMFERENCE

TYPE T3

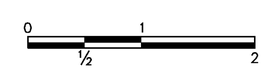

SCALE: 1½"=1'-0"

UNOFFICIAL WEBSITE COPY

DELAWARE DEPARTMENT OF TRANSPORTATION

ADDENDUMS / REVISIONS

SR1 / I-95 INTERCHANGE

CONTRACT	BRIDGE NO.	1-223
28-090-03	DESIGNED BY:	JMS
COUNTY		
NEW CASTLE	CHECKED BY:	JSW

LIGHTING DETAILS
LIGHT POLE FOUNDATIONS

LI-23

SHEET NO. 703

TOTAL SHTS. 803

8/2/2010 2:16:51 PM
M:\PROJECTS\2003\03059_DELTRNPK\SR1MALL\CADD\2809003\PLANS\CP78B_LL_SR1.DGN

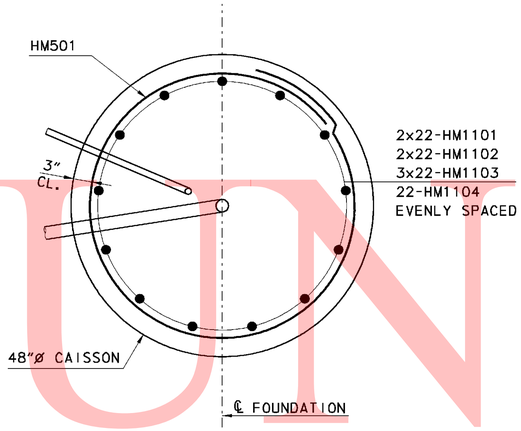

PLAN
HIGH MAST LIGHTING FOUNDATION

SCALE: 1"= 1'-0"

HIGH MAST LIGHTING FOUNDATION LENGTHS	
NO.	A
HM-1	25'-0"
HM-2	15'-0"
HM-3	20'-0"
HM-4	15'-0"
HM-5	20'-0"
HM-6	20'-0"
HM-7	35'-0"
HM2-1	25'-0"

GENERAL NOTES

SPECIFICATIONS: DELDOT STANDARD SPECIFICATIONS, AUGUST 2001 AND ALL CURRENT INTERIMS.

STANDARD SPECIFICATIONS FOR STRUCTURAL SUPPORTS FOR HIGHWAY SIGNS, LUMINAIRES AND TRAFFIC SIGNALS, 4TH EDITION, 2001, AND ALL CURRENT INTERIMS.

PORTLAND CEMENT CONCRETE : CONCRETE SHALL CONFORM TO SECTION 812, CLASS B.

REINFORCEMENT: REINFORCEMENT SHALL CONFORM TO SECTION 603, GRADE 60.

ANCHOR BOLTS: ANCHOR BOLTS SHALL BE HOT-DIPPED GALVANIZED AND MEET THE REQUIREMENTS OF AASHTO M 314. ANCHOR BOLTS SHALL HAVE A MINIMUM YIELD STRENGTH OF 55,000 PSI.

NOTES

1. COORDINATE ANCHOR BOLT PLACEMENT AND EMBEDMENT LENGTH WITH HIGH MAST POLE MANUFACTURER.
2. PAYMENT FOR HIGH MAST LIGHTING FOUNDATIONS INCLUDING CONCRETE PADS, SHALL BE PAID FOR UNDER ITEM #746561, HIGH MAST LIGHTING POLE AND FOUNDATION.
3. FOR HM-3, TEMPORARY CASING SHALL BE USED FOR THE ENTIRE LENGTH OF THE DRILLED SHAFT DURING CONSTRUCTION IN ACCORDANCE WITH THE SPECIFICATIONS.

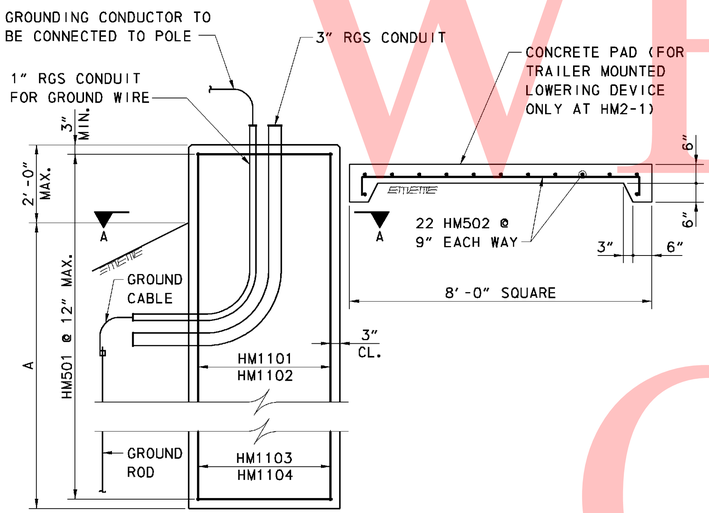

ELEVATION
HIGH MAST LIGHTING FOUNDATION

SCALE: NTS

REINFORCING BAR CHART							
QTY.	SIZE	LENGTH	MARK	TYPE	B	C	O
183	5	13'-0"	HM501	T3	2'-2"	10'-10"	3'-5⅜"
44	11	24'-6"	HM1101	STR			
44	11	14'-6"	HM1102	STR			
66	11	19'-6"	HM1103	STR			
22	11	34'-6"	HM1104	STR			
22	5	8'-6"	HM502	T2	7'-6"	6"	6"

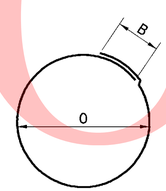

C= CIRCUMFERENCE

TYPE T3

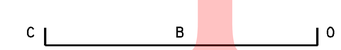

TYPE T2

0 1 4
.5 2
SCALE: 1" = 1'-0"

UNOFFICAL WEBSITE COPY

8/2/2010 2:32:12 PM
M:\PROJECTS\2003\03059_DELTRNPK\SRIMALL\CADD\2809003\PLANS\CP78C_LI_SR1.DGN

DELAWARE DEPARTMENT OF TRANSPORTATION

ADDENDUMS / REVISIONS

SR1 / I-95 INTERCHANGE

CONTRACT	BRIDGE NO.	
28-090-03	DESIGNED BY:	JMS
COUNTY		
NEW CASTLE	CHECKED BY:	JSW

HIGHMAST LIGHTING FOUNDATIONS

LI-24
SHEET NO.
704
TOTAL SHTS.
803

UTILITY TEST HOLE SCHEDULE						
NO.	UTILITY	STATION	OFFSET	GRND EL.	COVER	O.D. & MATERIAL
TH-1	ELEC (DOT)	835+20.99	51.91' RT	36.69	2.75	2.5" STEEL
TH-2	ELEC (DOT)	217+57.25	21.74' RT	38.25	2.46	2.5" STEEL
TH-4	TELE (VER)	1638+01.65	42.77' RT	45.14	3.53	(6)4" PLAS. COND.

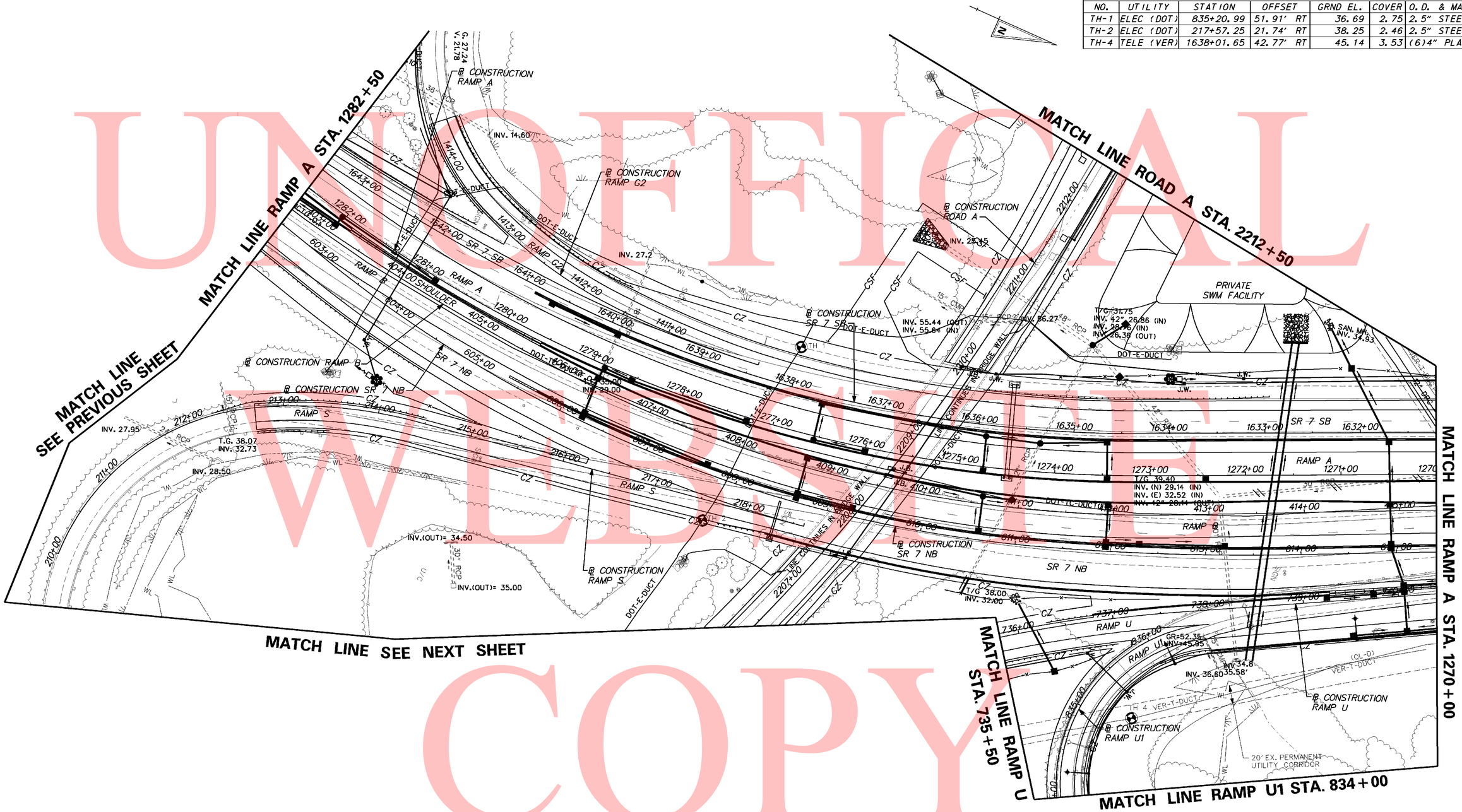

UNOFFICIAL WEBSITE COPY

9/10/2010 9:57:02 AM
M:\PROJECTS\2003\03059_DELTRNPK\SR1MALL\CADD\2809003\PLANS\UT01_SR1.DGN

DELAWARE DEPARTMENT OF TRANSPORTATION	ADDENDUMS / REVISIONS	SCALE 0 50 100 150 FEET	SR1 / I-95 INTERCHANGE	CONTRACT 28-090-03	BRIDGE NO.	UTILITY RELOCATION PLAN	SHEET NO. 705
				COUNTY NEW CASTLE	DESIGNED BY:		TOTAL SHTS. 803
					CHECKED BY:		

UTILITY TEST HOLE SCHEDULE						
NO.	UTILITY	STATION	OFFSET	GRND EL.	COVER	O.D. & MATERIAL
TH-5	WATER (A)	1337+36.07	51.08' RT	53.61	5.40	12.75" D.I.
TH-6	WATER (A)	1338+02.35	11.90' LT	54.37	4.67	12.75" D.I.
TH-7	TELE (VER)	1337+26.26	41.13' RT	54.56	4.37	(6)4" PLAS. COND.
TH-8	TELE (VER)	1337+95.09	22.20' LT	54.11	3.10	24"x14" RPC DUCT

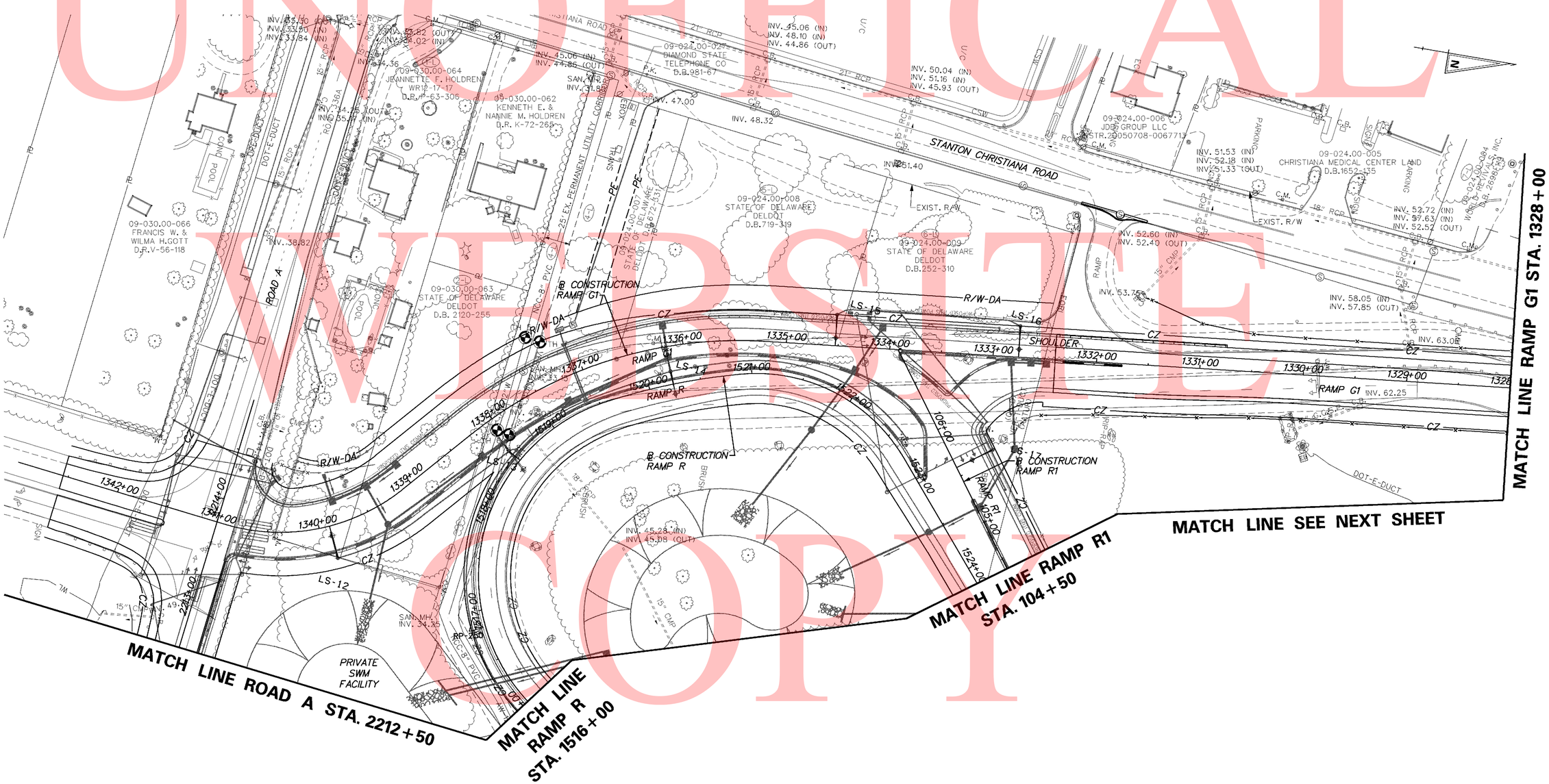

UNOFFICAL WEBSITE COPY

9/10/2010 11:21:40 AM
M:\PROJECTS\2003\03059_DELTRNPK\SRMALL\CADD\2809003\PLANS\UT02_SR1.DGN

DELAWARE DEPARTMENT OF TRANSPORTATION	ADDENDUMS / REVISIONS	SCALE 0 50 100 150 FEET	SR1 / I-95 INTERCHANGE	CONTRACT 28-090-03	BRIDGE NO.	UTILITY RELOCATION PLAN	SHEET NO. 706
				COUNTY NEW CASTLE	DESIGNED BY:		TOTAL SHTS. 803
					CHECKED BY:		

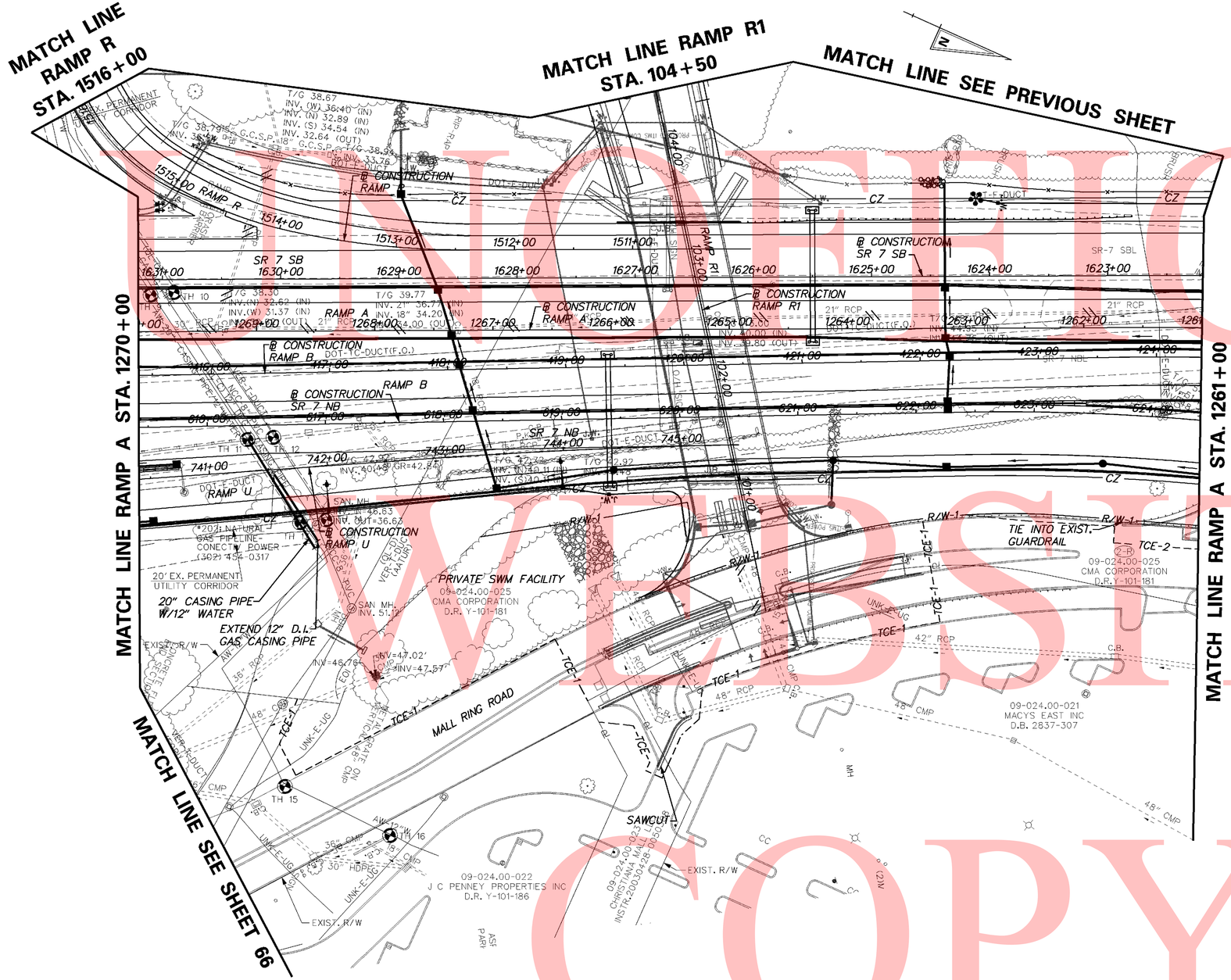

UNOFFICIAL WEBSITE COPY

UTILITY TEST HOLE SCHEDULE

NO.	UTILITY	STATION	OFFSET	GRND EL.	COVER	O.D. & MATERIAL
TH-9	WATER (A)	1269+89.56	30.88' RT	43.41	7.61	21" STL CASING
	GAS			43.41	6.04	13" METALLIC
TH-10	TELE (VER)	1269+69.90	32.99' RT	43.55	6.60	24"x16" RPC DUCT
TH-11	WATER (A)	616+34.14	11.78' RT	44.67	7.59	21" STL CASING
TH-12	TELE (VER)	616+55.93	10.37' RT	44.48	6.80	24"x14" RPC DUCT
TH-13	WATER (A)	741+73.57	46.32' RT	60.23	5.02	12.75" D.I.
TH-14	TELE (VER)	741+96.16	45.45' RT	59.79	5.96	(6)4" PLAS.COND.
TH-15	WATER (A)	741+45.03	268.11' RT	61.03	4.21	12.75" D.I.
TH-16	WATER (A)	742+30.77	315.86' RT	61.50	4.57	12.75" D.I.

9/10/2010 10:23:49 AM
M:\PROJECTS\2003\03059_DELTRNPK\SRIMALL\CADD\2809003\PLANS\UT03_SR1.DGN

DELAWARE DEPARTMENT OF TRANSPORTATION

ADDENDUMS / REVISIONS

SCALE 0 50 100 150 FEET

SR1 / I-95 INTERCHANGE

CONTRACT	BRIDGE NO.	
28-090-03	DESIGNED BY:	
COUNTY		
NEW CASTLE	CHECKED BY:	

UTILITY RELOCATION PLAN

SHEET NO. 707
TOTAL SHTS. 803

UTILITY TEST HOLE SCHEDULE						
NO.	UTILITY	STATION	OFFSET	GRND EL.	COVER	O. D. & MATERIAL
TH-19	ELEC (DPE)	1817+61.64	38.86' RT	67.45	2.84	24"x18" RPC DUCT
TH-20	XXXXXXXX	1316+85.21	1.51' RT	XXXX.XX	XX.XX	XX" XXXXXXXXXX
TH-21	ELEC (DPE)	1612+76.13	18.66' LT	71.90	1.11	26"x12" RPC DUCT
TH-22	ELEC (DPE)	632+98.54	8.07' RT	65.41	3.48	27"x19" RPC DUCT

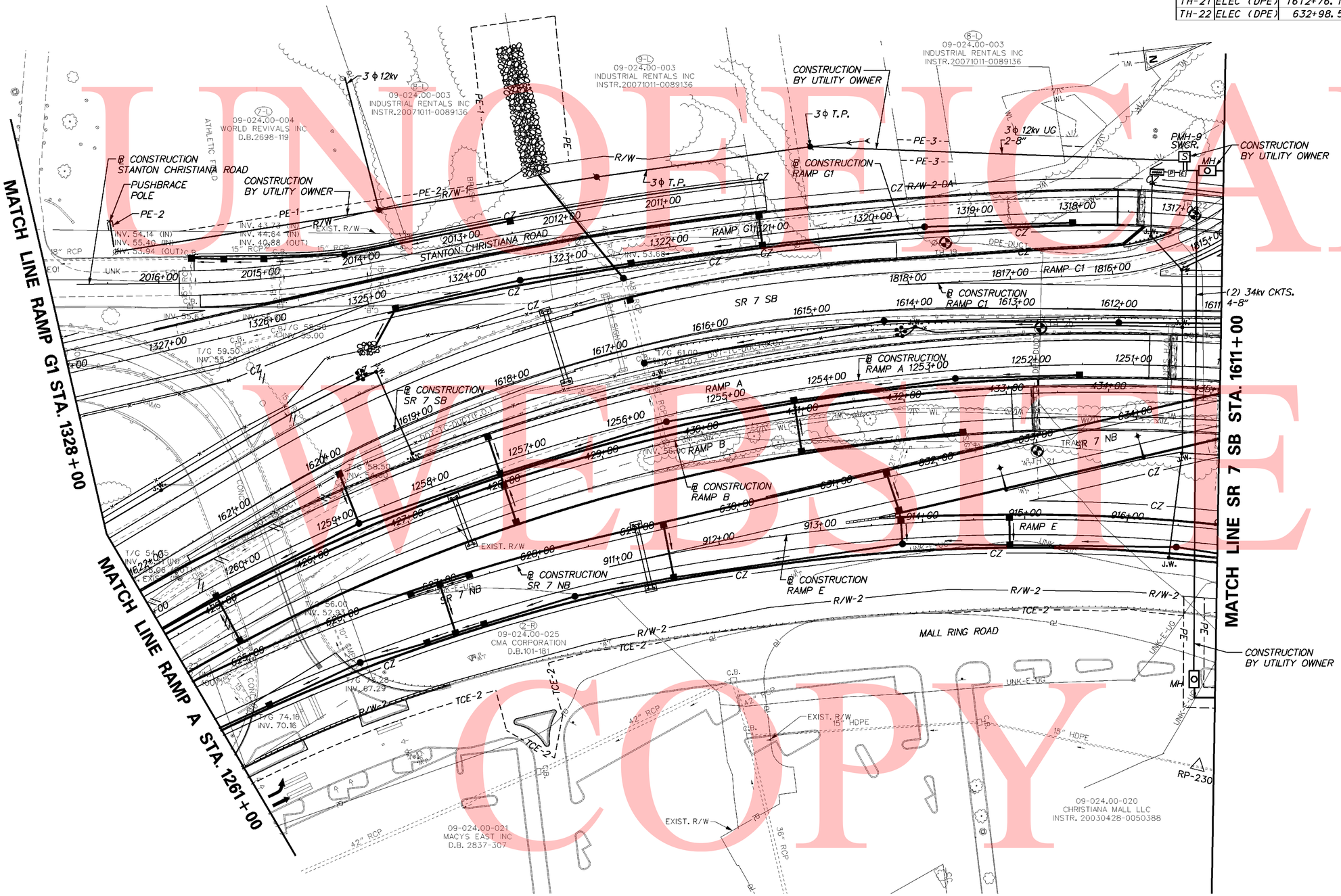

UNOFFICIAL WEBSITE COPY

6/24/2009 1:51:40 PM
M:\PROJECTS\2003\03059_DELTRNPK\SRMALL\CADD\2809003\PLANS\UT04_SR.DGN

DELAWARE DEPARTMENT OF TRANSPORTATION	ADDENDUMS / REVISIONS	SCALE 0 50 100 150 FEET	SR1 / I-95 INTERCHANGE	CONTRACT 28-090-03	BRIDGE NO.	UTILITY RELOCATION PLAN	SHEET NO. 708
				COUNTY NEW CASTLE	DESIGNED BY:		TOTAL SHTS. 803
					CHECKED BY:		

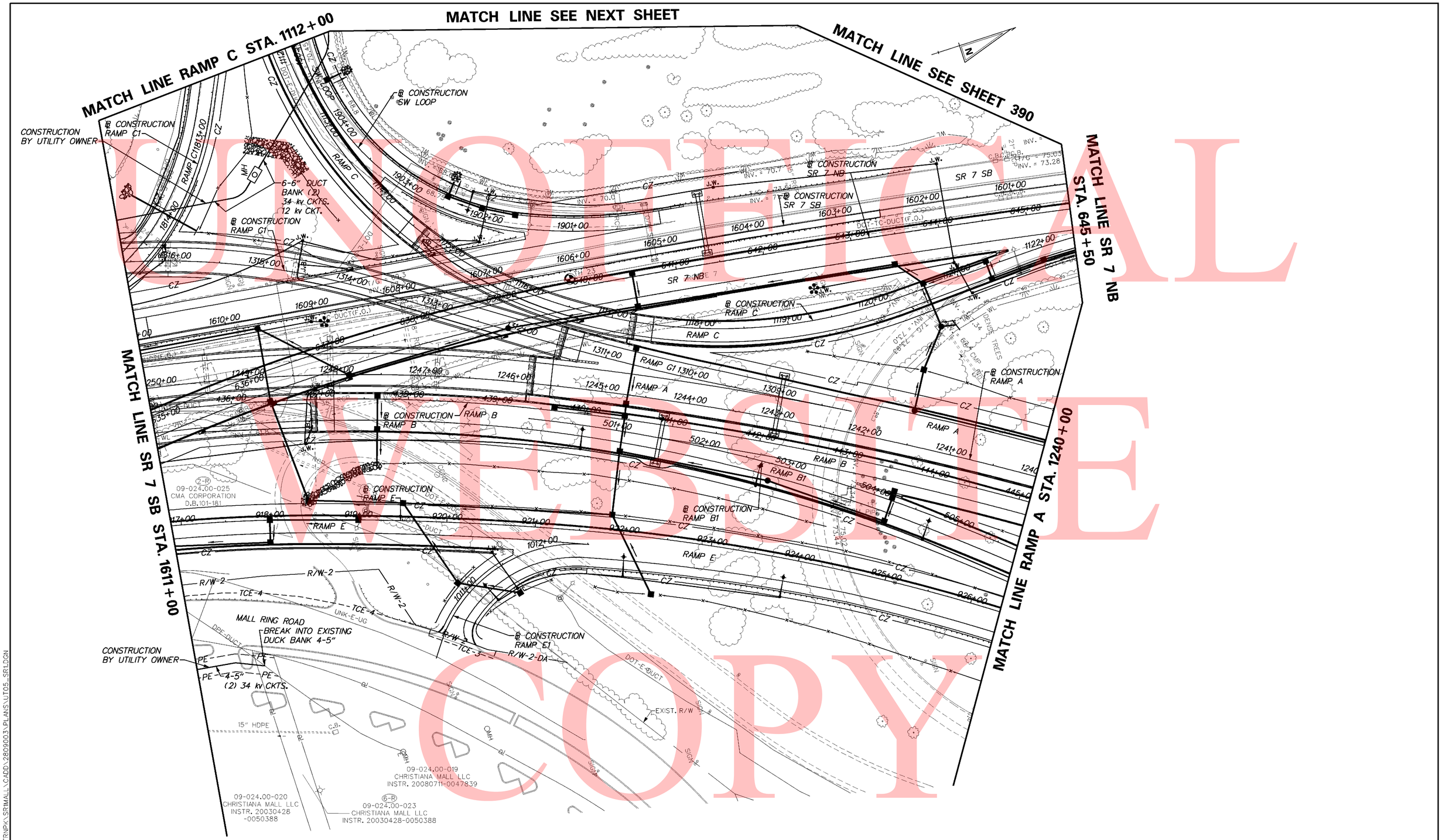

UNOFFICIAL WEBSITE COPY

UTILITY TEST HOLE SCHEDULE

NO.	UTILITY	STATION	OFFSET	GRND EL.	COVER	O.D. & MATERIAL
TH-23	COMM (DOT)	1606+08.00	17.57' LT	71.72	1.43	2.75" STEEL

DELAWARE DEPARTMENT OF TRANSPORTATION

ADDENDUMS / REVISIONS

SCALE 0 50 100 150 FEET

SR1 / I-95 INTERCHANGE

CONTRACT	BRIDGE NO.	
28-090-03	DESIGNED BY:	
COUNTY		
NEW CASTLE	CHECKED BY:	

UTILITY RELOCATION PLAN

SHEET NO. 709
TOTAL SHTS. 803

8/11/2010 1:09:10 PM
M:\PROJECTS\2003\03059_DELTRNPK\SR1MALL\CADD\2809003\PLANS\UT05_SR1.DGN

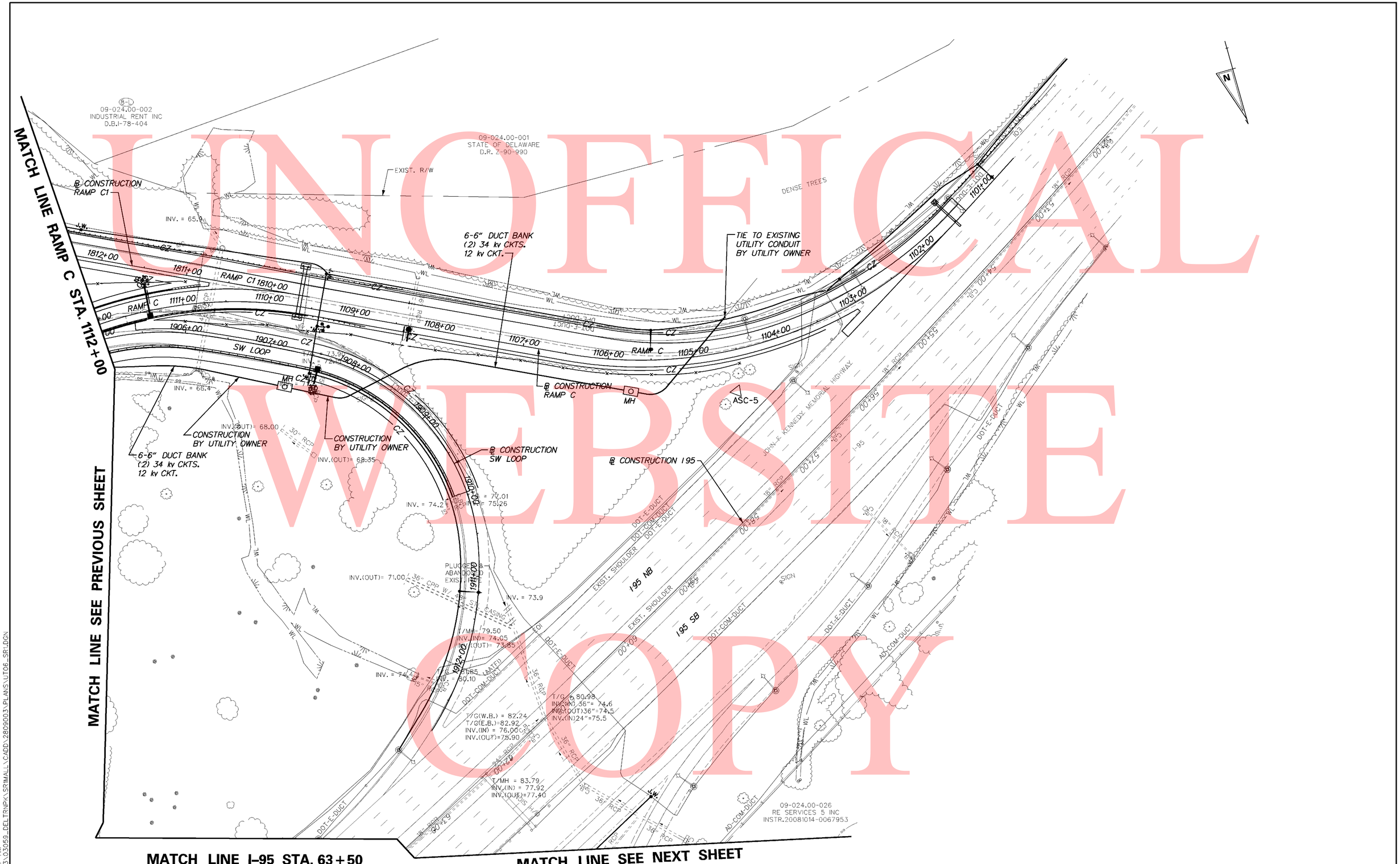

UNOFFICAL WEBSITE COPY

DELAWARE DEPARTMENT OF TRANSPORTATION	ADDENDUMS / REVISIONS	SCALE 0 50 100 150 FEET	SR1 / I-95 INTERCHANGE	CONTRACT 28-090-03	BRIDGE NO.	UTILITY RELOCATION PLAN	SHEET NO. 710
				COUNTY NEW CASTLE	DESIGNED BY:		TOTAL SHTS. 803
					CHECKED BY:		

9/10/2010 10:28:47 AM
M:\PROJECTS\2003\03059_DELTRNPK\SRTMALL\CADD\2809003\PLANS\UT06_SR1.DGN

PAVEMENT MARKINGS LEGEND

SYMBOL	ITEM	QUANTITY
A	6" SOLID WHITE EPOXY RESIN PAVEMENT STRIPING (ITEM 748507)	705 LF
B	6" SOLID YELLOW EPOXY RESIN PAVEMENT STRIPING (ITEM 748507)	705 LF
C	6" DASHED WHITE EPOXY RESIN PAVEMENT STRIPING, 10' LINE & 30' GAP (ITEM 748507)	176 LF
D	12" SOLID WHITE EPOXY RESIN PAVEMENT STRIPING (ITEM 748509)	345 LF
E	12" DASHED WHITE EPOXY RESIN PAVEMENT STRIPING, 3' LINE & 9' GAP (ITEM 748509)	195 LF

CONDUIT RUN SCHEDULE

CR*	*OF CON	SIZE	LENGTH	B/T/O	AMOUNT AND TYPE OF CABLE/ WIRE
1	1	4"	125'	T	Comm. Cable
2	1	4"	80'	B	Comm. Cable
3	1	4"	10'	T	Comm. Cable
4	2	2.5"	15'	T	Wavetronix Cable, Solar Power Cable
5	1	4"	560'	T	Comm. Cable
* 6	1	4"	600'	T	Comm. Cable

B = BORE, T = TRENCH, O = OPEN CUT.
* QUANTITY REFLECTS CONTINUATION OF PATHWAY SHOWN ON SHEET SSC-2

NOTES:

1. ALL PROPOSED ITMS CONNECTIONS AND TERMINATIONS SHALL BE COMPLETED BY DELDOT TRAFFIC FORCES. THE CONTRACTOR SHALL CONTACT DELDOTS SIGNAL CONSTRUCTION MANAGER AT 302.222.5920 TEN (10) DAYS PRIOR TO REQUIRED WORK
2. ALL UNDERGROUND ITMS FACILITIES TO BE INSTALLED BY THE CONTRACTOR. PRIOR TO COMPLETION OF UNDERGROUND FACILITIES THE CONTRACTOR SHALL CONTACT DELDOT'S SIGNAL CONSTRUCTION MANAGER AT 302.222.5920 TEN (10) DAYS PRIOR TO COMPLETION OF FACILITY.
3. ALL PROPOSED ITMS DEVICE TO BE FURNISHED AND INSTALLED BY DELDOT TRAFFIC FORCES. UPON CONTACT BY THE CONTRACTOR DELDOT TRAFFIC FORCES WILL DEVELOP A SCHEDULE OF WHEN WORK CAN BE PERFORMED AVOIDING CONFLICTS WITH THE GENERAL CONTRACTORS SCHEDULE.
4. CONTRACTOR SHALL BE RESPONSIBLE FOR ALL INSTALLATION AND REMOVAL OF ALL PROPOSED, TEMPORARY AND EXISTING MARKINGS AS REQUIRED. ALL PROPOSED MARKINGS SHALL TIE INTO EXISTING MARKINGS IN ACCORDANCE WITH THE MUTCD AND AS DIRECTED BY THE DELDOT'S CONSTRUCTION ENGINEER.
5. THE CONTRACTOR SHALL INSTALL AND REMOVE THE REGULATORY, WARNING, AND SPECIAL SIGNS AND POSTS WITHIN THE CONTRACT LIMITS, AS SHOWN. DELDOT SHALL FABRICATE AND SUPPLY THE REGULATORY, WARNING, AND SPECIAL SIGNS AND POSTS TO THE CONTRACTOR. FOR COORDINATION AND PICK UP OF ALL SIGNS AND POSTS, THE CONTRACTOR SHALL CONTACT DELDOT'S SIGN SHOP AT 302.760.2581. ALLOW FOUR (4) WEEKS FOR DELIVERY. ALL SIGNING MATERIALS REMOVED FROM THIS PROJECT SHALL BE RETURNED TO DELDOT'S SIGN SHOP.
6. ALL EXISTING OVERHEAD AND BRIDGE MOUNTED SIGNS AND STRUCTURES SHALL BE REMOVED BY THE CONTRACTOR WITHIN THE CONTRACT LIMITS UNLESS OTHERWISE NOTED. THE CONTRACTOR SHALL FURNISH AND INSTALL ALL PROPOSED OVERHEADS AND CANTILEVER SIGN STRUCTURES, FOUNDATIONS, AND SIGNS. THE CONTRACTOR SHALL RETURN ALL SIGNS REMOVED FROM THE PROJECT TO DELDOT'S SIGN SHOP. THE CONTRACTOR SHALL CONTACT DELDOT'S SIGN SHOP AT 302.760.2581 TO ARRANGE FOR DELIVERY OF SIGNS.
7. THE CONTRACTOR SHALL INSTALL RAISED PAVEMENT MARKERS WITHIN THE PROJECT LIMITS IN ACCORDANCE WITH THE DE-MUTCD.

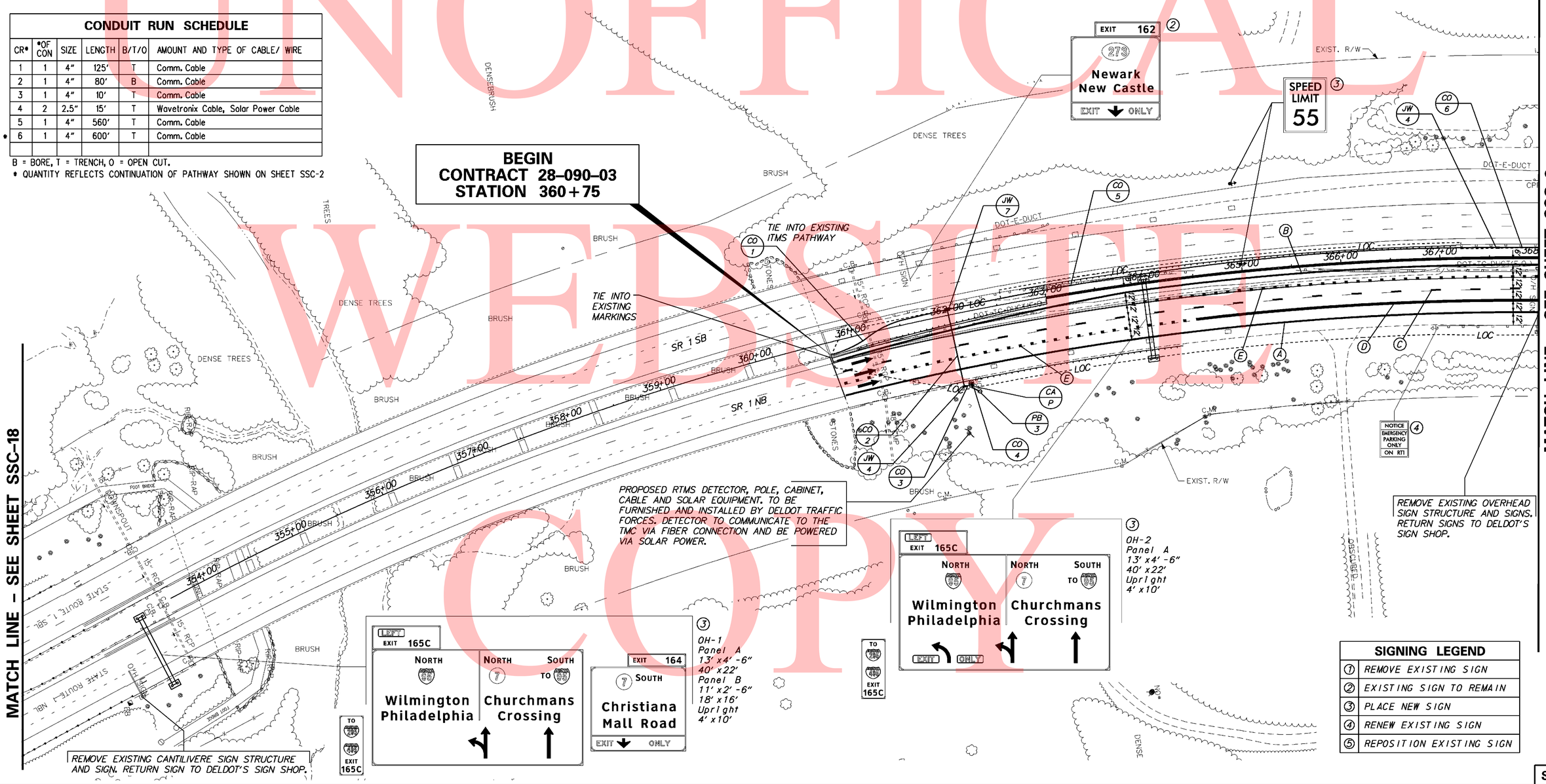

SIGNING LEGEND

1	REMOVE EXISTING SIGN
2	EXISTING SIGN TO REMAIN
3	PLACE NEW SIGN
4	RENEW EXISTING SIGN
5	REPOSITION EXISTING SIGN

UNOFFICIAL WEBSITE COPY

1/27/2009 1:28:48 PM
M:\PROJECTS\2003\03059_DELTRNPK\SRIMALL\CADD\2809003\PLANS\CP01_SSC_SR1.DGN

DELAWARE DEPARTMENT OF TRANSPORTATION

ADDENDUMS / REVISIONS

SCALE 0 50 100 150 FEET

SR1 / I-95 INTERCHANGE

CONTRACT	BRIDGE NO.
28-090-03	DESIGNED BY:
COUNTY	CHECKED BY:
NEW CASTLE	

SIGNING, STRIPING & CONDUIT PLAN

SSC-1
SHEET NO. 711
TOTAL SHTS. 803

PAVEMENT MARKINGS LEGEND		
SYMBOL	ITEM	QUANTITY
Ⓐ	6" SOLID WHITE EPOXY RESIN PAVEMENT STRIPING (ITEM 748507)	1,600 LF
Ⓑ	6" SOLID YELLOW EPOXY RESIN PAVEMENT STRIPING (ITEM 748507)	1,605 LF
Ⓒ	6" DASHED WHITE EPOXY RESIN PAVEMENT STRIPING, 10' LINE & 30' GAP (ITEM 748507)	240 LF
Ⓓ	12" SOLID WHITE EPOXY RESIN PAVEMENT STRIPING (ITEM 748509)	1,500 LF
Ⓔ	12" DASHED WHITE EPOXY RESIN PAVEMENT STRIPING, 3' LINE & 9' GAP (ITEM 748509)	170 LF
Ⓕ	12" DASHED BLACK EPOXY RESIN PAVEMENT STRIPING, 3' LINE & 9' GAP (ITEM 748539)	25 LF
Ⓖ	3" SOLID BLACK EPOXY RESIN PAVEMENT STRIPING (ITEM 748557)	200 LF

PAVEMENT MARKINGS LEGEND		
SYMBOL	ITEM	QUANTITY
Ⓗ	16" SOLID BLACK EPOXY RESIN PAVEMENT STRIPING (ITEM 748540)	100 LF
Ⓙ	9" RETROREFLECTIVE PREFORMED PATTERNED CONTRAST MARKING, 10' LINE & 30' GAP (ITEM 748547)	50 LF
Ⓚ	12" SOLID WHITE ALKYD THERMOPLASTIC PAVEMENT STRIPING (ITEM 748027)	50 LF

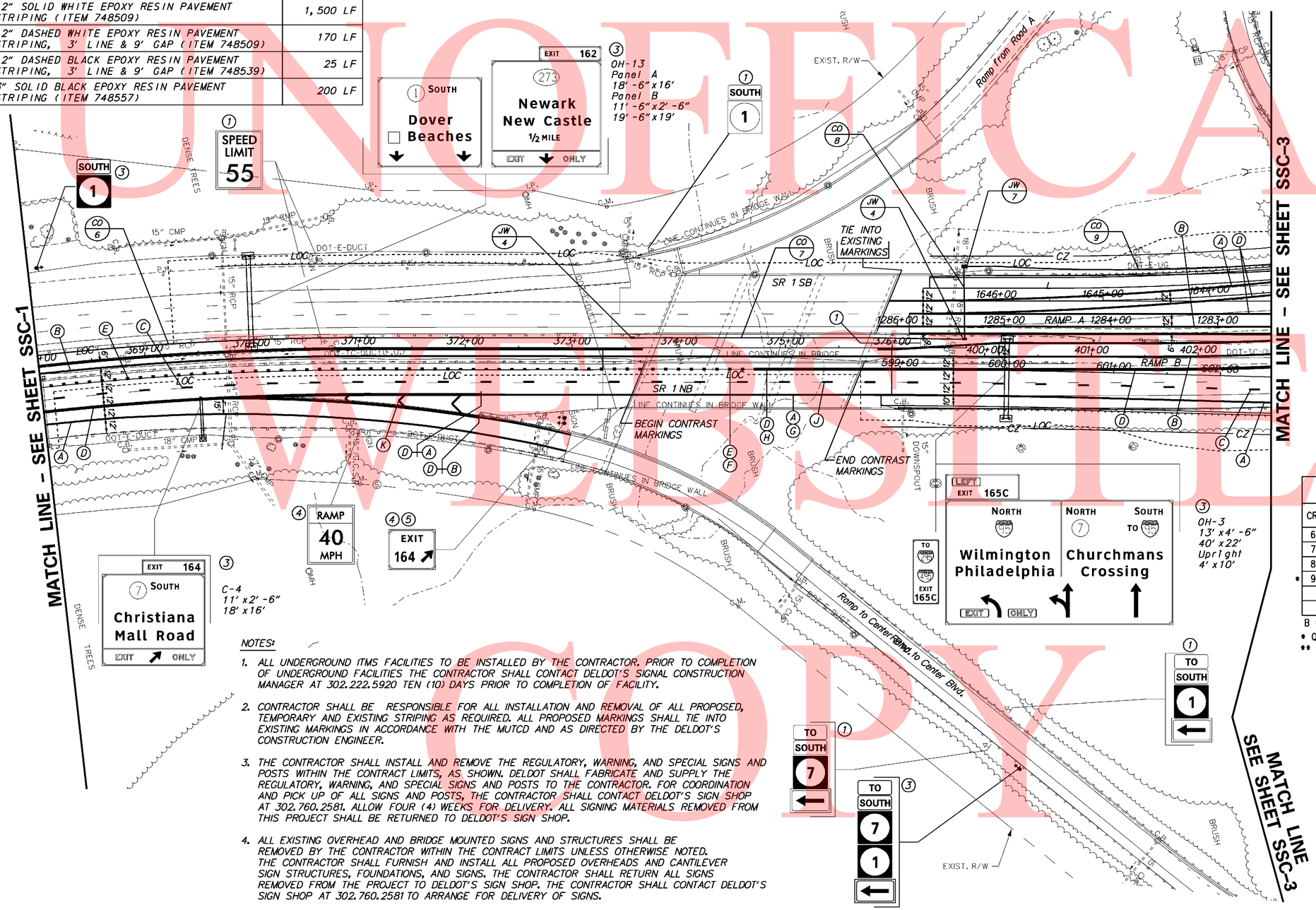

NOTES:

1. ALL UNDERGROUND ITMS FACILITIES TO BE INSTALLED BY THE CONTRACTOR. PRIOR TO COMPLETION OF UNDERGROUND FACILITIES THE CONTRACTOR SHALL CONTACT DELDOT'S SIGNAL CONSTRUCTION MANAGER AT 302.222.5920 TEN (10) DAYS PRIOR TO COMPLETION OF FACILITY.

2. CONTRACTOR SHALL BE RESPONSIBLE FOR ALL INSTALLATION AND REMOVAL OF ALL PROPOSED, TEMPORARY AND EXISTING STRIPING AS REQUIRED. ALL PROPOSED MARKINGS SHALL TIE INTO EXISTING MARKINGS IN ACCORDANCE WITH THE MUTCD AND AS DIRECTED BY THE DELDOT'S CONSTRUCTION ENGINEER.

3. THE CONTRACTOR SHALL INSTALL AND REMOVE THE REGULATORY, WARNING, AND SPECIAL SIGNS AND POSTS WITHIN THE CONTRACT LIMITS, AS SHOWN. DELDOT SHALL FABRICATE AND SUPPLY THE REGULATORY, WARNING, AND SPECIAL SIGNS AND POSTS TO THE CONTRACTOR. FOR COORDINATION AND PICK UP OF ALL SIGNS AND POSTS, THE CONTRACTOR SHALL CONTACT DELDOT'S SIGN SHOP AT 302.760.2581. ALLOW FOUR (4) WEEKS FOR DELIVERY. ALL SIGNING MATERIALS REMOVED FROM THIS PROJECT SHALL BE RETURNED TO DELDOT'S SIGN SHOP.

4. ALL EXISTING OVERHEAD AND BRIDGE MOUNTED SIGNS AND STRUCTURES SHALL BE REMOVED BY THE CONTRACTOR WITHIN THE CONTRACT LIMITS UNLESS OTHERWISE NOTED. THE CONTRACTOR SHALL FURNISH AND INSTALL ALL PROPOSED OVERHEADS AND CANTILEVER SIGN STRUCTURES, FOUNDATIONS, AND SIGNS. THE CONTRACTOR SHALL RETURN ALL SIGNS REMOVED FROM THE PROJECT TO DELDOT'S SIGN SHOP. THE CONTRACTOR SHALL CONTACT DELDOT'S SIGN SHOP AT 302.760.2581 TO ARRANGE FOR DELIVERY OF SIGNS.

5. CONTRACTOR SHALL INSTALL RAISED PAVEMENT MARKERS WITHIN THE PROJECT LIMITS IN ACCORDANCE WITH THE DE-MUTCD.

CONDUIT RUN SCHEDULE					
CR*	*OF CON	SIZE	LENGTH	B/T/O	AMOUNT AND TYPE OF CABLE/ WIRE
6	Pathway Information Shown on Sheet SSC-1				
7	1	4"	315'	**	Comm. Cable
8	1	4"	70'	B	Comm. Cable
* 9	1	4"	445'	T	Comm. Cable

B = BORE, T = TRENCH, O = OPEN CUT.
* QUANTITY REFLECTS CONTINUATION OF PATHWAY SHOWN ON SHEET SSC-3
** PATHWAY ATTACHED THE BRIDGE STRUCTURE (745549)

SIGNING LEGEND	
①	REMOVE EXISTING SIGN
②	EXISTING SIGN TO REMAIN
③	PLACE NEW SIGN
④	RENEW EXISTING SIGN
⑤	REPOSITION EXISTING SIGN

UNOFFICIAL WEBSITE COPY

9/27/2010 10:55:57 AM
M:\PROJECTS\2003\03059_DELTRNPK\SRMALL\CADD\2809003\PLANS\CP80_SSC_SR1.DGN

DELAWARE DEPARTMENT OF TRANSPORTATION

ADDENDUMS / REVISIONS

SCALE 0 50 100 150 FEET

SR1 / I-95 INTERCHANGE

CONTRACT	BRIDGE NO.	
28-090-03	DESIGNED BY:	
COUNTY		
NEW CASTLE	CHECKED BY:	

SIGNING, STRIPING & CONDUIT PLAN

SSC-2
SHEET NO.
712
TOTAL SHTS.
803

NOTES:

1. ALL PROPOSED ITMS CONNECTIONS AND TERMINATIONS SHALL BE COMPLETED BY DELDOT FORCES. THE CONTRACTOR SHALL CONTACT DELDOTS SIGNAL CONSTRUCTION MANAGER AT 302.222.5920 TEN (10) DAYS PRIOR TO REQUIRED WORK
2. ALL UNDERGROUND ITMS FACILITIES TO BE INSTALLED BY THE CONTRACTOR. PRIOR TO COMPLETION OF UNDERGROUND FACILITIES THE CONTRACTOR SHALL CONTACT DELDOT'S SIGNAL CONSTRUCTION MANAGER AT 302.222.5920 TEN (10) DAYS PRIOR TO COMPLETION OF FACILITY.
3. ALL PROPOSED ITMS DEVICE TO BE FURNISHED AND INSTALLED, BY DELDOT FORCES. UPON CONTACT BY THE CONTRACTOR DELDOT TRAFFIC FORCES WILL A SCHEDULE OF WHEN WORK CAN BE PERFORMED AVOIDING CONFLICT WITH THE CONTRACTORS WORK.
4. CONTRACTOR SHALL BE RESPONSIBLE FOR ALL INSTALLATION AND REMOVAL OF ALL PROPOSED, TEMPORARY AND EXISTING STRIPING AS REQUIRED. ALL PROPOSED MARKINGS SHALL TIE INTO EXISTING MARKINGS IN ACCORDANCE WITH THE MUTCD AND AS DIRECTED BY THE DELDOT'S CONSTRUCTION ENGINEER.

SIGNING LEGEND	
1	REMOVE EXISTING SIGN
2	EXISTING SIGN TO REMAIN
3	PLACE NEW SIGN
4	RENEW EXISTING SIGN
5	REPOSITION EXISTING SIGN

SIGN NOTE:

ALL EXISTING OVERHEAD GUIDE SIGNS TO BE REMOVED UNLESS OTHERWISE NOTED.

PROPOSED CCTV CAMERA, RTMS DETECTOR, POLE, CABINET, CABLE TO BE FURNISHED AND INSTALLED BY DELDOT TRAFFIC FORCES. DEVICES TO COMMUNICATE TO THE TMC VIA FIBER CONNECTION AND BE POWERED VIA POWER FEED LOCATED ALONG ROAD A (SEE SHEET SSC-5).

* QUANTITY REFLECTS CONTINUATION OF PATHWAY SHOWN ON SHEET SSC-4
** QUANTITY REFLECTS CONTINUATION OF PATHWAY SHOWN ON SHEET SSC-5

CONDUIT RUN SCHEDULE

CR*	*OF CON	SIZE	LENGTH	B/T/O	AMOUNT AND TYPE OF CABLE/ WIRE
9	Pathway Information Shown on Sheet SSC-2				
10	1	4"	78'	B	Comm. Cable
11	1	4"	460'	T	Comm. Cable
12	1	2"	145'	T	(2)12/*8 U.F. W/ Ground
* 13	1	2"	175'	T	(2)12/*8 U.F. W/ Ground
14	1	4"	52'	B	Comm. Cable
15	1	4"	100'	T	Comm. Cable
16	2	2/4"	50'	T	(2)12/*8 U.F. W/ Ground, Comm. Cable
17	1	2.5"	15'	T	Comm. Cable
18	1	2.5"	15'	T	Wavetronix Cable
19	3	2.5"	10'	T	(2)12/*8 U.F. W/ Ground, Comm. Cable
20	1	4"	225'	B	Comm. Cable
21	1	4"	255'	T	Comm. Cable
** 22	1	4"	240'	T	Comm. Cable

B = BORE, T = TRENCH, O = OPEN CUT.

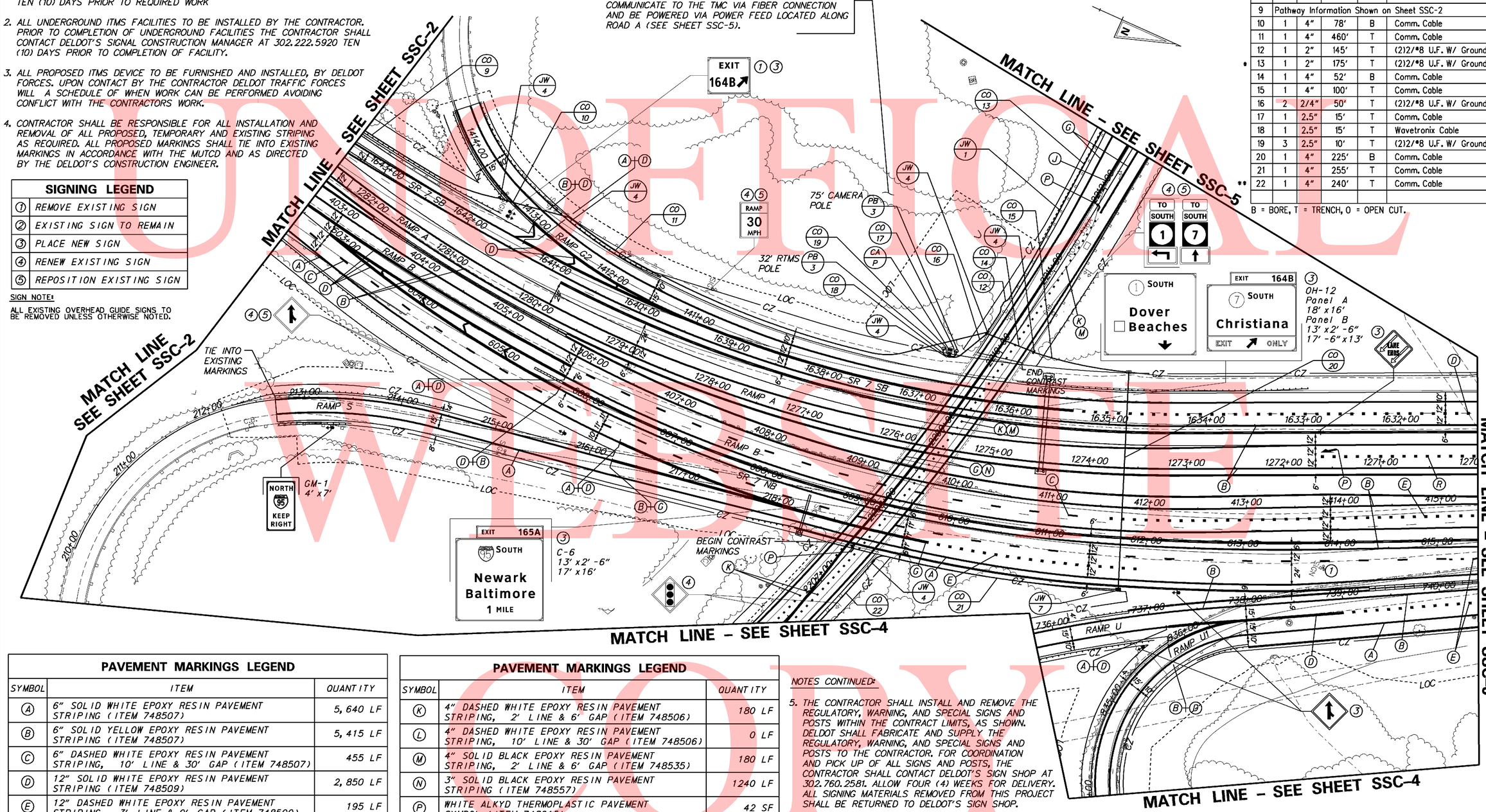

PAVEMENT MARKINGS LEGEND

SYMBOL	ITEM	QUANTITY
A	6" SOLID WHITE EPOXY RESIN PAVEMENT STRIPING (ITEM 748507)	5,640 LF
B	6" SOLID YELLOW EPOXY RESIN PAVEMENT STRIPING (ITEM 748507)	5,415 LF
C	6" DASHED WHITE EPOXY RESIN PAVEMENT STRIPING, 10' LINE & 30' GAP (ITEM 748507)	455 LF
D	12" SOLID WHITE EPOXY RESIN PAVEMENT STRIPING (ITEM 748509)	2,850 LF
E	12" DASHED WHITE EPOXY RESIN PAVEMENT STRIPING, 3' LINE & 9' GAP (ITEM 748509)	195 LF
F	12" SOLID WHITE ALKYD THERMOPLASTIC PAVEMENT STRIPING (ITEM 748027)	80 LF
G	4" SOLID WHITE EPOXY RESIN PAVEMENT STRIPING (ITEM 748506)	1,240 LF
H	4" SOLID YELLOW EPOXY RESIN PAVEMENT STRIPING (ITEM 748506)	0 LF
J	4" SOLID DOUBLE YELLOW EPOXY RESIN PAVEMENT STRIPING (ITEM 748506)	620 LF

PAVEMENT MARKINGS LEGEND

SYMBOL	ITEM	QUANTITY
K	4" DASHED WHITE EPOXY RESIN PAVEMENT STRIPING, 2' LINE & 6' GAP (ITEM 748506)	180 LF
L	4" DASHED WHITE EPOXY RESIN PAVEMENT STRIPING, 10' LINE & 30' GAP (ITEM 748506)	0 LF
M	4" SOLID BLACK EPOXY RESIN PAVEMENT STRIPING, 2' LINE & 6' GAP (ITEM 748535)	180 LF
N	3" SOLID BLACK EPOXY RESIN PAVEMENT STRIPING (ITEM 748557)	1240 LF
P	WHITE ALKYD THERMOPLASTIC PAVEMENT SYMBOL (ITEM 748015)	42 SF
R	6" DASHED WHITE EPOXY RESIN PAVEMENT STRIPING, 3' LINE & 9' GAP (ITEM 748507)	50 LF

NOTES CONTINUED:

5. THE CONTRACTOR SHALL INSTALL AND REMOVE THE REGULATORY, WARNING, AND SPECIAL SIGNS AND POSTS WITHIN THE CONTRACT LIMITS, AS SHOWN. DELDOT SHALL FABRICATE AND SUPPLY THE REGULATORY, WARNING, AND SPECIAL SIGNS AND POSTS TO THE CONTRACTOR. FOR COORDINATION AND PICK UP OF ALL SIGNS AND POSTS, THE CONTRACTOR SHALL CONTACT DELDOT'S SIGN SHOP AT 302.760.2581. ALLOW FOUR (4) WEEKS FOR DELIVERY. ALL SIGNING MATERIALS REMOVED FROM THIS PROJECT SHALL BE RETURNED TO DELDOT'S SIGN SHOP.
6. ALL EXISTING OVERHEAD, , AND BRIDGE MOUNTED SIGNS AND STRUCTURES SHALL BE REMOVED BY THE CONTRACTOR WITHIN THE CONTRACT LIMITS UNLESS OTHERWISE NOTED. THE CONTRACTOR SHALL FURNISH AND INSTALL ALL PROPOSED OVERHEADS AND CANTILEVER SIGN STRUCTURES, FOUNDATIONS, AND SIGNS. THE CONTRACTOR SHALL RETURN ALL SIGNS REMOVED FROM THE PROJECT TO DELDOT'S SIGN SHOP. THE CONTRACTOR SHALL CONTACT DELDOT'S SIGN SHOP AT 302.760.2581 TO ARRANGE FOR DELIVERY OF SIGNS.
7. CONTRACTOR SHALL INSTALL RAISED PAVEMENT MARKERS IN ACCORDANCE WITH THE MUTCD.

UNOFFICIAL WORKSHEET COPY

9/27/2010 11:50:25 AM
M:\PROJECTS\2003\03059_DELTRNPK\SRIMALL\CADD\2809003\PLANS\CP81_SSC_SR1.DGN

DELAWARE DEPARTMENT OF TRANSPORTATION

ADDENDUMS / REVISIONS

SCALE 0 50 100 150 FEET

SR1 / I-95 INTERCHANGE

CONTRACT	BRIDGE NO.
28-090-03	DESIGNED BY:
COUNTY	
NEW CASTLE	CHECKED BY:

SIGNING, STRIPING & CONDUIT PLAN

SSC-3
SHEET NO. 713
TOTAL SHTS. 803

SIGNING LEGEND	
1	REMOVE EXISTING SIGN
2	EXISTING SIGN TO REMAIN
3	PLACE NEW SIGN
4	RENEW EXISTING SIGN
5	REPOSITION EXISTING SIGN

PAVEMENT MARKINGS LEGEND		
SYMBOL	ITEM	QUANTITY
A	4" SOLID WHITE EPOXY RESIN PAVEMENT STRIPING (ITEM 748506)	2,655 LF
B	4" SOLID YELLOW EPOXY RESIN PAVEMENT STRIPING (ITEM 748506)	645 LF
C	4" SOLID DOUBLE YELLOW EPOXY RESIN PAVEMENT STRIPING (ITEM 748506)	650 LF
D	4" DASHED WHITE EPOXY RESIN PAVEMENT STRIPING, 2' LINE & 6' GAP (ITEM 748506)	200 LF
E	4" DASHED WHITE EPOXY RESIN PAVEMENT STRIPING, 10' LINE & 30' GAP (ITEM 748506)	0 LF

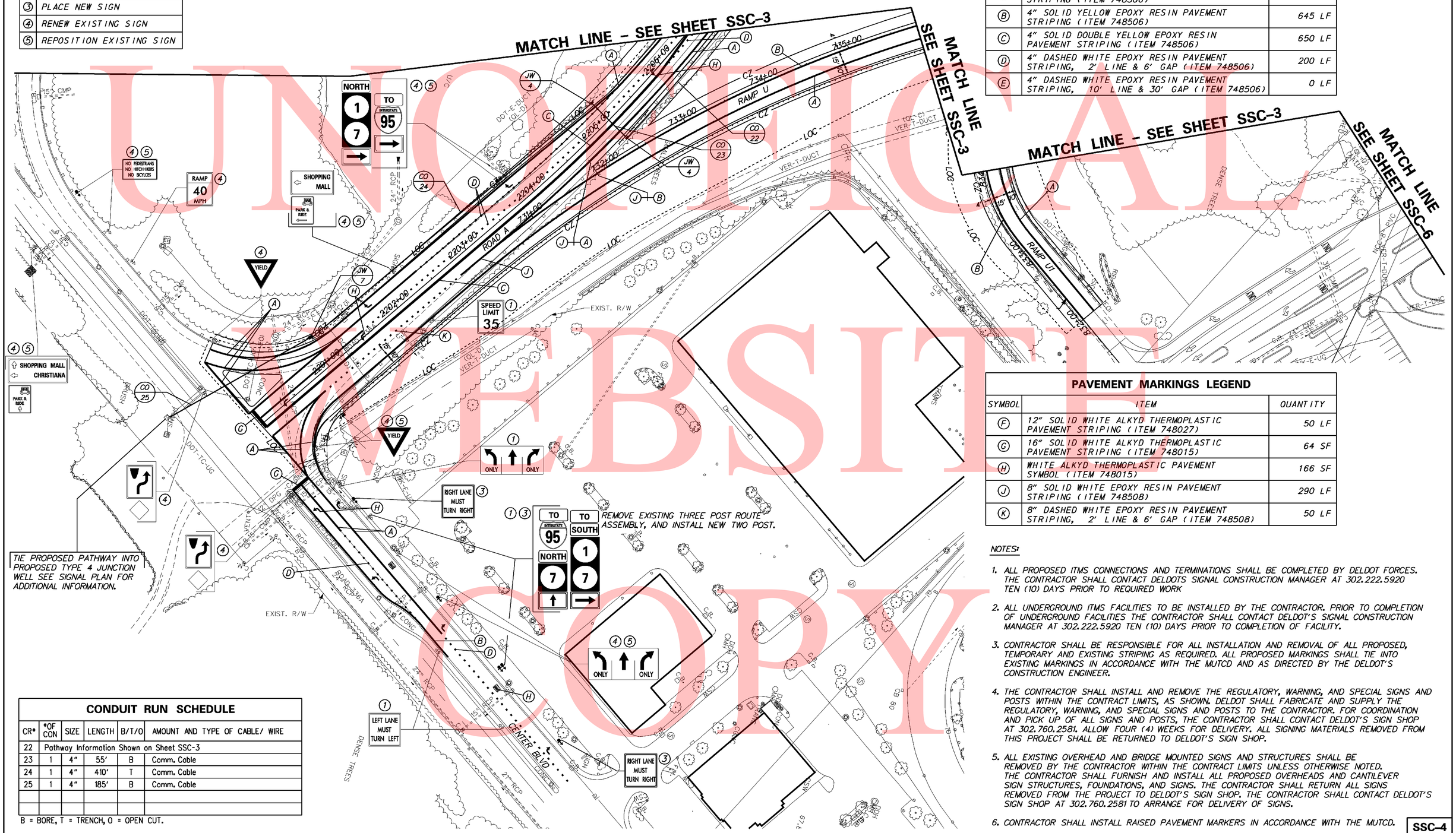

PAVEMENT MARKINGS LEGEND		
SYMBOL	ITEM	QUANTITY
F	12" SOLID WHITE ALKYD THERMOPLASTIC PAVEMENT STRIPING (ITEM 748027)	50 LF
G	16" SOLID WHITE ALKYD THERMOPLASTIC PAVEMENT STRIPING (ITEM 748015)	64 SF
H	WHITE ALKYD THERMOPLASTIC PAVEMENT SYMBOL (ITEM 748015)	166 SF
J	8" SOLID WHITE EPOXY RESIN PAVEMENT STRIPING (ITEM 748508)	290 LF
K	8" DASHED WHITE EPOXY RESIN PAVEMENT STRIPING, 2' LINE & 6' GAP (ITEM 748508)	50 LF

NOTES:

1. ALL PROPOSED ITMS CONNECTIONS AND TERMINATIONS SHALL BE COMPLETED BY DELDOT FORCES. THE CONTRACTOR SHALL CONTACT DELDOTS SIGNAL CONSTRUCTION MANAGER AT 302.222.5920 TEN (10) DAYS PRIOR TO REQUIRED WORK
2. ALL UNDERGROUND ITMS FACILITIES TO BE INSTALLED BY THE CONTRACTOR. PRIOR TO COMPLETION OF UNDERGROUND FACILITIES THE CONTRACTOR SHALL CONTACT DELDOT'S SIGNAL CONSTRUCTION MANAGER AT 302.222.5920 TEN (10) DAYS PRIOR TO COMPLETION OF FACILITY.
3. CONTRACTOR SHALL BE RESPONSIBLE FOR ALL INSTALLATION AND REMOVAL OF ALL PROPOSED, TEMPORARY AND EXISTING STRIPING AS REQUIRED. ALL PROPOSED MARKINGS SHALL TIE INTO EXISTING MARKINGS IN ACCORDANCE WITH THE MUTCD AND AS DIRECTED BY THE DELDOT'S CONSTRUCTION ENGINEER.
4. THE CONTRACTOR SHALL INSTALL AND REMOVE THE REGULATORY, WARNING, AND SPECIAL SIGNS AND POSTS WITHIN THE CONTRACT LIMITS, AS SHOWN. DELDOT SHALL FABRICATE AND SUPPLY THE REGULATORY, WARNING, AND SPECIAL SIGNS AND POSTS TO THE CONTRACTOR. FOR COORDINATION AND PICK UP OF ALL SIGNS AND POSTS, THE CONTRACTOR SHALL CONTACT DELDOT'S SIGN SHOP AT 302.760.2581. ALLOW FOUR (4) WEEKS FOR DELIVERY. ALL SIGNING MATERIALS REMOVED FROM THIS PROJECT SHALL BE RETURNED TO DELDOT'S SIGN SHOP.
5. ALL EXISTING OVERHEAD AND BRIDGE MOUNTED SIGNS AND STRUCTURES SHALL BE REMOVED BY THE CONTRACTOR WITHIN THE CONTRACT LIMITS UNLESS OTHERWISE NOTED. THE CONTRACTOR SHALL FURNISH AND INSTALL ALL PROPOSED OVERHEADS AND CANTILEVER SIGN STRUCTURES, FOUNDATIONS, AND SIGNS. THE CONTRACTOR SHALL RETURN ALL SIGNS REMOVED FROM THE PROJECT TO DELDOT'S SIGN SHOP. THE CONTRACTOR SHALL CONTACT DELDOT'S SIGN SHOP AT 302.760.2581 TO ARRANGE FOR DELIVERY OF SIGNS.
6. CONTRACTOR SHALL INSTALL RAISED PAVEMENT MARKERS IN ACCORDANCE WITH THE MUTCD.

CONDUIT RUN SCHEDULE					
CR*	*OF CON	SIZE	LENGTH	B/T/O	AMOUNT AND TYPE OF CABLE/ WIRE
22	Pathway Information Shown on Sheet SSC-3				
23	1	4"	55'	B	Comm. Cable
24	1	4"	410'	T	Comm. Cable
25	1	4"	185'	B	Comm. Cable

B = BORE, T = TRENCH, O = OPEN CUT.

UNOFFICIAL WEBSITE COPY

DELAWARE DEPARTMENT OF TRANSPORTATION

ADDENDUMS / REVISIONS

SCALE 0 50 100 150 FEET

SR1 / I-95 INTERCHANGE

CONTRACT	BRIDGE NO.
28-090-03	DESIGNED BY:
COUNTY	CHECKED BY:
NEW CASTLE	

SIGNING, STRIPING & CONDUIT PLAN

SSC-4

SHEET NO.	TOTAL SHTS.
714	803

PAVEMENT MARKINGS LEGEND

SYMBOL	ITEM	QUANTITY
A	4" SOLID WHITE EPOXY RESIN PAVEMENT STRIPING (ITEM 748506)	1,270 LF
B	4" SOLID YELLOW EPOXY RESIN PAVEMENT STRIPING (ITEM 748506)	530 LF
C	4" SOLID DOUBLE YELLOW EPOXY RESIN PAVEMENT STRIPING (ITEM 748506)	75 LF
D	4" DASHED WHITE EPOXY RESIN PAVEMENT STRIPING, 2' LINE & 6' GAP (ITEM 748506)	50 LF
E	4" DASHED WHITE EPOXY RESIN PAVEMENT STRIPING, 10' LINE & 30' GAP (ITEM 748506)	100 LF
F	16" SOLID WHITE ALKYD THERMOPLASTIC PAVEMENT STRIPING (ITEM 748015)	60 SF
G	WHITE ALKYD THERMOPLASTIC PAVEMENT SYMBOL (ITEM 748015)	93 SF

NOTES:

1. ALL PROPOSED ITMS CONNECTIONS AND TERMINATIONS SHALL BE COMPLETED BY DELDOT TRAFFIC FORCES. THE CONTRACTOR SHALL CONTACT DELDOTS SIGNAL CONSTRUCTION MANAGER AT 302.222.5920 TEN (10) DAYS PRIOR TO REQUIRED WORK
2. ALL UNDERGROUND ITMS FACILITIES TO BE INSTALLED BY THE CONTRACTOR. PRIOR TO COMPLETION OF UNDERGROUND FACILITIES THE CONTRACTOR SHALL CONTACT DELDOT'S SIGNAL CONSTRUCTION MANAGER AT 302.222.5920 TEN (10) DAYS PRIOR TO COMPLETION OF FACILITY.
3. CONTRACTOR SHALL BE RESPONSIBLE FOR ALL INSTALLATION AND REMOVAL OF ALL PROPOSED, TEMPORARY AND EXISTING STRIPING AS REQUIRED. ALL PROPOSED MARKINGS SHALL TIE INTO EXISTING MARKINGS IN ACCORDANCE WITH THE MUTCD AND AS DIRECTED BY THE DELDOT'S CONSTRUCTION ENGINEER.
4. THE CONTRACTOR SHALL INSTALL AND REMOVE THE REGULATORY, WARNING, AND SPECIAL SIGNS AND POSTS WITHIN THE CONTRACT LIMITS, AS SHOWN. DELDOT SHALL FABRICATE AND SUPPLY THE REGULATORY, WARNING, AND SPECIAL SIGNS AND POSTS TO THE CONTRACTOR. FOR COORDINATION AND PICK UP OF ALL SIGNS AND POSTS, THE CONTRACTOR SHALL CONTACT DELDOT'S SIGN SHOP AT 302.760.2581. ALLOW FOUR (4) WEEKS FOR DELIVERY. ALL SIGNING MATERIALS REMOVED FROM THIS PROJECT SHALL BE RETURNED TO DELDOT'S SIGN SHOP.
5. PROPOSED PLAN ELEMENTS INSTALLED UNDER CONTRACT 30-090-04 SHOWN FOR REFRENCE PURPOSES ONLY. SEE ORIGINAL CONTRACT DOCUMENTS FOR ACTUAL LOCATION OF EQUIPMENT.

CONDUIT RUN SCHEDULE

CR#	#OF CON	SIZE	LENGTH	B/T/O	AMOUNT AND TYPE OF CABLE/ WIRE
13	Pathway Information Shown on Sheet SSC-3				
26	1	2"	145'	B	(2)12/#8 U.F. W/ Ground

B = BORE, T = TRENCH, O = OPEN CUT.

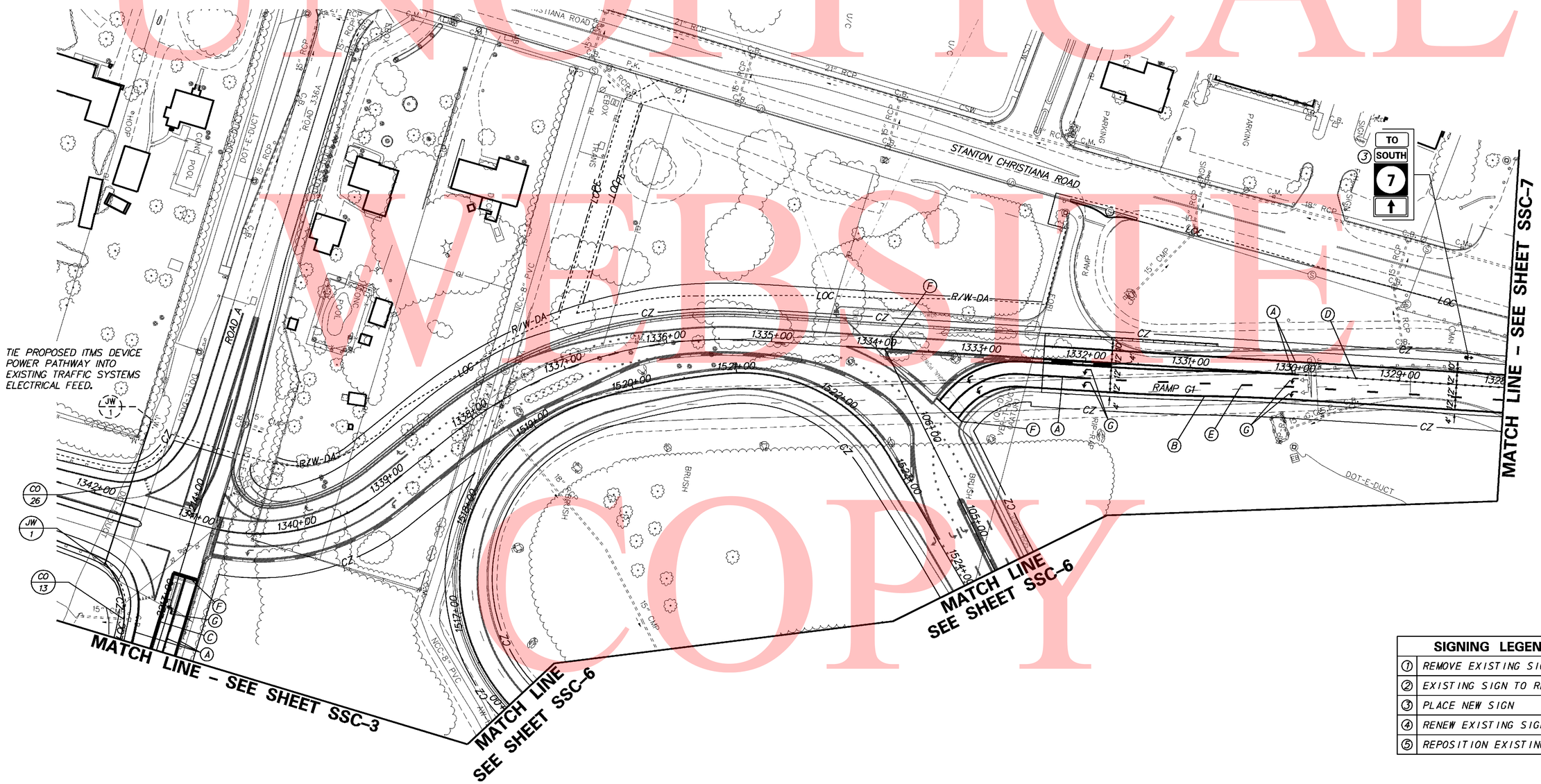

SIGNING LEGEND

1	REMOVE EXISTING SIGN
2	EXISTING SIGN TO REMAIN
3	PLACE NEW SIGN
4	RENEW EXISTING SIGN
5	REPOSITION EXISTING SIGN

UNOFFICIAL WEBSITE COPY

DELAWARE DEPARTMENT OF TRANSPORTATION

ADDENDUMS / REVISIONS

SCALE 0 50 100 150 FEET

SR1 / I-95 INTERCHANGE

CONTRACT 28-090-03 | COUNTY NEW CASTLE | BRIDGE NO. | DESIGNED BY: | CHECKED BY:

SIGNING, STRIPING & CONDUIT PLAN

SSC-5 | SHEET NO. 715 | TOTAL SHTS. 803

PROPOSED RTMS DETECTOR, POLE, CABINET, CABLE AND SOLAR EQUIPMENT. TO BE FURNISHED AND INSTALLED BY DELDOT TRAFFIC FORCES. DETECTOR TO COMMUNICATE TO THE TMC VIA FIBER CONNECTION AND BE POWERED VIA SOLAR POWER. INSTALL ADDITIONAL DETECTOR ON PROPOSED OVERHEAD SIGN STRUCTURE TO ALLOW FOR DETECTION OF NB TRAFFIC.

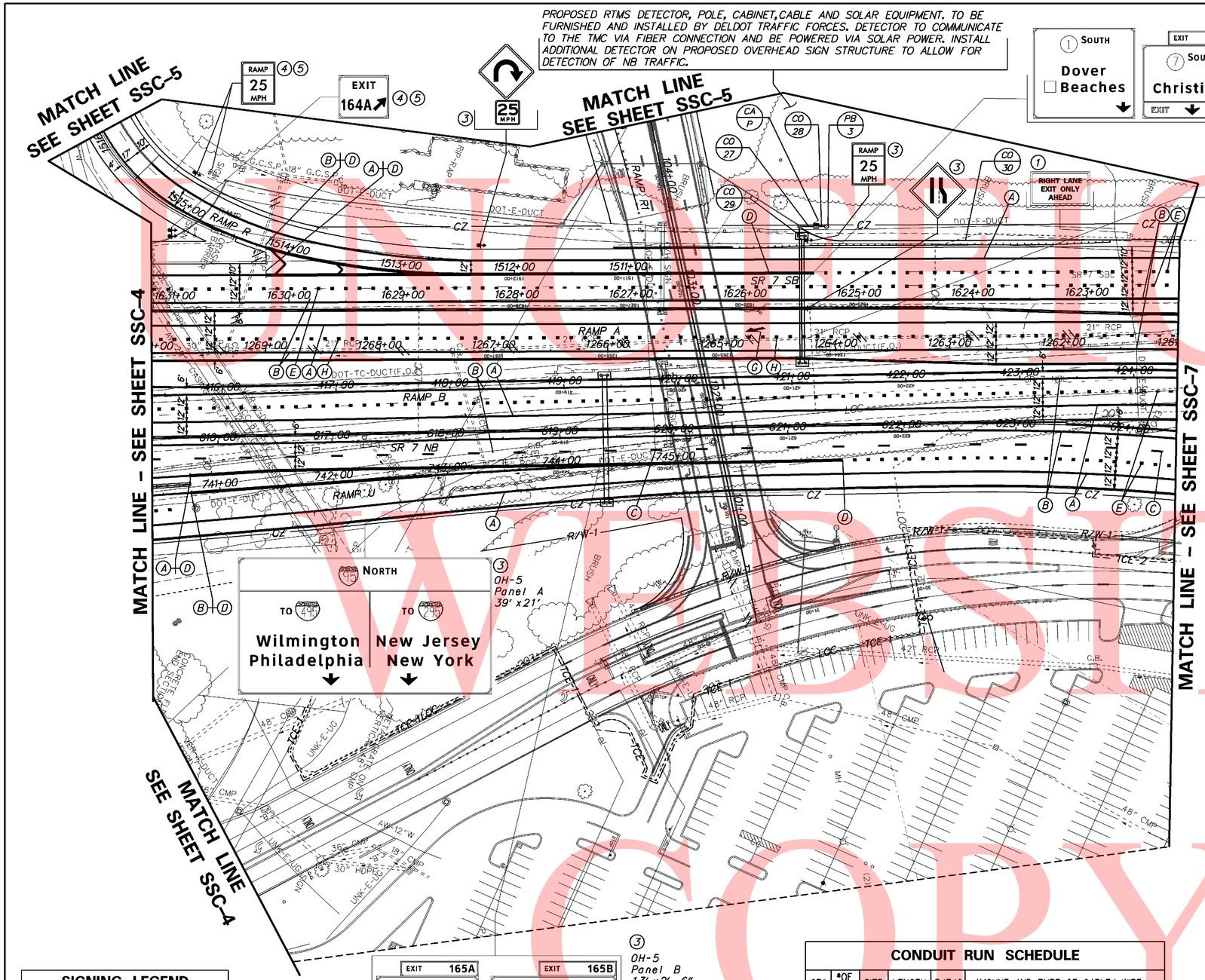

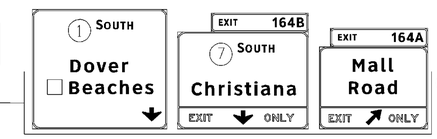

OH-11
Panel B
18' x16'
Panel C
13' x2' -6"
17' -6" x13'
Panel D
13' x2' -6"
14' -6" x11'

PRIOR TO STRUCTURE ERECTION CONTRACTOR SHALL INSTALL 1 ½" FLEXIBLE METALLIC LIQUID TIGHT CONDUIT ALONG THE FULL LENGTH OF STRUCTURE ARM FOR DELDOT TRAFFICS USE. A 2 ½" RISER SHALL ALSO BE INSTALLED ON THE STRUCTURE UP- RIGHT.

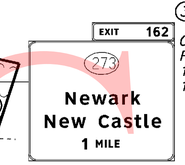

OH-11
Panel A
11' x2' -6"
19' -6" x16'

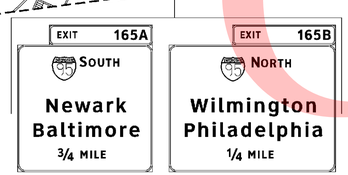

OH-5
Panel B
13' x2' -6"
17' x16'
Panel C
13' x2' -6"
21' x16'
Uprlight
4' x10'

TO EXIT 165B

PAVEMENT MARKINGS LEGEND

SYMBOL	ITEM	QUANTITY
A	6" SOLID WHITE EPOXY RESIN PAVEMENT STRIPING (ITEM 748507)	3,755 LF
B	6" SOLID YELLOW EPOXY RESIN PAVEMENT STRIPING (ITEM 748507)	3,765 LF
C	6" DASHED WHITE EPOXY RESIN PAVEMENT STRIPING, 10' LINE & 30' GAP (ITEM 748507)	225 LF
D	12" SOLID WHITE EPOXY RESIN PAVEMENT STRIPING (ITEM 748509)	1,705 LF
E	12" DASHED WHITE EPOXY RESIN PAVEMENT STRIPING, 3' LINE & 9' GAP (ITEM 748509)	605 LF
F	12" SOLID WHITE ALKYD THERMOPLASTIC PAVEMENT STRIPING (ITEM 748027)	50 LF
G	WHITE ALKYD THERMOPLASTIC PAVEMENT SYMBOL (ITEM 748015)	42 SF
H	6" DASHED WHITE EPOXY RESIN PAVEMENT STRIPING, 3' LINE & 9' GAP (ITEM 748507)	225 LF

NOTES:

1. ALL PROPOSED ITMS CONNECTIONS AND TERMINATIONS SHALL BE COMPLETED BY DELDOT FORCES. THE CONTRACTOR SHALL CONTACT DELDOTS SIGNAL CONSTRUCTION MANAGER AT 302.222.5920 TEN (10) DAYS PRIOR TO REQUIRED WORK
2. ALL UNDERGROUND ITMS FACILITIES TO BE INSTALLED BY THE CONTRACTOR. PRIOR TO COMPLETION OF UNDERGROUND FACILITIES THE CONTRACTOR SHALL CONTACT DELDOT'S SIGNAL CONSTRUCTION MANAGER AT 302.222.5920 TEN (10) DAYS PRIOR TO COMPLETION OF FACILITY.
3. ALL PROPOSED ITMS DEVICE TO BE FURNISHED AND INSTALLED BY DELDOT TRAFFIC FORCES. UPON CONTACT BY THE CONTRACTOR DELDOT TRAFFIC FORCES WILL DEVELOP A SCHEDULE OF WHEN WORK CAN BE PERFORMED AVOIDING CONFLICT WITH THE CONTRACTORS SCHEDULE.
4. CONTRACTOR SHALL BE RESPONSIBLE FOR ALL INSTALLATION AND REMOVAL OF ALL PROPOSED, TEMPORARY AND EXISTING STRIPING AS REQUIRED. ALL PROPOSED MARKINGS SHALL TIE INTO EXISTING MARKINGS IN ACCORDANCE WITH THE MUTCD AND AS DIRECTED BY THE DELDOT'S CONSTRUCTION ENGINEER.
5. THE CONTRACTOR SHALL INSTALL AND REMOVE THE REGULATORY, WARNING, AND SPECIAL SIGNS AND POSTS WITHIN THE CONTRACT LIMITS, AS SHOWN. DELDOT SHALL FABRICATE AND SUPPLY THE REGULATORY, WARNING, AND SPECIAL SIGNS AND POSTS TO THE CONTRACTOR. FOR COORDINATION AND PICK UP OF ALL SIGNS AND POSTS, THE CONTRACTOR SHALL CONTACT DELDOT'S SIGN SHOP AT 302.760.2581. ALLOW FOUR (4) WEEKS FOR DELIVERY. ALL SIGNING MATERIALS REMOVED FROM THIS PROJECT SHALL BE RETURNED TO DELDOT'S SIGN SHOP.
6. ALL EXISTING OVERHEAD AND BRIDGE MOUNTED SIGNS AND STRUCTURES SHALL BE REMOVED BY THE CONTRACTOR WITHIN THE CONTRACT LIMITS UNLESS OTHERWISE NOTED. THE CONTRACTOR SHALL FURNISH AND INSTALL ALL PROPOSED OVERHEADS AND CANTILEVER SIGN STRUCTURES, FOUNDATIONS, AND SIGNS. THE CONTRACTOR SHALL RETURN ALL SIGNS REMOVED FROM THE PROJECT TO DELDOT'S SIGN SHOP. THE CONTRACTOR SHALL CONTACT DELDOT'S SIGN SHOP AT 302.760.2581 TO ARRANGE FOR DELIVERY OF SIGNS.
7. CONTRACTOR SHALL INSTALL RAISED PAVEMENT MARKERS IN ACCORDANCE WITH THE MUTCD.

SIGNING LEGEND

1	REMOVE EXISTING SIGN
2	EXISTING SIGN TO REMAIN
3	PLACE NEW SIGN
4	RENEW EXISTING SIGN
5	REPOSITION EXISTING SIGN

SIGN NOTE:

ALL EXISTING OVERHEAD GUIDE SIGNS TO BE REMOVED UNLESS OTHERWISE NOTED.

CONDUIT RUN SCHEDULE

	CR*	*OF CON	SIZE	LENGTH	B/T/O	AMOUNT AND TYPE OF CABLE/ WIRE
	27	1	4"	15'	T	Comm. Cable
	28	2	2.5"	10'	T	Wavetronix Cable, Solar Power Cable
**	29	1	2.5/1.5"	45'/105'	**	Wavetronix Cable
*	30	1	4"	600'	T	Comm. Cable

B = BORE, T = TRENCH, O = OPEN CUT.
* QUANTITY REFLECTS CONTINUATION OF PATHWAY SHOWN ON SHEET SSC-7
** 2.5" PATHWAY TRENCHED TO STRUCTURE WITH RISER, 1.5" PATHWAY ATTACHED SIGN STRUCTURE

UNOFFICIAL WEBSITE COPY

DELAWARE DEPARTMENT OF TRANSPORTATION

ADDENDUMS / REVISIONS

SCALE 0 50 100 150 FEET

SR1 / I-95 INTERCHANGE

CONTRACT	BRIDGE NO.
28-090-03	DESIGNED BY:
COUNTY	
NEW CASTLE	CHECKED BY:

SIGNING, STRIPING & CONDUIT PLAN

SSC-6

SHEET NO. 716

TOTAL SHTS. 803

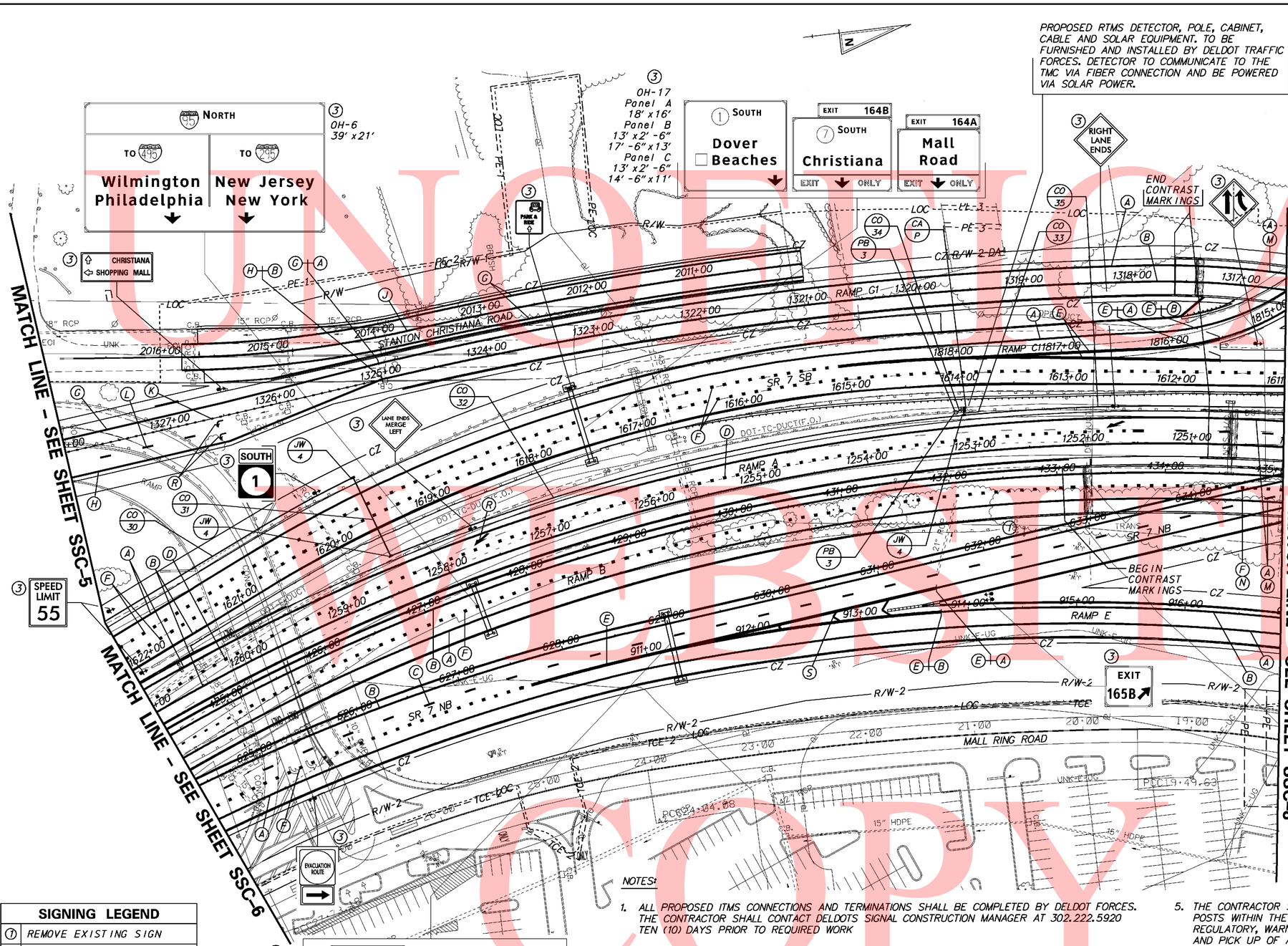

PROPOSED RTMS DETECTOR, POLE, CABINET, CABLE AND SOLAR EQUIPMENT. TO BE FURNISHED AND INSTALLED BY DELDOT TRAFFIC FORCES. DETECTOR TO COMMUNICATE TO THE TMC VIA FIBER CONNECTION AND BE POWERED VIA SOLAR POWER.

PAVEMENT MARKINGS LEGEND

SYMBOL	ITEM	QUANTITY
A	6" SOLID WHITE EPOXY RESIN PAVEMENT STRIPING (ITEM 748507)	5,545 LF
B	6" SOLID YELLOW EPOXY RESIN PAVEMENT STRIPING (ITEM 748507)	5,560 LF
C	6" DASHED WHITE EPOXY RESIN PAVEMENT STRIPING, 10' LINE & 30' GAP (ITEM 748507)	290 LF
D	6" DASHED WHITE EPOXY RESIN PAVEMENT STRIPING, 3' LINE & 9' GAP (ITEM 748507)	250 LF
E	12" SOLID WHITE EPOXY RESIN PAVEMENT STRIPING (ITEM 748509)	1,260 LF
F	12" DASHED WHITE EPOXY RESIN PAVEMENT STRIPING, 3' LINE & 9' GAP (ITEM 748509)	810 LF
G	4" SOLID WHITE EPOXY RESIN PAVEMENT STRIPING (ITEM 748506)	1,465 LF
H	4" SOLID YELLOW EPOXY RESIN PAVEMENT STRIPING (ITEM 748506)	300 LF
J	4" SOLID DOUBLE YELLOW EPOXY RESIN PAVEMENT STRIPING (ITEM 748506)	580 LF
K	4" DASHED WHITE EPOXY RESIN PAVEMENT STRIPING, 2' LINE & 6' GAP (ITEM 748506)	75 LF
L	4" DASHED WHITE EPOXY RESIN PAVEMENT STRIPING, 10' LINE & 30' GAP (ITEM 748506)	30 LF
M	3" SOLID BLACK EPOXY RESIN PAVEMENT STRIPING (ITEM 748557)	325 LF
N	12" SOLID BLACK EPOXY RESIN PAVEMENT STRIPING, 3' LINE & 9' GAP (ITEM 748539)	50 LF
P	9" RETROREFLECTIVE PREFORMED PATTERNED CONTRAST MARKING, 10' LINE & 30' GAP (ITEM 748547)	10 LF
R	WHITE ALKYD THERMOPLASTIC PAVEMENT SYMBOL (ITEM 748015)	115 SF
S	12" SOLID WHITE ALKYD THERMOPLASTIC PAVEMENT STRIPING (ITEM 748027)	60 LF

CONDUIT RUN SCHEDULE

CR*	#OF CON	SIZE	LENGTH	B/T/O	AMOUNT AND TYPE OF CABLE/ WIRE
30	Pathway Information Shown on Sheet SSC-6				
31	1	4"	82'	B	Comm. Cable
32	1	4"	550'	T	Comm. Cable
33	3	2.5"	10'	T	Wavetronix Cable, Solar Power
34	1	2.5"	10'	T	Wavetronix Cable
* 35	1	4"	400'	T	Comm. Cable

B = BORE, T = TRENCH, O = OPEN CUT.
* QUANTITY REFLECTS CONTINUATION OF PATHWAY SHOWN ON SHEET SSC-8

SIGNING LEGEND

1	REMOVE EXISTING SIGN
2	EXISTING SIGN TO REMAIN
3	PLACE NEW SIGN
4	RENEW EXISTING SIGN
5	REPOSITION EXISTING SIGN

SIGN NOTE:

ALL EXISTING OVERHEAD GUIDE SIGNS TO BE REMOVED UNLESS OTHERWISE NOTED.

ALL EXISTING REGULATORY, WARNING, AND SPECIAL SIGNS ASSUMED TO BE REMOVED UNLESS OTHERWISE NOTED.

NOTES:

1. ALL PROPOSED ITMS CONNECTIONS AND TERMINATIONS SHALL BE COMPLETED BY DELDOT FORCES. THE CONTRACTOR SHALL CONTACT DELDOTS SIGNAL CONSTRUCTION MANAGER AT 302.222.5920 TEN (10) DAYS PRIOR TO REQUIRED WORK
2. ALL UNDERGROUND ITMS FACILITIES TO BE INSTALLED BY THE CONTRACTOR. PRIOR TO COMPLETION OF UNDERGROUND FACILITIES THE CONTRACTOR SHALL CONTACT DELDOT'S SIGNAL CONSTRUCTION MANAGER AT 302.222.5920 TEN (10) DAYS PRIOR TO COMPLETION OF FACILITY.
3. ALL PROPOSED ITMS DEVICE TO BE FURNISHED AND INSTALLED, BY DELDOT TRAFFIC FORCES. UPON CONTACT BY THE CONTRACTOR DELDOT TRAFFIC FORCES WILL DEVELOP A SCHEDULE OF WHEN WORK CAN BE PERFORMED AVOIDING CONFLICT WITH THE CONTRACTORS SCHEDULE.
4. CONTRACTOR SHALL BE RESPONSIBLE FOR ALL INSTALLATION AND REMOVAL OF ALL PROPOSED, TEMPORARY AND EXISTING STRIPING AS REQUIRED. ALL PROPOSED MARKINGS SHALL TIE INTO EXISTING MARKINGS IN ACCORDANCE WITH THE MUTCD AND AS DIRECTED BY THE DELDOT'S CONSTRUCTION ENGINEER.
5. THE CONTRACTOR SHALL INSTALL AND REMOVE THE REGULATORY, WARNING, AND SPECIAL SIGNS AND POSTS WITHIN THE CONTRACT LIMITS, AS SHOWN. DELDOT SHALL FABRICATE AND SUPPLY THE REGULATORY, WARNING, AND SPECIAL SIGNS AND POSTS TO THE CONTRACTOR. FOR COORDINATION AND PICK UP OF ALL SIGNS AND POSTS, THE CONTRACTOR SHALL CONTACT DELDOT'S SIGN SHOP AT 302.760.2581. ALLOW FOUR (4) WEEKS FOR DELIVERY. ALL SIGNING MATERIALS REMOVED FROM THIS PROJECT SHALL BE RETURNED TO DELDOT'S SIGN SHOP.
6. ALL EXISTING OVERHEAD AND BRIDGE MOUNTED SIGNS AND STRUCTURES SHALL BE REMOVED BY THE CONTRACTOR WITHIN THE CONTRACT LIMITS UNLESS OTHERWISE NOTED. THE CONTRACTOR SHALL FURNISH AND INSTALL ALL PROPOSED OVERHEADS AND CANTILEVER SIGN STRUCTURES, FOUNDATIONS, AND SIGNS. THE CONTRACTOR SHALL RETURN ALL SIGNS REMOVED FROM THE PROJECT TO DELDOT'S SIGN SHOP. THE CONTRACTOR SHALL CONTACT DELDOT'S SIGN SHOP AT 302.760.2581 TO ARRANGE FOR DELIVERY OF SIGNS.
7. CONTRACTOR SHALL INSTALL RAISED PAVEMENT MARKERS IN ACCORDANCE WITH THE MUTCD.

UNOFFICIAL WEBSITE COPY

6/24/2009 1:51:40 PM
M:\PROJECTS\2003\03059_DELTRNPK\SRMALL\CADD\2809003\PLANS\CP85_SSC_SR1.DGN

DELAWARE DEPARTMENT OF TRANSPORTATION

ADDENDUMS / REVISIONS

SCALE 0 50 100 150 FEET

SR1 / I-95 INTERCHANGE

CONTRACT	BRIDGE NO.
28-090-03	DESIGNED BY:
COUNTY	
NEW CASTLE	CHECKED BY:

SIGNING, STRIPING & CONDUIT PLAN

SSC-7

SHEET NO.	TOTAL SHTS.
717	803

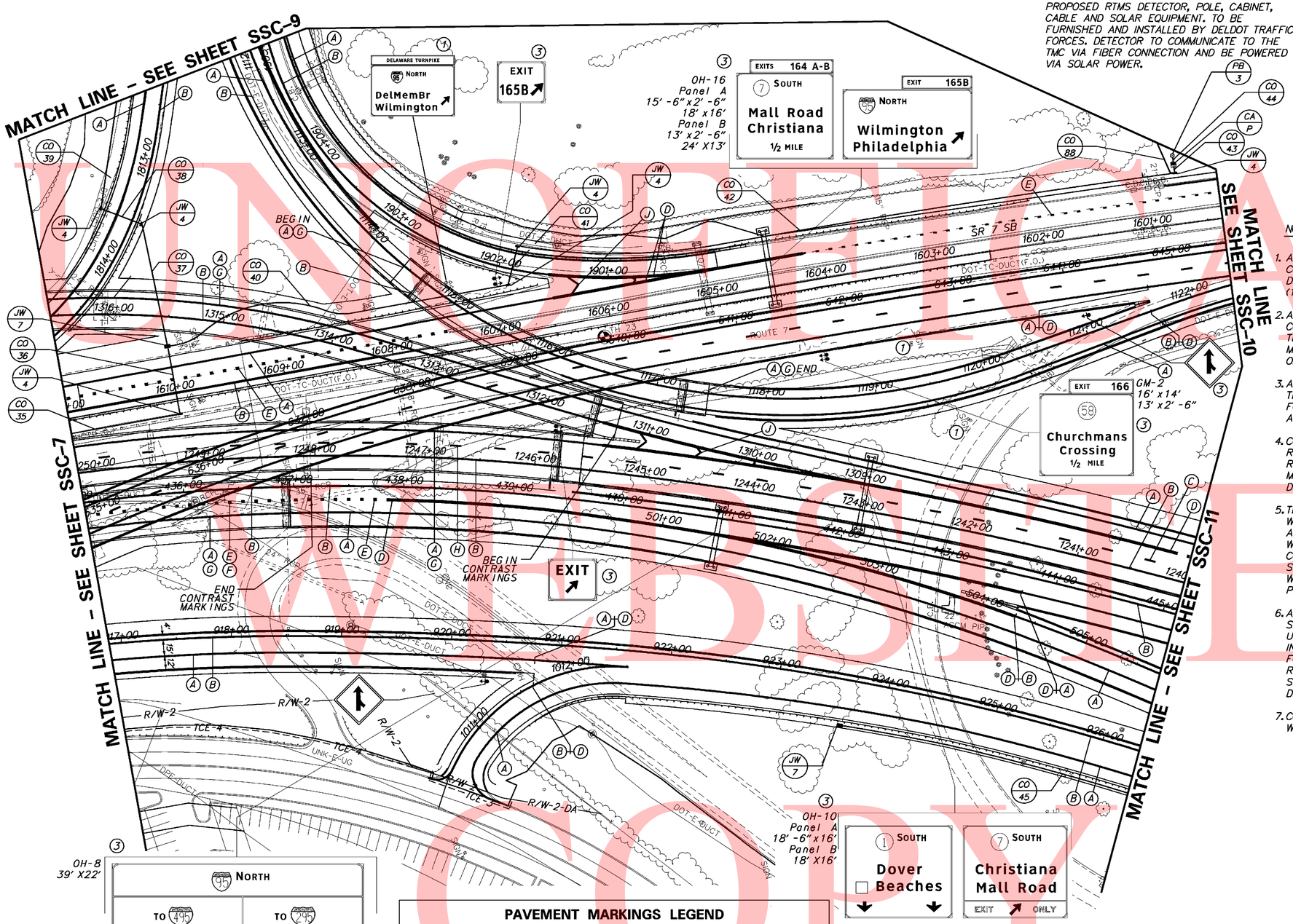

SIGNING LEGEND

1	REMOVE EXISTING SIGN
2	EXISTING SIGN TO REMAIN
3	PLACE NEW SIGN
4	RENEW EXISTING SIGN
5	REPOSITION EXISTING SIGN

SIGN NOTE:

ALL EXISTING OVERHEAD GUIDE SIGNS TO BE REMOVED UNLESS OTHERWISE NOTED.

ALL EXISTING REGULATORY, WARNING, AND SPECIAL SIGNS ASSUMED TO BE REMOVED UNLESS OTHERWISE NOTED.

NOTES:

1. ALL PROPOSED ITMS CONNECTIONS AND TERMINATIONS SHALL BE COMPLETED BY DELDOT FORCES. THE CONTRACTOR SHALL CONTACT DELDOTS SIGNAL CONSTRUCTION MANAGER AT 302.222.5920 TEN (10) DAYS PRIOR TO REQUIRED WORK
2. ALL UNDERGROUND ITMS FACILITIES TO BE INSTALLED BY THE CONTRACTOR. PRIOR TO COMPLETION OF UNDERGROUND FACILITIES THE CONTRACTOR SHALL CONTACT DELDOT'S SIGNAL CONSTRUCTION MANAGER AT 302.222.5920 TEN (10) DAYS PRIOR TO COMPLETION OF FACILITY.
3. ALL PROPOSED ITMS DEVICE TO BE FURNISHED AND INSTALLED BY DELDOT TRAFFIC FORCES.UPON CONTACT BY THE CONTRACTOR DELDOT TRAFFIC FORCES WILL DEVELOP A SCHEDULE OF WHEN WORK CAN BE PERFORMED AVOIDING CONFLICT WITH THE CONTRACTORS SCHEDULE.
4. CONTRACTOR SHALL BE RESPONSIBLE FOR ALL INSTALLATION AND REMOVAL OF ALL PROPOSED, TEMPORARY AND EXISTING STRIPING AS REQUIRED. ALL PROPOSED MARKINGS SHALL TIE INTO EXISTING MARKINGS IN ACCORDANCE WITH THE MUTCD AND AS DIRECTED BY DELDOT'S CONSTRUCTION ENGINEER.
5. THE CONTRACTOR SHALL INSTALL AND REMOVE THE REGULATORY, WARNING, AND SPECIAL SIGNS AND POSTS WITHIN THE CONTRACT LIMITS, AS SHOWN. DELDOT SHALL FABRICATE AND SUPPLY THE REGULATORY, WARNING, AND SPECIAL SIGNS AND POSTS TO THE CONTRACTOR. FOR COORDINATION AND PICK UP OF ALL SIGNS AND POSTS, THE CONTRACTOR SHALL CONTACT DELDOT'S SIGN SHOP AT 302.760.2581. ALLOW FOUR (4) WEEKS FOR DELIVERY. ALL SIGNING MATERIALS REMOVED FROM THIS PROJECT SHALL BE RETURNED TO DELDOT'S SIGN SHOP.
6. ALL EXISTING OVERHEAD AND BRIDGE MOUNTED SIGNS AND STRUCTURES SHALL BE REMOVED BY THE CONTRACTOR WITHIN THE CONTRACT LIMITS UNLESS OTHERWISE NOTED. THE CONTRACTOR SHALL FURNISH AND INSTALL ALL PROPOSED OVERHEADS AND CANTILEVER SIGN STRUCTURES, FOUNDATIONS, AND SIGNS. THE CONTRACTOR SHALL RETURN ALL SIGNS REMOVED FROM THE PROJECT TO DELDOT'S SIGN SHOP. THE CONTRACTOR SHALL CONTACT DELDOT'S SIGN SHOP AT 302.760.2581 TO ARRANGE FOR DELIVERY OF SIGNS.
7. CONTRACTOR SHALL INSTALL RAISED PAVEMENT MARKERS IN ACCORDANCE WITH THE MUTCD.

CONDUIT RUN SCHEDULE

	CR*	*OF CON	SIZE	LENGTH	B/T/O	AMOUNT AND TYPE OF CABLE/ WIRE
	35	Pathway Information Shown on Sheet SSC-7				
	36	1	4"	65'	B	Comm. Cable
	37	1	4"	120'	T	Comm. Cable
	38	1	4"	40'	B	Comm. Cable
*	39	1	4"	600'	T	Comm. Cable
	40	1	4"	310'	T	Comm. Cable
	41	1	4"	35'	B	Comm. Cable
	42	1	4"	600'	T	Comm. Cable
	43	3	2.5"	10'	T	Comm. Cable
	44	2	2.5"	10'	T	Wavetronix Cable, Solar Power Cable
**	45	1	4"	600'	T	Empty
***	88	1	4"	225'	T	Comm. Cable

B = BORE, T = TRENCH, O = OPEN CUT.
* QUANTITY REFLECTS CONTINUATION OF PATHWAY SHOWN ON SHEET SSC-9
** QUANTITY REFLECTS CONTINUATION OF PATHWAY SHOWN ON SHEET SSC-11
*** QUANTITY REFLECTS CONTINUATION OF PATHWAY SHOWN ON SHEET SSC-10

PAVEMENT MARKINGS LEGEND

SYMBOL	ITEM	QUANTITY
A	6" SOLID WHITE EPOXY RESIN PAVEMENT STRIPING (ITEM 748507)	7040 LF
B	6" SOLID YELLOW EPOXY RESIN PAVEMENT STRIPING (ITEM 748507)	7,650 LF
C	6" DASHED WHITE EPOXY RESIN PAVEMENT STRIPING, 10' LINE & 30' GAP (ITEM 748507)	410 LF
D	12" SOLID WHITE EPOXY RESIN PAVEMENT STRIPING (ITEM 748509)	2,390 LF
E	12" DASHED WHITE EPOXY RESIN PAVEMENT STRIPING, 3' LINE & 9' GAP (ITEM 748509)	255 LF

PAVEMENT MARKINGS LEGEND

SYMBOL	ITEM	QUANTITY
F	12" SOLID BLACK EPOXY RESIN PAVEMENT STRIPING, 3' LINE & 9' GAP (ITEM 748539)	70 LF
G	3" SOLID BLACK EPOXY RESIN PAVEMENT STRIPING (ITEM 748557)	1485 LF
H	9" RETROREFLECTIVE PREFORMED PATTERNED CONTRAST MARKING, 10' LINE & 30' GAP (ITEM 748547)	115 LF
J	12" SOLID WHITE ALKYD THERMOPLASTIC PAVEMENT STRIPING (ITEM 748027)	120 LF

UNOFFICIAL WEBSITE COPY

DELAWARE DEPARTMENT OF TRANSPORTATION

ADDENDUMS / REVISIONS

SCALE 0 50 100 150 FEET

SR1 / I-95 INTERCHANGE

CONTRACT	BRIDGE NO.
28-090-03	DESIGNED BY:
COUNTY	CHECKED BY:
NEW CASTLE	

SIGNING, STRIPING & CONDUIT PLAN

SSC-8

SHEET NO. 718

TOTAL SHTS. 803

1/14/2009 5:33:58 PM
M:\PROJECTS\2003\03059_DELTRNPK\SRIMALL\CADD\2809003\PLANS\CP08_SSC_SR1.DGN

SIGNING LEGEND
① REMOVE EXISTING SIGN
② EXISTING SIGN TO REMAIN
③ PLACE NEW SIGN
④ RENEW EXISTING SIGN
⑤ REPOSITION EXISTING SIGN

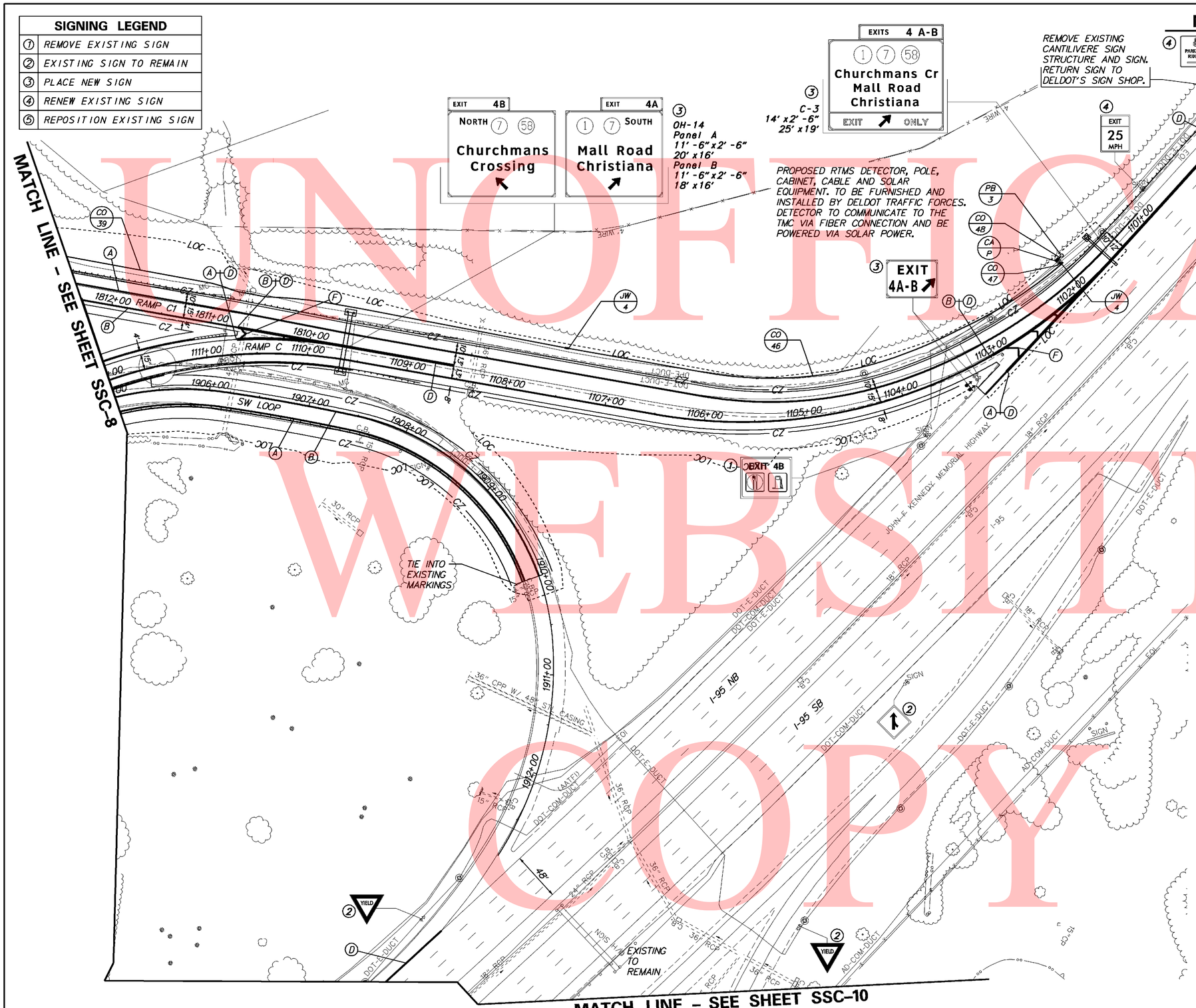

CONDUIT RUN SCHEDULE

CR*	*OF CON	SIZE	LENGTH	B/T/O	AMOUNT AND TYPE OF CABLE/ WIRE
39	Pathway Information Shown on Sheet SSC-8				
46	1	4"	560'	T	Comm. Cable
47	3	2.5"	5'	T	Comm. Cable
48	2	2.5"	8'	T	Wavetronix Cable, Solar Power Cable

B = BORE, T = TRENCH, O = OPEN CUT.

PAVEMENT MARKINGS LEGEND

SYMBOL	ITEM	QUANTITY
Ⓐ	6" SOLID WHITE EPOXY RESIN PAVEMENT STRIPING (ITEM 748507)	1,625 LF
Ⓑ	6" SOLID YELLOW EPOXY RESIN PAVEMENT STRIPING (ITEM 748507)	1,555 LF
Ⓒ	6" DASHED WHITE EPOXY RESIN PAVEMENT STRIPING, 10' LINE & 30' GAP (ITEM 748507)	0 LF
Ⓓ	12" SOLID WHITE EPOXY RESIN PAVEMENT STRIPING (ITEM 748509)	1030 LF
Ⓔ	12" DASHED WHITE EPOXY RESIN PAVEMENT STRIPING, 3' LINE & 9' GAP (ITEM 748509)	0 LF
Ⓕ	12" SOLID WHITE ALKYD THERMOPLASTIC PAVEMENT STRIPING (ITEM 748027)	65 LF

NOTES:

1. ALL PROPOSED ITMS CONNECTIONS AND TERMINATIONS SHALL BE COMPLETED BY DELDOT FORCES. THE CONTRACTOR SHALL CONTACT DELDOTS SIGNAL CONSTRUCTION MANAGER AT 302.222.5920 TEN (10) DAYS PRIOR TO REQUIRED WORK
2. ALL UNDERGROUND ITMS FACILITIES TO BE INSTALLED BY THE CONTRACTOR. PRIOR TO COMPLETION OF UNDERGROUND FACILITIES THE CONTRACTOR SHALL CONTACT DELDOT'S SIGNAL CONSTRUCTION MANAGER AT 302.222.5920 TEN (10) DAYS PRIOR TO COMPLETION OF FACILITY.
3. ALL PROPOSED ITMS DEVICE TO BE FURNISHED AND INSTALLED BY DELDOT TRAFFIC FORCES.UPON CONTACT BY THE CONTRACTOR DELDOT TRAFFIC FORCES WILL DEVELOP A SCHEDULE OF WHEN WORK CAN BE PERFORMED AVOIDING CONFLICT WITH THE CONTRACTORS SCHEDULE.
4. CONTRACTOR SHALL BE RESPONSIBLE FOR ALL INSTALLATION AND REMOVAL OF ALL PROPOSED, TEMPORARY AND EXISTING STRIPING AS REQUIRED. ALL PROPOSED MARKINGS SHALL TIE INTO EXISTING MARKINGS IN ACCORDANCE WITH THE MUTCD AND AS DIRECTED BY DELDOT'S CONSTRUCTION ENGINEER.
5. THE CONTRACTOR SHALL INSTALL AND REMOVE THE REGULATORY, WARNING, AND SPECIAL SIGNS AND POSTS WITHIN THE CONTRACT LIMITS, AS SHOWN. DELDOT SHALL FABRICATE AND SUPPLY THE REGULATORY, WARNING, AND SPECIAL SIGNS AND POSTS TO THE CONTRACTOR. FOR COORDINATION AND PICK UP OF ALL SIGNS AND POSTS, THE CONTRACTOR SHALL CONTACT DELDOT'S SIGN SHOP AT 302.760.2581. ALLOW FOUR (4) WEEKS FOR DELIVERY. ALL SIGNING MATERIALS REMOVED FROM THIS PROJECT SHALL BE RETURNED TO DELDOT'S SIGN SHOP.
6. ALL EXISTING OVERHEAD AND BRIDGE MOUNTED SIGNS AND STRUCTURES SHALL BE REMOVED BY THE CONTRACTOR WITHIN THE CONTRACT LIMITS UNLESS OTHERWISE NOTED. THE CONTRACTOR SHALL FURNISH AND INSTALL ALL PROPOSED OVERHEADS AND CANTILEVER SIGN STRUCTURES, FOUNDATIONS, AND SIGNS. THE CONTRACTOR SHALL RETURN ALL SIGNS REMOVED FROM THE PROJECT TO DELDOT'S SIGN SHOP. THE CONTRACTOR SHALL CONTACT DELDOT'S SIGN SHOP AT 302.760.2581 TO ARRANGE FOR DELIVERY OF SIGNS.
7. CONTRACTOR SHALL INSTALL RAISED PAVEMENT MARKERS IN ACCORDANCE WITH THE MUTCD.

UNOFFICIAL WEBSITE COPY

DELAWARE DEPARTMENT OF TRANSPORTATION

ADDENDUMS / REVISIONS

SCALE 0 50 100 150 FEET

SR1 / I-95 INTERCHANGE

CONTRACT	BRIDGE NO.
28-090-03	DESIGNED BY:
COUNTY	
NEW CASTLE	CHECKED BY:

SIGNING, STRIPING & CONDUIT PLAN

SSC-9
SHEET NO.
719
TOTAL SHTS.
803

MATCH LINE – SEE SHEET SSC-9

NOTES:

1. ALL PROPOSED ITMS CONNECTIONS AND TERMINATIONS SHALL BE COMPLETED BY DELDOT FORCES. THE CONTRACTOR SHALL CONTACT DELDOTS SIGNAL CONSTRUCTION MANAGER AT 302.222.5920 TEN (10) DAYS PRIOR TO REQUIRED WORK
2. ALL UNDERGROUND ITMS FACILITIES TO BE INSTALLED BY THE CONTRACTOR. PRIOR TO COMPLETION OF UNDERGROUND FACILITIES THE CONTRACTOR SHALL CONTACT DELDOT'S SIGNAL CONSTRUCTION MANAGER AT 302.222.5920 TEN (10) DAYS PRIOR TO COMPLETION OF FACILITY.
3. ALL PROPOSED ITMS DEVICE TO BE FURNISHED AND INSTALLED BY DELDOT TRAFFIC FORCES. UPON CONTACT BY THE CONTRACTOR DELDOT TRAFFIC FORCES WILL DEVELOP A SCHEDULE OF WHEN WORK CAN BE PERFORMED AVOIDING CONFLICT WITH THE CONTRACTORS SCHEDULE.
4. CONTRACTOR SHALL BE RESPONSIBLE FOR ALL INSTALLATION AND REMOVAL OF ALL PROPOSED, TEMPORARY AND EXISTING STRIPING AS REQUIRED. ALL PROPOSED MARKINGS SHALL TIE INTO EXISTING MARKINGS IN ACCORDANCE WITH THE MUTCD AND AS DIRECTED BY THE DELDOT'S CONSTRUCTION ENGINEER.
5. THE CONTRACTOR SHALL INSTALL AND REMOVE THE REGULATORY, WARNING, AND SPECIAL SIGNS AND POSTS WITHIN THE CONTRACT LIMITS, AS SHOWN. DELDOT SHALL FABRICATE AND SUPPLY THE REGULATORY, WARNING, AND SPECIAL SIGNS AND POSTS TO THE CONTRACTOR. FOR COORDINATION AND PICK UP OF ALL SIGNS AND POSTS, THE CONTRACTOR SHALL CONTACT DELDOT'S SIGN SHOP AT 302.760.2581. ALLOW FOUR (4) WEEKS FOR DELIVERY. ALL SIGNING MATERIALS REMOVED FROM THIS PROJECT SHALL BE RETURNED TO DELDOT'S SIGN SHOP.
6. ALL EXISTING OVERHEAD AND BRIDGE MOUNTED SIGNS AND STRUCTURES SHALL BE REMOVED BY THE CONTRACTOR WITHIN THE CONTRACT LIMITS UNLESS OTHERWISE NOTED. THE CONTRACTOR SHALL FURNISH AND INSTALL ALL PROPOSED OVERHEADS AND CANTILEVER SIGN STRUCTURES, FOUNDATIONS, AND SIGNS. THE CONTRACTOR SHALL RETURN ALL SIGNS REMOVED FROM THE PROJECT TO DELDOT'S SIGN SHOP. THE CONTRACTOR SHALL CONTACT DELDOT'S SIGN SHOP AT 302.760.2581 TO ARRANGE FOR DELIVERY OF SIGNS.
7. CONTRACTOR SHALL INSTALL RAISED PAVEMENT MARKERS IN ACCORDANCE WITH THE MUTCD.

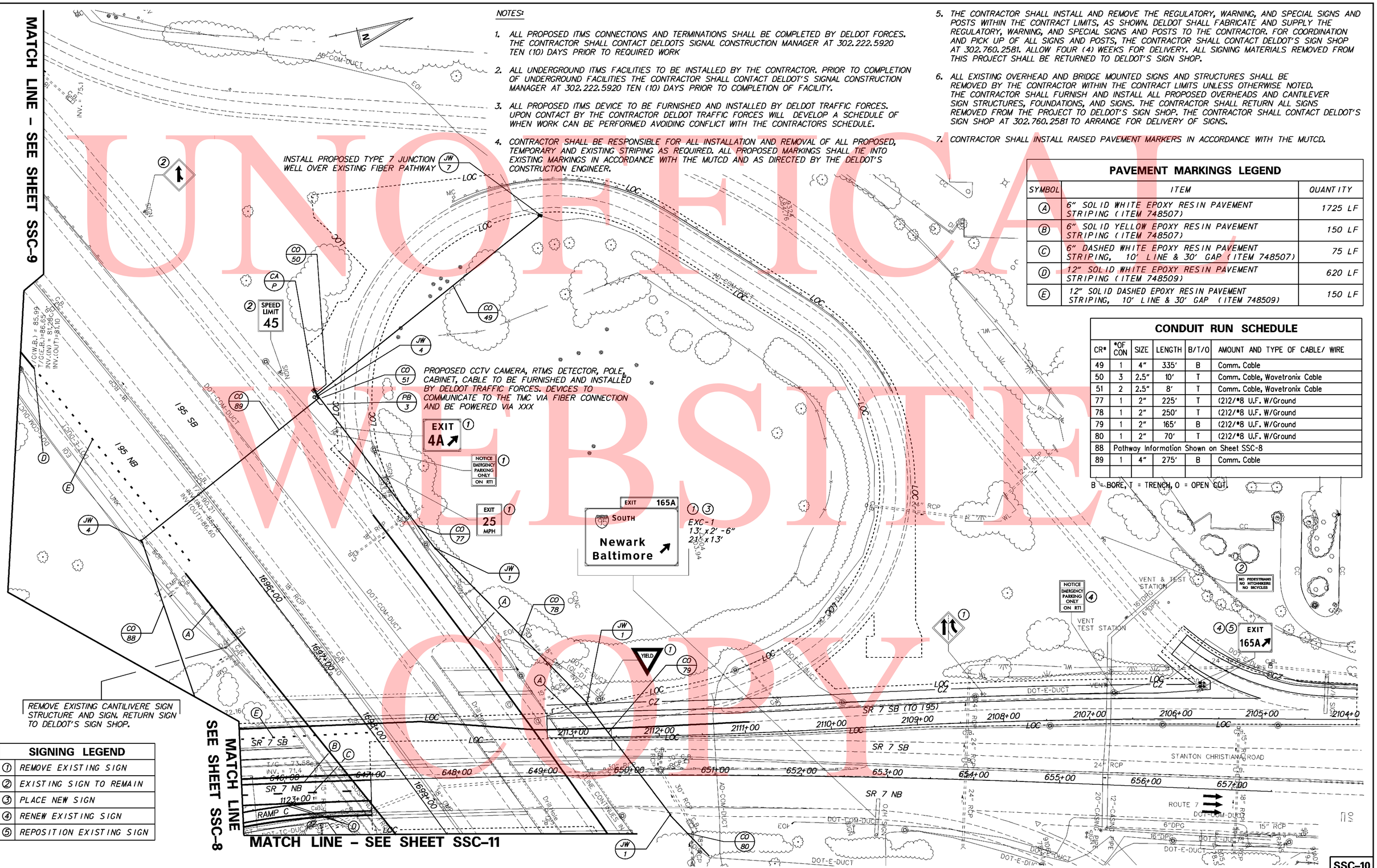

PAVEMENT MARKINGS LEGEND

SYMBOL	ITEM	QUANTITY
A	6" SOLID WHITE EPOXY RESIN PAVEMENT STRIPING (ITEM 748507)	1725 LF
B	6" SOLID YELLOW EPOXY RESIN PAVEMENT STRIPING (ITEM 748507)	150 LF
C	6" DASHED WHITE EPOXY RESIN PAVEMENT STRIPING, 10' LINE & 30' GAP (ITEM 748507)	75 LF
D	12" SOLID WHITE EPOXY RESIN PAVEMENT STRIPING (ITEM 748509)	620 LF
E	12" SOLID DASHED EPOXY RESIN PAVEMENT STRIPING, 10' LINE & 30' GAP (ITEM 748509)	150 LF

CONDUIT RUN SCHEDULE

CR#	#OF CON	SIZE	LENGTH	B/T/O	AMOUNT AND TYPE OF CABLE/ WIRE
49	1	4"	335'	B	Comm. Cable
50	3	2.5"	10'	T	Comm. Cable, Wavetronix Cable
51	2	2.5"	8'	T	Comm. Cable, Wavetronix Cable
77	1	2"	225'	T	(2)2/#8 U.F. W/Ground
78	1	2"	250'	T	(2)2/#8 U.F. W/Ground
79	1	2"	165'	B	(2)2/#8 U.F. W/Ground
80	1	2"	70'	T	(2)2/#8 U.F. W/Ground
88	Pathway Information Shown on Sheet SSC-8				
89	1	4"	275'	B	Comm. Cable

B = BORE, T = TRENCH, O = OPEN CUT

SIGNING LEGEND

1	REMOVE EXISTING SIGN
2	EXISTING SIGN TO REMAIN
3	PLACE NEW SIGN
4	RENEW EXISTING SIGN
5	REPOSITION EXISTING SIGN

UNOFFICIAL WEBSITE COPY

DELAWARE DEPARTMENT OF TRANSPORTATION

ADDENDUMS / REVISIONS

SCALE 0 50 100 150 FEET

SR1 / I-95 INTERCHANGE

CONTRACT	BRIDGE NO.
28-090-03	DESIGNED BY:
COUNTY	CHECKED BY:
NEW CASTLE	

SIGNING, STRIPING & CONDUIT PLAN

SSC-10

SHEET NO. 720

TOTAL SHTS. 803

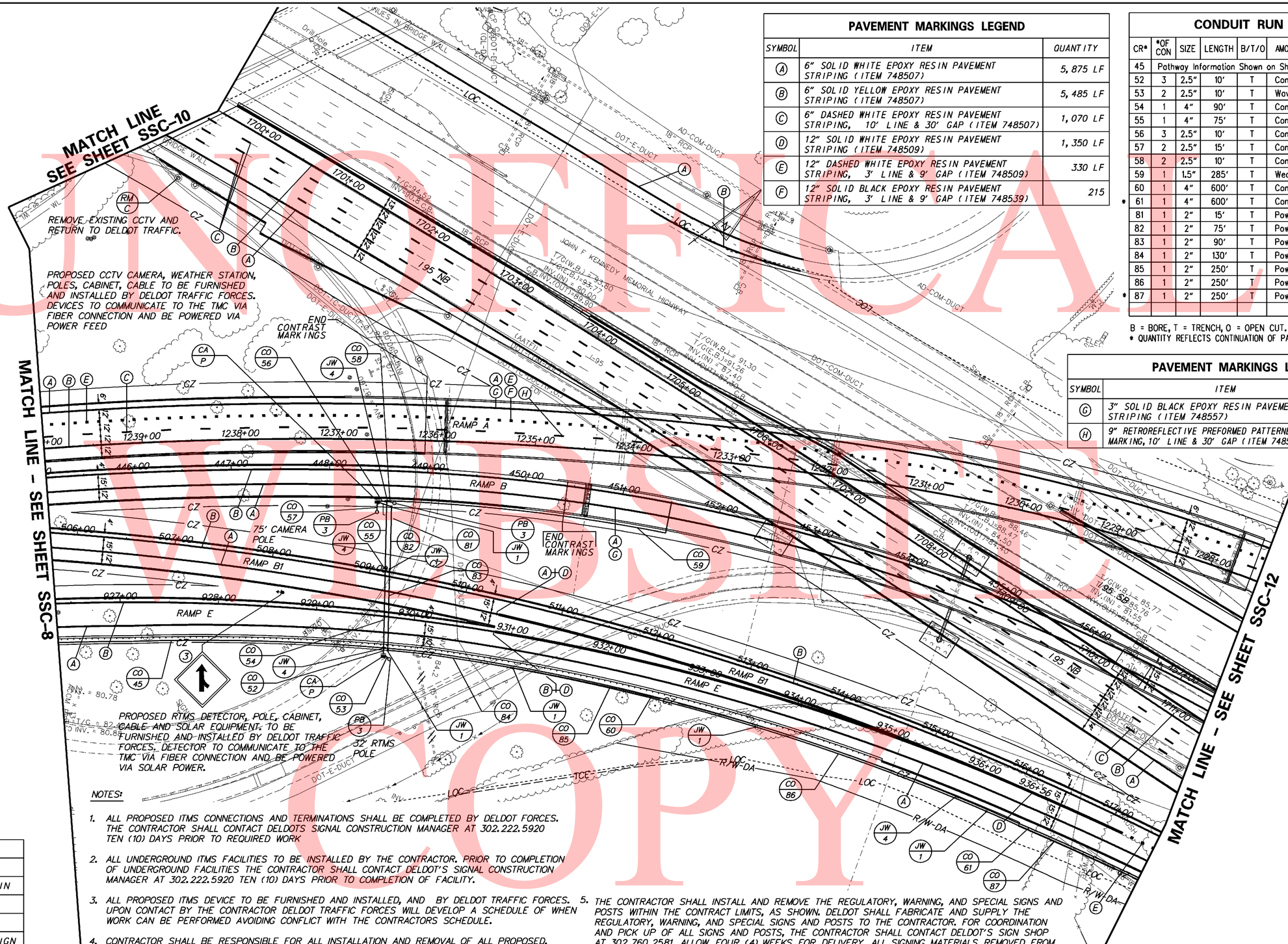

PAVEMENT MARKINGS LEGEND

SYMBOL	ITEM	QUANTITY
(A)	6" SOLID WHITE EPOXY RESIN PAVEMENT STRIPING (ITEM 748507)	5,875 LF
(B)	6" SOLID YELLOW EPOXY RESIN PAVEMENT STRIPING (ITEM 748507)	5,485 LF
(C)	6" DASHED WHITE EPOXY RESIN PAVEMENT STRIPING, 10' LINE & 30' GAP (ITEM 748507)	1,070 LF
(D)	12" SOLID WHITE EPOXY RESIN PAVEMENT STRIPING (ITEM 748509)	1,350 LF
(E)	12" DASHED WHITE EPOXY RESIN PAVEMENT STRIPING, 3' LINE & 9' GAP (ITEM 748509)	330 LF
(F)	12" SOLID BLACK EPOXY RESIN PAVEMENT STRIPING, 3' LINE & 9' GAP (ITEM 748539)	215

CONDUIT RUN SCHEDULE

CR*	*OF CON	SIZE	LENGTH	B/T/O	AMOUNT AND TYPE OF CABLE/ WIRE
45	Pathway Information Shown on Sheet SSC-8				
52	3	2.5"	10'	T	Comm. Cable
53	2	2.5"	10'	T	Wavetronix Cable
54	1	4"	90'	T	Comm. Cable
55	1	4"	75'	T	Comm. Cable
56	3	2.5"	10'	T	Comm. Cable
57	2	2.5"	15'	T	Comm. Cable
58	2	2.5"	10'	T	Comm. Cable
59	1	1.5"	285'	T	Weather Sensor
60	1	4"	600'	T	Comm. Cable
* 61	1	4"	600'	T	Comm. Cable
81	1	2"	15'	T	Power
82	1	2"	75'	T	Power
83	1	2"	90'	T	Power
84	1	2"	130'	T	Power
85	1	2"	250'	T	Power
86	1	2"	250'	T	Power
* 87	1	2"	250'	T	Power

B = BORE, T = TRENCH, O = OPEN CUT.
* QUANTITY REFLECTS CONTINUATION OF PATHWAY SHOWN ON SHEET SSC-12

PAVEMENT MARKINGS LEGEND

SYMBOL	ITEM	QUANTITY
(G)	3" SOLID BLACK EPOXY RESIN PAVEMENT STRIPING (ITEM 748557)	850 LF
(H)	9" RETROREFLECTIVE PREFORMED PATTERNED CONTRAST MARKING, 10' LINE & 30' GAP (ITEM 748547)	215 LF

NOTES:

1. ALL PROPOSED ITMS CONNECTIONS AND TERMINATIONS SHALL BE COMPLETED BY DELDOT FORCES. THE CONTRACTOR SHALL CONTACT DELDOTS SIGNAL CONSTRUCTION MANAGER AT 302.222.5920 TEN (10) DAYS PRIOR TO REQUIRED WORK
2. ALL UNDERGROUND ITMS FACILITIES TO BE INSTALLED BY THE CONTRACTOR. PRIOR TO COMPLETION OF UNDERGROUND FACILITIES THE CONTRACTOR SHALL CONTACT DELDOT'S SIGNAL CONSTRUCTION MANAGER AT 302.222.5920 TEN (10) DAYS PRIOR TO COMPLETION OF FACILITY.
3. ALL PROPOSED ITMS DEVICE TO BE FURNISHED AND INSTALLED, AND BY DELDOT TRAFFIC FORCES. UPON CONTACT BY THE CONTRACTOR DELDOT TRAFFIC FORCES WILL DEVELOP A SCHEDULE OF WHEN WORK CAN BE PERFORMED AVOIDING CONFLICT WITH THE CONTRACTORS SCHEDULE.
4. CONTRACTOR SHALL BE RESPONSIBLE FOR ALL INSTALLATION AND REMOVAL OF ALL PROPOSED, TEMPORARY AND EXISTING STRIPING AS REQUIRED. ALL PROPOSED MARKINGS SHALL TIE INTO EXISTING MARKINGS IN ACCORDANCE WITH THE MUTCD AND AS DIRECTED BY THE DELDOT'S CONSTRUCTION ENGINEER.
5. THE CONTRACTOR SHALL INSTALL AND REMOVE THE REGULATORY, WARNING, AND SPECIAL SIGNS AND POSTS WITHIN THE CONTRACT LIMITS, AS SHOWN. DELDOT SHALL FABRICATE AND SUPPLY THE REGULATORY, WARNING, AND SPECIAL SIGNS AND POSTS TO THE CONTRACTOR. FOR COORDINATION AND PICK UP OF ALL SIGNS AND POSTS, THE CONTRACTOR SHALL CONTACT DELDOT'S SIGN SHOP AT 302.760.2581. ALLOW FOUR (4) WEEKS FOR DELIVERY. ALL SIGNING MATERIALS REMOVED FROM THIS PROJECT SHALL BE RETURNED TO DELDOT'S SIGN SHOP.
6. CONTRACTOR SHALL INSTALL RAISED PAVEMENT MARKERS IN ACCORDANCE WITH THE MUTCD.

SIGNING LEGEND

(1)	REMOVE EXISTING SIGN
(2)	EXISTING SIGN TO REMAIN
(3)	PLACE NEW SIGN
(4)	RENEW EXISTING SIGN
(5)	REPOSITION EXISTING SIGN

SIGN NOTE:

ALL EXISTING REGULATORY, WARNING, AND SPECIAL SIGNS ASSUMED TO BE REMOVED UNLESS OTHERWISE NOTED.

UNOFFICIAL WEBSITE COPY

DELAWARE DEPARTMENT OF TRANSPORTATION

ADDENDUMS / REVISIONS

SCALE 0 50 100 150 FEET

SR1 / I-95 INTERCHANGE

CONTRACT 28-090-03
COUNTY NEW CASTLE
BRIDGE NO.
DESIGNED BY:
CHECKED BY:

SIGNING, STRIPING & CONDUIT PLAN

SSC-11
SHEET NO. 721
TOTAL SHTS. 803

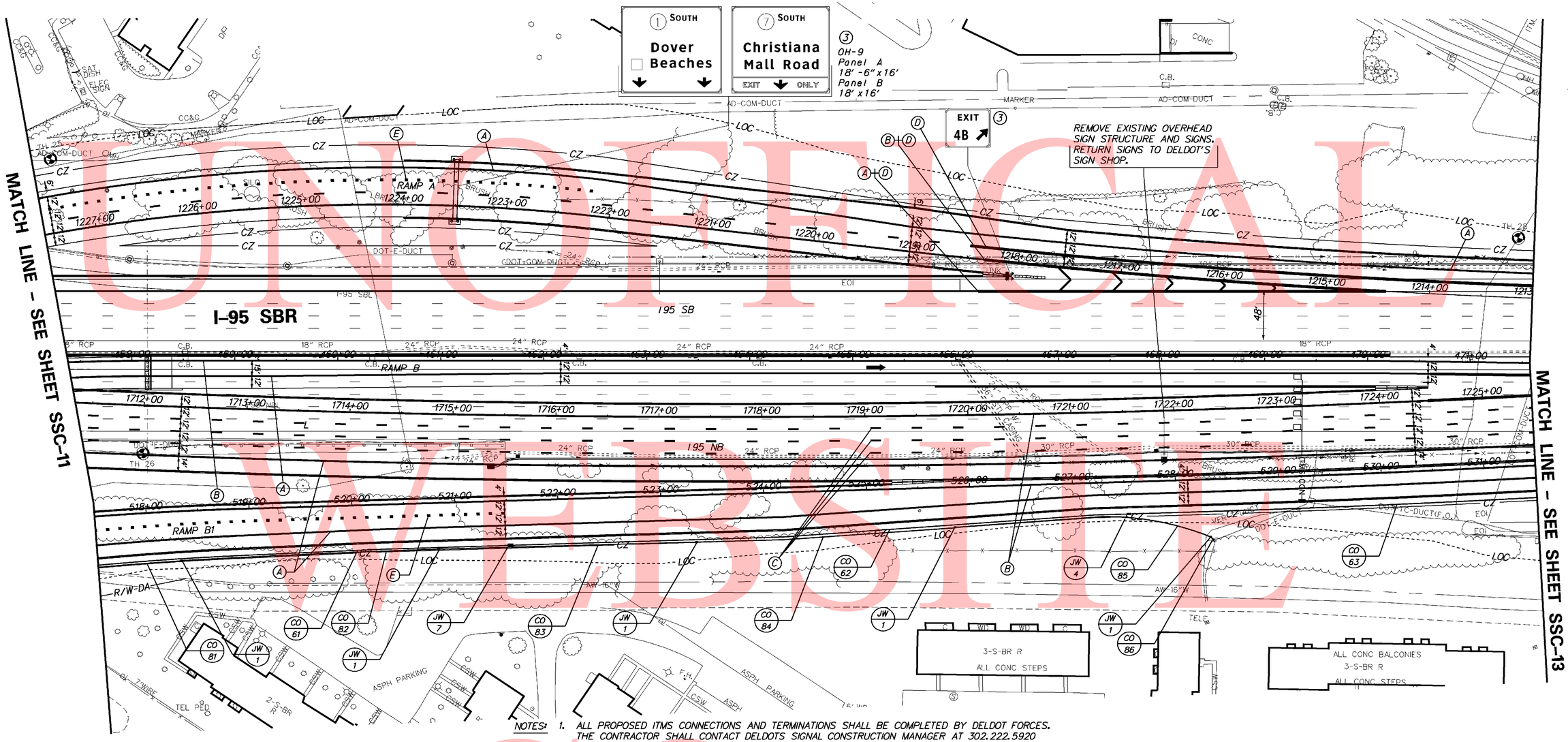

NOTES:

1. ALL PROPOSED ITMS CONNECTIONS AND TERMINATIONS SHALL BE COMPLETED BY DELDOT FORCES. THE CONTRACTOR SHALL CONTACT DELDOTS SIGNAL CONSTRUCTION MANAGER AT 302.222.5920 TEN (10) DAYS PRIOR TO REQUIRED WORK
2. ALL UNDERGROUND ITMS FACILITIES TO BE INSTALLED BY THE CONTRACTOR. PRIOR TO COMPLETION OF UNDERGROUND FACILITIES THE CONTRACTOR SHALL CONTACT DELDOT'S SIGNAL CONSTRUCTION MANAGER AT 302.222.5920 TEN (10) DAYS PRIOR TO COMPLETION OF FACILITY.
3. CONTRACTOR SHALL BE RESPONSIBLE FOR ALL INSTALLATION AND REMOVAL OF ALL PROPOSED, TEMPORARY AND EXISTING STRIPING AS REQUIRED. ALL PROPOSED MARKINGS SHALL TIE INTO EXISTING MARKINGS IN ACCORDANCE WITH THE MUTCD AND AS DIRECTED BY THE DELDOT'S CONSTRUCTION ENGINEER.
4. THE CONTRACTOR SHALL INSTALL AND REMOVE THE REGULATORY, WARNING, AND SPECIAL SIGNS AND POSTS WITHIN THE CONTRACT LIMITS, AS SHOWN. DELDOT SHALL FABRICATE AND SUPPLY THE REGULATORY, WARNING, AND SPECIAL SIGNS AND POSTS TO THE CONTRACTOR. FOR COORDINATION AND PICK UP OF ALL SIGNS AND POSTS, THE CONTRACTOR SHALL CONTACT DELDOT'S SIGN SHOP AT 302.760.2581. ALLOW FOUR (4) WEEKS FOR DELIVERY. ALL SIGNING MATERIALS REMOVED FROM THIS PROJECT SHALL BE RETURNED TO DELDOT'S SIGN SHOP.
5. ALL EXISTING OVERHEAD AND BRIDGE MOUNTED SIGNS AND STRUCTURES SHALL BE REMOVED BY THE CONTRACTOR WITHIN THE CONTRACT LIMITS UNLESS OTHERWISE NOTED. THE CONTRACTOR SHALL FURNISH AND INSTALL ALL PROPOSED OVERHEADS AND CANTILEVER SIGN STRUCTURES, FOUNDATIONS, AND SIGNS. THE CONTRACTOR SHALL RETURN ALL SIGNS REMOVED FROM THE PROJECT TO DELDOT'S SIGN SHOP. THE CONTRACTOR SHALL CONTACT DELDOT'S SIGN SHOP AT 302.760.2581 TO ARRANGE FOR DELIVERY OF SIGNS.
6. CONTRACTOR SHALL INSTALL RAISED PAVEMENT MARKERS IN ACCORDANCE WITH THE MUTCD.

CONDUIT RUN SCHEDULE

CR*	*OF CON	SIZE	LENGTH	B/T/O	AMOUNT AND TYPE OF CABLE/ WIRE
61	Pathway Information Shown on SSC-11				
62	1	4"	600'	T	Comm. Cable
* 63	1	4"	600'	T	Comm. Cable
81	Pathway Information Shown on SSC-11				
82	1	2"	250'	T	Power
83	1	2"	250'	T	Power
84	1	2"	250'	T	Power
85	1	2"	250'	T	Power
86	1	2"	10'	T	Power

B = BORE, T = TRENCH, O = OPEN CUT.
* QUANTITY REFLECTS CONTINUATION OF PATHWAY SHOWN ON SHEET SSC-13

SIGNING LEGEND

1	REMOVE EXISTING SIGN
2	EXISTING SIGN TO REMAIN
3	PLACE NEW SIGN
4	RENEW EXISTING SIGN
5	REPOSITION EXISTING SIGN

PAVEMENT MARKINGS LEGEND

SYMBOL	ITEM	QUANTITY
A	6" SOLID WHITE EPOXY RESIN PAVEMENT STRIPING (ITEM 748507)	6,450 LF
B	6" SOLID YELLOW EPOXY RESIN PAVEMENT STRIPING (ITEM 748507)	5,050 LF
C	6" DASHED WHITE EPOXY RESIN PAVEMENT STRIPING, 10' LINE & 30' GAP (ITEM 748507)	1,185 LF
D	12" SOLID WHITE EPOXY RESIN PAVEMENT STRIPING (ITEM 748509)	1,545 LF
E	12" DASHED WHITE EPOXY RESIN PAVEMENT STRIPING, 3' LINE & 9' GAP (ITEM 748509)	235 LF
F	12" SOLID WHITE ALKYD THERMOPLASTIC PAVEMENT STRIPING (ITEM 748027)	95 LF
G	3" SOLID BLACK EPOXY RESIN PAVEMENT STRIPING (ITEM 748557)	100 LF

UNOFFICIAL WEBSITE COPY

DELAWARE DEPARTMENT OF TRANSPORTATION

ADDENDUMS / REVISIONS

SCALE 0 50 100 150 FEET

SR1 / I-95 INTERCHANGE

CONTRACT	BRIDGE NO.
28-090-03	DESIGNED BY:
COUNTY	
NEW CASTLE	CHECKED BY:

SIGNING, STRIPING & CONDUIT PLAN

SSC-12

SHEET NO.
722
TOTAL SHTS.
803

8/27/2010 2:28:27 PM
M:\PROJECTS\2003\03059_DELTRNPK\SR1MALL\CADD\2809003\PLANS\CP90_SSC_SR.DGN

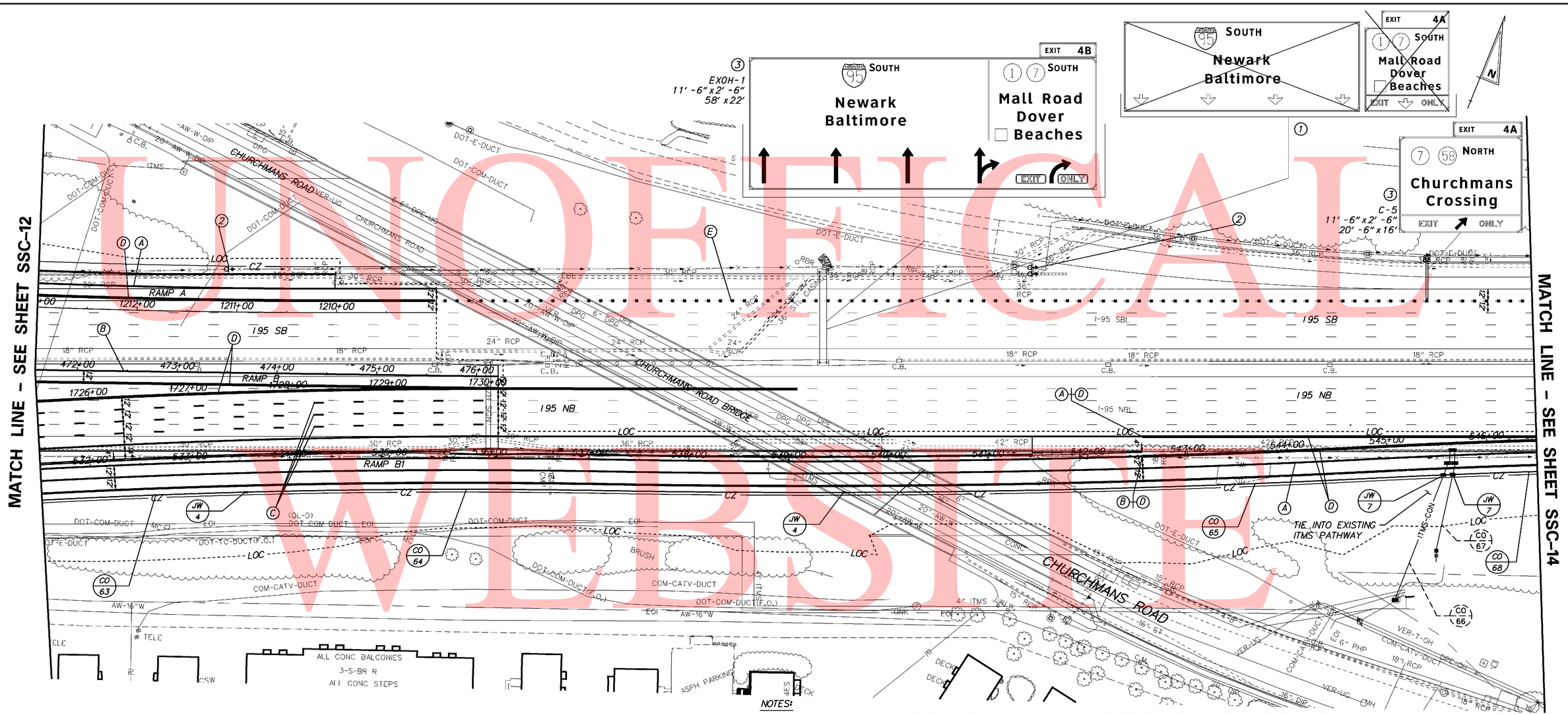

UNOFFICIAL WEBSITE COPY

CONDUIT RUN SCHEDULE

	CR*	*OF CON	SIZE	LENGTH	B/T/O	AMOUNT AND TYPE OF CABLE/ WIRE
	63	Pathway Information Shown on Sheet SSC-12				
	64	1	4"	600'	T	Comm. Cable
	65	1	4"	600'	T	Comm. Cable
*	66	1	4"	150'	T	Comm. Cable
*	67	1	4"	90'	T	Comm. Cable
**	68	1	4"	625'	T	Comm. Cable

B = BORE, T = TRENCH, O = OPEN CUT.
* DENOTES EXISTING
** QUANTITY REFLECTS CONTINUATION OF PATHWAY SHOWN ON SHEET SSC-14

PAVEMENT MARKINGS LEGEND

SYMBOL	ITEM	QUANTITY
A	6" SOLID WHITE EPOXY RESIN PAVEMENT STRIPING (ITEM 748507)	3,000 LF
B	6" SOLID YELLOW EPOXY RESIN PAVEMENT STRIPING (ITEM 748507)	1,565 LF
C	6" DASHED WHITE EPOXY RESIN PAVEMENT STRIPING, 10' LINE & 30' GAP (ITEM 748507)	350 LF
D	12" SOLID WHITE EPOXY RESIN PAVEMENT STRIPING (ITEM 748509)	2,430 LF
E	12" DASHED WHITE EPOXY RESIN PAVEMENT STRIPING, 3' LINE & 9' GAP (ITEM 748509)	275 LF

NOTES:

1. ALL PROPOSED ITMS CONNECTIONS AND TERMINATIONS SHALL BE COMPLETED BY DELDOT TRAFFIC FORCES. THE CONTRACTOR SHALL CONTACT DELDOTS SIGNAL CONSTRUCTION MANAGER AT 302.222.5920 TEN (10) DAYS PRIOR TO REQUIRED WORK
2. ALL UNDERGROUND ITMS FACILITIES TO BE INSTALLED BY THE CONTRACTOR. PRIOR TO COMPLETION OF UNDERGROUND FACILITIES THE CONTRACTOR SHALL CONTACT DELDOT'S SIGNAL CONSTRUCTION MANAGER AT 302.222.5920 TEN (10) DAYS PRIOR TO COMPLETION OF FACILITY.
3. ALL PROPOSED ITMS DEVICE TO BE FURNISHED AND INSTALLED BY DELDOT TRAFFIC FORCES. UPON CONTACT BY THE CONTRACTOR DELDOT TRAFFIC FORCES WILL DEVELOP A SCHEDULE OF WHEN WORK CAN BE PERFORMED AVOIDING CONFLICTS WITH THE GENERAL CONTRACTORS SCHEDULE.
4. CONTRACTOR SHALL BE RESPONSIBLE FOR ALL INSTALLATION AND REMOVAL OF ALL PROPOSED, TEMPORARY AND EXISTING MARKINGS AS REQUIRED. ALL PROPOSED MARKINGS SHALL TIE INTO EXISTING MARKINGS IN ACCORDANCE WITH THE MUTCD AND AS DIRECTED BY THE DELDOT'S CONSTRUCTION ENGINEER.
5. THE CONTRACTOR SHALL INSTALL AND REMOVE THE REGULATORY, WARNING, AND SPECIAL SIGNS AND POSTS WITHIN THE CONTRACT LIMITS, AS SHOWN. DELDOT SHALL FABRICATE AND SUPPLY THE REGULATORY, WARNING, AND SPECIAL SIGNS AND POSTS TO THE CONTRACTOR. FOR COORDINATION AND PICK UP OF ALL SIGNS AND POSTS, THE CONTRACTOR SHALL CONTACT DELDOT'S SIGN SHOP AT 302.760.2581. ALLOW FOUR (4) WEEKS FOR DELIVERY. ALL SIGNING MATERIALS REMOVED FROM THIS PROJECT SHALL BE RETURNED TO DELDOT'S SIGN SHOP.
6. ALL EXISTING OVERHEAD AND BRIDGE MOUNTED SIGNS AND STRUCTURES SHALL BE REMOVED BY THE CONTRACTOR WITHIN THE CONTRACT LIMITS UNLESS OTHERWISE NOTED. THE CONTRACTOR SHALL FURNISH AND INSTALL ALL PROPOSED OVERHEADS AND CANTILEVER SIGN STRUCTURES, FOUNDATIONS, AND SIGNS. THE CONTRACTOR SHALL RETURN ALL SIGNS REMOVED FROM THE PROJECT TO DELDOT'S SIGN SHOP. THE CONTRACTOR SHALL CONTACT DELDOT'S SIGN SHOP AT 302.760.2581 TO ARRANGE FOR DELIVERY OF SIGNS.
7. THE CONTRACTOR SHALL INSTALL RAISED PAVEMENT MARKERS WITHIN THE PROJECT LIMITS IN ACCORDANCE WITH THE DE-MUTCD.

SIGNING LEGEND

1	REMOVE EXISTING SIGN
2	EXISTING SIGN TO REMAIN
3	PLACE NEW SIGN
4	RENEW EXISTING SIGN
5	REPOSITION EXISTING SIGN

SSC–13

DELAWARE
DEPARTMENT OF TRANSPORTATION

ADDENDUMS / REVISIONS

SCALE
0 50 100 150
FEET

SR1 / I–95 INTERCHANGE

CONTRACT	BRIDGE NO.
28-090-03	DESIGNED BY:
COUNTY	
NEW CASTLE	CHECKED BY:

SIGNING, STRIPING & CONDUIT PLAN

SHEET NO.
723
TOTAL SHTS.
803

SIGNING LEGEND	
1	REMOVE EXISTING SIGN
2	EXISTING SIGN TO REMAIN
3	PLACE NEW SIGN
4	RENEW EXISTING SIGN
5	REPOSITION EXISTING SIGN

SIGN NOTE:

ALL EXISTING REG/WARN SIGNS THIS SHEET TO REMAIN.

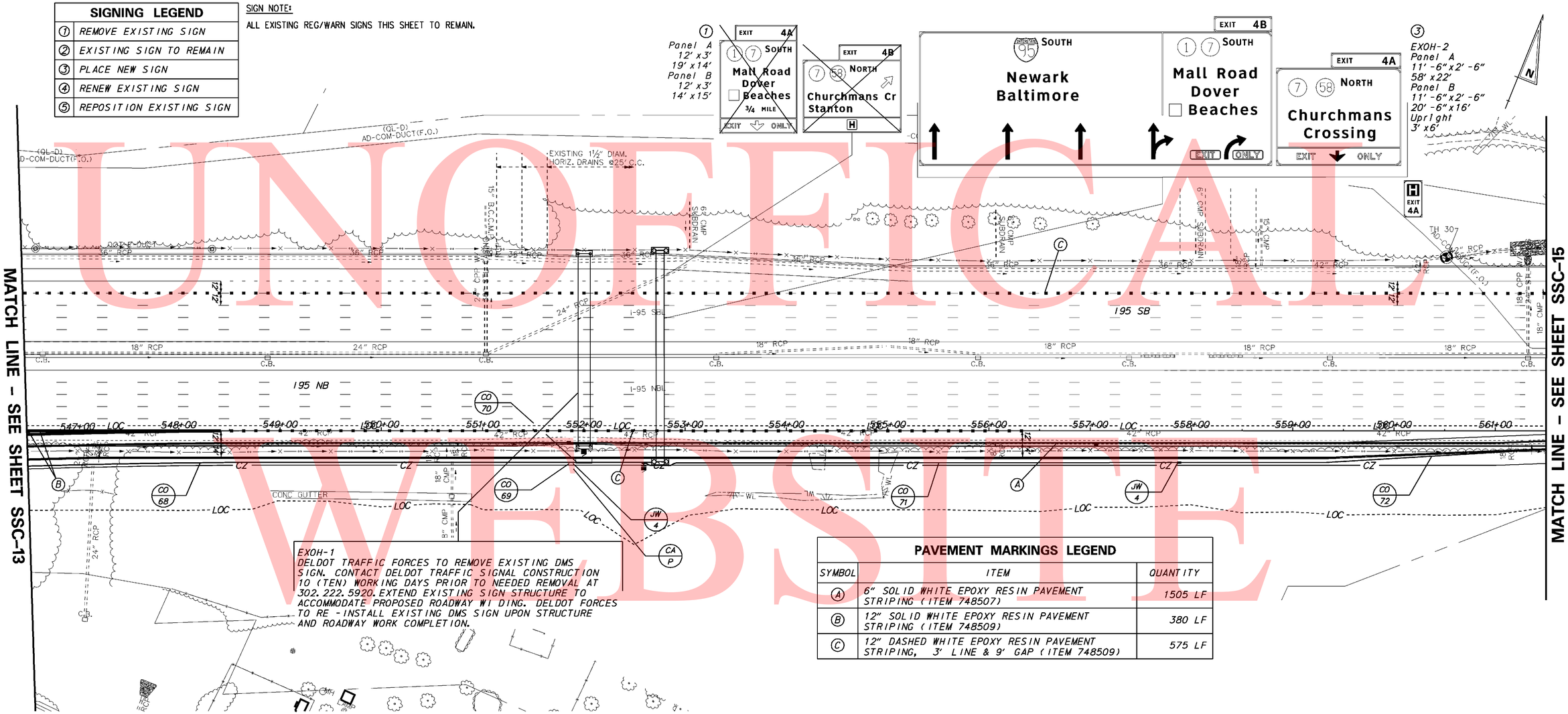

EXOH-1
DELDOT TRAFFIC FORCES TO REMOVE EXISTING DMS SIGN. CONTACT DELDOT TRAFFIC SIGNAL CONSTRUCTION 10 (TEN) WORKING DAYS PRIOR TO NEEDED REMOVAL AT 302.222.5920. EXTEND EXISTING SIGN STRUCTURE TO ACCOMMODATE PROPOSED ROADWAY WI DING. DELDOT FORCES TO RE - INSTALL EXISTING DMS SIGN UPON STRUCTURE AND ROADWAY WORK COMPLETION.

PAVEMENT MARKINGS LEGEND		
SYMBOL	ITEM	QUANTITY
A	6" SOLID WHITE EPOXY RESIN PAVEMENT STRIPING (ITEM 748507)	1505 LF
B	12" SOLID WHITE EPOXY RESIN PAVEMENT STRIPING (ITEM 748509)	380 LF
C	12" DASHED WHITE EPOXY RESIN PAVEMENT STRIPING, 3' LINE & 9' GAP (ITEM 748509)	575 LF

NOTES:

1. ALL PROPOSED ITMS CONNECTIONS AND TERMINATIONS SHALL BE COMPLETED BY DELDOT TRAFFIC FORCES. THE CONTRACTOR SHALL CONTACT DELDOTS SIGNAL CONSTRUCTION MANAGER AT 302.222.5920 TEN (10) DAYS PRIOR TO REQUIRED WORK

2. ALL UNDERGROUND ITMS FACILITIES TO BE INSTALLED BY THE CONTRACTOR. PRIOR TO COMPLETION OF UNDERGROUND FACILITIES THE CONTRACTOR SHALL CONTACT DELDOT'S SIGNAL CONSTRUCTION MANAGER AT 302.222.5920 TEN (10) DAYS PRIOR TO COMPLETION OF FACILITY.

3. ALL PROPOSED ITMS DEVICE TO BE FURNISHED AND INSTALLED BY DELDOT TRAFFIC FORCES. UPON CONTACT BY THE CONTRACTOR DELDOT TRAFFIC FORCES WILL DEVELOP A SCHEDULE OF WHEN WORK CAN BE PERFORMED AVOIDING CONFLICTS WITH THE GENERAL CONTRACTORS SCHEDULE.

4. CONTRACTOR SHALL BE RESPONSIBLE FOR ALL INSTALLATION AND REMOVAL OF ALL PROPOSED, TEMPORARY AND EXISTING MARKINGS AS REQUIRED. ALL PROPOSED MARKINGS SHALL TIE INTO EXISTING MARKINGS IN ACCORDANCE WITH THE MUTCD AND AS DIRECTED BY THE DELDOT'S CONSTRUCTION ENGINEER.

5. THE CONTRACTOR SHALL INSTALL AND REMOVE THE REGULATORY, WARNING, AND SPECIAL SIGNS AND POSTS WITHIN THE CONTRACT LIMITS, AS SHOWN. DELDOT SHALL FABRICATE AND SUPPLY THE REGULATORY, WARNING, AND SPECIAL SIGNS AND POSTS TO THE CONTRACTOR. FOR COORDINATION AND PICK UP OF ALL SIGNS AND POSTS, THE CONTRACTOR SHALL CONTACT DELDOT'S SIGN SHOP AT 302.760.2581. ALLOW FOUR (4) WEEKS FOR DELIVERY. ALL SIGNING MATERIALS REMOVED FROM THIS PROJECT SHALL BE RETURNED TO DELDOT'S SIGN SHOP.

6. ALL EXISTING OVERHEAD AND BRIDGE MOUNTED SIGNS AND STRUCTURES SHALL BE REMOVED BY THE CONTRACTOR WITHIN THE CONTRACT LIMITS UNLESS OTHERWISE NOTED. THE CONTRACTOR SHALL FURNISH AND INSTALL ALL PROPOSED OVERHEADS AND CANTILEVER SIGN STRUCTURES, FOUNDATIONS, AND SIGNS. THE CONTRACTOR SHALL RETURN ALL SIGNS REMOVED FROM THE PROJECT TO DELDOT'S SIGN SHOP. THE CONTRACTOR SHALL CONTACT DELDOT'S SIGN SHOP AT 302.760.2581 TO ARRANGE FOR DELIVERY OF SIGNS.

7. THE CONTRACTOR SHALL INSTALL RAISED PAVEMENT MARKERS WITHIN THE PROJECT LIMITS IN ACCORDANCE WITH THE DE-MUTCD.

CONDUIT RUN SCHEDULE					
CR*	*OF CON	SIZE	LENGTH	B/T/O	AMOUNT AND TYPE OF CABLE/ WIRE
68	Pathway Information Shown on Sheet SSC-13				
69	1	4"	5'	T	Comm. Cable
70	1	4"	10'	T	Comm. Cable
71	1	4"	600'	T	Comm. Cable
* 72	1	4"	450'	T	Comm. Cable

B = BORE, T = TRENCH, O = OPEN CUT.
* QUANTITY REFLECTS CONTINUATION OF PATHWAY SHOWN ON SHEET SSC-15

UNOFFICIAL WEBSITE COPY

SSC-14

DELAWARE DEPARTMENT OF TRANSPORTATION

ADDENDUMS / REVISIONS

SCALE 0 50 100 150 FEET

SR1 / I-95 INTERCHANGE

CONTRACT 28-090-03
COUNTY NEW CASTLE
BRIDGE NO.
DESIGNED BY:
CHECKED BY:

SIGNING, STRIPING & CONDUIT PLAN

SHEET NO. 724
TOTAL SHTS. 803

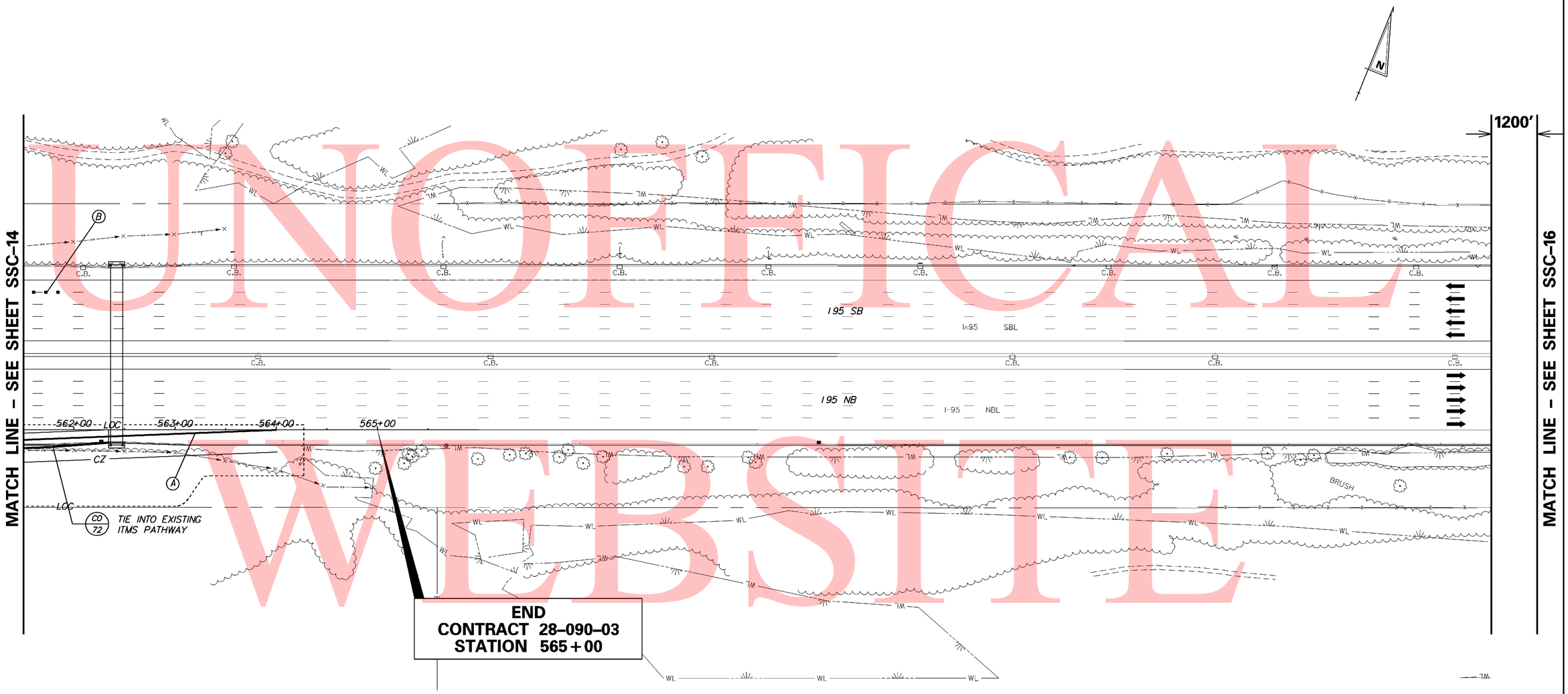

UNOFFICAL WEBSITE COPY

NOTES:

1. ALL PROPOSED ITMS CONNECTIONS AND TERMINATIONS SHALL BE COMPLETED BY DELDOT TRAFFIC FORCES. THE CONTRACTOR SHALL CONTACT DELDOTS SIGNAL CONSTRUCTION MANAGER AT 302.222.5920 TEN (10) DAYS PRIOR TO REQUIRED WORK
2. ALL UNDERGROUND ITMS FACILITIES TO BE INSTALLED BY THE CONTRACTOR. PRIOR TO COMPLETION OF UNDERGROUND FACILITIES THE CONTRACTOR SHALL CONTACT DELDOT'S SIGNAL CONSTRUCTION MANAGER AT 302.222.5920 TEN (10) DAYS PRIOR TO COMPLETION OF FACILITY.
3. ALL PROPOSED ITMS DEVICE TO BE FURNISHED AND INSTALLED BY DELDOT TRAFFIC FORCES. UPON CONTACT BY THE CONTRACTOR DELDOT TRAFFIC FORCES WILL DEVELOP A SCHEDULE OF WHEN WORK CAN BE PERFORMED AVOIDING CONFLICTS WITH THE GENERAL CONTRACTORS SCHEDULE.
4. CONTRACTOR SHALL BE RESPONSIBLE FOR ALL INSTALLATION AND REMOVAL OF ALL PROPOSED, TEMPORARY AND EXISTING MARKINGS AS REQUIRED. ALL PROPOSED MARKINGS SHALL TIE INTO EXISTING MARKINGS IN ACCORDANCE WITH THE MUTCD AND AS DIRECTED BY THE DELDOT'S CONSTRUCTION ENGINEER.
5. THE CONTRACTOR SHALL INSTALL RAISED PAVEMENT MARKERS WITHIN THE PROJECT LIMITS IN ACCORDANCE WITH THE DE-MUTCD.

SIGNING LEGEND

1	REMOVE EXISTING SIGN
2	EXISTING SIGN TO REMAIN
3	PLACE NEW SIGN
4	RENEW EXISTING SIGN
5	REPOSITION EXISTING SIGN

PAVEMENT MARKINGS LEGEND

SYMBOL	ITEM	QUANTITY
A	6" SOLID WHITE EPOXY RESIN PAVEMENT STRIPING (ITEM 748507)	250 LF
B	12" DASHED WHITE EPOXY RESIN PAVEMENT STRIPING, 3' LINE & 9' GAP (ITEM 748509)	10 LF

CONDUIT RUN SCHEDULE

CR*	*OF CON	SIZE	LENGTH	B/T/O	AMOUNT AND TYPE OF CABLE/ WIRE
72	Pathway Information Shown on Sheet SSC-14				

B = BORE, T = TRENCH, O = OPEN CUT.

SSC-15

DELAWARE DEPARTMENT OF TRANSPORTATION

ADDENDUMS / REVISIONS

SCALE 0 50 100 150 FEET

SR1 / I-95 INTERCHANGE

CONTRACT	BRIDGE NO.
28-090-03	DESIGNED BY:
COUNTY	
NEW CASTLE	CHECKED BY:

SIGNING, STRIPING & CONDUIT PLAN

SHEET NO. 725

TOTAL SHTS. 803

NOTES:

1. ALL EXISTING OVERHEAD AND BRIDGE MOUNTED SIGNS AND STRUCTURES SHALL BE REMOVED BY THE CONTRACTOR WITHIN THE CONTRACT LIMITS UNLESS OTHERWISE NOTED. THE CONTRACTOR SHALL FURNISH AND INSTALL ALL PROPOSED OVERHEADS AND CANTILEVER SIGN STRUCTURES, FOUNDATIONS, AND SIGNS. THE CONTRACTOR SHALL RETURN ALL SIGNS REMOVED FROM THE PROJECT TO DELDOT'S SIGN SHOP. THE CONTRACTOR SHALL CONTACT DELDOT'S SIGN SHOP AT 302.760.2581 TO ARRANGE FOR DELIVERY OF SIGNS.

SIGNING LEGEND	
1	REMOVE EXISTING SIGN
2	EXISTING SIGN TO REMAIN
3	PLACE NEW SIGN
4	RENEW EXISTING SIGN
5	REPOSITION EXISTING SIGN

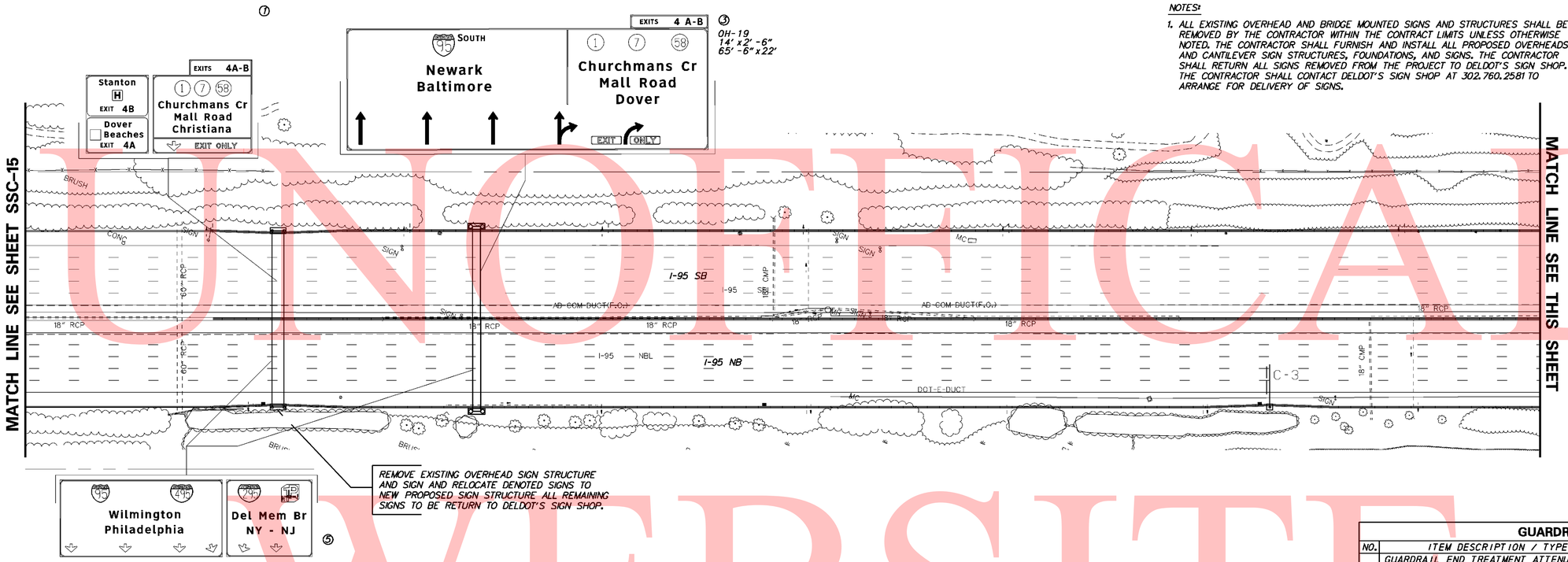

GUARDRAIL SCHEDULE				
NO.	ITEM DESCRIPTION / TYPE	BEGIN STA.	OFFSET	LENGTH
48	GUARDRAIL END TREATMENT ATTENUATOR, TYPE 1	NOTE 1	A	1 EA.
	GALVANIZED STEEL BEAM GUARDRAIL, TYPE 1		-14.00'	225.00'
	MAINTENANCE PAVEMENT			100 S.Y.
49	GUARDRAIL TO BARRIER CONNECTION (EXIT TYPE)	NOTE 2	14.00'	1 EA.
	GALVANIZED STEEL BEAM GUARDRAIL, TYPE 1		14.00'	175.00'
	END ANCHORAGE		14.00'	1 EA.
	MAINTENANCE PAVEMENT			83 S.Y.

NOTES: ALL BEGINNING STATIONS ARE APPROXIMATE. EXACT LOCATIONS ARE TO BE DETERMINED BY THE ENGINEER IN THE FIELD.
A = OFFSET ATTENUATORS AS PER STANDARD DETAILS.
OFFSET IS SET FROM THE EDGE OF ROADWAY CLOSEST TO THE OVERHEAD SIGN STRUCTURE.
NOTE 1: REMOVE EXISTING END TREATMENT ATTENUATOR AND CONNECT NEW GUARDRAIL CONTINUING NORTH FOR 275', WHICH INCLUDES THE NEW END TREATMENT ATTENUATOR.
NOTE 2: GUARDRAIL IS TO START AND CONNECT TO THE END OF THE EXISTING BARRIER.

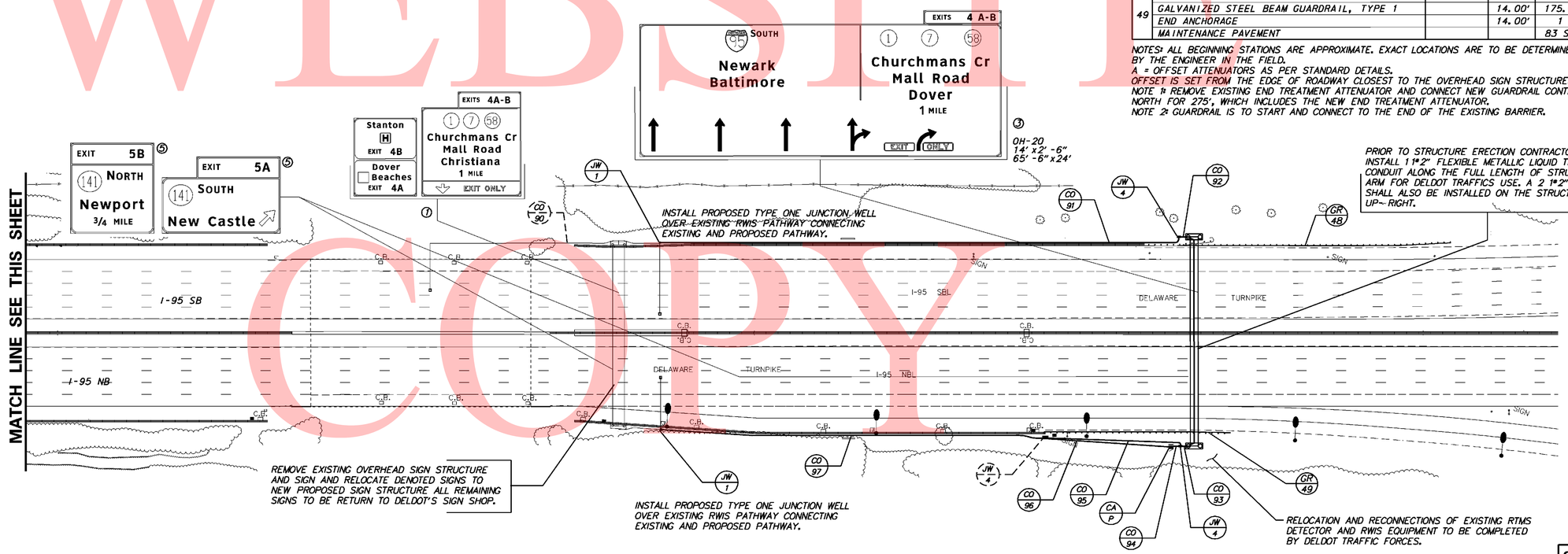

CONDUIT RUN SCHEDULE					
CR*	#OF CON	SIZE	LENGTH	B/T/O	AMOUNT AND TYPE OF CABLE/ WIRE
*90	1	2.5"	--	--	WEATHER CABLE
91	1	2.5"	535	T	WEATHER CABLE
92	1	2.5"	30	--	WEATHER CABLE
93	1	2.5"	30	--	WEATHER CABLE
94	1	2.5"	15	T	WEATHER CABLE
95	1	2.5"	145	T	WEATHER CABLE
96	1	2"	130	T	WEATHER CABLE
97	1	2.5"	400	T	WEATHER CABLE

B = BORE, T = TRENCH, O = OPEN CUT. *DENOTE EXISTING

UNOFFICIAL WEBSITE COPY

DELAWARE DEPARTMENT OF TRANSPORTATION

ADDENDUMS / REVISIONS

SCALE 0 60 120 180 FEET

SR1 / I-95 INTERCHANGE

CONTRACT 28-090-03
COUNTY NEW CASTLE
BRIDGE NO.
DESIGNED BY:
CHECKED BY:

SIGNING, STRIPING & CONDUIT PLAN

SSC-16
SHEET NO. 726
TOTAL SHTS. 803

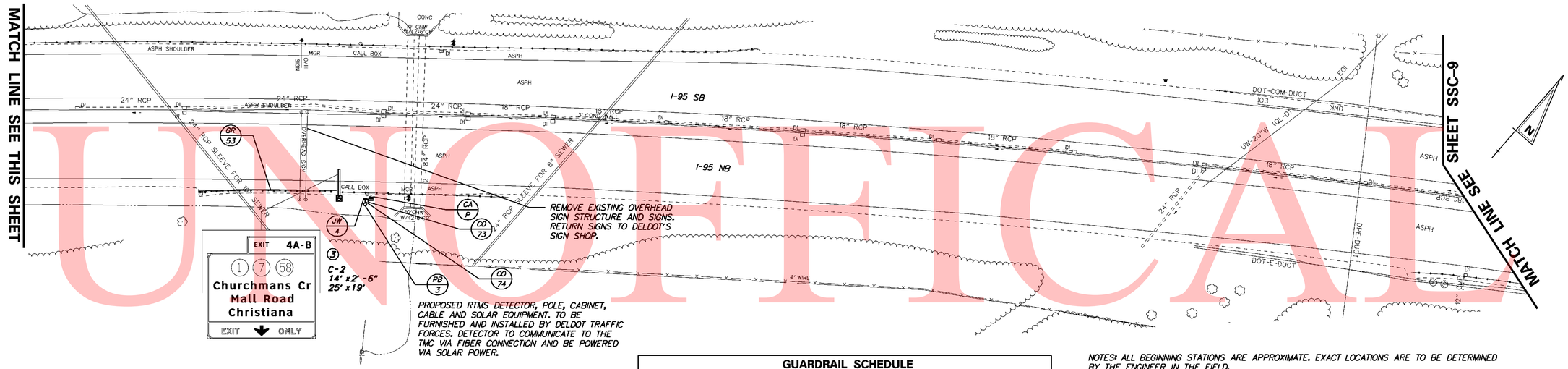

CONDUIT RUN SCHEDULE

CR*	#OF CON	SIZE	LENGTH	B/T/O	AMOUNT AND TYPE OF CABLE/ WIRE
73	3	2.5"	6'	T	Wavetronix Cable, Solar Power Cable
74	2	2.5"	6'	T	Wavetronix Cable, Solar Power Cable
75	3	2.5"	6'	T	Wavetronix Cable, Solar Power Cable
76	2	2.5"	6'	T	Wavetronix Cable, Solar Power Cable

B = BORE, T = TRENCH, O = OPEN CUT.

GUARDRAIL SCHEDULE

NO.	ITEM DESCRIPTION / TYPE	BEGIN STA.	OFFSET	LENGTH
50	GUARDRAIL END TREATMENT ATTENUATOR, TYPE 1	NOTE1	A	1 EA.
	GALVANIZED STEEL BEAM GUARDRAIL, TYPE 1		VARIES	237.50'
	MAINTENANCE PAVEMENT			106 S.Y.
51	GALVANIZED STEEL BEAM GUARDRAIL, TYPE 2	NOTE 2	-11.50'	62.50'
	MAINTENANCE PAVEMENT			28 S.Y.
52	GALVANIZED STEEL BEAM GUARDRAIL, TYPE 2	NOTE 3	11.50'	62.50'
	MAINTENANCE PAVEMENT			28 S.Y.
53	GUARDRAIL END TREATMENT ATTENUATOR, TYPE 1	NOTE 4	A	1 EA.
	GALVANIZED STEEL BEAM GUARDRAIL, TYPE 1		12.00'	100.00'
	MAINTENANCE PAVEMENT			44 S.Y.

NOTES: ALL BEGINNING STATIONS ARE APPROXIMATE. EXACT LOCATIONS ARE TO BE DETERMINED BY THE ENGINEER IN THE FIELD.
A = OFFSET ATTENUATORS AS PER STANDARD DETAILS.
OFFSET IS SET FROM THE EDGE OF ROADWAY CLOSEST TO THE OVERHEAD SIGN STRUCTURE.
NOTE 1: GUARDRAIL END TREATMENT ATTENUATOR IS TO START 250' SOUTH OF THE SOUTHERN FACE OF THE OVERHEAD SIGN STRUCTURE FOUNDATION.
NOTE 2: REMOVE EXISTING GUARDRAIL STARTING 25' SOUTH OF THE SOUTHERN FACE OF THE OVERHEAD SIGN STRUCTURE FOUNDATION AND CONSTRUCT 62.5' OF TYPE 2 GUARDRAIL. TIE PROPOSED GUARDRAIL TO EXISTING ON BOTH ENDS.
NOTE 3: REMOVE EXISTING GUARDRAIL STARTING 25' NORTH OF THE NORTHERN FACE OF THE OVERHEAD SIGN STRUCTURE FOUNDATION AND CONSTRUCT 62.5' OF TYPE 2 GUARDRAIL. TIE PROPOSED GUARDRAIL TO EXISTING ON BOTH ENDS.
NOTE 4: REMOVE EXISTING END TREATMENT ATTENUATOR AND CONNECT NEW GUARDRAIL CONTINUING SOUTH FOR 150', WHICH INCLUDES THE NEW GUARDRAIL END TREATMENT ATTENUATOR. CANTILEVER SIGN STRUCTURE FOUNDATION.

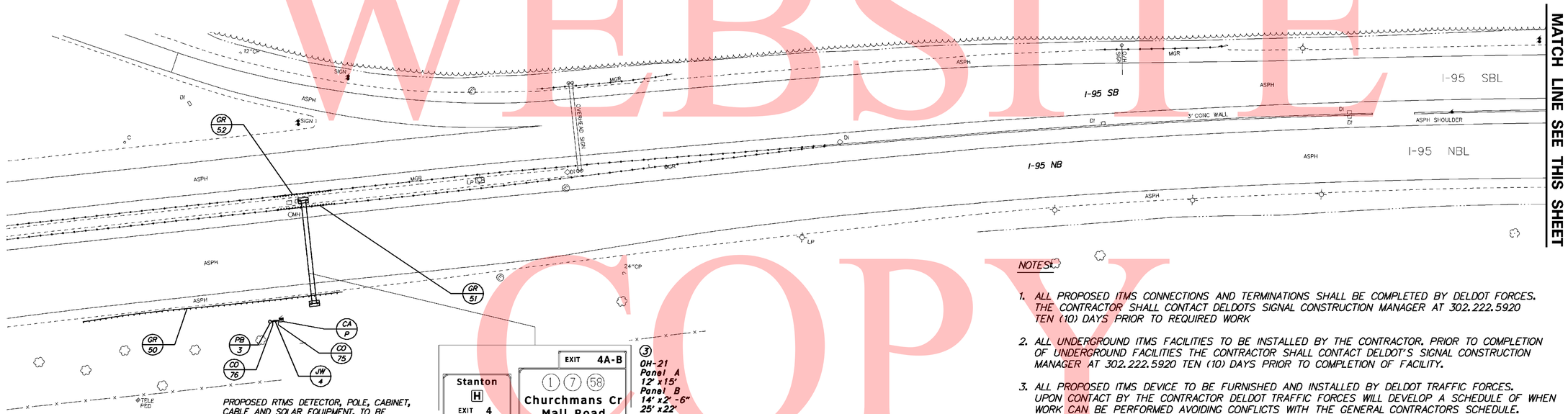

NOTES:

1. ALL PROPOSED ITMS CONNECTIONS AND TERMINATIONS SHALL BE COMPLETED BY DELDOT FORCES. THE CONTRACTOR SHALL CONTACT DELDOTS SIGNAL CONSTRUCTION MANAGER AT 302.222.5920 TEN (10) DAYS PRIOR TO REQUIRED WORK
2. ALL UNDERGROUND ITMS FACILITIES TO BE INSTALLED BY THE CONTRACTOR. PRIOR TO COMPLETION OF UNDERGROUND FACILITIES THE CONTRACTOR SHALL CONTACT DELDOT'S SIGNAL CONSTRUCTION MANAGER AT 302.222.5920 TEN (10) DAYS PRIOR TO COMPLETION OF FACILITY.
3. ALL PROPOSED ITMS DEVICE TO BE FURNISHED AND INSTALLED BY DELDOT TRAFFIC FORCES. UPON CONTACT BY THE CONTRACTOR DELDOT TRAFFIC FORCES WILL DEVELOP A SCHEDULE OF WHEN WORK CAN BE PERFORMED AVOIDING CONFLICTS WITH THE GENERAL CONTRACTORS SCHEDULE.
4. ALL EXISTING OVERHEAD AND BRIDGE MOUNTED SIGNS AND STRUCTURES SHALL BE REMOVED BY THE CONTRACTOR WITHIN THE CONTRACT LIMITS UNLESS OTHERWISE NOTED. THE CONTRACTOR SHALL FURNISH AND INSTALL ALL PROPOSED OVERHEADS AND CANTILEVER SIGN STRUCTURES, FOUNDATIONS, AND SIGNS. THE CONTRACTOR SHALL RETURN ALL SIGNS REMOVED FROM THE PROJECT TO DELDOT'S SIGN SHOP. THE CONTRACTOR SHALL CONTACT DELDOT'S SIGN SHOP AT 302.760.2581 TO ARRANGE FOR DELIVERY OF SIGNS.

SIGNING LEGEND

1	REMOVE EXISTING SIGN
2	EXISTING SIGN TO REMAIN
3	PLACE NEW SIGN
4	RENEW EXISTING SIGN
5	REPOSITION EXISTING SIGN

UNOFFICAL WEBSITE COPY

DELAWARE DEPARTMENT OF TRANSPORTATION

ADDENDUMS / REVISIONS

SCALE 0 60 120 180 FEET

SR1 / I-95 INTERCHANGE

CONTRACT	BRIDGE NO.
28-090-03	DESIGNED BY:
COUNTY	
NEW CASTLE	CHECKED BY:

SIGNING, STRIPING & CONDUIT PLAN

SSC-17
SHEET NO.
727
TOTAL SHTS.
803

GUARDRAIL SCHEDULE

NO.	ITEM DESCRIPTION / TYPE	BEGIN STA.	OFFSET	LENGTH
54	GUARDRAIL END TREATMENT ATTENUATOR, TYPE 1	NOTE 1	A	1 EA.
	GALVANIZED STEEL BEAM GUARDRAIL, TYPE 1		-6.50'	425.00'
	MAINTENANCE PAVEMENT			189 S.Y.
55	GALVANIZED STEEL BEAM GUARDRAIL, TYPE 1	NOTE 2	6.30'	87.50'
	END ANCHORAGE		6.30'	1 EA.
	MAINTENANCE PAVEMENT			39 S.Y.

NOTES: ALL BEGINNING STATIONS ARE APPROXIMATE. EXACT LOCATIONS ARE TO BE DETERMINED BY THE ENGINEER IN THE FIELD.
A = OFFSET ATTENUATORS AS PER STANDARD DETAILS.
OFFSET IS SET FROM THE EDGE OF THE THROUGH LANE TO THE FACE OF THE GUARDRAIL.
NOTE 1: REMOVE EXISTING END TREATMENT ATTENUATOR AND CONNECT NEW GUARDRAIL CONTINUING SOUTH FOR 475', WHICH INCLUDES THE NEW GUARDRAIL END TREATMENT ATTENUATOR.
NOTE 2: REMOVE EXISTING END ANCHORAGE AND CONNECT NEW GUARDRAIL CONTINUING SOUTH FOR 87.50'.

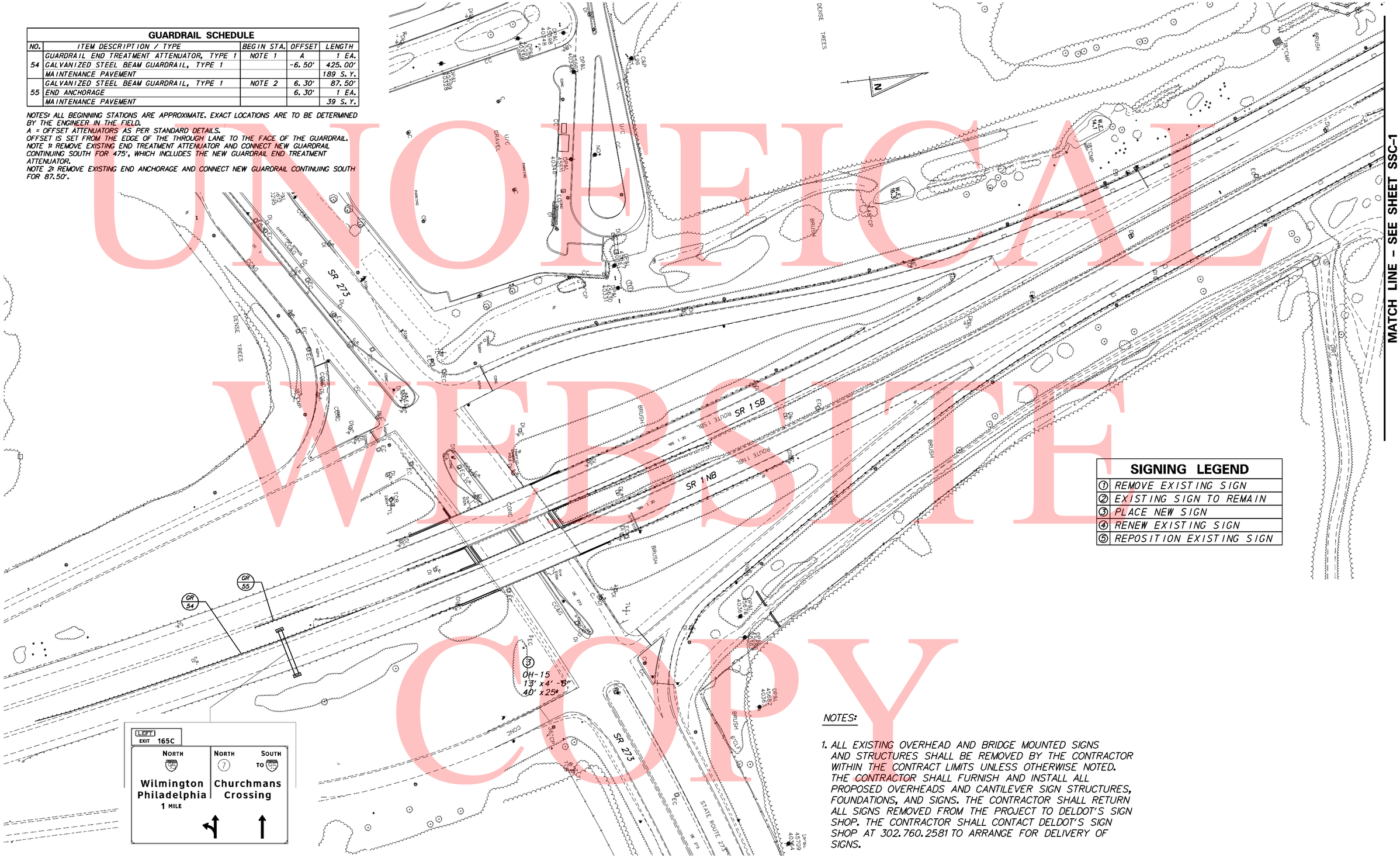

SIGNING LEGEND

1	REMOVE EXISTING SIGN
2	EXISTING SIGN TO REMAIN
3	PLACE NEW SIGN
4	RENEW EXISTING SIGN
5	REPOSITION EXISTING SIGN

MATCH LINE - SEE SHEET SSC-1

NOTES:

1. ALL EXISTING OVERHEAD AND BRIDGE MOUNTED SIGNS AND STRUCTURES SHALL BE REMOVED BY THE CONTRACTOR WITHIN THE CONTRACT LIMITS UNLESS OTHERWISE NOTED. THE CONTRACTOR SHALL FURNISH AND INSTALL ALL PROPOSED OVERHEADS AND CANTILEVER SIGN STRUCTURES, FOUNDATIONS, AND SIGNS. THE CONTRACTOR SHALL RETURN ALL SIGNS REMOVED FROM THE PROJECT TO DELDOT'S SIGN SHOP. THE CONTRACTOR SHALL CONTACT DELDOT'S SIGN SHOP AT 302.760.2581 TO ARRANGE FOR DELIVERY OF SIGNS.

UNOFFICIAL WEBSITE COPY

DELAWARE DEPARTMENT OF TRANSPORTATION

ADDENDUMS / REVISIONS

SCALE 0 60 120 180 FEET

SR1 / I-95 INTERCHANGE

CONTRACT	BRIDGE NO.
28-090-03	DESIGNED BY:
COUNTY	
NEW CASTLE	CHECKED BY:

SIGNING, STRIPING & CONDUIT PLAN

SSC-18

SHEET NO.	TOTAL SHTS.
728	803

1/27/2009 1:28:48 PM
W:\PROJECTS\3453-59_DELTRNPK\SRIMALL\CADD\2809003\PLANS\CP018_SSC_SR1.DGN

PANEL DESIGNATION	SHEET NUMBER	QUANTITY	LEGEND	SIZE AREA	SIZE HEIGHT	SIZE WIDTH	COLOR LEGEND	COLOR BCKGRND	BORDER WIDTH	BORDER RADIUS	ARROW	SHIELD	REMARKS
OH-1(A)	SSC-1	1	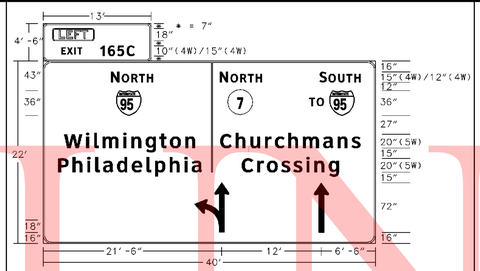	938.5 ft²	4'-6" 22'-0"	13'-0" 40'-0"	W W	G G	2" 2"	6" 12"	- TYPE A EXTENDED 72"	- M1-1 36" M1-5 36"	- EXTRUDED ALUMINUM - LEFT PLAQUE (E1-5bP) 156"x54"
OH-1(B)	SSC-1	1	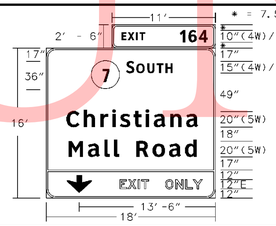	315.5 ft²	2'-6" 13'-0" 3'-0"	11'-0" 18'-0" 18'-0"	W W B	G G Y	2" 2" 2"	6" 12" 12"	- - DOWN 22"	- M1-5 36" -	- EXTRUDED ALUMINUM - EXIT NUMBER (E1-5P) 132"x30"
OH-2 OH-3	SSC-1 SSC-2	2	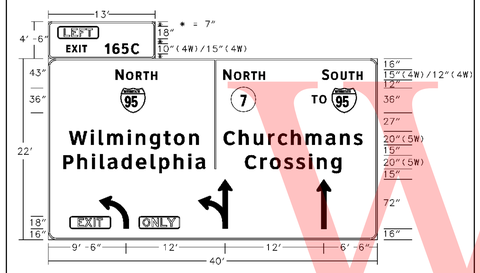	938.5 ft²	4'-6" 22'-0"	13'-0" 40'-0"	W W	G G	2" 2"	6" 12"	- TYPE A EXTENDED 72"	- M1-1 36" M1-5 36"	- EXTRUDED ALUMINUM - EXIT NUMBER (E11-1g) 66"x18" - ONLY PLAQUE (E11-1b) 66"x18" - LEFT PLAQUE (E1-5bP) 156"x54"
C-6	SSC-3	1	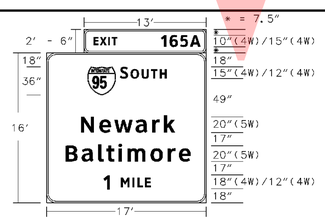	304.5 ft²	2'-6" 16'-0"	13'-0" 17'-0"	W W	G G	2" 2"	6" 12"	- -	- M1-1 36"	- EXTRUDED ALUMINUM - EXIT NUMBER (E1-5P) 156"x30"
OH-12(A)	SSC-3	1	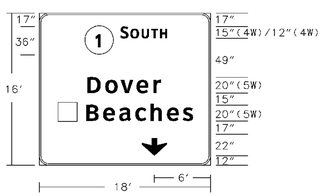	288 ft²	16'-0"	18'-0"	W	G	2"	12"	DOWN 22"	M1-5 36"	- EXTRUDED ALUMINUM
OH-5(A) OH-6	SSC-6 SSC-7	2	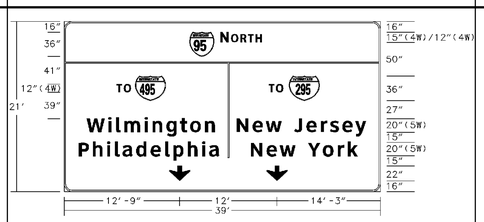	819 ft²	21'-0"	39'-0"	W	G	2"	12"	DOWN 22"	M1-1 36"	- EXTRUDED ALUMINUM

PANEL DESIGNATION	SHEET NUMBER	QUANTITY	LEGEND	SIZE AREA	SIZE HEIGHT	SIZE WIDTH	COLOR LEGEND	COLOR BCKGRND	BORDER WIDTH	BORDER RADIUS	ARROW	SHIELD	REMARKS
OH-5(B)	SSC-6	1	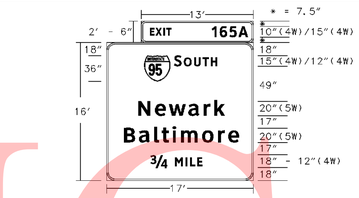	304.5 ft²	2'-6" 16'-0"	13'-0" 17'-0"	W W	G G	2" 2"	6" 12"	- -	- M1-1 36"	- EXTRUDED ALUMINUM - EXIT NUMBER (E1-5P) 156"x30"
OH-5(C)	SSC-6	1		368.5 ft²	2'-6" 16'-0"	13'-0" 21'-0"	W W	G G	2" 2"	6" 12"	- -	- M1-1 36"	- EXTRUDED ALUMINUM - EXIT NUMBER (E1-5P) 156"x30"
OH-7(A)	SSC-7	1	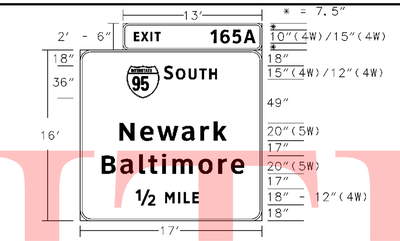	304.5 ft²	2'-6" 16'-0"	13'-0" 17'-0"	W W	G G	2" 2"	6" 12"	- -	- M1-1 36"	- EXTRUDED ALUMINUM - EXIT NUMBER (E1-5P) 156"x30"
OH-7(B)	SSC-7	1		344.5 ft²	2'-6" 13'-0"	13'-0" 24'-0"	W W	G G	2" 2"	6" 12"	- TYPE A @45° 28"	- M1-1 36"	- EXTRUDED ALUMINUM - EXIT NUMBER (E1-5P) 156"x30"
OH-8	SSC-8	1	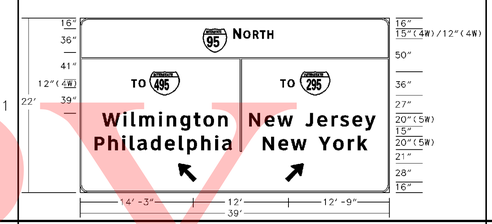	858 ft²	22'-0"	39'-0"	W	G	2"	12"	TYPE A @45° 28"	M1-1 36"	- EXTRUDED ALUMINUM
OH-9(A) OH-10(A) OH-13(A)	SSC-12 SSC-8 SSC-2	3	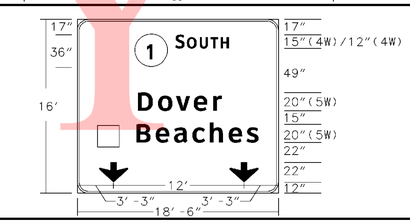	296 ft²	16'-0"	18'-6"	W	G	2"	12"	DOWN 22"	M1-5 36"	- EXTRUDED ALUMINUM

NOTES: 1. COLORS: B=BLACK, BL=BLUE, BR=BROWN, G=GREEN, W=WHITE/SILVER, Y=YELLOW.
2. THE CONTRACTOR WILL FURNISH AND INSTALL ALL SIGNS SHOWN ON THIS SHEET.

UNOFFICIAL WEBSITE COPY

DELAWARE DEPARTMENT OF TRANSPORTATION

ADDENDUMS / REVISIONS

SR1 / I-95 INTERCHANGE

CONTRACT	BRIDGE NO.	SHEET NO.
28-090-03	DESIGNED BY:	729
COUNTY	CHECKED BY:	TOTAL SHTS.
NEW CASTLE		803

SIGNING, STRIPING & CONDUIT PLAN

PANEL DESIGNATION	SHEET NUMBER	QUANTITY	LEGEND	SIZE AREA	SIZE HEIGHT	SIZE WIDTH	COLOR LEGEND	COLOR BCKGRND	BORDER WIDTH	BORDER RADIUS	ARROW	SHIELD	REMARKS
OH-9(B)	SSC-12	1	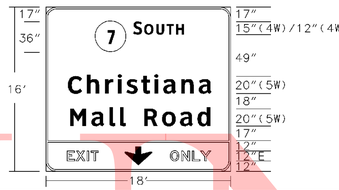	288 ft²	13'-0"	18'-0"	W	G	2"	12"	-	M1-5 36"	- EXTRUDED ALUMINUM - EXIT ONLY (E11-1) 216"X36"
					3'-0"	18'-0"	B	Y	2"	12"	DOWN 22"	-	
OH-10(B)	SSC-8	1	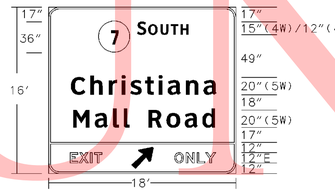	288 ft²	13'-0"	18'-0"	W	G	2"	12"	-	M1-5 36"	- EXTRUDED ALUMINUM - EXIT ONLY (E11-1d) 216"X36"
					3'-0"	18'-0"	B	Y	2"	12"	TYPE A @45° 28"	-	
OH-11(A)	SSC-6	1	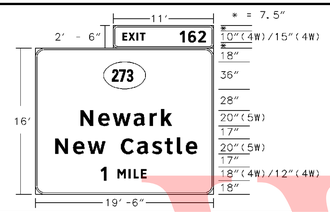	339.5 ft²	2'-6"	11'-0"	W	G	2"	6"	-	-	- EXTRUDED ALUMINUM - EXIT NUMBER (E1-5P) 132"X30"
					16'-0"	19'-6"	W	G	2"	12"	-	M1-5 36"	
OH-11(B) OH-17(A)	SSC-6 SSC-7	2	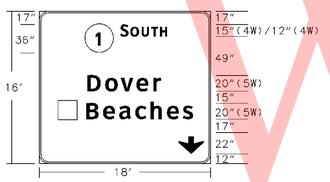	288 ft²	16'-0"	18'-0"	W	G	2"	12"	DOWN 22"	M1-5 36"	- EXTRUDED ALUMINUM
OH-11(C) OH-17(B)	SSC-6 SSC-7	2	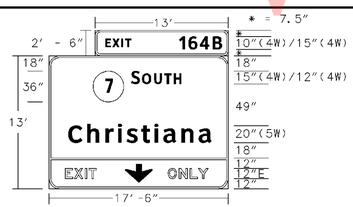	260 ft²	2'-6"	13'-0"	W	G	2"	6"	-	-	- EXTRUDED ALUMINUM - EXIT NUMBER (E1-5P) 156"X30" - EXIT ONLY (E11-1) 210"X36"
					10'-0"	17'-6"	W	G	2"	12"	-	M1-5 36"	
					3'-0"	17'-6"	B	Y	2"	12"	DOWN 22"	-	
OH-11(D)	SSC-6	1	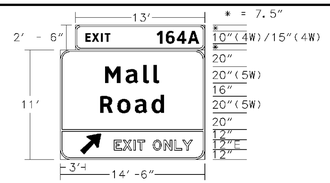	192 ft²	2'-6"	13'-0"	W	G	2"	6"	-	-	- EXTRUDED ALUMINUM - EXIT NUMBER (E1-5P) 156"X30" - EXIT ONLY (E11-1d) 174"X36"
					8'-0"	14'-6"	W	G	2"	12"	-	-	
					3'-0"	14'-6"	B	Y	2"	12"	TYPE A @45° 28"	-	
OH-12(B)	SSC-3	1	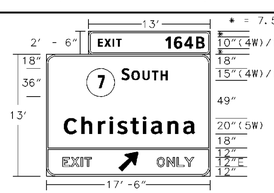	260 ft²	2'-6"	13'-0"	W	G	2"	6"	-	-	- EXTRUDED ALUMINUM - EXIT NUMBER (E1-5P) 156"X30" - EXIT ONLY (E11-1d) 210"X36"
					10'-0"	17'-6"	W	G	2"	12"	-	M1-5 36"	
					3'-0"	17'-6"	B	Y	2"	12"	TYPE A @45° 28"	-	

PANEL DESIGNATION	SHEET NUMBER	QUANTITY	LEGEND	SIZE AREA	SIZE HEIGHT	SIZE WIDTH	COLOR LEGEND	COLOR BCKGRND	BORDER WIDTH	BORDER RADIUS	ARROW	SHIELD	REMARKS
OH-13(B)	SSC-2	1	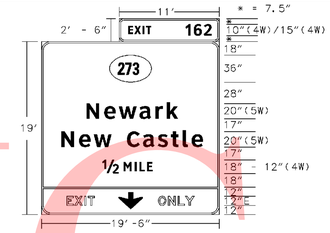	398 ft²	2'-6"	11'-0"	W	G	2"	6"	-	-	- EXTRUDED ALUMINUM - EXIT NUMBER (E1-5P) 132"X30" - EXIT ONLY (E11-1) 234"X36"
					16'-0"	19'-6"	W	G	2"	12"	-	M1-5 36"	
					3'-0"	19'-6"	B	Y	2"	12"	DOWN 22"	-	
OH-14(A)	SSC-9	1	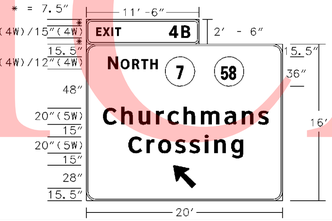	348.75 ft²	2'-6"	11'-6"	W	G	2"	6"	-	-	- EXTRUDED ALUMINUM - EXIT NUMBER (E1-5P) 138"X30"
					16'-0"	20'-0"	W	G	2"	12"	TYPE A @45° 28"	M1-5 36"	
OH-14(B)	SSC-9	1	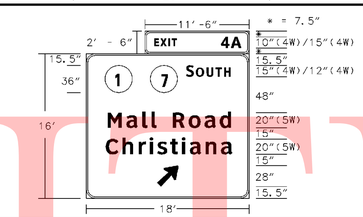	316.75 ft²	2'-6"	11'-6"	W	G	2"	6"	-	-	- EXTRUDED ALUMINUM - EXIT NUMBER (E1-5P) 138"X30"
					16'-0"	18'-0"	W	G	2"	12"	TYPE A @45° 28"	M1-5 36"	
OH-15	SSC-18	1	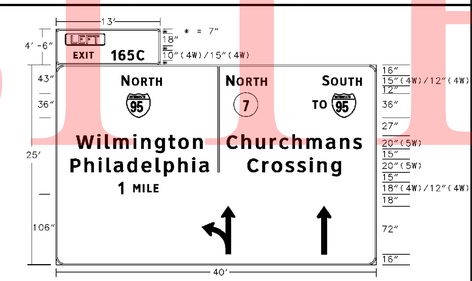	1058.5 ft²	4'-6"	13'-0"	W	G	2"	6"	-	-	- EXTRUDED ALUMINUM - LEFT EXIT (E1-5bP) 156"X54"
					25'-0"	40'-0"	W	G	2"	12"	TYPE A EXTENDED 72"	M1-1 36" M1-5 36"	
OH-18(B)	SSC-14	1	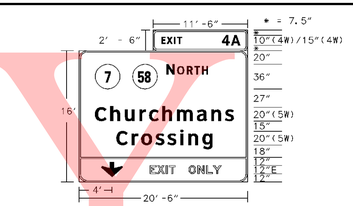	356.75 ft²	2'-6"	11'-6"	W	G	2"	6"	-	-	- EXTRUDED ALUMINUM - EXIT NUMBER (E1-5P) 138"X30" - EXIT ONLY (E11-1) 246"X36"
					13'-0"	20'-6"	W	G	2"	12"	-	M1-5 36"	
					3'-0"	20'-6"	W	G	2"	12"	DOWN 22"	-	
OH-16(A)	SSC-8	1	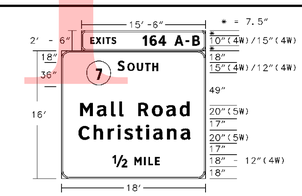	326.75 ft²	2'-6"	15'-6"	W	G	2"	6"	-	-	- EXTRUDED ALUMINUM - EXIT NUMBER (E1-5bP) 186"X30"
					16'-0"	18'-0"	W	G	2"	12"	-	M1-5 36"	

NOTES: 1. COLORS: B=BLACK, BL=BLUE, BR=BROWN, G=GREEN, W=WHITE/SILVER, Y=YELLOW.
2. THE CONTRACTOR WILL FURNISH AND INSTALL ALL SIGNS SHOWN ON THIS SHEET.

UNOFFICIAL WEBSITE COPY

DELAWARE DEPARTMENT OF TRANSPORTATION

ADDENDUMS / REVISIONS

SR1 / I-95 INTERCHANGE

CONTRACT	BRIDGE NO.
28-090-03	DESIGNED BY:
COUNTY	CHECKED BY:
NEW CASTLE	

SIGNING, STRIPING & CONDUIT PLAN

SHEET NO.
730
TOTAL SHTS.
803

PANEL DESIGNATION	SHEET NUMBER	QUANTITY	LEGEND	SIZE AREA	SIZE HEIGHT	SIZE WIDTH	COLOR LEGEND	COLOR BCKGRND	BORDER WIDTH	BORDER RADIUS	ARROW	SHIELD	REMARKS
OH-16(B)	SSC-8	1	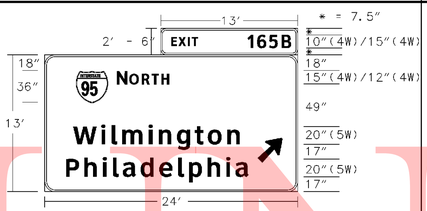	344.5 ▫'	2' -6"	13' -0"	W	G	2"	6"	-	-	- EXTRUDED ALUMINUM - EXIT NUMBER (E1-5P) 156"x30"
					13' -0"	24' -0"	W	G	2"	12"	TYPE A @45° 28"	M1-1 36"	
OH-17(C)	SSC-7	1	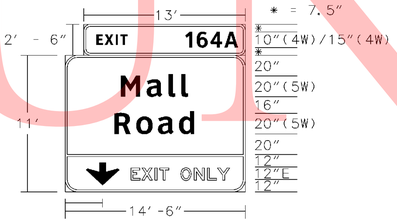	192 ▫'	2' -6"	13' -0"	W	G	2"	6"	-	-	- EXTRUDED ALUMINUM - EXIT NUMBER (E1-5P) 156"x30" - EXIT ONLY (E11-1) 174"x36"
					8' -0"	14' -6"	W	G	2"	12"	-	-	
					3' -0"	14' -6"	B	Y	2"	12"	DOWN 22"	-	
EXC-1	SSC-10	1	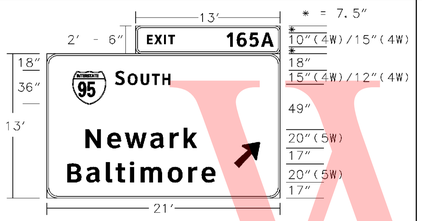	305.5 ▫'	2' -6"	13' -0"	W	G	2"	6"	-	-	- EXTRUDED ALUMINUM - EXIT NUMBER (E1-5P) 156"x30"
					13' -0"	21' -0"	W	G	2"	6"	TYPE A @45° 28"	M1-1 36"	
OH-21(A)	SSC-17	1	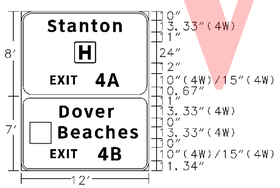	180 ▫'	8' -0"	12' -0"	W	G	2"	12"	-	-	- EXTRUDED ALUMINUM
					7' -0"	12' -0"	W	G	2"	12"	-	-	
OH-21(B)	SSC-17	1	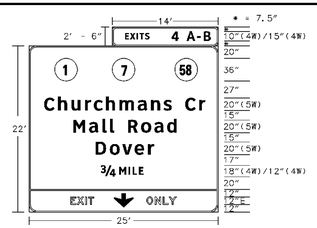	585 ▫'	2' -6"	14' -0"	W	G	2"	6"	-	-	- EXTRUDED ALUMINUM - EXIT NUMBER (E1-5P) 168"X30" - EXIT ONLY (E11-1) 300"X36"
					19' -0"	25' -0"	W	G	2"	12"	-	M1-5 36"	
					3' -0"	25' -0"	B	Y	2"	12"	DOWN 22"	-	
C-2	SSC-17	1	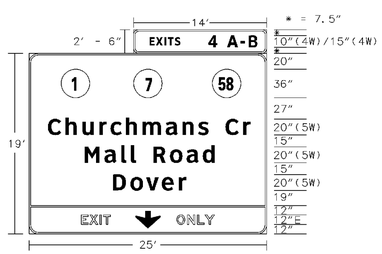	510 ▫'	2' -6"	14' -0"	W	G	2"	6"	-	-	- EXTRUDED ALUMINUM - EXIT NUMBER (E1-5P) 168"X30" - EXIT ONLY (E11-1) 300"X36"
					16' -0"	25' -0"	W	G	2"	12"	-	M1-5 36"	
					3' -0"	25' -0"	B	Y	2"	12"	DOWN 22"	-	

PANEL DESIGNATION	SHEET NUMBER	QUANTITY	LEGEND	SIZE AREA	SIZE HEIGHT	SIZE WIDTH	COLOR LEGEND	COLOR BCKGRND	BORDER WIDTH	BORDER RADIUS	ARROW	SHIELD	REMARKS
C-3	SSC-9	1	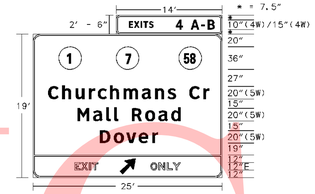	510 ▫'	2' -6"	14' -0"	W	G	2"	6"	-	-	- EXTRUDED ALUMINUM - EXIT NUMBER (E1-5P) 168"x30" - EXIT ONLY (E11-1d) 300"x36"
					16' -0"	25' -0"	W	G	2"	12"	-	M1-5 36"	
					3' -0"	25' -0"	B	Y	2"	12"	TYPE A @45° 28"	-	
C-4	SSC-2	1	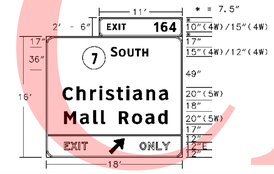	315.5 ▫'	2' -6"	11' -0"	W	G	2"	6"	-	-	- EXTRUDED ALUMINUM - EXIT NUMBER (E1-5P) 132"x30" - EXIT ONLY (E11-1d) 216"x36"
					13' -0"	18' -0"	W	G	2"	12"	-	M1-5 36"	
					3' -0"	18' -0"	B	Y	2"	12"	TYPE A @45° 28"	-	
C-5	SSC-13	1	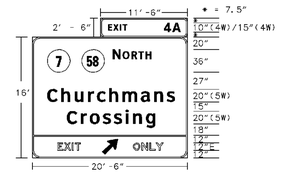	356.75 ▫'	2' -6"	11' -6"	W	G	2"	6"	-	-	- EXTRUDED ALUMINUM - EXIT NUMBER (E1-5P) 138"x30" - EXIT ONLY (E11-1d) 246"x36"
					16' -0"	20' -6"	W	G	2"	12"	-	M1-5 36"	
					3' -0"	20' -6"	B	Y	2"	12"	TYPE A @45° 28"	-	
EXOH-1 OH-18(A)	SSC-13 SSC-14	2	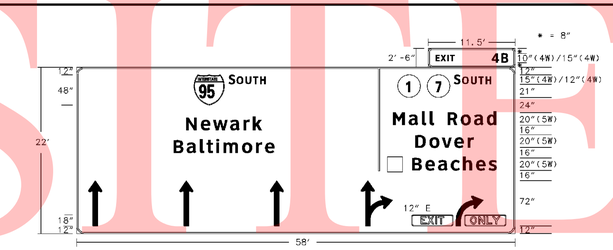	1304.75 ▫'	2' -6"	9' -6"	W	G	2"	6"	-	-	- EXTRUDED ALUMINUM - EXIT NUMBER (E1-5P) 138"x60" - EXIT PLAQUE (E11-1c) 66"x18" - ONLY PLAQUE (E11-1b) 66"x18"
					22' -0"	58' -0"	W	G	2"	6"	TYPE A EXTENDED 72"	M1-1 48" M1-5 36"	
OH-19	SSC-16	1	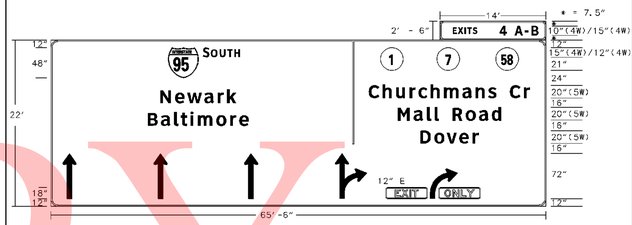	1476 ▫'	2' -6"	14' -0"	W	G	2"	6"	-	-	- EXTRUDED ALUMINUM - EXIT NUMBER (E1-5P) 168"x30" - EXIT PLAQUE (E11-1c) 66"x18" - ONLY PLAQUE (E11-1b) 66"x18"
					22' -0"	65' -6"	W	G	2"	12"	TYPE A EXTENDED 72"	M1-1 48" M1-5 36"	
OH-20	SSC-16	1	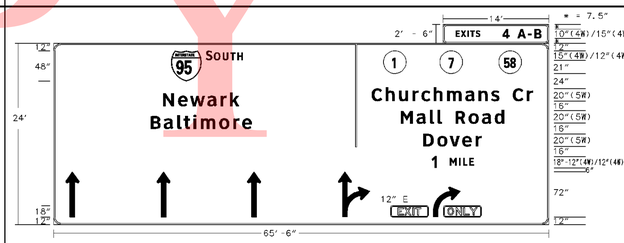	1607 ▫'	2' -6"	14' -0"	W	G	2"	6"	-	-	- EXTRUDED ALUMINUM - EXIT NUMBER (E1-5P) 168"x30" - EXIT PLAQUE (E11-1c) 66"x18" - ONLY PLAQUE (E11-1b) 66"x18"
					24' -0"	65' -6"	W	G	2"	12"	TYPE A EXTENDED 72"	M1-1 48" M1-5 36"	

NOTES: 1. COLORS: B=BLACK, BL=BLUE, BR=BROWN, G=GREEN, W=WHITE/SILVER, Y=YELLOW.
2. THE CONTRACTOR WILL FURNISH AND INSTALL ALL SIGNS SHOWN ON THIS SHEET.

UNOFFICIAL WEBSITE COPY

DELAWARE DEPARTMENT OF TRANSPORTATION

ADDENDUMS / REVISIONS

SR1 / I-95 INTERCHANGE

CONTRACT	BRIDGE NO.
28-090-03	DESIGNED BY:
COUNTY	CHECKED BY:
NEW CASTLE	

SIGNING, STRIPING & CONDUIT PLAN

SHEET NO. 731
TOTAL SHTS. 803

PANEL DESIGNATION	SHEET NUMBER	QUANTITY	LEGEND	SIZE AREA	SIZE HEIGHT	SIZE WIDTH	COLOR LEGEND	COLOR BCKGRND	BORDER WIDTH	BORDER RADIUS	ARROW	SHIELD	REMARKS
OH-1 OH-2 OH-3	SSC-1 SSC-1 SSC-2	3	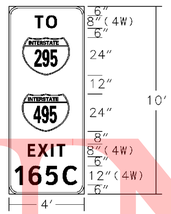	40 ▫'	10'-0"	4'-0"	W	G	2"	6"	-	M1-1 30"x24"	- EXTRUDED ALUMINUM - INSTALLED ON UPRIGHT
OH-5 OH-7	SSC-6 SSC-7	2	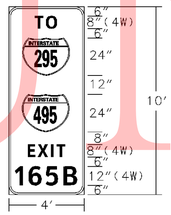	40 ▫'	10'-0"	4'-0"	W	G	2"	6"	-	M1-1 30"x24"	- EXTRUDED ALUMINUM - INSTALLED ON UPRIGHT

PANEL DESIGNATION	SHEET NUMBER	QUANTITY	LEGEND	SIZE AREA	SIZE HEIGHT	SIZE WIDTH	COLOR LEGEND	COLOR BCKGRND	BORDER WIDTH	BORDER RADIUS	ARROW	SHIELD	REMARKS
GM-1	SSC-3	1	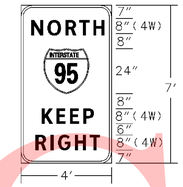	28 ▫'	7'-0"	4'-0"	W	G	2"	6"	-	M1-1 30"x24"	- EXTRUDED ALUMINUM
GM-2	SSC-8	1	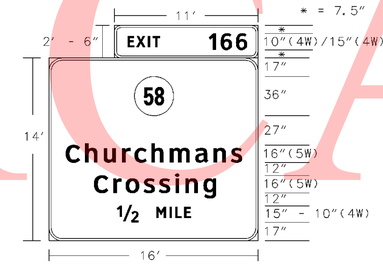	251.5 ▫'	2'-6" 14'-0"	11'-0" 16'-0"	W W	G G	2" 2"	6" 6"	- -	- M1-5 36"x36"	- EXTRUDED ALUMINUM

NOTES: 1. COLORS: B=BLACK, BL=BLUE, BR=BROWN, G=GREEN, W=WHITE/SILVER, Y=YELLOW.
2. THE CONTRACTOR WILL FURNISH AND INSTALL ALL SIGNS SHOWN ON THIS SHEET.

GROUND MOUNTED SIGN DETAIL

SIGN CLEARANCE

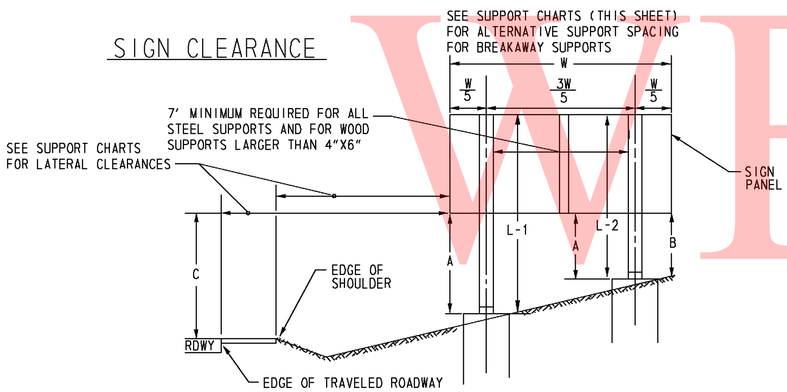

VERTICAL CLEARANCE OF SIGNS

A. 7'6" MINIMUM FOR BREAKAWAY SUPPORTS OR 5'-6" FOR NON-BREAKAWAY SUPPORTS.
B. 2.0' MINIMUM
C. 7'6" MINIMUM & PREFERABLE. THIS DIMENSION IS TO BE INCREASED ONLY WHEN REQUIRED TO MEET A = 7'-6" FOR BREAKAWAY OR A (MIN.) = 5'-6" FOR NON-BREAKAWAY AND B (MIN) 2'-0"

ALL DIMENSIONS ARE TO BOTTOM OF SIGN

*TOTAL WEIGHT BELOW THE HINGES SHOULD BE LESS THAN 600 POUNDS

LATERAL CLEARANCE

SEE SUPPORT CHARTS

** OBJECT CODES
W = FACE OF W-BEAM TRAFFIC BARRIER
FOC = FACE OF CURB
ES = EDGE OF SHOULDER
ETR = EDGE OF TRAVELED ROADWAY
CW = CENTERED IN MEDIAN
CG = CENTERED IN GORE (6' MINIMUM FROM EDGE OF PAVEMENT)

GUIDE SIGN STEEL SUPPORT CHART

SIGN NO.	SHEET NO.	POST SIZE	*BW OR NBW	SUPPORT L - 1	SUPPORT L - 2	SUPPORT L - 3	LATERAL CLEARANCE 6'	LATERAL CLEARANCE OBJECT**	SUPPORT SPACING FROM LEFT EDGE OF SIGN
GM-1	SSC-3	W6x9	NBW	16'-0"	-	-	4'	W	2'
GM-2	SSC-8	W12x26	NBW	24'-0"	22'-0"	-	6'	BARRIER	5.3'-5.4'-5.3'

* BW = BREAKAWAY NBW = NON-BREAKAWAY

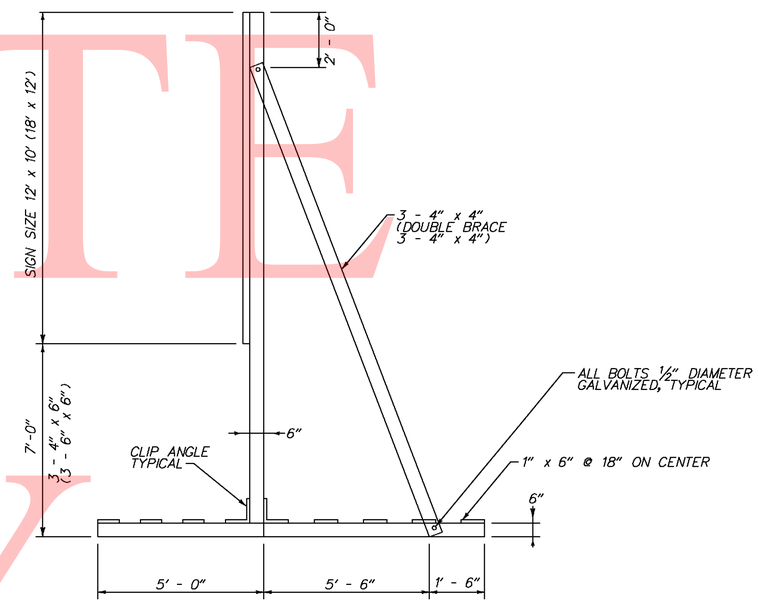

NOTES:
1. "SMALL" SUPPORT FOR SIGNS LESS THAN OR EQUAL TO 120 SF.
"LARGE" SUPPORT FOR SIGNS GREATER THAN 120 SF BUT LESS THAN 216 SF.
2. "LARGE" MODIFICATIONS DENOTED BY ALTERNATIONS IN (PARENTHESES).
3. SAND BAGS ARE TO BE PLACED ON 1" x 6" BEAMS. MIN 15 BAGS. (MAX. 25 BAGS).
4. ALL WORK AND MATERIALS NECESSARY TO FURNISH, INSTALL, RELOCATE AND REMOVE TEMPORARY SKIDS USED FOR TEMPORARY SIGNING WILL NOT BE MEASURED AND PAID FOR BUT WILL BE INCIDENTAL TO ITEM NO. 763500 - MAINTENANCE OF TRAFFIC.

SKID FOR NON-BREAKAWAY SYSTEM TEMPORARY SIGNING

UNOFFICIAL WEBSITE COPY

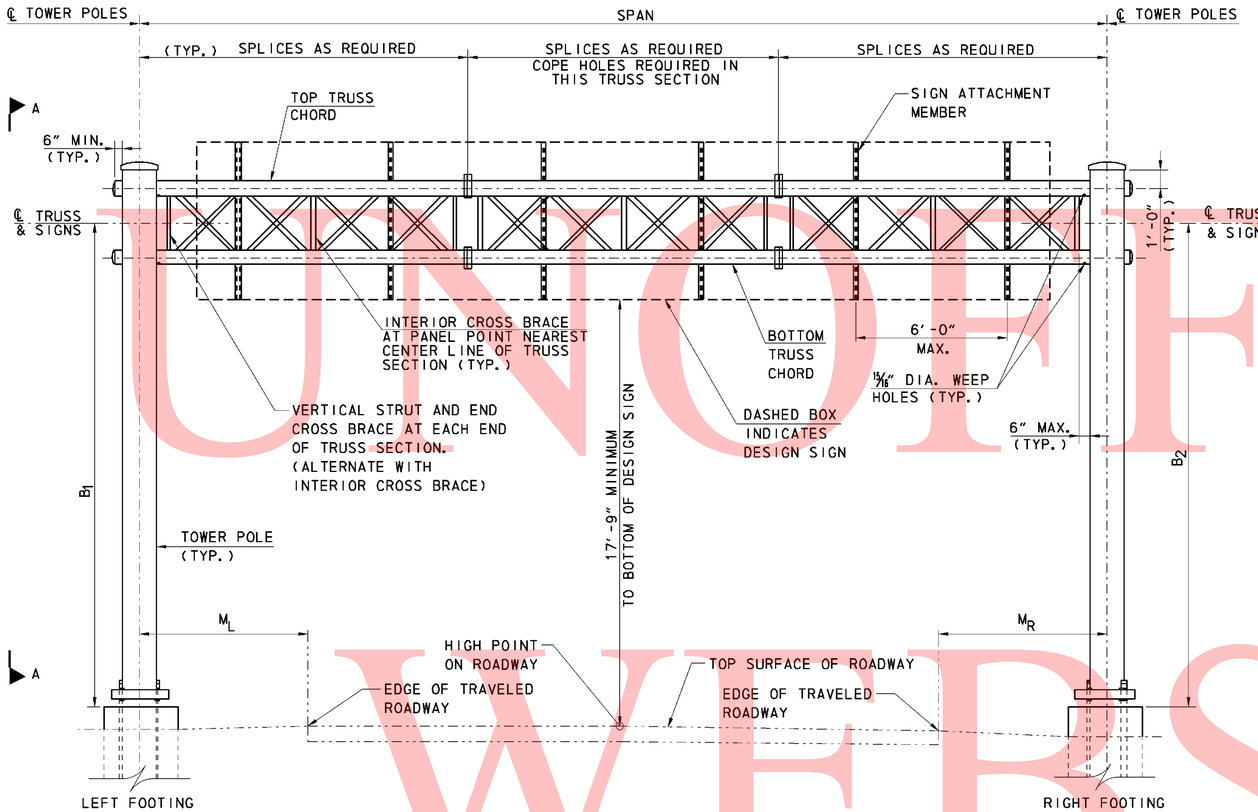

REAR ELEVATION VIEW

(NOTE: GUSSET PLATES NOT SHOWN FOR CLARITY)
NOT TO SCALE

NOTES:

1. THE STRUCTURES ARE DESIGNED IN ACCORDANCE WITH THE AASHTO STANDARD SPECIFICATIONS FOR STRUCTURAL SUPPORTS FOR HIGHWAY SIGNS, LUMINARIES AND TRAFFIC SIGNALS, 4th EDITION.
2. SEE SPECIAL PROVISIONS AND DELAWARE STANDARD SPECIFICATIONS FOR CONSTRUCTION PROCEDURE AND MATERIALS.
3. FOR SIGN STRUCTURE LOCATIONS, SEE SIGNING, STRIPING AND CONDUIT PLANS.
4. DESIGN BASIC WIND SPEED 110 MPH.
5. ANY ALTERNATE DESIGN SHALL BE STRUCTURALLY EQUIVALENT AND SUBJECT TO APPROVAL BY THE ENGINEER. SEE SPECIAL PROVISIONS.
6. MOUNTING HEIGHT B SHALL NOT BE LESS THAN [17'-9"+ ½ DESIGN SIGN HEIGHT +/- ELEVATION DIFFERENCE FROM HIGH POINT OF ROADWAY TO TOP OF CONCRETE BASE]. VERIFY MOUNTING HEIGHTS IN FIELD PRIOR TO FABRICATING STRUCTURE.
7. STEEL TEMPLATES SHALL BE USED TO SET ANCHOR BOLTS PLUMB WHEN POURING THE FOUNDATION.
8. LOCK WASHERS WITH FLAT WASHERS SHALL ONLY BE USED FOR "U" BOLT CONNECTIONS AND NUT SHALL BE TURNED UNTIL THE LOCK WASHER IS FLAT.
9. FOR REINFORCING DETAILS, SEE SHEETS 737 AND 738.
10. FOR ANCHOR BOLT SIZES, STEEL TEMPLATE SIZES, AND OVERHEAD TRUSS DETAILS, SEE SHEET 735.
11. POLE, ARM CHORD, END FRAME BRACING AND PIPE BRACING O.D. DIMENSIONS ARE ACTUAL.
12. STRUCTURE SHALL BE GALVANIZED TO CONFORM TO AASHTO M 111.
13. FASTENERS SHALL BE GALVANIZED TO CONFORM TO AASHTO M 232.
14. CAMBER SHALL BE OBTAINED BY INCREASING THE TOP CHORD LENGTHS AND DECREASING BOTTOM CHORD LENGTHS AS SHOWN. CHORD ENDS AND SPLICE PLATES SHALL BE PREPARED TO THE PROPER ANGLE BEFORE SPLICE PLATES ARE WELDED TO THE CHORDS.
15. A MINIMUM OF TWO SPLICES (THREE TRUSS SECTIONS) SHALL BE PROVIDED FOR ALL SPAN STRUCTURES.
16. THE INFORMATION PROVIDED ON SHEETS 733 THROUGH 738 IS FOR SIGNS OH-1 THROUGH OH-17 AND OH-21. FOR SIGNS OH-18 THROUGH OH-20 SEE SHEETS 738A THROUGH 738G.

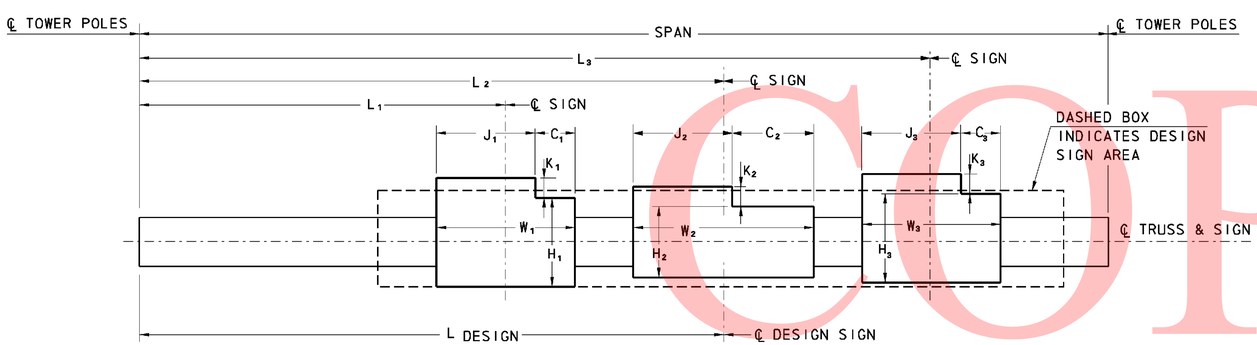

SIGN PANEL ELEVATION (LOOKING AT BACK OF SIGNS)

NOT TO SCALE

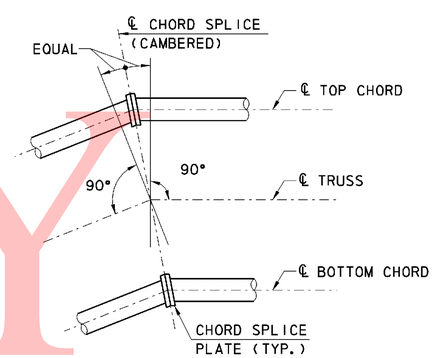

CAMBER DETAIL

(SEE NOTE 14)
NOT TO SCALE

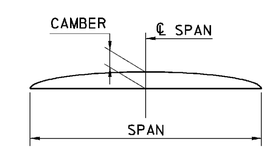

CAMBER DIAGRAM

NOT TO SCALE

UNOFFICIAL WEBSITE COPY

11/9/2010 1:03:21 PM
M:\PROJECTS\2003\03059_DELTRNPK\SR1MALL\CADD\2809003\PLANS\SS01_SR1.DGN

DELAWARE DEPARTMENT OF TRANSPORTATION	ADDENDUMS / REVISIONS	SR1 / I-95 INTERCHANGE	CONTRACT 28-090-03	BRIDGE NO.	OVERHEAD SIGN STRUCTURE ELEVATION	SHEET NO. 733
			COUNTY NEW CASTLE	DESIGNED BY: KMD		TOTAL SHTS. 803
				CHECKED BY: DST		

SIGN DESIG-NATION	STATION	SPAN	SIGN PANELS																											
			PANEL NO.	L_1	W_1	H_1	C_1	J_1	K_1	PANEL NO.	L_2	W_2	H_2	C_2	J_2	K_2	PANEL NO.	L_3	W_3	H_3	C_3	J_3	K_3	PANEL NO.	L_4	W_4	H_4	C_4	J_4	K_4
OH-1	353+25 NB 1	83′-6″	1	22′-6″	18′-0″	16′	7′-0″	11′-0″	2′-6″	2	52′-6″	40′-0″	22′	0′	13′-0″	4′-6″	-	-	-	-	-	-	-	-	-	-	-	-	-	-
OH-2	364+00 NB 1	79′-8″	1	53′-7″	40′-0″	22′	0′	13′-0″	4′-6″	-	-	-	-	-	-	-	-	-	-	-	-	-	-	-	-	-	-	-	-	-
OH-3	600+00 NB 7	74′-5½″	1	40′-5″	40′-0″	22′	0′	13′-0″	4′-6″	-	-	-	-	-	-	-	-	-	-	-	-	-	-	-	-	-	-	-	-	-
OH-5	619+40 NB 7	112′-9⅛″	1	25′-8″	21′-0″	16′	8′-0″	13′-0″	2′-6″	2	46′-8″	17′-0″	16′	4′-0″	13′-0″	2′-6″	3	89′-9″	39′	21′	-	-	-	-	-	-	-	-	-	-
OH-6	427+50 RP B	49′-7″	1	26′-4″	39′-0″	21′	-	-	-	-	-	-	-	-	-	-	-	-	-	-	-	-	-	-	-	-	-	-	-	-
OH-7	629+00 NB 7	64′-1″	1	19′-3¼″	24′-0″	13′	11′-0″	13′-0″	2′-6″	2	41′-9¼″	17′-0″	16′	4′-0″	13′-0″	2′-6″	-	-	-	-	-	-	-	-	-	-	-	-	-	-
OH-8	501+50 RP B1	55′-0½″	1	30′-1½″	39′-0″	22′	-	-	-	-	-	-	-	-	-	--	-	-	-	-	-	-	-	-	-	-	-	-	-	-
OH-9	1223+50 RP A	60′-0″	1	14′-10″	18′-0″	16′	-	-	-	2	34′-1″	18′-6″	16′	-	-	-	-	-	-	-	-	-	-	-	-	-	-	-	-	-
OH-10	1243+00 RP A	65′-6½″	1	16′-10⅜″	18′-0″	16′	-	-	-	2	37′-1⅜″	18′-6″	16′	-	-	-	-	-	-	-	-	-	-	-	-	-	-	-	-	-
OH-11	1625+50 NB 7	111′-6¼″	1	23′-0″	14′-6″	11′	1′-6″	13′-0″	2′-6″	2	40′-0″	17′-6″	13′	4′-6″	13′-0″	2′-6″	3	58′-9″	18′	16′	-	-	-	4	88′-11 7⁄16″	19′-6″	16′	8′-6″	11′	2′-6″
OH-12	1635+66 SB 7	99′-5½″	1	25′-3″	17′-6″	13′	4′-6″	13′-0″	2′-6″	2	44′-0″	18′-0″	16′	-	-	-	-	-	-	-	-	-	-	-	-	-	-	-	-	-
OH-13	370+00 SB 1	84′-2½″	1	37′-3″	19′-6″	19′	8′-6″	11′-0″	2′-6″	2	57′-3″	18′-6″	16′	-	-	-	-	-	-	-	-	-	-	-	-	-	-	-	-	-
OH-14	1109+65 RP C	59′-6¼″	1	24′-5⅞″	18′-0″	16′	6′-6″	11′-6″	2′-6″	2	44′-5⅞″	20′-0″	16′	0′	11′-6″	2′-6″	-	-	-	-	-	-	-	-	-	-	-	-	-	-
OH-15	NB 7	63′-6½″	1	40′-6½″	40′-0″	25′	0′-0″	13′-0″	4′-6″	-	-	-	-	-	-	-	-	-	-	-	-	-	-	-	-	-	-	-	-	-
OH-16	1604+50 NB 7	67′-0″	1	16′-3″	24′-0″	13′	11′-0″	13′-0″	2′-6″	2	41′-3″	18′-0″	16′	2′-6″	15′-6″	2′-6″	-	-	-	-	-	-	-	-	-	-	-	-	-	-
OH-17	1617+50 NB 7	73′-10⅝″	1	23′-0″	14′-6″	11′	1′-6″	13′-0″	2′-6″	2	40′-0″	17′-6″	13′	4′-6″	13′-0″	2′-6″	3	58′-9″	18′	16′	-	-	-	-	-	-	-	-	-	-
OH-21	NB 95	115′-6″	1	39′-0″	25′-0″	22′	11′-0″	14′-0″	2′-6″	2	59′-6″	12′-0″	15′	-	-	-	-	-	-	-	-	-	-	-	-	-	-	-	-	-

SIGN DESIG-NATION	SUPPORT STRUCTURES										
	M_L	B_1	POLE TOWER (TYP.)	B_2	M_R	TRUSS CHORD TUBE	DESIGN SIGN DIMENSIONS	TOWER BRACING	TRUSS CHORD BRACING	CAMBER	L_{DESIGN}
OH-1	21′-0″	34′-8 1⁄16″	18″ O.D. x 0.438″THK.	28′-3¼″	26′-6″	6.625″ O.D. x 0.25″THK.	65′(W)x22′(H)	8.625″ O.D. x 0.25″THK.	3.50″ O.D. x 0.25″THK.	1 13⁄16″	41′-9″
OH-2	22′-2″	32′-9″	18″ O.D. x 0.438″THK.	25′-4 11⁄16″	9′-0″	6.625″ O.D. x 0.25″THK.	65′(W)x22′(H)	8.625″ O.D. x 0.25″THK.	3.50″ O.D. x 0.25″THK.	1⅝″	39′-5″
OH-3	21′-0″	29′-1 15⁄16″	18″ O.D. x 0.438″THK.	24′-10 1⁄16″	17′-4″	6.625″ O.D. x 0.25″THK.	66′(W)x22′(H)	8.625″ O.D. x 0.25″THK.	3.50″ O.D. x 0.25″THK.	1½″	37′-3″
OH-5	11′-3″	23′-9 3⁄16″	20″ O.D. x 0.375″THK.	24′-0″	16′-3¼″	12.75″ O.D. x 0.312″THK.	74′(W)x21′(H)	8.625″ O.D. x 0.25″THK.	4.50″ O.D. x 0.25″THK.	2 11⁄16″	56′-1″
OH-6	15′-0″	29′-3¼″	16″ O.D. x 0.25″THK.	24′-10″	9′-0″	4.5″ O.D. x 0.25″THK.	44′(W)x21′(H)	6.625″ O.D. x 0.25″THK.	2.875″ O.D. x 0.141″THK.	⅞″	24′-5″
OH-7	4′-6¼″	26′-7½″	16″ O.D. x 0.25″THK.	19′-7⅛″	10′-6¼″	4.5″ O.D. x 0.25″THK.	55′(W)x16′(H)	6.625″ O.D. x 0.25″THK.	2.875″ O.D. x 0.141″THK.	1 3⁄16″	31′-9 5⁄16″
OH-8	17′-6¼″	29′-9″	18″ O.D. x 0.438″THK.	27′-11 3⁄16″	13′-6¼″	6.625″ O.D. x 0.25″THK.	48′(W)x22′(H)	6.625″ O.D. x 0.25″THK.	3.50″ O.D. x 0.25″THK.	⅞″	27′-5¼″
OH-9	9′-0″	22′-4″	16″ O.D. x 0.25″THK.	24′-11 3⁄16″	15′-0 ″	4.5″ O.D. x 0.25″THK.	54′(W)x16′(H)	6.625″ O.D. x 0.25″THK.	2.875″ O.D. x 0.141″THK.	1⅛″	30′-0″
OH-10	10′-6¼″	27′-0⅛″	16″ O.D. x 0.25″THK.	22′-7¾″	16′-6¼″	4.5″ O.D. x 0.25″THK.	56′(W)x16′(H)	6.625″ O.D. x 0.25″THK.	2.875″ O.D. x 0.141″THK.	1¼″	32′-8¼″
OH-11	21′-0″	26′-11 11⁄16″	20″ O.D. x 0.281″THK.	23′-4¼″	10′-6¼″	8.625″ O.D. x 0.25″THK.	77′(W)x16′(H)	8.625″ O.D. x 0.25″THK.	3.50″ O.D. x 0.25″THK.	2⅞″	55′-8⅝″
OH-12	21′-0″	29′-1 3⁄16″	20″ O.D. x 0.281″THK.	22′-11¼″	10′-6¼″	8.625″ O.D. x 0.25″THK.	80′(W)x16′(H)	8.625″ O.D. x 0.25″THK.	3.50″ O.D. x 0.25″THK.	2¼″	49′-8⅝″
OH-13	33′-8″	27′-5 5⁄16″	18″ O.D. x 0.438″THK.	29′-1 3⁄16″	15′-0″	6.625″ O.D. x 0.25″THK.	78′(W)x19′(H)	8.625″ O.D. x 0.25″THK.	3.50″ O.D. x 0.25″THK.	1¾″	42′-1¼″
OH-14	21′-0″	28′-1 13⁄16″	16″ O.D. x 0.25″THK.	25′ 5⅞″	12′-6¼″	4.5″ O.D. x 0.25″THK.	54′(W)x16′(H)	6.625″ O.D. x 0.25″THK.	2.875″ O.D. x 0.141″THK.	1 3⁄16″	29′-8⅝″
OH-15	21′-0″	29′-10 15⁄16″	18″ O.D. x 0.438″THK.	31′-0¼″	18′-6″	6.625″ O.D. x 0.25″THK.	60′(W)x25′(H)	6.625″ O.D. x 0.25″THK.	3.50″ O.D. x 0.25″THK.	1⅛″	31′-9¼″
OH-16	11′-0″	25′-0″	16″ O.D. x 0.25″THK.	24′-9″	17′-0″	4.5″ O.D. x 0.25″THK.	63′(W)x16′(H)	6.625″ O.D. x 0.25″THK.	2.875″ O.D. x 0.141″THK.	1⅜″	33′-5″
OH-17	21′-0″	25′-4″	18″ O.D. x 0.438″THK.	28′-2½″	16′-11″	6.625″ O.D. x 0.25″THK.	70′(W)x16′(H)	6.625″ O.D. x 0.25″THK.	3.50″ O.D. x 0.25″THK.	1 7⁄16″	36′-11 5⁄16″
OH-21	21′-0″	30′- 3⅜″	20″ O.D. x 0.375″THK.	28′-9″	22′-6″	12.75″ O.D. x 0.312″THK.	75′(W)x22′(H)	8.625″ O.D. x 0.25″THK.	4.50″ O.D. x 0.25″THK.	2 15⁄16″	57′-9″

UNOFFICIAL WORKING COPY

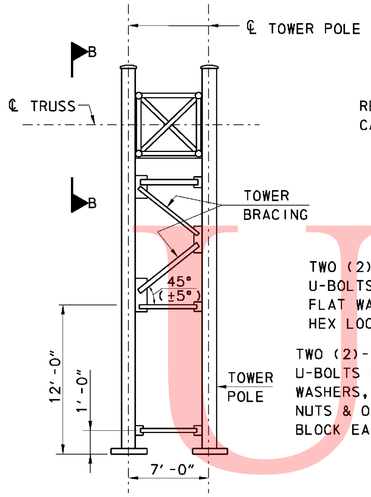

NOTE: FOR SECTION B-B, SEE SHT. 736.

SECTION A-A

NOT TO SCALE

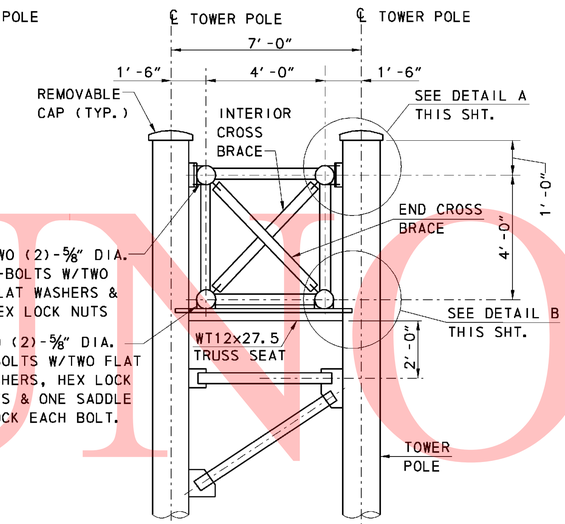

POLE & CHORD CONNECTION DETAIL

NOT TO SCALE

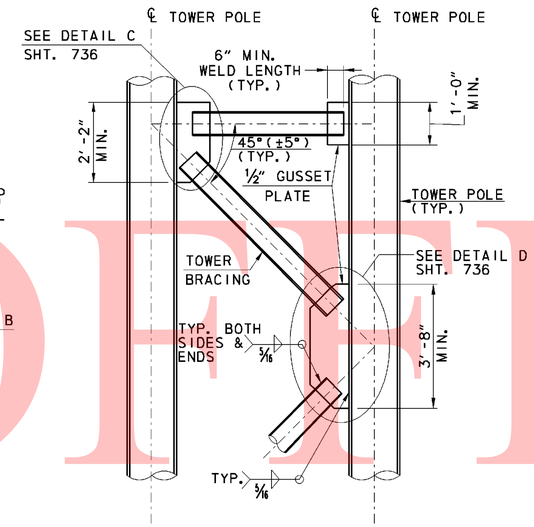

TOWER BRACING DETAIL

NOT TO SCALE

NOTE:
PROVIDE SLOT IN TOWER BRACING MEMBERS FOR CONNECTION TO GUSSET PLATES.

OVERHEAD SIGN CHORD SPLICE SCHEDULE				
CHORD SIZE	O.D.	B.C.	NO. & SIZE OF A325 BOLTS	FLANGE PLATE THICKNESS
4.5" O.D.	11½"	8"	EIGHT (8) - 1" DIA.	1½"
6.625" O.D.	15⅜"	11"	EIGHT (8) - 1¼" DIA.	2"
8.625" O.D.	19⅛"	13⅞"	EIGHT (8) - 1½" DIA.	2"
12.75" O.D.	23¼"	18"	TWELVE (12) - 1½" DIA.	2"

OVERHEAD SIGN BASE PLATE SCHEDULE									
TOWER POLE SIZE	BASE PLATE SIZE	BOLT CIRCLE	D	E	T	S	ANCHOR BOLT DIA.	MINIMUM EMBEDMENT LENGTH	ANCHOR PLATE SIZE
16" O.D.	2"×24"×24"	24 1/16"	24"	17"	2"	10"	2"	6'-0"	¾"×24"×24"
18" O.D.	2½"×28"×28"	28 7/16"	28"	20⅛"	2½"	11½"	2¼"	6'-0"	¾"×28"×28"
20" O.D.	2½"×30"×30"	30"	30"	21¼"	2½"	11½"	2½"	6'-0"	¾"×30"×30"

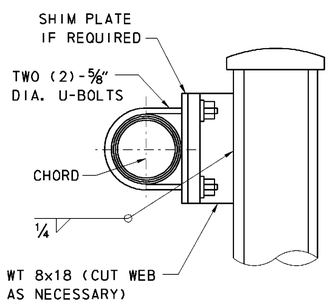

DETAIL A

NOT TO SCALE

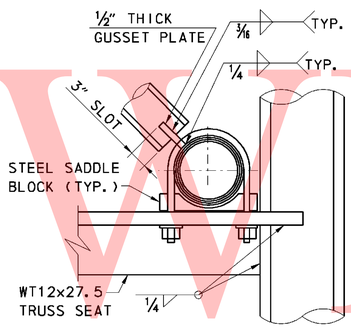

DETAIL B

NOT TO SCALE
(VERTICAL AND HORIZONTAL TRUSS MEMBERS NOT SHOWN FOR CLARITY.)

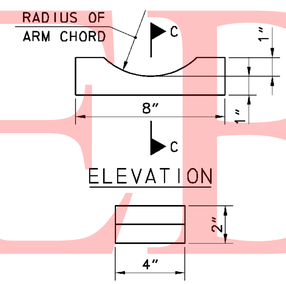

SECTION C-C

SADDLE BLOCK DETAIL

NOT TO SCALE

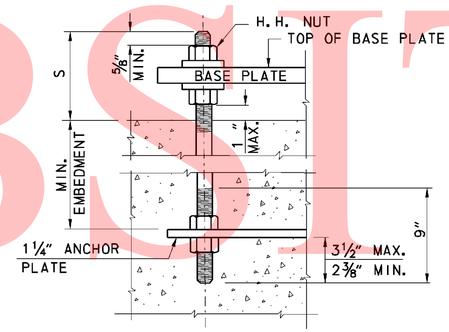

ANCHOR BOLT DETAIL

NOT TO SCALE

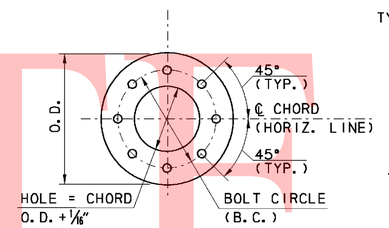

FLANGE PLATE

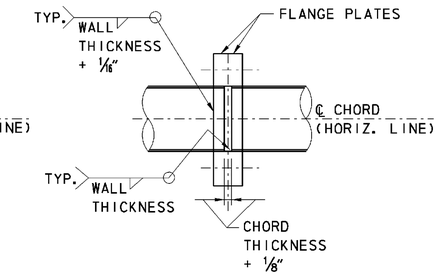

FLANGE SPLICE DETAIL

CHORD SPLICE DETAIL - 8 BOLT PATTERN

NOT TO SCALE

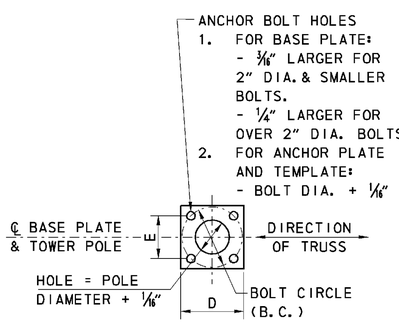

PLAN

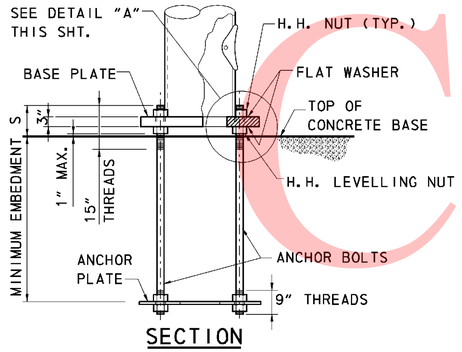

SECTION

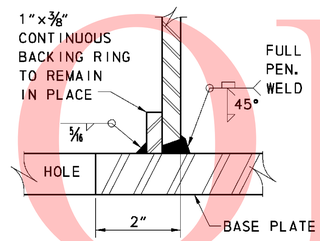

FULL-PENETRATION GROOVE WELD

DETAIL A

NOTES:
1. GALVANIZE ENTIRE LENGTH OF ANCHOR BOLTS.
2. ALL ANCHOR BOLTS SHALL BE PLUMB AFTER FOUNDATION INSTALLATION. STEEL TEMPLATE PLATE SHALL BE USED TO SET ANCHOR BOLTS.
3. BASE PLATE SHALL BE IN FULL CONTACT WITH ALL FLAT WASHERS.
4. ALL ANCHOR BOLTS SHALL BE TIGHTENED USING TURN OF NUT METHOD. (30° min to 45° max turn after snug tight).
5. GROUT SHALL NOT BE PLACED BETWEEN THE BASE PLATE AND CONCRETE BASE.

BASE PLATE AND ANCHOR PLATE (FOUR (4) BOLT PATTERN)

NOT TO SCALE

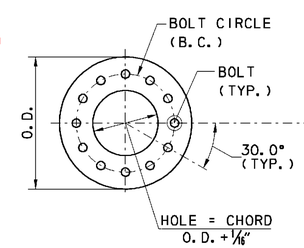

FLANGE PLATE

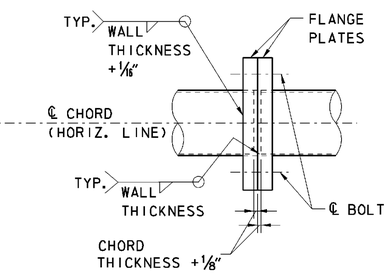

FLANGE SPLICE DETAIL

CHORD SPLICE DETAIL - 12 BOLT PATTERN

NOT TO SCALE

UNOFFICIAL WEBSITE COPY

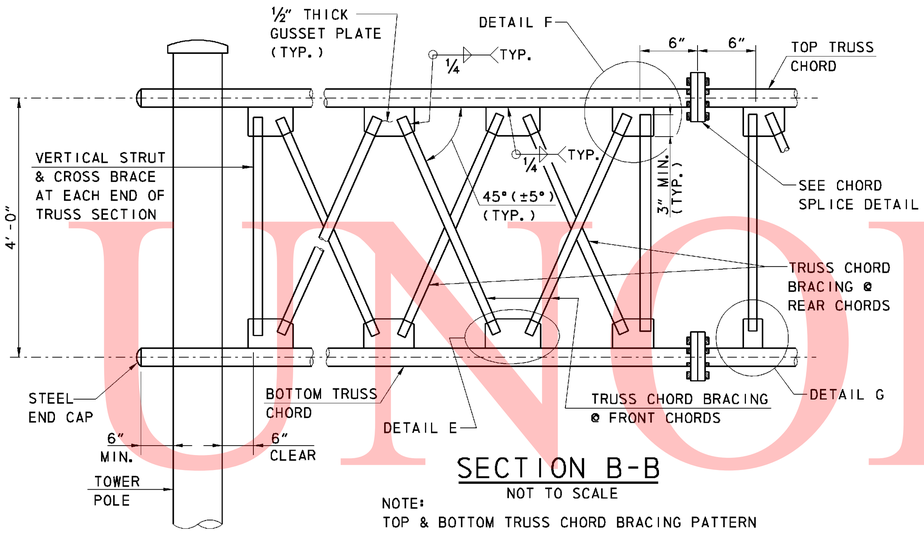

SECTION B-B

NOT TO SCALE

NOTE:
TOP & BOTTOM TRUSS CHORD BRACING PATTERN SIMILAR TO FRONT AND REAR BRACING

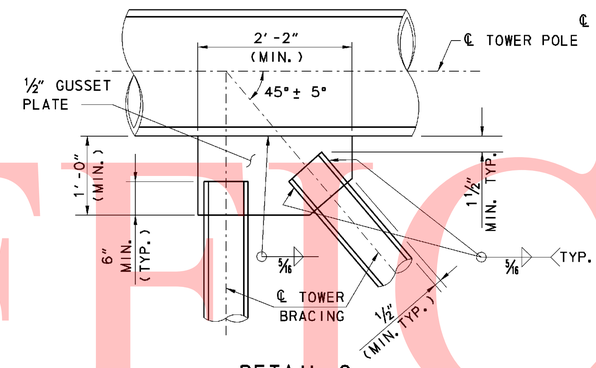

DETAIL C

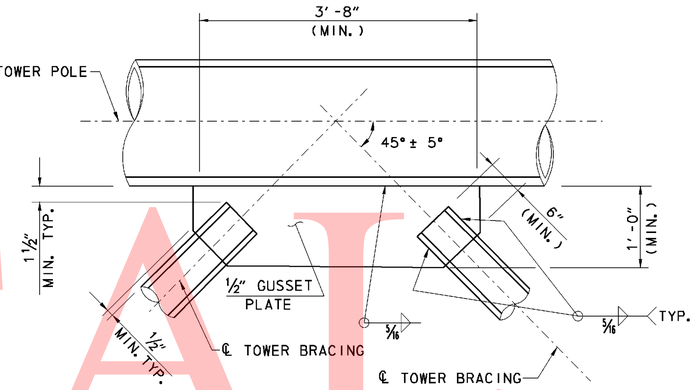

DETAIL D

OVERHEAD SIGN STRUCTURE TOWER CONNECTIONS

NOT TO SCALE

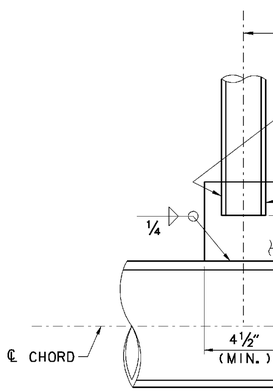

DETAIL G

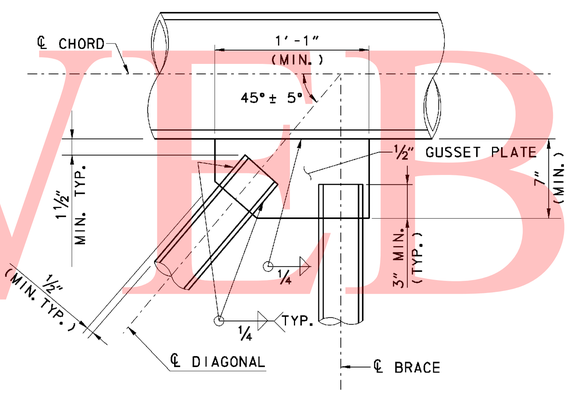

DETAIL F

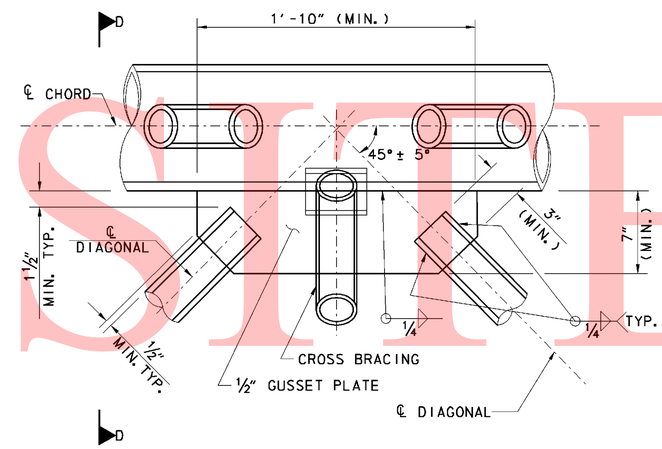

DETAIL E

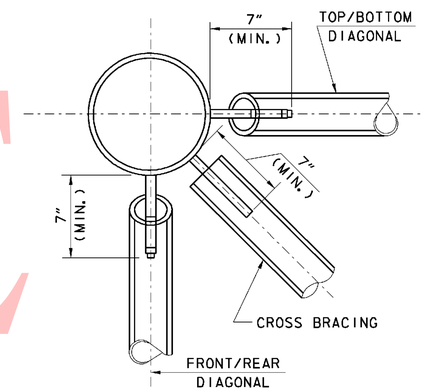

SECTION D-D

OVERHEAD SIGN STRUCTURE TRUSS CONNECTIONS

NOT TO SCALE

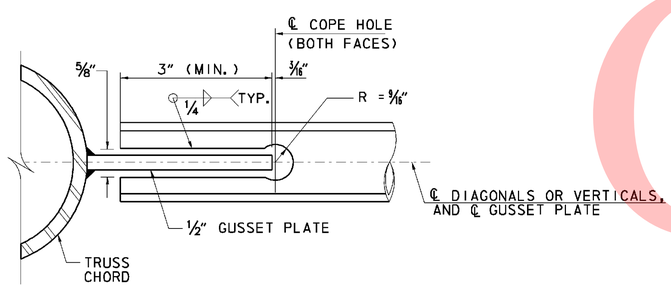

COPE HOLE DETAIL

NOT TO SCALE

NOTE:
COPE HOLES TO BE PROVIDED AT BOTH FACES OF ALL VERTICALS AND DIAGONALS IN THE MIDDLE SEGMENT

UNOFFICAL WEBSITE COPY

10/11/2010 9:55:16 AM
M:\PROJECTS\2003\03059_DELTRNPK\SRMALL\CADD\2809003\PLANS\SS04_SR1.DGN

DELAWARE DEPARTMENT OF TRANSPORTATION	ADDENDUMS / REVISIONS	SR1 / I-95 INTERCHANGE	CONTRACT 28-090-03	BRIDGE NO.	OVERHEAD SIGN STRUCTURE DETAILS - 2	SHEET NO. 736
			COUNTY NEW CASTLE	DESIGNED BY: KMD		TOTAL SHTS. 803
				CHECKED BY: DST		

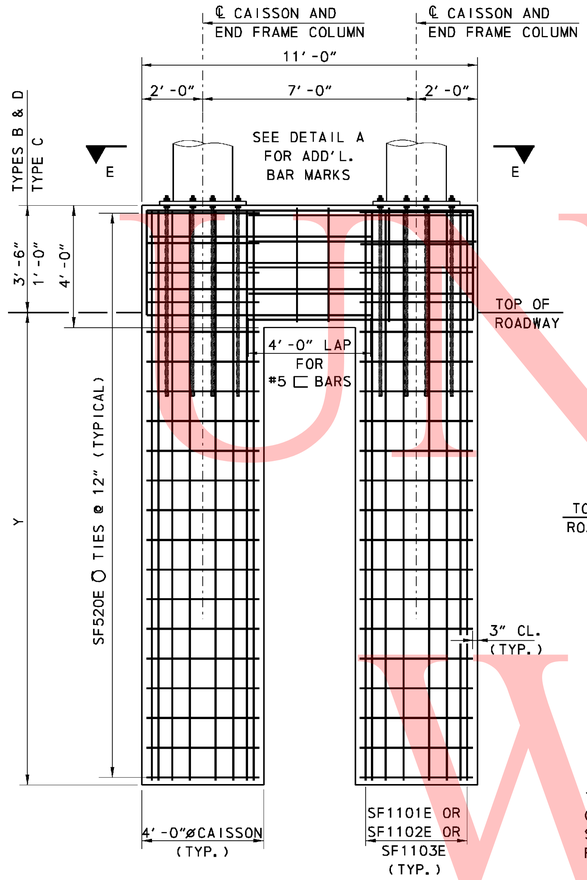

SECTION A-A

NOT TO SCALE

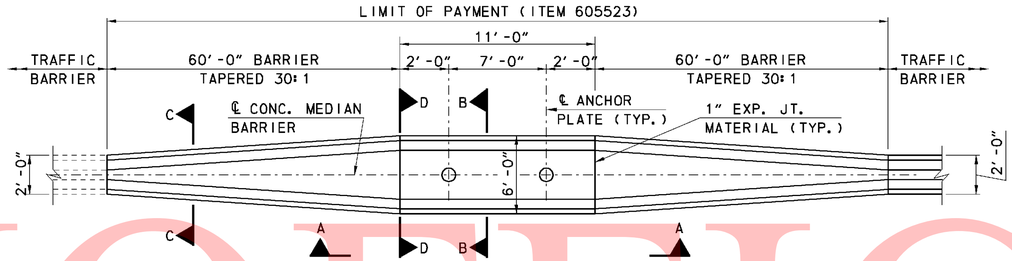

FOUNDATION PLAN TYPE D (MEDIAN BARRIER)

NOT TO SCALE

NOTES:

1. SEE SPECIAL PROVISIONS, AND DELAWARE STANDARD SPECIFICATIONS FOR CONSTRUCTION PROCEDURES AND MATERIALS.
2. STEEL TEMPLATES SHALL BE USED TO SET ANCHOR BOLTS PLUMB WHEN POURING THE FOUNDATION.
3. OPTIONAL COLD JOINTS IN THE CAISSONS SHALL BE LOCATED A MINIMUM OF 1′-0″ BELOW THE BOTTOM OF ANCHOR BOLTS. THE JOINT SURFACE PRIOR TO PLACING THE SECOND POUR SHALL BE ROUGHENED, CLEANED TO BE FREE OF ALL OIL, DIRT AND DEBRIS AND AN EPOXY BONDING AGENT SHALL BE APPLIED TO ALL TREATABLE SURFACES.
4. THE CONTRACTOR SHALL INSPECT THE BOTTOM OF THE SHAFT USING A SHAFT INSPECTION DEVICE (SID) OR AN APPROVED ALTERNATE DOWN-HOLE CAMERA TO VERIFY THE BOTTOM IS CLEAN AT THE TIME OF PLACING THE CONCRETE AND REINFORCEMENT. THE SHAFT BOTTOM SHALL BE FREE OF DEBRIS AND LOOSE MATERIAL.

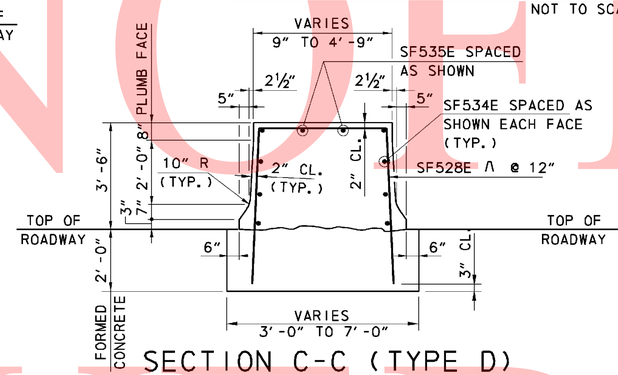

SECTION C-C (TYPE D)

NOT TO SCALE

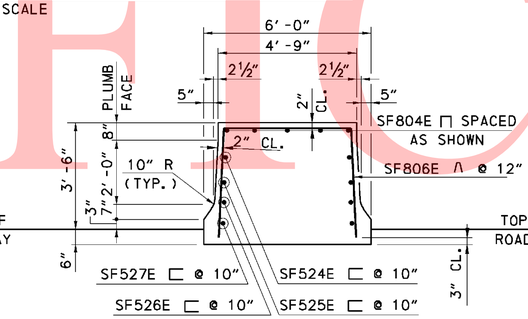

SECTION B-B (TYPE D)

NOT TO SCALE

NOTE : CAISSON, POLE AND BOLTS NOT SHOWN FOR CLARITY

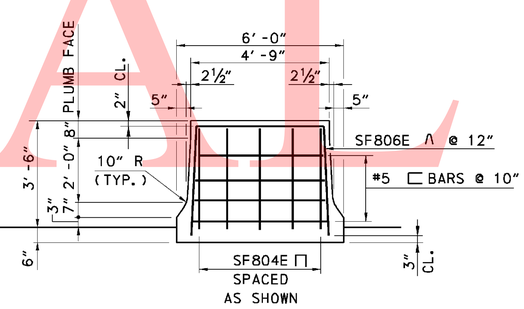

SECTION D-D (TYPE D)

NOT TO SCALE

NOTE : CAISSON NOT SHOWN FOR CLARITY

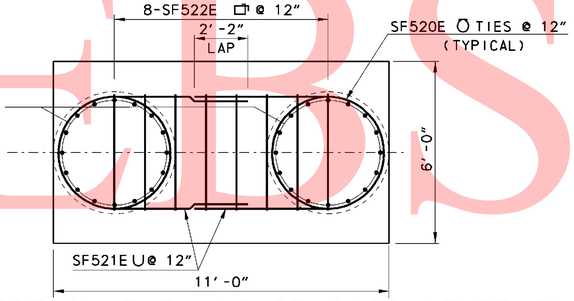

SECTION E-E INSIDE CAGE (TYPE D)

NOT TO SCALE

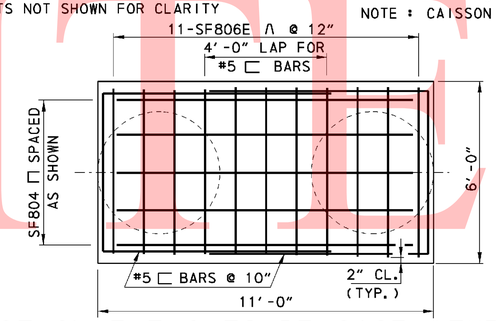

SECTION E-E OUTSIDE CAGE (TYPE D)

NOT TO SCALE

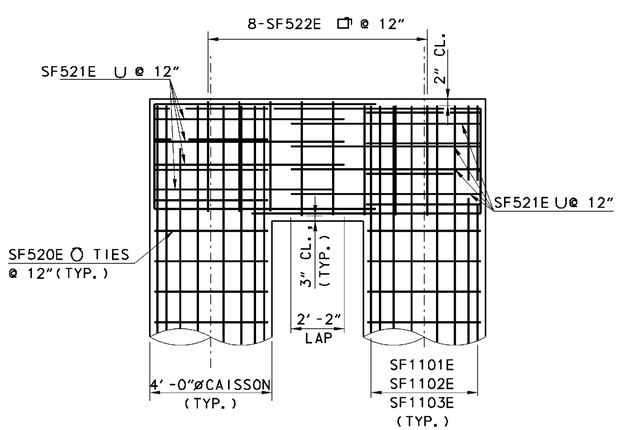

DETAIL A

NOT TO SCALE

SIGN DESIGNATION	STATION	ANCHOR BOLT			STEEL ANCHOR PLATE	LEFT FOOTING				RIGHT FOOTING				TOTAL QUANTITIES		
		QTY. PER FTG.	DIA.	MIN. EMBED.		Y	CU. YD CONC. PER FTG	#11 VERT. BAR TO USE	TYPE	Y	CU. YD CONC. PER FTG	#11 VERT. BAR TO USE	TYPE	CU. YD CONCRETE	LBS. REINF. STEEL	LF 4′-0″ DIA. CAISSON
OH-1	353+25 NB 1	8	2¼″	6′-0″	¾″×28″×28″	20′	26	SF1101E	C	20′	26	SF1101E	C	52	10,150	80′
OH-2	364+00 NB 1	8	2¼″	6′-0″	¾″×28″×28″	20′	26	SF1101E	C	20′	28	SF1102E	B	54	10,627	80′
OH-3	600+00 NB 7	8	2¼″	6′-0″	¾″×28″×28″	20′	26	SF1101E	C	20′	26	SF1101E	C	52	10,150	80′
OH-5	619+40 NB 7	8	2½″	6′-0″	¾″×30″×30″	20′	26	SF1101E	C	20′	26	SF1101E	C	52	10,150	80′
OH-6	427+50 RP B	8	2″	6′-0″	¾″×24″×24″	20′	26	SF1101E	C	20′	28	SF1102E	B	54	10,627	80′
OH-7	629+00 NB 7	8	2″	6′-0″	¾″×24″×24″	20′	26	SF1101E	C	20′	26	SF1101E	C	52	10,150	80′
OH-8	501+50 RP B1	8	2¼″	6′-0″	¾″×28″×28″	40′	45	SF1103E	C	40′	45	SF1103E	C	90	17,951	160′
OH-9	1223+50 RP A	8	2″	6′-0″	¾″×24″×24″	20′	28	SF1102E	B	20′	28	SF1102E	B	56	11,104	80′
OH-10	1243+00 RP A	8	2″	6′-0″	¾″×24″×24″	20′	26	SF1101E	C	20′	26	SF1101E	C	52	10,150	80′
OH-11	1625+50 NB 7	8	2½″	6′-0″	¾″×30″×30″	20′	26	SF1101E	C	20′	26	SF1101E	C	52	10,150	80′
OH-12	1635+66 SB 7	8	2½″	6′-0″	¾″×30″×30″	20′	26	SF1101E	C	20′	26	SF1101E	C	52	10,150	80′
OH-13	370+00 SB 1	8	2¼″	6′-0″	¾″×28″×28″	20′	26	SF1101E	C	20′	26	SF1101E	C	52	10,150	80′
OH-14	1109+65 RP C	8	2″	6′-0″	¾″×24″×24″	20′	26	SF1101E	C	20′	26	SF1101E	C	52	10,150	80′
OH-15	NB 7	8	2¼″	6′-0″	¾″×28″×28″	20′	26	SF1101E	C	20′	26	SF1101E	C	52	10,150	80′
OH-16	1604+50 NB 7	8	2″	6′-0″	¾″×24″×24″	20′	26	SF1101E	C	20′	26	SF1101E	C	52	10,150	80′
OH-17	1617+50 NB 7	8	2¼″	6′-0″	¾″×28″×28″	20′	26	SF1101E	C	20′	26	SF1101E	C	52	10,150	80′
OH-21	NB 95	8	2½″	6′-0″	¾″×30″×30″	20′	26	SF1101E	C	20′	26	SF1101E	C	52	10,150	80′

UNOFFICIAL WEBSITE COPY

NOTES:

1. SEE SPECIAL PROVISIONS, AND DELAWARE STANDARD SPECIFICATIONS FOR CONSTRUCTION PROCEDURES AND MATERIALS.
2. STEEL TEMPLATES SHALL BE USED TO SET ANCHOR BOLTS PLUMB WHEN POURING THE FOUNDATION.
3. OPTIONAL COLD JOINTS IN THE CAISSONS SHALL BE LOCATED A MINIMUM OF 1'-0" BELOW THE BOTTOM OF ANCHOR BOLTS. THE JOINT SURFACE PRIOR TO PLACING THE SECOND POUR SHALL BE ROUGHENED, CLEANED TO BE FREE OF ALL OIL, DIRT AND DEBRIS AND AN EPOXY BONDING AGENT SHALL BE APPLIED TO ALL TREATABLE SURFACES.
4. THE CONTRACTOR SHALL INSPECT THE BOTTOM OF THE SHAFT USING A SHAFT INSPECTION DEVICE (SID) OR AN APPROVED ALTERNATE DOWN-HOLE CAMERA TO VERIFY THE BOTTOM IS CLEAN AT THE TIME OF PLACING THE CONCRETE AND REINFORCEMENT. THE SHAFT BOTTOM SHALL BE FREE OF DEBRIS AND LOOSE MATERIAL.

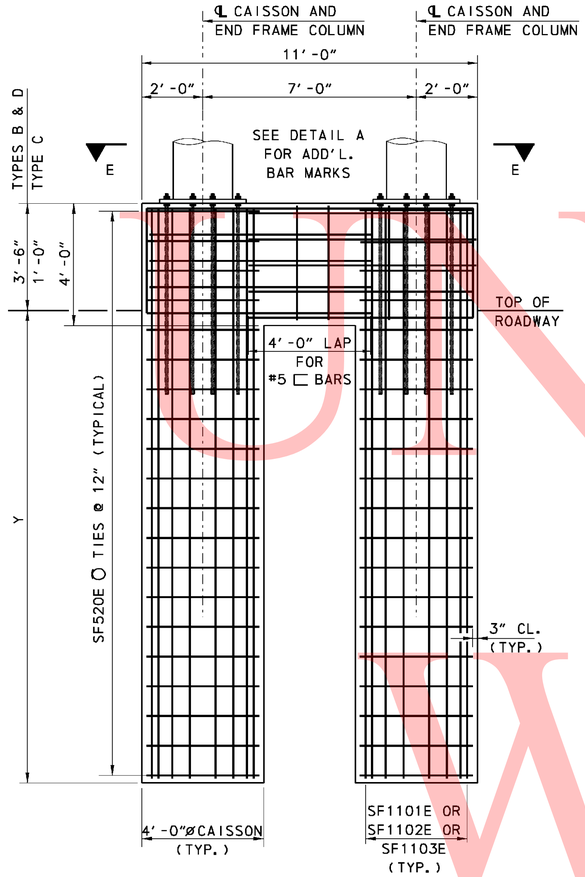

SECTION A-A

NOT TO SCALE

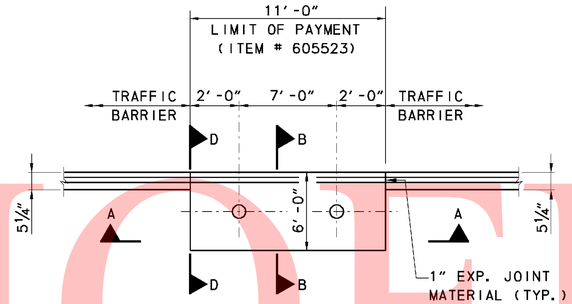

FOUNDATION PLAN TYPE B

NOT TO SCALE

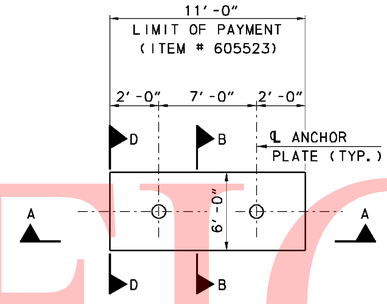

FOUNDATION PLAN TYPE C

NOT TO SCALE

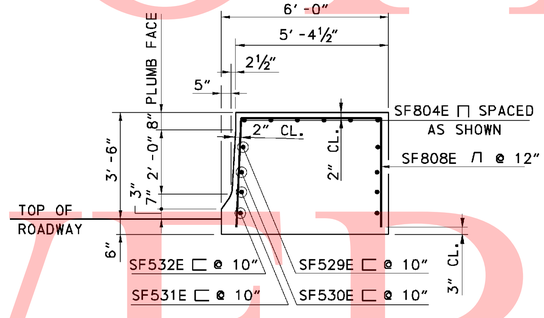

SECTION B-B (TYPE B)

NOTE: CAISSON, POLE AND BOLTS NOT SHOWN FOR CLARITY

NOT TO SCALE

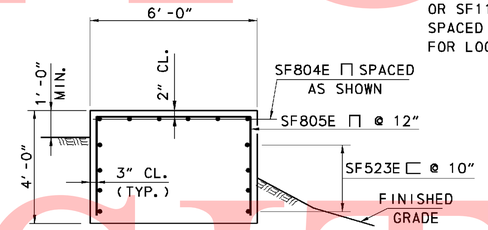

SECTION B-B (TYPE C)

NOTE: CAISSON, POLE AND BOLTS NOT SHOWN FOR CLARITY

NOT TO SCALE

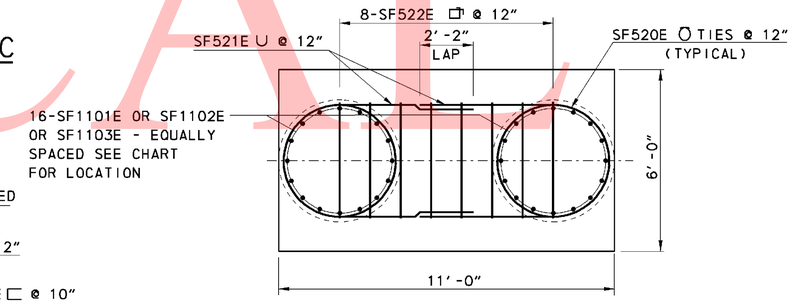

SECTION E-E INSIDE CAGE

NOT TO SCALE

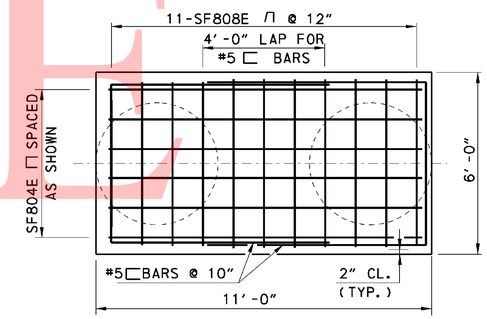

SECTION E-E OUTSIDE CAGE (TYPE B)

NOT TO SCALE

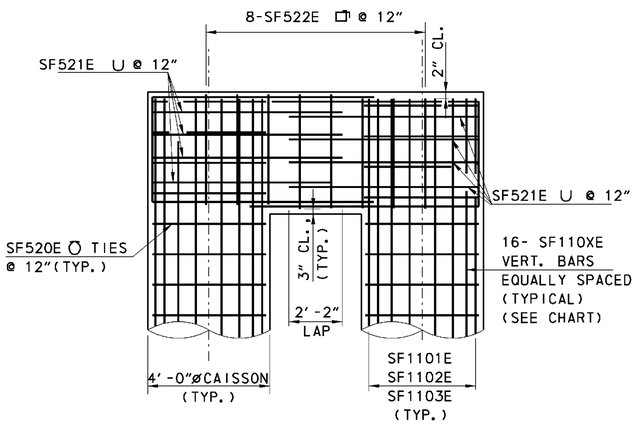

DETAIL A

NOT TO SCALE

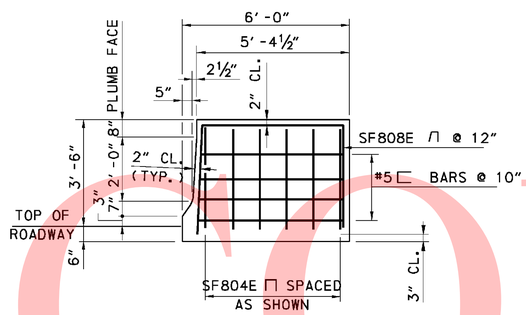

SECTION D-D (TYPE B)

NOTE : CAISSON, POLE AND BOLTS NOT SHOWN FOR CLARITY

NOT TO SCALE

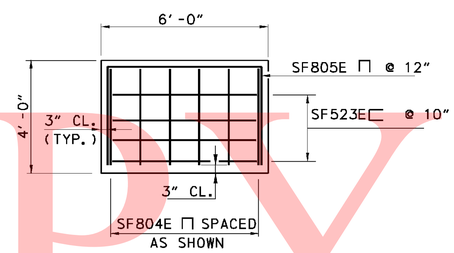

SECTION D-D (TYPE C)

NOT TO SCALE

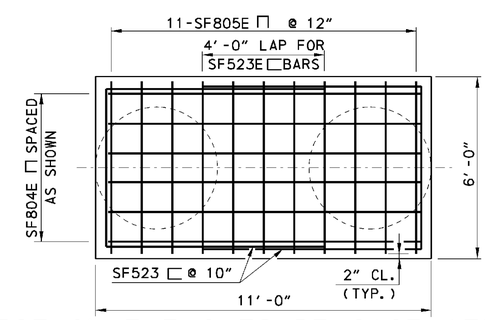

SECTION E-E OUTSIDE CAGE (TYPE C)

NOT TO SCALE

UNOFFICIAL WEBSITE COPY

11/5/2010 10:50:40 AM
M:\PROJECTS\2003\03059_DELTRNPK\SRIMALL\CADD\2809003\PLANS\SS06_SR1.DGN

DELAWARE DEPARTMENT OF TRANSPORTATION	ADDENDUMS / REVISIONS	SR1 / I-95 INTERCHANGE	CONTRACT 28-090-03	BRIDGE NO.	OVERHEAD SIGN STRUCTURE FOUNDATION DETAILS - 2	SHEET NO. 738
			COUNTY NEW CASTLE	DESIGNED BY: KWD		TOTAL SHTS. 803
				CHECKED BY: DST		

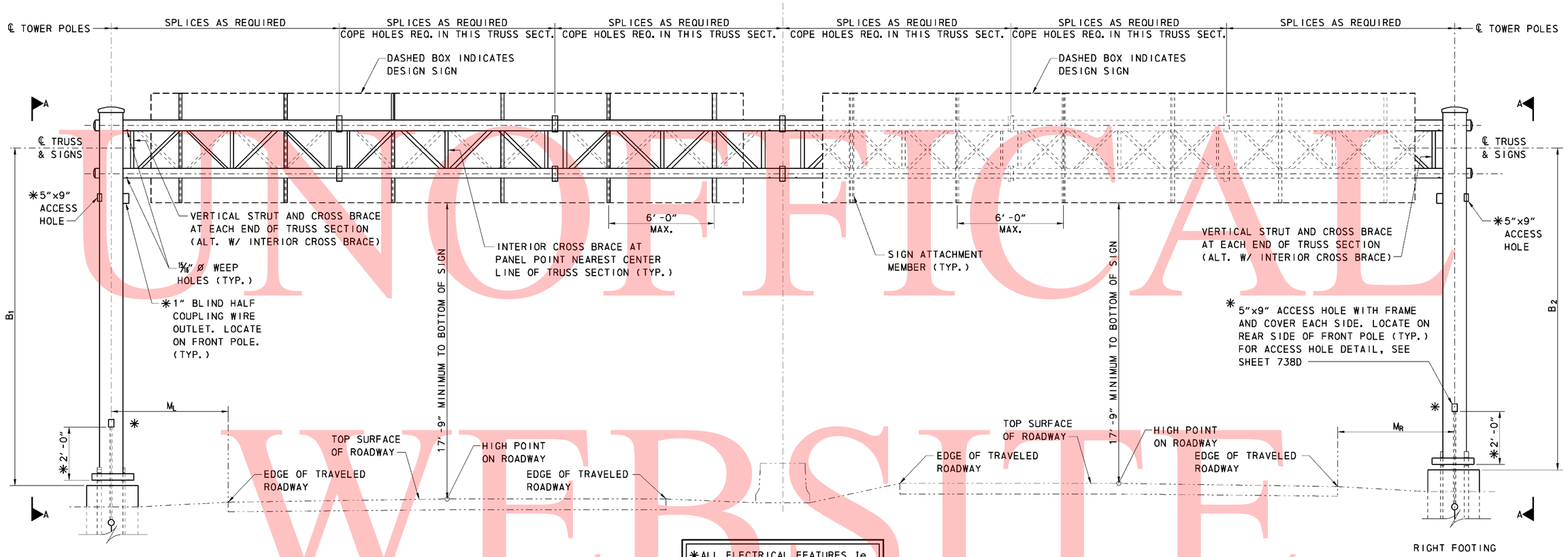

REAR ELEVATION VIEW (NBL)

(NOTE: GUSSET PLATES NOT SHOWN FOR CLARITY)
NOT TO SCALE

*ALL ELECTRICAL FEATURES ie PVC CONDUIT, ACCESS HOLES APPLY ONLY TO OH-18 DMS SIGN STRUCTURE.

FRONT ELEVATION VIEW (SBL)

(NOTE: GUSSET PLATES NOT SHOWN FOR CLARITY)
NOT TO SCALE

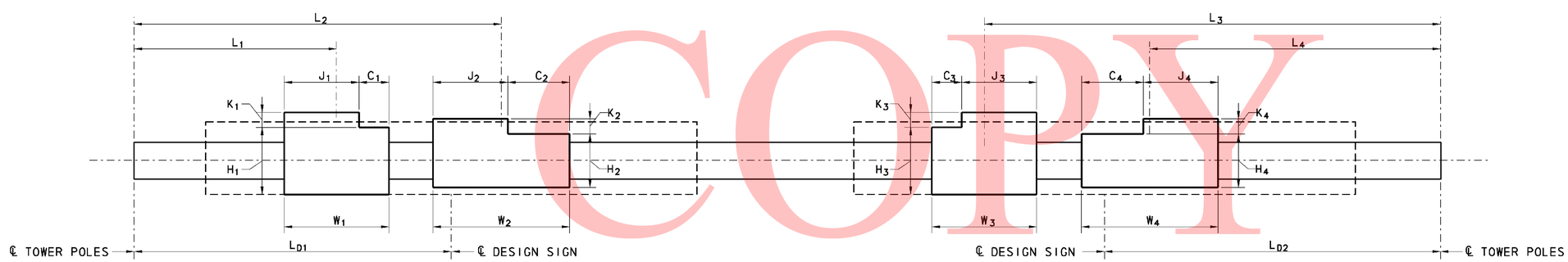

REAR ELEVATION VIEW (NBL)

NOT TO SCALE

FRONT ELEVATION VIEW (SBL)

NOT TO SCALE

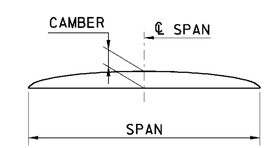

CAMBER DIAGRAM

NOT TO SCALE

NOTES:
1. FOR GENERAL NOTES, SEE SHEET 733.
2. FOR SECTION A-A, SEE SHEET 738C.

UNOFFICIAL WEBSITE COPY

DELAWARE DEPARTMENT OF TRANSPORTATION	ADDENDUMS / REVISIONS	SR1/I-95 INTERCHANGE	CONTRACT 28-090-03	BRIDGE NO.	FULL WIDTH SPAN OVERHEAD SIGN STRUCTURE ELEVATION	SHEET NO. 738A
			COUNTY NEW CASTLE	DESIGNED BY: KMD		TOTAL SHTS. 803
				CHECKED BY: DST		

11/9/2010 1:05:55 PM
M:\PROJECTS\2003\03059_DELTRNPK\SR1MALL\CADD\2809003\PLANS\SS07_SR1.DGN

SIGN PANELS - NBL

SIGN DESIGNATION	STATION	SPAN	PANEL NO.	L_1	W_1	H_1	C_1	J_1	K_1	PANEL NO.	L_2	W_2	H_2	C_2	J_2	K_2
OH-18	118+75 I-95	197'-2"	1	48'-0 11/16"	33'-0 7/8"	8'-0"	-	-	-	-	-	-	-	-	-	-
OH-19	158+50 I-95	185'-2"	1	25'-6"	19'-0"	17'-0"	-	-	-	2	57'-0"	36'-0"	17'-0"	-	-	-
OH-20	181+00 I-95	213'-0"	1	28'-6"	18'-0"	8'-0"	6'-0"	12'-0"	3'-0"	2	45'-6"	12'-0"	13'-0"	-	-	-

SIGN PANELS - SBL

SIGN DESIGNATION	PANEL NO.	L_3	W_3	H_3	C_3	J_3	K_3	PANEL NO.	L_4	W_4	H_4	C_4	J_4	K_4
OH-18	3	59'-7 3/4"	58'-0"	22'-0"	46'-6"	11'-6"	2'-6"	4	19'-4 3/4"	20'-6"	16'-0"	9'-0"	11'-6"	2'-6"
OH-19	3	42'-11"	65'-6"	22'-0"	51'-6"	14'-0"	2'-6"	-	-	-	-	-	-	-
OH-20	3	47'-6"	65'-6"	24'-0"	51'-6"	14'-0"	2'-6"	-	-	-	-	-	-	-

SUPPORT STRUCTURES

SIGN DESIGNATION	M_L	B_1	POLE TOWER (TYP.)	B_2	M_R	TRUSS CHORD TUBE	TOWER BRACING	TRUSS CHORD BRACING	CAMBER	DESIGN SIGN 1		DESIGN SIGN 2	
										DESIGN SIGN DIMENSIONS	L_1	DESIGN SIGN DIMENSIONS	L_2
OH-18	17'-11 1/4"	26'-6 1/4"	24"O.D. x0.469"THK.	26'-8 7/8"	19'-3"	14"O.D. x0.312"THK.	14"O.D. x0.312"THK.	6.625"O.D. x0.250"THK.	5 3/8"	DMS **	48'-0"	85'(W)x22'(H)	55'-0"
OH-19	18'-6 3/4"	26'-7 7/16"	24"O.D. x0.469"THK.	26'-8 3/8"	18'-6 3/4"	14"O.D. x0.250"THK.	14"O.D. x0.312"THK.	6.625"O.D. x0.250"THK.	4 15/16"	66'(W)x22'(H)	46'-3 1/2"	66'(W)x22'(H)	46'-3 1/2"
OH-20	16'-0"	34'-4 1/4"	24"O.D. x0.688"THK.	33'-9"	9'-0"	14"O.D. x0.312"THK.	16"O.D. x0.438"THK.	6.625"O.D. x0.250"THK.	6 5/16"	66'(W)x24'(H)	53'-3"	66'(W)x24'(H)	53'-3"

**DMS: 33'-0 7/8"(W)x8'-0"(H)
3500 LBS

UNOFFICAL WEBSITE COPY

11/9/2010 1:07:39 PM
M:\PROJECTS\2003\03059_DELTRNPK\SRMALL\CADD\2809003\PLANS\SS08_SR.DGN

DELAWARE DEPARTMENT OF TRANSPORTATION

ADDENDUMS / REVISIONS

SR1 / I-95 INTERCHANGE

CONTRACT	BRIDGE NO.	
28-090-03	DESIGNED BY:	KMD
COUNTY		
NEW CASTLE	CHECKED BY:	DST

FULL WIDTH SPAN OVERHEAD SIGN STRUCTURE SIGN PANEL AND SUPPORT STRUCTURE CHARTS

SHEET NO. 738B
TOTAL SHTS. 803

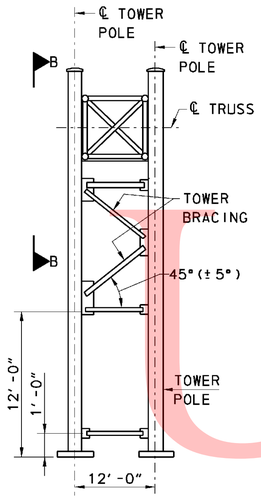

SECTION A-A
NOT TO SCALE

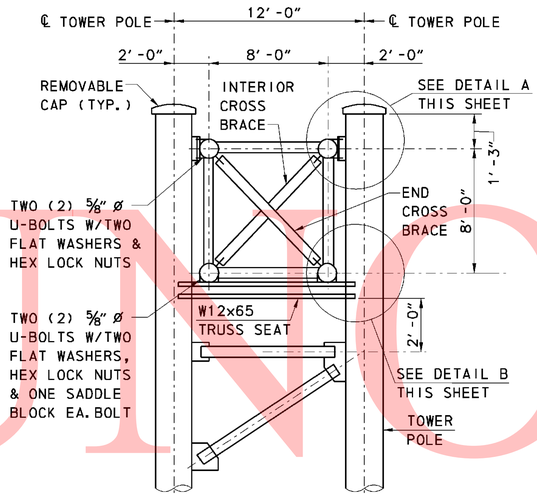

POLE & CHORD CONNECTION DETAIL
NOT TO SCALE

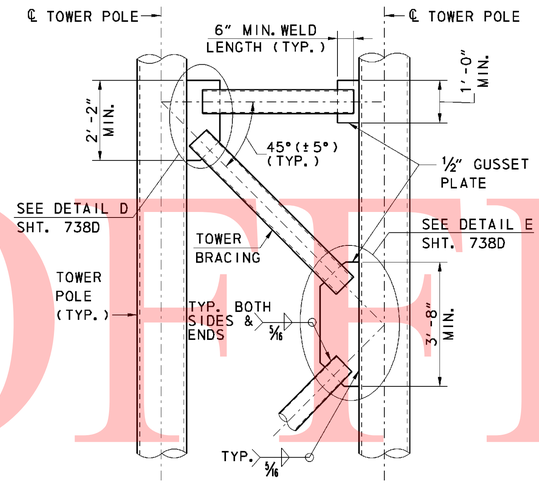

TOWER BRACING DETAIL
NOT TO SCALE

NOTE:
PROVIDE SLOT IN TOWER BRACING MEMBERS FOR CONNECTION TO GUSSET PLATES.

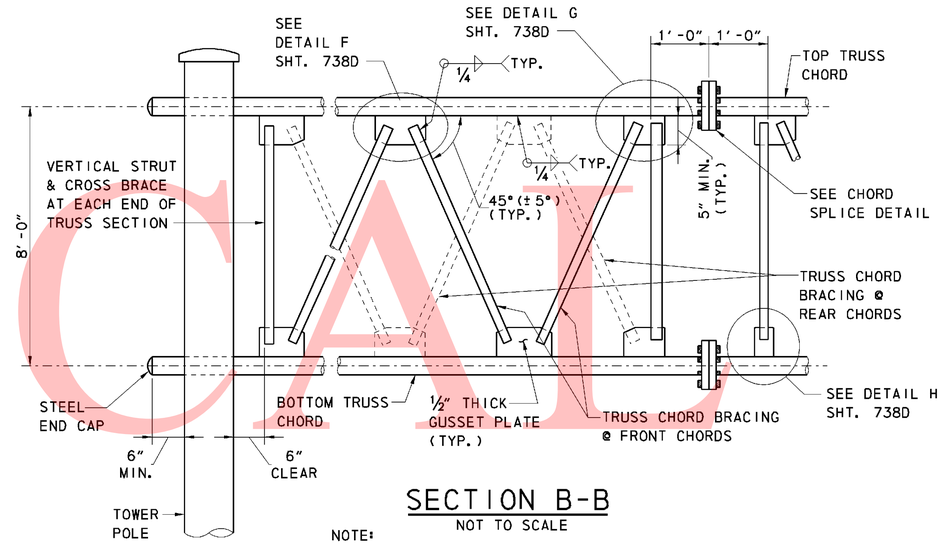

SECTION B-B
NOT TO SCALE

NOTE:
TOP & BOTTOM TRUSS CHORD BRACING PATTERN SIMILAR TO FRONT AND REAR BRACING

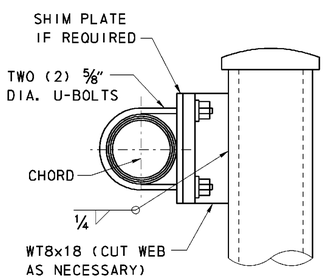

DETAIL A
NOT TO SCALE

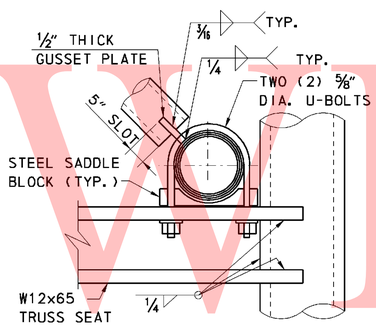

DETAIL B
NOT TO SCALE
(VERTICAL AND HORIZONTAL TRUSS MEMBERS NOT SHOWN FOR CLARITY.)

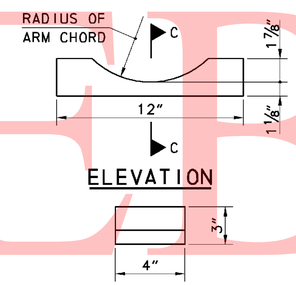

ELEVATION

SECTION C-C

SADDLE BLOCK DETAIL
NOT TO SCALE

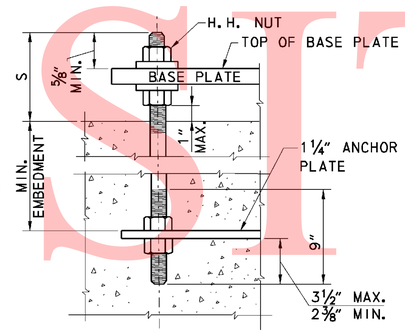

ANCHOR BOLT DETAIL
NOT TO SCALE

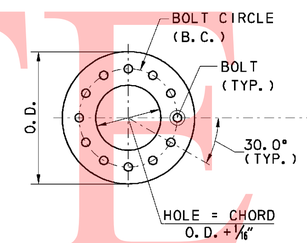

FLANGE PLATE

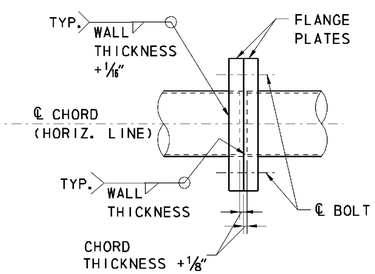

FLANGE SPLICE DETAIL

CHORD SPLICE DETAIL
NOT TO SCALE

NOTES:
1. GALVANIZE ENTIRE LENGTH OF ANCHOR BOLTS.
2. ALL ANCHOR BOLTS SHALL BE PLUMB AFTER FOUNDATION INSTALLATION. STEEL TEMPLATE PLATE SHALL BE USED TO SET ANCHOR BOLTS.
3. BASE PLATE SHALL BE IN FULL CONTACT WITH ALL FLAT WASHERS.
4. ALL ANCHOR BOLTS SHALL BE TIGHTENED USING TURN OF NUT METHOD. (30° min. to 45° max. turn after snug tight).
5. GROUT SHALL NOT BE PLACED BETWEEN THE BASE PLATE AND CONCRETE BASE.

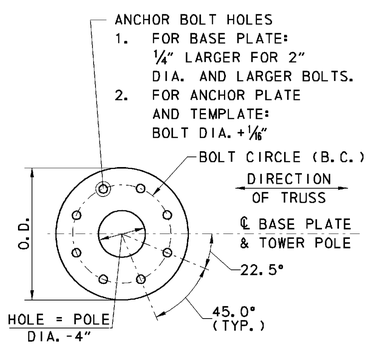

PLAN

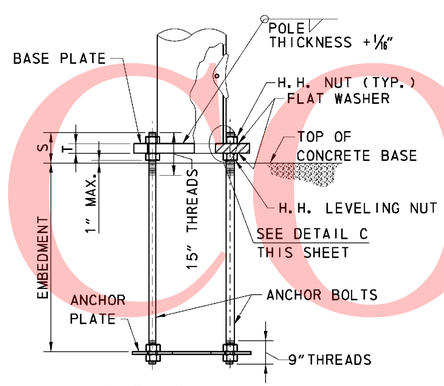

SECTION

BASE PLATE AND ANCHOR PLATE (EIGHT (8) BOLT PATTERN)
NOT TO SCALE

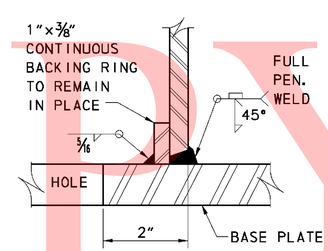

FULL-PENETRATION GROOVE WELD

DETAIL C

NOTES:
1. AT THE CONTRACTOR'S OPTION, THE CONNECTIONS OF HORIZONTAL AND DIAGONAL MEMBERS MAY BE BOLTED TO THE FRONT AND BACK TRUSSES, SEE SHEET 738E FOR DETAILS.
2. THE FRONT AND BACK TRUSSES SHALL BE FULLY WELDED.

OVERHEAD SIGN CHORD SPLICE SCHEDULE

CHORD SIZE	O.D.	B.C.	NO. & SIZE OF A325 BOLTS	FLANGE PLATE THICKNESS
14″ O.D.	26¼″	20⅛″	TWELVE (12) - 1¾″ DIA.	2″

OVERHEAD SIGN BASE PLATE SCHEDULE

TOWER POLE SIZE	BASE PLATE SIZE	BOLT CIRCLE	T	S	ANCHOR BOLT DIA.	MINIMUM EMBEDMENT LENGTH	ANCHOR PLATE SIZE
24″O.D.	3″x42″ DIA.	33″	3″	15″	2½″	6′-0″	¾″x42″ DIA.

UNOFFICIAL WEBSITE COPY

11/10/2010 12:38:11 PM
M:\PROJECTS\2003\03059_DELTRNPK\SR1MALL\CADD\2809003\PLANS\SS09_SR1.DGN

DELAWARE DEPARTMENT OF TRANSPORTATION

ADDENDUMS / REVISIONS

SR1 / I-95 INTERCHANGE

CONTRACT	BRIDGE NO.	
28-090-03	DESIGNED BY:	KMD
COUNTY		
NEW CASTLE	CHECKED BY:	DST

FULL WIDTH SPAN OVERHEAD SIGN STRUCTURE DETAILS - 1

SHEET NO. 738C
TOTAL SHTS. 803

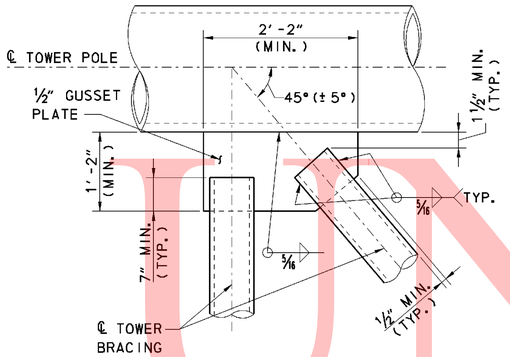

DETAIL D

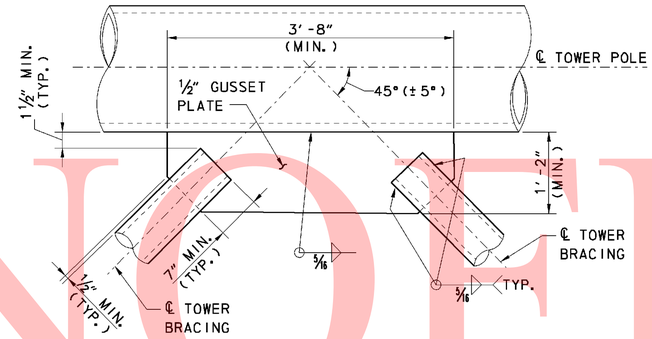

DETAIL E

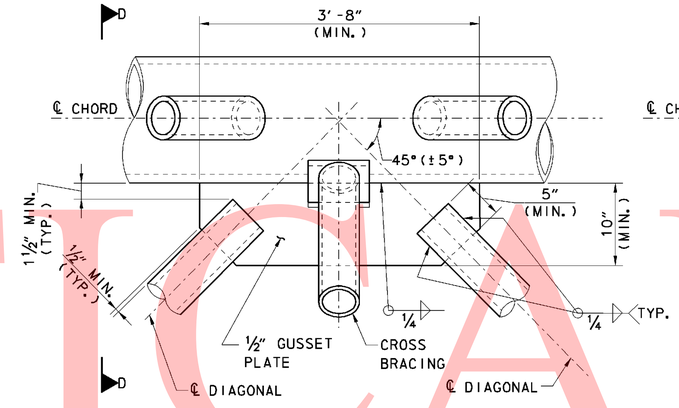

DETAIL F

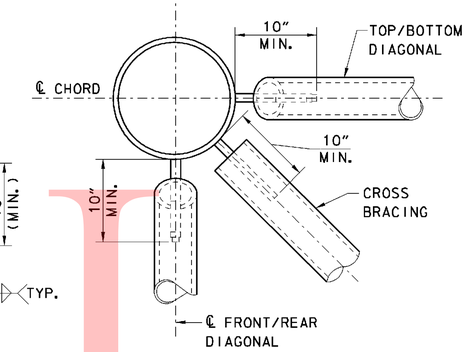

SECTION D-D

OVERHEAD SIGN STRUCTURE TOWER CONNECTIONS

NOT TO SCALE

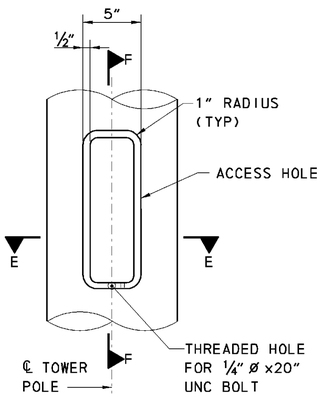

ELEVATION

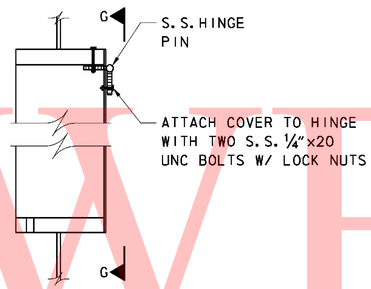

SECTION F-F

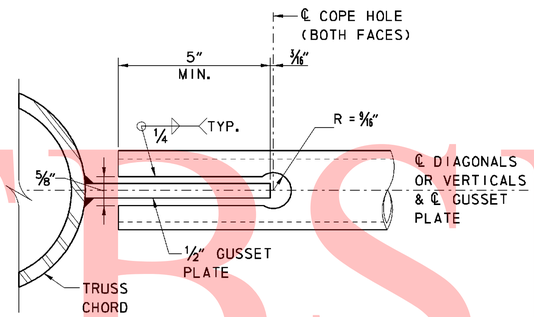

COPE HOLE DETAIL

NOT TO SCALE

NOTE:
COPE HOLES TO BE PROVIDED AT BOTH FACES OF ALL VERTICALS AND DIAGONALS IN THE MIDDLE SEGMENT

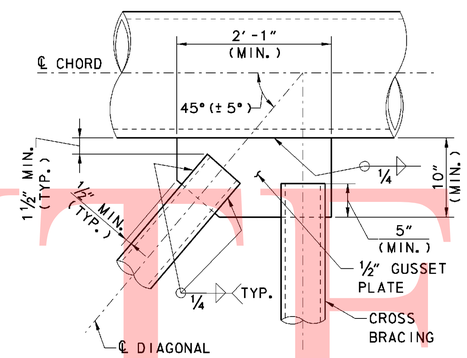

DETAIL G

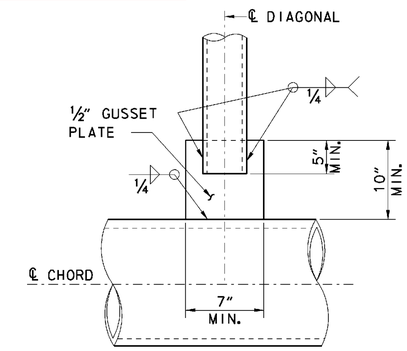

DETAIL H

OVERHEAD SIGN STRUCTURE TRUSS CONNECTIONS

NOT TO SCALE

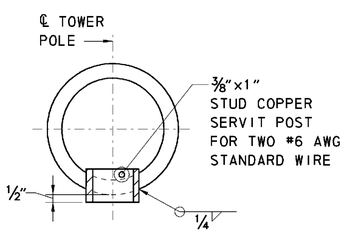

SECTION E-E

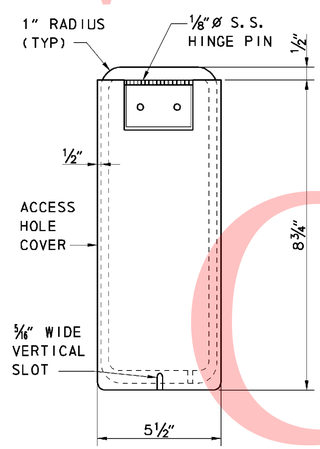

VIEW G-G

NOTES:
1. ACCESS HOLE COVER SHALL PROTRUDE OVERALL OPENING BY ¼″+ ON EACH SIDE.
2. ATTACH ACCESS HOLE COVER HINGE TO FRAME WITH TWO (2) S.S. ¼″ø × 20 UNC BOLTS TAPPED INTO ACCESS HOLE FRAME.

ACCESS HOLE DETAILS

NOT TO SCALE

UNOFFICIAL WEBSITE COPY

11/9/2010 1:10:25 PM
M:\PROJECTS\2003\03059_DELTRNPK\SRIMALL\CADD\2809003\PLANS\SS10_SR1.DGN

DELAWARE DEPARTMENT OF TRANSPORTATION	ADDENDUMS / REVISIONS	SR1 / I-95 INTERCHANGE	CONTRACT 28-090-03	BRIDGE NO.	FULL WIDTH SPAN OVERHEAD SIGN STRUCTURE DETAILS - 2	SHEET NO. 738D
			COUNTY NEW CASTLE	DESIGNED BY: KWD		TOTAL SHTS. 803
				CHECKED BY: DST		

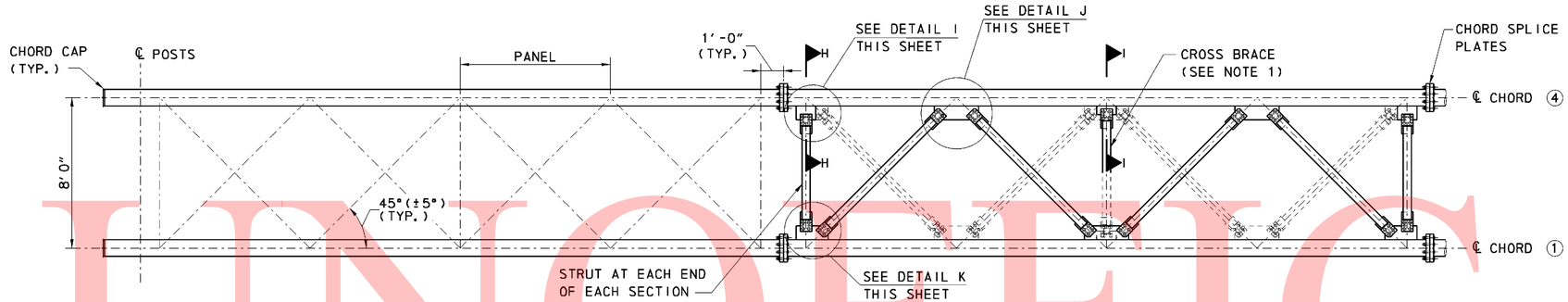

TOP VIEW OF TRUSS

NOT TO SCALE

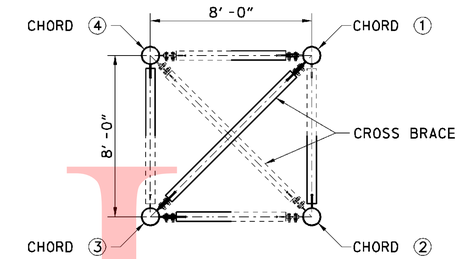

END VIEW OF TRUSS

NOT TO SCALE

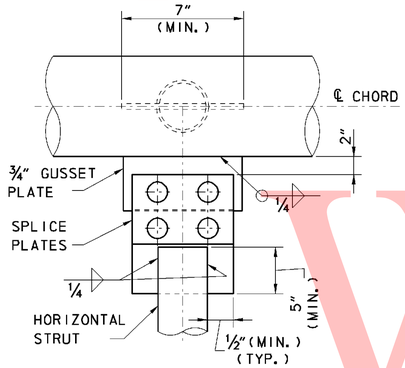

DETAIL I

NOT TO SCALE

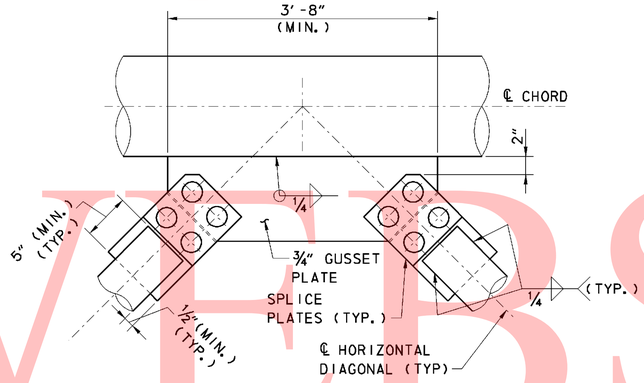

DETAIL J

NOT TO SCALE

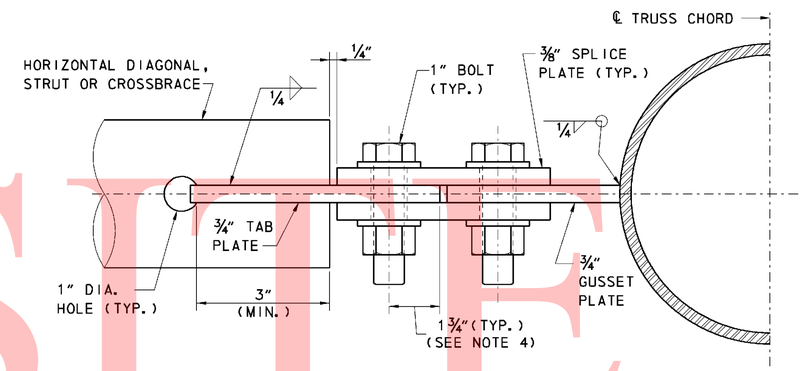

SPLIT TUBE BOLTED CONNECTION DETAIL

NOT TO SCALE

(TYPICAL FOR ALL BOLTED TRUSS CONNECTIONS)

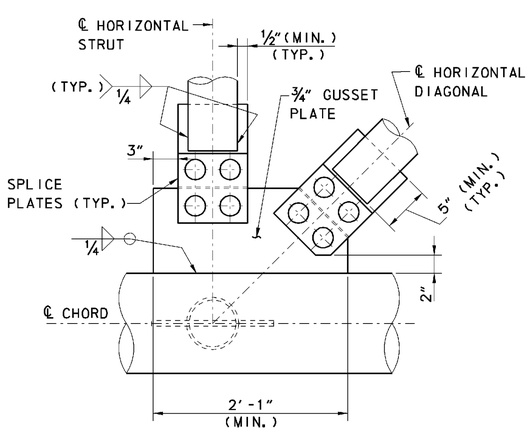

DETAIL K

NOT TO SCALE

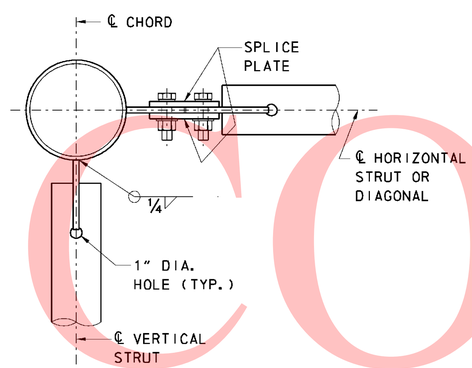

SECTION H-H

NOT TO SCALE

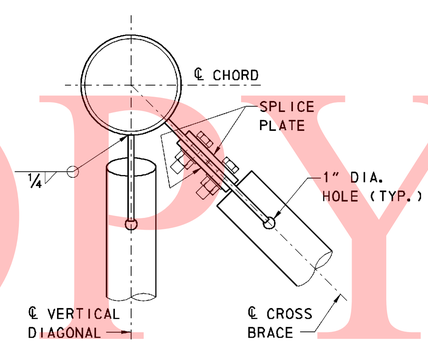

SECTION I-I

NOT TO SCALE

NOTES:

1. THE CROSS BRACING SHALL BRACE THE TRUSS CHORD MIDWAY BETWEEN HORIZONTAL DIAGONAL CONNECTION POINTS.
2. ALL BOLTED CONNECTIONS SHALL BE MADE WITH 1" DIA. HIGH STRENGTH BOLTS FULLY TIGHTENED. HOLES IN GUSSET AND TAB PLATES SHALL BE STANDARD. HOLES IN BOLTED CONNECTION SPLICE PLATES MAY BE OVERSIZE.
3. ALL VERTICAL TRUSS CONNECTIONS SHALL BE WELDED.
4. THE MINIMUM DISTANCE FROM THE CENTER OF FASTENER TO THE EDGE SHOULD BE 1¾".

UNOFFICAL WEBSITE COPY

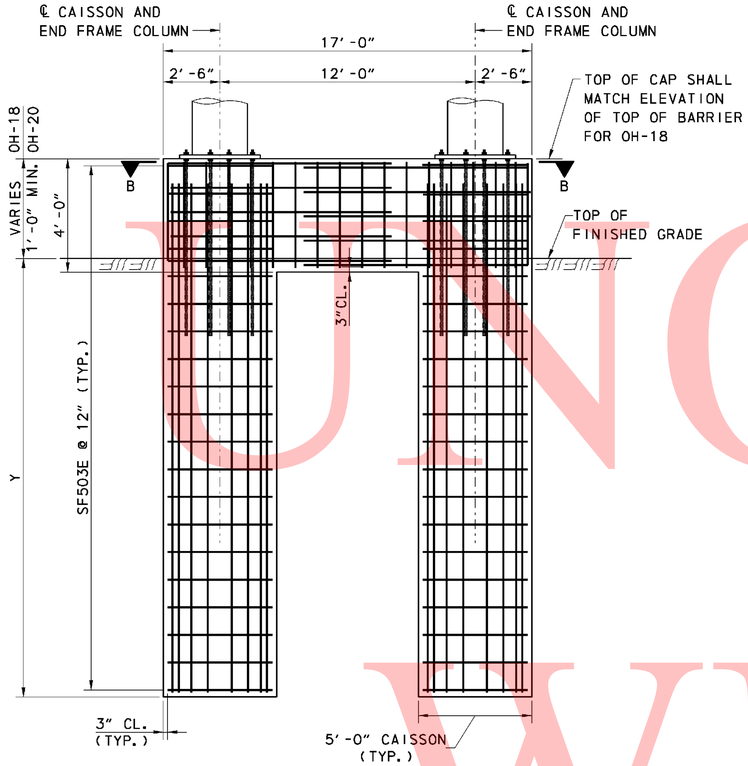

SECTION A-A
(OH-18 & OH-20)
NOT TO SCALE

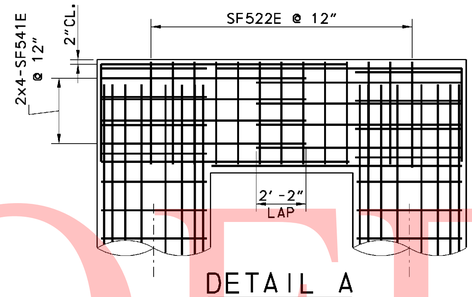

DETAIL A
(OH-18 & OH-20)
NOT TO SCALE

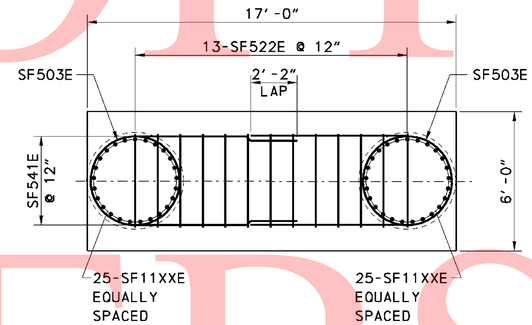

SECTION B-B INSIDE CAGE
(OH-18 & OH-20)
NOT TO SCALE

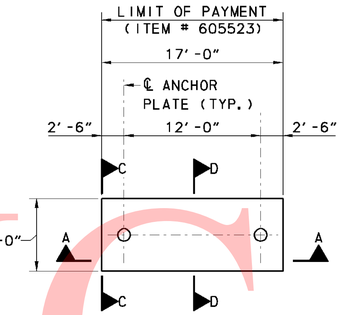

FOUNDATION PLAN TYPE A
(OH-18 & OH-20)
NOT TO SCALE

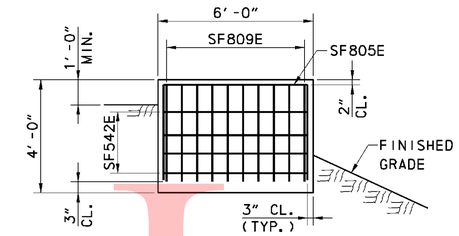

SECTION C-C
(OH-18 & OH-20)
NOT TO SCALE
NOTE: CAISSON, POLE AND BOLTS NOT SHOWN FOR CLARITY

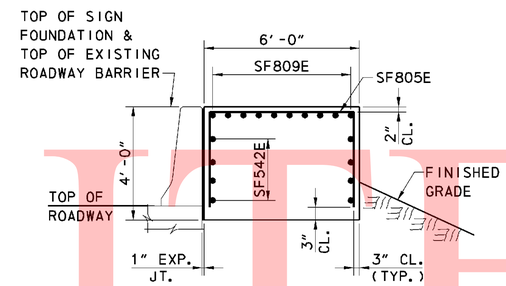

SECTION D-D
(OH-18 LEFT)
NOT TO SCALE
NOTE: CAISSON, POLE AND BOLTS NOT SHOWN FOR CLARITY

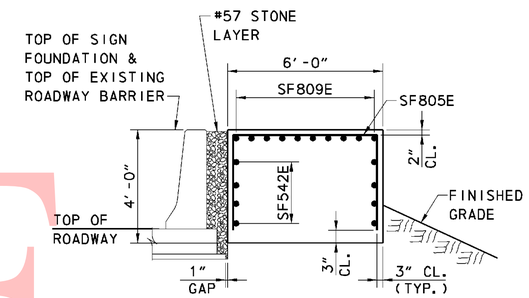

SECTION D-D
(OH-18 RIGHT)
NOT TO SCALE
NOTE: CAISSON, POLE AND BOLTS NOT SHOWN FOR CLARITY

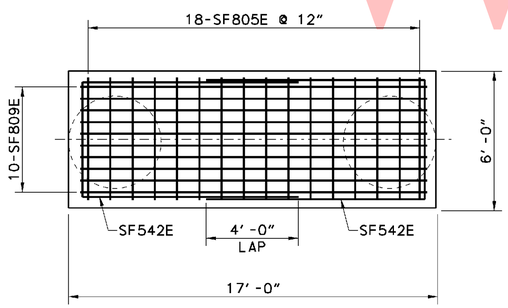

SECTION B-B OUTSIDE CAGE
(OH-18 & OH-20)
NOT TO SCALE

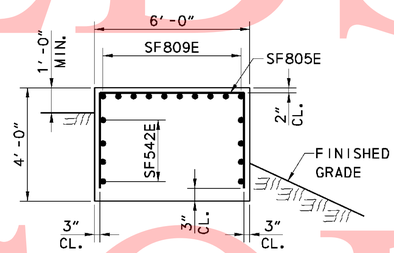

SECTION D-D
(OH-20)
NOT TO SCALE
NOTE: CAISSON, POLE AND BOLTS NOT SHOWN FOR CLARITY

SIGN DESIGNATION	STATION	ANCHOR BOLT QTY. PER FTG.	ANCHOR BOLT DIA.	ANCHOR BOLT MIN. EMBED.	STEEL ANCHOR PLATE	LEFT FOOTING Y	LEFT FOOTING CU. YD CONC. PER FTG	LEFT FOOTING #11 VERT. BAR TO USE	LEFT FOOTING TYPE	RIGHT FOOTING Y	RIGHT FOOTING CU. YD CONC. PER FTG	RIGHT FOOTING #11 VERT. BAR TO USE	RIGHT FOOTING TYPE	TOTAL QUANTITIES CU. YD CONCRETE	TOTAL QUANTITIES LBS. REINF. STEEL	TOTAL QUANTITIES LF 5′-0″ DIA. CAISSON
OH-18	118+75 I-95	8	2½″	6′-0″	¾″×42″ DIA.	25′	47	SF1110E	A	25′	47	SF1110E	A	94	18,863	100
OH-19	158+50 I-95	8	2½″	6′-0″	¾″×42″ DIA.	25′	77	SF1111E	E	25′	77	SF1111E	E	154	28,441	100
OH-20	181+00 I-95	8	2½″	6′-0″	¾″×42″ DIA.	25′	47	SF1110E	A	25′	47	SF1110E	A	94	18,863	100

NOTES:
1. SEE SPECIAL PROVISIONS, AND DELAWARE STANDARD SPECIFICATIONS FOR CONSTRUCTION PROCEDURES AND MATERIALS.
2. STEEL TEMPLATES SHALL BE USED TO SET ANCHOR BOLTS PLUMB WHEN POURING THE FOUNDATION.
3. OPTIONAL COLD JOINTS IN THE CAISSONS SHALL BE LOCATED A MINIMUM OF 1′-0″ BELOW THE BOTTOM OF ANCHOR BOLTS. THE JOINT SURFACE PRIOR TO PLACING THE SECOND POUR SHALL BE ROUGHENED, CLEANED TO BE FREE OF ALL OIL, DIRT AND DEBRIS AND AN EPOXY BONDING AGENT SHALL BE APPLIED TO ALL TREATABLE SURFACES.
4. THE CONTRACTOR SHALL INSPECT THE BOTTOM OF THE SHAFT USING A SHAFT INSPECTION DEVICE (SID) OR AN APPROVED ALTERNATE DOWN-HOLE CAMERA TO VERIFY THE BOTTOM IS CLEAN AT THE TIME OF PLACING THE CONCRETE AND REINFORCEMENT. THE SHAFT BOTTOM SHALL BE FREE OF DEBRIS AND LOOSE MATERIAL.
5. FOR OH-18 CARRYING DYNAMIC MESSAGE SIGNS (DMS) EACH FRAME TOWER SHALL HOUSE A 4″ GALVANIZED CONDUIT.

UNOFFICIAL WEBSITE COPY

DELAWARE DEPARTMENT OF TRANSPORTATION

ADDENDUMS / REVISIONS

SR1 / I-95 INTERCHANGE

CONTRACT	BRIDGE NO.	FULL WIDTH SPAN OVERHEAD SIGN STRUCTURE FOUNDATION DETAILS – 1	SHEET NO.
28-090-03	DESIGNED BY: KMD		738F
COUNTY			TOTAL SHTS.
NEW CASTLE	CHECKED BY: DST		803

11/9/2010 1:12:20 PM
M:\PROJECTS\2003\03059_DELTRN\PK\SRIMALL\CADD\2809003\PLANS\SS12_SR1.DGN

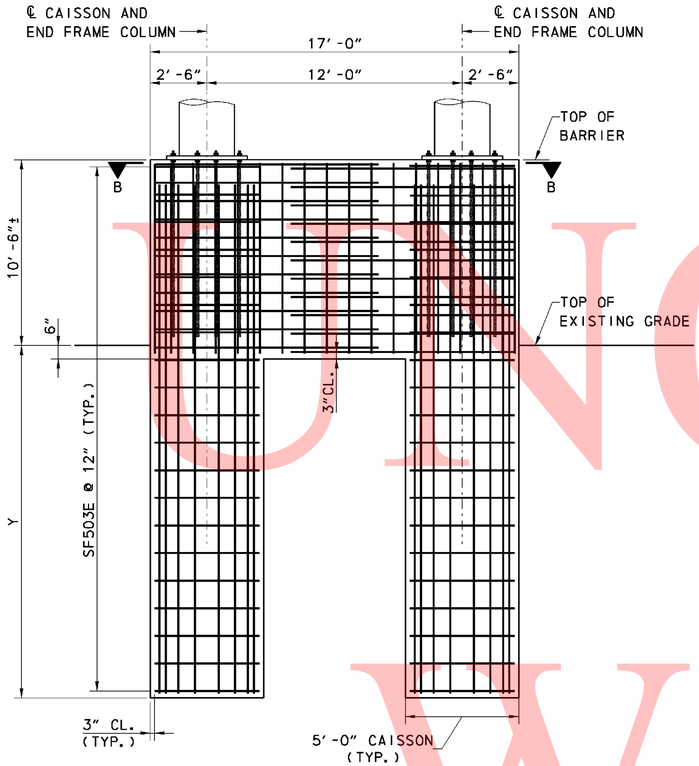

SECTION A-A
(OH-19)
NOT TO SCALE

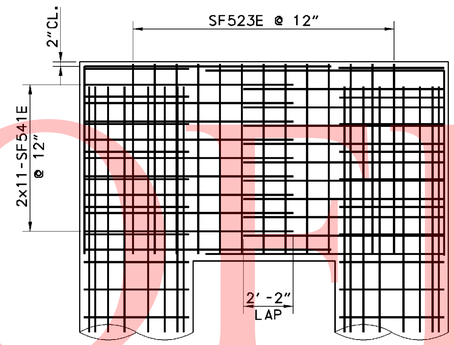

DETAIL A
(OH-19)
NOT TO SCALE

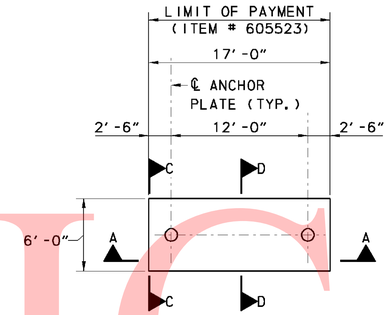

FOUNDATION PLAN TYPE E
(OH-19)
NOT TO SCALE

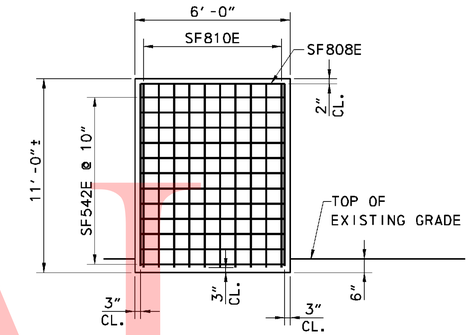

SECTION C-C
(OH-19)
NOT TO SCALE
NOTE: CAISSON, POLE AND BOLTS NOT SHOWN FOR CLARITY

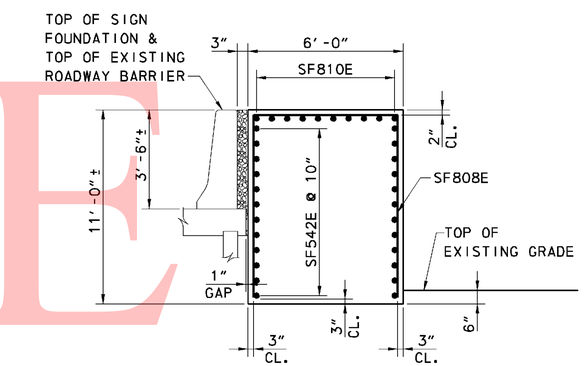

SECTION D-D
(OH-19)
NOT TO SCALE
NOTE: CAISSON, POLE AND BOLTS NOT SHOWN FOR CLARITY

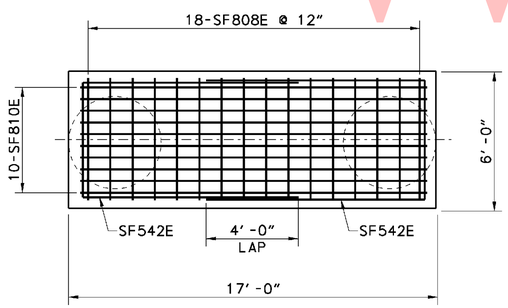

SECTION B-B OUTSIDE CAGE
(OH-19)
NOT TO SCALE

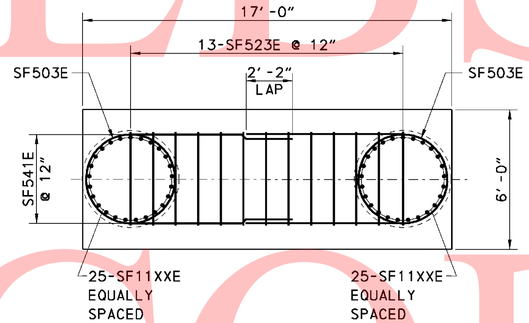

SECTION B-B INSIDE CAGE
(OH-19)
NOT TO SCALE

NOTES:
1. SEE SPECIAL PROVISIONS, AND DELAWARE STANDARD SPECIFICATIONS FOR CONSTRUCTION PROCEDURES AND MATERIALS.
2. STEEL TEMPLATES SHALL BE USED TO SET ANCHOR BOLTS PLUMB WHEN POURING THE FOUNDATION.
3. OPTIONAL COLD JOINTS IN THE CAISSONS SHALL BE LOCATED A MINIMUM OF 1′-0″ BELOW THE BOTTOM OF ANCHOR BOLTS. THE JOINT SURFACE PRIOR TO PLACING THE SECOND POUR SHALL BE ROUGHENED, CLEANED TO BE FREE OF ALL OIL, DIRT AND DEBRIS AND AN EPOXY BONDING AGENT SHALL BE APPLIED TO ALL TREATABLE SURFACES.
4. THE CONTRACTOR SHALL INSPECT THE BOTTOM OF THE SHAFT USING A SHAFT INSPECTION DEVICE (SID) OR AN APPROVED ALTERNATE DOWN-HOLE CAMERA TO VERIFY THE BOTTOM IS CLEAN AT THE TIME OF PLACING THE CONCRETE AND REINFORCEMENT. THE SHAFT BOTTOM SHALL BE FREE OF DEBRIS AND LOOSE MATERIAL.

UNOFFICIAL WEBSITE COPY

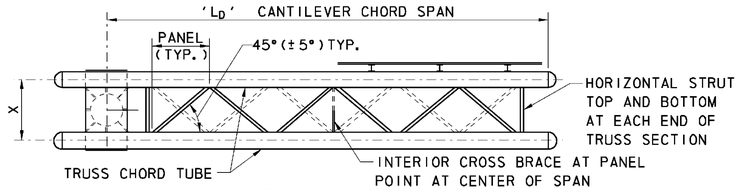

PLAN VIEW

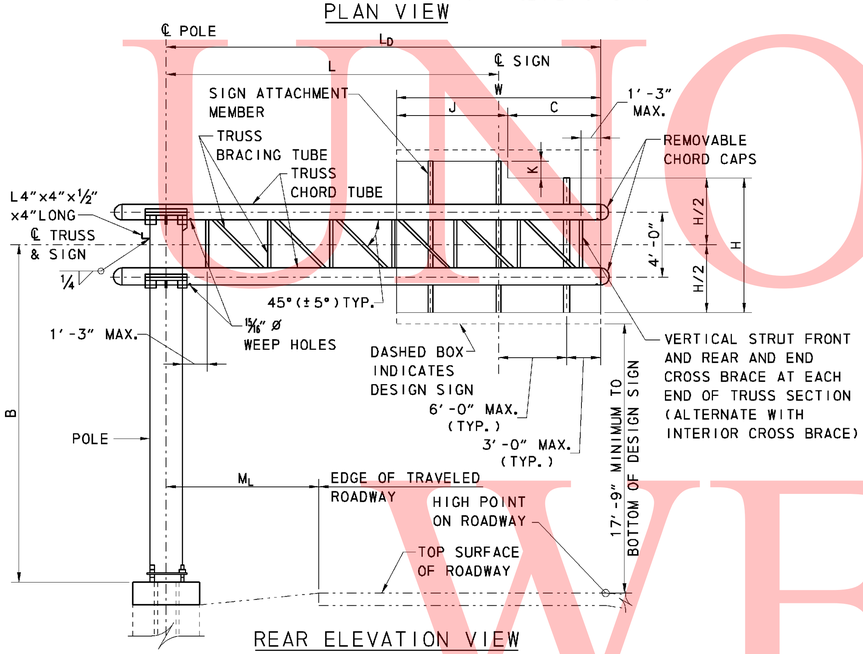

REAR ELEVATION VIEW

(GUSSET PLATE NOT SHOWN FOR CLARITY)

BOX TRUSS CANTILEVER SIGN STRUCTURE

NOT TO SCALE

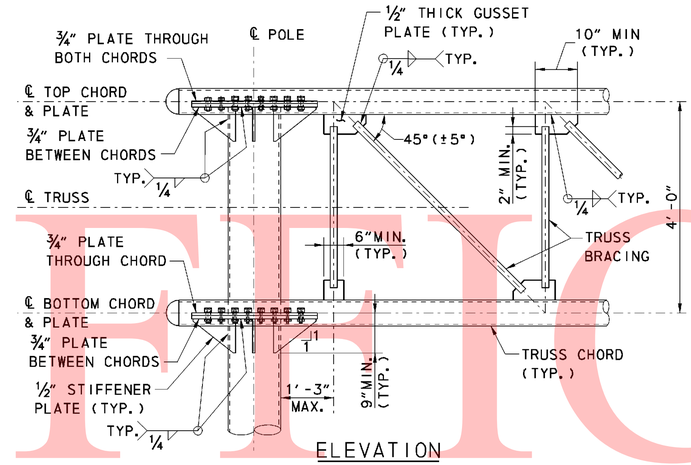

ELEVATION

NOTE: NOTCH END OF PIPE BRACE 2" MIN. x 5/16"

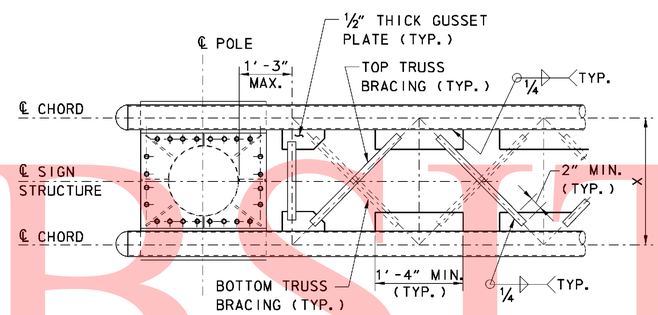

PLAN

TRUSS CHORD TO POLE CONNECTION DETAILS

NOT TO SCALE

NOTES:

1. THE STRUCTURES ARE DESIGNED IN ACCORDANCE WITH THE AASHTO STANDARD SPECIFICATIONS FOR STRUCTURAL SUPPORTS FOR HIGHWAY SIGNS, LUMINARIES AND TRAFFIC SIGNALS, 4TH EDITION AND BASED ON FATIGUE CATEGORY II.
2. SEE SPECIAL PROVISIONS AND DELAWARE STANDARD SPECIFICATIONS FOR CONSTRUCTION PROCEDURE AND MATERIALS.
3. FOR SIGN STRUCTURE LOCATIONS, SEE SIGNING, STRIPING AND CONDUIT PLANS.
4. DESIGN BASIC WIND SPEED 110 mph.
5. ANY ALTERNATE DESIGN SHALL BE STRUCTURALLY EQUIVALENT AND SUBJECT TO APPROVAL BY THE ENGINEER. SEE SPECIAL PROVISIONS.
6. ALL STRUCTURES SHALL BE DESIGNED FOR APPROXIMATELY 25% MORE SIGN AREA U.N.O. (ADJUSTED IN SIGN HEIGHT ONLY).
7. MOUNTING HEIGHT B SHALL NOT BE LESS THAN [17'-9"+ ½ DESIGN SIGN HEIGHT +/- ELEVATION DIFFERENCE FROM HIGH POINT OF ROADWAY TO TOP OF CONCRETE BASE]. VERIFY MOUNTING HEIGHTS IN FIELD PRIOR TO FABRICATING STRUCTURE.
8. STEEL TEMPLATES SHALL BE USED TO SET ANCHOR BOLTS PLUMB WHEN POURING THE FOUNDATION.
9. LOCK WASHERS WITH FLAT WASHERS SHALL ONLY BE USED FOR "U" BOLT CONNECTIONS AND NUT SHALL BE TURNED UNTIL THE LOCK WASHER IS FLAT.
10. FOR REINFORCING DETAILS, SEE SHEET 741.
11. FOR ANCHOR BOLT SIZES, STEEL TEMPLATE SIZES, AND TRUSS CHORD TO POLE CONNECTION DETAILS, SEE SHEET 740.
12. POLE, ARM CHORD, END FRAME BRACING AND PIPE BRACING O.D. DIMENSIONS ARE ACTUAL.
13. TRUSS CAMBER △V SHALL BE INCORPORATED DURING FABRICATION. THE CONTRACTOR SHALL ACHIEVE △H CAMBER BY TILTING THE POLE AND ADJUSTING LEVELING NUTS DURING INSTALLATION.
14. STRUCTURE SHALL BE GALVANIZED TO CONFORM TO AASHTO M 111.
15. FASTERNERS SHALL BE GALVANIZED TO CONFORM TO AASHTO M 232.

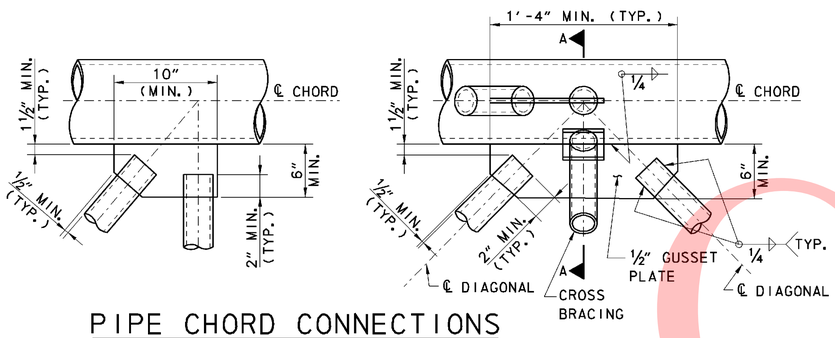

PIPE CHORD CONNECTIONS

NOT TO SCALE

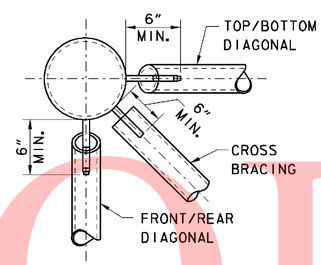

SECTION A-A

NOT TO SCALE

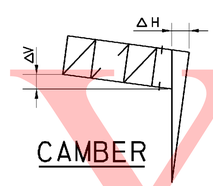

CAMBER

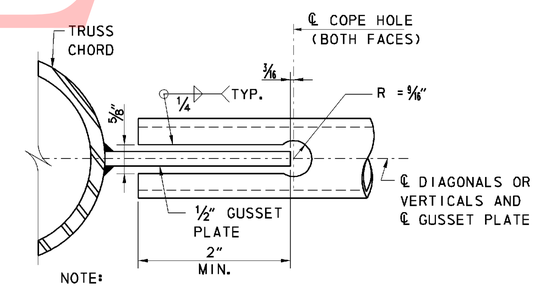

NOTE:
COPE HOLES TO BE PROVIDED AT BOTH FACES OF ALL VERTICALS AND DIAGONALS.

COPE HOLE DETAIL

NOT TO SCALE

SIGN DESIGNATION	STATION	POLE	TRUSS CHORD	TRUSS BRACING	L_D	B	M_L	PANEL NO.	L	W	H	C	J	K	DESIGN AREA PLUS EXIT PANEL	CAMBER	
																△H	△V
C-2	I-95	24" O.D. x 0.969" THK.	8.625" O.D. x 0.25" THK.	4.00" O.D. x 0.25" THK.	39'-6"	29'-10⅞"	21'-0"	1	27'-0"	25'-0"	19'-0"	11'-0"	14'-0"	2'-6"	30'(W)x19'(H)	2⅜"	5¼"
C-3	1101+50 RP C	24" O.D. x 0.969" THK.	8.625" O.D. x 0.25" THK.	4.00" O.D. x 0.25" THK.	40'-0"	28'-6"	21'-0"	1	27'-6"	25'-0"	19'-0"	11'-0"	14'-0"	2'-6"	30'(W)x19'(H)	2½"	5⅝"
C-4	369+50 NB 1	24" O.D. x 0.969" THK.	4.5" O.D. x 0.25" THK.	2.875" O.D. x 0.25" THK.	37'-4½"	27'-10 1/16"	21'-9"	1	28'-4½"	18'-0"	16'-0"	7'-0"	11'-0"	2'-6"	26'(W)x16'(H)	1⅝"	3 13/16"
C-5	111+50 I-95	24" O.D. x 0.562" THK.	4.5" O.D. x 0.25" THK.	2.875" O.D. x 0.25" THK.	34'-0"	23'-4⅝"	17'-0"	1	23'-9"	20'-6"	16'-0"	9'-0"	11'-6"	2'-6"	26'(W)x16'(H)	1½"	3 7/16"
C-6	608+50 NB 7	24" O.D. x 0.562" THK.	4.5" O.D. x 0.25" THK.	2.875" O.D. x 0.25" THK.	34'-11¼"	22'-6"	10'-11¼"	1	26'-5¼"	17'-0"	16'-0"	4'-0"	13'-0"	2'-6"	26'(W)x16'(H)	1⅜"	3⅜"

UNOFFICIAL WEBSITE COPY

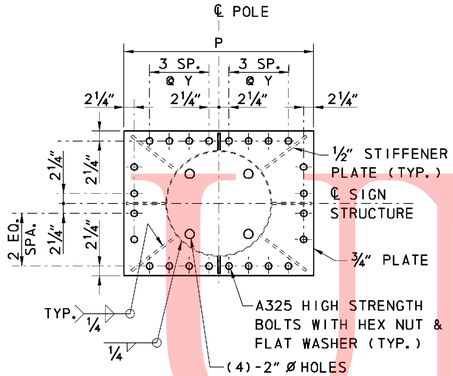

PLAN - POLE ASSEMBLY

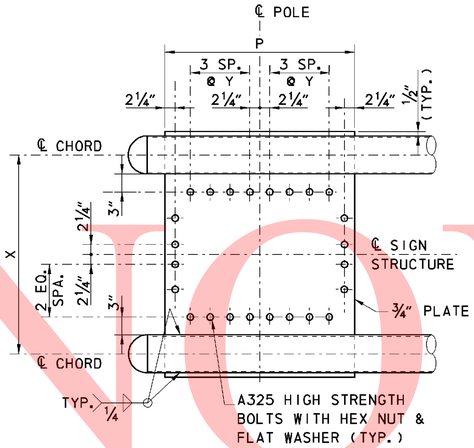

PLAN - TRUSS ASSEMBLY

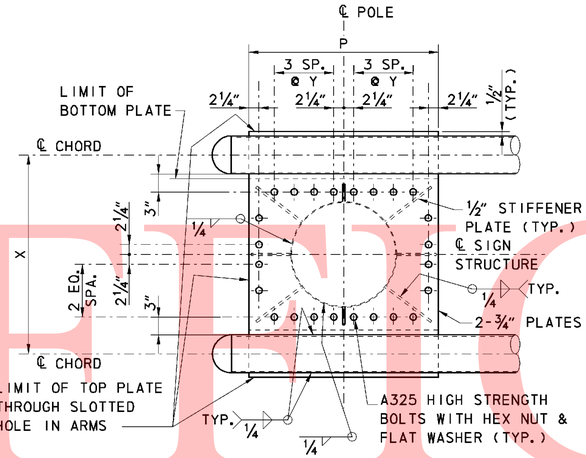

PLAN - POLE AND TRUSS ASSEMBLY

TRUSS TOP CONNECTION PLATE DETAILS

NOT TO SCALE

NOTES:
1. GALVANIZE ENTIRE LENGTH OF ANCHOR BOLTS.
2. ALL ANCHOR BOLTS SHALL BE PLUMB AFTER FOUNDATION INSTALLATION. STEEL TEMPLATE SHALL BE USED TO SET ANCHOR BOLTS.
3. BASE PLATE SHALL BE IN FULL CONTACT WITH ALL FLAT WASHERS.
4. ALL ANCHOR BOLT NUTS SHALL BE TIGHTENED USING TURN OF NUT METHOD. (30° min to 45° max turn after snug tight)
5. GROUT SHALL NOT BE PLACED BETWEEN THE BASE PLATE AND CONCRETE BASE.

CANTELEVER BOX TRUSS CONNECTION PLATE TABLE

CHORD SIZE	HORIZ. CHORD SPACING (X)	PLATE LENGTH (P)	SIZE OF BOLTS	BOLT SPACING (Y)
4.50" O.D. x 0.250" THK.	3'-6"	3'-2"	1" DIA.	4"
8.625" O.D. x 0.250" THK.	3'-8"	3'-8"	1½" DIA.	4½"

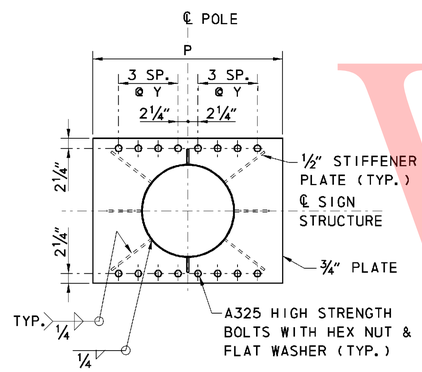

PLAN - POLE ASSEMBLY

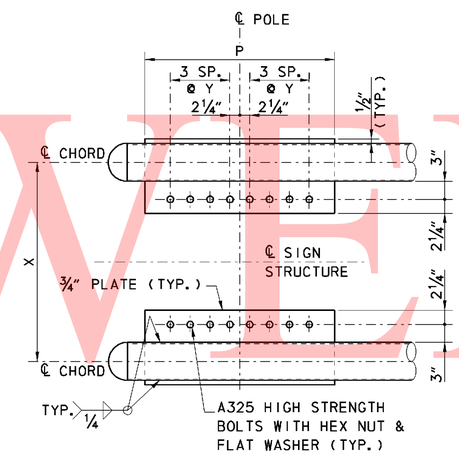

PLAN - TRUSS ASSEMBLY

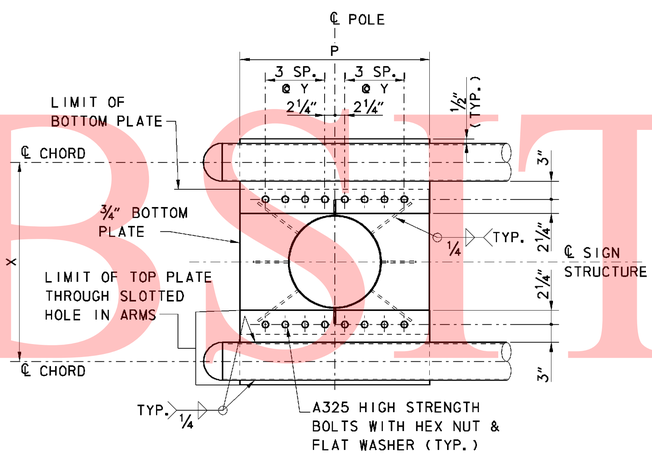

PLAN - POLE AND TRUSS ASSEMBLY

SIGN SIGNATION	D	BASE PLATE	ANCHOR PLATE	ANCHOR BOLT	S	ANCHOR BOLT MIN. EMBEDMENT
C-2	45"	3"x45" DIA.	1¼"x45" DIA.	3" DIA.	12¾"	8'-0"
C-3	45"	3"x45" DIA.	1¼"x45" DIA.	3" DIA.	12¾"	8'-0"
C-4	42"	3"x42" DIA.	1¼"x42" DIA.	2½" DIA.	12¾"	8'-0"
C-5	42"	3"x42" DIA.	1¼"x42" DIA.	2½" DIA.	12¾"	8'-0"
C-6	42"	3"x42" DIA.	1¼"x42" DIA.	2½" DIA.	12¾"	8'-0"

TRUSS BOTTOM CONNECTION PLATE DETAILS

NOT TO SCALE

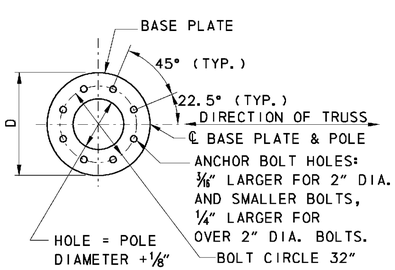

PLAN - BASE PLATE

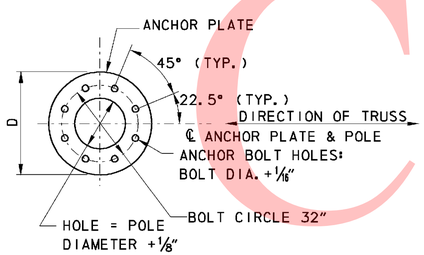

PLAN - ANCHOR PLATE AND TEMPLATE

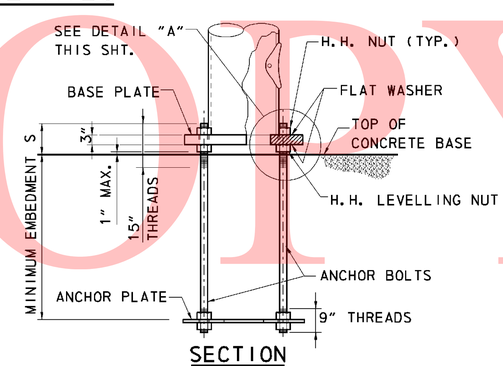

SECTION

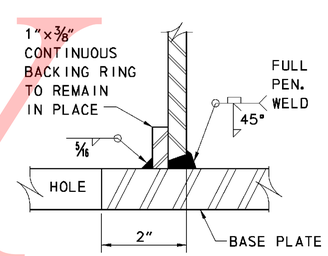

FULL-PENETRATION GROOVE WELD

DETAIL A

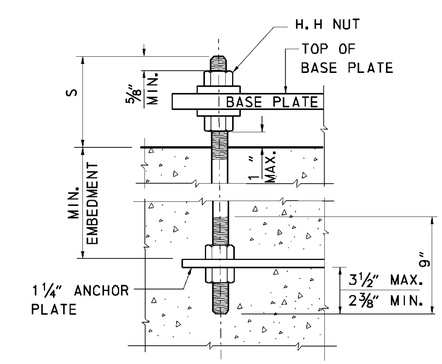

ANCHOR BOLT DETAIL

POLE ANCHOR BASE DETAILS

NOT TO SCALE

UNOFFICIAL WEBSITE COPY

11/9/2010 1:15:43 PM
M:\PROJECTS\2003\03059_DELTRNPK\SRIMALL\CADD\2809003\PLANS\SS15_SR1.DGN

DELAWARE DEPARTMENT OF TRANSPORTATION	ADDENDUMS / REVISIONS	SR1 / I-95 INTERCHANGE	CONTRACT 28-090-03	BRIDGE NO.	CANTELEVER SIGN STRUCTURE DETAILS - 1	SHEET NO. 740
			COUNTY NEW CASTLE	DESIGNED BY: KMD		TOTAL SHTS. 803
				CHECKED BY: DST		

					TOTAL QUANTITIES		
SIGN DESIG-NATION	W	H	T	E	CU. YD CONCRETE	LBS. REINF. STEEL	LF 5'-0" ø CAISSON
C-2	7'-0"	5'-0"	15'-0"	22'-0"	22	4220	15
C-3	7'-0"	5'-0"	15'-0"	22'-0"	22	4220	15
C-4	5'-6"	5'-0"	15'-0"	22'-0"	21	3617	15
C-5	5'-6"	5'-0"	15'-0"	22'-0"	29	4873	15
C-6	5'-6"	5'-0"	15'-0"	22'-0"	21	3617	15

NOTES:

1. SEE SPECIAL PROVISIONS, AND DELAWARE STANDARD SPECIFICATIONS FOR CONSTRUCTION PROCEDURES AND MATERIALS.
2. STEEL TEMPLATES SHALL BE USED TO SET ANCHOR BOLTS PLUMB WHEN POURING THE FOUNDATION.
3. OPTIONAL COLD JOINTS IN THE CAISSONS SHALL BE LOCATED A MINIMUM OF 1'-0" BELOW THE BOTTOM OF ANCHOR BOLTS. THE JOINT SURFACE PRIOR TO PLACING THE SECOND POUR SHALL BE ROUGHENED, CLEANED TO BE FREE OF ALL OIL, DIRT AND DEBRIS AND AN EPOXY BONDING AGENT SHALL BE APPLIED TO ALL TREATABLE SURFACES.
4. THE CONTRACTOR SHALL INSPECT THE BOTTOM OF THE SHAFT USING A SHAFT INSPECTION DEVICE (SID) OR AN APPROVED ALTERNATE DOWN-HOLE CAMERA TO VERIFY THE BOTTOM IS CLEAN AT THE TIME OF PLACING THE CONCRETE AND REINFORCEMENT. THE SHAFT BOTTOM SHALL BE FREE OF DEBRIS AND LOOSE MATERIAL.

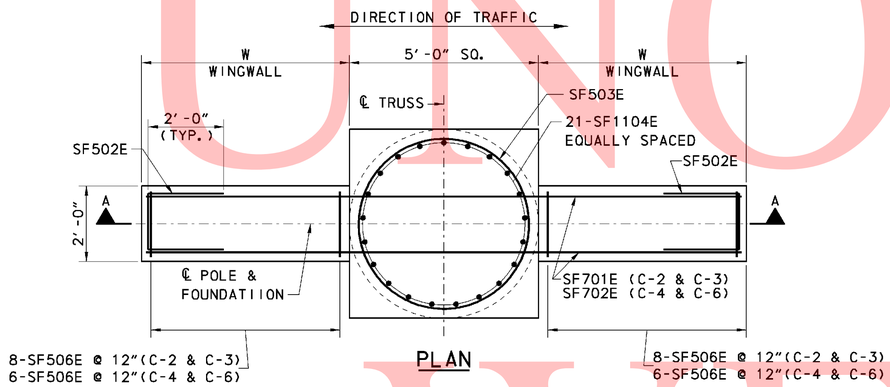

PLAN

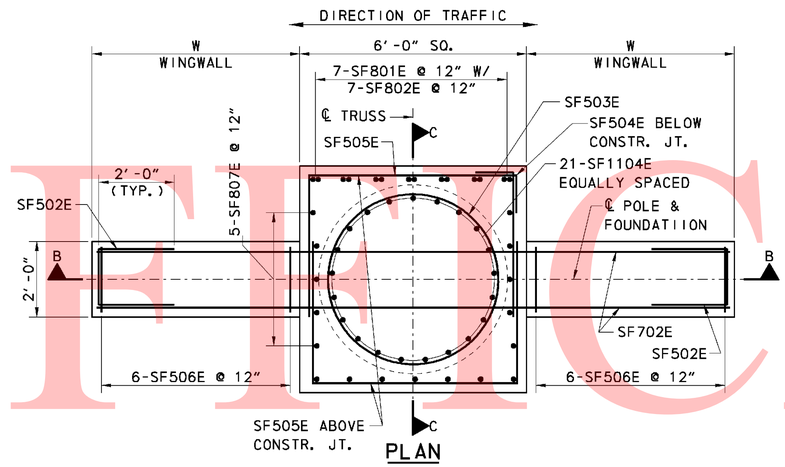

PLAN

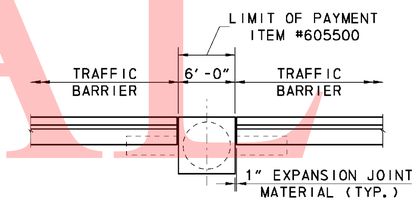

FOUNDATION PLAN

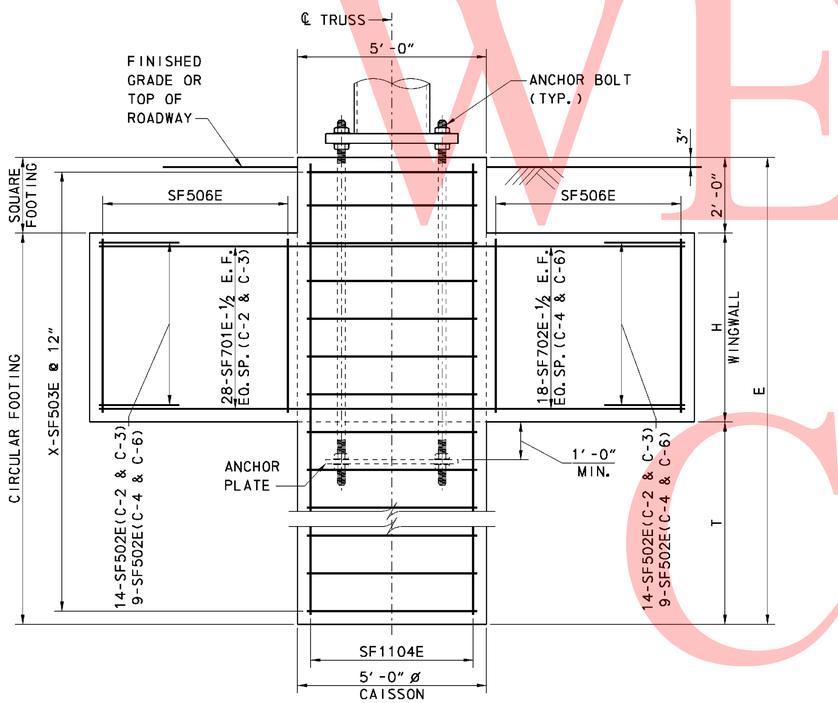

SECTION A-A

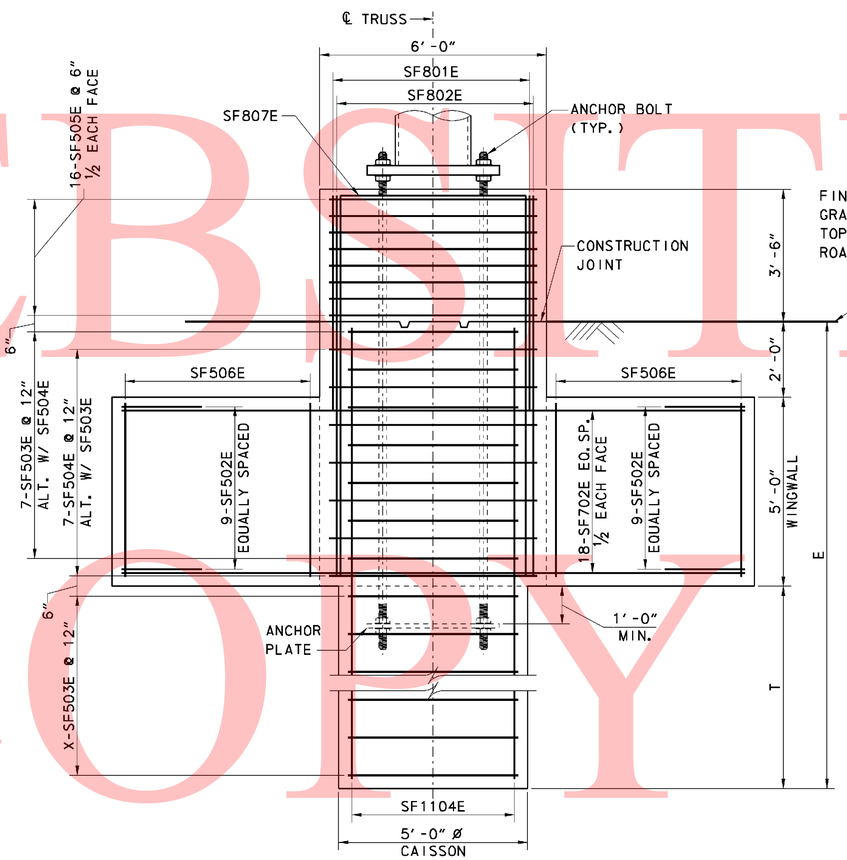

SECTION B-B

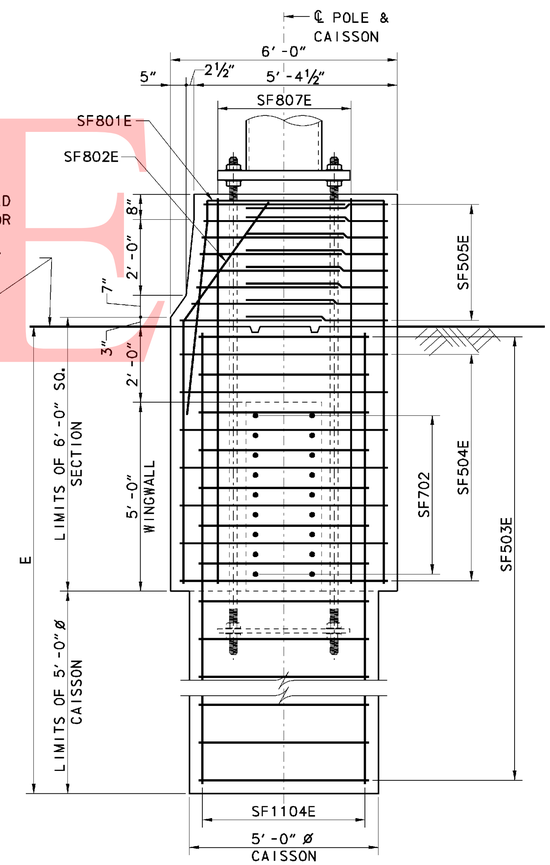

SECTION C-C

FOUNDATION DETAILS - C-2, C-3, C-4 & C-6

NOT TO SCALE

FOUNDATION DETAILS - C-5

NOT TO SCALE

UNOFFICIAL WEBSITE COPY

11/9/2010 1:16:54 PM
M:\PROJECTS\2003\03059_DELTRNPK\SR1MALL\CADD\2809003\PLANS\SS16_SR1.DGN

DELAWARE DEPARTMENT OF TRANSPORTATION	ADDENDUMS / REVISIONS	SR1 / I-95 INTERCHANGE	CONTRACT 28-090-03	BRIDGE NO.	CANTELEVER SIGN STRUCTURE FOUNDATION DETAILS	SHEET NO. 741
			COUNTY NEW CASTLE	DESIGNED BY: KMD		TOTAL SHTS. 803
				CHECKED BY: DST		

① ANY MARK NUMBER WITH SUFFIX 'E' DENOTES EPOXY-COATED REINFORCING STEEL.

② BAR MARK PREFIXES INDICATE THE FOLLOWING:
SF = SIGN STRUCTURE FOUNDATION

SPECIFICATIONS					BENDING DIMENSIONS (FT-INCHES / QUARTER INCH)											REMARKS
QTY.	SIZE	LENGTH	MARK	TYPE	A	B	C	D	E	F/R	G	H	J	K	O	
OVERHEAD SIGN STRUCTURE OH-1																
84	5	12'-0"	SF520E	T3		1'-0"	11'-0"								3'-6"	
16	5	14'-8"	SF521E	10		5'-6"	4'-7"	4'-7"		1'-9"					3'-6"	
16	5	16'-0"	SF522E	T2	10"	3'-8"	3'-6"	3'-8"	3'-6"		10"					
16	5	19'-10"	SF523E	17		7'-3"	5'-4"	7'-3"								
12	8	17'-2"	SF804E	17		3'-5"	10'-4"	3'-5"								
22	8	12'-6"	SF805E	17		3'-6"	5'-6"	3'-6"								
64	11	20'-6"	SF1101E	STR												
OVERHEAD SIGN STRUCTURE OH-2																
90	5	12'-0"	SF520E	T3		1'-0"	11'-0"								3'-6"	
16	5	14'-8"	SF521E	10		5'-6"	4'-7"	4'-7"		1'-9"					3'-6"	
16	5	16'-0"	SF522E	T2	10"	3'-8"	3'-6"	3'-8"	3'-6"		10"					
8	5	19'-10"	SF523E	17		7'-3"	5'-4"	7'-3"								
2	5	19'-4"	SF529E	17		7'-3"	4'-10"	7'-3"								
2	5	19'-5"	SF530E	17		7'-3"	4'-11"	7'-3"								
2	5	19'-6"	SF531E	17		7'-3"	5'-0"	7'-3"								
2	5	19'-7"	SF532E	17		7'-3"	5'-1"	7'-3"								
12	8	17'-2"	SF804E	17		3'-5"	10'-4"	3'-5"								
11	8	12'-6"	SF805E	17		3'-6"	5'-6"	3'-6"								
11	8	11'-10"	SF808E	H4	3'-6"	3"	3'-6"	4'-10"								
32	11	20'-6"	SF1101E	STR												
32	11	23'-0"	SF1102E	STR												
OVERHEAD SIGN STRUCTURE OH-3																
84	5	12'-0"	SF520E	T3		1'-0"	11'-0"								3'-6"	
16	5	14'-8"	SF521E	10		5'-6"	4'-7"	4'-7"		1'-9"					3'-6"	
16	5	16'-0"	SF522E	T2	10"	3'-8"	3'-6"	3'-8"	3'-6"		10"					
16	5	19'-10"	SF523E	17		7'-3"	5'-4"	7'-3"								
12	8	17'-2"	SF804E	17		3'-5"	10'-4"	3'-5"								
22	8	12'-6"	SF805E	17		3'-6"	5'-6"	3'-6"								
64	11	20'-6"	SF1101E	STR												
OVERHEAD SIGN STRUCTURE OH-5																
84	5	12'-0"	SF520E	T3		1'-0"	11'-0"								3'-6"	
16	5	14'-8"	SF521E	10		5'-6"	4'-7"	4'-7"		1'-9"					3'-6"	
16	5	16'-0"	SF522E	T2	10"	3'-8"	3'-6"	3'-8"	3'-6"		10"					
16	5	19'-10"	SF523E	17		7'-3"	5'-4"	7'-3"								
12	8	17'-2"	SF804E	17		3'-5"	10'-4"	3'-5"								
22	8	12'-6"	SF805E	17		3'-6"	5'-6"	3'-6"								
64	11	20'-6"	SF1101E	STR												
OVERHEAD SIGN STRUCTURE OH-6																
90	5	12'-0"	SF520E	T3		1'-0"	11'-0"								3'-6"	
16	5	14'-8"	SF521E	10		5'-6"	4'-7"	4'-7"		1'-9"					3'-6"	
16	5	16'-0"	SF522E	T2	10"	3'-8"	3'-6"	3'-8"	3'-6"		10"					
8	5	19'-10"	SF523E	17		7'-3"	5'-4"	7'-3"								
2	5	19'-4"	SF529E	17		7'-3"	4'-10"	7'-3"								
2	5	19'-5"	SF530E	17		7'-3"	4'-11"	7'-3"								
2	5	19'-6"	SF531E	17		7'-3"	5'-0"	7'-3"								
2	5	19'-7"	SF532E	17		7'-3"	5'-1"	7'-3"								
12	8	17'-2"	SF804E	17		3'-5"	10'-4"	3'-5"								
11	8	12'-6"	SF805E	17		3'-6"	5'-6"	3'-6"								
11	8	11'-10"	SF808E	H4	3'-6"	3"	3'-6"	4'-10"								
32	11	20'-6"	SF1101E	STR												
32	11	23'-0"	SF1102E	STR												
OVERHEAD SIGN STRUCTURE OH-7																
84	5	12'-0"	SF520E	T3		1'-0"	11'-0"								3'-6"	
16	5	14'-8"	SF521E	10		5'-6"	4'-7"	4'-7"		1'-9"					3'-6"	
16	5	16'-0"	SF522E	T2	10"	3'-8"	3'-6"	3'-8"	3'-6"		10"					
16	5	19'-10"	SF523E	17		7'-3"	5'-4"	7'-3"								
12	8	17'-2"	SF804E	17		3'-5"	10'-4"	3'-5"								
22	8	12'-6"	SF805E	17		3'-6"	5'-6"	3'-6"								
64	11	20'-6"	SF1101E	STR												

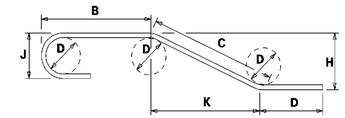

NOTES:
1. FIGURES SHOWN IN CIRCLES REPRESENT BAR BEND TYPES.
2. STANDARD BAR BENDS INCLUDE ONLY TYPES 1-32, S1-S12, AND T1-T16.
3. ALL DIMENSIONS ARE OUT-TO-OUT OF BAR EXCEPT "A" AND "G" ON STANDARD 180° AND 135° HOOKS.
4. "J" DIMENSIONS ON 180° HOOKS TO BE SHOWN ONLY WHERE NECESSARY TO RESTRICT HOOK SIZE, OTHERWISE STANDARD HOOKS ARE TO BE USED.
5. WHERE "J" IS NOT SHOWN, "J" WILL BE KEPT EQUAL TO OR LESS THAN "H" ON TRUSS BARS. WHERE "J" CAN EXCEED "H", IT SHALL BE SHOWN.
6. "H" DIMENSIONS OF STIRRUPS TO BE SHOWN WHERE NECESSARY TO FIT WITHIN THE CONCRETE.
7. UNLESS OTHERWISE NOTED, DIAMETER "D" IS THE SAME FOR ALL BENDS AND HOOKS ON A BAR.
8. WHERE SLOPE DIFFERS FROM 45° OFFSET, "H" AND "K" MUST BE SHOWN.
9. WHERE BARS ARE TO BE BENT MORE ACCURATELY THAN STANDARD BENDING TOLERANCES, BENDING DIMENSIONS WHICH REQUIRE CLOSER FABRICATION SHOULD HAVE LIMITS INDICATED.
10. FOR RECOMMENDED DIAMETER "D", OF BENDS, HOOKS, ETC., REFER TO TABLE AT RIGHT, 'CRSI' OR 'ACI' TABLES.
11. TYPE S1-S12, T1-T16 APPLY TO BAR SIZES 3 THROUGH 6.

ASTM STANDARD ENGLISH REINFORCING BARS				RECOMMENDED END HOOKS, APPLICABLE TO ALL GRADES			
	NOMINAL DIMENSIONS			180° HOOKS			90° HOOKS
BAR SIZE	DIAMETER (inches)	AREA (inches²)	WEIGHT (lbs./ft.)	D	A OR G	J	A OR G
3	0.375	0.110	0.376	2"	5"	3"	6"
4	0.500	0.200	0.668	3"	6"	4"	8"
5	0.625	0.310	1.043	3"	7"	5"	10"
6	0.750	0.440	1.502	4"	8"	6"	1'-0"
7	0.875	0.600	2.044	5"	10"	7"	1'-2"
8	1.000	0.790	2.670	6"	11"	8"	1'-4"
9	1.128	1.000	3.400	9"	1'-3"	11"	1'-7"
10	1.270	1.270	4.303	10"	1'-5"	1'-1"	1'-10"
11	1.410	1.560	5.313	1'-0"	1'-7"	1'-2"	2'-0"
14	1.693	2.250	7.650	1'-6"	2'-3"	1'-9"	2'-7"
18	2.257	4.000	13.600	2'-0"	3'-0"	2'-4"	3'-5"

STANDARD BAR BENDS

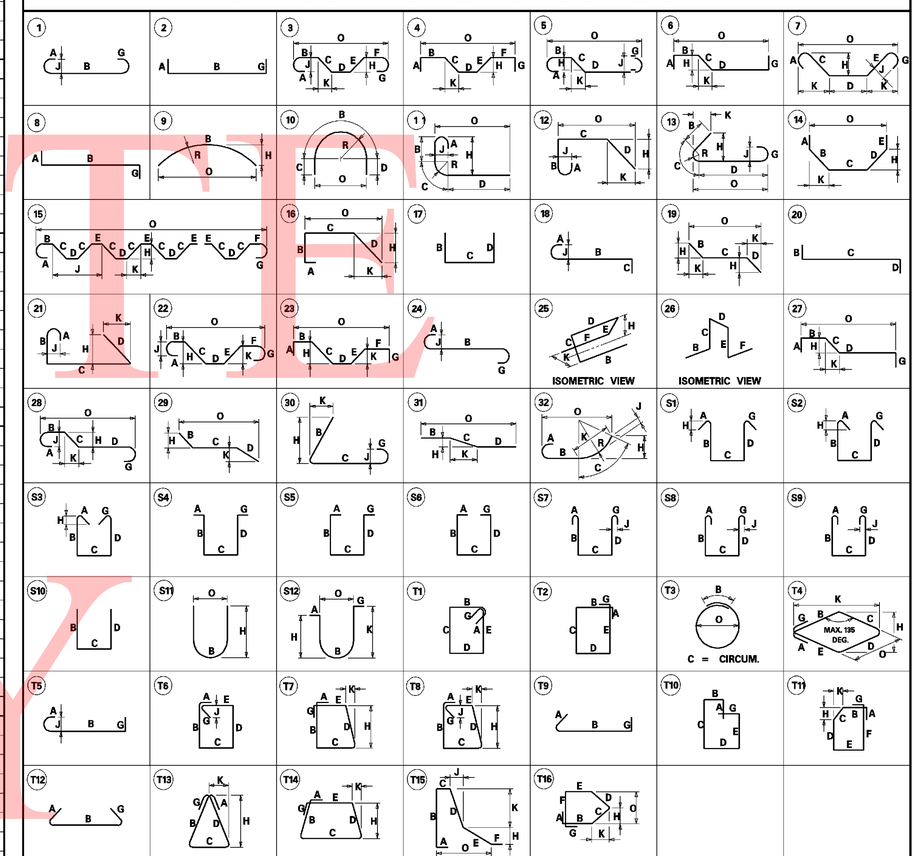

SPECIAL BAR BENDS

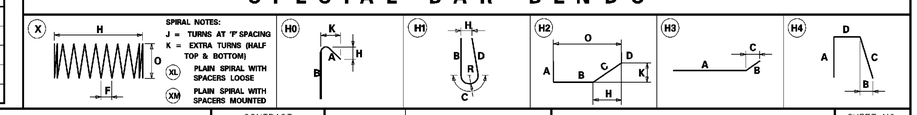

UNOFFICIAL WEBSITE COPY

11/9/2010 12:58:02 PM
M:\PROJECTS\2003\03059_DELTRNPK\SR1MALL\CADD\2809003\PLANS\BR04_SS_SR1.DGN

DELAWARE DEPARTMENT OF TRANSPORTATION

ADDENDUMS / REVISIONS

SR1 / I-95 INTERCHANGE

CONTRACT	BRIDGE NO.		OVERHEAD SIGN STRUCTURE BAR CHART - 1	SHEET NO.
28-090-03	DESIGNED BY:	KMD		741A
COUNTY				TOTAL SHTS.
NEW CASTLE	CHECKED BY:	DST		803

① ANY MARK NUMBER WITH SUFFIX 'E' DENOTES EPOXY-COATED REINFORCING STEEL.

② BAR MARK PREFIXES INDICATE THE FOLLOWING:
SF = SIGN STRUCTURE FOUNDATION

SPECIFICATIONS					BENDING DIMENSIONS (FT-INCHES / QUARTER INCH)											REMARKS
QTY.	SIZE	LENGTH	MARK	TYPE	A	B	C	D	E	F/R	G	H	J	K	O	
OVERHEAD SIGN STRUCTURE OH-8																
164	5	12'-0"	SF520E	T3		1'-0"	11'-0"								3'-6"	
16	5	14'-8"	SF521E	10		5'-6"	4'-7"	4'-7"		1'-9"					3'-6"	
16	5	16'-0"	SF522E	T2	10"	3'-8"	3'-6"	3'-8"	3'-6"		10"					
16	5	19'-10"	SF523E	17		7'-3"	5'-4"	7'-3"								
12	8	17'-2"	SF804E	17		3'-5"	10'-4"	3'-5"								
22	8	12'-6"	SF805E	17		3'-6"	5'-6"	3'-6"								
64	11	40'-6"	SF1103E	STR												
OVERHEAD SIGN STRUCTURE OH-9																
96	5	12'-0"	SF520E	T3		1'-0"	11'-0"								3'-6"	
16	5	14'-8"	SF521E	10		5'-6"	4'-7"	4'-7"		1'-9"					3'-6"	
16	5	16'-0"	SF522E	T2	10"	3'-8"	3'-6"	3'-8"	3'-6"		10"					
4	5	19'-4"	SF529E	17		7'-3"	4'-10"	7'-3"								
4	5	19'-5"	SF530E	17		7'-3"	4'-11"	7'-3"								
4	5	19'-6"	SF531E	17		7'-3"	5'-0"	7'-3"								
4	5	19'-7"	SF532E	17		7'-3"	5'-1"	7'-3"								
12	8	17'-2"	SF804E	17		3'-5"	10'-4"	3'-5"								
22	8	11'-10"	SF808E	H4	3'-6"	3"	3'-6"	4'-10"								
64	11	23'-0"	SF1102E	STR												
OVERHEAD SIGN STRUCTURE OH-10																
84	5	12'-0"	SF520E	T3		1'-0"	11'-0"								3'-6"	
16	5	14'-8"	SF521E	10		5'-6"	4'-7"	4'-7"		1'-9"					3'-6"	
16	5	16'-0"	SF522E	T2	10"	3'-8"	3'-6"	3'-8"	3'-6"		10"					
16	5	19'-10"	SF523E	17		7'-3"	5'-4"	7'-3"								
12	8	17'-2"	SF804E	17		3'-5"	10'-4"	3'-5"								
22	8	12'-6"	SF805E	17		3'-6"	5'-6"	3'-6"								
64	11	20'-6"	SF1101E	STR												
OVERHEAD SIGN STRUCTURE OH-11																
84	5	12'-0"	SF520E	T3		1'-0"	11'-0"								3'-6"	
16	5	14'-8"	SF521E	10		5'-6"	4'-7"	4'-7"		1'-9"					3'-6"	
16	5	16'-0"	SF522E	T2	10"	3'-8"	3'-6"	3'-8"	3'-6"		10"					
16	5	19'-10"	SF523E	17		7'-3"	5'-4"	7'-3"								
12	8	17'-2"	SF804E	17		3'-5"	10'-4"	3'-5"								
22	8	12'-6"	SF805E	17		3'-6"	5'-6"	3'-6"								
64	11	20'-6"	SF1101E	STR												
OVERHEAD SIGN STRUCTURE OH-12																
84	5	12'-0"	SF520E	T3		1'-0"	11'-0"								3'-6"	
16	5	14'-8"	SF521E	10		5'-6"	4'-7"	4'-7"		1'-9"					3'-6"	
16	5	16'-0"	SF522E	T2	10"	3'-8"	3'-6"	3'-8"	3'-6"		10"					
16	5	19'-10"	SF523E	17		7'-3"	5'-4"	7'-3"								
12	8	17'-2"	SF804E	17		3'-5"	10'-4"	3'-5"								
22	8	12'-6"	SF805E	17		3'-6"	5'-6"	3'-6"								
64	11	20'-6"	SF1101E	STR												
OVERHEAD SIGN STRUCTURE OH-13																
84	5	12'-0"	SF520E	T3		1'-0"	11'-0"								3'-6"	
16	5	14'-8"	SF521E	10		5'-6"	4'-7"	4'-7"		1'-9"					3'-6"	
16	5	16'-0"	SF522E	T2	10"	3'-8"	3'-6"	3'-8"	3'-6"		10"					
16	5	19'-10"	SF523E	17		7'-3"	5'-4"	7'-3"								
12	8	17'-2"	SF804E	17		3'-5"	10'-4"	3'-5"								
22	8	12'-6"	SF805E	17		3'-6"	5'-6"	3'-6"								
84	11	20'-6"	SF1101E	STR												

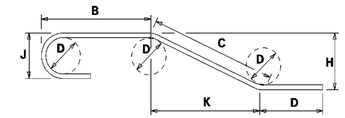

NOTES:
1. FIGURES SHOWN IN CIRCLES REPRESENT BAR BEND TYPES.
2. STANDARD BAR BENDS INCLUDE ONLY TYPES 1-32, S1-S12, AND T1-T16.
3. ALL DIMENSIONS ARE OUT-TO-OUT OF BAR EXCEPT "A" AND "G" ON STANDARD 180° AND 135° HOOKS.
4. "J" DIMENSIONS ON 180° HOOKS TO BE SHOWN ONLY WHERE NECESSARY TO RESTRICT HOOK SIZE, OTHERWISE STANDARD HOOKS ARE TO BE USED.
5. WHERE "J" IS NOT SHOWN, "J" WILL BE KEPT EQUAL TO OR LESS THAN "H" ON TRUSS BARS. WHERE "J" CAN EXCEED "H", IT SHALL BE SHOWN.
6. "H" DIMENSIONS OF STIRRUPS TO BE SHOWN WHERE NECESSARY TO FIT WITHIN THE CONCRETE.
7. UNLESS OTHERWISE NOTED, DIAMETER "D" IS THE SAME FOR ALL BENDS AND HOOKS ON A BAR.
8. WHERE SLOPE DIFFERS FROM 45° OFFSET, "H" AND "K" MUST BE SHOWN.
9. WHERE BARS ARE TO BE BENT MORE ACCURATELY THAN STANDARD BENDING TOLERANCES, BENDING DIMENSIONS WHICH REQUIRE CLOSER FABRICATION SHOULD HAVE LIMITS INDICATED.
10. FOR RECOMMENDED DIAMETER "D", OF BENDS, HOOKS, ETC., REFER TO TABLE AT RIGHT, 'CRSI' OR 'ACI' TABLES.
11. TYPE S1-S12, T1-T16 APPLY TO BAR SIZES 3 THROUGH 6.

ASTM STANDARD ENGLISH REINFORCING BARS				RECOMMENDED END HOOKS, APPLICABLE TO ALL GRADES			
NOMINAL DIMENSIONS				180° HOOKS			90° HOOKS
BAR SIZE	DIAMETER (inches)	AREA (inches²)	WEIGHT (lbs./ft.)	D	A OR G	J	A OR G
3	0.375	0.110	0.376	2"	5"	3"	6"
4	0.500	0.200	0.668	3"	6"	4"	8"
5	0.625	0.310	1.043	3"	7"	5"	10"
6	0.750	0.440	1.502	4"	8"	6"	1'-0"
7	0.875	0.600	2.044	5"	10"	7"	1'-2"
8	1.000	0.790	2.670	6"	11"	8"	1'-4"
9	1.128	1.000	3.400	9"	1'-3"	11"	1'-7"
10	1.270	1.270	4.303	10"	1'-5"	1'-1"	1'-10"
11	1.410	1.560	5.313	1'-0"	1'-7"	1'-2"	2'-0"
14	1.693	2.250	7.650	1'-6"	2'-3"	1'-9"	2'-7"
18	2.257	4.000	13.600	2'-0"	3'-0"	2'-4"	3'-5"

STANDARD BAR BENDS

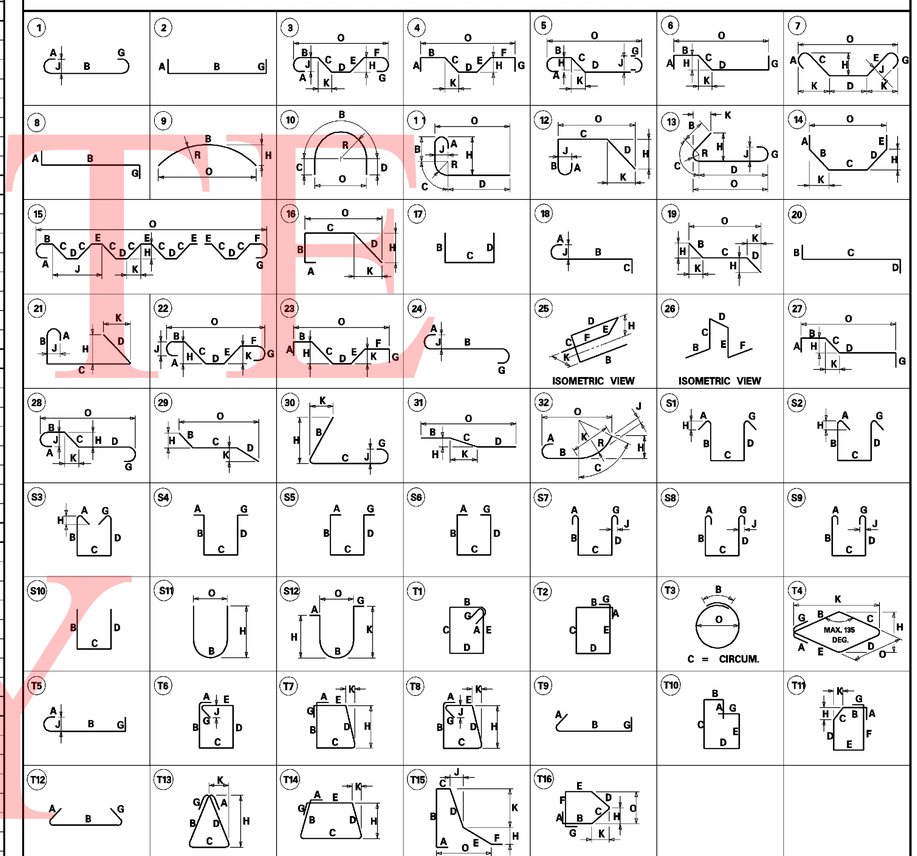

SPECIAL BAR BENDS

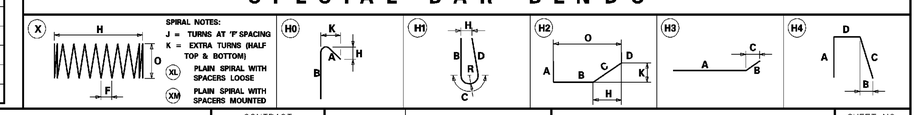

UNOFFICIAL WEBSITE COPY

DELAWARE DEPARTMENT OF TRANSPORTATION

ADDENDUMS / REVISIONS

SR1 / I-95 INTERCHANGE

CONTRACT	BRIDGE NO.	
28-090-03	DESIGNED BY:	KMD
COUNTY		
NEW CASTLE	CHECKED BY:	DST

OVERHEAD SIGN STRUCTURE BAR CHART - 2

SHEET NO. 741B
TOTAL SHTS. 803

11/9/2010 12:59:28 PM
M:\PROJECTS\2003\03059_DELTRNPK\SR1MALL\CADD\2809003\PLANS\BR05_SS_SR1.DGN

① ANY MARK NUMBER WITH SUFFIX 'E' DENOTES EPOXY-COATED REINFORCING STEEL.

② BAR MARK PREFIXES INDICATE THE FOLLOWING:
SF = SIGN STRUCTURE FOUNDATION

SPECIFICATIONS					BENDING DIMENSIONS (FT-INCHES / QUARTER INCH)											REMARKS
QTY.	SIZE	LENGTH	MARK	TYPE	A	B	C	D	E	F/R	G	H	J	K	O	
OVERHEAD SIGN STRUCTURE OH-14																
84	5	12'-0"	SF520E	T3		1'-0"	11'-0"								3'-6"	
16	5	14'-8"	SF521E	10		5'-6"	4'-7"	4'-7"		1'-9"					3'-6"	
16	5	16'-0"	SF522E	T2	10"	3'-8"	3'-6"	3'-8"	3'-6"		10"					
16	5	19'-10"	SF523E	17		7'-3"	5'-4"	7'-3"								
12	8	17'-2"	SF804E	17		3'-5"	10'-4"	3'-5"								
22	8	12'-6"	SF805E	17		3'-6"	5'-6"	3'-6"								
64	11	20'-6"	SF1101E	STR												
OVERHEAD SIGN STRUCTURE OH-15																
84	5	12'-0"	SF520E	T3		1'-0"	11'-0"								3'-6"	
16	5	14'-8"	SF521E	10		5'-6"	4'-7"	4'-7"		1'-9"					3'-6"	
16	5	16'-0"	SF522E	T2	10"	3'-8"	3'-6"	3'-8"	3'-6"		10"					
16	5	19'-10"	SF523E	17		7'-3"	5'-4"	7'-3"								
12	8	17'-2"	SF804E	17		3'-5"	10'-4"	3'-5"								
22	8	12'-6"	SF805E	17		3'-6"	5'-6"	3'-6"								
64	11	20'-6"	SF1101E	STR												
OVERHEAD SIGN STRUCTURE OH-16																
84	5	12'-0"	SF520E	T3		1'-0"	11'-0"								3'-6"	
16	5	14'-8"	SF521E	10		5'-6"	4'-7"	4'-7"		1'-9"					3'-6"	
16	5	16'-0"	SF522E	T2	10"	3'-8"	3'-6"	3'-8"	3'-6"		10"					
16	5	19'-10"	SF523E	17		7'-3"	5'-4"	7'-3"								
12	8	17'-2"	SF804E	17		3'-5"	10'-4"	3'-5"								
22	8	12'-6"	SF805E	17		3'-6"	5'-6"	3'-6"								
64	11	20'-6"	SF1101E	STR												
OVERHEAD SIGN STRUCTURE OH-17																
84	5	12'-0"	SF520E	T3		1'-0"	11'-0"								3'-6"	
16	5	14'-8"	SF521E	10		5'-6"	4'-7"	4'-7"		1'-9"					3'-6"	
16	5	16'-0"	SF522E	T2	10"	3'-8"	3'-6"	3'-8"	3'-6"		10"					
16	5	19'-10"	SF523E	17		7'-3"	5'-4"	7'-3"								
12	8	17'-2"	SF804E	17		3'-5"	10'-4"	3'-5"								
22	8	12'-6"	SF805E	17		3'-6"	5'-6"	3'-6"								
64	11	20'-6"	SF1101E	STR												
OVERHEAD SIGN STRUCTURE OH-21																
84	5	12'-0"	SF520E	T3		1'-0"	11'-0"								3'-6"	
16	5	14'-8"	SF521E	10		5'-6"	4'-7"	4'-7"		1'-9"					3'-6"	
16	5	16'-0"	SF522E	T2	10"	3'-8"	3'-6"	3'-8"	3'-6"		10"					
16	5	19'-10"	SF523E	17		7'-3"	5'-4"	7'-3"								
12	8	17'-2"	SF804E	17		3'-5"	10'-4"	3'-5"								
22	8	12'-6"	SF805E	17		3'-6"	5'-6"	3'-6"								
64	11	20'-6"	SF1101E	STR												

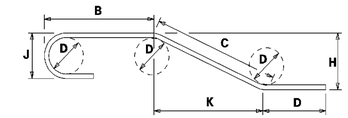

NOTES:
1. FIGURES SHOWN IN CIRCLES REPRESENT BAR BEND TYPES.
2. STANDARD BAR BENDS INCLUDE ONLY TYPES 1-32, S1-S12, AND T1-T16.
3. ALL DIMENSIONS ARE OUT-TO-OUT OF BAR EXCEPT "A" AND "G" ON STANDARD 180° AND 135° HOOKS.
4. "J" DIMENSIONS ON 180° HOOKS TO BE SHOWN ONLY WHERE NECESSARY TO RESTRICT HOOK SIZE, OTHERWISE STANDARD HOOKS ARE TO BE USED.
5. WHERE "J" IS NOT SHOWN, "J" WILL BE KEPT EQUAL TO OR LESS THAN "H" ON TRUSS BARS. WHERE "J" CAN EXCEED "H", IT SHALL BE SHOWN.
6. "H" DIMENSIONS OF STIRRUPS TO BE SHOWN WHERE NECESSARY TO FIT WITHIN THE CONCRETE.
7. UNLESS OTHERWISE NOTED, DIAMETER "D" IS THE SAME FOR ALL BENDS AND HOOKS ON A BAR.
8. WHERE SLOPE DIFFERS FROM 45° OFFSET, "H" AND "K" MUST BE SHOWN.
9. WHERE BARS ARE TO BE BENT MORE ACCURATELY THAN STANDARD BENDING TOLERANCES, BENDING DIMENSIONS WHICH REQUIRE CLOSER FABRICATION SHOULD HAVE LIMITS INDICATED.
10. FOR RECOMMENDED DIAMETER "D", OF BENDS, HOOKS, ETC., REFER TO TABLE AT RIGHT, 'CRSI' OR 'ACI' TABLES.
11. TYPE S1-S12, T1-T16 APPLY TO BAR SIZES 3 THROUGH 6.

ASTM STANDARD ENGLISH REINFORCING BARS				RECOMMENDED END HOOKS, APPLICABLE TO ALL GRADES			
	NOMINAL DIMENSIONS			180° HOOKS			90° HOOKS
BAR SIZE	DIAMETER (inches)	AREA (inches²)	WEIGHT (lbs./ft.)	D	A OR G	J	A OR G
3	0.375	0.110	0.376	2"	5"	3"	6"
4	0.500	0.200	0.668	3"	6"	4"	8"
5	0.625	0.310	1.043	3"	7"	5"	10"
6	0.750	0.440	1.502	4"	8"	6"	1'-0"
7	0.875	0.600	2.044	5"	10"	7"	1'-2"
8	1.000	0.790	2.670	6"	11"	8"	1'-4"
9	1.128	1.000	3.400	9"	1'-3"	11"	1'-7"
10	1.270	1.270	4.303	10"	1'-5"	1'-1"	1'-10"
11	1.410	1.560	5.313	1'-0"	1'-7"	1'-2"	2'-0"
14	1.693	2.250	7.650	1'-6"	2'-3"	1'-9"	2'-7"
18	2.257	4.000	13.600	2'-0"	3'-0"	2'-4"	3'-5"

STANDARD BAR BENDS

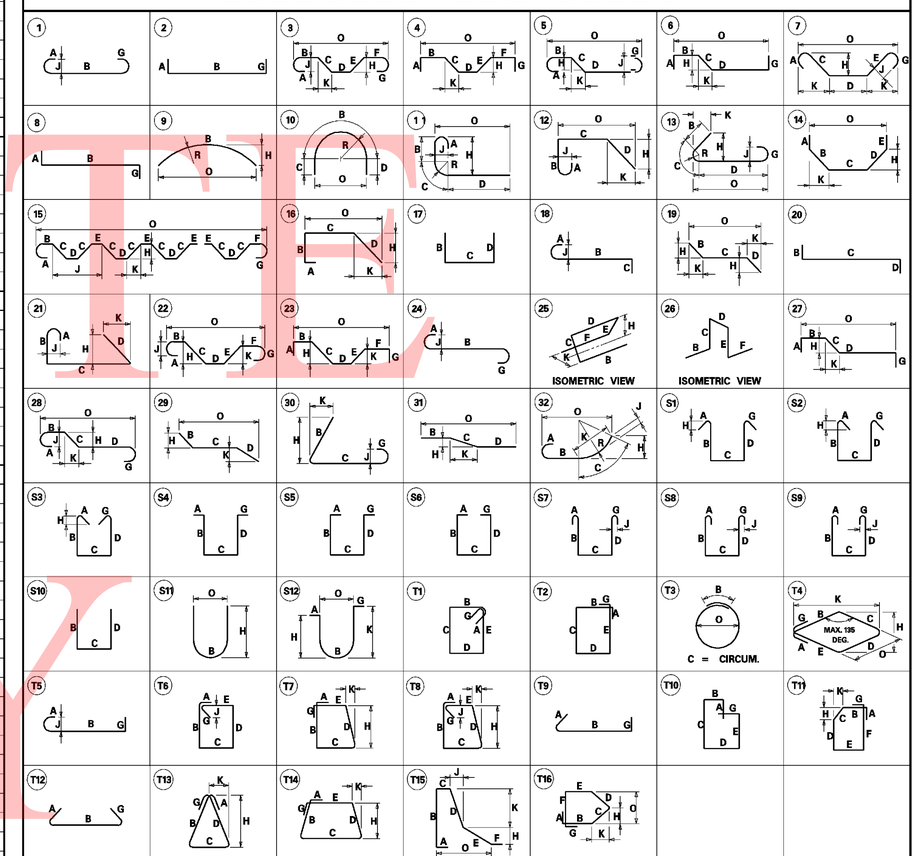

SPECIAL BAR BENDS

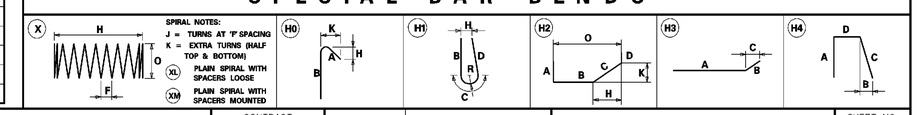

DELAWARE DEPARTMENT OF TRANSPORTATION	ADDENDUMS / REVISIONS	SR1 / I-95 INTERCHANGE	CONTRACT 28-090-03	BRIDGE NO.
			COUNTY NEW CASTLE	DESIGNED BY: KMD
				CHECKED BY: DST

OVERHEAD SIGN STRUCTURE BAR CHART - 3

SHEET NO. 741C
TOTAL SHTS. 803

11/9/2010 1:00:19 PM
M:\PROJECTS\2003\03059_DELTRNPK\SR1MALL\CADD\2809003\PLANS\BR06_SS_SR.DGN

UNOFFICIAL WEBSITE COPY

① ANY MARK NUMBER WITH SUFFIX 'E' DENOTES EPOXY-COATED REINFORCING STEEL.

② BAR MARK PREFIXES INDICATE THE FOLLOWING:
SF = SIGN STRUCTURE FOUNDATION

SPECIFICATIONS					BENDING DIMENSIONS (FT-INCHES / QUARTER INCH)											REMARKS
QTY.	SIZE	LENGTH	MARK	TYPE	A	B	C	D	E	F/R	G	H	J	K	O	
OVERHEAD SIGN STRUCTURE OH-18																
108	5	15'-2"	SF503E	T3		1'-0"	14'-2"								4'-6"	
26	5	18'-0"	SF522E	T2	10"	4'-8"	3'-6"	4'-8"	3'-6"		10"					
16	5	21'-9"	SF541E	10		7'-1"	7'-4"	7'-4"		2'-3"					4'-6"	
16	5	25'-10"	SF542E	17		10'-3"	5'-4"	10'-3"								
36	8	12'-6"	SF805E	17		3'-6"	5'-6"	3'-6"								
20	8	23'-6"	SF809E	17		3'-5"	16'-6"	3'-5"								
100	11	25'-3"	SF1110E	STR												
OVERHEAD SIGN STRUCTURE OH-19																
144	5	15'-2"	SF503E	T3		1'-0"	14'-2"								4'-6"	
26	5	32'-0"	SF523E	T2	10"	4'-8"	10'-6"	4'-8"	10'-6"		10"					
44	5	21'-9"	SF541E	10		7'-1"	7'-4"	7'-4"		2'-3"					4'-6"	
48	5	25'-10"	SF542E	17		10'-3"	5'-4"	10'-3"								
36	8	26'-6"	SF808E	17		10'-6"	5'-6"	10'-6"								
20	8	37'-4"	SF810E	17		10'-5"	16'-6"	10'-5"								
100	11	34'-9"	SF1111E	STR												
OVERHEAD SIGN STRUCTURE OH-20																
108	5	15'-2"	SF503E	T3		1'-0"	14'-2"								4'-6"	
26	5	18'-0"	SF522E	T2	10"	4'-8"	3'-6"	4'-8"	3'-6"		10"					
16	5	21'-9"	SF541E	10		7'-1"	7'-4"	7'-4"		2'-3"					4'-6"	
16	5	25'-10"	SF542E	17		10'-3"	5'-4"	10'-3"								
36	8	12'-6"	SF805E	17		3'-6"	5'-6"	3'-6"								
20	8	23'-6"	SF809E	17		3'-5"	16'-6"	3'-5"								
100	11	25'-3"	SF1110E	STR												

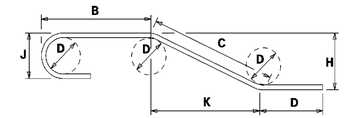

NOTES:
1. FIGURES SHOWN IN CIRCLES REPRESENT BAR BEND TYPES.
2. STANDARD BAR BENDS INCLUDE ONLY TYPES 1-32, S1-S12, AND T1-T16.
3. ALL DIMENSIONS ARE OUT-TO-OUT OF BAR EXCEPT "A" AND "G" ON STANDARD 180° AND 135° HOOKS.
4. "J" DIMENSIONS ON 180° HOOKS TO BE SHOWN ONLY WHERE NECESSARY TO RESTRICT HOOK SIZE, OTHERWISE STANDARD HOOKS ARE TO BE USED.
5. WHERE "J" IS NOT SHOWN, "J" WILL BE KEPT EQUAL TO OR LESS THAN "H" ON TRUSS BARS. WHERE "J" CAN EXCEED "H", IT SHALL BE SHOWN.
6. "H" DIMENSIONS OF STIRRUPS TO BE SHOWN WHERE NECESSARY TO FIT WITHIN THE CONCRETE.
7. UNLESS OTHERWISE NOTED, DIAMETER "D" IS THE SAME FOR ALL BENDS AND HOOKS ON A BAR.
8. WHERE SLOPE DIFFERS FROM 45° OFFSET, "H" AND "K" MUST BE SHOWN.
9. WHERE BARS ARE TO BE BENT MORE ACCURATELY THAN STANDARD BENDING TOLERANCES, BENDING DIMENSIONS WHICH REQUIRE CLOSER FABRICATION SHOULD HAVE LIMITS INDICATED.
10. FOR RECOMMENDED DIAMETER "D", OF BENDS, HOOKS, ETC., REFER TO TABLE AT RIGHT, 'CRSI' OR 'ACI' TABLES.
11. TYPE S1-S12, T1-T16 APPLY TO BAR SIZES 3 THROUGH 6.

ASTM STANDARD ENGLISH REINFORCING BARS				RECOMMENDED END HOOKS, APPLICABLE TO ALL GRADES			
	NOMINAL DIMENSIONS			180° HOOKS			90° HOOKS
BAR SIZE	DIAMETER (inches)	AREA (inches²)	WEIGHT (lbs./ft.)	D	A OR G	J	A OR G
3	0.375	0.110	0.376	2"	5"	3"	6"
4	0.500	0.200	0.668	3"	6"	4"	8"
5	0.625	0.310	1.043	3"	7"	5"	10"
6	0.750	0.440	1.502	4"	8"	6"	1'-0"
7	0.875	0.600	2.044	5"	10"	7"	1'-2"
8	1.000	0.790	2.670	6"	11"	8"	1'-4"
9	1.128	1.000	3.400	9"	1'-3"	11"	1'-7"
10	1.270	1.270	4.303	10"	1'-5"	1'-1"	1'-10"
11	1.410	1.560	5.313	1'-0"	1'-7"	1'-2"	2'-0"
14	1.693	2.250	7.650	1'-6"	2'-3"	1'-9"	2'-7"
18	2.257	4.000	13.600	2'-0"	3'-0"	2'-4"	3'-5"

STANDARD BAR BENDS

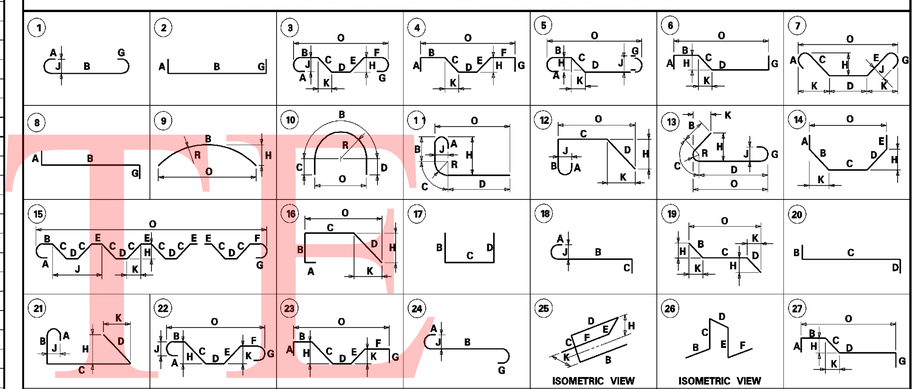

SPECIAL BAR BENDS

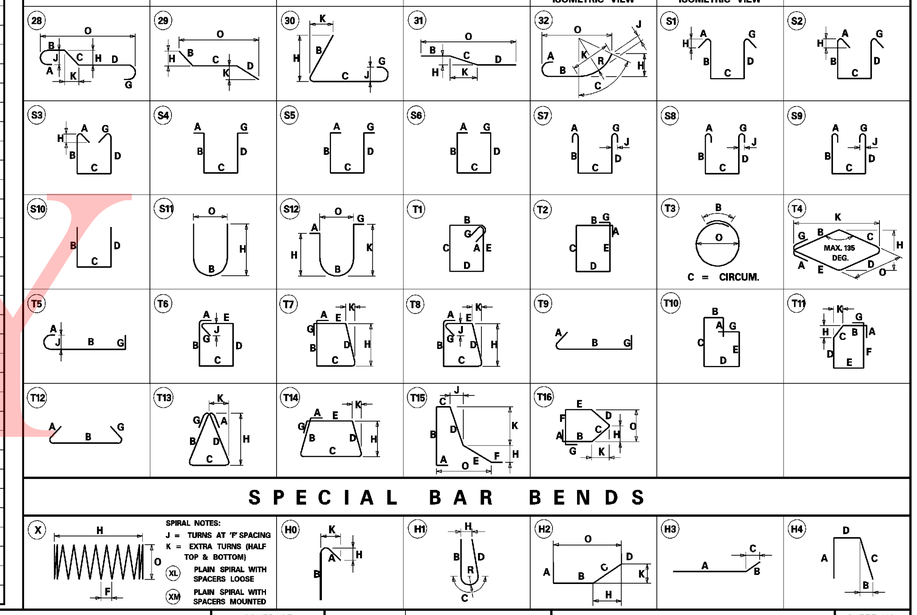

UNOFFICIAL WEBSITE COPY

11/9/2010 1:01:01 PM
M:\PROJECTS\2003\03059_DELTRNPK\SR1MALL\CADD\2809003\PLANS\BR07_SS_SR1.DGN

DELAWARE DEPARTMENT OF TRANSPORTATION

ADDENDUMS / REVISIONS

SR1 / I-95 INTERCHANGE

CONTRACT	BRIDGE NO.		FULL WIDTH SPAN OVERHEAD SIGN STRUCTURE BAR CHART - 1	SHEET NO.
28-090-03	DESIGNED BY:	KMD		741D
COUNTY				TOTAL SHTS.
NEW CASTLE	CHECKED BY:	DST		803

① ANY MARK NUMBER WITH SUFFIX 'E' DENOTES EPOXY-COATED REINFORCING STEEL.

② BAR MARK PREFIXES INDICATE THE FOLLOWING:
SF = SIGN STRUCTURE FOUNDATION

SPECIFICATIONS					BENDING DIMENSIONS (FT-INCHES / QUARTER INCH)											REMARKS
QTY.	SIZE	LENGTH	MARK	TYPE	A	B	C	D	E	F/R	G	H	J	K	O	
CANTILEVER SIGN STRUCTURE C-2																
28	5	5'-6"	SF502E	17		2'-0"	1'-6"	2'-0"								
23	5	15'-2"	SF503E	T3		1'-0"	14'-2"								4'-6"	
16	5	13'-8"	SF506E	T2	10"	1'-6"	4'-6"	1'-6"	4'-6"		10"					
28	7	18'-6"	SF701E	STR												
21	11	21'-7"	SF1104E	STR												
CANTILEVER SIGN STRUCTURE C-3																
28	5	5'-6"	SF502E	17		2'-0"	1'-6"	2'-0"								
23	5	15'-2"	SF503E	T3		1'-0"	14'-2"								4'-6"	
16	5	13'-8"	SF506E	T2	10"	1'-6"	4'-6"	1'-6"	4'-6"		10"					
28	7	18'-6"	SF701E	STR												
21	11	21'-7"	SF1104E	STR												
CANTILEVER SIGN STRUCTURE C-4																
18	5	5'-6"	SF502E	17		2'-0"	1'-6"	2'-0"								
23	5	15'-2"	SF503E	T3		1'-0"	14'-2"								4'-6"	
12	5	13'-8"	SF506E	T2	10"	1'-6"	4'-6"	1'-6"	4'-6"		10"					
18	7	15'-6"	SF702E	STR												
21	11	21'-7"	SF1104E	STR												
CANTILEVER SIGN STRUCTURE C-5																
18	5	5'-7"	SF502E	17		2'-0"	1'-6"	2'-0"								
22	5	15'-2"	SF503E	T3		1'-0"	14'-2"								4'-6"	
7	5	23'-8"	SF504E	T2	10"	5'-6"	5'-6"	5'-6"	5'-6"		10"					
16	5	12'-4"	SF505E	S10		3'-5"	5'-6"	3'-5"								
12	5	13'-8"	SF506E	T2	10"	1'-6"	4'-6"	1'-6"	4'-6"		10"					
18	7	15'-7"	SF702E	STR												
7	8	20'-4"	SF801E	H4	9'-10"	7½"	5'-9"	4'-9"								
7	8	10'-10"	SF802E	H3	7'-0"	3'-10"	3'-1"									
5	8	25'-0"	SF807E	17		9'-10"	5'-4"	9'-10"								
21	11	21'-7"	SF1104E	STR												
CANTILEVER SIGN STRUCTURE C-6																
18	5	5'-6"	SF502E	17		2'-0"	1'-6"	2'-0"								
23	5	15'-2"	SF503E	T3		1'-0"	14'-2"								4'-6"	
12	5	13'-8"	SF506E	T2	10"	1'-6"	4'-6"	1'-6"	4'-6"		10"					
18	7	15'-6"	SF702E	STR												
21	11	21'-7"	SF1104E	STR												

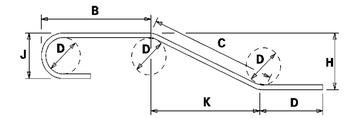

NOTES:
1. FIGURES SHOWN IN CIRCLES REPRESENT BAR BEND TYPES.
2. STANDARD BAR BENDS INCLUDE ONLY TYPES 1-32, S1-S12, AND T1-T16.
3. ALL DIMENSIONS ARE OUT-TO-OUT OF BAR EXCEPT "A" AND "G" ON STANDARD 180° AND 135° HOOKS.
4. "J" DIMENSIONS ON 180° HOOKS TO BE SHOWN ONLY WHERE NECESSARY TO RESTRICT HOOK SIZE, OTHERWISE STANDARD HOOKS ARE TO BE USED.
5. WHERE "J" IS NOT SHOWN, "J" WILL BE KEPT EQUAL TO OR LESS THAN "H" ON TRUSS BARS. WHERE "J" CAN EXCEED "H", IT SHALL BE SHOWN.
6. "H" DIMENSIONS OF STIRRUPS TO BE SHOWN WHERE NECESSARY TO FIT WITHIN THE CONCRETE.
7. UNLESS OTHERWISE NOTED, DIAMETER "D" IS THE SAME FOR ALL BENDS AND HOOKS ON A BAR.
8. WHERE SLOPE DIFFERS FROM 45° OFFSET, "H" AND "K" MUST BE SHOWN.
9. WHERE BARS ARE TO BE BENT MORE ACCURATELY THAN STANDARD BENDING TOLERANCES, BENDING DIMENSIONS WHICH REQUIRE CLOSER FABRICATION SHOULD HAVE LIMITS INDICATED.
10. FOR RECOMMENDED DIAMETER "D", OF BENDS, HOOKS, ETC., REFER TO TABLE AT RIGHT, 'CRSI' OR 'ACI' TABLES.
11. TYPE S1-S12, T1-T16 APPLY TO BAR SIZES 3 THROUGH 6.

ASTM STANDARD ENGLISH REINFORCING BARS				RECOMMENDED END HOOKS, APPLICABLE TO ALL GRADES			
	NOMINAL DIMENSIONS				180° HOOKS		90° HOOKS
BAR SIZE	DIAMETER (inches)	AREA (inches²)	WEIGHT (lbs./ft.)	D	A OR G	J	A OR G
3	0.375	0.110	0.376	2"	5"	3"	6"
4	0.500	0.200	0.668	3"	6"	4"	8"
5	0.625	0.310	1.043	3"	7"	5"	10"
6	0.750	0.440	1.502	4"	8"	6"	1'-0"
7	0.875	0.600	2.044	5"	10"	7"	1'-2"
8	1.000	0.790	2.670	6"	11"	8"	1'-4"
9	1.128	1.000	3.400	9"	1'-3"	11"	1'-7"
10	1.270	1.270	4.303	10"	1'-5"	1'-1"	1'-10"
11	1.410	1.560	5.313	1'-0"	1'-7"	1'-2"	2'-0"
14	1.693	2.250	7.650	1'-6"	2'-3"	1'-9"	2'-7"
18	2.257	4.000	13.600	2'-0"	3'-0"	2'-4"	3'-5"

STANDARD BAR BENDS

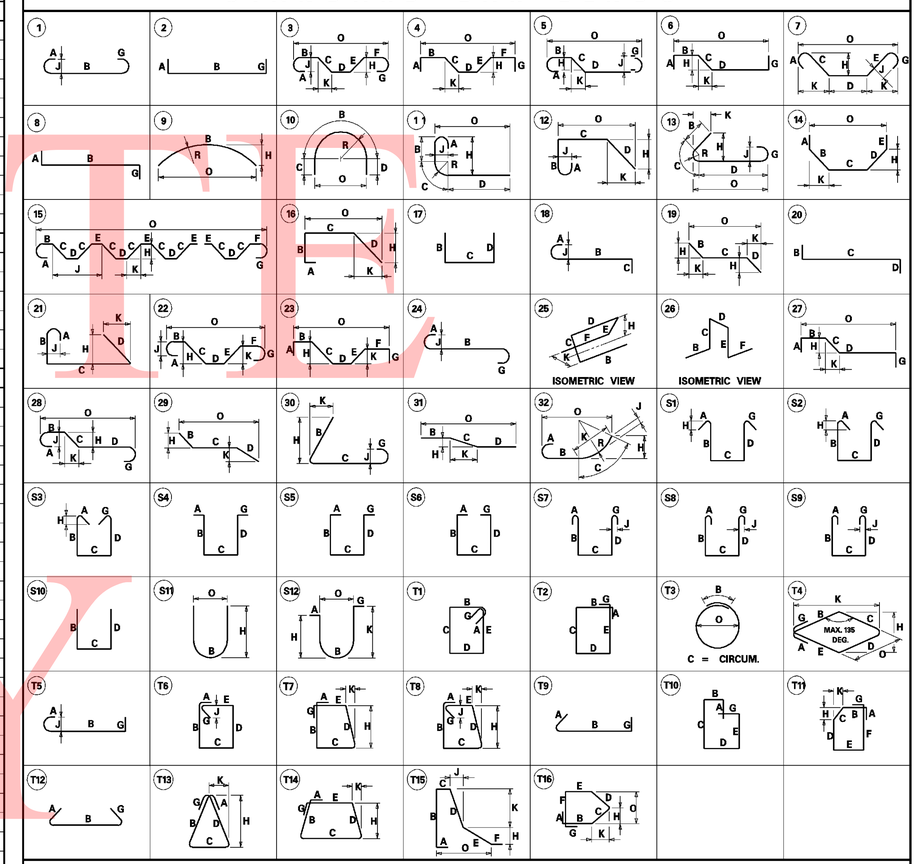

SPECIAL BAR BENDS

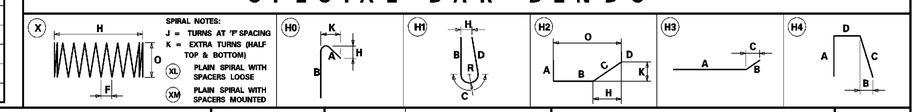

UNOFFICIAL WEBSITE COPY

11/9/2010 1:01:59 PM
M:\PROJECTS\2003\03059_DELTRNPK\SR1MALL\CADD\2809003\PLANS\BR08_SS_SR1.DGN

DELAWARE DEPARTMENT OF TRANSPORTATION

ADDENDUMS / REVISIONS

SR1 / I-95 INTERCHANGE

CONTRACT	BRIDGE NO.	
28-090-03	DESIGNED BY: KMD	
COUNTY		
NEW CASTLE	CHECKED BY: DST	

CANTELEVER SIGN STRUCTURE BAR CHART - 1

SHEET NO. 741E
TOTAL SHTS. 803

NOTES:

4. SEE CONTRACT 30-090-04 FOR PREVIOUSLY INSTALL SIGNAL EQUIPMENT.
5. ALL PROPOSED SIGNAL HEADS TO BE UNBAGGED BY DELDOT TRAFFIC FORCES.
6. ALL CABLE INSTALLATION TO BE COMPLETED BY DELDOT TRAFFIC FORCES. THE CONTRACTOR SHALL CONTACT DELDOT'S SIGNAL CONSTRUCTION MANAGER AT (302)222-5920 A MINIMUM OF TEN (10) DAYS PRIOR TO ANY REQUIRED WORK.
7. PROPOSED ITMS COMMS SHOWN FOR REFERENCE PURPOSE ONLY-SEE SIGNING, STRIPING AND CONDUIT PLANS FOR COMMUNICATION ROUTING.
8. PROPOSED MARKINGS SHOWN FOR REFERENCE PURPOSE ONLY-SEE SIGNING, STRIPING AND CONDUIT PLANS FOR LOCATION AND QUANTITIES.
9. FOR EXISTING AND PROPOSED SIGNING SEE SIGNING, STRIPING AND CONDUIT PLANS.
10. CONDUIT RUNS 1, 1A, 1B, 1C, AND 1D TO PROVIDE POWER SUPPLY FOR PROPOSED SIGNAL AND PROPOSED CCTV CAMERA AT THIS INTERSECTION AND RELOCATED MALL RING ROAD INTERSECTION.

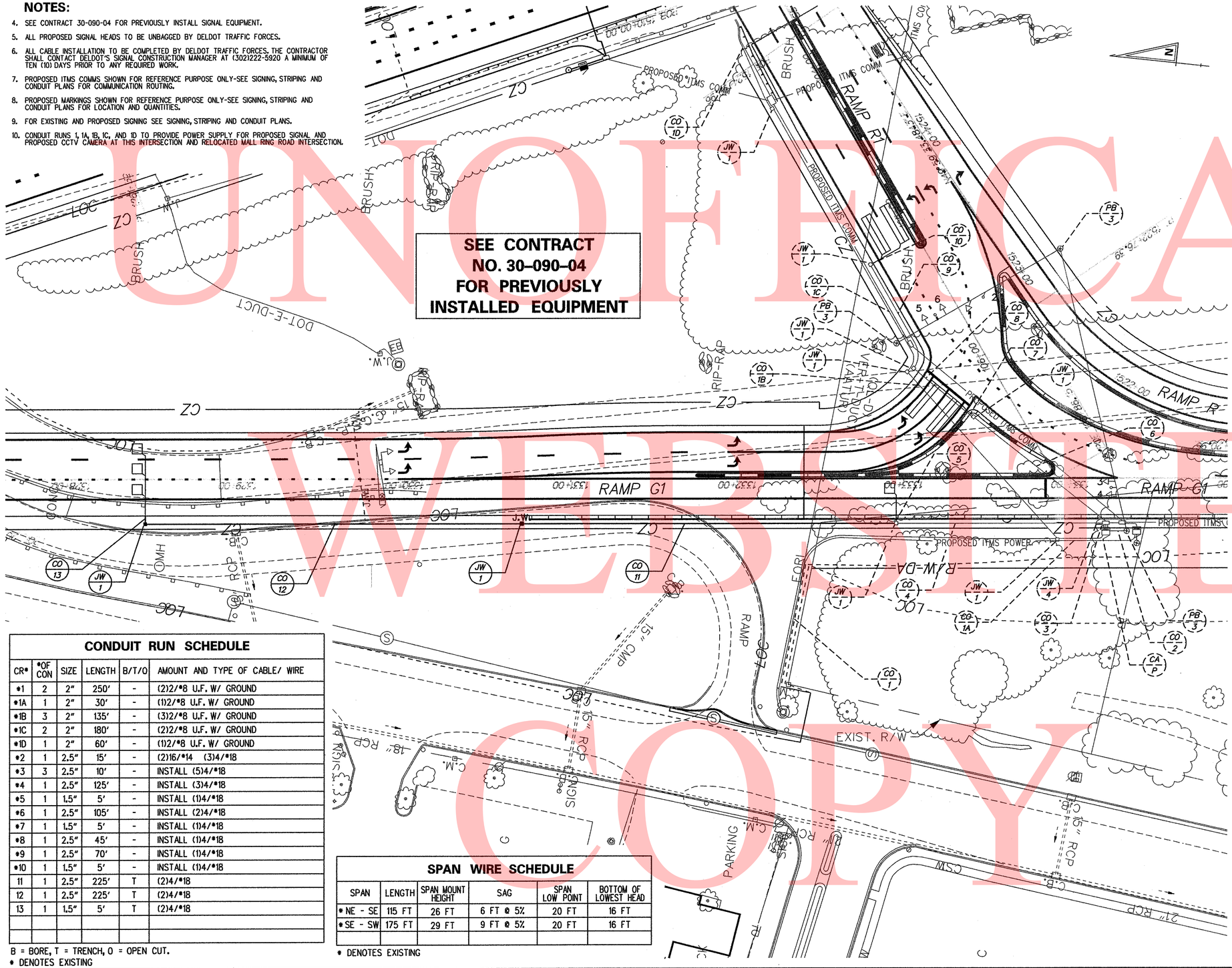

CONDUIT RUN SCHEDULE

CR*	*OF CON	SIZE	LENGTH	B/T/O	AMOUNT AND TYPE OF CABLE/ WIRE
*1	2	2"	250'	-	(2)2/*8 U.F. W/ GROUND
*1A	1	2"	30'	-	(1)2/*8 U.F. W/ GROUND
*1B	3	2"	135'	-	(3)2/*8 U.F. W/ GROUND
*1C	2	2"	180'	-	(2)2/*8 U.F. W/ GROUND
*1D	1	2"	60'	-	(1)2/*8 U.F. W/ GROUND
*2	1	2.5"	15'	-	(2)16/*14 (3)4/*18
*3	3	2.5"	10'	-	INSTALL (5)4/*18
*4	1	2.5"	125'	-	INSTALL (3)4/*18
*5	1	1.5"	5'	-	INSTALL (1)4/*18
*6	1	2.5"	105'	-	INSTALL (2)4/*18
*7	1	1.5"	5'	-	INSTALL (1)4/*18
*8	1	2.5"	45'	-	INSTALL (1)4/*18
*9	1	2.5"	70'	-	INSTALL (1)4/*18
*10	1	1.5"	5'	-	INSTALL (1)4/*18
11	1	2.5"	225'	T	(2)4/*18
12	1	2.5"	225'	T	(2)4/*18
13	1	1.5"	5'	T	(2)4/*18

B = BORE, T = TRENCH, O = OPEN CUT.
* DENOTES EXISTING

SPAN WIRE SCHEDULE

SPAN	LENGTH	SPAN MOUNT HEIGHT	SAG	SPAN LOW POINT	BOTTOM OF LOWEST HEAD
* NE - SE	115 FT	26 FT	6 FT @ 5%	20 FT	16 FT
* SE - SW	175 FT	29 FT	9 FT @ 5%	20 FT	16 FT

* DENOTES EXISTING

SIGNAL PHASING

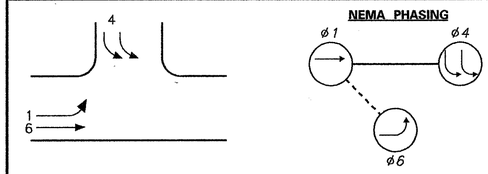

PHASING NOTES

1. PHASES ASSOCIATED BY A SOLID LINE WILL NOT OPERATE CONCURRENTLY.
2. PHASES ASSOCIATED BY A DASHED LINE WILL OPERATE CONCURRENTLY.

SIGNAL HEAD DIAGRAM

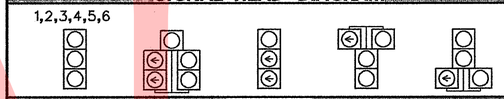

LEGEND

	PROPOSED SIGNAL CABINET	RM C	REMOVE BY CONTRACTOR
	EXISTING SIGNAL CABINET	RM O	REMOVE BY OTHERS
	PROPOSED SIGNAL POLE BASE	AB	ABANDON
	EXISTING SIGNAL POLE BASE	PB X	PROPOSED POLE BASE IDENTIFIER (TYPE OF POLE BASE)
	PROPOSED PEDESTRIAN POLE BASE	PB X	EXISTING POLE BASE IDENTIFIER (TYPE OF POLE BASE)
	EXISTING PEDESTRIAN POLE BASE	JW X	PROPOSED JUNCTION WELL IDENTIFIER (TYPE OF JUNCTION WELL)
	PROPOSED WOOD POLE	JW X	EXISTING JUNCTION WELL IDENTIFIER (TYPE OF JUNCTION WELL)
	EXISTING UTILITY POLE	CO #	PROPOSED CONDUIT RUN IDENTIFIER (# OF CONDUIT RUN)
	PROPOSED JUNCTION WELL	CO #	EXISTING CONDUIT RUN IDENTIFIER (# OF CONDUIT RUN)
J.W.	EXISTING JUNCTION WELL	OH #	PROPOSED OVERHEAD RUN IDENTIFIER (# OF OVERHEAD RUN)
	PROPOSED SIGNAL HEAD	OH #	EXISTING OVERHEAD RUN IDENTIFIER (# OF OVERHEAD RUN)
	EXISTING SIGNAL HEAD	MA XX	PROPOSED MAST ARM IDENTIFIER (LENGTH OF ARM)
	PROPOSED PEDESTRIAN SIGNAL HEAD	MA XX	EXISTING MAST ARM IDENTIFIER (LENGTH OF ARM)
	EXISTING PEDESTRIAN SIGNAL HEAD	CA X	PROPOSED CABINET IDENTIFIER (TYPE OF CABINET)
	PROPOSED PEDESTRIAN PUSHBUTTON	CA X	EXISTING CABINET IDENTIFIER (TYPE OF CABINET)
	EXISTING PEDESTRIAN PUSHBUTTON		PROPOSED SPAN WIRE
	PROPOSED VIDEO DETECTION	XX	EXISTING SPAN WIRE
	EXISTING VIDEO DETECTION		RIGHT-OF-WAY OR PROPERTY LINE
	PROPOSED MICROWAVE DETECTION		PROPOSED SPAN INSULATOR
	EXISTING MICROWAVE DETECTION		EXISTING SPAN INSULATOR
	OVERHEAD SIGNING	P	SERVICE PEDESTAL
	PROPOSED OPTICOM RECEIVER		
	EXISTING OPTICOM RECEIVER		
	PROPOSED MAST ARM		
	EXISTING MAST ARM		
	PROPOSED LUMINAIRE		
	EXISTING LUMINAIRE		
	PROPOSED LOOP DETECTOR (TYPE 1 OR 2)		
	EXISTING LOOP DETECTOR (TYPE 1 OR 2)		

GENERAL SIGNAL NOTES

1. ALL SIGNAL POLES WILL BE 32 FEET, EXCEPT WHERE SHOWN.
2. ALL GALVANIZED CONDUIT (GRC) SHALL BE REAMED AND THREADED. ALL GRC SHALL BE THREADED TOGETHER WITH APPROVED COUPLINGS. SET SCREW, BOLTED, AND COMPRESSION FITTING ARE NOT ACCEPTABLE.
3. ALL UNDERGROUND AND OVERHEAD UTILITIES SHOWN ON THESE PLANS ARE SCHEMATIC ONLY AND MAY NOT BE COMPLETE. THE CONTRACTOR SHALL BE RESPONSIBLE FOR NOTIFYING MISS UTILITY, AND/OR THE APPROPRIATE UTILITY PRIOR TO THE BEGINNING OF CONSTRUCTION FOR THE UTILITY MARKOUTS. IF THE CONTRACTOR PERCEIVES THAT A CONFLICT BETWEEN UTILITIES AND THE TRAFFIC SIGNAL WILL OCCUR, THE CONTRACTOR SHALL NOTIFY DELDOT TRAFFIC IMMEDIATELY BEFORE CONSTRUCTION.

RECOMMENDED _____ DATE: 9.16.10 | RECOMMENDED _____ DATE: _____ | RECOMMENDED _____ DATE: _____ | APPROVED TRAFFIC ENGINEER _____ DATE: 9/16/10 | APPROVED FOR INSTALLATION CHIEF TRAFFIC ENGINEER _____ DATE: 9/16/10

DELAWARE DEPARTMENT OF TRANSPORTATION

ADDENDUM / REVISIONS

SCALE 0 30 60 90 FEET

SR1 / I-95 INTERCHANGE

CONTRACT	PERMIT NO.	N
28-090-03	DESIGNED BY: JCR	
COUNTY		
NEW CASTLE	CHECKED BY: RK&K	

SIGNAL PLAN
RAMP G1 @ RAMP R1

SHEET NO. 742
TOTAL SHTS. 803

M:\PROJECTS\2003\03059_DELTRNPK\SRIMALL\CADD\2809003\PLANS\CP99_SG_SR1.DGN

UNOFFICIAL WEBSITE COPY

NOTES:

6. REMOVE EXISITING SIGNAL CABINET AND BASE AND INSTALL A NEW TYPE 4 JUNCTION WELL OVER EXISTING CONDUIT STUB OUTS CUTTING EXISTING CONDUITS AS NEEDED.
7. RELOCATE EXISTING STEP DOWN TRANSFORMER TO NEW PROPOSED EMPTY SIGNAL CABINET. ADD ADDITIONAL ELECTRICAL METERING EQUIPMENT AS NEEDED.
8. ALL EXISITNG CABEL TO BE REROUTED OR REPLACED AS NEEDED OR REQUIRED BY DELDOT TRAFFIC SIGNAL CONSTRUCTION INSPECTOR.
9. ALL EXISTING SIGNAL HEADS AND SPAN WIRE TO BE REMOVED BY DELDOT TRAFFIC FORCES. DELDOT TRAFFIC FORCES TO INSTALL NEW BOX SPAN DESIGN AND SIGNAL HEADS.
10. PROPOSED ITMS COMMS SHOWN FOR REFERENCE PURPOSE ONLY-SEE SIGNING, STRIPING AND CONDUIT PLANS FOR COMMUNICATION ROUTING.
11. PROPOSED MARKINGS SHOWN FOR REFERENCE PURPOSE ONLY-SEE SIGNING, STRIPING AND CONDUIT PLANS FOR LOCATION AND QUANTITIES.
12. FOR EXISTING AND PROPOSED SIGNING SEE SIGNING, STRIPING AND CONDUIT PLANS.
13. DELDOT TMC TO MODIFY EXISTING SIGNAL PHASING TO ACCOMMODATE NEW SIGNAL OPERATION.
14. ALL CABLE REMOVAL AND INSTALLATION TO BE COMPLETED BY DELDOT TRAFFIC FORCES. THE CONTRACTOR SHALL CONTACT DELDOT'S SIGNAL CONSTRUCTION MANAGER AT (302)222-5920 A MINIMUM OF TEN (10) DAYS PRIOR TO ANY REQUIRED WORK.
15. EXISTING SIGNAL POLE LOCATED WITHIN THE PROPOSED ROADWAY OF RAMP G1 AND ROAD A TIE IN SHALL REMAIN PROTECTED AND ERECT UNTIL PROPOSED SIGNAL IS IN PLACE AND OPERATIONAL.
16. EXISTING SIGNAL TO REMAIN IN PLACE AND OPERATIONAL UNTIL PROPOSED SIGNAL IS INSTALLED AND OPERATING AS REQUIRED. ALL PROPOSED HEAD SHALL BE BAGGED AND REMAINED BAGGED UNTIL ROADWAY AND SIGNAL PHASING MODIFICATIONS HAVE BEEN COMPLETED OR AS NEEDED TO MEET REQUIRED APPROVED CONSTRUCTION PHASING OPERATION. THE CONTRACTOR SHALL CONTACT DELDOT'S SIGNAL CONSTRUCTION MANAGER AT (302)222-5920 A MINIMUM OF TEN (10) DAYS PRIOR TO ANY REQUIRED WORK OR PHASING MODIFICATION.

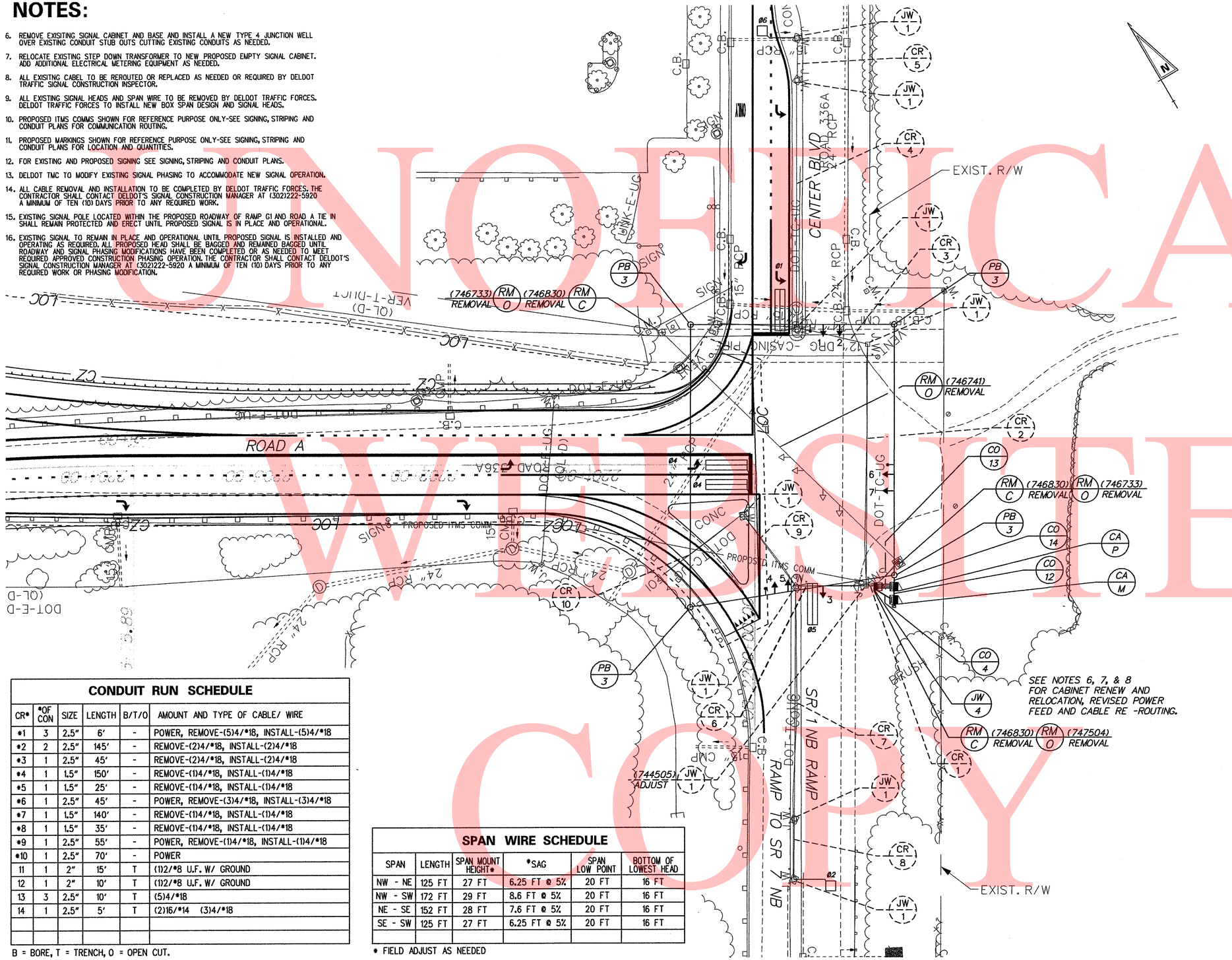

CONDUIT RUN SCHEDULE

CR*	*OF CON	SIZE	LENGTH	B/T/O	AMOUNT AND TYPE OF CABLE/ WIRE
*1	3	2.5"	6'	-	POWER, REMOVE-(5)4/*18, INSTALL-(5)4/*18
*2	2	2.5"	145'	-	REMOVE-(2)4/*18, INSTALL-(2)4/*18
*3	1	2.5"	45'	-	REMOVE-(2)4/*18, INSTALL-(2)4/*18
*4	1	1.5"	150'	-	REMOVE-(1)4/*18, INSTALL-(1)4/*18
*5	1	1.5"	25'	-	REMOVE-(1)4/*18, INSTALL-(1)4/*18
*6	1	2.5"	45'	-	POWER, REMOVE-(3)4/*18, INSTALL-(3)4/*18
*7	1	1.5"	140'	-	REMOVE-(1)4/*18, INSTALL-(1)4/*18
*8	1	1.5"	35'	-	REMOVE-(1)4/*18, INSTALL-(1)4/*18
*9	1	2.5"	55'	-	POWER, REMOVE-(1)4/*18, INSTALL-(1)4/*18
*10	1	2.5"	70'	-	POWER
11	1	2"	15'	T	(1)2/*8 U.F. W/ GROUND
12	1	2"	10'	T	(1)2/*8 U.F. W/ GROUND
13	3	2.5"	10'	T	(5)4/*18
14	1	2.5"	5'	T	(2)16/*14 (3)4/*18

B = BORE, T = TRENCH, O = OPEN CUT.
* DENOTES EXISTING.

SPAN WIRE SCHEDULE

SPAN	LENGTH	SPAN MOUNT HEIGHT*	*SAG	SPAN LOW POINT	BOTTOM OF LOWEST HEAD
NW - NE	125 FT	27 FT	6.25 FT @ 5%	20 FT	16 FT
NW - SW	172 FT	29 FT	8.6 FT @ 5%	20 FT	16 FT
NE - SE	152 FT	28 FT	7.6 FT @ 5%	20 FT	16 FT
SE - SW	125 FT	27 FT	6.25 FT @ 5%	20 FT	16 FT

* FIELD ADJUST AS NEEDED

SIGNAL PHASING

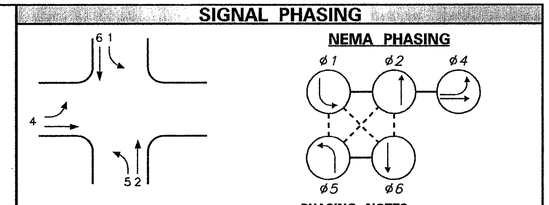

PHASING NOTES

1. PHASES ASSOCIATED BY A SOLID LINE WILL NOT OPERATE CONCURRENTLY.
2. PHASES ASSOCIATED BY A DASHED LINE WILL OPERATE CONCURRENTLY.

SIGNAL HEAD DIAGRAM

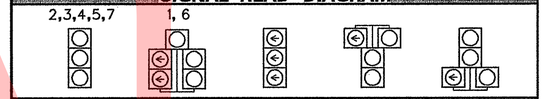

LEGEND

- PROPOSED SIGNAL CABINET
- EXISTING SIGNAL CABINET
- PROPOSED SIGNAL POLE BASE
- EXISTING SIGNAL POLE BASE
- PROPOSED PEDESTRIAN POLE BASE
- EXISTING PEDESTRIAN POLE BASE
- PROPOSED WOOD POLE
- EXISTING UTILITY POLE
- PROPOSED JUNCTION WELL
- EXISTING JUNCTION WELL
- PROPOSED SIGNAL HEAD
- EXISTING SIGNAL HEAD
- PROPOSED PEDESTRIAN SIGNAL HEAD
- EXISTING PEDESTRIAN SIGNAL HEAD
- PROPOSED PEDESTRIAN PUSHBUTTON
- EXISTING PEDESTRIAN PUSHBUTTON
- PROPOSED VIDEO DETECTION
- EXISTING VIDEO DETECTION
- PROPOSED MICROWAVE DETECTION
- EXISTING MICROWAVE DETECTION
- OVERHEAD SIGNING
- PROPOSED OPTICOM RECEIVER
- EXISTING OPTICOM RECEIVER
- PROPOSED MAST ARM
- EXISTING MAST ARM
- PROPOSED LUMINAIRE
- EXISTING LUMINAIRE
- PROPOSED LOOP DETECTOR (TYPE 1 OR 2)
- EXISTING LOOP DETECTOR (TYPE 1 OR 2)
- REMOVE BY CONTRACTOR
- REMOVE BY OTHERS
- ABANDON
- PROPOSED POLE BASE IDENTIFIER (TYPE OF POLE BASE)
- EXISTING POLE BASE IDENTIFIER (TYPE OF POLE BASE)
- PROPOSED JUNCTION WELL IDENTIFIER (TYPE OF JUNCTION WELL)
- EXISTING JUNCTION WELL IDENTIFIER (TYPE OF JUNCTION WELL)
- PROPOSED CONDUIT RUN IDENTIFIER (# OF CONDUIT RUN)
- EXISTING CONDUIT RUN IDENTIFIER (# OF CONDUIT RUN)
- PROPOSED OVERHEAD RUN IDENTIFIER (# OF OVERHEAD RUN)
- EXISTING OVERHEAD RUN IDENTIFIER (# OF OVERHEAD RUN)
- PROPOSED MAST ARM IDENTIFIER (LENGTH OF ARM)
- EXISTING MAST ARM IDENTIFIER (LENGTH OF ARM)
- PROPOSED CABINET IDENTIFIER (TYPE OF CABINET)
- EXISTING CABINET IDENTIFIER (TYPE OF CABINET)
- PROPOSED SPAN WIRE
- EXISTING SPAN WIRE
- RIGHT-OF-WAY OR PROPERTY LINE
- PROPOSED SPAN INSULATOR
- EXISTING SPAN INSULATOR
- SERVICE PEDESTAL

GENERAL SIGNAL NOTES

1. ALL SIGNAL POLES WILL BE 32 FOOT, STEEL STRAIN POLES.
2. ALL SIGNAL EQUIPMENT REMOVED FROM A PROJECT IS TO BE RETURNED TO DELDOT TRAFFIC - DOVER, DELAWARE.
3. POLE BASES, CABINET BASE AND CONDUIT JUNCTION WELLS TO BE REMOVED IN ACCORDANCE WITH SECTION 201 AND 202 OF THE STANDARD SPECIFICATIONS OR AS DIRECTED BY ENGINEER. EXISTING CONDUIT IS TO BE ABANDONED.
4. ALL GALVANIZED CONDUIT (GRC) SHALL BE REAMED AND THREADED. ALL GRC SHALL BE THREADED TOGETHER WITH APPROVED SCREW, BOLTED, AND COMPRESSION FITTING ARE NOT ACCEPTABLE.
5. ALL UNDERGROUND AND OVERHEAD UTILITIES SHOWN ON THESE PLANS ARE SCHEMATIC ONLY AND MAY NOT BE COMPLETE. THE CONTRACTOR SHALL BE RESPONSIBLE FOR NOTIFYING MISS UTILITY, AND/OR THE APPROPRIATE UTILITY PRIOR TO THE BEGINNING OF CONSTRUCTION FOR THE UTILITY MARKOUTS. IF THE CONTRACTOR PERCEIVES THAT A CONFLICT BETWEEN UTILITIES AND THE TRAFFIC SIGNAL WILL OCCUR, THE CONTRACTOR SHALL NOTIFY DELDOT TRAFFIC IMMEDIATELY BEFORE CONSTRUCTION.

RECOMMENDED _____ DATE: 9.16.10 | RECOMMENDED _____ DATE: _____ | RECOMMENDED _____ DATE: _____ | APPROVED TRAFFIC ENGINEER _____ DATE: 9/16/10 | APPROVED FOR INSTALLATION CHIEF TRAFFIC ENGINEER _____ DATE: 9/16/10

DELAWARE DEPARTMENT OF TRANSPORTATION

ADDENDUM / REVISIONS

SCALE 0 30 60 90 FEET

SR1/I-95 INTERCHANGE

CONTRACT	PERMIT NO.	N-538
28-090-03	DESIGNED BY: JCR	
COUNTY		
NEW CASTLE	CHECKED BY: RK&K	

SIGNAL PLAN
DEL RT. 1 NB OFF RAMP @ ROAD A

SHEET NO. 743
TOTAL SHTS. 803

M:\PROJECTS\2003\03059_DELTRNPK\SR1MALL\CADD\2809003\PLANS\CP100_SG_SR1.DGN

UNOFFICIAL WEBSITE COPY

UNOFFICIAL WEBSITE COPY

DELAWARE DEPARTMENT OF TRANSPORTATION
AASHTO CLASSIFICATION OF SOILS AND SOIL-AGGREGATE MIXTURES

General Classification	Granular Materials (35% or Less Passing 0.075 mm)							Silt-Clay Materials (More than 35% Passing 0.075 mm)					Organic Soils
Group Classification: Group	A-1		A-3	A-2				A-4	A-5	A-6	A-7		A-8
Sub-Group	A-1-a	A-1-b		A-2-4	A-2-5	A-2-6	A-2-7				A-7-5	A-7-6	
Graphic	A	B			5		7				5		
Sieve Analysis, % Passing													
2.00 mm (No. 10)	50 Max	-	-	-	-	-	-	-	-	-	-	-	See Note 1
0.425 mm (No. 40)	30 Max	50 Max	51 Min	-	-	-	-	-	-	-	-	-	
0.075 mm (No. 200)	15 Max	25 Max	10 Max	35 Max	35 Max	35 Max	35 Max	36 Min	36 Min	36 Min	36 Min	36 Min	
Characteristics of Fraction Passing 0.425 mm (No. 40)													
Liquid Limit	-		-	40 Max	41 Min	40 Max	41 Min	40 Max	41 Min	41 Max	41 Min	41 Min	See Note 1
Plasticity Index	6 Max		NP	10 Max	10 Max	11 Min	11 Min	10 Max	10 Max	11 Min	11 Min	11 Min	
Usual Types of Significant Constituent Materials	Stone Fragments, Gravel and Sand		Fine Sand	Silty or Clayey Gravel and Sand				Silty Soils		Clayey Soils			Organic Soils

Plasticity Index of A-7-5 Subgroup Is Equal to or Less Than LL Minus 30

Plasticity Index of A-7-6 Subgroup Is Greater Than LL Minus 30

Note 1-Classification Based on Visual Inspection and not on Sieve Analysis or Atterberg Limits

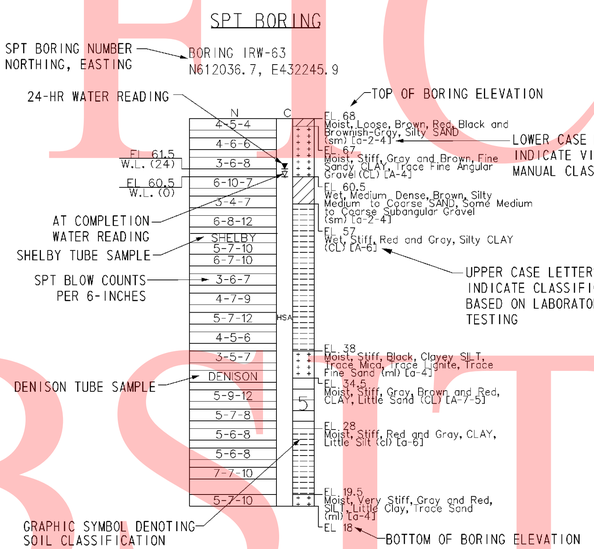

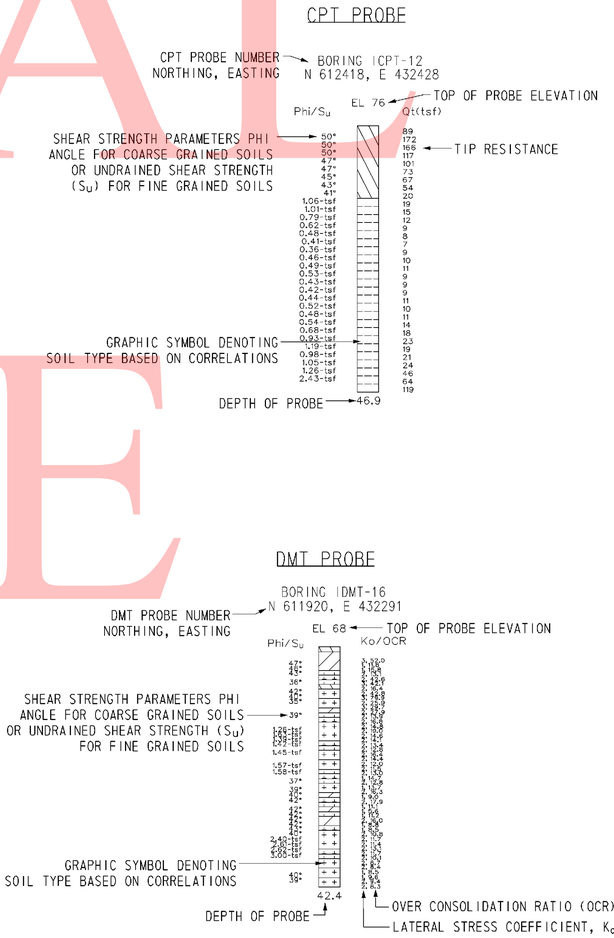

NOTES:

1. THE BORINGS AND DRIVE TEST WERE CONDUCTED IN MULTIPLE PHASES BY THE ROBERT B. BALTER COMPANY, THE WALTON CORPORATION, AND FINDLING, INC. BETWEEN AUGUST 2004 AND OCTOBER 2008.
2. THE SOIL SYMBOLS REFLECT ONLY THE MAJOR SOIL CONSTITUENT, FOR MORE COMPLETE SOIL CHARACTERISTIC REFER TO THE SOIL LOGS CONTAINED WITHIN THE FINAL FOUNDATION REPORTS DATED FEBRUARY 2009.
3. THE FIELD BORING LOGS RECORD SAMPLE SPOON RECOVERY. THE LOGS ARE AVAILABLE UPON REQUEST.
4. N = BLOWS ON A 2 INCH OD SAMPLING SPOON BY 140 LB DRIVE- WEIGHT FALLING 30 INCHES INDICATING SUCCESSIVE 6 INCH INCREMENTS OF PENETRATION IN LIEU OF BLOWS PER FOOT. PENETRATIONS GREATER THAN 6-INCHES OR LESS THAN 6-INCHES ARE INDICATED BY WOH, WOR, OR THE DEPTH OF THE PENETRATION OVER 50 (OR NUMBER OF BLOWS IF OTHER THAN 50) OVER THE NEAREST INCH.

   WOH= STATIC WEIGHT OF SAMPLING SPOON DRIVE-WEIGHT ASSEMBLY, DRIVE-WEIGHT,ANVIL (WHEN AUTOMATIC HAMMER IS USED), DRILL ROD(S), AND SAMPLING SPOONS.

   WOR= STATIC WEIGHT OF DRILL ROD AND SAMPLING SPOON
5. BORINGS AND SOIL SAMPLING WERE PERFORMED IN ACCORDANCE TO AASHTO T-206, T-225 AND T-306
6. USCS AND AASHTO DESIGNATIONS INDICATED IN UPPER CASE AND HAVE BEEN CONFIRMED USING LAB SOIL CLASSIFICATION TESTS. USCS AND AASHTO DESIGNATIONS INDICATED IN LOWER CASE ARE BASED ON VISUAL CLASSIFICATION TECHNIQUES ACCORDING TO ASTM D 2488 AND AASHTO M 145 BY RK&K GEOLOGIST OR ENGINEER.
7. CPT AND DMT WERE DRILLED BY IN-SITU SOIL TESTING, L.C AND CONETEC, INC.

   CPT = CONE PENETRATION TESTING
   DMT = FLAT- PLATE DILATOMETER
8. C= DEPTH OF HOLLOW STEM CONTINUOUS FLIGHT AUGER (HSA) WITH A 3-3/8 INCH ID, AND LIMIT OF MUD ROTARY (MD).
9. FOR LABORATORY TEST RESULTS FOR UNDISTURBED TUBE SAMPLES AND INDEX TESTING, SEE FOLLOWING SHEETS.
10. ADDITIONAL LABORATORY TEST RESULTS FOR UNDISTURBED TUBE SAMPLES ARE DETAILED ON THE BORING NOTES & LEGEND SHEET FOR EACH APPLICABLE BRIDGE AND RETAINING WALL STRUCTURE.
11. FOR ALL OTHER BORING & DRIVE TESTS SEE BRIDGE AND RETAINING WALL BORING & DRIVE TEST SHEETS.
12. FOR BORING LOCATIONS, SEE CONSTRUCTION PLAN SHEETS.

9/10/2010 10:40:23 AM
M:\PROJECTS\2003\03059_DELTRNPK\SRIMALL\CADD\2809003\PLANS\B0068_SR1.DGN

DELAWARE DEPARTMENT OF TRANSPORTATION	ADDENDUMS / REVISIONS	SR1 / I-95 INTERCHANGE	CONTRACT 28-090-03	BRIDGE NO.	BORING NOTES & LEGEND	SHEET NO. 744
			COUNTY NEW CASTLE	DESIGNED BY:		TOTAL SHTS. 803
				CHECKED BY:		

UNOFFICAL WEBSITE COPY

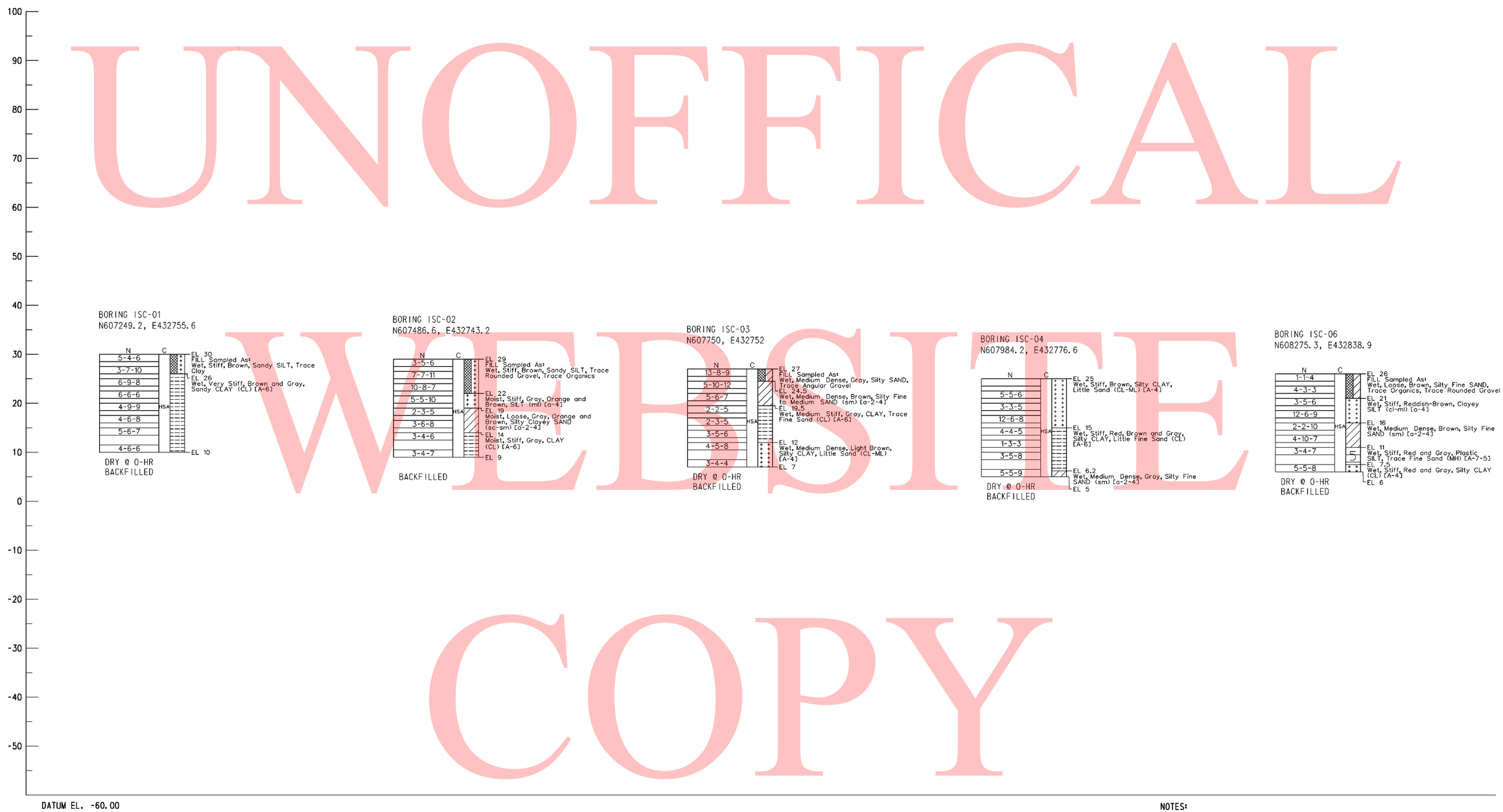

NOTES:

1. FOR BORING NOTES AND INFORMATION SEE SHEET NO. 744 OF 803.
2. FOR BORING LOCATIONS SEE CONSTRUCTION PLAN SHEETS.

3/1/2010 2:39:20 PM
M:\PROJECTS\2003\03059_DELTRNPK\SRIMALL\CADD\2809003\PLANS\B0069_SR1.DGN

DELAWARE DEPARTMENT OF TRANSPORTATION	ADDENDUMS / REVISIONS	SCALE 0 10 20 30 FEET	SR1 / I-95 INTERCHANGE	CONTRACT 28-090-03	BRIDGE NO.	BORING & DRIVE TESTS	SHEET NO. 745
				COUNTY NEW CASTLE	DESIGNED BY: JLT		TOTAL SHTS. 803
					CHECKED BY: EMK		

UNOFFICAL WEBSITE COPY

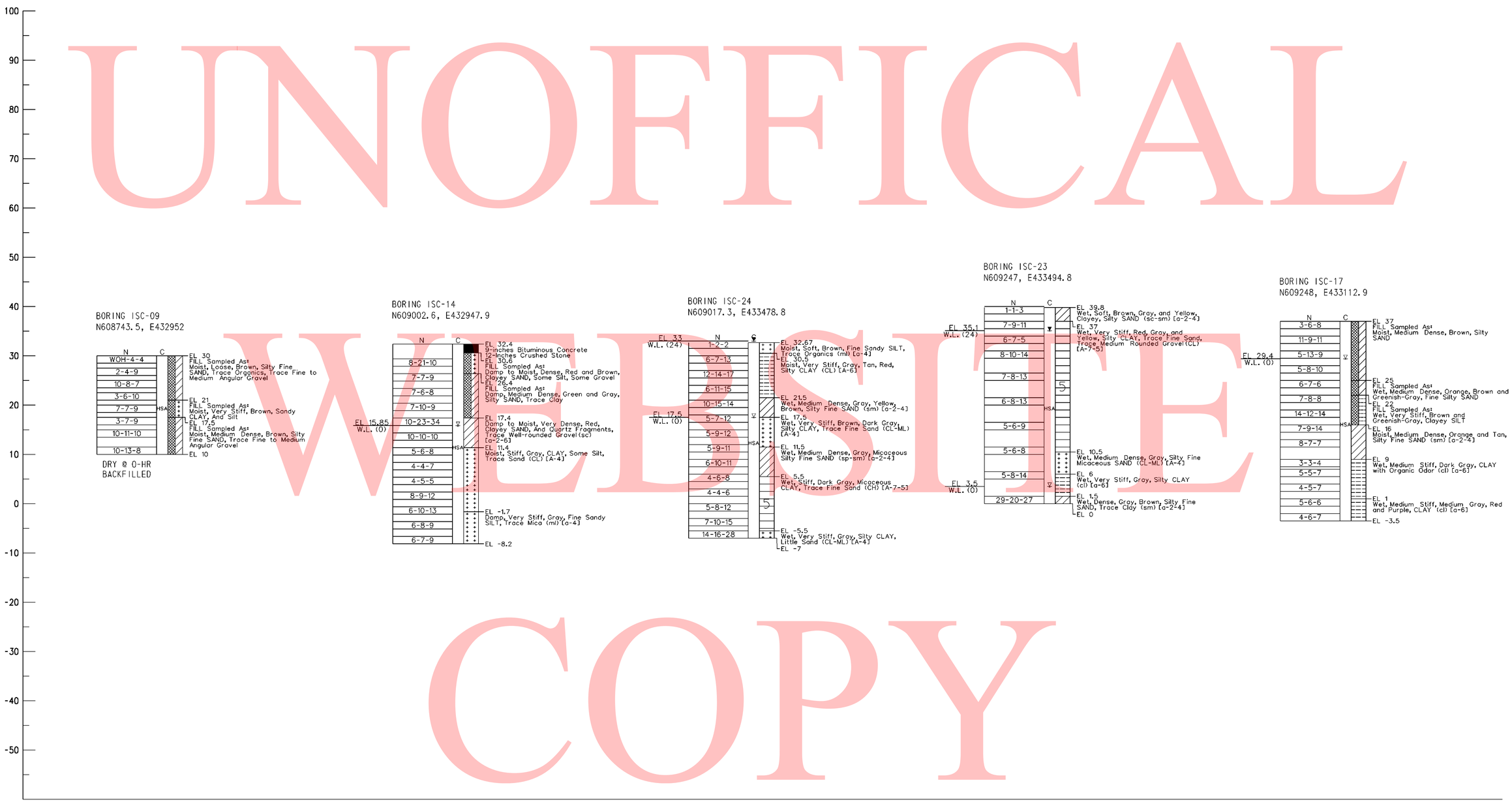

DATUM EL. -60.00

NOTES:

1. FOR BORING NOTES AND INFORMATION SEE SHEET NO. 744 OF 803.
2. FOR BORING LOCATIONS SEE CONSTRUCTION PLAN SHEETS.

3/3/2010 6:33:18 AM
M:\PROJECTS\2003\03059_DELTRNPK\SRIMALL\CADD\2809003\PLANS\B0070_SR1.DGN

DELAWARE DEPARTMENT OF TRANSPORTATION	ADDENDUMS / REVISIONS	SCALE 0 10 20 30 FEET	SR1 / I-95 INTERCHANGE	CONTRACT 28-090-03	BRIDGE NO.	BORING & DRIVE TESTS	SHEET NO. 746
				COUNTY NEW CASTLE	DESIGNED BY: JLT		TOTAL SHTS. 803
					CHECKED BY: EMK		

UNOFFICAL WEBSITE COPY

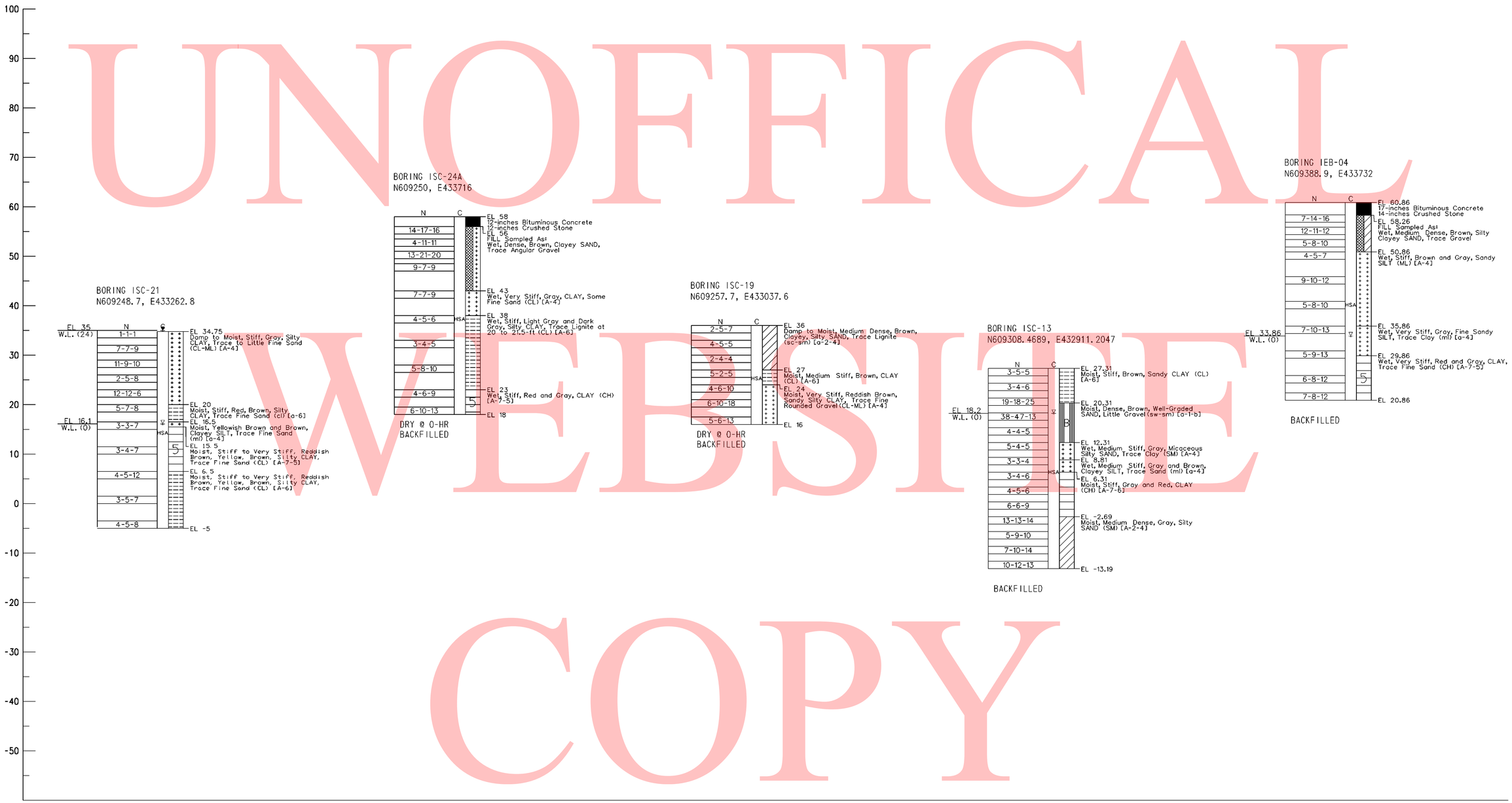

NOTES:

1. FOR BORING NOTES AND INFORMATION SEE SHEET NO. 744 OF 803.
2. FOR BORING LOCATIONS SEE CONSTRUCTION PLAN SHEETS.

3/1/2010 3:15:37 PM
M:\PROJECTS\2003\03059_DELTRNPK\SRIMALL\CADD\2809003\PLANS\B0071_SR1.DGN

DELAWARE DEPARTMENT OF TRANSPORTATION	ADDENDUMS / REVISIONS	SCALE 0 10 20 30 FEET	SR1 / I-95 INTERCHANGE	CONTRACT 28-090-03	BRIDGE NO.	BORING & DRIVE TESTS	SHEET NO. 747
				COUNTY NEW CASTLE	DESIGNED BY: JLT		TOTAL SHTS. 803
					CHECKED BY: EMK		

UNOFFICAL WEBSITE COPY

DATUM EL. -70.00

NOTES:

1. FOR BORING NOTES AND INFORMATION SEE SHEET NO. 744 OF 803.
2. FOR BORING LOCATIONS SEE CONSTRUCTION PLAN SHEETS.

3/1/2010 3:16:37 PM
M:\PROJECTS\2003\03059_DELTRNPK\SRMALL\CADD\2809003\PLANS\B0072_SR1.DGN

DELAWARE DEPARTMENT OF TRANSPORTATION	ADDENDUMS / REVISIONS	SCALE 0 10 20 30 FEET	SR1 / I-95 INTERCHANGE	CONTRACT 28-090-03	BRIDGE NO.	BORING & DRIVE TESTS	SHEET NO. 748
				COUNTY NEW CASTLE	DESIGNED BY: JLT		TOTAL SHTS. 803
					CHECKED BY: EMK		

UNOFFICAL WEBSITE COPY

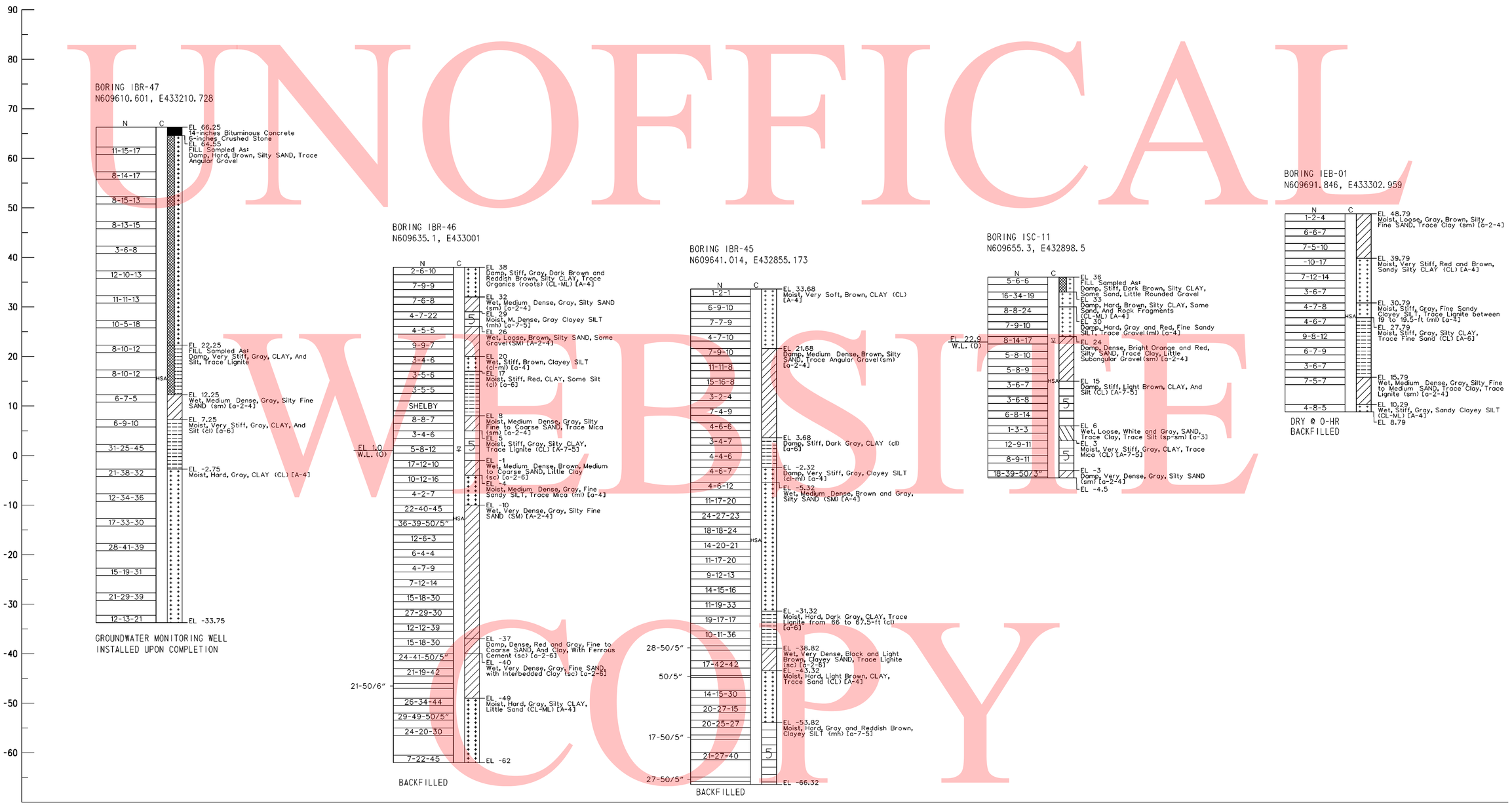

DATUM EL. -70.00

NOTES:

1. FOR BORING NOTES AND INFORMATION SEE SHEET NO. 744 OF 803.
2. FOR BORING LOCATIONS SEE CONSTRUCTION PLAN SHEETS.

DELAWARE DEPARTMENT OF TRANSPORTATION	ADDENDUMS / REVISIONS	SCALE 0 10 20 30 FEET	SR1 / I-95 INTERCHANGE	CONTRACT 28-090-03	BRIDGE NO.	BORING & DRIVE TESTS	SHEET NO. 749
				COUNTY NEW CASTLE	DESIGNED BY: JLT		TOTAL SHTS. 803
					CHECKED BY: EMK		

3/1/2010 3:17:28 PM
M:\PROJECTS\2003\03059_DELTRNPK\SRIMALL\CADD\2809003\PLANS\B0073_SR1.DGN

UNOFFICAL WEBSITE COPY

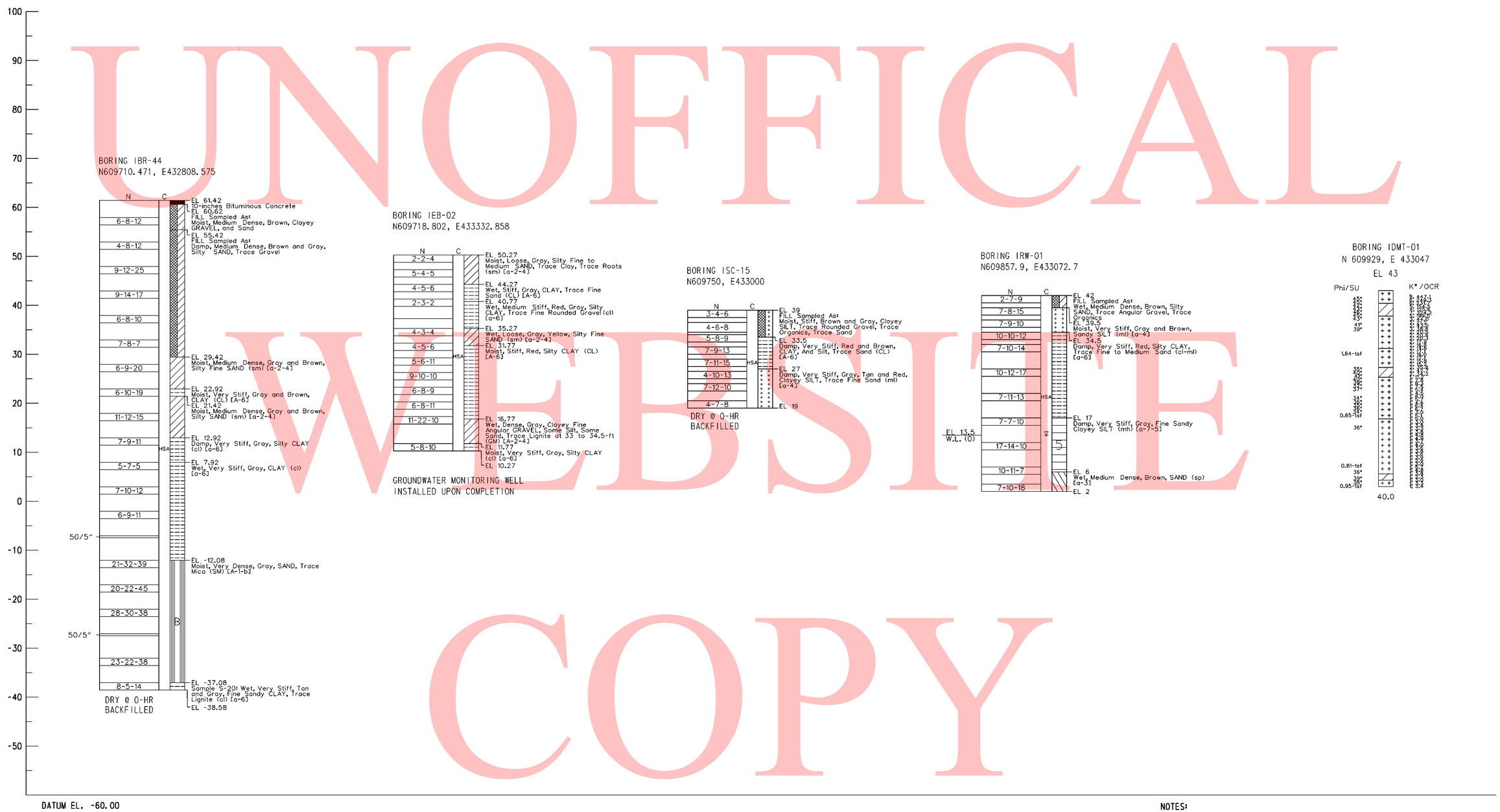

DATUM EL. -60.00

NOTES:

1. FOR BORING NOTES AND INFORMATION SEE SHEET NO. 744 OF 803.
2. FOR BORING LOCATIONS SEE CONSTRUCTION PLAN SHEETS.

3/1/2010 3:39:55 PM
M:\PROJECTS\2003\03059_DELTRNPK\SRIMALL\CADD\2809003\PLANS\B0074_SR1.DGN

DELAWARE DEPARTMENT OF TRANSPORTATION	ADDENDUMS / REVISIONS	SCALE 0 10 20 30 FEET	SR1 / I-95 INTERCHANGE	CONTRACT 28-090-03	BRIDGE NO.	BORING & DRIVE TESTS	SHEET NO. 750
				COUNTY NEW CASTLE	DESIGNED BY: JLT		TOTAL SHTS. 803
					CHECKED BY: EMK		

UNOFFICAL WEBSITE COPY

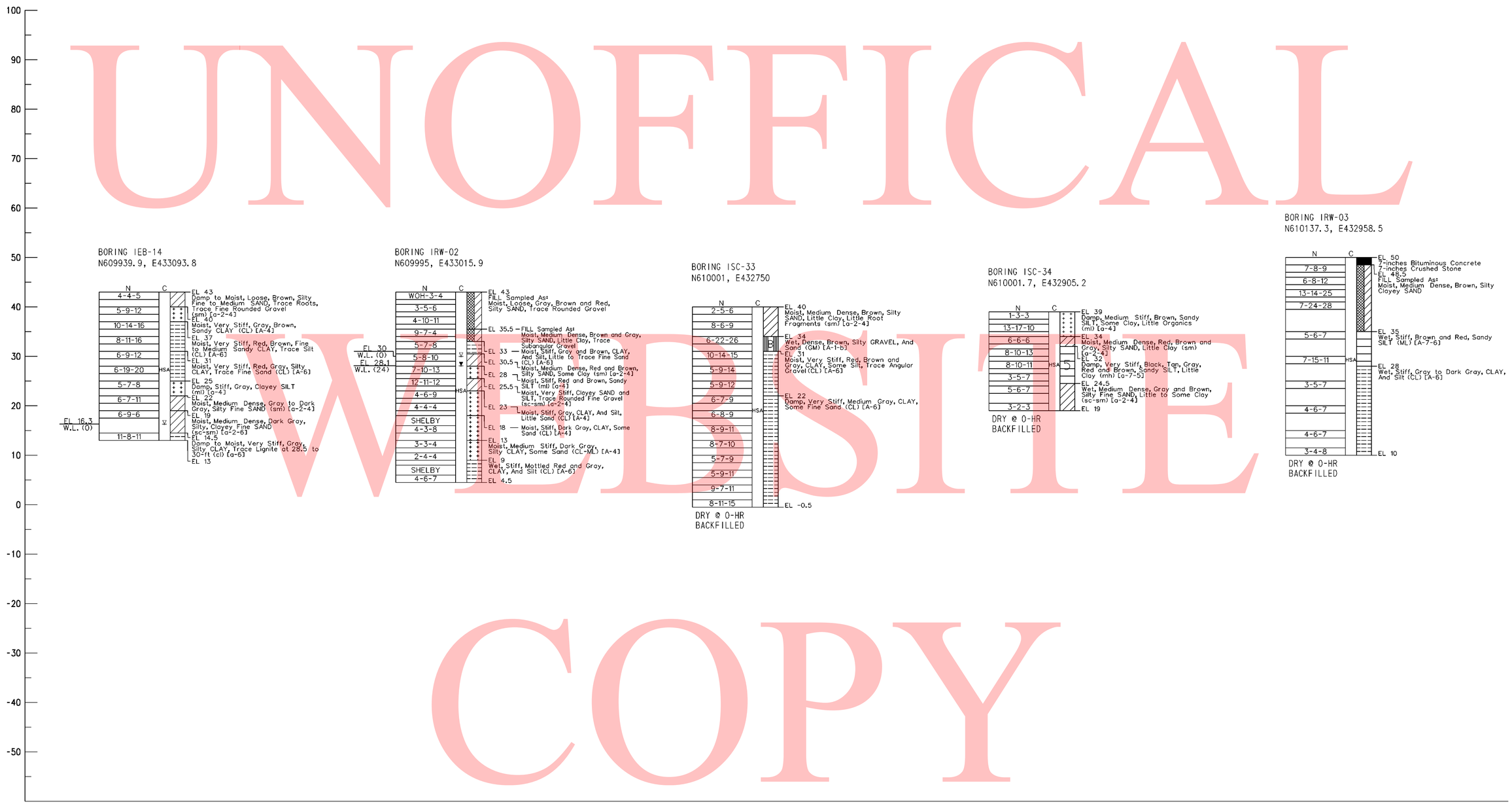

NOTES:

1. FOR BORING NOTES AND INFORMATION SEE SHEET NO. 128 OF 143.
2. FOR BORING LOCATIONS SEE CONSTRUCTION PLAN SHEETS.

DELAWARE DEPARTMENT OF TRANSPORTATION	ADDENDUMS / REVISIONS	SCALE 0 10 20 30 FEET	SR1 / I-95 INTERCHANGE	CONTRACT 28-090-03	BRIDGE NO.	BORING & DRIVE TESTS	SHEET NO. 751
				COUNTY NEW CASTLE	DESIGNED BY: JLT		TOTAL SHTS. 803
					CHECKED BY: EMK		

3/3/2010 6:35:02 AM
M:\PROJECTS\2003\03059_DELTRNPK\SR1MALL\CADD\2809003\PLANS\B0075_SR1.DGN

UNOFFICAL WEBSITE COPY

NOTES:

1. FOR BORING NOTES AND INFORMATION SEE SHEET NO. 128 OF 143.
2. FOR BORING LOCATIONS SEE CONSTRUCTION PLAN SHEETS.

3/1/2010 3:41:16 PM
M:\PROJECTS\2003\03059_DELTRNPK\SR1MALL\CADD\2809003\PLANS\B0076_SR.DGN

DELAWARE DEPARTMENT OF TRANSPORTATION	ADDENDUMS / REVISIONS	SCALE 0 10 20 30 FEET	SR1 / I-95 INTERCHANGE	CONTRACT 28-090-03	BRIDGE NO.	BORING & DRIVE TESTS	SHEET NO. 752
				COUNTY NEW CASTLE	DESIGNED BY: JLT		TOTAL SHTS. 803
					CHECKED BY: EMK		

UNOFFICAL WEBSITE COPY

NOTES:

1. FOR BORING NOTES AND INFORMATION SEE SHEET NO. 128 OF 143.
2. FOR BORING LOCATIONS SEE CONSTRUCTION PLAN SHEETS.

3/1/2010 3:42:17 PM
M:\PROJECTS\2003\03059_DELTRNPK\SR1MALL\CADD\2809003\PLANS\B0077_SR1.DGN

DELAWARE DEPARTMENT OF TRANSPORTATION	ADDENDUMS / REVISIONS	SCALE 0 10 20 30 FEET	SR1 / I-95 INTERCHANGE	CONTRACT 28-090-03	BRIDGE NO.	BORING & DRIVE TESTS	SHEET NO. 753
				COUNTY NEW CASTLE	DESIGNED BY: JLT		TOTAL SHTS. 803
					CHECKED BY: EMK		

UNOFFICAL WEBSITE COPY

DATUM EL. -60.00

NOTES:

1. FOR BORING NOTES AND INFORMATION SEE SHEET NO. 128 OF 143.
2. FOR BORING LOCATIONS SEE CONSTRUCTION PLAN SHEETS.

3/1/2010 3:42:44 PM
M:\PROJECTS\2003\03059_DELTRNPK\SRIMALL\CADD\2809003\PLANS\B0078_SR1.DGN

DELAWARE DEPARTMENT OF TRANSPORTATION	ADDENDUMS / REVISIONS	SCALE 0 10 20 30 FEET	SR1 / I-95 INTERCHANGE	CONTRACT 28-090-03	BRIDGE NO.	BORING & DRIVE TESTS	SHEET NO. 754
				COUNTY NEW CASTLE	DESIGNED BY: JLT		TOTAL SHTS. 803
					CHECKED BY: EMK		

UNOFFICAL WEBSITE COPY

DATUM EL. -60.00

NOTES:

1. FOR BORING NOTES AND INFORMATION SEE SHEET NO. 128 OF 143.
2. FOR BORING LOCATIONS SEE CONSTRUCTION PLAN SHEETS.

DELAWARE DEPARTMENT OF TRANSPORTATION	ADDENDUMS / REVISIONS	SCALE 0 10 20 30 FEET	SR1 / I-95 INTERCHANGE	CONTRACT 28-090-03	BRIDGE NO.	BORING & DRIVE TESTS	SHEET NO. 755
				COUNTY NEW CASTLE	DESIGNED BY: JLT		TOTAL SHTS. 803
					CHECKED BY: EMK		

6/28/2010 1:4:05 PM
M:\PROJECTS\2003\03059_DELTRNPK\SRIMALL\CADD\2809003\PLANS\B0079_SR1.DGN

DATUM EL. -60.00

NOTES:

1. FOR BORING NOTES AND INFORMATION SEE SHEET NO. 128 OF 143.
2. FOR BORING LOCATIONS SEE CONSTRUCTION PLAN SHEETS.

UNOFFICAL WEBSITE COPY

6/28/2010 1:32:00 PM
M:\PROJECTS\2003\03059_DELTRNPK\SRMALL\CADD\2809003\PLANS\B0080_SR1.DGN

DELAWARE DEPARTMENT OF TRANSPORTATION	ADDENDUMS / REVISIONS	SCALE 0 10 20 30 FEET	SR1 / I-95 INTERCHANGE	CONTRACT 28-090-03	BRIDGE NO.	BORING & DRIVE TESTS	SHEET NO. 756
				COUNTY NEW CASTLE	DESIGNED BY: JLT		TOTAL SHTS. 803
					CHECKED BY: EMK		

DATUM EL. -60.00

NOTES:

1. FOR BORING NOTES AND INFORMATION SEE SHEET NO. 128 OF 143.
2. FOR BORING LOCATIONS SEE CONSTRUCTION PLAN SHEETS.

UNOFFICIAL WEBSITE COPY

6/28/2010 1:51:48 PM
M:\PROJECTS\2003\03059_DELTRNPK\SRIMALL\CADD\2809003\PLANS\B0081_SR1.DGN

DELAWARE DEPARTMENT OF TRANSPORTATION	ADDENDUMS / REVISIONS	SCALE 0 10 20 30 FEET	SR1 / I-95 INTERCHANGE	CONTRACT 28-090-03	BRIDGE NO.	BORING & DRIVE TESTS	SHEET NO. 757
				COUNTY NEW CASTLE	DESIGNED BY: JLT		TOTAL SHTS. 803
					CHECKED BY: EMK		

NOTES:

1. FOR BORING NOTES AND INFORMATION SEE SHEET NO. 128 OF 143.
2. FOR BORING LOCATIONS SEE CONSTRUCTION PLAN SHEETS.

UNOFFICAL WEBSITE COPY

6/28/2010 12:43:09 PM
M:\PROJECTS\2003\03059_DELTRNPK\SR1MALL\CADD\2809003\PLANS\B0082_SR1.DGN

DELAWARE DEPARTMENT OF TRANSPORTATION	ADDENDUMS / REVISIONS	SCALE 0 10 20 30 FEET	SR1 / I-95 INTERCHANGE	CONTRACT 28-090-03	BRIDGE NO.	BORING & DRIVE TESTS	SHEET NO. 758
				COUNTY NEW CASTLE	DESIGNED BY: JLT		TOTAL SHTS. 803
					CHECKED BY: EMK		

UNOFFICAL WEBSITE COPY

NOTES:

1. FOR BORING NOTES AND INFORMATION SEE SHEET NO. 128 OF 143.
2. FOR BORING LOCATIONS SEE CONSTRUCTION PLAN SHEETS.

3/1/2010 3:49:18 PM
M:\PROJECTS\2003\03059_DELTRNPK\SR1MALL\CADD\2809003\PLANS\B0083_SR1.DGN

DELAWARE DEPARTMENT OF TRANSPORTATION	ADDENDUMS / REVISIONS	SCALE 0 10 20 30 FEET	SR1 / I-95 INTERCHANGE	CONTRACT 28-090-03	BRIDGE NO.	BORING & DRIVE TESTS	SHEET NO. 759
				COUNTY NEW CASTLE	DESIGNED BY: JLT		TOTAL SHTS. 803
					CHECKED BY: EMK		

UNOFFICAL WEBSITE COPY

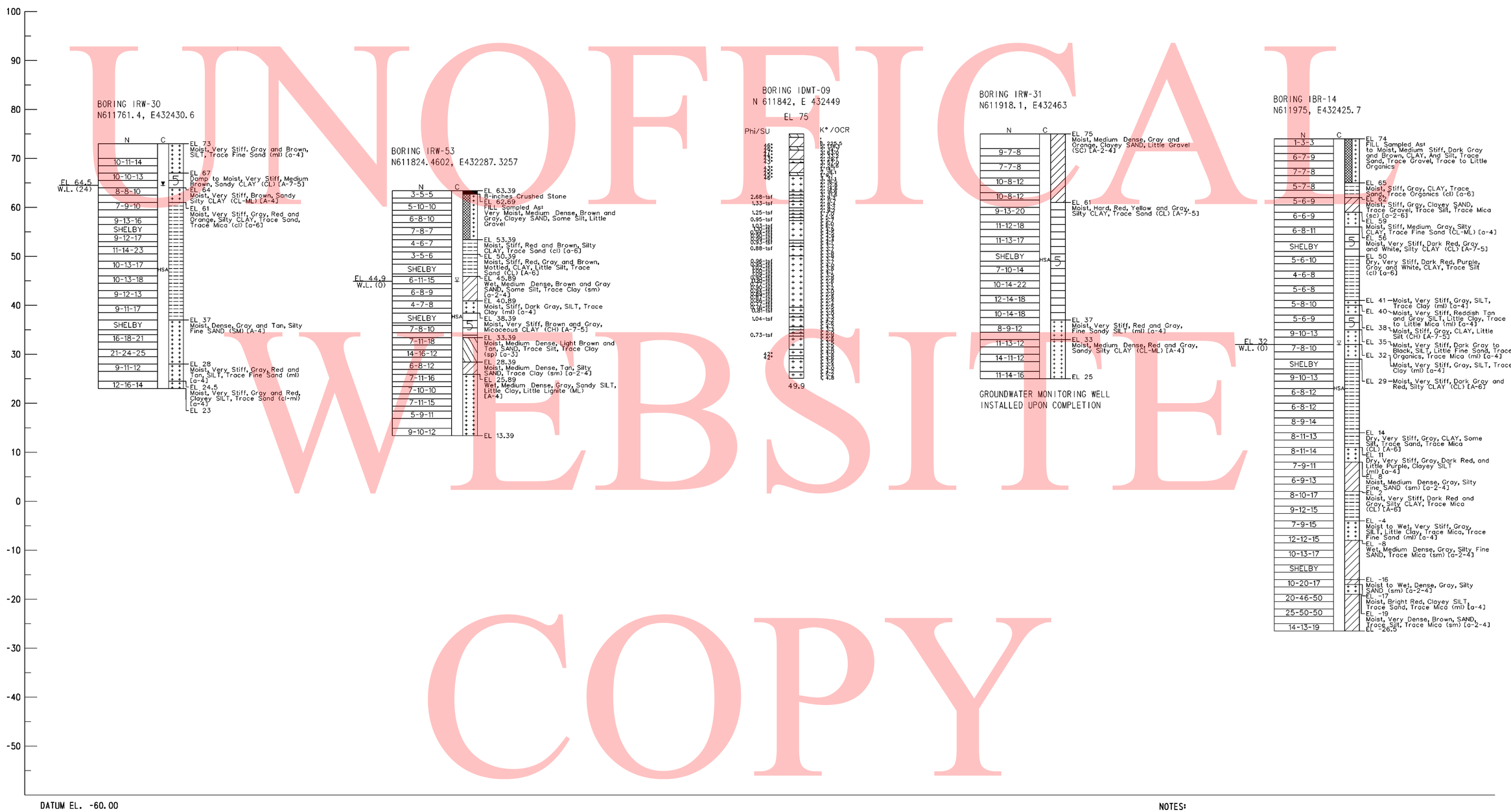

NOTES:

1. FOR BORING NOTES AND INFORMATION SEE SHEET NO. 744 OF 803.
2. FOR BORING LOCATIONS SEE CONSTRUCTION PLAN SHEETS.

3/1/2010 3:49:49 PM
M:\PROJECTS\2003\03059_DELTRNPK\SR1MALL\CADD\2809003\PLANS\B0084_SR1.DGN

DELAWARE DEPARTMENT OF TRANSPORTATION	ADDENDUMS / REVISIONS	SCALE 0 10 20 30 FEET	SR1 / I-95 INTERCHANGE	CONTRACT 28-090-03	BRIDGE NO.	BORING & DRIVE TESTS	SHEET NO. 760
				COUNTY NEW CASTLE	DESIGNED BY: JLT		TOTAL SHTS. 803
					CHECKED BY: EMK		

UNOFFICAL WEBSITE COPY

DATUM EL. -50.00

NOTES:

1. FOR BORING NOTES AND INFORMATION SEE SHEET NO. 744 OF 803.
2. FOR BORING LOCATIONS SEE CONSTRUCTION PLAN SHEETS.

3/1/2010 3:50:32 PM
M:\PROJECTS\2003\03059_DELTRNPK\SRMALL\CADD\2809003\PLANS\B0085_SR1.DGN

DELAWARE DEPARTMENT OF TRANSPORTATION	ADDENDUMS / REVISIONS	SCALE 0 10 20 30 FEET	SR1 / I-95 INTERCHANGE	CONTRACT 28-090-03	BRIDGE NO.	BORING & DRIVE TESTS	SHEET NO. 761
				COUNTY NEW CASTLE	DESIGNED BY: JLT		TOTAL SHTS. 803
					CHECKED BY: EMK		

UNOFFICAL WEBSITE COPY

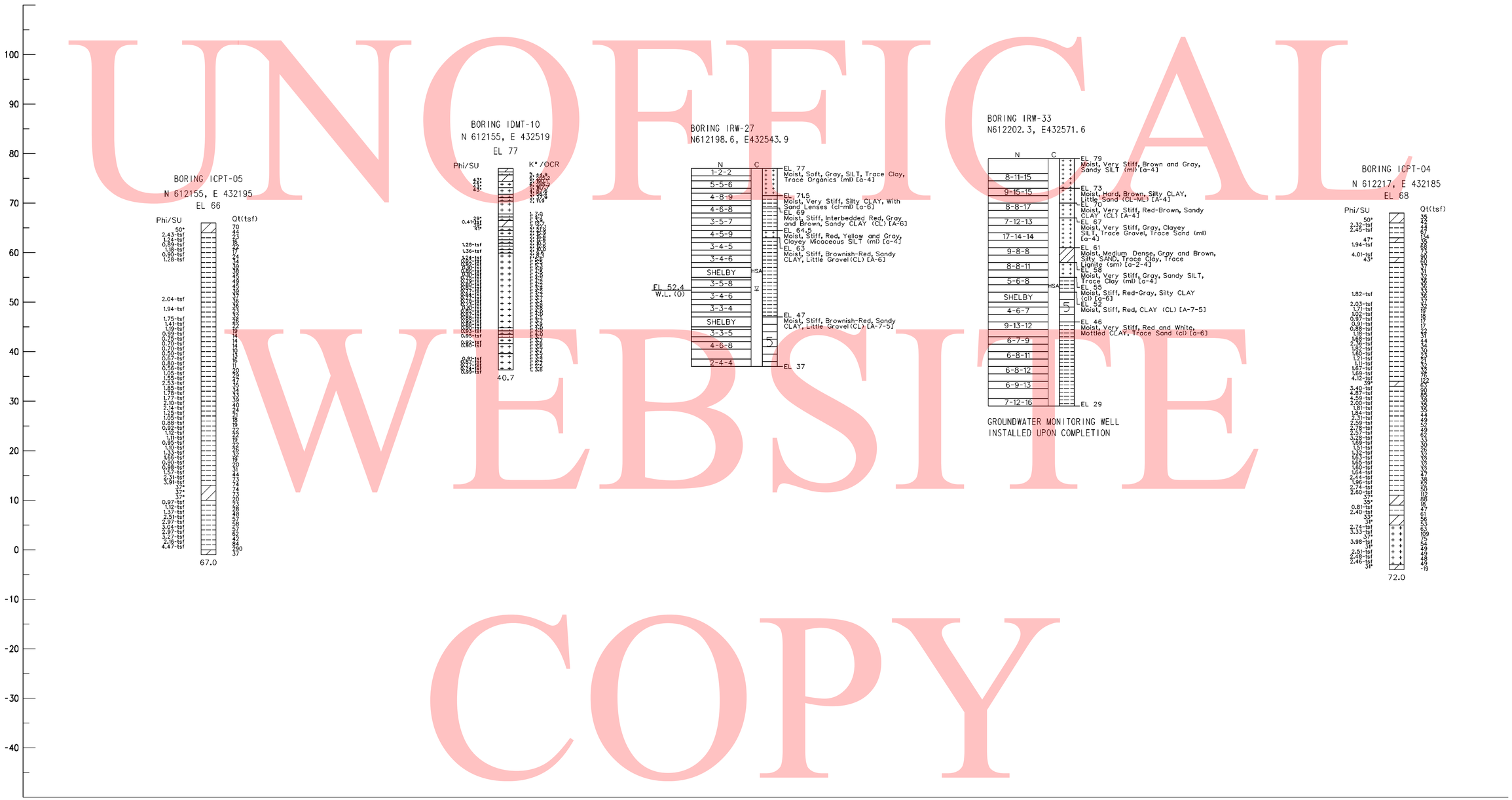

NOTES:

1. FOR BORING NOTES AND INFORMATION SEE SHEET NO. 744 OF 803.
2. FOR BORING LOCATIONS SEE CONSTRUCTION PLAN SHEETS.

DELAWARE DEPARTMENT OF TRANSPORTATION	ADDENDUMS / REVISIONS	SCALE 0 10 20 30 FEET	SR1 / I-95 INTERCHANGE	CONTRACT 28-090-03	BRIDGE NO.	BORING & DRIVE TESTS	SHEET NO. 762
				COUNTY NEW CASTLE	DESIGNED BY: JLT		TOTAL SHTS. 803
					CHECKED BY: EMK		

3/1/2010 3:51:10 PM
M:\PROJECTS\2003\03059_DELTRNPK\SRIMALL\CADD\2809003\PLANS\B0086_SR.DGN

UNOFFICAL WEBSITE COPY

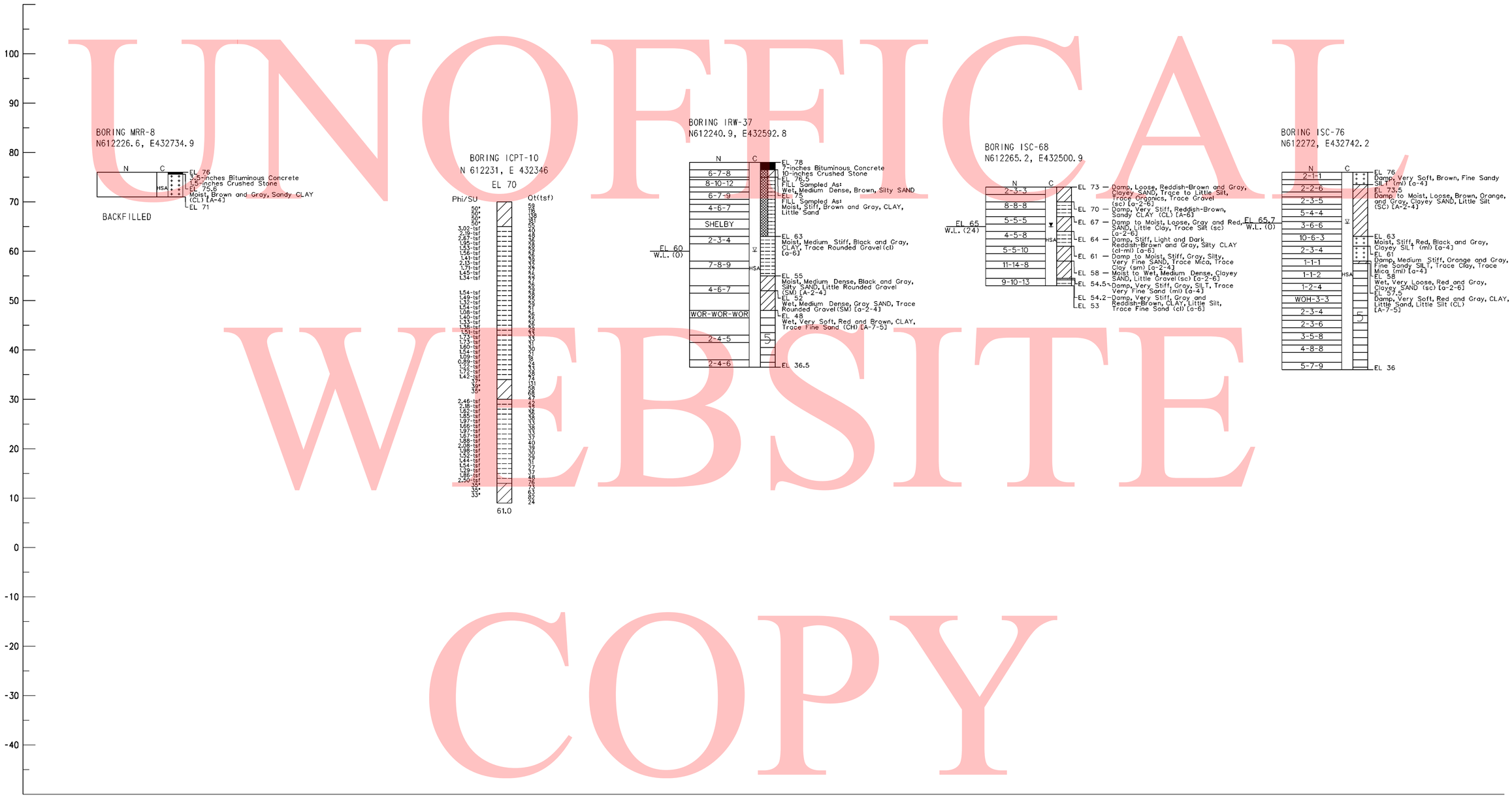

DATUM EL. -50.00

NOTES:

1. FOR BORING NOTES AND INFORMATION SEE SHEET NO. 744 OF 803.
2. FOR BORING LOCATIONS SEE CONSTRUCTION PLAN SHEETS.

DELAWARE DEPARTMENT OF TRANSPORTATION	ADDENDUMS / REVISIONS	SCALE 0 10 20 30 FEET	SR1 / I-95 INTERCHANGE	CONTRACT 28-090-03	BRIDGE NO.	BORING & DRIVE TESTS	SHEET NO. 763
				COUNTY NEW CASTLE	DESIGNED BY: JLT		TOTAL SHTS. 803
					CHECKED BY: EMK		

3/1/2010 3:51:41 PM
M:\PROJECTS\2003\03059_DELTRNPK\SRIMALL\CADD\2809003\PLANS\B0087_SR1.DGN

NOTES:

1. FOR BORING NOTES AND INFORMATION SEE SHEET NO. 744 OF 803.
2. FOR BORING LOCATIONS SEE CONSTRUCTION PLAN SHEETS.

UNOFFICAL WEBSITE COPY

3/1/2010 3:52:50 PM
M:\PROJECTS\2003\03059_DELTRNPK\SR1MALL\CADD\2809003\PLANS\B0088_SR1.DGN

DELAWARE DEPARTMENT OF TRANSPORTATION	ADDENDUMS / REVISIONS	SCALE 0 10 20 30 FEET	SR1 / I-95 INTERCHANGE	CONTRACT 28-090-03	BRIDGE NO.	BORING & DRIVE TESTS	SHEET NO. 764
				COUNTY NEW CASTLE	DESIGNED BY: JLT		TOTAL SHTS. 803
					CHECKED BY: EMK		

UNOFFICAL WEBSITE COPY

DATUM EL. -50.00

NOTES:

1. FOR BORING NOTES AND INFORMATION SEE SHEET NO. 744 OF 803.
2. FOR BORING LOCATIONS SEE CONSTRUCTION PLAN SHEETS.

3/1/2010 3:53:13 PM
M:\PROJECTS\2003\03059_DELTRNPK\SRIMALL\CADD\2809003\PLANS\B0089_SR1.DGN

DELAWARE DEPARTMENT OF TRANSPORTATION	ADDENDUMS / REVISIONS	SCALE 0 10 20 30 FEET	SR1 / I-95 INTERCHANGE	CONTRACT 28-090-03	BRIDGE NO.	BORING & DRIVE TESTS	SHEET NO. 765
				COUNTY NEW CASTLE	DESIGNED BY: JLT		TOTAL SHTS. 803
					CHECKED BY: EMK		

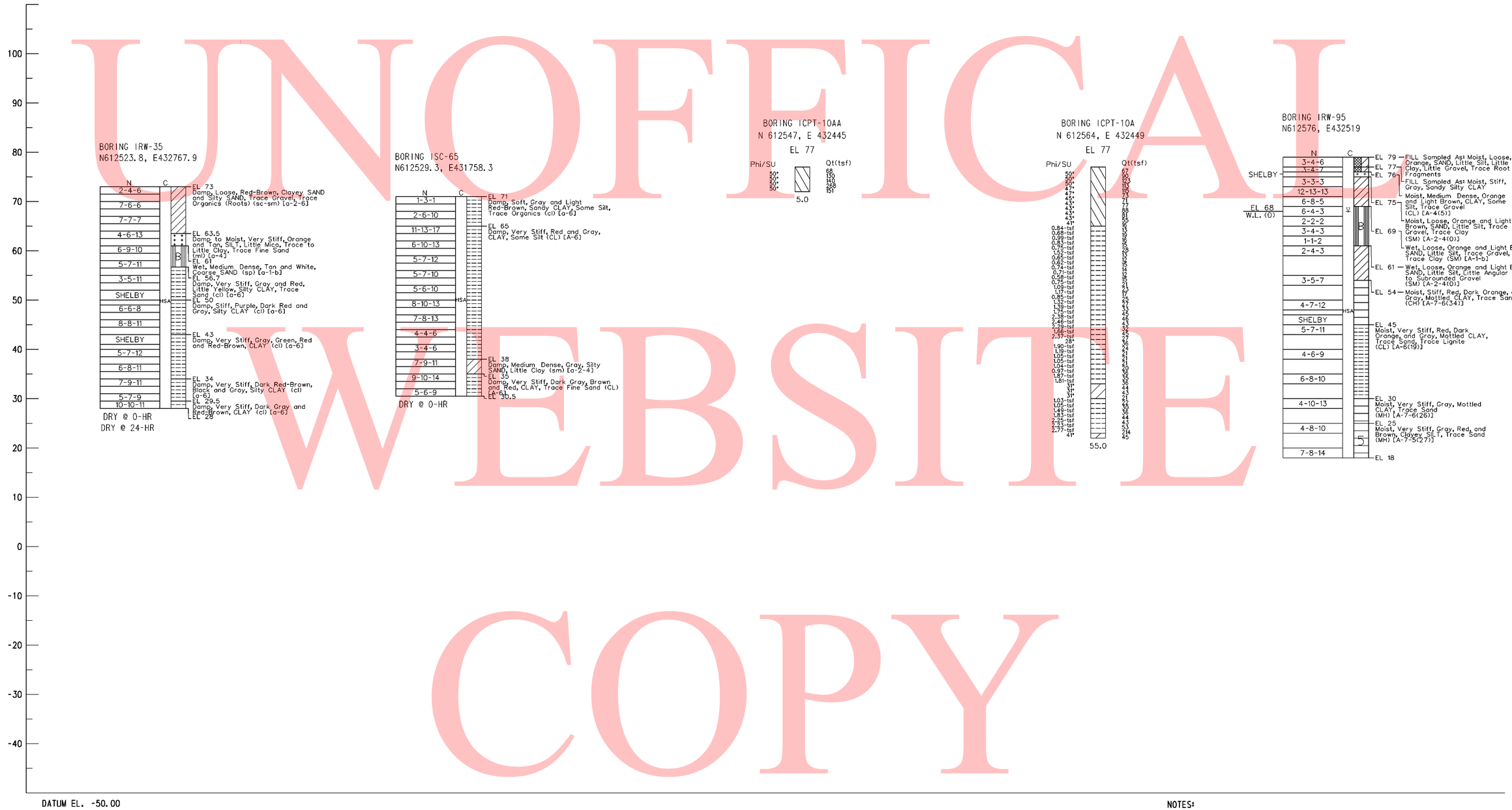

NOTES:

1. FOR BORING NOTES AND INFORMATION SEE SHEET NO. 744 OF 803.
2. FOR BORING LOCATIONS SEE CONSTRUCTION PLAN SHEETS.

UNOFFICAL WEBSITE COPY

3/1/2010 3:53:39 PM
M:\PROJECTS\2003\03059_DELTRNPK\SRIMALL\CADD\2809003\PLANS\B0090_SR1.DGN

DELAWARE DEPARTMENT OF TRANSPORTATION	ADDENDUMS / REVISIONS	SCALE 0 10 20 30 FEET	SR1 / I-95 INTERCHANGE	CONTRACT 28-090-03	BRIDGE NO.	BORING & DRIVE TESTS	SHEET NO. 766
				COUNTY NEW CASTLE	DESIGNED BY: JLT		TOTAL SHTS. 803
					CHECKED BY: EMK		

DATUM EL. -50.00

NOTES:

1. FOR BORING NOTES AND INFORMATION SEE SHEET NO. 744 OF 803.
2. FOR BORING LOCATIONS SEE CONSTRUCTION PLAN SHEETS.

UNOFFICIAL WEBSITE COPY

3/1/2010 3:54:18 PM
M:\PROJECTS\2003\03059_DELTRNPK\SRIMALL\CADD\2809003\PLANS\B0091_SR1.DGN

DELAWARE DEPARTMENT OF TRANSPORTATION	ADDENDUMS / REVISIONS	SCALE 0 10 20 30 FEET	SR1 / I-95 INTERCHANGE	CONTRACT 28-090-03	BRIDGE NO.	BORING & DRIVE TESTS	SHEET NO. 767
				COUNTY NEW CASTLE	DESIGNED BY: JLT		TOTAL SHTS. 803
					CHECKED BY: EMK		

UNOFFICAL WEBSITE COPY

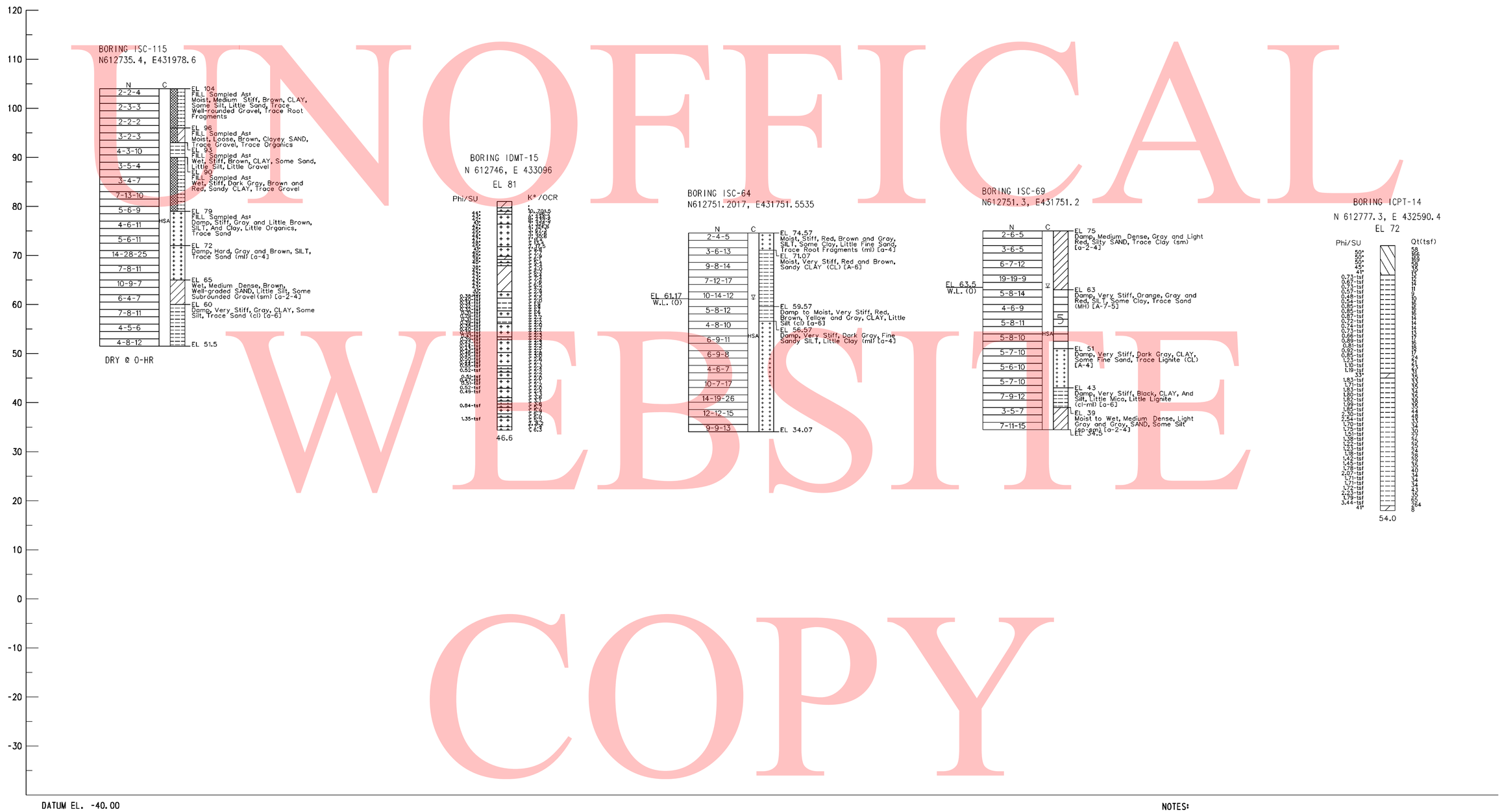

DATUM EL. -40.00

NOTES:

1. FOR BORING NOTES AND INFORMATION SEE SHEET NO. 744 OF 803.
2. FOR BORING LOCATIONS SEE CONSTRUCTION PLAN SHEETS.

3/1/2010 4:01:38 PM
M:\PROJECTS\2003\03059_DELTRNPK\SRIMALL\CADD\2809003\PLANS\B0092_SR1.DGN

DELAWARE DEPARTMENT OF TRANSPORTATION	ADDENDUMS / REVISIONS	SCALE 0 10 20 30 FEET	SR1 / I-95 INTERCHANGE	CONTRACT 28-090-03	BRIDGE NO.	BORING & DRIVE TESTS	SHEET NO. 768
				COUNTY NEW CASTLE	DESIGNED BY: JLT		TOTAL SHTS. 803
					CHECKED BY: EMK		

UNOFFICIAL WEBSITE COPY

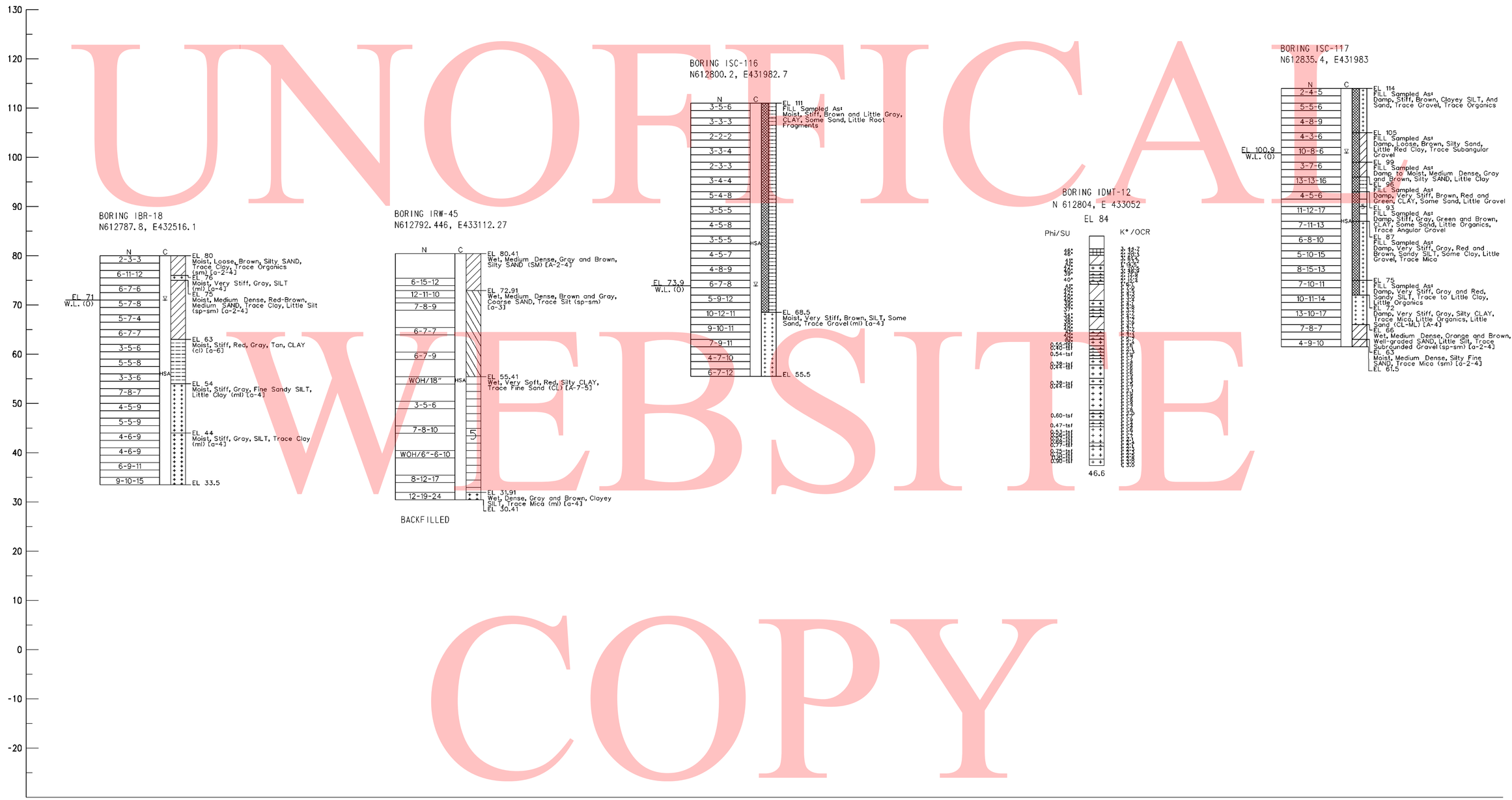

DATUM EL. -30.00

NOTES:

1. FOR BORING NOTES AND INFORMATION SEE SHEET NO. 744 OF 803.
2. FOR BORING LOCATIONS SEE CONSTRUCTION PLAN SHEETS.

3/1/2010 4:04:20 PM
M:\PROJECTS\2003\03059_DELTRNPK\SRIMALL\CADD\2809003\PLANS\B0093_SR1.DGN

DELAWARE DEPARTMENT OF TRANSPORTATION	ADDENDUMS / REVISIONS	SCALE 0 10 20 30 FEET	SR1 / I-95 INTERCHANGE	CONTRACT 28-090-03	BRIDGE NO.	BORING & DRIVE TESTS	SHEET NO. 769
				COUNTY NEW CASTLE	DESIGNED BY: JLT		TOTAL SHTS. 803
					CHECKED BY: EMK		

DATUM EL. -60.00

NOTES:

1. FOR BORING NOTES AND INFORMATION SEE SHEET NO. 744 OF 803.
2. FOR BORING LOCATIONS SEE CONSTRUCTION PLAN SHEETS.

UNOFFICIAL WEBSITE COPY

3/1/2010 4:07:37 PM
M:\PROJECTS\2003\03059_DELTRNPK\SRIMALL\CADD\2809003\PLANS\B0094_SR1.DGN

DELAWARE DEPARTMENT OF TRANSPORTATION	ADDENDUMS / REVISIONS	SCALE 0 10 20 30 FEET	SR1 / I-95 INTERCHANGE	CONTRACT 28-090-03	BRIDGE NO.	BORING & DRIVE TESTS	SHEET NO. 770
				COUNTY NEW CASTLE	DESIGNED BY: JLT		TOTAL SHTS. 803
					CHECKED BY: EMK		

DATUM EL. -60.00

NOTES:

1. FOR BORING NOTES AND INFORMATION SEE SHEET NO. 744 OF 803.
2. FOR BORING LOCATIONS SEE CONSTRUCTION PLAN SHEETS.

UNOFFICIAL WEBSITE COPY

3/1/2010 4:08:33 PM
M:\PROJECTS\2003\03059_DELTRNPK\SRMALL\CADD\2809003\PLANS\B0095_SR1.DGN

DELAWARE DEPARTMENT OF TRANSPORTATION	ADDENDUMS / REVISIONS	SCALE 0 10 20 30 FEET	SR1 / I-95 INTERCHANGE	CONTRACT 28-090-03	BRIDGE NO.	BORING & DRIVE TESTS	SHEET NO. 771
				COUNTY NEW CASTLE	DESIGNED BY: JLT		TOTAL SHTS. 803
					CHECKED BY: EMK		

DATUM EL. -60.00

NOTES:

1. FOR BORING NOTES AND INFORMATION SEE SHEET NO. 744 OF 803.
2. FOR BORING LOCATIONS SEE CONSTRUCTION PLAN SHEETS.

UNOFFICIAL WEBSITE COPY

DELAWARE DEPARTMENT OF TRANSPORTATION	ADDENDUMS / REVISIONS	SCALE 0 10 20 30 FEET	SR1 / I-95 INTERCHANGE	CONTRACT 28-090-03	BRIDGE NO.	BORING & DRIVE TESTS	SHEET NO. 772
				COUNTY NEW CASTLE	DESIGNED BY: JLT		TOTAL SHTS. 803
					CHECKED BY: EMK		

3/1/2010 4:15:53 PM
M:\PROJECTS\2003\03059_DELTRNPK\SR1MALL\CADD\2809003\PLANS\B0096_SR1.DGN

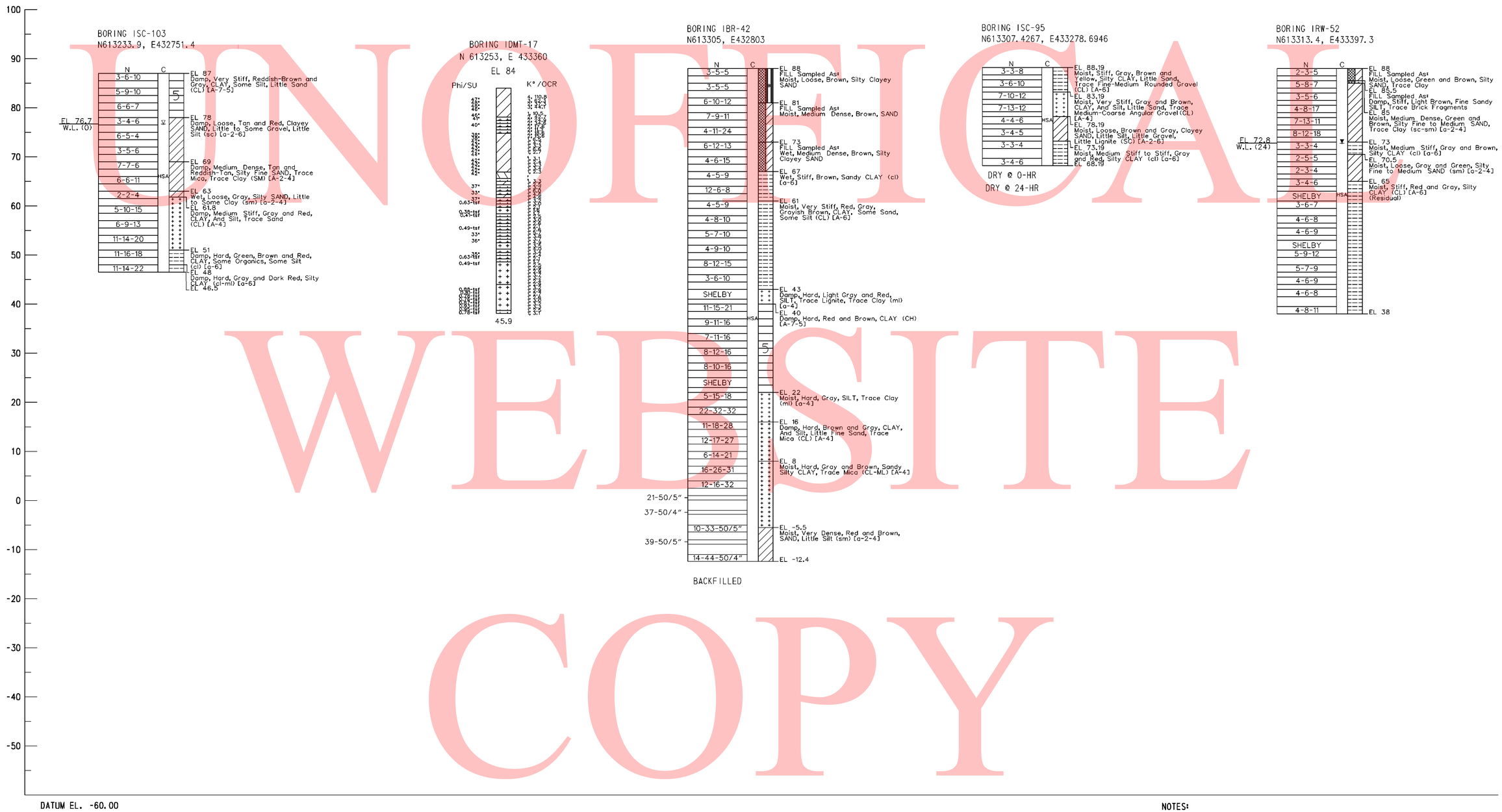

UNOFFICIAL WEBSITE COPY

NOTES:

1. FOR BORING NOTES AND INFORMATION SEE SHEET NO. 744 OF 803.
2. FOR BORING LOCATIONS SEE CONSTRUCTION PLAN SHEETS.

DELAWARE DEPARTMENT OF TRANSPORTATION	ADDENDUMS / REVISIONS	SCALE 0 10 20 30 FEET	SR1 / I-95 INTERCHANGE	CONTRACT 28-090-03	BRIDGE NO.	BORING & DRIVE TESTS	SHEET NO. 773
				COUNTY NEW CASTLE	DESIGNED BY: JLT		TOTAL SHTS. 803
					CHECKED BY: EMK		

3/1/2010 4:16:19 PM
M:\PROJECTS\2003\03059_DELTRNPK\SR1MALL\CADD\2809003\PLANS\B0097_SR1.DGN

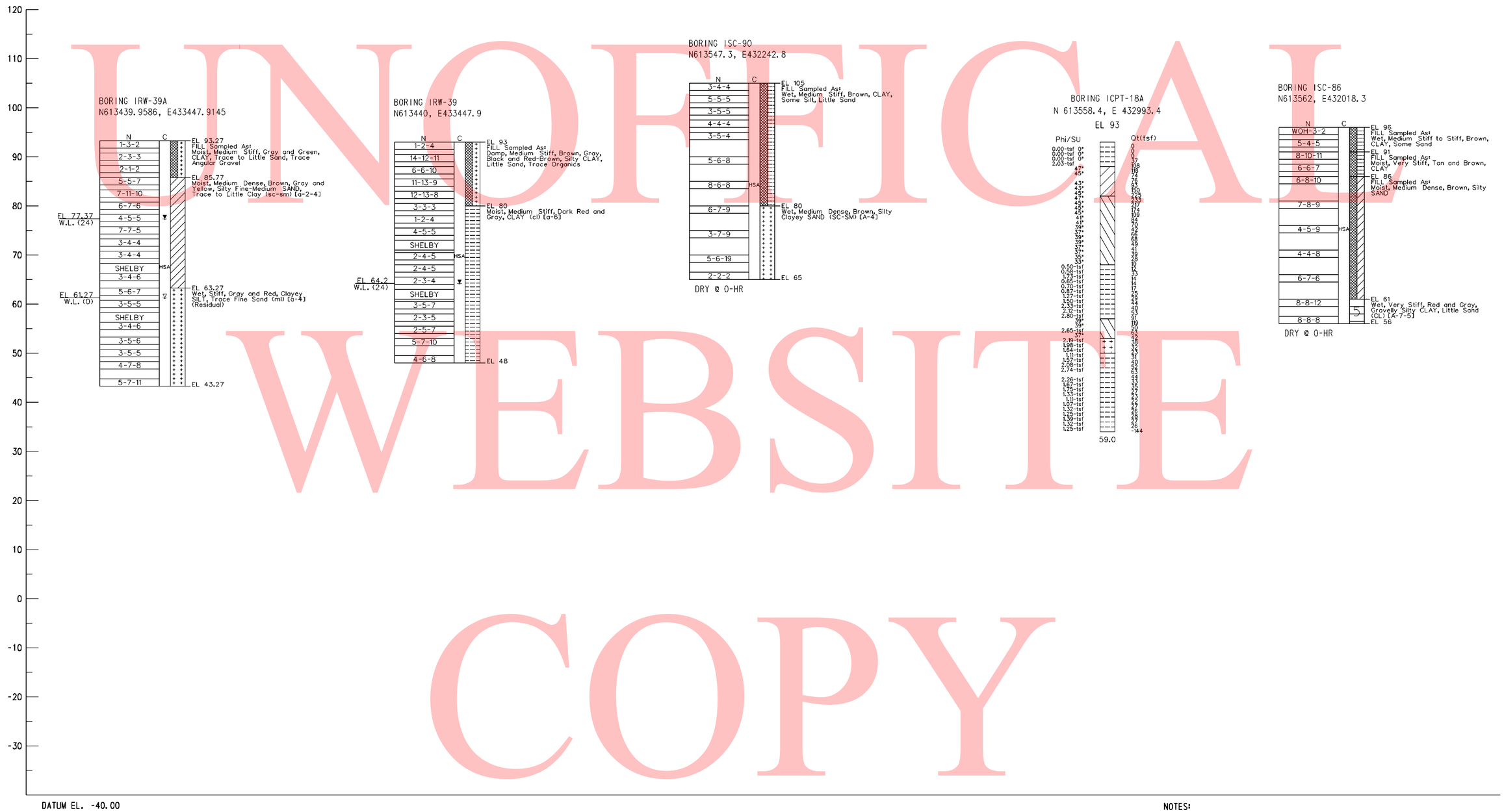

NOTES:

1. FOR BORING NOTES AND INFORMATION SEE SHEET NO. 744 OF 803.
2. FOR BORING LOCATIONS SEE CONSTRUCTION PLAN SHEETS.

UNOFFICIAL WEBSITE COPY

3/1/2010 4:21:11 PM
M:\PROJECTS\2003\03059_DELTRNPK\SR1MALL\CADD\2809003\PLANS\B0098_SR1.DGN

DELAWARE DEPARTMENT OF TRANSPORTATION	ADDENDUMS / REVISIONS	SCALE 0 10 20 30 FEET	SR1 / I-95 INTERCHANGE	CONTRACT 28-090-03	BRIDGE NO.	BORING & DRIVE TESTS	SHEET NO. 774
				COUNTY NEW CASTLE	DESIGNED BY: JLT		TOTAL SHTS. 803
					CHECKED BY: EMK		

UNOFFICAL WEBSITE COPY

DATUM EL. -40.00

NOTES:

1. FOR BORING NOTES AND INFORMATION SEE SHEET NO. 744 OF 803.
2. FOR BORING LOCATIONS SEE CONSTRUCTION PLAN SHEETS.

3/1/2010 4:21:34 PM
M:\PROJECTS\2003\03059_DELTRNPK\SRIMALL\CADD\2809003\PLANS\B0099_SR1.DGN

DELAWARE DEPARTMENT OF TRANSPORTATION	ADDENDUMS / REVISIONS	SCALE 0 10 20 30 FEET	SR1 / I-95 INTERCHANGE	CONTRACT 28-090-03	BRIDGE NO.	BORING & DRIVE TESTS	SHEET NO. 775
				COUNTY NEW CASTLE	DESIGNED BY: JLT		TOTAL SHTS. 803
					CHECKED BY: EMK		

UNOFFICIAL WEBSITE COPY

NOTES:

1. FOR BORING NOTES AND INFORMATION SEE SHEET NO. 744 OF 803.
2. FOR BORING LOCATIONS SEE CONSTRUCTION PLAN SHEETS.

3/1/2010 4:22:04 PM
M:\PROJECTS\2003\03059_DELTRNPK\SRIMALL\CADD\2809003\PLANS\B0100_SR1.DGN

DELAWARE DEPARTMENT OF TRANSPORTATION	ADDENDUMS / REVISIONS	SCALE 0 10 20 30 FEET	SR1 / I-95 INTERCHANGE	CONTRACT 28-090-03	BRIDGE NO.	BORING & DRIVE TESTS	SHEET NO. 776
				COUNTY NEW CASTLE	DESIGNED BY: JLT		TOTAL SHTS. 803
					CHECKED BY: EMK		

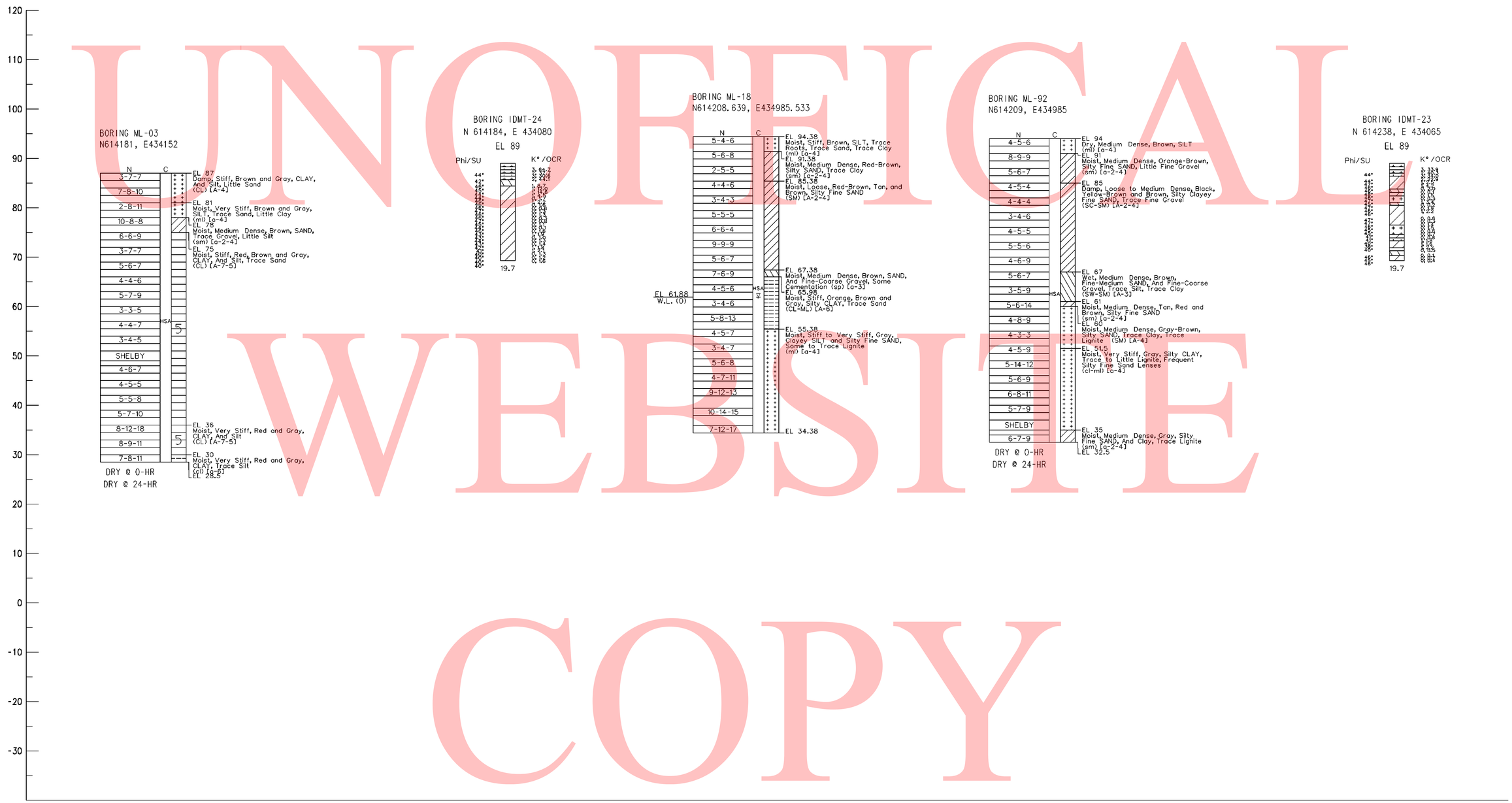

DATUM EL. -40.00

NOTES:

1. FOR BORING NOTES AND INFORMATION SEE SHEET NO. 744 OF 803.
2. FOR BORING LOCATIONS SEE CONSTRUCTION PLAN SHEETS.

UNOFFICAL WEBSITE COPY

DELAWARE DEPARTMENT OF TRANSPORTATION	ADDENDUMS / REVISIONS	SCALE 0 10 20 30 FEET	SR1 / I-95 INTERCHANGE	CONTRACT 28-090-03	BRIDGE NO.	BORING & DRIVE TESTS	SHEET NO. 777
				COUNTY NEW CASTLE	DESIGNED BY: JLT		TOTAL SHTS. 803
					CHECKED BY: EMK		

3/1/2010 4:22:32 PM
M:\PROJECTS\2003\03059_DELTRNPK\SR1MALL\CADD\2809003\PLANS\B0101_SR1.DGN

NOTES:

1. FOR BORING NOTES AND INFORMATION SEE SHEET NO. 744 OF 803.
2. FOR BORING LOCATIONS SEE CONSTRUCTION PLAN SHEETS.

UNOFFICIAL WEBSITE COPY

3/1/2010 4:44:46 PM
M:\PROJECTS\2003\03059_DELTRNPK\SR1MALL\CADD\2809003\PLANS\B0102_SR1.DGN

DELAWARE DEPARTMENT OF TRANSPORTATION	ADDENDUMS / REVISIONS	SCALE 0 10 20 30 FEET	SR1 / I-95 INTERCHANGE	CONTRACT 28-090-03	BRIDGE NO.	BORING & DRIVE TESTS	SHEET NO. 778
				COUNTY NEW CASTLE	DESIGNED BY: JLT		TOTAL SHTS. 803
					CHECKED BY: EMK		

DATUM EL. -60.00

NOTES:

1. FOR BORING NOTES AND INFORMATION SEE SHEET NO. 744 OF 803.
2. FOR BORING LOCATIONS SEE CONSTRUCTION PLAN SHEETS.

UNOFFICIAL WEBSITE COPY

3/1/2010 5:20:42 PM
M:\PROJECTS\2003\03059_DELTRNPK\SRMALL\CADD\2809003\PLANS\B0103_SR.DGN

DELAWARE DEPARTMENT OF TRANSPORTATION	ADDENDUMS / REVISIONS	SCALE 0 10 20 30 FEET	SR1 / I-95 INTERCHANGE	CONTRACT 28-090-03	BRIDGE NO.	BORING & DRIVE TESTS	SHEET NO. 779
				COUNTY NEW CASTLE	DESIGNED BY: JLT		TOTAL SHTS. 803
					CHECKED BY: EMK		

DATUM EL. -60.00

NOTES:

1. FOR BORING NOTES AND INFORMATION SEE SHEET NO. 744 OF 803.
2. FOR BORING LOCATIONS SEE CONSTRUCTION PLAN SHEETS.

UNOFFICIAL WEBSITE COPY

3/2/2010 8:40:29 AM
M:\PROJECTS\2003\03059_DELTRNPK\SRMALL\CADD\2809003\PLANS\B0104_SR1.DGN

DELAWARE DEPARTMENT OF TRANSPORTATION	ADDENDUMS / REVISIONS	SCALE 0 10 20 30 FEET	SR1 / I-95 INTERCHANGE	CONTRACT 28-090-03	BRIDGE NO.	BORING & DRIVE TESTS	SHEET NO. 780
				COUNTY NEW CASTLE	DESIGNED BY: JLT		TOTAL SHTS. 803
					CHECKED BY: EMK		

NOTES:

1. FOR BORING NOTES AND INFORMATION SEE SHEET NO. 744 OF 803.
2. FOR BORING LOCATIONS SEE CONSTRUCTION PLAN SHEETS.

UNOFFICAL WEBSITE COPY

DELAWARE DEPARTMENT OF TRANSPORTATION	ADDENDUMS / REVISIONS	SCALE 0 10 20 30 FEET	SR1 / I-95 INTERCHANGE	CONTRACT 28-090-03	BRIDGE NO.	BORING & DRIVE TESTS	SHEET NO. 781
				COUNTY NEW CASTLE	DESIGNED BY: JLT		TOTAL SHTS. 803
					CHECKED BY: EMK		

3/2/2010 8:41:49 AM
M:\PROJECTS\2003\03059_DELTRNPK\SRIMALL\CADD\2809003\PLANS\B0105_SR1.DGN

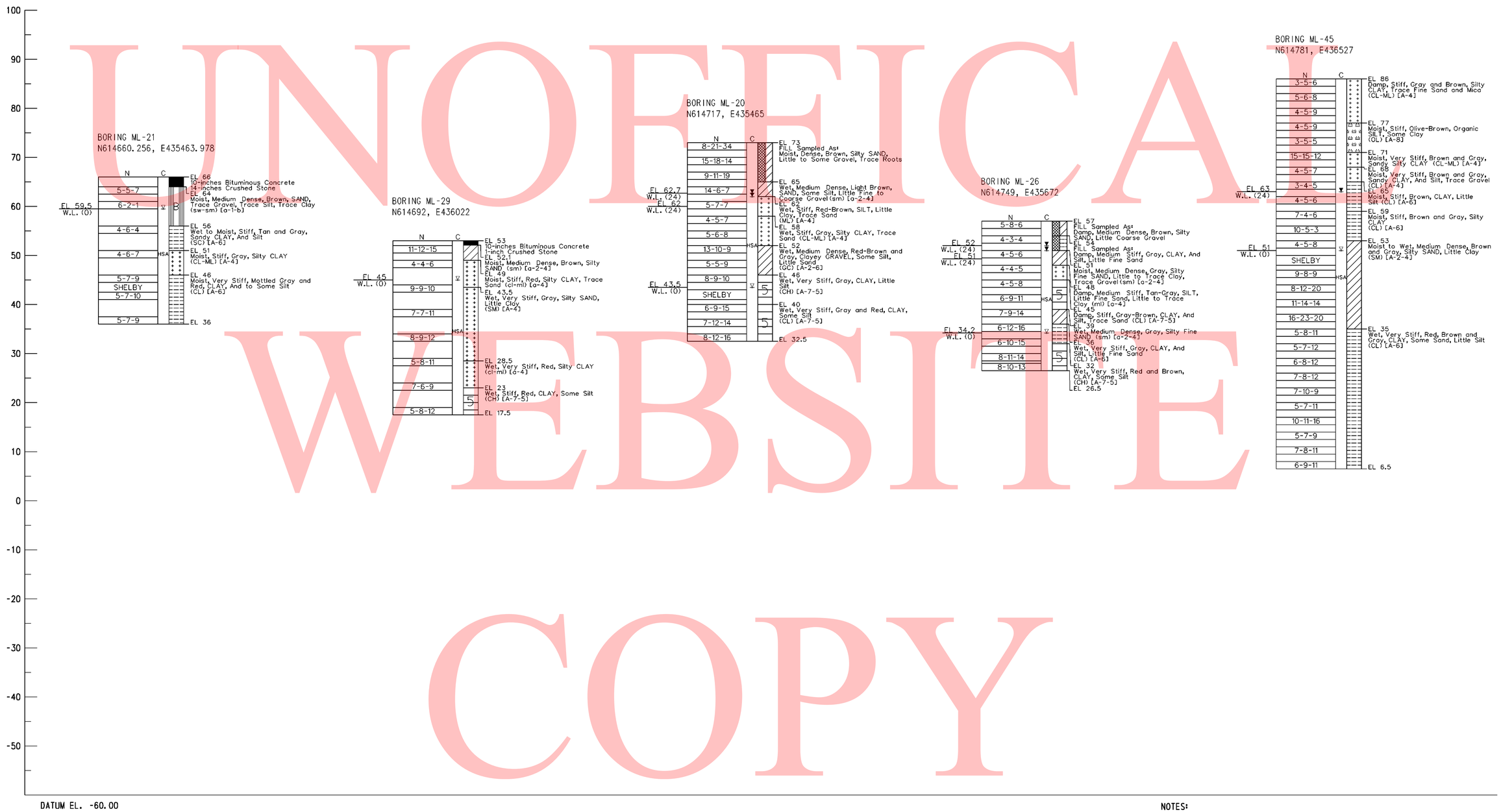

NOTES:

1. FOR BORING NOTES AND INFORMATION SEE SHEET NO. 744 OF 803.
2. FOR BORING LOCATIONS SEE CONSTRUCTION PLAN SHEETS.

UNOFFICIAL WEBSITE COPY

DELAWARE DEPARTMENT OF TRANSPORTATION	ADDENDUMS / REVISIONS	SCALE 0 10 20 30 FEET	SR1 / I-95 INTERCHANGE	CONTRACT 28-090-03	BRIDGE NO.	BORING & DRIVE TESTS	SHEET NO. 782
				COUNTY NEW CASTLE	DESIGNED BY: JLT		TOTAL SHTS. 803
					CHECKED BY: EMK		

3/2/2010 8:47:40 AM
M:\PROJECTS\2003\03059_DELTRNPK\SRMALL\CADD\2809003\PLANS\B0106_SR1.DGN

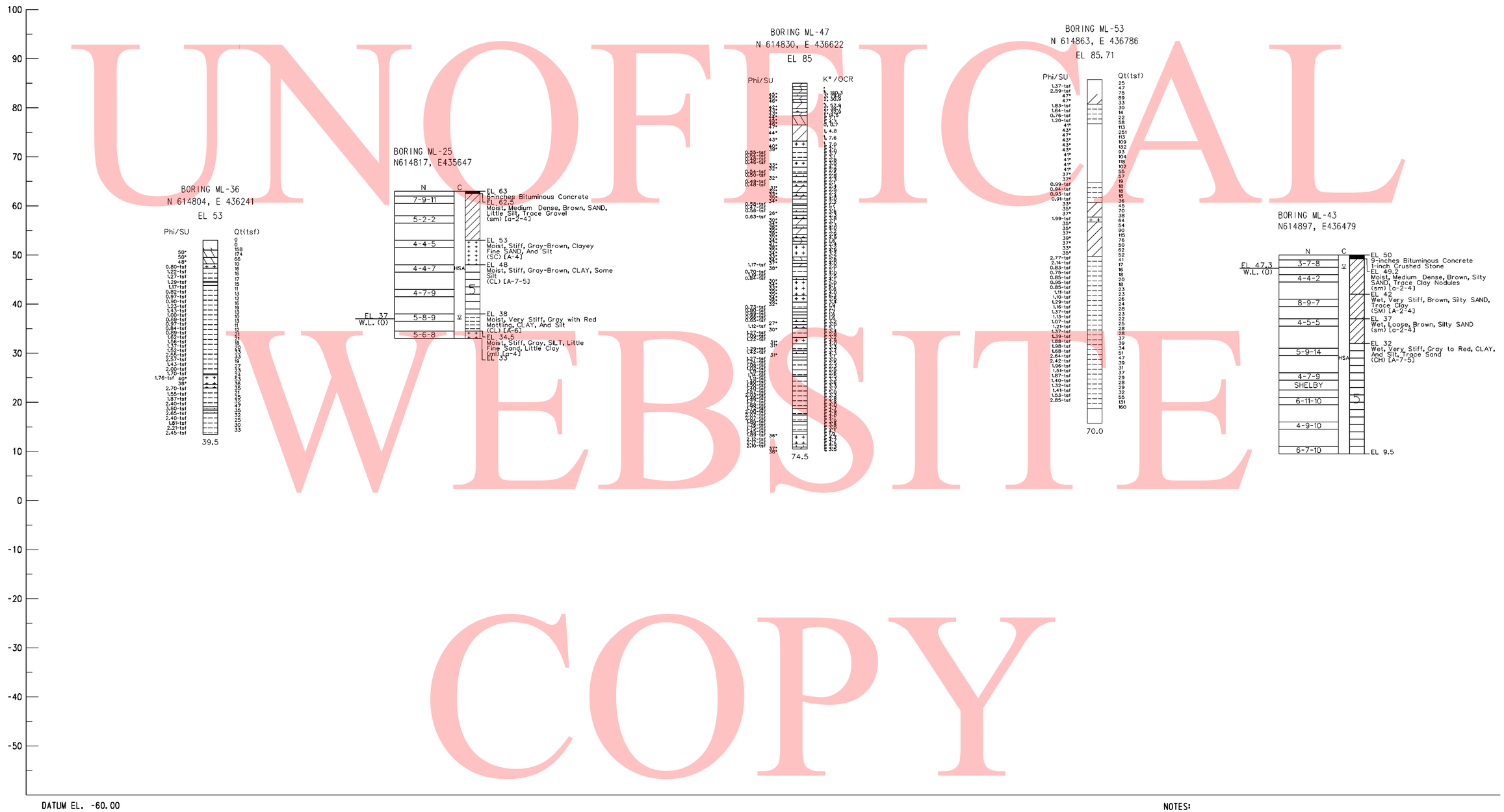

UNOFFICIAL WEBSITE COPY

NOTES:

1. FOR BORING NOTES AND INFORMATION SEE SHEET NO. 744 OF 803.
2. FOR BORING LOCATIONS SEE CONSTRUCTION PLAN SHEETS.

3/2/2010 8:50:48 AM
M:\PROJECTS\2003\03059_DELTRNPK\SR1MALL\CADD\2809003\PLANS\B0107_SR1.DGN

DELAWARE DEPARTMENT OF TRANSPORTATION	ADDENDUMS / REVISIONS	SCALE 0 10 20 30 FEET	SR1 / I-95 INTERCHANGE	CONTRACT 28-090-03	BRIDGE NO.	BORING & DRIVE TESTS	SHEET NO. 783
				COUNTY NEW CASTLE	DESIGNED BY: JLT		TOTAL SHTS. 803
					CHECKED BY: EMK		

UNOFFICIAL WEBSITE COPY

NOTES:

1. FOR BORING NOTES AND INFORMATION SEE SHEET NO. 744 OF 803.
2. FOR BORING LOCATIONS SEE CONSTRUCTION PLAN SHEETS.

3/2/2010 8:54:15 AM
M:\PROJECTS\2003\03059_DELTRNPK\SRIMALL\CADD\2809003\PLANS\B0108_SR1.DGN

DELAWARE DEPARTMENT OF TRANSPORTATION	ADDENDUMS / REVISIONS	SCALE 0 10 20 30 FEET	SR1 / I-95 INTERCHANGE	CONTRACT 28-090-03	BRIDGE NO.	BORING & DRIVE TESTS	SHEET NO. 784
				COUNTY NEW CASTLE	DESIGNED BY: JLT		TOTAL SHTS. 803
					CHECKED BY: EMK		

UNOFFICAL WEBSITE COPY

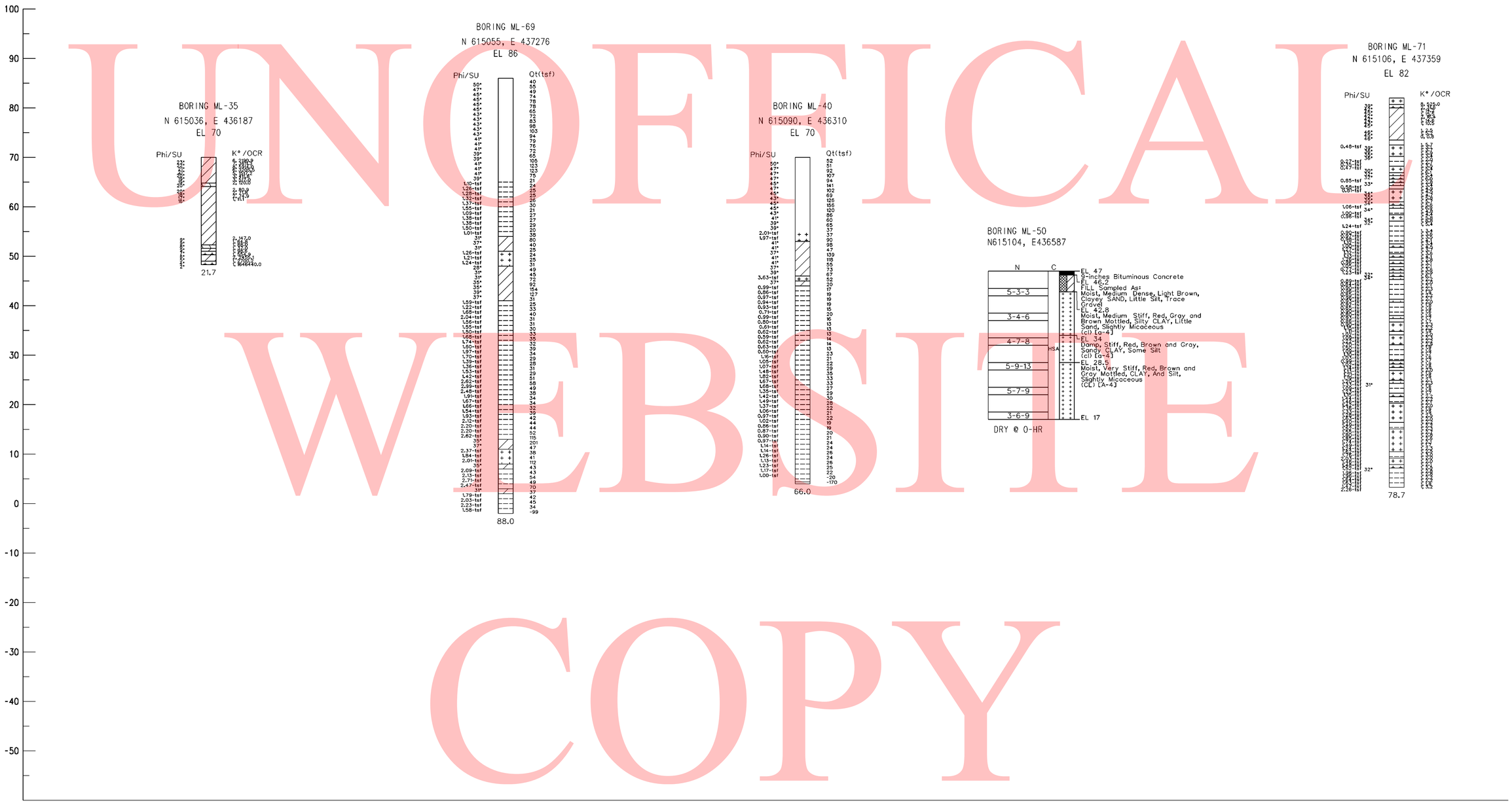

DATUM EL. -60.00

NOTES:

1. FOR BORING NOTES AND INFORMATION SEE SHEET NO. 744 OF 803.
2. FOR BORING LOCATIONS SEE CONSTRUCTION PLAN SHEETS.

3/2/2010 9:00:06 AM
M:\PROJECTS\2003\03059_DELTRNPK\SRMALL\CADD\2809003\PLANS\B0109_SR1.DGN

DELAWARE DEPARTMENT OF TRANSPORTATION	ADDENDUMS / REVISIONS	SCALE 0 10 20 30 FEET	SR1 / I-95 INTERCHANGE	CONTRACT 28-090-03	BRIDGE NO.	BORING & DRIVE TESTS	SHEET NO. 785
				COUNTY NEW CASTLE	DESIGNED BY: JLT		TOTAL SHTS. 803
					CHECKED BY: EMK		

UNOFFICIAL WEBSITE COPY

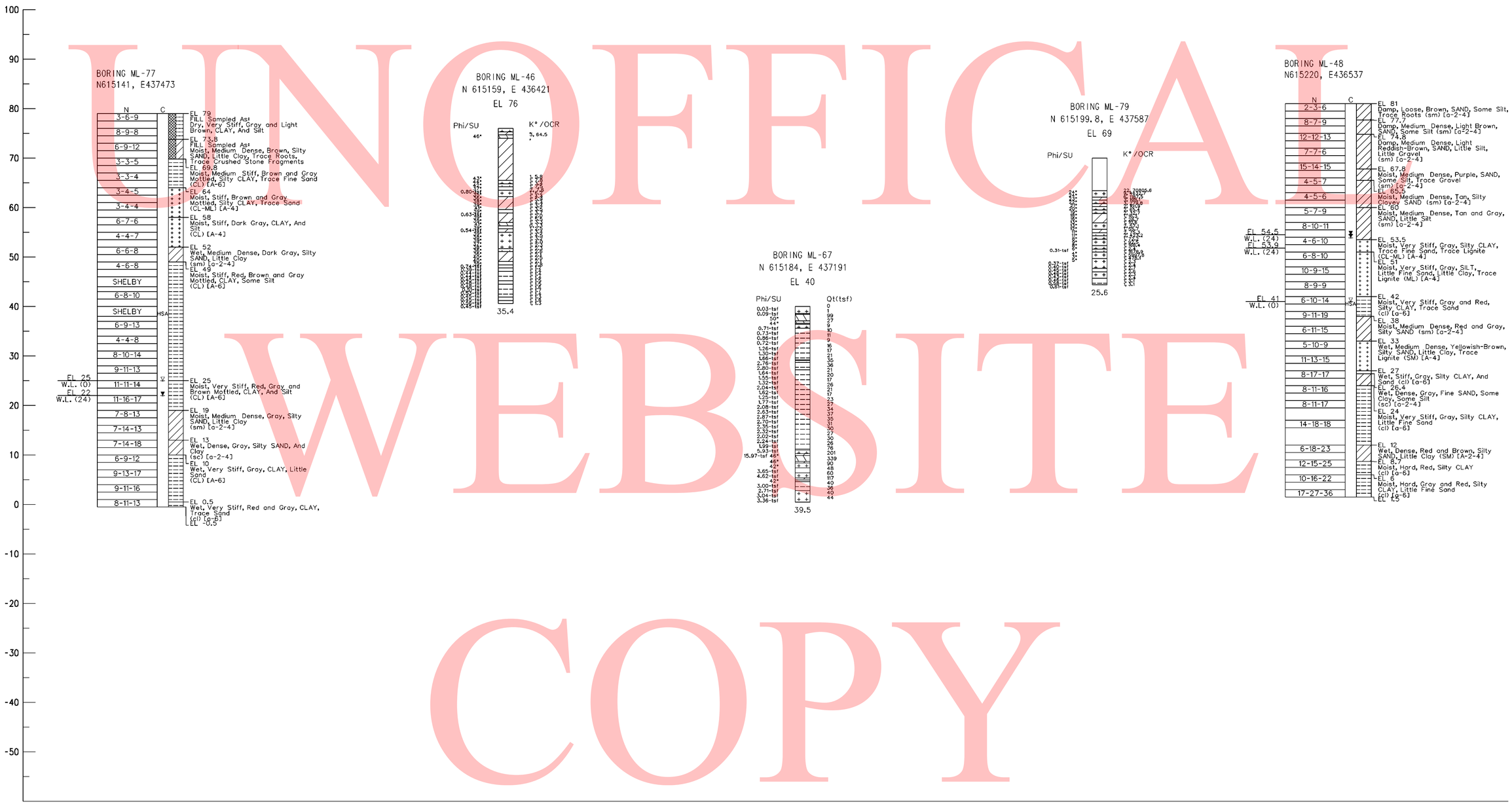

DATUM EL. -60.00

NOTES:

1. FOR BORING NOTES AND INFORMATION SEE SHEET NO. 744 OF 803.
2. FOR BORING LOCATIONS SEE CONSTRUCTION PLAN SHEETS.

3/2/2010 9:10:59 AM
M:\PROJECTS\2003\03059_DELTRNPK\SR1MALL\CADD\2809003\PLANS\B0110_SR1.DGN

DELAWARE DEPARTMENT OF TRANSPORTATION	ADDENDUMS / REVISIONS	SCALE 0 10 20 30 FEET	SR1 / I-95 INTERCHANGE	CONTRACT 28-090-03	BRIDGE NO.	BORING & DRIVE TESTS	SHEET NO. 786
				COUNTY NEW CASTLE	DESIGNED BY: JLT		TOTAL SHTS. 803
					CHECKED BY: EMK		

UNOFFICIAL WEBSITE COPY

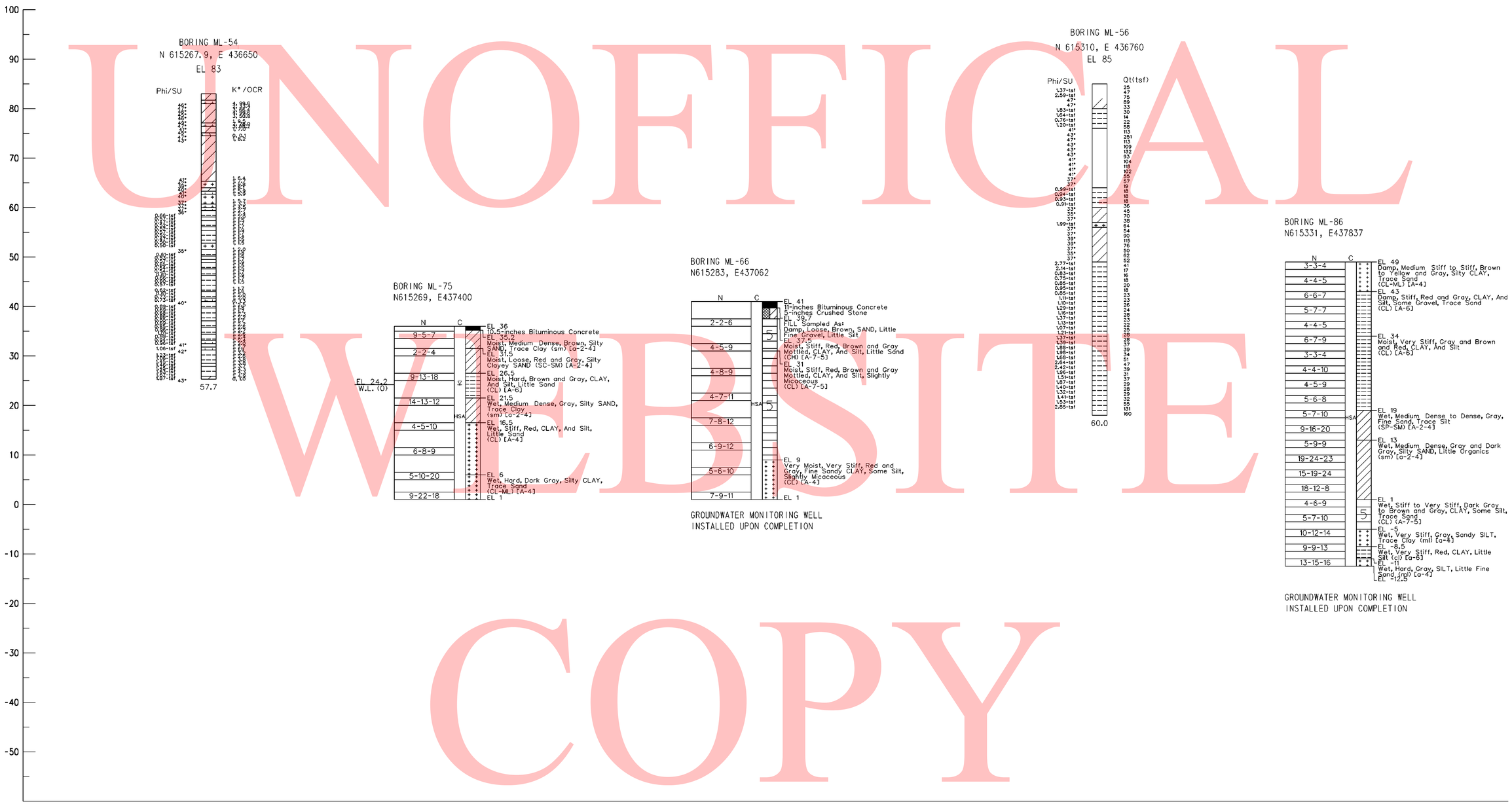

NOTES:

1. FOR BORING NOTES AND INFORMATION SEE SHEET NO. 744 OF 803.
2. FOR BORING LOCATIONS SEE CONSTRUCTION PLAN SHEETS.

DELAWARE DEPARTMENT OF TRANSPORTATION	ADDENDUMS / REVISIONS	SCALE 0 10 20 30 FEET	SR1 / I-95 INTERCHANGE	CONTRACT 28-090-03	BRIDGE NO.	BORING & DRIVE TESTS	SHEET NO. 787
				COUNTY NEW CASTLE	DESIGNED BY: JLT		TOTAL SHTS. 803
					CHECKED BY: EMK		

3/2/2010 9:11:45 AM
M:\PROJECTS\2003\03059_DELTRNPK\SR1MALL\CADD\2809003\PLANS\B011_SR1.DGN

UNOFFICIAL WEBSITE COPY

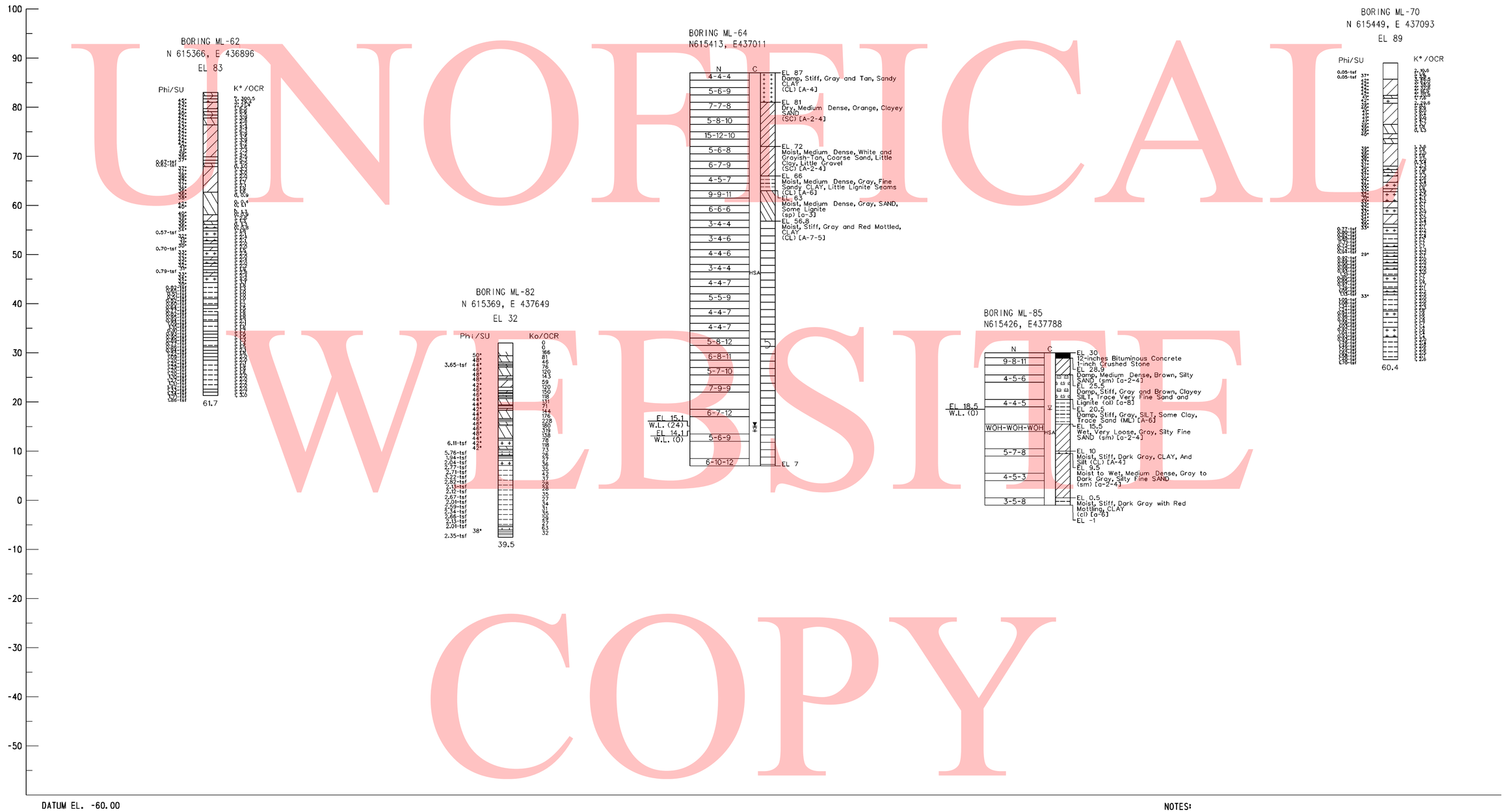

DATUM EL. -60.00

NOTES:

1. FOR BORING NOTES AND INFORMATION SEE SHEET NO. 744 OF 803.
2. FOR BORING LOCATIONS SEE CONSTRUCTION PLAN SHEETS.

3/2/2010 9:12:14 AM
M:\PROJECTS\2003\03059_DELTRNPK\SRIMALL\CADD\2809003\PLANS\B0112_SR1.DGN

DELAWARE DEPARTMENT OF TRANSPORTATION	ADDENDUMS / REVISIONS	SCALE 0 10 20 30 FEET	SR1 / I-95 INTERCHANGE	CONTRACT 28-090-03	BRIDGE NO.	BORING & DRIVE TESTS	SHEET NO. 788
				COUNTY NEW CASTLE	DESIGNED BY: JLT		TOTAL SHTS. 803
					CHECKED BY: EMK		

UNOFFICAL WEBSITE COPY

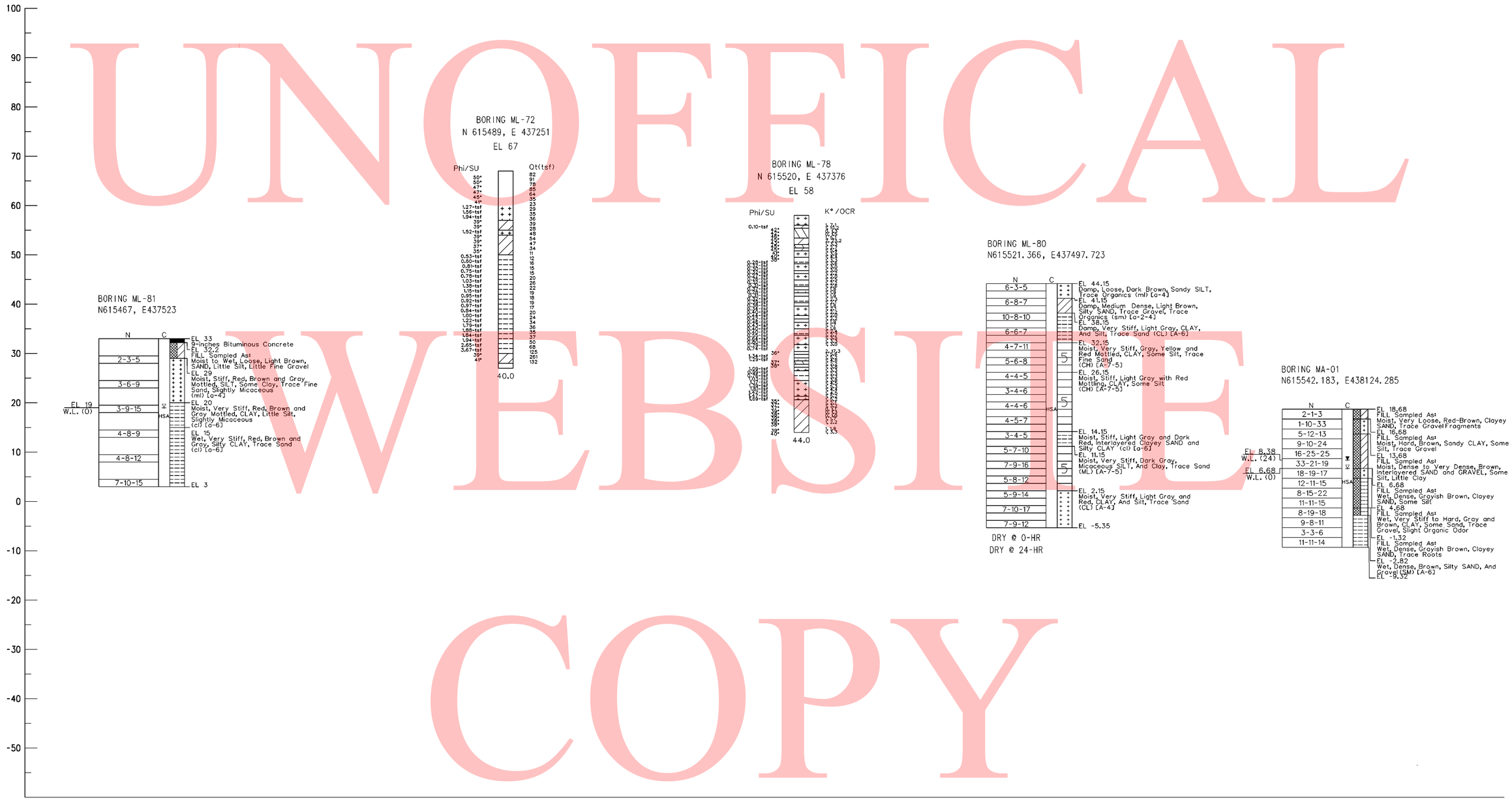

NOTES:

1. FOR BORING NOTES AND INFORMATION SEE SHEET NO. 744 OF 803.
2. FOR BORING LOCATIONS SEE CONSTRUCTION PLAN SHEETS.

DELAWARE DEPARTMENT OF TRANSPORTATION	ADDENDUMS / REVISIONS	SCALE 0 10 20 30 FEET	SR1 / I-95 INTERCHANGE	CONTRACT 28-090-03	BRIDGE NO.	BORING & DRIVE TESTS	SHEET NO. 789
				COUNTY NEW CASTLE	DESIGNED BY: JLT		TOTAL SHTS. 803
					CHECKED BY: EMK		

3/2/2010 9:14:56 AM
M:\PROJECTS\2003\03059_DELTRNPK\SR1MALL\CADD\2809003\PLANS\B0113_SR1.DGN

UNOFFICAL WEBSITE COPY

NOTES:

1. FOR BORING NOTES AND INFORMATION SEE SHEET NO. 128 OF 143.
2. FOR BORING LOCATIONS SEE CONSTRUCTION PLAN SHEETS.

6/28/2010 12:45:55 PM
M:\PROJECTS\2003\03059_DELTRNPK\SR1MALL\CADD\2809003\PLANS\B0114_SR1.DGN

DELAWARE DEPARTMENT OF TRANSPORTATION	ADDENDUMS / REVISIONS	SCALE 0 10 20 30 FEET	SR1 / I-95 INTERCHANGE	CONTRACT 28-090-03	BRIDGE NO.	BORING & DRIVE TESTS	SHEET NO. 790
				COUNTY NEW CASTLE	DESIGNED BY: JLT		TOTAL SHTS. 803
					CHECKED BY: EMK		

NOTES:

1. FOR BORING NOTES AND INFORMATION SEE SHEET NO. 744 OF 803.
2. FOR BORING LOCATIONS SEE CONSTRUCTION PLAN SHEETS.

UNOFFICIAL WEBSITE COPY

3/2/2010 9:16:00 AM
M:\PROJECTS\2003\03059_DELTRNPK\SRMALL\CADD\2809003\PLANS\B0115_SR1.DGN

DELAWARE DEPARTMENT OF TRANSPORTATION	ADDENDUMS / REVISIONS	SCALE 0 10 20 30 FEET	SR1 / I-95 INTERCHANGE	CONTRACT 28-090-03	BRIDGE NO.	BORING & DRIVE TESTS	SHEET NO. 791
				COUNTY NEW CASTLE	DESIGNED BY: JLT		TOTAL SHTS. 803
					CHECKED BY: EMK		

NOTES:

1. FOR BORING NOTES AND INFORMATION SEE SHEET NO. 744 OF 803.
2. FOR BORING LOCATIONS SEE CONSTRUCTION PLAN SHEETS.

UNOFFICAL WEBSITE COPY

3/2/2010 9:16:26 AM
M:\PROJECTS\2003\03059_DELTRNPK\SRIMALL\CADD\2809003\PLANS\B016_SR1.DGN

DELAWARE DEPARTMENT OF TRANSPORTATION	ADDENDUMS / REVISIONS	SCALE 0 10 20 30 FEET	SR1 / I-95 INTERCHANGE	CONTRACT 28-090-03	BRIDGE NO.	BORING & DRIVE TESTS	SHEET NO. 792
				COUNTY NEW CASTLE	DESIGNED BY: JLT		TOTAL SHTS. 803
					CHECKED BY: EMK		

SUMMARY OF LABORATORY TEST RESULTS OF TUBE SAMPLES

BORING NO.	TOP SAMPLE DEPTH (FT)	NATURAL MOISTURE CONTENT (%)	LL	PL	PI	PERCENT PASSING NO. 200	AASHTO	UNDISTURBED TUBE TESTING	TOTAL UNIT WEIGHT (pcf)	UNCONFINED COMPRESSION (psf)	TOTAL STRESS COHESION (psf)	TOTAL STRESS FRICTION ANGLE (deg)	EFFECTIVE STRESS COHESION (psf)	EFFECTIVE STRESS FRICTION ANGLE (deg)	UNDRAINED SHEAR (psf)	INITIAL VOID RATIO	PRECONSOLIDATION STRESS MAX (psf)	PRECONSOLIDATION STRESS MIN (psf)	C_c	C_r	pH	RESISTIVITY (ohm-cm)
IBR-14	45.0	19.2	29	17	12	83.0	A-6	UC	140.7	6897	-	-	-	-	3449	-	-	-	-	-	-	-
IBR-14	45.0	-	-	-	-	-	-	DS	133.8	-	1370	12.0	-	-	-	-	-	-	-	-	-	-
ICPT-16A	30.0	-	-	-	-	-	-	CONS	-	-	-	-	-	-	-	0.47	10000	7800	0.07	0.01	-	-
ICPT-16A	30.0	16.4	34	19	15	94.3	-	UC	137.3	8380	-	-	-	-	4190	-	-	-	-	-	-	-
ICPT-16A	44.0	-	-	-	-	-	-	CONS	-	-	-	-	-	-	-	0.30	8400	7800	0.07	0.01	-	-
ICPT-16A	44.0	16.7	41	18	23	65.0	-	UC	135.7	6490	-	-	-	-	3245	-	-	-	-	-	-	-
ICPT-16A	54.0	-	-	-	-	-	-	CONS	-	-	-	-	-	-	-	0.87	10800	10000	0.19	0.04	-	-
ICPT-16A	54.0	13.2	64	26	38	92.2	-	UC	128.9	11234	-	-	-	-	5617	-	-	-	-	-	-	-
IEB-13A	15.0	-	-	-	-	-	-	CONS	77.8	-	-	-	-	-	-	0.55	5900	6600	0.12	0.02	-	-
IEB-13A	15.0	-	-	-	-	-	-	UC	132.3	2338	-	-	-	-	1169	-	-	-	-	-	-	-
IEB-13A	15.0	18.7	33	19	14	75.0	A-6	UU	127.7	-	-	-	-	-	1770	-	-	-	-	-	-	-
IEB-13B	19.8	26.2	58	25	33	97.2	-	CIUC	126.1	-	310	26.1	-	-	-	-	-	-	-	-	-	-
IEB-13B	32.0	-	-	-	-	-	-	CONS	-	-	-	-	-	-	-	0.45	14500	11400	0.05	0.03	-	-
IEB-13B	32.0	16.1	28	17	11	70.6	-	UC	135.9	9244	-	-	-	-	4622	-	-	-	-	-	-	-
IEB-13B	38.0	-	-	-	-	-	-	CONS	-	-	-	-	-	-	-	0.45	20000	14500	0.04	0.01	-	-
IEB-13B	38.0	15.5	27	14	13	65.4	-	UC	137.2	9152	-	-	-	-	4576	-	-	-	-	-	-	-
IEB-13B	58.0	22.1	NP	NP	NP	46.7	-	CONS	127.1	-	-	-	-	-	-	0.51	19200	16000	0.04	0.01	-	-
IEB-15	12.0	23.9	49	26	23	99.1	A-7-6	CONS	129.5	-	-	-	-	-	-	0.67	12000	7060	0.19	0.05	-	-
IEB-15	12.5	-	-	-	-	-	-	UU	128.3	-	-	-	-	-	1594	-	-	-	-	-	-	-
IEB-15	31.0	17.9	36	20	16	95.5	A-6	CONS	132.8	-	-	-	-	-	-	0.53	10580	3820	0.17	0.05	-	-
IEB-15	31.5	-	-	-	-	-	-	DS	128.0	-	-	-	0	26.9	-	-	-	-	-	-	-	-
IEB-15	56.0	20.1	47	25	22	98.1	A-7-6	CONS	132.8	-	-	-	-	-	-	0.58	8100	4800	0.2	0.06	-	-
IRW-02	25.0	19	-	-	-	-	-	DS	130.8	-	145	27.1	-	-	-	-	-	-	-	-	-	-
IRW-02	35.0	17.2	39	20	19	89.0	A-6	UU	-	-	-	-	-	-	4555	-	-	-	-	-	-	-
IRW-09	20.0	28.6	39	20	19	99.0	A-6	CIUC	-	-	1760	11.7	1630	18.2	-	-	-	-	-	-	-	-
IRW-09	35.0	-	-	-	-	-	-	CONS	110.9	-	-	-	-	-	-	0.54	7840	4600	0.11	0.03	-	-
IRW-09	35.0	17.5	23	18	5	62.0	A-8	DS	-	-	1075	15.2	-	-	-	-	-	-	-	-	-	-
IRW-09	35.0	-	-	-	-	-	-	UU	-	-	-	-	-	-	5819	-	-	-	-	-	-	-
IRW-23	14.5	19.5	48	24	24	99.0	A-7-5	CIUC	-	-	1070	5.3	1080	7.6	-	-	-	-	-	-	-	-
IRW-23	24.5	18.4	36	15	21	99.0	A-6	CONS	108.7	-	-	-	-	-	-	0.52	9920	7260	0.13	0.03	-	-
IRW-23	24.5	18.2	-	-	-	-	-	DS	130.6	-	985	20.1	-	-	-	-	-	-	-	-	-	-
IRW-23	24.5	-	-	-	-	-	-	UC	131.9	5150	-	-	-	-	2575	-	-	-	-	-	-	-
IRW-23	24.5	-	-	-	-	-	-	UU	-	-	-	-	-	-	3790	-	-	-	-	-	-	-
IRW-26	25.0	17.3	30	18	12	89.0	A-6	DS	134.1	-	995	15.8	-	-	-	-	-	-	-	-	-	-
IRW-27	30.0	23	43	20	23	90.0	A-7-5	CIUC	-	-	550	14.8	500	24.6	-	-	-	-	-	-	-	-
IRW-32	25.0	-	-	-	-	-	-	CONS	114.2	-	-	-	-	-	-	0.55	13000	9200	0.14	0.04	-	-
IRW-32	25.0	19.5	39	19	20	85.0	A-6	DS	-	-	715	15.7	-	-	-	-	-	-	-	-	-	-
IRW-32	25.0	-	-	-	-	-	-	UU	-	-	-	-	-	-	2785	-	-	-	-	-	-	-
IRW-32	35.0	19.4	57	27	30	97.0	A-7-5	CIUC	-	-	1820	14.8	1580	23	-	-	-	-	-	-	-	-
IRW-33	27.0	26.1	47	22	25	96.0	A-7-5	CONS	100.5	-	-	-	-	-	-	0.80	2800	2240	0.2	0.07	5.02	4200
IRW-33	27.0	-	-	-	-	-	-	DS	130.8	-	470	10.7	-	-	-	-	-	-	-	-	-	-
IRW-33	27.0	-	-	-	-	-	-	UU	126.2	-	-	-	-	-	1420	-	-	-	-	-	-	-
IRW-33A	24.0	23.3	42	21	21	87.0	A-7-5	CONS	107.8	-	-	-	-	-	-	0.69	2500	1800	0.19	0.07	5.61	3500
IRW-33A	24.0	-	-	-	-	-	-	DS	131.9	-	170	19.4	-	-	-	-	-	-	-	-	-	-
IRW-33A	24.0	-	-	-	-	-	-	UU	125.7	-	-	-	-	-	920	-	-	-	-	-	-	-
IRW-33A	33.0	19.2	55	21	34	100.0	A-7-5	CIUC	-	-	930	5.2	660	17.2	-	-	-	-	-	-	-	-
IRW-42	18.0	-	42	22	20	-	A-7-5	CIUC	-	-	630	9.6	680	13.8	-	-	-	-	-	-	-	-
IRW-42	30.0	-				-		CONS	114.7	-	-	-	-	-	-	0.54	8760	7920	0.18	0.04	-	-
IRW-42	30.0	26.1	44	22	22	97.0	A-7-5	DS	-	-	370	14.7	-	-	-	-	-	-	-	-	5.37	2900
IRW-42	30.0	-	-	-	-	-	-	UU	-	-	-	-	-	-	1847	-	-	-	-	-	-	-
IRW-44	25.0	-	-	-	-	-	-	CONS	103.6	-	-	-	-	-	-	0.66	7860	5820	0.17	0.05	-	-
IRW-44	25.0	20.1	40	19	21	92.0	A-6	DS	-	-	722	7.2	-	-	-	-	-	-	-	-	-	-
IRW-44	35.0	20.5	56	28	28	99.0	A-7-5	CIUC	-	-	1140	4.3	1100	8.8	-	-	-	-	-	-	-	-

NOTES:

1. LL= LIQUID LIMIT
2. PL = PLASTIC LIMIT
3. PI = PLASTICITY INDEX
4. UC = UNCONFINED COMPRESSION
5. DS = DIRECT SHEAR
6. CONS = CONSOLIDATION
7. UU = UNCONSOLIDATED- UNDRAINED TRIAXIAL TEST
8. CIUC = CONSOLIDATED ISOTROPIC UNDRAINED COMPRESSION TRIAXIAL TEST

UNOFFICIAL WEBSITE COPY

SUMMARY OF LABORATORY TEST RESULTS OF TUBE SAMPLES

BORING NO.	TOP SAMPLE DEPTH (FT)	NATURAL MOISTURE CONTENT (%)	LL	PL	PI	PERCENT PASSING NO. 200	AASHTO	UNDISTURBED TUBE TESTING	TOTAL UNIT WEIGHT (pcf)	UNCONFINED COMPRESSION (psf)	TOTAL STRESS COHESION (psf)	TOTAL STRESS FRICTION ANGLE (deg)	EFFECTIVE STRESS COHESION (psf)	EFFECTIVE STRESS FRICTION ANGLE (deg)	UNDRAINED SHEAR (psf)	INITIAL VOID RATIO	PRECONSOLIDATION STRESS MAX (psf)	PRECONSOLIDATION STRESS MIN (psf)	C_c	C_r	pH	RESISTIVITY (ohm-cm)
IRW-49	20.0	17.7	21	19	2	68.0	A-4	CIUC	-	-	0	45.4	530	36.3	-	-	-	-	-	-	-	-
IRW-49	30.0	20.7	41	22	19	99.0	A-7-5	CONS	113.4	-	-	-	-	-	-	0.48	10220	8000	0.09	0.03	-	-
IRW-49	30.0	-	-	-	-	-	-	UC	128.5	5559	-	-	-	-	2780	-	-	-	-	-	-	-
IRW-49	30.0	-	-	-	-	-	-	UU	132.0	-	-	-	-	-	1090	-	-	-	-	-	-	-
IRW-50	25.0	-	-	-	-	-	-	CONS	111.2	-	-	-	-	-	-	0.56	16560	10500	0.19	0.03	-	-
IRW-50	25.0	19.9	NP	NP	NP	32.0	A-2-4	DS	-	-	725	15.7	-	-	-	-	-	-	-	-	-	-
IRW-50	25.0	-				-		UU	-	-	-	-	-	-	2250	-	-	-	-	-	-	-
IRW-51	25.0	-				-		CONS	105.8	-	-	-	-	-	-	0.64	5500	3880	0.23	0.09	-	-
IRW-51	25.0	21.6	38	19	19	96.0	A-6	DS	-	-	415	14.6	-	-	-	-	-	-	-	-	5.71	3000
IRW-51	25.0	-				-		UU	-	-	-	-	-	-	2772	-	-	-	-	-	-	-
IRW-51	35.0	22.3	48	21	27	98.0	A-7-5	CIUC	-	-	520	10.1	550	15.8	-	-	-	-	-	-	-	-
IRW-52	25.0	-	34	16	18	-	A-6	CIUC	-	-	210	20.7	350	30.4	-	-	-	-	-	-	-	-
IRW-52	35.0	-	-	-	-	-	-	CONS	108.3	-	-	-	-	-	-	0.63	5200	5120	0.16	0.05	-	-
IRW-52	35.0	22.3	48	21	27	98.0	A-7-5	DS	-	-	1155	11.1	-	-	-	-	-	-	-	-	5.07	7700
IRW-52	35.0	-	-	-	-	-	-	UU	128.7	-	-	-	-	-	4870	-	-	-	-	-	-	-
IRW-53	15.0	19.9	39	22	17	99.0	A-6	CONS	107.6	-	-	-	-	-	-	0.54	8000	3920	0.15	0.04	5.22	3000
IRW-53	15.0	-	-	-	-	-	-	DS	129.8	-	860	9.7	-	-	-	-	-	-	-	-	-	-
IRW-53	25.0	22.5	51	27	24	96.0	A-7-5	CIUC	-	-	1520	7.4	1580	9.7	-	-	-	-	-	-	-	-
IRW-76	22.5	23.5	39	21	18	97.0	A-6	DS	129.9	-	120	19.1	-	-	-	-	-	-	-	-	-	-
IRW-76	22.5	-	-	-	-	-	-	UC	132.5	4095	-	-	-	-	2048	-	-	-	-	-	-	-
IRW-76	32.5	-	-	-	-	-	-	UU	122.0	-	-	-	-	-	700	-	-	-	-	-	-	-
IRW-83	30.0	-	-	-	-	-	-	DS	133.5	-	410	13.7	-	-		-	-	-	-	-	-	-
IRW-83	30.0	20.2	41	21	20	99.0	A-7-5	UU	130.0	-	-	-	-	-	780	-	-	-	-	-	-	-
ML-06	20.0	21.1	27	19	8	82.0	A-4	DS	-	-	230	9.9	-	-	-	-	-	-	-	-	-	-
ML-06	20.0	-						UC	137.0	4780	-	-	-	-	2390	-	-	-	-	-	-	-
ML-06	32.0	19.8	23	17	6	59.0	A-4	DS	-	-	620	22.1	-	-		-	-	-	-	-	-	-
ML-06	32.0	-						UC	131.0	930	-	-	-	-	465	-	-	-	-	-	-	-
ML-10	51.0	20.8	46	23	23	92.0	A-7-5	DS	-	-	1870	2.8	-	-		-	-	-	-	-	-	-
ML-10	51.0	-						UC	133.0	4526	-	-	-	-	2263	-	-	-	-	-	-	-
ML-20	30.0	25.1	54	25	29	99.0	A-7-5	DS	126.2	-	270	18.5	-	-		-	-	-	-	-	-	-
ML-20	30.0	-	-	-	-	-	-	UC	128.0	2511	-	-	-	-	1256	-	-	-	-	-	-	-
ML-21	21.5	22.8	36	17	19	94.0	A-6	DS	-	-	799	10.0	-	-		-	-	-	-	-	-	-
ML-21	21.5	-	-	-	-	-	-	UC	140.0	1767	-	-	-	-	884	-	-	-	-	-	-	-
ML-23	45.0	22.1	49	24	25	100.0	A-7-5	DS	-	-	835	11.5	-	-		-	-	-	-	-	-	-
ML-23	45.0	-	-	-	-	-	-	UC	133.0	3684	-	-	-	-	1842	-	-	-	-	-	-	-
ML-43	25.5	-	-	-	-	-	-	CONS	128.0	-	-	-	-	-	-	0.78	-	1200	0.11	0.11	-	-
ML-43	25.5	25.4	56	26	30	85.0	A-7-5	DS	-	-	407	18.6	-	-	-	-	-	-	-	-	-	-
ML-43	25.5	-	-	-	-	-	-	UU	126.0	-	-	-	-	-	1800	-	-	-	-	-	-	-
ML-61	48.0	23.2	48	22	26	97.0	A-7-5	DS	-	-	980	11.3	-	-	-	-	-	-	-	-	-	-
ML-61	48.0	-	-	-	-	-	-	UC	131.0	2735	-	-	-	-	1368	-	-	-	-	-	-	-
ML-77	39.0	18.5	35	17	18	98.0	A-6	DS	-	-	652	20.5	-	-	-	-	-	-	-	-	-	-
ML-77	39.0	-	-	-	-	-	-	UC	130.0	5673	-	-	-	-	2837	-	-	-	-	-	-	-
ML-77	39.0	-	-	-	-	-	-	UU	131.9	-	-	-	-	-	4200	-	-	-	-	-	-	-
S-01	25.0	-	-	-	-	-	-	CONS	-	-	-	-	-	-	-	-	-	-	1.15	-	-	-
S-01	25.0	-	-	-	-	-	-	UC	-	4032		-	-	-	2016	-	-	-	-	-	-	-
S-01A	36.0	34.2	52		24	-	-	CONS	-	-	-	-	-	-	-	0.96	-	4820	0.22	-	-	-
S-01B	28.5	52.2	58	47	11	-	-	CONS	-	-	-	-	-	-	-	0.86	-		0.48	-	-	-
S-02	15.0	30.7	40	22	18	-	-	CONS	-	-	-	-	-	-	-	0.76	-	4200	0.20	0.07	-	-
S-03	10.0	36	43	30	13	-	-	CONS	-	-	-	-	-	-	-	0.95	-	9060	0.26	0.06	-	-
S-03	15.0	101	63	-	-	-	-	CONS	-	-	-	-	-	-	-	1.28	-	8460	0.50	0.10	-	-
S-04	6.0	-	-	-	-	-	-	CONS	-	-	-	-	-	-	-	-	-	-	0.08	-	-	-
S-04	6.0	-	-	-	-	-	-	UC	-	3456	-	-	-	-	1728	-	-	-	-	-	-	-
S-04	25.5	-	-	-	-	-	-	CONS	-	-	-	-	-	-	-	-	-	-	0.11	-	-	-
S-04	25.6	-	-	-	-	-	-	UU	-	-	2200	16.0	-	-	-	-	-	-	-	-	-	-
WS-1	25.5	-	-	-	-	-	-	CONS	-	-	-	-	-	-	-	-	-	-	0.19	-	-	-
WS-1	25.5	-	-	-	-	-	-	UU	-	-	2297	-	-	-	-	-	-	-	-	-	-	-
WS-1	40.0	-	-	-	-	-	-	CONS	-	-	-	-	-	-	-	-	-	-	0.13	-	-	-
WS-1	40.0	19.1				-	-	UU	-	-	3500	1.0	-	-	-	-	-	-	-	-	-	-
WS-2	30.0	-	-	-	-	-	-	CONS	-	-	-	-	-	-	-	-	-	-	0.18	-	-	-
WS-2	30.0	30	64	35	29	93.0	A-7-5	UU	-	-	1700	4.0	-	-	-	-	-	-	-	-	-	-

NOTES:

1. LL= LIQUID LIMIT
2. PL = PLASTIC LIMIT
3. PI = PLASTICITY INDEX
4. UC = UNCONFINED COMPRESSION
5. DS = DIRECT SHEAR
6. CONS = CONSOLIDATION
7. UU = UNCONSOLIDATED- UNDRAINED TRIAXIAL TEST
8. CIUC = CONSOLIDATED ISOTROPIC UNDRAINED COMPRESSION TRIAXIAL TEST

UNOFFICIAL WEBSITE COPY

SUMMARY OF INDEX TEST RESULTS

BORING NO.	TOP SAMPLE DEPTH (FT)	NATURAL MOISTURE CONTENT (%)	LL	PL	PI	PERCENT PASSING NO. 200	AASHTO
99-B-01	39.0	18.9	22	-	2	-	-
99-B-04	15.0	26.3	54	28	26	-	-
99-B-10	30.0	14.1	28	-	11	-	-
99-B-11	18.0	16.3	35	-	16	-	-
B-01	3.0	14.0	27	19	8	56.0	A-4
B-01	8.0	15.0	24	21	3	35.0	A-2-4
B-01	13.0	16.0	22	19	3	28.0	A-2-4
B-01	18.0	35.0	39	27	12	83.0	A-6
B-01	19.0	14.0	-	-	NP	9.0	A-1-b
B-01	23.0	17.0	27	16	11	65.0	A-6
B-01	28.0	26.0	28	27	1	96.0	A-4
B-01	33.0	25.0	55	26	29	90.0	A-7-6
B-01	38.0	27.0	58	28	30	97.0	A-7-6
B-01	43.0	23.0	49	25	24	98.0	A-7-6
B-01	48.0	26.0	50	24	26	98.0	A-7-6
B-01	48.7	21.0	24	-	-	-	-
B-01	49.2	16.0	30	20	10	48.0	A-4
B-01	53.0	21.0	-	-	NP	14.0	A-2-4
B-01	58.0	19.0	-	-	NP	25.0	A-2-4
B-01	63.0	23.0	-	-	NP	20.0	A-2-4
B-01	68.0	18.0	-	-	NP	15.0	A-2-4
B-02	13.5	18.0	26	16	10	52.0	A-4
B-02	18.5	20.0	25	18	7	53.0	A-4
B-02	19.5	13.0	17	-	NP	22.0	A-2-4
B-02	23.5	12.0	30	16	14	43.0	A-6
B-02	28.5	21.0	54	22	32	92.0	A-7-6
B-02	33.5	30.0	63	32	31	96.0	A-7-5
B-02	38.5	29.0	48	28	20	86.0	A-7-6
B-02	43.5	25.0	39	23	16	76.0	A-6
B-02	48.5	24.0	35	21	14	74.0	A-6
B-02	53.5	21.0	28	19	9	51.0	A-4
B-02	54.5	20.0	34	20	14	63.0	A-6
B-02	58.5	24.0	-	-	NP	7.0	A-3
B-02	59.5	21.0	-	-	NP	15.0	A-2-4
B-02	63.5	22.0	-	-	NP	12.0	A-2-4
B-02	68.5	21.0	-	-	NP	16.0	A-2-4
B-02	73.5	21.0	-	-	NP	16.0	A-2-4
B-02	74.0	17.0	32	21	11	76.0	A-6
B-02	78.5	18.0	-	-	NP	27.0	A-2-4
B-02	83.5	19.0	-	-	NP	17.0	A-2-4
B-02	84.0	16.0	27	19	8	50.0	A-4
B-03	2.5	13.0	25	19	6	45.0	A-4
B-03	4.0	17.0	32	20	12	62.0	A-6
B-03	4.5	11.0		-	NP	21.0	A-1-b
B-03	8.5	16.0	21	-	NP	34.0	A-2-4
B-03	13.5	24.0	28	19	9	68.0	A-4
B-03	18.5	37.0	45	30	15	93.0	A-7-5
B-03	23.5	15.0	26	19	7	63.0	A-4
B-03	28.5	12.0	21	16	5	31.0	A-2-4
B-03	33.5	14.0	20	16	4	22.0	A-2-4
B-03	38.5	23.0	-	-	NP	18.0	A-2-4
B-03	43.5	27.0	49	27	22	81.0	A-7-6
B-03	48.5	25.0	47	25	22	76.0	A-7-6
B-03	49.0	20.0	-	-	NP	20.0	A-2-4
B-03	53.5	18.0	-	-	NP	24.0	A-2-4
B-03	58.5	21.0	-	-	NP	21.0	A-2-4
B-03	63.5	23.0	-	-	NP	24.0	A-2-4
B-03	68.5	21.0	-	-	NP	21.0	A-2-4
B-05	3.0	14.0	-	-	NP	13.0	A-1-b
B-05	8.0	22.0	29	20	9	52.0	A-4
B-05	9.0	27.0	28	-	NP	39.0	A-4
B-05	13.0	18.0	22	19	3	35.0	A-2-4
B-05	18.0	40.0	44	33	11	97.0	A-7-5
B-05	23.0	48.0	54	47	7	86.0	A-5
B-05	28.0	66.0	50	43	7	-	-
B-05	33.0	11.0	-	-	NP	9.0	A-1-a
B-05	38.0	20.0	35	20	15	64.0	A-6
B-05	43.0	22.0	-	-	NP	2.0	A-3
B-05	48.0	21.0	-	-	NP	7.0	A-3
B-05	53.0	19.0	16	-	NP	44.0	A-4
B-05	58.0	24.0	-	-	NP	26.0	A-2-4
B-05	63.0	19.0	-	-	NP	20.0	A-2-4
B-06	1.0	10.0	23	18	5	38.0	A-4
B-06	3.0	11.0	23	18	5	36.0	A-4
B-06	8.0	20.0	29	23	6	93.0	A-4

SUMMARY OF INDEX TEST RESULTS

BORING NO.	TOP SAMPLE DEPTH (FT)	NATURAL MOISTURE CONTENT (%)	LL	PL	PI	PERCENT PASSING NO. 200	AASHTO
B-06	13.0	11.0	19	-	NP	12.0	A-1-a
B-06	18.0	33.0	30	24	6	44.0	A-4
B-06	19.0	38.0	43	33	10		
B-06	23.0	42.0	44	33	11	90.0	A-7-5
B-06	28.0	169.0	97	-	-	-	-
B-06	33.0	58.0	34	-	-	-	-
B-06	34.0	22.0	-	-	NP	8.0	A-1-b
B-06	38.0	10.0	23	-	NP	8.0	A-1-a
B-06	43.0	23.0	36	25	11	75.0	A-6
B-06	48.0	21.0	36	22	14	83.0	A-6
B-06	53.0	24.0	36	23	13	73.0	A-6
B-06	58.0	19.0	22		NP	46.0	A-4
B-06	63.0	18.0	26	21	5	34.0	A-2-4
B-06	68.0	21.0	28	17	11	67.0	A-6
B-06	73.0	20.0	27	17	10	65.0	A-4
B-06	74.0	19.0	35	21	14	57.0	A-6
B-06	78.0	20.0	23	18	5	25.0	A-2-4
B-06	79.0	18.0	-	-	NP	27.0	A-2-4
B-06	83.0	17.0	-	-	NP	26.0	A-2-4
B-06	88.0	16.0	19	15	4	43.0	A-4
B-06	93.0	19.0	33	19	14	52.0	A-6
B-06	98.0	14.0	39	19	20	25.0	A-2-6
B-07	3.0	13.0	-	-	NP	21.0	A-2-4
B-07	8.0	17.0	-	-	NP	17.0	A-1-b
B-07	13.0	17.0	-	-	NP	18.0	A-2-4
B-07	18.0	18.0	28	18	10	66.0	A-4
B-07	23.0	21.0	28	19	9	87.0	A-4
B-07	28.0	22.0	27	19	8	77.0	A-4
B-07	33.0	23.0	26	18	8	80.0	A-4
B-12	3.0	7.0	-	-	NP	14.0	A-1-b
B-12	8.0	15.0	37	22	15	39.0	A-6
B-12	13.0	24.0	49	26	23	98.0	A-7-6
B-12	18.0	24.0	50	27	23	96.0	A-7-6
B-12	23.0	16.0	23	-	NP	46.0	A-4
B-12	28.0	25.0	20	-	NP	28.0	A-2-4
B-12	33.0	18.0	30	21	9	98.0	A-4
B-13	3.0	11.0	-	-	NP	16.0	A-1-b
B-13	8.0	16.0	34	19	15	81.0	A-6
B-13	13.0	16.0	24	21	3	24.0	A-2-4
B-13	18.0	23.0	58	27	31	94.0	A-7-6
B-13	23.0	18.0	38	22	16	91.0	A-6
B-13	28.0	21.0	42	23	19	98.0	A-7-6
B-13	33.0	23.0	48	23	25	96.0	A-7-6
B-14	1.0	14.0	23	18	5	30.0	A-2-4
B-14	4.0	23.0	32	22	10	95.0	A-4
B-14	9.0	19.0	33	20	13	67.0	A-6
B-14	14.0	18.0	38	22	16	89.0	A-6
B-14	19.0	23.0	49	24	25	98.0	A-7-6
B-14	24.0	2.0	39	22	17	98.0	A-6
B-14	29.0	51.0	53	29	24	98.0	A-7-6
B-14	34.0	53.0	51	27	24	95.0	A-7-6
B-14	39.0	13.0	39	23	16	90.0	A-6
B-15	1.0	18.0	-	-	NP	37.0	A-4
B-15	4.0	18.0	36	22	14	24.0	A-2-6
B-15	9.0	22.0	33	20	13	38.0	A-6
B-15	10.0	16.0	17	-	NP	17.0	A-1-b
B-15	14.0	23.0	32	19	13	81.0	A-6
B-15	19.0	23.0	36	21	15	80.0	A-6
B-15	24.0	24.0	48	21	27	91.0	A-7-6
B-15	29.0	31.0	57	27	30	96.0	A-7-6
B-15	34.0	30.0	35	26	9	89.0	A-4
B-15	39.0	21.0	27	16	11	45.0	A-6
B-15	40.0	28.0	47	28	19	93.0	A-7-6
B-16	1.0	22.0	28	21	7	94.0	A-4
B-16	3.0	18.0	29	19	10	87.0	A-4
B-16	8.0	19.0	29	20	9	81.0	A-4
B-16	13.0	16.0	29	19	10	48.0	A-4
B-16	18.0	26.0	51	25	26	96.0	A-7-6
B-16	23.0	27.0	54	27	27	95.0	A-7-6
B-16	28.0	40.0	55	31	24	96.0	A-7-5
B-16	33.0	28.0	48	27	21	88.0	A-7-6
B-17	1.0	18.0	29	22	7	81.0	A-4
B-17	4.0	21.0	33	21	12	84.0	A-6
B-17	8.0	19.0	26	20	6	90.0	A-4
B-17	13.0	16.0	28	18	10	61.0	A-4

SUMMARY OF INDEX TEST RESULTS

BORING NO.	TOP SAMPLE DEPTH (FT)	NATURAL MOISTURE CONTENT (%)	LL	PL	PI	PERCENT PASSING NO. 200	AASHTO
B-17	14.0	16.0	-	-	NP	22.0	A-2-4
B-17	18.0	10.0	18	15	3	22.0	A-1-b
B-17	18.5	29.0	31	19	12	67.0	A-6
B-17	23.0	28.0	56	27	29	94.0	A-7-6
B-17	28.0	27.0	63	30	33	96.0	A-7-5
B-17	33.0	45.0	40	23	17	74.0	A-6
B-17	38.0	56.0	51	28	23	84.0	A-7-6
B-18	1.0	23.0	32	26	6	97.0	A-4
B-18	4.5	23.0	28	24	4	97.0	A-4
B-18	7.0	23.0	26	23	3	90.0	A-4
B-18	8.0	13.0	25	22	3	-	-
B-18	12.0	21.0	20	15	5	70.0	A-4
B-18	17.0	24.0	20	17	3	48.0	A-4
B-18	22.0	23.0	24	19	5	75.0	A-4
B-18	22.5	17.0	23	-	NP	70.0	A-4
B-18	27.0	51.0	48	24	24	95.0	A-7-6
B-18	32.0	30.0	57	28	29	97.0	A-7-6
B-18	37.0	31.0	51	29	22	90.0	A-7-6
B-19	2.0	16.0	28	16	12	70.0	A-6
B-19	7.0	16.0	29	18	11	90.0	A-6
B-19	12.0	24.0	54	27	27	96.0	A-7-6
B-19	17.0	21.0	47	23	24	98.0	A-7-6
B-19	22.0	23.0	49	25	24	99.0	A-7-6
B-19	27.0	27.0	55	30	25	99.0	A-7-5
B-19	32.0	25.0	46	27	19	82.0	A-7-6
B-19	37.0	34.0	65	34	31	99.0	A-7-5
B-20	1.0	22.0	34	20	14	94.0	A-6
B-20	4.0	21.0	28	23	5	96.0	A-4
B-20	9.0	19.0	27	20	7	89.0	A-4
B-20	9.5	16.0	40	22	18	97.0	A-6
B-20	14.0	22.0	44	23	21	94.0	A-7-6
B-20	19.0	20.0	45	25	20	82.0	A-7-6
B-20	24.0	24.0	45	26	19	99.0	A-7-6
B-20	29.0	27.0	49	29	20	97.0	A-7-6
B-20	34.0	18.0	31	20	11	65.0	A-6
B-20	39.0	23.0	39	23	16	79.0	A-6
B-21	1.0	16.0	37	20	17	95.0	A-6
B-21	3.5	17.0	29	17	12	93.0	A-6
B-21	8.5	17.0	32	18	14	89.0	A-6
B-21	13.5	23.0	53	26	27	95.0	A-7-6
B-21	18.5	20.0	42	23	19	91.0	A-7-6
B-21	23.5	26.0	52	33	19	99.0	A-7-5
B-21	28.5	27.0	55	28	27	97.0	A-7-6
B-21	33.5	17.0	31	20	11	67.0	A-6
B-21	34.5	15.0	24	18	6	48.0	A-4
B-21	38.5	23.0	39	25	14	84.0	A-6
B-22	1.0	19.0	29	20	9	74.0	A-4
B-22	4.0	23.0	42	24	18	-	-
B-22	9.0	24.0	45	26	19	90.0	A-7-6
B-22	14.0	23.0	44	28	16	91.0	A-7-6
B-22	19.0	23.0	47	25	22	87.0	A-7-6
B-22	24.0	27.0	48	27	21	-	-
B-22	29.0	24.0	44	26	18	86.0	A-7-6
B-22	34.0	15.0	29	18	11	58.0	A-6
B-22	39.0	18.0	33	22	11	75.0	A-6
B-23	1.0	17.0	30	20	10	63.0	A-4
B-23	4.0	16.0	-	-	NP	16.0	A-2-4
B-23	9.0	20.0	34	21	13	74.0	A-6
B-23	14.0	27.0	60	29	31	92.0	A-7-6
B-23	19.0	30.0	58	30	28	94.0	A-7-5

NOTES:

1. LL = LIQUID LIMIT
2. PL = PLASTIC LIMIT
3. PI = PLASTICITY INDEX

UNOFFICIAL WEB SITE COPY

SUMMARY OF INDEX TEST RESULTS

BORING NO.	TOP SAMPLE DEPTH (FT)	NATURAL MOISTURE CONTENT (%)	LL	PL	PI	PERCENT PASSING NO. 200	AASHTO
B-23	24.0	46.0	49	25	24	81	A-7-6
B-23	29.0	2.0	33	21	12	68	A-6
B-23	34.0	3.0	39	22	17	83	A-6
B-23	39.0	40.0	48	27	21	86	A-7-6
IBR-01	5.5	12.8	25	17	8	60	A-4
IBR-01	12.5	17.9	22	17	5	73	A-4
IBR-01	22.5	14.8	28	16	12	93	A-6
IBR-01	29.5	19.6	38	20	18	89	A-6
IBR-01	42.5	24.6	NP	NP	NP	8	A-3
IBR-02	10.0	24.5	40	22	18	92	A-6
IBR-02	45.0	17.9	26	19	7	91	A-4
IBR-02	65.0	21.1	NP	NP	NP	52	A-4
IBR-03	6.0	21.2	41	20	21	86	A-7-5
IBR-03	15.0	17.3	29	17	12	92	A-6
IBR-03	30.0	20.2	50	24	26	92	A-7-5
IBR-03	69.0	20.7	32	20	12	96	A-6
IBR-03	78.0	13.7	20	14	6	54	A-4
IBR-04	6.0	19.9	25	20	5	82	A-4
IBR-04	15.0	22.9	47	24	23	97	A-7-5
IBR-04	32.0	17.6	25	18	7	41	A-4
IBR-04	39.5	19.5	36	22	14	99	A-6
IBR-04	41.5	22.0	36	24	12	97	A-6
IBR-04	51.0	24.0	NP	NP	NP	32	A-2-4
IBR-04	66.0	15.5	NP	NP	NP	81	A-4
IBR-04	78.0	16.0	20	14	6	47	A-4
IBR-04	96.0	20.2	NP	NP	NP	9	A-3
IBR-05	9.0	19.7	46	23	23	89	A-7-5
IBR-05	21.0	26.6	58	29	29	97	A-7-5
IBR-05	30.0	17.5	35	21	14	96	A-6
IBR-05	41.0	17.7	21	17	4	73	A-4
IBR-05	59.0	18.7	NP	NP	NP	45	A-4
IBR-05	71.0	18.8	16	15	1	80	A-4
IBR-05	86.0	23.1	NP	NP	NP	21	A-2-4
IBR-06	9.0	16.7	47	26	21	97	A-7-5
IBR-06	18.0	17.6	40	24	16	91	A-6
IBR-06	48.0	17.3	19	17	2	46	A-4
IBR-06	87.0	22.1	NP	NP	NP	38	A-4
IBR-07	12.0	22.6	45	23	22	98	A-7-5
IBR-07	30.0	20.8	38	21	17	100	A-6
IBR-07	43.0	20.2	38	21	17	99	A-6
IBR-07	52.0	26.6	56	29	27	99	A-7-5
IBR-07	76.0	19.1	NP	NP	NP	31	A-2-4
IBR-07	88.0	14.3	21	15	6	65	A-4
IBR-08	60.0	18.7	NP	NP	NP	45	A-4
IBR-08	81.0	14.5	27	16	11	84	A-6
IBR-09	9.0	13.0	27	17	10	76	A-4
IBR-09	87.0	16.7	24	15	9	79	A-4
IBR-09A	2.5	16.1	28	20	8	98	A-4
IBR-09A	15.0	15.7	41	22	19	86	A-7-5
IBR-09A	30.0	23.8	56	27	29	99	A-7-5
IBR-09A	42.5	11.3	22	17	5	69	A-4
IBR-09A	62.5	14.5	21	15	6	67	A-4
IBR-09A	80.0	17.8	21	15	6	68	A-4
IBR-09A	90.0	18.3	NP	NP	NP	16	A-2-4
IBR-09A	98.5	14.6	NP	NP	NP	11	A-1-b
IBR-10	19.5	31.4	55	27	28	97	A-7-5
IBR-10	24.5	15.4	32	20	12	92	A-6
IBR-10	32.0	21.0	NP	NP	NP	43	A-4
IBR-10	39.5	16.8	29	18	11	73	A-6
IBR-10	49.5	26.4	50	26	24	98	A-7-5
IBR-10	89.5	20.6	NP	NP	NP	17	A-2-4
IBR-12	32.5	12.8	22	16	6	45	A-4
IBR-12	42.5	18.4	23	17	6	94	A-4
IBR-12	75.0	17.5	18	14	4	60	A-4
IBR-12	95.0	18.2	28	17	11	95	A-6
IBR-13	15.0	21.0	62	24	38	97	A-7-5
IBR-13A	7.0	17.3	30	21	9	91	A-4
IBR-13A	24.5	19.8	47	24	23	98	A-7-5
IBR-13A	37.0	20.2	27	19	8	93	A-4
IBR-13A	49.5	17.5	25	19	6	93	A-4

SUMMARY OF INDEX TEST RESULTS

BORING NO.	TOP SAMPLE DEPTH (FT)	NATURAL MOISTURE CONTENT (%)	LL	PL	PI	PERCENT PASSING NO. 200	AASHTO
IBR-13A	62.0	22.6	19	19	NP	53	A-6
IBR-13A	77.0	18.9	NP	NP	NP	11	A-2-4
IBR-13A	87.0	15.3	22	15	7	76	A-4
IBR-14	6.0	15.9	25	15	10	67	A-4
IBR-14	15.0	14.1	24	17	7	62	A-4
IBR-14	21.0	18.9	44	20	24	94	A-7-5
IBR-14	36.0	25.2	60	30	30	98	A-7-5
IBR-14	60.0	7.3	40	21	19	97	A-6
IBR-14	75.0	16.5	30	17	13	88	A-6
IBR-15	6.0	14.7	39	20	19	38	A-6
IBR-15	25.0	19.3	42	22	20	97	A-7-5
IBR-15	29.5	24.0	46	25	21	99	A-7-5
IBR-15	35.0	16.3	23	14	9	67	A-4
IBR-15	47.0	20.9	22	17	5	45	A-4
IBR-15	59.0	16.5	21	14	7	60	A-4
IBR-15	80.0	18.2	NP	NP	NP	28	A-2-4
IBR-15	92.0	19.9	20	14	6	21	A-2-4
IBR-16	7.5	18.0	45	25	20	95	A-7-5
IBR-16	35.0	16.6	66	27	39	99	A-7-5
IBR-17A	12.0	21.3	45	21	24	78	A-7-5
IBR-17A	27.0	16.1	31	18	13	92	A-6
IBR-17A	36.0	14.8	22	16	6	63	A-4
IBR-17A	51.0	18.3	41	21	20	92	A-7-5
IBR-17A	66.0	18.9	25	16	9	78	A-4
IBR-17A	78.0	20.2	20	18	2	51	A-4
IBR-17A	99.0	15.4	19	13	6	61	A-4
IBR-18A	18.0	20.7	32	20	12	97	A-6
IBR-18A	36.0	20.1	50	26	24	87	A-7-5
IBR-18A	54.0	18.2	NP	NP	NP	46	A-4
IBR-18A	79.0	13.6	NP	NP	NP	21	A-2-4
IBR-18B	3.0	17.8	35	20	15	65	A-6
IBR-18B	12.0	16.9	NP	NP	NP	14	A-2-4
IBR-18B	18.0	20.4	37	21	16	95	A-6
IBR-18B	39.0	25.2	67	30	37	100	A-7-5
IBR-18B	60.0	19.6	20	18	2	59	A-4
IBR-18B	78.0	15.8	18	12	6	27	A-2-4
IBR-18B	90.0	15.5	NP	NP	NP	12	A-2-4
IBR-18C	9.0	31.9	42	25	17	76	A-7-5
IBR-18C	21.0	13.8	32	20	12	94	A-6
IBR-18C	36.0	25.0	62	32	30	98	A-7-6
IBR-18C	54.0	20.0	NP	NP	NP	27	A-2-4
IBR-18C	74.0	14.1	23	15	8	78	A-4
IBR-18C	89.0	13.2	NP	NP	NP	12	A-2-4
IBR-19	6.0	15.5	24	16	8	44	A-4
IBR-19	21.0	22.1	49	22	27	99	A-7-5
IBR-19	33.0	20.4	NP	NP	NP	26	A-2-4
IBR-19	42.0	14.9	19	14	5	42	A-4
IBR-19	75.0	22.8	41	20	21	94	A-7-5
IBR-19	90.0	23.8	42	23	19	99	A-7-5
IBR-20	2.5	14.6	NP	NP	NP	23	A-2-4
IBR-20	17.5	24.2	41	22	19	100	A-7-5
IBR-20	40.0	25.4	61	27	34	94	A-7-5
IBR-20	47.5	20.6	44	29	15	98	A-7-5
IBR-20	70.0	25.1	NP	NP	NP	36	A-4
IBR-22	7.5	21.8	50	26	24	95	A-7-5
IBR-22	27.5	9.3	NP	NP	NP	26	A-2-4
IBR-22	35.0	17.0	36	20	16	99	A-6
IBR-22	45.0	18.1	26	19	7	85	A-4
IBR-23	3.0	30.1	42	29	13	46	A-7-5
IBR-23	12.0	19.9	49	19	30	99	A-7-5
IBR-23	24.0	22.3	55	27	28	98	A-7-5
IBR-23	42.0	26.8	49	27	22	99	A-7-5
IBR-23	54.0	20.1	41	22	19	99	A-7-5
IBR-23	72.0	16.7	29	17	12	80	A-6
IBR-23	81.0	16.0	28	17	11	80	A-6
IBR-23	93.0	18.7	NP	NP	NP	19	A-1-b
IBR-24	5.0	21.2	45	20	25	67	A-7-5
IBR-24	40.0	18.9	22	18	4	72	A-4
IBR-24	65.0	19.8	41	22	19	97	A-7-5
IBR-24	85.0	21.3	NP	NP	NP	23	A-2-4

SUMMARY OF INDEX TEST RESULTS

BORING NO.	TOP SAMPLE DEPTH (FT)	NATURAL MOISTURE CONTENT (%)	LL	PL	PI	PERCENT PASSING NO. 200	AASHTO
IBR-24	95.0	15.3	28	18	10	57	A-4
IBR-26	9.0	22.9	26	25	1	95	A-4
IBR-26	18.0	17.7	NP	NP	NP	16	A-1-b
IBR-26	30.0	14.0	30	17	13	66	A-6
IBR-26	42.0	17.3	33	20	13	97	A-6
IBR-26	60.0	35.7	61	29	32	98	A-7-5
IBR-26	66.0	27.7	41	24	17	96	A-7-5
IBR-26	78.0	15.2	32	18	14	92	A-6
IBR-26	81.0	18.0	34	18	16	94	A-6
IBR-26	87.0	16.6	23	15	8	72	A-4
IBR-26	96.0	19.2	NP	NP	NP	37	A-4
IBR-26A	3.0	20.4	28	20	8	76	A-4
IBR-26A	12.0	16.2	NP	NP	NP	26	A-2-4
IBR-26A	24.0	11.5	NP	NP	NP	11	A-1-b
IBR-26A	39.0	17.5	34	19	15	99	A-6
IBR-26A	45.0	14.9	28	17	11	85	A-6
IBR-26A	54.0	15.1	35	20	15	77	A-6
IBR-26A	75.0	28.9	51	25	26	98	A-7-5
IBR-27	15.0	9.9	NP	NP	NP	11	A-1-b
IBR-27	30.0	14.1	28	16	12	49	A-6
IBR-27	48.0	16.5	33	19	14	98	A-6
IBR-27	54.0	15.5	25	15	10	80	A-4
IBR-27	69.0	16.7	25	17	8	68	A-4
IBR-27	84.0	13.5	30	16	14	93	A-6
IBR-27	96.0	17.6	NP	NP	NP	43	A-4
IBR-27A	6.0	18.4	28	21	7	92	A-4
IBR-27A	21.0	16.8	28	18	10	57	A-4
IBR-27A	36.0	34.0	51	26	25	100	A-7-5
IBR-27A	54.0	17.3	23	17	6	60	A-4
IBR-27A	79.0	24.8	56	31	25	99	A-7-6
IBR-27A	94.0	19.8	34	20	14	99	A-6
IBR-28	5.0	11.7	27	18	9	65	A-4
IBR-28	20.0	17.4	21	17	4	17	A-2-4
IBR-28	40.0	15.4	29	17	12	90	A-6
IBR-28	65.0	20.8	43	20	23	96	A-7-5
IBR-28A	9.5	8.7	NP	NP	NP	16	A-2-4
IBR-28A	25.0	8.5	NP	NP	NP	11	A-1-b
IBR-28A	45.0	22.0	NP	NP	NP	41	A-4
IBR-31	9.0	16.2	33	19	14	97	A-6
IBR-31	59.0	21.9	40	23	17	98	A-6
IBR-31	89.0	18.6	25	15	10	50	A-4
IBR-32	20.0	20.8	NP	NP	NP	30	A-2-4
IBR-32	30.0	18.7	25	16	9	57	A-8
IBR-32	67.5	27.8	23	19	4	46	A-4
IBR-32	82.5	17.8	33	19	14	73	A-6
IBR-33	10.0	14.4	NP	NP	NP	20	A-2-4
IBR-33	20.0	17.0	23	18	5	79	A-4
IBR-33	27.5	15.8	30	18	12	89	A-6
IBR-33	35.0	15.8	21	16	5	68	A-4
IBR-33	45.0	15.4	22	15	7	69	A-4
IBR-33	52.5	22.3	43	22	21	95	A-7-5
IBR-33	70.0	30.9	69	34	35	99	A-7-6
IBR-33	85.0	24.1	32	19	13	68	A-6
IBR-33	95.0	32.2	46	25	21	89	A-7-5
IBR-42	6.0	9.9	NP	NP	NP	13	A-1-b
IBR-42	15.0	16.6	24	17	7	25	A-2-4
IBR-42	30.0	33.3	38	20	18	70	A-6
IBR-42	42.0	25.7	41	20	21	89	A-7-5
IBR-42	54.0	27.4	61	28	33	97	A-7-5
IBR-42	72.0	12.9	26	16	10	83	A-4
IBR-42	84.0	12.5	22	15	7	64	A-4
IBR-42A	9.0	5.9	22	15	7	54	A-4
IBR-42A	18.0	16.7	NP	NP	NP	11	A-1-b
IBR-42A	42.0	17.0	29	18	11	92	A-6
IBR-42A	54.0	22.9	46	24	22	88	A-7-5
IBR-42A	66.0	19.9	37	22	15	92	A-6
IBR-42A	72.0	20.4	NP	NP	NP	8	A-3
IBR-42A	87.0	14.1	23	15	8	74	A-4
IBR-43	15.0	23.8	47	23	24	99	A-7-5
IBR-43	22.5	17.6	32	20	12	91	A-6

NOTES:

1. LL = LIQUID LIMIT
2. PL = PLASTIC LIMIT
3. PI = PLASTICITY INDEX

UNOFFICIAL WEBSITE COPY

SUMMARY OF INDEX TEST RESULTS

BORING NO.	TOP SAMPLE DEPTH (FT)	NATURAL MOISTURE CONTENT (%)	LL	PL	PI	PERCENT PASSING NO. 200	AASHTO
IBR-43	40.0	17.7	30	20	10	99	A-4
IBR-43	50.0	23.8	54	29	25	89	A-7-5
IBR-43	75.0	16.4	26	15	11	78	A-6
IBR-44	3.5	11.4	22	14	8	35	A-2-4
IBR-44	38.5	19.9	29	17	12	88	A-6
IBR-44	93.5	21.6	NP	NP	NP	20	A-1-b
IBR-45	3.0	14.5	25	16	9	70	A-4
IBR-45	45.0	22.2	NP	NP	NP	47	A-4
IBR-45	78.0	17.8	21	13	8	60	A-4
IBR-46	0.0	13.9	26	20	6	85	A-4
IBR-46	12.0	17.2	NP	NP	NP	20	A-2-4
IBR-46	36.0	24.4	49	24	25	93	A-7-5
IBR-46	51.0	22.0	NP	NP	NP	31	A-2-4
IBR-46	93.0	17.1	23	16	7	80	A-4
IBR-47	4.0	12.9	19	17	2	45	A-4
IBR-47	49.0	23.4	37	20	17	81	A-6
IBR-47	98.5	23.5	24	16	8	74	A-4
IBR-48	0.0	12.7	25	17	8	67	A-4
IBR-48	15.0	23.4	49	26	23	97	A-7-5
IBR-48	36.0	20.1	41	22	19	90	A-7-5
IBR-48	57.0	25.2	NP	NP	NP	11	A-2-4
IBR-48	75.0	20.2	NP	NP	NP	20	A-2-4
IBR-49	0.0	19.8	24	20	4	62	A-4(0)
IBR-49	2.0	17.5	35	17	17	92	A-6(15)
IBR-49	8.0	19.2	44	21	23	91	A-7-6(22)
IBR-49	10.0	18.6	45	21	25	90	A-7-6(24)
IBR-49	12.0	20.9	54	24	29	94	A-7-6(32)
IBR-49	14.0	25.4	61	27	34	98	A-7-6(39)
IBR-49	18.0	20.0	38	19	19	81	A-6(15)
IBR-49	24.0	20.9	29	18	11	75	A-6(6)
IBR-49	25.0	20.3	22	NP	NP	36	A-4(0)
IBR-49	29.0	21.6	NV	NP	NP	12	A-2-4(0)
IBR-49	34.0	25.5	50	22	28	94	A-7-6(29)
IBR-49	39.0	21.8	39	22	18	97	A-6(18)
IBR-49	44.0	19.7	28	18	10	89	A-4(8)
IBR-49	49.0	22.1	19	NP	NP	69	A-4(0)
IBR-49	54.0	21.7	23	NP	NP	84	A-4(0)
IBR-49	59.0	21.6	NV	NP	NP	20	A-2-4(0)
IBR-49	64.0	19.1	25	18	6	92	A-4(5)
IBR-49	69.0	21.5	NV	NP	NP	17	A-2-4(0)
IBR-49	74.0	21.5	18	NP	NP	62	A-4(0)
IBR-49	74.5	23.6	NV	NP	NP	37	A-4(0)
IBR-50	0.0	16.3	29	22	6	76	A-4(4)
IBR-50	2.0	13.1	21	NP	NP	53	A-4(0)
IBR-50	4.0	18.7	33	20	13	82	A-6(10)
IBR-50	6.0	19.0	37	22	15	89	A-6(14)
IBR-50	8.0	19.9	34	20	14	81	A-6(10)
IBR-50	10.0	23.8	49	25	24	96	A-7-6(26)
IBR-50	12.0	22.7	NV	NP	NP	1	A-3
IBR-50	14.0	23.4	51	26	25	97	A-7-6(28)
IBR-50	16.0	25.3	57	27	31	94	A-7-6(33)
IBR-50	18.0	23.7	54	26	28	98	A-7-6(32)
IBR-50	24.0	20.3	32	23	9	87	A-4(8)
IBR-50	29.0	24.1	NV	NP	NP	93	A-4(0)
IBR-50	39.0	21.6	18	NP	NP	52	A-4(0)
IBR-50	44.0	21.9	20	NP	NP	56	A-4(0)
IBR-50	49.0	20.0	20	NP	NP	54	A-4(0)
IBR-50	54.0	24.9	22	NP	NP	50	A-4(0)
IBR-50	59.0	19.5	20	15	5	56	A-4(0)
IBR-50	64.0	20.6	NV	NP	NP	22	A-2-4(0)
IBR-50	69.0	20.0	NV	NP	NP	36	A-4(0)
IBR-50	73.0	21.8	NV	NP	NP	19	A-2-4(0)
IBR-51	0.5	16.4	28	21	7	60	A-4(2)
IBR-51	2.0	15.2	23	16	7	77	A-4(3)
IBR-51	4.0	15.9	23	19	4	93	A-4(2)
IBR-51	6.0	18.6	27	21	6	98	A-4(5)
IBR-51	8.0	20.9	28	22	6	99	A-4(6)
IBR-51	10.0	18.4	28	19	9	96	A-4(8)
IBR-51	14.0	21.6	24	17	7	76	A-4(3)
IBR-51	16.0	23.0	22	16	5	53	A-4(0)

SUMMARY OF INDEX TEST RESULTS

BORING NO.	TOP SAMPLE DEPTH (FT)	NATURAL MOISTURE CONTENT (%)	LL	PL	PI	PERCENT PASSING NO. 200	AASHTO
IBR-51	18.0	21.2	46	23	23	95	A-7-6(24)
IBR-51	24.0	15.9	30	18	12	93	A-6(10)
IBR-51	29.0	18.7	47	21	26	91	A-7-6(25)
IBR-51	34.0	24.2	57	29	28	98	A-7-6(33)
IBR-51	39.0	20.6	50	24	26	99	A-7-6(29)
IBR-51	45.0	18.3	20	NP	NP	39	A-4(0)
IBR-51	49.0	16.9	21	15	6	76	A-4(2)
IBR-51	54.0	22.9	43	21	22	94	A-7-6(22)
IBR-51	59.0	25.6	48	27	22	98	A-7-6(25)
IBR-51	64.0	24.0	22	NP	NP	65	A-4(0)
IBR-51	69.0	19.1	20	15	5	67	A-4(1)
IBR-51	73.0	26.5	NV	NP	NP	26	A-2-4(0)
IBR-52	1.0	7.9	26	18	9	47	A-4(1)
IBR-52	2.0	11.2	16	NP	NP	66	A-4(0)
IBR-52	4.0	23.2	22	NP	NP	70	A-4(0)
IBR-52	6.0	16.5	20	17	2	78	A-4(0)
IBR-52	8.0	23.6	NV	NP	NP	43	A-4(0)
IBR-52	10.0	22.6	19	NP	NP	59	A-4(0)
IBR-52	12.0	26.0	23	20	3	69	A-4(0)
IBR-52	14.0	25.6	42	22	20	94	A-7-6(20)
IBR-52	18.0	20.2	48	21	28	93	A-7-6(28)
IBR-52	22.0	20.4	51	23	29	95	A-7-6(30)
IBR-52	29.0	23.4	54	27	27	98	A-7-6(31)
IBR-52	34.0	24.8	45	13	33	97	A-7-6(33)
IBR-52	35.0	17.8	29	21	8	84	A-4(5)
IBR-52	39.0	25.4	NV	NP	NP	17	A-2-4(0)
IBR-52	44.0	14.3	21	NP	NP	58	A-4(0)
IBR-52	49.0	20.4	NV	NP	NP	44	A-4(0)
IBR-52	54.0	18.0	19	NP	NP	47	A-4(0)
IBR-52	59.0	27.3	NV	NP	NP	30	A-2-4(0)
IBR-52	64.0	22.8	21	NP	NP	52	A-4(0)
IBR-52	69.0	21.9	NV	NP	NP	17	A-2-4(0)
IBR-52	73.0	22.0	20	NP	NP	54	A-4(0)
IBR-53	0.0	12.1	22	18	4	64	A-4(0)
IBR-53	1.5	5.0	NV	NP	NP	25	A-2-4(0)
IBR-53	2.0	7.0	NV	NP	NP	12	A-2-4(0)
IBR-53	4.0	20.8	NV	NP	NP	15	A-2-4(0)
IBR-53	6.0	30.7	30	22	9	82	A-4(6)
IBR-53	7.5	24.5	40	21	18	97	A-6(20)
IBR-53	8.0	20.8	41	20	21	93	A-7-6(20)
IBR-53	10.0	21.8	38	22	16	90	A-6(15)
IBR-53	14.0	24.6	43	25	18	95	A-7-6(19)
IBR-53	16.0	22.4	38	22	16	96	A-6(16)
IBR-53	18.0	24.2	47	26	21	100	A-7-6(25)
IBR-53	24.0	20.2	33	24	8	87	A-4(7)
IBR-53	29.0	20.1	23	14	9	71	A-4(3)
IBR-53	34.0	17.1	33	19	14	84	A-6(11)
IBR-53	39.0	17.1	24	21	4	89	A-4(2)
IBR-53	44.0	23.2	21	NP	NP	65	A-4(0)
IBR-53	49.0	24.8	NV	NP	NP	34	A-2-4(0)
IBR-53	54.0	25.7	NV	NP	NP	21	A-2-4(0)
IBR-53	59.0	21.9	NV	NP	NP	12	A-2-4(0)
IBR-53	64.0	22.8	15	NP	NP	49	A-4(0)
IBR-53	69.0	18.5	17	NP	NP	66	A-4(0)
IBR-53	74.0	15.7	NV	NP	NP	25	A-2-4(0)
IBR-54	0.0	17.4	22	17	5	75	A-4(1)
IBR-54	2.0	15.3	28	17	11	87	A-6(8)
IBR-54	4.0	24.8	48	22	26	84	A-7-6(23)
IBR-54	6.0	22.8	52	22	29	86	A-7-6(27)
IBR-54	8.0	18.8	37	21	16	90	A-6(15)
IBR-54	10.0	18.5	36	21	15	88	A-6(13)
IBR-54	12.0	20.8	37	19	19	90	A-6(16)
IBR-54	14.0	23.4	46	25	21	94	A-7-6(22)
IBR-54	16.0	24.8	42	25	17	93	A-7-6(18)
IBR-54	18.0	19.7	34	22	12	93	A-6(11)
IBR-54	24.0	22.6	73	26	46	95	A-7-6(50)
IBR-54	29.0	26.4	NV	NP	NP	13	A-2-4(0)
IBR-54	34.0	17.5	28	19	10	10	A-4(8)
IBR-54	39.0	16.0	16	NP	NP	33	A-2-4(0)
IBR-54	44.0	19.8	19	NP	NP	61	A-4(0)

SUMMARY OF INDEX TEST RESULTS

BORING NO.	TOP SAMPLE DEPTH (FT)	NATURAL MOISTURE CONTENT (%)	LL	PL	PI	PERCENT PASSING NO. 200	AASHTO
IBR-54	49.0	21.0	19	NP	NP	66	A-4(0)
IBR-54	54.0	41.3	21	NP	NP	-	-
IBR-54	55.0	53.8	NV	NP	NP	-	-
IBR-54	59.0	32.3	NV	NP	NP	19	A-2-4(0)
IBR-54	64.0	22.1	19	NP	NP	80	A-4(0)
IBR-54	69.0	26.7	NV	NP	NP	23	A-2-4(0)
IBR-54	73.0	25.3	20	18	2	73	A-4(0)
IBR-55	0.5	11.5	22	17	5	43	A-4(0)
IBR-55	2.0	17.5	26	21	5	82	A-4(3)
IBR-55	4.0	11.4	16	NP	NP	40	A-4(0)
IBR-55	6.0	10.5	16	NP	NP	35	A-2-4(0)
IBR-55	8.0	11.5	18	NP	NP	35	A-2-4(0)
IBR-55	10.0	10.0	22	NP	NP	25	A-1-b
IBR-55	12.0	14.7	22	NP	NP	26	A-2-4(0)
IBR-55	14.0	15.9	22	NP	NP	74	A-4(0)
IBR-55	16.0	17.5	22	NP	NP	82	A-4(0)
IBR-55	18.0	18.4	25	NP	NP	92	A-4(0)
IBR-55	24.0	21.6	40	24	16	99	A-6(18)
IBR-55	29.0	20.9	38	23	16	84	A-6(13)
IBR-55	34.0	19.5	32	21	11	98	A-6(11)
IBR-55	38.0	19.1	28	22	6	99	A-4(6)
IBR-55	44.0	18.4	25	19	6	94	A-4(4)
IBR-55	49.0	18.7	23	17	6	82	A-4(3)
IBR-55	54.0	23.0	35	24	11	96	A-6(11)
IBR-55	59.0	26.3	43	25	18	98	A-7-6(19)
IBR-55	64.0	29.0	46	32	14	97	A-7-5(18)
IBR-55	69.0	29.8	55	29	26	94	A-7-6(29)
IBR-55	74.0	32.2	48	29	18	99	A-7-6(23)
IBR-56	0.5	11.4	23	17	7	46	A-4(0)
IBR-56	2.0	9.8	18	NP	NP	39	A-4(0)
IBR-56	4.0	8.2	NV	NP	NP	10	A-1-b
IBR-56	6.0	8.6	NV	NP	NP	18	A-1-b
IBR-56	8.0	9.0	NV	NP	NP	18	A-1-b
IBR-56	10.0	9.0	NV	NP	NP	15	A-1-b
IBR-56	12.0	25.1	NV	NP	NP	25	A-2-4 (0)
IBR-56	14.0	16.0	25	16	9	72	A-4(4)
IBR-56	16.0	19.2	41	17	24	87	A-7-6(21)
IBR-56	18.0	17.4	34	20	15	91	A-6(13)
IBR-56	24.0	17.8	29	19	10	85	A-4(7)
IBR-56	29.0	20.7	34	20	14	94	A-6(13)
IBR-56	34.0	17.4	27	19	8	91	A-4(6)
IBR-56	39.0	21.2	32	19	13	92	A-6(11)
IBR-56	44.0	17.2	20	NP	NP	77	A-4(0)
IBR-56	49.0	27.6	57	29	27	98	A-7-6(32)
IBR-56	54.0	19.2	37	20	17	94	A-6(16)
IBR-56	59.0	25.9	50	24	26	97	A-7-6(29)
IBR-56	64.0	28.1	52	26	26	98	A-7-6(30)
IBR-56	69.0	31.4	54	28	26	98	A-7-6(30)
IBR-56	74.0	18.2	26	17	10	51	A-4(2)
IBR-57	0.5	15.4	22	NP	NP	63	A-4
IBR-57	2.0	12.9	27	18	9	30	A-2-4
IBR-57	4.0	12.2	20	NP	NP	31	A-2-4
IBR-57	6.0	11.0	NP	NP	NP	17	A-1-b
IBR-57	8.0	13.5	23	18	5	27	A-2-4
IBR-57	10.0	14.7	NP	NP	NP	19	A-1-b
IBR-57	12.0	14.6	NP	NP	NP	22	A-1-b
IBR-57	14.0	18.5	NP	NP	NP	22	A-2-4
IBR-57	16.0	18.5	NP	NP	NP	19	A-1-b
IBR-57	18.0	17.3	24	19	5	61	A-4
IBR-57	24.0	20.1	27	18	9	89	A-4
IBR-57	28.0	19.6	31	18	13	92	A-6
IBR-57	34.0	20.9	22	18	4	73	A-4
IBR-57	39.0	19.7	21	18	3	81	A-4
IBR-57	44.0	18.4	20	NP	NP	80	A-4
IBR-57	49.0	19.7	34	20	14	83	A-6
IBR-57	54.0	23.5	40	22	18	93	A-6
IBR-57	59.0	24.3	50	27	23	99	A-7-6
IBR-57	64.0	23.5	49	25	24	86	A-7-6
IBR-57	69.0	28.6	47	27	20	94	A-7-6
IBR-57	74.0	21.1	36	19	17	61	A-6

NOTES:

1. LL = LIQUID LIMIT
2. PL = PLASTIC LIMIT
3. PI = PLASTICITY INDEX

UNOFFICIAL WEBSITE COPY

SUMMARY OF INDEX TEST RESULTS

BORING NO.	TOP SAMPLE DEPTH (FT)	NATURAL MOISTURE CONTENT (%)	LL	PL	PI	PERCENT PASSING NO. 200	AASHTO
IBR-58	2.0	8.7	23	16	7	30	A-2-4
IBR-58	4.0	12.1	31	20	11	25	A-2-6
IBR-58	6.0	10.0	25	NP	NP	19	A-1-b
IBR-58	8.0	9.5	NV	NP	NP	23	A-2-4
IBR-58	10.0	8.1	NV	NP	NP	13	A-1-b
IBR-58	12.0	11.4	NV	NP	NP	14	A-1-b
IBR-58	14.0	12.9	NV	NP	NP	15	A-1-b
IBR-58	16.0	15.9	NV	NP	NP	18	A-2-4
IBR-58	18.0	18.7	NV	NP	NP	17	A-2-4
IBR-58	29.0	17.1	15	NP	NP	38	A-4
IBR-58	34.0	17.5	41	18	23	79	A-7-6
IBR-58	37.0	18.3	40	21	19	88	A-6
IBR-58	39.0	18.3	21	17	5	70	A-4
IBR-58	44.0	20.2	23	17	6	78	A-4
IBR-58	49.0	21.8	24	17	7	84	A-4
IBR-58	54.0	21.5	25	17	7	81	A-4
IBR-58	59.0	21.7	42	23	19	19	A-7-6
IBR-58	64.0	24.3	49	27	22	96	A-7-6
IBR-58	69.0	24.4	34	22	12	84	A-6
IBR-58	74.0	22.0	40	19	21	83	A-6
IBR-59	0.5	10.3	NV	NP	NP	21	A-2-4(0)
IBR-59	2.0	10.7	NV	NP	NP	20	A-1-b
IBR-59	4.0	10.6	NV	NP	NP	5	A-1-b
IBR-59	6.0	10.8	NV	NP	NP	17	A-1-b
IBR-59	8.0	19.2	NV	NP	NP	29	A-2-4(0)
IBR-59	10.0	13.3	NV	NP	NP	8	A-1-b
IBR-59	12.0	15.8	20	NP	NP	62	A-4(0)
IBR-59	14.0	18.4	14	11	3	70	A-4(0)
IBR-59	16.0	26.9	23	19	5	61	A-4(0)
IBR-59	18.0	24.4	16	NP	NP	36	A-4(0)
IBR-59	24.0	17.3	22	17	5	59	A-4(0)
IBR-59	29.0	18.9	19	NP	NP	69	A-4(0)
IBR-59	34.0	26.0	NV	NP	NP	42	A-4(0)
IBR-59	39.0	24.9	34	20	14	88	A-6(12)
IBR-59	44.0	23.9	46	25	21	98	A-7-6(24)
IBR-59	49.0	26.0	55	26	29	99	A-7-6(34)
IBR-59	54.0	15.4	29	18	11	68	A-6(5)
IBR-59	56.0	23.2	22	16	6	56	A-4(1)
IBR-59	58.0	21.0	33	19	14	75	A-6(9)
IBR-59	64.0	21.0	NV	NP	NP	14	A-2-4(0)
IBR-59	69.0	25.0	41	25	16	82	A-7-6(14)
IBR-59	74.0	25.0	41	25	16	82	A-7-6(14)
IBR-60	2.5	9.0	22	16	6	30	A-2-4(0)
IBR-60	4.0	7.8	NV	NP	NP	16	A-1-b
IBR-60	6.0	6.7	NV	NP	NP	11	A-1-b
IBR-60	8.0	10.9	NV	NP	NP	17	A-1-b
IBR-60	10.0	9.3	NV	NP	NP	14	A-1-b
IBR-60	12.0	12.9	NV	NP	NP	7	A-1-b
IBR-60	14.0	21.5	30	19	11	69	A-6(6)
IBR-60	16.0	20.1	27	19	8	78	A-4(5)
IBR-60	24.0	20.1	23	18	5	61	A-4(0)
IBR-60	29.0	20.2	21	17	5	70	A-4(0)
IBR-60	34.0	24.5	21	NP	NP	58	A-4(0)
IBR-60	39.0	27.3	30	20	9	67	A-4(4)
IBR-60	49.0	24.2	46	21	24	87	A-7-6(23)
IBR-60	59.0	18.1	27	17	10	66	A-4(4)
IBR-60	64.0	24.7	45	25	20	98	A-7-6(22)
IBR-60	69.0	20.6	27	16	11.6	44	A-6(2)
IBR-60	73.0	23.8	33	18	15	64	A-6(7)
IBR-61	2.0	12.1	25	22	3	42	A-4(0)
IBR-61	4.0	14.0	24	15	9	32	A-2-4(0)
IBR-61	6.0	10.6	23	19	4	15	A-1-b
IBR-61	8.0	10.1	21	NP	NP	15	A-1-b
IBR-61	10.0	13.3	NV	NP	NP	78	A-4(0)
IBR-61	12.0	23.3	30	22	8	41	A-4(0)
IBR-61	16.0	23.1	31	22	9	99	A-4(9)
IBR-61	18.0	22.7	35	23	11	97	A-6(11)
IBR-61	24.0	19.0	25	18	8	75	A-4(3)
IBR-61	29.0	19.1	24	17	7	70	A-4(3)
IBR-61	34.0	23.1	18	NP	NP	51	A-4(0)

SUMMARY OF INDEX TEST RESULTS

BORING NO.	TOP SAMPLE DEPTH (FT)	NATURAL MOISTURE CONTENT (%)	LL	PL	PI	PERCENT PASSING NO. 200	AASHTO
IBR-61	39.0	26.6	25	16	10	52	A-4(2)
IBR-61	44.0	23.2	41	22	20	93	A-7-6(19)
IBR-61	49.0	30.2	64	27	37	94	A-7-6(40)
IBR-61	54.0	23.2	52	25	28	98	A-7-6(30)
IBR-61	64.0	33.2	52	31	21	99	A-7-5(26)
IBR-61	69.0	33.8	49	32	17	97	A-7-5(21)
IBR-61	74.0	19.1	36	23	13	83	A-6(11)
IBR-61	74.5	20.7	28	17	11	58	A-6(4)
IBR-61	79.0	20.8	30	20	10	75	A-4(6)
IBR-61	84.0	29.6	48	31	17	91	A-7-5(19)
IBR-61	89.0	20.5	33	22	11	72	A-6(7)
IBR-61	93.0	17.2	29	18	11	63	A-6(4)
IBR-61	95.0	19.9	35	23	12	76	A-6(8)
IEB-01	12.0	14.0	27	18	9	78	A-4
IEB-01	30.0	21.7	35	22	13	99	A-6
IEB-01	38.5	19.3	22	16	6	74	A-4
IEB-02	6.0	18.1	31	17	14	84	A-6
IEB-02	24.0	17.9	37	20	17	98	A-6
IEB-02	33.5	19.3	17	15	2	23	A-2-4
IEB-03	4.5	8.6	21	68	NP	36	A-6
IEB-03	20.0	16.6	24	17	7	80	A-4
IEB-03	38.5	14.3	34	18	16	91	A-6
IEB-04	5.0	13.4	21	14	7	34	A-2-4
IEB-04	15.0	19.2	NP	NP	NP	64	A-4
IEB-04	35.0	22.2	52	27	25	97	A-7-5
IEB-13	3.0	14.0	24	21	3	21	A-2-4
IEB-13	21.0	15.9	34	19	15	72	A-6
IEB-13	30.0	24.3	35	19	16	80	A-6
IEB-13	39.0	16.4	39	18	21	88	A-6
IEB-13A	3.0	20.8	26	17	9	50	A-4
IEB-13A	7.5	17.7	33	20	13	40	A-6
IEB-13A	18.5	16.9	36	22	14	84	A-6
IEB-13A	25.0	17.3	31	19	12	96	A-6
IEB-13A	37.0	20.1	30	19	11	76	A-8
IEB-14	3.0	18.7	28	20	8	98	A-4
IEB-14	9.0	14.3	32	17	15	77	A-6
IEB-14	12.0	15.6	34	17	17	89	A-6
IEB-15	0.0	12.4	26	18	8	54	A-4
IEB-15	2.0	19.1	28	20	8	76	A-4
IEB-15	4.0	17.6	28	19	9	62	A-4
IEB-15	6.0	12.6	23	16	7	29	A-2-4
IEB-15	8.0	24.0	49	25	24	91	A-7-6
IEB-15	10.0	25.5	40	26	14	95	A-6
IEB-15	14.0	22.3	34	24	10	91	A-4
IEB-15	16.0	19.1	27	22	5	73	A-4
IEB-15	18.0	18.8	29	21	8	73	A-4
IEB-15	24.0	21.7	37	24	13	90	A-6
IEB-15	29.0	18.2	37	20	17	93	A-6
IEB-15	34.0	17.9	38	19	19	84	A-6
IEB-15	39.0	26.4	61	32	29	100	A-7-5
IEB-15	44.0	20.4	37	24	13	83	A-6
IEB-15	49.0	17.3	24	NP	NP	50	A-4
IEB-15	54.0	19.0	32	19	13	83	A-6
IEB-15	59.0	17.8	31	19	12	86	A-6
IEB-15	64.0	18.7	21	19	12	92	A-6
IEB-15	69.0	19.1	21	17	4	60	A-4
IEB-15	74.0	18.9	20	NP	NP	65	A-4
IEB-15	79.0	20.5	19	NP	NP	49	A-4
IEB-15	84.0	25.3	NP	NP	NP	18	A-2-4
IEB-15	89.0	20.3	NP	NP	NP	20	A-2-4
IEB-15	94.0	19.4	NP	NP	NP	22	A-2-4
IEB-15	98.0	18.5	NP	NP	NP	22	A-2-4
IRW-02	10.0	0.5	32	20	12	87	A-6
IRW-02	20.0	16.4	26	16	10	88	A-4
IRW-02	25.0	18.5	25	17	8	90	A-4
IRW-02	30.0	18.8	21	17	4	73	A-4
IRW-03	4.0	8.7	18	13	5	26	A-2-4
IRW-03	15.0	23.8	49	31	18	84	A-7-6
IRW-03	25.0	17.8	28	18	10	99	A-4
IRW-03	35.0	18.5	29	18	11	98	A-6

SUMMARY OF INDEX TEST RESULTS

BORING NO.	TOP SAMPLE DEPTH (FT)	NATURAL MOISTURE CONTENT (%)	LL	PL	PI	PERCENT PASSING NO. 200	AASHTO
IRW-04	1.5	7.5	NP	NP	NP	17	A-2-4
IRW-04	15.0	17.9	36	21	15	87	A-6
IRW-04	35.0	26.8	NP	NP	NP	5	A-3
IRW-05	9.5	21.9	37	18	19	93	A-6
IRW-05	20.0	19.5	32	16	16	88	A-6
IRW-05	30.0	19.9	NP	NP	NP	48	A-4
IRW-06	6.0	10.5	35	21	14	65	A-6
IRW-06	15.0	8.4	38	19	19	75	A-6
IRW-06	25.0	20.8	24	17	7	87	A-4
IRW-07	2.5	13.6	27	16	11	63	A-6
IRW-07	7.5	13.9	28	19	9	63	A-4
IRW-07	15.0	18.8	27	25	2	79	A-4
IRW-07A	5.0	13.6	24	15	9	65	A-4
IRW-07A	30.0	19.7	28	18	10	75	A-4
IRW-08	7.5	12.3	23	16	7	60	A-4
IRW-08	12.5	15.0	26	17	9	86	A-4
IRW-10	10.0	20.4	39	21	18	99	A-6
IRW-10	25.0	23.9	60	24	36	96	A-7-5
IRW-10	33.0	21.1	36	21	15	89	A-6
IRW-11	10.0	15.8	19	16	3	52	A-4
IRW-11	20.0	17.4	26	15	11	59	A-6
IRW-12	7.5	19.8	43	20	23	77	A-7-5
IRW-12	15.0	19.8	52	22	30	91	A-7-5
IRW-12	33.0	14.1	27	16	11	86	A-6
IRW-13	2.0	18.5	33	20	13	98	A-6
IRW-13	35.0	24.7	54	27	27	99	A-7-5
IRW-14	9.0	15.6	25	15	10	76	A-4
IRW-14	12.0	14.8	19	14	5	62	A-4
IRW-14	27.0	21.3	45	22	23	99	A-7-5
IRW-15	9.0	13.7	32	17	15	46	A-6
IRW-15	24.0	21.7	47	22	25	97	A-7-5
IRW-16	7.5	10.7	NP	NP	NP	15	A-2-4
IRW-16	17.5	15.1	24	19	5	61	A-8
IRW-16	35.0	21.7	NP	NP	NP	11	A-1-a
IRW-17	4.5	14.0	27	17	10	59	A-4
IRW-17	19.5	22.6	46	25	21	96	A-7-5
IRW-17	29.5	16.6	28	17	11	93	A-6
IRW-17	49.0	20.3	26	18	8	74	A-4
IRW-18	6.0	20.1	24	19	5	96	A-4
IRW-18	12.0	15.2	21	15	6	43	A-4
IRW-18	27.0	22.6	37	22	15	90	A-6
IRW-18	36.0	18.7	40	22	18	99	A-6
IRW-18	42.0	12.4	25	17	8	90	A-4
IRW-19	4.0	15.3	NP	NP	NP	9	A-1-a
IRW-19	15.0	28.6	48	27	21	90	A-7-5
IRW-19	25.0	15.3	26	18	8	62	A-4
IRW-19	34.0	18.6	39	22	17	99	A-6
IRW-19	45.0	16.4	24	16	8	67	A-4
IRW-20	6.0	8.2	21	15	6	14	A-2-4
IRW-20	15.0	21.6	49	24	25	99	A-7-5
IRW-20	27.0	4.1	NP	NP	NP	20	A-2-4
IRW-21	3.0	24.8	26	18	8	99	A-4
IRW-21	12.0	12.4	25	15	10	43	A-4
IRW-21	37.0	15.9	25	16	9	90	A-4
IRW-21	46.0	19.9	33	20	13	92	A-6
IRW-22	17.5	19.3	40	23	17	93	A-6
IRW-22	30.0	12.6	24	19	5	63	A-4
IRW-22	48.5	27.9	NP	NP	NP	31	A-2-4
IRW-23	39.5	19.2	36	23	13	97	A-6
IRW-24	7.5	23.8	39	21	18	82	A-6
IRW-24	12.5	21.7	42	23	19	95	A-7-5
IRW-24	27.5	17.1	35	20	15	100	A-6
IRW-25	3.0	17.9	27	19	8	81	A-4
IRW-26	5.0	12.7	30	18	12	34	A-2-6
IRW-26	17.5	26.0	57	29	28	99	A-7-5
IRW-26	30.0	20.5	NP	NP	NP	18	A-2-4
IRW-26	42.5	20.0	33	19	14	82	A-6
IRW-27	8.0	12.9	32	18	14	65	A-6
IRW-27	20.0	15.8	29	15	14	64	A-6
IRW-28	12.0	16.3	33	19	14	94	A-6

NOTES:

1. LL = LIQUID LIMIT
2. PL = PLASTIC LIMIT
3. PI = PLASTICITY INDEX

UNOFFICIAL WEBSITE COPY

SUMMARY OF INDEX TEST RESULTS

BORING NO.	TOP SAMPLE DEPTH (FT)	NATURAL MOISTURE CONTENT (%)	LL	PL	PI	PERCENT PASSING NO. 200	AASHTO
IRW-28	24.0	19.7	43	19	24	78	A-7-5
IRW-28	33.0	26.8	56	30	26	99	A-7-5
IRW-28	48.5	21.4	22	17	5	76	A-4
IRW-29	3.0	14.4	28	19	9	76	A-4
IRW-29	9.0	19.8	27	21	6	87	A-4
IRW-29	21.0	21.7	44	23	21	91	A-7-5
IRW-29	36.0	17.3	36	21	15	95	A-6
IRW-29	48.5	21.8	20	17	3	34	A-2-4
IRW-30	6.0	14.9	43	23	20	57	A-7-5
IRW-30	9.0	18.8	24	17	7	60	A-4
IRW-30	42.0	13.0	NP	NP	NP	39	A-4
IRW-31	9.0	11.3	24	16	8	32	A-2-4
IRW-31	27.0	25.2	46	23	23	95	A-7-5
IRW-31	42.0	14.8	22	18	4	55	A-4
IRW-32	12.5	20.9	26	22	4	93	A-4
IRW-32	37.5	16.8	41	19	22	87	A-7-5
IRW-33	6.0	22.6	27	21	6	83	A-4
IRW-33	9.0	16.7	25	17	8	69	A-4
IRW-33A	12.0	22.7	22	16	6	68	A-4
IRW-34	12.0	20.6	29	19	10	61	A-4
IRW-34	24.0	13.0	30	17	13	65	A-6
IRW-34	43.5	21.8	37	20	17	99	A-6
IRW-37	3.5	25.1	38	19	19	84	A-6
IRW-37	25.0	13.5	NP	NP	NP	19	A-2-4
IRW-37	40.0	26.9	58	27	31	97	A-7-5
IRW-39	5.0	16.5	26	21	5	86	A-4
IRW-39A	5.0	20.8	30	20	10	79	A-4
IRW-40	7.5	10.0	43	23	20	95	A-7-5
IRW-40	15.0	21.9	47	22	25	93	A-7-5
IRW-41	3.0	12.1	31	17	14	99	A-6
IRW-41	9.0	12.6	21	16	5	38	A-4
IRW-41	44.0	24.0	43	23	20	99	A-7-5
IRW-42	12.0	15.0	24	18	6	56	A-4
IRW-42	25.0	21.5	42	22	20	92	A-7-5
IRW-43	3.0	9.7	NP	NP	NP	18	A-2-4
IRW-43	12.0	23.5	48	22	26	88	A-7-5
IRW-43	33.0	22.0	NP	NP	NP	32	A-2-4
IRW-43	45.0	26.2	62	29	33	99	A-7-5
IRW-44	7.5	15.1	25	13	12	46	A-6
IRW-44	10.0	11.9	22	20	2	32	A-2-4
IRW-44	17.5	25.5	28	18	10	75	A-4
IRW-45	6.0	12.1	21	20	1	14	A-2-4
IRW-45	25.0	23.4	47	23	24	98	A-7-5
IRW-46	5.0	14.3	37	20	17	51	A-6
IRW-46	17.0	20.4	54	24	30	96	A-7-5
IRW-46	32.5	15.7	NP	NP	NP	12	A-2-4
IRW-46	40.0	17.7	23	19	4	81	A-4
IRW-47A	0.0	9.5	25	16	9	45	A-4
IRW-47A	9.0	25.4	36	19	17	92	A-6
IRW-47A	24.0	28.0	52	28	24	99	A-7-5
IRW-47A	48.0	15.5	NP	NP	NP	8	A-1-b
IRW-48	12.0	22.1	35	20	15	88	A-6
IRW-48	33.0	12.3	26	15	11	62	A-6
IRW-49	32.5	15.5	34	19	15	96	A-6
IRW-49	35.0	20.3	35	21	14	94	A-6
IRW-49	37.5	20.2	47	22	25	94	A-7-5
IRW-49	40.0	20.6	44	19	25	95	A-7-5
IRW-50	15.0	22.6	57	24	33	96	A-7-5
IRW-53	5.0	14.3	24	16	8	43	A-4
IRW-53	48.5	18.8	NP	NP	NP	57	A-4
IRW-60	5.0	17.4	44	24	20	96	A-7-5
IRW-60	12.5	18.4	47	24	23	99	A-7-5
IRW-60	20.0	14.7	24	18	6	64	A-4
IRW-60	40.0	16.1	29	19	10	99	A-4
IRW-61	12.5	25.5	34	19	15	70	A-6
IRW-61	30.0	13.9	30	19	11	99	A-6
IRW-61	37.5	15.8	27	17	10	96	A-4
IRW-63	2.5	16.2	28	19	9	52	A-4
IRW-63	25.0	19.1	34	23	11	98	A-6
IRW-63	35.0	18.4	44	24	20	88	A-7-5

SUMMARY OF INDEX TEST RESULTS

BORING NO.	TOP SAMPLE DEPTH (FT)	NATURAL MOISTURE CONTENT (%)	LL	PL	PI	PERCENT PASSING NO. 200	AASHTO
IRW-64	5.0	12.5	24	18	6	44	A-4
IRW-64	17.5	16.9	28	17	11	78	A-6
IRW-64	30.0	24.9	32	19	13	78	A-6
IRW-68	12.0	18.9	23	14	9	66	A-4
IRW-68	21.0	25.2	NP	NP	NP	23	A-2-4
IRW-68	36.0	22.2	42	19	23	99	A-7-5
IRW-69	3.0	20.8	29	19	10	97	A-4
IRW-69	12.0	27.5	NP	NP	NP	17	A-2-4
IRW-69	33.0	21.4	52	21	31	99	A-7-5
IRW-70	6.0	9.1	NP	NP	NP	14	A-1-b
IRW-70	21.0	22.0	NP	NP	NP	30	A-2-4
IRW-70	39.0	25.7	NP	NP	NP	26	A-2-4
IRW-71	6.0	10.8	NP	NP	NP	16	A-2-4
IRW-71	39.0	18.3	24	16	8	77	A-8
IRW-72	0.0	16.0	33	20	13	97	A-6
IRW-72	12.0	7.4	NP	NP	NP	11	A-1-b
IRW-72	24.0	18.6	25	15	10	60	A-4
IRW-72	33.0	19.2	22	17	5	63	A-4
IRW-73	3.0	12.7	25	18	7	31	A-2-4
IRW-73	12.0	8.3	NP	NP	NP	12	A-1-b
IRW-73	30.0	21.9	23	15	8	62	A-4
IRW-73	48.5	20.5	40	20	20	99	A-6
IRW-74	3.0	22.3	30	22	8	95	A-4
IRW-74	18.5	16.2	18	16	2	16	A-2-4
IRW-74	43.5	23.0	49	21	28	90	A-7-5
IRW-75	3.0	11.1	22	15	7	34	A-2-4
IRW-75	12.0	28.3	52	25	27	96	A-7-5
IRW-75	36.0	24.0	50	23	27	98	A-7-5
IRW-76	5.0	13.6	18	16	2	26	A-2-4
IRW-76	15.0	27.6	28	21	7	12	A-2-4
IRW-76	27.5	33.8	56	25	31	97	A-7-5
IRW-76	32.5	31.1	57	28	29	99	A-7-5
IRW-76	48.5	20.7	47	24	23	98	A-7-5
IRW-77	3.0	17.1	35	20	15	97	A-6
IRW-77	9.0	19.0	44	22	22	98	A-7-5
IRW-77	27.0	28.5	57	27	30	97	A-7-5
IRW-77	39.0	22.7	33	16	17	93	A-6
IRW-77	45.0	22.0	49	23	26	99	A-7-5
IRW-77	48.5	26.0	53	24	29	98	A-7-5
IRW-78	7.5	23.5	33	19	14	71	A-6
IRW-78	12.5	12.4	NP	NP	NP	24	A-2-4
IRW-78	35.0	19.8	49	28	21	97	A-7-5
IRW-79	0.0	14.8	25	17	8	84	A-4
IRW-79	21.0	28.5	45	22	23	94	A-7-5
IRW-79	39.0	19.9	43	22	21	97	A-7-5
IRW-80	12.0	24.4	33	19	14	39	A-6
IRW-80	21.0	21.3	NP	NP	NP	42	A-4
IRW-80	33.0	23.4	NP	NP	NP	50	A-4
IRW-80	45.0	26.8	57	23	34	98	A-7-5
IRW-81	7.5	17.8	NP	NP	NP	28	A-2-4
IRW-81	12.5	17.4	20	17	3	16	A-2-4
IRW-81	20.0	18.2	22	16	6	75	A-4
IRW-81	42.5	20.6	48	25	23	85	A-7-5
IRW-83	6.0	19.4	26	17	9	72	A-4
IRW-83	18.0	19.1	30	20	10	89	A-4
IRW-83	27.0	21.9	47	23	24	93	A-7-5
IRW-85	0.0	11.0	19	15	4	25	A-2-4
IRW-85	18.0	9.8	NP	NP	NP	16	A-1-b
IRW-85	51.0	23.6	45	20	25	83	A-7-5
IRW-86	0.5	14.2	28	19	9	53	A-4
IRW-86	2.0	17.0	25	17	8	45	A-4
IRW-86	4.0	13.9	28	19	9	37	A-4
IRW-86	6.0	12.0	40	22	18	25	A-2-6
IRW-86	8.0	14.6	22	16	6	50	A-4
IRW-86	10.0	16.7	29	19	10	63	A-4
IRW-86	12.0	13.6	25	17	8	45	A-4
IRW-86	14.0	11.8	41	17	14		
IRW-86	16.0	12.0	NP	NP	NP	16	A-1-b
IRW-86	18.0	12.8	21	15	6	23	A-1-b
IRW-86	24.0	23.4	46	25	21	96	A-7-6

SUMMARY OF INDEX TEST RESULTS

BORING NO.	TOP SAMPLE DEPTH (FT)	NATURAL MOISTURE CONTENT (%)	LL	PL	PI	PERCENT PASSING NO. 200	AASHTO
IRW-86	29.0	20.2	28	19	9	91	A-4
IRW-86	34.0	17.1	24	18	6	79	A-4
IRW-86	39.0	18.6	26	19	7	95	A-4
IRW-86	44.0	20.4	31	20	11	98	A-4
IRW-86	49.0	23.0	29	22	7	93	A-4
IRW-86	54.0	24.5	20	NP	NP	58	A-4
IRW-86	59.0	23.8	21	NP	NP	74	A-4
IRW-87	0.5	2.9	21	NP	NP	-	-
IRW-87	1.0	5.4	17	NP	NP	-	-
IRW-87	3.0	10.4	21	17	4	35	A-2-4(0)
IRW-87	4.0	8.2	22	17	5	29	A-2-4(0)
IRW-87	6.0	16.8	28	20	8	81	A-4(5)
IRW-87	7.0	9.4	19	NP	NP	24	A-2-4(0)
IRW-87	8.0	18.6	30	20	10	85	A-4(8)
IRW-87	10.0	19.3	27	20	6	85	A-4(5)
IRW-87	12.0	9.1	25	17	8	-	-
IRW-87	15.3	15.7	32	19	13	80	A-6(9)
IRW-87	16.0	13.1	18	NP	NP	20	A-1-b
IRW-87	17.0	17.3	37	20	18	68	A-6(10)
IRW-87	18.0	19.2	41	20	21	95	A-7-6(20)
IRW-87	24.0	28.9	53	27	26	96	A-7-6(29)
IRW-87	29.0	22.5	39	20	19	96	A-6(19)
IRW-87	34.0	19.4	24	19	4	74	A-4(2)
IRW-87	39.0	12.4	21	NP	NP	90	A-4(0)
IRW-87	44.0	21.2	32	22	11	99	A-4(10)
IRW-87	49.0	24.6	34	25	9	98	A-4(10)
IRW-87	54.0	48.6	28	22	6	64	A-4(2)
IRW-87	59.0	25.1	25	NP	NP	82	A-4(0)
IRW-88	0.5	6.7	NV	NP	NP	17	A-2-4
IRW-88	2.0	10.2	24	17	7	34	A-2-4
IRW-88	4.0	13.6	22	NP	NP	65	A-4(0)
IRW-88	6.0	13.0	26	18	8	51	A-4(1)
IRW-88	8.0	15.1	35	22	13	58	A-6(5)
IRW-88	10.0	20.9	55	26	29	90	A-7-6(29)
IRW-88	14.0	17.9	37	23	14	96	A-6(15)
IRW-88	16.0	20.7	35	22	13	96	A-6(13)
IRW-88	18.0	19.4	44	24	19	93	A-7-6(21)
IRW-88	24.0	20.7	28	18	10	81	A-4(6)
IRW-88	29.0	29.2	24	NP	NP	61	A-4(0)
IRW-88	34.0	21.4	36	23	13	95	A-6(13)
IRW-88	39.0	20.3	37	22	15	98	A-6(16)
IRW-88	44.0	23.0	29	20	9	82	A-4(6)
IRW-88	49.0	22.4	27	20	7	75	A-4(4)
IRW-88	54.0	23.5	29	19	10	78	A-4(6)
IRW-88	59.0	23.5	24	NP	NP	54	A-4(0)
IRW-89	1.0	7.6	NV	NP	NP	11	A-1-a
IRW-89	2.5	6.4	NV	NP	NP	13	A-1-b
IRW-89	4.0	8.5	NV	NP	NP	15	A-2-4(0)
IRW-89	6.0	16.1	NV	NP	NP	18	A-2-4(0)
IRW-89	8.0	14.0	NV	NP	NP	12	A-1-b
IRW-89	10.0	26.2	NV	NP	NP	17	A-2-4(0)
IRW-89	12.0	18.2	NV	NP	NP	18	A-2-4(0)
IRW-89	14.0	18.9	24	NP	NP	21	A-1-b
IRW-89	16.0	14.1	16	NP	NP	-	-
IRW-89	18.0	25.9	44	27	17	55	A-7-6(7)
IRW-89	24.0	19.3	30	20	10	98	A-4(9)
IRW-89	29.0	18.0	22	18	4	85	A-4(1)
IRW-89	34.0	17.3	26	18	8	86	A-4(5)
IRW-89	39.0	22.9	43	23	20	93	A-7-6(20)
IRW-89	44.0	32.0	62	30	33	99	A-7-5(38)
IRW-89	49.0	24.2	47	25	23	98	A-7-6(25)
IRW-89	54.0	27.3	26	NP	NP	78	A-4(0)
IRW-89	58.0	28.5	46	28	18	94	A-7-6(20)
IRW-90	2.0	10.9	NV	NP	NP	23	A-2-4
IRW-90	4.0	21.5	NV	NP	NP	21	A-2-4
IRW-90	6.0	18.1	NV	NP	NP	14	A-2-4
IRW-90	8.0	21.4	NV	NP	NP	14	A-2-4
IRW-90	10.0	18.4	NV	NP	NP	10	A-1-b
IRW-90	12.0	20.0	NV	NP	NP	13	A-2-4
IRW-90	14.0	23.2	NV	NP	NP	21	A-2-4

NOTES:

1. LL = LIQUID LIMIT
2. PL = PLASTIC LIMIT
3. PI = PLASTICITY INDEX

UNOFFICIAL WEBSITE COPY

SUMMARY OF INDEX TEST RESULTS

BORING NO.	TOP SAMPLE DEPTH (FT)	NATURAL MOISTURE CONTENT (%)	LL	PL	PI	PERCENT PASSING NO. 200	AASHTO
IRW-90	16.0	21.1	NV	NP	NP	21	A-2-4
IRW-90	18.0	17.8	NV	NP	NP	18	A-2-4
IRW-90	19.0	17.5	NV	NP	NP	10	A-1-b
IRW-90	24.0	19.8	24	18	6	78	A-4(3)
IRW-90	29.0	16.4	28	17	11	65	A-6(5)
IRW-90	34.0	21.0	22	17	5	70	A-4(1)
IRW-90	39.0	21.3	22	18	4	67	A-4(0)
IRW-90	40.0	25.2	42	20	22	-	-
IRW-90	43.0	21.3	44	22	22	91	A-7-6(21)
IRW-90	49.0	25.7	50	26	24	94	A-7-6(26)
IRW-90	54.0	30.2	49	28	21	96	A-7-6(24)
IRW-90	58.0	35.4	55	32	23	97	A-7-5(28)
IRW-91	1.5	2.9	NV	NP	NP	7	A-1-a
IRW-91	2.0	9.5	18	NP	NP	37	A-4(0)
IRW-91	4.0	20.1	18	NP	NP	23	A-2-4(0)
IRW-91	6.0	15.8	NV	NP	NP	16	A-1-b
IRW-91	8.0	9.8	19	NP	NP	-	-
IRW-91	10.0	16.2	20	NP	NP	43	A-4(0)
IRW-91	12.0	12.8	21	NP	NP	-	-
IRW-91	14.0	18.1	26	18	8	43	A-4(0)
IRW-91	16.0	23.9	22	18	4	56	A-4(0)
IRW-91	18.0	23.2	23	16	7	53	A-4(1)
IRW-91	24.0	18.5	22	17	6	65	A-4(1)
IRW-91	29.0	25.9	19	NP	NP	30	A-2-4(0)
IRW-91	34.0	23.7	49	21	28	95	A-7-6(29)
IRW-91	39.0	21.5	38	19	18	93	A-6(18)
IRW-91	44.0	30.9	56	25	31	97	A-7-6(35)
IRW-91	49.0	29.2	42	21	21	93	A-7-6(21)
IRW-91	54.0	33.0	50	29	21	98	A-7-6(26)
IRW-91	58.5	32.3	60	31	29	97	A-7-5(34)
IRW-93	2.0	8.3	19	NP	NP	30	A-2-4(0)
IRW-93	4.0	7.0	NV	NP	NP	13	A-1-b
IRW-93	6.0	13.4	NV	NP	NP	13	A-1-b
IRW-93	8.0	14.5	NV	NP	NP	17	A-1-b
IRW-93	10.0	16.9	NV	NP	NP	67	A-4(0)
IRW-93	12.0	19.6	24	17	7	78	A-4(3)
IRW-93	13.0	22.7	NV	NP	NP	27	A-2-4(0)
IRW-93	14.0	16.6	24	16	8	65	A-4(3)
IRW-93	16.0	19.2	46	23	24	85	A-7-6(21)
IRW-93	18.0	21.9	51	25	26	92	A-7-6(27)
IRW-93	20.0	21.7	44	22	22	92	A-7-6(22)
IRW-93	24.0	20.3	40	22	18	89	A-6(17)
IRW-93	29.0	24.1	45	25	20	97	A-7-6(22)
IRW-93	34.0	19.0	37	21	17	94	A-6(16)
IRW-93	39.0	19.1	40	23	18	99	A-6(19)
IRW-93	44.0	23.9	34	25	9	97	A-4(10)
IRW-93	49.0	18.2	30	18	13	84	A-6(9)
IRW-93	54.0	20.5	24	18	5	81	A-4(3)
IRW-93	58.0	24.5	21	NP	NP	72	A-4(0)
IRW-95	0.0	11.6	22	18	4	31	A-2-4(0)
IRW-95	2.0	12.5	19	NP	NP	29	A-2-4(0)
IRW-95	3.0	21.1	29	19	10	68	A-4(5)
IRW-95	4.0	14.5	NV	NP	NP	20	A-2-4(0)
IRW-95	6.0	11.9	NV	NP	NP	15	A-2-4(0)
IRW-95	8.0	16.8	NV	NP	NP	14	A-2-4(0)
IRW-95	10.0	17.1	NV	NP	NP	16	A-1-b
IRW-95	12.0	19.5	NV	NP	NP	18	A-1-b
IRW-95	14.0	15.2	NV	NP	NP	14	A-1-b
IRW-95	16.0	16.7	NV	NP	NP	14	A-1-b
IRW-95	18.0	20.4	NV	NP	NP	19	A-2-4(0)
IRW-95	24.0	24.9	55	26	29	100	A-7-6(34)
IRW-95	29.0	22.7	46	22	24	99	A-7-6(26)
IRW-95	34.0	18.3	39	20	19	96	A-6(19)
IRW-95	39.0	20.8	32	19	13	89	A-6(11)
IRW-95	44.0	18.5	30	19	10	91	A-6(9)
IRW-95	49.0	29.7	51	29	22	98	A-7-6(26)
IRW-95	54.0	31.2	53	30	23	97	A-7-5(27)
IRW-95	58.0	28.8	42	30	12	98	A-7-5(15)
IRW-96	0.5	7.2	NV	NP	NP	16	A-1-b
IRW-96	2.0	20.9	52	25	27	84	A-7-6(24)

SUMMARY OF INDEX TEST RESULTS

BORING NO.	TOP SAMPLE DEPTH (FT)	NATURAL MOISTURE CONTENT (%)	LL	PL	PI	PERCENT PASSING NO. 200	AASHTO
IRW-96	4.0	21.6	53	28	25	98	A-7-6(29)
IRW-96	6.0	19.3	47	25	22	97	A-7-6(25)
IRW-96	8.0	16.5	39	21	19	88	A-6(17)
IRW-96	10.0	18.3	35	22	13	89	A-6(12)
IRW-96	12.0	18.9	30	22	8	80	A-4(5)
IRW-96	14.0	19.7	26	22	5	92	A-4(3)
IRW-96	16.0	19.9	26	21	5	91	A-4(3)
IRW-96	18.0	17.1	26	19	7	85	A-4(4)
IRW-96	24.0	32.8	35	24	12	81	A-6(9)
IRW-96	29.0	18.8	25	19	6	69	A-4(2)
IRW-96	34.0	21.4	21	NP	NP	54	A-4(0)
IRW-96	39.0	21.3	34	24	10	99	A-4(11)
IRW-96	44.0	20.5	25	19	6	68	A-4(2)
IRW-96	49.0	23.6	22	NP	NP	55	A-4(0)
IRW-96	54.0	19.2	27	17	11	47	A-6(2)
IRW-96	59.0	26.6	50	27	23	94	A-7-6(25)
IRW-97	0.0	13.5	18	NP	NP	32	A-2-4
IRW-97	2.0	8.5	18	NP	NP	17	A-1-b
IRW-97	4.0	21.3	37	22	15	86	A-6(14)
IRW-97	6.0	19.9	37	22	16	77	A-6(11)
IRW-97	8.0	23.8	44	26	18	88	A-7-6(18)
IRW-97	10.0	28.4	58	30	28	95	A-7-5(32)
IRW-97	12.0	25.8	48	26	22	96	A-7-6(24)
IRW-97	14.0	24.0	46	25	21	98	A-7-6(24)
IRW-97	18.0	19.8	34	22	13	98	A-6(12)
IRW-97	24.0	19.8	27	19	8	98	A-4(7)
IRW-97	29.0	35.4	29	23	5.4	77	A-4(4)
IRW-97	34.0	16.1	23	20	3	62	A-4(0)
IRW-97	39.0	16.7	31	18	13	90	A-6(11)
IRW-97	43.0	23.3	40	20	20	77	A-6(15)
IRW-97	49.0	30.5	46	33	14	98	A-7-5(17)
IRW-97	54.0	22.5	21	NP	NP	68	A-4(0)
IRW-97	58.0	23.0	14.2	NP	NP	35	A-2-4
ISC-01	12.5	16.5	27	16	11	69	A-6
ISC-02	18.5	22.2	38	24	14	96	A-6
ISC-03	10.0	19.2	28	17	11	91	A-6
ISC-03	15.0	21.9	21	17	4	76	A-4
ISC-04	5.0	18.2	25	19	6	77	A-4
ISC-04	12.5	18.2	40	22	18	81	A-6
ISC-06	15.0	30.0	56	30	26	96	A-7-5
ISC-06	18.5	22.1	33	23	10	92	A-4
ISC-09	10.0	14.3	27	18	9	65	A-4
ISC-09	18.0	9.4	NP	NP	NP	24	A-2-4
ISC-103	6.0	18.5	45	23	22	89	A-7-5
ISC-103	21.0	17.6	NP	NP	NP	34	A-2-4
ISC-103	30.0	16.4	29	19	10	92	A-4
ISC-103A	0.0	16.9	35	15	20	62	A-6
ISC-103A	6.0	12.2	27	13	14	52	A-6
ISC-103A	27.0	28.5	58	28	30	99	A-7-5
ISC-103A	39.0	19.2	22	16	6	74	A-4
ISC-11	0.0	13.8	26	16	10	68	A-4
ISC-11	5.0	16.1	26	20	6	66	A-4
ISC-11	24.0	23.5	48	26	22	99	A-7-5
ISC-11	36.0	25.8	46	22	24	90	A-7-5
ISC-116	3.0	19.8	38	19	19	71	A-6
ISC-116	30.0	22.3	35	19	16	73	A-6
ISC-117	21.0	22.6	42	21	21	61	A-7-5
ISC-117	42.0	15.4	25	18	7	73	A-4
ISC-118	28.5	21.6	38	21	17	87	A-6
ISC-119	38.5	16.8	35	18	17	85	A-6
ISC-12	0.0	12.7	24	16	8	55	A-4
ISC-12	3.0	15.1	27	16	11	73	A-6
ISC-12	5.0	15.6	27	17	10	46	A-4
ISC-12	15.0	19.7	45	27	18	92	A-7-5
ISC-12	27.0	18.8	NP	NP	NP	31	A-2-4
ISC-12	36.0	15.5	32	20	12	51	A-6
ISC-13	3.0	17.9	40	25	15	63	A-6
ISC-13	15.0	23.7	NP	NP	NP	42	A-4
ISC-13	24.0	29.1	65	31	34	97	A-7-6
ISC-13	36.0	20.1	NP	NP	NP	24	A-2-4

SUMMARY OF INDEX TEST RESULTS

BORING NO.	TOP SAMPLE DEPTH (FT)	NATURAL MOISTURE CONTENT (%)	LL	PL	PI	PERCENT PASSING NO. 200	AASHTO
ISC-14	2.0	14.7	24	14	10	38	A-4
ISC-14	3.0	12.1	24	16	8	45	A-4
ISC-14	33.0	14.8	26	18	8	83	A-4
ISC-15	7.5	16.0	36	21	15	96	A-6
ISC-19	9.0	16.4	34	19	15	66	A-6
ISC-19	18.5	15.4	21	15	6	56	A-4
ISC-20	6.0	19.6	42	22	20	84	A-7-5
ISC-21	6.0	22.3	24	19	5	90	A-4
ISC-21	23.5	22.1	41	22	19	97	A-7-5
ISC-21	28.5	19.7	37	20	17	76	A-6
ISC-23	6.0	16.8	43	23	20	94	A-7-5
ISC-23	29.5	25.9	23	16	7	50	A-4
ISC-24	6.0	16.9	40	22	18	89	A-6
ISC-24	21.0	18.1	24	18	6	64	A-4
ISC-24	30.0	32.8	63	30	33	96	A-7-5
ISC-24	39.0	19.1	23	19	4	79	A-4
ISC-24A	2.0	10.0	24	15	9	37	A-4
ISC-24A	4.5	8.3	18	15	3	28	A-2-4
ISC-24A	15.0	17.6	24	16	8	71	A-4
ISC-24A	20.0	21.8	37	21	16	70	A-6
ISC-24A	30.0	16.4	38	19	19	94	A-6
ISC-24A	38.5	24.2	52	27	25	96	A-7-5
ISC-25	15.0	18.0	26	18	8	74	A-4
ISC-25	30.0	23.8	29	19	10	72	A-4
ISC-26	0.0	16.0	24	19	5	66	A-4
ISC-26	20.0	13.9	22	16	6	47	A-4
ISC-26	30.0	17.4	35	20	15	98	A-6
ISC-29	3.0	16.4	NP	NP	NP	66	A-4
ISC-29	18.0	19.2	34	20	14	86	A-6
ISC-29	30.0	17.3	25	16	9	78	A-4
ISC-31	4.5	21.4	40	20	20	91	A-6
ISC-31	35.0	13.7	24	16	8	77	A-4
ISC-32	6.0	14.1	27	16	11	90	A-6
ISC-33	6.0	5.6	NP	NP	NP	13	A-1-b
ISC-33	15.0	17.3	40	21	19	100	A-6
ISC-33	30.0	19.5	29	18	11	90	A-6
ISC-35	1.0	7.7	NP	NP	NP	39	A-4
ISC-35	15.0	20.3	48	25	23	98	A-7-5
ISC-35	22.5	23.2	39	22	17	93	A-6
ISC-35	32.5	13.2	NP	NP	NP	38	A-4
ISC-36	5.0	13.0	27	16	11	-	A-6
ISC-36	6.5	11.4	25	17	8	64	A-4
ISC-36	20.0	3.3	25	19	6	90	A-4
ISC-36	35.0	17.2	41	23	18	93	A-7-5
ISC-37	2.5	13.4	23	15	8	42	A-4
ISC-37	10.0	20.0	26	19	7	97	A-4
ISC-37	30.0	16.0	44	20	24	80	A-7-5
ISC-37	38.5	16.3	36	20	16	93	A-6
ISC-40	5.0	21.1	25	18	7	-	A-4
ISC-40	10.0	22.3	47	21	26	-	A-7-5
ISC-41	0.0	22.7	42	24	18	84	A-7-5
ISC-41	5.0	14.5	25	17	8	71	A-4
ISC-41	27.5	21.4	52	24	28	90	A-7-5
ISC-42	0.0	20.4	27	19	8	70	A-4
ISC-42	5.0	19.2	NP	NP	NP	51	A-4
ISC-42	7.5	17.2	20	18	2	60	A-4
ISC-42	25.0	24.5	53	22	31	90	A-7-5
ISC-43	4.0	16.5	22	15	7	46	A-4
ISC-43	7.5	14.2	24	16	8	51	A-4
ISC-43	15.0	17.5	41	23	18	82	A-7-5
ISC-43	27.5	23.1	44	23	21	99	A-7-5
ISC-44	7.5	16.1	26	17	9	-	A-4
ISC-44	15.0	17.0	51	22	29	95	A-7-5
ISC-44	22.5	22.1	52	28	24	99	A-7-5
ISC-44	30.0	20.6	NP	NP	NP	11	A-2-4
ISC-44	38.5	18.3	35	21	14	94	A-6
ISC-49	1.0	15.8	32	18	14	57	A-6
ISC-49	12.5	17.9	26	15	11	50	A-6
ISC-49	27.5	21.8	45	23	22	88	A-7-5
ISC-50	7.5	19.9	25	19	6	75	A-4

NOTES:

1. LL = LIQUID LIMIT
2. PL = PLASTIC LIMIT
3. PI = PLASTICITY INDEX

UNOFFICIAL WEBSITE COPY

SUMMARY OF INDEX TEST RESULTS

BORING NO.	TOP SAMPLE DEPTH (FT)	NATURAL MOISTURE CONTENT (%)	LL	PL	PI	PERCENT PASSING NO. 200	AASHTO
ISC-50	30.0	19.7	46	23	23	94	A-7-5
ISC-51	2.5	15.7	36	20	16	94	A-6
ISC-51	12.5	14.2	20	17	3	53	A-4
ISC-51	25.0	20.1	45	20	25	93	A-7-5
ISC-64	9.0	27.5	40	25	15	54	A-6
ISC-65	15.0	18.5	38	24	14	93	A-6
ISC-65	39.0	19.2	37	21	16	100	A-6
ISC-66	6.0	13.3	30	16	14	51	A-6
ISC-66	27.0	17.2	50	23	27	97	A-7-5
ISC-67	33.0	21.2	40	22	18	99	A-6
ISC-68	5.0	15.1	31	16	15	-	A-6
ISC-69	15.0	28.4	51	30	21	99	A-7-5
ISC-69	24.0	15.5	27	18	9	96	A-4
ISC-70	2.5	8.8	23	15	8	34	A-2-4
ISC-70	5.0	15.2	25	14	11	43	A-6
ISC-70	35.0	18.8	33	16	17	97	A-6
ISC-71	9.0	11.7	26	17	9	43	A-4
ISC-71	21.0	15.8	51	25	26	95	A-7-5
ISC-71	33.0	15.6	34	18	16	90	A-6
ISC-72	3.0	15.3	25	18	7	76	A-4
ISC-72	12.0	10.1	25	37	NP	12	A-2-6
ISC-74	0.0	14.4	25	17	8	31	A-2-4
ISC-74	4.0	17.8	NP	NP	NP	20	A-2-4
ISC-74	12.0	14.6	NP	NP	NP	16	A-2-4
ISC-74	24.0	24.4	56	26	30	95	A-7-5
ISC-76	10.0	12.5	28	18	10	27	A-2-4
ISC-76	20.0	23.4	49	22	27	84	A-7-5
ISC-77	1.0	15.5	27	16	11	43	A-6
ISC-77	2.5	9.8	21	15	6	27	A-2-4
ISC-77	17.5	18.8	41	19	22	90	A-7-5
ISC-77	38.5	14.9	27	16	11	86	A-6
ISC-86	0.0	14.7	29	18	11	73	A-6
ISC-86	5.0	17.1	37	23	14	97	A-6
ISC-86	15.0	10.0	NP	NP	NP	23	A-2-4
ISC-86	35.0	23.3	43	23	20	61	A-7-5
ISC-87	5.0	22.6	28	19	9	55	A-4
ISC-87	25.0	11.9	NP	NP	NP	22	A-2-4
ISC-90	0.0	19.4	31	18	13	69	A-6
ISC-90	5.0	15.8	32	19	13	59	A-6
ISC-90	7.5	12.5	25	17	8	67	A-4
ISC-90	25.0	10.0	21	16	5	41	A-4
ISC-91	0.0	21.5	34	20	14	66	A-6
ISC-91	2.5	16.8	31	21	10	71	A-4
ISC-91	25.0	3.7	NP	NP	NP	15	A-1-b
ISC-94	2.5	10.3	NP	NP	NP	16	A-2-4
ISC-94	15.0	12.8	NP	NP	NP	18	A-2-4
ISC-94	35.0	21.2	39	18	21	93	A-6
ISC-95	0.0	18.2	26	19	7	80	A-4
ISC-95	2.5	15.0	30	19	11	86	A-6
ISC-95	5.0	14.3	27	19	8	85	A-4
ISC-95	12.5	10.5	29	17	12	-	A-2-6
ITP-01	0.5	10.2	NP	NP	NP	25	A-1-b
ITP-02	0.0	10.6	21	14	7	32	A-2-4
ITP-02	12.5	8.5	NP	NP	NP	22	A-1-b
ITP-03	0.0	10.2	18	15	3	20	A-2-4
ITP-04	0.0	8.8	22	15	7	37	A-4
ITP-06	0.0	25.5	46	18	28	75	A-7-5
ITP-07	9.6	23.4	40	23	17	71	A-6
ITP-12	8.5	18.6	26	19	7	66	A-4
ITP-12	48.5	15.3	27	18	9	80	A-4
ITP-13	9.5	15.6	25	17	8	71	A-4
ITP-14	29.0	14.1	27	16	11	53	A-6
ITP-15	5.0	20.7	25	15	10	52	A-4
ITP-17	0.0	19.0	26	16	10	40	A-4
ITP-19	0.0	18.3	27	16	11	46	A-6
MA-01	2.0	17.1	23	14	9	55	A-4
MA-01	12.0	15.7	25	17	8	45	A-4
MA-01	16.0	25.4	37	24	13	55	A-6
MA-01	20.0	25.9	30	19	11	41	A-6
MA-01	25.0	19.3	NP	NP	NP	15	A-2-4

SUMMARY OF INDEX TEST RESULTS

BORING NO.	TOP SAMPLE DEPTH (FT)	NATURAL MOISTURE CONTENT (%)	LL	PL	PI	PERCENT PASSING NO. 200	AASHTO
ML-01	3.0	17.8	26	19	7	96	A-4
ML-01	15.0	18.4	NP	NP	NP	7	A-3
ML-02	2.5	20.9	28	17	11	92	A-6
ML-02	10.0	22.9	24	18	6	78	A-4
ML-02	27.0	19.1	39	22	17	81	A-6
ML-02	36.0	21.8	44	20	24	94	A-7-5
ML-03	2.5	16.5	23	15	8	66	A-4
ML-03	12.0	20.8	42	21	21	82	A-7-5
ML-03	51.0	18.9	43	21	22	98	A-7-5
ML-05	3.0	15.5	31	16	15	33	A-2-6
ML-05	12.0	16.9	NP	NP	NP	22	A-2-4
ML-05	27.0	19.7	39	18	21	82	A-6
ML-06	2.5	19.2	31	21	10	79	A-4
ML-06	54.0	16.2	40	19	21	80	A-6
ML-07	6.0	8.6	NP	NP	NP	15	A-2-4
ML-07	7.5	9.0	17	14	3	33	A-2-4
ML-07	15.0	13.1	NP	NP	NP	30	A-2-4
ML-07	21.0	18.1	21	15	6	51	A-8
ML-07	36.0	21.0	38	21	17	98	A-6
ML-07	45.0	23.9	41	20	21	95	A-7-5
ML-07	48.0	18.8	26	18	8	91	A-4
ML-07	54.0	21.1	48	22	26	94	A-7-5
ML-08	4.0	18.1	NP	NP	NP	10	A-2-4
ML-08	19.0	24.3	21	16	5	41	A-4
ML-08	25.0	29.3	NP	NP	NP	17	A-2-4
ML-09	2.5	16.3	19	16	3	27	A-2-4
ML-09	8.0	21.9	23	17	6	55	A-4
ML-09	23.0	16.9	35	19	16	90	A-6
ML-10	18.0	25.5	18	17	1	48	A-4
ML-10	30.0	17.0	27	15	12	75	A-6
ML-11	10.0	10.8	19	16	3	28	A-2-4
ML-11	24.0	18.8	NP	NP	NP	12	A-2-4
ML-11	42.0	18.0	29	17	12	80	A-6
ML-11	64.0	17.4	36	18	18	87	A-6
ML-12	9.0	17.9	25	16	9	81	A-4
ML-12	14.0	17.1	27	17	10	65	A-4
ML-12	19.0	16.5	38	19	19	82	A-6
ML-12	29.0	16.9	35	20	15	99	A-6
ML-13	10.0	18.3	25	18	7	63	A-4
ML-13	20.0	22.2	26	16	10	83	A-4
ML-13	29.0	25.8	60	24	36	99	A-7-5
ML-14	12.5	11.6	25	15	10	59	A-4
ML-14	24.0	26.9	25	18	7	78	A-4
ML-14	33.0	20.3	32	19	13	87	A-6
ML-15	6.0	12.0	28	19	9	55	A-4
ML-15	12.0	5.2	NP	NP	NP	11	A-1-b
ML-15	45.0	16.5	28	16	12	77	A-6
ML-15	51.0	19.4	49	22	27	91	A-7-5
ML-16	9.0	18.4	31	17	14	82	A-6
ML-16	19.0	17.6	32	17	15	83	A-6
ML-16	24.0	21.3	39	18	21	92	A-6
ML-17	10.0	16.6	30	20	10	74	A-4
ML-17	20.0	17.2	40	21	19	89	A-6
ML-18	12.0	14.6	NP	NP	NP	15	A-2-4
ML-18	33.0	20.3	26	19	7	92	A-4
ML-19	3.0	14.0	28	16	12	52	A-6
ML-19	9.0	13.4	NP	NP	NP	20	A-2-4
ML-19	39.0	18.6	24	16	8	73	A-4
ML-19	48.0	25.8	40	21	19	94	A-6
ML-20	12.0	19.7	21	18	3	61	A-4
ML-20	18.0	15.2	21	14	7	75	A-4
ML-20	24.0	16.2	32	18	14	32	A-2-6
ML-20	36.0	18.9	48	24	24	97	A-7-5
ML-21	2.0	7.3	NP	NP	NP	11	A-1-b
ML-21	10.0	15.9	28	16	12	45	A-6
ML-21	15.0	18.7	26	19	7	96	A-4
ML-21	23.5	16.9	36	19	17	97	A-6
ML-22	2.5	3.9	NP	NP	NP	15	A-1-b
ML-22	15.0	21.3	51	23	28	99	A-7-5
ML-22	25.0	14.3	37	17	20	63	A-6

SUMMARY OF INDEX TEST RESULTS

BORING NO.	TOP SAMPLE DEPTH (FT)	NATURAL MOISTURE CONTENT (%)	LL	PL	PI	PERCENT PASSING NO. 200	AASHTO
ML-23	2.5	21.7	26	20	6	86	A-4
ML-23	12.0	25.1	26	19	7	70	A-4
ML-23	18.0	20.6	30	17	13	37	A-6
ML-25	10.0	15.8	21	13	8	49	A-4
ML-25	20.0	20.2	41	19	22	95	A-7-5
ML-25	25.0	18.9	38	20	18	96	A-6
ML-26	3.0	12.4	36	17	19	61	A-6
ML-26	12.0	18.6	44	21	23	99	A-7-5
ML-26	21.0	17.3	28	16	12	86	A-6
ML-26	27.0	25.4	50	25	25	97	A-7-5
ML-29	9.5	21.5	NP	19	NP	40	A-4
ML-29	19.0	19.8	NP	NP	NP	16	A-2-4
ML-29	34.0	29.6	68	26	42	97	A-7-5
ML-32	9.0	16.3	24	16	8	60	A-4
ML-32	15.0	18.8	21	15	6	59	A-4
ML-32	18.0	17.9	35	19	16	90	A-6
ML-32	27.0	33.1	22	16	6	55	A-4
ML-32	51.0	19.5	42	20	22	86	A-7-5
ML-34	2.5	21.6	31	23	8	90	A-4
ML-34	12.5	8.8	22	18	4	28	A-2-4
ML-34	27.0	16.1	29	17	12	63	A-6
ML-34	36.0	17.3	50	14	36	81	A-7-5
ML-34	45.0	23.6	NP	NP	NP	51	A-4
ML-34	57.0	21.3	45	20	25	89	A-7-5
ML-34	66.0	20.7	33	19	14	75	A-6
ML-43	9.0	16.6	NP	NP	NP	19	A-2-4
ML-45	5.0	18.5	27	20	7	95	A-4
ML-45	9.0	21.5	27	21	6	99	A-8
ML-45	12.0	21.6	26	23	3	96	A-8
ML-45	15.0	15.8	25	21	4	61	A-4
ML-45	18.0	22.1	25	16	9	60	A-4
ML-45	21.0	20.8	31	18	13	97	A-6
ML-45	27.0	18.9	32	21	11	69	A-6
ML-45	33.0	19.0	NP	NP	NP	23	A-2-4
ML-45	39.0	24.9	NP	NP	NP	14	A-2-4
ML-45	45.0	23.3	NP	NP	NP	11	A-2-4
ML-45	51.0	23.3	39	18	21	75	A-6
ML-45	69.0	24.0	48	24	24	93	A-7-5
ML-48	28.0	19.6	22	15	7	72	A-4
ML-48	33.0	23.3	NP	NP	NP	65	A-4
ML-48	48.0	21.4	NP	NP	NP	44	A-4
ML-48	69.0	29.0	NP	NP	NP	35	A-2-4
ML-50	2.5	12.7	24	15	9	21	A-2-4
ML-50	18.5	18.1	24	15	9	99	A-4
ML-61	7.5	9.8	26	17	9	42	A-4
ML-61	17.5	14.0	32	18	14	46	A-6
ML-61	21.0	23.6	21	15	6	30	A-2-4
ML-61	27.0	19.3	27	18	9	76	A-4
ML-61	33.0	17.2	25	17	8	78	A-4
ML-61	36.0	25.3	30	19	11	85	A-6
ML-64	2.5	17.4	27	18	9	86	A-4
ML-64	12.5	11.0	26	17	9	34	A-2-4
ML-64	17.5	11.9	25	16	9	32	A-2-4
ML-64	21.0	38.9	28	17	11	73	A-6
ML-64	36.0	22.9	53	24	29	93	A-7-5
ML-64	63.5	17.2	48	23	25	92	A-7-5
ML-66	3.5	25.3	51	24	27	88	A-7-5
ML-66	13.5	18.4	43	19	24	98	A-7-5
ML-66	23.5	20.6	41	25	16	99	A-7-5
ML-66	33.5	18.4	23	15	8	54	A-4
ML-75	4.5	10.9	19	12	7	34	A-2-4
ML-75	9.5	24.2	31	18	13	62	A-6
ML-75	19.5	32.7	25	16	9	52	A-4
ML-75	33.5	23.0	21	14	7	53	A-4
ML-77	2.5	16.6	30	20	10	97	A-4
ML-77	12.0	18.8	32	19	13	87	A-6
ML-77	18.0	16.4	22	18	4	67	A-4
ML-77	24.0	18.8	30	20	10	97	A-4
ML-77	36.0	17.9	40	21	19	100	A-6
ML-77	54.0	14.5	32	15	17	84	A-6

NOTES:

1. LL = LIQUID LIMIT
2. PL = PLASTIC LIMIT
3. PI = PLASTICITY INDEX

UNOFFICIAL WEBSITE COPY

SUMMARY OF INDEX TEST RESULTS

BORING NO.	TOP SAMPLE DEPTH (FT)	NATURAL MOISTURE CONTENT (%)	LL	PL	PI	PERCENT PASSING NO. 200	AASHTO
ML-77	75.0	18.4	33	20	13	72	A-6
ML-80	9.0	16.2	38	19	19	92	A-6
ML-80	12.0	19.6	50	24	26	92	A-7-5
ML-80	21.0	28.3	58	29	29	92	A-7-5
ML-80	33.0	23.9	44	28	16	93	A-7-5
ML-80	45.0	12.8	26	16	10	64	A-4
ML-85	9.5	20.5	19	19	NP	87	A-6
ML-85	20.0	19.2	25	16	9	69	A-4
ML-86	3.0	16.3	22	17	5	64	A-4
ML-86	7.5	18.7	38	19	19	53	A-6
ML-86	15.0	14.3	32	16	16	88	A-6
ML-86	18.0	19.9	41	20	21	98	A-6
ML-86	27.0	17.4	35	16	19	99	A-6
ML-86	30.0	28.0	NP	NP	NP	8	A-2-4
ML-86	51.0	27.1	44	24	20	91	A-7-5
ML-87	12.0	20.5	20	16	4	55	A-4
ML-87	30.0	21.7	32	18	14	75	A-6
ML-87	36.5	26.9	29	18	11	55	A-6
ML-89	27.0	20.7	32	20	12	82	A-6
ML-89	42.0	16.7	25	14	11	69	A-6
ML-89	51.0	16.8	27	17	10	71	A-4
ML-90	2.5	18.3	30	20	10	77	A-4
ML-90	15.0	19.6	32	17	15	93	A-6
ML-90	30.0	23.1	38	21	17	97	A-6
ML-90	39.0	26.0	28	17	11	95	A-6
ML-91	12.5	20.7	30	17	13	67	A-6
ML-91	23.0	29.8	52	23	29	92	A-7-5
ML-91	36.0	21.5	32	17	15	96	A-6
ML-91	51.0	26.5	59	24	35	100	A-7-5
ML-92	17.5	7.7	22	15	7	27	A-2-4
ML-92	30.0	16.9	NP	NP	NP	9	A-3
ML-92	39.0	37.0	NP	NP	NP	36	A-4
ML-93	17.5	9.9	NP	NP	NP	21	A-2-4
ML-93	27.0	21.4	21	18	3	66	A-4
ML-93	60.0	18.7	35	18	17	96	A-6
MRR-6	1.0	15.9	21	14	7	63	A-4
MRR-8	1.0	17.3	23	14	9	52	A-4
P-05	1.0	15.0	28	10	18	42	A-6
P-05	7.0	16.0	31	21	10	33	A-2-4
P-05	9.0	25.0	44	25	19	89	A-7-6
P-05	14.0	21.0	38	21	17	91	A-6
P-05	19.0	18.0	25	19	6	90	A-4
P-05	24.0	21.0	42	23	19	98	A-7-6
P-05	29.0	19.0	20	-	NP	41	A-4
P-05	34.0	21.0	-	-	NP	24	A-2-4
P-05	39.0	21.0	-	-	NP	10	A-1-b
P-05	44.0	22.0	33	20	13	72	A-6
P-05	49.0	23.0	38	22	16	80	A-6
P-05	54.0	19.0	28	19	9	67	A-4
P-05	59.0	20.0	31	19	12	76	A-6
S-01	3.0	9.0	NP	NP	NP	21	A-1-b
S-01	3.5	14.0	24	19	5	57	A-4 (1)
S-01	8.0	12.0	24	21	3	41	A-4 (0)
S-01	13.0	25.0	40	23	17	89	A-6 (16)
S-01	18.0	34.0	39	27	12	94	A-6 (13)
S-01	28.0	96.0	55	45	10	-	-
S-01	28.8	16.0	NP	NP	NP	18	A-2-4 (0)
S-01	33.0	11.0	NP	NP	NP	8	A-1-a
S-01	38.0	25.0	45	23	22	79	A-7-6 (18)
S-01	43.0	21.0	27	19	8	68	A-4 (3)
S-01	48.0	24.0	39	25	14	81	A-6 (12)
S-01A	8.0	24.0	30	25	5	93	A-4
S-01A	10.0	23.0	26	-	NP	89	A-4
S-01A	11.5	10.0	23	15	8	45	A-4
S-01A	12.0	18.0	29	21	8	78	A-4
S-01A	14.0	21.0	27	23	4	91	A-4
S-01A	19.0	15.0	27	19	8	55	A-4
S-01A	24.0	16.0	39	21	18	54	A-6
S-01A	25.5	24.0	60	27	33	96	A-7-6
S-01A	29.0	18.0	42	24	18	72	A-7-6

SUMMARY OF INDEX TEST RESULTS

BORING NO.	TOP SAMPLE DEPTH (FT)	NATURAL MOISTURE CONTENT (%)	LL	PL	PI	PERCENT PASSING NO. 200	AASHTO
S-01A	30.0	15.0	26	21	5	47	A-4
S-01A	31.0	22.0	25	-	NP	27	A-2-4
S-01A	34.0	29.0	44	28	16	85	A-7-6
S-01B	27.0	28.0	-	-	NP	28	A-2-4
S-02	3.0	21.0	33	24	9	70	A-4 (5)
S-02	8.0	18.0	32	22	10	59	A-4 (4)
S-02	13.0	29.0	41	26	15	95	A-7-6 (16)
S-02	18.0	41.0	42	31	12	92	A-7-5 (14)
S-02	28.0	14.0	NP	NP	NP	10	A-1-b
S-02	33.0	27.0	42	26	16	74	A-7-6 (12)
S-02	38.0	26.0	51	27	24	82	A-7-6 (21)
S-02	43.0	27.0	52	29	23	86	A-7-6 (22)
S-02	43.6	20.0	26	22	4	53	A-4 (0)
S-02	48.0	20.0	NP	NP	NP	13	A-2-4 (0)
S-02	53.0	20.0	31	23	8	72	A-4 (5)
S-02	63.0	20.0	30	21	9	32	A-2-4 (0)
S-02	64.0	17.0	31	18	13	60	A-6 (5)
S-02	68.0	14.0	22	17	5	38	A-4 (0)
S-03	3.0	12.0	22	17	5	43	A-4 (0)
S-03	8.0	10.0	19	16	3	-	-
S-03	8.5	37.0	40	29	11	98	A-6 (13)
S-03	13.0	45.0	49	39	10	98	A-5 (15)
S-03	18.0	73.0	61	53	8	58	A-5 (6)
S-03	23.0	27.0	32	NP	NP	33	A-2-4 (0)
S-03	28.0	20.0	38	24	14	78	A-6 (11)
S-03	33.0	24.0	21	NP	NP	32	A-2-4 (0)
S-03	33.5	21.0	33	23	10	76	A-4 (7)
S-03	38.0	21.0	26	NP	NP	37	A-4 (0)
S-03	43.0	24.0	NP	NP	NP	22	A-2-4 (0)
S-03	48.0	19.0	NP	NP	NP	21	A-2-4 (0)
S-03	53.0	22.0	36	22	14	61	A-6 (7)
S-03	58.0	25.0	27	23	4	52	A-4 (0)
S-03	63.0	20.0	23	18	5	47	A-4 (0)
S-03	68.0	20.0	40	23	17	59	A-6 (8)
S-04	1.0	9.0	21	17	4	28	A-2-4 (0)
S-04	4.5	24.0	33	25	8	91	A-4 (8)
S-04	8.0	25.0	27	22	5	98	A-4 (4)
S-04	14.5	28.0	NP	NP	NP	13	A-2-4 (0)
S-04	19.0	11.0	21	-	-	-	-
S-04	24.0	21.0	39	24	15	64	A-6 (8)
S-04	27.5	33.0	68	37	31	89	A-7-5 (34)
S-04	35.0	25.0	NP	NP	NP	8	A-3
S-04	40.0	29.0	25	-	-	-	-
S-04	40.5	25.0	NP	NP	NP	20	A-2-4 (0)
S-04	45.0	20.0	NP	NP	NP	26	A-2-4 (0)
S-04	45.5	20.0	NP	NP	NP	17	A-2-4 (0)
S-04	50.0	21.0	22	17	5	46	A-4 (0)
S-04	50.8	20.0	24	19	5	42	A-4 (0)
S-04	55.0	18.0	28	18	10	45	A-4 (1)
S-04	60.0	17.0	30	20	10	44	A-4 (1)
S-04	65.0	25.0	40	32	8	59	A-4 (4)
S-04	70.0	28.0	57	28	29	83	A-7-6 (27)
S-04A	0.3	-	28	13	15	58	A-6 (5)
S-04A	1.0	-	28	21	7	58	A-4 (2)
S-04A	2.5	-	27	20	7	36	A-4 (0)
S-04A	3.5	-	30	21	9	77	A-4 (6)
S-04A	5.5	-	25	19	6	39	A-4 (0)
S-04A	6.5	-	41	13	28	91	A-7-6 (25)
SW-01	3.0	30.6	60	31	29	96	A-7-6
SW-01	6.0	13.8	27	16	11	69	A-6
SW-01	12.0	18.6	46	22	24	96	A-7-5
SW-02	0.0	16.9	29	19	10	98	A-4
SW-02	12.0	9.5	35	20	15	59	A-6
SW-03	3.0	23.7	29	19	10	91	A-4
SW-03	6.0	23.3	29	17	12	73	A-6
SW-03	12.0	16.8	23	16	7	64	A-4
SW-03	15.0	16.6	37	20	17	85	A-6
SW-03	18.5	20.8	26	16	10	74	A-4
SW-04	3.0	23.0	26	19	7	93	A-4
SW-04	6.0	17.8	40	19	21	94	A-6

SUMMARY OF INDEX TEST RESULTS

BORING NO.	TOP SAMPLE DEPTH (FT)	NATURAL MOISTURE CONTENT (%)	LL	PL	PI	PERCENT PASSING NO. 200	AASHTO
SW-04	9.0	20.0	44	22	22	82	A-7-5
SW-04	12.0	20.0	35	19	16	94	A-6
SW-04	18.5	26.2	36	19	17	84	A-6
SW-05	3.5	13.3	23	18	5	24	A-2-4
SW-06	3.0	19.2	24	18	6	72	A-4
SW-06	30.0	17.3	30	19	11	85	A-6
SW-06	36.0	6.7	NP	NP	NP	9	A-3
SW-07	6.0	17.3	26	17	9	33	A-2-4
SW-07	36.0	18.1	30	17	13	83	A-6
SWM-01	0.0	17.6	31	20	11	68	A-6(6)
SWM-01	2.0	24.4	37	20	17	89	A-6(15)
SWM-01	4.0	21.1	36	19	17	74	A-6(11)
SWM-01	6.0	14.6	25	16	11	59	A-4(3)
SWM-01	7.0	9.5	19	NP	NP	32	A-2-4(0)
SWM-01	8.0	10.4	NV	NP	NP	21	A-1-b
SWM-01	10.0	10.6	NV	NP	NP	20	A-1-b
SWM-01	12.0	11.3	NV	NP	NP	18	A-2-4(0)
SWM-01	13.0	21.4	47	26	21	94	A-7-6(23)
SWM-01	14.0	21.8	43	24	18	90	A-7-6(18)
SWM-01	16.0	20.6	44	25	19	98	A-7-6(22)
SWM-01	18.0	17.9	35	21	14	91	A-6(13)
SWM-01	20.0	17.4	27	21	6	88	A-4(4)
SWM-01	21.0	15.0	26	20	6	84	A-4(4)
SWM-01	22.0	16.4	25	19	6	89	A-4(4)
SWM-01	23.5	19.4	24	17	7	84	A-4(4)
SWM-02	0.5	10.2	22	NP	NP	47	A-4(0)
SWM-02	2.0	15.8	33	19	14	51	A-6(4)
SWM-02	4.0	22.0	24	NP	NP	89	A-4(0)
SWM-02	6.0	24.3	27	NP	NP	88	A-4(0)
SWM-02	7.0	24.3	26	23	3	91	A-4(2)
SWM-02	8.0	20.4	25	23	2	84	A-4(1)
SWM-02	10.0	23.9	23	NP	NP	78	A-4(0)
SWM-02	12.0	23.1	39	24	16	93	A-6(15)
SWM-02	14.0	22.0	34	23	12	97	A-6(12)
SWM-02	16.0	23.3	42	23	19	96	A-7-6(20)
SWM-02	18.0	21.3	37	24	14	92	A-6(13)
SWM-02	20.0	21.4	35	21	14	94	A-6(13)
SWM-02	22.0	20.4	29	20	8	90	A-4(6)
SWM-02	23.5	24.5	33	22	11	96	A-6(11)
SWM-03	0.5	11.2	26	21	6	69	A-4(2)
SWM-03	2.0	17.1	28	21	7	88	A-4(5)
SWM-03	4.0	17.1	27	21	7	89	A-4(4)
SWM-03	6.0	14.2	26	20	7	52	A-4(1)
SWM-03	8.0	15.4	29	21	8	44	A-4(1)
SWM-03	10.0	20.9	32	22	10	50	A-4(2)
SWM-03	12.0	22.7	31	22	9	54	A-4(3)
SWM-03	14.0	17.5	NV	NP	NP	19	A-2-4(0)
SWM-03	16.0	22.4	NV	NP	NP	13	A-2-4(0)
SWM-03	18.0	18.4	NV	NP	NP	13	A-1-b
SWM-03	20.0	14.0	NV	NP	NP	14	A-1-b
SWM-03	22.0	11.8	NV	NP	NP	15	A-1-b
SWM-03	24.0	21.7	NV	NP	NP	16	A-2-4(0)
URS-1	0.0	12.1	22	20	3	56	A-4(0)
URS-1	2.0	20.2	25	22	3	75	A-4(0)
URS-1	4.0	14.1	21	19	3	47	A-4(0)
URS-1	6.0	14.7	30	17	13	44	A-6(2)
URS-1	8.0	16.4	23	19	4	50	A-4(0)
URS-1	10.0	25.0	47	25	22	97	A-7-6(24)
URS-1	12.0	24.9	44	26	18	99	A-7-6(21)
URS-1	14.0	22.7	39	23	16	100	A-6(18)
URS-1	16.0	21.4	40	23	17	99	A-6(19)
URS-1	18.0	24.0	34	22	12	98	A-6(12)
URS-1	20.0	27.2	40	23	17	88	A-6(16)
URS-1	22.0	28.6	37	22	15	94	A-6(15)
URS-1	26.0	24.0	44	21	23	84	A-7-6(20)
URS-1	28.0	18.3	35	20	15	89	A-6(13)
URS-1	34.0	22.2	28	19	10	84	A-4(6)
URS-1	39.0	21.1	29	19	10	93	A-4(8)
URS-1	44.0	22.0	32	20	12	98	A-6(12)
URS-1	49.0	24.9	23	NP	NP	59	A-4(0)

NOTES:

1. LL = LIQUID LIMIT
2. PL = PLASTIC LIMIT
3. PI = PLASTICITY INDEX

UNOFFICIAL WEBSITE COPY

SUMMARY OF INDEX TEST RESULTS

BORING NO.	TOP SAMPLE DEPTH (FT)	NATURAL MOISTURE CONTENT (%)	LL	PL	PI	PERCENT PASSING NO. 200	AASHTO
URS-1	54.0	23.2	NV	NP	NP	77	A-4(0)
URS-1	59.0	16.5	20	NP	NP	67	A-4(0)
URS-1	64.0	19.7	18	NP	NP	47	A-4(0)
URS-1	69.0	20.3	19	17	2	62	A-4(0)
URS-1	74.0	19.5	17	NP	NP	45	A-4(0)
URS-1	79.0	20.2	16	NP	NP	36	A-4(0)
URS-1	84.0	19.8	18	NP	NP	53	A-4(0)
URS-1	89.0	16.4	NV	NP	NP	21	A-2-4(0)
URS-1	94.0	10.6	NV	NP	NP	21	A-2-4(0)
URS-1	99.0	16.6	NV	NP	NP	15	A-2-4(0)
URS-1	104.0	16.4	NV	NP	NP	17	A-2-4(0)
URS-1	109.0	15.2	NV	NP	NP	20	A-2-4(0)
URS-1	114.0	13.2	18	14	4	40	A-4(0)
URS-1	119.0	26.1	40	21	19	78	A-6(14)
URS-1	124.0	15.5	36	17	19	34	A-2-6(2)
URS-2	1.5	3.2	NV	NP	NP	5	A-1-a
URS-2	2.0	12.2	32	21	11	58	A-6(4)
URS-2	4.0	21.2	24	24	10	95	A-4(10)
URS-2	6.0	8.5	NV	NP	NP	17	A-1-b
URS-2	8.0	9.1	NV	NP	NP	21	A-2-4(0)
URS-2	10.0	10.9	NV	NP	NP	22	A-2-4(0)
URS-2	12.0	11.6	NV	NP	NP	17	A-2-4(0)
URS-2	14.0	21.1	NV	NP	NP	53	A-4(0)
URS-2	16.0	17.6	NV	NP	NP	18	A-2-4(0)
URS-2	18.0	16.9	NV	NP	NP	16	A-2-4(0)
URS-2	24.0	17.3	NV	NP	NP	14	A-1-b
URS-2	29.0	17.1	NV	NP	NP	-	-
URS-2	34.0	16.2	27	17	10	67	A-4(4)
URS-2	39.0	24.8	40	21	19	98	A-6(20)
URS-2	44.0	25.6	NV	NP	NP	16	A-2-4(0)
URS-2	49.0	35.2	NV	NP	NP	32	A-2-4(0)
URS-2	54.0	26.1	NV	NP	NP	26	A-2-4(0)
URS-2	59.0	20.7	52	25	27	80	A-7-6(23)
URS-2	64.0	22.7	55	27	28	88	A-7-6(28)
URS-2	69.0	28.3	56	31	25	98	A-7-5(30)
URS-2	74.0	23.6	49	27	22	95	A-7-6(24)
URS-2	79.0	27.3	44	24	20	85	A-7-6(18)
URS-2	84.0	18.5	29	20	9	80	A-4(6)
URS-2	89.0	26.6	21	NP	NP	27	A-2-4(0)
URS-2	94.0	16.6	21	14	7	46	A-4(0)
URS-2	98.0	22.8	40	23	17	86	A-6(16)
URS-2	104.0	19.4	30	20	9	72	A-4(6)
URS-2	108.0	-	-	-	-	-	-
URS-2	109.0	22.8	-	-	-	-	-
URS-2	114.0	15.6	NV	NP	NP	13	A-2-4(0)
URS-2	119.0	26.3	18.6	NP	NP	38	A-4(0)
URS-2	124.0	23.2	NV	NP	NP	22	A-2-4(0)
URS-3	1.0	13.4	27	NP	NP	39	A-4(0)
URS-3	1.5	7.3	NP	NP	NP	22	A-1-b
URS-3	2.0	9.1	NP	NP	NP	14	A-1-b
URS-3	4.0	15.7	14	NP	NP	55	A-4(0)
URS-3	6.0	14.3	NP	NP	NP	18	A-2-4(0)
URS-3	8.0	7.9	-	-	-	-	-
URS-3	10.0	17.4	22	18	4	87	A-4(1)
URS-3	12.0	20.4	28	18	10	83	A-4(7)
URS-3	14.0	25.2	21	16	5	66	A-4(0)
URS-3	16.0	24.9	17	NP	NP	31	A-2-4(0)
URS-3	17.0	19.9	33	19	14	94	A-6(13)
URS-3	18.0	19.3	20	NP	NP	26	A-2-4(0)
URS-3	23.0	23.0	NP	NP	NP	45	A-4(0)
URS-3	28.0	22.9	19	NP	NP	62	A-4(0)
URS-3	33.0	26.0	45	23	22	98	A-7-6(24)
URS-3	35.1	21.0	-	-	-	-	-
URS-3	37.0	19.6	30	19	11	95	A-6(10)
URS-3	43.0	20.8	30	21	9	95	A-4(8)
URS-3	48.0	21.9	30	20	10	98	A-4(9)
URS-3	50.1	32.8	-	-	-	-	-
URS-3	52.0	21.9	42	23	19	91	A-7-6(19)
URS-3	58.0	28.8	53	29	24	98	A-7-6(28)
URS-3	63.0	26.1	43	23	20	87	A-7-6(18)

SUMMARY OF INDEX TEST RESULTS

BORING NO.	TOP SAMPLE DEPTH (FT)	NATURAL MOISTURE CONTENT (%)	LL	PL	PI	PERCENT PASSING NO. 200	AASHTO
URS-3	68.0	20.8	35	19	16	75	A-6(11)
URS-3	73.0	-	-	-	-	-	-
URS-3	78.0	21.8	43	23	20	73	A-7-6(14)
URS-3	81.0	-	42	22	20	79	A-7-6(16)
URS-3	83.0	23.3	44	26	18	90	A-7-6(18)
URS-3	88.0	19.5	35	21	14	69	A-6(8)
URS-3	91.0	-	-	-	-	-	-
URS-3	93.0	20.1	NP	NP	NP	21	A-2-4(0)
URS-3	98.0	21.6	36	24	12	86	A-6(11)
URS-3	103.0	20.8	26	NP	NP	86	A-4(0)
URS-3	108.0	23.8	NP	NP	NP	16	A-2-4(0)
URS-3	113.0	15.1	NP	NP	NP	18	A-1-b
URS-3	118.0	14.6	24	16	8	56	A-4(2)
URS-3	123.0	19.3	39	20	19	66	A-6(11)
URS-4	0.5	10.0	22	20	2	36	A-4(0)
URS-4	2.0	10.0	19	NP	NP	57	A-4(0)
URS-4	4.0	11.9	20	NP	NP	38	A-4(0)
URS-4	6.0	14.1	NP	NP	NP	20	A-2-4(0)
URS-4	8.0	13.6	22	NP	NP	25	A-1-b
URS-4	10.0	9.5	22	21	1	20	A-1-b
URS-4	12.0	17.0	NP	NP	NP	18	A-2-4(0)
URS-4	14.0	20.6	34	20	14	52	A-6(4)
URS-4	16.0	18.3	27	18	9	38	A-4(0)
URS-4	18.0	22.9	40	22	18	73	A-6(12)
URS-4	22.1	24.0	-	-	-	-	-
URS-4	24.0	18.6	40	23	17	99	A-6(18)
URS-4	26.0	22.1	-	-	-	-	-
URS-4	29.0	23.0	29	18	11	88	A-6(8)
URS-4	34.0	17.3	36	24	12	90	A-6(11)
URS-4	37.0	24.6	42	22	20	89	A-7-6(19)
URS-4	39.0	28.9	20	17	2	64	A-4(0)
URS-4	44.0	29.2	46	20	25	99	A-7-6(28)
URS-4	49.0	23.5	34	21	13	80	A-6(10)
URS-4	54.0	25.3	NP	NP	NP	20	A-2-4(0)
URS-4	59.0	28.6	40	32	8	91	A-4(10)
URS-4	64.0	24.3	22	NP	NP	57	A-4(0)
URS-4	69.0	20.9	42	24	18	99	A-7-6(20)
URS-4	74.0	16.4	43	26	17	99	A-7-6(19)
URS-4	79.0	16.1	-	-	-	-	-
URS-4	84.0	16.9	36	23	13	99	A-6(14)
URS-4	86.0	15.5	46	22	24	100	A-7-6(27)
URS-4	89.0	12.7	40	23	17	95	A-6(17)
URS-4	94.0	13.9	28	19	9	78	A-4(6)
URS-4	94.5	-	NP	NP	NP	34	A-2-4(0)
URS-4	99.0	22.1	26	17	9	67	A-4(4)
URS-4	104.0	25.5	NP	NP	NP	13	A-1-b
URS-4	109.0	12.7	NP	NP	NP	16	A-2-4(0)
URS-4	114.0	13.9	NP	NP	NP	13	A-2-4(0)
URS-4	119.0	22.1	40	23	17	83	A-6(14)
URS-4	124.0	25.5	34	22	12	74	A-6(8)
URS-4	126.0	15.2	26	13	13	46	A-6(2)
URS-5	0.5	13.1	23	16	7	35	A-2-4(0)
URS-5	2.0	15.2	18	16	2	41	A-4(0)
URS-5	4.0	18.6	29	17	12	81	A-6(8)
URS-5	6.0	20.1	34	21	13	91	A-6(12)
URS-5	8.0	23.3	36	20	16	85	A-6(13)
URS-5	10.0	21.3	44	24	20	92	A-7-6(20)
URS-5	12.0	15.7	23	15	8	54	A-4(1)
URS-5	14.0	19.4	17	NP	NP	38	A-4(0)
URS-5	16.0	12.9	24	16	8	52	A-4(1)
URS-5	18.0	16.2	19	NP	NP	32	A-2-4(0)
URS-5	23.0	17.0	23	19	4	51	A-4(0)
URS-5	28.0	13.6	22	17	5	45	A-4(0)
URS-5	33.0	24.0	50	26	24	100	A-7-6(28)
URS-5	37.5	20.9	58	28	30	98	A-7-6(35)
URS-5	43.0	21.1	35	21	14	95	A-6(12)
URS-5	48.0	17.1	29	20	9	82	A-4(6)
URS-5	53.0	18.4	18	NP	NP	49	A-4(0)
URS-5	58.0	18.5	18	NP	NP	53	A-4(0)
URS-5	63.0	21.0	17	NP	NP	52	A-4(0)

SUMMARY OF INDEX TEST RESULTS

BORING NO.	TOP SAMPLE DEPTH (FT)	NATURAL MOISTURE CONTENT (%)	LL	PL	PI	PERCENT PASSING NO. 200	AASHTO
URS-5	68.0	23.1	17	NP	NP	48	A-4(0)
URS-5	73.0	22.4	NP	NP	NP	27	A-2-4(0)
URS-5	78.0	21.4	17	NP	NP	43	A-4(0)
URS-5	83.0	26.0	16	NP	NP	55	A-4(0)
URS-5	88.0	19.1	NP	NP	NP	15	A-2-4(0)
URS-5	93.0	17.4	NP	NP	NP	21	A-2-4(0)
URS-5	98.0	20.2	NP	NP	NP	22	A-2-4(0)
URS-5	103.0	17.2	NP	NP	NP	15	A-2-4(0)
URS-5	108.0	21.0	20	NP	NP	30	A-2-4(0)
URS-5	113.0	19.8	40	17	23	55	A-6(9)
URS-5	118.0	22.3	42	20	22	53	A-7-6(8)
URS-5	123.0	22.3	42	21	21	75	A-7-6(15)
WA-1	3.0	26.0	26	19	7	91	A-4
WA-1	8.0	22.0	30	20	10	86	A-4
WA-1	13.0	41.0	46	29	17	98	A-7-6
WA-1	18.0	174.0	100	-	-	-	-
WA-1	23.0	27.0	28	27	1	54	A-4
WA-1	33.0	22.0	23	-	NP	21	A-2-4
WA-1	38.0	29.0	40	31	9	90	A-4
WA-1	43.0	32.0	46	30	16	89	A-7-5
WA-1	43.5	27.0	-	-	NP	13	A-2-4
WA-1	48.0	21.0	-	-	NP	12	A-2-4
WA-1	53.0	20.0	16	-	NP	17	A-2-4
WA-1	58.0	14.0	19	17	2	35	A-2-4
WA-1	63.0	22.0	-	-	NP	16	A-2-4
WA-1	68.0	22.0	-	-	NP	27	A-2-4
WA-2	1.0	15.0	20	-	NP	87	A-4
WA-2	4.0	26.0	29	24	5	93	A-4
WA-2	9.0	23.0	34	23	11	90	A-6
WA-2	14.0	41.0	46	32	14	98	A-7-5
WA-2	19.0	174.0	115	-	-	-	-
WA-2	24.0	15.0	-	-	NP	4	A-1-a
WA-2	29.0	21.0	24	20	4	26	A-2-4
WA-2	34.0	24.0	28	24	4	47	A-4
WA-2	39.0	28.0	-	-	NP	6	A-3
WA-2	44.0	21.0	38	20	18	64	A-6
WA-2	49.0	21.0	-	-	NP	15	A-2-4
WA-2	54.0	22.0	-	-	NP	8	A-1-b
WA-2	59.0	20.0	-	-	NP	8	A-1-b
WA-2	64.0	20.0	-	-	NP	10	A-3
WA-2	69.0	24.0	40	22	18	67	A-6
WA-2	74.0	21.0	41	22	19	52	A-7-6
WS-1	4.0	17.0	28	20	8	82	A-4
WS-1	9.0	13.0	24	18	6	35	A-2-4
WS-1	14.0	20.0	33	22	11	59	A-6
WS-1	19.0	14.0	25	20	5	17	A-1-b
WS-1	24.0	18.0	31	17	14	96	A-6
WS-1	27.5	20.0	35	20	15	88	A-6
WS-1	35.0	28.0	47	27	20	91	A-7-6
WS-1	42.0	29.0	39	24	15	84	A-6
WS-1	45.0	26.0	39	24	15	82	A-6
WS-1	50.0	19.0	28	18	10	68	A-4
WS-1	55.0	20.0	34	21	13	72	A-6
WS-1	60.0	24.0	-	-	NP	25	A-2-4
WS-1	65.0	23.0	-	-	NP	11	A-2-4
WS-2	3.0	6.0	-	-	NP	18	A-1-b
WS-2	8.0	16.0	29	20	9	78	A-4
WS-2	13.0	18.0	31	20	11	69	A-6
WS-2	18.0	13.0	22	15	7	59	A-4
WS-2	23.0	16.0	23	16	7	53	A-4
WS-2	23.5	22.0	44	25	19	91	A-7-6
WS-2	28.0	29.0	63	33	30	92	A-7-5
WS-2	33.0	34.0	68	33	35	95	A-7-5
WS-2	38.0	31.0	47	27	20	82	A-7-6
WS-2	43.0	23.0	35	20	15	71	A-6
WS-2	48.0	23.0	38	21	17	74	A-6
WS-2	53.0	16.0	28	17	11	47	A-6
WS-2	58.0	24.0	-	-	NP	5	A-3
WS-2	63.0	21.0	35	26	9	76	A-4
WS-2	68.0	13.0	-	-	NP	15	A-2-4

NOTES:

1. LL = LIQUID LIMIT
2. PL = PLASTIC LIMIT
3. PI = PLASTICITY INDEX

UNOFFICIAL WEBSITE COPY