COUNTY	CONTRACT	F.P.A. DIV. NO	STATE	FED AID PROJ. NO	FISCAL YEAR	SHEET NO	TOTAL SHEETS
NEW CASTLE	70-04-016	2	DEL	I-495-3(19)15		1	46

INTERSTATE HIGHWAY ROUTE I-495
CHRISTINA RIVER BRIDGE - SUBSTRUCTURE

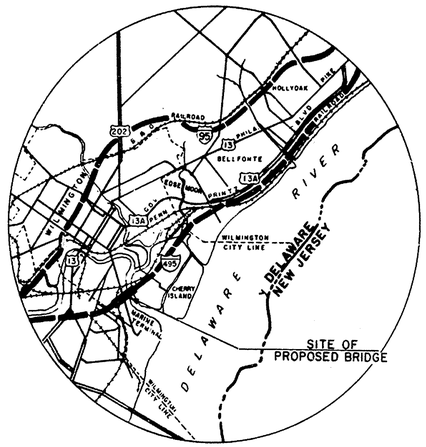

SCALE: 1" = 7500'

THE STATE OF DELAWARE

State of Delaware

STATE HIGHWAY DEPARTMENT

PLAN
FOR
CONSTRUCTION OF CONTRACT Nº 70-04-016

STA. 348+21.46 TO STA. 392+16.57

4,395.11 FEET: 0.832 MILES

SCALE: PLAN: 1 IN. = 50 FT.
PROFILE: HOR. 1 IN. = 50 FT.
VERT. 1 IN. = 50 FT.

FEDERAL AID PROJECT Nº I-495-3(19)15
(THIS IS A CONTROLLED ACCESS HIGHWAY)

EQUATION

119+88.67 I-495 N.B., Bk. =
119+60.81 I-495 S.B., Bk. =
347+96.46 ℄ I-495, Ah.

DESIGN DATA

FEDERAL CLASS	URBAN
Design Speed	60 mph
ADT (1967)	28,700
ADT (1992)	77,700
DHV (1992)	8,547
Directional Distribution	55%
Percentage of Trucks (of ADT)	13%

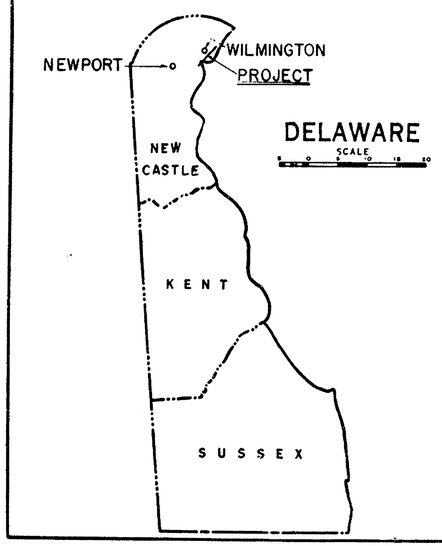

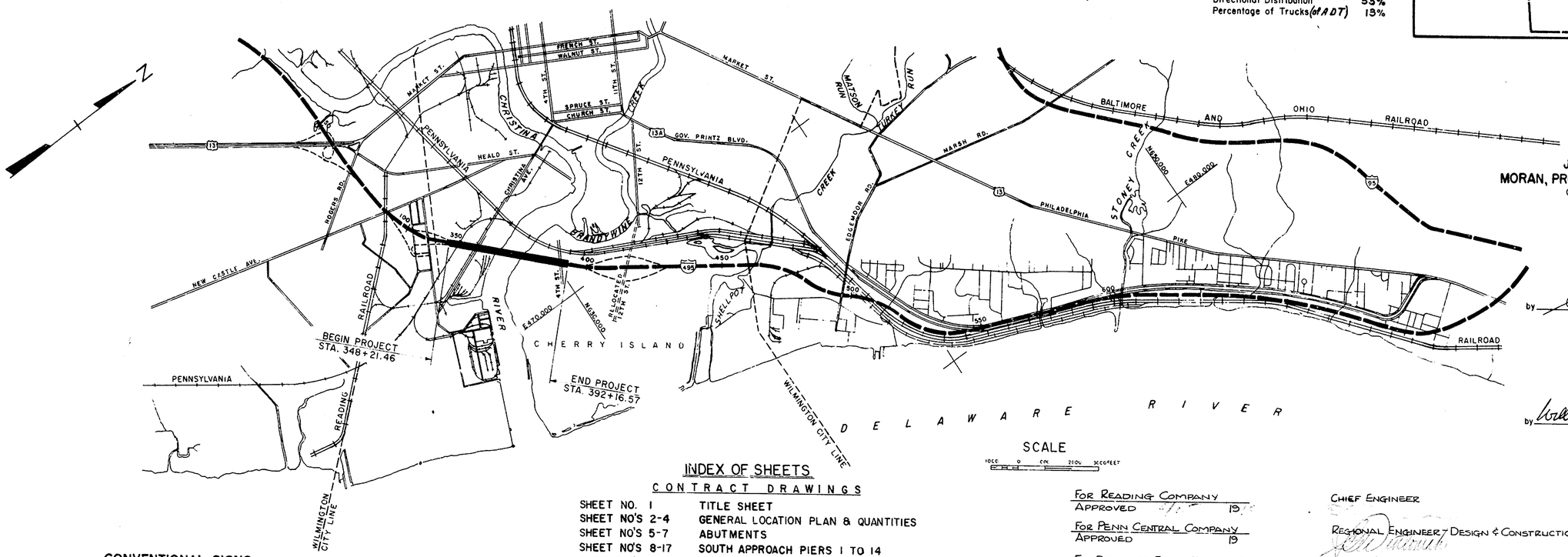

J. E. GREINER CO.
MORAN, PROCTOR, MUESER & RUTLEDGE
CONSULTING ENGINEERS

by

by

SCALE

REVISIONS
△ SOUTH APPROACH SLABS ADDED — JAN. 27, 1972

CONVENTIONAL SIGNS

COUNTY LINE
CITY OR TOWN LINE
RIGHT OF WAY LINE
CENTRE LINE, PROPOSED ROAD
MACADAM, TRAVELLED ROAD
TROLLEY OR RAILROAD
WIRE FENCE
PRESENT CULVERT
PROPOSED CULVERT
TELEGRAPH POLE
TREE

PROFILE

INDEX OF SHEETS

CONTRACT DRAWINGS

SHEET NO. 1	TITLE SHEET
SHEET NO'S 2-4	GENERAL LOCATION PLAN & QUANTITIES
SHEET NO'S 5-7	ABUTMENTS
SHEET NO'S 8-17	SOUTH APPROACH PIERS 1 TO 14
SHEET NO'S 18-32	RIVER PIERS 15 TO 19
SHEET NO'S 33-44	△ NORTH APPROACH PIERS 20 TO 37
SHEET NO. 45, 45 A	SLOPE PROTECTION DETAILS, APPROACH SLAB △
SHEET NO. 46	SUBSTRUCTURE NAVIGATION LIGHTING

INFORMATION DRAWINGS

SHEET A	BORING LOCATION PLAN
SHEET BB	BORING LEGENDS & INDEX
SHEETS D, E, F, G, H	BORINGS & GEOLOGIC SECTIONS
SHEETS I, II	TEST PILE DRIVING RECORDS
SHEET III	PILE TEST RECORDS

FOR READING COMPANY
APPROVED 19

FOR PENN CENTRAL COMPANY
APPROVED 19

FOR DELAWARE STATE HIGHWAY DEPT.

RECOMMENDED	5/17	1970
RECOMMENDED	5/17	1970
APPROVED	5/17	1970
APPROVED	5-17	1970

CHIEF ENGINEER

REGIONAL ENGINEER, DESIGN & CONSTRUCTION

CHIEF PLANS & DESIGN DIVISION

ASST. CHIEF ENGINEER

CHIEF ENGINEER

DIRECTOR OF OPERATIONS

DEPARTMENT OF COMMERCE
BUREAU OF PUBLIC ROADS

APPROVED:

DIVISION ENGINEER DATE

COUNTY	CONTRACT	P. B. A. REG. NO.	STATE	FED. AID PROJECT NO.	FISCAL YEAR	SHEET NO.	TOTAL SHEETS
NEW CASTLE	70-08-016	2	DEL.	I-495-3(19)15		2	46

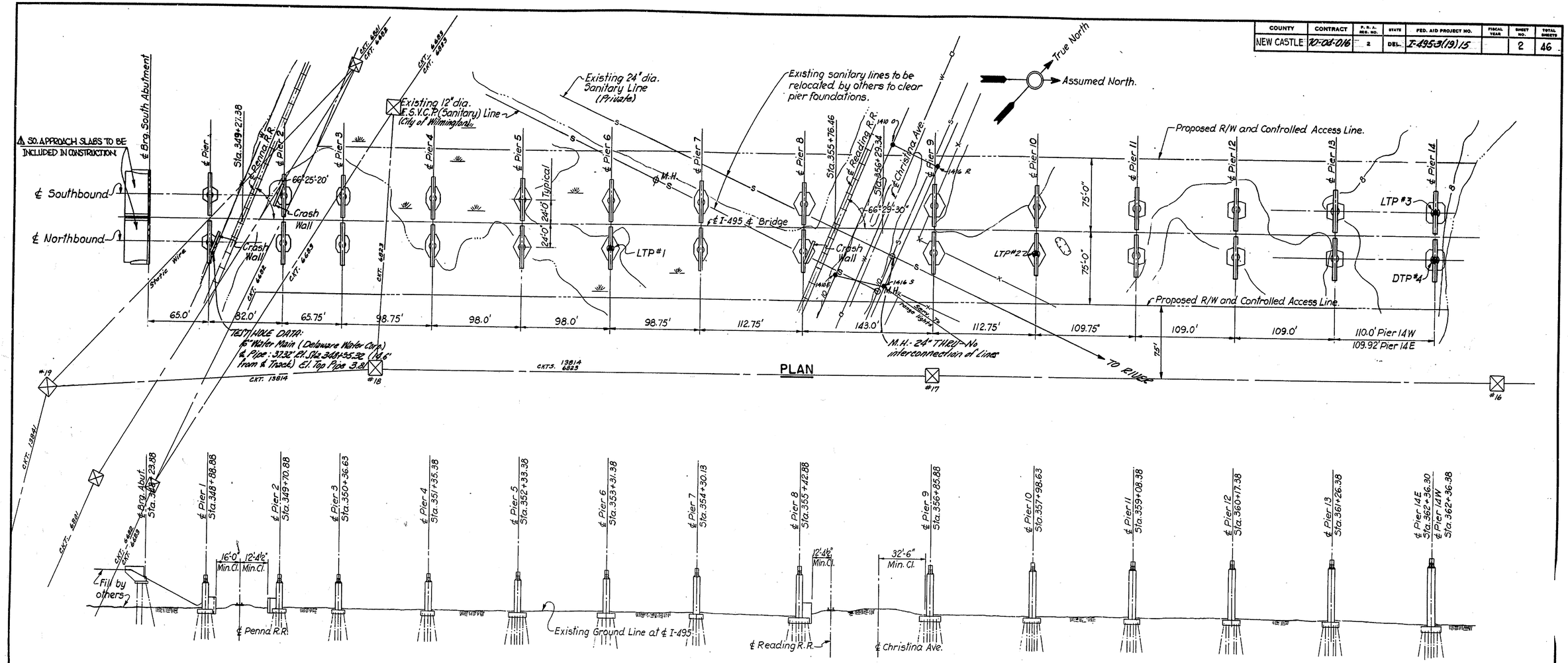

GENERAL NOTES

SPECIFICATIONS: Design Criteria are based on 1961 Standard Specifications for Highway Bridges, American Association of State Highway Officials, with Interim Specifications, 1961, 1962 and 1964

Material and workmanship are to conform with State of Delaware, State Highway Department Standard Specifications dated June 1, 1965, unless otherwise noted and/or specified by Special Provisions.

DEAD LOAD: Concrete - 150 lbs. per cu.ft.

LIVE LOAD: HS-20-44 Modified for Interstate Loading.

ELEVATIONS: Based on U.S.C. & G.S. Datum 1929.

BORINGS: The subsoil data and interpretations do not form a part of the contract, and are included for the bidders information only. Available soil samples taken at the site may be examined by arrangement with State Highway Department of Delaware. The Contractor shall make his own interpretation and judgments of the boring results and assume full responsibility for same.

TEST PILES: In August-September 1965 the pile test program was conducted at the location of the Christina River Bridge. The program consisted of test driving of 5 (five) fluted, tapered steel shells known as "Monotube" piles and 2 (two) 14BP73 H piles. 3 (three) Monotube piles and 1 (one) H pile were load tested.

The Information Drawings showing pile test results do not form a part of the Contract. The Contractor shall make his own interpretations and judgements of the pile test results and assume full responsibility for same.

FOUNDATIONS: Abutment piles to be cast-in-place concrete piles and shall be driven to develop a minimum bearing capacity of 35 tons.

Piles for Piers Nos. 1 to 10 inclusive and 31 to 37 inclusive to be cast-in-place concrete piles and shall be driven to develop a minimum bearing capacity of 60 tons. The nominal diameter and shell thickness of the steel casings or shells of cast-in-place concrete piles shall be as shown in the Specifications or on the Plans or approved by the Director.

Piles for Piers Nos. 11 to 30 inclusive to be 14BP89 H piles and shall be driven to develop a minimum bearing capacity of 118 tons.

A minimum of one test pile shall be driven at a permanent pile location in all abutment and pier footings except those 7 (seven) footings where test piles were already driven by others.

EXCAVATION FOR STRUCTURES: The depth of excavation measured for payment shall be the vertical distance from the bottom of concrete to the ground line existing at the time of excavation, but not above finished grade. The horizontal limits of excavation for payment shall be 1'-6" beyond the face of concrete.

PORTLAND CEMENT CONCRETE MASONRY: All concrete shall be controlled concrete with a minimum compressive strength of 3000 p.s.i. in 28 days. Portland Cement Type V shall be used in concrete mixes below El.+6 and cast-in-place concrete piles for Piers Nos. 1 to 10 inclusive. Cover over reinforcing bars shall be 2" except as otherwise noted on the drawings or as follows: Pile Caps - 3", Approach Slabs - 1-1/2". All exposed edges of concrete shall be chamfered 3/4"x3/4" unless otherwise shown. Concrete in areas under bearing plates shall be constructed to a smooth finish to the elevations 1/8" higher than shown on plan, and ground to elevations shown on Plans.

ANCHOR BOLTS: Material for anchor bolts for bridge shoes shall conform to ASTM A-36 Specifications.

BAR REINFORCEMENT: Bar reinforcement to be ASTM A615 Grade 40

Lapped splices, unless otherwise noted, are to be a minimum of 24 bar diameters.

SLOPE PROTECTION: Slope protection to the extent indicated on the drawings shall be as specified in the Special Provisions.

ACID PROTECTION: Pier shafts below El.+6, pile caps and piles of piers Nos. 1 through 8 inclusive shall be acid protected as shown on the Plans or specified.

NAVIGATION PROTECTION: The Contractor shall furnish, install and maintain all navigation lights, signs and other protective and safety devices as may be necessary and/or as required by the respective public authorities. (See Special Provisions.)

WROUGHT IRON: Wherever in these plans a reference is made to wrought iron, the use of A-242 Steel with vinyl coating is permitted, except hardware for timber structures. See Special Provisions.

UTILITIES LEGEND

Underground Facilities
- —S— Wilmington Sanitary Sewer
- —W— Delaware Water Corp.
- —□—W—□— Wilmington Water Dept.

Aerial Facilities
- —●— Present DP&L pole & wire line
- —X— " D.S.T. pole
- —— " D.P.&L Transmission line
- ☒ #12 " " Tower

LEGEND:

- ▲ — Existing Load Test Pile
- ◆ — Existing Drive Test Pile

REVISIONS
△ SOUTH APPROACH SLABS ADDED — JAN. 27, 1972 BGS

J. E. GREINER CO.
MORAN, PROCTOR, MUESER & RUTLEDGE
CONSULTING ENGINEERS

DELAWARE
STATE HIGHWAY DEPARTMENT

INTERSTATE ROUTE I-495

CHRISTINA RIVER BRIDGE
GENERAL LOCATION PLAN
SOUTH ABUTMENT TO PIER 14

D. A.L.A.
T. P.F.
C. W.W.

SCALE 1" = 50'
DATE 5/14/70

APPROVED BY: John S. Rutledge
BRIDGE ENGINEER

OGILVIE PRESS, INC. — D-127 4848

COUNTY	CONTRACT	P.S.A. REG. NO.	STATE	FED. AID PROJECT NO.	FISCAL YEAR	SHEET NO.	TOTAL SHEETS
NEW CASTLE	70-04-016	2	DEL.	I-495-3(19)15		3	46

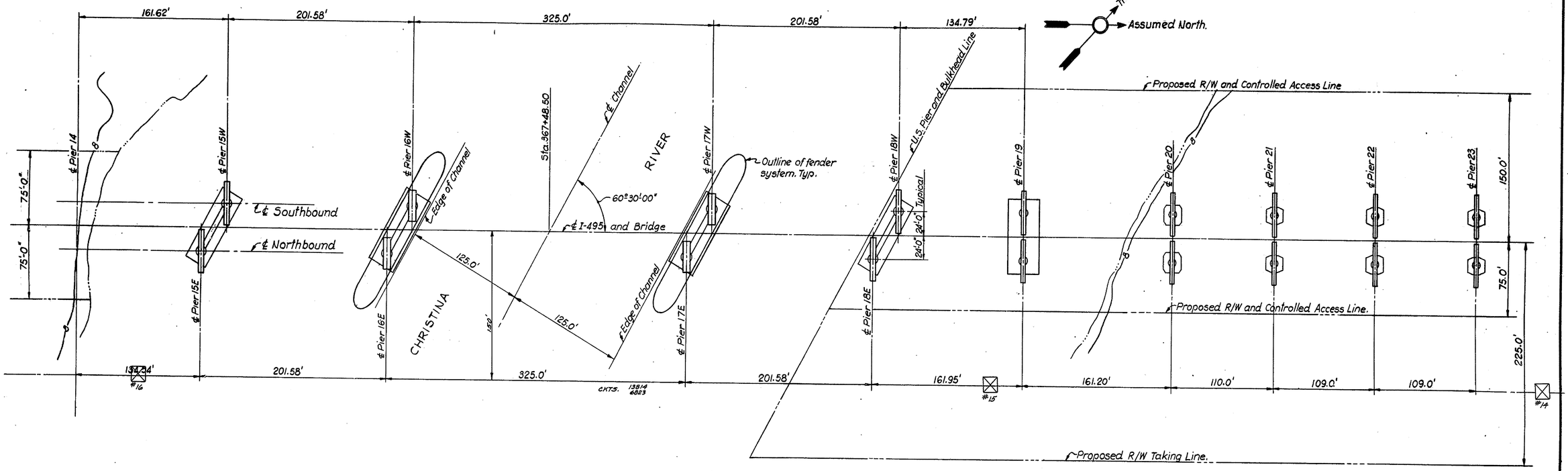

PLAN

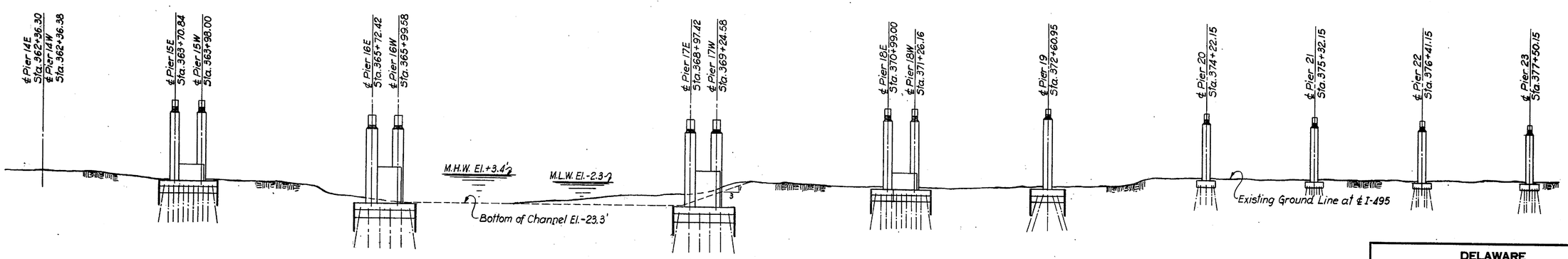

ELEVATION

DELAWARE
STATE HIGHWAY DEPARTMENT

INTERSTATE ROUTE I-495

CHRISTINA RIVER BRIDGE
GENERAL LOCATION PLAN
PIERS 15 TO 23

J. E. GREINER CO.
MORAN, PROCTOR, MUESER & RUTLEDGE
CONSULTING ENGINEERS

D.A.L.A
T.P.F.
C.W.W.

SCALE 1" = 50'
DATE 5/14/70

APPROVED BY:
BRIDGE ENGINEER

COUNTY	CONTRACT	F. R. A. REG. NO.	STATE	FED. AID PROJECT NO.	FISCAL YEAR	SHEET NO.	TOTAL SHEETS
NEW CASTLE	70-04-016	2	DEL.	I-495-3(19)15		4	46

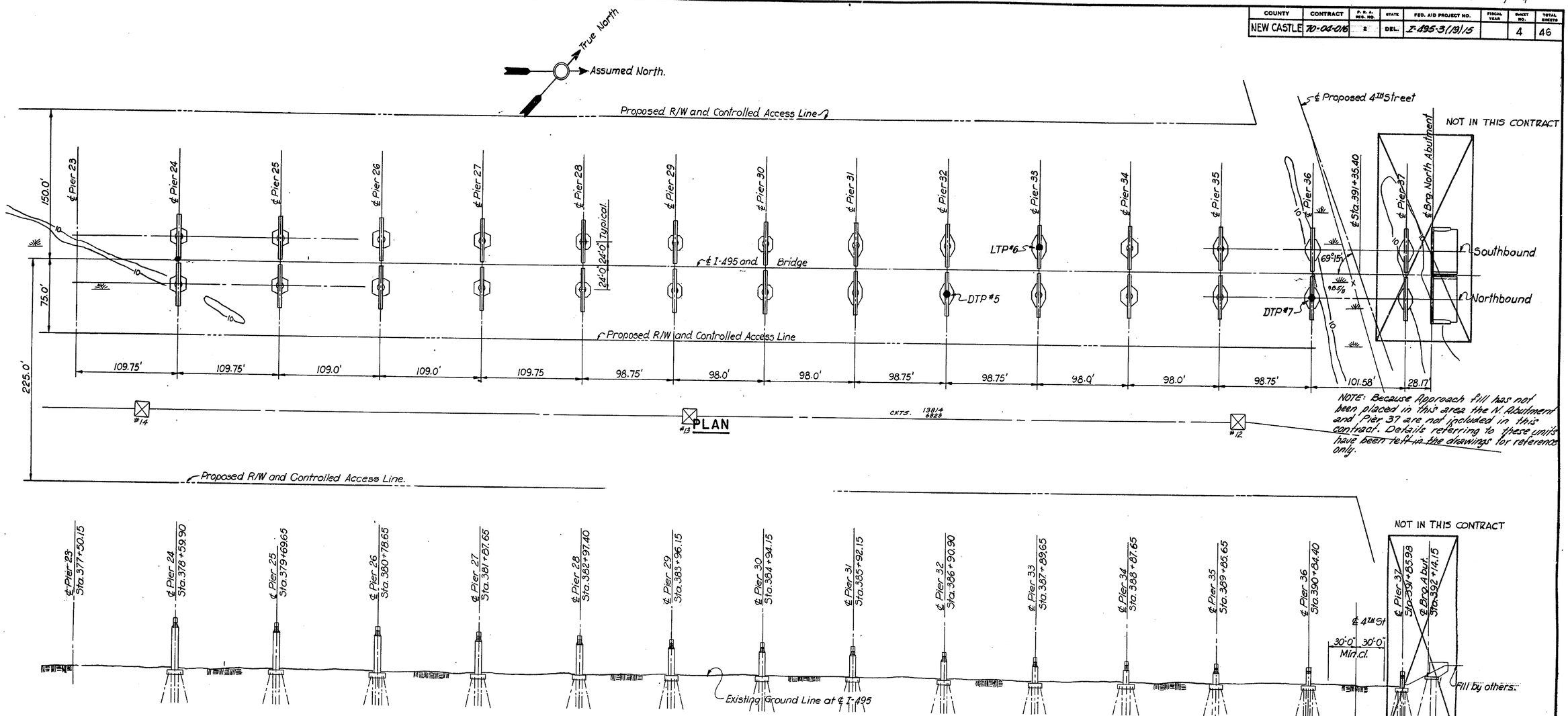

ELEVATION

① ESTIMATED FIXED QUANTITY ITEMS
② SEE SPECIFICATIONS ⑤ TO BE USED WHERE DIRECTED

ITEM No.	4							17	18					20	32	32A	35							37	S.P.	S.P.	S.P.	7	S.P.	S.P.		S.P.	S.P.	S.P.
DESCRIPTION	EXCAVATION FOR STRUCTURES							TIMBER ① STRUCTURES TREATED	PORTLAND CEMENT CONCRETE MASONRY ①					BAR REINF ①	TIMBER PILES TREATED	TIMBER TEST PILES	CAST-IN-PLACE CONCRETE PILES			STEEL SHELL TEST PILES			PILE LOAD TESTS		PORTLAND CEMENT CONCRETE GUTTER	STEEL H PILES 14BP89	STEEL H TEST PILES	WROUGHT IRON	SELECT BORROW	CONCRETE SLOPE PAVING	ACID PROTECTION PIERS 1 THRU 8 ①		ELECT. WORK	FIELD OFFICE	CHECK BORINGS
	ABUT'S	EXCAVATION, CONSTRUCTION & REMOVAL OF COFFERDAMS					PIERS ON LAND	FENDER PIERS 16 & 17	TREMIE SEAL	ABUT'S	PIER FOOTINGS	PIERS ABOVE FTG	APPROACH SLABS				ABUT'S PILES (12" DIAM.)	PIERS 1 TO 8 INCL. (16" DIAM.)	PIERS 9-10 & 31 TO 36 (16" DIAM.)	AT ABUT'S (12" DIAM.)	AT PIERS 1 TO 8 (16" DIAM.)	AT PIERS 9-10, 31-36 (16" DIAM.)	CIP CONC PILE	STEEL H PILE				PROT. PLATES ① ②	⑤		PROTECT. OF PILES	PROTECT. OF PIERS			L. F.
UNIT	C.Y.	C.Y.	C.Y.	C.Y.	C.Y.	C.Y.	C.Y.	MBM	C.Y.	C.Y.	C.Y.	C.Y.	C.Y.	LB	LF	LF	L.F.	L.F.	L.F.	L.F.	L.F.	L.F.	EA.	EA.	S.Y.	L.F.	L.F.	LBS.	C.Y.	S.Y.	S.F.	S.F.	L.S.	L.S.	IGS
SOUTH APPROACH S. ABUT. THRU PIER 14	264	—	—	—	—	—	2,763	—	—	212	1,824	3,363	△ 143 ~~NONE~~	~~1,063,300~~ ~~1,082,200~~ △	—	—	4,530	16,280	5,220	80	380	100	1	1	105	13,550	490	—	1,000	851	42,380	20,400	—	L.S.	
RIVER PIERS PIER 15 THRU 19	—	L.S.	L.S.	L.S.	L.S.	L.S.	—	166	2,974	—	2,270	△ 3894 ~~3,320~~		△ 1,095,400	11,120	240	—	—	—	—	—	—	—	—	—	32,880	520	166,860	—	—	—	—	L.S.	
NORTH APPROACH PIER 20 THRU 36	—	—	—	—	—	—	3114	—	—	—	1,829	3,332		~~1,062,100~~ △ ~~998,400~~	—	—	—	—	16,819	—	—	510	—	—	—	28,590	1220	—	—	—	—	—	—	
TOTAL	264	L.S.	L.S.	L.S.	L.S.	L.S.	5,877	166	2,974	212	5,923	10,589 ~~10,015~~ △	△ 143	~~3,225,300~~ △ ~~3,156,000~~ △	11,120	240	4,530	16,280	22,039	80	380	610	1	1	105	75,020	2210	166,860	1,000	851	42,380	20,400	L.S.	L.S.	

△ 1,097,364 ~~1,096,364~~
△ 1,108,682
△ 1,059,220
△ 3265.226 ~~3235.226~~

△ QUANTITIES E.Z. 9/18/70
△ QUANTITIES R.B. 1-18-71
△ QUANTITIES, SO. APPROACH SLABS ADDED — JAN. 27, 1972 BGS & R.B.F.

REVISIONS

DELAWARE
STATE HIGHWAY DEPARTMENT

INTERSTATE ROUTE I-495

CHRISTINA RIVER BRIDGE
GENERAL LOCATION PLAN
PIER 24 TO NORTH ABUTMENT

J. E. GREINER CO.
MORAN, PROCTOR, MUESER & RUTLEDGE
CONSULTING ENGINEERS

D. A.L.A.
T. P.F.
C. W.W.

SCALE 1" = 50'
DATE 5/14/70

APPROVED BY: John S. Linkletter
BRIDGE ENGINEER

GUILFORD PRESS, INC. — 8-127 4640

COUNTY	CONTRACT	F.P.A. RES. NO.	STATE	FED. AID PROJECT NO.	FISCAL YEAR	SHEET NO.	TOTAL SHEETS
NEW CASTLE	70-04-016	2	DEL.	I-495-3(19)15		5	46

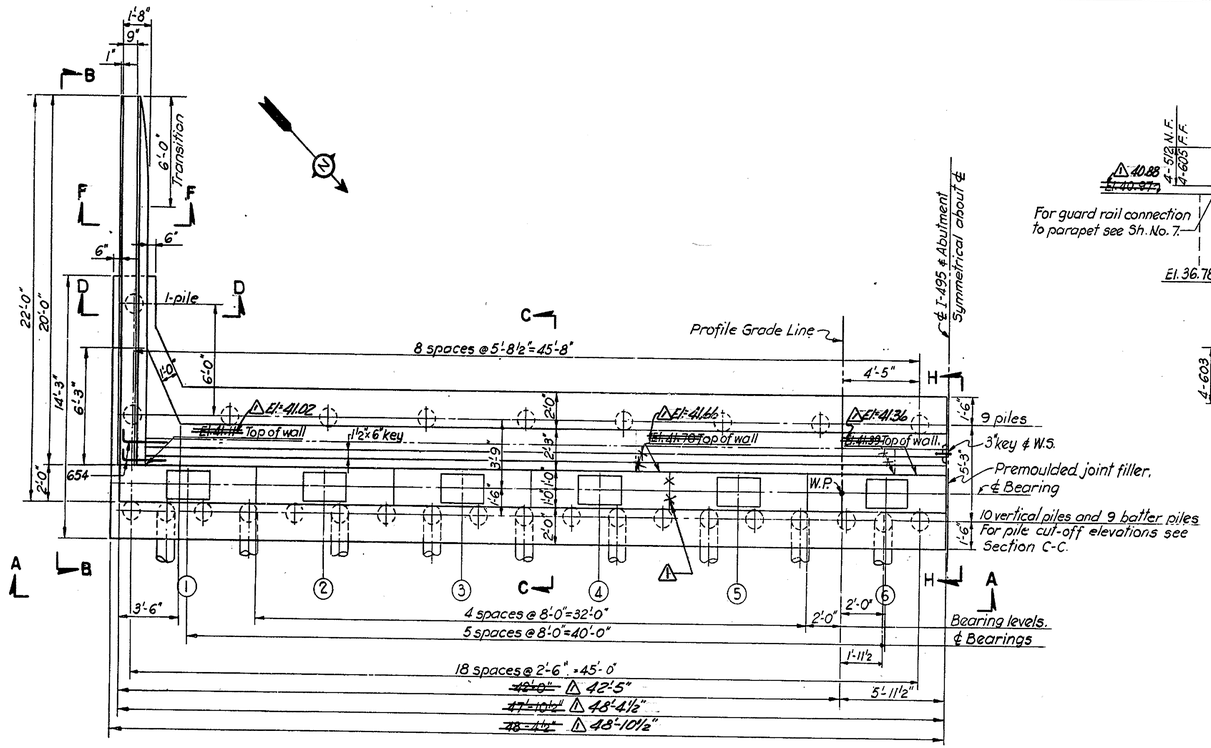

PLAN

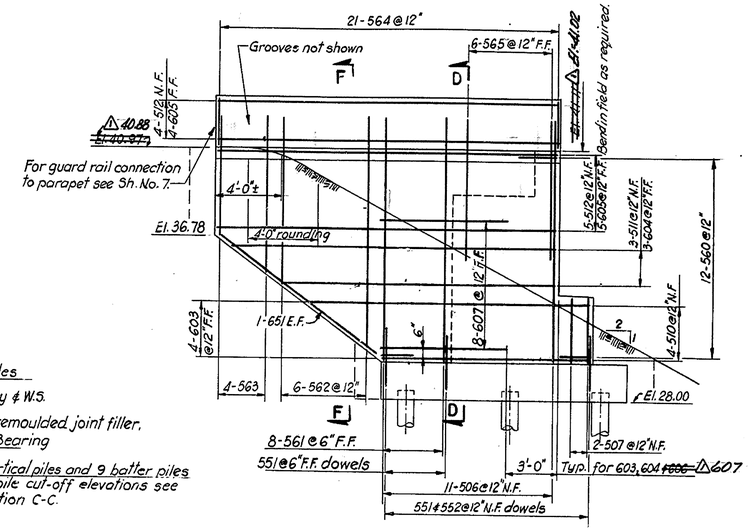

ELEVATION B - B

REINFORCING SCHEDULE
2 REQUIRED

BENT BARS (All dimensions are out to out.)

MARK	NO.	SIZE	LENGTH	TYPE	A	B	C	D	E	F	G	REMARKS
551	13	#5	4-7	I	1-6	3-1						
552	56		3-10	I	0-9	3-1						
553	49		5-5	I	0-9	4-8						
554	8	6-9	~~8-10~~	I	3-6	~~3-10~~	3-3					
555	8	6-11	~~7-10~~	I	3-6	~~3-10~~	3-5					
556	8	7-1	~~7-12~~	I	3-6	~~5-8~~	3-7					
557	16		7-3	I	3-6	3-9						
558	8		7-1	I	3-6	3-7						
559	49		9-9	I	1-9	8-0						
560	12		3-2	I	1-7	1-7						
561	8		13-4	II	11-4	2-0				1-2	1-8	
562	6		18-4 to 25-0	IV	2-0	6-10 to 10-2	1-2	8-4 to 11-8		1-8	1-2	Increment 0'-8"
563	4		12-2 to 16-8	IV	2-0	4-1 to 6-1	0-7 to 1-1	5-6 to 7-6		1-8	1-2	Equal increment on sides shown.
564	21		5-5	V								See diagram
565	6	#5	6-0	II	4-0	2-0				1-2	1-8	
651	2	#6	13-6	II	11-7	1-11				1-1	1-7	
652	18	#6	10-0	III	8-0	1-0	1-0	0-11	0-6	0-6	0-11	
653	4	#6	~~9-7~~	II	~~7-8~~	~~1-11~~				~~0-6~~	~~7-11~~	
654	4	#6	4-7	I	1-1	3-6						
			20-4		15-10	4-6				0-3	4-6	

STRAIGHT BARS

MARK	NO.	SIZE	LENGTH	REMARKS
501	6	#5	40-0	
502	6		~~9-7~~	10-1
503	31		7-9	
504	2		13-9	
505	47		3-7	
506	11		12-9	
507	2		3-4	
510	4		12-0 to 16-3	Increment 1'-5"
511	3		15-9 to 18-7	Increment 1'-5"
512	9		19-8	
514	48	#5	9-4	
601	21	#6	30-0	
602	17		~~19-7~~	20-1
603	4		8-9 to 13-0	Increment 1'-5"
604	3		14-6 to 17-4	Increment 1'-5"
605	9		19-8	
607	8	#6	7-6	
701	61	#7	7-9	
702	4	#7	13-9	
703	2	#7	7-6	
1001	9	#10	~~40-0~~	40-6
1002	~~25~~ 32	#10	11-2	
1003	4	#10	15-8	

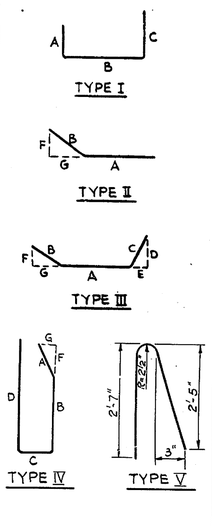

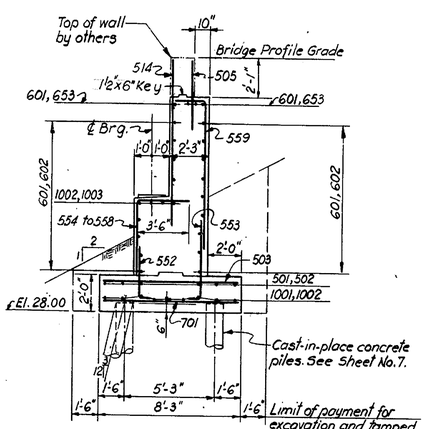

SECTION C - C

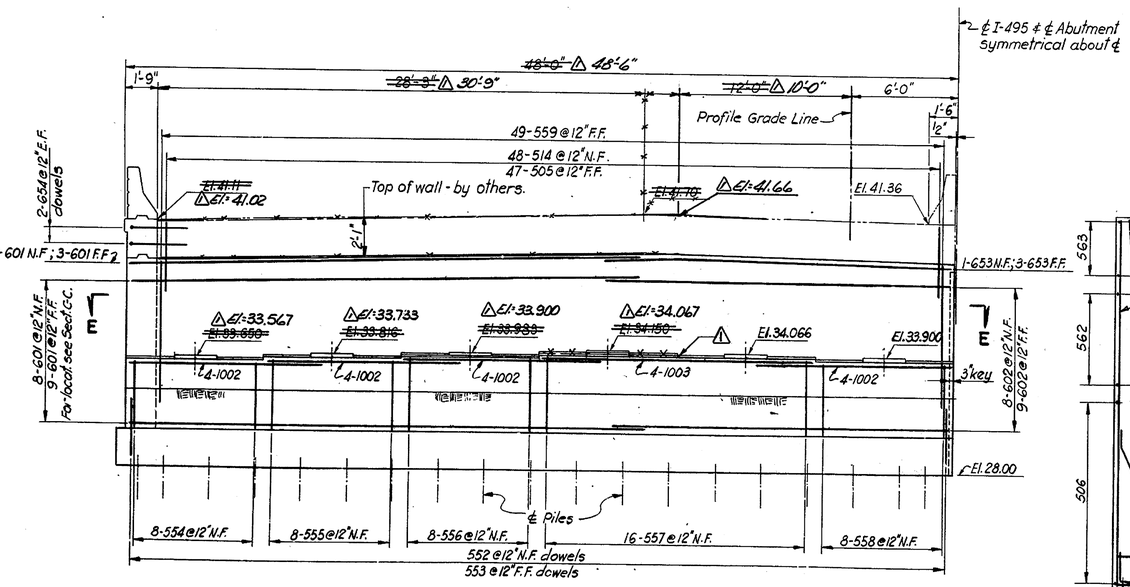

ELEVATION A - A

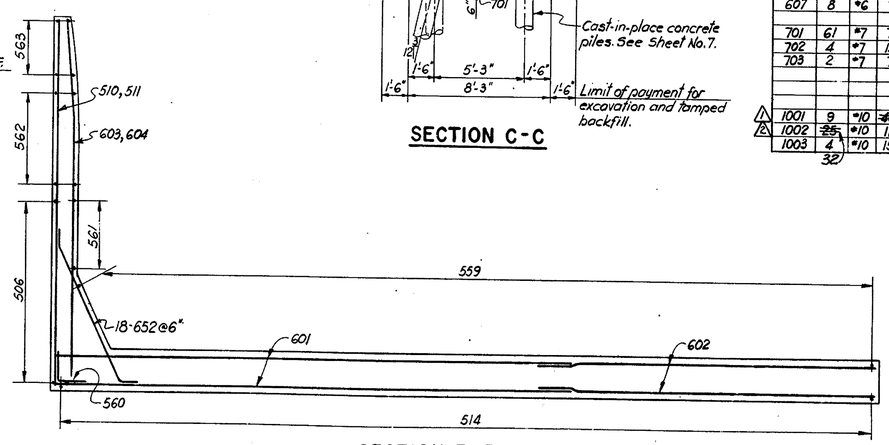

SECTION E - E

NOTES

1. For General Notes see Sheet No. 2.
2. For Sections D-D, F-F and H-H see Sheet No. 7.

REVISIONS
△ Revised abutment elev.; Dimensions; & Reinforcing Schedule 11/29/70 T.F.F.
△ REVISED : REINFORCING SCHEDULE 1-15-71 R.B.F.

J. E. GREINER CO.
MORAN, PROCTOR, MUESER & RUTLEDGE
CONSULTING ENGINEERS

DELAWARE
STATE HIGHWAY DEPARTMENT

INTERSTATE ROUTE I-495

CHRISTINA RIVER BRIDGE
SOUTH ABUTMENT

D. R.C.H.
T. P.F.
C. W.W.

SCALE 1/4" = 1'-0"
DATE 5/14/70

APPROVED BY:
BRIDGE ENGINEER

DEILVIE PRESS, INC. — 9-187 4560

COUNTY	CONTRACT	F. A. RES. NO.	STATE	FED. AID PROJECT NO.	FISCAL YEAR	SHEET NO.	TOTAL SHEETS
NEW CASTLE	70-04-016	2	DEL.	I-495-3(19)15		6	46

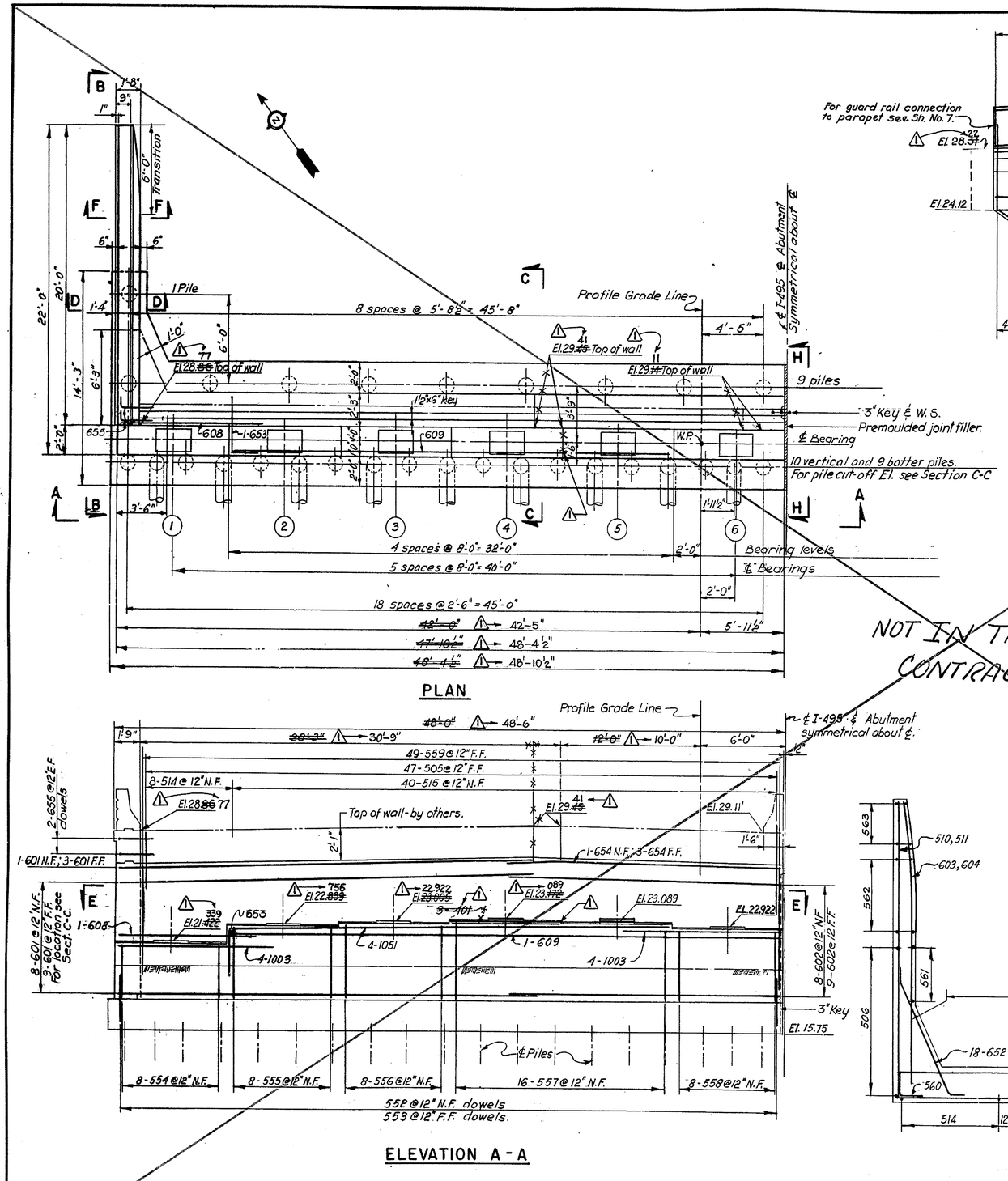

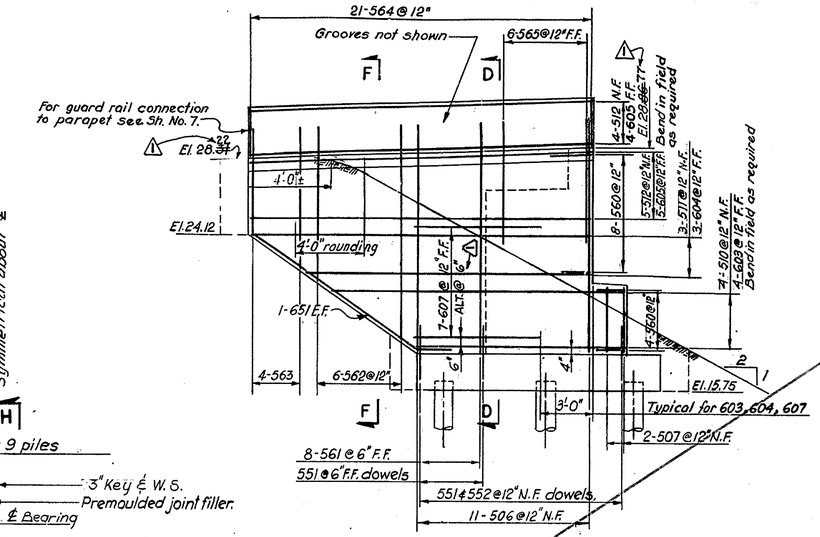

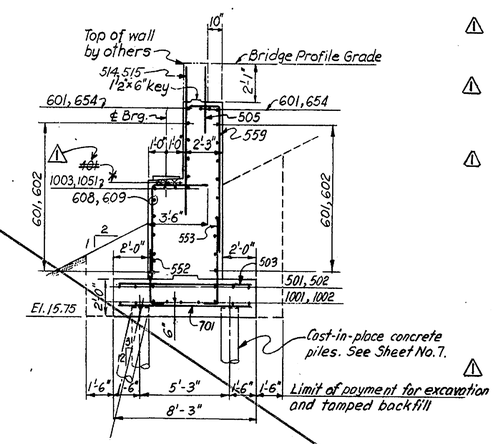

REINFORCING SCHEDULE
(2 REQUIRED)

BENT BARS (All dimensions are out to out)

MARK	NO	SIZE	LENGTH	TYPE	A	B	C	D	E	F	G	REMARKS
551	13	#5	4-7	I	1-6	3-1						
552	56	"	3-10	I	0-9	3-1						
553	49		5-5	I	0-9	4-8						
554	8	6-9	~~8-10~~	I	3-6	~~3-4~~ 3-3						
555	8	8-2	~~9-5~~	I	3-6	~~4-9~~ 4-8						
556	8	8-4	~~9-6~~	I	3-6	~~4-11~~ 4-10						
557	16		8-6	I	3-6	5-0						
558	8		8-2	I	3-6	4-8						
559	49		9-7	I	1-9	7-10						
560	12		3-2	I	1-7	1-7						
561	8	8-0	25-0	II	11-1	2-0	11-0			1-2	1-8	
562	6	24-6	10-0 / 25-0	IV	2-0 / 10-0	6-8 / 10-2	1-2	8-2 / 11-8	11-6	1-8	1-2	Increment 1'-8"
563	4		12-2 / 16-8	IV	2-0	4-1 / 5-6 / 6-1	0-7 / 1-1	5-6 / 7-6		1-8	1-2	Equal increment on sides shown
564	21	"	5-5	V	see diagram							
565	6	#5	6-0	II	4-0	2-0				1-2	1-8	
651	2	#6	13-6	II	11-7	1-11						
652	18	"	10-0	III	8-0	1-0	1-0	0-11	0-6	0-6	0-11	
653	1	"	5-8	I	1-11	3-9						
654	4	"	~~10-7~~	II	~~7-8~~	~~1-11~~				~~0-10~~	~~1-11~~	
655	4	#6	4-7	I	1-1	3-6				0-3	4-6	
			20-4		15-10	4-6						
1051	4	#10	34-10	I	3-2	31-8						

STRAIGHT BARS

MARK	NO.	SIZE	LENGTH	REMARKS
~~401~~	~~3~~	~~#4~~	~~7-8~~	
501	6	#5	40-0	
502	6	"	~~8-7~~	10-1
503	31	"	7-9	
504	2	"	13-9	
505	47	"	3-7	
506	11	"	13-0	
507	2	"	~~3-4~~	3-3
510	4	"	12-0 / 16-6	Increment 1'-6"
511	3	"	16-0 / 19-0	Increment 1'-6"
512	9	"	19-8	
514	8	#5	9-0	
515	40	#5	8-0	
601	21	#6	30-0	
602	17	"	~~19-7~~	20-1

MARK	NO.	SIZE	LENGTH	REMARKS
603	4	#6	9-0 / 13-6	Increment 1'-6"
604	3	"	14-7 / 17-11	Increment 1'-6"
605	9	"	19-8	
607	7	"	7-6	
608	1	"	10-0	
609	1	#6	39-6	
701	61	#7	7-9	
702	4	"	13-9	
703	2	#7	7-6	
1001	9	#10	~~19-2~~	20-6
1002	9	"	11-2	
1003	8	#10	10-10	

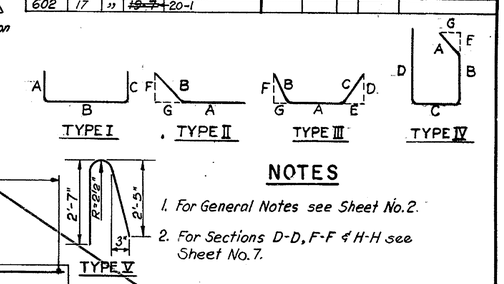

NOTES

1. For General Notes see Sheet No. 2.
2. For Sections D-D, F-F & H-H see Sheet No. 7.

REVISIONS

△1 REVISED ABUTMENT ELEV., DIMENSIONS, & REINFORCING SCHEDULE 12-8-70 R.B.F.

DELAWARE
STATE HIGHWAY DEPARTMENT

INTERSTATE ROUTE I-495

CHRISTINA RIVER BRIDGE
NORTH ABUTMENT

J. E. GREINER CO.
MORAN, PROCTOR, MUESER & RUTLEDGE
CONSULTING ENGINEERS

D. R.C.H.
T. P.O.
C. W.W.

SCALE 1/4" = 1'-0"
DATE 5/14/70

APPROVED BY: John H. Cullen
BRIDGE ENGINEER

COUNTY	CONTRACT	F. R. A. REG. NO.	STATE	FED. AID PROJECT NO.	FISCAL YEAR	SHEET NO.	TOTAL SHEETS
NEW CASTLE	70-06-016	2	DEL.	I-495-3(19)15		7	46

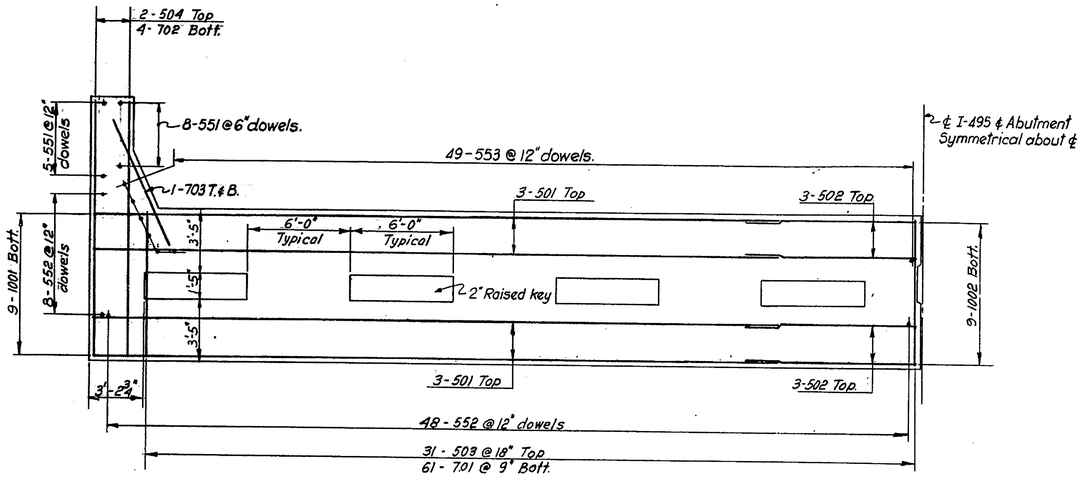

FOOTING REINFORCING PLAN

Scale: 1/4" = 1'-0"

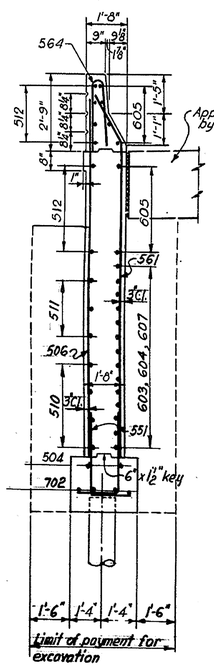

SECTION D-D

Scale: 3/8" = 1'-0"

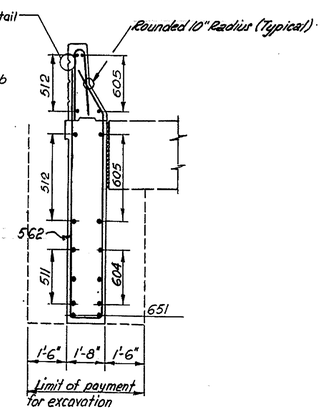

SECTION F-F

Scale: 3/8" = 1'-0"

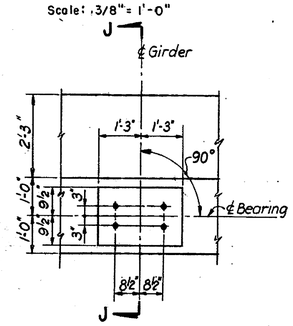

PLAN

CONC. PAD UNDER BEARING PLATES

Scale: 1/2" = 1'-0"

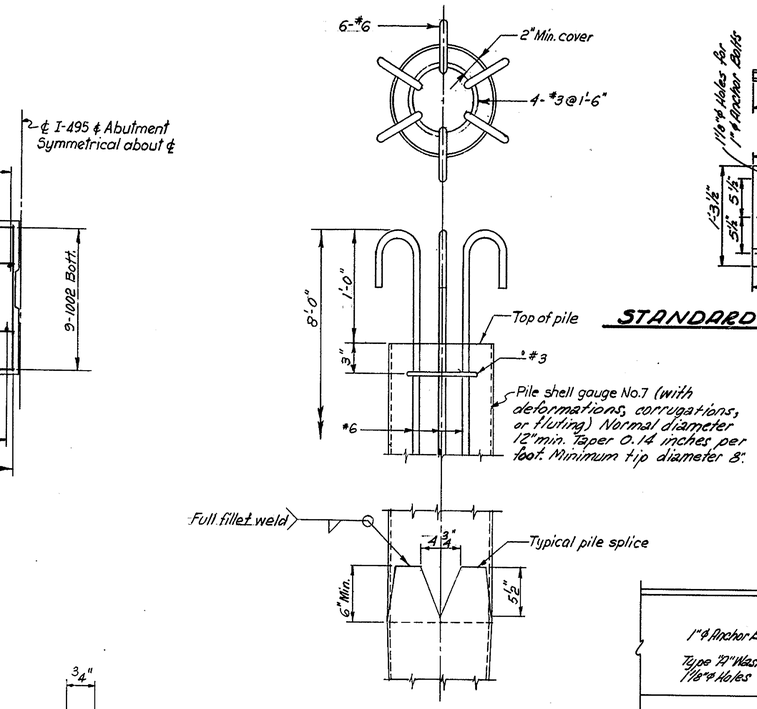

PILE DETAIL

N.T.S.

NOTE: Alternate type of piles meeting State of Delaware Standard Specifications will be accepted

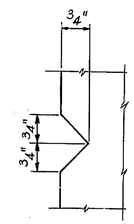

DETAIL OF GROOVE

N.T.S.

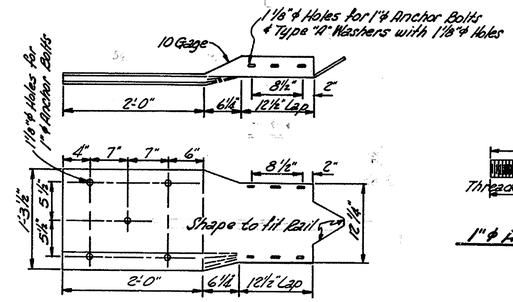

STANDARD TERMINAL SECTION MODIFIED

Scale 1" = 1'-0"

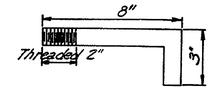

1"φ ANCHOR BOLT

Scale: 1/4" = 1"

NOTE: This detail for location of Anchor Bolts only. Do not install Terminal Section.

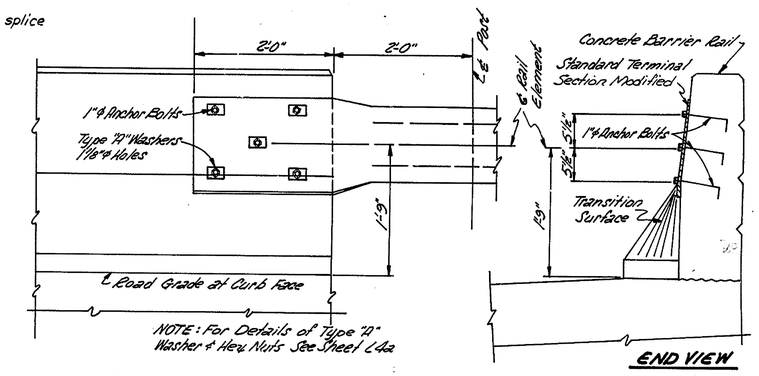

END VIEW

GUARDRAIL JUNCTION AT BRIDGE BARRIER RAIL ~ NEW CONSTRUCTION

Scale: 1" = 1'-0"

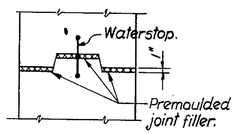

SECTION M-M

N.T.S.

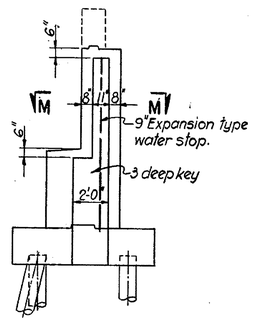

SECTION H-H

Scale: 1/4" = 1'-0"

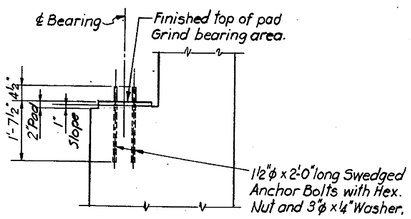

SECTION J-J

NOTES

1. For General Notes see Sheet No. 2.
2. Work this Drawing with Sheet No's. 5
3. Cast-in-place concrete piles for Abutments shall be driven to develop a minimum 35 ton bearing capacity. See Specifications.
4. Approximate Pile Tip Elevations for estimating purposes only: South Abutment El.-50.0.

DELAWARE
STATE HIGHWAY DEPARTMENT

INTERSTATE ROUTE I-495

CHRISTINA RIVER BRIDGE
ABUTMENT DETAILS

J. E. GREINER CO.
MORAN, PROCTOR, MUESER & RUTLEDGE
CONSULTING ENGINEERS

D. R.C.H.	SCALE AS NOTED	APPROVED BY: John Schaller
T. P.O.	DATE 5/19/70	BRIDGE ENGINEER
C. W.W.		

REVISIONS

DEILVE PRESS, INC. — D-157

COUNTY	CONTRACT	F. B. A. REG. NO.	STATE	FED. AID PROJECT NO.	FISCAL YEAR	SHEET NO.	TOTAL SHEETS
NEW CASTLE	70-04-016	2	DEL.	I-495-3(19)15		8	46

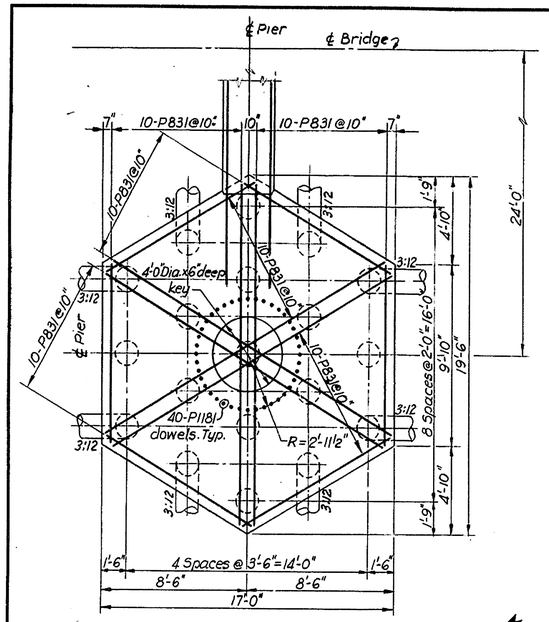

PLAN - PIER 1W
Scale : 1/4" = 1'-0"

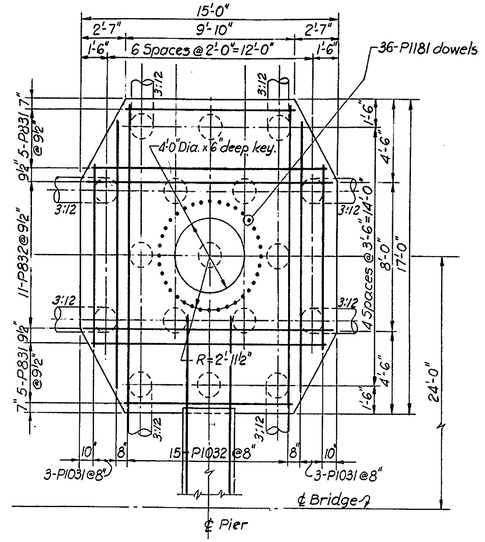

PLAN - PIER 2E
Scale : 1/4" = 1'-0"

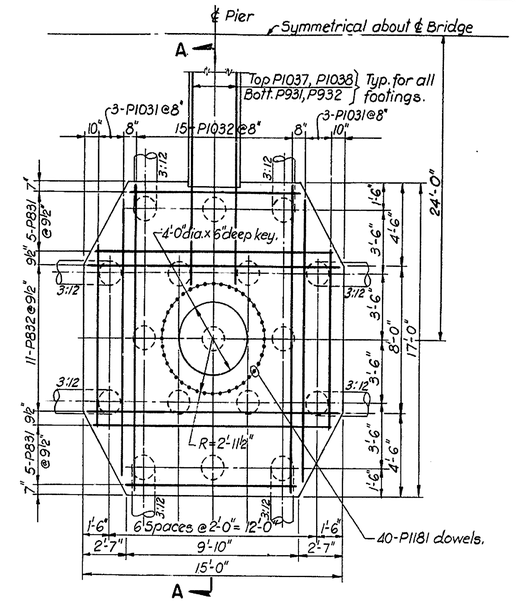

PLAN - PIER 3
Scale : 1/4" = 1'-0"

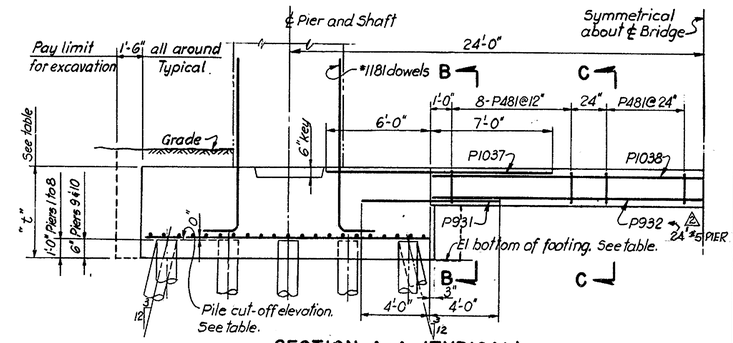

SECTION A-A (TYPICAL)
Scale : 1/4" = 1'-0"

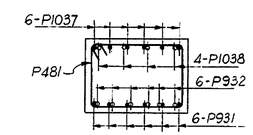

SECTION B-B
Scale : 1/2" = 1'-0"

-3.402	-2.336	-2.208
-4.402	-3.336	-3.208

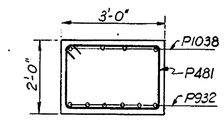

SECTION C-C
Scale : 1/2" = 1'-0"

TABULATION OF FOOTING PROPERTIES

		PIER NO. 1	2	3	4	5	6	7	8	9	10
Pile cut-off elevation		~~-3.459~~	~~-2.161~~	~~-2.114~~	-2.291	-2.284	-1.911	-1.013	-4.066	+0.224	+0.021
El. bottom of footing		~~-4.459~~	~~-3.161~~	~~-3.114~~	-3.291	-3.284	-2.911	-2.013	-5.066	-0.276	-0.479
t		5'-0"	5'-0"	5'-0"	5'-6"	5'-6"	5'-6"	5'-6"	6'-0"	5'-6"	5'-0
Number of piles	Vertical	11	9	9	13	15	15	13	20	20	15
	Battered	8	8	8	8	8	8	8	10	10	8
	Total	19	17	17	21	23	23*	21	30	30	23*
Approx. Pile Tip Elev. for estimating only.		-50.0	-50.0	-50.0	-50.0	-50.0	-50.0	-50.0	-50.0	-50.0	-50.0

NOTE: Number of piles shown is for single footing and includes one existing test pile driven by others in each of the footings 6E & 10E (*). Crash wall piles in footings 1E, 2W & 8E not included.

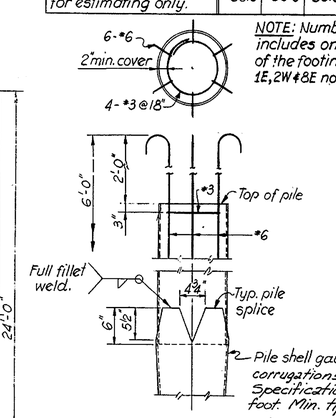

PILE DETAIL
PIERS 9 AND 10 ONLY
N.T.S.

NOTES:
1. For General Notes see Sheet No. 2.
2. For Shaft details see Sheets No's. 11 to 13.
3. For Footing and crash wall details for Piers 1E, 2W & 8E see Sheet No. 9.
4. For Reinf. Bar Schedule see Sheet No. 16.
5. For Acid Protection and Pile Details for Piers 1 to 8 see Sheet No. 9.

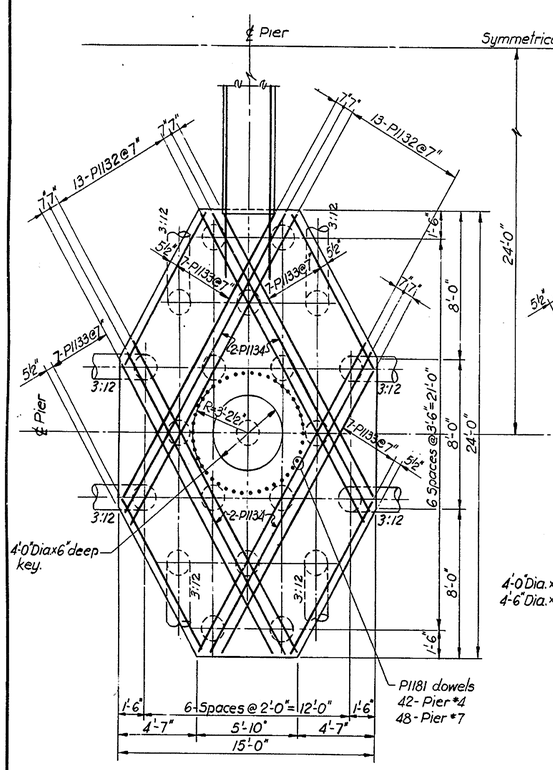

PLAN - PIERS 4 & 7
Scale : 1/4" = 1'-0"

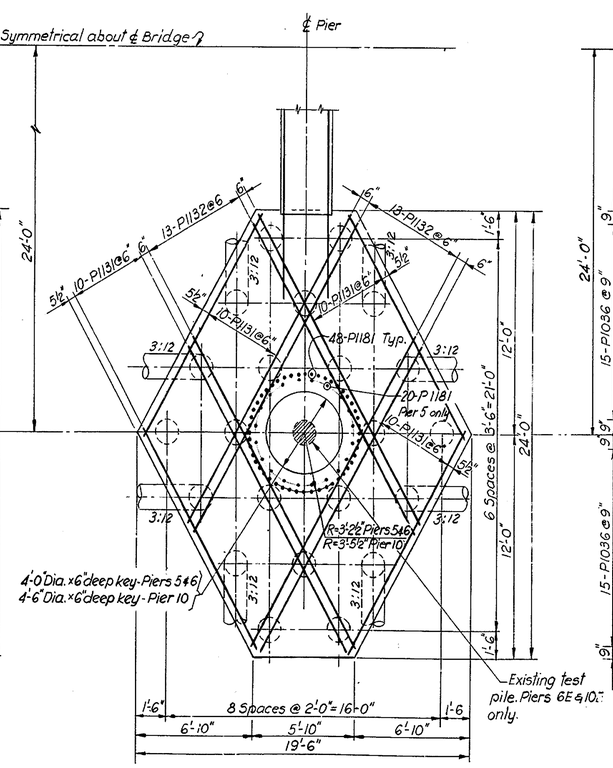

PLAN - PIERS 5, 6 & 10
Scale : 1/4" = 1'-0"

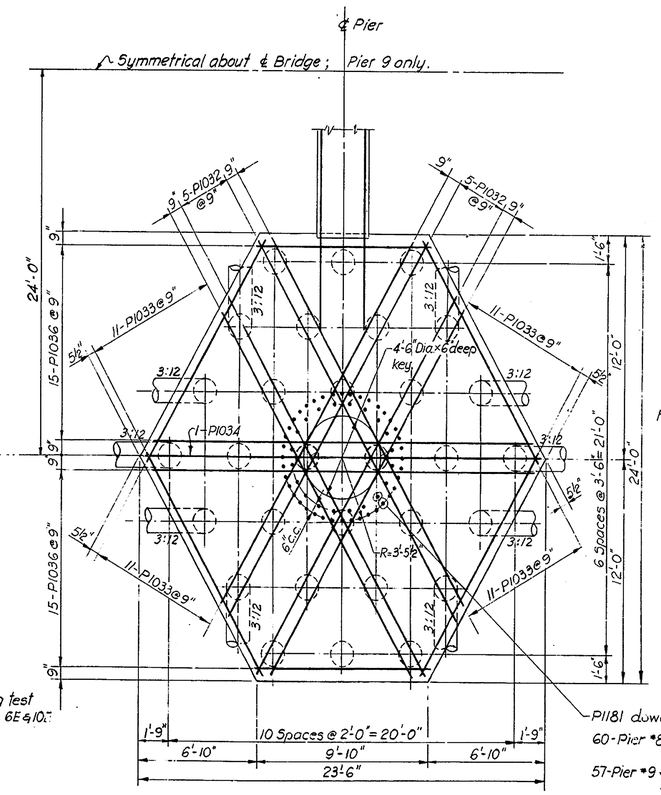

PLAN - PIERS 8W & 9
Scale : 1/4" = 1'-0"

REVISIONS
1 REVISED : TABULATION OF FOOTING PROPERTIES 1-18-71 R.B.F.
2 REVISED : SECTION A-A, BAR 932 LENGTH, PIER 5, 2-3-71 R.B.F.

DELAWARE
STATE HIGHWAY DEPARTMENT

INTERSTATE ROUTE I-495

CHRISTINA RIVER BRIDGE
FOOTINGS FOR PIERS
1 TO 10 - EAST & WEST

J. E. GREINER CO.
MORAN, PROCTOR, MUESER & RUTLEDGE
CONSULTING ENGINEERS

D. A. L. A.
T. P. F.
C. W. W.

SCALE AS NOTED
DATE 5/14/70

APPROVED BY: John H. Schultz
BRIDGE ENGINEER

OGILVIE PRESS, INC. — D-187

COUNTY	CONTRACT	P. B. A. REG. NO.	STATE	FED. AID PROJECT NO.	FISCAL YEAR	SHEET NO.	TOTAL SHEETS
NEW CASTLE	70-04-016	2	DEL.	I-495-3(19)15		9	46

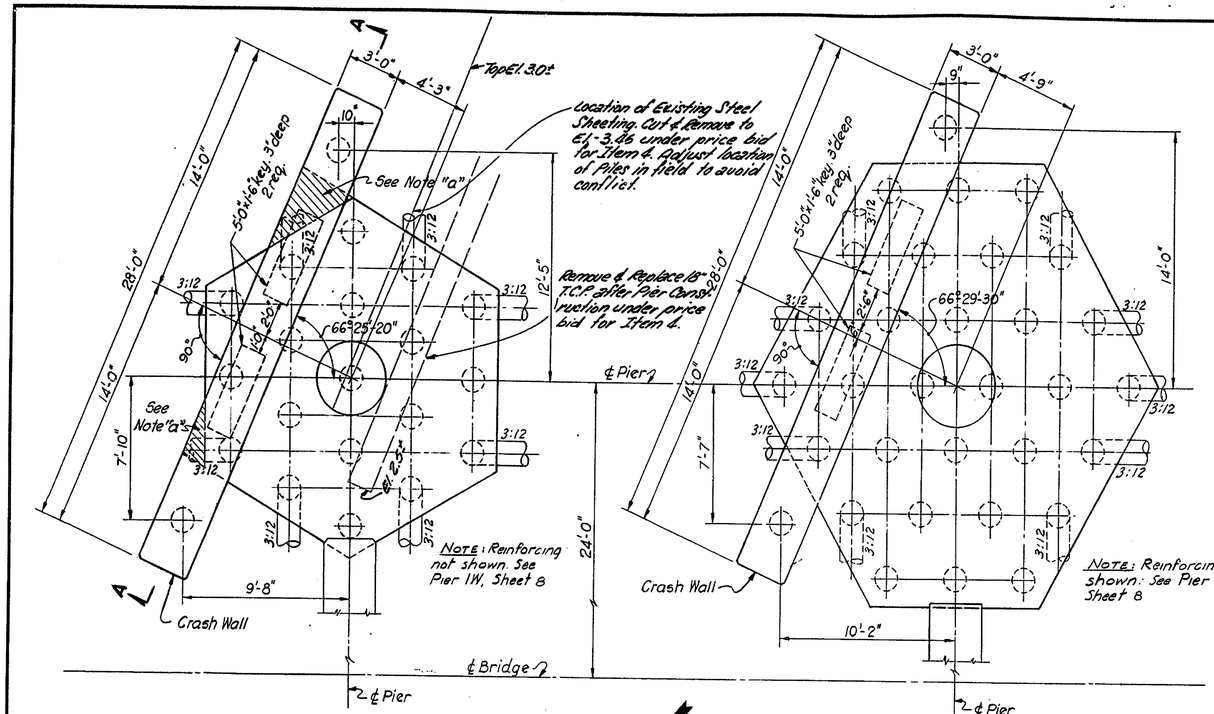

PLAN - PIER 1E

Scale : 1/4" = 1'-0"

PLAN - PIER 8E

Scale : 1/4" = 1'-0"

NOTE "a": Shaded sections of crash walls below top of footings 1E & 2W to be poured monolithically with the footings.

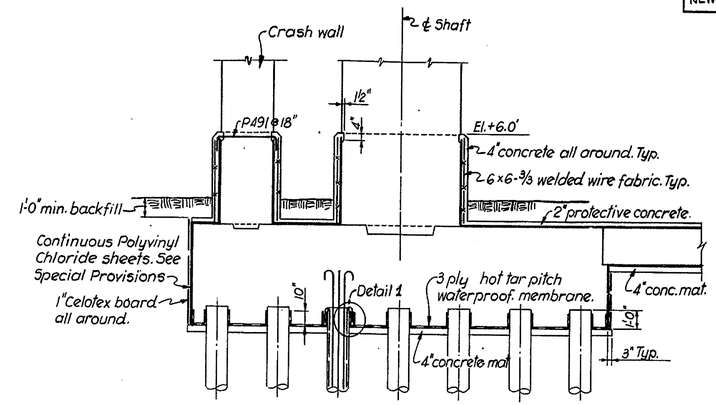

FOOTING ACID PROTECTION DETAIL

(TYPICAL FOR PIERS 1 TO 8 INCLUSIVE)

N.T.S.

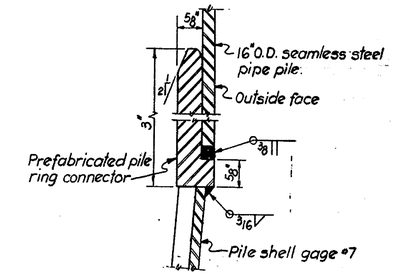

DETAIL 2

N.T.S.

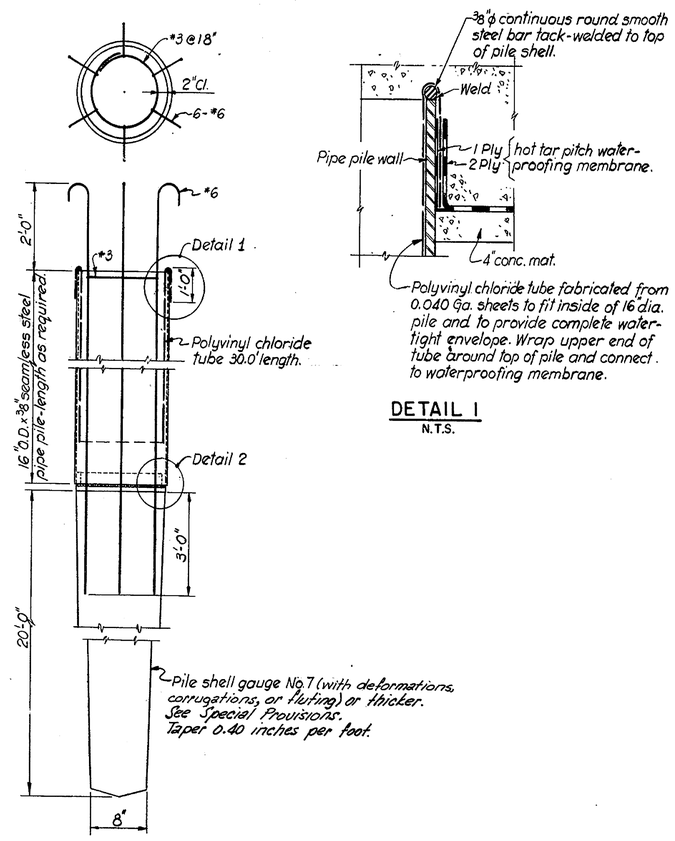

PILE DETAIL

(TYPICAL FOR PIERS 1 TO 8 INCLUSIVE)

N.T.S.

DETAIL 1

N.T.S.

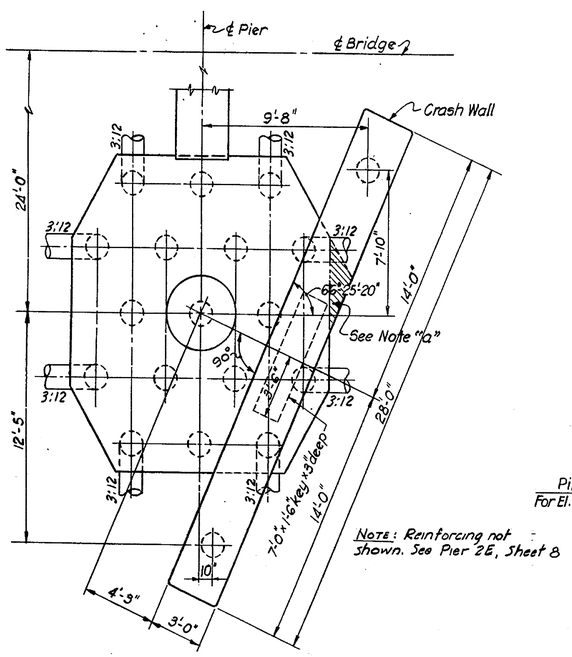

PLAN - PIER 2W

Scale : 1/4" = 1'-0"

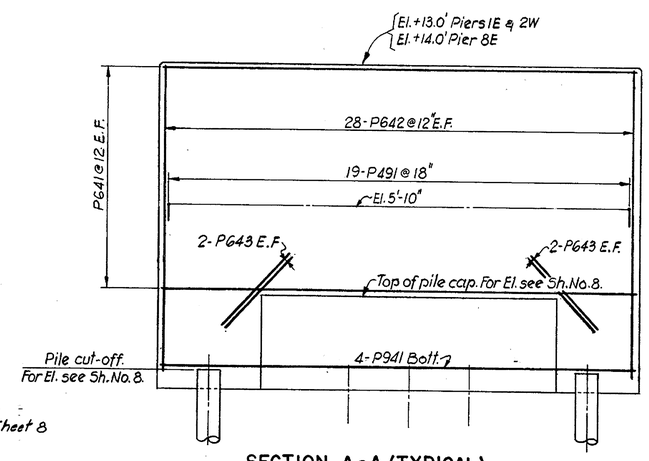

SECTION A-A (TYPICAL)

N.T.S.

NOTES

1. For General Notes see Sheet No. 2.
2. For Footing Details not shown see Sheet No. 8.
3. For Shaft Details see Sheet No's 11 & 13.
4. For Reinf. Bar Schedule see Sheet No. 16.
5. Contractor shall provide necessary sheeting and bracing to protect Railroad embankment. Drawings showing details of bracing shall be submitted for Director's and R. R. approval.

#1 Sheeting & Pile Added at Pier 1E 5/14/70 (Addendum #3)

DELAWARE
STATE HIGHWAY DEPARTMENT

INTERSTATE ROUTE I-495

CHRISTINA RIVER BRIDGE
FOOTINGS FOR PIERS 1E, 2W & 8E
AND ACID PROTECTION DETAILS

J. E. GREINER CO.
MORAN, PROCTOR, MUESER & RUTLEDGE
CONSULTING ENGINEERS

D. A.L.A.
T. P.F.
C. W.W.

SCALE: AS NOTED
DATE: 5/14/70

APPROVED BY: John E. Cubbin
BRIDGE ENGINEER

OGILVIE PRESS, INC. — D-157 4448

COUNTY	CONTRACT	F.B.A. SEC. NO.	STATE	FED. AID PROJECT NO.	FISCAL YEAR	SHEET NO.	TOTAL SHEETS
NEW CASTLE	70-04-016	D	DEL.	I-495-3(19)15		10	46

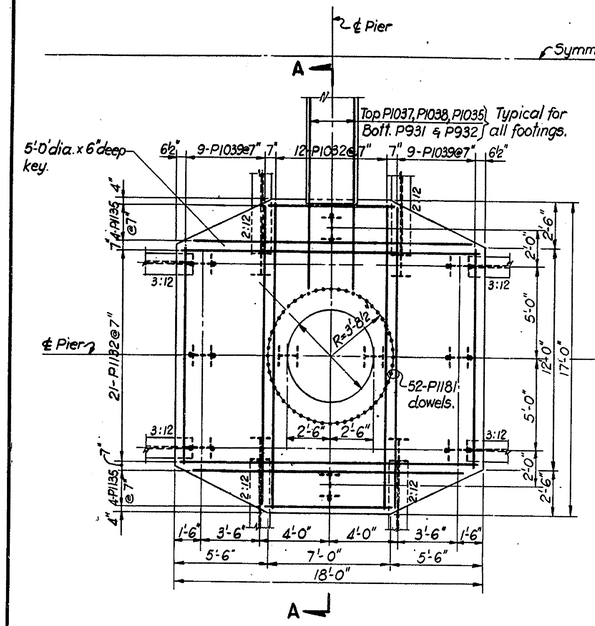

PLAN - PIERS 11 & 13
Scale: 1/4" = 1'-0"

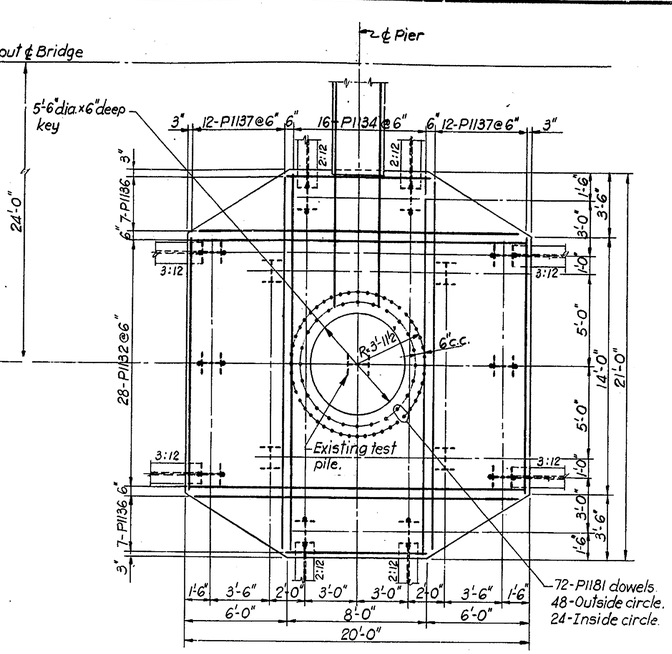

PLAN - PIER 14
Scale: 1/4" = 1'-0"

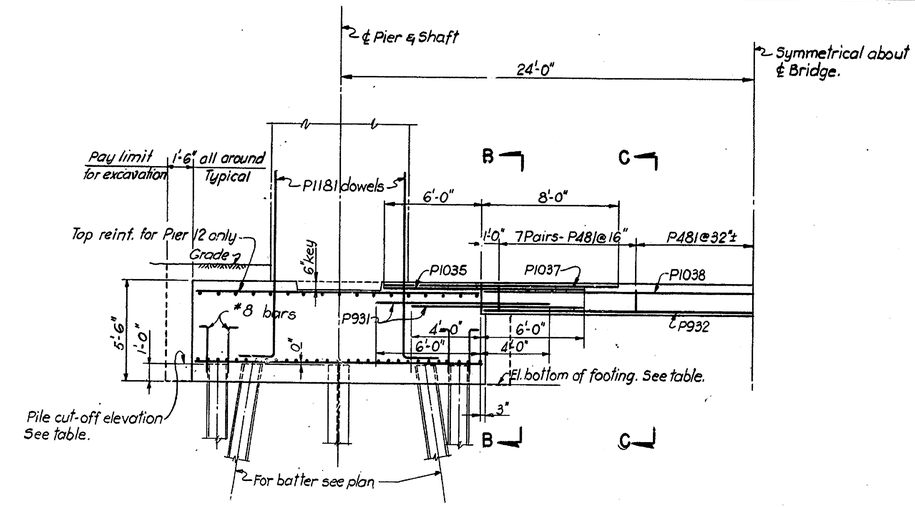

SECTION A-A (TYPICAL)
Scale: 1/4" = 1'-0"

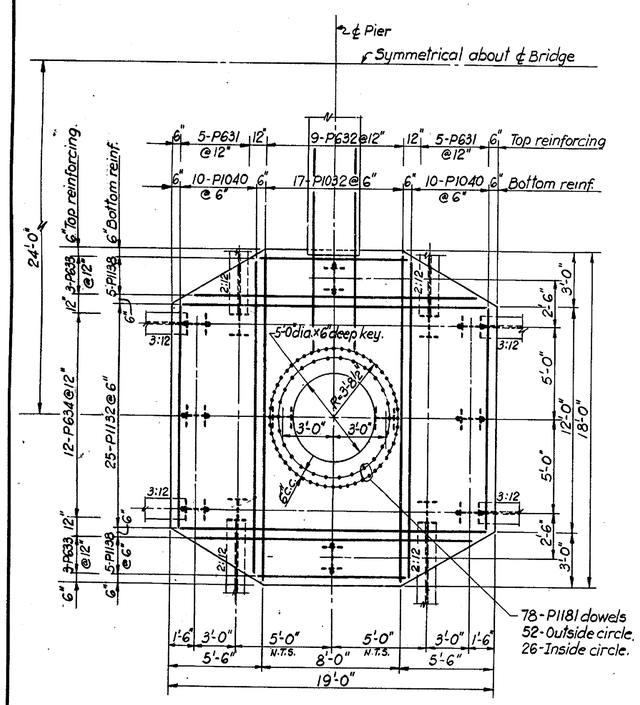

PLAN - PIER 12
Scale: 1/4" = 1'-0"

TABULATION OF FOOTING PROPERTIES		PIER NO.			
		11	12	13	14
Pile cut-off elevations.		-0.096	+1.646	+1.376	-2.365
El. bottom of footing		-1.096	+0.646	+0.376	-3.365
Number of piles.	Vertical	6	6	6	7
	Batter	8	8	8	8
	Total	14	14	14	15*
Approx. pile tip Elev. for estimating only.		-105.0	-125.0	-125.0	-135.0

NOTE: Number of piles shown is for single footing and includes one existing test pile driven by others in footings 14E & 14W (*).

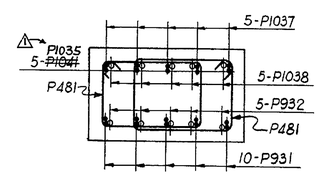

SECTION B-B
Scale: 3/4" = 1'-0"

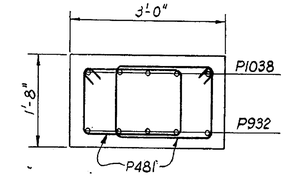

SECTION C-C
Scale: 3/4" = 1'-0"

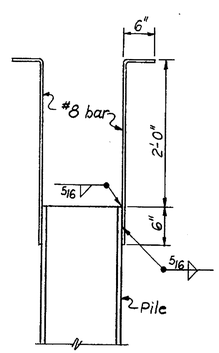

PILE ANCHOR DETAIL
N.T.S.

For all piles located around the perimeter of pile cap and marked thus ⊥-⊥ on the plan.

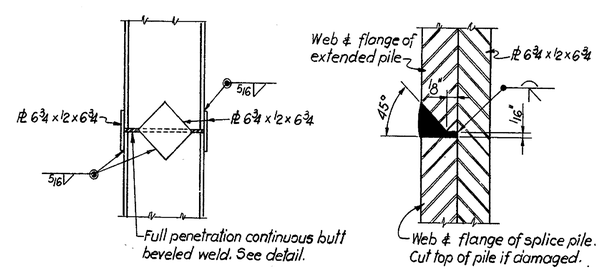

PILE SPLICE DETAIL
N.T.S.

NOTES:

1. For General Notes see Sheet No. 2.
2. For Shaft details see Sheet No's. 14 & 15.
3. For Reinf. Bar Schedule see Sheet No. 16.

REVISIONS
REVISED: BAR No. SECTION B-B 2-3-71 R.B.F.

DELAWARE
STATE, HIGHWAY DEPARTMENT

INTERSTATE ROUTE I-495

CHRISTINA RIVER BRIDGE
FOOTINGS FOR PIERS
11 TO 14 - EAST & WEST

J. E. GREINER CO.
MORAN, PROCTOR, MUESER & RUTLEDGE
CONSULTING ENGINEERS

D. A.L.A.
T. P.F.
C. W.W.

SCALE AS NOTED
DATE 5/14/70

APPROVED BY: John W. Richter
BRIDGE ENGINEER

COUNTY	CONTRACT	F. A. REG. NO.	STATE	FED. AID PROJECT NO.	FISCAL YEAR	SHEET NO.	TOTAL SHEETS
NEW CASTLE	70-04-016	2	DEL.	I-495-3(19)15		11	46

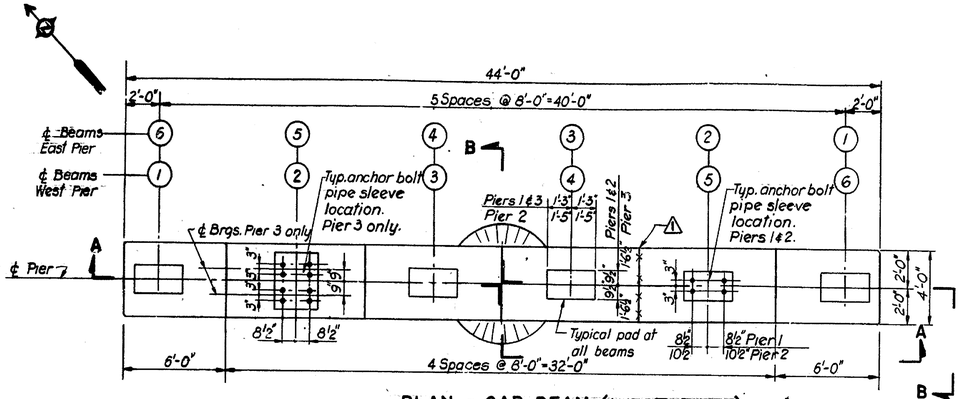

PLAN - CAP BEAM (WEST PIER) △1

Scale: 1/4" = 1'-0"

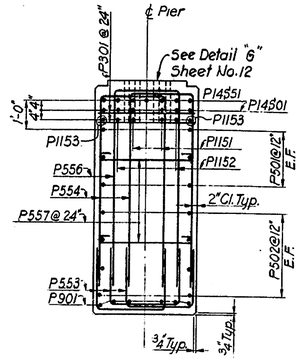

SECTION C - C

Scale: 3/8" = 1'-0"

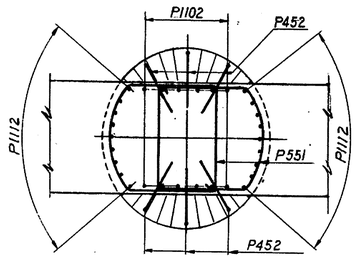

SECTION D-D

Scale: 3/8" = 1'-0"

TABULATION OF ELEVATIONS & HEIGHTS OF PIERS	PIER NO. 1	2	3
El. top of Pad ①	34.935	36.330	37.958
②	35.101	36.497	38.125
③	35.268	36.664	38.292
④	35.435	36.830	38.458
⑤	35.351	36.747	38.375
⑥	35.185	36.580	38.208
El. Bottom of Cap Beam	26.601	27.997	29.625
El. Top of Footing	0.518	1.664	1.792
Dimension "h"	26'-1"	26'-4"	27'-10"

△1

TABULATION OF ELEVATIONS & HEIGHTS OF PIERS	PIER NO. 1	2	3
El. top of Pad ①	34.851	36.247	37.875
②	35.018	36.414	38.042
③	35.185	36.581	38.209
④	35.351	36.747	38.375
⑤	35.351	36.747	38.375
⑥	35.185	36.580	38.208
El. Bottom of Cap. Beam	26.518	27.914	29.542
El. Top of Footing	0.518	1.664	1.792
Dimension "h"	26'-0"	26'-3"	27'-9"

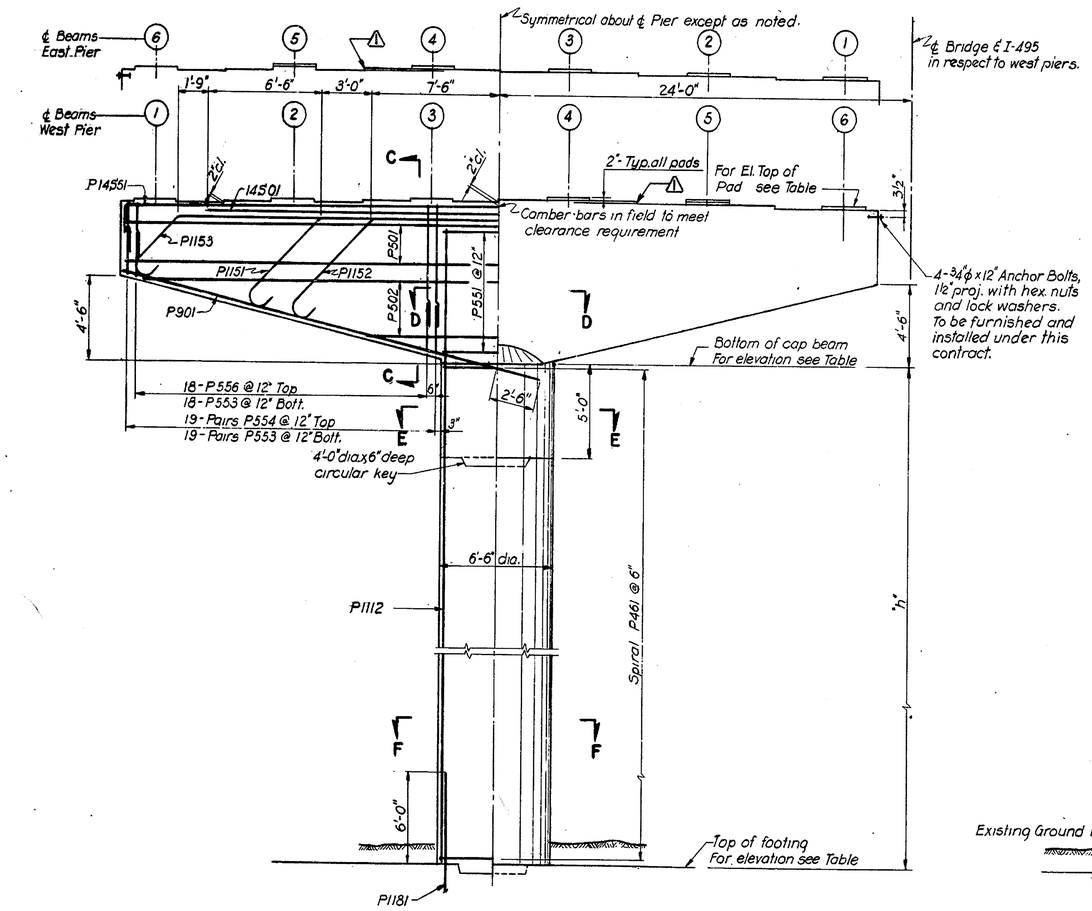

HALF SECTION A-A · HALF ELEVATION A-A

Scale: 1/4" = 1'-0"

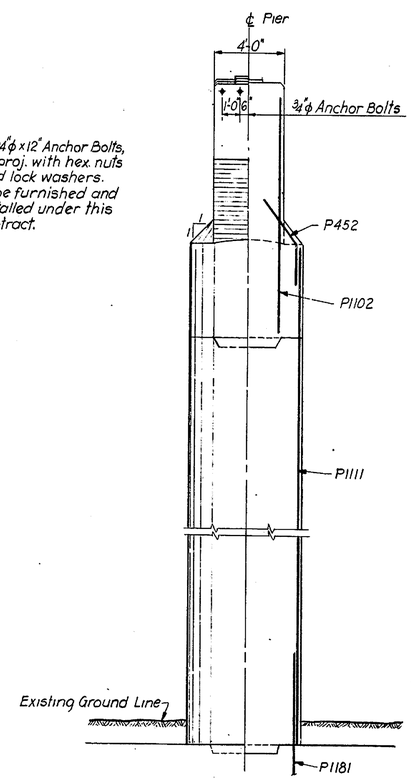

HALF ELEVATION B-B · HALF SECTION B-B

Scale: 1/4" = 1'-0"

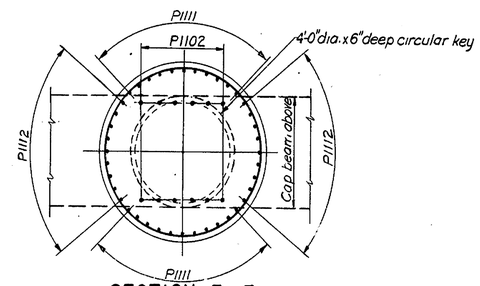

SECTION E - E

Scale: 3/8" = 1'-0"

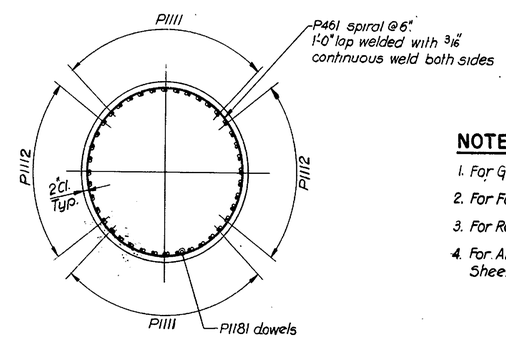

SECTION F-F

Scale: 3/8" = 1'-0"

NOTE: Shaft reinforcing shown for Pier 1 For number of bars in each pier see schedule of reinforcing bars Sh. No. 16.

NOTES

1. For General Notes see Sheet No. 2.
2. For Footing details see Sheet No. 8.
3. For Reinforcing Bar Schedule see Sheet No. 16.
4. For Anchor Bolt Pipe Sleeve detail see Sheet No. 12.

△1 REVISED PIER ELEV. & DIMENSIONS. 12-8-70 R.G.F.

REVISIONS

DELAWARE
STATE HIGHWAY DEPARTMENT

INTERSTATE ROUTE I-495

CHRISTINA RIVER BRIDGE
PIERS 1 TO 3 - EAST & WEST

J. E. GREINER CO.
MORAN, PROCTOR, MUESER & RUTLEDGE
CONSULTING ENGINEERS

D. Y.U.
T. L.S.
C. W.W.

SCALE AS NOTED

DATE 5/19/70

APPROVED BY: John W. Lindsley
BRIDGE ENGINEER

11

COUNTY	CONTRACT	F. B. A. REG. NO.	STATE	FED. AID PROJECT NO.	FISCAL YEAR	SHEET NO.	TOTAL SHEETS
NEW CASTLE	70-04-016	8	DEL.	I-495-3(19)15		12	46

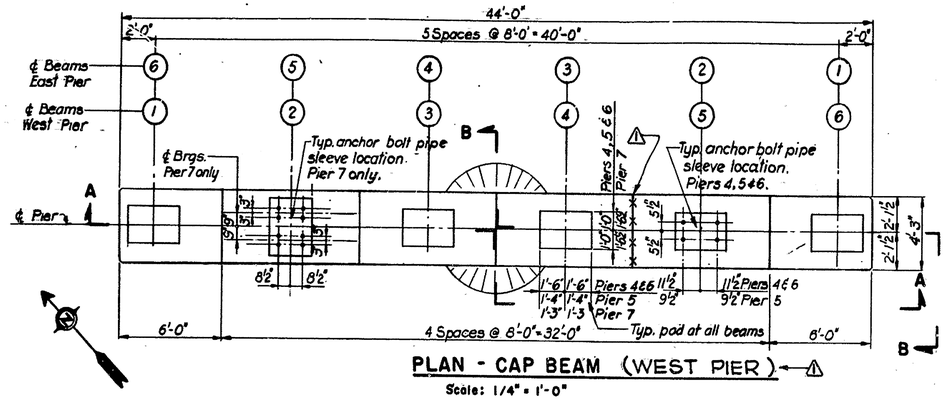

PLAN - CAP BEAM (WEST PIER)

Scale: 1/4" = 1'-0"

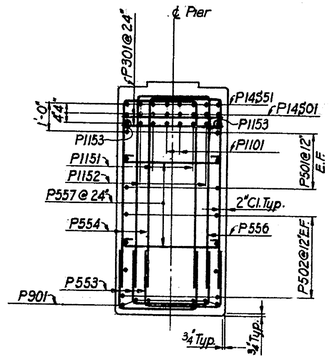

SECTION C - C

Scale: 3/8" = 1'-0"

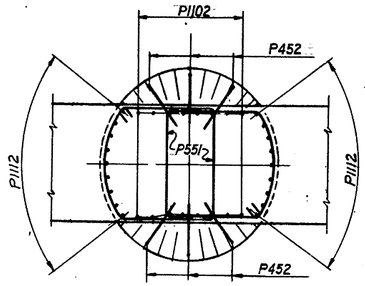

SECTION D-D

Scale: 3/8" = 1'-0"

TABULATION OF ELEVATIONS & HEIGHTS OF PIERS	PIER NO. 4	5	6	7
El. top of pad ①	39.876	43.383	45.756	49.654
②	40.042	43.550	45.922	49.820
③	40.209	43.716	46.089	49.987
④	40.376	43.883	46.256	50.154
⑤	40.292	43.800	46.172	50.070
⑥	40.126	43.633	46.006	49.904
El. Bottom of Cap Beam	31.542	35.049	37.422	41.320
El. Top of Footing	2.209	2.216	2.589	3.487
Dimension "h"	29'-4"	32'-10"	34'-10"	37'-10"

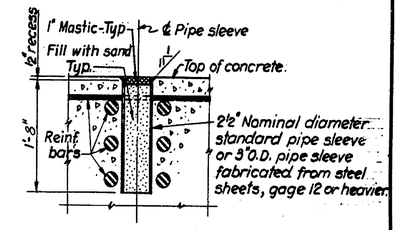

DETAIL G
ANCHOR BOLT PIPE SLEEVE
N.T.S.

NOTE: Pipe sleeves to be secured in place to assure proper location. All reinf. to clear pipe sleeves. Anchor bolts for approach spans will be furnished and set by others.

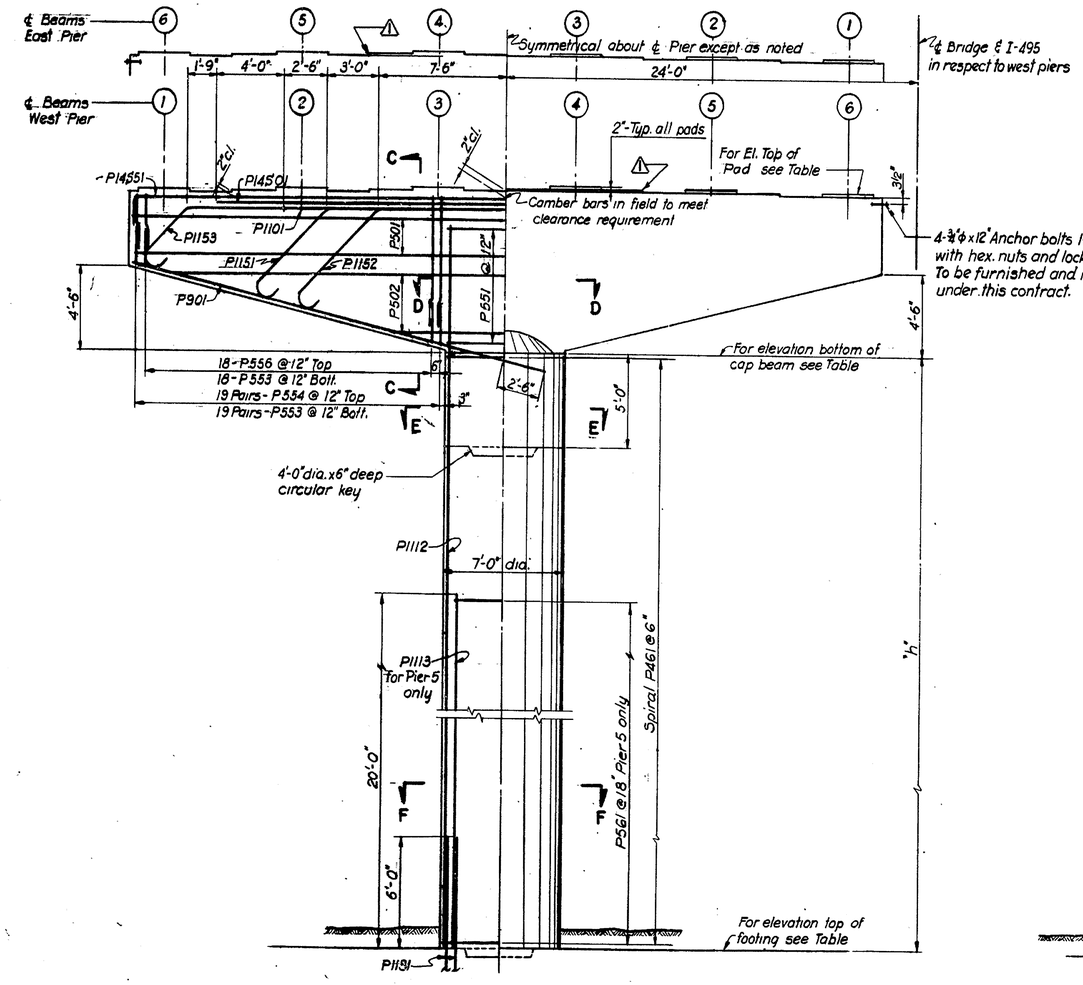

HALF SECTION A-A HALF ELEVATION A-A

Scale: 1/4" = 1'-0"

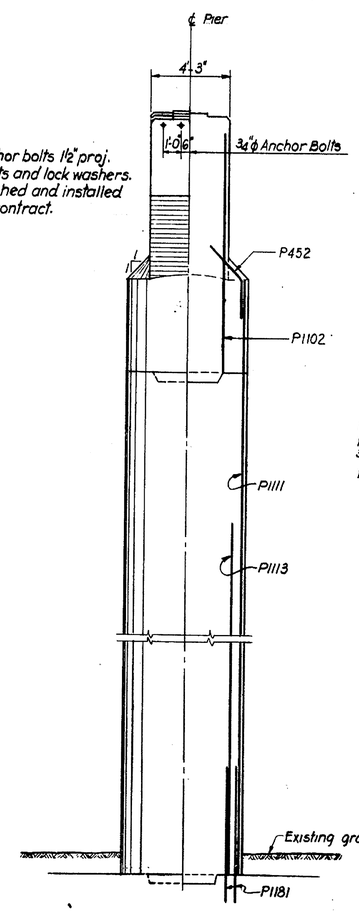

HALF ELEVATION B-B HALF SECTION B-B

Scale: 1/4" = 1'-0"

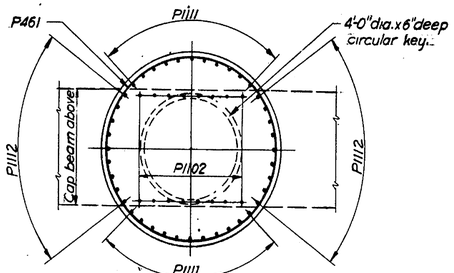

SECTION E - E

Scale: 3/8" = 1'-0"

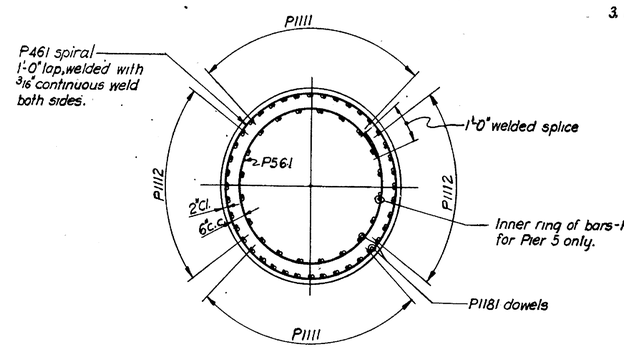

SECTION F-F

Scale: 3/8" = 1'-0"

NOTE: Shaft reinforcing shown for Pier 5. For number of bars in each pier see schedule of reinforcing bars Sh. No. 16.

NOTES:

1. For General Notes see Sheet No. 2.
2. For Footing Details see Sheet No. 8.
3. For Reinforcing Bar Schedule see Sheet No. 16.

TABULATION OF ELEVATIONS & HEIGHTS OF PIERS	PIER NO. 4	5	6	7
El. top of pad ①	39.792	43.299	45.672	49.570
②	39.958	43.466	45.838	49.736
③	40.125	43.632	46.005	49.904
④	40.292	43.800	46.172	50.070
⑤	40.292	43.800	46.172	50.070
⑥	40.126	43.633	46.006	49.904
El. Bottom of Cap Beam	31.459	34.966	37.339	41.237
El. Top of Footing	2.209	2.216	2.589	3.487
Dimension "h"	29'-3"	32'-9"	34'-9"	37'-9"

REVISIONS
△1 REVISED ; PER ELEV. & DIMENSIONS . 12-8-70 R.G.F.

DELAWARE
STATE HIGHWAY DEPARTMENT

INTERSTATE ROUTE I-495

CHRISTINA RIVER BRIDGE
PIERS 4 TO 7 - EAST & WEST.

J. E. GREINER CO.
MORAN, PROCTOR, MUESER & RUTLEDGE
CONSULTING ENGINEERS

D. Y. U.
T. L. S.
C. W. W.

SCALE AS NOTED
DATE 5/14/70

APPROVED BY: John H. Fehler
BRIDGE ENGINEER

COUNTY	CONTRACT	F. R. A. REG. NO.	STATE	FED. AID PROJECT NO.	FISCAL YEAR	SHEET NO.	TOTAL SHEETS
NEW CASTLE	70-04-016	2	DEL.	I-495-3(19)15		13	46

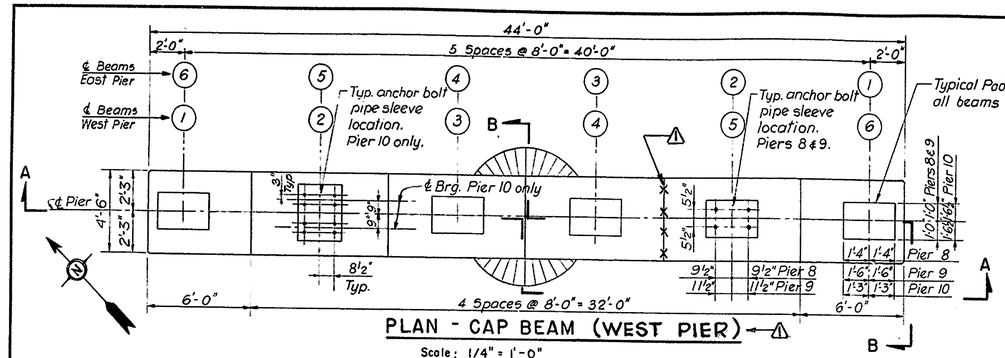

PLAN - CAP BEAM (WEST PIER)

Scale: 1/4" = 1'-0"

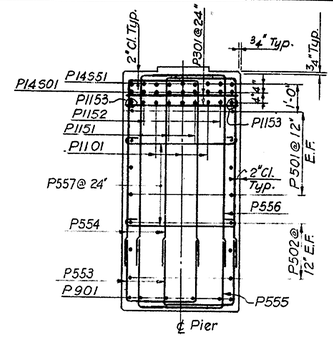

SECTION C-C

Scale: 3/8" = 1'-0"

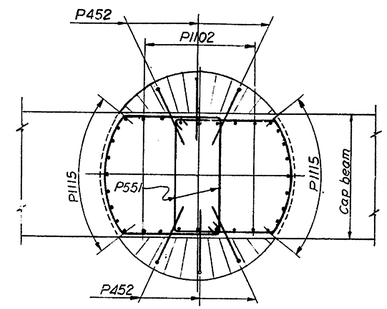

SECTION D-D

Scale: 3/8" = 1'-0"

TABULATION OF ELEVATIONS AND HEIGHTS OF PIERS	PIER NO. 8	9	10
El. top of Pad ①	52.600	56.380	60.688
②	52.767	56.551	60.855
③	52.934	56.724	61.022
④	53.100	56.890	61.188
⑤	53.017	56.807	61.105
⑥	52.850	56.640	60.938
El. Bottom of Cap Beam	43.767	47.357	51.854
El. Top of Footing	0.934	5.224	4.521
Dimension "h"	42'-10"	42'-4"	47'-4"

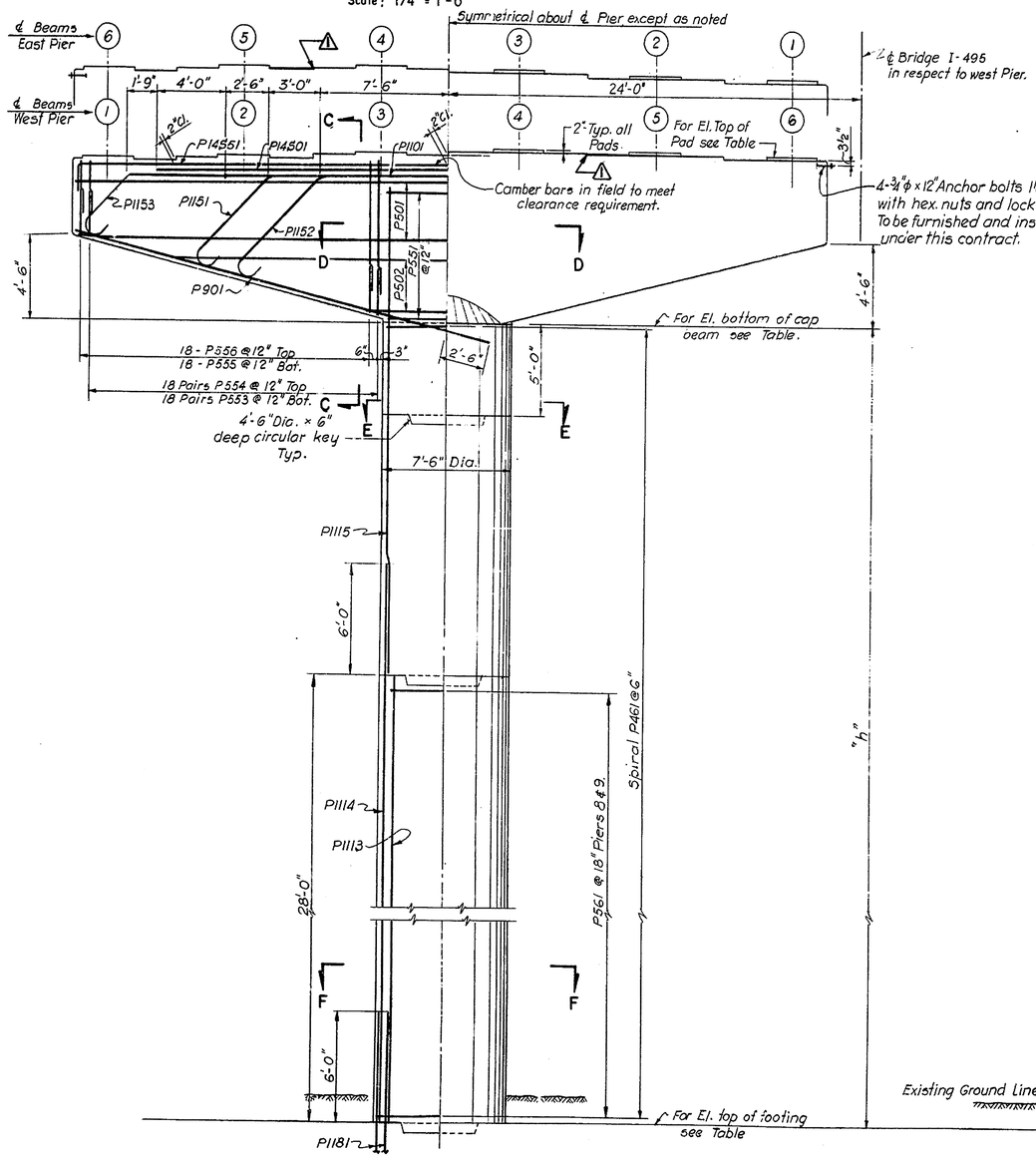

HALF SECTION A-A

HALF ELEVATION A-A

Scale: 1/4" = 1'-0"

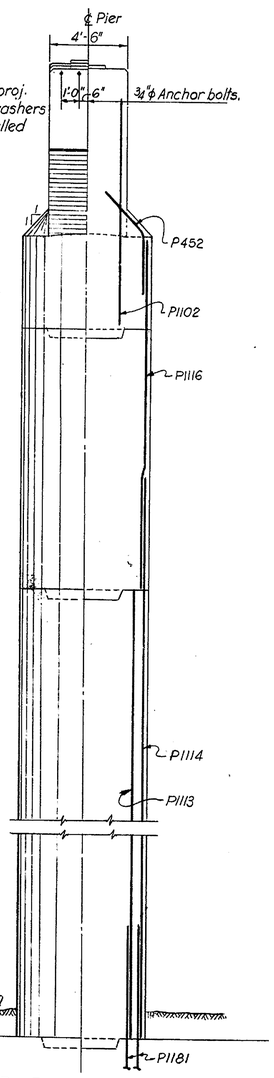

HALF ELEVATION B-B

HALF SECTION B-B

Scale: 1/4" = 1'-0"

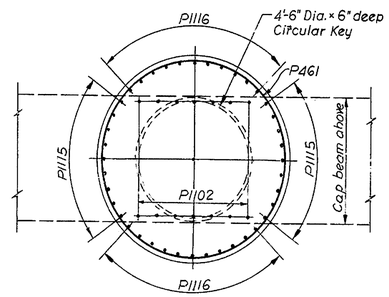

SECTION E-E

Scale: 3/8" = 1'-0"

TABULATION OF ELEVATIONS AND HEIGHTS OF PIERS	PIER NO. 8	9	10
El. top of Pad ①	52.517	56.307	60.604
②	52.684	56.474	60.772
③	52.850	56.640	60.937
④	53.017	56.807	61.105
⑤	53.017	56.807	61.105
⑥	52.850	56.640	60.938
El. Bottom of Cap Beam	43.684	47.474	51.771
El. Top of Footing	0.934	5.224	4.521
Dimension "h"	42'-9"	42'-3"	47'-3"

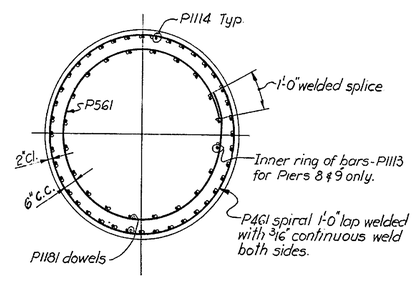

SECTION F-F

Scale: 3/8" = 1'-0"

NOTE: Shaft reinforcing shown for Pier 8
For number of bars in each pier
see schedule of reinforcing bars, Sheet No. 16.

NOTES:

1. For General Notes see Sheet No. 2.
2. For Footing Details see Sheet No. 8.
3. For Reinforcement Bar Schedule see Sheet No. 16.
4. For Anchor Bolt Pipe Sleeve detail see Sheet No. 12.

REVISIONS

REVISED : PIER ELEV. & DIMENSIONS, 12-8-70 R.B.F.

DELAWARE
STATE HIGHWAY DEPARTMENT

INTERSTATE ROUTE I-495

CHRISTINA RIVER BRIDGE
PIERS 8 TO 10 - EAST & WEST

J. E. GREINER CO.
MORAN, PROCTOR, MUESER & RUTLEDGE
CONSULTING ENGINEERS

D. Y.U.
T. R.B.
C. W.W.

SCALE AS NOTED

DATE 5/14/70

APPROVED BY: John E. Fielder
BRIDGE ENGINEER

GOILVIE PRESS, INC. — D-127

COUNTY	CONTRACT	F. R. A. REG. NO.	STATE	FED. AID PROJECT NO.	FISCAL YEAR	SHEET NO.	TOTAL SHEETS
NEW CASTLE	70-04-016	2	DEL.	I-495-3(19)15		14	46

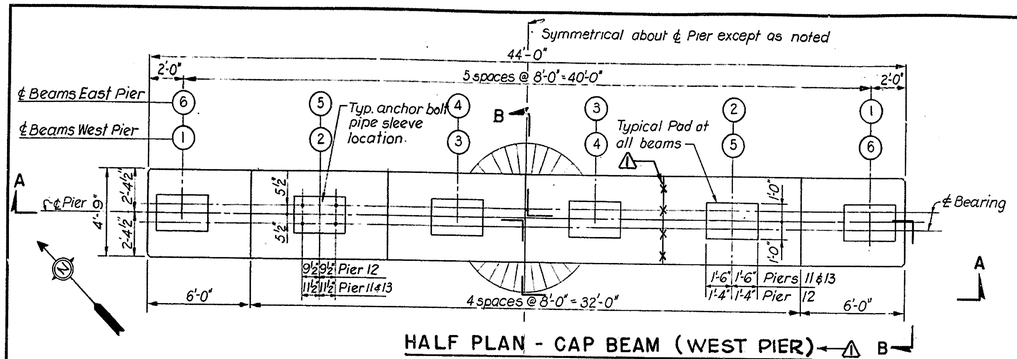

HALF PLAN - CAP BEAM (WEST PIER)

Scale: 1/4" = 1'-0"

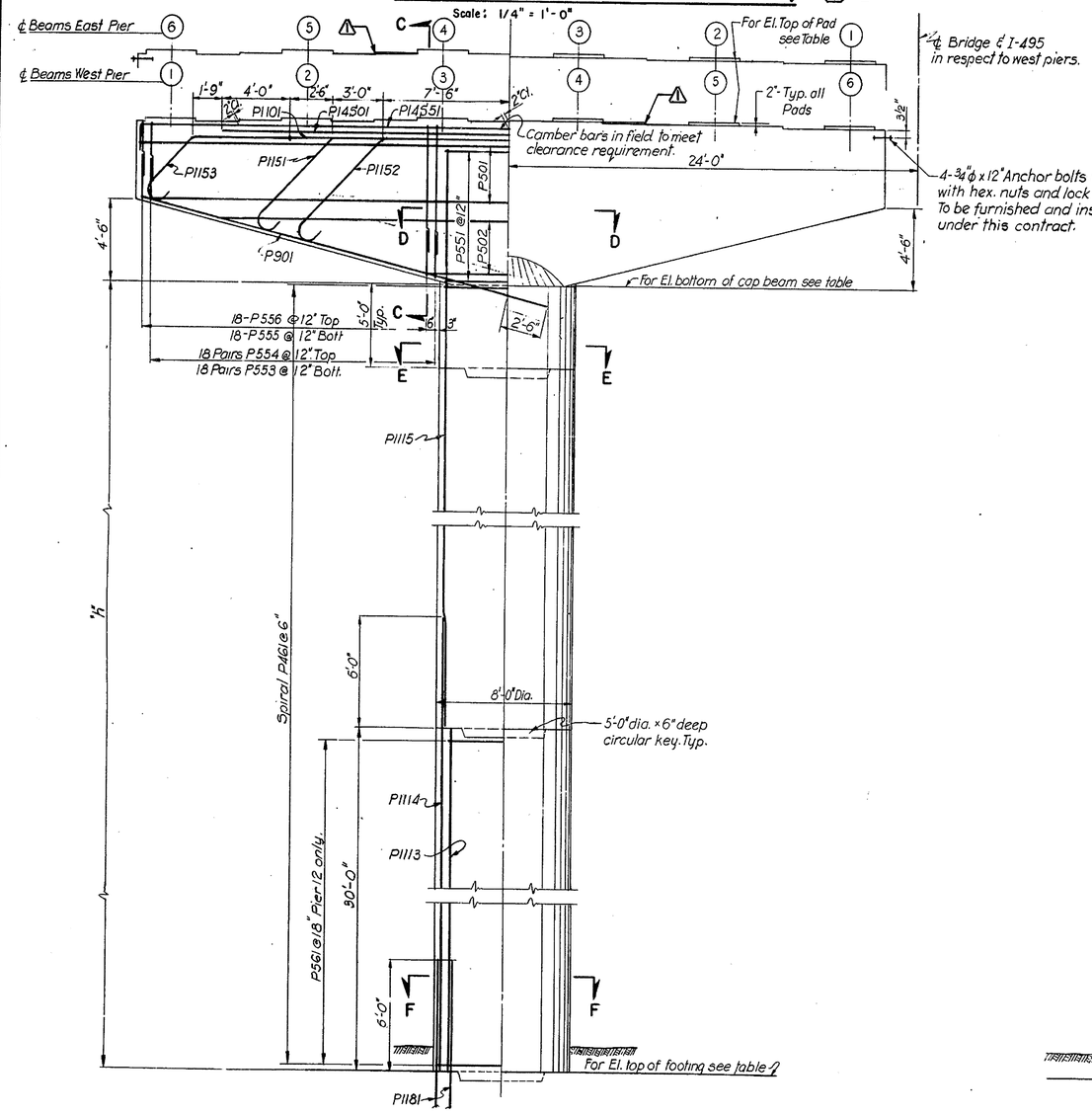

HALF SECTION A-A HALF ELEVATION A-A

Scale: 1/4" = 1'-0"

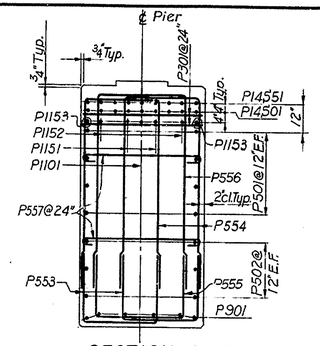

SECTION C-C

Scale: 3/8" = 1'-0"

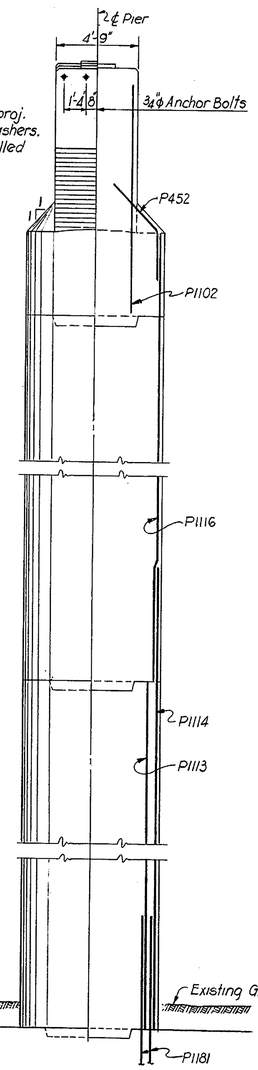

HALF ELEVATION B-B HALF SECTION B-B

Scale: 1/4" = 1'-0"

TABULATION OF ELEVATIONS AND HEIGHTS OF PIERS	PIER NO. 11	PIER NO. 12	PIER NO. 13
El. top of Pad ①	62.987	66.729	68.959
②	63.153	66.896	69.125
③	63.320	67.062	69.292
④	63.487	67.229	69.459
⑤	63.487	67.229	69.459
⑥	63.321	67.063	69.292
El. bottom of Cap Beam	54.154	57.896	60.126
El. Top of Footing	4.404	6.146	5.876
Dimension "h"	49'-9"	51'-9"	54'-3"

TABULATION OF ELEVATIONS AND HEIGHTS OF PIERS	PIER NO. 11	PIER NO. 12	PIER NO. 13
El. top of Pad ①	63.071	66.813	69.042
②	63.237	66.979	69.209
③	63.404	67.146	69.376
④	63.571	67.313	69.542
⑤	63.487	67.229	69.459
⑥	63.321	67.063	69.292
El. bottom of Cap Beam	54.237	57.979	60.209
El. Top of Footing	4.404	6.146	5.876
Dimension "h"	49'-10"	51'-10"	54'-4"

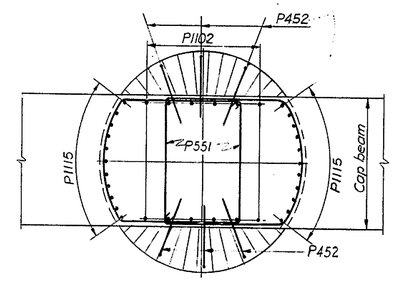

SECTION D-D

Scale: 3/8" = 1'-0"

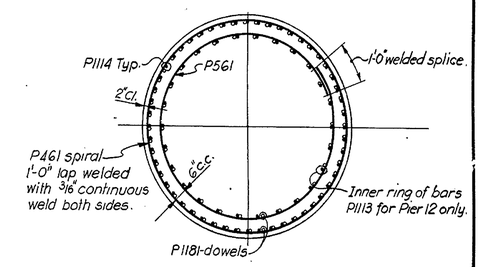

SECTION F-F

Scale: 3/8" = 1'-0"

NOTE: Shaft reinforcing shown for Pier 12. For number of bars in each pier see schedule of reinforcing bars, Sh. No. 16.

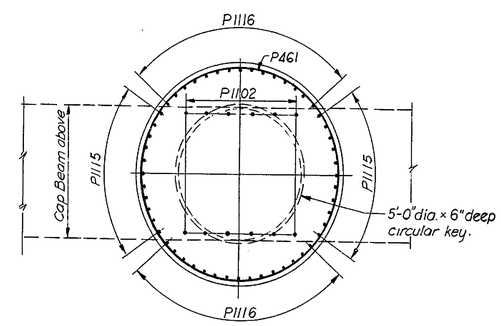

SECTION E-E

Scale: 3/8" = 1'-0"

NOTES:

1. For General Notes see Sheet No. 2.
2. For Footing Details see Sheet No. 10.
3. For Reinforcing Bar Schedule see Sheet No. 16.
4. For Anchor Bolt Pipe Sleeve detail see Sheet No. 12.

REVISIONS

△ REVISED : - PIER ELEV. & DIMENSIONS . 12-8-70 R.B.F.

DELAWARE
STATE HIGHWAY DEPARTMENT

INTERSTATE ROUTE I-495

CHRISTINA RIVER BRIDGE
PIERS 11 TO 13 - EAST & WEST

J. E. GREINER CO.
MORAN, PROCTOR, MUESER & RUTLEDGE
CONSULTING ENGINEERS

D. Y. U.
T. S. L.
C. W. W.

SCALE AS NOTED
DATE 5/14/70

APPROVED BY: John H. Cubbit
BRIDGE ENGINEER

GRILVIE PRESS, INC. — 8-127 4249

COUNTY	CONTRACT	P. R. A. REG. NO.	STATE	FED. AID PROJECT NO.	FISCAL YEAR	SHEET NO.	TOTAL SHEETS
NEW CASTLE	70-04-016	2	DEL.	I-495-3(19)15		15	46

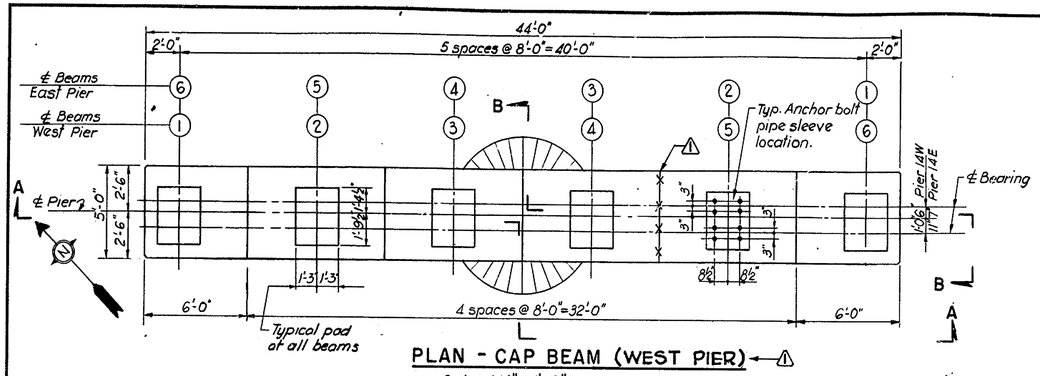

PLAN - CAP BEAM (WEST PIER)

Scale: 1/4" = 1'-0"

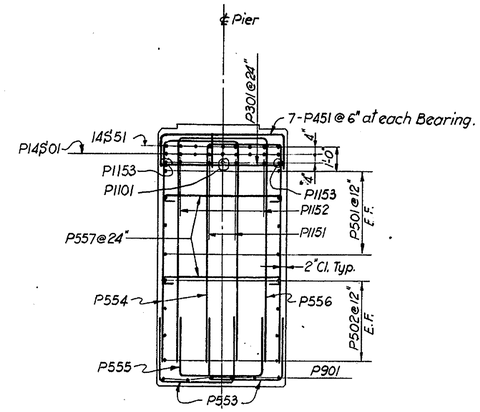

SECTION C - C

Scale: 3/8" = 1'-0"

TABULATION OF ELEVATIONS AND HEIGHTS OF PIERS	East	West
El. top of Pad ①	70.718	70.697
②	70.884	70.863
③	71.051	71.030
④	71.218	71.197
⑤	71.218	71.197
⑥	71.051	71.030
El. bottom of Cap Beam	61.385	61.364
El. Top of Footing	2.135	2.135
Dimension "h"	59'-3"	59'-2¾"

TABULATION OF ELEVATIONS AND HEIGHTS OF PIERS	East	West
El. top of Pad ①	70.801	70.780
②	70.968	70.947
③	71.135	71.114
④	71.301	71.280
⑤	71.218	71.197
⑥	71.051	71.030
El. bottom of Cap Beam	61.468	61.447
El. Top of Footing	2.135	2.135
Dimension "h"	59'-4"	59'-3¾"

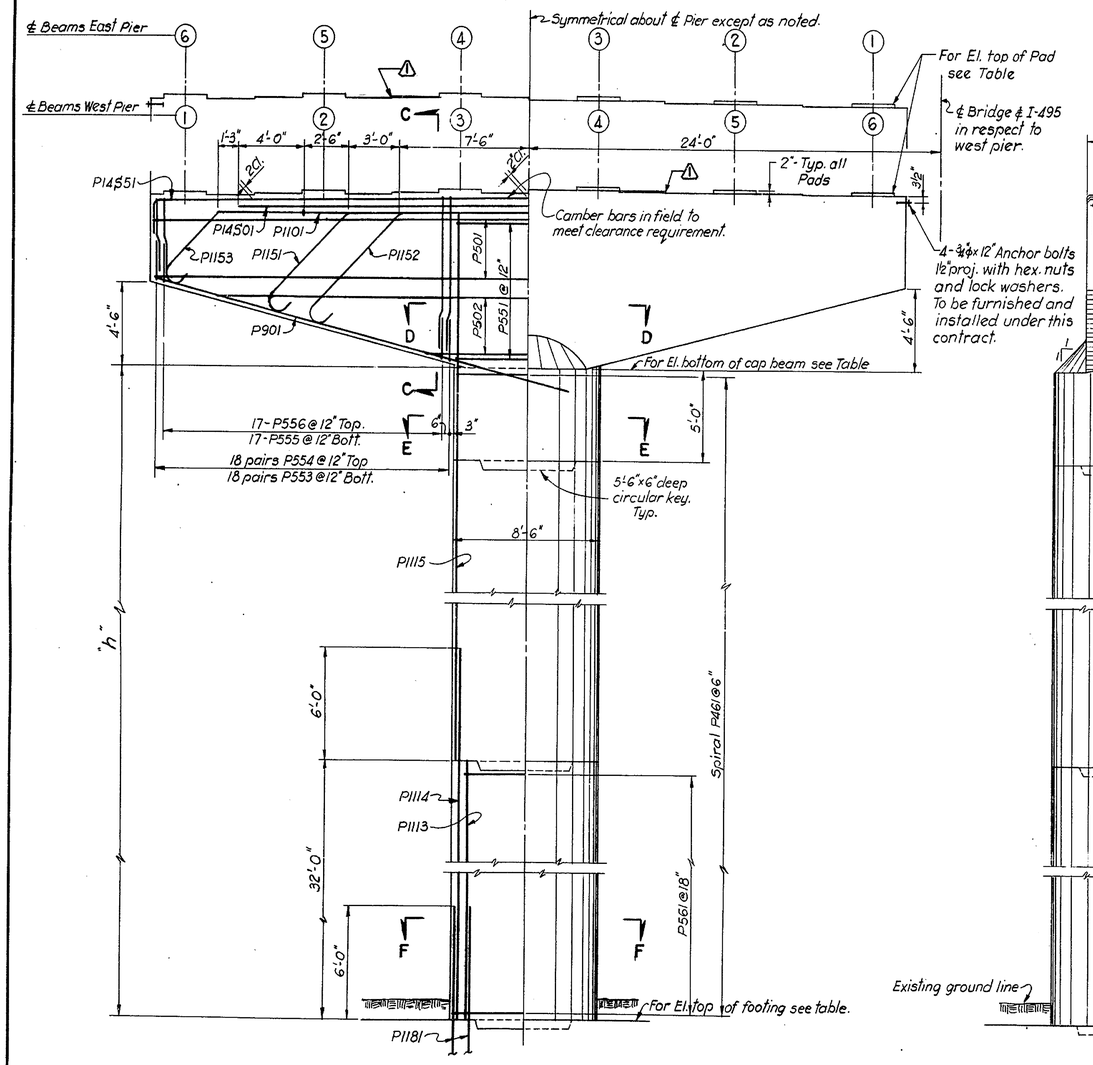

HALF SECTION A-A HALF ELEVATION A-A

Scale: 1/4" = 1'-0"

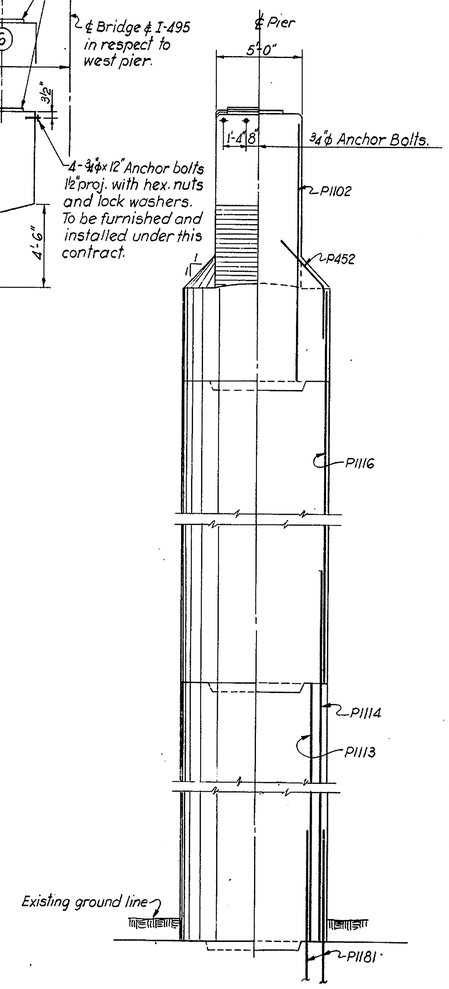

HALF ELEVATION B-B HALF SECTION B-B

Scale: 1/4" = 1'-0"

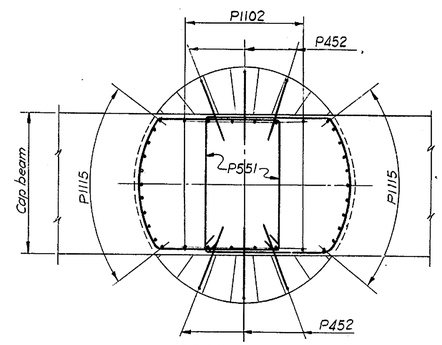

SECTION D-D

Scale: 3/8" = 1'-0"

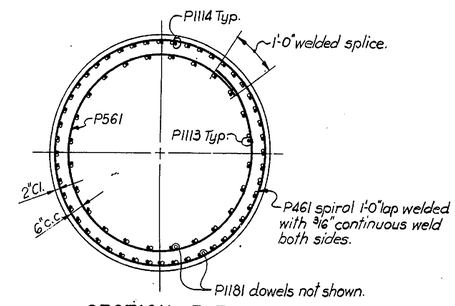

SECTION F-F

Scale: 3/8" = 1'-0"

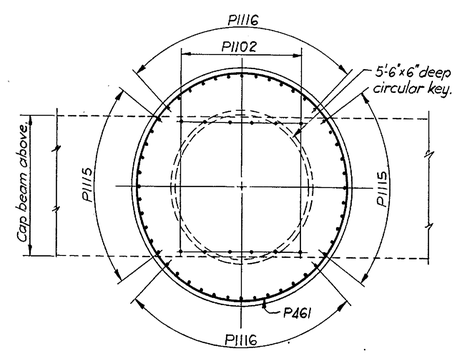

SECTION E-E

Scale: 3/8" = 1'-0"

NOTES:

1. For General Notes see Sheet No. 2.
2. For Footing Details see Sheet No. 10.
3. For Reinforcing Bar Schedule see Sheet No. 16.
4. For Anchor Bolt Pipe Sleeves details see Sheet No. 12.

J. E. GREINER CO.
MORAN, PROCTOR, MUESER & RUTLEDGE
CONSULTING ENGINEERS

DELAWARE
STATE HIGHWAY DEPARTMENT

INTERSTATE ROUTE I-495

CHRISTINA RIVER BRIDGE
PIER 14 - EAST & WEST

D. Y.U.
T. P.F.
C. W.W.

SCALE AS NOTED
DATE 5/14/70

APPROVED BY: John Schultz
BRIDGE ENGINEER

REVISED : PIER ELEV. & DIMENSIONS . 12-8-70 R.B.F.

ORILVIE PRESS, INC. — D-127

COUNTY	CONTRACT	F.A. REG. NO.	STATE	FED. AID PROJECT NO.	FISCAL YEAR	SHEET NO.	TOTAL SHEETS
NEW CASTLE	70-04-016	2	DEL.	I-495-3(19)15		16	46

STRAIGHT BARS

	PIER		1		2		3		4		5		6		7		8		9		10		11		12		13		14		REMARKS
	MARK	SIZE	REQ.	LENGTH	REQ.	LENGTH	REQ.	LENGTH	REQ.	LENGTH	REQ.	LENGTH	REQ.	LENGTH	REQ.	LENGTH	REQ.	LENGTH	REQ.	LENGTH	REQ.	LENGTH	REQ.	LENGTH	REQ.	LENGTH	REQ.	LENGTH	REQ.	LENGTH	
CAP BEAMS	P301	#3	56	3-8	56	3-8	56	3-8	64	3-11	64	3-11	64	3-11	64	3-11	64	4-2	64	4-2	64	4-2	64	4-5	64	4-5	64	4-5	64	4-8	
	P501	#5	12	43-8	12	43-8	12	43-8	12	43-8	12	43-8	12	43-8	12	43-8	16	43-8	16	43-8	16	43-8	16	43-8	16	43-8	16	43-8	16	42-0	
	P502	#5	16	12-0 to 37-6	16	12-0 to 37-6	16	12-0 to 37-6	16	12-0 to 37-6	16	12-0 to 37-6	16	12-0 to 37-6	16	12-0 to 37-6	Δ2 ~~16~~ 12	9-0 to 34-6	Δ2 ~~16~~ 12	9-0 to 34-6	Δ2 ~~16~~ 12	9-0 to 34-6	Δ2 ~~16~~ 12	9-0 to 34-6	Δ2 ~~16~~ 12	9-0 to 34-6	Δ2 ~~16~~ 12	9-0 to 34-6	16	13-0 to 38-6	INCREMENT 8'-5" 2 BARS OF EACH
	P901	#9	24	25-0	24	25-0	24	25-0	24	25-0	24	25-0	24	25-0	24	25-0	24	25-0	24	25-0	24	25-0	24	25-0	24	25-0	24	25-0	24	25-0	
	P1101	#11		-		-		-	4	26-0	4	26-0	4	26-0	4	26-0	Δ2 6 ~~4~~	26-0	6	26-0	6	26-0	2	26-0	2	26-0	2	26-0	2	26-0	
	P1102	#11	24	12-6	24	12-6	24	12-6	32	12-6	32	12-6	32	12-6	32	12-6	28	13-0	28	13-0	28	13-0	24	13-0	24	13-0	24	13-0	24	13-6	
	P14801	#14	12	34-0	12	34-0	12	34-0	16	34-0	16	34-0	16	34-0	16	34-0	18	34-0	18	34-0	18	34-0	18	34-0	18	34-0	18	34-0	18	34-0	
SHAFTS	P1111	#11	44	Δ2 25-11 ~~26-2~~	36	Δ2 26-0 ~~26-4~~	44	Δ2 27-7 ~~27-10~~	48	29-4	Δ2 52 ~~44~~	32-10	52	34-10	52	37-10		-		-		-		-		-		-		-	
	P1112		36	33-6	36	34-0	36	35-6	36	37-0	~~36~~ Δ2 44	40-6	44	42-6	44	45-6		-		-		-		-		-		-		-	
	P1113			-		-		-		-	40	20-0		-		-	40	28-0	38	28-0		-		-	52	30-0		-	48	32-0	
	P1114			-		-		-		-		-		-		-	80	34-0	76	34-0	96	34-0	104	35-0	104	36-0	104	36-0	95	38-0	
	P1115			-		-		-		-		-		-		-	36	23-0	32	22-6	44	27-6	44	28-0	44	32-0	44	32-6	44	36-0	
	P1116	#11		-		-		-		-		-		-		-	44	~~15-10~~ Δ3 14	44	~~15-4~~ Δ3 14	52	19-4	60	19-10	~~52~~ Δ2 60	21-10	~~52~~ Δ2 60	24-4	52	27-4	

Δ2 NO CHANGE IN QUANTITY SINCE THE 76 WAS INCLUDED IN ORIGINAL ESTIMATE

BENT BARS (ALL DIMENSIONS ARE OUT TO OUT)

	PIER		1		2		3		4		5		6		7		8		9		10		11		12		13		14		REMARKS
	MARK	SIZE	REQ.	LENGTH	REQ.	LENGTH	REQ.	LENGTH	REQ.	LENGTH	REQ.	LENGTH	REQ.	LENGTH	REQ.	LENGTH	REQ.	LENGTH	REQ.	LENGTH	REQ.	LENGTH	REQ.	LENGTH	REQ.	LENGTH	REQ.	LENGTH	REQ.	LENGTH	
CAP BEAMS	P451	#4	-	-	-	-	-	-	-	-	-	-	-	-	-	-	-	-	-	-	-	-	-	-	-	-	-	-	84	7-8	
	P452	#4	12	5-0	12	5-0	12	5-0	12	5-2	12	5-2	12	5-2	12	5-2	12	5-4	12	5-4	12	5-4	12	5-7	12	5-7	12	5-7	12	5-9	
	P561	#5	32	15-11	32	15-11	32	15-11	32	16-5	32	16-5	32	16-5	32	16-5	32	17-3	32	17-3	32	17-3	32	19-3	32	19-3	32	19-3	36	20-5	
	P552			-		-		-		-		-		-		-		-		-		-		-		-		-		-	
	P553		224	7-0	224	7-0	224	7-0	224	7-4	224	7-4	224	7-4	224	7-4	144	7-3	144	7-3	144	7-3	144	7-4	144	7-4	144	7-4	144	7-6	
	P554		152	8-4 to 17-4	152	8-4 to 17-4	152	8-4 to 17-4	152	8-8 to 17-8	152	8-8 to 17-8	152	8-8 to 17-8	152	8-8 to 17-8	144	9-11 to 18-5	144	9-11 to 18-5	144	9-11 to 18-5	144	9-10 to 18-4	144	9-10 to 18-4	144	9-10 to 18-4	144	11-2 to 19-8	INCREMENT 0'-3" 8 BARS OF EACH
	P555			-		-		-		-		-		-		-	72	7-8	72	7-8	72	7-8	72	7-10	72	7-10	72	7-10	68	8-0	
	P556		72	8-6 to 17-0	72	8-6 to 17-0	72	8-6 to 17-0	72	8-10 to 17-4	72	8-10 to 17-4	72	8-10 to 17-4	72	8-10 to 17-4	72	10-2 to 18-8	72	10-2 to 18-8	72	10-2 to 18-8	72	10-2 to 18-8	72	10-2 to 18-8	72	10-2 to 18-8	68	11-10 to 19-10	INCREMENT 0'-3" 4 BARS OF EACH
	P557	#5	76	4-10	76	4-10	76	4-10	76	5-1	76	5-1	76	5-1	76	5-1	80	5-4	80	5-4	80	5-4	80	5-7	80	5-7	80	5-7	80	5-10	
	P1151	#11	4	35-4	4	35-4	4	35-4	4	35-4	4	35-4	4	35-4	4	35-4	4	36-8	4	36-8	4	36-8	4	36-8	4	36-8	4	36-8	4	38-2	
	P1152	#11	4	31-2	4	31-2	4	31-2	4	31-2	4	31-2	4	31-2	4	31-2	4	32-6	4	32-6	4	32-6	4	32-6	4	32-6	4	32-6	4	33-10	
	P1153	#11	4	47-2	4	47-2	4	47-2	4	47-2	4	47-2	4	47-2	4	47-2	4	48-2	4	48-2	4	48-2	4	48-2	4	48-2	4	48-2	4	49-0	
	P14851	#14	14	46-8	14	46-8	14	46-8	16	46-8	16	46-8	15	46-8	16	46-8	18	46-8	18	46-8	18	46-8	18	46-8	18	46-8	18	46-8	18	46-8	
SHAFTS	P461	#4	2	1092-0	2	1092.0	2	1132-0	2	1310-0	2	1460-0	2	1545-0	2	1675-0	2	2030-0	2	2006-0	2	2236-0	2	2496-0	2	2616-0	2	2740-0	2	3180-0	
	P561	#5		-		-		-		-	26	18-10		-		-	38	20-5	38	20-5		-		-	40	22-0		-	44	23-6	

STRAIGHT BARS

	PIER		1		2		3		4		5		6		7		8		9		10		11		12		13		14		REMARKS
	MARK	SIZE	REQ.	LENGTH	REQ.	LENGTH	REQ.	LENGTH	REQ.	LENGTH	REQ.	LENGTH	REQ.	LENGTH	REQ.	LENGTH	REQ.	LENGTH	REQ.	LENGTH	REQ.	LENGTH	REQ.	LENGTH	REQ.	LENGTH	REQ.	LENGTH	REQ.	LENGTH	
CRASH WALLS	P641	#6	26	27-6	22	27-6		-		-		-		-		-	26	27-6		-		-		-		-		-		-	
	P642	#6	56	16-5	56	15-2		-		-		-		-		-	56	18-0		-		-		-		-		-		-	
	P643	#6	8	6-0	8	6-0		-		-		-		-		-	8	6-0		-		-		-		-		-		-	
	P941	#9	4	27-6	4	27-6		-		-		-		-		-	4	27-6		-		-		-		-		-		-	

Δ2

BENT BARS (ALL DIMENSIONS ARE OUT TO OUT)

	PIER		1		2		3		4		5		6		7		8		9		10		11		12		13		14		REMARKS
	MARK	SIZE	REQ.	LENGTH	REQ.	LENGTH											REQ.	LENGTH													
CRASH WALLS	P491	#4	19	4-10	19	4-10											19	4-10													

STRAIGHT BARS

	PIER		1		2		3		4		5		6		7		8		9		10		11		12		13		14		REMARKS
	MARK	SIZE	REQ.	LENGTH	REQ.	LENGTH	REQ.	LENGTH	REQ.	LENGTH	REQ.	LENGTH	REQ.	LENGTH	REQ.	LENGTH	REQ.	LENGTH	REQ.	LENGTH	REQ.	LENGTH	REQ.	LENGTH	REQ.	LENGTH	REQ.	LENGTH	REQ.	LENGTH	
FOOTINGS	P631	#6		-		-		-		-		-		-		-		-		-		-		-	20	11-10 to 18-6		-		-	INCREMENT 1'-2" 4 BARS OF EACH
	P632			-		-		-		-		-		-		-		-		-		-		-	18	17-6		-		-	
	P633			-		-		-		-		-		-		-		-		-		-		-	12	9-1 to 16-7		-		-	INCREMENT 8'-9" 4 BARS OF EACH
	P634	#6		-		-		-		-		-		-		-		-		-		-		-	24	18-6		-		-	
	P831	#8	120	10-0 to 18-3	20	10-0 to 13-8	20	10-0 to 13-8		-		-		-		-		-		-		-		-	-	-		-		-	INCREMENT 0'-11" ~~12~~ Δ3 4 BARS OF EACH
	P832	#8		-	22	14-6	22	14-6		-		-		-		-		-		-		-		-	-	-		-		-	
	P931	#9	12	8-0	12	8-0	12	8-0	12	8-0	12	8-0	12	8-0	12	8-0	12	8-0	12	8-0	12	8-0	20	10-0	20	10-0	20	10-0	20	10-0	
	P932	#9	6	30-0	6	31-0	6	31-0	6	24-0	6	~~30-0~~ Δ3 24	6	24-0	6	24-0	6	24-0	6	24-0	6	24-0	5	31-0	5	30-0	5	31-0	5	27-0	
	P1031	#10		-	12	10-3 to 14-9	12	10-3 to 14-9		-		-		-		-		-		-		-		-		-		-		-	INCREMENT 2'-3" 4 BARS OF EACH
	P1032			-	30	16-6	30	16-6		-		-		-		-	20	23-3	20	23-3		-	24	16-6	34	17-6	24	16-6		-	
	P1033			-		-		-		-		-		-		-	88	13-9 to 22-6	88	13-9 to 22-6		-		-		-		-		-	INCREMENT 0'-10½" 8 BARS OF EACH
	P1034			-		-		-		-		-		-		-	2	23-0	2	23-0		-		-		-		-		-	
	P1035			-		-		-		-		-		-		-		-		-		-	10	12-0	10	12-0	10	12-0	10	12-0	
	P1036			-		-		-		-		-		-		-	60	10-2 to 21-10	60	10-2 to 21-10		-		-		-		-		-	INCREMENT 0'-10" 4 BARS OF EACH
	P1037		12	13-0	12	13-0	12	13-0	12	13-0	12	13-0	12	13-0	12	13-0	12	13-0	12	13-0	12	13-0	10	14-0	10	14-0	10	14-0	10	14-0	
	P1038		4	30-0	4	31-0	4	31-0	4	24-0	4	~~30-0~~ Δ3 24	4	24-0	4	24-0	4	24-0	4	24-0	4	24-0	5	31-0	5	30-0	5	31-0	5	27-0	
	P1039			-		-		-		-		Δ3 -		-		-		-		-		-	36	12-0 to 16-0		-	36	12-0 to 16-0		-	INCREMENT 0'-6" 4 BARS OF EACH
	P1040	#10		-		-		-		-		-		-		-		-		-		-		-	40	11-10 to 17-1		-		-	INCREMENT 0'-7" 4 BARS OF EACH
	P1131	#11		-		-		-		-	80	13-9 to 19-0	80	13-9 to 19-0		-		-		-	80	13-9 to 19-0		-		-		-		-	INCREMENT 0'-7" 8 BARS OF EACH
	P1132			-		-		-	52	19-2	52	19-2	52	19-2	52	19-2		-		-	52	19-2	42	17-6	50	18-6	42	17-6	56	19-6	
	P1133			-		-		-	56	9-9 to 17-9		-		-	56	9-9 to 17-9		-		-		-		-		-		-		-	INCREMENT 1'-4" 8 BARS OF EACH
	P1134			-		-		-	8	18-6		-		-	8	18-6		-		-		-		-		-		-	32	20-6	
	P1135			-		-		-		-		-		-		-		-		-		-	16	7-9 to 15-6		-	16	7-9 to 15-6		-	INCREMENT 2'-7" 4 BARS OF EACH
	P1136			-		-		-		-		-		-		-		-		-		-		-		-		-	28	8-2 to 18-8	INCREMENT 1'-9" 4 BARS OF EACH
	P1137			-		-		-		-		-		-		-		-		-		-		-		-		-	48	18-7 to 20-0	INCREMENT 0'-7" 4 BARS OF EACH
	P1138	#11		-		-		-		-		-		-		-		-		-		-		-	20	9-1 to 16-7		-		-	INCREMENT 1'-10½" 4 BARS OF EACH

BENT BARS (ALL DIMENSIONS ARE OUT TO OUT)

	PIER		1		2		3		4		5		6		7		8		9		10		11		12		13		14		REMARKS
	MARK	SIZE	REQ.	LENGTH	REQ.	LENGTH	REQ.	LENGTH	REQ.	LENGTH	REQ.	LENGTH	REQ.	LENGTH	REQ.	LENGTH	REQ.	LENGTH	REQ.	LENGTH	REQ.	LENGTH	REQ.	LENGTH	REQ.	LENGTH	REQ.	LENGTH	REQ.	LENGTH	
FOOTINGS	P481	#4	22	8-10	22	8-10	22	8-10	20	8-10	22	8-10	20	8-10	20	8-10	20	8-10	20	8-10	20	8-10	36	7-0	36	7-0	36	7-0	34	7-0	
	P1181	#11	80	12-0	72	12-0	80	12-0	84	12-6	136 ~~120~~ Δ1	12-6	96	12-6	96	12-6	120	13-0	114	13-0	96	12-6	104	12-6	156	12-6	104	12-6	144	12-6	

REVISIONS
Δ1 QUANTITIES E.Z. 9/18/70
Δ2 QUANTITIES & LENGTHS - R.B.F. 1-18-71
Δ3 REVISED: LENGTHS - R.B.F. 2-3-71

NOTES

1. For General Notes see Sheet No. 2.

2. For Reinforcing Bar Details see Sheet No. 17.

DELAWARE
STATE HIGHWAY DEPARTMENT

INTERSTATE ROUTE I-495

CHRISTINA RIVER BRIDGE
BAR REINFORCING SCHEDULE
PIERS 1 TO 14

J. E. GREINER CO.
MORAN, PROCTOR, MUESER & RUTLEDGE
CONSULTING ENGINEERS

D. P.F.
T. V.R.W.
C. R.B.

SCALE NONE
DATE 5/11/70

APPROVED BY: [signature]
BRIDGE ENGINEER

OGILVIE PRESS, INC. — D-127 4248

D C B A A B C D

COUNTY	CONTRACT	P. O. A. REG. NO.	STATE	FED. AID PROJECT NO.	FISCAL YEAR	SHEET NO.	TOTAL SHEETS
NEW CASTLE	70-04-016	2	DEL.	I-495-3(19)15		17	46

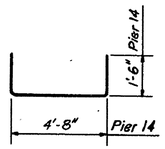

P451

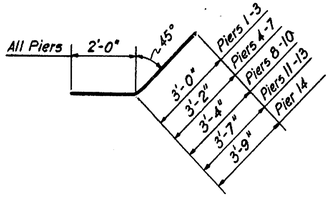

P452

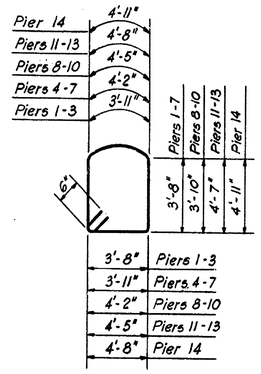

P 551

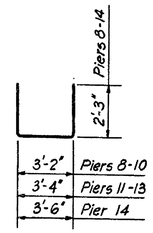

P555

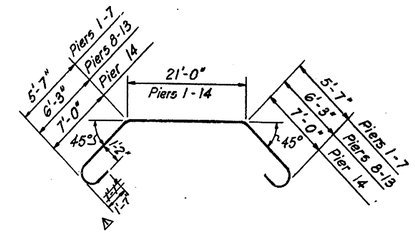

P1151

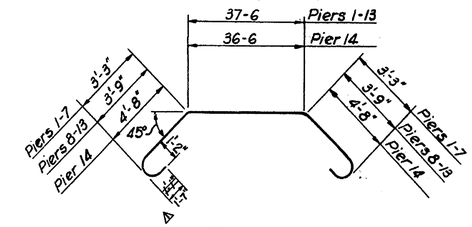

P1153

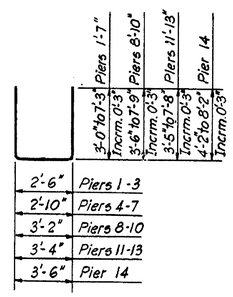

P556

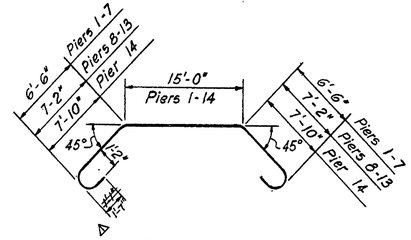

P1152

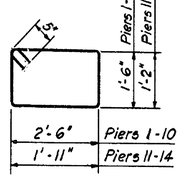

P481

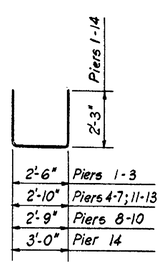

P553

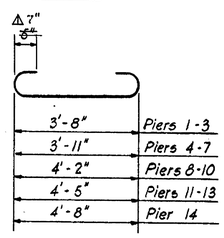

P 557

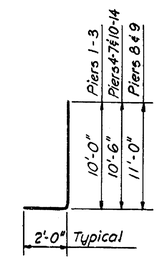

P1181

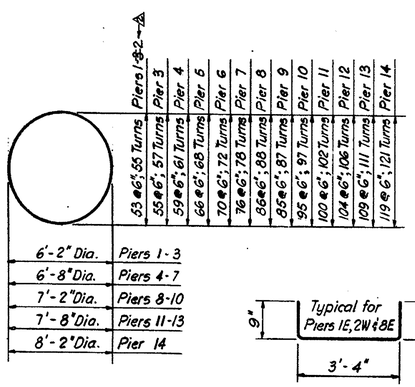

P461

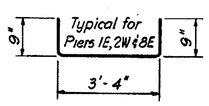

P491

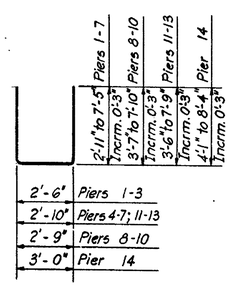

P554

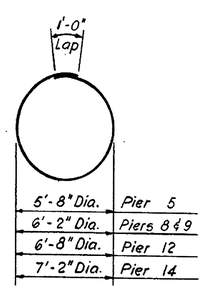

P561

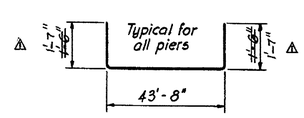

P14S51

NOTES

1. For General Notes see Sheet No. 2.
2. For Bar Reinforcement Schedule see Sheet No. 16.

REVISIONS

REVISED: DIMENSIONS — R.B.F. 1-18-71

REVISED: PIER No. — R.B.F. 2-3-71

J. E. GREINER CO.
MORAN, PROCTOR, MUESER & RUTLEDGE
CONSULTING ENGINEERS

DELAWARE
STATE HIGHWAY DEPARTMENT

INTERSTATE ROUTE I-495

CHRISTINA RIVER BRIDGE
BAR REINFORCEMENT DETAILS
PIERS 1 TO 14

D. P. F.
T. R. B.
C. W. W.

SCALE NONE

DATE 5/14/70

APPROVED BY: John S. Bilotta
BRIDGE ENGINEER

COUNTY	CONTRACT	P.B.A. REG. NO.	STATE	FED. AID PROJECT NO.	FISCAL YEAR	SHEET NO.	TOTAL SHEETS
NEW CASTLE	70-04-016	2	DEL.	I-495-3(19)15		18	46

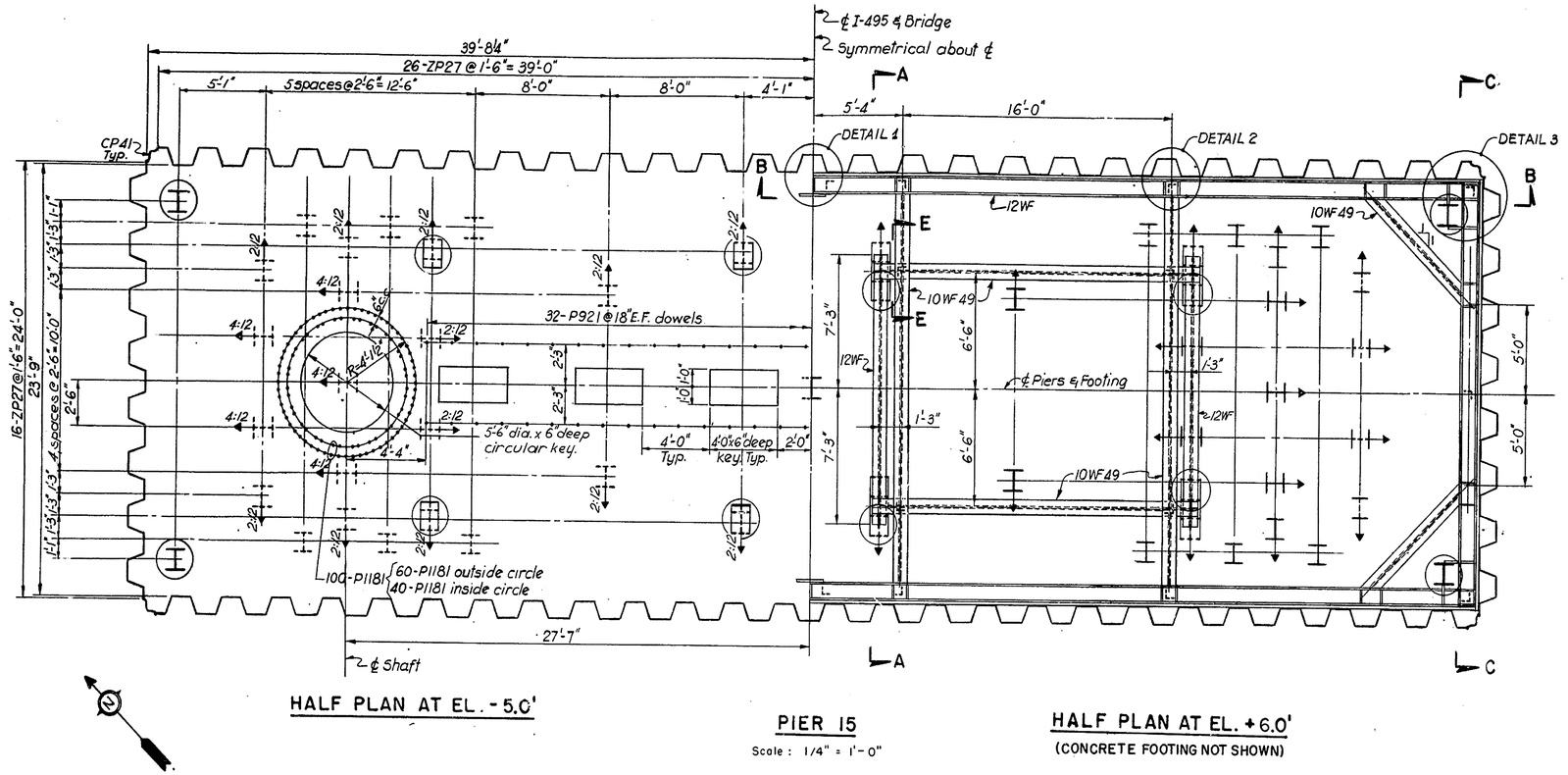

HALF PLAN AT EL. -5.0'

PIER 15

Scale: 1/4" = 1'-0"

HALF PLAN AT EL. +6.0'

(CONCRETE FOOTING NOT SHOWN)

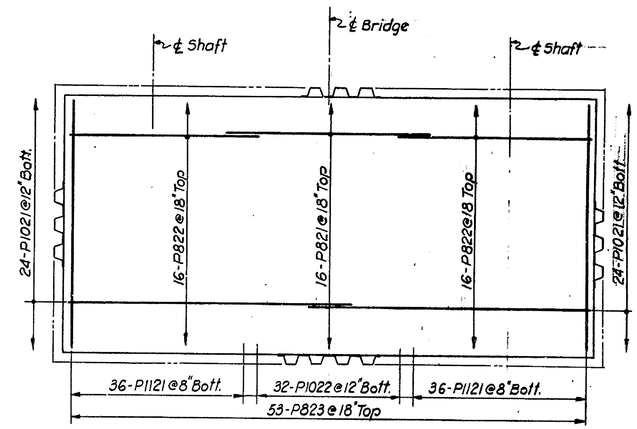

PLAN – FOOTING REINFORCEMENT

PIERS 15 & 18

N. T. S.

NOTES:

1. For General Notes see Sheet No. 2.
2. For Construction Procedure see Sheet No. 19.
3. For Sections A-A to E-E and Details 1 to 3 see Sheet No. 19.
4. For Pier details see Sheet No. 20.
5. For Reinforcing Bar Schedule see Sheet No. 31.
6. Contractor may submit an alternate cofferdam scheme or modify individual details subject to Director's approval.
7. Piles indicated thus (I) are to be used to support the cofferdam.

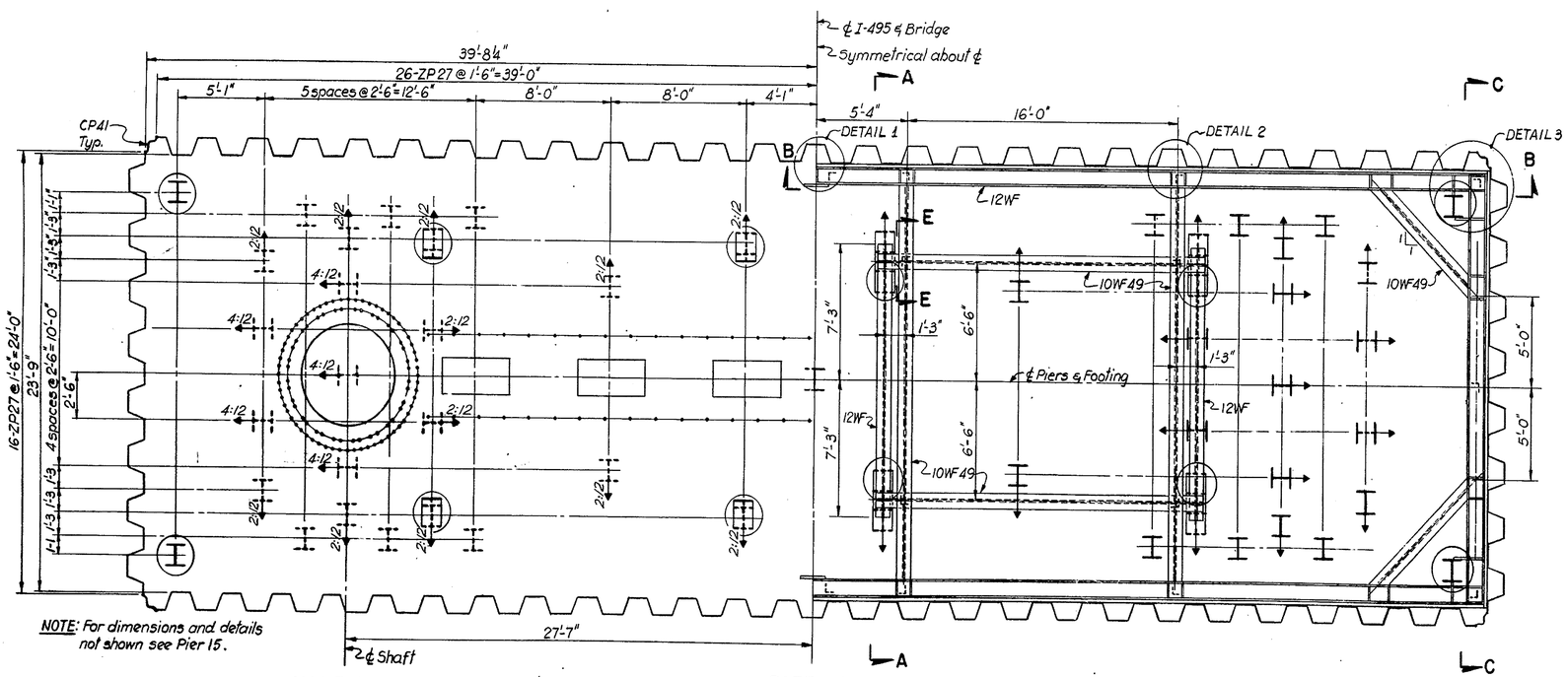

NOTE: For dimensions and details not shown see Pier 15.

HALF PLAN AT EL. -5.0'

PIER 18

Scale: 1/4" = 1'-0"

HALF PLAN AT EL. +6.0'

REVISIONS

DELAWARE
STATE HIGHWAY DEPARTMENT

INTERSTATE ROUTE I-495

CHRISTINA RIVER BRIDGE
FOOTINGS FOR PIERS 15 & 18
PLANS

J. E. GREINER CO.
MORAN, PROCTOR, MUESER & RUTLEDGE
CONSULTING ENGINEERS

D. A.L.A.	SCALE AS NOTED	APPROVED BY John Gilbert
T. P.F.	DATE 5/14/70	BRIDGE ENGINEER
C. W.W.		

COUNTY	CONTRACT	P. R. A. REG. NO.	STATE	FED. AID PROJECT NO.	FISCAL YEAR	SHEET NO.	TOTAL SHEETS
NEW CASTLE	70-04-016	2	DEL.	I-495-3(19)15		19	46

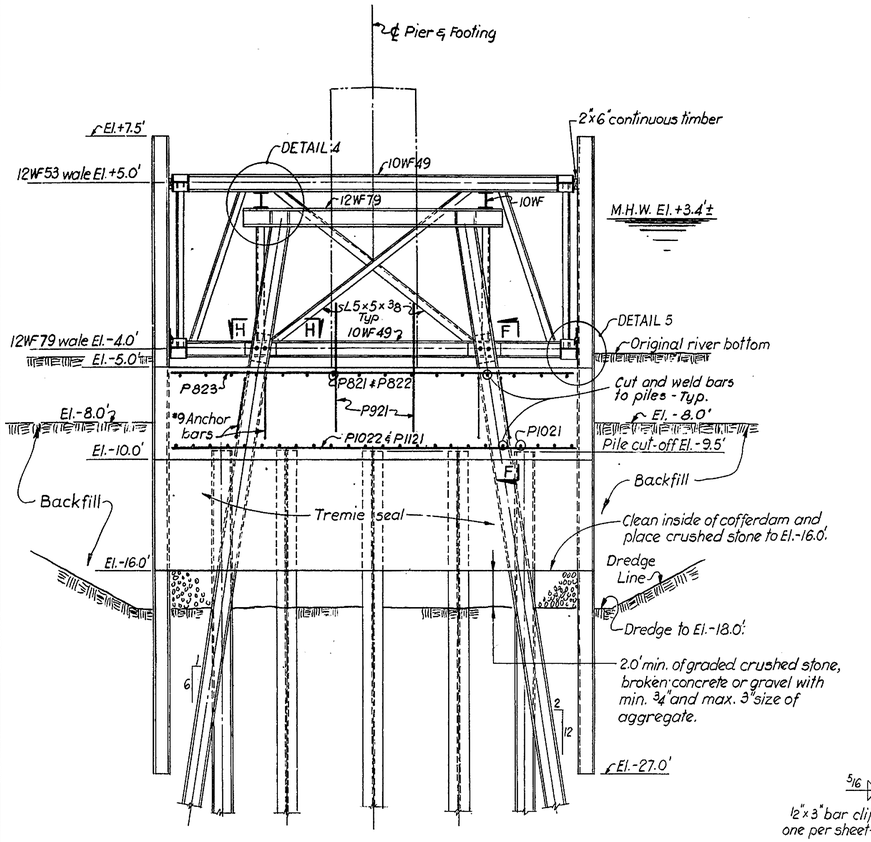

SECTION A-A

Scale: 1/4" = 1'-0"

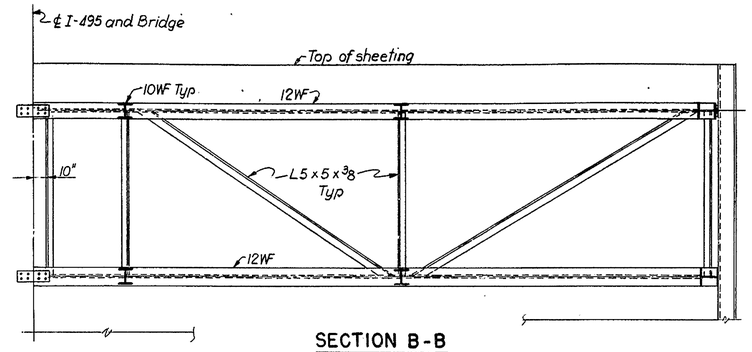

SECTION B-B

Scale: 1/4" = 1'-0"

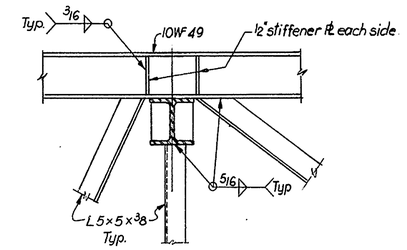

DETAIL 4

Scale: 3/4" = 1'-0"

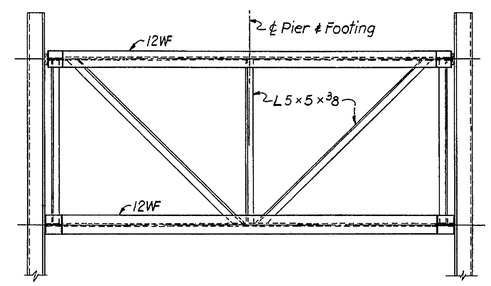

SECTION C-C

Scale: 1/4" = 1'-0"

SUGGESTED CONSTRUCTION PROCEDURE

1. Dredge river bottom to limits shown on the drawing.
2. Drive 14BP89 piles. Piles designated to support the cofferdam shall be extended to required elevations.
3. Install pre-assembled sections of bracing frame in position and make necessary connections. Drive mooring and/or breasting dolphins to protect the cofferdam as required.
4. Install and drive sheet piles as required. Attach each sheet pile to the lower wale.
5. Prepare bottom inside of cofferdam and place 2.0' layer of crushed stone to El.-16.0'.
6. Backfill with run of bank granular material outside of cofferdam to El.-8.0'±. (See Specifications.)
7. Pour Tremie concrete sub-foundation as specified.
8. Dewater cofferdam.
9. Clean and chip top of tremie concrete as specified and cut-off piles at El.-9.5'. Place reinforcing steel and pour concrete footing to the limits shown.
10. Remove bracing frames and cut-off cofferdam supporting piles at footing level and encase protruding sections with a minimum of 4" cement mortar mixed in proportion 1:2.
11. Install wrought iron protective plates and pour wall and shaft sections to El.+10.0'.
12. Remove completely or cut-off and remove the upper section of sheet piling above El.-5.0'±.
13. Complete construction of pier.

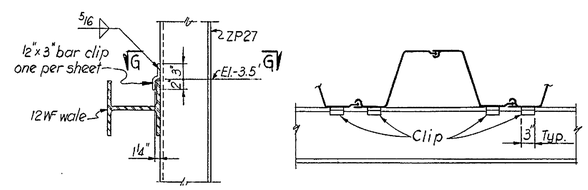

DETAIL 5

Scale: 3/4" = 1'-0"

SECTION G-G

Scale: 3/4" = 1'-0"

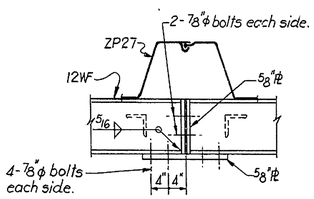

DETAIL 1

Scale: 3/4" = 1'-0"

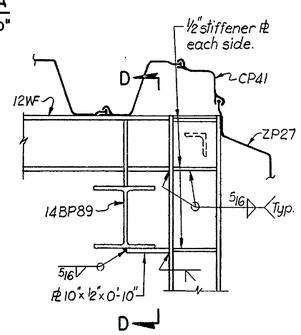

DETAIL 3

Scale: 3/4" = 1'-0"

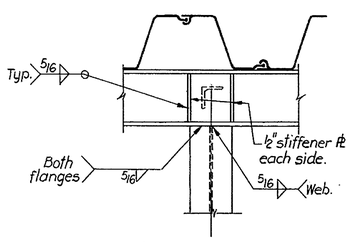

DETAIL 2

Scale: 3/4" = 1'-0"

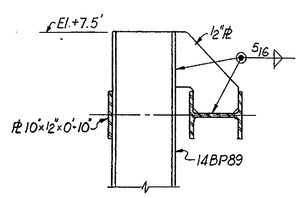

SECTION D-D

Scale: 3/4" = 1'-0"

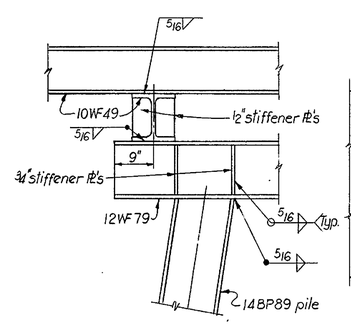

SECTION E-E

Scale: 3/4" = 1'-0"

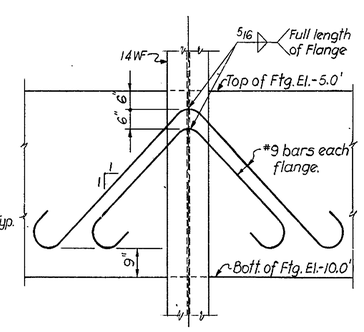

SECTION F-F

ANCHOR BAR DETAIL
TYPICAL FOR PILES EXTENDED ABOVE TOP OF FOOTING

Scale: 1/2" = 1'-0"

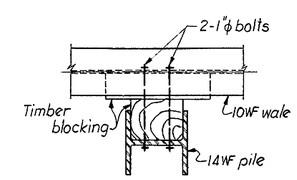

SECTION H-H

Scale: 3/4" = 1'-0"

NOTES:

1. For General Notes see Sheet No. 2.
2. Work this sheet with Sheet No. 18.
3. For Pier Details see Sheet No. 20.
4. For Reinforcing Bar Schedule see Sheet No. 31.

DELAWARE
STATE HIGHWAY DEPARTMENT

INTERSTATE ROUTE I-495

CHRISTINA RIVER BRIDGE
FOOTINGS FOR PIERS 15 & 18
SECTIONS & DETAILS

J. E. GREINER CO.
MORAN, PROCTOR, MUESER & RUTLEDGE
CONSULTING ENGINEERS

D. A.L.A.
T. P. F.
C. W.W.

SCALE AS NOTED

DATE 5/19/70

APPROVED BY: John H. Gibbs
BRIDGE ENGINEER

REVISIONS

OGILVIE PRESS, INC. — D-137 4249

COUNTY	CONTRACT	F.R.A. REG. NO.	STATE	FED. AID PROJECT NO.	FISCAL YEAR	SHEET NO.	TOTAL SHEETS
NEW CASTLE	70-04-016	2	DEL.	I-495-3(19)15		20	46

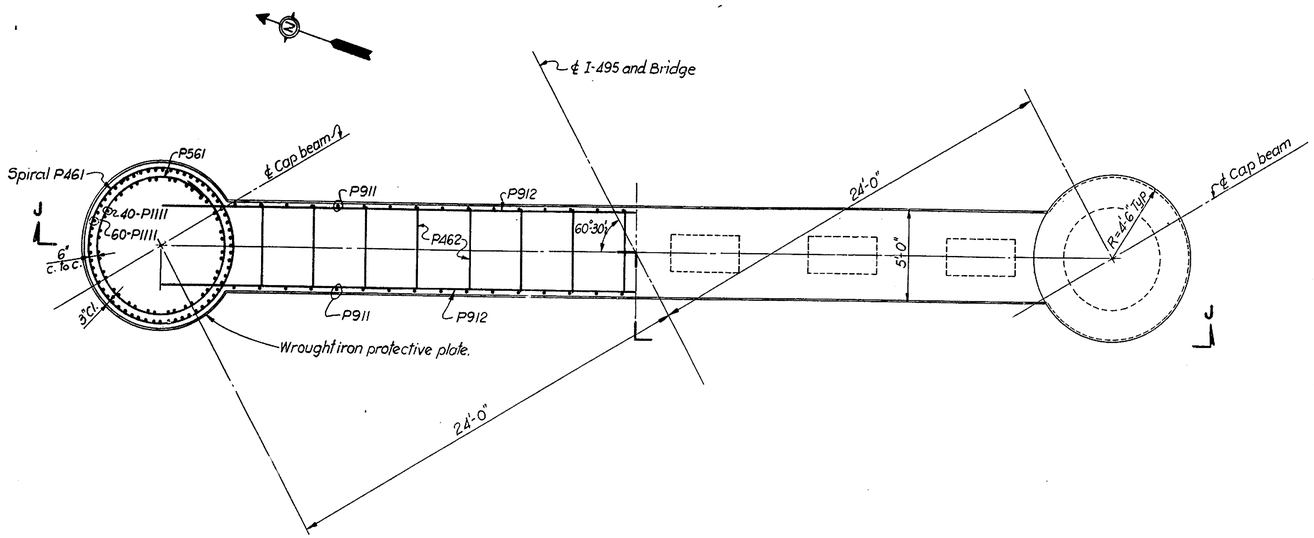

HALF SECTION H-H

Scale: 1/4" = 1'-0"

HALF TOP VIEW H-H

Scale: 1/4" = 1'-0"

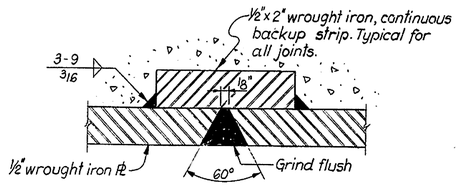

TYPICAL WROUGHT IRON PLATE JOINT DETAIL

N.T.S.

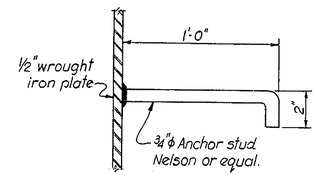

DETAIL "A"

TYPICAL STUD ANCHOR

N.T.S.

Note: Anchor studs shall be located a minimum of 2" away from the joint.

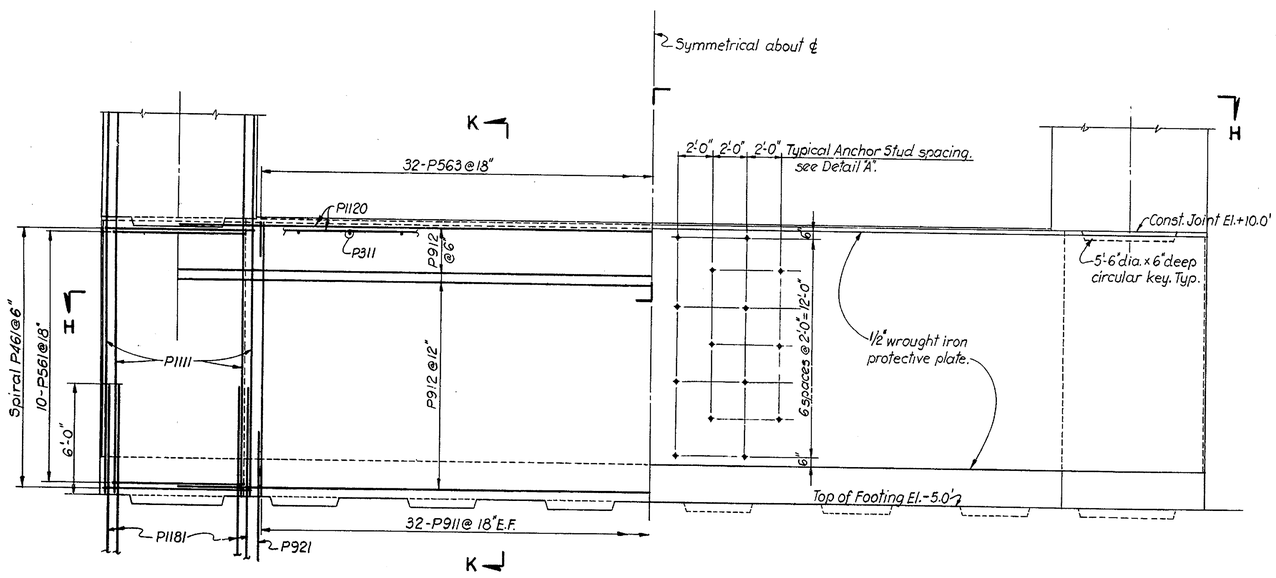

HALF SECTION J-J

Scale: 1/4" = 1'-0"

HALF ELEVATION J-J

Scale: 1/4" = 1'-0"

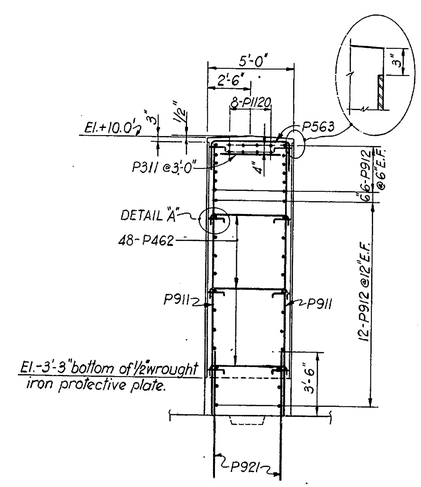

SECTION K-K

Scale: 1/4" = 1'-0"

NOTES:

1. For General Notes see Sheet No. 2.
2. For Shaft Details above El.+10.0' see Sheet No. 21.
3. For Footing Details see Sheet No. 18.
4. For Reinforcing Bar Schedule see Sheet No. 31.

REVISIONS

DELAWARE
STATE HIGHWAY DEPARTMENT

INTERSTATE ROUTE I-495

CHRISTINA RIVER BRIDGE
PIERS 15 & 18 BELOW EL.+10.0'

J. E. GREINER CO.
MORAN, PROCTOR, MUESER & RUTLEDGE
CONSULTING ENGINEERS

D. A.L.A.	SCALE AS NOTED	APPROVED BY:
T. P. F.	DATE 5/14/70	BRIDGE ENGINEER
C. W.W.		

COUNTY	CONTRACT	F. R. A. REG. NO.	STATE	FED. AID PROJECT NO.	FISCAL YEAR	SHEET NO.	TOTAL SHEETS
NEW CASTLE	70-04-016	2	DEL.	I-495-3(19)15		21	46

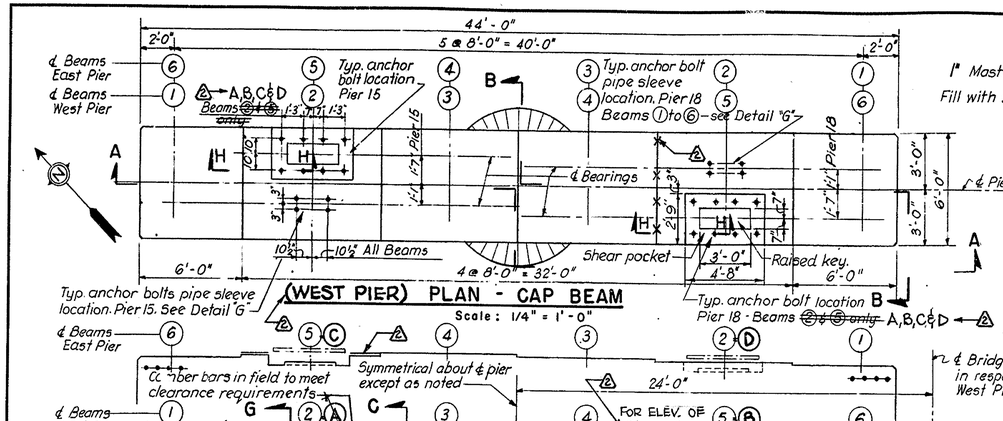

(WEST PIER) PLAN - CAP BEAM

Scale: 1/4" = 1'-0"

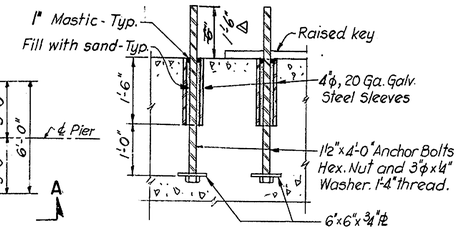

SECTION H-H

ANCHOR BOLT

N.T.S.

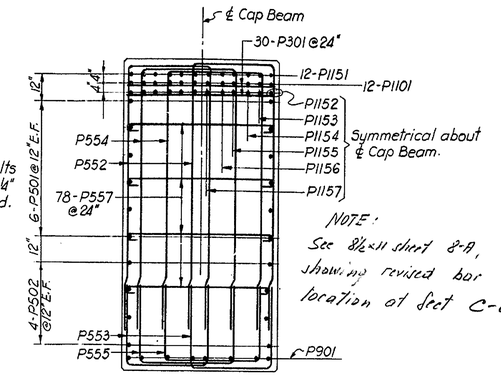

NOTE: See 8½x11 sheet 8-A, showing revised bar location of Sect C-C.

SECTION C-C

Scale: 3/8" = 1'-0"

TABULATION OF ELEVATIONS AND HEIGHTS OF PIERS	PIER NO.			
	15E	15W	18E	18W
El. ①	69.825	70.214	71.086	70.765
②	69.992	70.380	71.252	70.932
③	70.159	70.547	71.419	71.098
④	70.325	70.714	71.586	71.265
⑤	70.242	70.630	71.502	71.182
⑥	70.075	70.464	71.336	71.015
El. Bottom of Cap Beam	58.92	59.25	60.17	59.83
El. Top of Wall	10.0	10.0	10.0	10.0
Dimension "h"	48'-11"	49'-3"	50'-2"	49'-10"

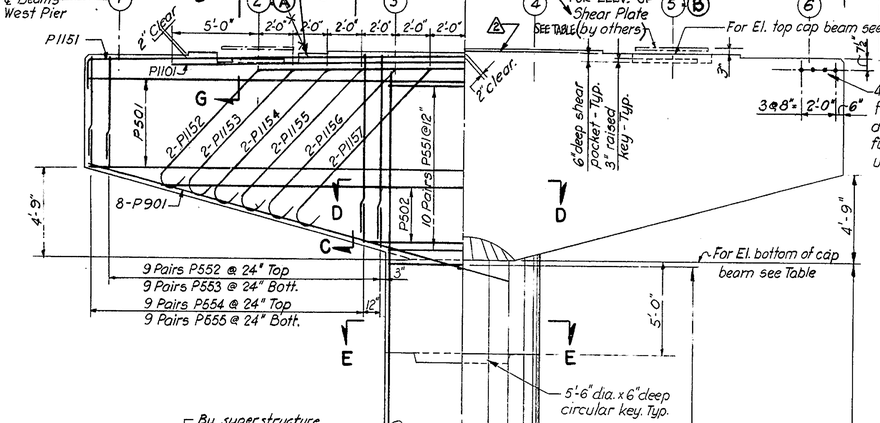

HALF SECTION A-A

HALF ELEVATION A-A

Scale: 1/4" = 1'-0"

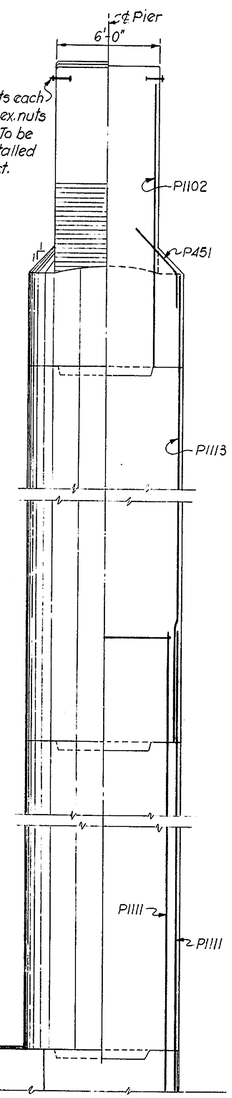

HALF ELEVATION B-B

HALF SECTION B-B

Scale: 1/4" = 1'-0"

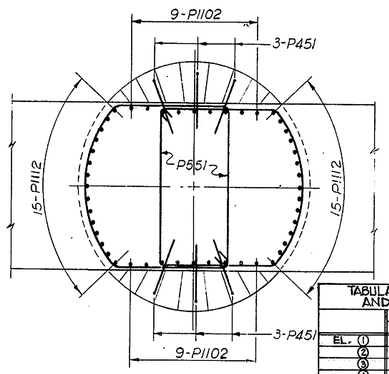

SECTION D-D

Scale: 3/8" = 1'-0"

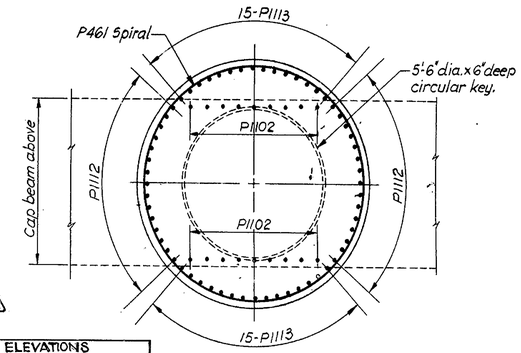

SECTION E-E

Scale: 3/8" = 1'-0"

TABULATION OF ELEVATIONS AND HEIGHTS OF PIERS	PIER NO.			
	15E	15W	18E	18W
EL. ①	69.741	70.130	71.002	70.681
②	69.908	70.296	71.168	70.848
③	70.076	70.463	71.335	71.015
④	70.242	70.630	71.502	71.182
⑤	70.242	70.630	71.502	71.182
⑥	70.075	70.464	71.336	71.015
EL. BOTTOM OF CAP BEAM	58.83	59.17	60.08	59.75
EL. TOP OF WALL	10.0	10.0	10.0	10.0
DIMENSION "h"	48'-10"	49'-2"	50'-1"	49'-9"
EL. ② A,D	70.156	70.547	71.419	71.098
EL. ⑤ B,C	70.492	70.880	71.752	71.432

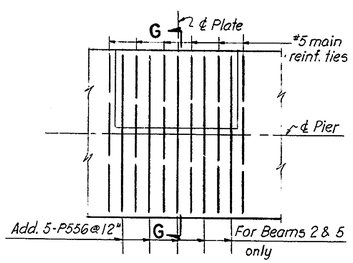

SECTION G-G

PLAN

ADDED REINFORCEMENT UNDER BEARING PLATES

Scale: 3/8" = 1'-0"

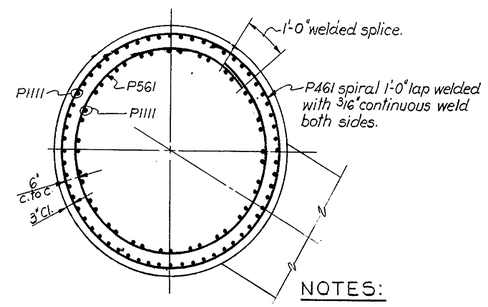

SECTION F-F

Scale: 3/8" = 1'-0"

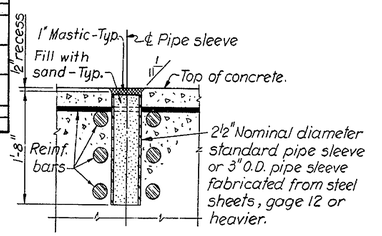

DETAIL G

ANCHOR BOLT PIPE SLEEVE

N.T.S.

NOTE: Pipe sleeves to be secured in place to assure proper location. All reinforcing to clear pipe sleeves. Anchor bolts for approach spans will be furnished and set by others.

2 COMPARED TO SUPERSTRUCTURE, ELEV. PT. ② COINCIDES WITH GIRDERS A, D & ELEV. PT. ⑤ COINCIDES WITH GIRDER A & B OF THREE SPAN GIRDER BRIDGE.

NOTES:

1. For General Notes see Sheet No. 2.
2. For Wall and Shaft details below El. 10.0' see Sheet No. 20.
3. For Reinforcement Bar Schedule see Sheet No. 31.

REVISIONS

2 Dimensions 2.2. 10/7/70

1 REVISED :: PIER ELEV & DIMENSIONS, 12-8-70 R.B.F.

DELAWARE
STATE HIGHWAY DEPARTMENT

INTERSTATE ROUTE I-495

CHRISTINA RIVER BRIDGE
PIERS 15 & 18 - EAST & WEST

J. E. GREINER CO.
MORAN, PROCTOR, MUESER & RUTLEDGE
CONSULTING ENGINEERS

D. A.L.A.
T. L.S.
C. W.W.

SCALE AS NOTED

DATE 5/14/70

APPROVED BY: John H. Little
BRIDGE ENGINEER

OGILVIE PRESS, INC. — D-137 4246

COUNTY	CONTRACT	F.E.A. REG. NO.	STATE	FED. AID PROJECT NO.	FISCAL YEAR	SHEET NO.	TOTAL SHEETS
NEW CASTLE	70-04-016	2	DEL.	I-495-3(19)15		22	46

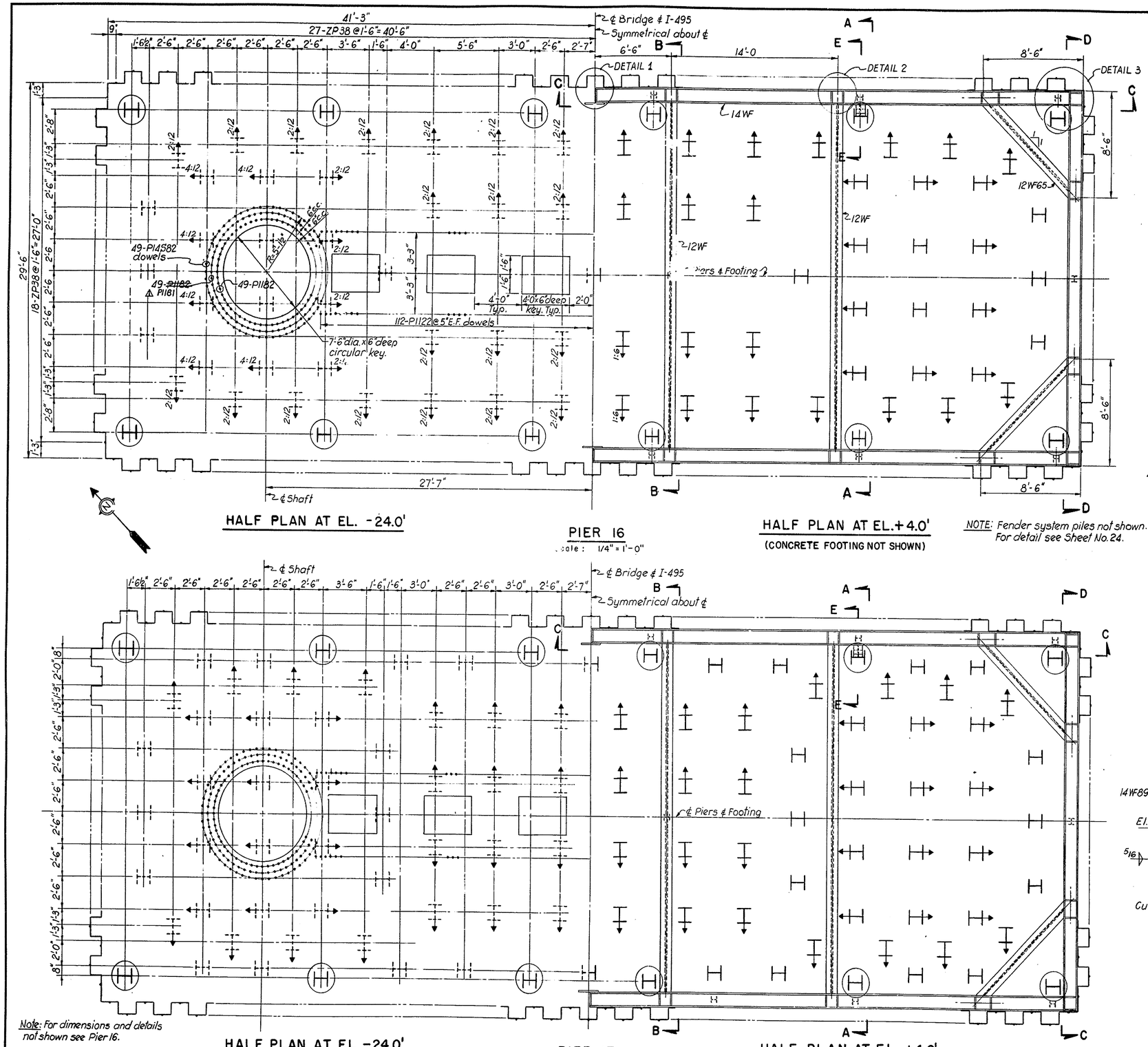

HALF PLAN AT EL. -24.0'

PIER 16
Scale: 1/4" = 1'-0"

HALF PLAN AT EL. +4.0'
(CONCRETE FOOTING NOT SHOWN)

NOTE: Fender system piles not shown. For detail see Sheet No. 24.

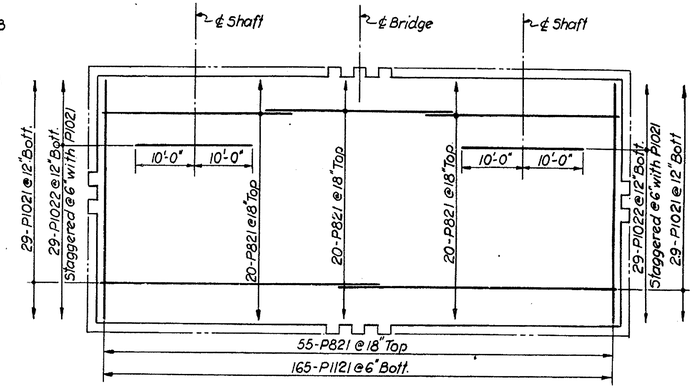

PLAN – FOOTING REINFORCEMENT
PIERS 16 & 17
N. T. S.

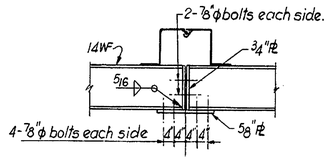

DETAIL 1
Scale: 1/2" = 1'-0"

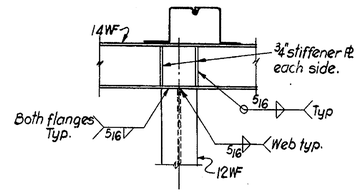

DETAIL 2
Scale: 1/2" = 1'-0"

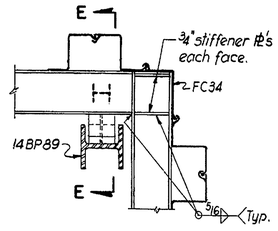

DETAIL 3
Scale: 1/2" = 1'-0"

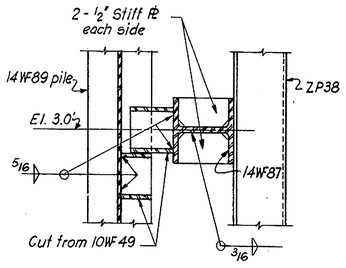

SECTION E-E
Scale: 3/4" = 1'-0"

NOTES

1. For General Notes see Sheet No. 2.
2. For Sections A-A, B-B, C-C, D-D and Detail 4 see Sheet No. 23.
3. For Pier details see Sheet No. 26.
4. For Reinforcing Bar Schedule see Sheet No. 31.
5. Piles indicated thus (H) are to be used to support the cofferdam.
6. Contractor may submit an alternate cofferdam scheme or modify individual details subject to Director's approval.

Note: For dimensions and details not shown see Pier 16.

HALF PLAN AT EL. -24.0'

PIER 17
Scale 1/4" = 1'-0"

HALF PLAN AT EL. +4.0'

REVISED: TYPE OF DOWELLS – R.B.F. 1-18-71

DELAWARE
STATE HIGHWAY DEPARTMENT

INTERSTATE ROUTE I-495

CHRISTINA RIVER BRIDGE
FOOTINGS FOR PIERS 16 & 17
PLANS & DETAILS

J. E. GREINER CO.
MORAN, PROCTOR, MUESER & RUTLEDGE
CONSULTING ENGINEERS

D.A.L.A.&W.W. T.P.F. C.W.W.	SCALE AS NOTED	APPROVED BY: John [signature]
	DATE 5/14/70	BRIDGE ENGINEER

COUNTY	CONTRACT	P. B. A. REG. NO.	STATE	FED. AID PROJECT NO.	FISCAL YEAR	SHEET NO.	TOTAL SHEETS
NEW CASTLE	70-04-016	2	DEL.	I-495-3(19)15		23	46

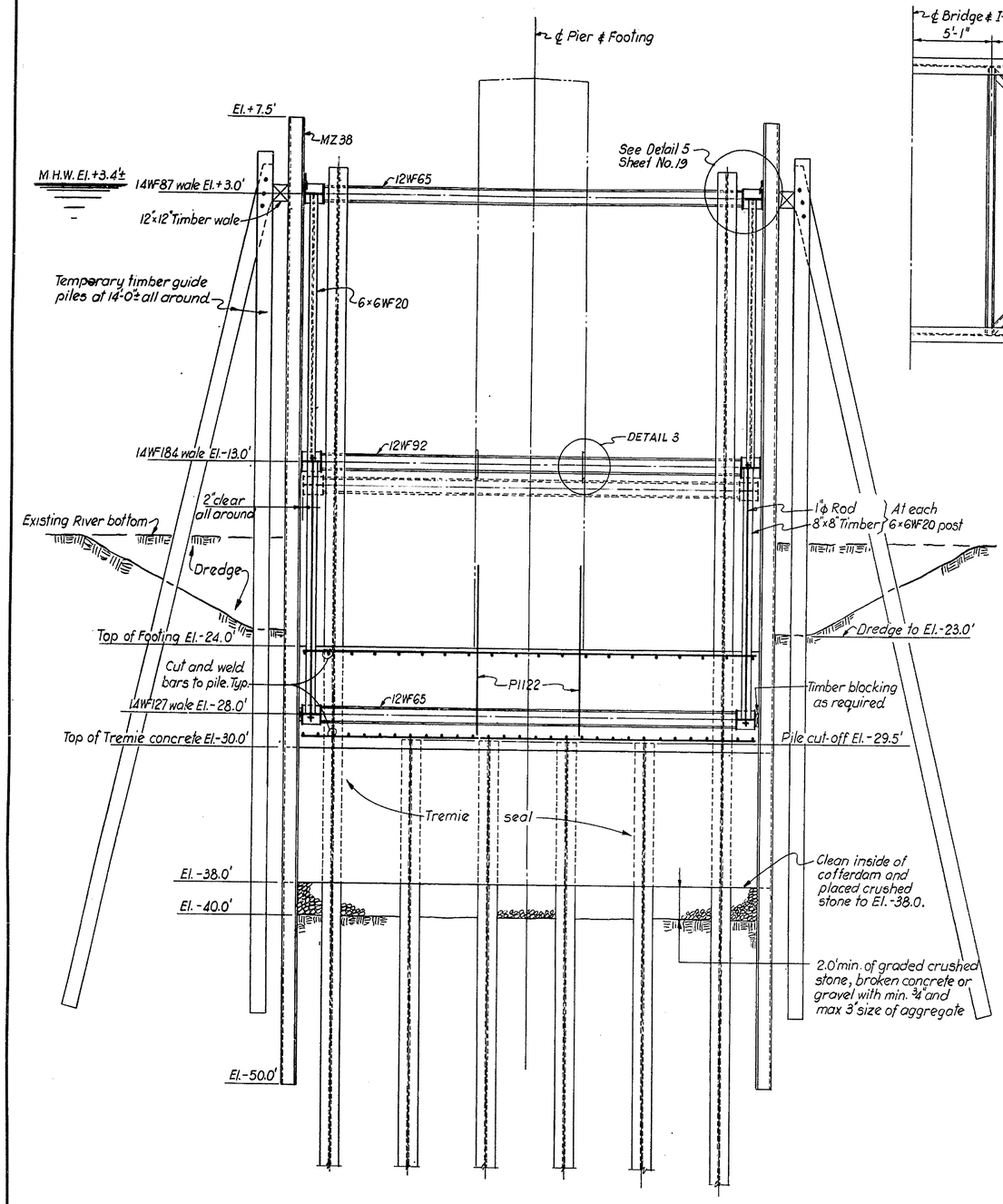

SECTION A-A

Scale : 1/4" = 1'-0"

NOTE: Fender system piles not shown. For details see Sheet No. 24.

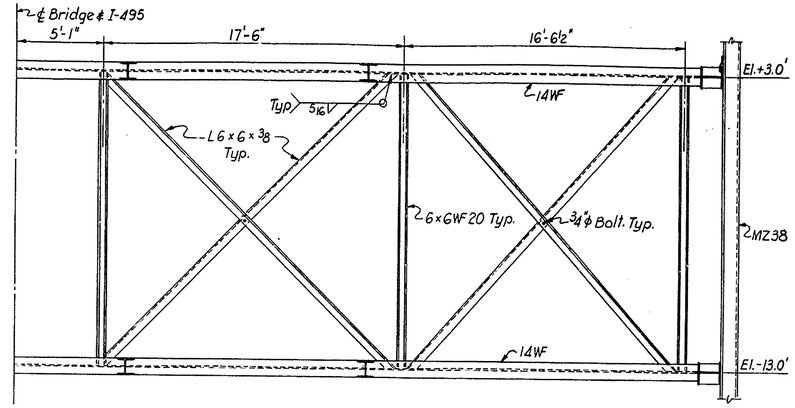

SECTION C-C

Scale : 1/4" = 1'-0"

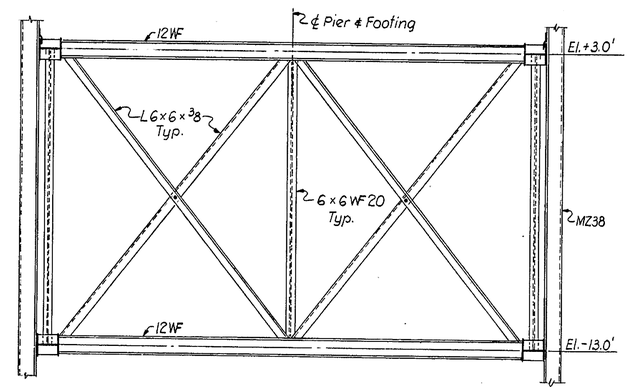

SECTION B-B (AS SHOWN)

SECTION D-D (SIMILAR)

Scale : 1/4" = 1'-0"

NOTE: Wales and struts below El.-13.0' not shown.

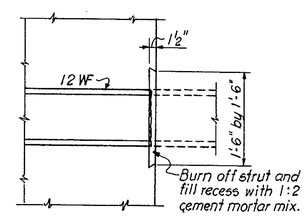

DETAIL 3

Scale : 3/4" = 1'-0"

SUGGESTED CONSTRUCTION PROCEDURE

1. Dredge river bottom to limits shown on the drawing.
2. Drive temporary timber guide piles and 12-14BP89 cofferdam supporting piles designated thus ⊕ on the Plan.
3. Preassemble two sections of the two upper tiers of braces in the shop. Hang lower tier just below brace at El.-13.0. Install preassembled sections of bracing in position and make necessary connections. Drive mooring and/or breasting dolphins to protect the cofferdam as required.
4. Install sheet piling and drive as required. Attach each sheet to the upper wale.
5. Excavate inside of cofferdam to El.-30.0 and lower third tier of bracing into place. Block and wedge as required and install posts and ties.
6. Complete excavation inside of cofferdam.
7. Drive 14 BP89 Piles.
8. Prepare bottom inside of cofferdam and place 2.0' layer of crushed stone to El.-38.0.
9. Pour Tremie concrete subfoundation as specified.
10. Dewater cofferdam.
11. Clean and chip top of tremie concrete as specified and cut-off at El.-29.5.
12. Remove tier of bracing at El.-28.0, place reinforcing steel, set steel fender supporting piles and pour concrete footing to the limits shown. Set fender struts.
13. Pour shafts and wall to El.-2.75, providing 2.0'x2.0' openings in wall around the fender struts and embedding 12WF bracing struts at El. 13.0 in the concrete wall.
14. Lower upper wale and rebrace against concrete wall below El.-3.0. Maintain corner braces as shown.
15. Install wrought iron protective plate and pour wall and shaft sections to El.+10.0. Install remaining portion of fender system in cofferdam rebracing as necessary.
16. Cut-off cofferdam supporting piles at footing level and encase protruding sections with a minimum of 4" cement mortar mixed in proportion 1:2.
17. Cut-off steel struts embedded in wall at El.-13.0 and plaster wall recess as shown in Detail 3.
18. Remove completely or cut off and remove the upper section of Sheet Piling above El.-24.0±

NOTES:

1. For General Notes see Sheet No. 2
2. Work this drawing with Sheet No. 24.
3. For Reinforcing Bar Schedule see Sheet No. 31.

REVISIONS

J. E. GREINER CO.
MORAN, PROCTOR, MUESER & RUTLEDGE
CONSULTING ENGINEERS

DELAWARE
STATE HIGHWAY DEPARTMENT

INTERSTATE ROUTE I-495

CHRISTINA RIVER BRIDGE
FOOTINGS FOR PIERS 16 & 17
SECTIONS & DETAILS

D.A.L.A.
T.P.F.
C.W.W.

SCALE AS NOTED

DATE 5/14/70

APPROVED BY: John H. Liebler
BRIDGE ENGINEER

OGILVIE PRESS, INC. — D-127

RS 2-2

COUNTY	CONTRACT	F. R. A. REG. NO.	STATE	FED. AID PROJECT NO.	FISCAL YEAR	SHEET NO.	TOTAL SHEETS
NEW CASTLE	70-04-016	2	DEL.	I-495-3(19)15		24	46

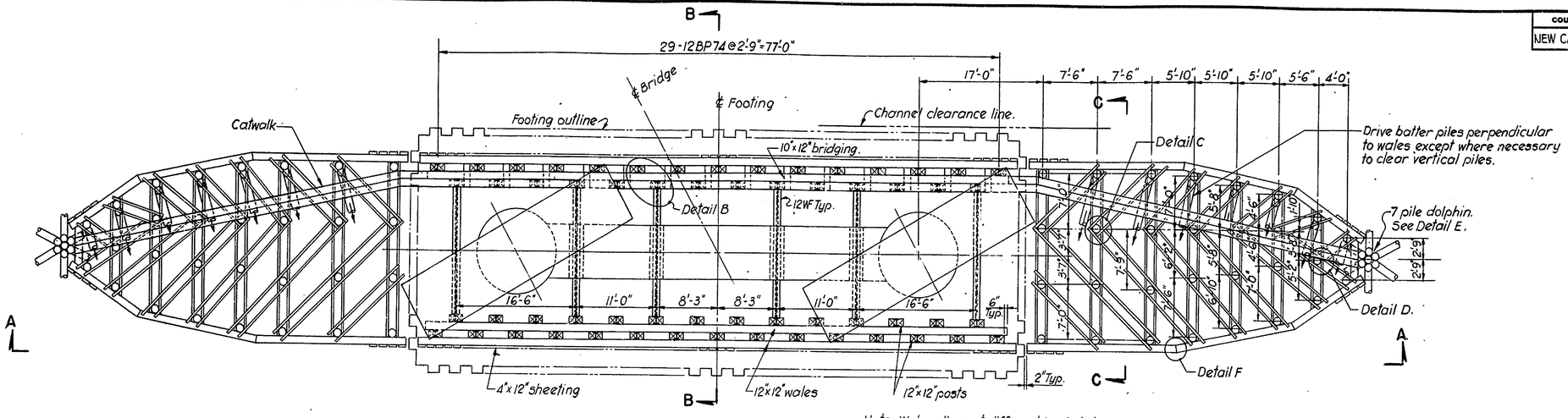

Note: Wale splices at different levels to be offset by one post space. (5'-6").

PLAN

Scale: 1/8" = 1'-0"

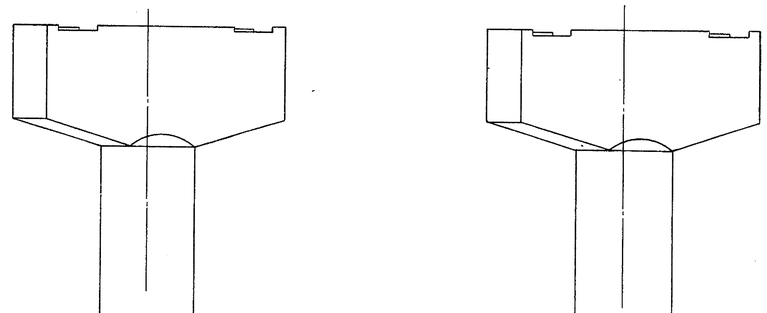

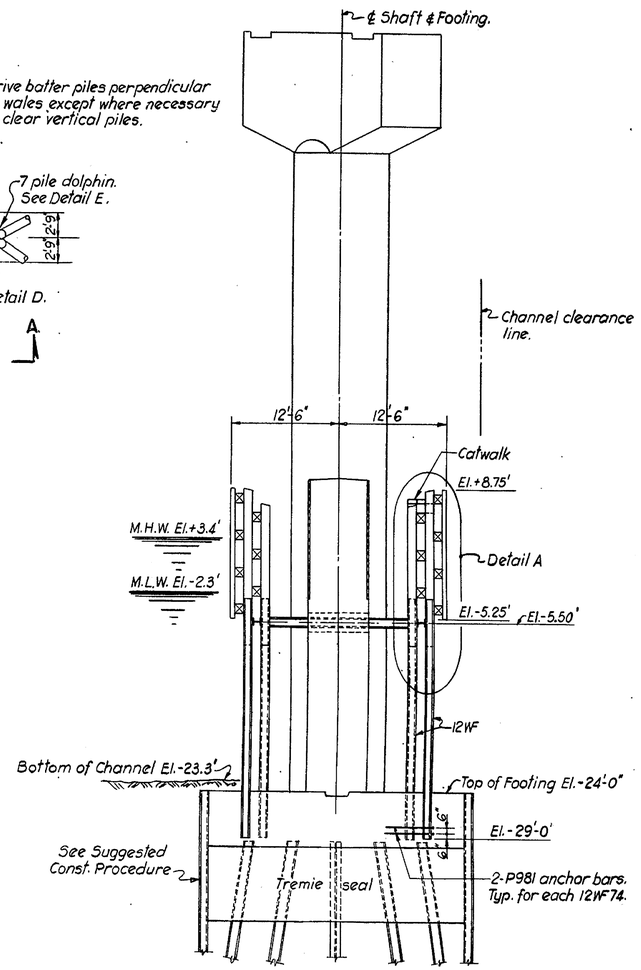

SECTION B-B

Scale: 1/8" = 1'-0"

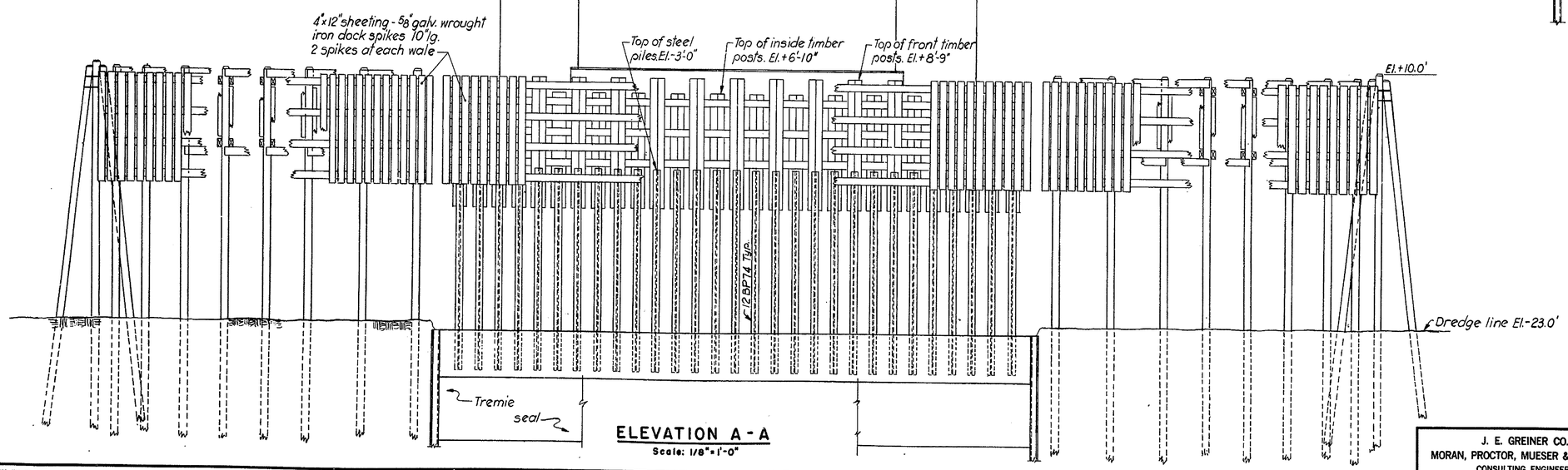

ELEVATION A-A

Scale: 1/8" = 1'-0"

NOTES

1. For General Notes see Sheet No. 2.
2. For Foundation Details of Piers 16 & 17 see Sheet No's. 26 & 27.
3. Work this drawing with Sheet No. 25.

DELAWARE
STATE HIGHWAY DEPARTMENT

INTERSTATE ROUTE I-495

CHRISTINA RIVER BRIDGE
PIERS 16 & 17 - FENDER SYSTEM
PLAN, ELEVATION & SECTION

J. E. GREINER CO.
MORAN, PROCTOR, MUESER & RUTLEDGE
CONSULTING ENGINEERS

D. I. L.
T. L. S. & P. F.
C. W. W.

SCALE AS NOTED
DATE 5/14/70

APPROVED BY: John H. Cubbage
BRIDGE ENGINEER

COUNTY	CONTRACT	P. R. A. SEQ. NO.	STATE	FED. AID PROJECT NO.	FISCAL YEAR	SHEET NO.	TOTAL SHEETS
NEW CASTLE	70-04-016	2	DEL.	I-495-3(19)15		25	46

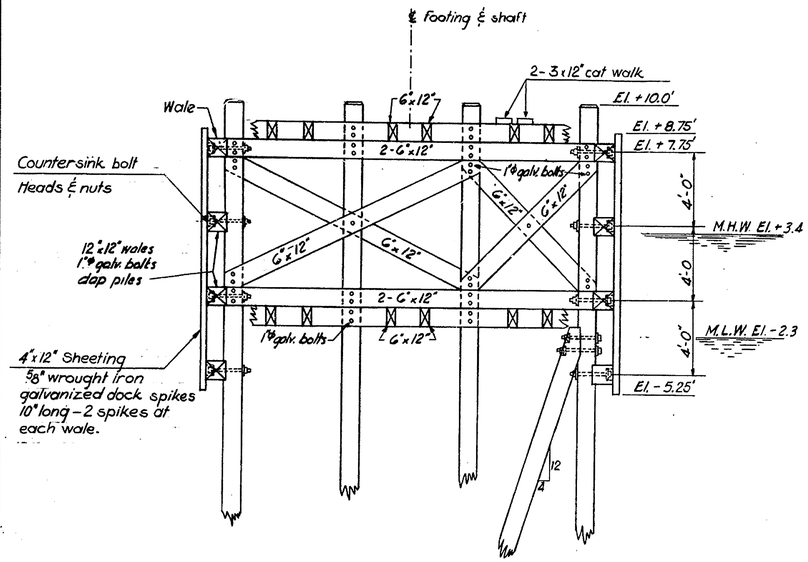

SECTION C-C

Scale: 1/4" = 1'-0"

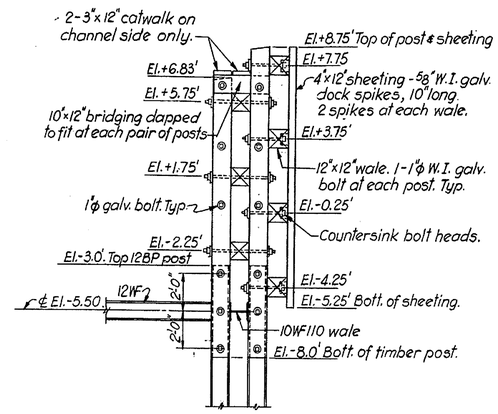

DETAIL A

Scale: 1/4" = 1'-0"

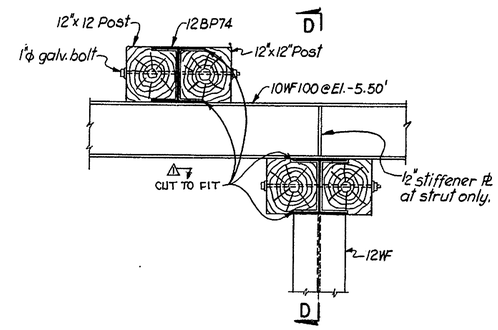

DETAIL B

Scale: 3/4" = 1'-0"

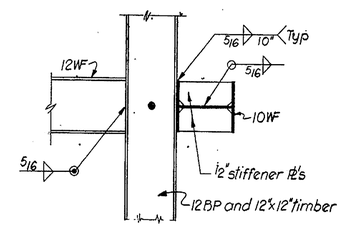

SECTION D-D

Scale: 3/4" = 1'-0"

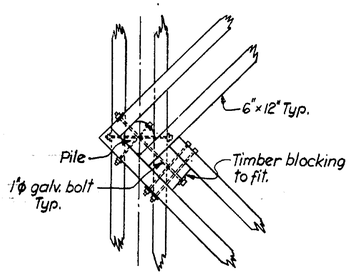

DETAIL C

N. T. S.

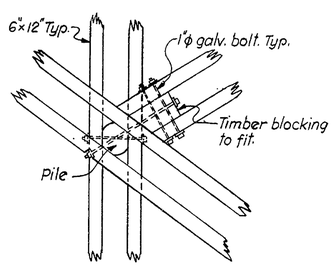

DETAIL D

N. T. S.

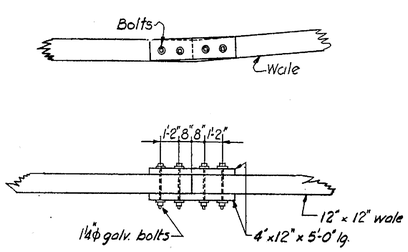

DETAIL F

TYPICAL WALE SPLICE

N. T. S.

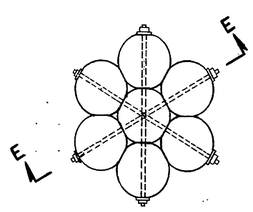

DETAIL E

N. T. S.

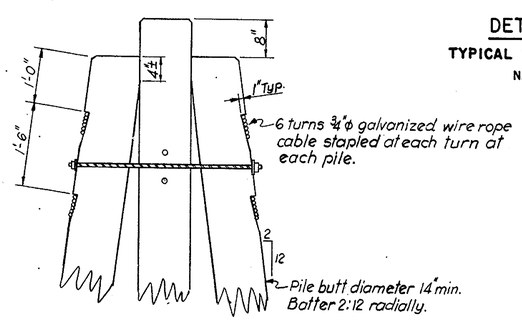

SECTION E-E

N. T. S.

NOTES

1. For General Notes see Sheet No. 2.
2. All spikes, bolts, drift pins, washers and hardware to be wrought iron or equal, galvanized.
3. Bolts to have sq. heads and ogee washer each end.
4. All treated timber piles shall be driven to develop a minimum safe bearing capacity of (10) tons by formula, but in no case shall the tip elevations be higher than El.-45.0. (See Specifications Page 39).
5. The Contractor shall furnish and maintain navigation lights, signals, gages, ranges, buoys and others markers as required by public authorities. See Special Provisions.

DELAWARE
STATE HIGHWAY DEPARTMENT

INTERSTATE ROUTE I-495

CHRISTINA RIVER BRIDGE
PIERS 16 & 17 - FENDER SYSTEM
FENDER DETAILS

J. E. GREINER CO.
MORAN, PROCTOR, MUESER & RUTLEDGE
CONSULTING ENGINEERS

D. I.L.
T. L.S.
C. W.W.

SCALE AS NOTED

DATE 5/14/70

APPROVED BY: John E. Gibbs
BRIDGE ENGINEER

REVISED: DETAIL B - R&F. 2-3-71

COUNTY	CONTRACT	P.B.A. REG. NO.	STATE	FED. AID PROJECT NO.	FISCAL YEAR	SHEET NO.	TOTAL SHEETS
NEW CASTLE	70-04-016	2	DEL.	I-495-3(19)15		26	46

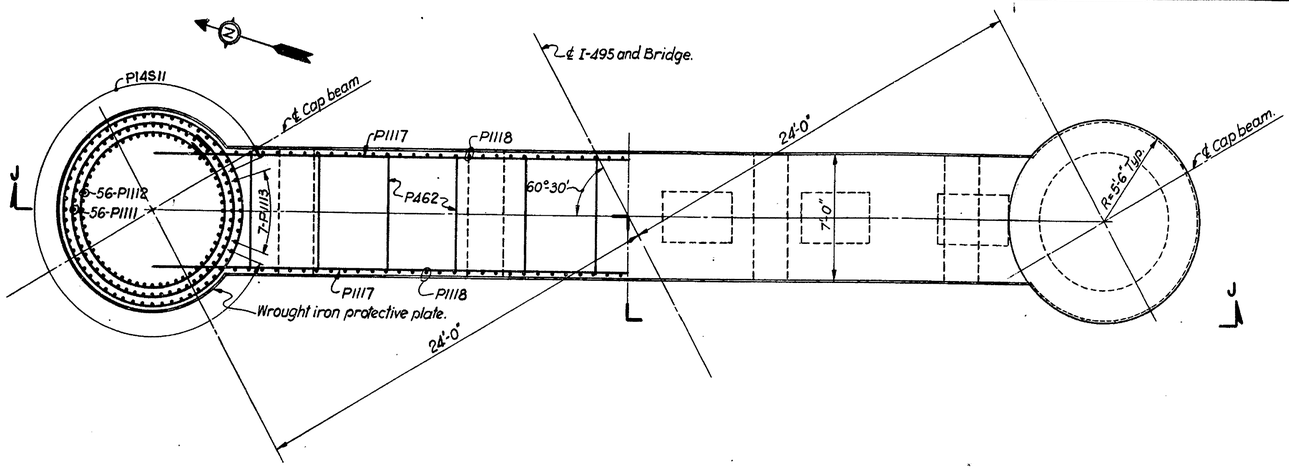

HALF SECTION H-H
Scale: 1/4" = 1'-0"

HALF TOP VIEW H-H
Scale: 1/4" = 1'-0"

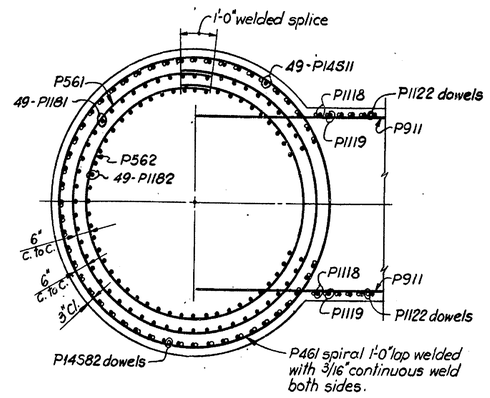

SECTION L-L
Scale: 3/8" = 1'-0"

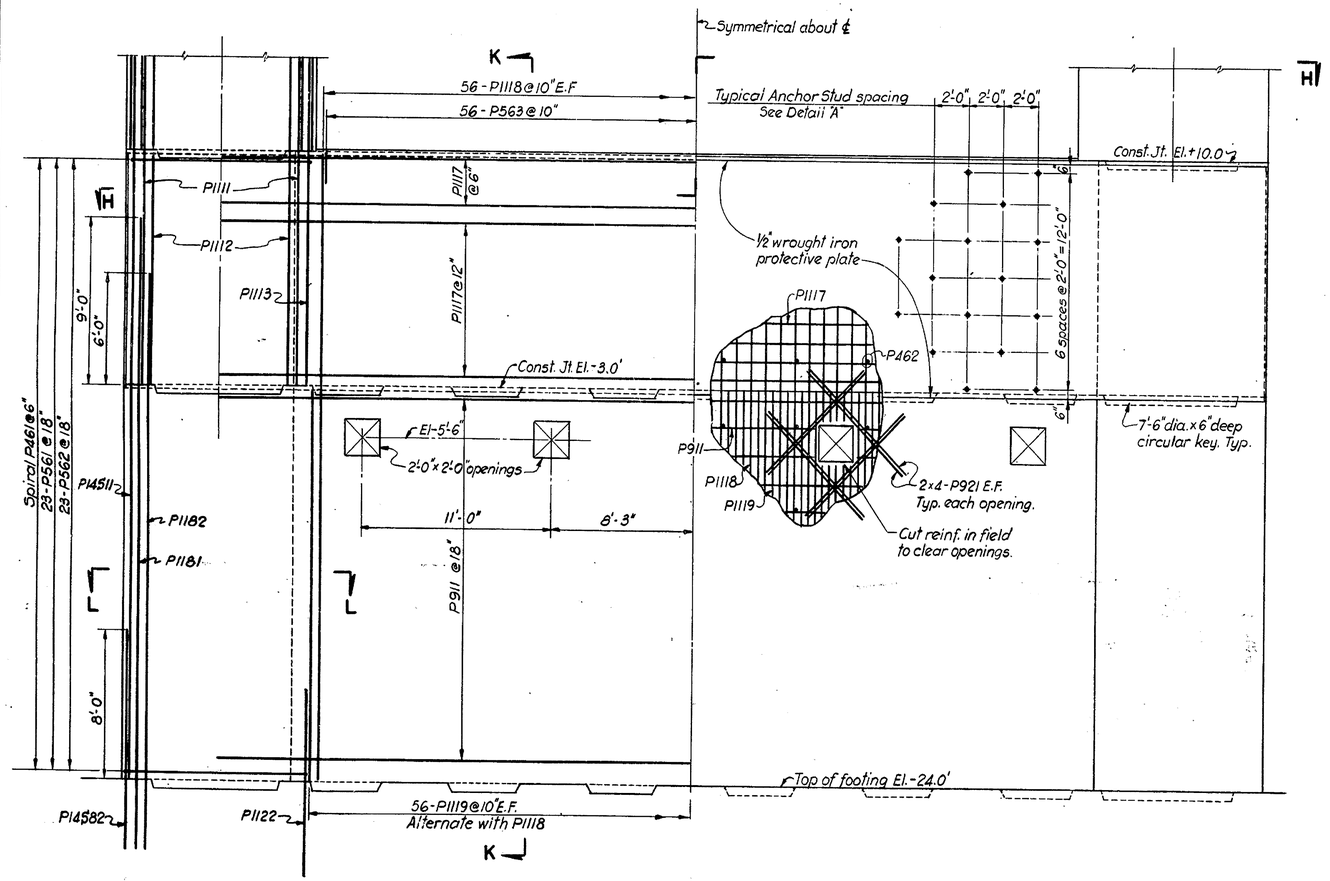

HALF SECTION J-J
Scale: 1/4" = 1'-0"

HALF ELEVATION J-J
Scale: 1/4" = 1'-0"

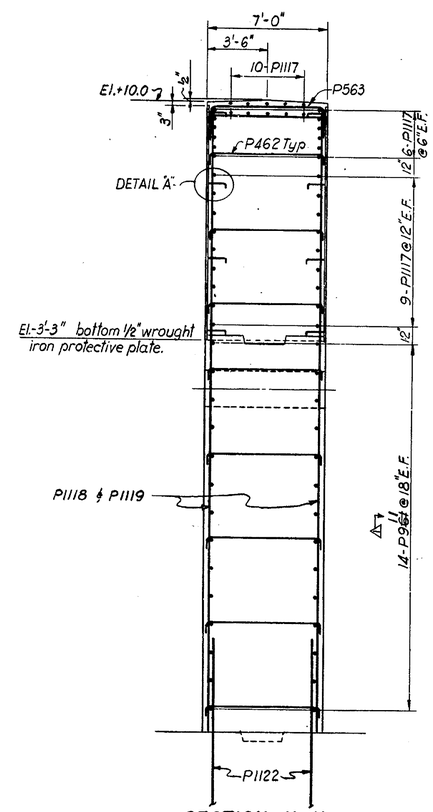

SECTION K-K
Scale: 1/4" = 1'-0"

NOTES:

1. For General Notes see Sheet No. 2.
2. For Shaft Details above El.+10.0' see Sheet No. 27.
3. For Footing Details see Sheet No. 22.
4. For Detail 'A' and Wrought Iron Plate Joint Detail see Sheet No. 20.
5. For Reinforcing Bar Schedule see Sheet No. 31.

REVISIONS
△ REVISED: BAR No., SECTION K-K — R.B.E. 2-3-71

DELAWARE
STATE HIGHWAY DEPARTMENT

INTERSTATE ROUTE I-495

CHRISTINA RIVER BRIDGE
PIERS 16 & 17 BELOW EL. 10.0'

J. E. GREINER CO.
MORAN, PROCTOR, MUESER & RUTLEDGE
CONSULTING ENGINEERS

D. A.L.A.
T. P.F.
C. W.W.

SCALE AS NOTED
DATE 5/19/70

APPROVED BY:
BRIDGE ENGINEER

COUNTY	CONTRACT	F. B. A. REG. NO.	STATE	FED. AID PROJECT NO.	FISCAL YEAR	SHEET NO.	TOTAL SHEETS
NEW CASTLE	70-04-016	2	DEL.	I-495-3(19)15		27	46

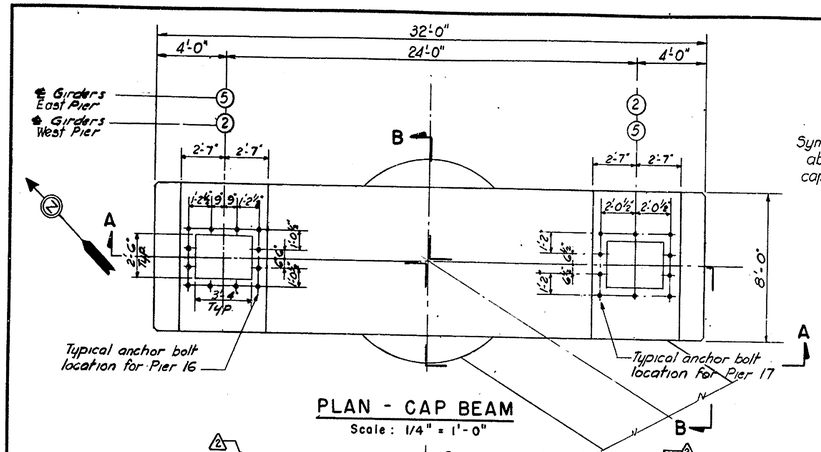

PLAN - CAP BEAM

Scale : 1/4" = 1'-0"

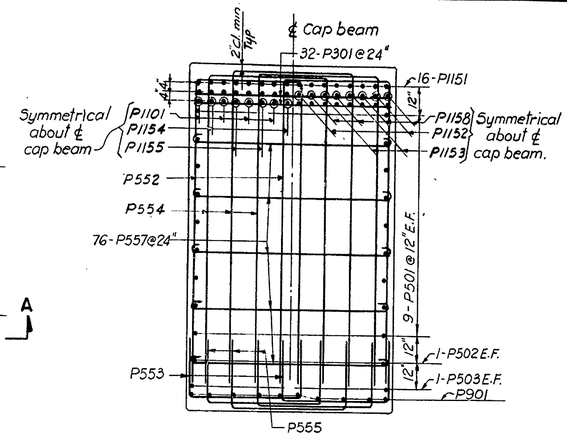

SECTION C-C

Scale : 3/8" = 1'-0"

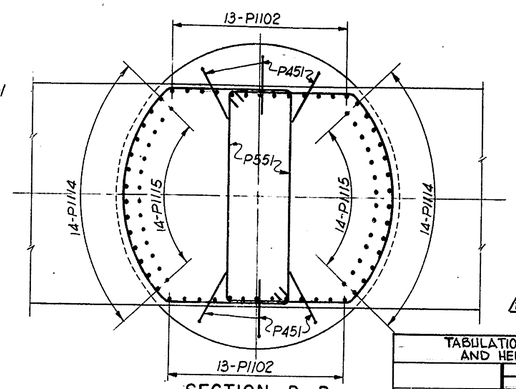

SECTION D-D

Scale : 3/8" = 1'-0"

TABULATION OF ELEVATIONS AND HEIGHTS OF PIERS	PIER NO.			
	16E	16W	17E	17W
El. ②	58.695	58.888	58.927	58.802
⑤	58.945	59.138	59.177	59.052
El. Bottom of Cap Beam	45.50	45.67	45.75	45.58
El. Top of Wall	10.00	10.00	10.00	10.00
Dimension "h"	35'-6"	35'-8"	35'-9"	35'-7"

△2 COMPARED TO SUPERSTRUCTURE ELEV. PT. ② COINCIDES WITH GIRDERS A,D AND ELEV. PT. ⑤ COINCIDES WITH GIRDERS B & C OF THREE SPAN GIRDER BRIDGE.

TABULATION OF ELEVATIONS AND HEIGHTS OF PIERS	PIER NO.			
	16E	16W	17E	17W
EL. ②=A,D	58.612	58.805	58.844	58.719
⑤=B,C	58.945	59.138	59.177	59.052
EL. BOTTOM OF CAP BEAM	45.42	45.58	45.67	45.50
EL. TOP OF WALL	10.00	10.00	10.00	10.00
DIMENSION "h"	35'-5"	35'-7"	35'-8"	35'-6"

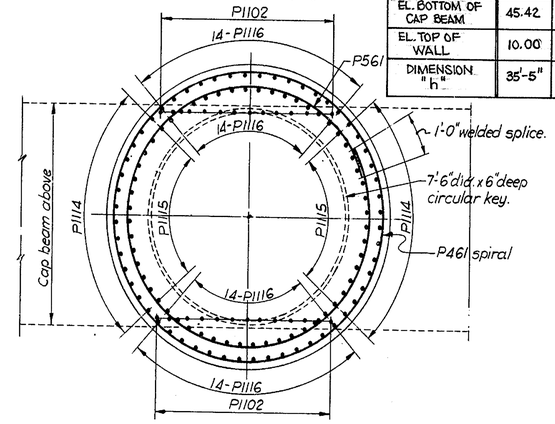

SECTION E-E

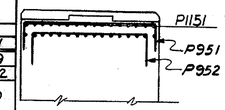

SECTION G-G

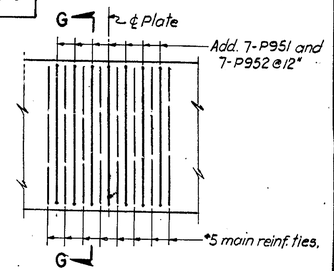

PLAN

ADDED REINFORCEMENT UNDER BEARING PLATES

Scale : 3/8" = 1'-0"

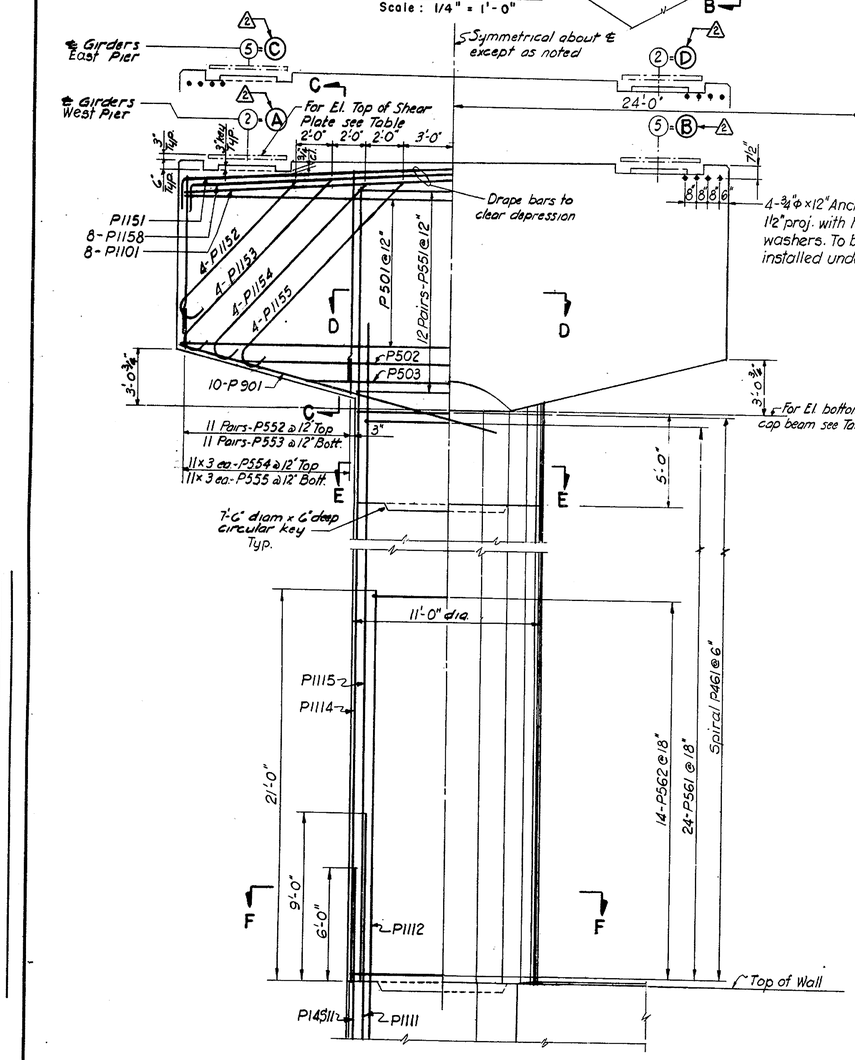

HALF SECTION A-A

HALF ELEVATION A-A

Scale : 1/4" = 1'-0"

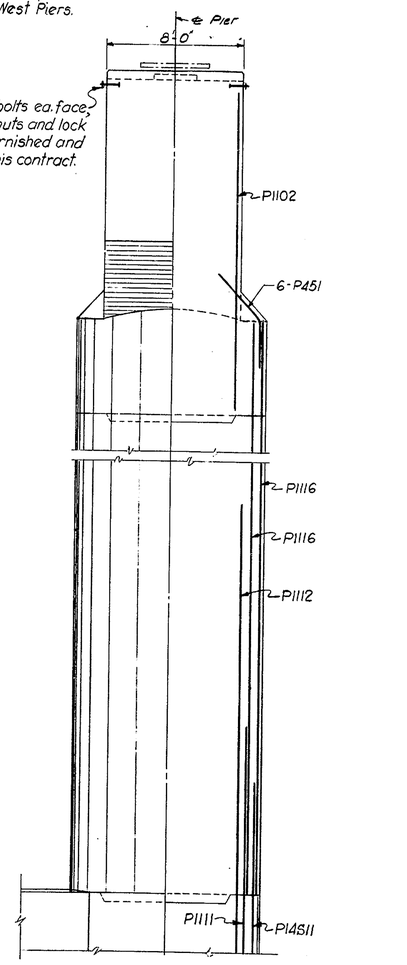

HALF ELEVATION B-B

HALF SECTION B-B

Scale : 1/4" = 1'-0"

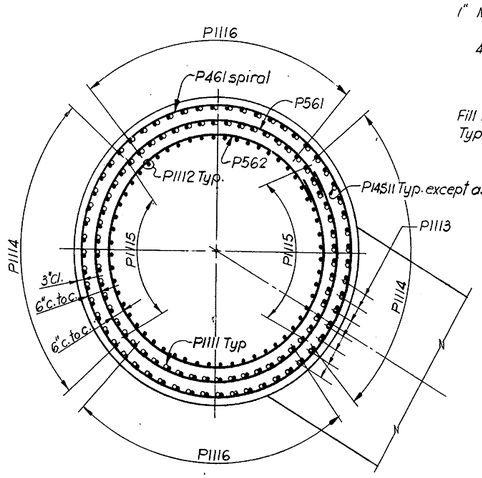

SECTION F-F

Scale : 3/8" = 1'-0"

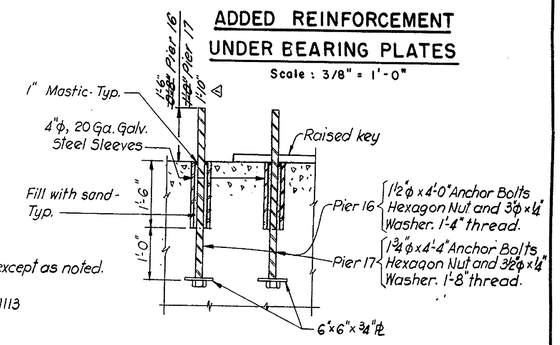

TYPICAL ANCHOR BOLT DETAIL

N.T.S.

NOTES:

For Notes see Sheet No. 26.

REVISIONS

△ Dimensions E.L. 10/7/70

△ REVISED : PIER ELEV. DIMENSIONS . 12-8-70 R.B.F.

DELAWARE
STATE HIGHWAY DEPARTMENT

INTERSTATE ROUTE I-495

CHRISTINA RIVER BRIDGE
PIERS 16 & 17 - EAST & WEST

J. E. GREINER CO.
MORAN, PROCTOR, MUESER & RUTLEDGE
CONSULTING ENGINEERS

D. A.L.A.
T. L.S.
C. W.W.

SCALE AS NOTED

DATE 5/19/70

APPROVED BY: John E. Gibbs
BRIDGE ENGINEER

GOILVIE PRESS, INC. — D-187 4146

COUNTY	CONTRACT	P. B. A. REG. NO.	STATE	FED. AID PROJECT NO.	FISCAL YEAR	SHEET NO.	TOTAL SHEETS
NEWCASTLE	70-04-016	2	DEL.	I-495-3(19)15		28	46

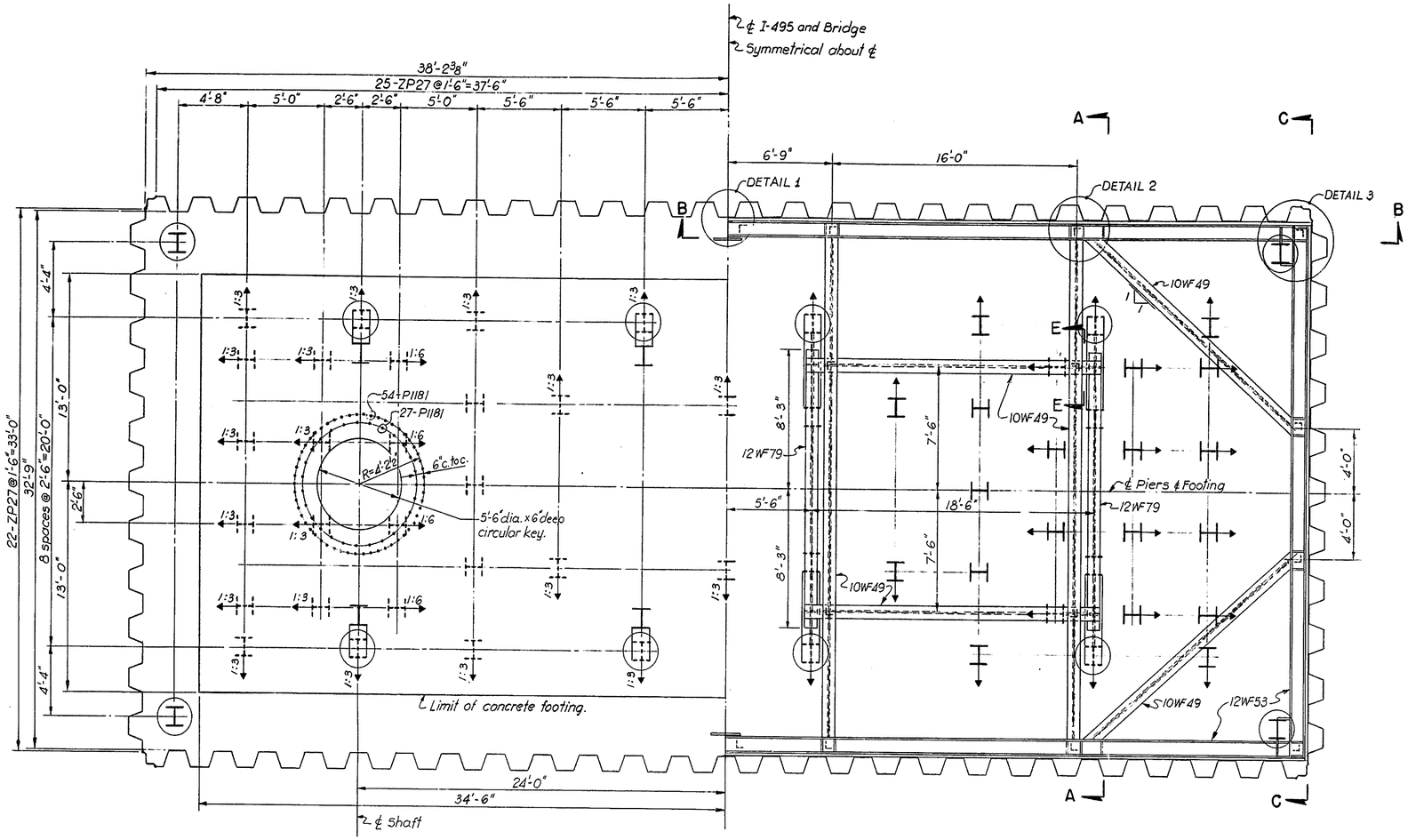

HALF PLAN AT EL. -3.0'

Scale: 1/4" = 1'-0"

HALF PLAN AT EL. +7.0'

(CONCRETE FOOTING NOT SHOWN)

Scale: 1/4" = 1'-0"

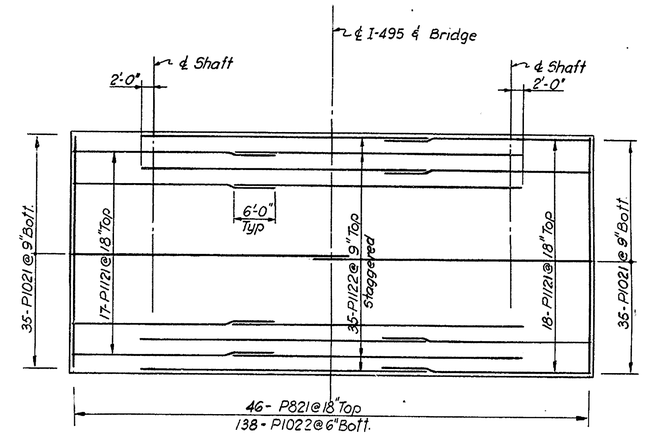

PLAN - FOOTING REINFORCING

N.T.S.

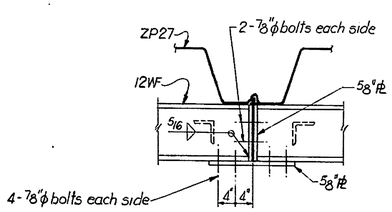

DETAIL 1

Scale: 3/4" = 1'-0"

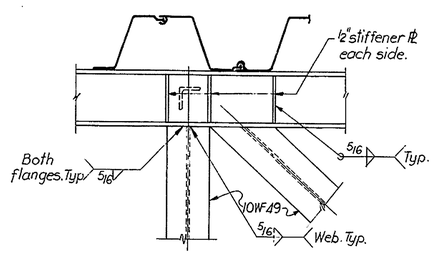

DETAIL 2

Scale: 3/4" = 1'-0"

NOTES

1. For General Notes see Sheet No. 2.
2. Work this Sheet with Sheet No. 29.
3. For Detail No. 3 see Sheet No. 19.
4. For Pier Details see Sheet No. 30.
5. For Reinf. Bar Schedule see Sheet No. 31.
6. Contractor may submit an alternate cofferdam scheme or modify individual details subject to Director's approval.

REVISIONS

DELAWARE
STATE HIGHWAY DEPARTMENT

INTERSTATE ROUTE I-495

CHRISTINA RIVER BRIDGE
FOOTING FOR PIER 19
PLAN & DETAILS

J. E. GREINER CO.
MORAN, PROCTOR, MUESER & RUTLEDGE
CONSULTING ENGINEERS

D. I.L.
T. P.F.
C. W.W.

SCALE AS NOTED

DATE 5/19/70

APPROVED BY: John E. Richter
BRIDGE ENGINEER

COUNTY	CONTRACT	F. B. A. REG. NO.	STATE	FED. AID PROJECT NO.	FISCAL YEAR	SHEET NO.	TOTAL SHEETS
NEW CASTLE	70-04-016	2	DEL.	I-495-3(19)15		29	46

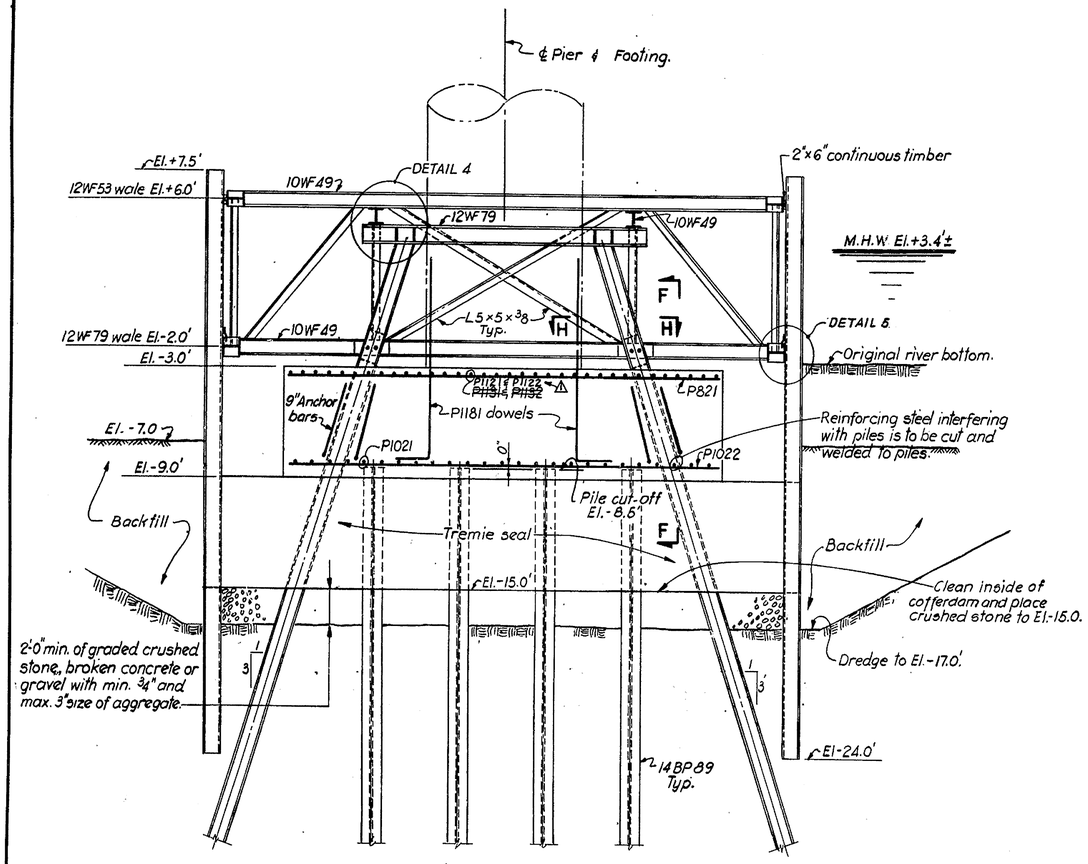

SECTION A-A

Scale: 1/4" = 1'-0"

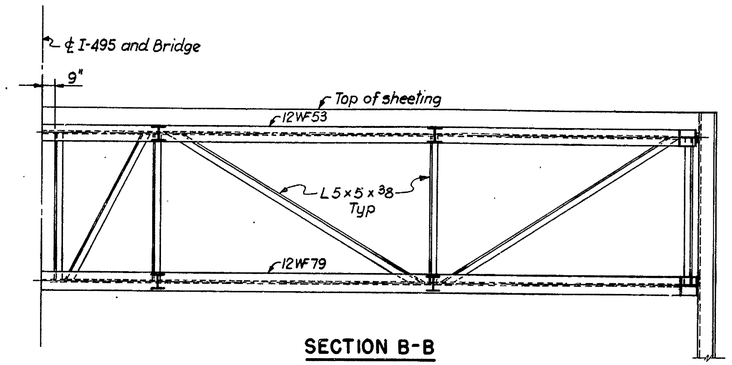

SECTION B-B

Scale: 1/4" = 1'-0"

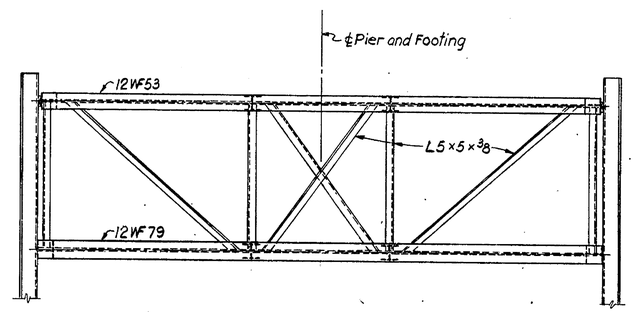

SECTION C-C

Scale: 1/4" = 1'-0"

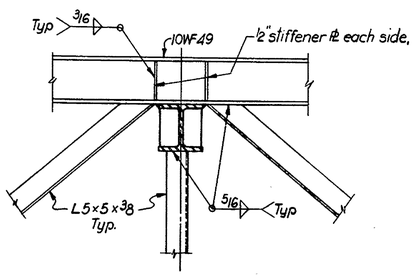

SECTION E-E

Scale: 3/4" = 1'-0"

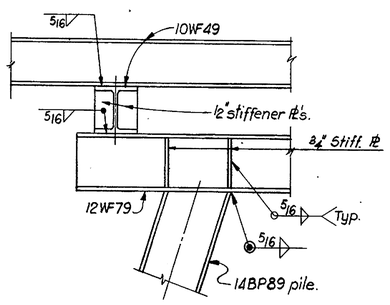

DETAIL 4

Scale: 3/4" = 1'-0"

NOTES

1. For General Notes see Sheet No. 2.
2. Work this sheet with Sheet No. 28
3. For Sections F-F, H-H and Detail 5 see Sheet No. 19.
4. For Pier Details see Sheet No. 30.
5. For Reinforcing Schedule see Sheet No. 31.
6. For Suggested Construction Procedure see Sheet No. 19.

DELAWARE STATE HIGHWAY DEPARTMENT			
INTERSTATE ROUTE I-495			
CHRISTINA RIVER BRIDGE FOOTING FOR PIER 19 SECTIONS & DETAILS			
J. E. GREINER CO. MORAN, PROCTOR, MUESER & RUTLEDGE CONSULTING ENGINEERS	D. A.L.A. T. P.F. C. W.W.	SCALE AS NOTED DATE 5/19/70	APPROVED BY: John H. Cubbis BRIDGE ENGINEER

29

△1 REVISED - DWG. INT. SECTION A-A — R.B.F. 2-3-71

COUNTY	CONTRACT	P.R.A. REG. NO.	STATE	FED. AID PROJECT NO.	FISCAL YEAR	SHEET NO.	TOTAL SHEETS
NEW CASTLE	70-04-016	2	DEL.	I-495-3(19)15		30	46

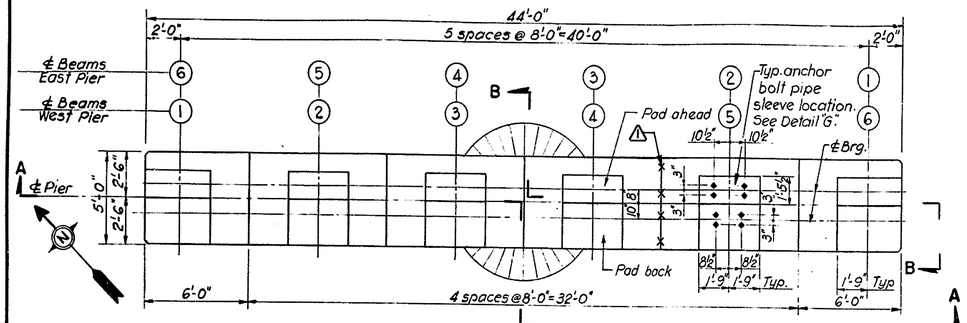

PLAN - CAP BEAM (WEST PIER)

Scale: 1/4" = 1'-0"

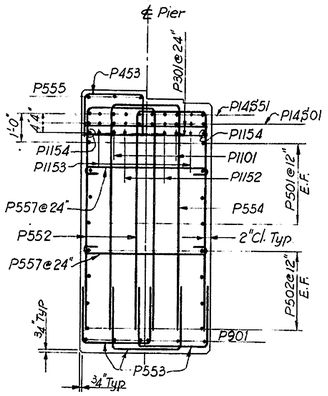

SECTION C - C

Scale: 3/8" = 1'-0"

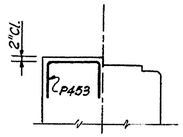

SECTION H - H

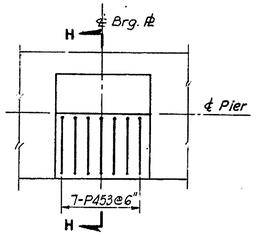

PLAN

GRILLAGE UNDER BEARING PLATES

Scale: 3/8" = 1'-0"

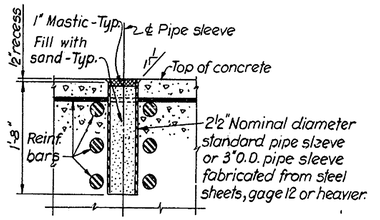

DETAIL G
ANCHOR BOLT PIPE SLEEVE

N.T.S.

NOTE: Pipe sleeves to be secured in place to assure proper location. All reinf. to clear pipe sleeves. Anchor bolts for approach spans will be furnished and set by others.

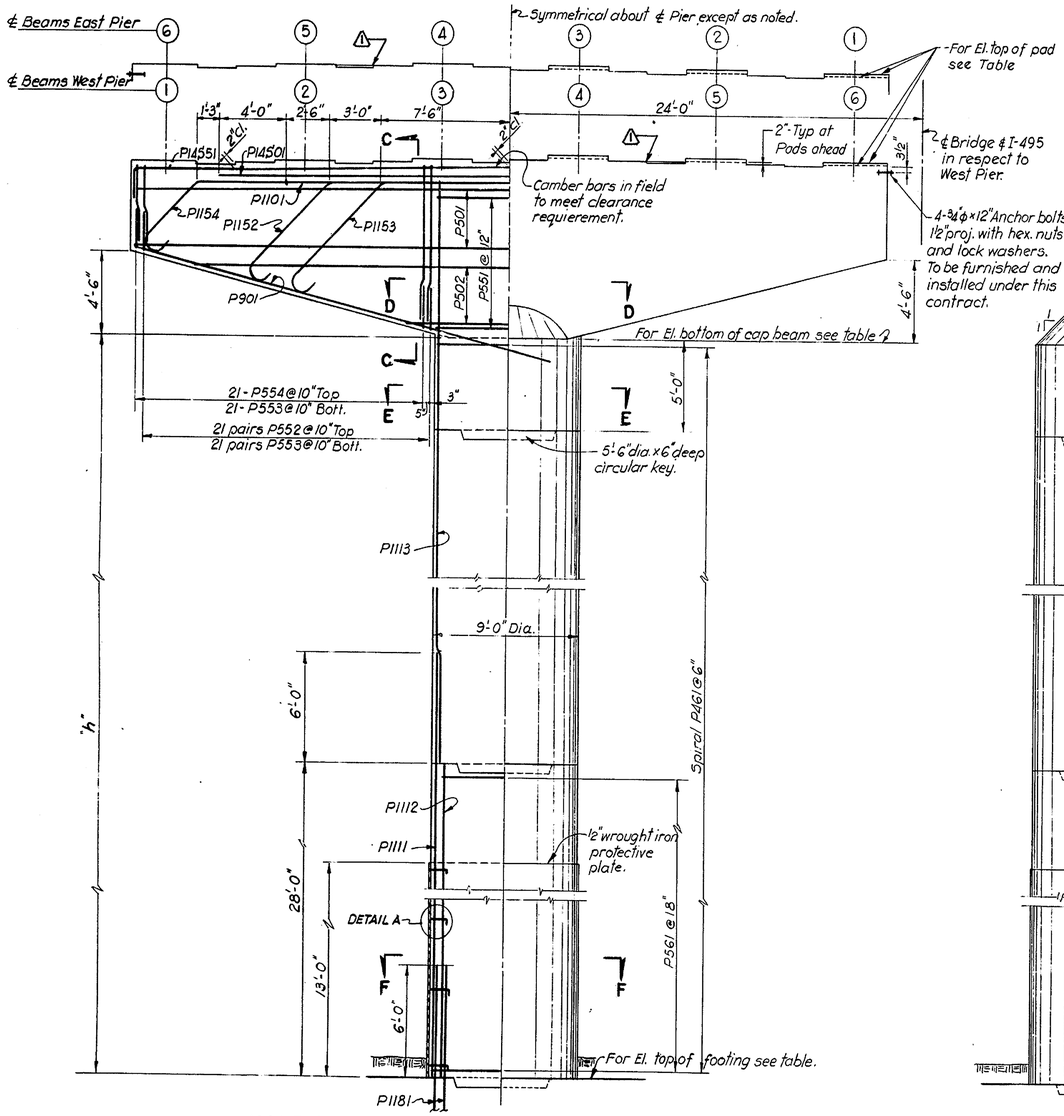

HALF SECTION A-A HALF ELEVATION A-A

Scale: 1/4" = 1'-0"

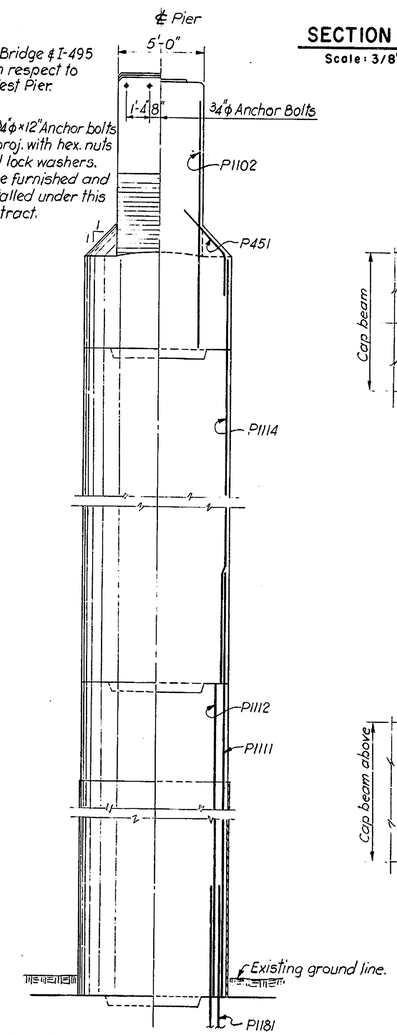

HALF ELEVATION B-B HALF SECTION B-B

Scale: 1/4" = 1'-0"

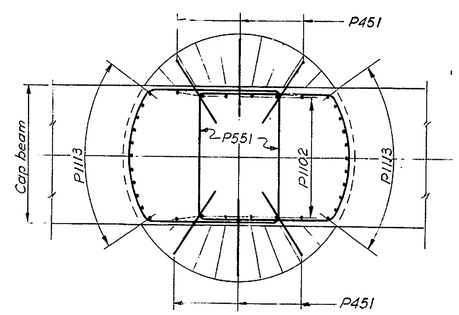

SECTION D-D

Scale: 3/8" = 1'-0"

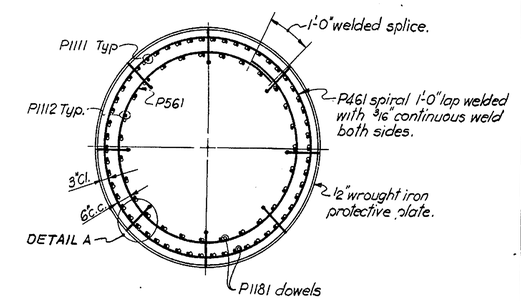

SECTION F-F

Scale: 3/8" = 1'-0"

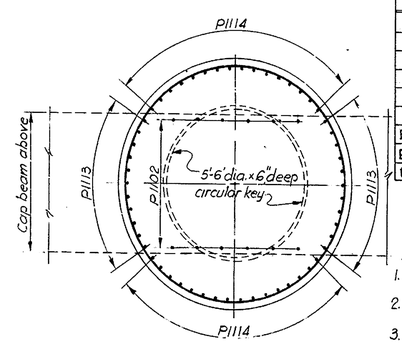

SECTION E-E

Scale: 3/8" = 1'-0"

TABULATION OF ELEVATIONS AND HEIGHTS OF PIERS	AHEAD	BACK EAST	BACK WEST
EL. TOP OF PAD ①	71.680	71.977	71.997
②	71.847	72.143	72.164
③	72.013	72.310	72.331
④	72.180	72.476	72.497
⑤	72.180	72.476	72.497
⑥	72.013	72.310	72.330
EL. BOTTOM OF CAP BEAM	—	62.33	62.33
EL. TOP OF FOOTING	—	-3.00	-3.00
DIMENSION "h"	—	65'-4"	65'-4"

TABULATION OF ELEVATIONS AND HEIGHTS OF PIERS	Ahead	Back East	Back West
El. Top of Pad ①	71.763	72.060	72.080
②	71.930	72.226	72.247
③	72.096	72.393	72.414
④	72.263	72.560	72.580
⑤	72.180	72.476	72.497
⑥	72.013	72.310	72.330
El. bottom of cap beam	—	62.42	62.42
El. top of footing	—	-3.00	-3.00
Dimension "h"	—	65'-5"	65'-5"

NOTES:

1. For General Notes see Sheet No. 2.
2. For Footing Details see Sheet No. 28.
3. For Reinforcing Bar Schedule see Sheet No. 31.
4. For Detail "A" and Wrought Iron Plate Joint Detail see Sheet No. 20.

DELAWARE
STATE HIGHWAY DEPARTMENT

INTERSTATE ROUTE I-495

CHRISTINA RIVER BRIDGE
PIER 19 - EAST & WEST

J. E. GREINER CO.
MORAN, PROCTOR, MUESER & RUTLEDGE
CONSULTING ENGINEERS

D. S.L.T.
T. P.F.
C. W.W.

SCALE AS NOTED

DATE 5/4/70

APPROVED BY: John H. Fickes
BRIDGE ENGINEER

REVISED: PIER ELEV/DIMENSIONS, 12-8-70 R.B.F.

COUNTY	CONTRACT	P. R. A. REG. NO.	STATE	FED. AID PROJECT NO.	FISCAL YEAR	SHEET NO.	TOTAL SHEETS
NEW CASTLE	70-04-016	2	DEL.	I-495-3(19)15		31	46

STRAIGHT BARS

	PIER		15		16		17		18		19		
	MARK	SIZE	REQUIRED	LENGTH	REQUIRED	LENGTH	REQUIRED	LENGTH	REQUIRED	LENGTH	REQUIRED	LENGTH	REMARKS
CAP BEAMS	P301	#3	60	5-8	64	7-8	64	7-8	60	5-8	64	4-8	
	P501	#5	24	43-8	36	31-8	36	31-8	24	43-8	16	43-8	
	P502	#5	16	11-6 to 35-6	4	22-6	4	22-6	16	11-6 to 35-6	16	13-0 to 37-0	INCREMENT 5'-0" 4 BARS OF EACH
	P503	#5		-	4	14-6	4	14-6		-		-	
	P901	#9	32	25-0	40	18-9	40	18-9	32	25-0	24	25-0	
	P1101	#11	24	34-0	16	31-6	16	31-6	24	34-0	4-8	26-0	
	P1102	#11	36	15-3	52	17-0	52	17-0	36	15-3	24	13-6	
	P14S01	#14S		-		-		-		-	20	34-0	
SHAFTS	P1111	#11	200	40-0	112	21-9	112	21-9	200	40-0	108	34-0	
	P1112	#11	60	40-3	112	33-9	112	33-9	60	41-1	54	28-0	
	P1113	#11	60	29-9	14	18-9	14	18-9	60	30-8	44	46-0	
	P1114	#11		-	56	48-0	56	48-0		-	64	37-6	
	P1115	#11		-	56	40-0	56	40-0		-		-	
	P1116	#11		-	112	35-6	112	35-6		-		-	
	P14S11	#14S		-	98	40-0	98	40-0		-		-	
WALLS	P311	#3	16	4-6		-		-	16	4-6		-	
	P911	#9	64	14-9	28	55-0	28	55-0	64	14-9		-	
	P912	#9	36	55-0		-		-	36	55-0		-	
	P1117	#11		-	40	55-0	40	55-0		-		-	
	P1118	#11		-	112	33-10	112	33-10		-		-	
	P1119	#11		-	112	20-9	112	20-9		-		-	
	P1120	#11	8	55-0		-		-	8	55-0		-	
FOOTINGS	P821	#8	16	30-0	115	29-0	115	29-0	16	30-0	46	25-6	
	P822	#8	32	27-0		-		-	32	27-0		-	
	P823	#8	53	23-0		-		-	53	23-0		-	
	P921	#9	64	7-0	64	8-0	64	8-0	64	7-0		-	
	P1021	#10	48	41-0	58	42-7	58	42-7	48	41-0	70	36-0	
	P1022	#10	32	23-0	58	20-0	58	20-0	32	23-0	138	25-6	
	P1121	#11	72	23-0	165	29-0	165	29-0	72	23-0	35	26-3	
	P1122	#11		-	224	10-0	224	10-0		-	35	40-0	

BENT BARS (ALL DIMENSIONS ARE OUT TO OUT)

	PIER		15		16		17		18		19		
	MARK	SIZE	REQUIRED	LENGTH	REQUIRED	LENGTH	REQUIRED	LENGTH	REQUIRED	LENGTH	REQUIRED	LENGTH	REMARKS
CAP BEAMS	P451	#4	12	5-3	12	5-5	12	5-5	12	5-3	12	6-0	
	P453	#4		-		-		-		-	84	5-8	
	P551	#5	40	21-10	48	26-9	48	26-9	40	21-10	36	21-3	
	P552	#5	72	15-5 to 23-5	88	21-4 to 26-4	88	21-4 to 26-4	72	15-5 to 23-5	168	10-10 to 19-2	
	P553	#5	72	9-3	88	9-2	88	9-2	72	9-3	252	7-2	
	P554	#5	72	15-6 to 23-6	132	21-10 to 26-10	132	21-10 to 26-10	72	15-6 to 23-6	84	10-8 to 19-0	
	P555	#5	72	9-10	132	9-8	132	9-8	72	9-10	36	6-8	
	P556	#5	20	8-8		-		-	20	8-8		-	
	P557	#5	156	6-10	152	8-10	152	8-10	156	6-10	80	5-10	
	P951	#9		-	28	10-8	28	10-8		-		-	
	P952	#9		-	28	9-8	28	9-8		-		-	
	P1151	#11	24	46-8	32	34-8	32	34-8	24	46-8		-	
	P1152	#11	4	43-10	8	40-10	8	40-10	4	43-10	4	38-2	
	P1153	#11	4	41-2	8	41-6	8	41-6	4	41-2	4	33-10	
	P1154	#11	4	38-4	8	38-0	8	38-0	4	38-4	4	48-8	
	P1155	#11	4	35-6	8	35-6	8	35-6	4	35-6		-	
	P1156	#11	4	32-10		-		-	4	32-10		-	
	P1157	#11	4	30-0		-		-	4	30-0		-	
	P1158	#11		-	16	33-8	16	33-8		-		-	
	P14S51	#14S		-		-		-		-	20	46-8	
SHAFTS	P461	#4	2	3560-0	2	4890-0	2	4890-0	2	3560-0	2	3700-0	
	P561	#5	52	24-7	94	30-10	94	30-10	52	24-7	38	24-6	
	P562	#5		-	74	27-9	74	27-9		-		-	
WALLS	P462	#4	48	5-4	108	7-4	108	7-4	48	5-4		-	
	P563	#5	32	7-8	56	9-8	56	9-8	32	7-8		-	
FOOTINGS	P981	#9		-	118	10-1	118	10-1		-		-	
	P1181	#11	~~100~~ 200	12-6	98	37-9	98	37-9	~~100~~ 200	12-6	162	13-6	
	P1182	#11		-	98	34-9	98	34-9		-		-	
	P14S82	#14S		-	98	15-6	98	15-6		-		-	

NOTES

1. For General Notes see Sheet No. 2.
2. For Reinforcing Bar Details see Sheet No. 32.

REVISIONS
△ REVISED: QUANTITIES — R&F. 1-18-71

J. E. GREINER CO.
MORAN, PROCTOR, MUESER & RUTLEDGE
CONSULTING ENGINEERS

D. P. F.
T. V.R.W.
C. W.W.

SCALE NONE
DATE 5/14/70

APPROVED BY: John H. Cubbins
BRIDGE ENGINEER

DELAWARE
STATE HIGHWAY DEPARTMENT

INTERSTATE ROUTE I-495

CHRISTINA RIVER BRIDGE
BAR REINFORCING SCHEDULE
PIERS 15 TO 19

OGILVIE PRESS, INC. — D-127 2483

COUNTY	CONTRACT	F. B. A. REG. NO.	STATE	FED. AID PROJECT NO.	FISCAL YEAR	SHEET NO.	TOTAL SHEETS
NEW CASTLE	70-04-016	2	DEL.	I-495-3(19)15		32	46

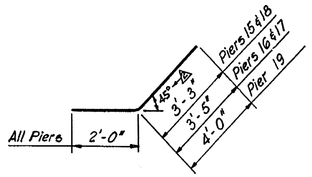

P451

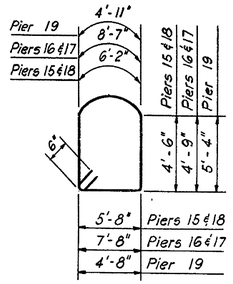

P551

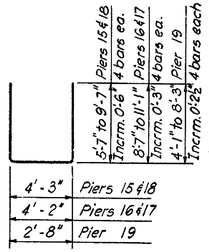

P552

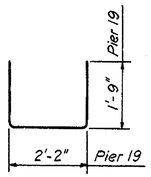

P453

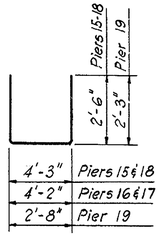

P553

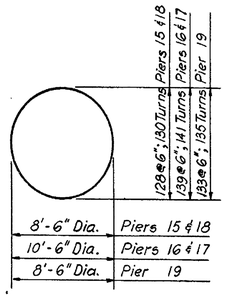

P461

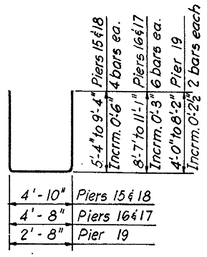

P554

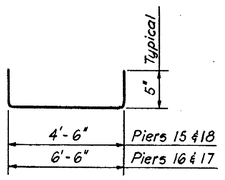

P462

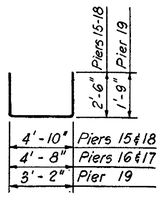

P555

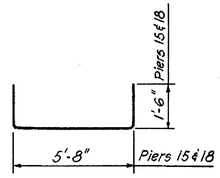

P556

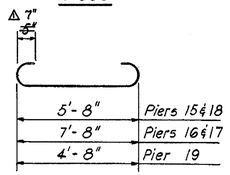

P557

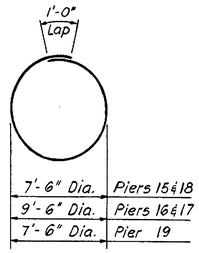

P561

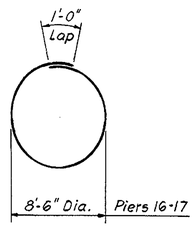

P562

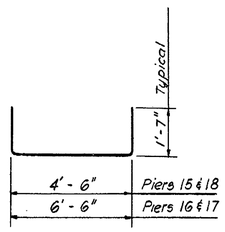

P563

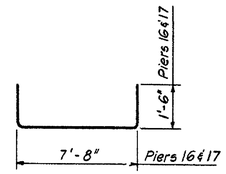

P951

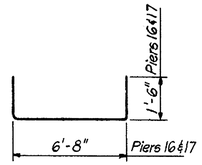

P952

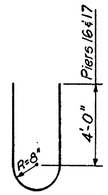

P981

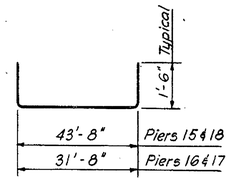

P1151

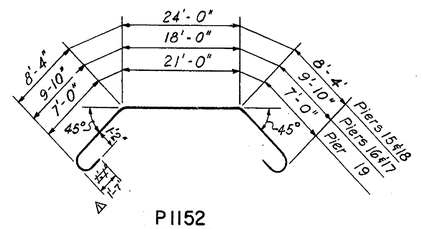

P1152

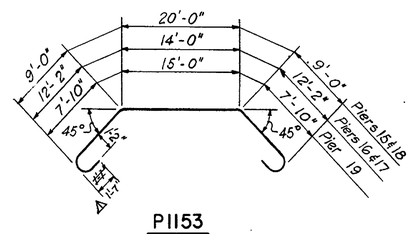

P1153

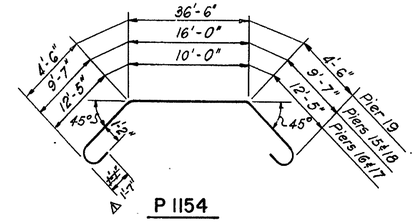

P1154

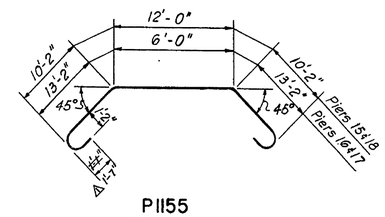

P1155

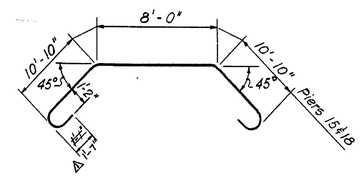

P1156

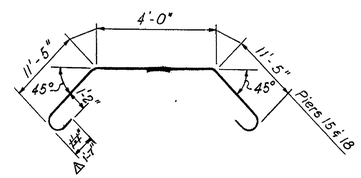

P1157

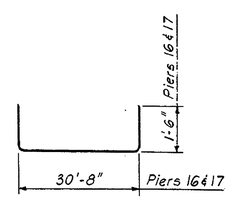

P1158

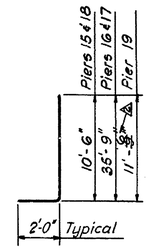

P1181

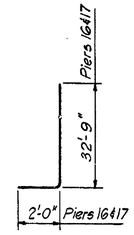

P1182

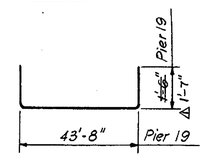

P14S51

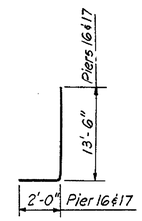

~~P14S52~~ △ P14S82

NOTES

1. For General Notes see Sheet No. 2.
2. For Bar Reinforcement Schedule see Sheet No. 31.

REVISIONS

△ REVISED : DIMENSIONS — R.B.F. 1-18-71

△ REVISED : DIMENSIONS — R.B.F. 2-3-71

DELAWARE
STATE HIGHWAY DEPARTMENT

INTERSTATE ROUTE I-495

CHRISTINA RIVER BRIDGE
BAR REINFORCEMENT DETAILS
PIERS 15 TO 19

J. E. GREINER CO.
MORAN, PROCTOR, MUESER & RUTLEDGE
CONSULTING ENGINEERS

D. P. F.
T. R. B.
C. W. W.

SCALE NONE

DATE 5/14/70

APPROVED BY: John E. Schultz
BRIDGE ENGINEER

DOBLVIE PRESS, INC. — D-127 3402

COUNTY	CONTRACT	P. R. A. REG. NO.	STATE	FED. AID PROJECT NO.	FISCAL YEAR	SHEET NO.	TOTAL SHEETS
NEW CASTLE	70-04-016	2	DEL.	I-495-3(19)15		33	46

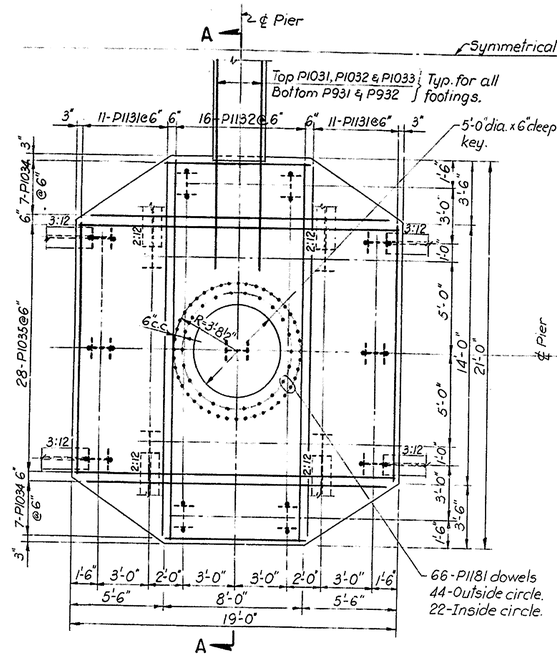

PIER 20

Scale: 1/4" = 1'-0"

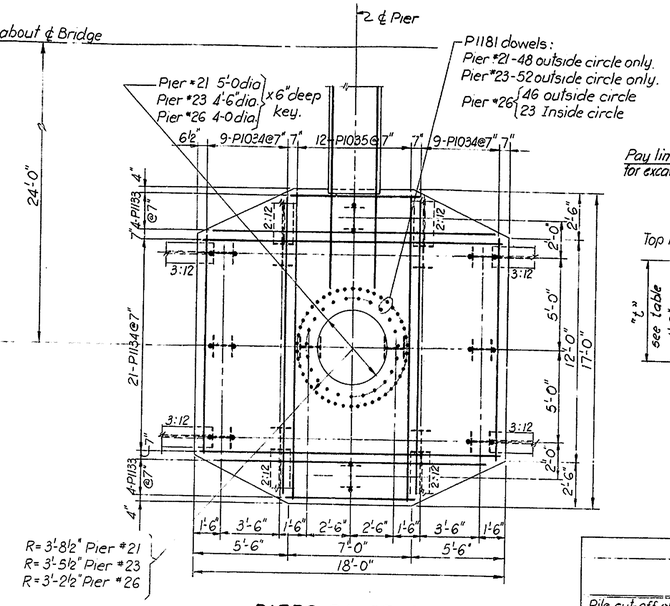

PIERS 21, 23, 26

Scale: 1/4" = 1'-0"

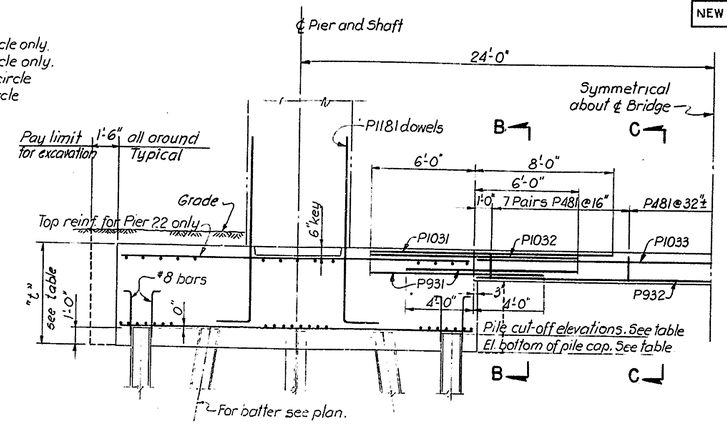

SECTION A-A (TYPICAL)

Scale: 1/4" = 1'-0"

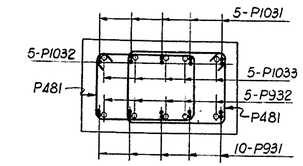

SECTION B-B

Scale: 3/4" = 1'-0"

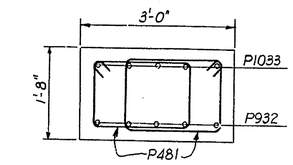

SECTION C-C

Scale: 3/4" = 1'-0"

TABULATION OF FOOTING PROPERTIES

		PIER NO										
		20	21 (+1.552)	22	23	24	25	26	27	28	29	30
Pile cut-off elevations		+1.656	+1.652	+1.617	+1.562	+2.966	+3.026	+2.086	+2.531	+2.445	+2.792	+2.665
El. bottom of pile cap.		+0.656	+0.552	+0.617	+0.562	+1.966	+2.026	+1.086	+1.531	+1.445	+1.792	+1.665
"t"		5'-6"	5'-6"	5'-6"	5'-6"	5'-6"	5'-6"	5'-6"	5'-6"	5'-6"	5'-6"	5'-6"
Number of piles	Vertical	7	6	6	6	4	4	6	4	3	3	3
	Batter	8	8	8	8	8	8	8	8	8	8	8
	Total	15	14	14	14	12	12	14	12	11	11	11
Approx. Pile Tip Elev. for estimating only.		-110.0	-110.0	-105.0	-105.0	-110.0	-105.0	-85.0	-95.0	-100.0	-100.0	-95.0

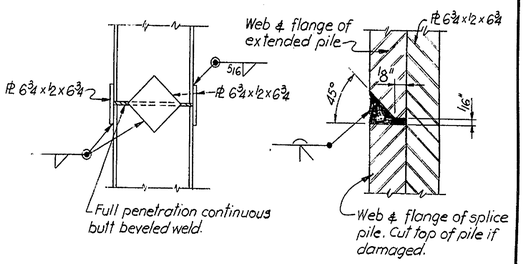

TYPICAL H-PILE SPLICE DETAIL

N.T.S.

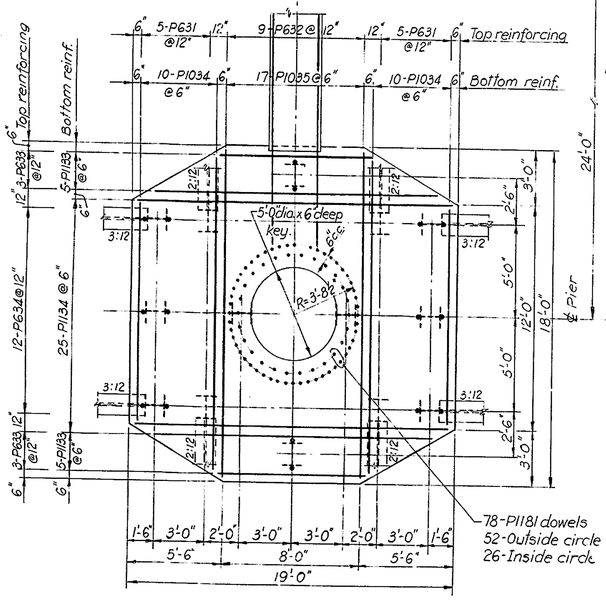

PIER 22

Scale: 1/4" = 1'-0"

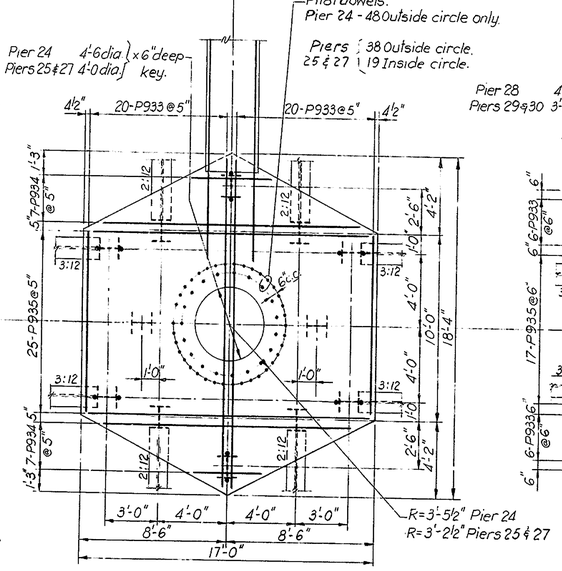

PIERS 24, 25, 27

Scale: 1/4" = 1'-0"

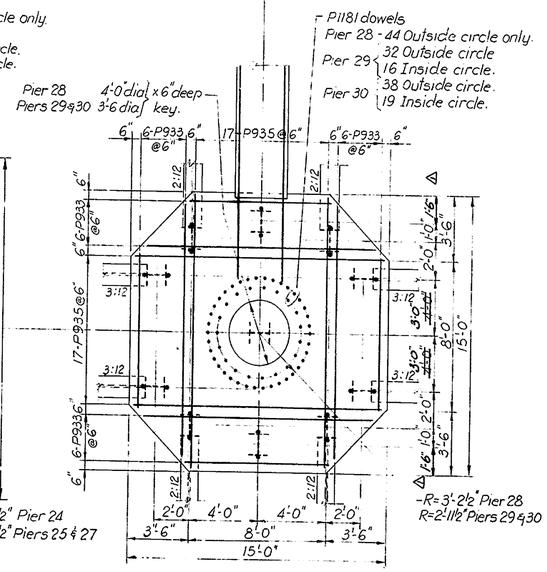

PIERS 28, 29, 30

Scale: 1/4" = 1'-0"

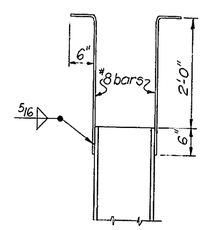

PILE ANCHOR DETAIL

N.T.S.

For piles located around the perimeter of pile cap and marked thus ⊣⊢ on the plan.

NOTES

1. For General Notes see Sheet No. 2.
2. For Pier Details see Sheet No's. 35 to 39.
3. For Reinforcing Bar Schedule see Sheet No's. 42 & 43.

REVISIONS

Dimensions E.I. 10/8/70

△ REVISED ; TABULATION OF FOOTING PROPERTIES - R.B.F. 2-3-71

DELAWARE
STATE HIGHWAY DEPARTMENT

INTERSTATE ROUTE I-495

CHRISTINA RIVER BRIDGE
FOOTINGS FOR PIERS
20 TO 30 - EAST & WEST

J. E. GREINER CO.
MORAN, PROCTOR, MUESER & RUTLEDGE
CONSULTING ENGINEERS

D. A. L.A
T. P.F
C. W.W

SCALE AS NOTED

DATE 5/14/70

APPROVED BY: John H. Fitchter
BRIDGE ENGINEER

OGILVIE PRESS, INC. — D-127

COUNTY	CONTRACT	P.R.A. REG. NO.	STATE	FED. AID PROJECT NO.	FISCAL YEAR	SHEET NO.	TOTAL SHEETS
NEW CASTLE	70-04-016	2	DEL.	I-495-3(19)15		34	46

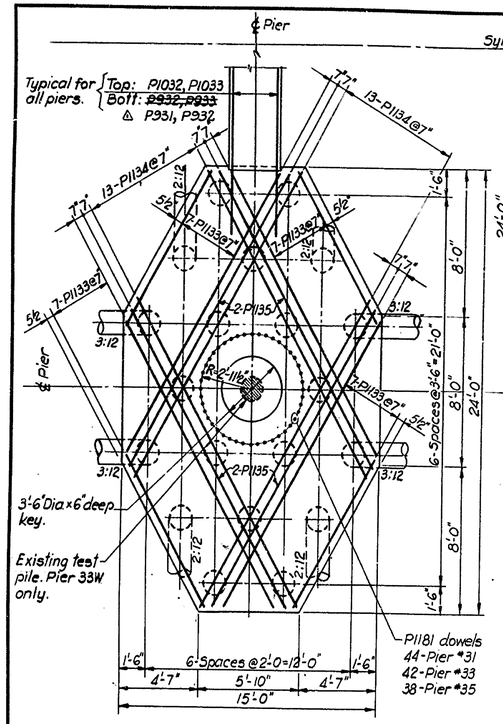

PIERS 31,33,35

Scale : 1/4" = 1'-0"

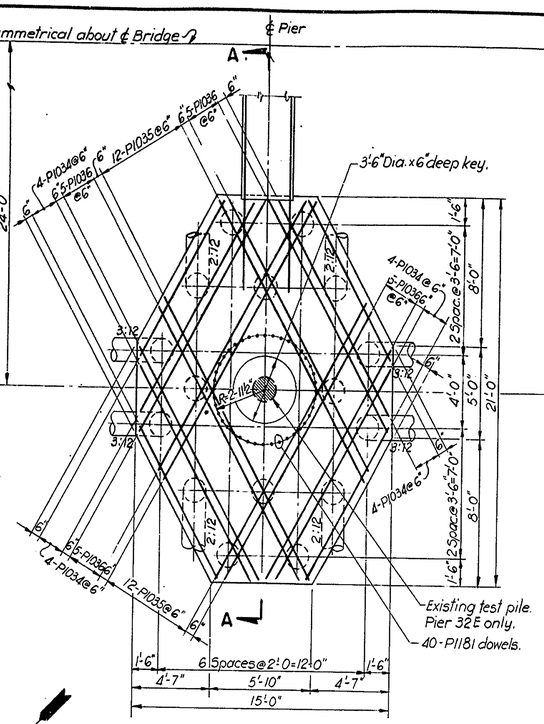

PIER 32

Scale : 1/4" = 1'-0"

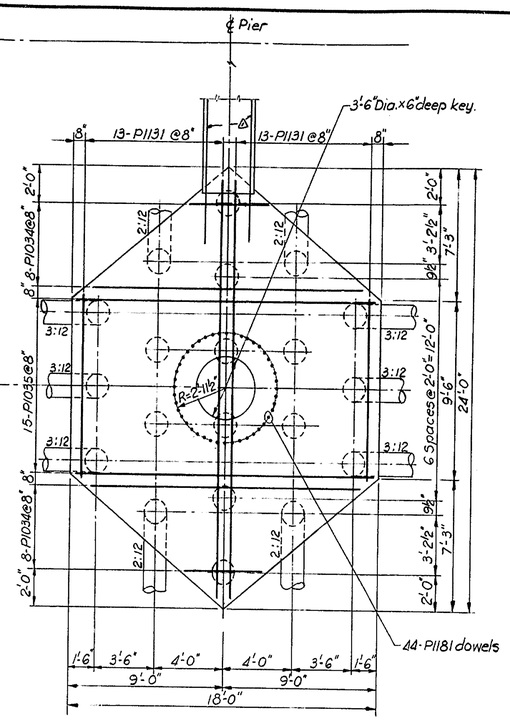

PIER 34

Scale : 1/4" = 1'-0"

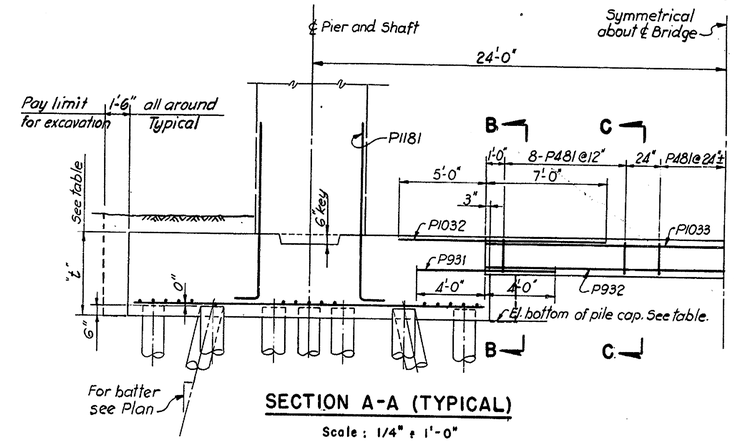

SECTION A-A (TYPICAL)

Scale : 1/4" = 1'-0"

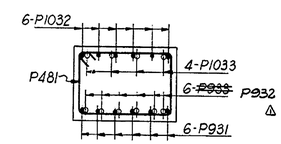

SECTION B-B

Scale : 1/2" = 1'-0"

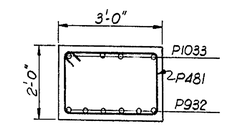

SECTION C-C

Scale : 1/2" = 1'-0"

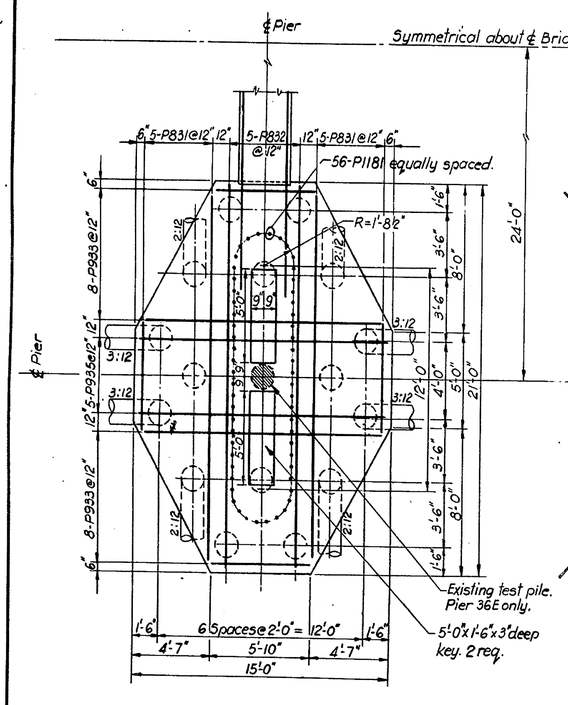

PIER 36

Scale : 1/4" = 1'-0"

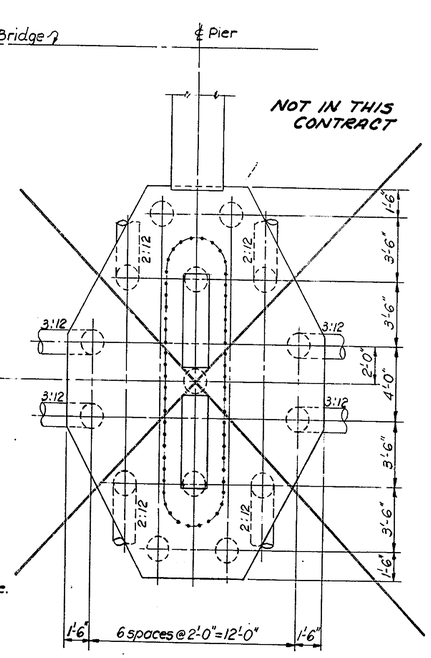

NOTE: Footing dimensions and reinforcing details same as Pier 36.

PIER 37

Scale : 1/4" = 1'-0"

TABULATION OF FOOTING PROPERTIES		PIER NO.						
		31	32	33	34	35	36	37
Pile cut-off elevations		+2.402	+3.124	+1.971	+2.844	+2.081	+3.292	+3.300
El. bottom of pile cap		+1.902	+2.624	+1.471	+2.344	+1.581	+2.792	+2.800
"t"		5'-0"	4'-6"	5'-0"	4'-6"	5'-0"	4'-6"	4'-6"
Number of piles	Vertical	13	9	13	10	13	9	7
	Batter	8	8	8	10	8	8	8
	Total	21	17*	21*	20	21	17*	15
Approx. Pile Tip Elev. for estimating only.		-75.0	-67.0	-73.0	-77.0	-72.0	-62.0	-64.0

NOT IN THIS CONTRACT

NOTE: Number of piles shown includes one test pile driven by others in following footings 32E, 33W & 36E *.

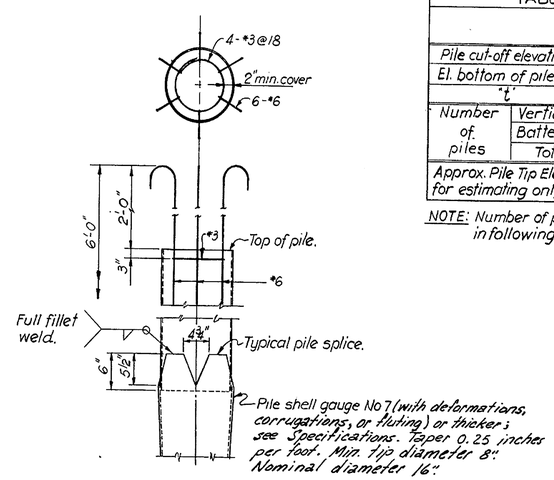

PILE DETAIL

N. T. S.

NOTES:

1. For General Notes see Sheet No. 2.
2. For Shaft Details see Sheet No's. 39 to 41.
3. For Reinforcing Bar Schedule see Sheet No. 43.

△ REINFORCEMENT E.E. 9/18/70

DELAWARE
STATE HIGHWAY DEPARTMENT

INTERSTATE ROUTE I-495

CHRISTINA RIVER BRIDGE
FOOTINGS FOR PIERS
31 TO 36 - EAST & WEST

J. E. GREINER CO.
MORAN, PROCTOR, MUESER & RUTLEDGE
CONSULTING ENGINEERS

D. A.L.A.
T. P.F.
C. W.W.

SCALE AS NOTED

DATE 5/18/70

APPROVED BY: John H. Cubbler
BRIDGE ENGINEER

OGILVIE PRESS, INC. — B-187

COUNTY	CONTRACT	P. S. & E. REQ. NO.	STATE	FED. AID PROJECT NO.	FISCAL YEAR	SHEET NO.	TOTAL SHEETS
NEW CASTLE	70-04-016	2	DEL.	I-495-3(19)15		35	46

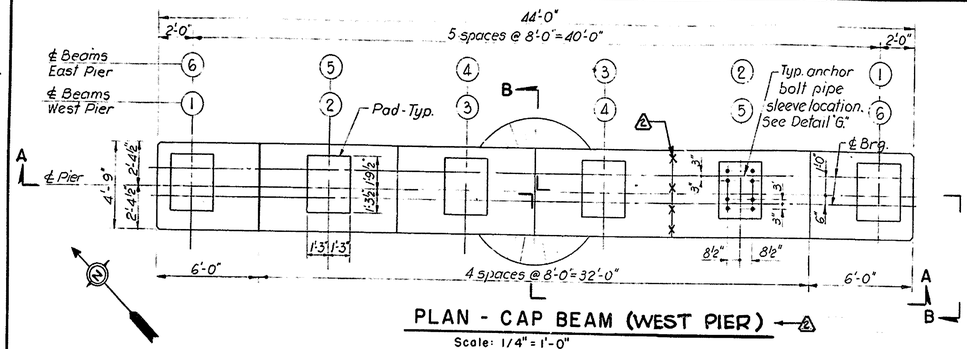

PLAN - CAP BEAM (WEST PIER)

Scale: 1/4" = 1'-0"

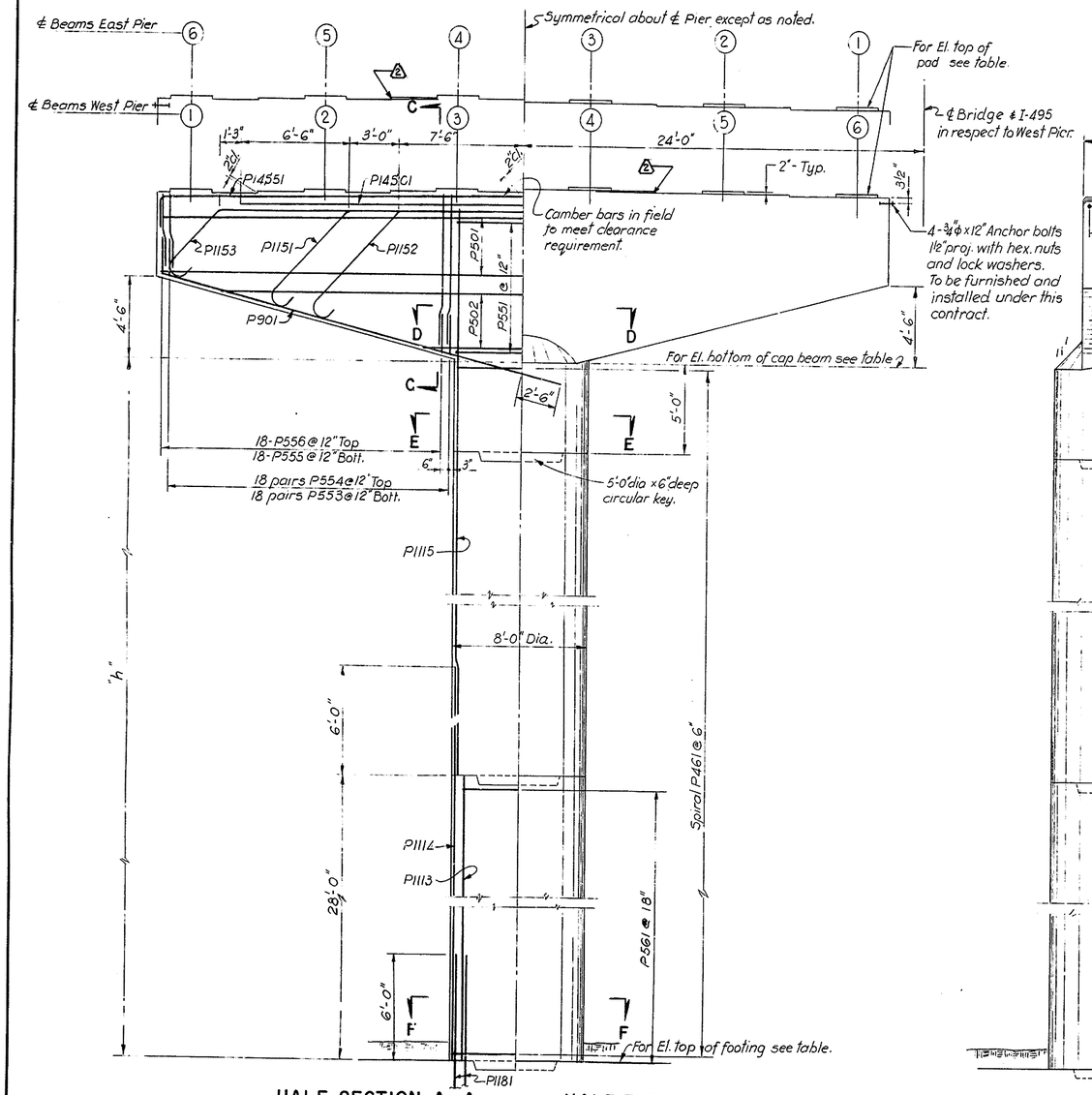

HALF SECTION A-A

HALF ELEVATION A-A

Scale: 1/4" = 1'-0"

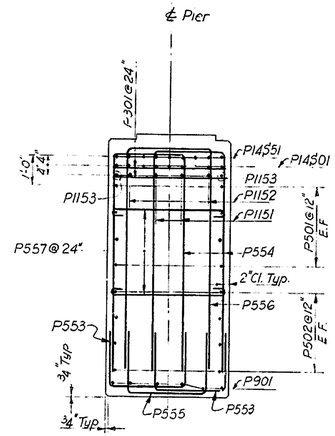

SECTION C-C

Scale: 3/8" = 1'-0"

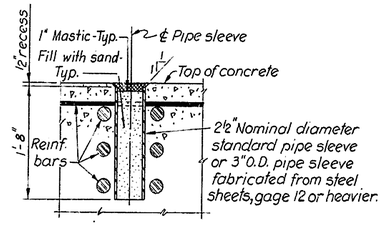

DETAIL G

ANCHOR BOLT PIPE SLEEVE

N.T.S.

~~TABULATION OF ELEVATIONS AND HEIGHTS OF PIERS~~

	PIER NO. 20
El. Top of Pad ①	68.823
②	68.989
③	69.146
④	69.323
⑤	69.289
⑥	69.073
El. bottom of Cap Beam	59.489
El. top of Footing	6.156
Dimension "h"	53'-4"

TABULATION OF ELEVATIONS AND HEIGHTS OF PIERS

	PIER NO. 20
EL. TOP OF PAD ①	68.740
②	68.906
③	69.073
④	69.239
⑤	69.239
⑥	69.073
EL. BOTTOM OF CAP BEAM	59.406
EL. TOP OF FOOTING	6.156
DIMENSION "h"	53'-3"

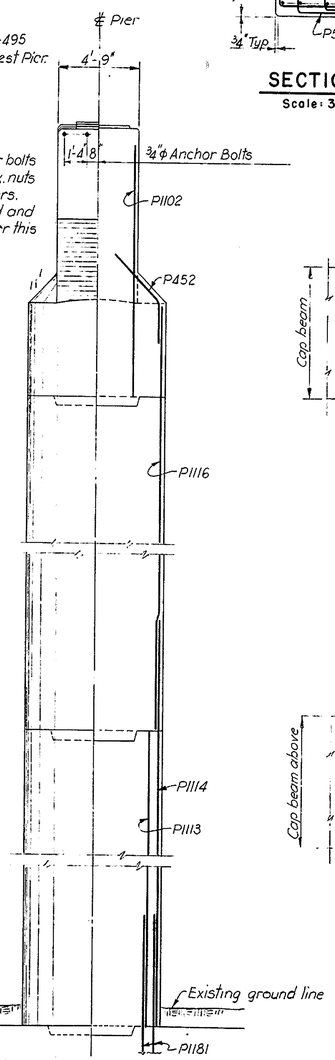

HALF ELEVATION B-B

HALF SECTION B-B

Scale: 1/4" = 1'-0"

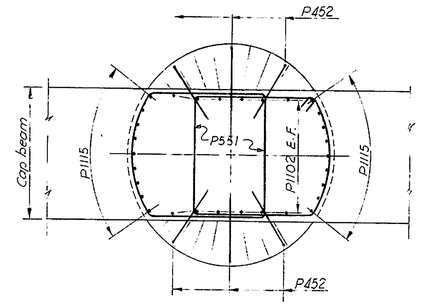

SECTION D-D

Scale: 3/8" = 1'-0"

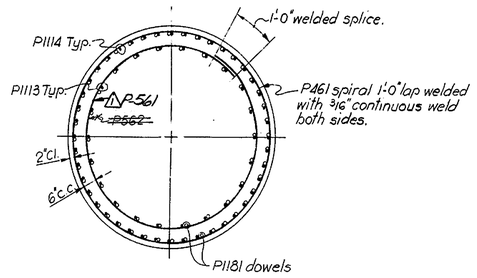

SECTION F-F

Scale: 3/8" = 1'-0"

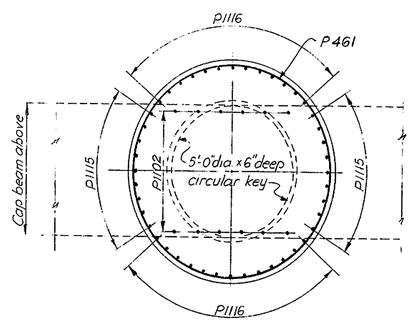

SECTION E-E

Scale: 3/8" = 1'-0"

NOTES:

1. For General Notes see Sheet No. 2.
2. For Footing Details see Sheet No. 33.
3. For Reinforcing Bar Schedule see Sheet No. 42.

△1 REVISED Bars P-562 (SECTION F-F) TO P-561 TEF 12/1/70
△2 REVISED : PIER ELEV. DIMENSIONS. 12-9-70 R.G.F.

DELAWARE
STATE HIGHWAY DEPARTMENT

INTERSTATE ROUTE I-495

CHRISTINA RIVER BRIDGE
PIER 20 - EAST & WEST

J. E. GREINER CO.
MORAN, PROCTOR, MUESER & RUTLEDGE
CONSULTING ENGINEERS

D. Y. U.
T. P. F.
C. W. W.

SCALE AS NOTED

DATE 5/14/70

APPROVED BY: John H. Schlitter
BRIDGE ENGINEER

OGILVIE PRESS, INC. — D-127 4848

COUNTY	CONTRACT	F.A.P. REG. NO.	STATE	FED. AID PROJECT NO.	FISCAL YEAR	SHEET NO.	TOTAL SHEETS
NEW CASTLE	70-04-016	2	DEL.	I-495-3(19)15		36	46

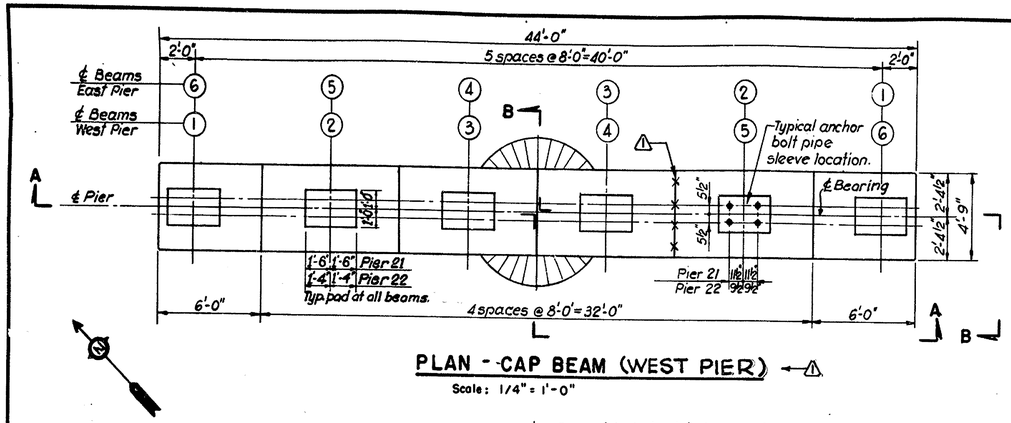

PLAN - CAP BEAM (WEST PIER)

Scale: 1/4" = 1'-0"

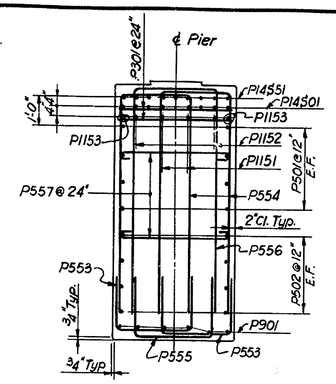

SECTION C-C

Scale: 3/8" = 1'-0"

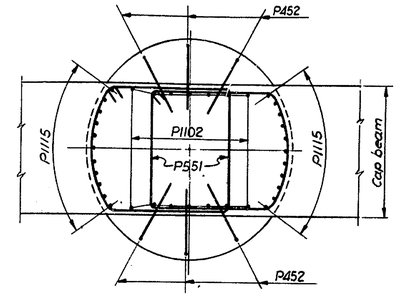

SECTION D-D

Scale: 3/8" = 1'-0"

TABULATION OF ELEVATIONS AND HEIGHTS OF PIERS.		PIER NO. 21	PIER NO. 22
El. Top of Pad	1	66.719	64.284
	2	66.886	64.460
	3	67.092	64.617
	4	67.219	64.784
	5	67.136	64.700
	6	66.969	64.534
El. Bottom of Cap Beam		57.385	54.950
El. Top of Footing		6.052	6.117
Dimension "h"		51'-4"	48'-10"

TABULATION OF ELEVATIONS AND HEIGHTS OF PIERS		PIER NO. 21	PIER NO. 22
EL. TOP OF PAD	1	66.636	64.200
	2	66.802	64.366
	3	66.968	64.533
	4	67.136	64.700
	5	67.136	64.700
	6	66.969	64.534
EL. BOTTOM OF CAP BEAM		57.302	54.867
EL. TOP OF FOOTING		6.052	6.117
DIMENSION "h"		51'-3"	48'-9"

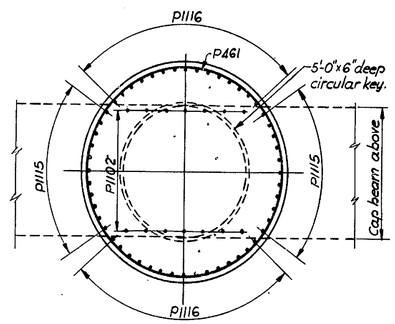

SECTION E-E

Scale: 3/8" = 1'-0"

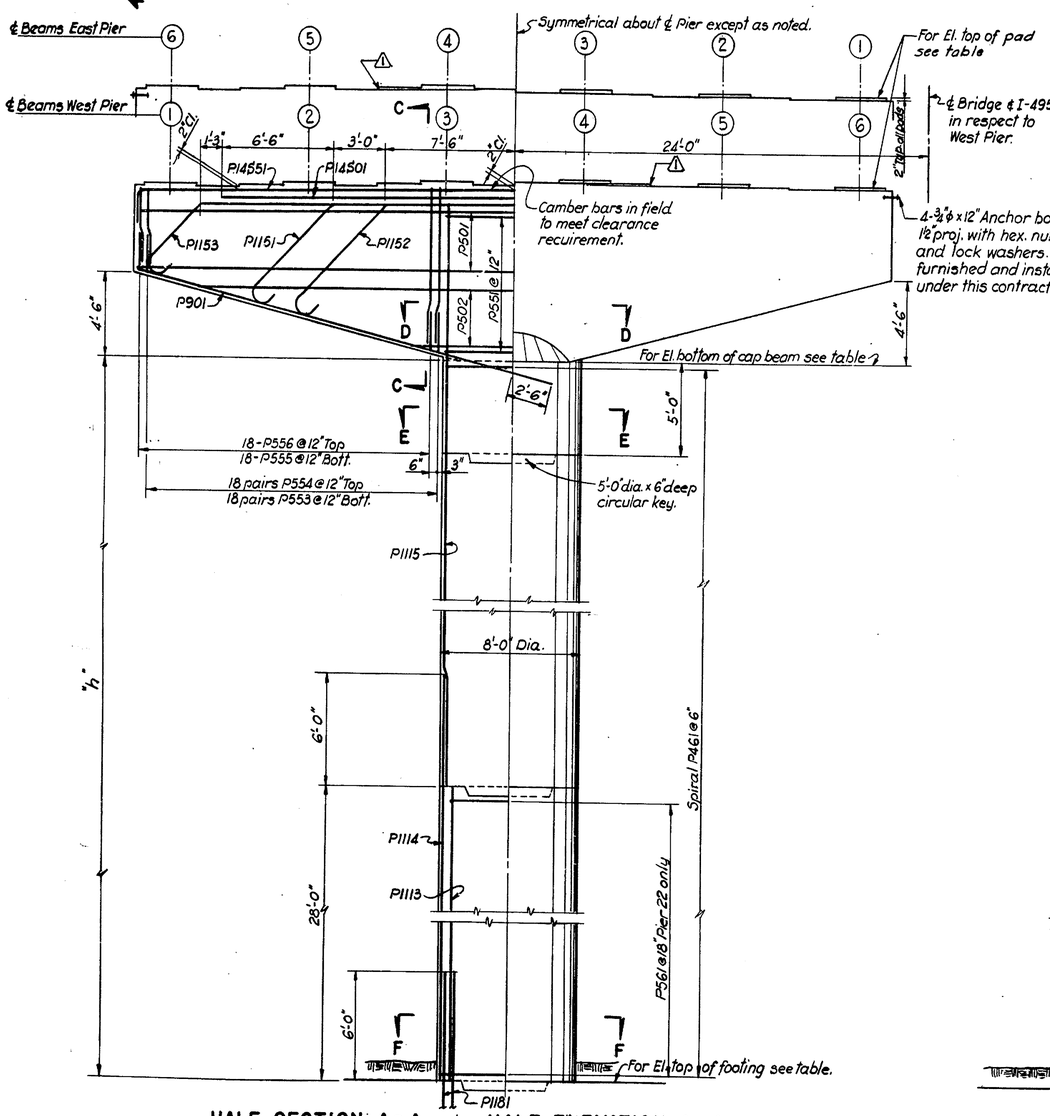

HALF SECTION A-A HALF ELEVATION A-A

Scale: 1/4" = 1'-0"

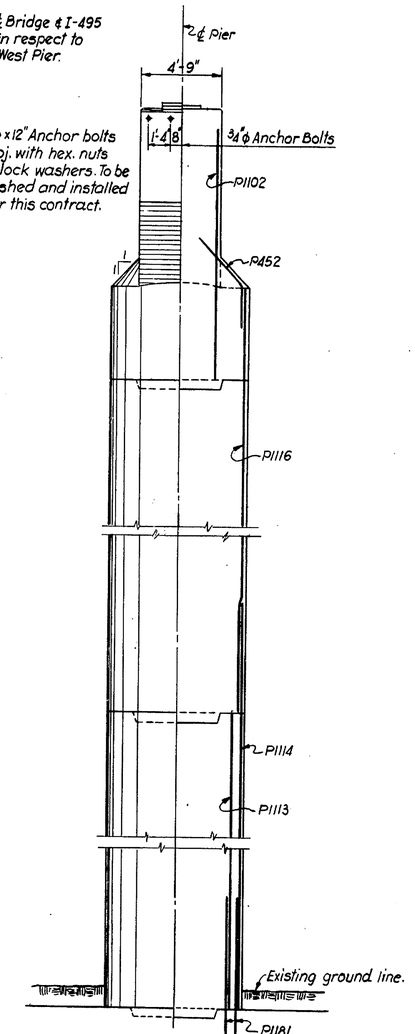

HALF ELEVATION B-B HALF SECTION B-B

Scale: 1/4" = 1'-0"

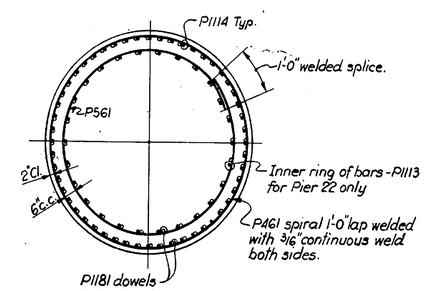

SECTION F-F

Scale: 3/8" = 1'-0"

NOTE: Shaft reinforcing shown for Pier 22. For number of bars in Pier 21 see schedule of reinforcing bars, Sh. No. 42.

NOTES

1. For General Notes see Sheet No. 2.
2. For Footing Details see Sheet No. 33.
3. For Reinforcement Bar Schedule see Sheet No. 42.
4. For Anchor Bolt Pipe Sleeve detail see Sheet No. 35

REVISIONS
⚠ REVISED : PIER ELEV. & DIMENSIONS, 12-8-70 R.B.F.

DELAWARE
STATE HIGHWAY DEPARTMENT

INTERSTATE ROUTE I-495

CHRISTINA RIVER BRIDGE
PIERS 21 & 22 - EAST & WEST

J. E. GREINER CO.
MORAN, PROCTOR, MUESER & RUTLEDGE
CONSULTING ENGINEERS

D. Y.U.
T. P.F.
C. W.W.

SCALE AS NOTED

DATE 5/14/70

APPROVED BY: John E. Schultz
BRIDGE ENGINEER

COUNTY	CONTRACT	P. R. A. REG. NO.	STATE	FED. AID PROJECT NO.	FISCAL YEAR	SHEET NO.	TOTAL SHEETS
NEW CASTLE	70-04-016	2	DEL.	I-495-3(19)15		37	46

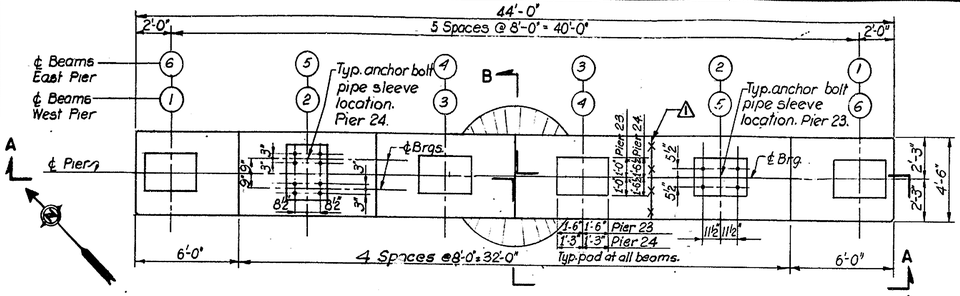

PLAN - CAP BEAM (WEST PIER)

Scale: 1/4" = 1'-0"

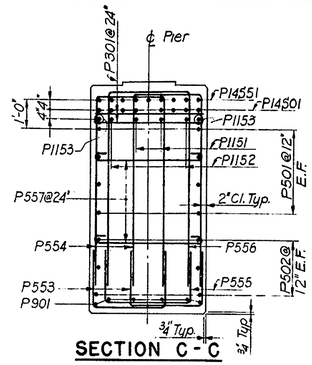

SECTION C - C

Scale: 3/8" = 1'-0"

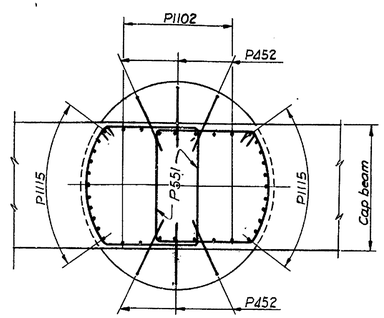

SECTION D-D

Scale: 3/8" = 1'-0"

TABULATION OF ELEVATIONS AND HEIGHTS OF PIERS	PIER NO. 23	PIER NO. 24
El. Top of Pad ①	60.729	58.633
②	60.896	58.800
③	61.062	58.966
④	61.229	59.133
⑤	61.146	59.050
⑥	60.979	58.883
El. Bottom of Cap Beam	51.895	48.799
El. Top of Footing	6.062	6.966
Dimension "h"	45'-10"	42'-10"

TABULATION OF ELEVATIONS AND HEIGHTS OF PIERS	PIER NO. 23	PIER NO. 24
EL. TOP OF PAD 1	60.645	58.550
2	60.812	58.717
3	60.978	58.883
4	61.146	59.050
5	61.146	59.050
6	60.979	58.883
EL. BOTTOM OF CAP BEAM	51.812	~~48.716~~ △49.716
EL. TOP OF FOOTING	6.062	~~6.966~~ △7.466
DIMENSION "h"	45'-9"	~~42'-9"~~ △42'-3"

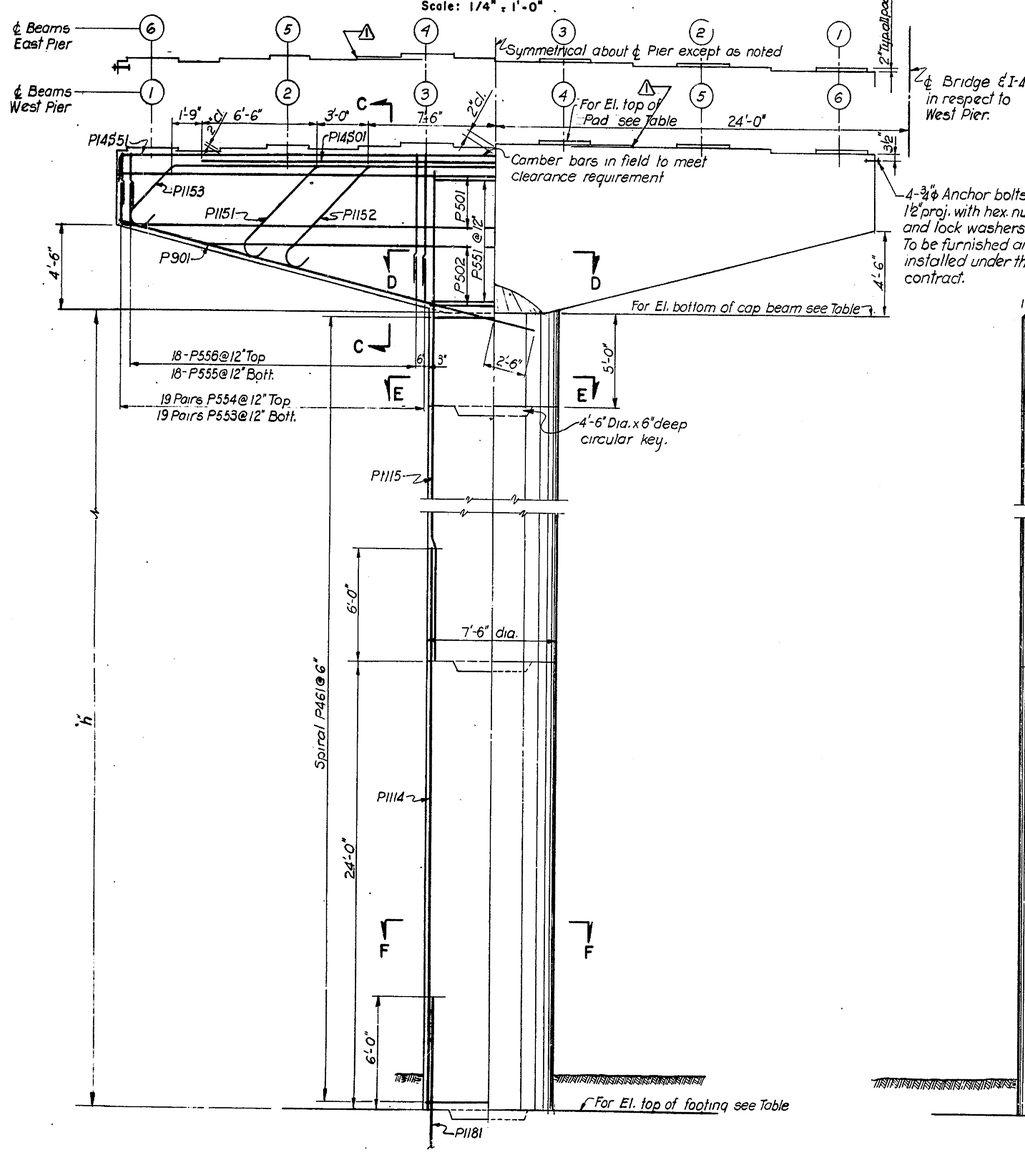

HALF SECTION A-A HALF ELEVATION A-A

Scale: 1/4" = 1'-0"

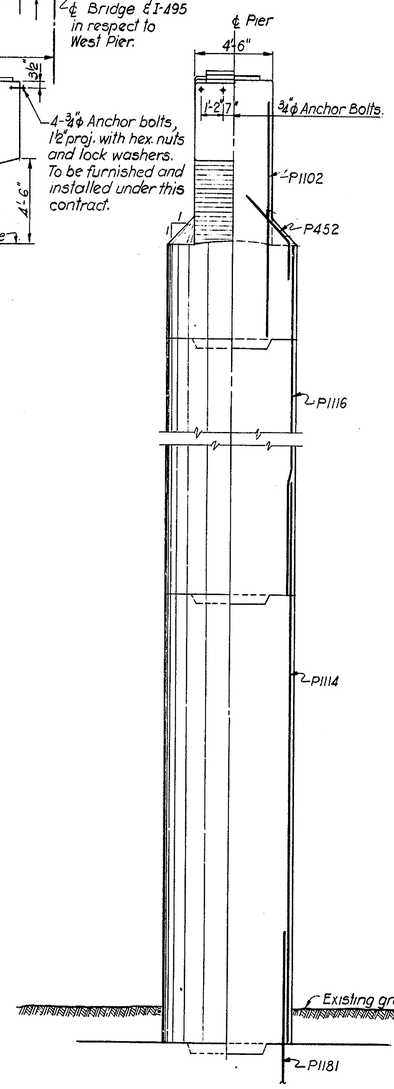

HALF ELEVATION B-B HALF SECTION B-B

Scale: 1/4" = 1'-0"

4-3/4" ϕ Anchor bolts, 1'12" proj. with hex. nuts and lock washers. To be furnished and installed under this contract.

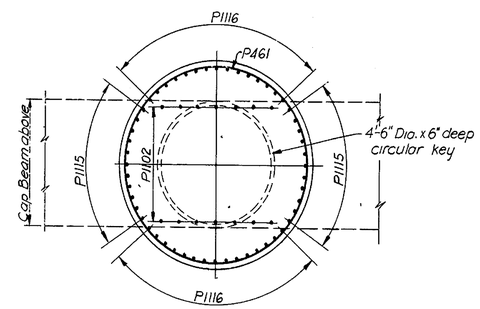

SECTION E-E

Scale: 3/8" = 1'-0"

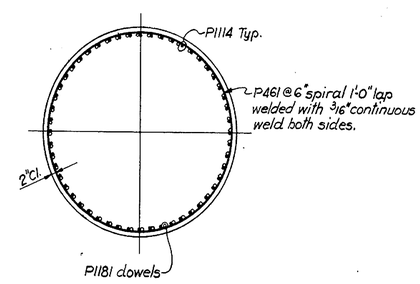

SECTION F-F

Scale: 3/8" = 1'-0"

NOTE: Shaft reinforcing shown for Pier 23. For number of bars in Pier 24 see schedule of reinforcing bars, Sh. No. 42.

NOTES:

1. For General Notes see Sheet No. 2.
2. For Footing Details see Sheet No. 33.
3. For Reinforcing Bar Schedule see Sheet No. 42
4. For Anchor Bolt Pipe Sleeve Detail see Sheet No. 35.

△ REVISED : PIER ELEV/DIMENSIONS . 12-8-70 R.B.F.
△ REVISED : PIER ELEV/DIMENSIONS . 1-18-71 R.B.F.

DELAWARE
STATE HIGHWAY DEPARTMENT

INTERSTATE ROUTE I-495

CHRISTINA RIVER BRIDGE
PIERS 23 & 24 - EAST & WEST

J. E. GREINER CO.
MORAN, PROCTOR, MUESER & RUTLEDGE
CONSULTING ENGINEERS

D. Y. U.
T. P. O.
C. W. W.

SCALE AS NOTED
DATE 5/14/70

APPROVED BY: John H. Liebler
BRIDGE ENGINEER

GRILVIE PRESS, INC. — D-157

COUNTY	CONTRACT	P. R. A. REG. NO.	STATE	FED. AID PROJECT NO.	FISCAL YEAR	SHEET NO.	TOTAL SHEETS
NEW CASTLE	70-04-016	2	DEL.	I-495-3(19)15		38	46

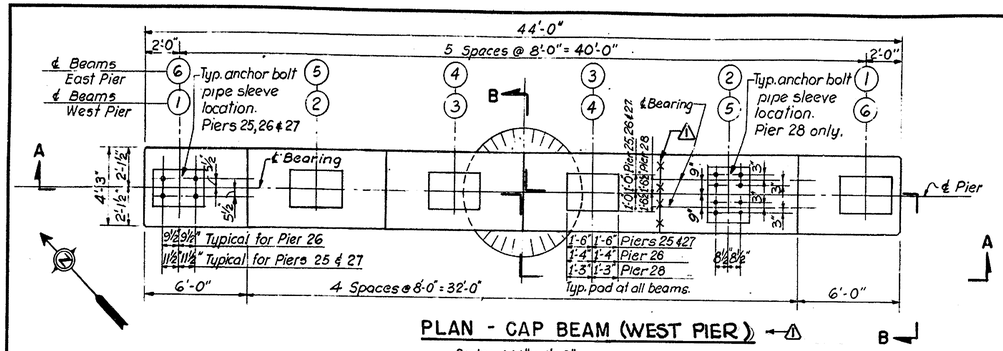

PLAN - CAP BEAM (WEST PIER)

Scale: 1/4" = 1'-0"

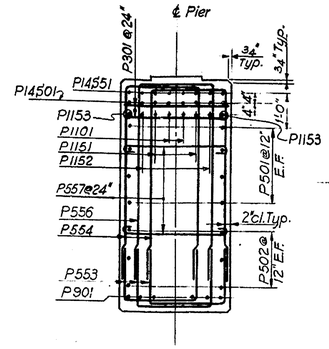

SECTION C-C

Scale: 3/8" = 1'-0"

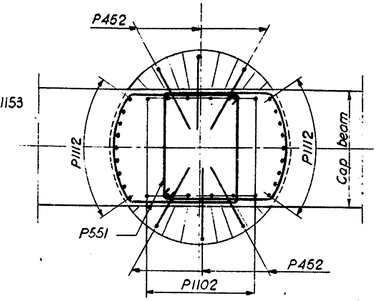

SECTION D-D

Scale: 3/8" = 1'-0"

TABULATION OF ELEVATIONS & HEIGHTS OF PIERS	PIER NO. 25	26	27	28
El. Top of Pad ①	54.693	52.252	48.698	46.612
②	54.859	52.419	48.864	46.779
③	55.026	52.586	49.031	46.945
④	55.193	52.752	49.198	47.112
⑤	55.109	52.669	49.114	47.029
⑥	54.943	52.502	48.948	46.862
El. Bottom of Cap Beam	45.859	43.419	39.864	37.778
El. Top of Footing	7.026	6.586	6.531	6.945
Dimension "h"	38'-10"	36'-10"	33'-4"	30'-10"

TABULATION OF ELEVATIONS & HEIGHTS OF PIERS	PIER NO. 25	26	27	28
EL. TOP OF PAD ①	54.610	52.168	48.615	46.528
②	54.775	52.335	48.781	46.696
③	54.942	52.502	48.948	46.862
④	55.109	52.669	49.114	47.029
⑤	55.109	52.669	49.114	47.029
⑥	54.943	52.502	48.948	46.862
EL. BOTTOM OF CAP BEAM	45.776	43.336	39.781	37.695
EL. TOP OF FOOTING	~~7.026~~ △ 7.526	6.586	~~6.531~~ △ 7.031	6.945
DIMENSION "h"	~~38'-9"~~ △ 38'-3"	36'-9"	~~33'-3"~~ △ 32'-9"	30'-9"

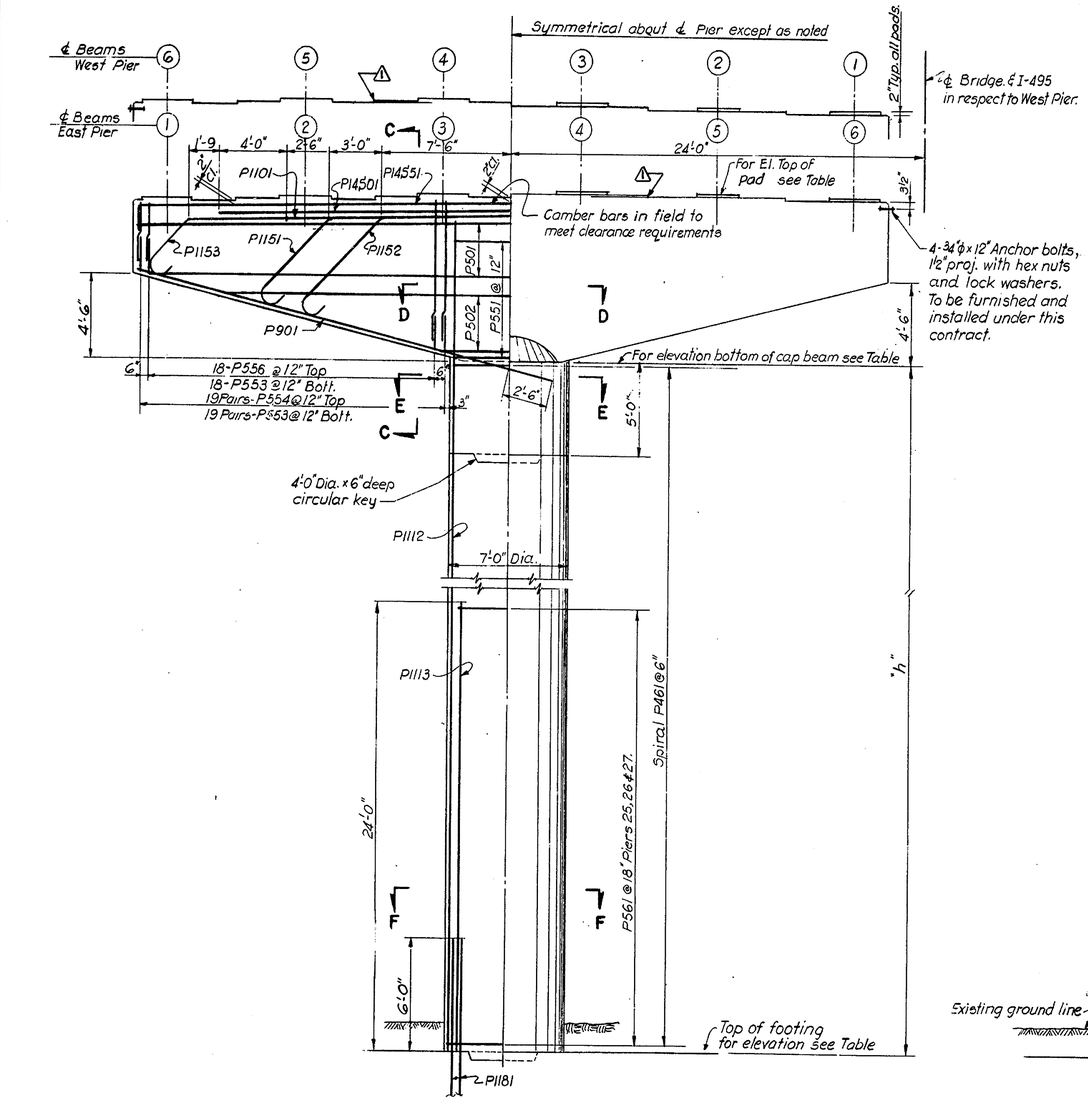

HALF SECTION A-A HALF ELEVATION A-A

Scale: 1/4" = 1'-0"

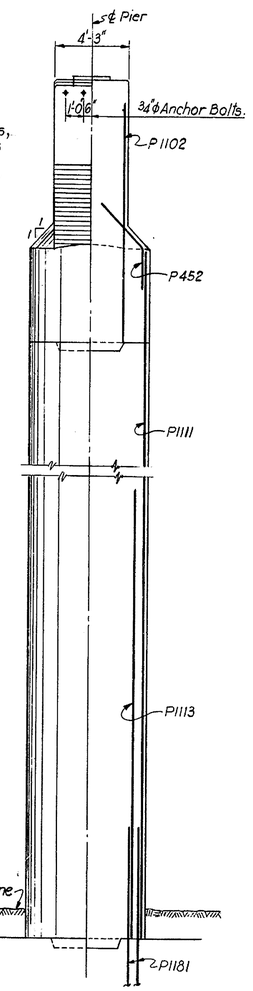

HALF ELEVATION B-B HALF SECTION B-B

Scale: 1/4" = 1'-0"

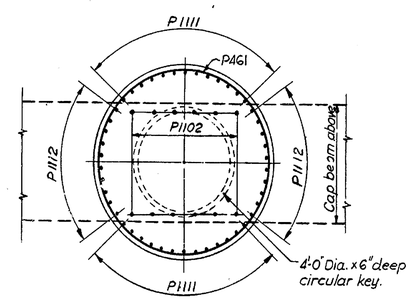

SECTION E-E

Scale: 3/8" = 1'-0"

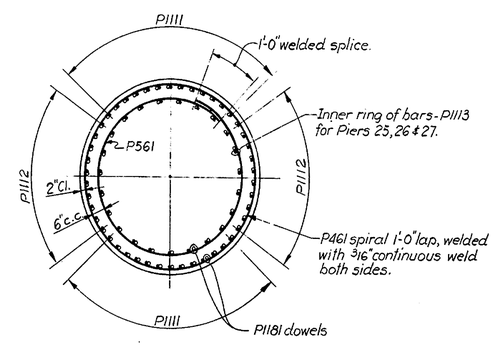

SECTION F-F

Scale: 3/8" = 1'-0"

NOTE: Shaft reinforcing shown for Pier 26. For number of bars in each pier see schedule of reinforcing bars, Sheet No. 42.

NOTES:

1. For General Notes see Sheet No 2.
2. For Footing Details see Sheet No. 33.
3. For Reinforcing Bar Schedule see Sheet No. 42.
4. For Anchor Bolt Pipe Sleeve Detail see Sheet No. 35.

REVISIONS
△1 REVISED : PIER ELEV & DIMENSIONS. 12-8-70 R.B.F.
△2 REVISED : PIER ELEV & DIMENSIONS 1-18-71 R.B.F.

DELAWARE
STATE HIGHWAY DEPARTMENT

INTERSTATE ROUTE I-495

CHRISTINA RIVER BRIDGE
PIERS 25 TO 28 - EAST & WEST

J. E. GREINER CO.
MORAN, PROCTOR, MUESER & RUTLEDGE
CONSULTING ENGINEERS

D. Y. U.
T. P. F.
C. W. W.

SCALE AS NOTED
DATE 5/14/70

APPROVED BY: John H. Cubbage
BRIDGE ENGINEER

OBILVIE PRESS, INC. — D-137 4248

COUNTY	CONTRACT	F.P.A. REG. NO.	STATE	FED. AID PROJECT NO.	FISCAL YEAR	SHEET NO.	TOTAL SHEETS
NEW CASTLE	70-04-016	2	DEL.	I-495-3(19)15		39	46

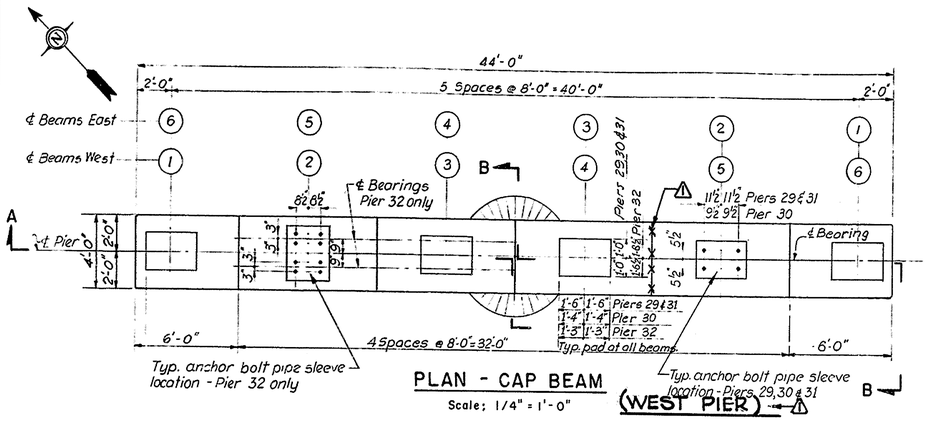

PLAN - CAP BEAM
(WEST PIER)
Scale: 1/4" = 1'-0"

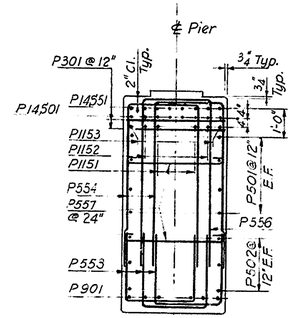

SECTION C - C
Scale: 3/8" = 1'-0"

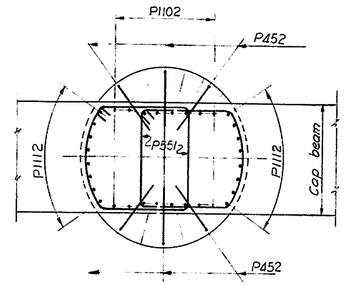

SECTION D - D
Scale: 3/8" = 1'-0"

TABULATION OF ELEVATIONS & HEIGHTS OF PIERS	PIER NO.			
	29	30	31	32
El. Top of Pad ①	42.959	40.831	37.669	35.791
②	43.125	40.998	37.735	35.957
③	43.292	41.165	37.902	36.124
④	43.459	41.331	38.069	36.291
⑤	43.375	41.248	37.985	36.207
⑥	43.209	41.081	37.819	36.041
El. Bottom of Cap Beam	34.125	31.998	28.735	26.957
El. Top of Footing	7.292	7.165	6.902	7.124
Dimension "h"	26'-10"	24'-10"	21'-10"	19'-10"

TABULATION OF ELEVATIONS & HEIGHTS OF PIERS	PIER NO.			
	29	30	31	32
EL. TOP OF PAD ①	42.875	40.747	37.485	35.707
②	43.041	40.914	37.651	35.873
③	43.208	41.081	37.818	36.040
④	43.375	41.248	37.985	36.207
⑤	43.375	41.248	37.985	36.207
⑥	43.209	41.081	37.819	36.041
EL. BOTTOM OF CAP BEAM	34.042	31.915	28.652	26.874
EL. TOP OF FOOTING	7.292	7.165	6.902	7.124
DIMENSION "h"	26'-9"	24'-9"	21'-9"	19'-9"

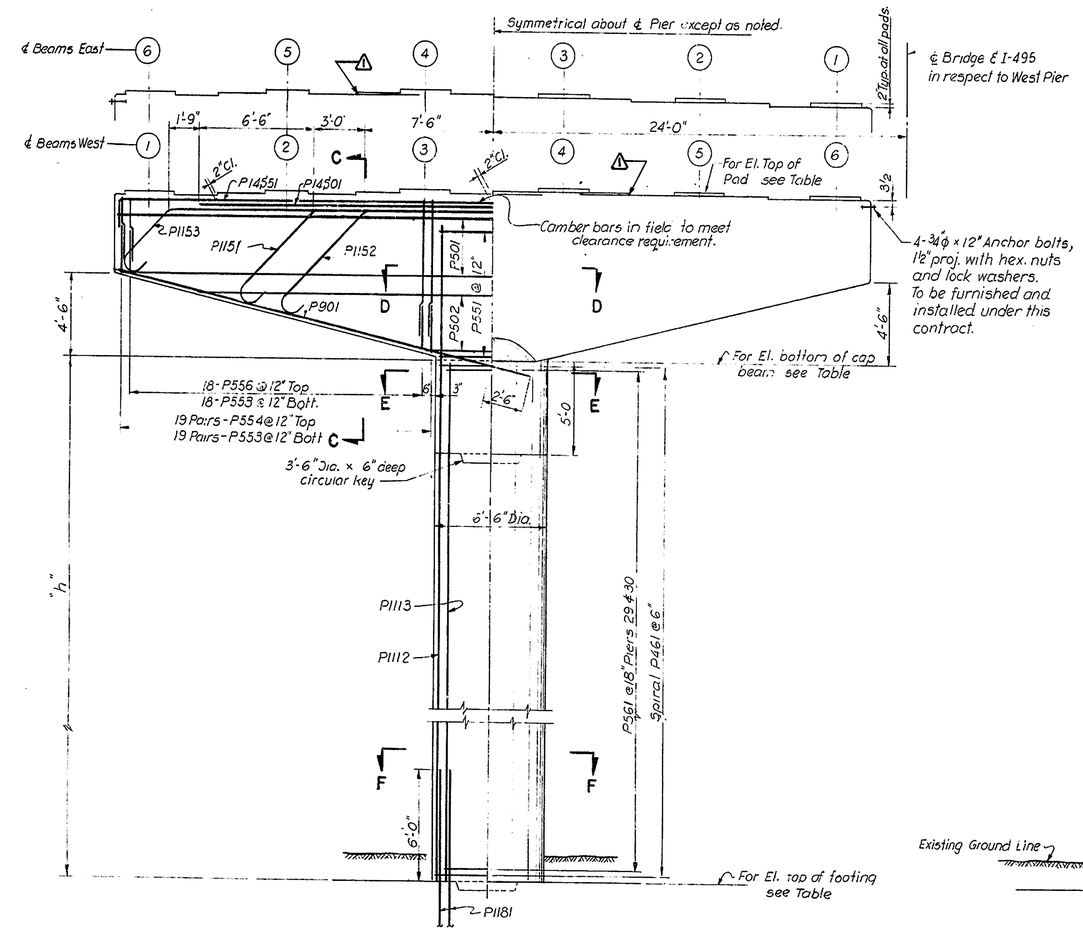

HALF SECTION A - A
HALF ELEVATION A - A
Scale: 1/4" = 1'-0"

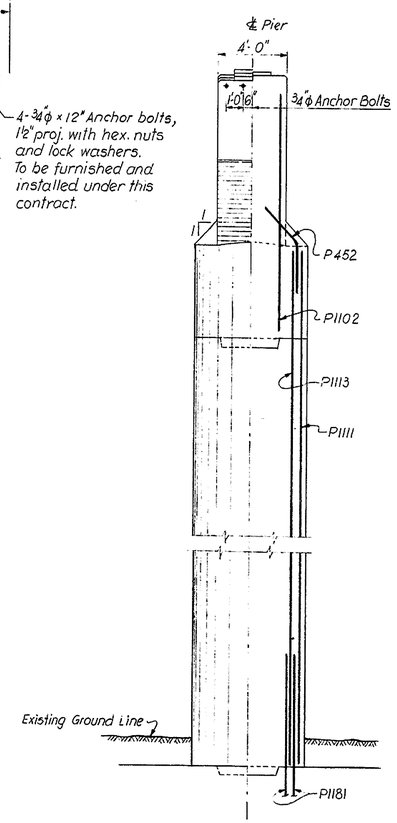

HALF ELEVATION B - B
HALF SECTION B - B
Scale: 1/4" = 1'-0"

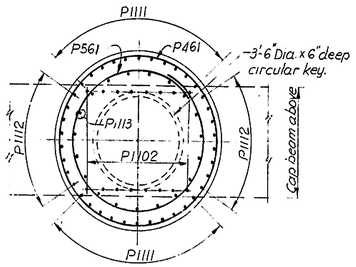

SECTION E - E
Scale: 3/8" = 1'-0"

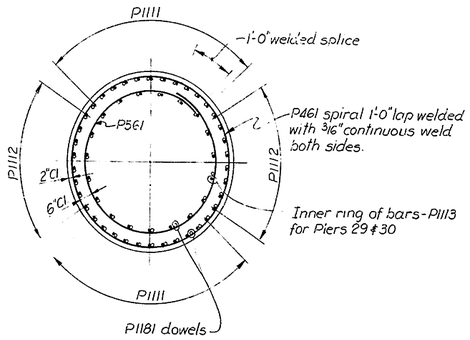

SECTION F - F
Scale: 3/8" = 1'-0"

NOTE: Shaft reinforcement shown for Pier 30. For number of bars in each pier see schedule of reinforcing bars, Sheet No. 43.

NOTES:

1. For General Notes see Sheet No. 2.
2. For Footing Details see Sheet No's 33 & 34.
3. For Reinforcing Bar Schedule see Sheet No. 43.
4. For Anchor Bolt Pipe Sleeve Detail see Sheet No. 35

REVISED PIER ELEV. & DIMENSIONS, 12-8-70 R.B.F.

DELAWARE
STATE HIGHWAY DEPARTMENT

INTERSTATE ROUTE I-495

CHRISTINA RIVER BRIDGE
PIERS 29 TO 32 - EAST & WEST

J. E. GREINER CO.
MORAN, PROCTOR, MUESER & RUTLEDGE
CONSULTING ENGINEERS

D. Y. U.
T. R. B.
C. W. W.

SCALE AS NOTED

DATE: 5/19/70

APPROVED BY: John S. Fulton
BRIDGE ENGINEER

OGILVIE PRESS, INC. — D-127

COUNTY	CONTRACT	P. R. A. REG. NO.	STATE	FED. AID PROJECT NO.	FISCAL YEAR	SHEET NO.	TOTAL SHEETS
NEW CASTLE	70-04-016	2	DEL.	I-495-3(19)19		40	46

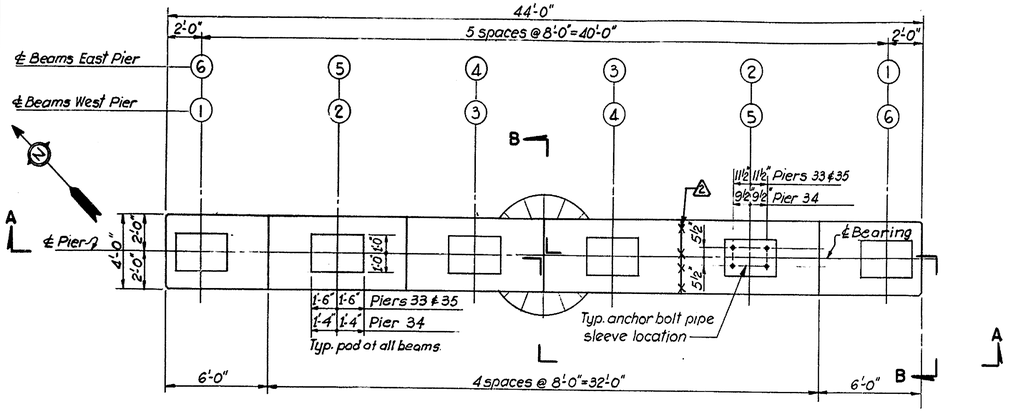

PLAN - CAP BEAM (WEST PIER)

Scale: 1/4" = 1'-0"

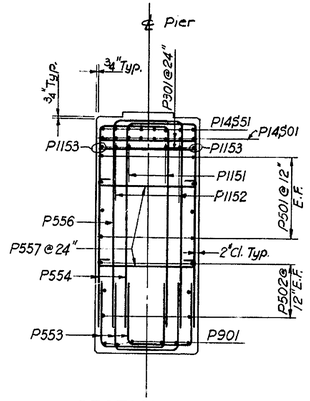

SECTION C-C

Scale: 3/8" = 1'-0"

TABULATION OF ELEVATIONS AND HEIGHTS OF PIERS	PIER NO.		
	33	34	35
El. Top of Pad ①	32.138	30.010	26.748
②	32.304	30.177	26.914
③	32.471	30.344	27.081
④	32.638	30.510	27.248
⑤	32.554	30.427	27.164
⑥	32.388	30.260	26.998
El. Bottom of Cap Beam	23.304	21.177	17.914
El. Top of Footing	6.471	6.844	6.581
Dimension "h"	16'-10"	14'-4"	11'-4"

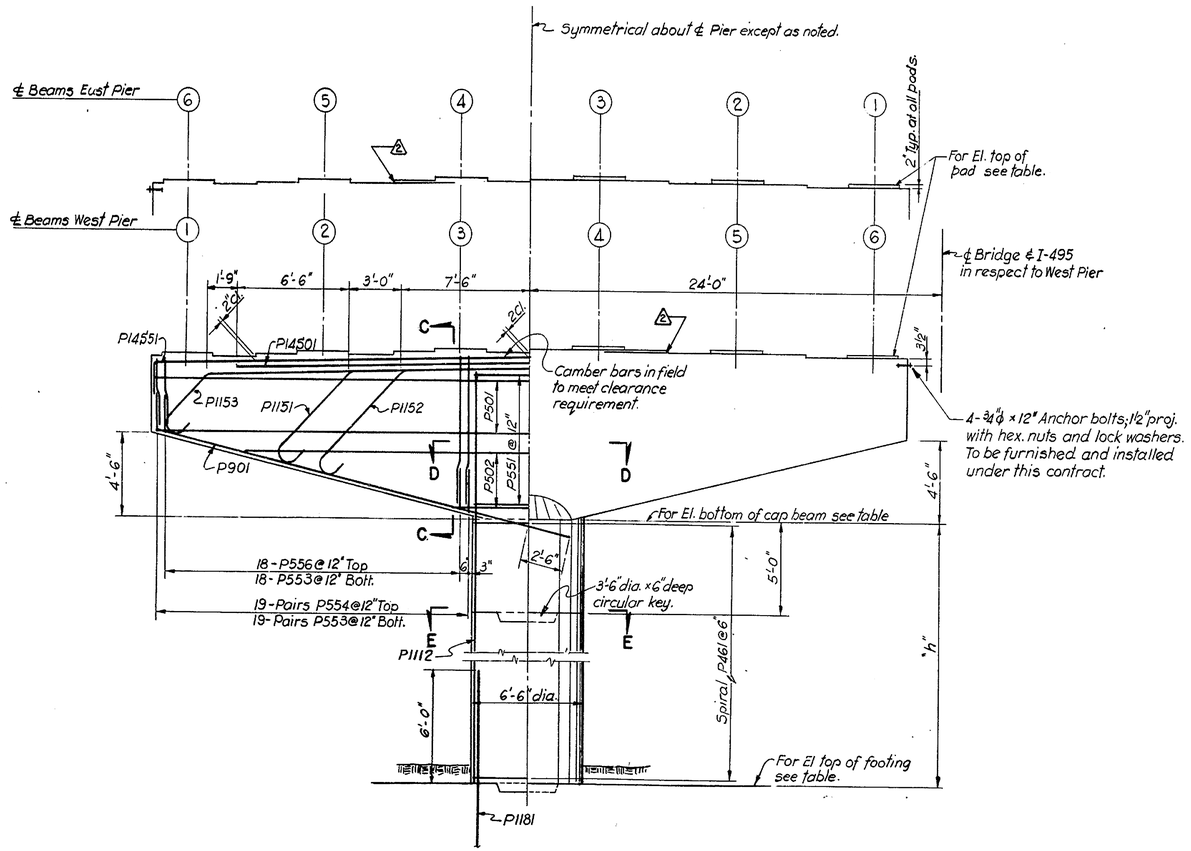

HALF SECTION A-A HALF ELEVATION A-A

Scale: 1/4" = 1'-0"

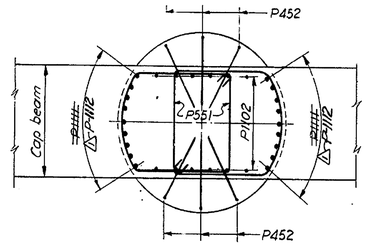

SECTION D-D

Scale: 3/8" = 1'-0"

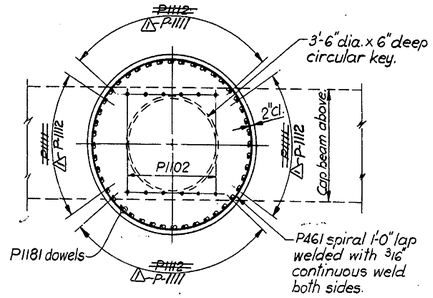

SECTION E-E

Scale: 3/8" = 1'-0"

NOTE: Shaft reinforcing shown for Pier 34. For number of bars in each pier see schedule of reinforcing bars, Sheet No. 43.

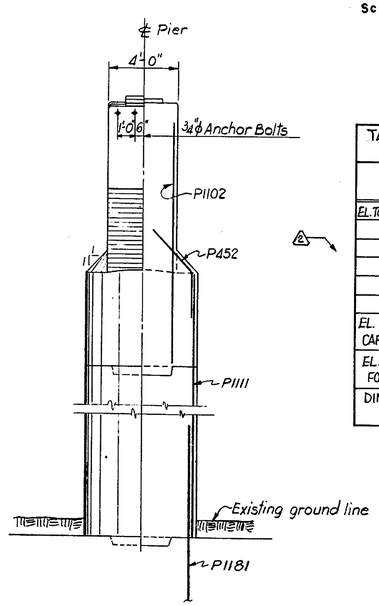

HALF ELEVATION B-B HALF SECTION B-B

Scale: 1/4" = 1'-0"

TABULATION OF ELEVATIONS AND HEIGHTS OF PIERS	PIER NO.		
	33	34	35
EL. TOP OF PAD	32.054	29.926	26.664
	32.220	30.093	26.830
	32.387	30.260	26.998
	32.554	30.427	27.164
	32.554	30.427	27.164
	32.388	30.260	26.998
EL. BOTTOM OF CAP BEAM	23.221	21.094	17.831
EL. TOP OF FOOTING	6.471	6.844	6.581
DIMENSION "h"	16'-9"	14'-3"	11'-3"

NOTES:

1. For General Notes see Sheet No 2.
2. For Footing Details see Sheet No. 34
3. For Reinforcing Bar Schedule see Sheet No. 43.
4. For Anchor Bolt Pipe Sleeve Detail see Sheet No. 35.

△1 Revised Bars P-1111 & P-1112 (Sections D-D & E-E) TFF 12/4/70
△2 REVISED : PIER ELEV & DIMENSIONS . 12-8-70 R.B.F.

DELAWARE
STATE HIGHWAY DEPARTMENT

INTERSTATE ROUTE I-495

CHRISTINA RIVER BRIDGE
PIERS 33 TO 35 - EAST & WEST

J. E. GREINER CO.
MORAN, PROCTOR, MUESER & RUTLEDGE
CONSULTING ENGINEERS

D. Y. U.
T. P. F.
C. W. W.

SCALE AS NOTED

DATE 5/19/70

APPROVED BY: John H. Liebler
BRIDGE ENGINEER

COUNTY	CONTRACT	F.R.A. REG. NO.	STATE	FED. AID PROJECT NO.	FISCAL YEAR	SHEET NO.	TOTAL SHEETS
NEW CASTLE	70-04-016	2	DEL.	I-495-3(19)15		41	46

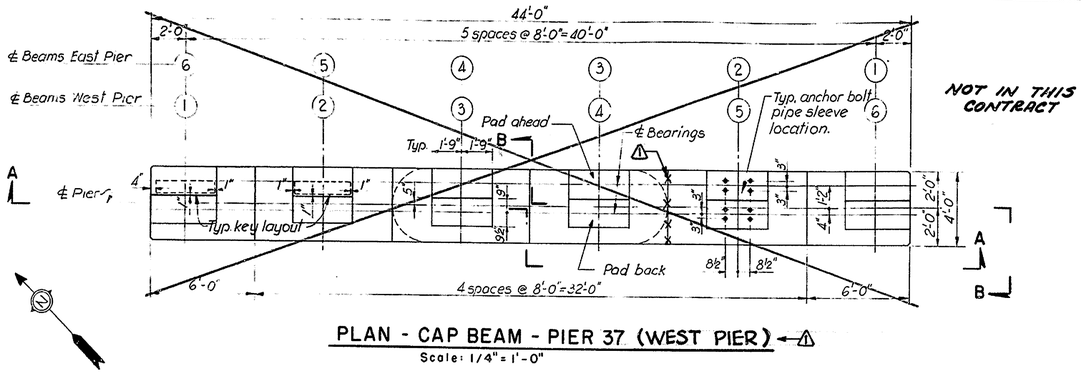

PLAN - CAP BEAM - PIER 37 (WEST PIER)

Scale: 1/4" = 1'-0"

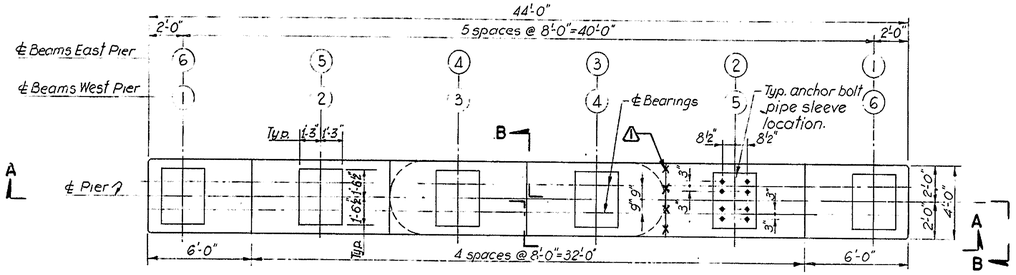

PLAN - CAP BEAM - PIER 36 (WEST PIER)

Scale: 1/4" = 1'-0"

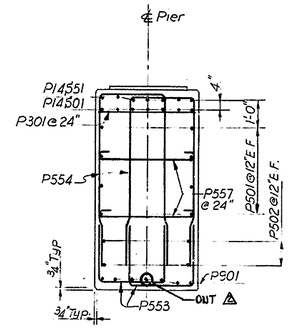

PIER 36

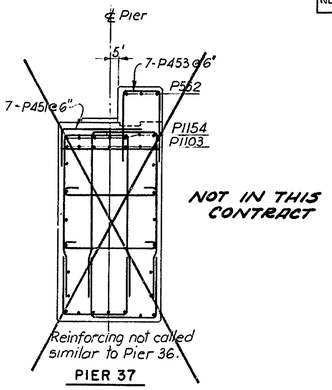

PIER 37

SECTION C-C

Scale: 3/8" = 1'-0"

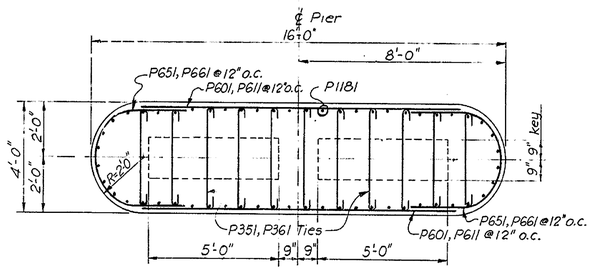

SECTION D-D

Scale: 3/8" = 1'-0"

TABULATION OF ELEVATIONS AND HEIGHTS OF PIERS

	PIER NO. 36	~~37 Ahead~~	~~37 Back~~
El. Top of Pad ①	24.959	~~22.435~~	~~22.435~~
②	25.126	~~22.453~~	~~22.535~~
③	25.292	~~22.519~~	~~22.619~~
④	25.459	~~22.585~~	~~22.969~~
⑤	25.376	~~22.902~~	~~22.802~~
⑥	25.209	~~23.935~~	~~22.716~~
El. Bottom of Cap Beam	17.125	~~14.639~~	
El. Top of Footing	7.292	~~7.300~~	
Dimension "h"	9'-10"	~~7'-4"~~	

TABULATION OF ELEVATIONS AND HEIGHTS OF PIERS

	PIER NO. 36	37 AHEAD	37 BACK
EL. TOP OF PAD ①	24.876	22.352	22.352
②	25.042	23.769	22.550
③	25.209	23.936	22.717
④	25.376	24.102	22.883
⑤	25.376	24.102	22.883
⑥	25.209	23.935	22.716
EL. BOTTOM OF CAP BEAM	17.042	14.55	
EL. TOP OF FOOTING	7.292	7.300	
DIMENSION "h"	9'-9"	7'-3"	

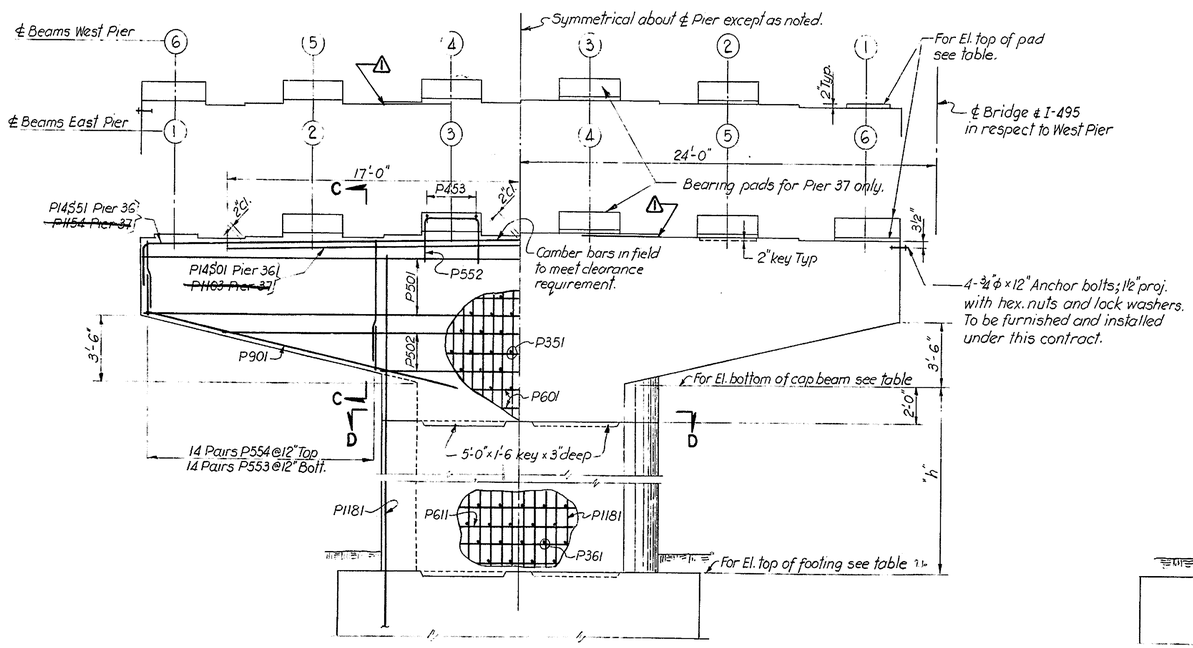

HALF SECTION A-A HALF ELEVATION A-A

Scale: 1/4" = 1'-0"

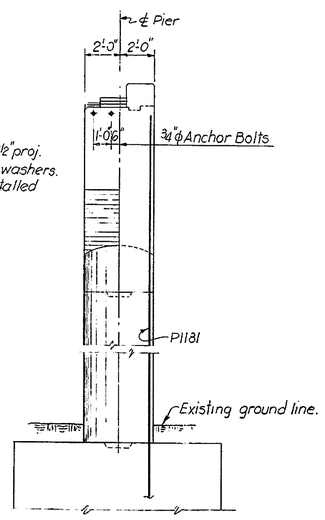

HALF ELEVATION B-B HALF SECTION B-B

Scale: 1/4" = 1'-0"

NOTES

1. For General Notes see Sheet No. 2.
3. For Footing Details see Sheet No. 34.
4. For Reinforcing Bar Schedule see Sheet No. 43.
5. For Anchor Bolt Pipe Sleeve Detail see Sheet No. 35.

REVISED: PIER ELEV. DIMENSIONS. 12-8-70 R.B.F.
REVISED: SECTION C-C, PIER 36 — 2-3-71 R.B.F.

DELAWARE
STATE HIGHWAY DEPARTMENT

INTERSTATE ROUTE I-495

CHRISTINA RIVER BRIDGE
PIERS 36 & 37 - EAST & WEST

J. E. GREINER CO.
MORAN, PROCTOR, MUESER & RUTLEDGE
CONSULTING ENGINEERS

D. Y. L.
T. P. F.
C. W. W.

SCALE AS NOTED

DATE 5/14/70

APPROVED BY: John E. Fuller
BRIDGE ENGINEER

COUNTY	CONTRACT	P. R. A. REG. NO.	STATE	FED. AID PROJECT NO.	FISCAL YEAR	SHEET NO.	TOTAL SHEETS
NEW CASTLE	70-04-016	2	DEL.	I-495-3(19)15		42	46

STRAIGHT BARS

	PIER		20		21		22		23		24		25		26		27		28		REMARKS
	MARK	SIZE	REQ.	LENGTH	REQ.	LENGTH	REQ.	LENGTH	REQ.	LENGTH	REQ.	LENGTH	REQ.	LENGTH	REQ.	LENGTH	REQ.	LENGTH	REQ.	LENGTH	
CAP BEAMS	P301	#3	64	4-5	64	4-5	64	4-5	64	4-2	64	4-2	64	3-11	64	3-11	64	3-11	64	3-11	
	P501	#5	16	43-8	16	43-8	16	43-8	16	43-8	16	43-8	16	43-8	16	43-8	16	43-8	16	43-8	
	P502	#5	16	13-0 to 38-0	16	13-0 to 38-0	16	13-0 to 38-0	△ ~~16~~ 12	9-0 to 34-0	△ ~~16~~ 12	9-0 to 34-0	△ ~~16~~ 12	9-0 to 34-0	△ ~~16~~ 12	9-0 to 34-0	△ ~~16~~ 12	9-0 to 34-0	△ ~~16~~ 12	9-0 to 34-0	INCREMENT 8'-4" 2 BARS OF EACH
	P901	#9	24	25-0	24	25-0	24	25-0	24	25-0	24	25-0	24	25-0	24	25-0	24	25-0	24	25-0	
	P1101	#11		-		-		-		-		-	4	26-0	4	26-0	4	26-0	4	26-0	
	P1102	#11	24	13-6	28	13-6	28	13-6	28	13-0	28	~~13-0~~ △12-7	24	13-0 △12-7	24	13-0	24	~~13-0~~ △12-7	24	13-0	
	P14301	#14	18	34-0	16	34-0	16	34-0	16	34-0	16	34-0	16	34-0	16	34-0	16	34-0	16	34-0	
SHAFTS	P1111	#11		-		-		-		-		-	44	~~38-10~~	52	36-10	44	~~33-4~~	52	30-10	
	P1112	#11		-		-		-		-		-	32	47-0	40	45-0	32	41-6	36	39-0	
	P1113	#11	44	28-0		-	52	28-0		-		-	38	24-0	46	24-0	38	24-0		-	
	P1114	#11	88	34-0	96	34-0	104	34-0	104	30-0	96	30-0		-		-		-		-	
	P1115	#11	36	34-0	36	32-0	44	29-6	44	30-0	44	27-0		-		-		-		-	
	P1116	#11	52	25-4	60	23-4	60	20-10	60	21-10	52	~~18-10~~ △~~7-10~~ △18-3									

△ → * BAR HAVE BEEN SHIPPED CUT IN FIELD

STRAIGHT BARS

	PIER		20		21		22		23		24		25		26		27		28		REMARKS
	MARK	SIZE	REQ.	LENGTH	REQ.	LENGTH	REQ.	LENGTH	REQ.	LENGTH	REQ.	LENGTH	REQ.	LENGTH	REQ.	LENGTH	REQ.	LENGTH	REQ.	LENGTH	
FOOTINGS	P631	#6		-		-	20	11-10 to 16-6 INCREMENT 1'-2" 4 BARS OF EACH		-		-		-		-		-		-	
	P632	#6		-		-	18	17-6		-		-		-		-		-		-	
	P633	#6		-		-	12	9-1 to 16-7 INCREMENT 3'-9" 4 BARS OF EACH		-		-		-		-		-		-	
	P634	#6		-		-	24	18-6		-		-		-		-		-		-	
	P931	#9	20	10-0	20	10-0	20	10-0	20	10-0	20	10-0	20	10-0	20	10-0	20	10-0	20	10-0	
	P932	#9	5	27-0	5	31-0	5	30-0	5	31-0	5	29-8	5	29-8	5	31-0	5	29-8	5	33-0	
	P933	#9		-		-		-		-	80	9-8 to 17-7 INCREMENT 0'-5" 4 BARS OF EACH	80	9-8 to 17-7 INCREMENT 0'-5" 4 BARS OF EACH	80	-	80	9-8 to 17-7 INCREMENT 0'-5" 4 BARS OF EACH	48	8-6 to 13-6 INCREMENT 1'-0" 8 BARS OF EACH	
	P934	#9		-		-		-		-	28	4-5 to 14-5 INCREMENT 1'-8" 4 BARS OF EACH	28	4-5 to 14-5 INCREMENT 1'-8" 4 BARS OF EACH	28	-	28	4-5 to 14-5 INCREMENT 1'-8" 4 BARS OF EACH		-	
	P935	#9		-		-		-		-	50	16-6	50	16-6	50	-	50	16-6	68	14-6	
	P1031	#10	10	14-0	10	14-0	10	14-0	10	14-0	10	14-0	10	14-0	10	14-0	10	14-0	10	14-0	
	P1032	#10	10	12-0	10	12-0	10	12-0	10	12-0	10	12-0	10	12-0	10	12-0	10	12-0	10	12-0	
	P1033	#10	5	27-0	5	31-0	5	30-0	5	31-0	5	29-8	5	29-8	5	31-0	5	29-8	5	33-0	
	P1034	#10	28	8-3 to 17-9 INCREMENT 1'-7" 4 BARS OF EACH	36	12-0 to 16-0 INCREMENT 0'-6" 4 BARS OF EACH	40	11-10 to 17-1 INCREMENT 0'-7" 4 BARS OF EACH	36	12-0 to 16-0 INCREMENT 0'-6" 4 BARS OF EACH		-		-	36	12-0 to 16-0 INCREMENT 0'-6" 4 BARS OF EACH		-		-	
	P1035	#10	56	18-6	24	16-6	34	17-6	24	16-6		-		-	24	16-6		-		-	
	P1131	#11	44	13-9 to 20-0 INCREMENT 0'-7½" 4 BARS OF EACH		-		-		-		-		-		-		-		-	
	P1132	#11	32	20-6		-		-		-		-		-		-		-		-	
	P1133	#11		-	16	7-9 to 15-6 INCREMENT 2'-7" 4 BARS OF EACH	20	9-1 to 16-7 INCREMENT 1'-10½" 4 BARS OF EACH	16	7-9 to 15-6 INCREMENT 2'-7" 4 BARS OF EACH		-		-	16	7-9 to 15-6 INCREMENT 2'-7" 4 BARS OF EACH		-		-	
	P1134	#11		-	42	17-6	50	18-6	42	17-6		-		-	42	17-6		-		-	

BENT BARS (ALL DIMENSIONS ARE OUT TO OUT)

	PIER		20		21		22		23		24		25		26		27		28		REMARKS
	MARK	SIZE	REQ.	LENGTH	REQ.	LENGTH	REQ.	LENGTH	REQ.	LENGTH	REQ.	LENGTH	REQ.	LENGTH	REQ.	LENGTH	REQ.	LENGTH	REQ.	LENGTH	
CAP BEAMS	P451	#4		-		-		-		-		-		-		-		-		-	
	P452	#4	12	5-6	12	5-6	12	5-6	12	5-4	12	5-4	12	5-2	12	5-2	12	5-2	12	5-2	
	P551	#5	36	19-6	36	19-8	36	19-8	32	17-3	32	17-3	32	17-1	32	17-1	32	17-1	32	17-1	
	P552	#5		-		-		-		-		-		-		-		-		-	
	P553	#5	144	7-4	144	7-4	144	7-4	152	7-3	152	7-3	224	7-4	224	7-4	224	7-4	224	7-4	
	P554	#5	144	11-0 to 19-6	144	11-0 to 19-6	144	11-0 to 19-6	152	9-7 to 18-7	152	9-7 to 18-7	152	9-8 to 18-8	152	9-8 to 18-8	152	9-8 to 18-8	152	9-8 to 18-8	
	P555	#5	72	7-10	72	7-10	72	7-10	72	7-8	72	7-8		-		-		-		-	
	P556	#5	72	11-4 to 19-10	72	11-4 to 19-10	72	11-4 to 19-10	72	10-2 to 18-8	72	10-2 to 18-8	72	9-10 to 18-4	72	9-10 to 18-4	72	9-10 to 18-4	72	9-10 to 18-4	
	P557	#5	80	5-7	80	5-7	80	5-7	80	5-4	80	5-4	80	5-1	80	5-1	80	5-1	80	5-1	
	P1151	#11	4	38-2	4	38-2	4	38-2	4	36-8	4	36-8	4	36-8	4	36-8	4	36-8	4	36-8	
	P1152	#11	4	33-10	4	33-10	4	33-10	4	32-6	4	32-6	4	32-6	4	32-6	4	32-6	4	32-6	
	P1153	#11	4	48-8	4	48-8	4	48-8	4	48-2	4	48-2	4	48-2	4	48-2	4	48-2	4	48-2	
	△ P14551	#14	18	46-~~8~~10	18	46-~~8~~10	18	46-~~8~~10	18	46-~~8~~10	18	46-~~8~~10	16	46-~~8~~10	16	46-~~8~~10	16	46-~~8~~10	16	46-~~8~~10	
SHAFTS	P461	#4	2	2690-0	2	2600-0	2	2470-0	2	2170-0	2	2030-0	2	1717-0	2	1630-0	2	1480-0	2	1373-0	
	P561	#5	38	22-0		-	38	22-0		-		-	32	18-10	32	18-10	32	18-10		-	

BENT BARS (ALL DIMENSIONS ARE OUT TO OUT)

	PIER		20		21		22		23		24		25		26		27		28		REMARKS
	MARK	SIZE	REQ.	LENGTH	REQ.	LENGTH	REQ.	LENGTH	REQ.	LENGTH	REQ.	LENGTH	REQ.	LENGTH	REQ.	LENGTH	REQ.	LENGTH	REQ.	LENGTH	
FOOTINGS	P481	#4	34	7-0	36	7-0	36	7-0	36	7-0	36	7-0	36	7-0	36	7-0	36	7-0	38	7-0	
	P1181	#11	132 ~~86~~ △	12-6	96 ~~48~~ △	12-6	156 ~~78~~ △	12-6	104 ~~52~~ △	12-6	96 ~~48~~ △	12-6	114 ~~57~~ △	12-6	138 ~~69~~ △	12-6	114 ~~57~~ △	12-6	88 ~~44~~ △	12-6	

NOTES

1. For General Notes see Sheet No. 2.
2. For Reinforcing Bar Details see Sheet No. 44.

REVISIONS
△ QUANTITIES E.Z. 5/18/70
△ QUANTITIES & LENGTHS T.F.F. 12/11/70
△ QUANTITIES & LENGTHS R.B.F. 1/18/71

DELAWARE
STATE HIGHWAY DEPARTMENT

INTERSTATE ROUTE I-495

CHRISTINA RIVER BRIDGE
BAR REINFORCING SCHEDULE
PIERS 20 TO 28

J. E. GREINER CO.
MORAN, PROCTOR, MUESER & RUTLEDGE
CONSULTING ENGINEERS

D. P. F.
T. V.R.W.
C. W.W.

SCALE NONE
DATE 5/19/70

APPROVED BY: John S. Kulstad
BRIDGE ENGINEER

OGILVIE PRESS, INC. — D-127 4248

COUNTY	CONTRACT	P. R. A. REG. NO.	STATE	FED. AID PROJECT NO.	FISCAL YEAR	SHEET NO.	TOTAL SHEETS
NEW CASTLE	70-04-016	2	DEL.	I-495-3 (19) 16		43	46

STRAIGHT BARS

	PIER		29		30		31		32		33		34		35		36		37		
	MARK	SIZE	REQ.	LENGTH	REQ.	LENGTH	REQ.	LENGTH	REQ.	LENGTH	REQ.	LENGTH	REQ.	LENGTH	REQ.	LENGTH	REQ.	LENGTH	REQ.	LENGTH	REMARKS
CAP BEAMS	P301	#3	64	3-8	64	3-8	64	3-8	64	3-8	64	3-8	64	3-8	64	3-8	36	3-8	36	3-8	
	P501	#5	16	43-8	16	43-8	16	43-8	16	43-8	16	43-8	16	43-8	16	43-8	16	43-8	16	43-8	
	P502	#5	△ ~~16~~ 12	9-0 to 34-0	△ ~~16~~ 12	9-0 to 34-0	△ ~~16~~ 12	9-0 to 34-0	△ ~~16~~ 12	9-0 to 34-0	△ ~~16~~ 12	9-0 to 34-0	△ ~~16~~ 12	9-0 to 34-0	△ ~~16~~ 12	9-0 to 34-0	△ ~~16~~ 8	15-0 to 33-4	12	15-0 to 33-4	
			INCREMENT 8'-4"														INCREMENT 9'-2"				2 BARS OF EACH
	P601	#6		-		-		-		-		-		-		-	8	12-0	8	12-0	
	P901	#9	24	25-0	24	25-0	24	25-0	24	25-0	24	25-0	24	25-0	24	25-0	~~24~~ 28	18-6	24	18-6	
	P1102	#11	32	13-0	32	13-0	32	13-0	32	13-0	24	13-0	24	13-0	24	13-0		-		-	
	P1103	#11		-		-		-		-		-		-		-		-	14	34-0	
	P14501	#14	16	34-0	16	34-0	16	34-0	16	34-0	16	34-0	16	34-0	16	34-0	14	34-0		-	
SHAFTS	P611	#6		-		-		-		-		-		-		-	32	12-0	32	12-0	
	P1111	#11	36	26-10	44	24-10	52	21-10	44	19-10	48	16-10	52	14-4	44	11-4		-		-	
	P1112	#11	28	35-0	32	33-0	36	30-0	36	28-0	26	25-0	36	22-6	32	19-6		-		-	
	P1113	#11	32	26-10	38	24-10		-		-		-		-		-		-		-	

NOT IN THIS CONTRACT

BENT BARS (ALL DIMENSIONS ARE OUT TO OUT)

	PIER		29		30		31		32		33		34		35		36		37		
	MARK	SIZE	REQ.	LENGTH	REQ.	LENGTH	REQ.	LENGTH	REQ.	LENGTH	REQ.	LENGTH	REQ.	LENGTH	REQ.	LENGTH	REQ.	LENGTH	REQ.	LENGTH	REMARKS
CAP BEAMS	P351	#3		-		-		-		-		-		-		-	198	4-6	198	4-6	
	P452	#4	12	5-0	12	5-0	12	5-0	12	5-0	12	5-0	12	5-0	12	5-0		-		-	
	P551	#5	32	15-7	32	15-7	32	15-7	32	15-7	32	△ 15-7 ~~17-1~~	32	△ 15-7 ~~17-1~~	32	△ 15-7 ~~17-1~~		-		-	
	P552	#5		-		-		-		-		△ 7-7 ~~7-4~~		△ 7-7 ~~7-4~~		△ 7-7 ~~7-4~~			36	8-3	
	P553	#5	224	7-2	224	7-2	224	7-2	224	7-2	224	~~7-4~~	224	~~7-4~~	224	~~7-4~~	112	7-0	112	7-0	
	P554	#5	152	9-6 to 18-6	152	9-6 to 18-6	152	9-6 to 18-6	152	9-6 to 18-6	152	~~9-8-6~~ △ to ~~18-8-6~~	152	~~9-8-6~~ △ to ~~18-8-6~~	152	~~9-8-6~~ △ to ~~18-8-6~~	112	9-6 to 16-0	112	9-6 to 16-0	
	P556	#5	72	9-8 to 18-2	72	9-8 to 18-2	72	9-8 to 18-2	72	9-8 to 18-2	72	~~9-10-8~~ △ to ~~18-4-2~~	72	~~9-10-8~~ △ to ~~18-4-2~~	72	~~9-10-8~~ △ to ~~18-4-2~~		-		-	
	P557	#6	80	4-10	80	4-10	80	4-10	80	4-10	80	4-10	80	4-10	80	4-10	56	4-10	56	4-10	
	P651	#6		-		-		-		-		-		-		-	8	9-9	8	9-9	
	P1151	#11	4	36-8	4	36-8	4	36-8	4	36-8	4	36-8	4	36-8	4	36-8		-		-	
	P1152	#11	4	32-6	4	32-6	4	32-6	4	32-6	4	32-6	4	32-6	4	32-6		-		-	
	P1153	#11	4	48-2	4	48-2	4	48-2	4	48-2	4	48-2	4	48-2	4	48-2		-		-	
	P1154	#11		△ 10-7		△ 10-7		△ 10-7		△ 10-7		△ 10-7		△ 10-7		△ 10-7		△ 10-7	14	46-8	
	P14351	#14	16	46-8	16	46-8	16	46-8	16	46-8	16	46-8	16	46-8	16	46-8	14	46-8		-	
SHAFTS	P361	#3		-		-		-		-		-		-		-	176	4-6	110	4-6	
	P461	#4	2	1112-0	2	1032-0	2	913-0	2	835-0	~~2~~ △ 3	715-0	2	615-0	2	497-0		-		-	
	P561	#5	36	17-3	34	17-3		-		-		-		-		-	~~32~~ △ 32	~~9-9~~ △ 9-9	20	9-9	
	P661																				

NOT IN THIS CONTRACT

STRAIGHT BARS

	PIER		29		30		31		32		33		34		35		36		37		
	MARK	SIZE	REQ.	LENGTH	REQ.	LENGTH	REQ.	LENGTH	REQ.	LENGTH	REQ.	LENGTH	REQ.	LENGTH	REQ.	LENGTH	REQ.	LENGTH	REQ.	LENGTH	REMARKS
FOOTINGS	P831	#8		-		-		-		-		-		-		-	20	6-0 to 20-0 INCREMENT 3'-9" 4 BARS OF EACH	20	6-0 to 20-0 INCREMENT 3'-9" 4 BARS OF EACH	
	P832	#8		-		-		-		-		-		-		-	10	20-6	10	20-6	
	P931	#9	20	10-0	20	10-0	12	8-0	12	12-0	12	8-0	12	8-0 △	12	8-0	12	12-0	12	12-0	
	P932	#9	5	33-0	5	33-0	6	24-0	6	27-0	6	24-0 △	6	24-0 △	6	27-0	6	27-0	6	27-0	
	P933	#9	48	8-6 to 13-6 INCREMENT 1'-0" 8 BARS OF EACH	48	8-6 to 13-6 INCREMENT 1'-0" 8 BARS OF EACH		-		-		-		-		-	32	5'-10 to 14-0 INCREMENT 1'-2" 4 BARS OF EACH	32	5'-10 to 14-0 INCREMENT 1'-2" 4 BARS OF EACH	
	P935	#9	68	14-6	68	14-6		-		-		-		-		-	10	14-6	10	14-6	
	P1031	#10	10	14-0	10	14-0		-		-		-		-		-		-		-	
	P1032	#10	10	12-0	10	12-0	12	12-0	12	12-0	12	12-0 △	12	12-0 △	12	12-0	12	12-0	12	12-0	
	P1033	#10	5	33-0	5	33-0	4	24-0	4	27-0	4	24-0 △	4	24-0 △	4	27-0	4	27-0	4	27-0	
	P1034	#10		-		-		-	32	9-9 to 13-3 INCREMENT 1'-2" 8 BARS OF EACH		-	32	4-2 to 15-10 INCREMENT 1'-8" 4 BARS OF EACH		-		-		-	
	P1035	#10		-		-		-	48	17-4		-	30	17-4		-		-		-	
	P1036	#10		-		-		-	40	14-5 to 16-9 INCREMENT 0'-7" 8 BARS OF EACH		-		-		-		-		-	
	P1131	#11		-		-		-		-		-	52	9-10 to 22-10 INCREMENT 1'-1" 4 BARS OF EACH		-		-		-	
	P1133	#11		-		-	56	9-9 to 17-9 INCREMENT 1'-4" 8 BARS OF EACH		-	56	9-9 to 17-9 INCREMENT 1'-4" 8 BARS OF EACH		-	56	9-9 to 17-9 INCREMENT 1'-4" 8 BARS OF EACH		-		-	
	P1134	#11		-		-	52	19-2		-	52	19-2		-	52	19-2		-		-	
	P1135	#11		-		-	8	18-6		-	8	18-6		-	8	18-6		-		-	

NOT IN THIS CONCRETE

BENT BARS (ALL DIMENSIONS ARE OUT TO OUT)

	PIER		29		30		31		32		33		34		35		36		37		
	MARK	SIZE	REQ.	LENGTH	REQ.	LENGTH	REQ.	LENGTH	REQ.	LENGTH	REQ.	LENGTH	REQ.	LENGTH	REQ.	LENGTH	REQ.	LENGTH	REQ.	LENGTH	REMARKS
FOOTINGS	P481	#4	38	7-0	38	7-0	20	8-10	21	8-10	20	8-10	21	8-10	20	8-10	21	8-10	21	8-10	
	P1181	#11	96 ~~48~~ △	12-6	114 ~~57~~ △	12-6	88 ~~44~~ △	12-6	80 ~~40~~ △	12-0	84 ~~42~~ △	12-6	88 ~~44~~ △	12-0	76 ~~38~~ △	12-6	112 ~~56~~ △	23-0	112 ~~56~~ △	21-6	

NOTES

1. For General Notes see Sheet No. 2.
2. For Reinforcing Bar Details see Sheet No. 44.

△ QUANTITIES & LENGTH T.E.F. 12/11/70

△ QUANTITIES & LENGTH T.E.F. 9/18/70

J. E. GREINER CO.
MORÀN, PROCTOR, MUESER & RUTLEDGE
CONSULTING ENGINEERS

D. P. F.
T. V.R.W.
C. W. W.

SCALE NONE

DATE 5/14/70

APPROVED BY: John H. Liddle
BRIDGE ENGINEER

DELAWARE
STATE HIGHWAY DEPARTMENT

INTERSTATE ROUTE I-495

CHRISTINA RIVER BRIDGE
BAR REINFORCING SCHEDULE
PIERS 29 TO 36

OGILVIE PRESS, INC. — D-127

COUNTY	CONTRACT	P. B. A. REG. NO.	STATE	FED. AID PROJECT NO.	FISCAL YEAR	SHEET NO.	TOTAL SHEETS
NEW CASTLE	70-04-016	2	DEL.	I-495-3(19)15		44	46

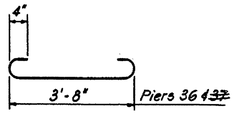

P351 & P361

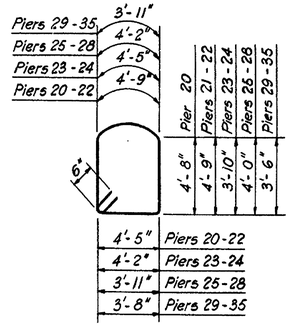

P551

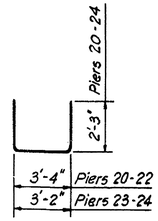

P555

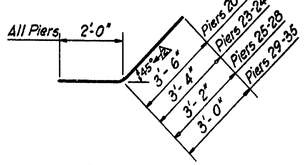

P452

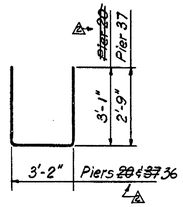

P552

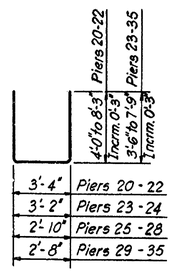

P556

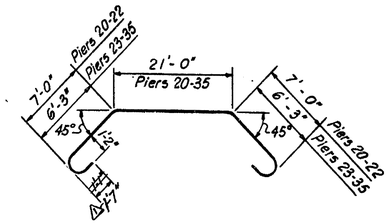

P 1151

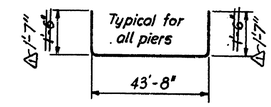

P14S51

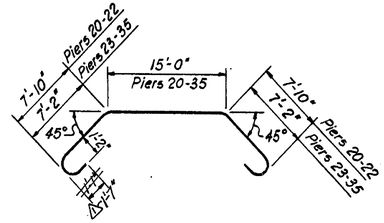

P1152

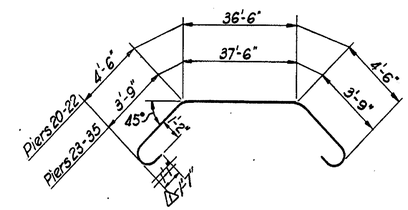

P1153

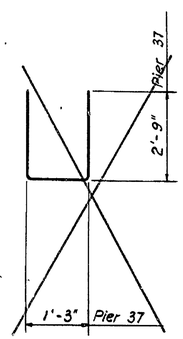

P453

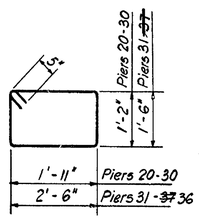

P 481

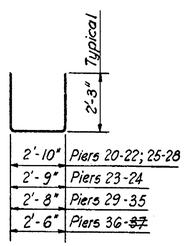

P553

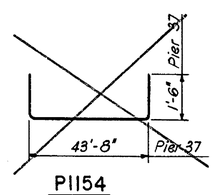

P1154

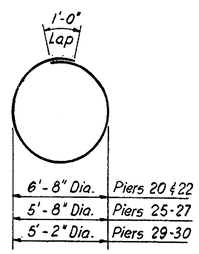

P561

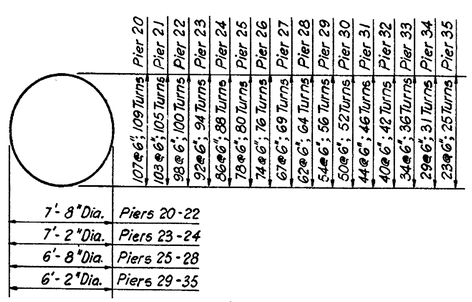

P461

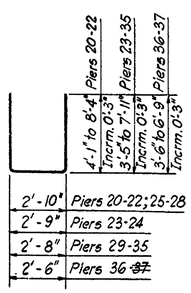

P554

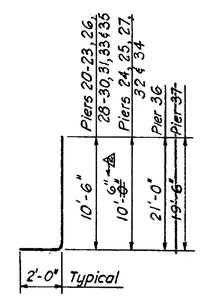

P1181

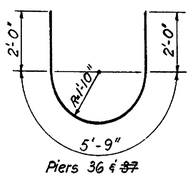

P651 & P661

NOTES

1. For General Notes see Sheet No. 2.
2. For Bar Reinforcement Schedule see Sheet No. 42 & 43.

DELAWARE
STATE HIGHWAY DEPARTMENT

INTERSTATE ROUTE I-495

CHRISTINA RIVER BRIDGE
BAR REINFORCEMENT DETAILS
PIERS 20 TO 36

J. E. GREINER CO.
MORAN, PROCTOR, MUESER & RUTLEDGE
CONSULTING ENGINEERS

D. P.F.
T. R.B.
C. W. W.

SCALE NONE
DATE 5/14/70

APPROVED BY: John E. Gibbs
BRIDGE ENGINEER

REVISED DIMENSIONS P351, P361, P452, P1151, P1152, P1153, P555, T.F.F. 12/11/70
REVISED DIMENSIONS — REF. 2-3-71

OGILVIE PRESS, INC. — 8-187

44

COUNTY	CONTRACT	P. R. A. REG. NO.	STATE	FED. AID PROJECT NO.	FISCAL YEAR	SHEET NO.	TOTAL SHEETS
NEW CASTLE	70-04-016	2	DEL.	I-495-3(19)15		45	46

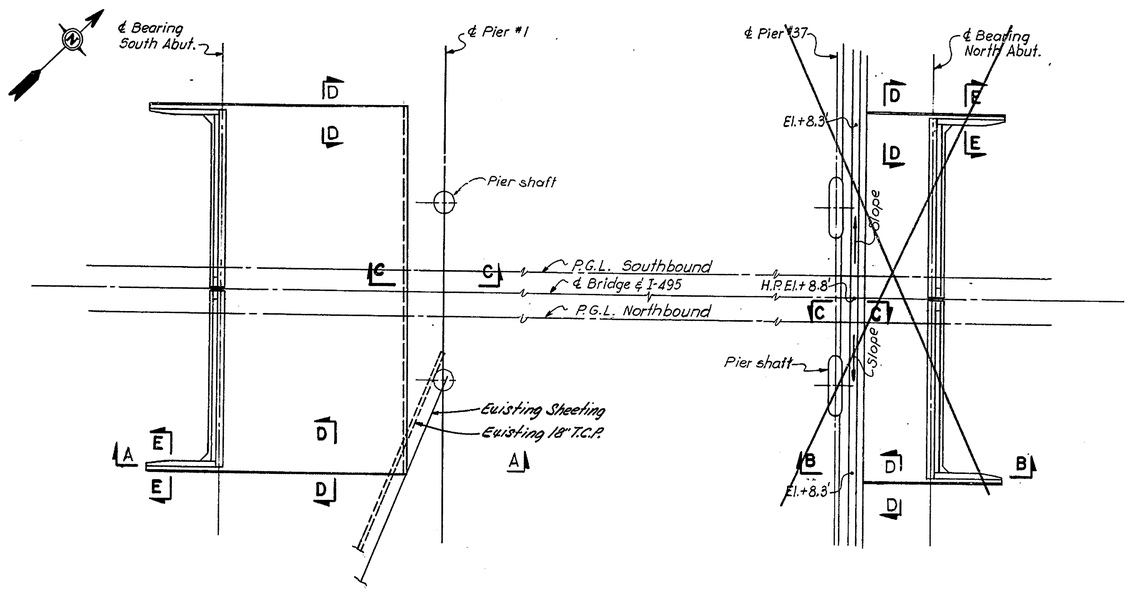

PLAN
Scale: 1" = 20' - 0"

NOT IN THIS CONTRACT

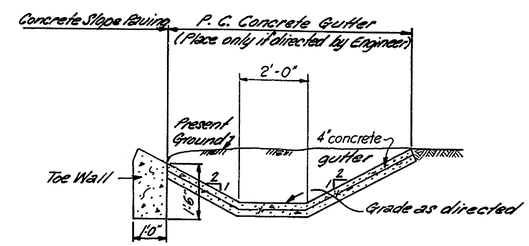

SECTION C-C
Scale: 1/2" = 1' - 0"

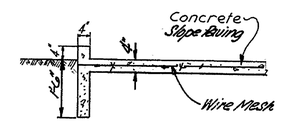

SECTION D-D
Scale: 1/2" = 1' - 0"

NOTES

1. For General Notes see Sheet No. 2.

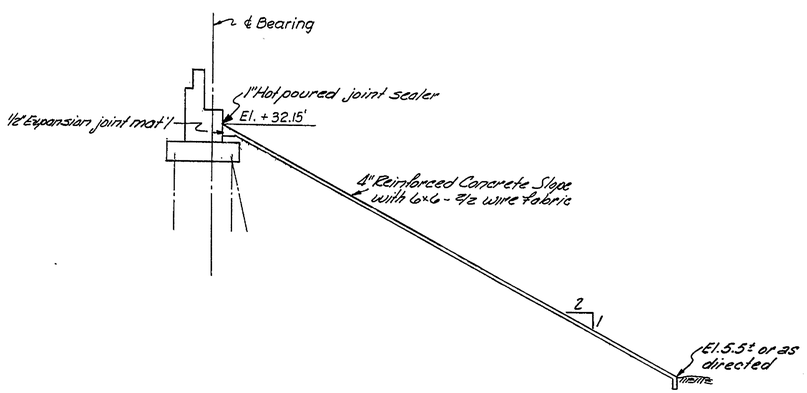

SECTION A-A
Scale: 1/8" = 1' - 0"

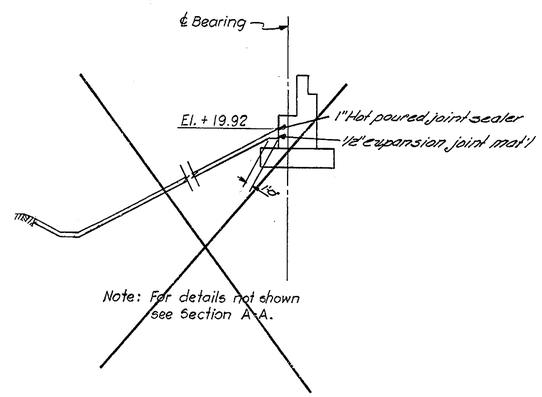

SECTION B-B
Scale: 1/8" = 1' - 0"

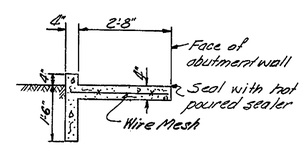

SECTION E-E
Scale: 1/2" = 1' - 0"

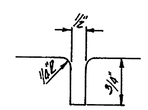

GROVE DETAIL
(For Location see Special Provs.)

J. E. GREINER CO. MORAN, PROCTOR, MUESER & RUTLEDGE CONSULTING ENGINEERS	D. S.L.T. T. R.B. C. W.W.	SCALE AS NOTED DATE 5/14/70	APPROVED BY: John H. Rutledge BRIDGE ENGINEER

DELAWARE
STATE HIGHWAY DEPARTMENT

INTERSTATE ROUTE I-495

CHRISTINA RIVER BRIDGE
SLOPE PAVING DETAILS

w/ Slope Protection Revised 7/29/70 (Addendum #3)

COUNTY	CONTRACT	F. B. A. REG. NO.	STATE	FED. AID PROJECT NO.	FISCAL YEAR	SHEET NO	TOTAL SHEETS
NEW CASTLE	70-04-016	2	DEL.	I-495-3(19)15		45A	46

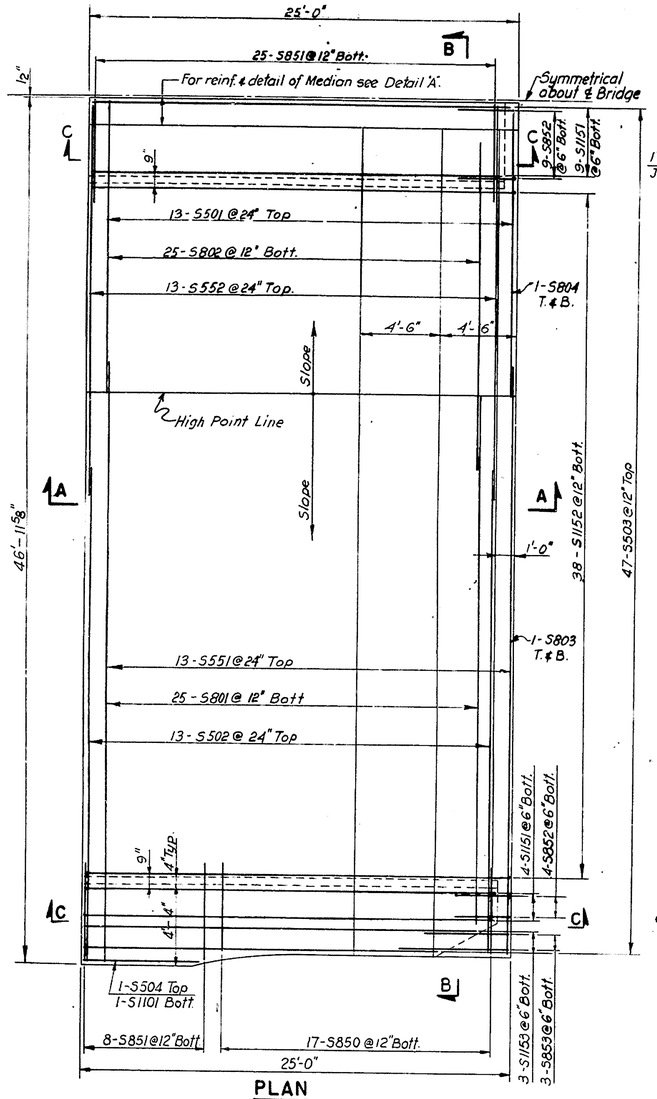

PLAN

2-AS SHOWN

Scale: ¼"=1'-0"

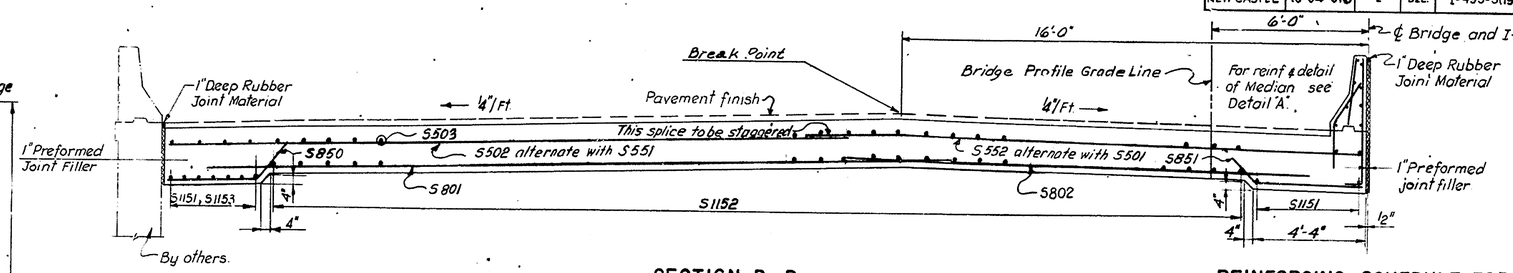

SECTION B-B

Scale: 3/8"=1'-0"

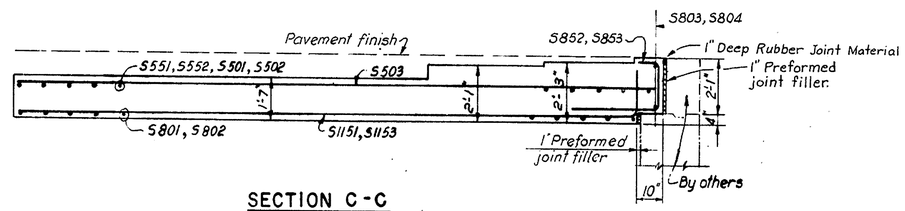

SECTION C-C

Scale: 3/8"=1'-0"

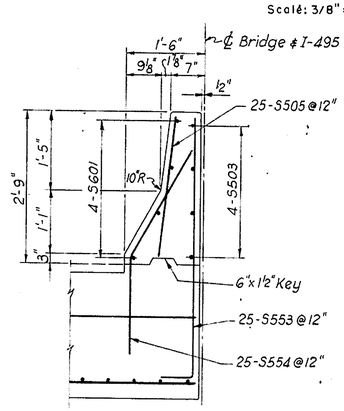

DETAIL "A"

Scale: 3/4"=1'-0"

REINFORCING SCHEDULE FOR ONE SLAB

2 REQUIRED EXCEPT AS NOTED

BENT BARS- (Dimensions are out to out)

MARK	NO.	SIZE	LENGTH	TYPE	A	B	C	D	E	F	G	REMARKS
S551	13	#5	32-4	II	30-9	1-7	0-1	1-7				
S552	13	"	21-4	II	15-9	5-7	0-3	5-7				
S553	25	"	5-1	I	4-7	0-6						
S554	25	#5	4-0	II	1-10	2-2	1-2	1-10				
S850	17	#8	5-0	II	3-3	1-9	1-3	1-3				
S851	33	#8	5-9	II	4-0	1-9	1-3	1-3				
S852	13	#8	5-7	I	3-3	1-8	0-8					
S853	3	#8	6-6 to 8-6	I	4-2 to 6-2	1-8	0-8					Increment 1'-0"
S1151	13	#11	25-8	I	23-10	1-10						
S1152	38	#11	26-2	I	24-6	1-8						
S1153	3	#11	22-8 to 24-8	I	21-0 to 23-0	1-8						Increment 1'-0"

STRAIGHT BARS

MARK	NO.	SIZE	LENGTH	REMARKS
S501	13	#5	15-9	
S502	13	"	26-9	
S503	51	"	24-8	
S504	1	#5	6-6	
S505	25	#5	2-6	
S601	4	#6	24-8	
S801	25	#8	29-0	
S802	25	"	18-0	
S803	2	"	30-10	
S804	2	#8	19-10	
S1101	1	#11	6-6	

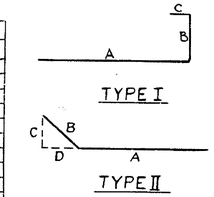

NOTE

For General Notes see Sheet Nos. 2 & 3.

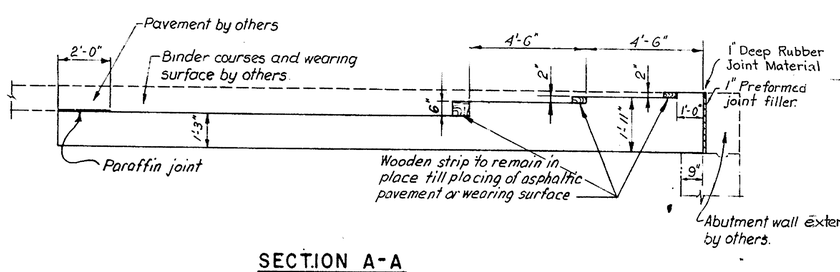

SECTION A-A

Scale: 3/8"=1'-0"

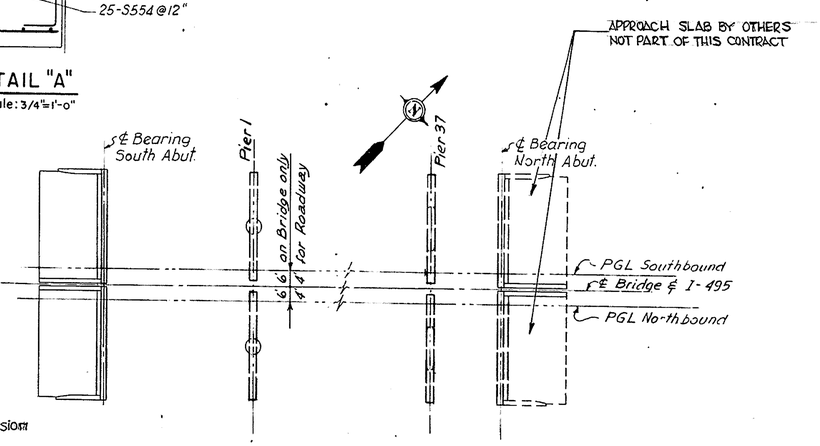

KEY PLAN

N.T.S.

J. E. GREINER CO.
MORAN, PROCTOR, MUESER & RUTLEDGE
CONSULTING ENGINEERS

DELAWARE DEPARTMENT OF HIGHWAYS & TRANSPORTATION
DIVISION OF HIGHWAYS

INTERSTATE ROUTE I-495

CHRISTINA RIVER BRIDGE
SO. APPROACH SLABS

D. R.C.H.
T. P.O.
C. W. W.

SCALE AS NOTED
DATE 7/1/71

APPROVED BY:
BRIDGE ENGINEER

NEW SHEET-APPROACH SLAB SO. ABUTMENT ADDED — JAN. 27, 1972 B.G.S. & R.O.F.

COUNTY	CONTRACT	F.E.A. REG. NO.	STATE	FED. AID PROJECT NO.	FISCAL YEAR	SHEET NO.	TOTAL SHEETS
NEW CASTLE	70-04-016	2	DEL.	I-495-3(19)15		46	46

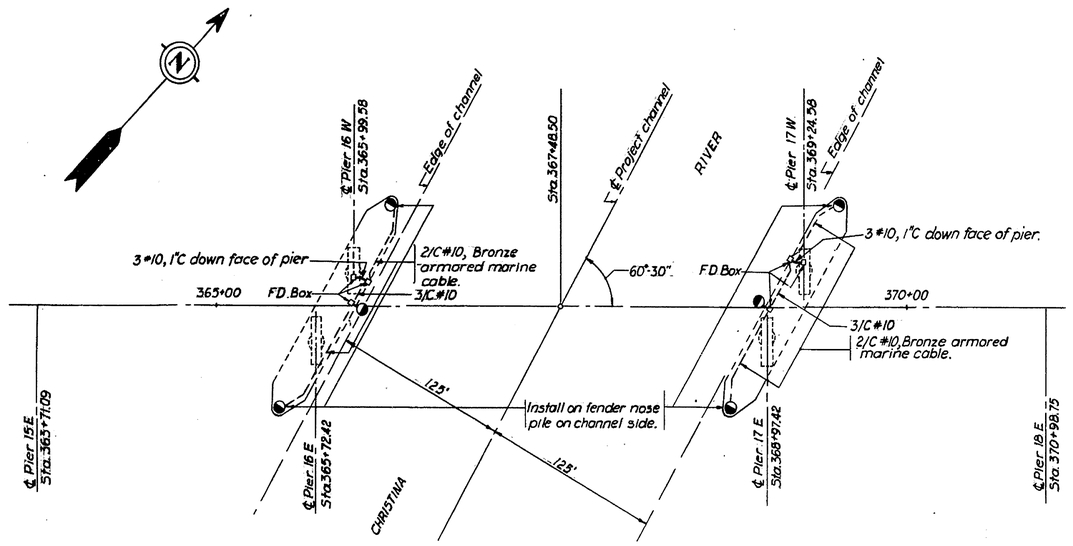

PLAN
Scale: 1"=50'

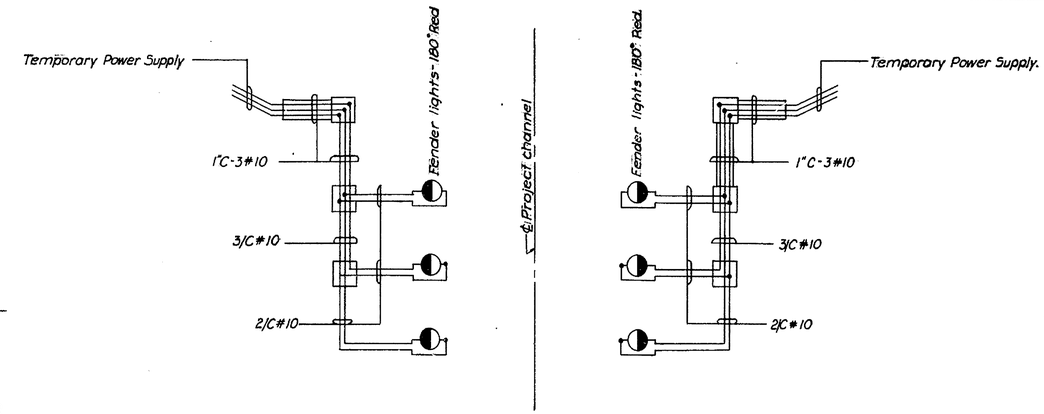

SCHEMATIC WIRING DIAGRAM

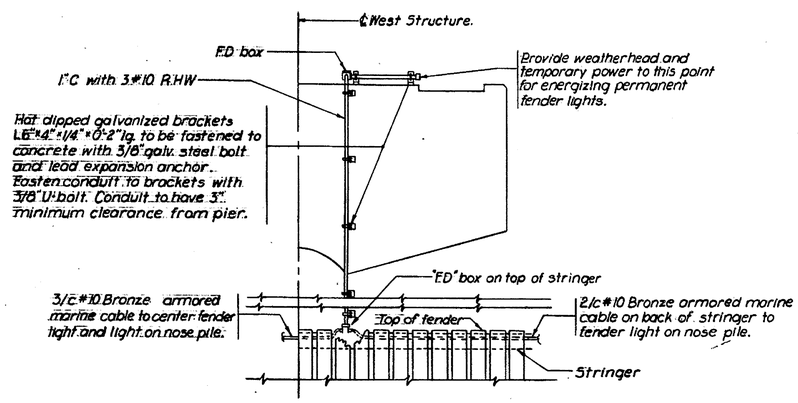

CONDUIT ARRANGEMENT AT PIER 17 W
Scale: 3/16"=1'-0"

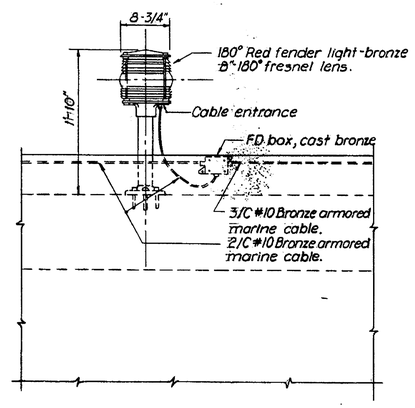

SIDE ELEVATION

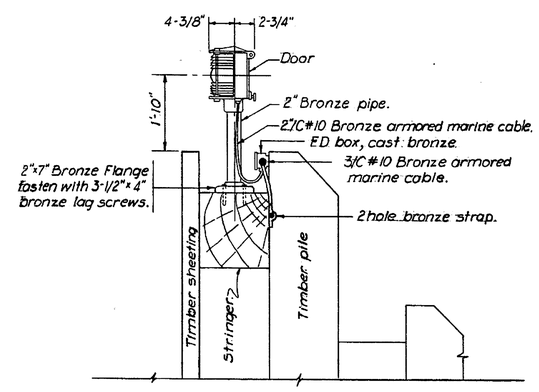

FRONT ELEVATION

180° RED FENDER LIGHT
Scale 1"=1'-0"

REVISIONS

DELAWARE
STATE HIGHWAY DEPARTMENT

INTERSTATE ROUTE I-495

CHRISTINA RIVER BRIDGE
SUBSTRUCTURE
NAVIGATION LIGHTING

J. E. GREINER CO.
MORAN, PROCTOR, MUESER & RUTLEDGE
CONSULTING ENGINEERS

D. R.L.S.
T. L.G.
C. N.W.K.

SCALE As Noted.
DATE July 29, 1966

APPROVED BY: John S. Rutledge 5/12/70
BRIDGE ENGINEER

COUNTY	CONTRACT	F.P.A. REG. NO.	STATE	FED. AID PROJECT NO.	FISCAL YEAR	SHEET NO.	TOTAL SHEETS
NEW CASTLE		2	DEL.			A	

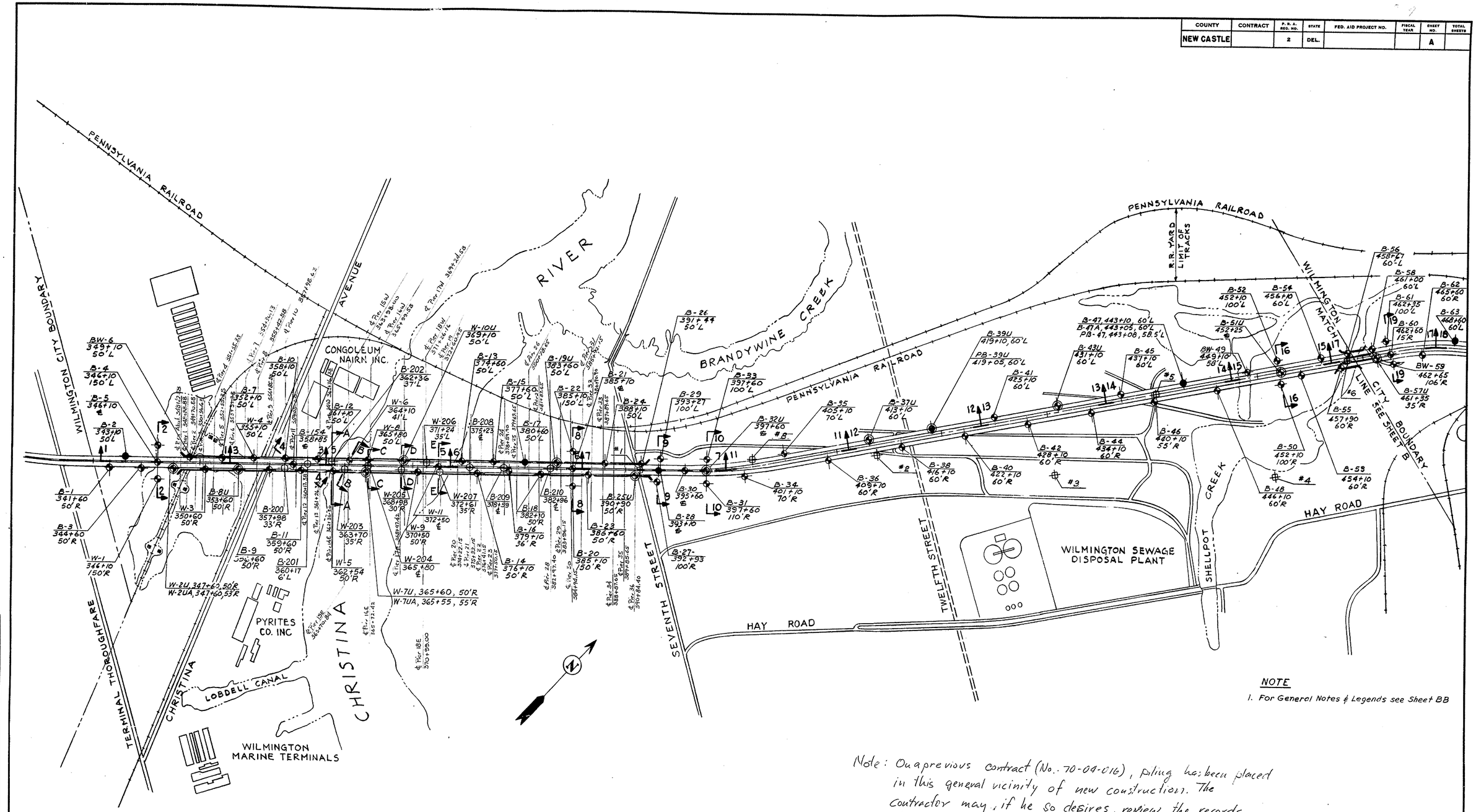

NOTE

1. For General Notes & Legends see Sheet BB

Note: On a previous contract (No. 70-04-016), piling has been placed in this general vicinity of new construction. The contractor may, if he so desires, review the records of pile driving in the office of the Bridge Engineer.

GRAPHIC SCALE

400' 200' 0 400' 800' 1200'

FOR INFORMATION ONLY

J. E. GREINER CO.
MORAN, PROCTOR, MUESER & RUTLEDGE
CONSULTING ENGINEERS

DELAWARE
STATE HIGHWAY DEPARTMENT

INTERSTATE ROUTE I-495

BORING LOCATION PLAN
STATION 341+00 TO STATION 459+27

D. S.L.T.	SCALE 1" = 400'	APPROVED BY:
T. L. S.		
C. R.C.H.	DATE 3-1-1963	BRIDGE ENGINEER

REVISIONS
1. Added locations of 200 series borings.
2. Added Transverse Sections A-A to E-E inclusive.

GRILVIE PRESS, INC. — B-127 4240

M2450

D C B A 1 5 10 A B C D

COUNTY	CONTRACT	P. B. A. REG. NO.	STATE	FED. AID PROJECT NO.	FISCAL YEAR	SHEET NO.	TOTAL SHEETS
NEW CASTLE		2	DEL.			BB	

INDEX

SHEET	TITLE	CONTENTS
AA	TITLE SHEET	PROJECT TITLE & SITE PLAN
BB	GENERAL NOTES, LEGENDS & INDEX	AS SHOWN
A	BORING LOCATION PLAN - STA. 341+00 TO STA. 459+27	LOCATION PLAN FOR SECTIONS 1-1 TO 17-17
B	" " " - STA. 459+27 TO STA. 561+50	" " " " 17-17 TO 36-36
C	" " " - STA. 561+50 TO STA. 625+00	" " " " 37-37 TO 43-43
D	BORINGS & GEOLOGIC SECTIONS - STA. 341+00 TO STA. 353+20	SECTIONS 1-1 AND 2-2; DATA FOR PIEZOMETER PB-2
E	" " " " - STA. 353+20 TO STA. 362+20	" 3-3 AND 4-4
F	" " " " - STA. 362+20 TO STA. 374+20	" 5-5
G	" " " " - STA. 374+20 TO STA. 386+30	" 6-6 AND DATA FOR PIEZOMETER PB-17
H	" " " " - STA. 386+30 TO STA. 399+10	" 7-7 " " " " PB-28
I	" " " " - STA. 385+10, 393+10, 397+60	" 8-8, 9-9 AND 10-10
J	" " " " - STA. 399+10 TO STA. 411+10	" 11-11
K	" " " " - STA. 411+10 TO STA. 423+60	" 12-12 AND DATA FOR PIEZOMETER PB-39U
L	" " " " - STA. 423+60 TO STA. 436+10	" 13-13
M	" " " " - STA. 436+10 TO STA. 448+80	" 14-14 AND DATA FOR PIEZOMETER PB-47
N	" " " " - STA. 448+80 TO STA. 466+90	" 15-15, 16-16 AND 17-17
O	" " " " - STA. 466+90 TO STA. 479+60 & STA. 462+60	" 18-18, 19-19 AND 20-20; DATA FOR PIEZOMETER PB-63
P	" " " " - STA. 479+60 TO STA. 490+70 & STA. 476+11, STA. 477+75	" 21-21, 22-22, 23-23 AND 24-24; DATA FOR PIEZOMETER PB-73 & PB-78
Q	" " " " - STA. 490+70 TO STA. 500+70	" 25-25, 26-26, 27-27 AND 28-28 DATA FOR PIEZOMETER PB-100
R	" " " " - STA. 500+70 TO STA. 511+80	" 29-29, 30-30, 31-31 AND 32-32 DATA FOR PIEZOMETER PB-109
S	" " " " - STA. 511+80 TO STA. 534+10	" 33-33 AND 34-34; DATA FOR PIEZOMETER PB-113
T	" " " " - STA. 534+10 TO STA. 561+20	" 35-35 AND 36-36 " " " PB-125
U	" " " " - STA. 561+20 TO STA. 591+60	" 37-37 AND 38-38 " " " PB-137
V	" " " " - STA. 591+60 TO STA. 610+60	" 39-39 AND 40-40
W	" " " " - STA. 610+60 TO STA. 622+60 & STA. 602+77, STA. 604+03	" 41-41, 42-42 AND 43-43; DATA FOR PIEZOMETER PB-153
X	DELAWARE RIVER BORING LOCATION PLAN AND BORING LOGS W-12 TO W-19	AS SHOWN
Y	DELAWARE RIVER BORING LOGS W-20 TO W-34	AS SHOWN
Z	TYPICAL PIEZOMETER INSTALLATION & TIDE READINGS.	AS SHOWN

NOTES AND LEGEND FOR BORING LOCATION PLAN

1. TOPOGRAPHY SHOWN ON PLANS WAS COMPILED BY PHOTOGRAMMETRIC METHODS FROM DATA OBTAINED BY AIR SURVEY CORPORATION IN THE SPRING OF 1962 AND SUPPLEMENTED BY INSTRUMENT SURVEYS MADE BY THE J.E. GREINER COMPANY AND MORAN, PROCTOR, MUESER & RUTLEDGE.
2. 1 2 - INDICATES LIMITS AND NUMBER OF GEOLOGIC SECTION.
3. B-7 - SYMBOL AND NUMBER DESIGNATION OF DRY SAMPLE BORING.
   - B - BORINGS LOCATED ON LAND
   - W - BORINGS MADE ON WATER
   - BW - BORINGS SCHEDULED TO BE MADE ON LAND THAT WERE ACTUALLY MADE ON WATER.
4. B-8U - SYMBOL AND NUMBER DESIGNATION OF UNDISTURBED SAMPLE BORING.
5. B-2 - SYMBOL DESIGNATION WHERE PIEZOMETER WAS INSTALLED WITHIN OR ADJACENT TO THE BORING INDICATED. (FOR TYPICAL DETAILS OF PIEZOMETER INSTALLATION, SEE SHEET Z).
6. 2 - SYMBOL AND NUMBER DESIGNATION FOR 8 BORINGS MADE IN 1957 BY SPRAGUE AND HENWOOD, INC. FOR MICHAEL BAKER JR., INC. LOGS OF THESE BORINGS ARE AVAILABLE AT THE DELAWARE STATE HIGHWAY DEPARTMENT.
7. LOCATION PLAN OF BORINGS MADE FOR BORROW INVESTIGATION IN THE DELAWARE RIVER IS SHOWN ON SHEET X. BORING LOGS ARE ON SHEETS X AND Y.
8. BORING LOCATIONS AND ELEVATIONS WERE ESTABLISHED IN THE FIELD BY J.E. GREINER COMPANY AND MORAN, PROCTOR, MUESER & RUTLEDGE.

LEGEND FOR BORING LOGS

1.

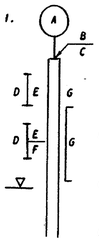

A = BORING LOCATION AND NUMBER; SUFFIXED BY A LETTER "U" INDICATES UNDISTURBED SAMPLE BORINGS USING 3-1/2" DIAMETER CASING. ALL OTHER BORINGS ARE DRY SAMPLE BORINGS USING 2-1/2" DIAMETER CASING EXCEPT BORINGS B-152A AND B-152B WHICH WERE MADE WITH AN 1" DIAMETER RETRACTABLE PLUG SAMPLER.

B = ELEVATION OF GROUND SURFACE AT LAND BORING LOCATIONS OR ELEVATION OF MUD LINE AT WATER BORING LOCATIONS.

C = DISTANCE AND DIRECTION OF OFFSET OF BORINGS FROM CENTERLINE OF ROUTE I-495, LOOKING AT INCREASING STATIONS.

D = TYPE AND NUMBER OF SAMPLE:

- D - DRY SAMPLES TAKEN WITH A 2" O.D. SPLIT SPOON
- U - UNDISTURBED SAMPLES RECOVERED WITH A 3" DIAMETER FIXED-PISTON SAMPLER
- S - 3" DIAMETER OPEN END "SHELBY" TUBE SAMPLES
- W - SAMPLES RECOVERED FROM WASH WATER
- UD,SD - JAR SAMPLES FROM AN UNACCEPTABLE UNDISTURBED OR "SHELBY" SAMPLES
- V - VANE SHEAR TESTS, MADE WITH A TAPPERED 2-1/2"x6-3/4" VANE.
- NR - NO RECOVERY
- CORE - 1-3/16" ROCK CORE

E = PENETRATION RESISTANCE DURING ADVANCING OF SAMPLER RECORDED IN NUMBER OF BLOWS OF 140 LB. HAMMER, FALLING 30" PER FOOT OF PENETRATION OR AS OTHERWISE NOTED. BLOWS INDICATED ARE FOR LAST 12" OF AN 18" DRIVE. ALSO INDICATES PER CENT RECOVERY OF ROCK CORE.

- P - INDICATES SAMPLER PUSHED DOWN BY HAND FOR DRY SAMPLES AND BY USE OF MACHINE FOR UNDISTURBED SAMPLES.
- T - INDICATES SAMPLER DRIVEN DOWN BY 340 LB. HAMMER WITH A VARIABLE HEIGHT OF FALL. BLOWS NOT SHOWN.
- WH - ADVANCED UNDER WEIGHT OF SAMPLE HAMMER.
- WR - ADVANCED UNDER WEIGHT OF "A" DRILL RODS.
- HD - SAMPLE WAS HAND-DUG.

F = WATER CONTENT OF SOIL SAMPLE EXPRESSED IN PER CENT OF DRY WEIGHT.

G = PENETRATION RESISTANCE ENCOUNTERED IN ADVANCING CASING, RECORDED IN NUMBER OF BLOWS OF 300 LB. HAMMER FOR DRY SAMPLE HOLES AND 340 LB. HAMMER FOR UNDISTURBED SAMPLE HOLES WITH 24" FALL PER FOOT OF PENETRATION.

[G PENETRATION RESISTANCE OF CASING DRIVEN AFTER HOLE HAD BEEN WASHED AHEAD.

▽ MOST RELIABLE GROUND WATER LEVEL AS OBSERVED IN BORED HOLE.

▽ RANGE OF GROUND WATER LEVELS OBSERVED IN PIEZOMETER.

2. DESCRIPTIONS OF MATERIAL PERTAIN TO INDIVIDUAL SAMPLES AND ARE BASED ON LABORATORY TESTS AND MAY OR MAY NOT AGREE WITH THOSE ON THE FIELD BORING LOGS OR THE DRILLERS' LOGS.
3. ALL TIMES INDICATED ON THE WATER LEVEL OBSERVATIONS FROM PIEZOMETERS ARE EASTERN DAYLIGHT SAVING TIME.

NOTES FOR GEOLOGIC SECTIONS

1. STRATIFICATIONS FOR GEOLOGIC SECTIONS ARE INTERPOLATIONS FROM INDIVIDUAL BORINGS AND MAY NOT REPRESENT THE EXISTING CONDITIONS. THE CONTRACTOR SHALL MAKE HIS OWN INTERPRETATION WHICH MAY AFFECT HIS METHODS AND COST OF CONSTRUCTION.
2. SUBSOIL STRATIFICATIONS ARE BASED ON LABORATORY TESTS AND GEOLOGICAL CONSIDERATIONS WITH EACH GROUP REPRESENTED BY THE ENCIRCLED NUMERAL. THE APPROPRIATE DESCRIPTIONS FOR NUMERAL DESIGNATIONS ARE INCLUDED IN THE "LEGEND FOR STRATIFICATION".
3. DESCRIPTIONS AND DIVISIONS OF SUBSOIL STRATA WERE DETERMINED BY J.E. GREINER COMPANY AND MORAN, PROCTOR, MUESER & RUTLEDGE FROM EXAMINATION OF SAMPLES AND LABORATORY TESTS AND MAY OR MAY NOT AGREE WITH THOSE ON THE FIELD BORING LOGS OR THE DRILLERS' LOGS.
4. STRATIFICATIONS SHOWN ON THE LONGITUDINAL GEOLOGIC SECTIONS ARE PROJECTIONS FROM INDIVIDUAL BORINGS ON THE PLANE PASSING THROUGH THE CENTERLINE OF ROUTE I-495 EXCEPT SECTIONS 35 TO 40 INCLUSIVE. SECTIONS 35 TO 40 ARE PROFILES OF PLANES PASSING THROUGH BORINGS SHOWN. ALL BORINGS ON THE LONGITUDINAL SECTIONS ARE SHOWN AT THE PROPER LOCATIONS WITH RESPECT TO THE STATIONS ALONG THE CENTERLINE. THESE LOCATIONS MAY OR MAY NOT REPRESENT THE ACTUAL DISTANCE BETWEEN INDIVIDUAL BORINGS.
5. NO EXISTING STRUCTURES OR UTILITY LINES INTERSECTED BY THE GEOLOGIC SECTIONS ARE SHOWN.
6. ALL ELEVATIONS REFER TO U.S.C.& G. SURVEY DATUM; MEAN SEA LEVEL AT SANDY HOOK = 0.00 FT.
7. TIDE READINGS OBTAINED BY J.E. GREINER COMPANY AND MORAN, PROCTOR, MUESER & RUTLEDGE ARE FROM TWO TIDE GAUGES IN THE CHRISTINA RIVER ADJACENT TO THE PROPOSED RIVER CROSSING, LOCATED APPROXIMATELY 1/2 MILE UPSTREAM FROM THE WILMINGTON MARINE TERMINAL. (SEE SHEET Z).

LEGEND FOR STRATIFICATION

J.E.G. CO. & M.P.M.& R. DESIGNATION	DELAWARE DESIGNATION	SOIL DESCRIPTION
I	A-7 & A-8	SOFT DARK GRAY ORGANIC SILTY CLAY, TRACE TO SOME VEGETATION AND TRACE PEAT LAYERS.
II	A-4	LOOSE TO MEDIUM COMPACT BROWN AND GRAY FINE TO MEDIUM SANDY SILT TO SILTY FINE SAND.
III	A-1	COMPACT TO VERY COMPACT BROWN COARSE TO FINE SAND, SOME GRAVEL, TRACE SILT AND MICA.
IV	A-6	MEDIUM TO STIFF GRAY AND BROWN SILTY CLAY AND CLAYEY SILT WITH GRAY FINE SAND LAYERS.
V	A-6	STIFF MOTTLED RED WITH GRAY SILTY CLAY, TRACE TO SOME SAND AND GRAVEL, LENSES OF GRAY FINE SANDY SILT.
VI	A-4	COMPACT TO VERY COMPACT RED, BROWN AND GRAY FINE SANDY SILT TO SILTY FINE SAND, SOME CLAY.
VII	A-6	STIFF TO HARD VARICOLORED SILTY CLAY TO CLAYEY FINE SAND AND FINE SAND.
VIII	—	BEDROCK - RELATIVELY SOUND FRACTURED DARK GRAY QUARTZ DIORITE.

ABBREVIATIONS

b	BOTTOM	lt	LIGHT
bk	BLACK	m, med	MEDIUM
brn	BROWN	m-c	MEDIUM TO COARSE
c	COARSE	mic	MICACEOUS
cl	CLAY OR CLAYEY	mid	MIDDLE
comp	COMPACT	mtld	MOTTLED
dec	DECOMPOSED, DECAYED	org	ORGANIC
dk	DARK	si	SILT, SILTY
f	FINE	sm	SOME
fgmt	FRAGMENTS	t	TOP
grn	GREEN	tr	TRACE
gry	GRAY	veg	VEGETATION, VEGETABLE MATTER
gvl	GRAVEL	yel	YELLOW

FOR INFORMATION ONLY

DELAWARE
STATE HIGHWAY DEPARTMENT

INTERSTATE ROUTE I-495

GENERAL NOTES
LEGENDS AND INDEX

J. E. GREINER CO.
MORAN, PROCTOR, MUESER & RUTLEDGE
CONSULTING ENGINEERS

D. RCH
T. VRW
C. RCH

SCALE NONE

DATE 3-1-1963

APPROVED BY:

BRIDGE ENGINEER

BB

REVISIONS

ORSLVIE PRESS, INC. — B-187 4040
M2450

COUNTY	CONTRACT	P.R.A. RES. NO.	STATE	FED. AID PROJECT NO.	FISCAL YEAR	SHEET NO.	TOTAL SHEETS
NEW CASTLE		2	DEL.			D	

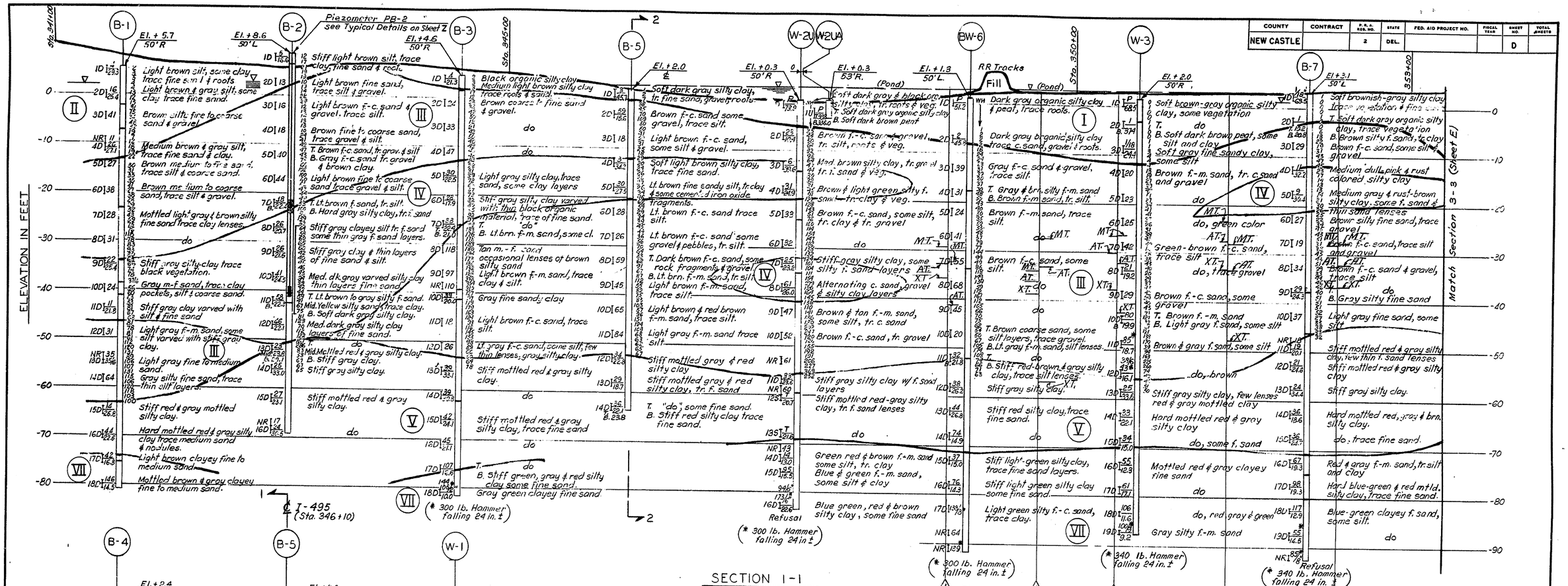

STATION		348+88.88	348+88.88	349+70.88	349+70.88	350+36.63	350+36.63		351+35.38	351+35.38		352+33.38	352+33.38
LOCATION		1 E.	1 W.	2 E.	2 W.	3 E.	3 W.		4 E.	4 W.		5 E.	5 W.
TYPE OF PILE		Monotube	Monotube	Monotube	Monotube	Monotube	Monotube		Monotube	Monotube		Monotube	Monotube
TIP ELEV. MIN.	(MT.)	-29.33	-32.40	-33.96	-27.25	-26.63	-26.21		-23.38	-27.94		-28.02	-27.57
MAX.	(XT.)	-35.50	-100.65	-38.55	-56.74	-37.37	-44.95		-33.40	-47.62		-36.53	-36.51
AVERAGE	(AT.)	-32.65	-41.31	-36.35	-33.40	-30.08	-32.87		-27.47	-33.79		-32.49	-32.28

WATER LEVEL OBSERVATIONS FROM PIEZOMETER PB-2

DATE	8-23 1962	8-24	8-24	8-27	8-27	8-30	9-4	9-6	9-11	9-12	9-18	9-20	9-21	10-5	10-12	10-26	10-30	11-2	11-7	11-28			
TIME	1300	0800	1300	1000	1400	1145	1415	1400	1430	0915	0950	0845	1520	1310	0755	1220	0730	1115	0925	1600			
W.L. ELEV.	+2.5	+2.0	+1.9	+1.7	+1.8	+1.7	+1.7	+1.7	+1.7	+1.7	+1.9	+2.0	+1.5	+2.0	+1.9	+2.6	+1.9	+2.1	+2.3	+2.6			

NOTES:
1. For General Notes and Legend see Sheet BB
2. For Plan see Sheet A

GRAPHIC SCALES
Horizontal 40' 20' 10' 0 40' 80' 120'
Vertical 10' 5' 0 10' 20' 30'

FOR INFORMATION ONLY

J.E. GREINER CO.
MORAN, PROCTOR, MUESER & RUTLEDGE
CONSULTING ENGINEERS

DELAWARE
STATE HIGHWAY DEPARTMENT

INTERSTATE ROUTE I-495

BORINGS AND GEOLOGIC SECTIONS
STA.341+00 TO STA.353+20

D. S.L.T.	SCALE AS SHOWN	APPROVED BY:
T. P.O.		
C. RCH.	DATE 3-1-1963	BRIDGE ENGINEER

As Built Information Added - (Pile Tip Elev) 4/16/72 TTF

M2450

COUNTY	CONTRACT	F.A.P. REG. NO.	STATE	FED. AID PROJECT NO.	FISCAL YEAR	SHEET NO.	TOTAL SHEETS
NEW CASTLE		2	DEL.			E	

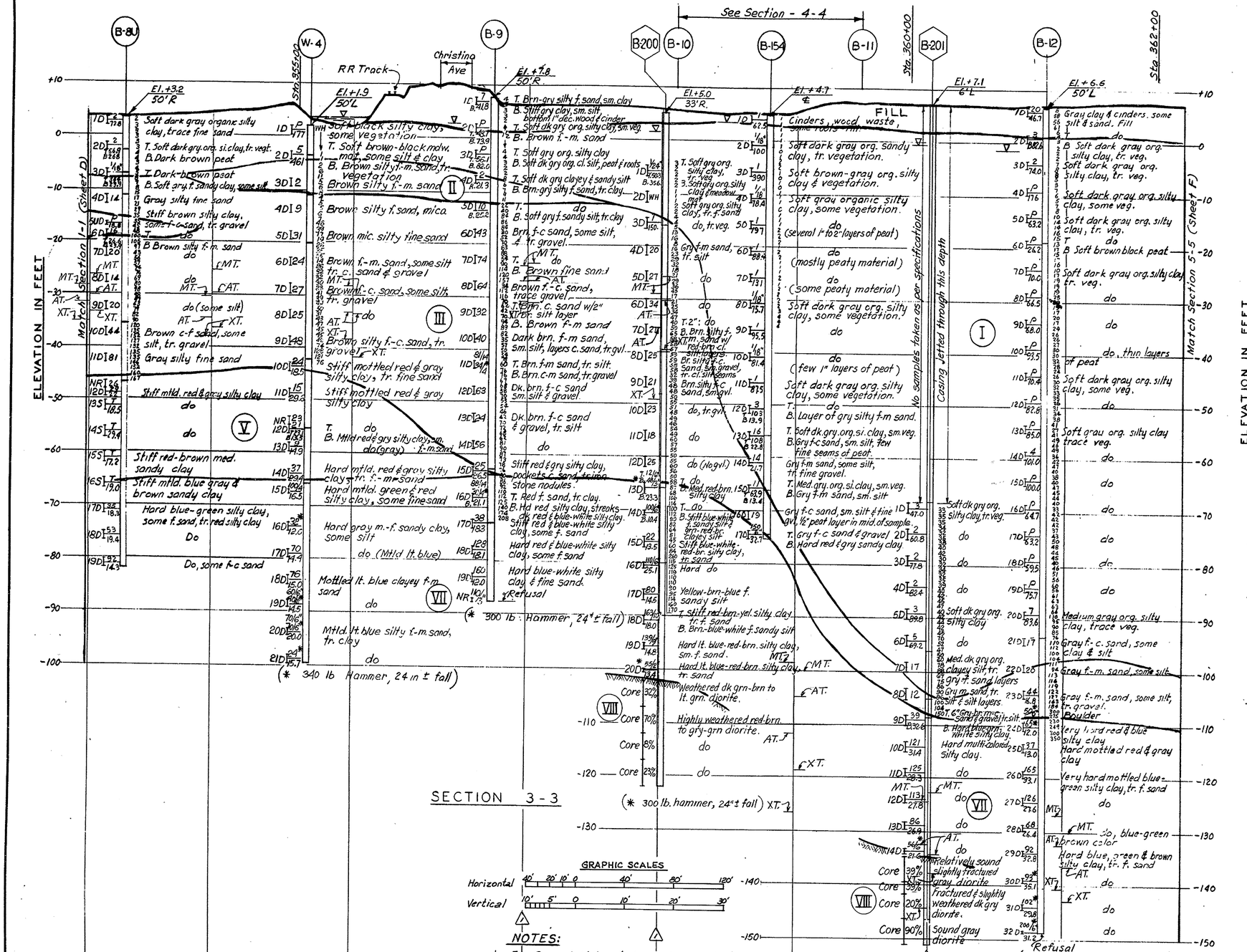

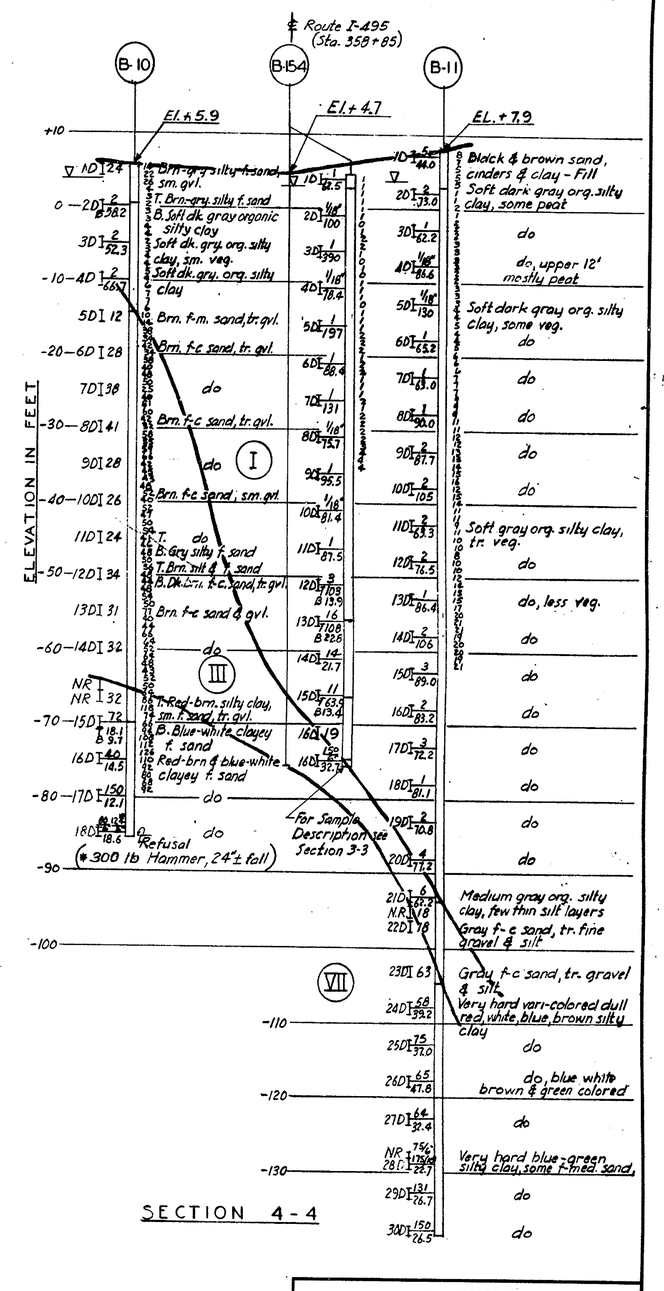

353+31.38	353+31.38	354+30.13	354+30.13	355+42.88	355+42.88	356+85.88	356+85.88	357+98.63	357+98.63	359+08.38	359+08.38	360+17.38	360+17.38	361+26.38	361+26.38	STATION	
6 E.	6 W.	7 E.	7 W.	8 E.	8 W.	9 E.	9 W.	10 E.	10 W.	11 E.	11 W.	12 E.	12 W.	13 E.	13 W.	LOCATION	
Monotube	Monotube	Monotube	Monotube	Monotube	Monotube	Monotube	Monotube	Monotube	Monotube	Steel "H"	Steel "H"	Steel "H"	Steel "H"	Steel "H"	Steel "H"	TYPE OF PILE	
-28.38	-26.36	-30.15	-25.41	-28.22	-29.99	-24.08	-23.45	-29.06	-25.68	-98.66	-99.95	-124.63	-121.15	-126.70	-129.95	MIN. (MT.)	TIP ELEV.
-35.10	-33.44	-37.95	-36.19	-38.32	-41.93	-32.18	-30.92	-49.04	-39.50	-126.59	-118.69	-144.28	-137.84	-140.64	-142.94	MAX. (XT.)	
-31.51	-30.21	-34.38	-29.85	-33.19	-33.81	-27.15	-26.75	-35.27	-30.80	-111.74	-104.98	-132.44	-133.35	-132.36	-136.60	AVERAGE (AT.)	

REVISIONS
1. 2/8/65 Longitudinal Section revised to show stratifications as interpolated to occur at centerline of ROUTE I-495
Added Borings B-200 & B-201
TK As Built Information Added on (Wilbur Tilley) 6/4/72 Tilley

FOR INFORMATION ONLY

J.E. GREINER CO.
MORAN, PROCTOR, MUESER & RUTLEDGE
CONSULTING ENGINEERS

DELAWARE
STATE HIGHWAY DEPARTMENT

INTERSTATE ROUTE I-495

BORINGS AND GEOLOGIC SECTIONS
STA. 353+20 TO STA. 362+20

D. S.L.T.	SCALE AS SHOWN	APPROVED BY:
T. L.S.	DATE 3-1-1963	BRIDGE ENGINEER
C. R.C.H		

M2450

COUNTY	CONTRACT	P. R. A. REG. NO.	STATE	FED. AID PROJECT NO.	FISCAL YR.	SHEET NO.	TOTAL SHEETS
NEW CASTLE	70-04-016	2	DEL.			F	

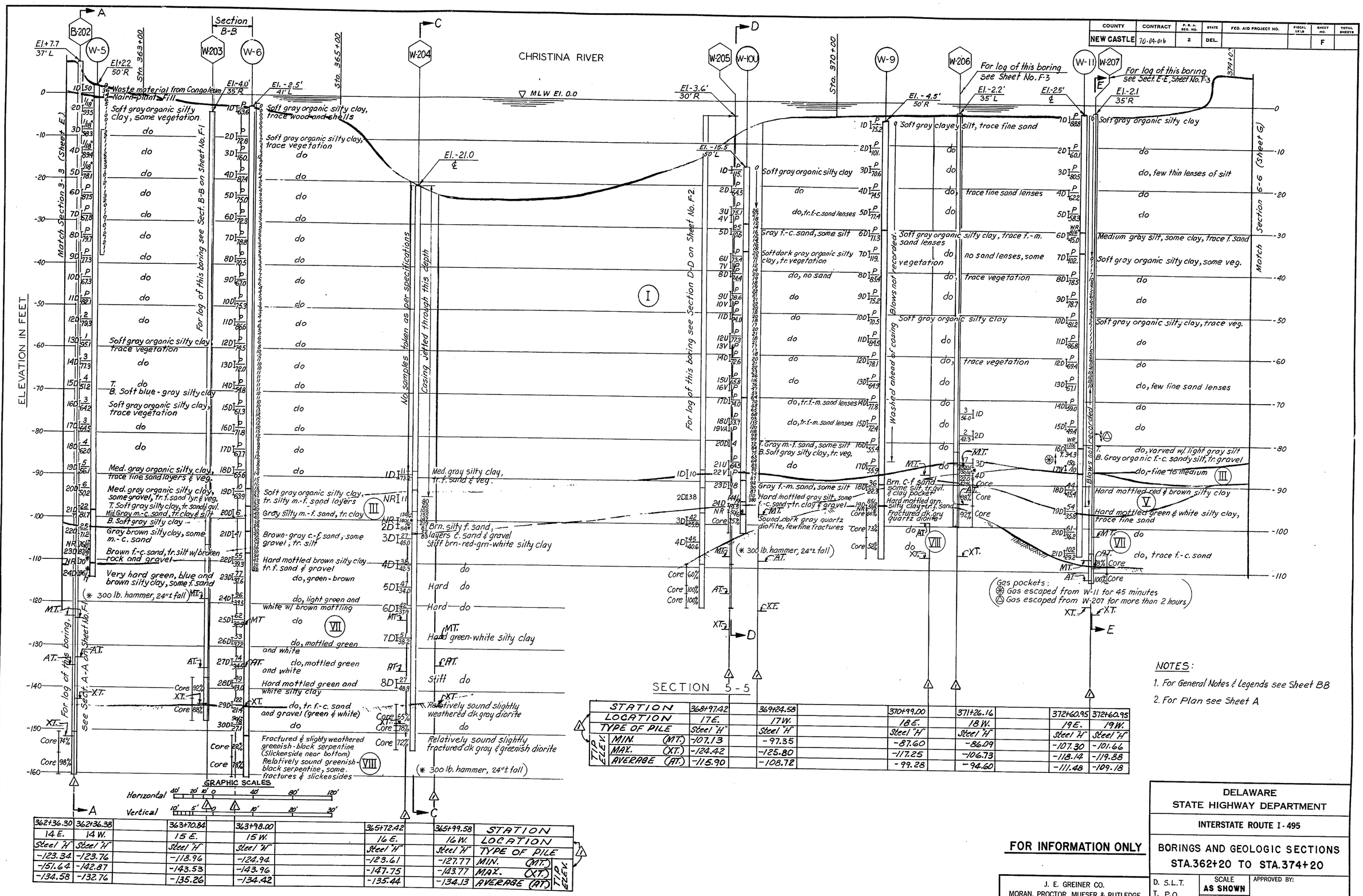

STATION	362+36.30	362+36.38	363+70.84	363+98.00	365+72.42	365+99.58
LOCATION	14 E.	14 W.	15 E.	15 W.	16 E.	16 W.
TYPE OF PILE	Steel "H"	Steel "H"	Steel "H"	Steel "H"	Steel "H"	Steel "H"
TIP ELEV. MIN. (MT.)	-123.34	-123.76	-118.96	-124.94	-123.61	-127.77
MAX. (XT.)	-151.64	-142.87	-143.53	-143.96	-147.75	-143.77
AVERAGE (AT.)	-134.58	-132.76	-135.26	-134.42	-135.44	-134.13

STATION	368+97.42	369+24.58	370+99.00	371+26.16	372+60.95	372+60.95
LOCATION	17E.	17W.	18E.	18W.	19E.	19W.
TYPE OF PILE	Steel "H"	Steel "H"	Steel "H"	Steel "H"	Steel "H"	Steel "H"
TIP ELEV. MIN. (MT.)	-107.13	-97.35	-87.60	-86.09	-107.30	-101.66
MAX. (XT.)	-124.42	-125.80	-117.25	-106.73	-118.14	-119.88
AVERAGE (AT.)	-115.90	-108.72	-99.28	-94.60	-111.48	-109.18

NOTES:

1. For General Notes & Legends see Sheet BB
2. For Plan see Sheet A

1. 2/9/65 Longitudinal Section revised to show stratifications as interpolated to occur at centerline of Route I-495.
Added Borings B-202, W-203, W-204, W-205, W-206 & W-207
Deleted Borings W-1U, W-1UA & W-8
As Built Information Added - File Tin Can 6/14/72 TCF

FOR INFORMATION ONLY

J. E. GREINER CO.
MORAN, PROCTOR, MUESER & RUTLEDGE
CONSULTING ENGINEERS

DELAWARE
STATE HIGHWAY DEPARTMENT

INTERSTATE ROUTE I-495

BORINGS AND GEOLOGIC SECTIONS
STA. 362+20 TO STA. 374+20

D. S.L.T.
T. P.O.
C. RCH

SCALE AS SHOWN
DATE 3-1-1963

APPROVED BY:
BRIDGE ENGINEER

OGILVIE PRESS, INC. — D-187 4246

M2450

COUNTY	CONTRACT	F.P.A. REG. NO.	STATE	FED. AID PROJECT NO.	FISCAL YEAR	SHEET NO.	TOTAL SHEETS
NEW CASTLE	70 04-06	2	DEL.			G	

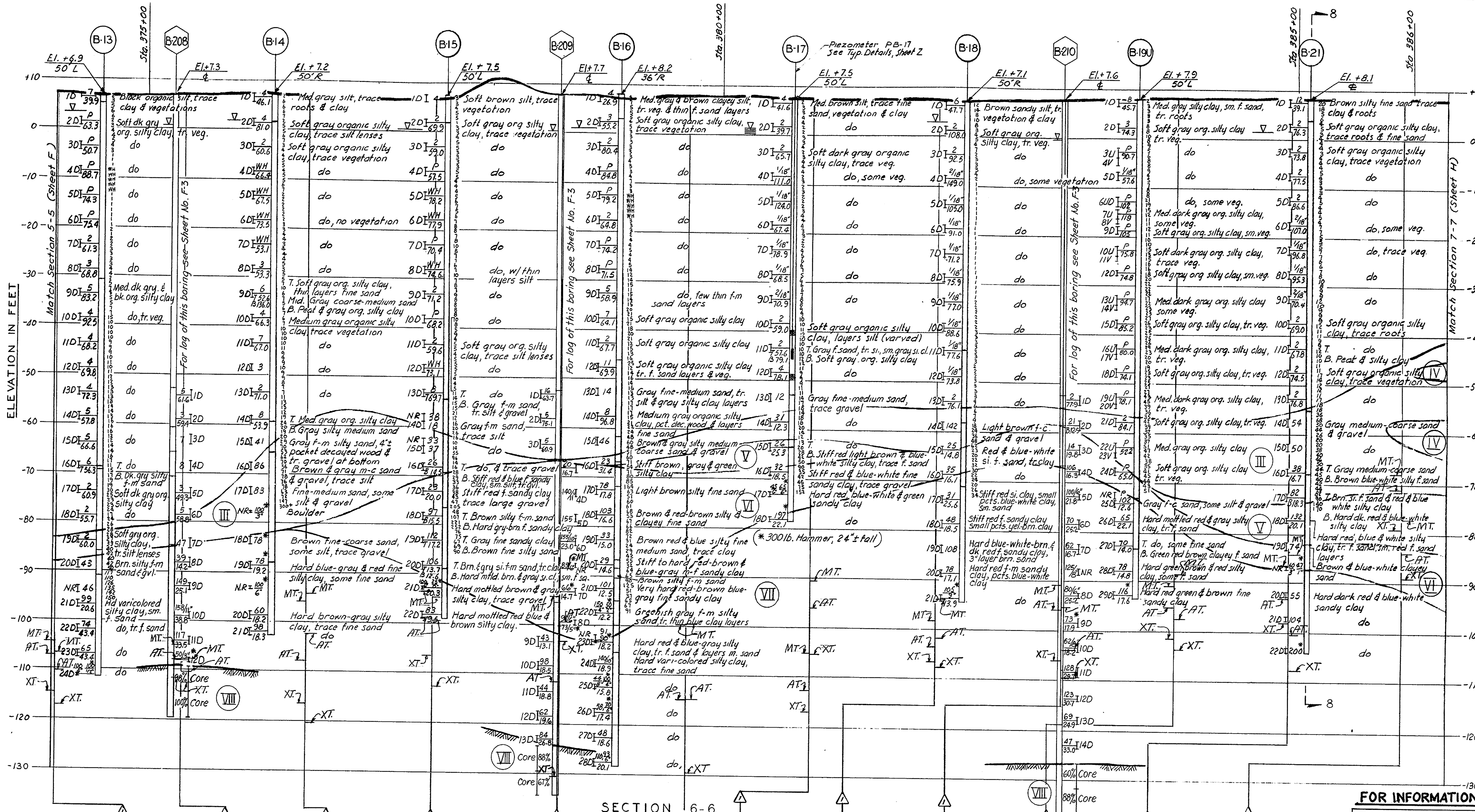

NOTES:

1. For General Notes & Legends see Sheet BB
2. For Plan see Sheet A.
3. ✱ Indicates blows made by 300 lb. hammer, falling 24"±.

GRAPHIC SCALES

Horizontal: 40' 20' 10' 0' 40' 80' 120'

Vertical: 10' 5' 0' 10' 20' 30'

WATER LEVEL OBSERVATIONS FROM PIEZOMETER PB-17

DATE	8-29-62	8-29	8-29	8-30	8-30	9-4	9-6	9-11	9-12	9-18	9-18	9-18	9-20	9-21	10-5	10-12	10-19	10-26	10-30	11-2	11-7	11-28
TIME	1220	1520	1720	0755	1050	0808	1050	1500	0820	0745	1110	1540	0730	1435	1350	0830	1520	1030	0830	0730	0955	1545
W.L. ELEV.	+1.6	+1.5	+1.5	+1.4	+1.4	+1.5	+1.5	+1.4	+1.5	+1.0	+0.8	+0.9	+0.5	+0.1	+0.3	+0.5	+0.7	+0.9	+0.6	+0.7	+0.5	+1.7

STATION	374+22.15	374+22.15	375+32.15	375+32.15	376+41.15	376+41.15	377+50.15	377+50.15	378+59.90	378+59.90	379+69.65	379+69.65
LOCATION	20E.	20W.	21E.	21W.	22E.	22W.	23E.	23W.	24E.	24W.	25E.	25W.
TYPE OF PILE	Steel "H"	Steel "H"	Steel "H"	Steel "H"	Steel "H"	Steel "H"	Steel "H"	Steel "H"	Steel "H"	Steel "H"	Steel "H"	Steel "H"
TIP ELEV. MIN. (MT.)	-104.50	-106.71	-104.88	-107.72	-95.79	-94.20	-93.35	-94.80	-94.07	-88.49	-99.75	-99.76
TIP ELEV. MAX. (XT.)	-114.61	-117.41	-111.50	-112.52	-116.59	-120.38	-106.36	-112.65	-130.35	-113.33	-140.88	-129.45
TIP ELEV. AVERAGE (AT.)	-107.31	-110.14	-107.81	-110.16	-107.92	-102.79	-98.61	-99.48	-111.24	-99.26	-114.81	-114.84

STATION	380+78.65	380+78.65	381+87.65	381+87.65	382+97.40	382+97.40	383+96.15	383+96.15	384+94.15	384+94.15	385+92.15	385+92.15
LOCATION	26E.	26W.	27E.	27W.	28E.	28W	29E.	29W.	30E.	30W.	31E.	31W.
TYPE OF PILE	Steel "H"	Steel "H"	Steel "H"	Steel "H"	Steel "H"	Steel "H"	Steel "H"	Steel "H"	Steel "H"	Steel "H"	Monotube	Monotube
TIP ELEV. MIN. (MT.)	-105.17	-90.62	-98.28	-94.01	-90.76	-95.26	-91.01	-88.61	-86.41	-84.00	-66.92	-76.91
TIP ELEV. MAX. (XT.)	-117.06	-105.43	-106.57	-107.67	-105.99	-109.82	-101.50	-103.72	-98.13	-107.61	-78.80	-89.00
TIP ELEV. AVERAGE (AT.)	-112.68	-96.10	-103.52	-101.76	-95.71	-103.96	-95.32	-97.50	-93.24	-100.33	-70.64	-83.79

REVISIONS

1. 2/9/65 Longitudinal Section revised to show stratifications as interpolated to occur at centerline of Route I-495. Added Boring B-208, B-209 & B-210
2. As Built Information Added (Pile Tip Elev.) 6/16/72 T.F.

FOR INFORMATION ONLY

J.E. GREINER CO.
MORAN, PROCTOR, MUESER & RUTLEDGE
CONSULTING ENGINEERS

DELAWARE
STATE HIGHWAY DEPARTMENT

INTERSTATE ROUTE I-495

BORINGS AND GEOLOGIC SECTIONS
STA.374+20 TO STA.386+30

D. S.L.T.
T. L.S.
C. R.C.H.

SCALE AS SHOWN

DATE 3-1-1963

APPROVED BY:

BRIDGE ENGINEER

OGILVIE PRESS, INC. — D-127
M2450

COUNTY	CONTRACT	P.R.A. REG. NO.	STATE	FED. AID PROJECT NO.	FISCAL YEAR	SHEET NO.	TOTAL SHEETS
NEW CASTLE	70-04-016	2	DEL.			H	

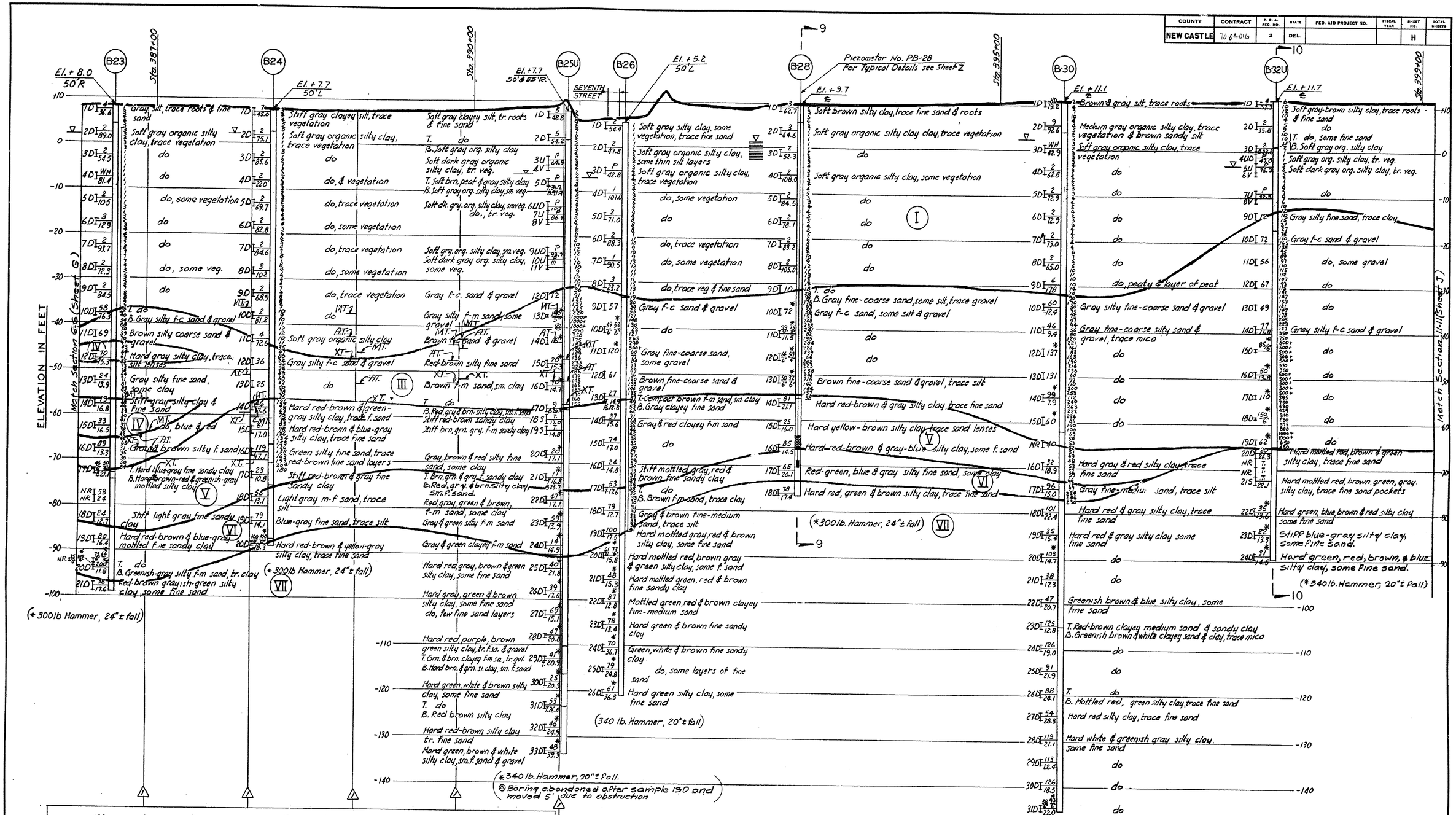

SECTION 7 - 7

WATER LEVEL OBSERVATIONS FROM PIEZOMETER PB-28															
DATE	9-6-62	9-7	9-11	9-12	9-18	9-18	9-18	9-20	9-21	10-5	10-12	10-19	11-6	11-7	11-28
TIME	1000	0815	1530	0835	0835	1120	1530	0745	1420	1345	0845	1530	1530	1010	1600
WL ELEV.	+1.4	+1.2	+1.4	+1.2	-1.8	-1.3	-1.6	-2.3	-2.7	-2.6	-1.3	-0.3	+0.7	+0.4	+0.5

STATION		386+90.90	386+90.90	387+89.65	387+89.65	388+87.65	388+87.65	389+85.65	389+85.65	390+84.40	390+84.40
LOCATION		32E.	32W.	33E.	33W.	34E.	34W.	35E.	35W.	36E.	36W.
TYPE OF PILE		Monotube	Monotube	Monotube	Monotube	Monotube	Monotube	Monotube	Monotube	Monotube	Monotube
TIP ELEV.	MIN. (MT.)	-56.67	-63.74	-36.38	-60.37	-37.53	-45.83	-44.03	-43.00	-37.77	-47.05
	MAX. (XT.)	-67.28	-74.47	-59.45	-68.05	-47.77	-60.74	-52.70	-51.71	-51.93	-56.86
	AVERAGE (AT.)	-63.97	-68.26	-51.08	-60.22	-42.43	-52.76	-47.04	-44.90	-43.67	-51.90

NOTES:
1. For General Notes & Legends see Sheet BB
2. For Plan see Sheet A

GRAPHIC SCALES
Horizontal 40' 20' 10' 0 40' 80' 120'
Vertical 10' 5' 0 10' 20' 30'

FOR INFORMATION ONLY

J. E. GREINER CO.
MORAN, PROCTOR, MUESER & RUTLEDGE.
CONSULTING ENGINEERS

DELAWARE
STATE HIGHWAY DEPARTMENT

INTERSTATE ROUTE I-495

BORINGS AND GEOLOGIC SECTIONS
STA.386+30 TO STA.399+10

D. S.L.T.
T. L.S.
C. R.C.H.

SCALE AS SHOWN
DATE 3-1-1963

APPROVED BY:
BRIDGE ENGINEER

REVISIONS
As Built Information Added (Pile Tip Elev.) 6/16/72 I.E.F.

OSILVIE PRESS, INC. — D-127 4946

M2450

COUNTY	CONTRACT	P. B. A. REG. NO.	STATE	FED. AID PROJECT NO.	FISCAL YEAR	SHEET NO.	TOTAL SHEETS
NEW CASTLE	78-084-016	2	DEL.			1	

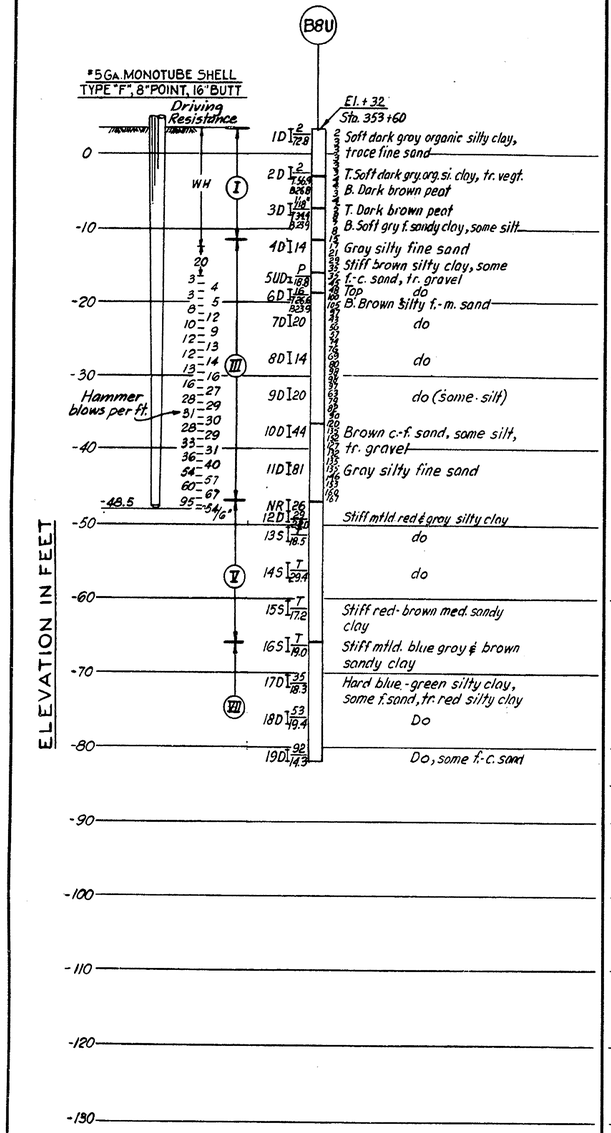

TEST PILE NO. 1

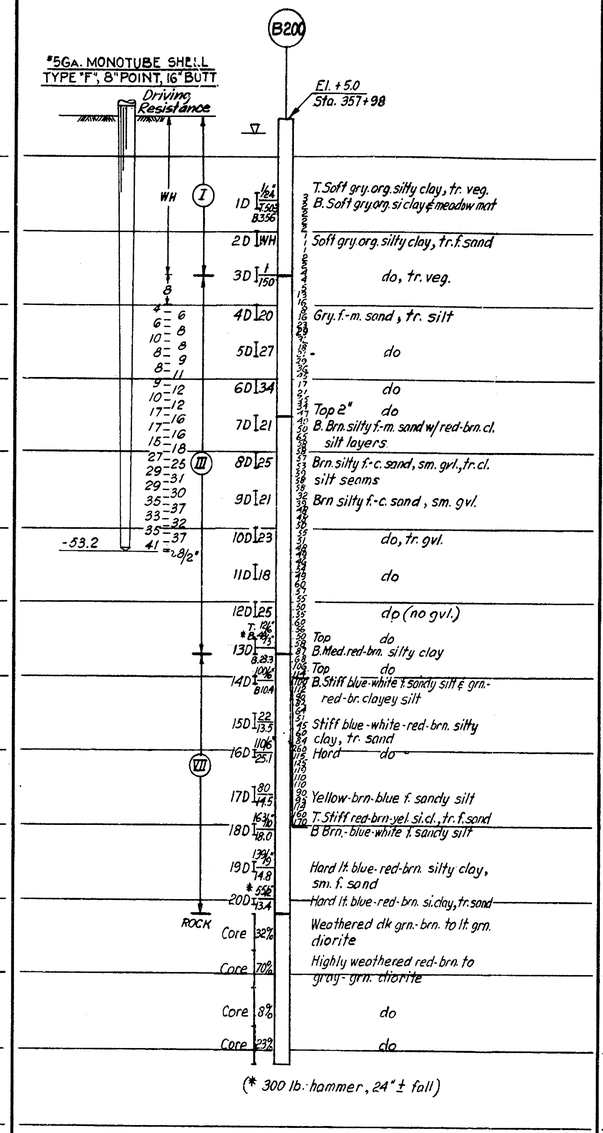

TEST PILE NO. 2

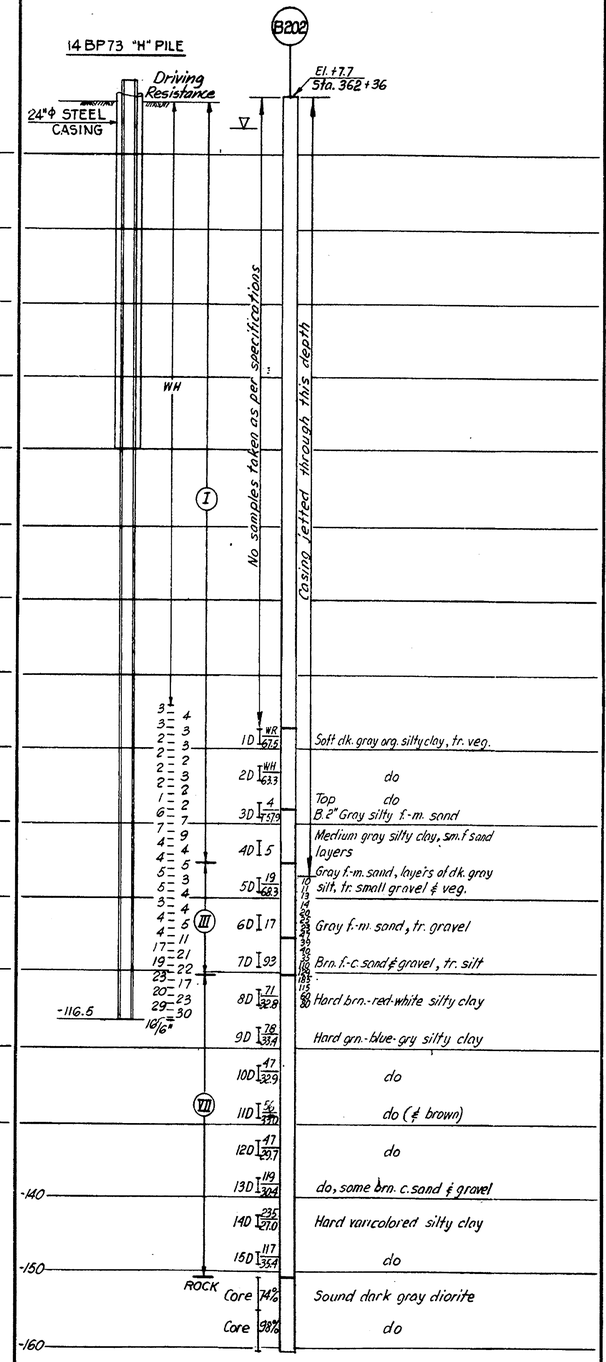

TEST PILE NO. 3

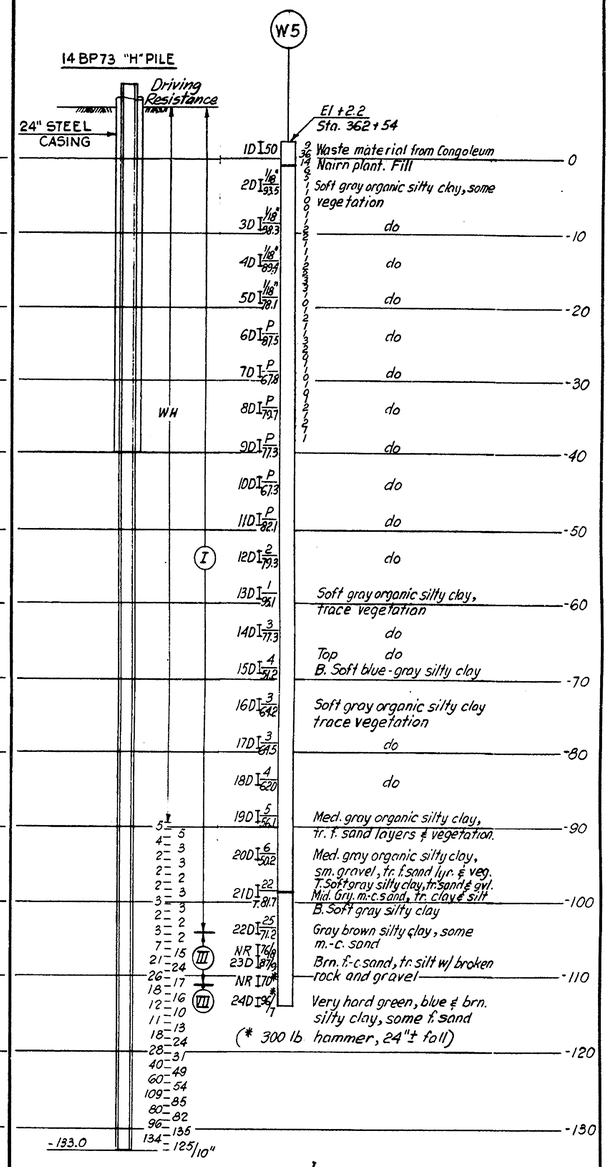

TEST PILE NO. 4

For notes and legend see Dwg. No. 2

FOR INFORMATION ONLY

J. E. GREINER CO.
MORAN, PROCTOR, MUESER & RUTLEDGE
CONSULTING ENGINEERS

DELAWARE
STATE HIGHWAY DEPARTMENT

INTERSTATE ROUTE I-495

CHRISTINA RIVER BRIDGE
TEST PILE DRIVING RECORDS

D. P. O.	SCALE	APPROVED BY:
T. R. B.		
C. J.P.G.	DATE 9-27-65	BRIDGE ENGINEER

COUNTY	CONTRACT	P. R. R. REG. NO.	STATE	FED. AID PROJECT NO.	FISCAL YEAR	SHEET NO.	TOTAL SHEETS
NEW CASTLE	70-24-010	2	DEL.			II	

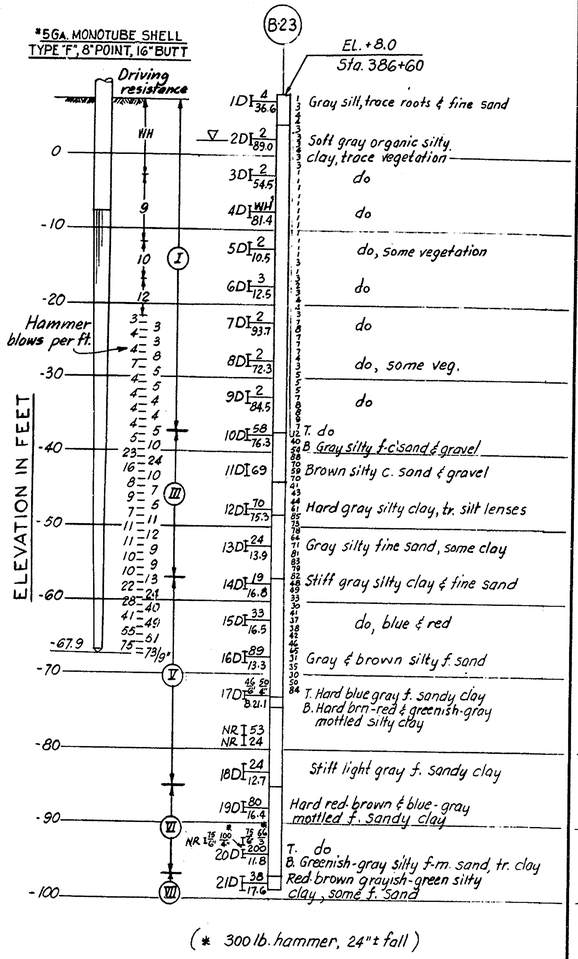

TEST PILE NO. 5

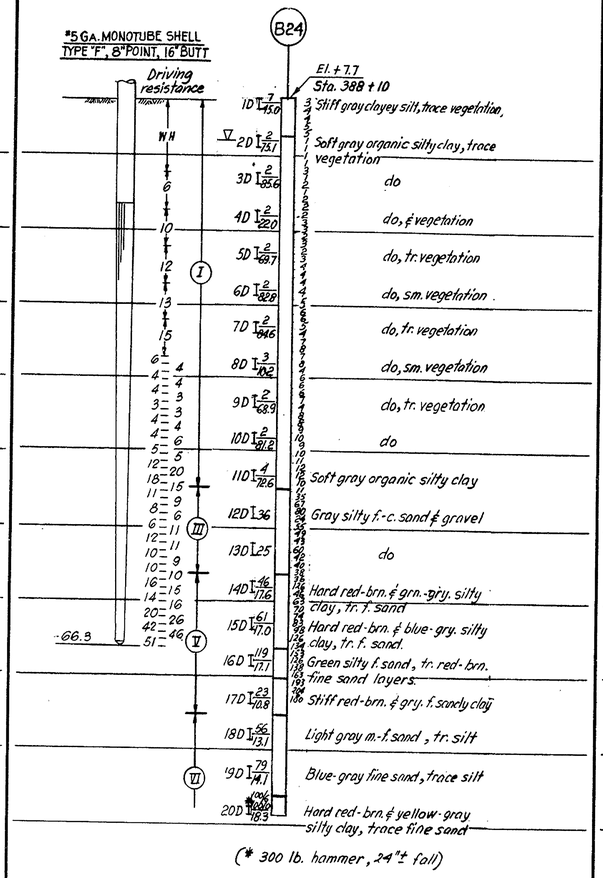

TEST PILE NO. 6

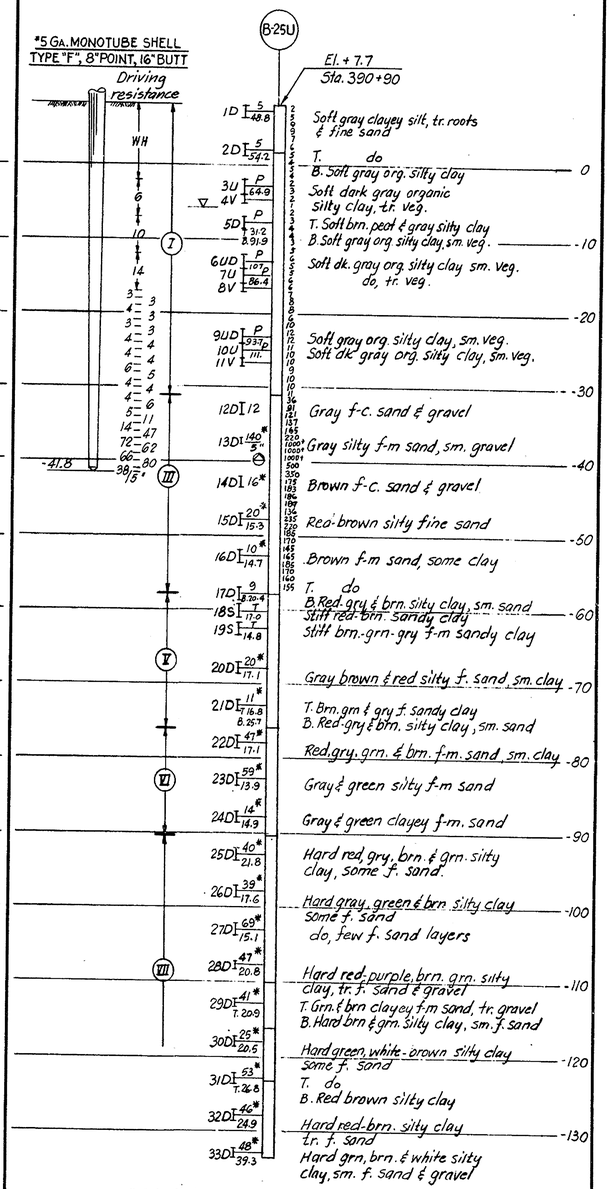

TEST PILE NO. 7

LEGEND:

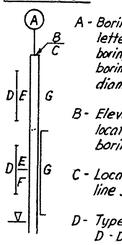

A - Boring location and number; Suffixed by a letter "U" indicates undisturbed sample boring using 3½" diameter casing. All other borings are dry sample borings using 2½" diameter casing.

B - Elevation of ground surface at land boring locations or elevation of mud line at water boring locations

C - Location of boring referenced to center-line stationing of Rte. I-495

D - Type and number of sample:
- D - Dry samples taken w/a 2" O.D. split spoon.
- U - Undisturbed samples recovered w/a 3" diameter fixed-piston sampler
- S - 3" diameter open end "shelby" tube samples.
- NR - No recovery
- Core - 1 3/16" rock core.

E - Penetration resistance during advancing of sampler recorded in number of blows of 140 lb. hammer, falling 30" per foot of penetration or as otherwise noted. Blows indicated are for last 12" of an 18" drive. Also indicates per cent recovery of rock core
- P - Indicates sampler pushed down by hand for dry samples and by use of mashine for undisturbed samples.
- T - Indicates sampler driven down by 340 lb. hammer with a variable height of fall. Blows not shown
- WH - Advanced under weight of sample hammer
- WR - Advanced under weight of 7/8" drill rods.

F - Water content of soil sample expressed in per cent of dry weight

G - Penetration resistance encountered in advancing casing. Recorded in number of blows of 300 lb. hammer for dry sample holes and 340 lb. hammer for undisturbed sample holes with 24" fall per foot of penetration

G - Penetration resistance of casing driven after hole had been washed ahead

▽ - Most reliable ground water level as observed in bored hole

NOTES:

1. Soils descriptions were made by the Consulting Engineer and pertain to individual samples
2. The Consulting Engineer and the State do not represent that these logs show completely the existing conditions and do not guarantee the correctness of this information or any interpretations made from them.
3. All elevations refer to U.S.C. & G. Survey Datum: Mean Sea Level at Sandy Hook = 0.00 ft.
4. Test piles in sketches are not drawn to scale
5. Pile driving resistance in blows per foot is shown in column at left of boring log. Monotube piles were driven with Vulcan 06 hammer H-piles with McKiernan-Terry 510.
6. For location of test piles see Plan - Dwgs. No 2 & 4

FOR INFORMATION ONLY

DELAWARE
STATE HIGHWAY DEPARTMENT

INTERSTATE ROUTE I-495

CHRISTINA RIVER BRIDGE
TEST PILE DRIVING RECORDS

J. E. GREINER CO.
MORAN, PROCTOR, MUESER & RUTLEDGE
CONSULTING ENGINEERS

D. P. O.	SCALE	APPROVED BY:
T. R. B.		
C. J.P.G.	DATE 9-27-65	BRIDGE ENGINEER

DEILVIE PRESS, INC. — 9-127 4248

COUNTY	CONTRACT	P.R.A. REG. NO.	STATE	FED. AID PROJECT NO.	FISCAL YEAR	SHEET NO.	TOTAL SHEETS
NEW CASTLE	7J 04 01.3	2	DEL.			III	

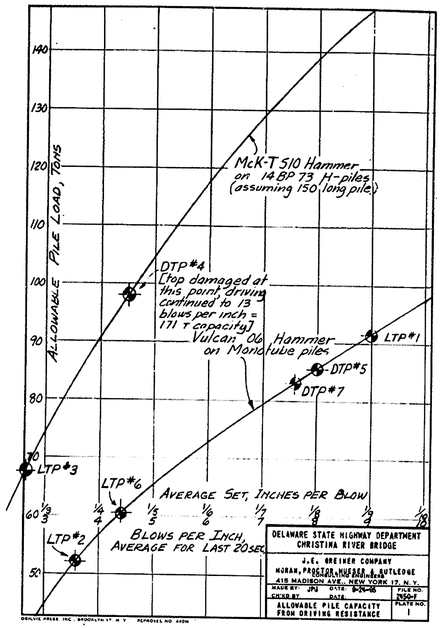

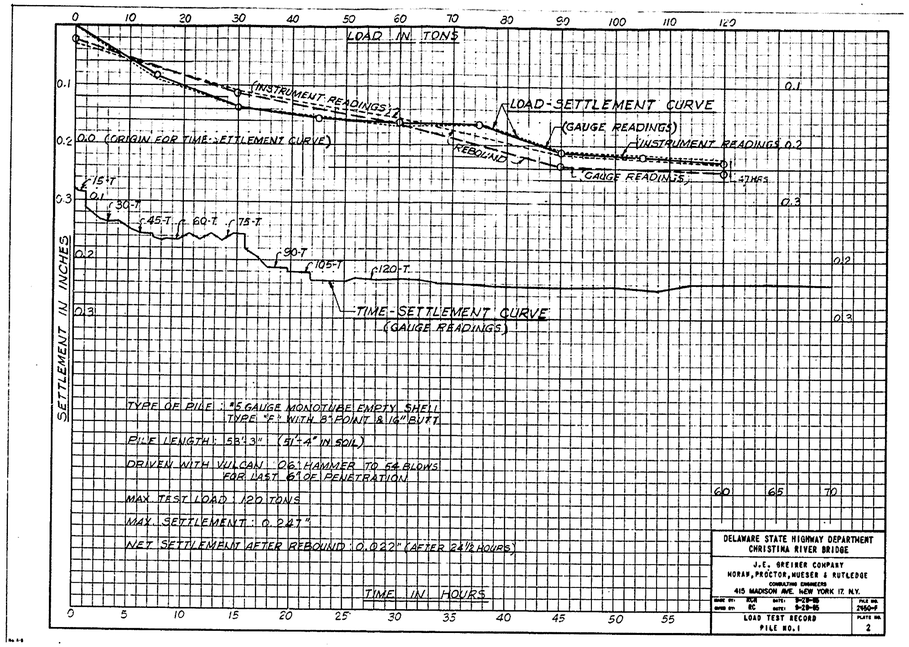

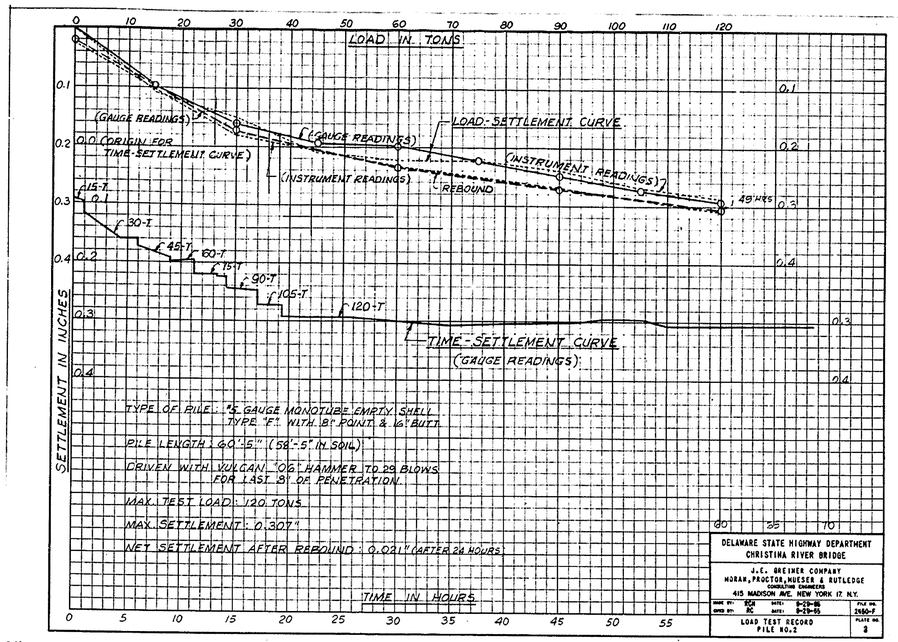

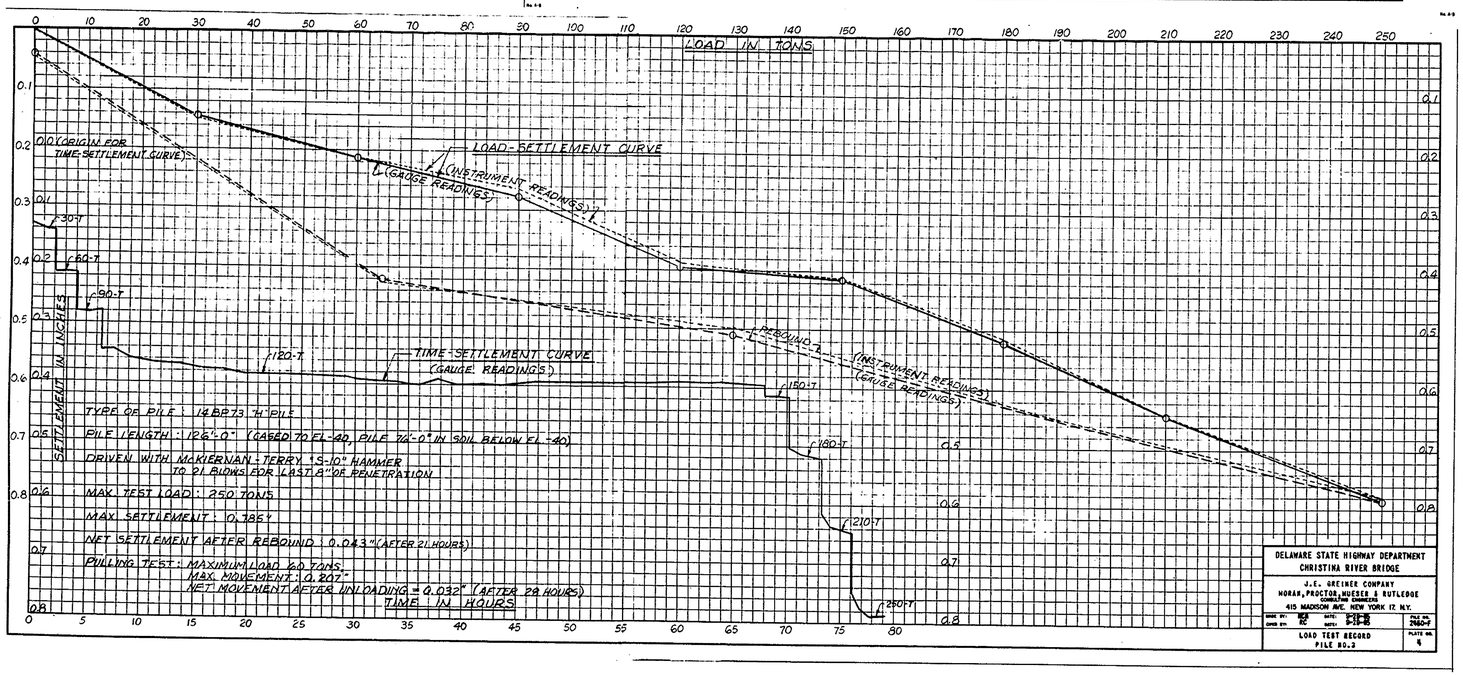

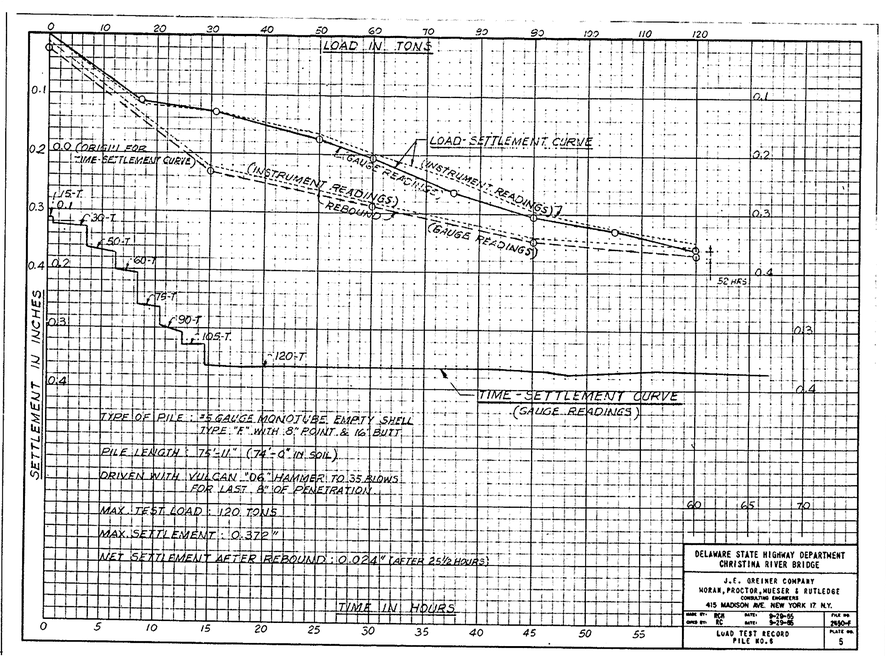

NOTE: For location of test piles see Plan Dwg No's 2 & 4

FOR INFORMATION ONLY

J. E. GREINER CO.
MORAN, PROCTOR, MUESER & RUTLEDGE
CONSULTING ENGINEERS

D.
T.
C.

SCALE

DATE

APPROVED BY:

BRIDGE ENGINEER

DELAWARE
STATE HIGHWAY DEPARTMENT

INTERSTATE ROUTE I-495

CHRISTINA RIVER BRIDGE
PILE TEST RECORDS

REVISIONS

COUNTY	CONTRACT	F.P.A. DIV. NO	STATE	FED AID PROJ. NO.	FISCAL YEAR	SHEET NO.	TOTAL SHEETS
NEW CASTLE	70-04-016	2	DEL	I-495-3(19)15		1	46

INTERSTATE HIGHWAY ROUTE I-495
CHRISTINA RIVER BRIDGE - SUBSTRUCTURE

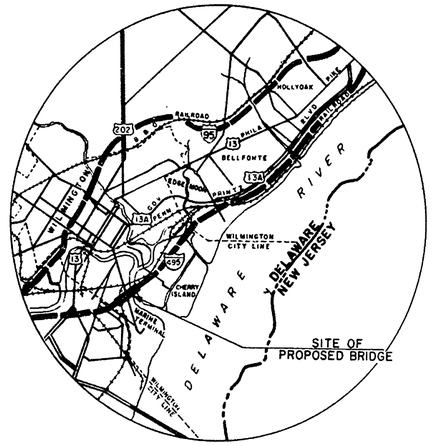

SCALE: 1" = 7500'

THE STATE OF DELAWARE

STATE HIGHWAY DEPARTMENT

PLAN
FOR
CONSTRUCTION OF CONTRACT № 70-04-016

STA. 348+21.46 TO STA. 392+16.57

4,395.11 FEET: 0.832 MILES

SCALE: PLAN: 1 IN. = 50 FT.
PROFILE: HOR. 1 IN. = 50 FT.
VERT. 1 IN. = 50 FT.

FEDERAL AID PROJECT № I-495-3(19)15
(THIS IS A CONTROLLED ACCESS HIGHWAY)

EQUATION

119+88.67 I-495 N.B., Bk. =
119+60.81 I-495 S.B., Bk. =
347+96.46 ℄ I-495, Ah.

DESIGN DATA

FEDERAL CLASS	URBAN
Design Speed	60 mph
ADT (1962)	14,500
ADT (1987)	54,700
DHV (1987)	6,020
Directional Distribution	57.5%
Percentage of Trucks	15 %

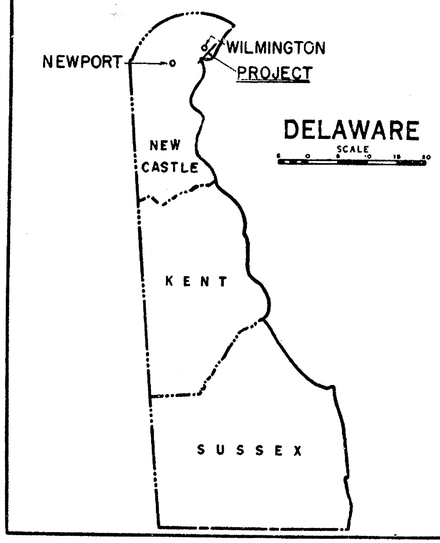

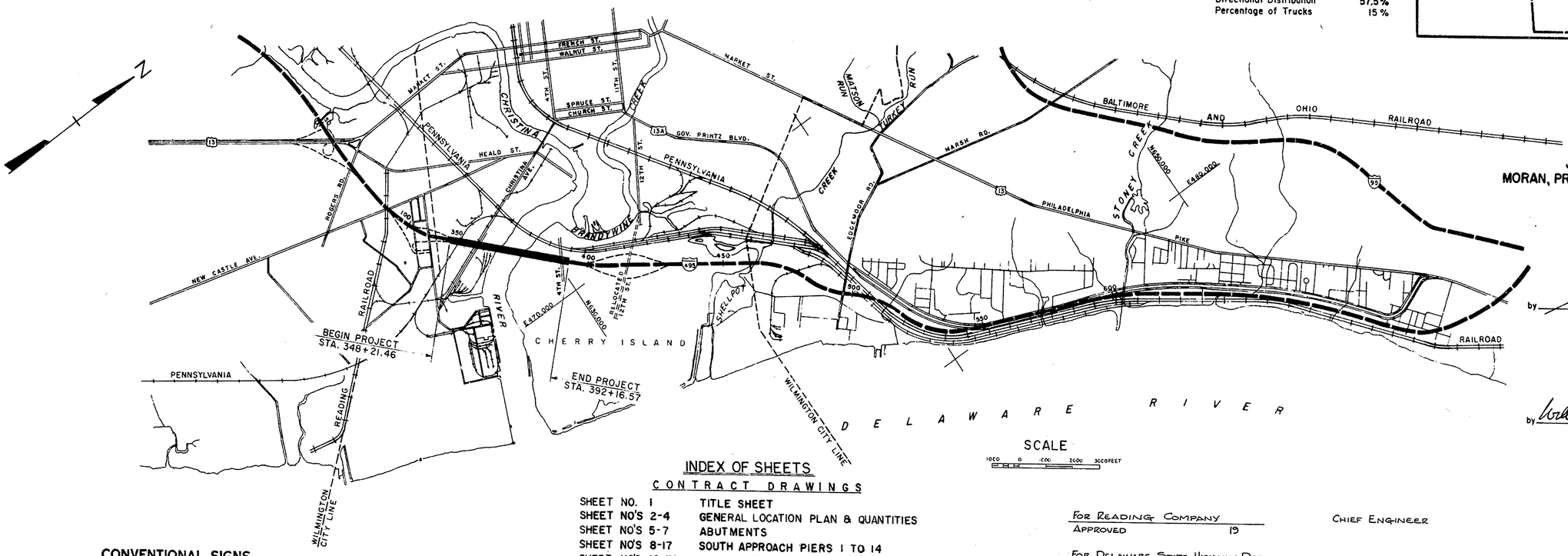

J. E. GREINER CO.
MORAN, PROCTOR, MUESER & RUTLEDGE
CONSULTING ENGINEERS

by C. J. Donnelly

by William H. Cannon

INDEX OF SHEETS

CONTRACT DRAWINGS

SHEET NO. 1	TITLE SHEET
SHEET NO'S 2-4	GENERAL LOCATION PLAN & QUANTITIES
SHEET NO'S 5-7	ABUTMENTS
SHEET NO'S 8-17	SOUTH APPROACH PIERS 1 TO 14
SHEET NO'S 18-32	RIVER PIERS 15 TO 19
SHEET NO'S 33-44	NORTH APPROACH PIERS 20 TO 37
SHEET NO. 45	SLOPE PROTECTION DETAILS
SHEET NO. 46	SUBSTRUCTURE NAVIGATION LIGHTING

INFORMATION DRAWINGS

SHEET A	BORING LOCATION PLAN
SHEET BB	BORING LEGENDS & INDEX
SHEETS D, E, F, G, H	BORINGS & GEOLOGIC SECTIONS
SHEETS I, II	TEST PILE DRIVING RECORDS
SHEET III	PILE TEST RECORDS

CONVENTIONAL SIGNS

COUNTY LINE	WIRE FENCE
CITY OR TOWN LINE	PRESENT CULVERT
RIGHT OF WAY LINE	PROPOSED CULVERT
CENTRE LINE, PROPOSED ROAD	TELEGRAPH POLE
MACADAM, TRAVELLED ROAD	TREE
TROLLEY OR RAILROAD	

PROFILE: GRADE, GROUND, DATUM

For Reading Company		Chief Engineer
Approved	19	
For Delaware State Highway Dept.		
RECOMMENDED	19	CHIEF PLANS & DESIGN DIVISION
RECOMMENDED	19	ASST. CHIEF ENGINEER
APPROVED	19	CHIEF ENGINEER
APPROVED	19	DIRECTOR OF OPERATIONS

DEPARTMENT OF COMMERCE
BUREAU OF PUBLIC ROADS

APPROVED:

DIVISION ENGINEER DATE

COUNTY	CONTRACT	P. B. A. REG. NO.	STATE	FED. AID PROJECT NO.	FISCAL YEAR	SHEET NO.	TOTAL SHEETS
NEW CASTLE		2	DEL.			4	46

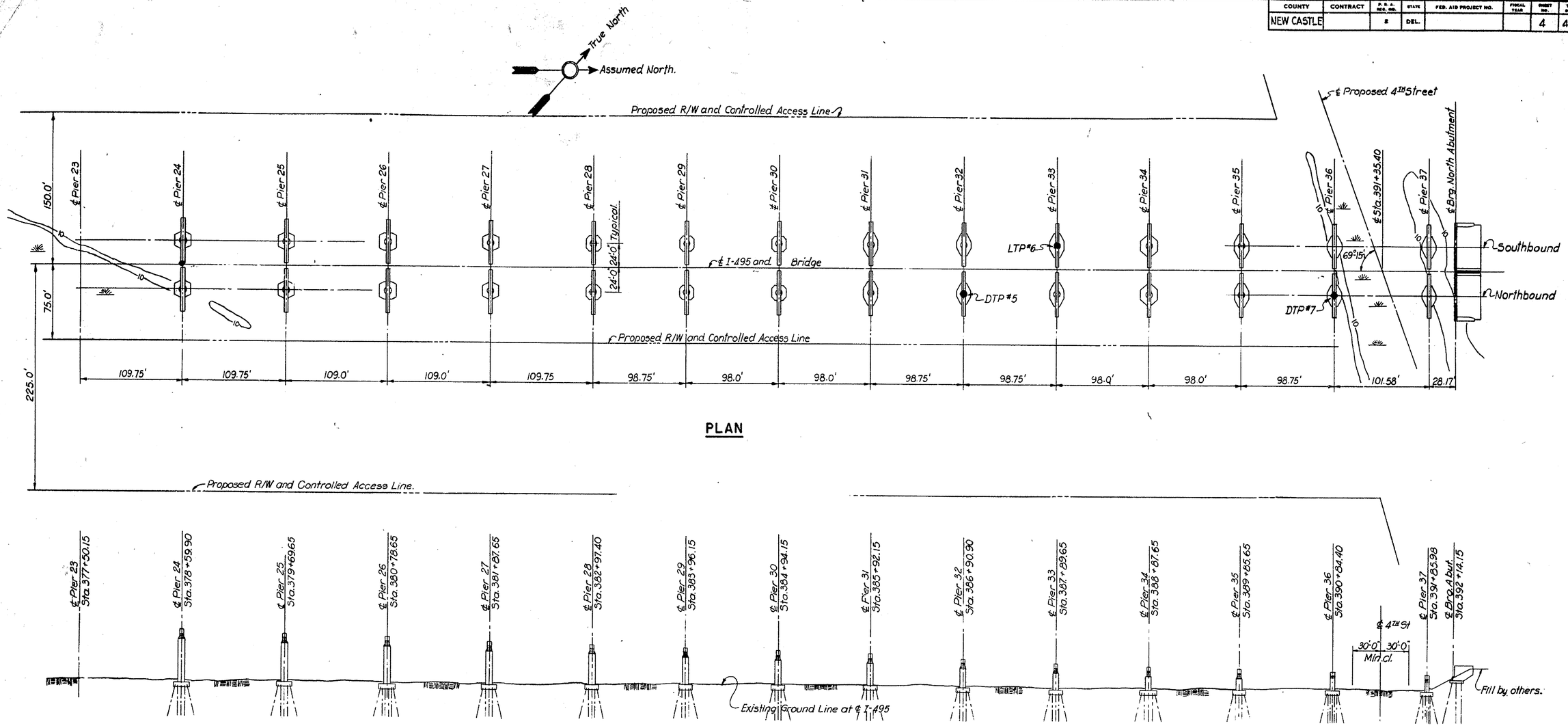

PLAN

ELEVATION

① ESTIMATED FIXED QUANTITY ITEMS.

ITEM No.	4							17	18					20	32	32A	35								37	S.P.	S.P.	S.P.	S.P.	S.P.	S.P.		S.P.	S.P.
DESCRIPTION	EXCAVATION FOR STRUCTURES							TIMBER ① STRUCTURES TREATED	PORTLAND CEMENT CONCRETE MASONRY ①					BAR REINF ①	TIMBER PILES TREATED	TIMBER TEST PILES	CAST-IN-PLACE CONCRETE PILES			STEEL SHELL TEST PILES			PILE LOAD TESTS		PORTLAND CEMENT CONCRETE GUTTER	STEEL H PILES 14BP89	STEEL H TEST PILES	WROUGHT IRON PROTECT. PLATES ①	PROTECTIVE SURFACE TREATMENT ①	SLOPE PAVINGS	ACID PROTECTION PIERS 1 THRU 8 ①		ELECT. WORK	FIELD OFFICE
	ABUT'S	RIVER PIERS ①					PIERS ON LAND	FENDER PIERS 16&17	TREME SEAL	ABUT'S	PIER FOOTINGS	PIERS ABOVE FTG	APPROACH SLABS				ABUT'S PILES (12" DIAM.)	PIERS 1 TO 8 NO. (16" DIAM)	PIERS 9-10 & 31 TO 37 (16" DIAM)	AT ABUT'S (12" DIAM)	AT PIERS 1 TO 8 (16" DIAM)	AT PIERS 9-10, 31-37 (16" DIAM)	CIP CONC PILE	STEEL H PILE							PROTECT. OF PILES	PROTECT. OF PIERS		
		PIER 15	PIER 16	PIER 17	PIER 18	PIER 19																												
UNIT	C.Y.	C.Y.	C.Y.	C.Y.	C.Y.	C.Y.	C.Y.	MBM	C.Y.	C.Y.	C.Y.	C.Y.	C.Y.	LB	L.F.	L.F.	L.F.	L.F.	L.F.	L.F.	L.F.	L.F.	EA.	EA.	S.Y.	L.F.	L.F.	LBS.	S.Y.	S.Y.	S.F.	S.F.	L.S.	L.S.
SOUTH APPROACH S. ABUT. THRU PIER 14	264	—	—	—	—	—	2,763	—	—	212	1,824	3,363	NONE	1,062,200	—	—	4,530	16,280	5,220	80	380	100	1	1	105	13,550	490	—	NONE	851	42,380	20,400	—	L.S.
RIVER PIERS PIER 15 THRU 19	—	1,142	1,887	2,641	1,142	1,403	—	166	2,974	—	2,270	3,320	—	1,095,400	11,120	240	—	—	—	—	—	—	—	—	—	32,880	520	166,860	—	—	—	—	L.S.	
NORTH APPROACH PIER 20 THRU N. ABUT.	~~264~~	—	—	—	—	—	~~3,285~~	—	—	~~212~~	~~1,915~~	~~3,455~~	—	~~1,037,800~~	—	—	~~4,620~~	—	~~18,870~~	~~80~~	—	510	—	—	~~105~~	28,590	1220	—	—	~~243~~	—	—	—	
TOTAL	~~528~~	1,142	1,887	2,641	1,142	1,403	~~6,048~~	166	2,974	~~424~~	~~6,009~~	~~10,138~~	—	~~3,195,400~~	11,120	240	~~9,150~~	16,280	~~24,090~~	~~160~~	380	610	1	1	~~210~~	75,020	2210	166,860	—	~~1,099~~	42,380	20,400	L.S.	L.S.

DELAWARE
STATE HIGHWAY DEPARTMENT

INTERSTATE ROUTE I-495

CHRISTINA RIVER BRIDGE
GENERAL LOCATION PLAN
PIER 24 TO NORTH ABUTMENT

J. E. GREINER CO.
MORAN, PROCTOR, MUESER & RUTLEDGE
CONSULTING ENGINEERS

D. A.L.A.
T. P.F.
C. W.W.

SCALE 1" = 50'

DATE

APPROVED BY:

BRIDGE ENGINEER

CONTRACT 70-04-016

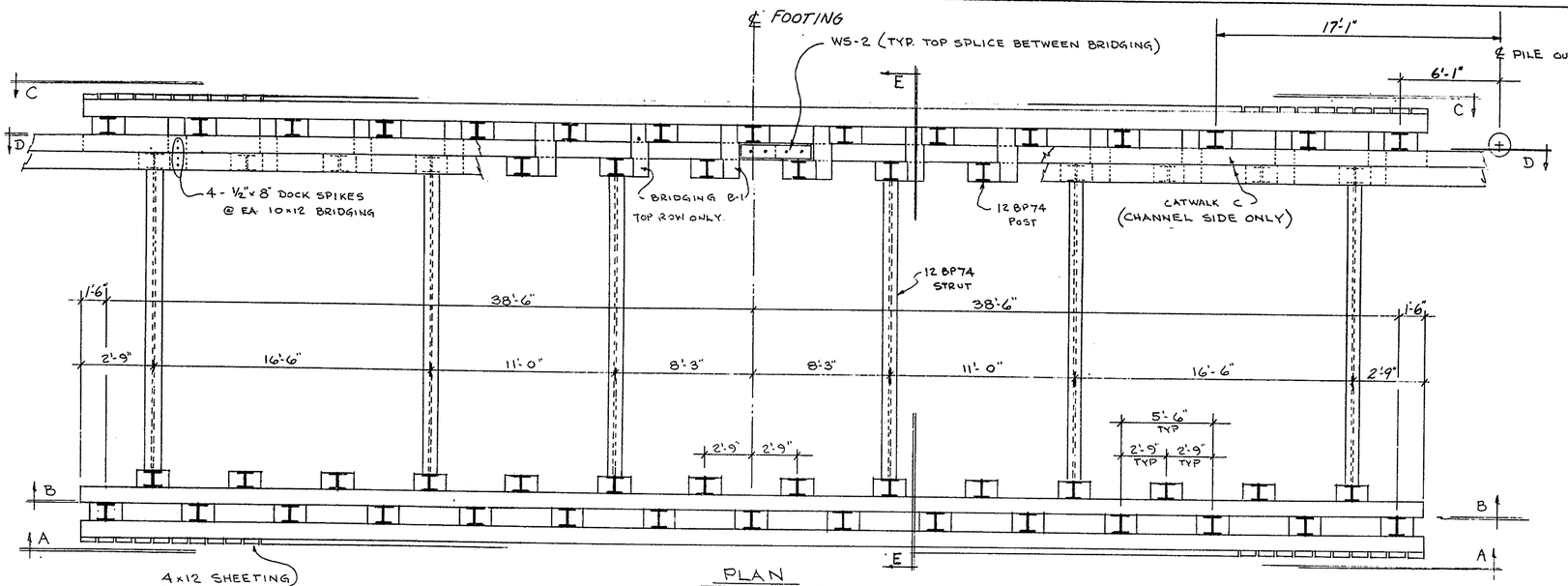

PLAN

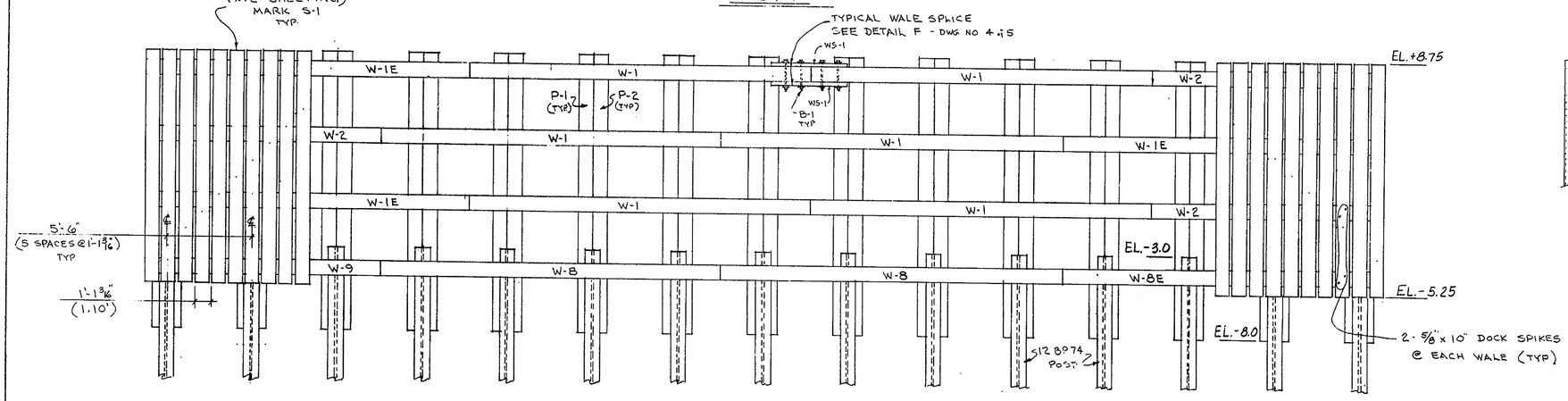

ELEVATION A-A & C-C

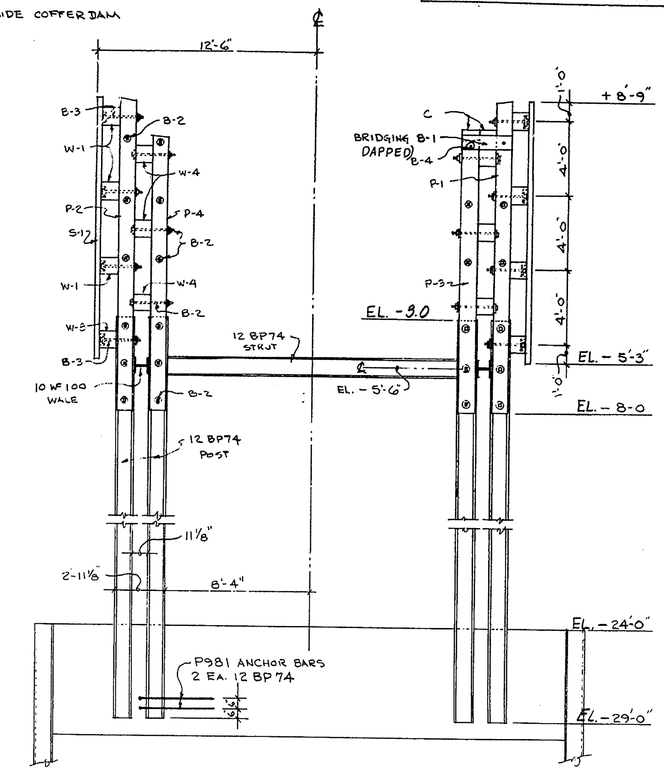

SECTION E-E

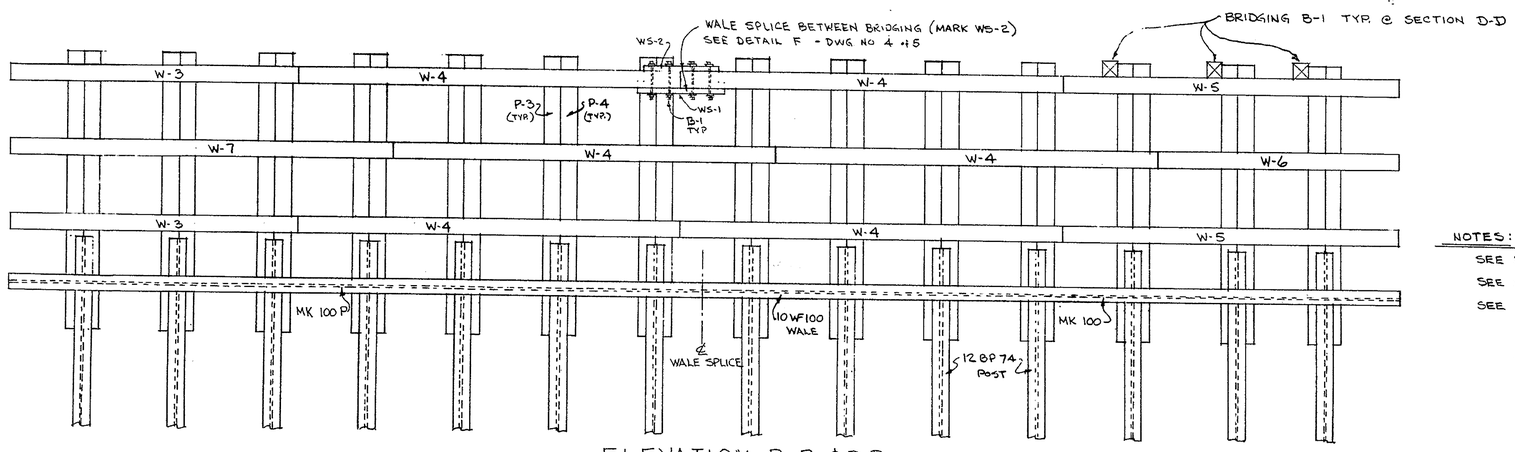

ELEVATION B-B & D-D

APPROVED
Delaware State Highway Dept.
6-30-71

NOTES:

SEE DWG. NO. 3 & 5 FOR TIMBER DETAILS
SEE DWG NO 4 & 5 FOR STEEL & MISC DETAILS
SEE DWG NO 5 & 5 FOR MATERIAL LIST & SPEC'S

DETAILS INSIDE COFFERDAM

Rev. 7-12-71

SCALE 4" = 1'-0"

DELAWARE
STATE HIGHWAY DEPARTMENT

INTERSTATE ROUTE I-495

CHRISTINA RIVER BRIDGE

PIERS 16 & 17 FENDER SYSTEM

CONTRACTOR: G.A. & F.C. WAGMAN, INC

DWG. NO. 1 of 5 DATE: 6-19-71 DRAWN BY: P.H.W. CHECKED BY: L.C.B.

CONTRACT 70-04-016

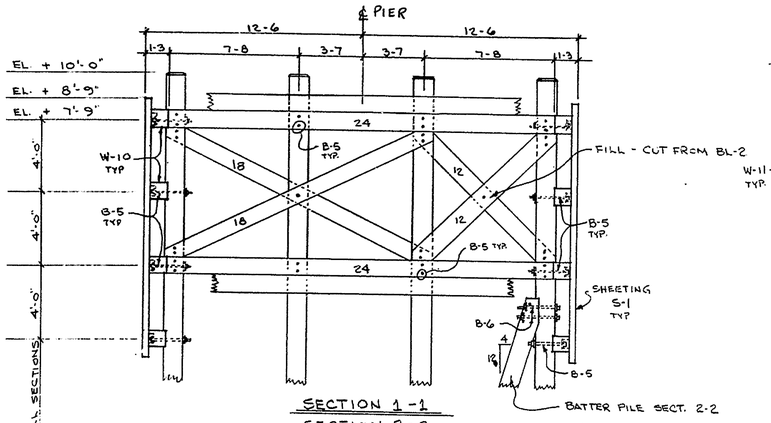

SECTION 1-1
SECTION 2-2

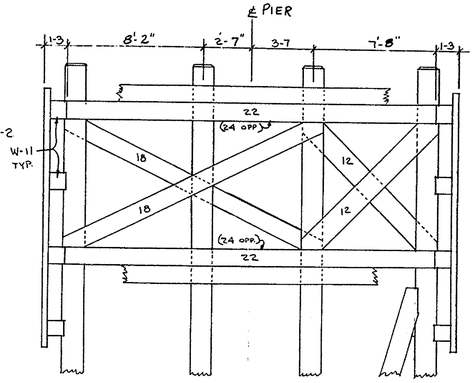

SECTION 4-4

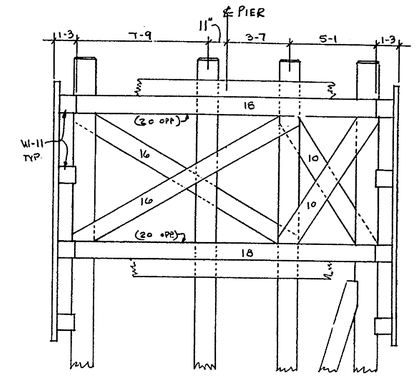

SECTION 6-6

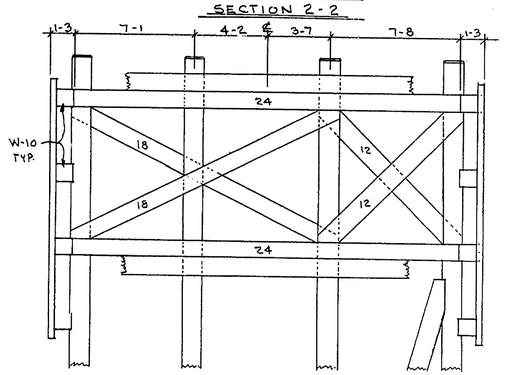

SECTION 3-3

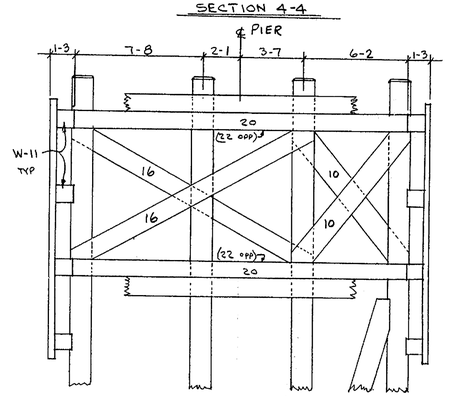

SECTION 5-5

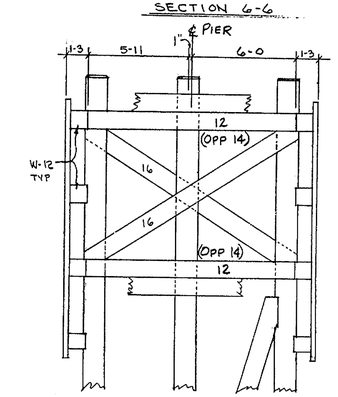

SECTION 7-7

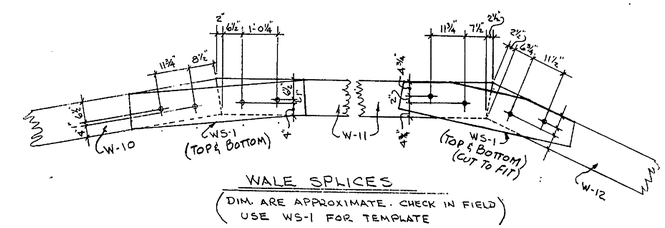

WALE SPLICES

(DIM. ARE APPROXIMATE. CHECK IN FIELD
USE WS-1 FOR TEMPLATE)

SCALE: ½" = 1'-0"

NOTES:

BOLTS FOR SECTIONS 3-3 THRU 7-7 SAME AS SHOWN ON SECTION 1-1 & 2-2.

BOLT HOLES ARE 1" Φ EXCEPT 1¼" Φ IN WALE SPLICES

COUNTERBORE WALES 4¼" Φ BY 1¾" DEEP.

SEE DWG NO. 5 of 5 FOR MATERIAL LIST.

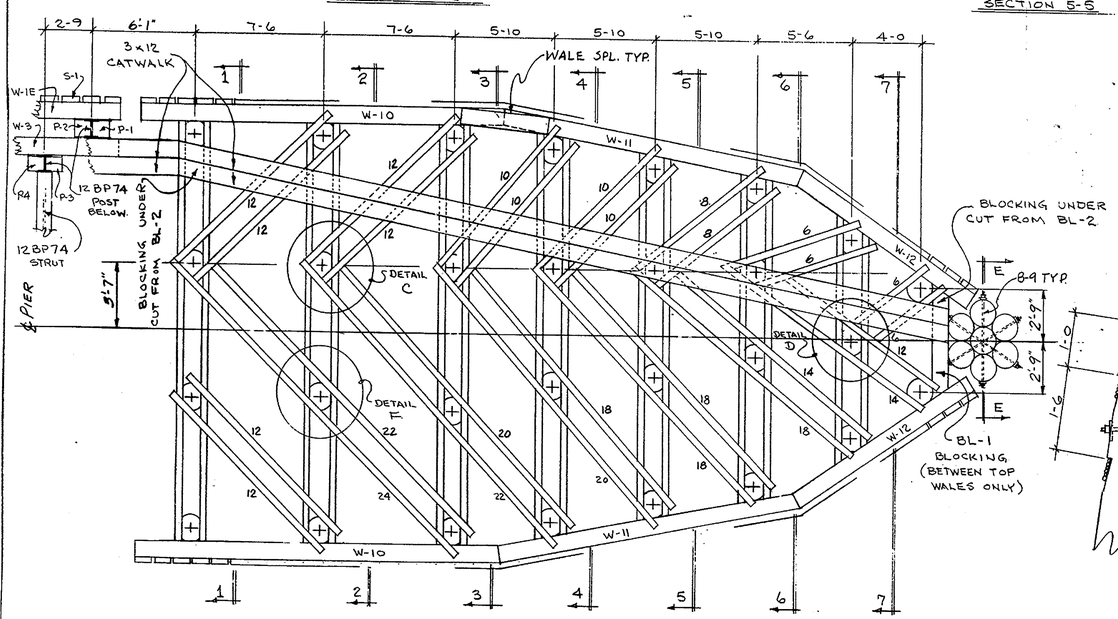

PLAN

OPP. END SAME

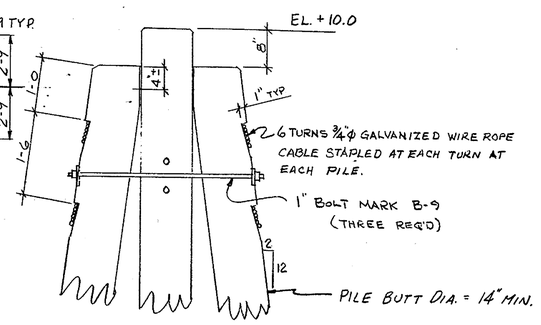

SECTION E-E

SCALE: ¾" = 1'-0"

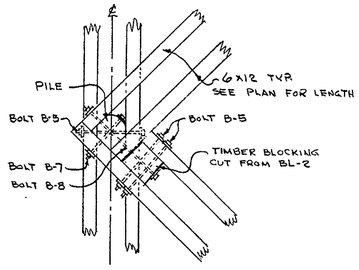

DETAIL C - ½" = 1'-0"

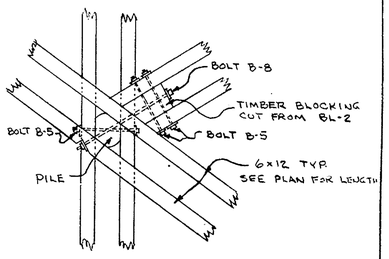

DETAIL D ½" = 1'-0"

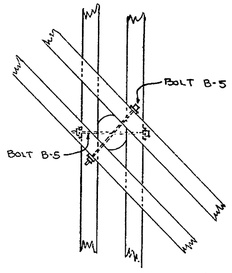

DETAIL F ½" = 1'-0"

APPROVED
Delaware State Highway Department
6-30-71

DETAILS OUTSIDE COFFERDAM

DELAWARE
STATE HIGHWAY DEPARTMENT

INTERSTATE ROUTE I-495

CHRISTINA RIVER BRIDGE

PIERS 16 & 17 FENDER SYSTEM

CONTRACTOR: G.A. & F.C. WAGMAN, INC.

DWG. NO. 2 of 5 DATE: 6-9-71 DRAWN BY: RHW CHECKED BY: L.C.B.

SCALE: ¼" = 1'-0" UNLESS NOTED

Rev. 7-14-71

CONTRACT 70-04-016

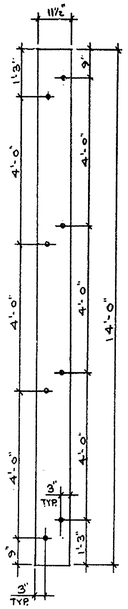

4×12 SHEETING - MARK S-1

FINISH 3⅜ × 11½ × 14-0

DRILL ½" HOLES FROM ONE SIDE

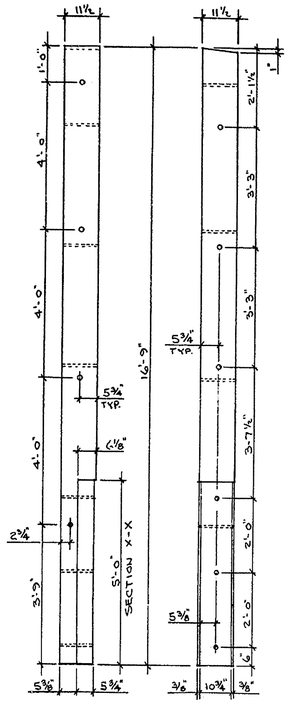

12×12 POST - MARK P-1

FINISH 11½ × 11½ × 16-9

DRILL 1" HOLES FROM SIDES SHOWN

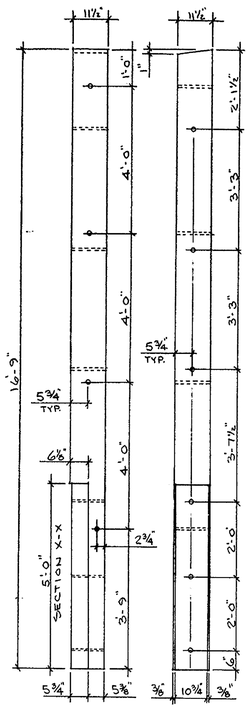

12×12 POST - MARK P-2

FINISH 11½ × 11½ × 16-9

DRILL 1" HOLES FROM SIDES SHOWN

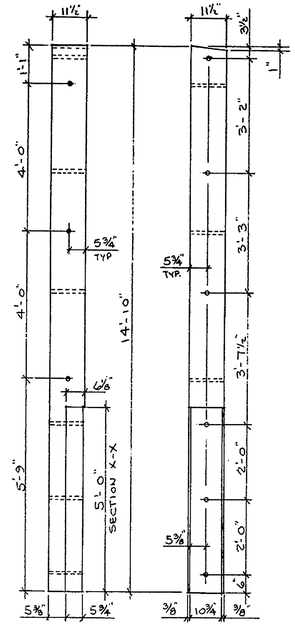

12×12 POST - MARK P-3

FINISH 11½ × 11½ × 14-10

DRILL 1" HOLES FROM SIDES SHOWN

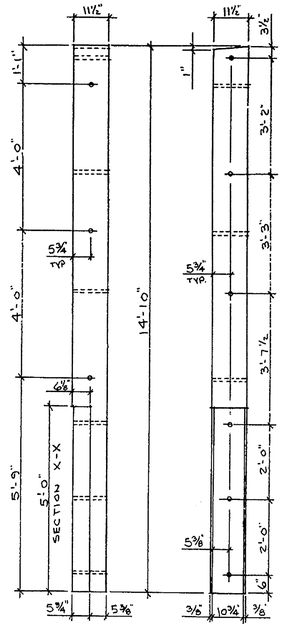

12×12 POST - MARK P-4

FINISH 11½ × 11½ × 14-10

DRILL 1" HOLES FROM SIDES SHOWN

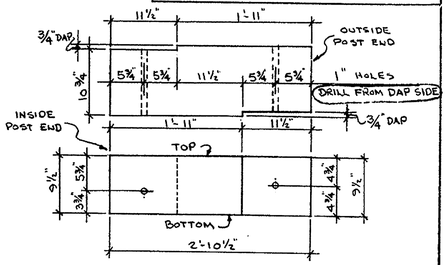

10×12 BRIDGING - MARK B-1

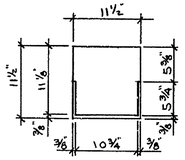

5'-0" DAP DETAIL AT BOTT. POST

SECTION X-X

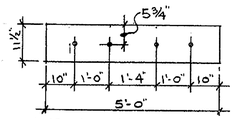

4×12 WALE SPLICE - MARK WS-1

FINISH 3⅜ × 11½ × 5-0 - 1¼" HOLES

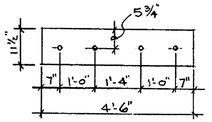

4×12 WALE SPLICE - MARK WS-2

FINISH 3⅜ × 11½ × 4'-6" - 1¼" HOLES

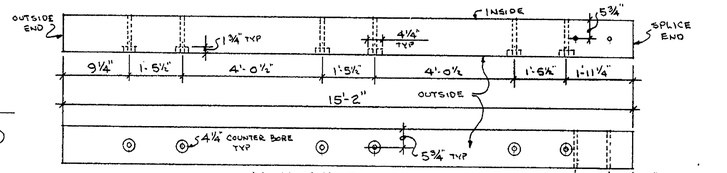

12×12 WALE - MARK W-9

FINISH 11½ × 11½ × 15-2 - DRILL 1" HOLES FROM INSIDE

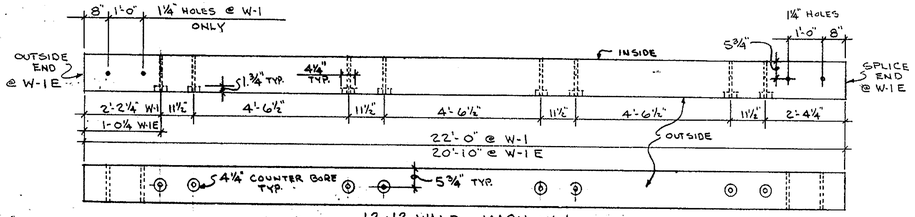

12×12 WALE - MARK W-1

FINISH 11½ × 11½ × 22-0 W-1, 20-10 W-1E DRILL 1" HOLES FROM INSIDE

12×12 WALE - MARK W-1E (AS NOTED)

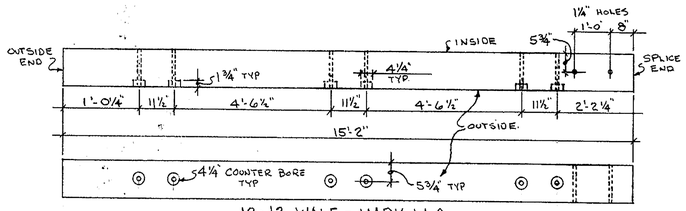

12×12 WALE - MARK W-2

FINISH 11½ × 11½ × 15-2 - DRILL 1" HOLES FROM INSIDE

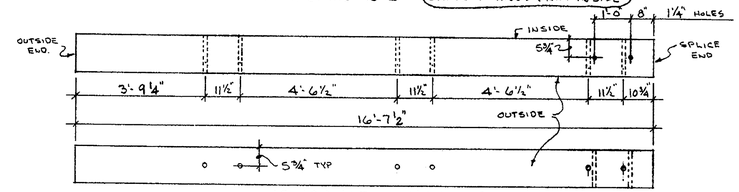

12×12 WALE - MARK W-3

FINISH 11½ × 11½ × 16-7½ - DRILL 1" HOLES FROM INSIDE

TAG INSIDE FACE

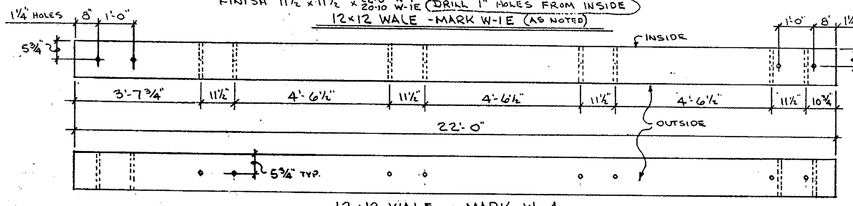

12×12 WALE - MARK W-4

FINISH 11½ × 11½ × 22-0 - DRILL 1" HOLES FROM INSIDE

TAG INSIDE FACE

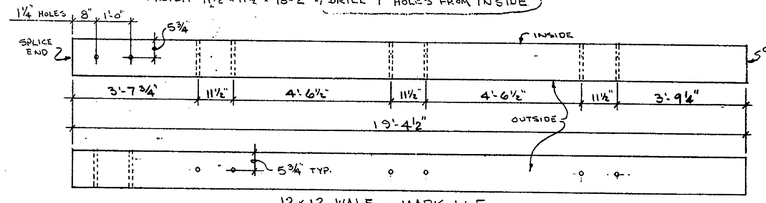

12×12 WALE - MARK W-5

FINISH 11½ × 11½ × 19-4½ DRILL 1" HOLES FROM INSIDE

TAG INSIDE FACE

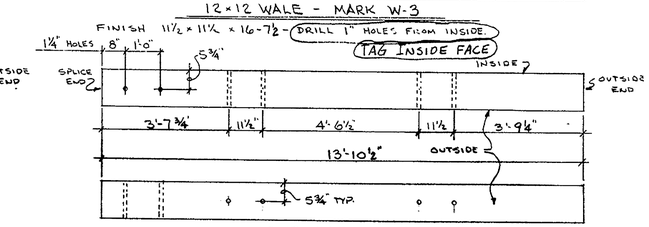

12×12 WALE - MARK W-6

FINISH 11½ × 11½ × 13-10½ DRILL 1" HOLES FROM INSIDE

TAG INSIDE FACE

TIMBER DETAILS

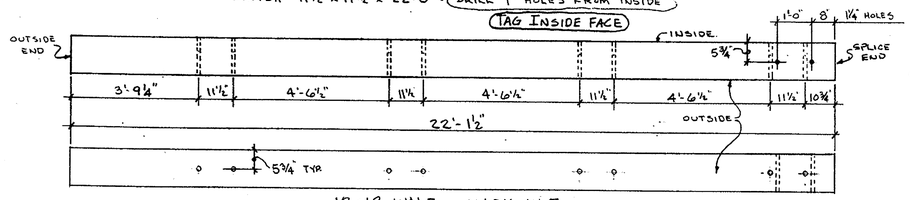

12×12 WALE - MARK W-7

FINISH 11½ × 11½ × 22-1½ - DRILL 1" HOLES FROM INSIDE

TAG INSIDE FACE

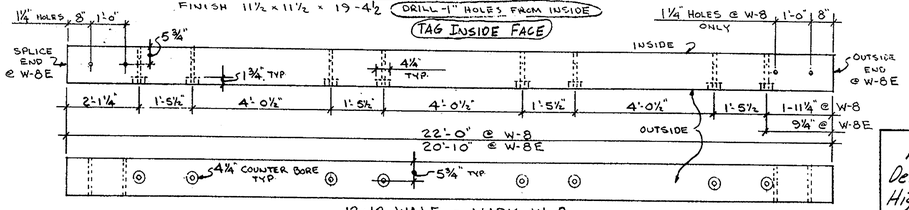

12×12 WALE - MARK W-8

FINISH 11½ × 11½ × 22-0 W-8, 20-10 W-8E DRILL 1" HOLES FROM INSIDE

12×12 WALE - MARK W-8E (AS NOTED)

APPROVED
Delaware State
Highway Dept.
6-30-71

Rev. 7-12-71

DELAWARE
STATE HIGHWAY DEPARTMENT

INTERSTATE ROUTE I-495

CHRISTINA RIVER BRIDGE

PIERS 16 & 17 FENDER SYSTEM

CONTRACTOR: G.A. & F.C. WAGMAN, INC

DWG. NO. 3 of 5 DATE: 6-9-71 DRAWN BY: PHW CHECKED BY: LCB

CONTRACT 70-04-016

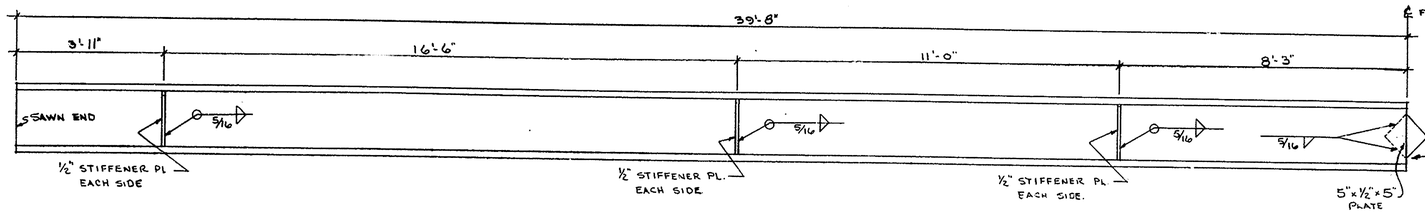

10 WF 100 WALE WITH PLATE

MARK 100-P

(PAINT AFTER ERECTION & WELDING)

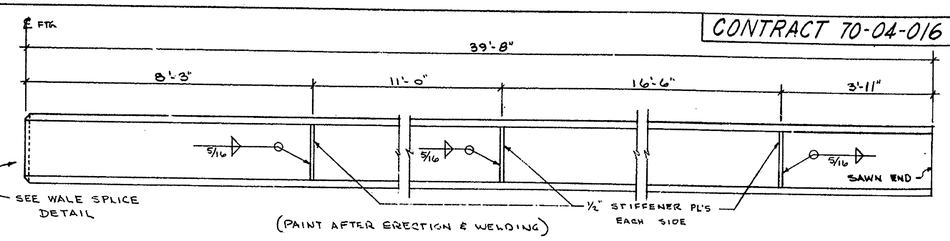

10 WF 100 WALE WITHOUT PLATE

MARK 100

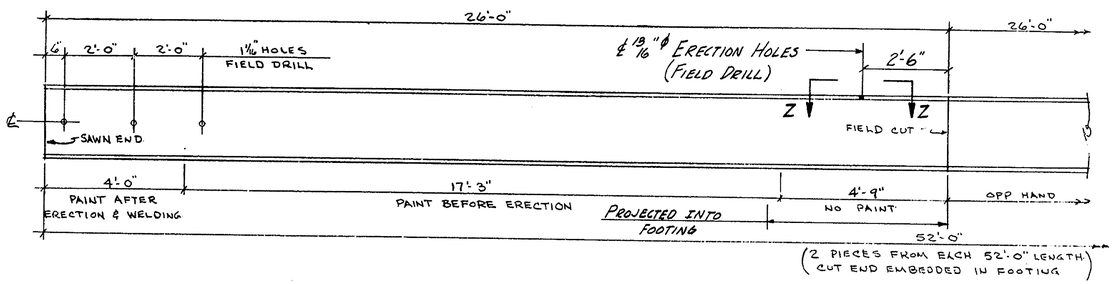

12 BP 74 POST

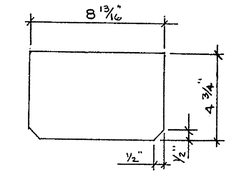

½" STIFFENER PLATE

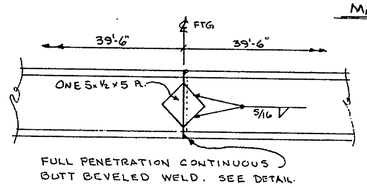

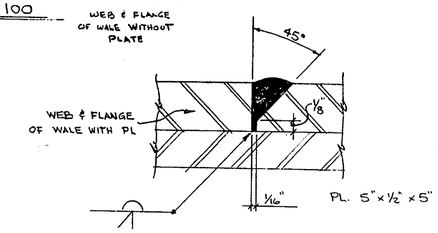

WALE SPLICE DETAIL

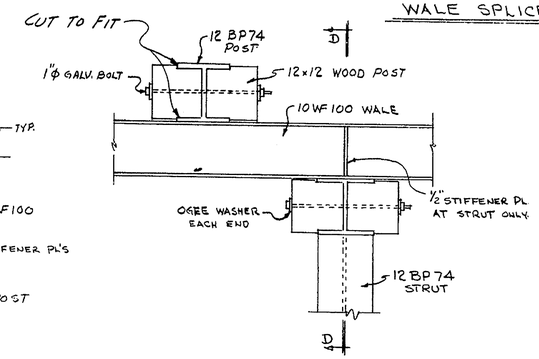

DETAIL B

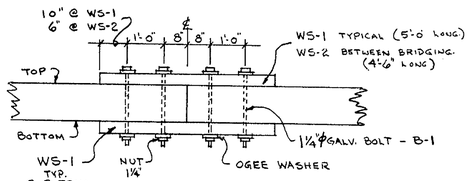

DETAIL F

TYPICAL WALE SPLICE

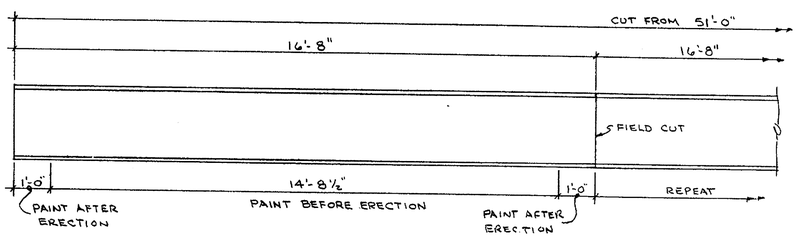

12 BP 74 STRUT

(3 PIECES FROM EACH 51'-0" LENGTH USE MILL END WHERE POSSIBLE.)

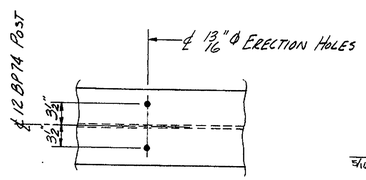

SECTION Z-Z

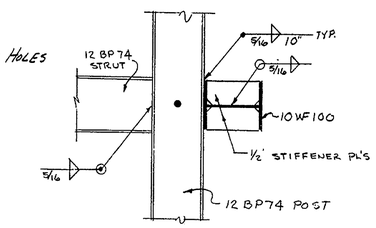

SECTION D-D

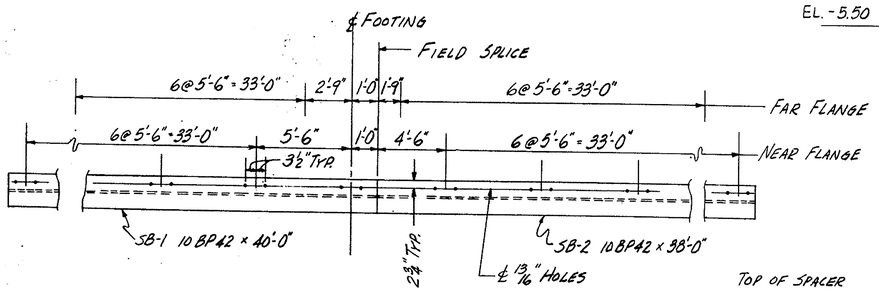

SPACER BEAM DETAIL

REQUIRED: 4 EA. MK SB-1
4 EA. MK SB-2
116 EA. 11/16 FILLS

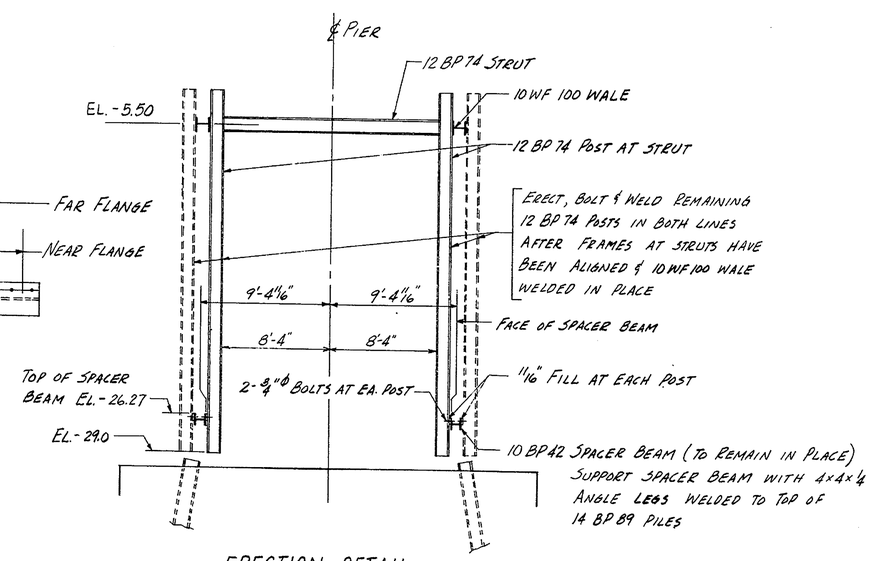

ERECTION DETAIL

STEEL ERECTION PROCEDURE:

1. ERECT AND ALIGN 10 BP 42 SPACER BEAMS.
2. ASSEMBLE EACH STRUT AND THE TWO ADJACENT POSTS INTO A SINGLE FRAME.
3. INSTALL AND ALIGN THE SIX STRUT FRAMES BY BOLTING THEM TO THE SPACER BEAM (10 BP 42) & CROSS BRACING TEMPORARILY WITH ANGLES TACK WELDED NEAR THE TOP & BOTTOM ON THE INSIDE OF POSTS.
4. INSTALL AND WELD 10 WF 100 WALES TO POSTS ON THE STRUT FRAMES.
5. INSTALL REMAINING POSTS BY BOLTING TO SPACER BEAMS AND WELDING TO 10 WF 100 WALE. APPLY PROTECTIVE COATING TO ALL STEEL MEMBERS WHICH REMAIN EXPOSED ABOVE TOP OF FOOTING.
6. ERECT & BOLT ALL TIMBER.

APPROVED
Delaware State Highway Dept.
6-30-71

Rev. 7-12-71

STEEL & MISC. DETAILS

DELAWARE
STATE HIGHWAY DEPARTMENT

INTERSTATE ROUTE I-495
CHRISTINA RIVER BRIDGE

PIERS 16 & 17 FENDER SYSTEM

CONTRACTOR: G.A. & F.C. WAGMAN, INC.

DWG. NO. 4 of 5 DATE: 6-9-71 DRAWN BY: PHW CHECKED BY: LCB

MATERIAL LIST

ITEM	SIZE	LENGTH	MARK	GRADE	HOLES PER PIECE 1" Φ U.N.O.	4¼" COUNTBORES PER PIECE	QUANTITY PIER 16 (I)	QUANTITY PIER 17 (I)	QUANTITY PIER 16 (Φ)	QUANTITY PIER 17 (Φ)	TOTAL
SHEETING	4×12	14-0	S-1	1,800#	8 × ½"	–	146	146	184	184	660
WALE SPLICE	4×12	5-0	WS-1	1,800#	4 × 1¼"	–	81	81	64	64	290
WALE SPLICE	4×12	4-6	WS-2	1,800#	4 × 1¼"	–	3	3	–	–	6
BRACING (*)	6×12	24-0	24	1,800#	*	–	–	–	32	32	64
(*)		22-0	22	1,800#	*	–	–	–	16	16	32
(*)		20-0	20	1,800#	*	–	–	–	16	16	32
(*)		18-0	18	1,800#	*	–	–	–	36	36	72
(*)		16-0	16	1,800#	*	–	–	–	12	12	24
(*)		14-0	14	1,800#	*	–	–	–	12	12	24
(*)		12-0	12	1,800#	*	–	–	–	48	48	96
(*)		10-0	10	1,800#	*	–	–	–	32	32	64
(*)		8-0	8	1,800#	*	–	–	–	8	8	16
BRACING (*)	6×12	6-0	6	1,800#	*	–	–	–	8	8	16
WALE	12×12	22-0	W-1	1,800#	8 × 1" 4 × 1¼"	8	12	12	–	–	24
		20-10	W-1E	1,800#	8 × 1" 2 × 1¼"	8	6	6	–	–	12
		22-0	W-8	1,800#	8 × 1" 4 × 1¼"	8	4	4	–	–	8
		20-10	W-8E	1,800#	8 × 1" 2 × 1¼"	8	2	2	–	–	4
		15-2	W-2	1,800#	6 × 1" 2 × 1¼"	6	6	6	–	–	12
		15-2	W-9	1,800#	6 × 1" 2 × 1¼"	6	2	2	–	–	4
		16-7½	W-3	1,800#	6 × 1" 2 × 1¼"	–	4	4	–	–	8
		22-0	W-4	1,800#	8 × 1" 4 × 1¼"	–	12	12	–	–	24
		19-4½	W-5	1,800#	6 × 1" 2 × 1¼"	–	4	4	–	–	8
		13-10½	W-6	1,800#	4 × 1" 2 × 1¼"	–	2	2	–	–	4
		22-1½	W-7	1,800#	8 × 1" 2 × 1¼"	–	2	2	–	–	4
(*)		22-0	W-10	1,800#	*	*	–	–	16	16	32
(*)		18-0	W-11	1,800#	*	*	–	–	16	16	32
WALE (*)	12×12	12-0	W-12	1,800#	*	*	–	–	16	16	32
POST	12×12	16-9	P-1	2,400#	10	–	30	30	–	–	60
POST	12×12	16-9	P-2	2,400#	10	–	30	30	–	–	60
POST	12×12	14-10	P-3	2,400#	9	–	28	28	–	–	56
POST	12×12	14-10	P-4	2,400#	9	–	28	28	–	–	56
CATWALK (*)	3×12	24-0	C	1,800#	*	–	8	8	8	8	32
BLOCKING (*)	12×12	8-0	BL-1	1,800#	*	–	–	–	2	2	4
BLOCKING (*)	12×12	20-0	BL-2	1,800#	*	–	–	–	4	4	8
BRIDGING	10×12	2-10½	B-1	1,800#	2	–	14	14	–	–	28

ITEM	SIZE	LENGTH	MARK	THREAD LENGTH	QUANTITY PIER 16 (I)	QUANTITY PIER 17 (I)	QUANTITY PIER 16 (Φ)	QUANTITY PIER 17 (Φ)	TOTAL (ROUNDED)
BOLT	1¼"	2-0	B-1	3½"	168	168	128	128	610
BOLT	1"	2-3	B-2	3"	488	488	–	–	1000
BOLT	1"	2-1	B-3	3"	240	240	–	–	500
BOLT	1"	3-2	B-4	3"	28	28	–	–	60
BOLT	1"	2-6	B-5	9"	–	–	760	760	1600
BOLT	1"	3-0	B-6	1'-3"	–	–	28	28	60
BOLT	1"	2-0	B-7	9"	–	–	24	24	52
BOLT	1"	4-3	B-8	1'-3"	–	–	28	28	60
ROD	1"	5-5	B-9	1'-3" EA. END	–	–	6	6	15
OGEE WASHER	1"	–	–	–	1512	1512	1692	1692	6500
OGEE WASHER	1¼"	–	–	–	336	336	256	256	1220
NUT (REG SQUARE)	1"	–	–	–	756	756	852	852	3300
NUT (REG SQUARE)	1¼"	–	–	–	168	168	128	128	620
DOCK SPIKES	⅝"	10"	–	–	1168	1168	1472	1472	5500
DOCK SPIKES	½"	8"	–	–	80	80	128	128	460
GALV. WIRE ROPE CABLE	¾" Φ	L/F	–	–	–	–	400 L/F	400 L/F	800
WF WALE	10WF100	39-8	100 P	–	2	2	–	–	4 PCS 40-0
WF WALE	10WF100	39-8	100	–	2	2	–	–	4 PCS 40-0
PLATE	5×½×5	–	–	–	2	2	–	–	4
STIFFENER	8 13/16×½×4¾	–	–	–	24	24	–	–	48
WF POST	12BP74	26-0	–	–	58	58	–	–	58 PC'S 52-0
WF STRUT	12BP74	16-8	–	–	6	6	–	–	4 PC'S 51-0
GALV. STAPLES	½"	3" LONG x ¾" SPREAD	–	–	–	–	72	72	175

NOTES

(I) INSIDE COFFERDAM
(Φ) OUTSIDE COFFERDAM
* FIELD DRILL (*) FIELD CUT
SEE DWG.# 2 of 5 & 3 of 5 FOR TIMBER DETAILS
SEE DWG.# 4 of 5 FOR STEEL & MISC. DETAILS
SEE DWG.# 1 of 5 & 2 of 5 FOR LOCATION

SPECIFICATIONS

ALL TIMBER SHALL BE DENSE SOUTHERN YELLOW PINE, 1800 LBS PER SQ. IN. ALLOWABLE STRESS, STRUCTURAL GRADE, EXCEPT FOR POSTS WHICH SHALL BE 2400 LBS PER SQ IN. ALLOWABLE STRESS, SELECT STRUCTURAL GRADE.

ALL TIMBER SHALL BE SURFACED FOUR SIDES TO THE FINISHED DIMENSIONS SHOWN, AND SHALL BE IN ACCORDANCE WITH DELAWARE STATE HIGHWAY DEPT. 1965 STANDARD SPECIFICATIONS FOR ITEM 17, EXCEPT AS MODIFIED HEREIN.

ALL TIMBER SHALL BE TREATED WITH A PRESERVATIVE TREATMENT CONSISTING OF 20 POUNDS OF CREOSOTE OIL RETAINED PER CUBIC FOOT OF TIMBER, AND SHALL BE DONE ACCORDING TO THE REQUIREMENTS OF THE STANDARD SPECIFICATIONS FOR HIGHWAY BRIDGES OF AASHO.

MACHINE BOLTS SHALL HAVE SQUARE HEADS AND NUTS.
BOLTS AND SPIKES SHALL BE WROUGHT IRON AND COMPLETELY GALVANIZED ACCORDING TO ASTM A 153.
OGEE WASHERS SHALL BE CAST IRON AND COMPLETELY GALVANIZED ACCORDING TO ASTM A 153.

STRUCTURAL STEEL SHALL CONFORM TO THE REQUIREMENTS OF ASTM A 36.
ELECTRODE E-7016 SHALL BE USED FOR ALL WELDING.
ALL STRUCTURAL STEEL SHALL RECEIVE A CORROSION PROTECTIVE COATING OF "AMERON NO. 78" APPLIED IN ACCORDANCE WITH THE MANUFACTURER'S RECOMMENDATIONS.

APPROVED
Delaware State Highway Dept.
6-30-71

Rev. 7-14-71

CONTRACT 70-04-016

MATERIAL LIST & SPECIFICATIONS

DELAWARE
STATE HIGHWAY DEPARTMENT

INTERSTATE ROUTE I-495

CHRISTINA RIVER BRIDGE

PIERS 16 & 17 FENDER SYSTEM

CONTRACTOR: G.A. & F.C. WAGMAN, INC.

DWG. NO. 5 of 5 DATE: 6-9-71 DRAWN BY: PNW CHECKED BY: LCB

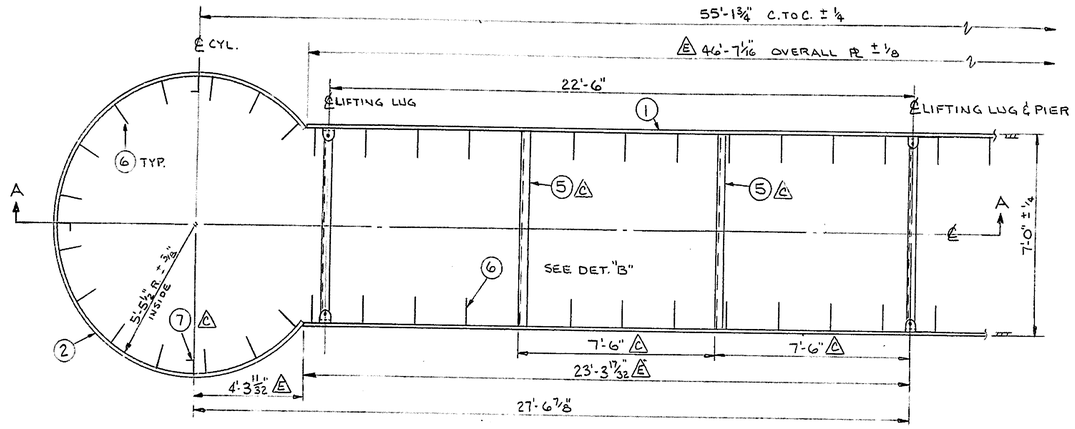

PLAN

1 REQ'D. - PIER 16
1 REQ'D. - PIER 17

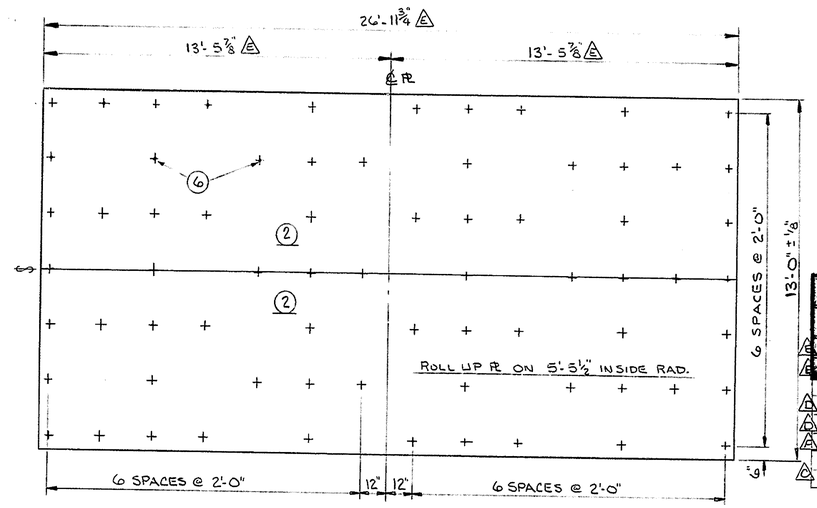

LET	REVISION	BY	APP'V'D	DATE
A	ADDED ALT. WELD DETAIL	EWT		2-2-71
B	REV'D. ANCHOR STUD TO TOE UP.	EWT		2-22-71
C	ADDED 8 L BRACES (PC. 5). ADDED 6 L CLIPS (PC. 7) IN LOWER CYL. ADDED NOTES 1 & 2.	EWT		3-3-71
D	REV'D. INSIDE PL DIM. SECT. B-B FROM 7'-0" TO 6'-11". REV'D. OTHER DIM'S., L/M, AND JOINT WELD DET. TO SUIT.	EWT		3-17-71
E	ADDED SEAM IN PL'S. PCS. 1 AND 2. REV'D. WELD JOINTS DIM'S. AND L/M.	EWT		3-23-71
F	ADDED 188 ANCHOR STUDS PER PIER.	EWT		3-26-71

LIST OF MATERIAL

PART NO.	AMT.	DESCRIPTION	LENGTH	WEIGHT	MARK NO
1-1	8	78" x 20.4# PL (ASTM A-242)	46'-7 1/16"	49,422	1
1-2	8	78" x 20.4# PL (ASTM A-242)	26'-11¾"	28,620	2
1-3	12	4" x 30.6# PL (ASTM A-36)	0'-11"	112	6
1-4	6	4" x 3" x ¼" L (ASTM A-36)	6'-9½"	236	7
1-5	22	4" x 3" x ¼" L (ASTM A-36)	6'-11"	883	7
1-6	908	¾" ANCHOR STUD - NELSON OR EQUAL		1630	
1-7	12	6" x 4" x ½" L (ASTM A-36)	0'-6"	97	

TOTAL 81,050#

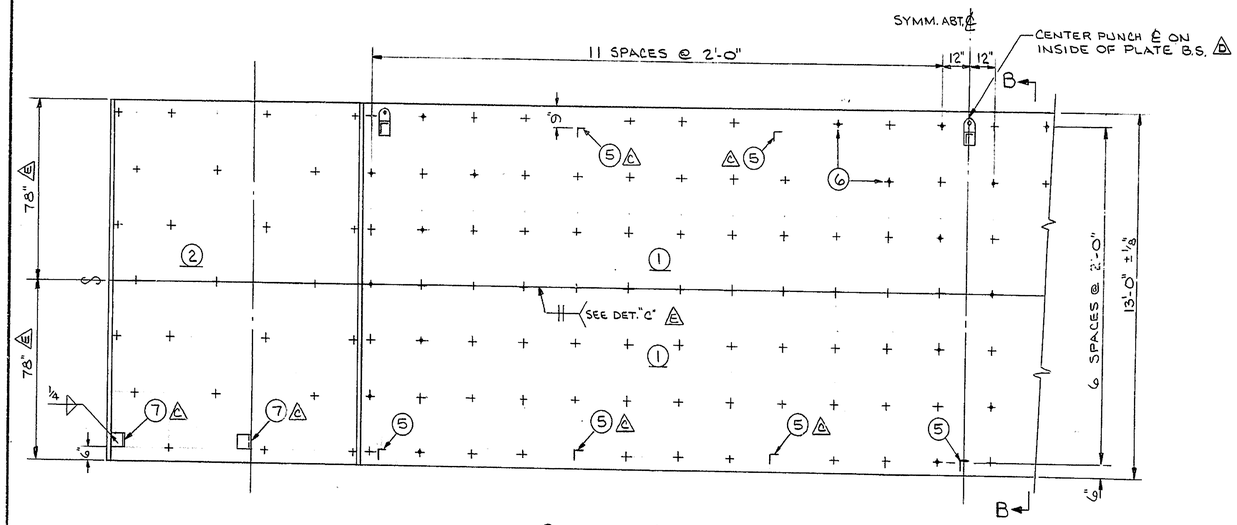

SECTION A-A

CYLINDER PL EXPANDED

INSTALL ANCHOR STUDS AFTER ROLLING
CENTER PUNCH LOCATIONS BEFORE ROLLING PLATE

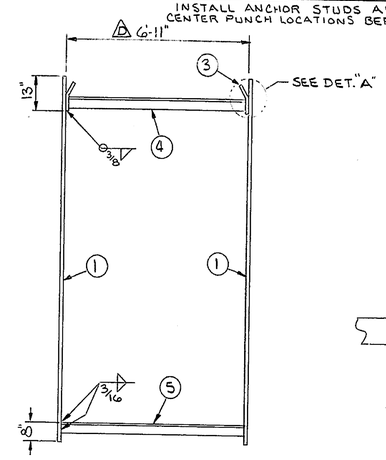

SECTION B-B

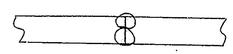

DETAIL "C"

MACHINE WELD
L61 WIRE
780 FLUX

NOTES:

1- MAT'L. IN L/M FOR (2) PIERS.
2- ANCHOR STUDS ON SIDE PLATES (PC. 1) TO LINE-UP BETWEEN PLATES.

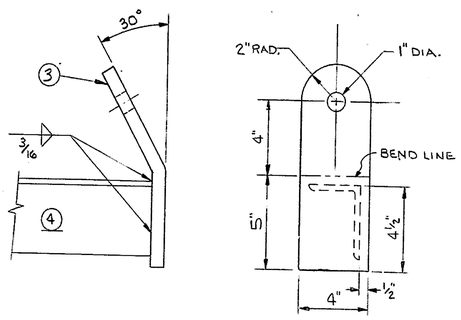

DETAIL "A"

TYP. LIFTING LUG
SCALE 3" = 1'-0"

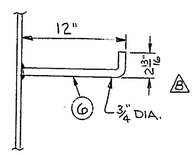

DETAIL "B"

TYP. ANCHOR STUD
SCALE 1½" = 1'-0"

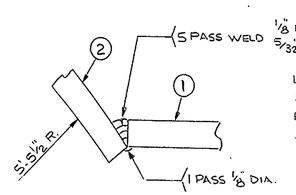

USE E7018 ELECTROD.
SEQUENCE 1ST AND 2ND PASS BACK STEP.
ALL WELDS VERTICAL UP BEAD.

TYP. JOINT WELD

CYLINDER TO COLUMN

REFERENCE DRAWINGS		
NO.	DWG. NO.	TITLE

PROTECTION PLATES
PIERS 16 & 17

"APPROVED"
DELAWARE STATE
HIGHWAYS DEPARTMENT 4-13-71

WILEY MANUFACTURING COMPANY
PORT DEPOSIT, MARYLAND U.S.A.

DELAWARE STATE HIGHWAY DEPARTMENT
CHRISTINA RIVER BRIDGE I-495
GENERAL CONTRACTOR G.A. & F.C. WAGMAN INC.

DRAWN E.W.T.	CHECKED	JOB 4-231
DATE 11-10-70	APPROVED	
SCALE 3/8" = 1'-0" AND AS NOTED	APPROVED	

DWG. NO. 4-231-07-1 F

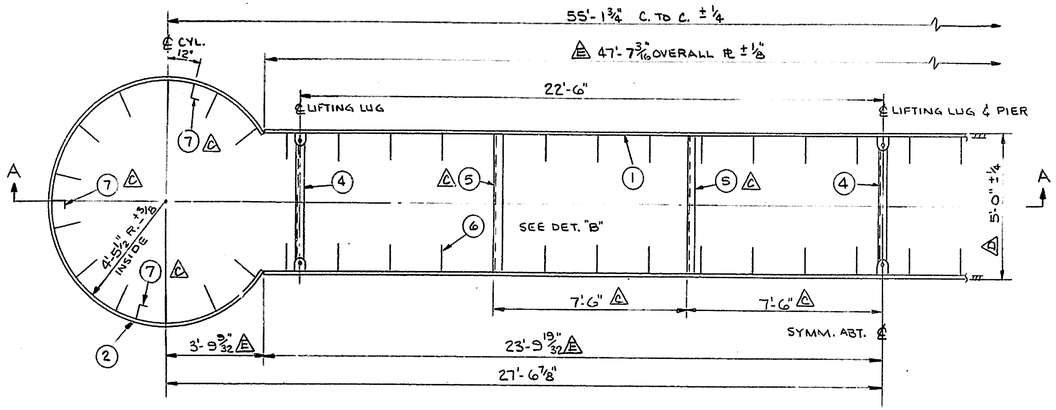

PLAN

1 REQ'D. - PIER 15
1 REQ'D. - PIER 18

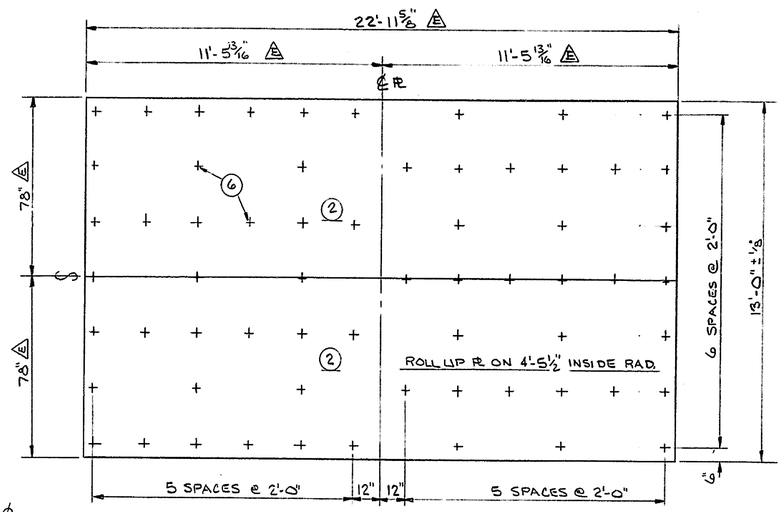

CYLINDER ℞ EXPANDED

INSTALL ANCHOR STUDS AFTER ROLLING
CENTER PUNCH LOCATIONS BEFORE ROLLING PLATE

LET	REVISION	BY	APP'V'D	DATE
A	ADDED ALT. WELD DETAIL	EWT		2-2-71
B	REV'D. ANCHOR STUD TO TOE UP.	EWT		2-22-71
C	ADDED 8 L BRACES (PC. 5). ADDED 6 L CLIPS (PC. 7) IN LOWER CYL. ADDED NOTES 1 & 2.	EWT		3-3-71
D	REV'D. INSIDE ℞ DIM. SECT. B-B FROM 5'-0" TO 4'-11". REV'D. OTHER DIM'S., L/M, AND JOINT WELD DETAIL TO SUIT.	EWT		3-17-71
E	ADDED SEAM IN ℞'S. PCS. 1 AND 2. REV'D. WELD JOINTS, DIM'S AND L/M.	EWT		3-23-71
F	ADDED 194 ANCHOR STUDS PER PIER	EWT		3-26-71

LIST OF MATERIAL

	PART NO.	AMT.	DESCRIPTION	LENGTH	WEIGHT	MARK NO
E	2-1	8	78" x 20.4# ℞ (ASTM A-242)	47'-7 7/16"	50,493	3
E	2-2	8	78" x 20.4# ℞ (ASTM A-242)	22'-11 5/8"	24,366	4
	2-3	12	4" x 30.6# ℞ (ASTM A-36)	0'-11"	112	6
D	2-4	6	4 x 3 x 1/4" L (ASTM A-36)	4'-9 1/2"	166	7
D	2-5	22	4 x 3 x 1/4" L (ASTM A-36)	4'-11"	627	7
A	2-6	892	3/4" ANCHOR STUD - NELSON OR EQUAL		1650	
C	2-7	12	6" x 4" x 1/2" L (ASTM A-36)	0'-6"	97	

TOTAL 77,511 #

NOTES:
C 1- MAT'L. IN L/M FOR (2) PIERS.
C 2- ANCHOR STUDS ON SIDE PLATES (PC. 1) TO LINE-UP BETWEEN PLATES.

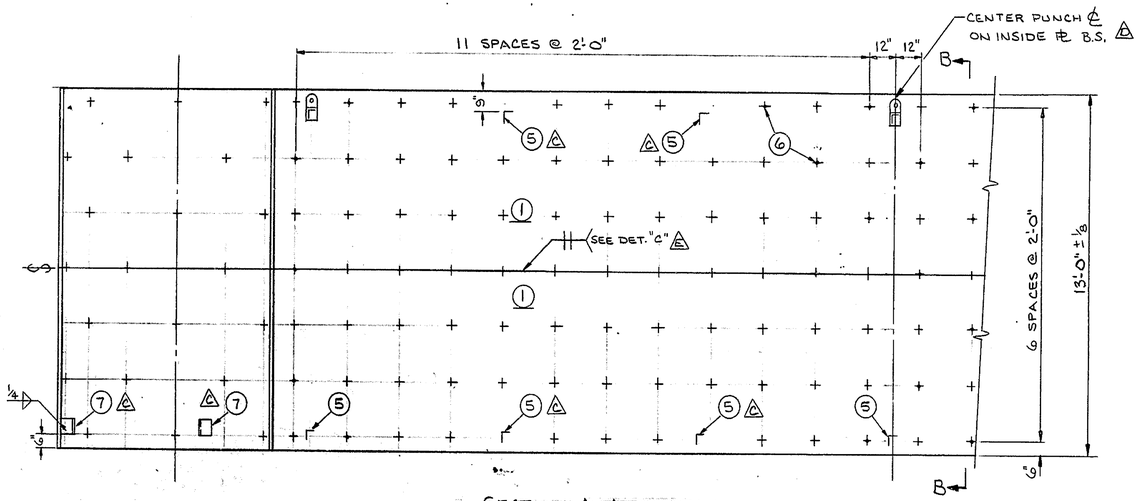

SECTION A-A

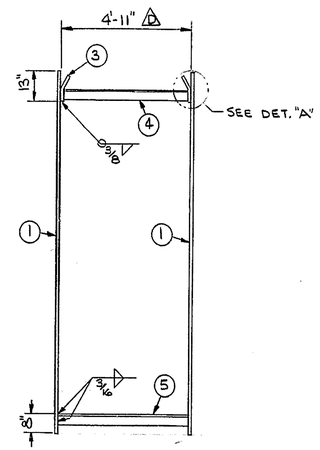

SECTION B-B

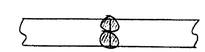

DETAIL "C"
MACHINE WELD
LG1 WIRE
780 FLUX

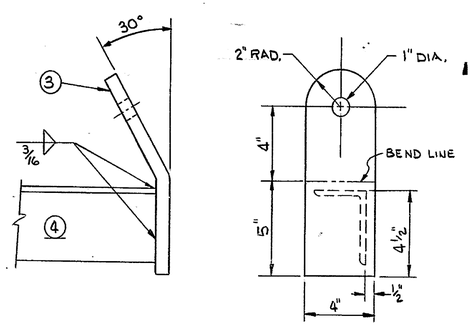

DETAIL "A"
TYP. LIFTING LUG
SCALE 3" = 1'-0"

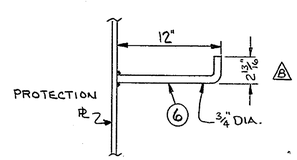

DETAIL "B"
TYP. ANCHOR STUD
SCALE 1 1/2" = 1'-0"

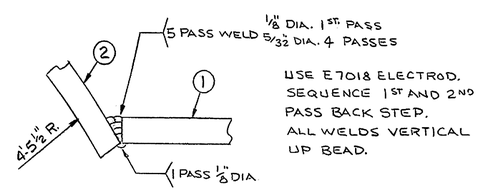

USE E7018 ELECTROD.
SEQUENCE 1ST AND 2ND PASS BACK STEP.
ALL WELDS VERTICAL UP BEAD.

TYP. JOINT WELD
CYLINDER TO COLUMN

REFERENCE DRAWINGS

NO.	DWG. NO.	TITLE

PROTECTION PLATES
PIERS 15 & 18

"APPROVED"
DELAWARE STATE
HIGHWAYS DEPARTMENT 4-13-71

WILEY MANUFACTURING COMPANY
PORT DEPOSIT, MARYLAND U.S.A.

DELAWARE STATE HIGHWAY DEPARTMENT
CHRISTINA RIVER BRIDGE I-495
GENERAL CONTRACTOR G.A. & F.C. WAGMAN INC.

DRAWN E.W.T.	CHECKED	JOB 4-231
DATE 11-13-70	APPROVED	HULL
SCALE 3/8" = 1'-0" AND AS NOTED	APPROVED C. Johnston	
DWG. NO. 4-231-07-2		F

LET	REVISION	BY	APP'V'D	DATE
A	REV'D. ANCHOR STUD TO TOE UP.	EWT		2-22-71
B	ADDED SEAM IN ℞ Pc. 1	EWT		3-23-71

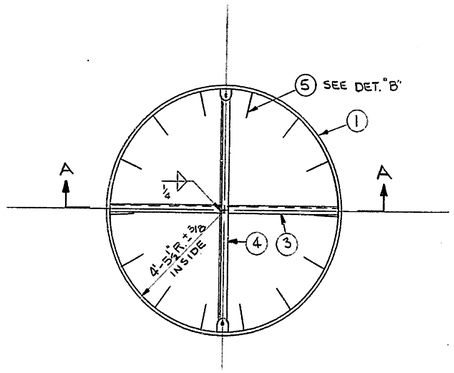

PLAN
1 REQ'D.- PIER 19 EAST
1 REQ'D.- PIER 19 WEST

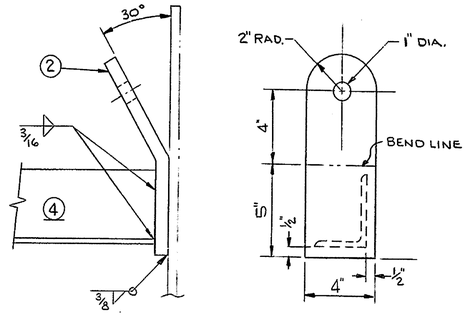

DETAIL "A"
TYP. LIFTING LUG
SCALE 3" = 1'-0"

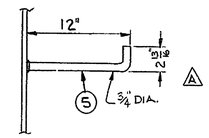

DETAIL "B"
TYP. ANCHOR STUD
SCALE 1½" = 1'-0"

LIST OF MATERIAL

PART NO.	AMT.	DESCRIPTION	LENGTH	WEIGHT	MARK NO
A 3-1	4	78" × 20.4# ℞ (ASTM A-242)	28'-1¾"	14,929	5
A 3-2	4	4" × 30.6# ℞ (ASTM A-36)	0'-11"	37	6
3-3	6	4 × 3 × ¼" L (ASTM A-36)	8'-11"	310	7
3-4	2	4 × 3 × ¼" L (ASTM A-36)	8'-0½"	102	7
3-5	98	¾" ANCHOR STUD - NELSON OR EQUAL		181	

TOTAL 15,559#

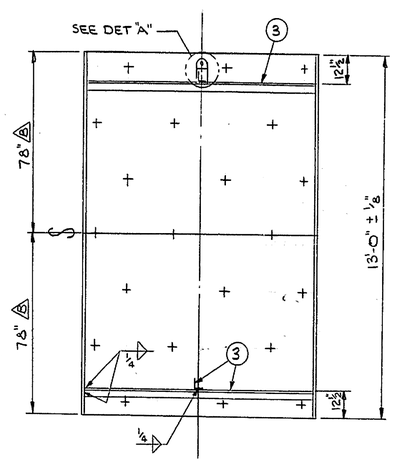

SECTION A-A

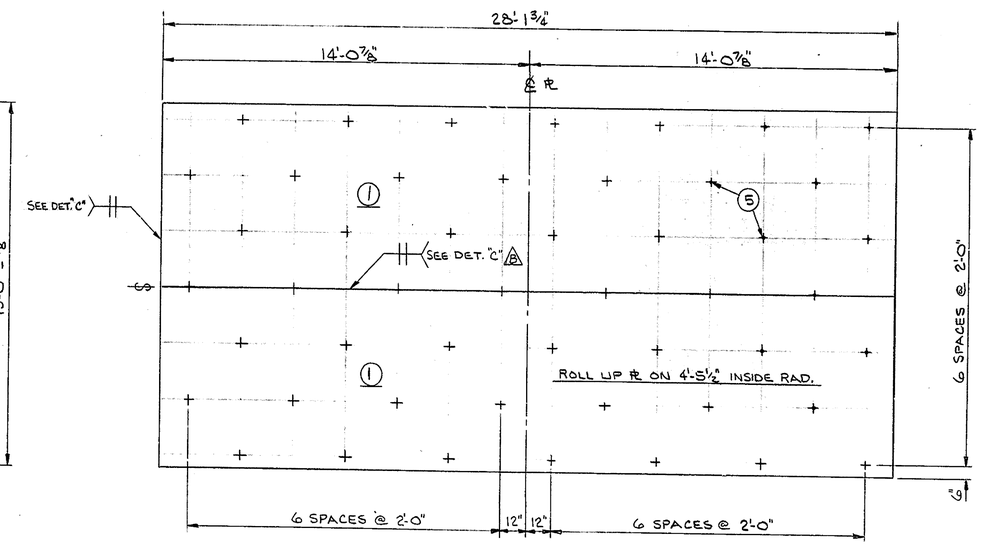

PLATE EXPANDED
INSTALL ANCHOR STUDS AFTER ROLLING
CENTER PUNCH LOCATIONS BEFORE ROLLING PLATE

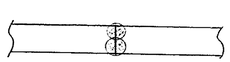

DETAIL "C"
MACHINE WELD
L61 WIRE
780 FLUX

REFERENCE DRAWINGS

NO.	DWG. NO.	TITLE

PROTECTION PLATES
PIER 19 EAST & 19 WEST

WILEY MANUFACTURING COMPANY
PORT DEPOSIT, MARYLAND U.S.A.

DELAWARE STATE HIGHWAY DEPARTMENT
CHRISTINA RIVER BRIDGE I-495
GENERAL CONTRACTOR G.A. & F.C. WAGMAN INC

DRAWN E.W.T.	CHECKED	JOB 4-231
DATE 11-17-70	APPROVED	~~HULL~~
SCALE 3/8"=1'-0" AND AS NOTED	APPROVED E. Johnston	
DWG. NO. 4-231-07-3		B

"APPROVED"
DELAWARE STATE
HIGHWAYS DEPARTMENT 4-13-71

D C B A 1 5 10 A B C D

CONTRACT 70-04-016

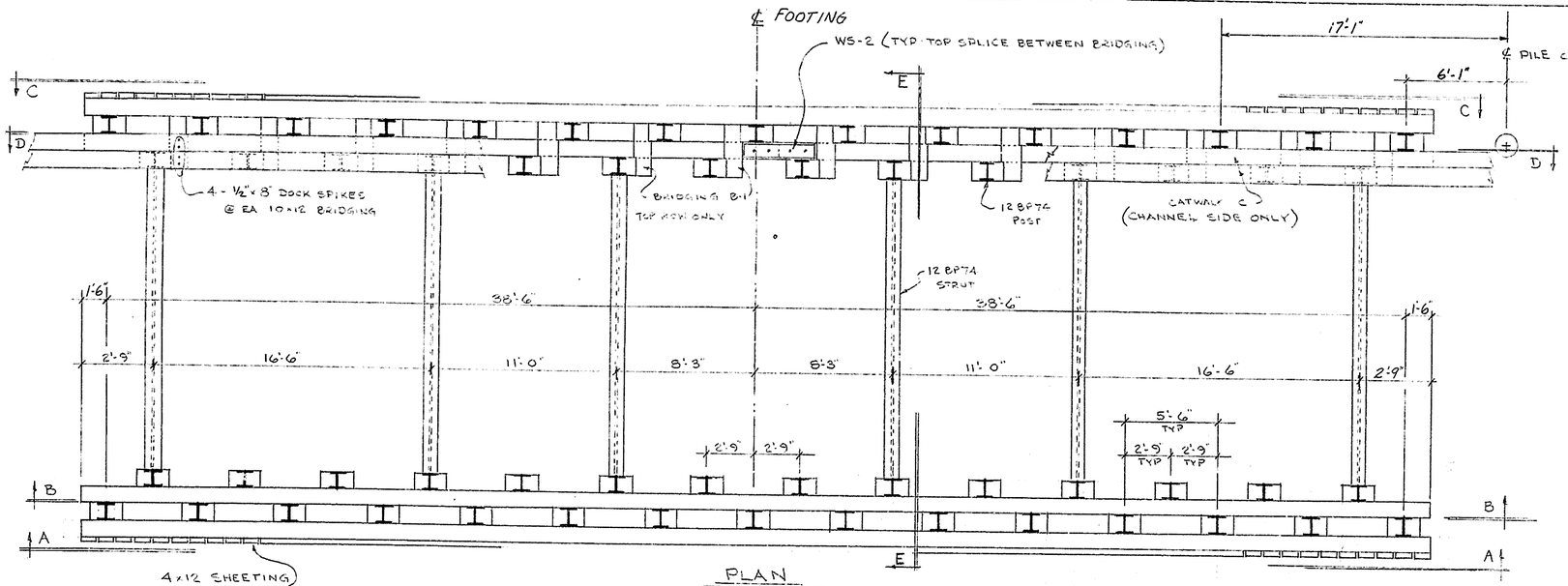

PLAN

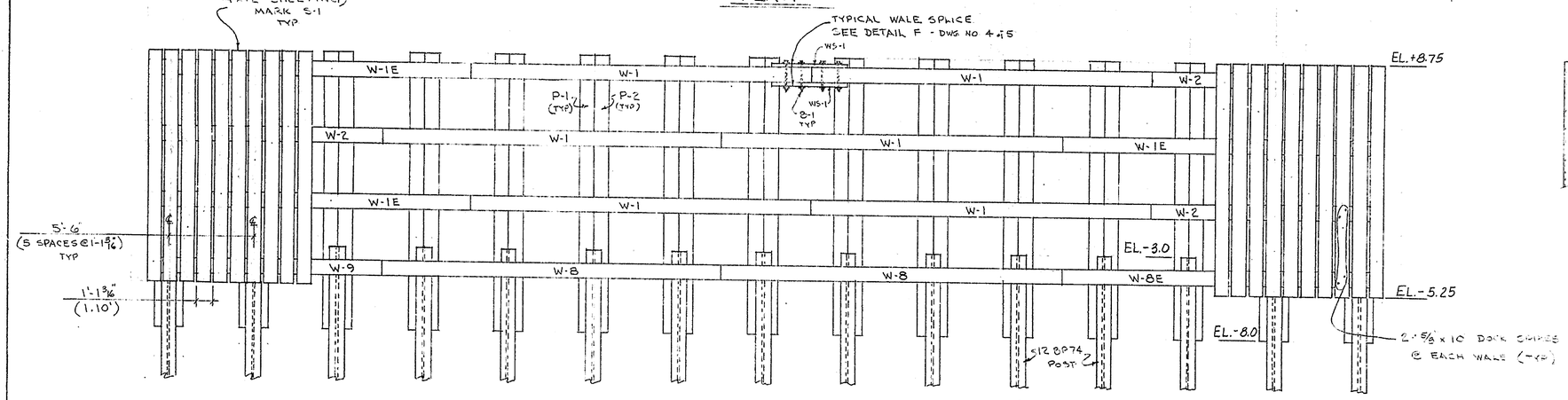

ELEVATION A-A & C-C

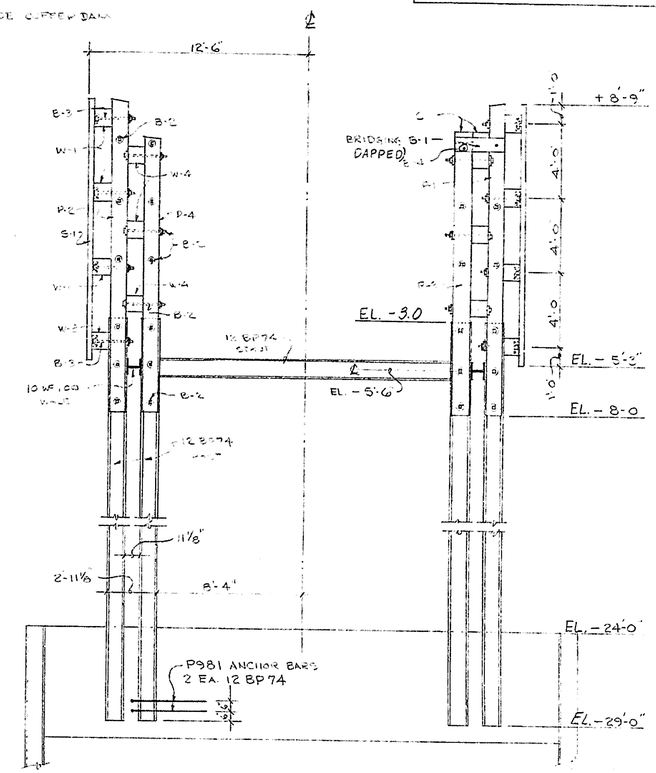

SECTION E-E

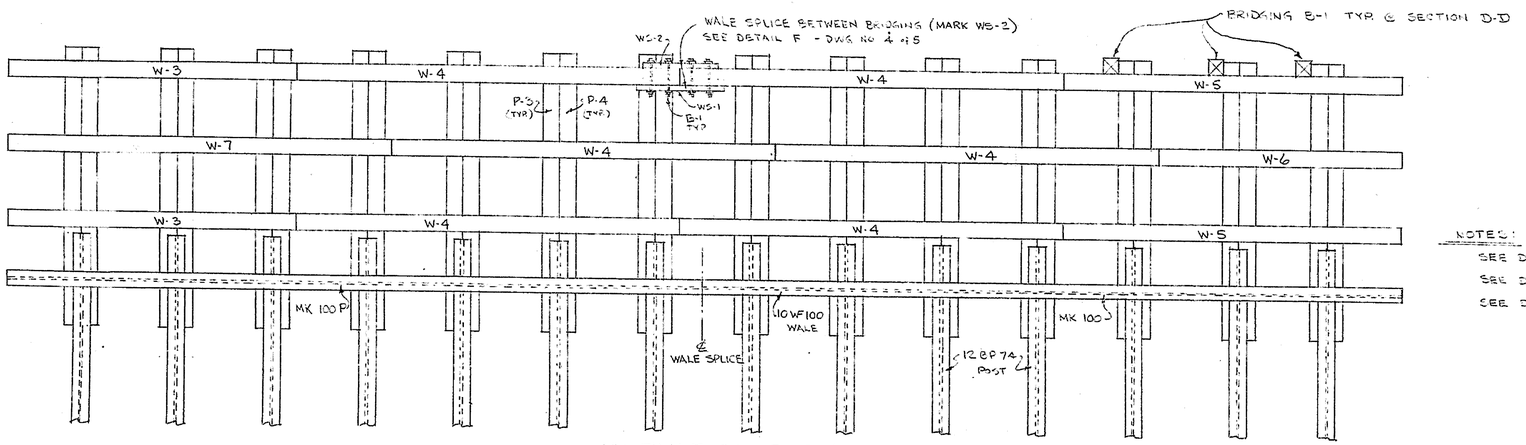

ELEVATION B-B & D-D

APPROVED
Delaware State Highway Dept.
6-30-71

NOTES:

SEE DWG NO. 3 of 5 FOR TIMBER DETAILS
SEE DWG NO 4 of 5 FOR STEEL & M.C. DETAILS
SEE DWG NO 5 of 5 FOR MATERIAL LIST & SPLICE

DETAILS INSIDE COFFER DAM

Rev 7-12-71

SCALE 4" = 1'-0"

DELAWARE
STATE HIGHWAY DEPARTMENT

INTERSTATE ROUTE I-495

CHRISTINA RIVER BRIDGE

PIERS 16 & 17 FENDER SYSTEM

CONTRACTOR: GA & FC WAGMAN, INC

DWG. NO. 1 of 5 DATE: 6-19-71 DRAWN BY: PHW CHECKED BY: LCB

CONTRACT 70-04-016

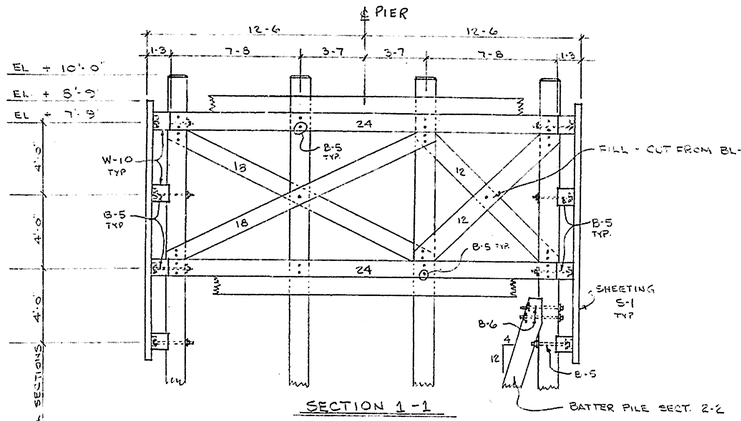

SECTION 1-1
SECTION 2-2

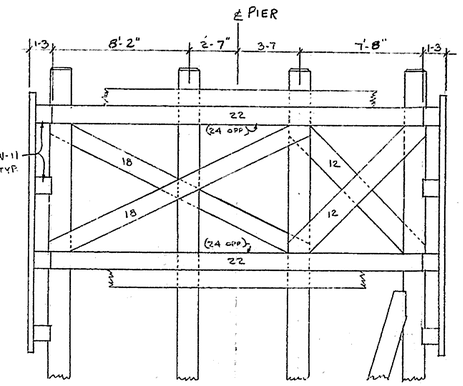

SECTION 4-4

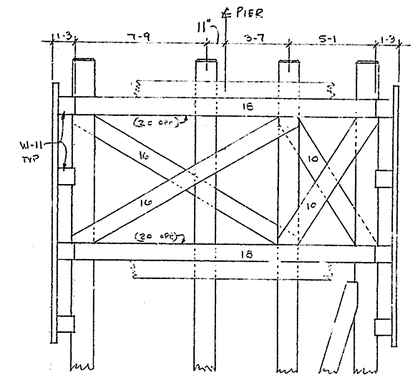

SECTION 6-6

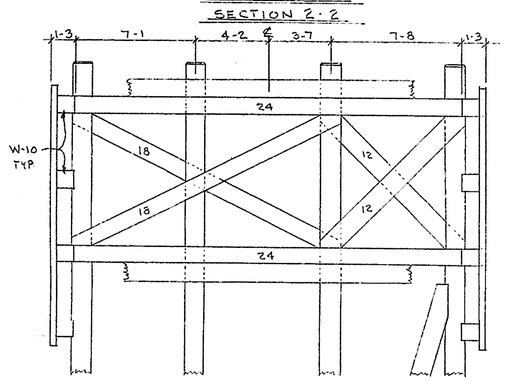

SECTION 3-3

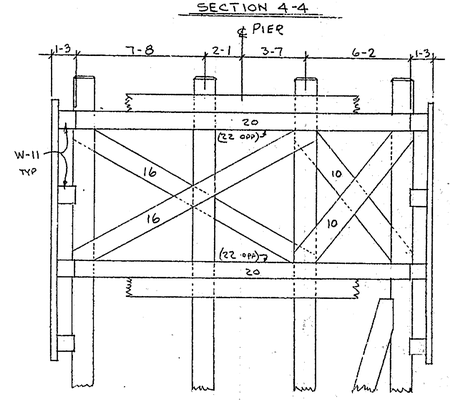

SECTION 5-5

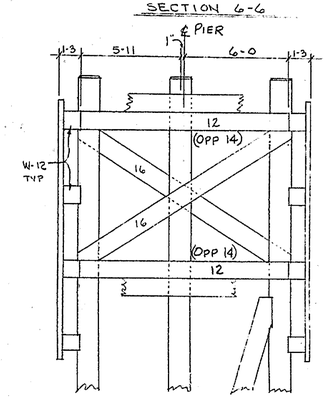

SECTION 7-7

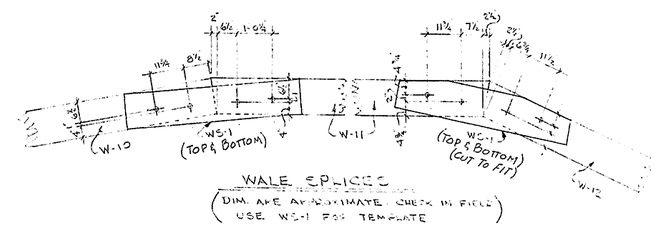

WALE SPLICES
(DIM. ARE APPROXIMATE CHECK IN FIELD)
USE WS-1 FOR TEMPLATE
SCALE: 1/2" = 1'-0"

NOTES: BOLTS FOR SECTIONS 3-3 THRU 7-7 SAME AS SHOWN ON SECTION 1-1 & 2-2.
BOLT HOLES ARE 1" Φ EXCEPT 1 1/4" Φ IN WALE SPLICES
COUNTERBORE WALES 4 1/4" Φ BY 1 3/4" DEEP.
SEE DWG. NO. 5 of 5 FOR MATERIAL LIST.

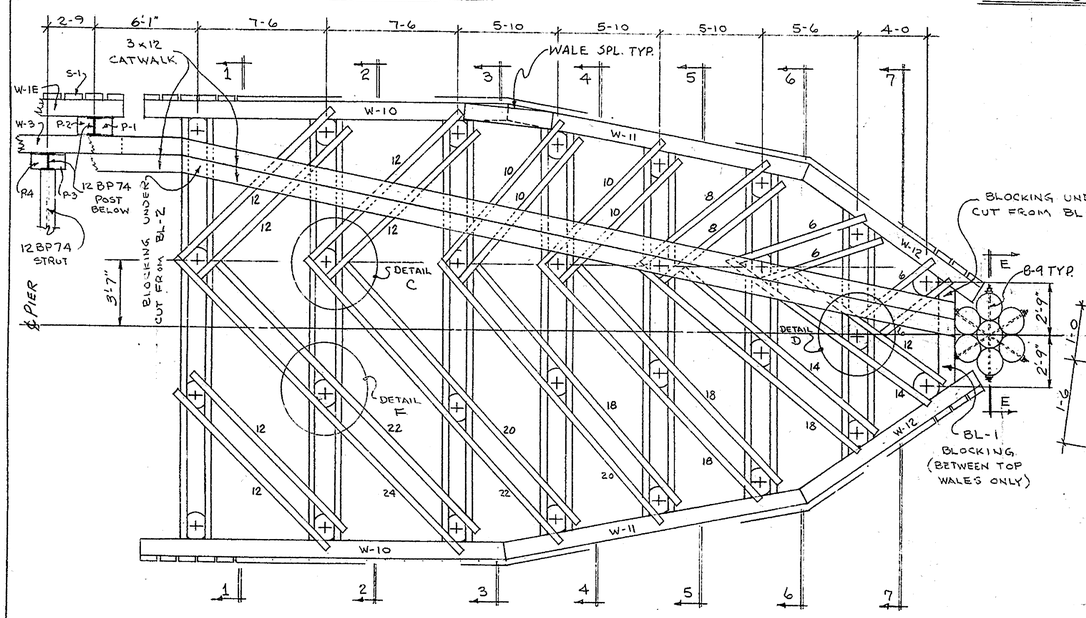

PLAN
OPP END SAME

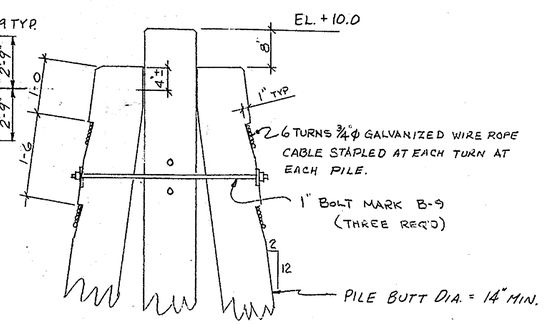

SECTION E-E
SCALE: 3/4" = 1'-0"

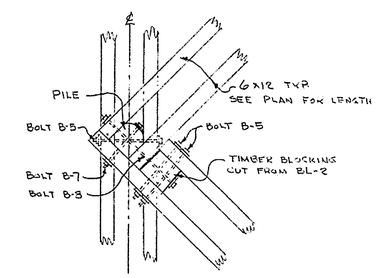

DETAIL C - 1/2" = 1'-0"

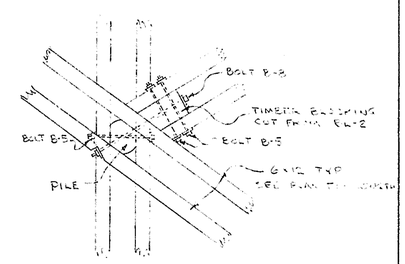

DETAIL D 1/2" = 1'-0"

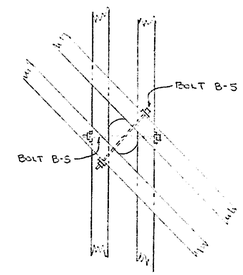

DETAIL F 1/2" = 1'-0"

APPROVED
Delaware State Highway Department
6-30-71

DETAILS OUTSIDE COFFERDAM

DELAWARE
STATE HIGHWAY DEPARTMENT

INTERSTATE ROUTE I-495
CHRISTINA RIVER BRIDGE

PIERS 16 & 17 FENDER SYSTEM

CONTRACTOR: G.A. & F.C. WASMAN, INC.

DWG. NO. 2 of 5 DATE 6-9-71 DRAWN BY PHW CHECKED BY LCB

SCALE: 1/4" = 1'-0" UNLESS NOTED

Rev. 7-14-71

CONTRACT 70-04-016

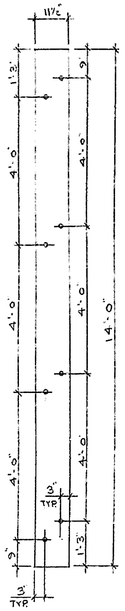

4×12 SHEETING - MARK S-1

FINISH 3⅜ × 11½ × 14-0

DRILL ½" HOLES FROM ONE SIDE

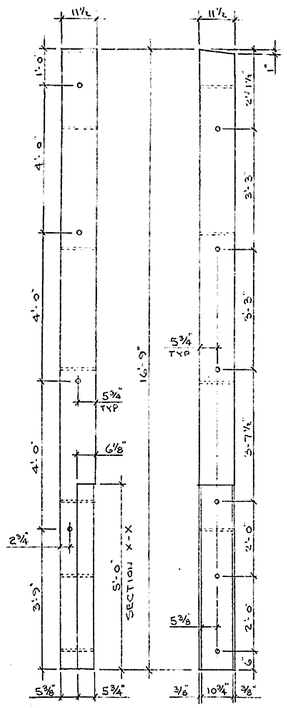

12×12 POST - MARK P-1

FINISH 11½ × 11½ × 16-9

DRILL 1" HOLES FROM SIDES SHOWN

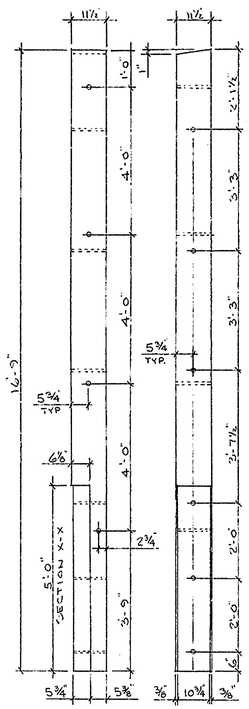

12×12 POST - MARK P-2

FINISH 11½ × 11½ × 16-9

DRILL 1" HOLES FROM SIDES SHOWN

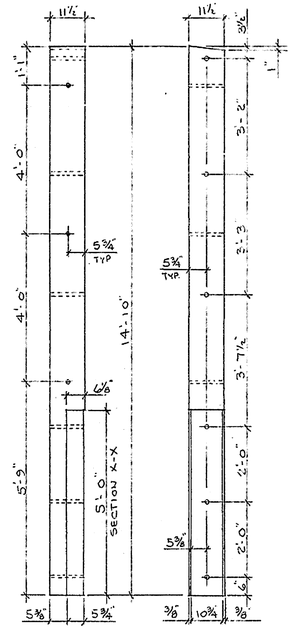

12×12 POST - MARK P-3

FINISH 11½ × 11½ × 14-10

DRILL 1" HOLES FROM SIDES SHOWN

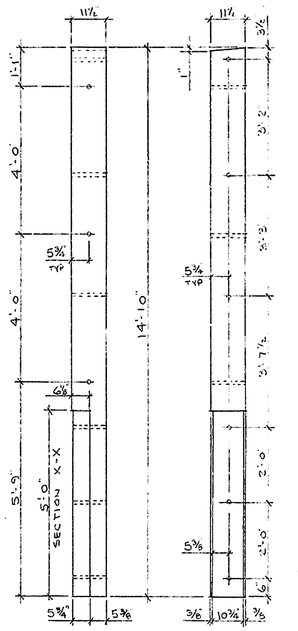

12×12 POST - MARK P-4

FINISH 11½ × 11½ × 14-10

DRILL 1" HOLES FROM SIDES SHOWN

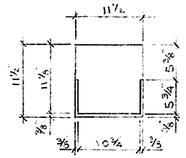

5'-0" DAP DETAIL AT BOTT. POST

SECTION X-X

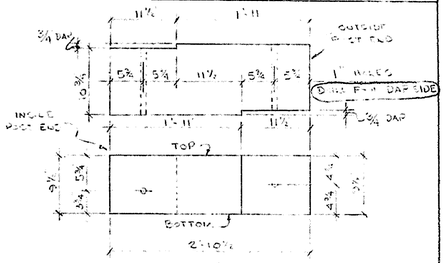

10×12 BRIDGING - MARK E-1

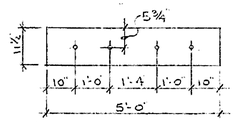

4×1½ WALE SPLICE - MARK WS-1

FINISH 3⅜ × 11½ × 5-0 - 1¼ HOLES

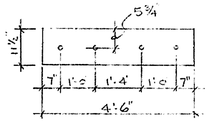

4×12 WALE SPLICE - MARK WS-2

FINISH 3⅜ × 11½ × 4-6 - 1¼ HOLES

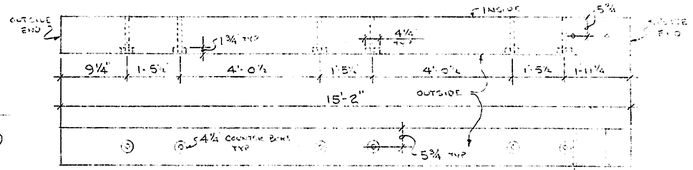

12×1½ WALE - MARK W-9

FINISH 11½ × 11½ × 15-2 - DRILL 1" HOLES FROM INSIDE

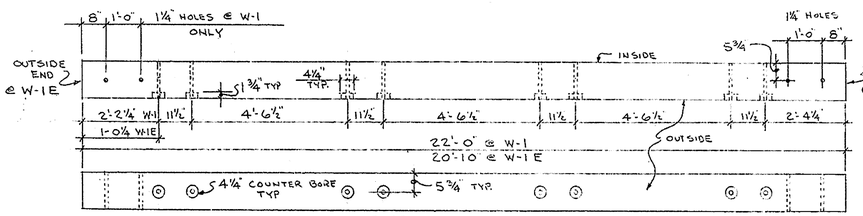

12×12 WALE - MARK W-1

FINISH 11½ × 11½ × 22-0 W-1 / 20-10 W-1E DRILL 1" HOLES FROM INSIDE

12×12 WALE - MARK W-1E (AS NOTED)

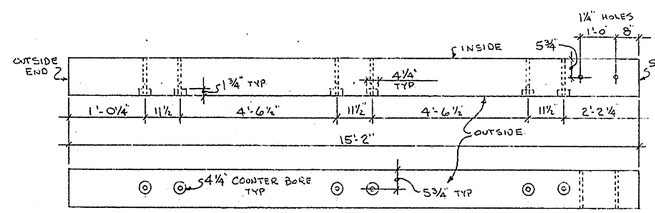

12×12 WALE - MARK W-2

FINISH 11½ × 11½ × 15-2 - DRILL 1" HOLES FROM INSIDE

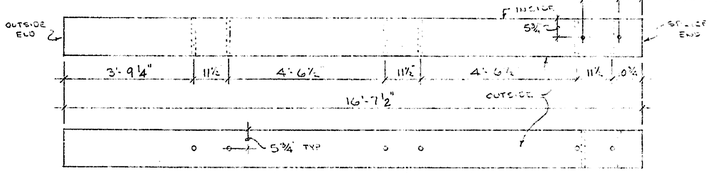

12×12 WALE - MARK W-3

FINISH 11½ × 11½ × 16-7½ - DRILL 1" HOLES FROM INSIDE

TAG INSIDE FACE

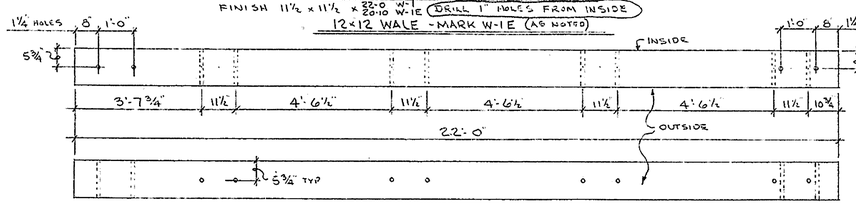

12×12 WALE - MARK W-4

FINISH 11½ × 11½ × 22-0 - DRILL 1" HOLES FROM INSIDE

TAG INSIDE FACE

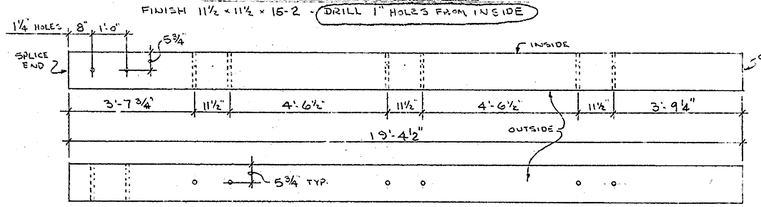

12×12 WALE - MARK W-5

FINISH 11½ × 11½ × 19-4½ DRILL 1" HOLES FROM INSIDE

TAG INSIDE FACE

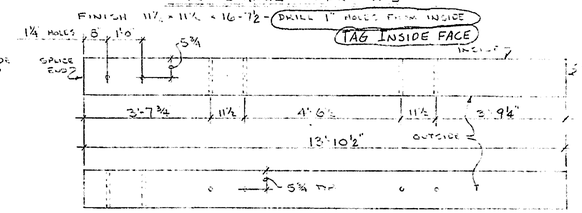

12×12 WALE - MARK W-6

FINISH 11½ × 11½ × 13-10½ DRILL 1" HOLES FROM INSIDE

TAG INSIDE FACE

TIMBER DETAILS

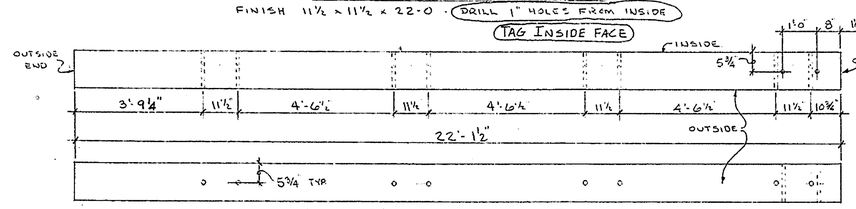

12×12 WALE - MARK W-7

FINISH 11½ × 11½ × 22-1½ - DRILL 1" HOLES FROM INSIDE

TAG INSIDE FACE

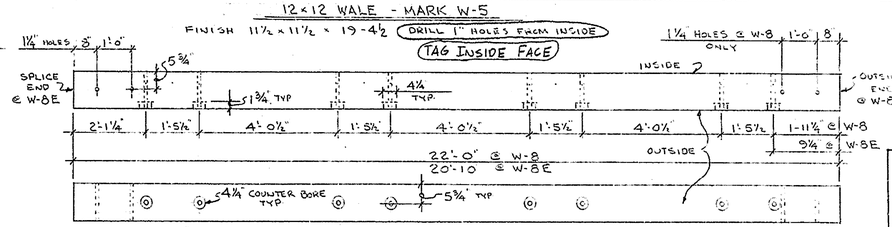

12×12 WALE - MARK W-8

FINISH 11½ × 11½ × 22-0 W-8 / 20-10 W-8E DRILL 1" HOLES FROM INSIDE

12×12 WALE - MARK W-8E (AS NOTED)

APPROVED
Delaware State
Highway Dept.
6-30-71

Rev. 7-12-71

DELAWARE
STATE HIGHWAY DEPARTMENT

INTERSTATE ROUTE I-495

CHRISTINA RIVER BRIDGE

PIERS 16 & 17 FENDER SYSTEM

CONTRACTOR: G.A. & F.C. WAGNER, INC.

DWG. NO. 3 OF 5 DATE 6-9-71 DRAWN BY: PHW CHECKED BY: LCB

CONTRACT 70-04-016

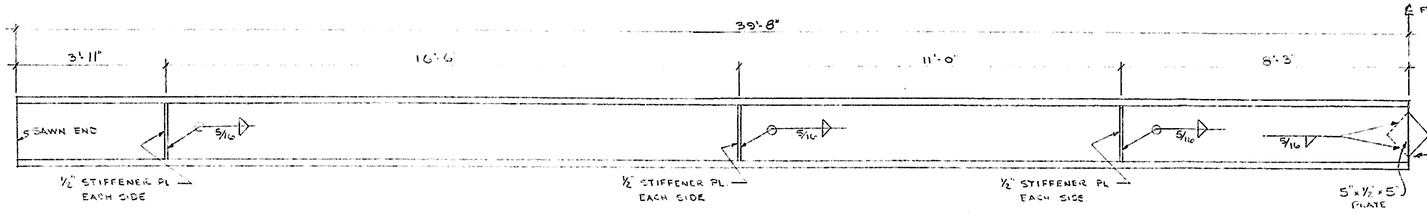

10 WF 100 WALE WITH PLATE

MARK 100-P

(PAINT AFTER ERECTION & WELDING)

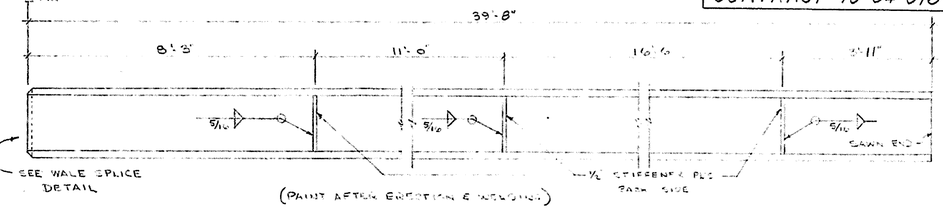

10 WF 100 WALE WITHOUT PLATE

MARK 100

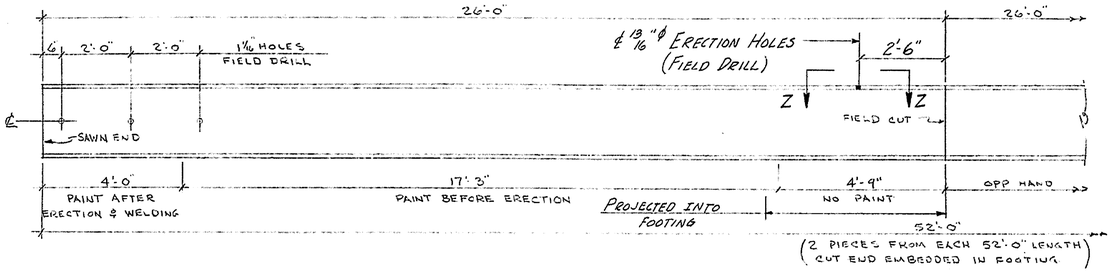

12 BP 74 POST

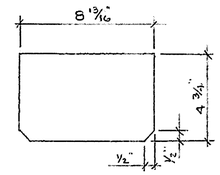

1/2" STIFFENER PLATE

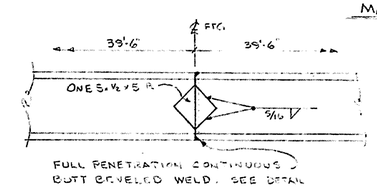

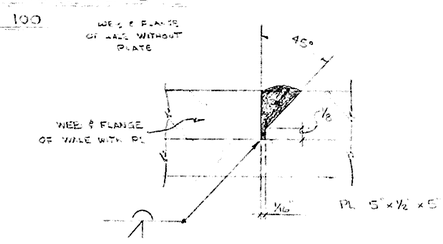

WALE SPLICE DETAIL

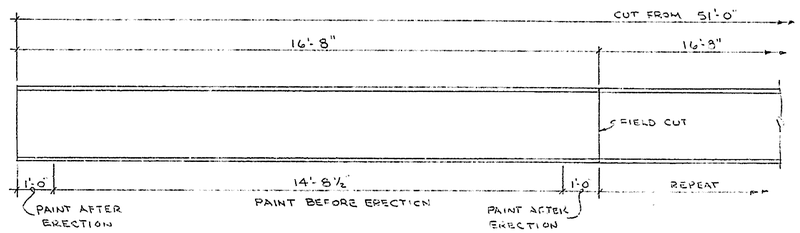

12 BP 74 STRUT

(3 PIECES FROM EACH 51'-0" LENGTH)
(USE MILL END WHERE POSSIBLE)

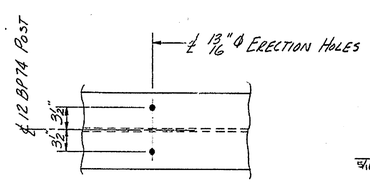

SECTION Z-Z

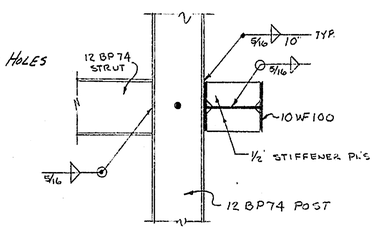

SECTION D-D

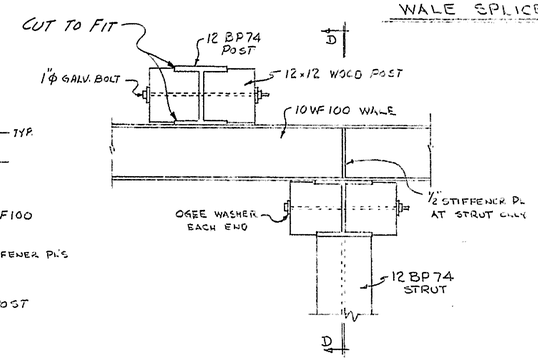

DETAIL B

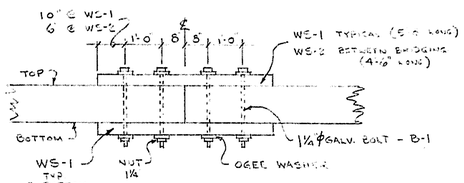

DETAIL F

TYPICAL WALE SPLICE

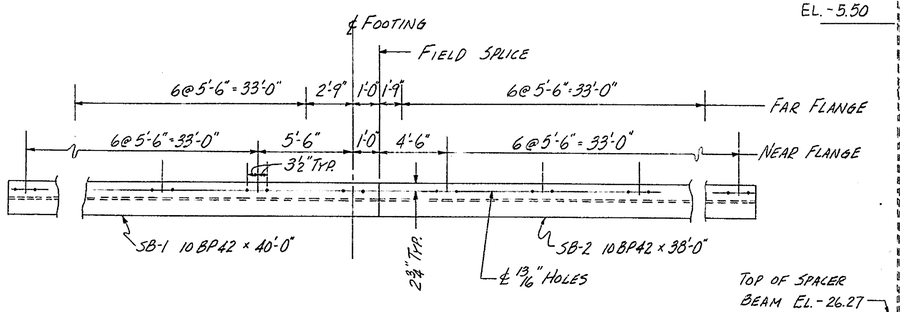

SPACER BEAM DETAIL

REQUIRED: 4 EA. MK SB-1
4 EA. MK SB-2
116 EA. 11/16 FILLS

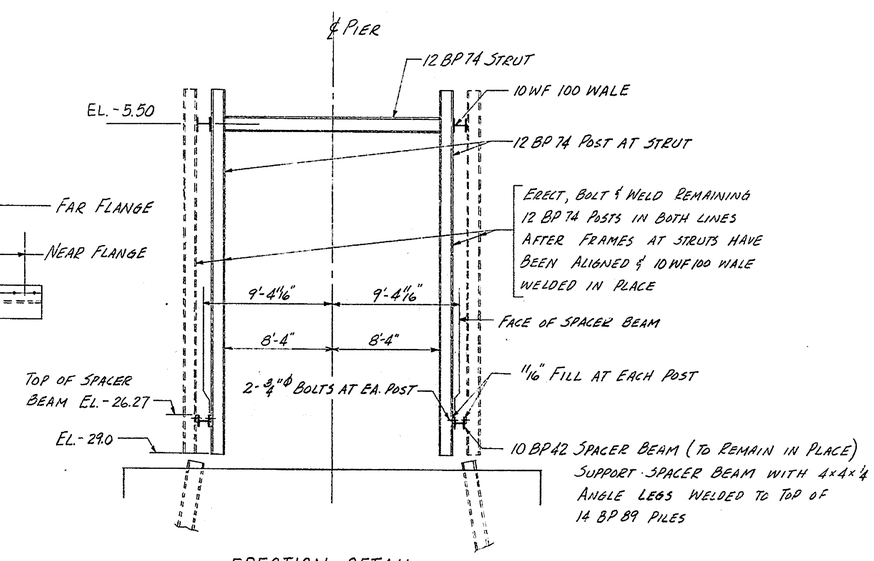

ERECTION DETAIL

STEEL ERECTION PROCEDURE:

1. ERECT AND ALIGN 10 BP 42 SPACER BEAMS.
2. ASSEMBLE EACH STRUT AND THE TWO ADJACENT POSTS INTO A SINGLE FRAME.
3. INSTALL AND ALIGN THE SIX STRUT FRAMES BY BOLTING THEM TO THE SPACER BEAM (10 BP 42) & CROSS BRACING TEMPORARILY WITH ANGLES TACK WELDED NEAR THE TOP & BOTTOM ON THE INSIDE OF POSTS.
4. INSTALL AND WELD 10 WF 100 WALES TO POSTS ON THE STRUT FRAMES.
5. INSTALL REMAINING POSTS BY BOLTING TO SPACER BEAMS AND WELDING TO 10 WF 100 WALE. APPLY PROTECTIVE COATING TO ALL STEEL MEMBERS WHICH REMAIN EXPOSED ABOVE TOP OF FOOTING.
6. ERECT & BOLT ALL TIMBER.

APPROVED
Delaware State Highway Dept.
6-30-71

Rev. 7-12-71

STEEL & MISC. DETAILS

DELAWARE
STATE HIGHWAY DEPARTMENT

INTERSTATE ROUTE I 495

CHRISTINA RIVER BRIDGE

PIERS 16 & 17 FENDER SYSTEM

CONTRACTOR: GRAEF-NAGMAN, INC.

DWG. NO 4 of 5 DATE: 6-9-71 DRAWN BY: DHW CHECKED BY: LCB

MATERIAL LIST

ITEM	SIZE	LENGTH	MARK	GRADE	HOLES PER PIECE 1" Φ UNO	4½ COUNTBORES PER PIECE	QUANTITY PIER 16 (I)	QUANTITY PIER 17 (I)	QUANTITY PIER 16 (Φ)	QUANTITY PIER 17 (Φ)	TOTAL
SHEETING	4 x 12	14-0	S-1	1,800#	8 x ½"	–	146	146	184	184	660
WALE SPLICE	4 x 12	5-0	WE-1	1,800#	4 x 1¼"	–	81	81	64	64	290
WALE SPLICE	4 x 12	4-6	WS-2	1,800#	4 x 1¼"	–	3	3	–	–	6
BRACING (*)	6 x 12	24-0	24	1,800#	*	–	–	–	32	32	64
(*)		22-0	22	1,800#	*	–	–	–	16	16	32
(*)		20-0	20	1,800#	*	–	–	–	16	16	32
(*)		18-0	18	1,800#	*	–	–	–	36	36	72
(*)		16-0	16	1,800#	*	–	–	–	12	12	24
(*)		14-0	14	1,800#	*	–	–	–	12	12	24
(*)		12-0	12	1,800#	*	–	–	–	48	48	96
(*)		10-0	10	1,800#	*	–	–	–	32	32	64
(*)		8-0	8	1,800#	*	–	–	–	8	8	16
BRACING (*)	6 x 12	6-0	6	1,800#	*	–	–	–	8	8	16
WALE	12 x 12	22-0	W-1	1,800#	8 x 1" 4 x 1¼"	8	12	12	–	–	24
		20-10	W-1E	1,800#	8 x 1" 2 x 1¼"	8	6	6	–	–	12
		22-0	W-8	1,800#	8 x 1" 4 x 1¼"	8	4	4	–	–	8
		20-10	W-8E	1,800#	8 x 1" 2 x 1¼"	8	2	2	–	–	4
		15-2	W-2	1,800#	6 x 1" 2 x 1¼"	6	6	6	–	–	12
		15-2	W-9	1,800#	6 x 1" 2 x 1¼"	6	2	2	–	–	4
		16-7½	W-3	1,800#	6 x 1" 2 x 1¼"	–	4	4	–	–	8
		22-0	W-4	1,800#	8 x 1" 4 x 1¼"	–	12	12	–	–	24
		19-4½	W-5	1,800#	6 x 1" 2 x 1¼"	–	4	4	–	–	8
		13-10½	W-6	1,800#	4 x 1" 2 x 1¼"	–	2	2	–	–	4
		22-1½	W-7	1,800#	8 x 1" 2 x 1¼"	–	2	2	–	–	4
(*)		22-0	W-10	1,800#	*	*	–	–	16	16	32
(*)		18-0	W-11	1,800#	*	*	–	–	16	16	32
WALE (*)	12 x 12	12-0	W-12	1,800#	*	*	–	–	16	16	32
POST	12 x 12	16-9	P-1	2,400#	10	–	30	30	–	–	60
POST	12 x 12	16-9	P-2	2,400#	10	–	30	30	–	–	60
POST	12 x 12	14-10	P-3	2,400#	9	–	28	28	–	–	56
POST	12 x 12	14-10	P-4	2,400#	9	–	28	28	–	–	56
CATWALK (*)	3 x 12	24-0	C	1,800#	*	–	8	8	8	8	32
BLOCKING (*)	12 x 12	8-0	BL-1	1,800#	*	–	–	–	2	2	4
BLOCKING (*)	12 x 12	20-0	BL-2	1,800#	*	–	–	–	4	4	8
BRIDGING	10 x 12	2-10½	B-1	1,800#	2	–	14	14	–	–	28

ITEM	SIZE	LENGTH	MARK	THREAD LENGTH	QUANTITY PIER 16 (I)	QUANTITY PIER 17 (I)	QUANTITY PIER 16 (Φ)	QUANTITY PIER 17 (Φ)	TOTAL (ROUNDED)
BOLT	1¼"	2-0	B-1	3½"	168	168	128	128	610
BOLT	1"	2-3	B-2	3"	488	488	–	–	1000
BOLT	1"	2-1	B-3	3"	240	240	–	–	500
BOLT	1"	3-2	B-4	3"	28	28	–	–	60
BOLT	1"	2-6	B-5	9"	–	–	760	760	1600
BOLT	1"	3-0	B-6	1'-3"	–	–	28	28	60
BOLT	1"	2-0	B-7	9"	–	–	24	24	52
BOLT	1"	4-3	B-8	1'-3"	–	–	28	28	60
ROD	1"	5-5	B-9	1'-3" EA. END	–	–	6	6	15
OGEE WASHER	1"	–	–	–	1512	1512	1692	1692	6500
OGEE WASHER	1¼"	–	–	–	336	336	256	256	1220
NUT (REG SQUARE)	1"	–	–	–	756	756	852	852	3300
NUT (REG SQUARE)	1¼"	–	–	–	168	168	128	128	620
DOCK SPIKES	⅝"	10"	–	–	1168	1168	1472	1472	5500
DOCK SPIKES	½"	8"	–	–	80	80	128	128	460
GALV. WIRE ROPE CABLE	¾" Φ	L/F	–	–	–	–	400 L/F	400 L/F	800
WF WALE	10WF100	39-8	100 P	–	2	2	–	–	4 PCS 40-0
WF WALE	10WF100	39-8	100	–	2	2	–	–	4 PCS 40-0
PLATE	5 x ½ x 5	–	–	–	2	2	–	–	4
STIFFENER	8 5/16 x ½ x 4¾	–	–	–	24	24	–	–	48
WF POST	12BP74	26-0	–	–	58	58	–	–	58 PCS 52-0
WF STRUT	12BP74	16-8	–	–	6	6	–	–	4 PCS 51-0
GALV. STAPLES	½"	3" LONG x ¾" SPREAD	–	–	–	–	72	72	175

NOTES

(I) INSIDE COFFERDAM

(Φ) OUTSIDE COFFERDAM

* FIELD DRILL (*) FIELD CUT

SEE DWG. # 2 of 5 & 3 of 5 FOR TIMBER DETAILS

SEE DWG. # 4 of 5 FOR STEEL & MISC. DETAILS

SEE DWG. # 1 of 5 & 2 of 5 FOR LOCATION

SPECIFICATIONS

ALL TIMBER SHALL BE DENSE SOUTHERN YELLOW PINE, 1800 LBS PER SQ. IN. ALLOWABLE STRESS, STRUCTURAL GRADE, EXCEPT FOR POSTS WHICH SHALL BE 2400 LBS PER SQ IN. ALLOWABLE STRESS, SELECT STRUCTURAL GRADE.

ALL TIMBER SHALL BE SURFACED FOUR SIDES TO THE FINISHED DIMENSIONS SHOWN, AND SHALL BE IN ACCORDANCE WITH DELAWARE STATE HIGHWAY DEPT. 1965 STANDARD SPECIFICATIONS FOR ITEM 17, EXCEPT AS MODIFIED HEREIN.

ALL TIMBER SHALL BE TREATED WITH A PRESERVATIVE TREATMENT CONSISTING OF 20 POUNDS OF CREOSOTE OIL RETAINED PER CUBIC FOOT OF TIMBER, AND SHALL BE DONE ACCORDING TO THE REQUIREMENTS OF THE STANDARD SPECIFICATIONS FOR HIGHWAY BRIDGES OF AASHO.

MACHINE BOLTS SHALL HAVE SQUARE HEADS AND NUTS.
BOLTS AND SPIKES SHALL BE WROUGHT IRON AND COMPLETELY GALVANIZED ACCORDING TO ASTM A 153.
OGEE WASHERS SHALL BE CAST IRON AND COMPLETELY GALVANIZED ACCORDING TO ASTM A153.

STRUCTURAL STEEL SHALL CONFORM TO THE REQUIREMENTS OF ASTM A36.
ELECTRODE E-7016 SHALL BE USED FOR ALL WELDING.
ALL STRUCTURAL STEEL SHALL RECEIVE A CORROSION PROTECTIVE COATING OF "AMERON NO. 78" APPLIED IN ACCORDANCE WITH THE MANUFACTURER'S RECOMMENDATIONS.

APPROVED
Delaware State Highway Dept.
6-30-71

Rev. 7-14-71

CONTRACT 70-04-016

MATERIAL LIST & SPECIFICATIONS

DELAWARE
STATE HIGHWAY DEPARTMENT

INTERSTATE ROUTE I-495

CHRISTINA RIVER BRIDGE

PIERS 16 & 17 FENDER SYSTEM

CONTRACTOR: G.A. & F.C. WAGMAN, INC

DWG. NO. 5 of 5 DATE: 6-9-71 DRAWN BY PHW CHECKED BY L.C.E.