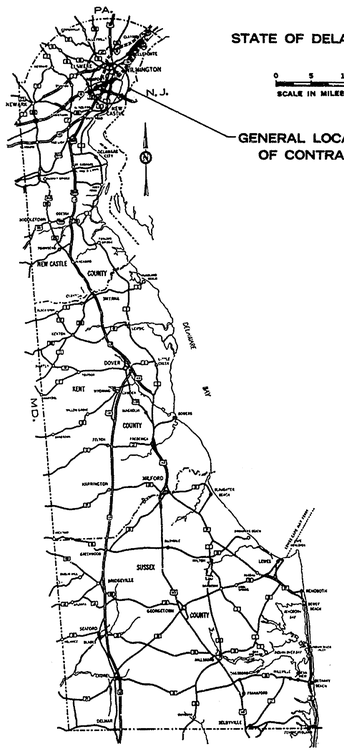

DESIGN DESIGNATION

FEDERAL CLASS	URBAN
A.D.T. 1992	56,200 (TWO WAY)
D.H.V. 1992	6,745 (TWO WAY)
DESIGN SPEED	70 M.P.H.
MIN. STOPPING SIGHT DISTANCE	600 FT.
MAX. S.E.	0.04 FT./FT.
MAX. DEGREE CURVE	1°-38'
MAX. % GRADE	1.7%

THE STATE OF DELAWARE

DEPARTMENT OF HIGHWAYS AND TRANSPORTATION
DIVISION OF HIGHWAYS

CONSTRUCTION PLAN FOR:

CONTRACT NUMBER 71-05-003

FEDERAL AID PROJECT NUMBER EMP I-495-3(22)14

BEGIN PROJECT: STATION NO. N.B. ℄ 88+83.92 **END:** STATION NO. N.B. ℄ 120+13.61

LENGTH: 3,129.69 FEET = 0.593 MILES

CONTRACT	COUNTY	STATE	B.P.R. REQ. NO.	FEDERAL AID PROJECT NUMBER	FISCAL YEAR	SHEET NUMBER	TOTAL SHEETS
71-05-003	NEW CASTLE	DEL.	2	I-495-3(22)14	197	1	161

SURVEY BOOKS

FOR INDEX OF PLANS SEE SHEET # 2

UTILITIES

CITY OF WILMINGTON SANITARY SEWER
NEW CASTLE COUNTY SANITARY SEWER
WILMINGTON WATER DEPARTMENT
DIAMOND STATE TELEPHONE COMPANY
DELMARVA POWER AND LIGHT COMPANY

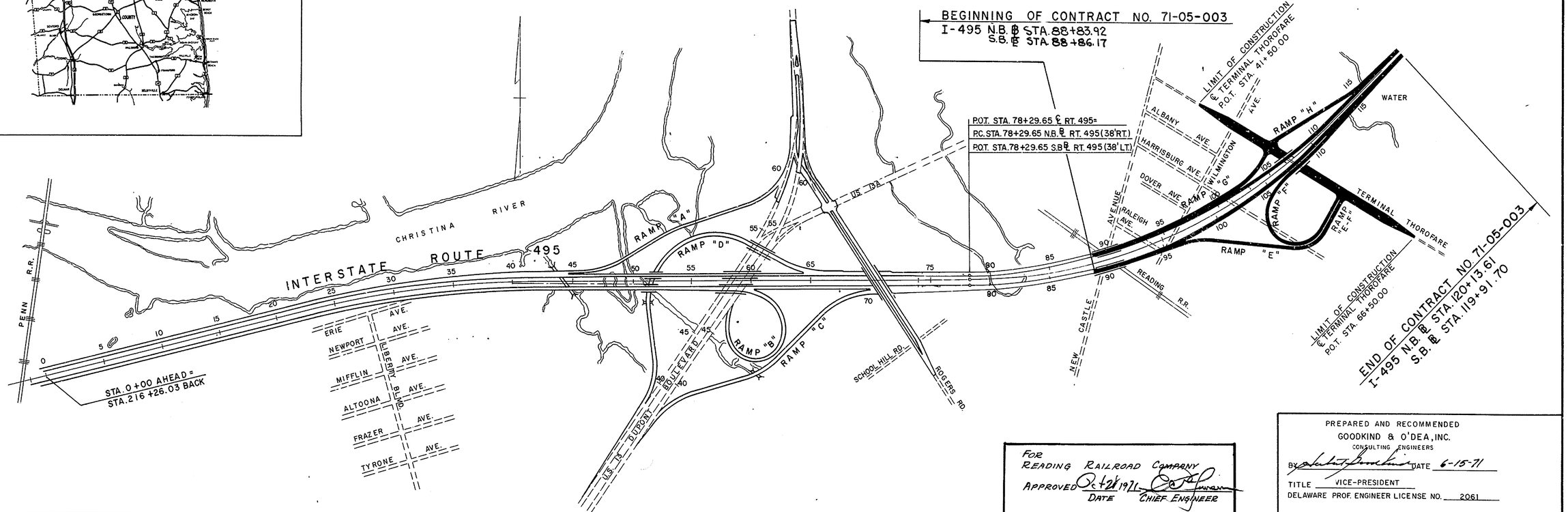

FOR READING RAILROAD COMPANY
APPROVED Oct 21 1971 DATE
CHIEF ENGINEER

PREPARED AND RECOMMENDED
GOODKIND & O'DEA, INC.
CONSULTING ENGINEERS
BY [signature] DATE 6-15-71
TITLE VICE-PRESIDENT
DELAWARE PROF. ENGINEER LICENSE NO. 2061

CONVENTIONAL SIGNS

PROPOSED CENTER LINE	WOODED AREA
NEW RIGHT OF WAY LINE	TELEPHONE OR UTILITY POLE
PROPERTY LINE	EXISTING CULVERT OR PIPE
CONCRETE ROAD	RAILROAD
MACADAM OR ASPHALT ROAD	GUARD RAIL

SCALES

TITLE SHEET	1" = 400 FEET
CONSTRUCTION PLAN	1" = 50 FEET
VERTICAL PROFILE	1" = 5 FEET

DIVISION OF HIGHWAYS

RECOMMENDED

RECOMMENDED 6/17 19 71 [signature] CHIEF, PLANS AND DESIGN

RECOMMENDED _____ 19 ___ ASSISTANT CHIEF ENGINEER

APPROVED

APPROVED 6/17 19 71 [signature] DEPUTY DIRECTOR-CHIEF ENGINEER

APPROVED 6-17 19 71 [signature] DIRECTOR OF HIGHWAYS

DEPARTMENT OF TRANSPORTATION
FEDERAL HIGHWAY ADMINISTRATION

APPROVED _____ 19 ___

DIVISION ENGINEER

COUNTY	CONTRACT	P. R. A. REG. NO.	STATE	FED. AID PROJECT NO.	SHEET NO.	TOTAL SHEETS
NEW CASTLE	71-05-003	2	DEL.	I-495-3(22)14	2	161

PREL. TRACING_____ DESIGN_____ CHKD._____

REVISIONS

INDEX OF PLANS

PLAN SHEET	SHEET NO.
WIDENING AND RESURFACING OF EXISTING TERMINAL AVENUE. STA. T-3+14.27 TO 5+44.80 (EA-1+50)	A, B
COVER SHEET	1
INDEX OF PLANS	2
GENERAL NOTES	3
TYPICAL ROADWAY SECTIONS	4 - 7
TYPICAL PAVEMENT DETAILS	8 - 10
DRAINAGE DETAILS	11 - 15
MISCELLANEOUS DETAILS	16 - 18
INDEX OF PLAN SHEETS	19
ALIGNMENT DATA PLAN	20
DATA ALIGNMENT TABLES	21
CONSTRUCTION PLANS	22 - 27
PROFILES	
I-495 MAINLINE	28 - 31
RAMP E	32
RAMPS F & EF	33
RAMP G	34
RAMP H	35
TERMINAL THOROFARE IMPROVEMENT	36
TRAFFIC SIGNAL SHEET	36 A
PAVEMENT ELEVATIONS & DETAILS	37 - 42
BORING LOCATIONS	43
BORING DESCRIPTIONS	44 - 45
STRUCTURAL PLANS	
BRIDGE #5 - I-495 OVER NEW CASTLE AVENUE & READING RAILROAD	46 - 83
BRIDGE #6 - I-495 OVER TERMINAL THOROFARE	84 - 110
ESTIMATED QUANTITIES	111 - 113

PLAN SHEET	SHEET NO.
CROSS SECTIONS I-495	114 - 126
CROSS SECTIONS TERMINAL THOROFARE	127 - 131
CROSS SECTIONS RAMP "E"	132 - 134
CROSS SECTIONS RAMP "F"	135 - 136
CROSS SECTIONS RAMP "E-F"	137 - 138
CROSS SECTIONS RAMP "G"	139 - 140
CROSS SECTIONS RAMP "H"	141 - 142
STATE OF DELAWARE - DIVISION OF HIGHWAYS STANDARD SHEETS	

TITLE	DESIGNATION	
CURB AND CROSSABLE TRAFFIC SEPARATORS	C-2	143
CASTINGS, STEPS, MONUMENT BOX DETAILS	D-1	144
CATCH BASINS A & B	D-7	145
CATCH BASINS A-A AND LAWN	D-8	146
CATCH BASINS J, J MOD. AND SD-1A	D-9	147
CATCH BASIN B-2, JUNCTION BOX A	D-12	148
FLARED END SECTIONS, R.C.P. AND C.M.P.	D-15	149
PIPE BEDDING AND METHODS OF EROSION PROTECTION	D-16	150
CATCH BASIN DOUBLE A	D-18	151
TEMPORARY EROSION CONTROL DETAILS	E-1	152
GUARD RAIL WOOD AND STEEL POST	G-2	153
GUARD RAIL PLACING AND ANCHORING	G-3	154
POST AND FASTENERS - (W) GALVANIZED STEEL BEAM	G-4	155
RAIL ELEMENTS - (W) GALVANIZED STEEL BEAM	G-5	156
CONNECTION OF GUARD RAIL TO BRIDGE	G-7	157
STRAIGHT AND L TYPE HEADWALLS	H-1	158
REINFORCED PORTLAND CEMENT CONCRETE PAVEMENT	P-1	159
DESIGN SYMBOLS	S-1	160
CHAIN LINK FENCE	M-4	161
CHAIN LINK FENCE	M-5	161A
TRAFFIC CONTROL ITEMS	T-2	161B

COUNTY	CONTRACT	P. R. A. REG. NO.	STATE	FED. AID PROJECT NO.	SHEET NO.	TOTAL SHEETS
NEW CASTLE	71-05-003	2	DEL.	I-495-3(22)14	3	161

PREL. TRACING _____ DESIGN _____ CHKD. _____

REVISIONS

GENERAL NOTES

1. THIS CONTRACT IS TO BE CONSTRUCTED IN ACCORDANCE WITH THE STATE OF DELAWARE - STATE HIGHWAY DEPARTMENT STANDARD SPECIFICATIONS DATED JUNE 1, 1970 EXCEPT AS AMENDED BY THE SPECIAL PROVISIONS, THESE GENERAL NOTES AND PLANS.

2. WITHIN THE LIMITS OF THE CONTRACT ALL EXISTING STORM DRAINAGE FACILITIES INTENDED TO REMAIN FUNCTIONAL AFTER THE COMPLETION OF PROPOSED WORK SHALL BE CLEANED OUT AND REPAIRED AS ORDERED BY THE ENGINEER. NO SEPARATE PAYMENT WILL BE MADE FOR THIS WORK (SEE SECTION 202 OF THE STANDARD SPECIFICATIONS).

3. UNLESS OTHERWISE NOTED, ALL PROPOSED DITCHES SHALL BE SEEDED AND MULCHED AS ORDERED BY THE ENGINEER.

4. ALL EXISTING STORM AND SEWER PIPES ABANDONED AND NOT REMOVED SHALL BE PLUGGED WITH CEMENT MASONRY. THE COST OF THIS WORK SHALL BE CONSIDERED INCLUDED IN THE UNIT PRICES BID FOR THE VARIOUS DRAINAGE ITEMS.

5. THE CONTRACTOR SHALL REMOVE AND RESET (IF DISTURBED BY CONSTRUCTION) ALL MAIL BOXES, HOUSE LAMPS, SIGNS, WIRES, FENCES, ETC. AS ORDERED BY THE ENGINEER. THE COST OF THIS WORK SHALL BE CONSIDERED INCLUDED IN THE LUMP SUM PRICE BID FOR "CLEARING AND GRUBBING".

6. EXISTING CATCH BASIN AND MANHOLE CASTINGS, SIGNS, GUARD RAIL AND OTHER SUCH ITEMS OF VALUE TO BE REMOVED OR ABANDONED SHALL BE SALVAGED AND STOCKPILED AS ORDERED BY THE ENGINEER AND WILL BECOME THE PROPERTY OF THE STATE OF DELAWARE. THE COST OF THIS WORK SHALL BE INCLUDED IN THE LUMP SUM PRICE BID FOR "CLEARING AND GRUBBING".

7. THE CONTRACTORS ATTENTION IS DIRECTED TO THE FACT THAT CERTAIN MAJOR ITEMS OF CONSTRUCTION, WITHIN THE PROJECT LIMITS, HAVE BEEN INITIATED UNDER A PREVIOUS CONTRACT, INCLUDING ROADWAY EXCAVATION AND EMBANKMENTS, DRAINAGE, RIPRAP, DITCHING, EROSION CONTROL ITEMS AND FENCING. CONSTRUCTION UNDER THIS CONTRACT SHALL CONSIST OF COMPLETING ALL OF THE WORK, BEYOND THAT WHICH WAS CONSTRUCTED, TO THE FINAL LINES AND GRADES AND SHALL INCLUDE FINISH GRADING, SUBBASE, BASE COURSES, PAVEMENTS, CURBS, GUARD RAIL, BRIDGES, COMPLETION OF EROSION CONTROL ITEMS, COMPLETION AND MODIFICATION OF DRAINAGE SYSTEMS AND ALL RELATED ITEMS. MINOR QUANTITIES OF REPAIR TO EXISTING ITEMS SHALL BE PAID FOR UNDER THE BASIC CONSTRUCTION ITEMS. PARTICULAR ATTENTION SHOULD BE DIRECTED TO THE SPECIAL PROVISIONS AMENDING THE STANDARD SPECIFICATIONS.

COUNTY	CONTRACT	P.R.A. REG. NO.	STATE	FED. AID PROJECT NO.	SHEET NO.	TOTAL SHEETS
NEW CASTLE	71-05-003	2	DEL.	I-495-3(22)14	4	161

TYPICAL SECTIONS-MAIN LINE

PREL. TRACING_____ DESIGN_____ CHKD._____

REVISIONS

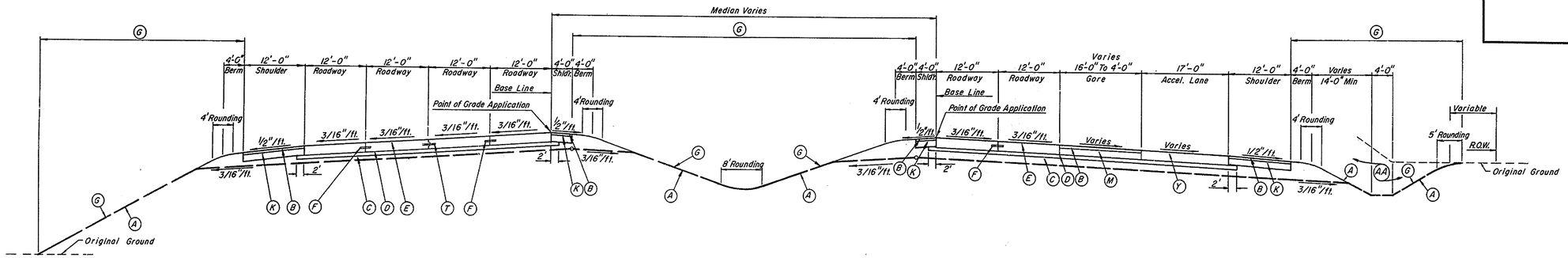

Drainage Ditch Where Shown
(For Ditch Details See Sheet Nos. 13 & 15)

HALF - SECTION IN FILL

TYPICAL SECTION NORMAL
MAIN LINE

HALF - SECTION IN CUT

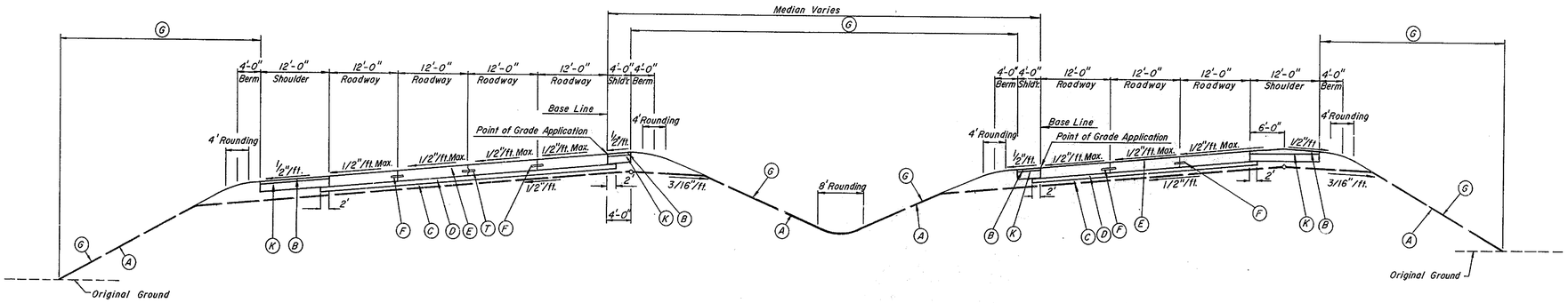

Drainage Ditch Where Shown
(For Ditch Details See Sheet Nos. 13 & 15)

TYPICAL SECTION SUPERELEVATED
MAIN LINE

LEGEND

- (A) SLOPE TO BE AS SHOWN ON THE CROSS SECTIONS
- (B) 2" HOT MIX, HOT LAID ASPHALTIC CONCRETE (TYPE "C")
- (C) SELECT BORROW MIN. (4" IN FILL, 8" IN CUT)
- (D) 4" SELECT BORROW, CEMENT TREATED
- (E) 9" CONTINUOUSLY REINFORCED PORTLAND CEMENT CONCRETE PAVEMENT
- (F) LONGITUDINAL JOINT
- (G) FOR SEEDING, MULCHING, TOPSOIL AND CROWN VETCH SEE NOTE #1

- (I) GALVANIZED STEEL BEAM GUARD RAIL (STEEL POSTS)
- (J) HOT MIX, HOT LAID ASPHALTIC CONCRETE CURB TYPE 2,
- (K) 7" CRUSHER RUN BASE COURSE
- (L) 9" REINFORCED PORTLAND CEMENT CONCRETE PAVEMENT
- (M) CRUSHER RUN BASE COURSE (VARIABLE DEPTH AS SHOWN) — NOTE TO CONTRACTOR: CRUSHER RUN PAY QUANTITIES WILL BE COMPUTED FROM THE NEAT TEMPLATE LINES SHOWN ON THE TYPICAL SECTIONS.

- (P) 4" ~~CRUSHER RUN~~ SELECT BORROW BASE COURSE
- (Q) DOWELLED JOINT WITH EXISTING PAVEMENT
- (R) INTEGRAL PORTLAND CEMENT CONCRETE CURB AND GUTTER TYPE I

- *(T) LONGITUDINAL CONSTRUCTION JOINT
- (U) PORTLAND CEMENT CONCRETE PARKWAY CURB TYPE 2 MODIFIED
- (V) 4" PORTLAND CEMENT CONCRETE SIDEWALK

- (X) SELECT BORROW (VARIABLE THICKNESS)
- (Y) 10" REINFORCED PORTLAND CEMENT CONCRETE PAVEMENT
- (AA) BORROW, EXCAVATION AND EMBANKMENT

NOTE #1

Topsoil 4" to be placed on all newly constructed or disturbed Fill Slopes.
Topsoil 4" to be placed on all Cut Slopes 4:1 or Flatter.

All Cut and Fill Slopes Steeper than 4:1 shall be seeded with Crown Vetch and mulched. All remaining slopes to be seeded and mulched.

Disturbed or graded areas beyond the slopes shall be seeded and mulched as ordered by the Engineer.

*NOTE: IN FOUR LANE PAVEMENT SECTIONS, ONE LONGITUDINAL CONSTRUCTION JOINT SHALL BE INSTALLED AS APPROVED BY THE ENGINEER.

TYPICAL SECTIONS-MAIN LINE

Scale: Horizontal 3/32" = 1'-0"
Vertical 3/16" = 1'-0"

COUNTY	CONTRACT	P.R.A. REG. NO.	STATE	FED. AID PROJECT	SHEET NO.	TOTAL SHEETS
NEW CASTLE	71-05-003	2	DEL.	I-495-3(22)14	5	161

TYPICAL SECTIONS-MAIN LINE

PREL. TRACING _____ DESIGN _____ CHKD. _____

REVISIONS

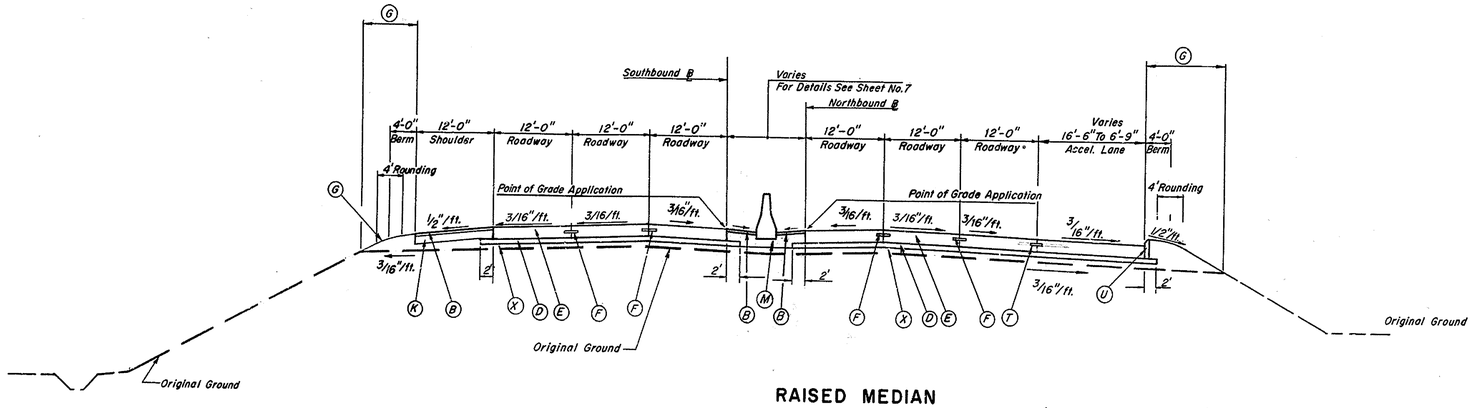

RAISED MEDIAN
TYPICAL SECTION NORMAL
MAIN LINE
SIX LANE DIVIDED HIGHWAY

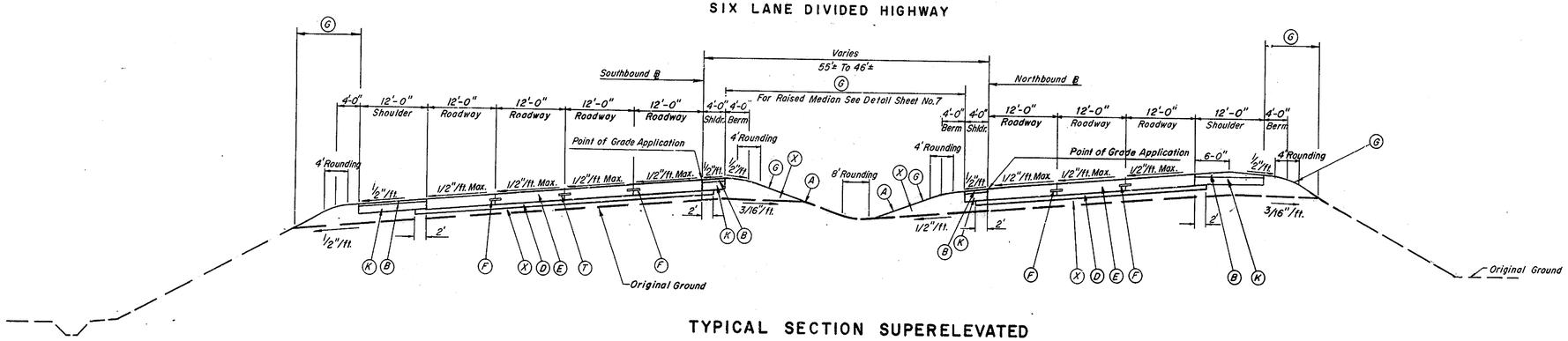

TYPICAL SECTION SUPERELEVATED
MAIN LINE

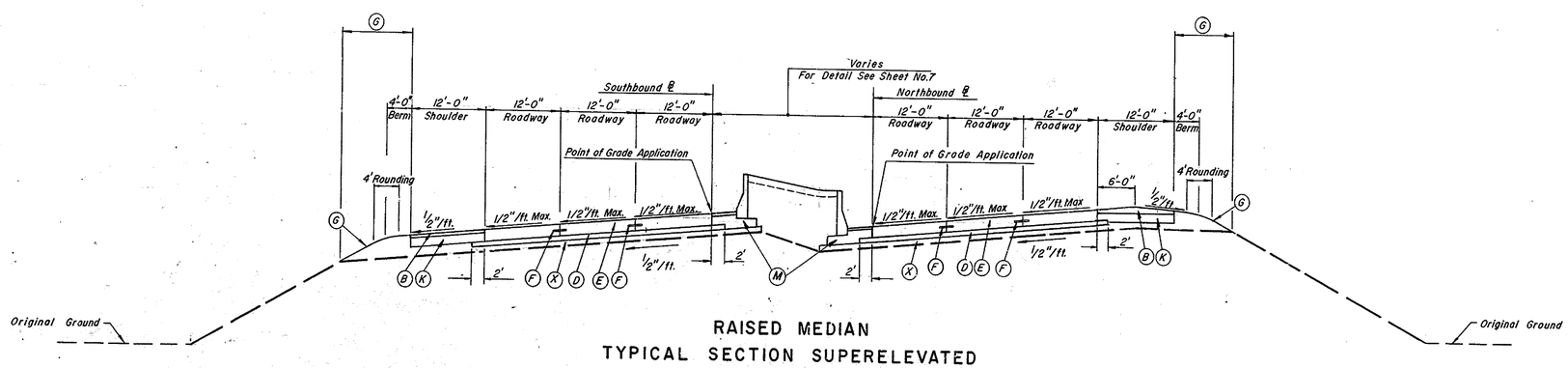

RAISED MEDIAN
TYPICAL SECTION SUPERELEVATED
MAIN LINE

TYPICAL SECTIONS - MAIN LINE

(For Legend See Sheet No. 4)

CHECKED
GRADE
BEARINGS
TIE POINTS
BENCH MARKS
EARTHWORK
DRAINAGE

REVISIONS

12-1 6

COUNTY	CONTRACT	P. B. A. REG. NO.	STATE	FED. AID PROJECT NO.	SHEET NO.	TOTAL SHEETS
NEW CASTLE	71-05-003	2	DEL.	I-495-3(22)14	6	161

TYPICAL SECTIONS-RAMPS & SIDE ROADS

PREL. TRACING _____ DESIGN _____ CHKD. _____

REVISIONS

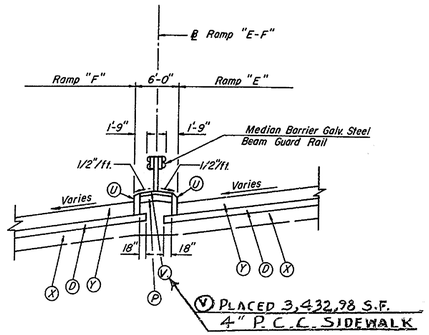

MEDIAN DETAIL - RAMP "E-F"

NOT TO SCALE

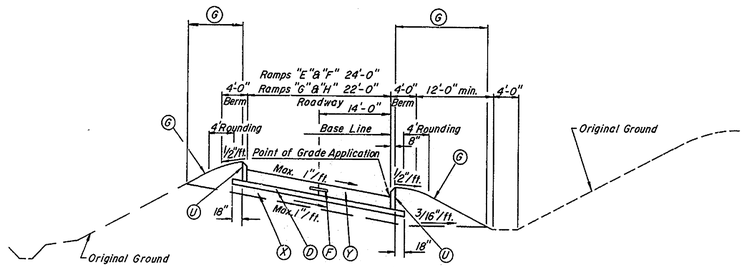

TYPICAL SECTION

22' & 24' CURBED RAMP

RAMPS E,F,G,H

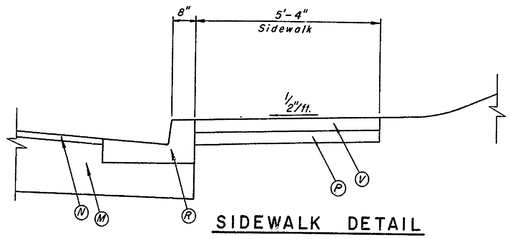

SIDEWALK DETAIL

NOT TO SCALE

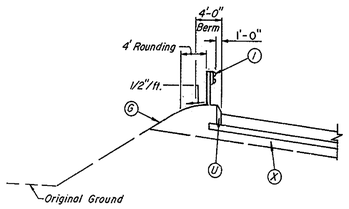

DETAIL OF LEFT SIDE

RAMPS "E" & "F"

WITH GALV. STL. BEAM GUARD RAIL

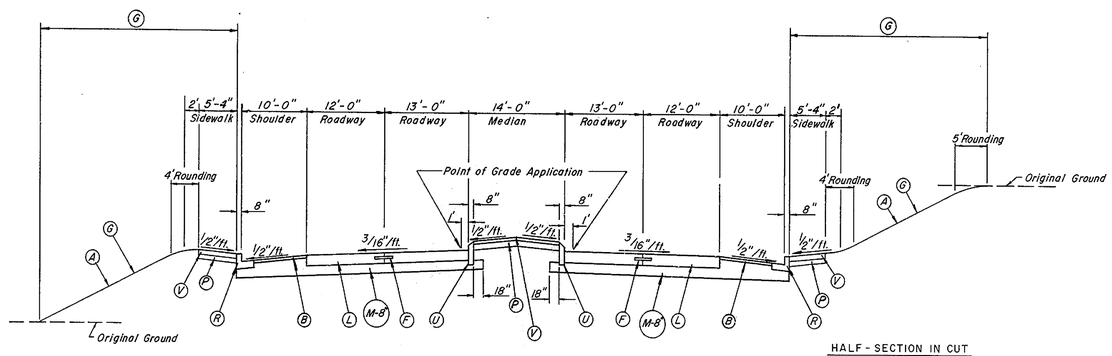

TYPICAL SECTION NORMAL

TERMINAL THOROFARE IMPROVEMENT

NOT TO SCALE

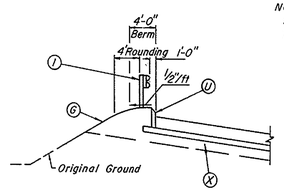

NOTE: For Details of Soil Sterilization and Bit. Surface Treatment See Sheet No. 16

DETAIL OF {RAMPS "G" & "H" & RIGHT SIDE OF RAMPS "E" & "F"}

WITH GALV. STL. BEAM GUARD RAIL

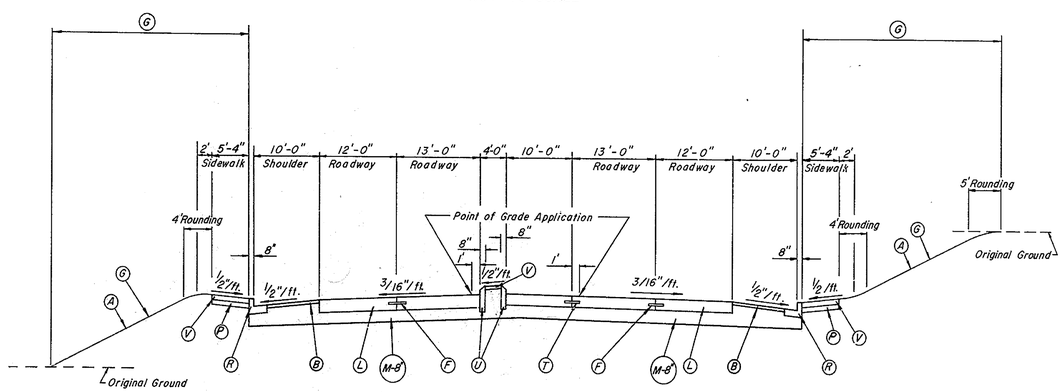

TYPICAL SECTION NORMAL

TERMINAL THOROFARE IMPROVEMENT

WITH STORAGE LANE

NOT TO SCALE

TYPICAL SECTIONS-RAMPS & SIDE ROAD

(For Legend See Sheet No. 4)

5 WILPRINT MYLAR

R-1 6

COUNTY	CONTRACT	F. R. A. REG. NO.	STATE	FED. AID PROJECT NO.	SHEET NO.	TOTAL SHEETS
NEW CASTLE	71-05-003	2	DEL.	I-495-3(22)14	7	161

TYPICAL SECTIONS - MEDIAN DETAILS

PREL. TRACING _____ DESIGN _____ CHKD. _____

REVISIONS

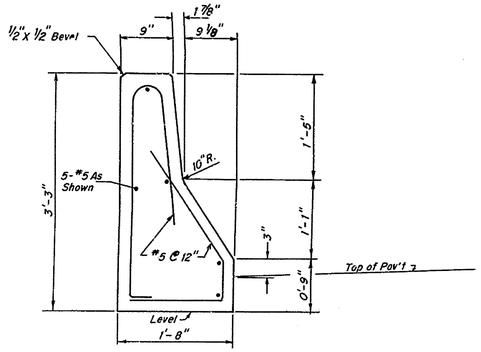

SPLIT CONCRETE BARRIER

Scale: 1" = 1'-0"

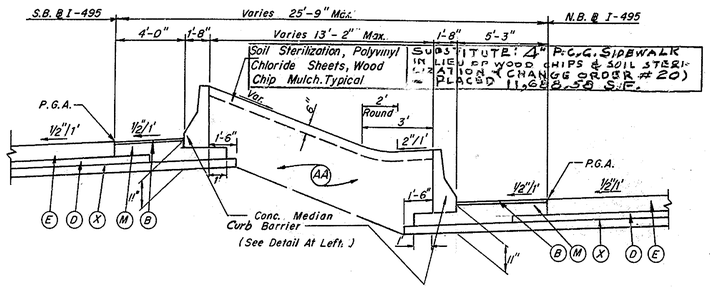

MEDIAN DETAILS

BRIDGE OVER NEW CASTLE AVE. TO BRIDGE OVER TERMINAL THOROFARE

Scale: 1/4" = 1'-0"

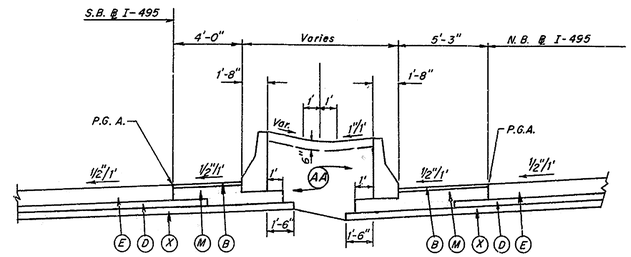

MEDIAN DETAILS

EQUAL P.G.A. ELEVATIONS

Scale: 1/4" = 1'-0"

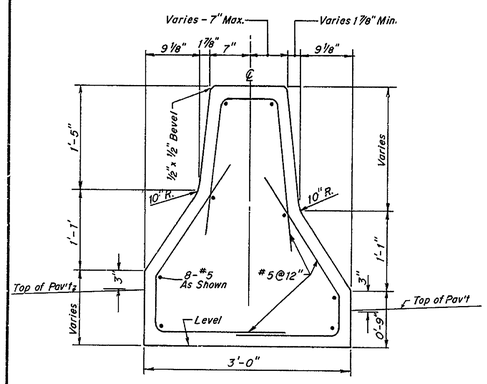

VARIABLE HEIGHT CONCRETE BARRIER

Scale: 1" = 1'-0"

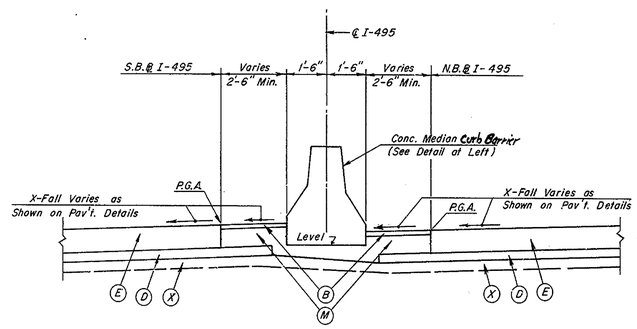

MEDIAN DETAILS

I-495 BRIDGE OVER TERMINAL THOROFARE TO N.B. ℄ STA. 110+93.28

Scale: 3/8" = 1'-0"

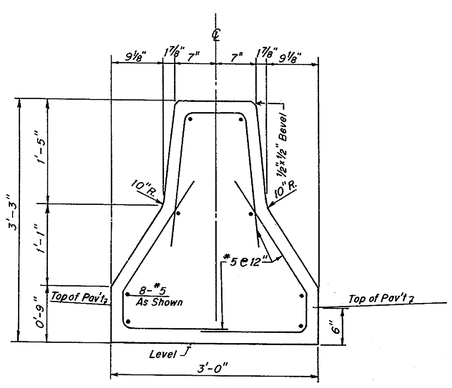

STANDARD CONCRETE MEDIAN BARRIER

Scale: 1" = 1'-0"

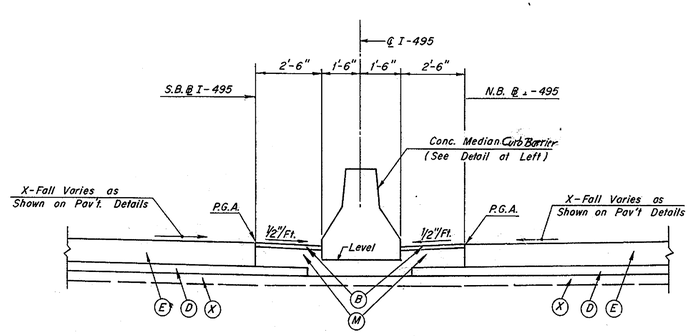

MEDIAN DETAILS

N.B. ℄ STA. 110+93.28 TO END OF PROJECT

Scale: 3/8" = 1'-0"

TYPICAL SECTIONS - MEDIAN DETAILS

Scale: As Shown

(For Legend See Sheet No. 4)

COUNTY	CONTRACT	P.R.A. REG. NO.	STATE	FED. AID PROJECT	SHEET NO.	TOTAL SHEETS
NEW CASTLE	71-05-003	2	DEL.	I-495-3(22)14	8	161

CONTINUOUSLY REINF. P.C.C. PAVEMENT

PREL. TRACING V.L.D. - D.M.E. DESIGN _____ CHKD. _____

REVISIONS

① Added "W" BOLT Detail and indicated where to be used W.J.S. 7/11/72

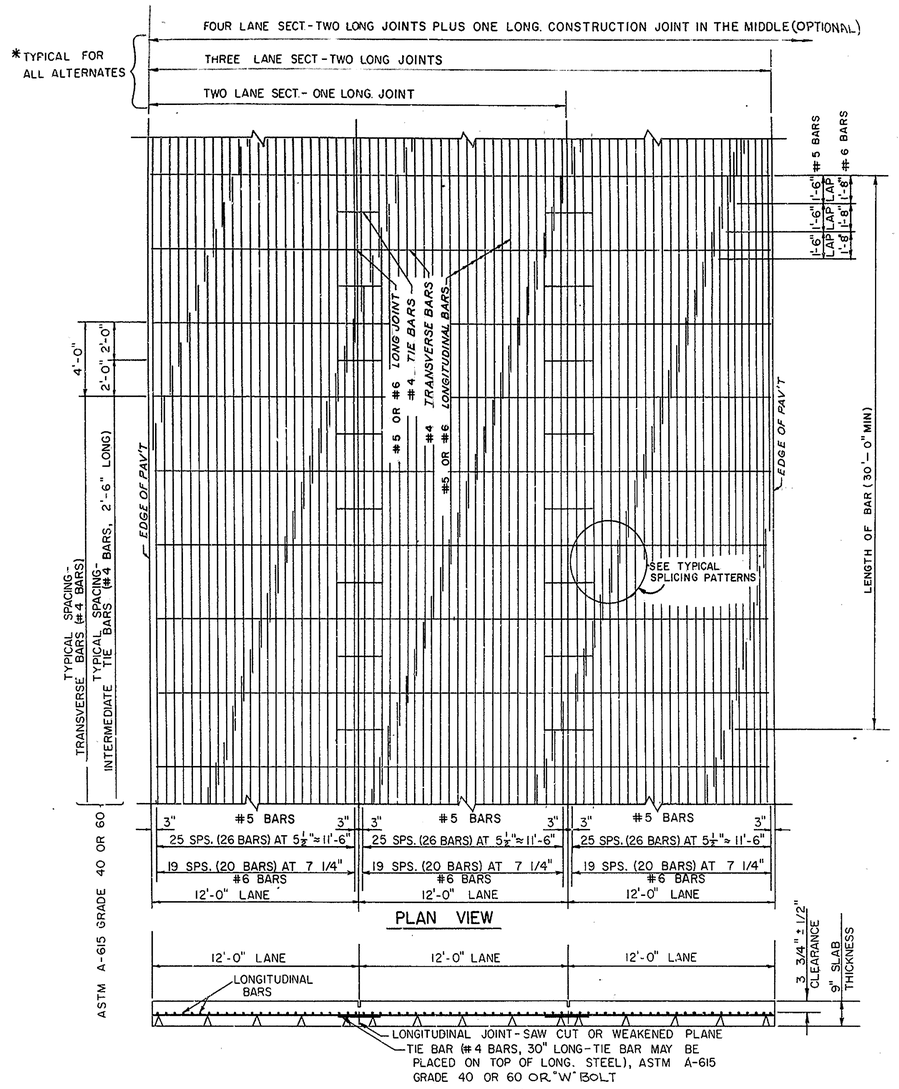

TRANSVERSE SECTION *

SHOWING #5 BARS

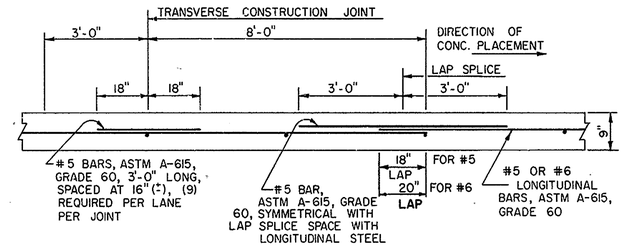

EXTRA BAR METHOD

TRANSVERSE CONSTRUCTION JOINT

LONGITUDINAL SECTION

NOTE:

REFER TO SPECIAL PROVISIONS FOR DETAILS OF LONGITUDINAL JOINT CONSTRUCTION

BAR REINFORCEMENT

CONSTRUCTION METHOD I-9

NOTES:

ALTERNATE METHODS OF PROVIDING REQUIRED TIE STEEL AREA WILL BE PERMITTED WHEN APPROVED IN WRITING BY THE ENGINEER

EXTRA BAR METHOD APPLIES ONLY TO LAPS FALLING WITHIN AN AREA FROM 8' BEYOND TO 3' BEHIND THE TRANSVERSE CONSTRUCTION JOINT

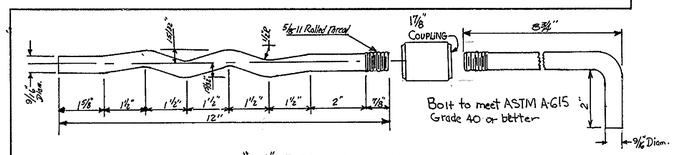

"W" BOLT DETAIL

No Scale

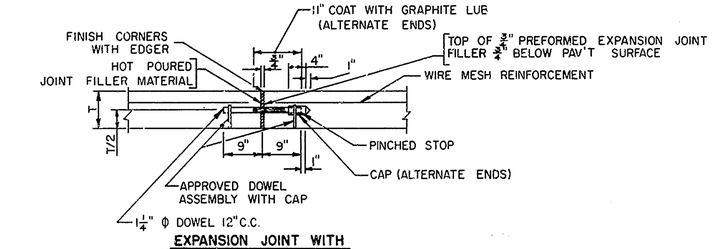

EXPANSION JOINT WITH

LOAD TRANSFER DEVICE DETAIL

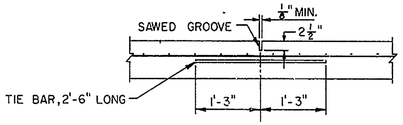

LONGITUDINAL SAW CUT JOINT DETAIL

REFER TO SPECIAL PROVISIONS FOR DETAILS ON WEAKENED PLANE JOINT AS ALTERNATE TO SAWING. TIE BAR MAY BE PLACED ON TOP OR BOTTOM OF LONGITUDINAL STEEL REINFORCEMENT.

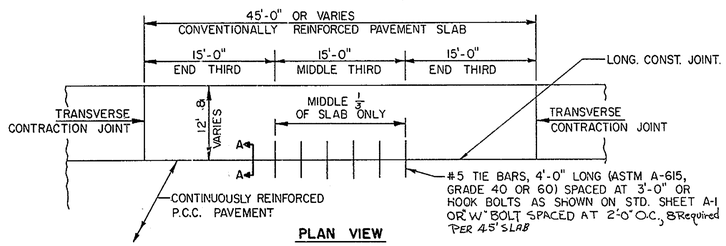

PLAN VIEW

ADJACENT CONVENTIONAL & CONTINUOUSLY REINFORCED PAVEMENTS

(RAMP & MAINLINE CONNECTION)

GENERAL NOTES

SEE TYPICAL SECTION SHEETS FOR PAVEMENT CROWN/TRANSVERSE SLOPE AND POINT OF GRADE APPLICATION.

THE DESIGN AND INSTALLATION OF WIRE MESH SHEETS IS TO BE SUCH THAT A MINIMUM OF "BUILD-UP" OCCURS AT SPLICES.

THE DETAILS OR DIMENSIONS SHOWN ON THE TYPICAL WIRE FABRIC SHEET DETAIL MAY BE CHANGED BY THE CONTRACTOR PROVIDED PRIOR WRITTEN APPROVAL IS OBTAINED FROM THE ENGINEER.

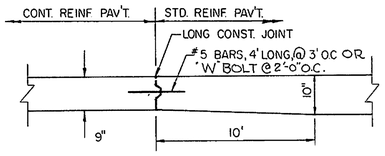

SECTION A-A

NOTES TERM JOINT DETAILS

AFTER ASSEMBLY, WF BEAM TO BE HOT-DIPPED GALVANIZED IN ACCORDANCE WITH ASTM A-123 BEAM TO BE FABRICATED TO MATCH PAVEMENT CROWN OR SLOPE.

ALL AREAS OF CONTACT BETWEEN THE WF BEAM ASSEMBLY AND ADJOINING PAVEMENTS SHALL BE LUBRICATED WITH GRAPHITE OR GREASE.

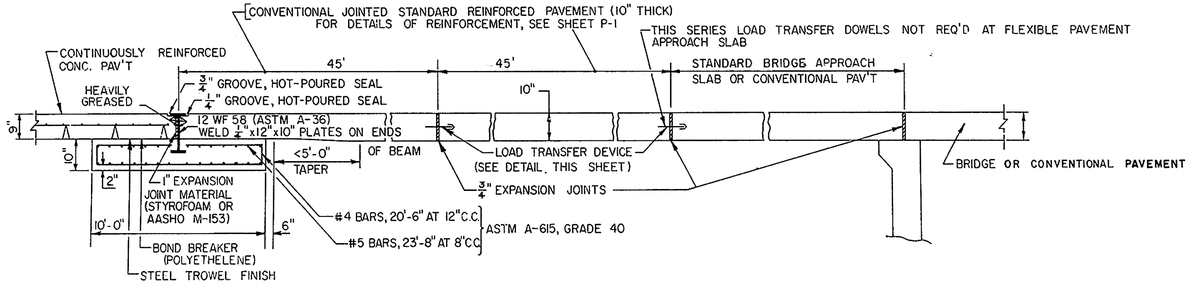

TERMINAL JOINT DETAIL

CONTINUOUSLY REINF. P.C.C. PAVEMENT DETAILS

(NO SCALE)

COUNTY	CONTRACT	P R A REG NO	STATE	FED AID PROJECT NO.	SHEET NO	TOTAL SHEETS
NEW CASTLE	71-05-003	2	DEL.	I-495-3(22)14	9	161

CONTINUOUSLY REINF. P.C.C. PAVEMENT

PREL. TRACING D.M.E. DESIGN ____ CHKD. ____

REVISIONS

TYPICAL SPLICING PATTERNS

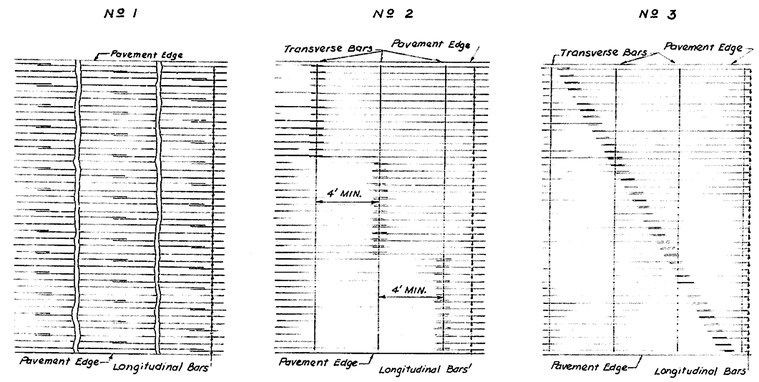

TRANSVERSE BARS SHOWN ABOVE MAY OR MAY NOT BE USED. SEE METHOD 1 OR 1-A. MINIMUM STAGGER OF SPLICES : 4'

MINIMUM SKEW : 12' FOR 24' PAVEMENT

NOTE :
IN PATTERNS #1 AND #2, MAXIMUM NUMBER OF LONGITUDINAL BARS SPLICED AT ONE LOCATION = 2/3 NUMBER PER TRAFFIC LANE (12'), MINIMUM STAGGER = 4'. CONTRACTOR MAY USE OTHER PATTERNS IF APPROVED IN WRITING BY THE ENGINEER.

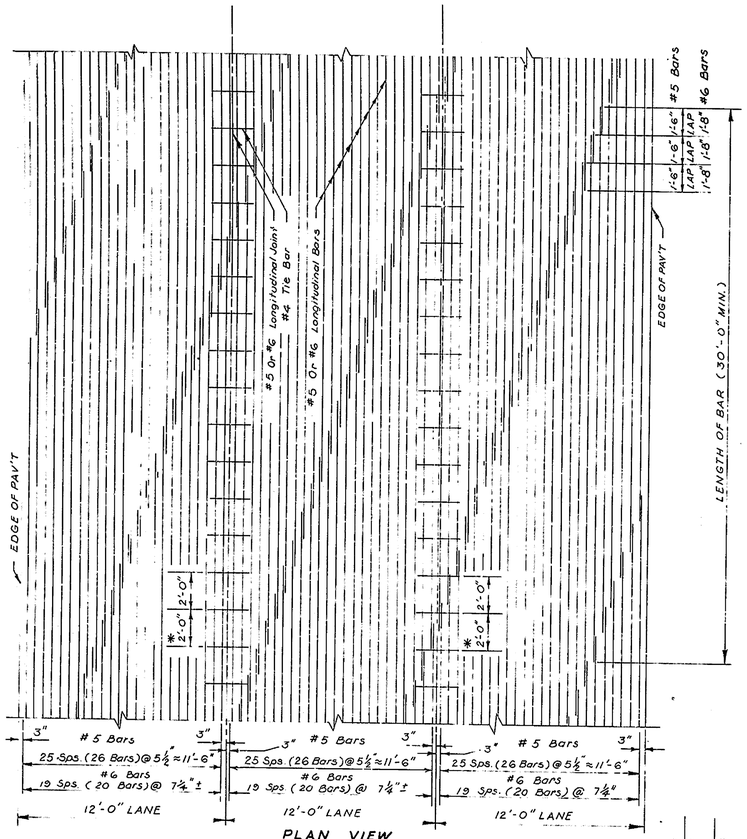

PLAN VIEW

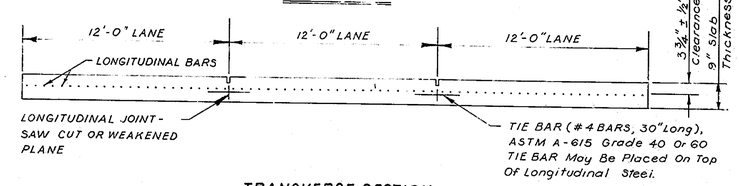

TRANSVERSE SECTION
SHOWING #5 BARS

***NOTE :**
Typical Spacing - Tie Bars (# 4 Bars, 2'-6" Long), ASTM A-615 Grade 40 Or 60

NOTE :
This Construction Method Will Be Permitted Only If The Contractor Has Equipment Designed Specifically To Locate The Steel As Required

NOTE :
Refer To Special Provisions For Details Of Longitudinal Joint Construction.

BAR REINFORCEMENT
CONSTRUCTION METHOD 1-9A

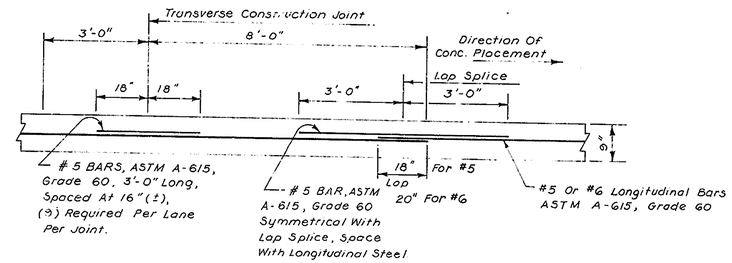

EXTRA BAR METHOD

NOTE :
Extra Bar Method Applies Only To Laps Falling Within An Area From 8' Beyond To 3' Behind The Transverse Construction Joint

TRANSVERSE CONSTRUCTION JOINT
LONGITUDINAL SECTION

CONTINUOUSLY REINF. P.C.C. PAVEMENT DETAILS
(NO SCALE)

COUNTY	CONTRACT	P & R REG NO	STATE	FED AID PROJECT NO	SHEET NO	TOTAL SHEETS
NEW CASTLE	71-05-003	2	DEL.	I-495-3 (22) 14	10	161

CONTINUOUSLY REINF. P.C.C. PAVEMENT

PREL. TRACING _____ DESIGN _____ CHKD. _____

REVISIONS

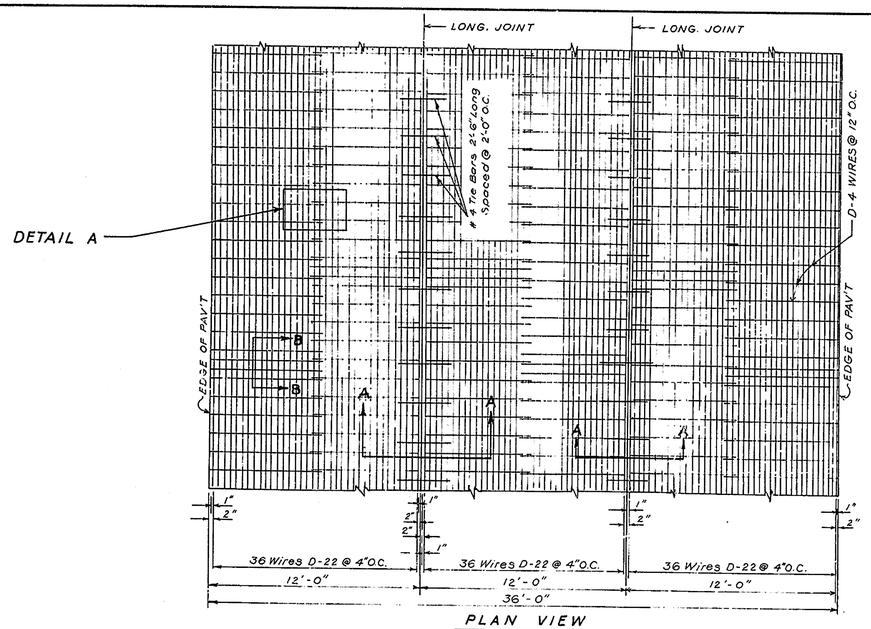

PLAN VIEW

STEEL REINF. MUST BE PRE-SET

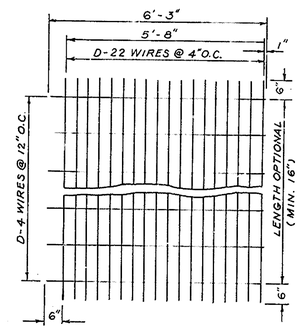

TYPICAL WIRE FABRIC SHEET

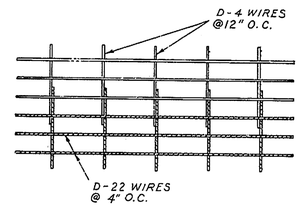

DETAIL A

Wire Fabric Sheets To Be Securely Fastened To Prevent Separation During Concrete Placement

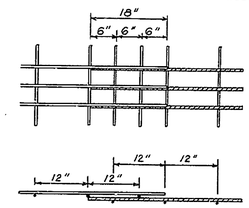

SECTION B-B

Wire Fabric Sheets To Be Securely Fastened To Prevent Separation During Concrete Placement.

Longitudinal Joint See Detail Sheet # 10 & Special Provisions.

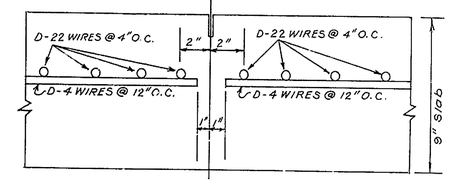

SECTION A-A

No Scale

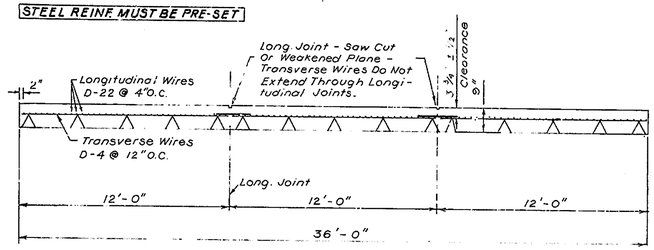

TRANSVERSE SECTION

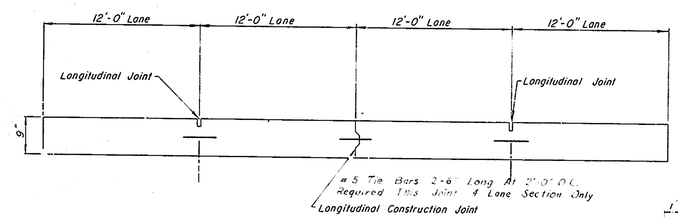

TRANSVERSE SECTION

(FOUR LANE SECTION)

4 Tie Bar 2'-6" Long On 2'-0" Centers Not Shown

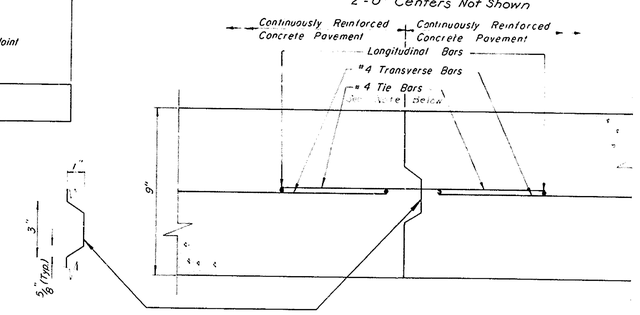

LONGITUDINAL CONSTRUCTION JOINT

NOTE: [illegible]

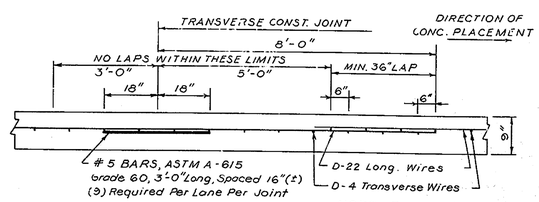

DOUBLE LAP METHOD

NOTE: The Double Lap Requirement (36") And Or Extra Bar Method Applies Only To Laps Falling Within An Area From 5' Beyond To 8' Beyond The Transverse Construction Joint.

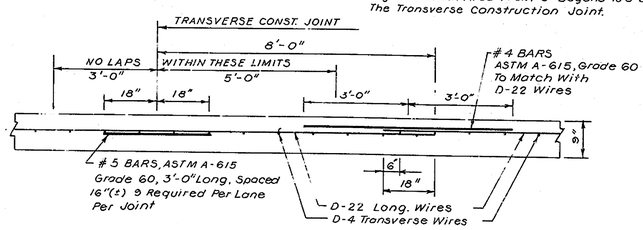

EXTRA BAR METHOD

TRANSVERSE CONSTRUCTION JOINT

LONGITUDINAL SECTION

NOTE: Refer To Special Provisions and Sheet # 10 For Details of Longitudinal Joint Construction.

WIRE MESH REINFORCEMENT

CONSTRUCTION METHOD 2-9

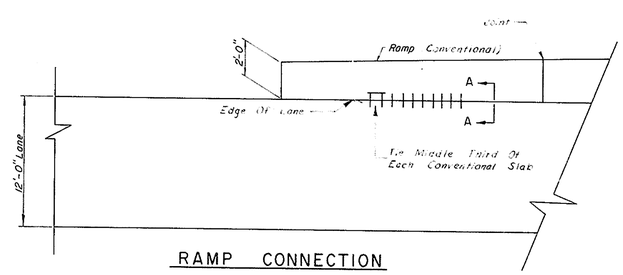

RAMP CONNECTION

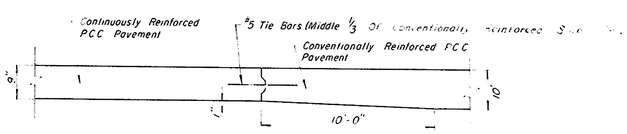

SECTION A-A

CONTINUOUSLY REINF. P.C.C. PAVEMENT DETAILS

(NO SCALE)

COUNTY	CONTRACT	P.R.A. REG. NO	STATE	FED AID PROJECT NO.	SHEET NO.	TOTAL SHEETS
NEW CASTLE	71-05-003	2	DEL.	I-495-3(22)14	11	161

DRAINAGE DETAILS

PREL. TRACING _____ DESIGN _____ CHKD. _____

REVISIONS

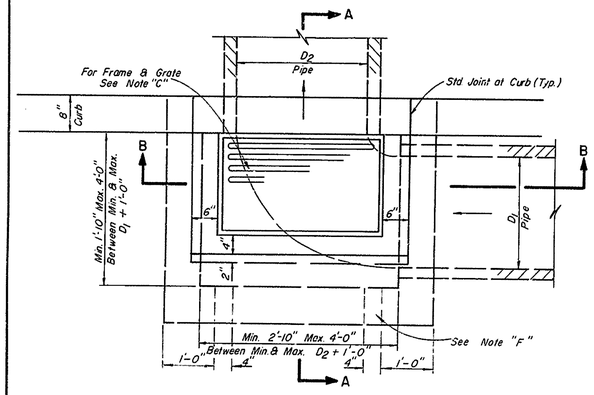

PLAN
3/4" = 1'-0"

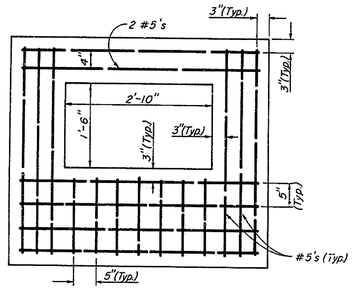

SLAB PLAN
3/4" = 1'-0"

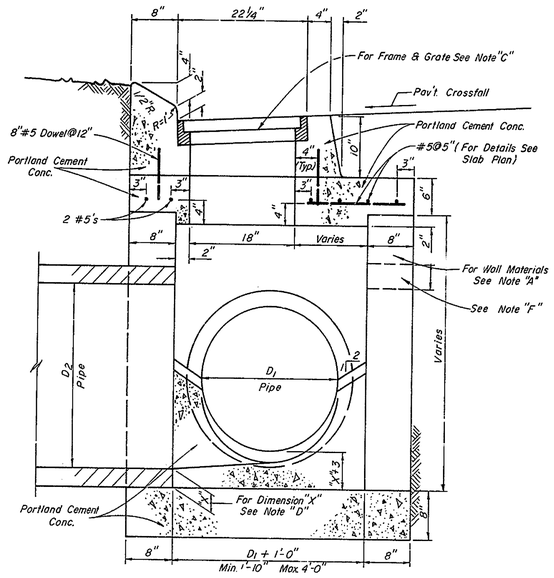

SECTION A-A
1" = 1'-0"

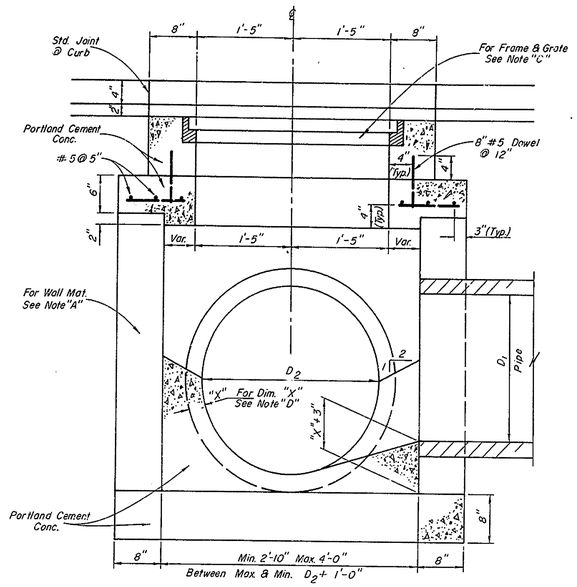

SECTION B-B
1" = 1'-0"

TYPE "A-A" CATCH BASIN (MODIFIED)

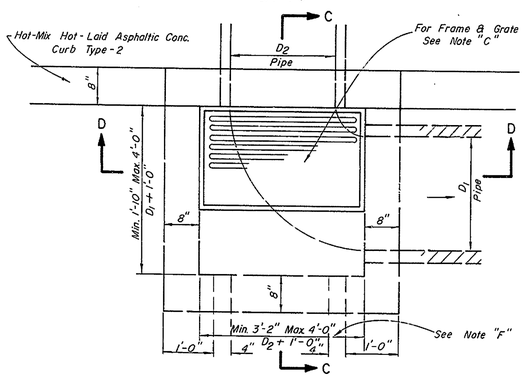

PLAN
3/4" = 1'-0"

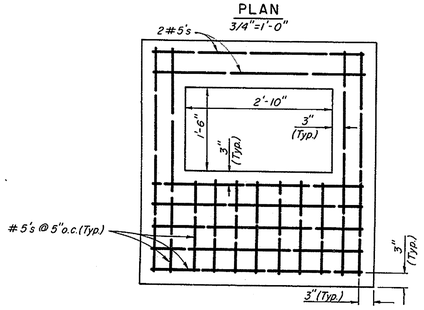

SLAB PLAN
3/4" = 1'-0"

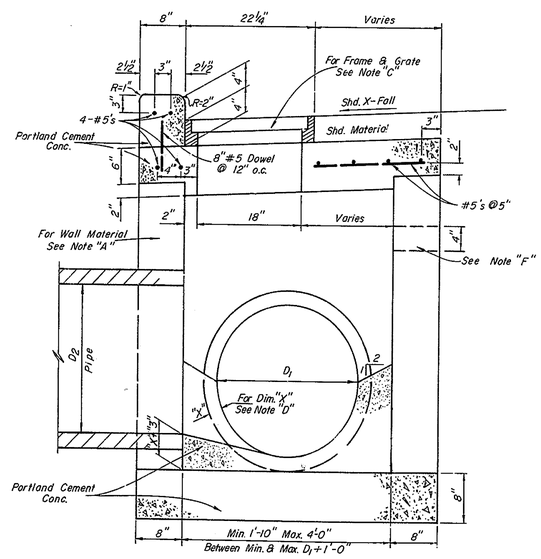

SECTION C-C
1" = 1'-0"

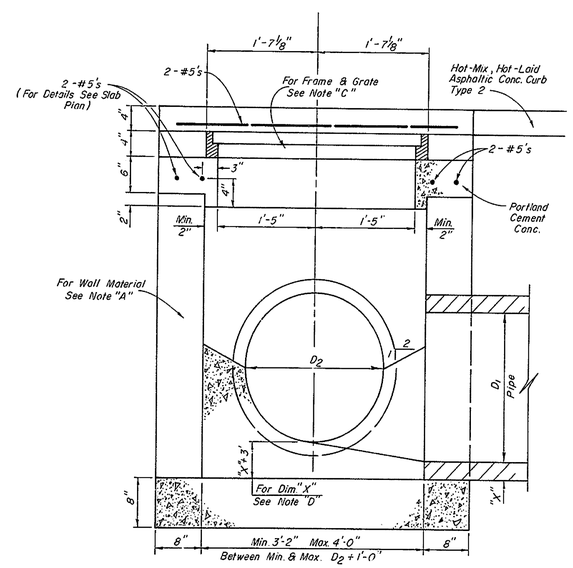

SECTION D-D
1" = 1'-0"

TYPE "X" CATCH BASIN (MODIFIED)

GENERAL NOTES

A. Walls of the Catch Basin Shall be Constructed of Portland Cement Concrete, Brick, or Concrete Block at the Option of the Contractor.

B. The Tops of the Catch Basin Walls Shall be the Same Elevation as the Bottom of the Concrete Median Barrier. In Order to Set the Top of Grate at the Correct Elevation a Variable Depth Mortar Bed Shall be Placed Between the Tops of the Walls and the Bottom of the Grate Frame. The Mortar Shall be in Accordance with Sections 614.06 and 614.08 of the Standard Specifications and Shall not be Paid for Separately but will be Considered incidental to the Catch Basin Item.

C. The Frames and Grates Shall be as Detailed on Standard Sheet "D-1"

D. Dimension "X" Shall be Equal to the Wall Thickness of the Outlet R.C. Pipe.

E. The "Curb Opening" in the Conc. Median Barrier Shall be Made with the Use of an Oiled Wood Block of the Shape, Width, Height and Length of the Opening and Shall be Incidental to the Catch Basin Item.

F. Two 4"x4" Square Openings, Two in Each Catch Basin Face, Shall be Provided as Detailed

G. In any Catch Basin Where the Depth Between the Top of Grate and the Top of Pipe is Greater than 3'-0", Standard Steps Shall be Provided as Detailed on Standard Sheet "D-1" For Catch Basin Types "A-1" (Modified) and Double "A-1" (Modified) the Steps Shall be in the Front Wall of the Catch Basin. For Catch Basins Types "A-A" (Modified) and "X" (Modified) the Steps Shall be in the Back Wall of the Catch Basin.

H. In any Catch Basin Where the Depth Between the Top of Grate and the Invert of of the Pipe is Greater than 10'-0", the Thickness of the Catch Basin Walls Shall be Increased to 12".

I. For Catch Basins Type "A-A" (Modified) and "X" (Modified) the Cost of Reinforcing Steel and Curb Shall be Included in the Price of the Catch Basin and no Separate Payment will be Made for these Items.

J. Curb-Side Drainage Structures [Type "X" (Mod), Type "A-A" (Mod), and Dbl. Type "A-A" (Mod) Catch Basins] Located Between C.L. Sta 74+00 and NB & SB B.L. Sta. 85+00 Have Been Constructed, From the Bottom Slab Upwards to the Roadway Subgrade Line and Covered, Under a Previous Contract. Under this Contract, All of These Catch Basins Shall be Completed to the Final Lines and Grades as Detailed in the Plans.

DRAINAGE DETAILS

Scale as Noted

COUNTY	CONTRACT	P. R. A. REG. NO.	STATE	FED. AID PROJECT NO.	SHEET NO.	TOTAL SHEETS
NEW CASTLE	71-05-003	2	DEL.	I-495-3(22)14	12	161

DRAINAGE DETAILS

PREL. TRACING_____ DESIGN_____ CHKD._____

REVISIONS

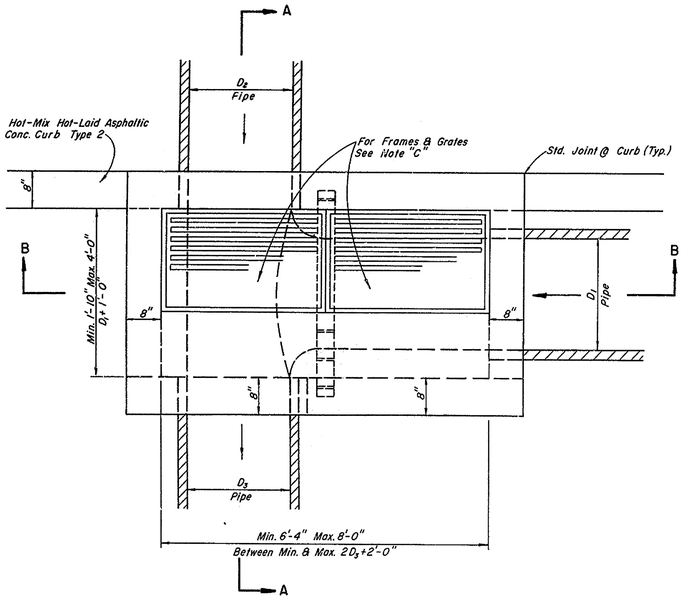

PLAN

3/4" = 1'-0"

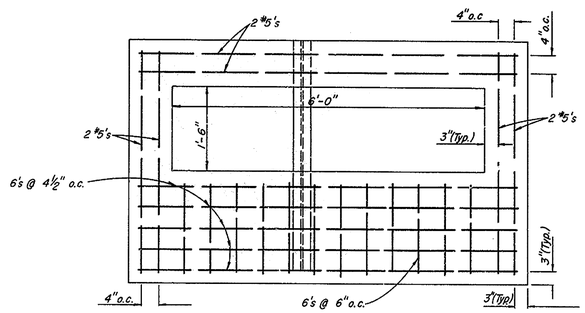

SLAB PLAN

3/4" = 1'-0"

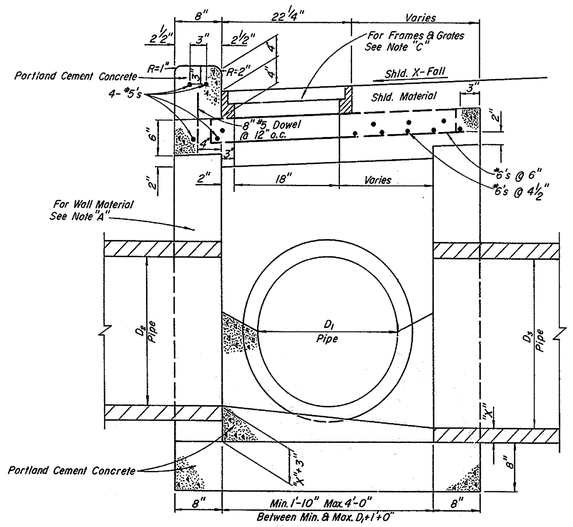

SECTION A-A

1" = 1'-0"

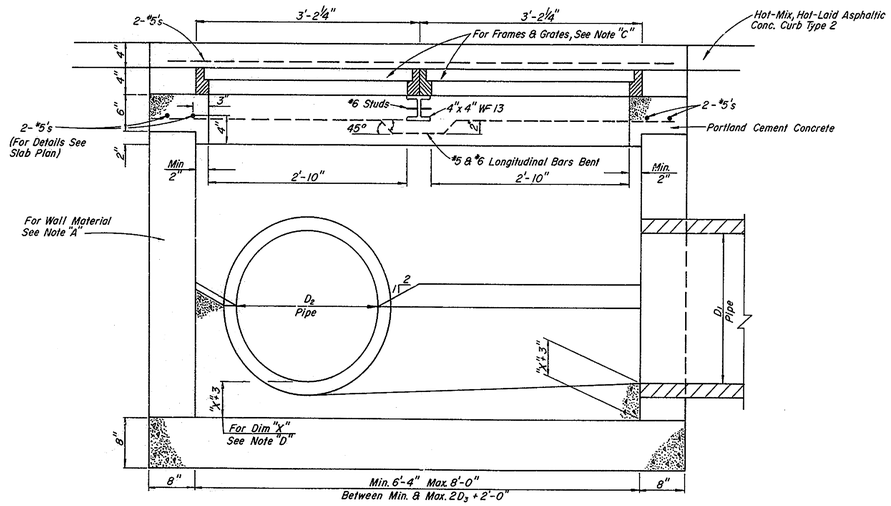

SECTION B-B

1" = 1'-0"

NOTE:

For Reference To "General Notes", See Sheet No. 11

DOUBLE TYPE "X" CATCH BASIN (MODIFIED)

DRAINAGE DETAILS

Scale As Noted

COUNTY	CONTRACT	P. B. A. REG. NO.	STATE	FED. AID PROJECT NO.	SHEET NO.	TOTAL SHEETS
NEW CASTLE	71-05-003	2	DEL.	I-495-3(22)14	13	161

TYPICAL SECTIONS & DRAINAGE DETAILS

PREL. TRACING _____ DESIGN _____ CHKD. _____

REVISIONS

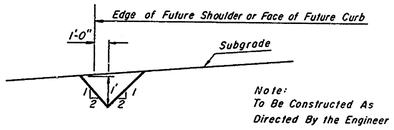

DETAIL "A"

TEMPORARY DRAINAGE DITCH

Scale: Horiz. 3/16" = 1'-0"
Vert. 3/8" = 1'-0"

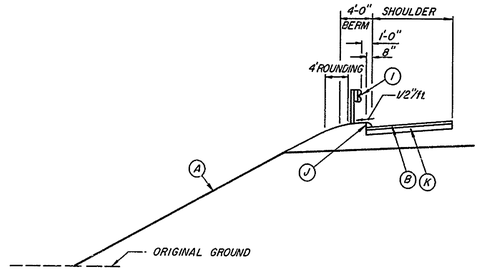

DETAIL OF CURB AND GUARD RAIL

MAIN LINE DEL. I-495
(NOT TO SCALE)

NOTE: For Detail of Soil Sterilization and Bituminous Surface Treatment See Sheet No. 16

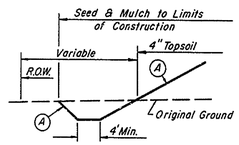

TOE OF SLOPE DRAINAGE DITCH *

NOT TO SCALE

* NOTE: (DRAINAGE DITCH)
To Be Constructed Where Shown on Plans and to Grade Shown on Plans (Min. Depth of 1') (To Be Paid for Under Excavation Item.)

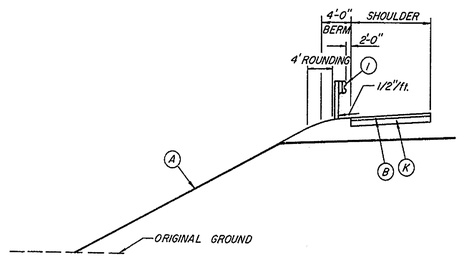

DETAIL OF BERM WITH GUARD RAIL - NO CURBING

MAIN LINE DEL. I-495
(NOT TO SCALE)

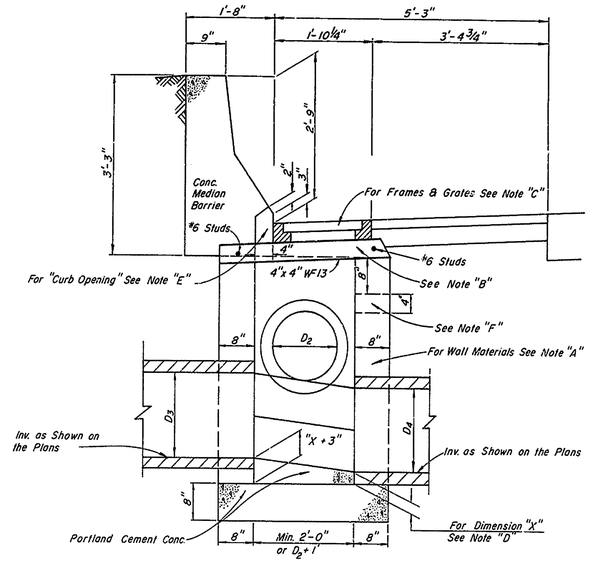

SECTION "B-B"

3/4" = 1'-0"

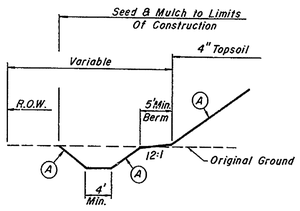

TOE OF SLOPE DRAINAGE DITCH WITH BERM *

NOT TO SCALE

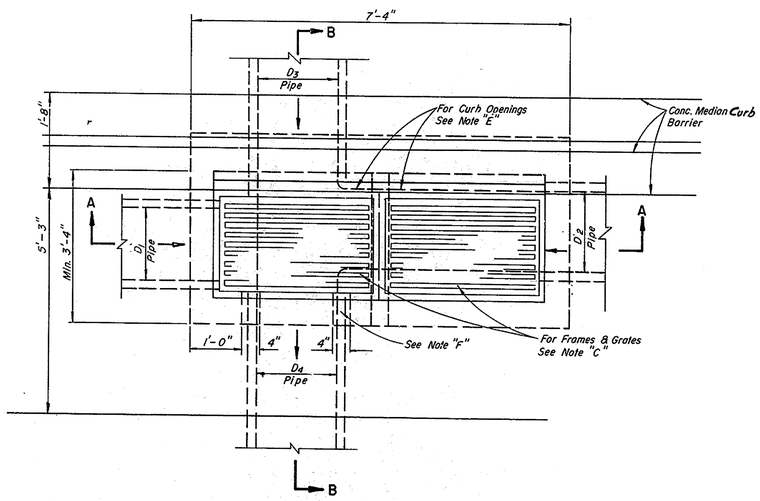

PLAN

NOT TO SCALE

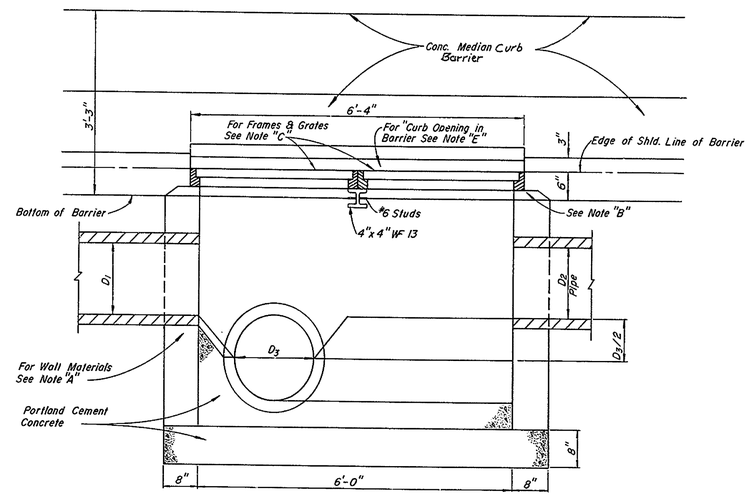

SECTION "A-A"

3/4" = 1'-0"

NOTE:
For Reference To "General Notes", See Sheet No. 11

DOUBLE (SIDE BY SIDE) TYPE "A-1" CATCH BASIN (MODIFIED)

TYPICAL SECTIONS & DRAINAGE DETAILS
Scale As Noted

COUNTY	CONTRACT	P.R.A. REG. NO.	STATE	FED. AID PROJECT NO.	SHEET NO.	TOTAL SHEETS
NEW CASTLE	71-05-003	2	DEL.	I-495-3(22)14	14	161

DRAINAGE DETAILS

PREL. TRACING _____ DESIGN _____ CHKD. _____

REVISIONS

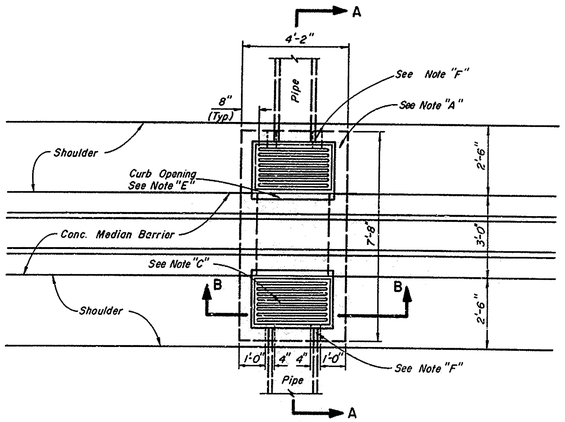

PLAN
3/8"=1'-0"

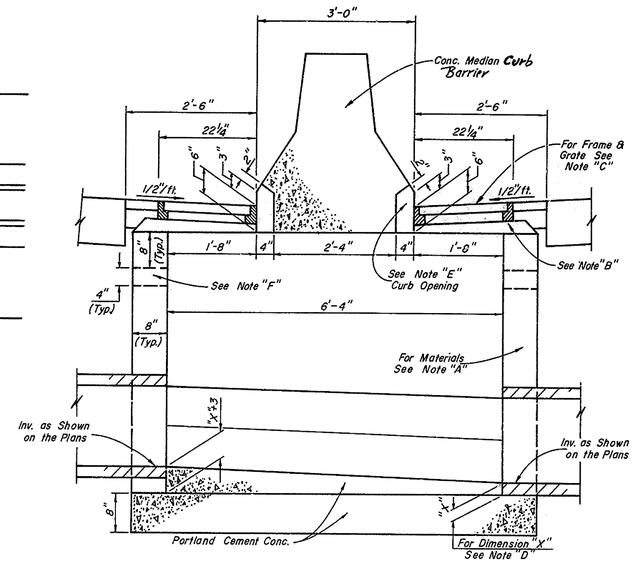

SECTION A-A
3/4"=1'-0"

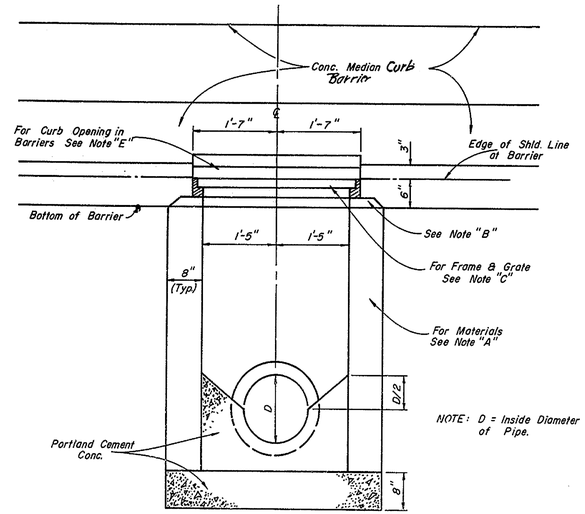

SECTION B-B
3/4"=1'-0"

DOUBLE TYPE "A-1" CATCH BASIN (MODIFIED)

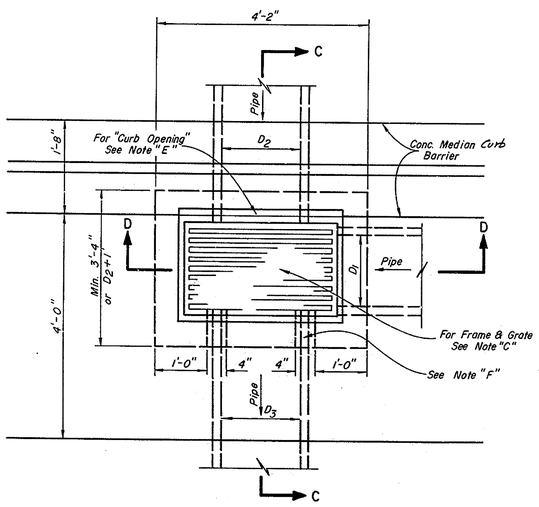

PLAN
3/4"=1'-0"

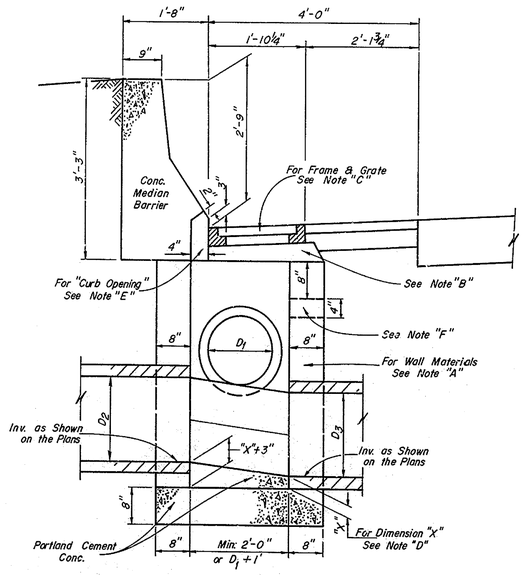

SECTION C-C
3/4"=1'-0"

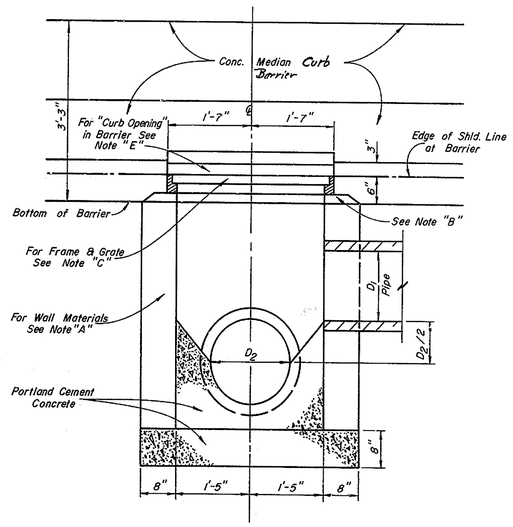

SECTION D-D
3/4"=1'-0"

TYPE "A-1" CATCH BASIN (MODIFIED)

NOTE:
For Reference To "General Notes", See Sheet No. 11

DRAINAGE DETAILS
Scale as Noted

COUNTY	CONTRACT	P. B. A. REG. NO.	STATE	FED AID PROJECT NO.	SHEET NO.	TOTAL SHEETS
NEW CASTLE	71-05-003	2	DEL.	I-495-3(22)14	15	161

DRAINAGE DETAILS

PREL. TRACING _____ DESIGN _____ CHKD. _____

REVISIONS

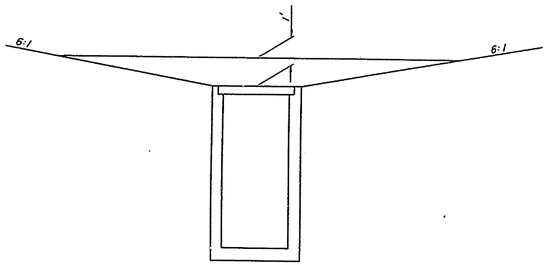

SECTION B-B

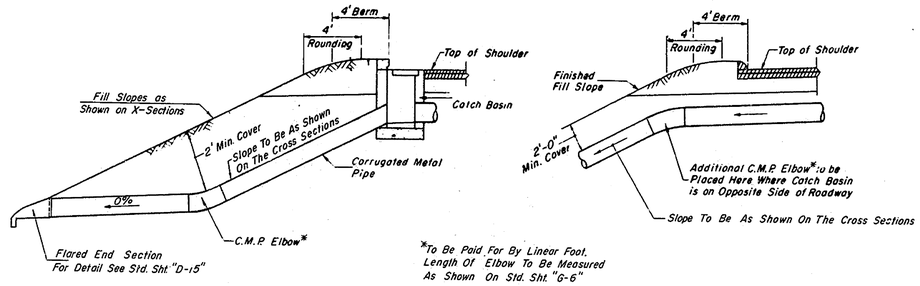

*To Be Paid For By Linear Foot. Length Of Elbow To Be Measured As Shown On Std. Sht. "G-6"

DETAIL OF C.M.P. ELBOWS

No Scale

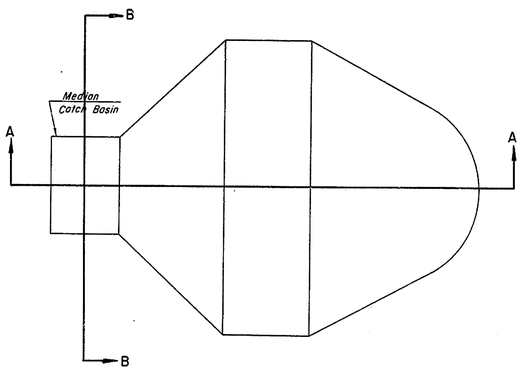

PLAN

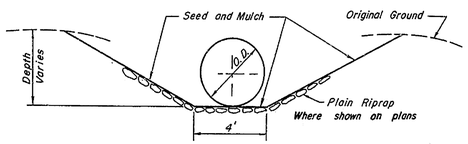

TYPICAL SECTION FOR LATERAL DITCHING

No Scale

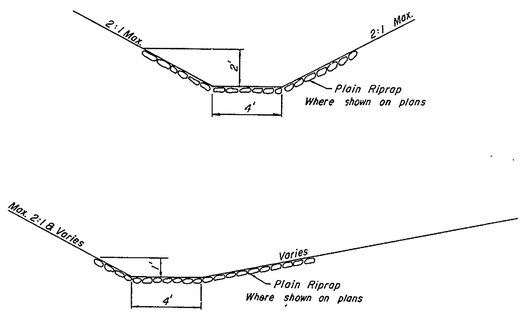

TYPICAL SECTIONS FOR LONGITUDINAL DITCHING

No Scale

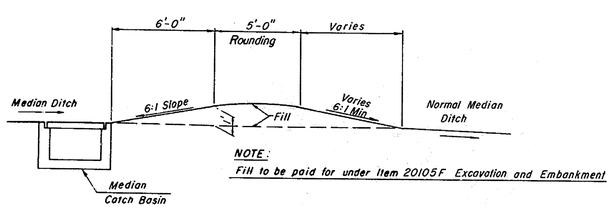

NOTE:
Fill to be paid for under Item 20105F Excavation and Embankment

SECTION A-A

MEDIAN CONSTRUCTION AT CATCH BASIN

No Scale

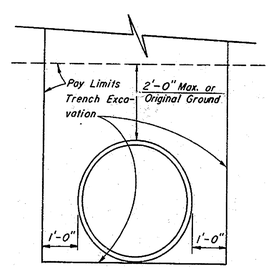

PAY LIMITS TRENCH EXCAVATION

No Scale

COUNTY	CONTRACT	P B A REG. NO	STATE	FED AID PROJECT NO	SHEET NO.	TOTAL SHEETS
NEW CASTLE	71-05-003	2	DEL.	I-495-3(22)14	16	161

MISCELLANEOUS DETAILS

PREL. TRACING _____ DESIGN _____ CHKD. _____

REVISIONS

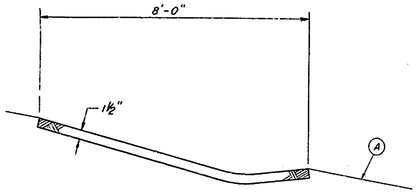

SECTION A-A

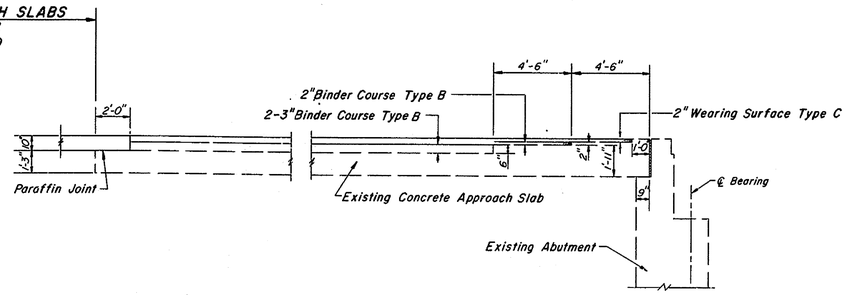

JUNCTION WITH EXISTING APPROACH SLABS
CHRISTINA RIVER BRIDGE

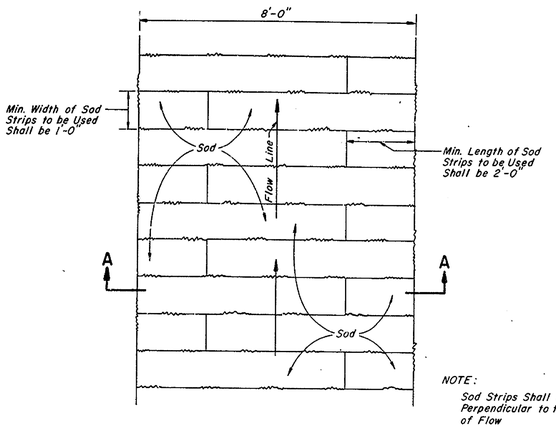

PLAN

TYPICAL DETAILS
SOD GUTTER
NOT TO SCALE
(SEE PLANS FOR LOCATION)

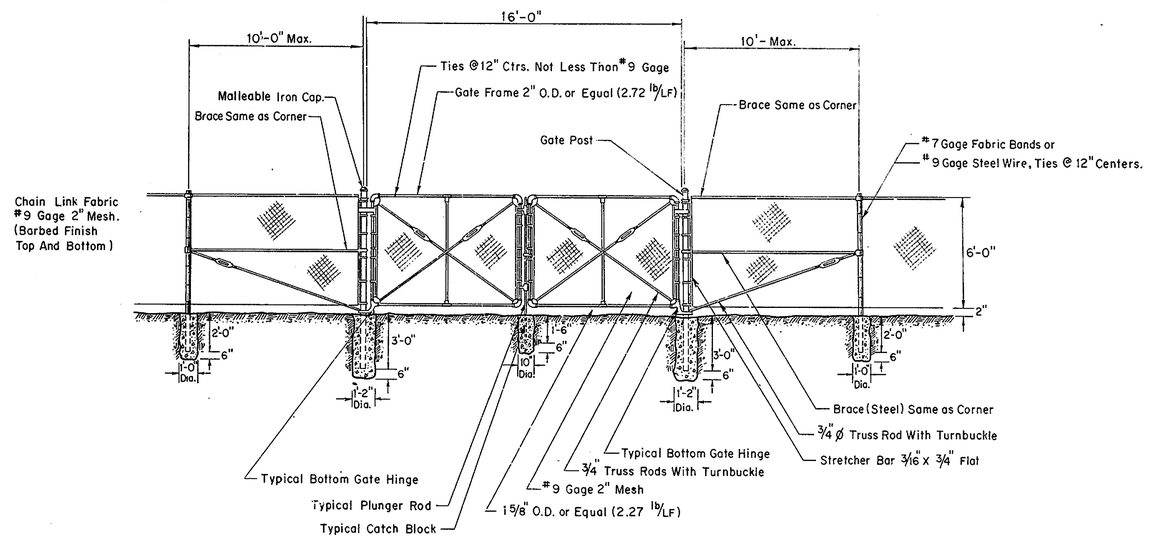

VEHICULAR GATES
(DOUBLE SWING)
- No Scale -

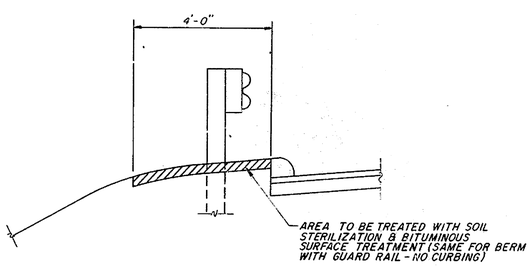

SECTION A-A
(NOT TO SCALE)

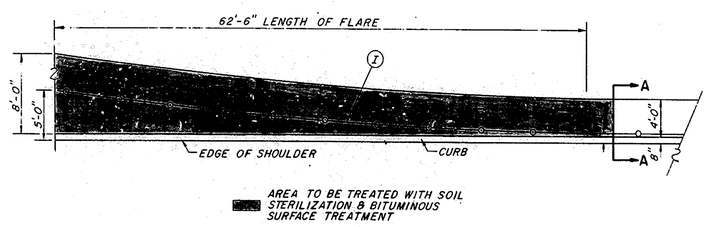

PLAN
(NOT TO SCALE)

SOIL STERILIZATION & BITUMINOUS SURFACE TREATMENT

MISCELLANEOUS DETAILS
SCALE AS NOTED

COUNTY	CONTRACT	P.R.A. REG. NO.	STATE	FED.AID.PROJECT NO.	SHEET NO.	TOTAL SHEETS
NEW CASTLE	71-05-003	2	DEL.	I-495-3(22)14	17	161

MISCELLANEOUS DETAILS

PREL. TRACING _____ DESIGN _____ CHKD _____

REVISIONS

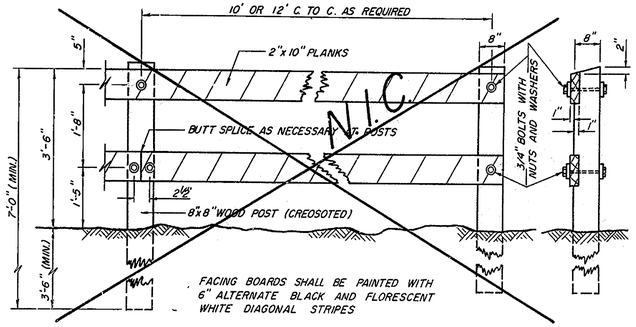

DETAIL FOR PERMANENT BARRICADE

NOT TO SCALE

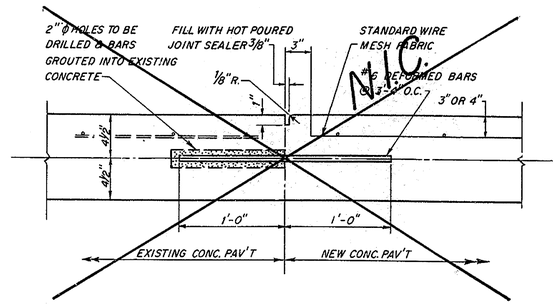

TYPICAL DOWELLED

JOINT WITH EXISTING PAVEMENT

Scale: 1 1/2" = 1'-0"

NOTE: TO BE USED AT ALL LOCATIONS WERE NEW AND EXISTING CONCRETE ABUT.

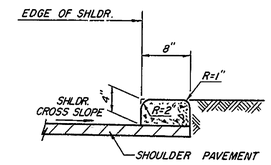

HOT-MIX, HOT-LAID

ASPHALTIC CONC. CURB

TYPE 2

NOT TO SCALE

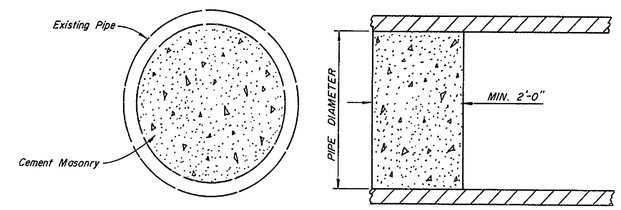

FRONT VIEW

SIDE VIEW

DETAIL FOR PLUGGING PIPES

(NOT TO SCALE)

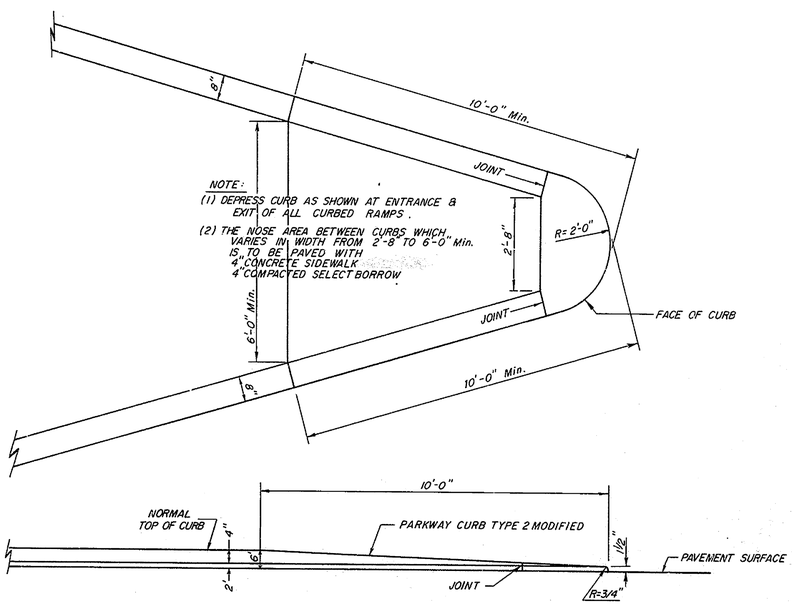

DETAIL OF CURB TRANSITION

SCALE: 1/2"=1'-0"

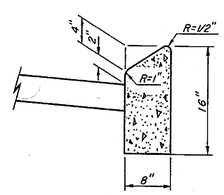

PARKWAY CURB

TYPE 2 MODIFIED

NOT TO SCALE

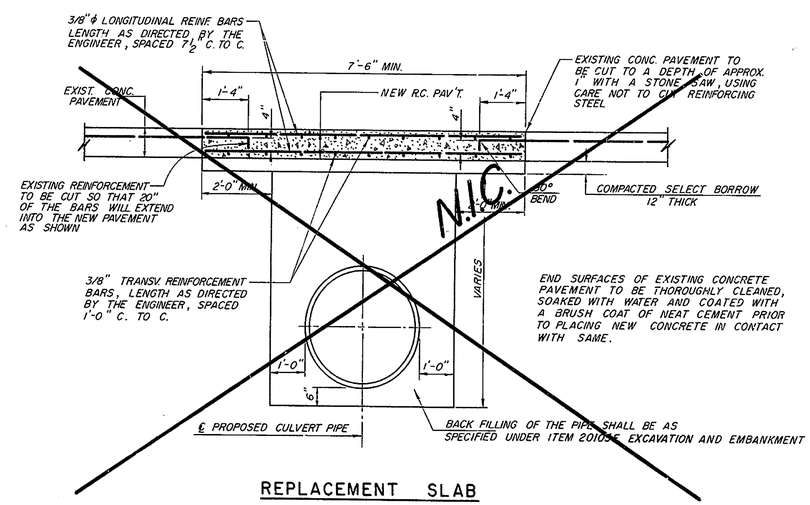

REPLACEMENT SLAB

WHERE CONCRETE PAVEMENT IS TO BE REPLACED

AT CROSS DRAIN TRENCH UNDER EXISTING PAVEMENT

(NOT TO SCALE)

MISCELLANEOUS DETAILS

SCALE AS NOTED

COUNTY	CONTRACT	F.A.P. REG. NO.	STATE	FED. AID PROJECT NO.	SHEET NO.	TOTAL SHEETS
NEW CASTLE	71-05-003	2	DEL.	I-495-3(22)14	18	161

MEDIAN BARRIER DETAILS

PREL. TRACING _____ DESIGN _____ CHKD. _____

REVISIONS

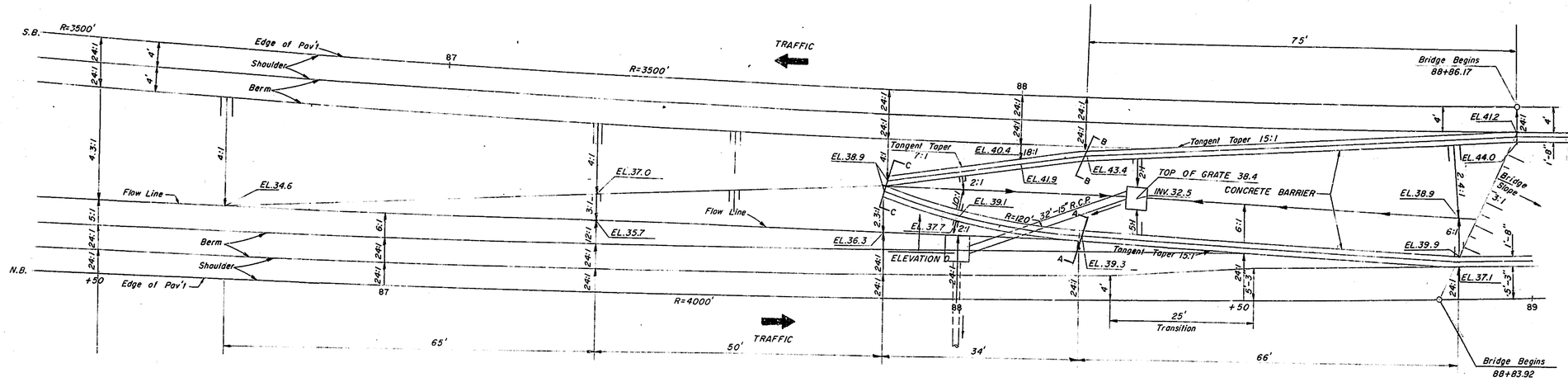

PLAN
1" = 10'

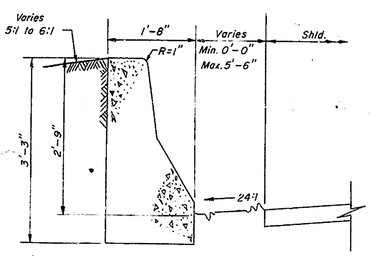

SECTION A-A*
3/4" = 1'-0"

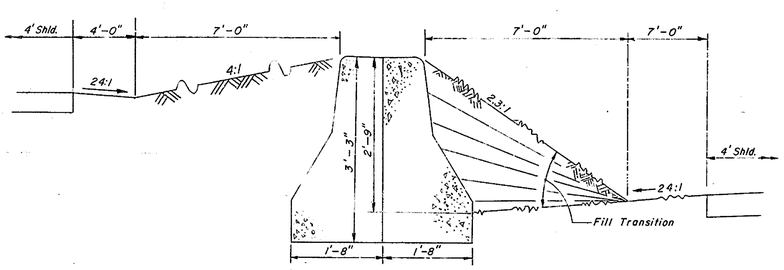

SECTION C-C*
NOT TO SCALE

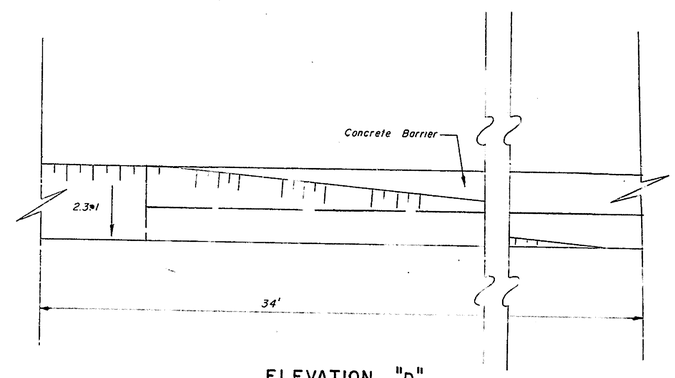

ELEVATION "D"
3/8" = 1'-0"

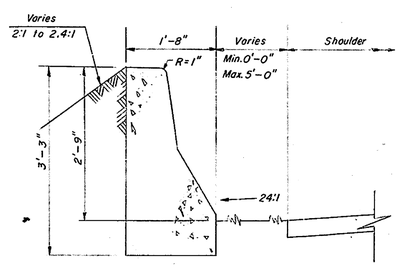

SECTION B-B*
3/4" = 1'-0"

*For Reinforcement Details, See Sheet No. 7, Refer to Split Concrete Barrier Detail

MISCELLANEOUS DETAILS
SCALE AS NOTED

COUNTY	CONTRACT	F. R. A. REG. NO.	STATE	FED. AID PROJECT NO.	SHEET NO.	TOTAL SHEETS
NEW CASTLE	71-05-003	2	DEL.	I-495-3(22)14	19	161

INDEX OF PLANS

PREL. TRACING_____ DESIGN_____ CHKD._____

REVISIONS

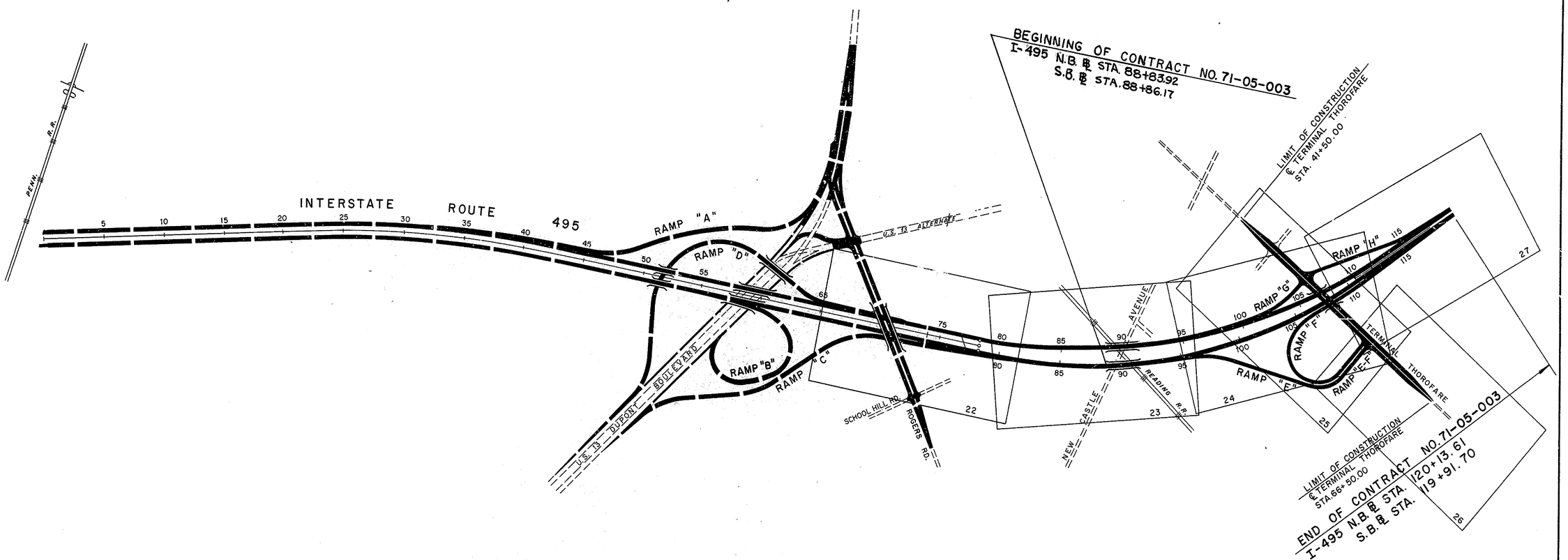

INDEX OF PLANS

COUNTY	CONTRACT	P. R. A. REG. NO.	STATE	FED. AID PROJECT NO.	SHEET NO.	TOTAL SHEETS
NEW CASTLE	71-05-003	2	DEL.	I-495-3(22)14	20	161

ALIGNMENT DATA PLAN

PREL. TRACING _____ DESIGN _____ CHKD. _____

REVISIONS

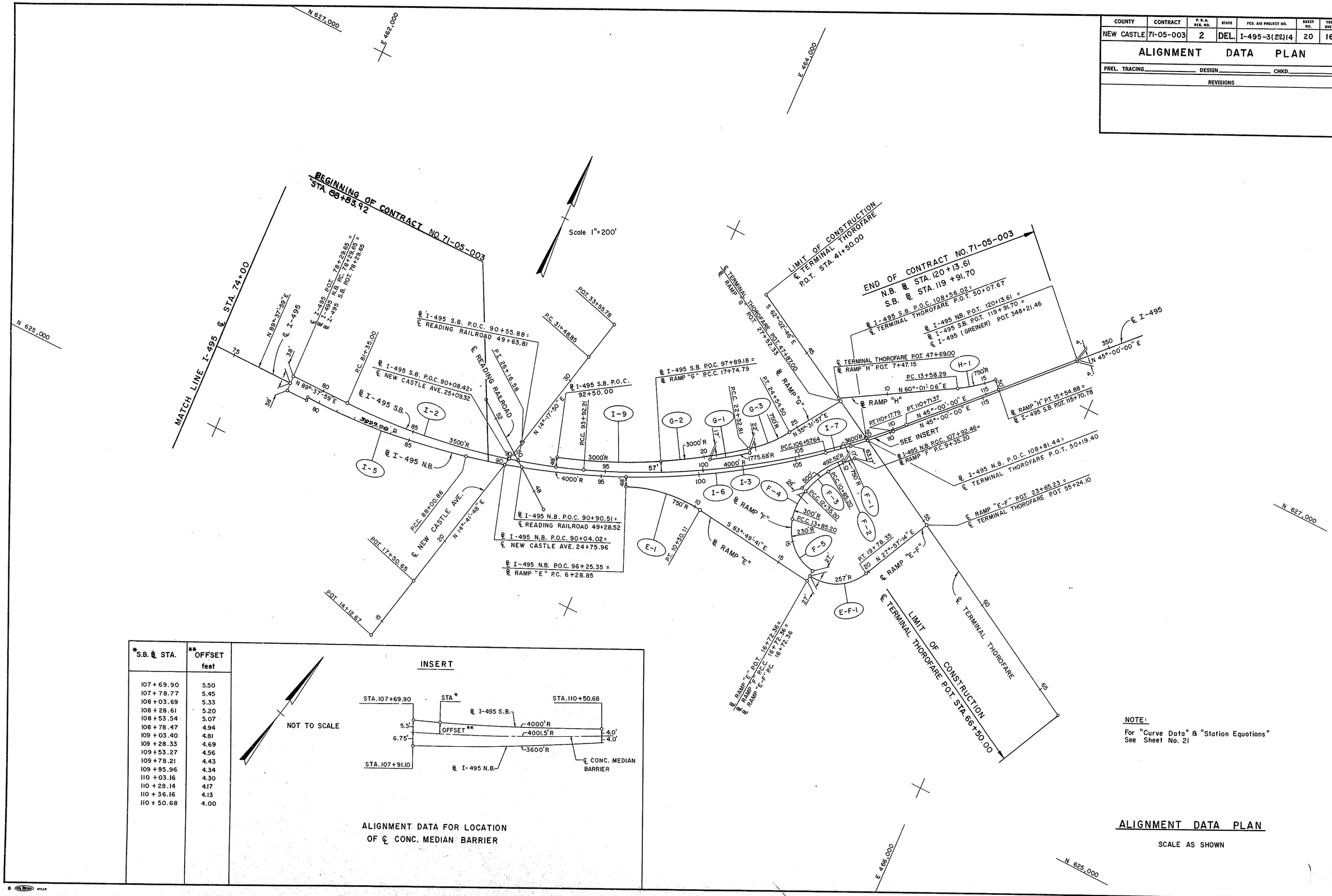

*S.B. ℄ STA.	**OFFSET feet
107 + 69.90	5.50
107 + 78.77	5.45
108 + 03.69	5.33
108 + 28.61	5.20
108 + 53.54	5.07
108 + 78.47	4.94
109 + 03.40	4.81
109 + 28.33	4.69
109 + 53.27	4.56
109 + 78.21	4.43
109 + 95.96	4.34
110 + 03.16	4.30
110 + 28.14	4.17
110 + 36.16	4.13
110 + 50.68	4.00

NOT TO SCALE

INSERT

ALIGNMENT DATA FOR LOCATION OF ℄ CONC. MEDIAN BARRIER

NOTE:

For "Curve Data" & "Station Equations" See Sheet No. 21

ALIGNMENT DATA PLAN

SCALE AS SHOWN

CURVE DATA TABLE

I.D. NO.	DELTA ANGLE	DEGREE OF CURVE	RADIUS OF CURVE	TANGENT LENGTH	LENGTH OF CURVE	EXTERNAL	PC/PCC N	PC/PCC E	PI N	PI E	PT/PCC N	PT/PCC E	MAX. SUPER. e
1-2	20°-34'-51.0"	1°-38'-13.3"	3500.000'	635.454'	1257.213'	57.218'	625,394.457	462,563.999	625,398.526	463,199.440	625,625.711	463,792.894	
1-3	24°-03'-08.0"	1°-25'-56.6"	4000.000'	852.132'	1679.162'	87.759'	625,625.711	463,792.894	625,930.363	464,588.706	626,532.911	465,191.254	
1-[illegible]	12°-18'-16.8"	1°-25'-58.6	3999.98	431.17	859.023	23.17	625,329.561	462,370.387	625,331.979	462,801.849	625,426.561	463,222.217	
1-6	26°-35'-47.1"	1°-25'-56.6"	4000.000'	945.427'	1856.779'	110.211'	625,426.351	463,222.217	625,633.953	464,144.618	626,232.360	464,876.561	
1-7	5°-43'-55.1"	1°-35'-23.6"	3600.000'	180.225'	360.150'	4.508'	626,232.300	464,876.561	626,346.433	465,016.090	626,473.871	465,143.528	
1-9	10°-09'-51.6"	1°-54'-35.5"	3000.000'	266.801'	532.201'	11.840'	625,623.067	463,643.758	625,708.253	463,896.594	625,836.719	464,130.429	
E-1	30°-39'-13.7"	7°-38'-22.0"	750.000'	205.555'	401.257'	27.659'	625,645.071	464,022.259	625,730.253	464,209.333	625,708.153	464,413.696	
EF-1	68°-13'-04.6"	22°-17'-38.7"	257.000'	174.061'	305.991'	53.397'	625,665.945	465,055.128	625,647.232	465,228.179	625,800.984	465,309.772	
F-1	11°-27'-33.0"	7°-38'-22.0"	750.000'	75.251'	150.000'	3.766'	626,272.252	465,021.105	626,219.042	464,967.894	626,156.321	464,926.316	
F-3	17°-11'-19.4"	11°-27'-33.0"	500.000'	75.567'	150.000'	5.678'	626,156.321	464,926.316	626,093.336	464,884.562	626,020.825	464,863.287	
F-[illegible]	28°-38'-52.4"	19°-05'-54.9"	300.000'	76.602'	150.000'	9.625'	626,020.825	464,863.287	625,947.321	464,841.720	625,872.476	464,858.033	
F-5	71°-32'-02.6"	24°-54'-40.4"	230.000'	165.680'	287.156'	53.460'	625,872.476	464,858.033	625,710.596	464,893.316	625,692.788	465,058.037	
F-2	29°-00'-05.4"	11°-37'-53.6"	492.519'	131.210'	256.463'	17.[illegible]78'	626,244.322	464,971.880	626,153.484	464,877.199	626,027.582	464,840.258	
G-1	6°-[illegible]'-[illegible]7.0"	3°-13'-36.[illegible]	1775.683'	103.884'	207.531'	3.306'	626,069.540	464,526.897	626,006.255	464,444.515	625,953.007	464,355.315	
G-2	89°-44'-50.9"	1°-54'-35.5"	3000.000'	229.454'	458.017'	8.762'	625,836.719	464,130.429	625,947.204	464,331.532	626,086.986	464,513.494	
G-3	16°-56'-09.4"	7°-38'-22.0"	750.000'	111.660'	221.691'	8.266'	626,086.986	464,513.494	626,155.009	464,602.042	626,245.876	464,666.935	
H-1	15°-01'-05.3"	7°-38'-22.0"	750.000'	98.860'	196.587'	6.487'	626,802.089	465,353.492	626,851.492	465,439.124	626,921.396	465,509.029	

TABLE OF STATION EQUATIONS

(INTERSECTING ℄'s AND ℄'s)

I-495 ℄ P.O.T. Sta. 78+29.65 = I-495 ℄ N.B. P.C. Sta. 78+29.65 = I-495 ℄ S.B. P.O.T. Sta. 78+29.65
I-495 ℄ N.B. P.O.C. Sta. 90+04.92 = ℄ New Castle Avenue Sta. 24+75.96
I-495 ℄ S.B. P.O.C. Sta. 90+08.42 = ℄ New Castle Avenue Sta. 25+09.32
I-495 ℄ N.B. P.O.C. Sta. 90+90.51 = ℄ Reading Railroad Sta. 49+28.52
I-495 ℄ S.B. P.O.C. Sta. 90+55.88 = ℄ Reading Railroad Sta. 49+63.81
I-495 ℄ N.B. P.O.C. Sta. 96+25.35 = ℄ Ramp E P.C. Sta. 6+28.85
I-495 ℄ N.B. P.O.C. Sta. 107+92.46 = ℄ Ramp F P.C. Sta. 9+35.20
I-495 ℄ S.B. P.O.C. Sta. 97+89.18 = ℄ Ramp G P.C.C. Sta. 17+74.79
I-495 ℄ S.B. P.O.T. Sta. 115+70.78 = ℄ Ramp H P.T. Sta. 15+54.88
I-495 ℄ N.B. P.O.C. Sta. 108+81.44 = ℄ Terminal Thorofare P.O.T. Sta. 50+19.40
I-495 ℄ S.B. P.O.C. Sta. 108+56.02 = ℄ Terminal Thorofare P.O.T. Sta. 50+07.67
I-495 ℄ N.B. P.O.T. Sta. 120+13.61 = I-495 ℄ S.B. P.O.T. Sta. 119+91.70 = ℄ I-495 (Grenier) P.O.T. Sta. 348+2[illegible].46
℄ Ramp E P.O.T. Sta. 6+72.36 = ℄ Ramp F P.C.C. Sta. 16+72.36 = ℄ Ramp E-F P.C. Sta. 16+72.36
℄ Terminal Thorofare P.O.T. Sta. 55+24.[illegible]0 = ℄ Ramp E-F P.O.T. Sta. 23+65.23
℄ Terminal Thorofare P.O.T. Sta. 47+87.00 = ℄ Ramp G P.O.T. Sta. 27+52.33
℄ Terminal Thorofare P.O.T. Sta. 47+69.00 = ℄ Ramp H P.O.T. Sta. 7+47.15

COUNTY	CONTRACT	F.H.A. REG. NO.	STATE	FED. AID PROJECT NO.	SHEET NO.	TOTAL SHEETS
NEW CASTLE	71-05-003	2	DEL.	I-495-3(22)14	21	161

DATA ALIGNMENT TABLES

PREL TRACING ____ DESIGN ____ CHKD ____

REVISIONS

TABLE OF MEDIAN OFFSETS

NORTHBOUND ℄ STATION	SOUTHBOUND ℄ STATION	DIST. BETWEEN ℄'s (RADIAL TO N.B. ℄)	NORTHBOUND ℄ STATION	SOUTHBOUND ℄ STATION	DIST. BETWEEN ℄'s (RADIAL TO N.B. ℄)
79+00.000	79+00.000	76.000	116+00.000	115+78.093	8.000'
80+00.000	79+99.030	63.570	117+00.000	116+78.093	8.000'
81+00.000	80+97.538	60.886	118+00.000	117+78.093	8.000'
82+00.000	81+96.181	56.267	119+00.000	118+78.093	8.000'
83+00.000	82+94.934	51.759			
84+00.000	83+93.783	47.565			
85+00.000	84+92.719	43.688			
86+00.000	85+91.735	40.134			
87+00.000	86+90.823	36.903			
88+00.000	87+89.981	33.999			
89+00.000	88+88.346	31.445'			
90+00.000	89+87.613	29.200'			
91+00.000	90+86.930	27.288'			
92+00.000	91+86.279	25.71[illegible]'			
93+00.000	92+85.659	24.471'			
94+00.000	93+85.062	23.568'			
95+00.000	94+84.486	22.853'			
96+00.000	95+83.933	22.123'			
97+00.000	96+83.390	21.379'			
98+00.000	97+82.866	20.621'			
99+00.000	98+82.362	19.851'			
100+00.000	99+81.877	19.068'			
101+00.000	100+81.413	18.274'			
102+00.000	101+80.977	17.468'			
103+00.000	102+80.551	16.651'			
104+00.000	103+80.147	15.823'			
105+00.000	104+79.764	14.986'			
106+00.000	105+79.403	14.139'			
107+00.000	106+79.049	13.258'			
108+00.000	107+78.701	12.138'			
109+00.000	108+78.393	10.732'			
110+00.000	109+78.137	9.042'			
111+00.000	110+78.093	8.000'			
112+00.000	111+78.093	8.000'			
113+00.000	112+78.093	8.000'			
114+00.000	113+78.093	8.000'			
115+00.000	114+78.093	8.000'			

#6

COUNTY	CONTRACT	P.R.A. REG. NO.	STATE	FED. AID. PROJECT NO.	SHEET NO.	TOTAL SHEETS
NEW CASTLE	71-05-003	2	DEL.	I-495-3(22)14	22	161

PREL. TRACING _____ DESIGN _____ CHKD. _____

REVISIONS

THIS SHEET FOR INFORMATION ONLY
CONSTRUCTION NOT IN THIS CONTRACT

CHECKED
GRADE
BEARINGS
TIE POINTS
BENCH MARKS
EARTHWORK
DRAINAGE

REVISIONS

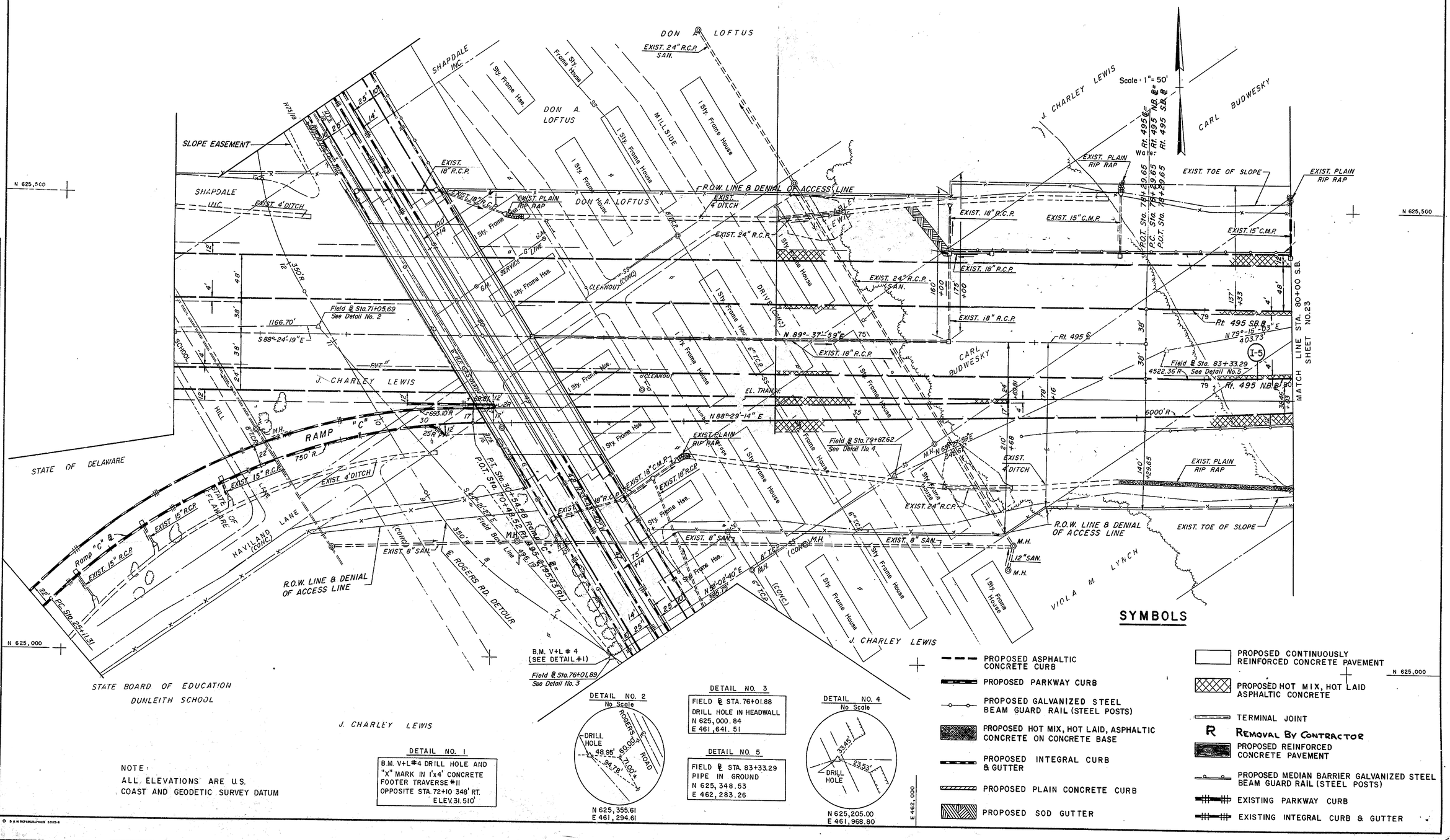

NOTE:
ALL ELEVATIONS ARE U.S. COAST AND GEODETIC SURVEY DATUM

© D & M REPRODUCTIONS 32125-8

#6

COUNTY	CONTRACT	P.R.A. REG. NO.	STATE	FED. AID. PROJECT NO.	SHEET NO.	TOTAL SHEETS
NEW CASTLE	71-05-003	2	DEL.	I-495-3(22)14	23	161

PREL. TRACING _____ DESIGN _____ CHKD. _____

REVISIONS

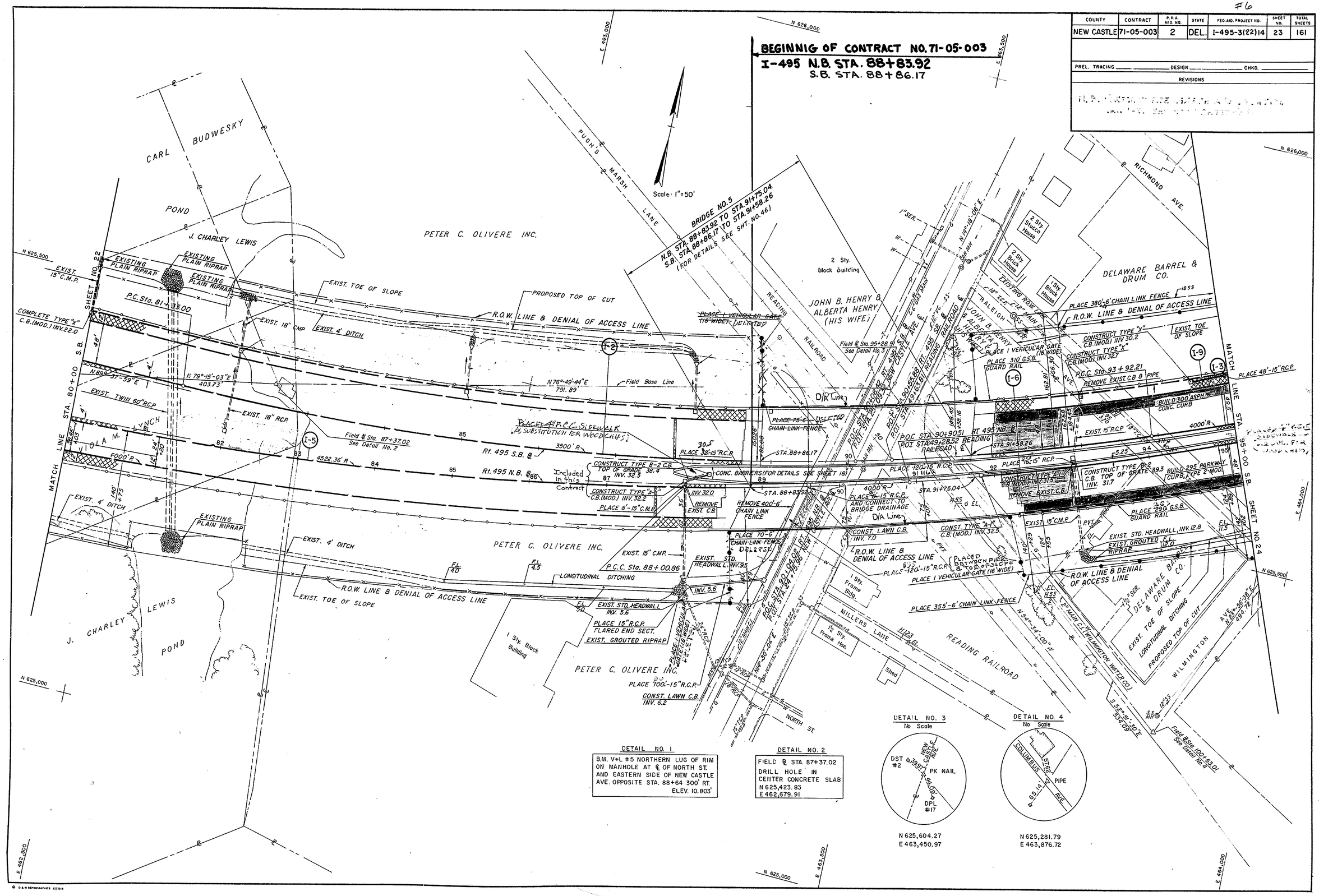

COUNTY	CONTRACT	P.R.A. REG. NO.	STATE	FED. AID. PROJECT NO.	SHEET NO.	TOTAL SHEETS
NEW CASTLE	71-05-003	2	DEL.	I-495-3(22)14	24	161

PREL. TRACING _____ DESIGN _____ CHKD. _____

REVISIONS

5-11-72 Revised Drainage Sta. 100+ To Sta. 102+ Right ℄ W.S.S.

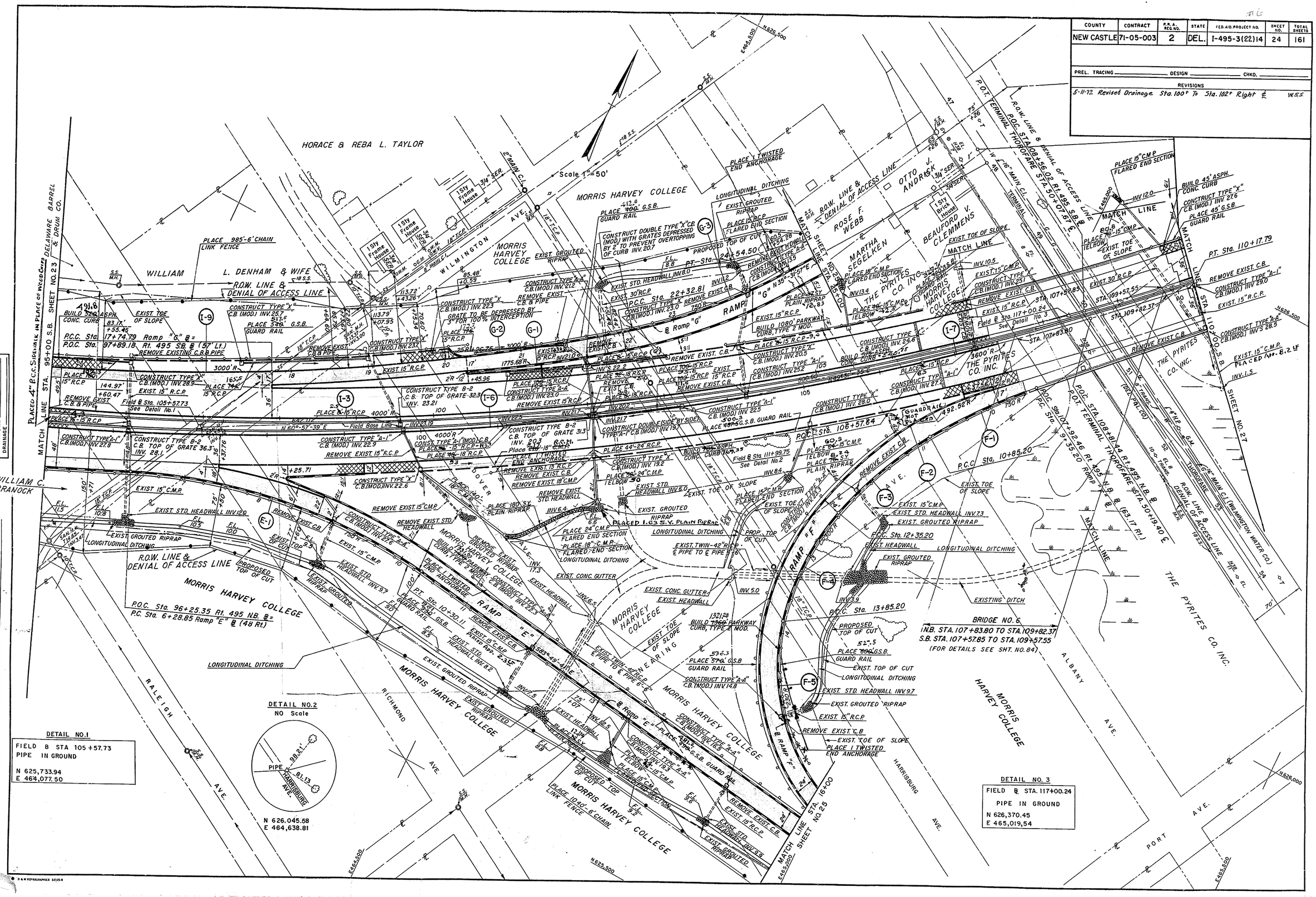

#6

COUNTY	CONTRACT	P.R.A. REG. NO.	STATE	FED. AID PROJECT NO.	SHEET NO.	TOTAL SHEETS
NEW CASTLE	71-03 033	2	DEL.	I-495-3(22)14	25	161

PREL. TRACING _____ DESIGN _____ CHKD. _____

REVISIONS

Buildings to remain on Parcels N° 54 and 57 Lt. & Rt. Sta. 45.5 WSS 7-14-72
Buildings To Be Removed on Parcel N° 54 Lt. Sta. 45.5 WSS 7-26-72

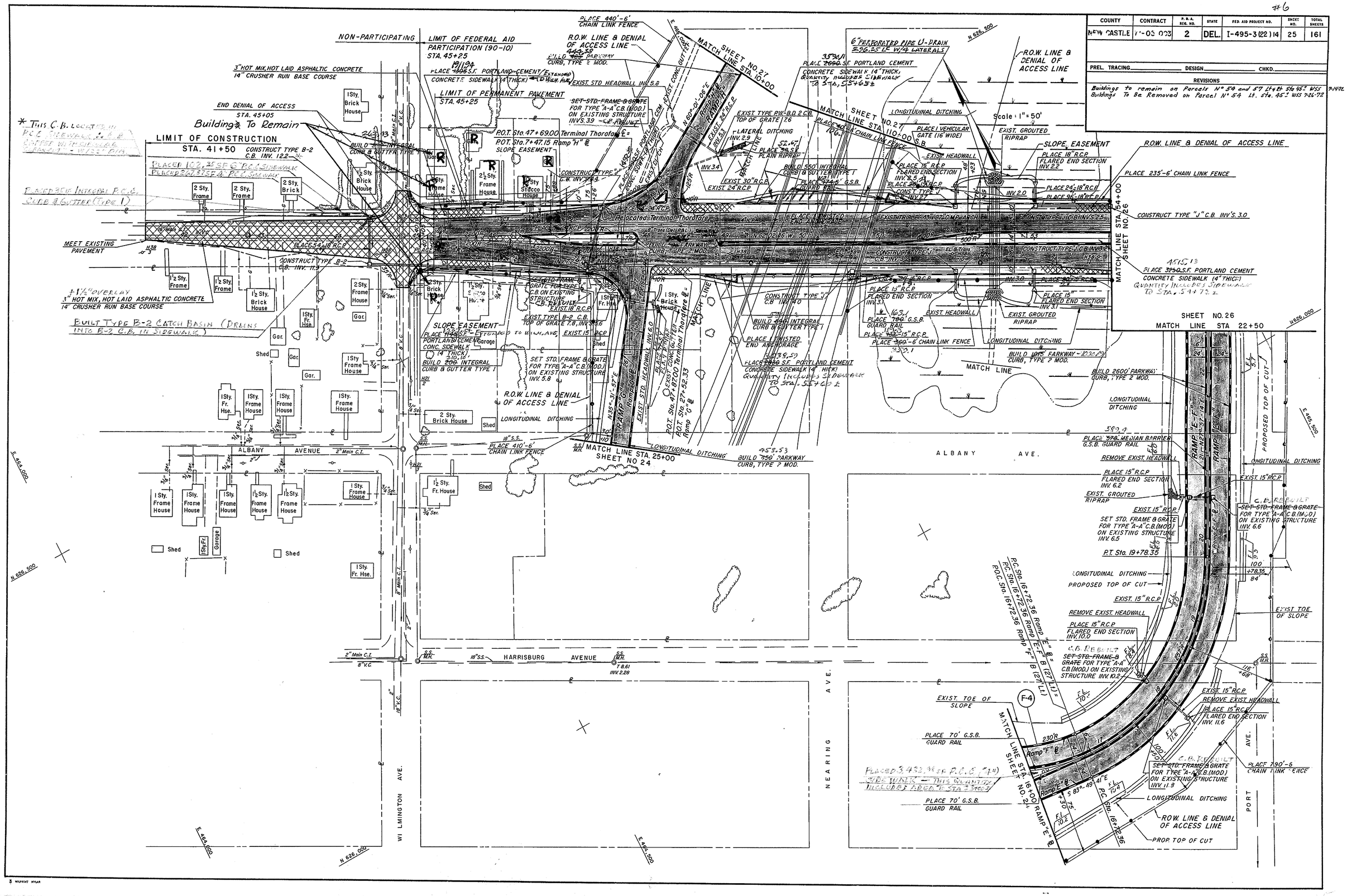

COUNTY	CONTRACT	P.R.A. REG. NO.	STATE	FED. AID. PROJECT NO.	SHEET NO.	TOTAL SHEETS
NEW CASTLE	71-05-003	2	DEL.	I-495-3(22.)14	26	161

PREL. TRACING _____ DESIGN _____ CHKD. _____

REVISIONS

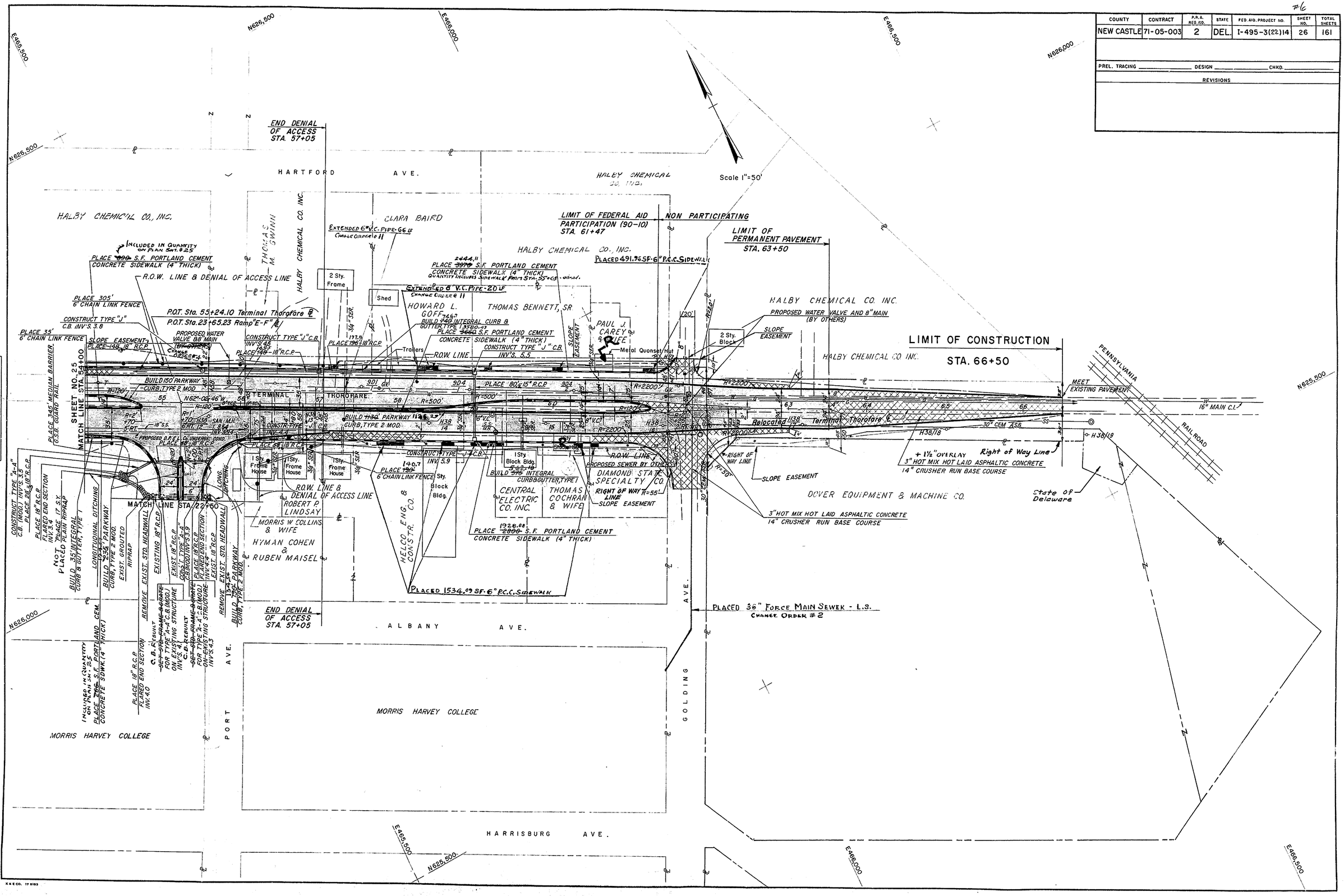

K & E CO. 17 8183

COUNTY	CONTRACT	P.R.A. REG. NO.	STATE	FED. AID PROJECT NO.	SHEET NO.	TOTAL SHEETS
NEW CASTLE	71-05-003	2	DEL.	I-495-3(22)14	27	161

PREL. TRACING _____ DESIGN _____ CHKD. _____

REVISIONS

DETAIL SPECIAL RAMP NOSE

N.T.S.

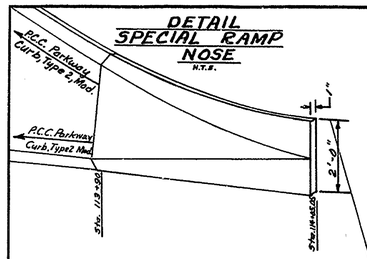

S.B. I-495 Station	Offsets From S.B. I-495 B.L. Lt. Edge Shld.	Rt. Edge Ramp	Opposite Ramp "H" Sta.
114+05.05	44.00'	46.00'	13+92.61
114+00	43.90'	47.19'	13+87.58
113+90	43.70'	49.47'	13+77.61
113+75	43.40'	53.04'	13+62.68
113+65	43.20'	55.91'	13+52.36
113+63	43.16'	56.44'	13+50.29
113+50	42.90'	59.93'	13+36.83
113+25	42.40'	66.64'	13+10.95
113+16.5	42.23'	68.98'	13+01.89
113+05.05	42.00'	71.99'	12+93.29
113+00	↓	73.35'	12+85.06
112+75	↓	80.05'	12+59.18
112+55	42.00'	85.42'	12+38.47

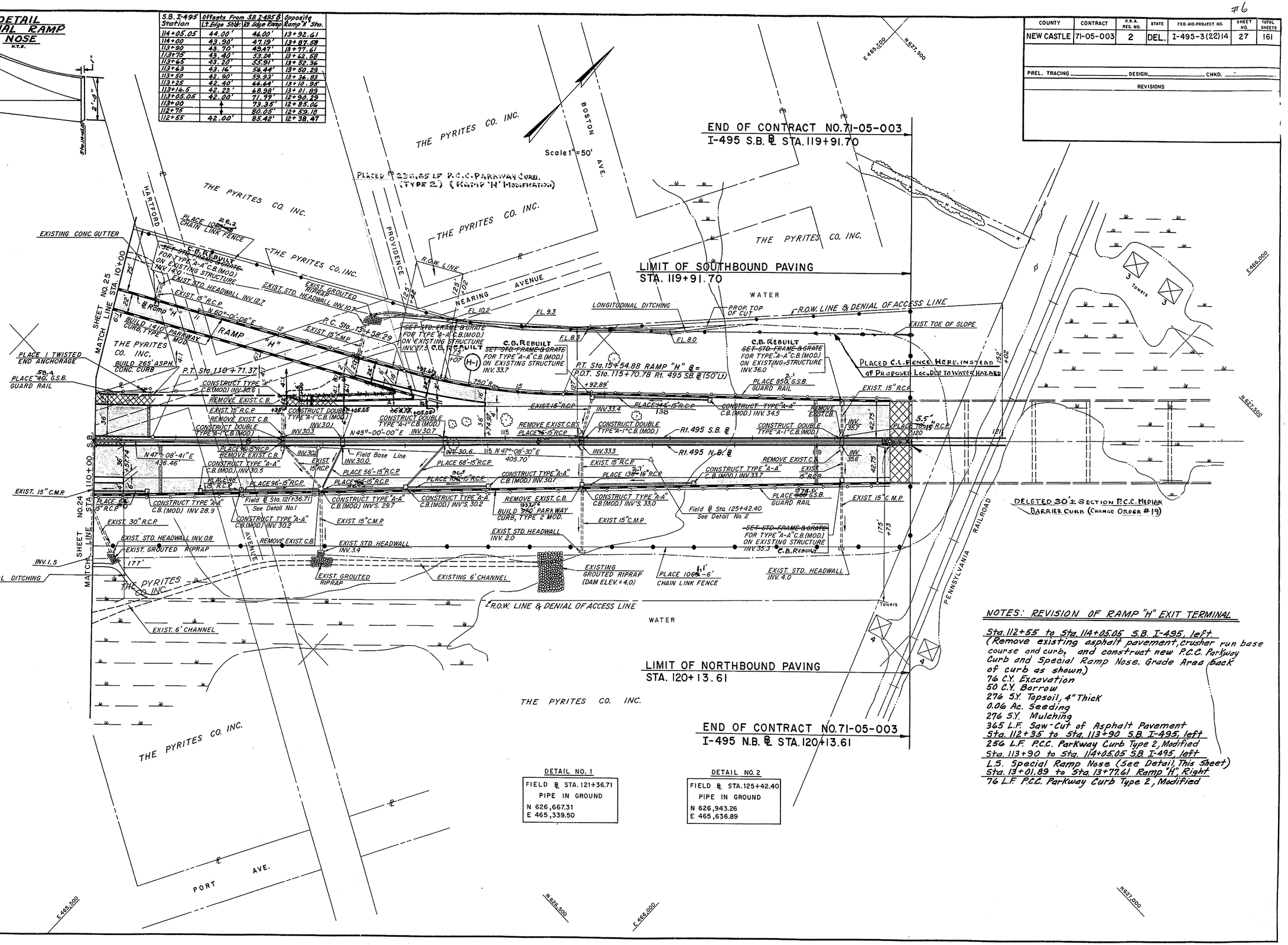

DETAIL NO. 1

FIELD ℄ STA. 121+36.71
PIPE IN GROUND
N 626,667.31
E 465,339.50

DETAIL NO. 2

FIELD ℄ STA. 125+42.40
PIPE IN GROUND
N 626,943.26
E 465,636.89

NOTES: REVISION OF RAMP "H" EXIT TERMINAL

Sta. 112+55 to Sta. 114+05.05 S.B. I-495, left
(Remove existing asphalt pavement, crusher run base course and curb, and construct new P.C.C. Parkway Curb and Special Ramp Nose. Grade Area back of curb as shown.)
76 C.Y. Excavation
50 C.Y. Borrow
276 S.Y. Topsoil, 4" Thick
0.06 Ac. Seeding
276 S.Y. Mulching
365 L.F. Saw-Cut of Asphalt Pavement
Sta. 112+35 to Sta. 113+90 S.B. I-495, left
256 L.F. P.C.C. Parkway Curb Type 2, Modified
Sta. 113+90 to Sta. 114+05.05 S.B. I-495, left
L.S. Special Ramp Nose (See Detail, This Sheet)
Sta. 13+01.89 to Sta. 13+77.61 Ramp "H", Right
76 L.F. P.C.C. Parkway Curb Type 2, Modified

CHECKED
GRADE
BEARINGS
TIE POINTS
BENCH MARKS
EARTHWORK
DRAINAGE

REVISIONS
Revised Ramp "H" Nose 4-22-74 WRJ

© D & W. REPRODUCTIONS 33123-8

COUNTY	CONTRACT	P.R.A. REG. NO.	STATE	FED. AID PROJECT NO.	SHEET NO.	TOTAL SHEETS
NEW CASTLE	71-05-003	2	DEL.	I-495-3(22)14	28	161

MAINLINE PROFILE

PREL. TRACING _____ DESIGN _____ CHKD. _____

REVISIONS

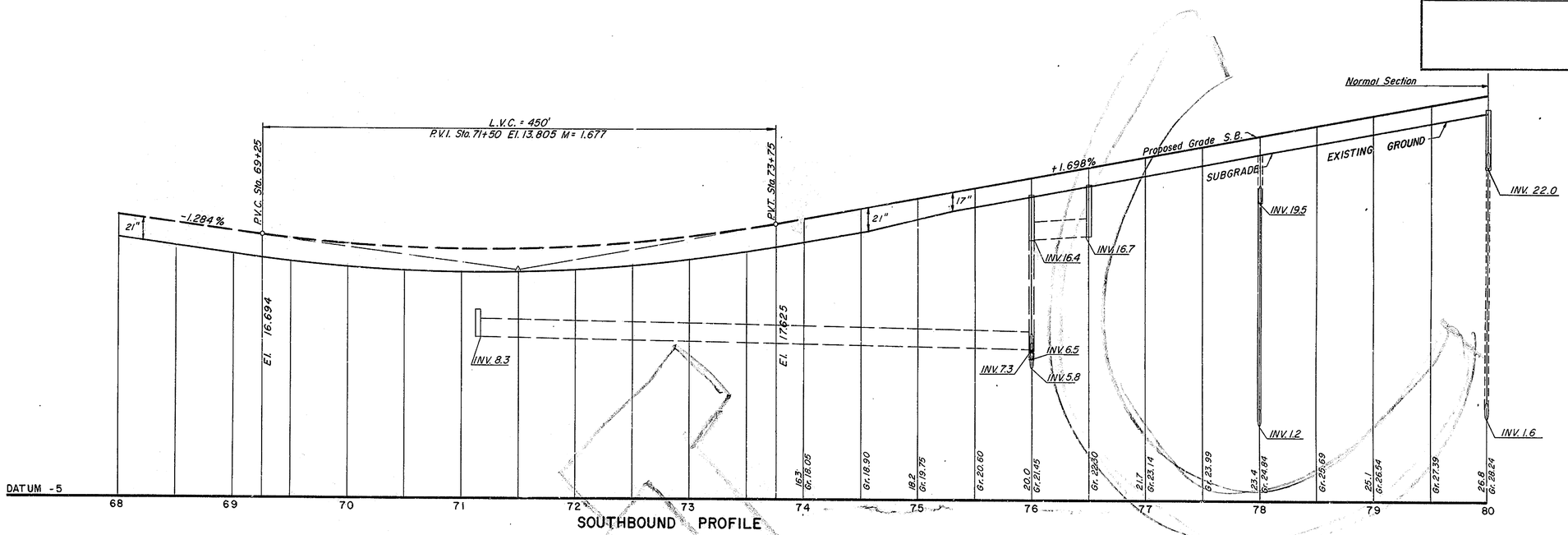

SOUTHBOUND PROFILE

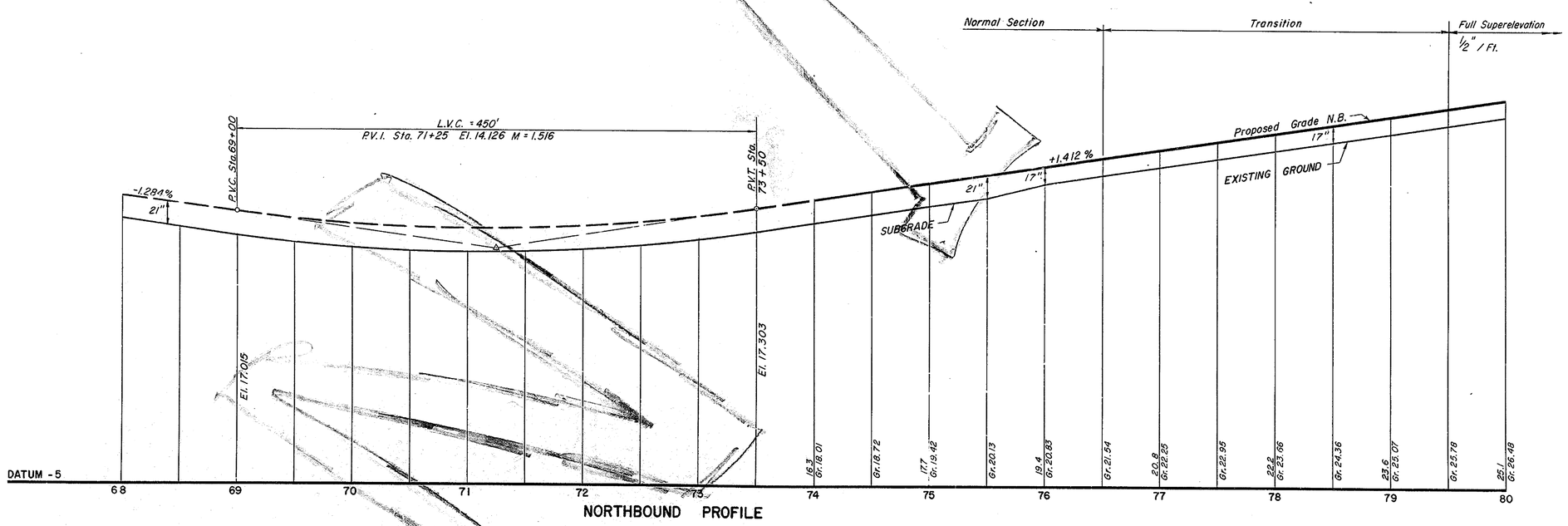

NORTHBOUND PROFILE

MAINLINE PROFILE

Scale Horiz. 1" = 50'
Vert. 1" = 5'

GRADE
BEARINGS
TIE POINTS
BENCH MARKS
EARTHWORK
DRAINAGE

REVISIONS

K & E CO. 17 5133

COUNTY	CONTRACT	P.R.A. REG. NO.	STATE	FED. AID PROJECT NO.	SHEET NO.	TOTAL SHEETS
NEW CASTLE	71-05-003	2	DEL.	I-495-3(22)14	29	161

MAINLINE PROFILE

PREL. TRACING _____ DESIGN _____ CHK. _____

REVISIONS

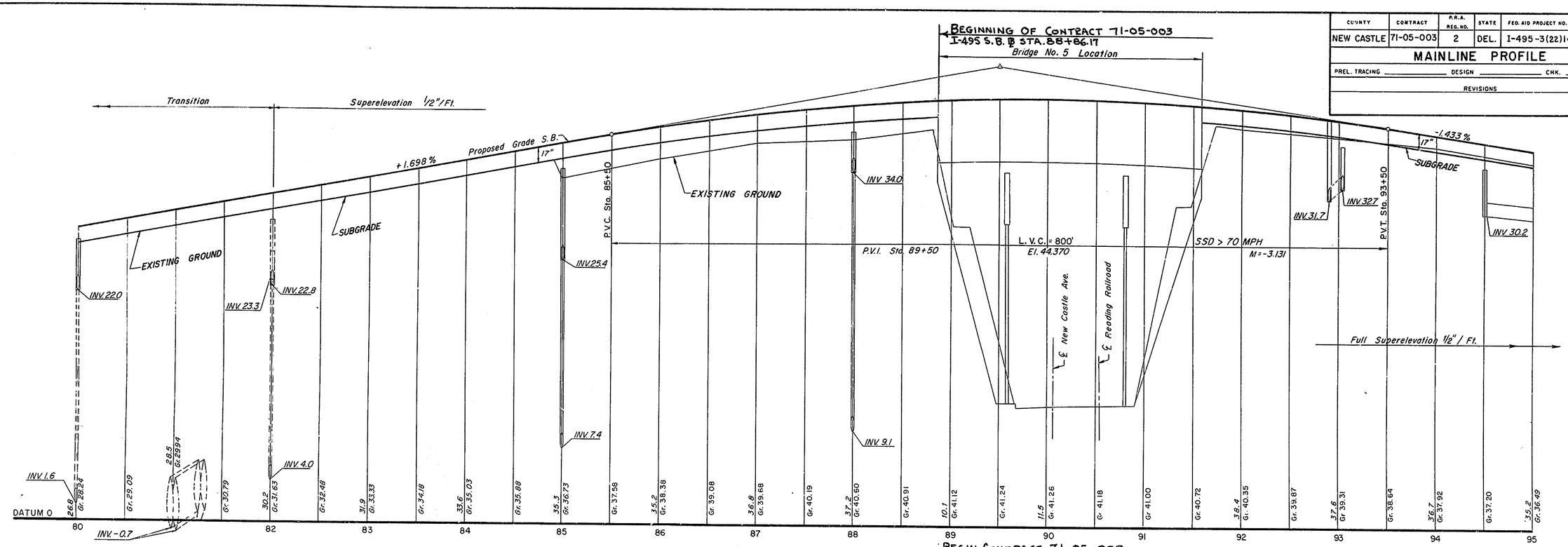

SOUTHBOUND PROFILE

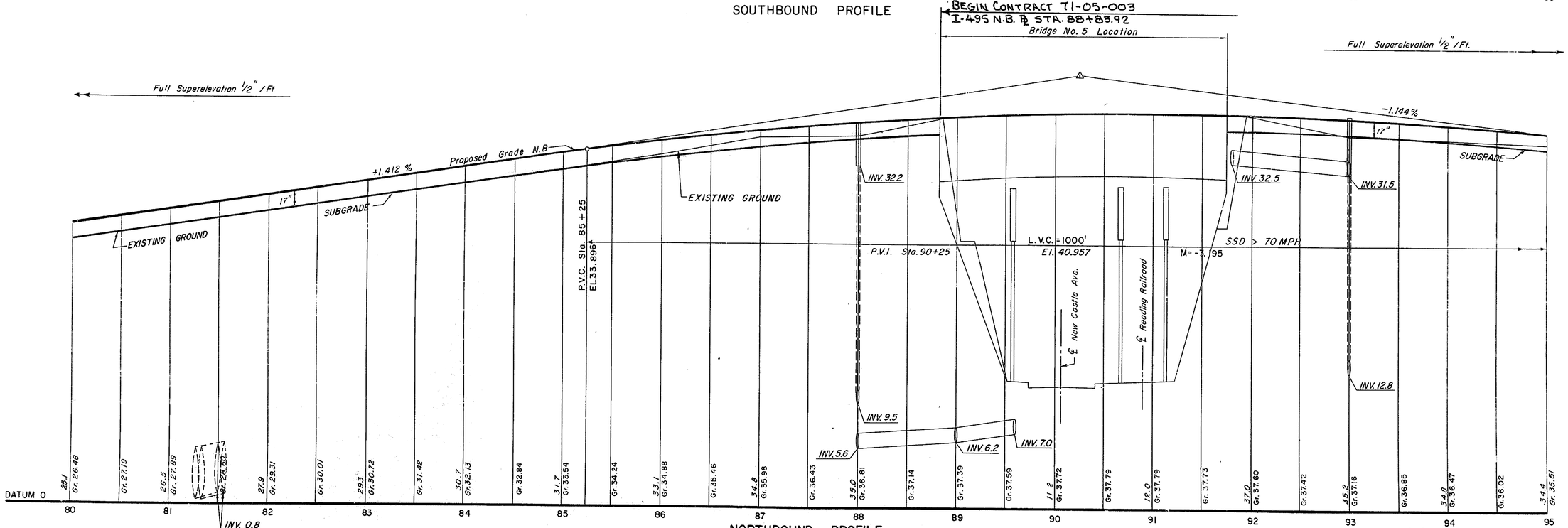

NORTHBOUND PROFILE

MAINLINE PROFILE

Scale Horiz. 1" = 50'
Vert. 1" = 5'

CHECKED
GRADE
BEARINGS
TIE POINTS
BENCH MARKS
EARTHWORK
DRAINAGE

REVISIONS

K & E CO. 17 8183

COUNTY	CONTRACT	P.R.A. REQ. NO.	STATE	FED. AID. PROJECT NO.	SHEET NO.	TOTAL SHEETS
NEW CASTLE	71-05-003	2	DEL.	I-495-3(22)14	30	161

MAINLINE PROFILE

PREL. TRACING _____ DESIGN _____ CHED. _____

REVISIONS

BEARINGS
TIE POINTS
BENCH MARKS
EARTHWORK
DRAINAGE

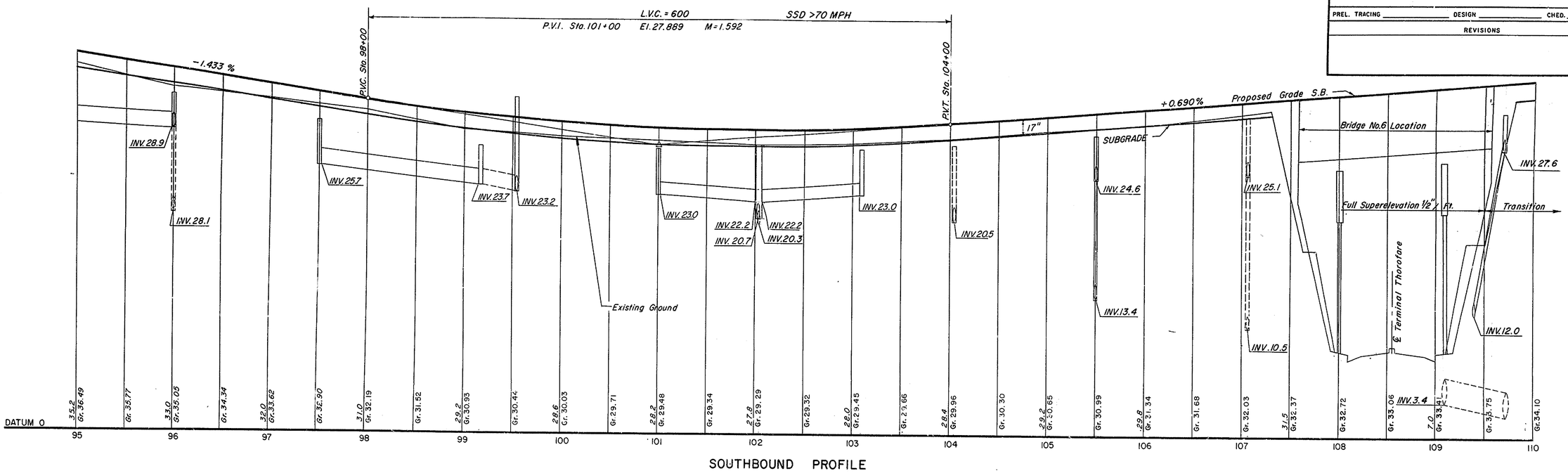

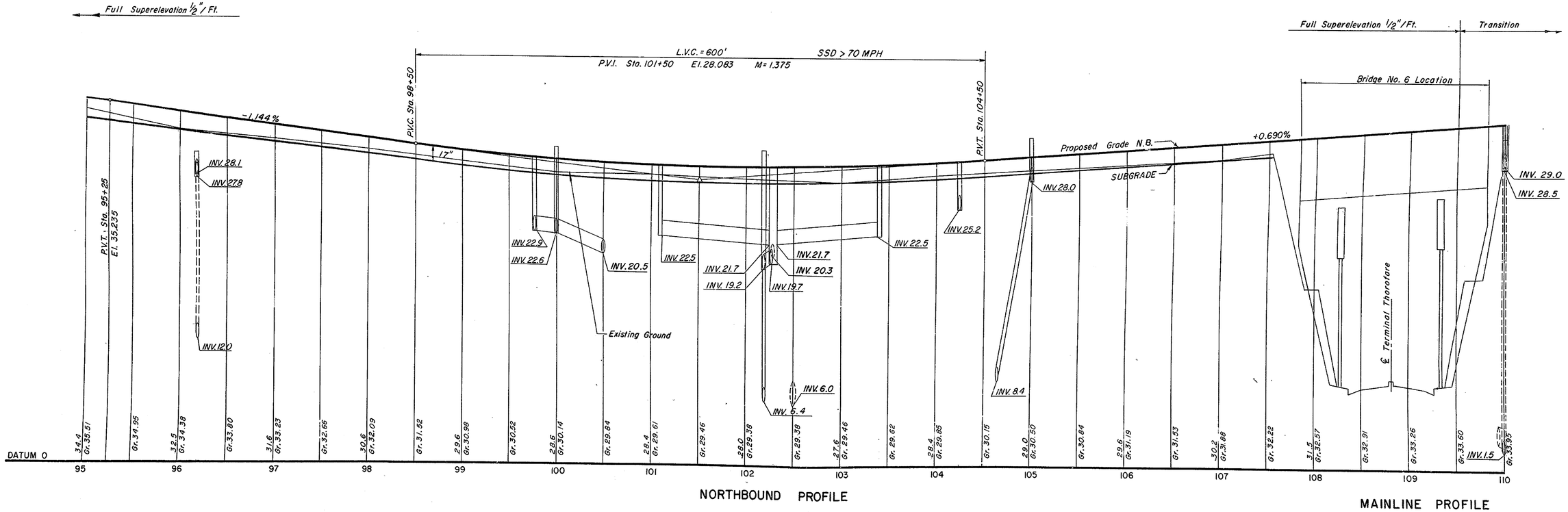

MAINLINE PROFILE

Scale Horiz 1" = 50'
Vert. 1" = 5'

K & E CO. 17 5193

COUNTY	CONTRACT	P.R.A. REG.NO.	STATE	FED. AID PROJECT NO.	SHEET NO.	TOTAL SHEETS
NEW CASTLE	71-05-003	2	DEL.	I-495-3(22)14	31	161

MAINLINE PROFILE

PREL. TRACING _____ DESIGN _____ CHKD. _____

REVISIONS

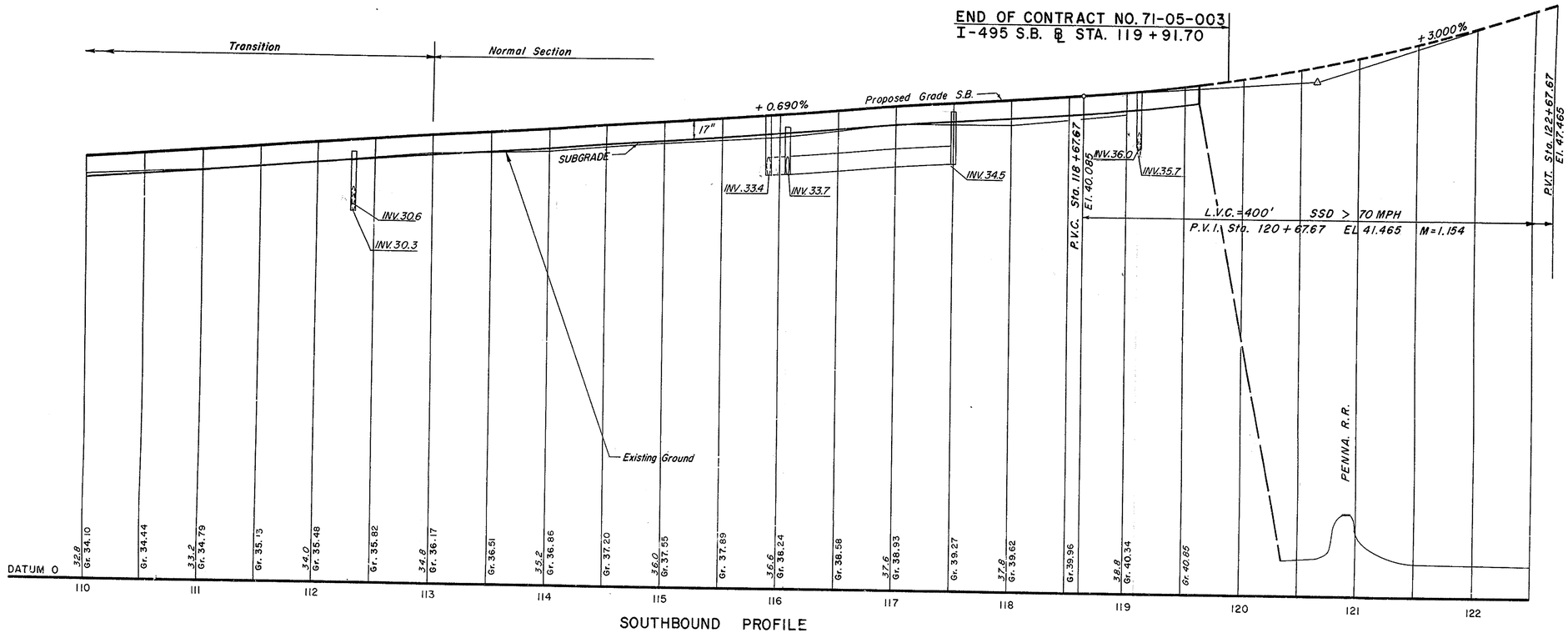

SOUTHBOUND PROFILE

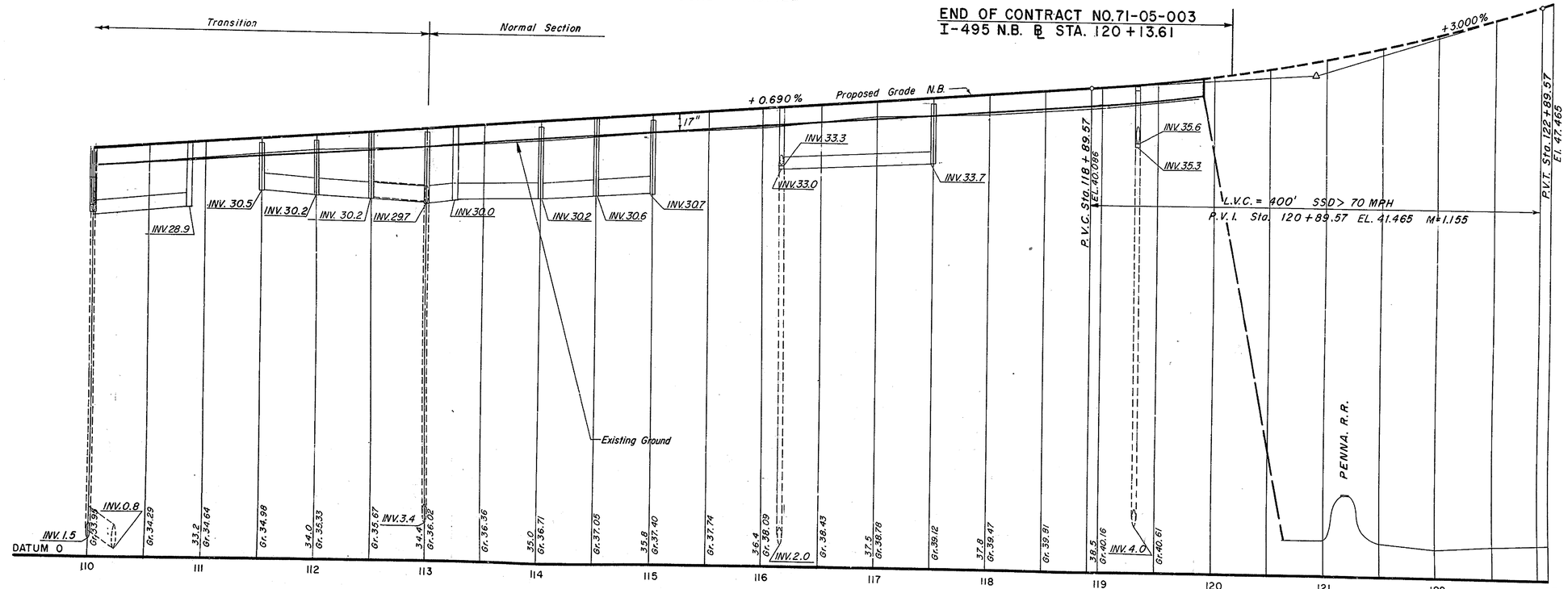

NORTHBOUND PROFILE

MAINLINE PROFILE

Scale Horiz. 1" = 50'
Vert. 1" = 5'

BEARINGS
TIE POINTS
BENCH MARKS
EARTHWORK
DRAINAGE

COUNTY	CONTRACT	P.R.A. REG. NO.	STATE	FED. AID PROJECT NO.	SHEET NO.	TOTAL SHEETS
NEW CASTLE	71-05-003	2	DEL.	I-495-3(22)14	32	161

RAMP "E" PROFILE

PREL. TRACING _____ DESIGN _____ CHKD. _____

REVISIONS

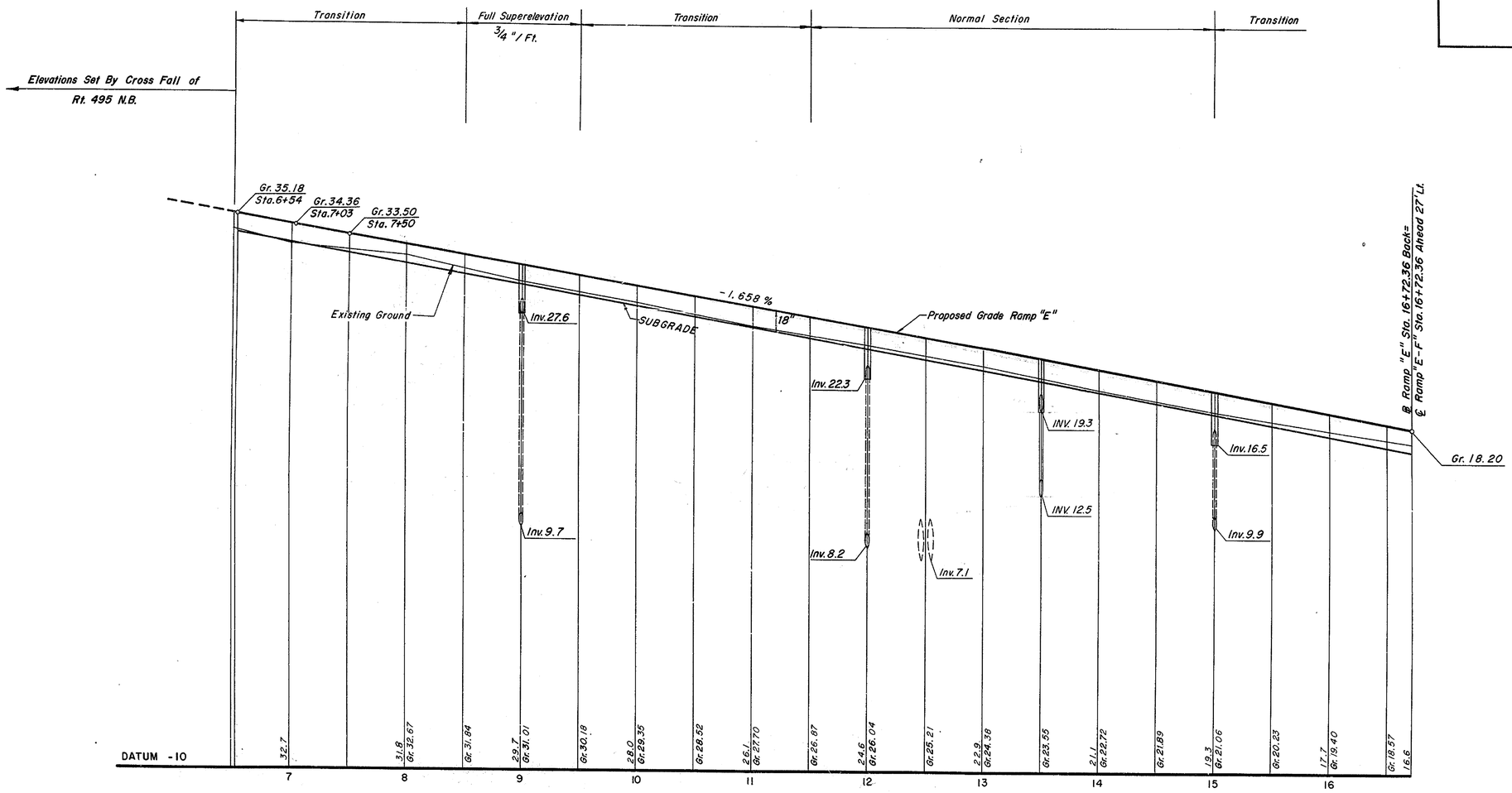

RAMP "E" PROFILE

RAMP "E" PROFILE
Scale Horiz 1" = 50'
Vert. 1" = 5'

BEARINGS
TIE POINTS
BENCH MARKS
EARTHWORK
DRAINAGE

K & E CO. 17 5183

COUNTY	CONTRACT	P.R.A. REG. NO.	STATE	FED. AID. PROJECT NO.	SHEET NO.	TOTAL SHEETS
NEW CASTLE	71-05-003	2	DEL.	I-495-3(22)14	33	161

RAMP "F" AND "E-F" PROFILE

PREL. TRACING _____ DESIGN _____ CHKD. _____

REVISIONS

BEARINGS
TRAVERSE
BENCH MARKS
EARTHWORK
DRAINAGE

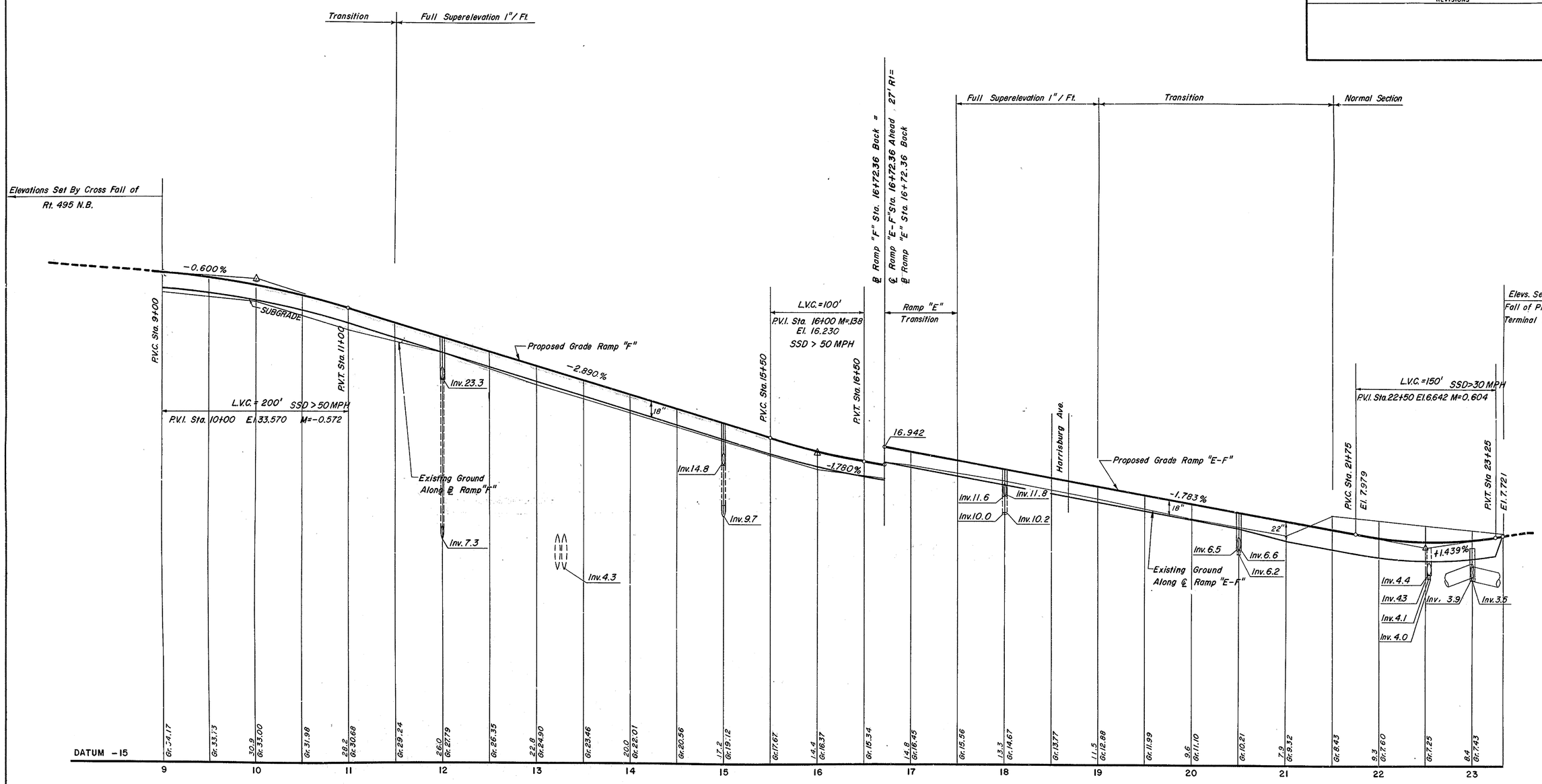

RAMP "F" AND "E-F" PROFILE

RAMP "F" AND "E-F" PROFILE

Scale Horiz 1" = 50'
Vert. 1" = 5'

K & E CO. 17 5183

COUNTY	CONTRACT	R.R.A. REG. NO.	STATE	FED. AID PROJECT NO.	SHEET NO.	TOTAL SHEETS
NEW CASTLE	71-05-003	2	DEL.	I-495-3(22)14	34	161

RAMP "G" PROFILE

PREL. TRACING _____ DESIGN _____ CHKD. _____

REVISIONS

BEARINGS
TIE POINTS
BENCH MARKS
EARTHWORK
DRAINAGE

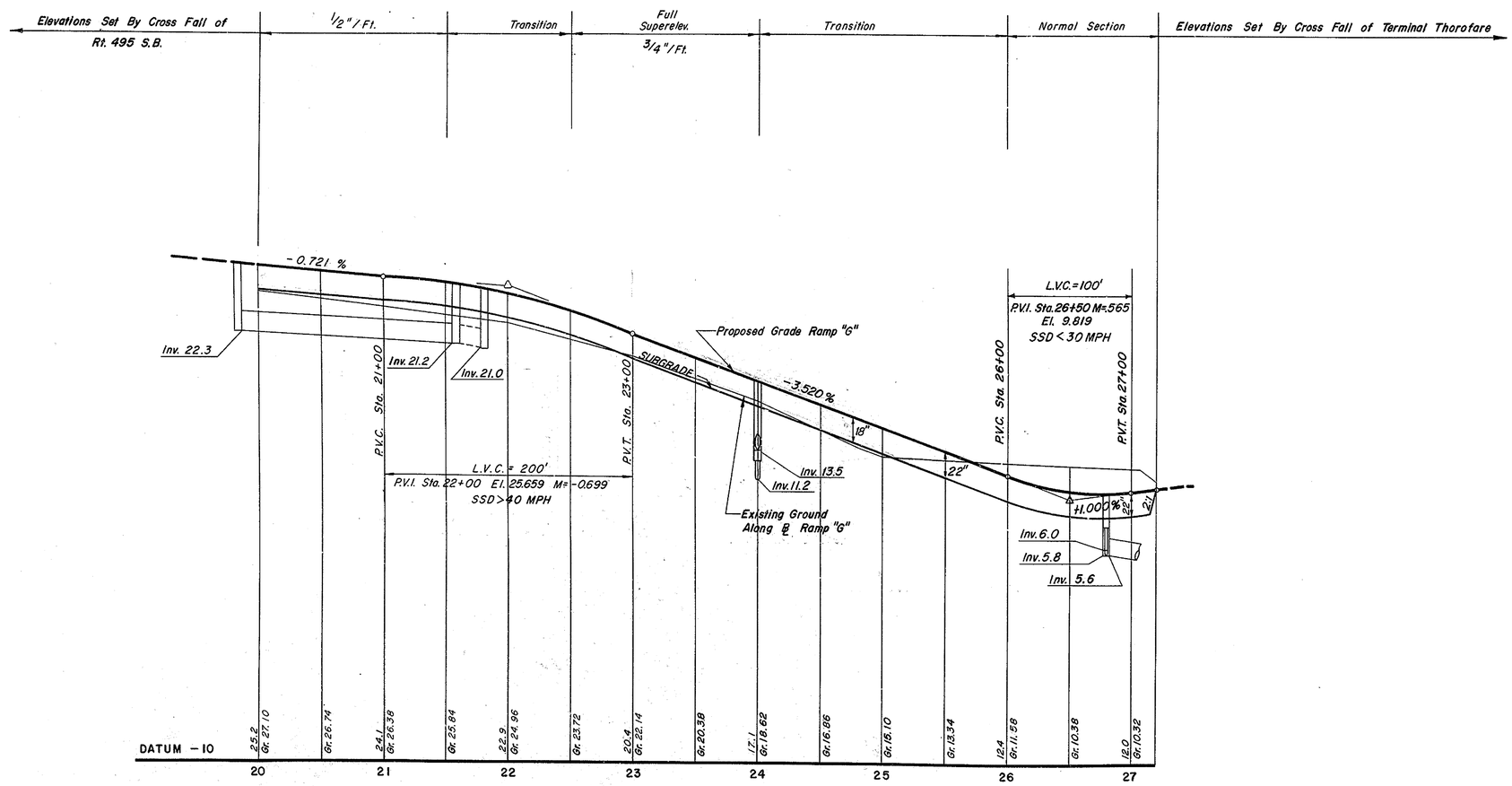

RAMP "G" PROFILE

RAMP "G" PROFILE
Scale Horiz 1"=50'
Vert. 1"=5'

K & E CO. 17 5153

COUNTY	CONTRACT	P.R.A. REG.NO.	STATE	FED. AID PROJECT NO.	SHEET NO.	TOTAL SHEETS
NEW CASTLE	71-05-003	2	DEL.	I-495-3(22)14	35	161

RAMP "H" PROFILE

PREL. TRACING _____ DESIGN _____ CHKD. _____

REVISIONS

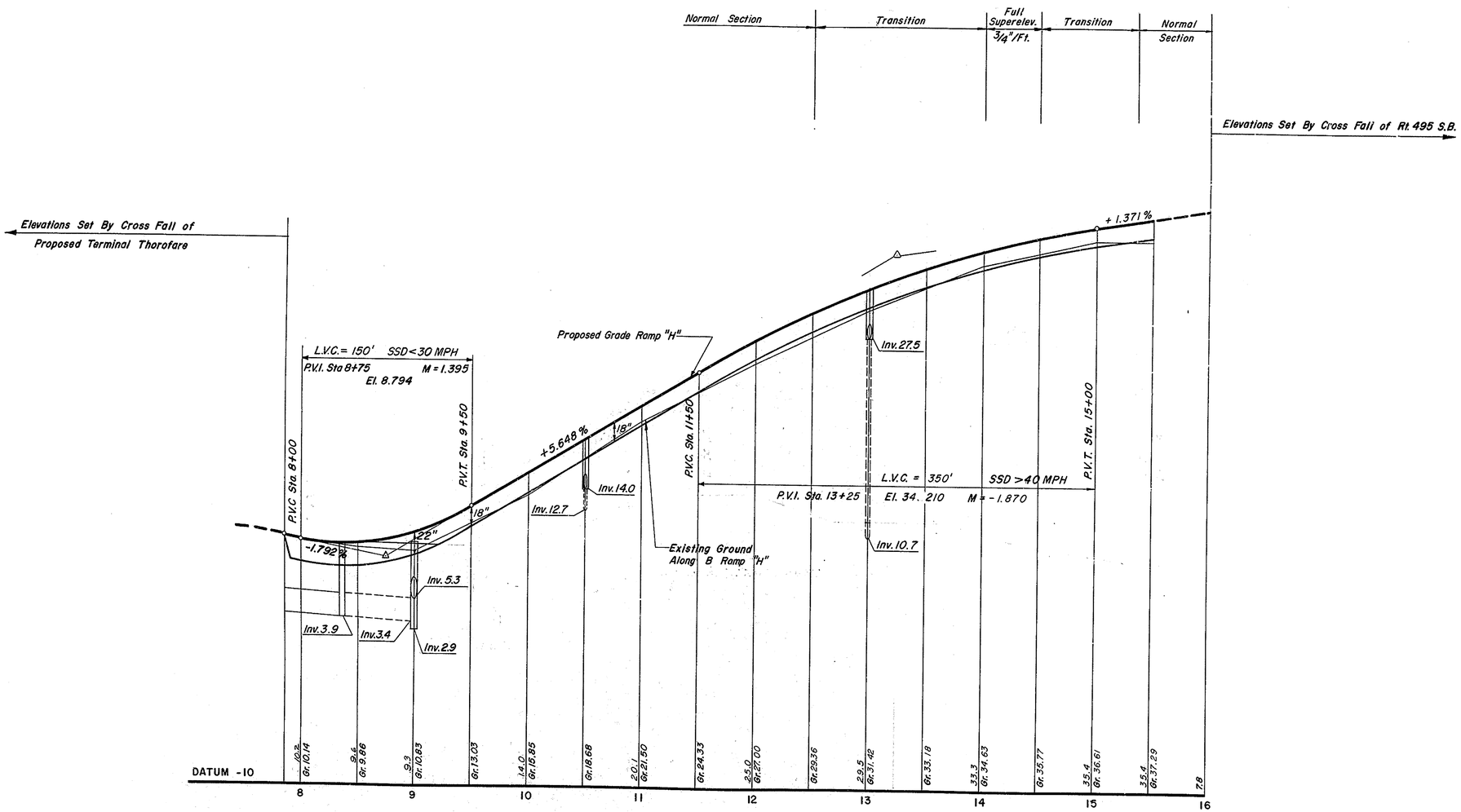

RAMP "H" PROFILE

GRADE
BEARINGS
TIE POINTS
BENCH MARKS
EARTHWORK
DRAINAGE

REVISIONS

RAMP "H" PROFILE

Scale Horiz 1" = 50'
Vert. 1" = 5'

K & E CO. 17 5153

COUNTY	CONTRACT	P.R.A. REG.NO.	STATE	FED. AID PROJECT NO.	SHEET NO.	TOTAL SHEETS
NEW CASTLE	71-05-003	2	DEL.	I-495-3(22)14	36	161

TERMINAL THOROFARE IMPROVEMENT

PREL. TRACING _____ DESIGN _____ CHKD. _____

REVISIONS.

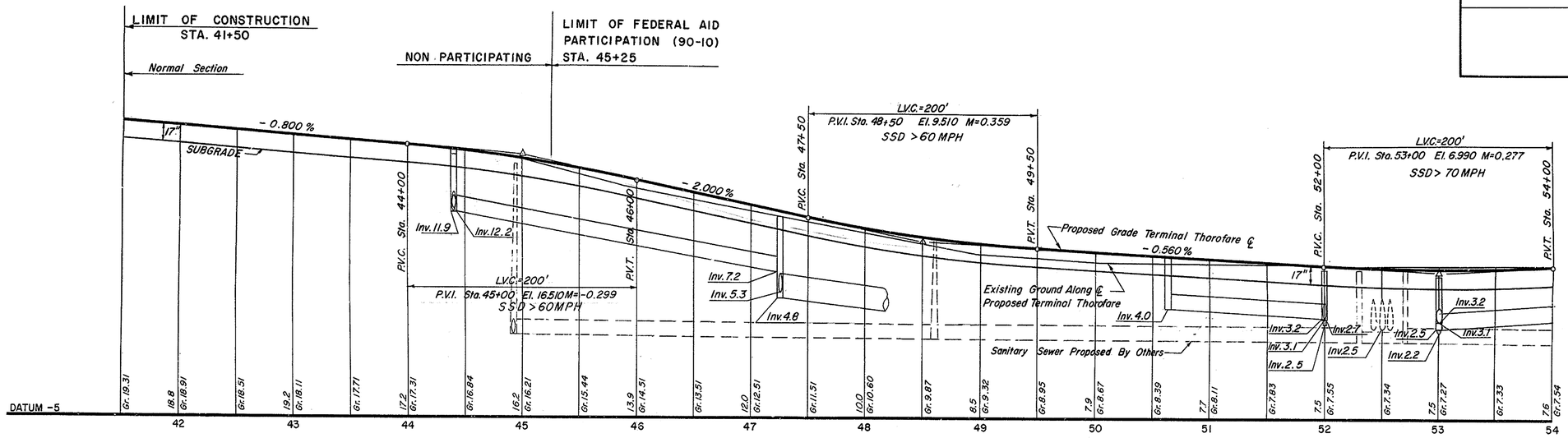

TERMINAL THOROFARE IMPROVEMENT

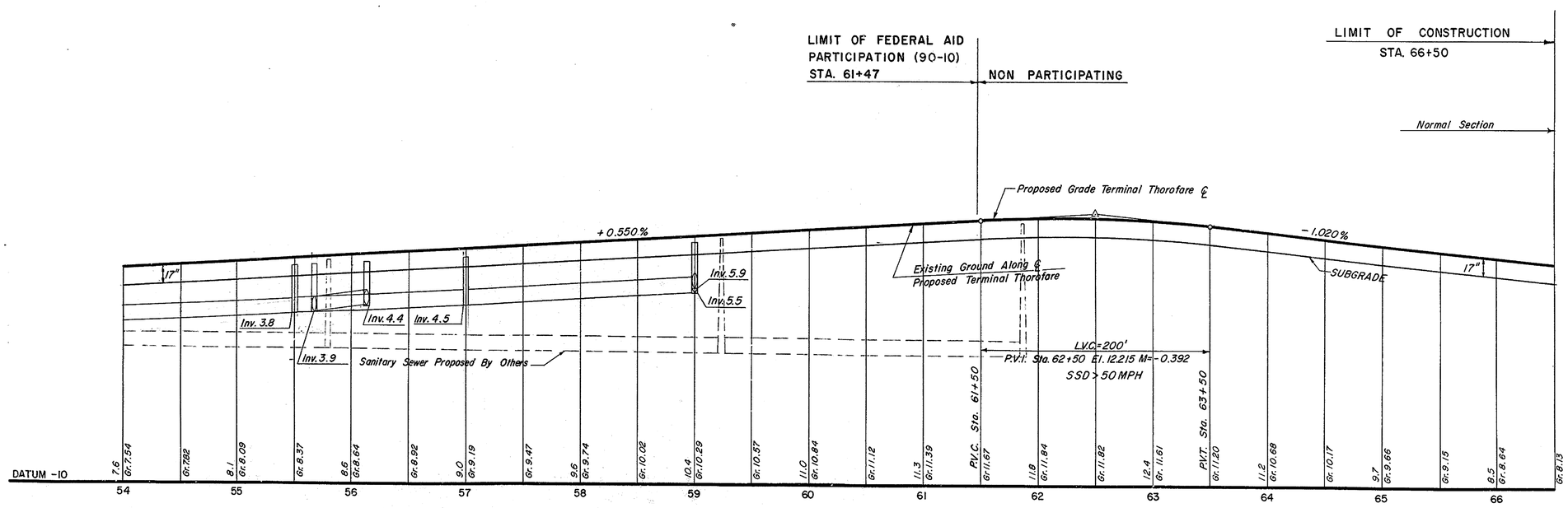

TERMINAL THOROFARE IMPROVEMENT

TERMINAL THOROFARE IMPROVEMENT

Scale Horiz 1"= 50'
Vert. 1"= 5'

BEARINGS
TIE POINTS
BENCH MARKS
EARTHWORK
DRAINAGE

K & E CO. 17 5183

D C B A A B C D

COUNTY	CONTRACT	P.B.A. REG. NO.	STATE	FED. AID PROJECT NO.	SHEET NO.	TOTAL SHEETS
NEW CASTLE	71-05-003	2	DEL	I-495 3 (22) 14	36A	161

TERMINAL THOROFARE

PREL. TRACING C.H. SHORT DESIGN _____ CHKD. _____

10/28/71 REVISIONS

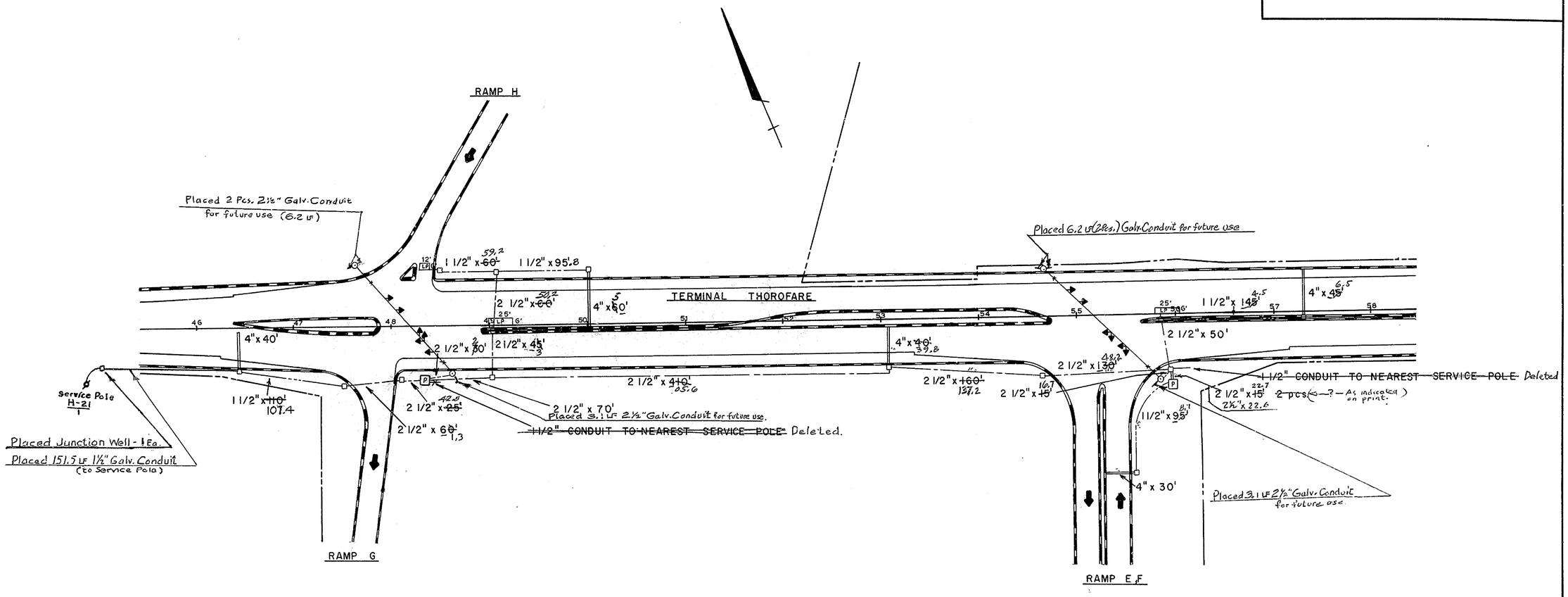

LEGEND

- STEEL POLE BASE
- P CABINET BASE
- 2 1/2" GALV. CONDUIT
- 1 1/2" GALV. CONDUIT
- 4" NON-METLLIC CONDUIT
- LOOP DETECTOR
- JUNCTION WELL
- SPAN WIRE
- SIGNAL HEAD

Scale: 1"=50'

COUNTY	CONTRACT	P.R.A. REG.NO.	STATE	FED.AID.PROJECT NO.	SHEET NO.	TOTAL SHEETS
NEW CASTLE	71-05-003	2	DEL.	I-495-3(22)14	37	161

PAVEMENT DETAILS

PREL. TRACING _____ DESIGN _____ CHKD. _____

REVISIONS

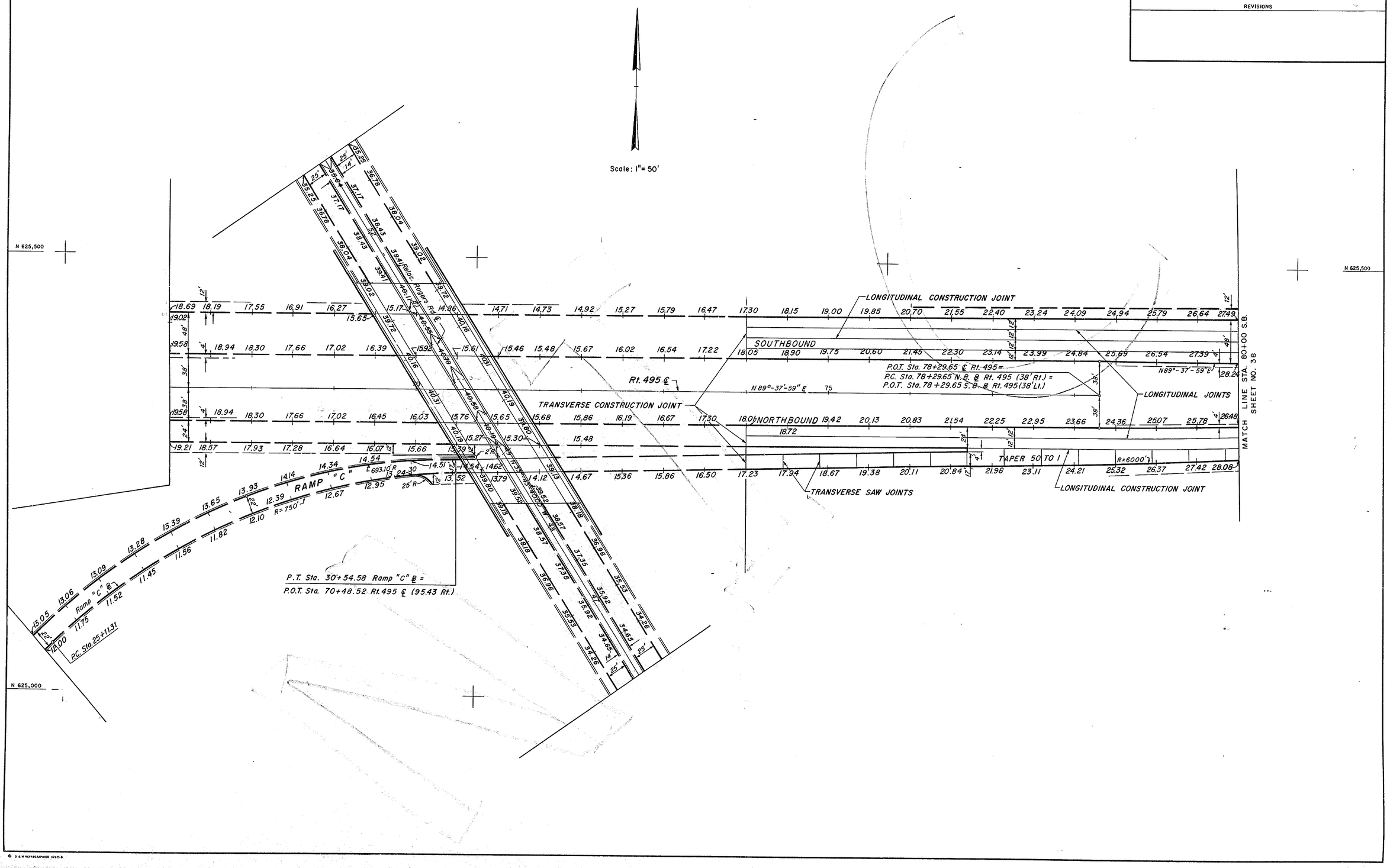

COUNTY	CONTRACT	P.R.A. REG. NO.	STATE	FED. AID. PROJECT NO.	SHEET NO.	TOTAL SHEETS
NEW CASTLE	71-05-003	2	DEL.	I-495-3(22)14	38	161

PAVEMENT DETAILS

PREL. TRACING _____ DESIGN _____ CHKD _____

REVISIONS

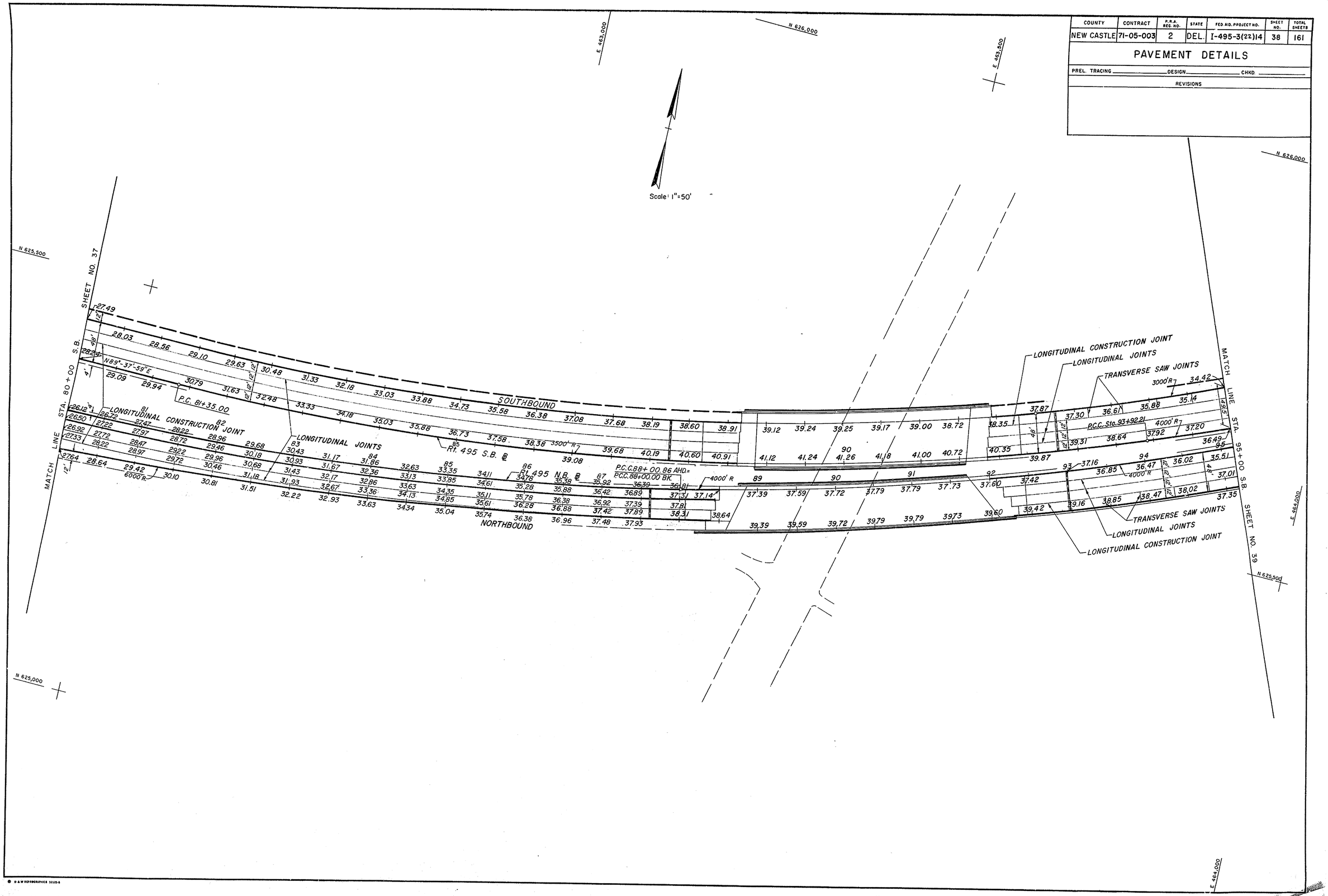

COUNTY	CONTRACT	P.R.A. REG.NO.	STATE	FED. AID. PROJECT NO.	SHEET NO.	TOTAL SHEETS
NEW CASTLE	71-05-003	2	DEL.	I-495-3(22)14	39	161

PAVEMENT DETAILS

PREL. TRACING _____ DESIGN _____ CHKD. _____

REVISIONS

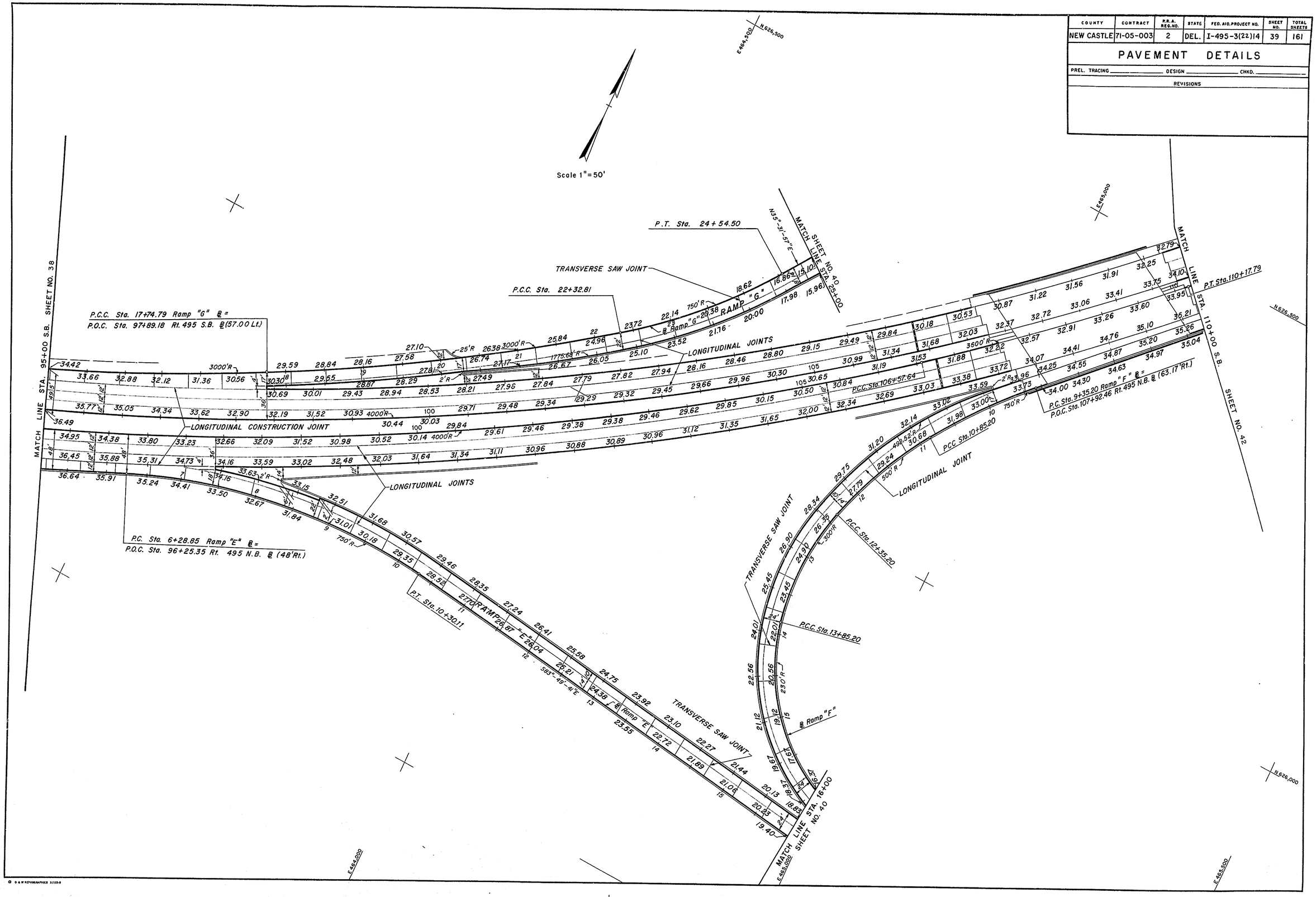

COUNTY	CONTRACT	P.R.A. REG. NO.	STATE	FED. AID PROJEC NO.	SHEET NO.	TOTAL SHEETS
NEW CASTLE	71-05-003	2	DEL.	I-495-3(22)14	40	161

PAVEMENT DETAILS

PREL. TRACING _____ DESIGN _____ CHKD. _____

REVISIONS

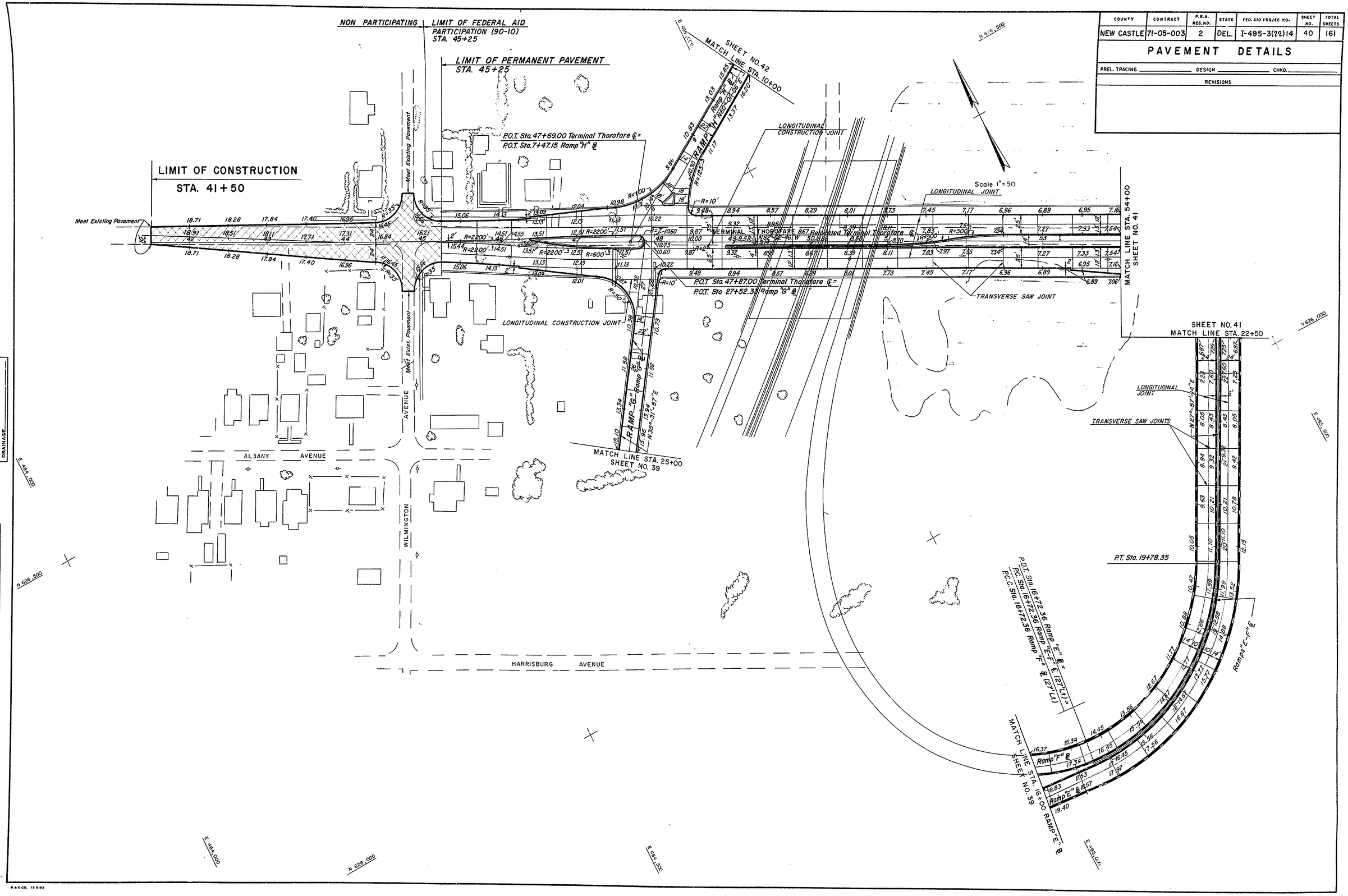

BEARINGS
TIE POINTS
BENCH MARKS
EARTHWORK
DRAINAGE

K & E CO. 17 5183

COUNTY	CONTRACT	P.R.A. REG. NO.	STATE	FED. AID. PROJECT NO.	SHEET NO.	TOTAL SHEETS
NEW CASTLE	71-05-003	2	DEL.	I-495-3(22)14	41	161

PAVEMENT DETAILS

PREL. TRACING _____ DESIGN _____ CHKD. _____

REVISIONS

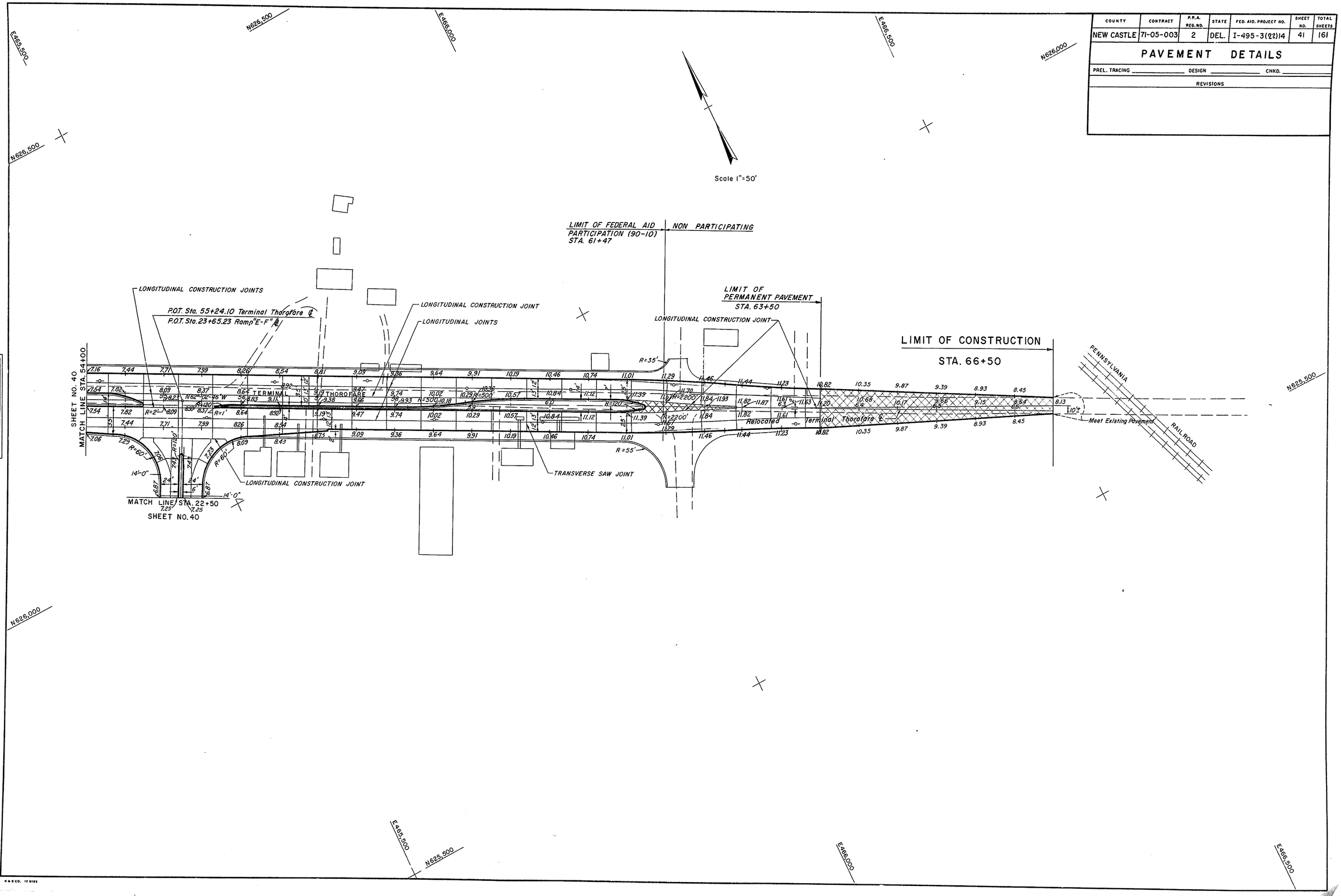

CHECKED
GRADE
BEARINGS
TIE POINTS
BENCH MARKS
EARTHWORK
DRAINAGE

REVISIONS

K & E CO. 17 5183

COUNTY	CONTRACT	P.R.A. REG. NO.	STATE	FED. AID PROJECT NO	SHEET NO.	TOTAL SHEETS
NEW CASTLE	71-05-003	2	DEL.	I-495-3(22)14	42	161

PAVEMENT DETAILS

PREL. TRACING _____ DESIGN _____ CHKD. _____

REVISIONS

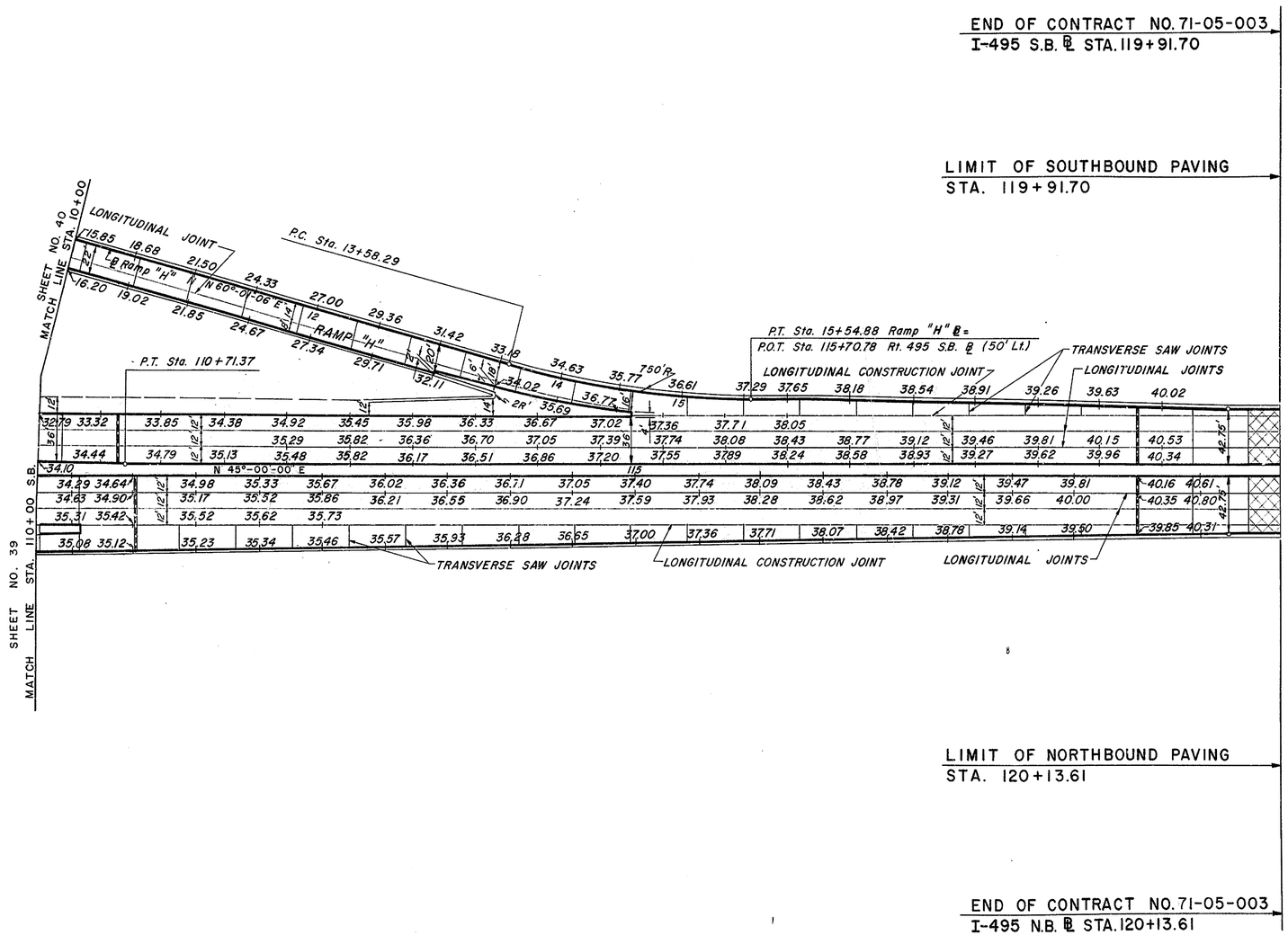

COUNTRY	CONTRACT	P.R.A. REG. NO.	STATE	FED. AID PROJECT NO.	SHEET NO.	TOTAL SHEETS
NEW CASTLE	71-05-003	2	DEL.	I-495-3(22)14	43	161

BORING LOCATION PLAN

PREL. TRACING _____ DESIGN _____ CHKD. _____

REVISIONS

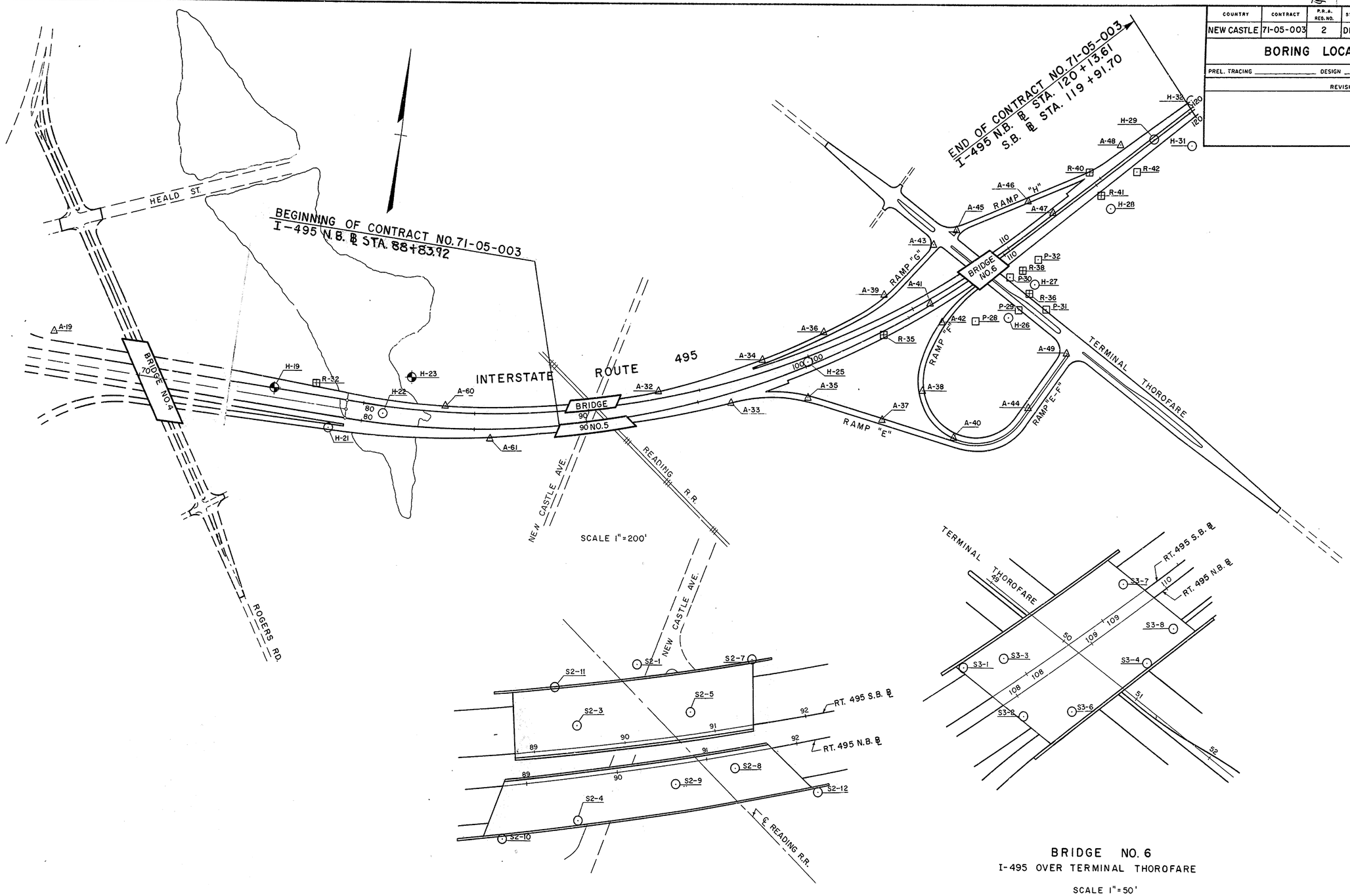

BRIDGE NO. 5
I-495 OVER NEW CASTLE AVE. & READING R.R.
SCALE 1"= 50'

BRIDGE NO. 6
I-495 OVER TERMINAL THOROFARE
SCALE 1"=50'

BORING LOCATION PLAN

CHECKED
GRADE
BEARINGS
TIE POINTS
BENCH MARKS
EARTHWORK
DRAINAGE

REVISIONS

R.B.&E.CO. 17 5183

COUNTY	CONTRACT	P.R.A. REG. NO.	STATE	FED. AID PROJECT NO.	SHEET NO.	TOTAL SHEETS
NEW CASTLE	71-05-003	2	DEL.	I-495-3(22)14	44	161

BORING DESCRIPTION SHEET

PREL. TRASING

DESIGN

CHKD.

REVISIONS

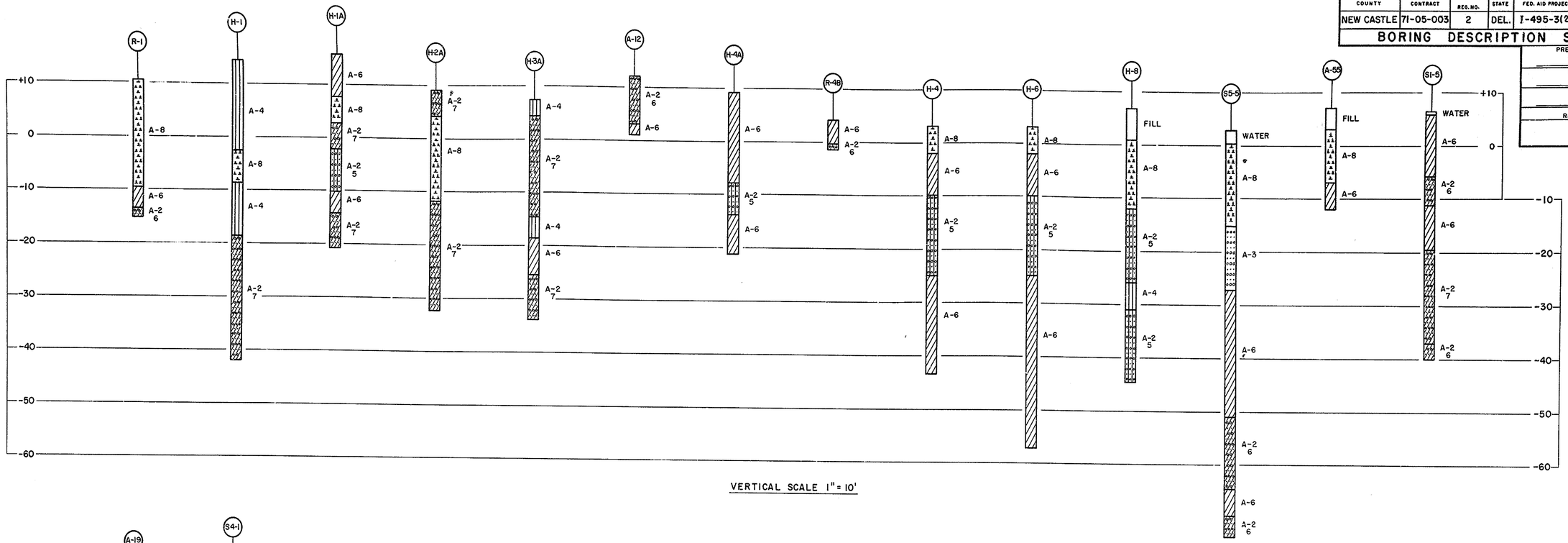

VERTICAL SCALE 1" = 10'

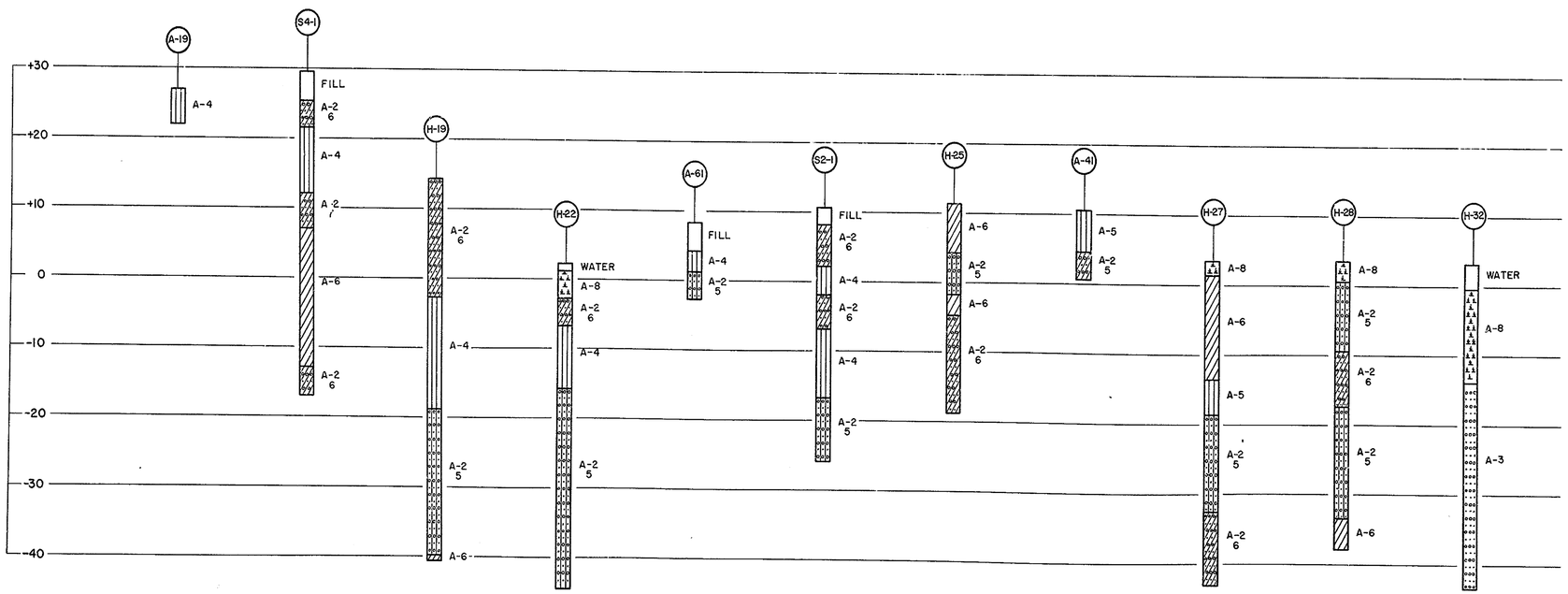

VERTICAL SCALE 1" = 10'

LOCATION OF BORINGS					
NO.	STATION	OFFSET	NO.	STATION	OFFSET
R-1	Sta. 0+00	℄	S4-1	Sta. 70+50	82' L
H-1	Sta. 3+60	℄	H-19	Sta. 76+00	38' L
H-1A	Sta. 6+60	60' L	H-22	Sta. 80+90 S.B.	40' R
H-2A	Sta. 18+37	℄	A-61	Sta. 85+60 S.B.	95' R
H-3A	Sta. 21+60	60' L	S2-1	Sta. 90+20 S.B.	65' L
A-12	Sta. 27+10	100' L	H-25	Sta. 99+90 S.B.	15' R
H-4A	Sta. 33+30	60' L	A-41	Sta. 105+80 S.B.	5' R
R-4B	Sta. 37+00	100' L	H-27	Sta. 110+10 S.B.	190' R
H-4	Sta. 42+10	60' L	H-28	Sta. 114+60 S.B.	125' R
H-6	Sta. 45+00	110' R	H-32	Sta. 120+00 S.B.	30' L
H-8	Sta. 47+76	℄			
S5-5	Sta. 51+00	35' R			
A-55	Sta. 54+00	℄			
S1-5	Sta. 60+50	75' L			
A-19	Sta. 66+00	120' L			

BEARINGS
TIE POINTS
BENCH MARKS
EARTHWORK
DRAINAGE

BORING DESCRIPTION SHEET

K & E CO. 17 5183

COUNTY	CONTRACT	P.S.A. REG. NO.	STATE	FED. AID PROJECT NO.	SHEET NO.	TOTAL SHEETS
NEW CASTLE	71-05-003	2	DEL.	I-495-3(22)14	45	161

BORING DESCRIPTION SHEET

PREL TRACING _____ DESIGN _____ CHKD. _____

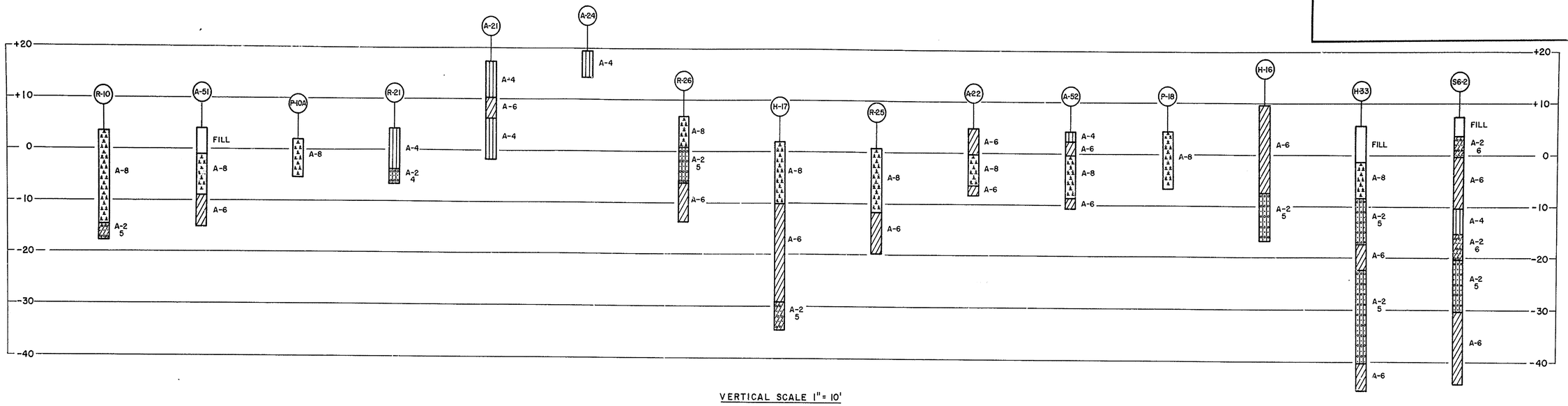

VERTICAL SCALE 1" = 10'

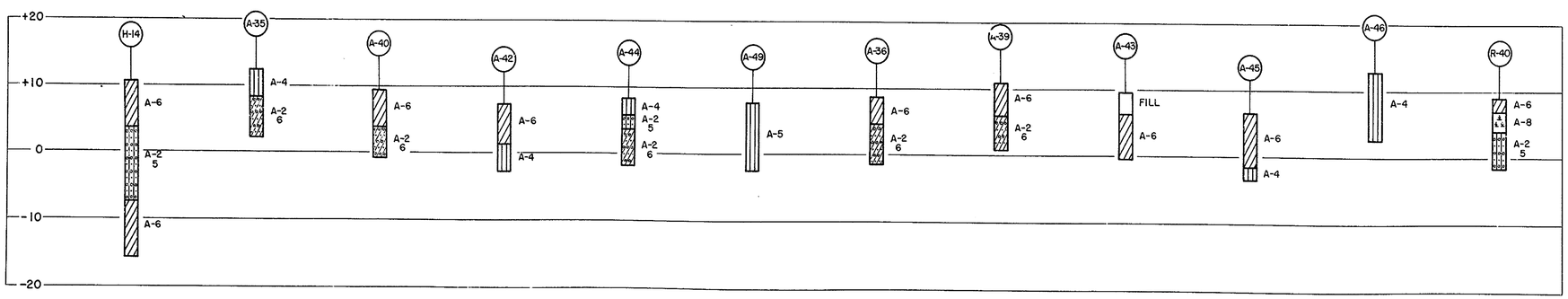

VERTICAL SCALE 1" = 10'

LOCATION OF BORINGS					
NO.	STATION	OFFSET	NO.	STATION	OFFSET
R-10	Ramp "A" Sta. 29+15	5'L	S6-2	Ramp "D" Sta. 29+30	℄
A-51	" Sta. 32+50	15'R	H-14	" Sta. 33+00	30'R
P-10A	" Sta. 35+25	45'R	A-35	Ramp "E" Sta. 9+90	20'L
R-21	" Sta. 40+80	35'R	A-40	" Sta. 16+50	30'L
A-21	" Sta. 45+35	℄	A-42	Ramp "F" Sta. 11+15	20'R
A-24	Ramp "B" Sta. 10+80	85'L	A-44	Ramps "E-F" Sta. 20+30	10'L
R-26	" Sta. 15+45	℄	A-49	" Sta. 23+20	15'L
H-17	" Sta. 20+50	140'R	A-36	Ramp "G" Sta. 20+95	15'L
R-25	" Sta. 23+95	50'R	A-39	" Sta. 24+05	10'L
A-22	Ramp "C" Sta. 11+90	60'L	A-43	" Sta. 27+00	℄
A-52	" Sta. 16+40	60'L	A-45	Ramp "H" Sta. 8+30	15'R
P-18	" Sta. 21+35	℄	A-46	" Sta. 11+70	10'R
H-16	" Sta. 23+80	45'L	R-40	" Sta. 14+60	℄
H-33	Ramp "D" Sta. 23+10	20'R			

BORING DESCRIPTION SHEET

GRADE
BEARINGS
TIE POINTS
BENCH MARKS
STRUCTURE
EARTHWORK
DRAINAGE

REVISIONS

K&E CO. 17 8193

D C B A

I-7

COUNTY	CONTRACT	F.R.A. REG. NO.	STATE	FED. AID PROJECT NO.	SHEET NO.	TOTAL SHEETS
NEW CASTLE	71-05-003	2	DEL.		46	151

INTERSTATE ROUTE 495 OVER NEW CASTLE AVE. & READING R.R.

BRIDGE NO. 5

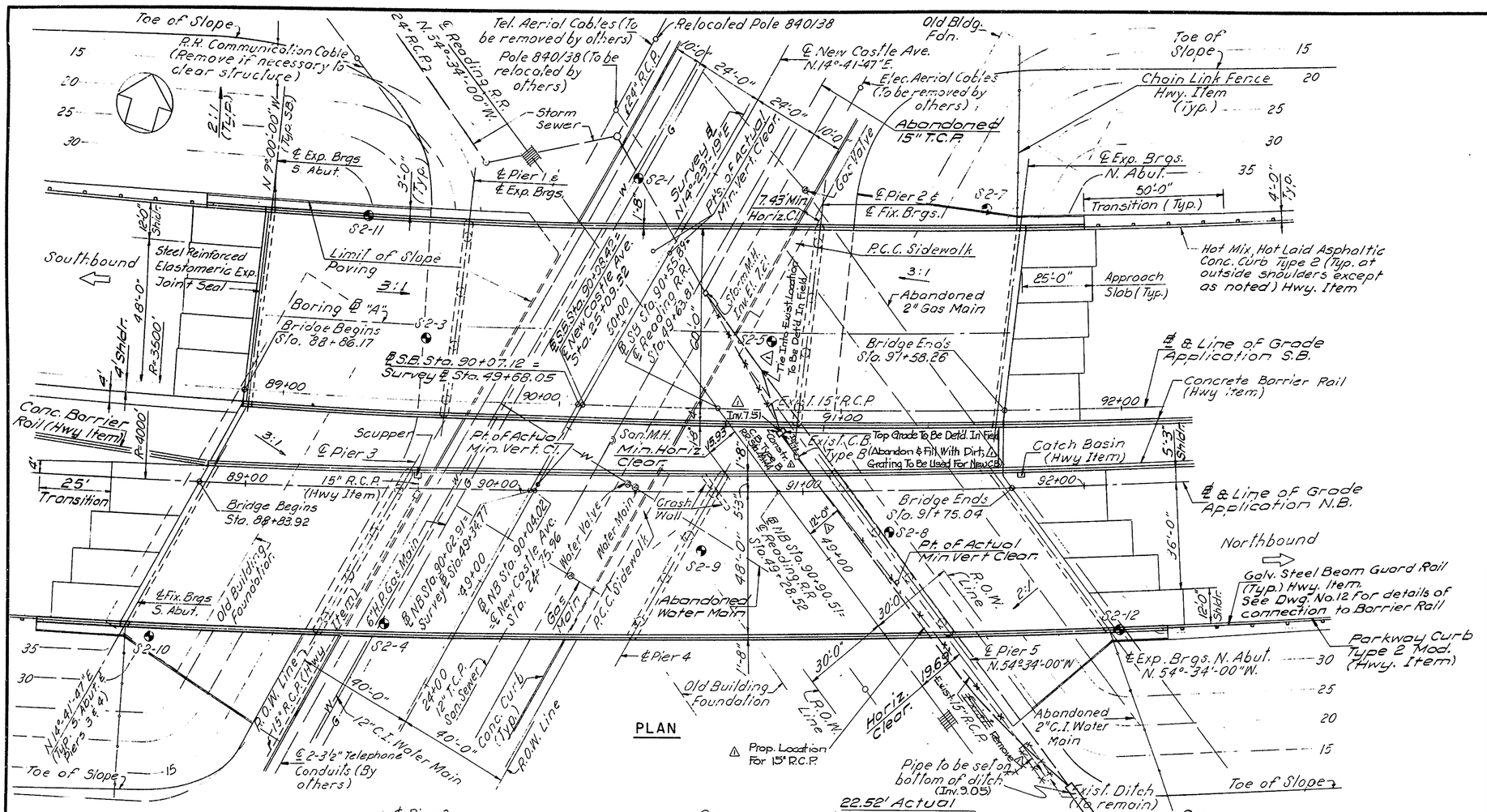

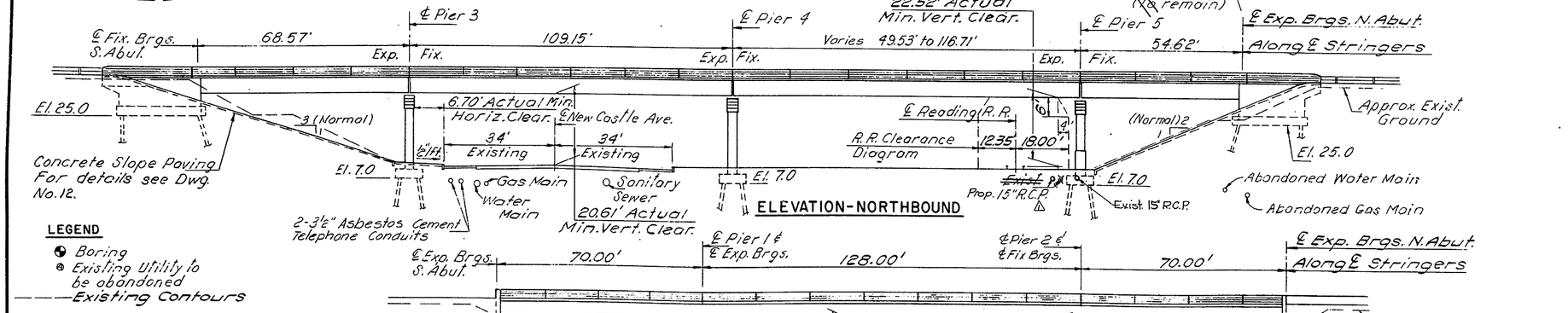

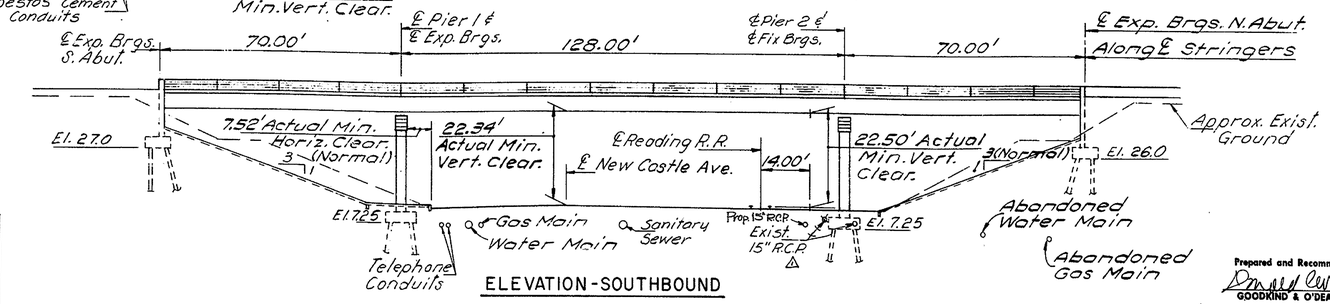

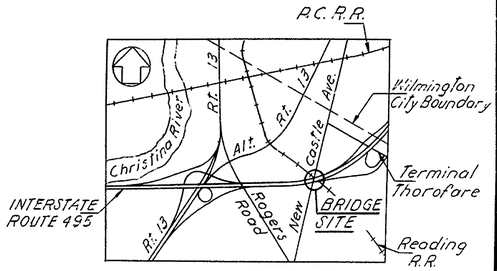

LOCATION PLAN

Scale: 1" = 2000'

LEGEND

- Boring
- Existing Utility to be abandoned
- Existing Contours

INDEX OF DRAWINGS

DRAWING NO.	TITLE
1	GENERAL PLAN
2	LAYOUT PLAN, GENERAL NOTES AND QUANTITIES
3	SOUTH ABUTMENT - NORTHBOUND
4	SOUTH ABUTMENT - NORTHBOUND-BAR REINFORCEMENT
5	SOUTH ABUTMENT - SOUTHBOUND
6	SOUTH ABUTMENT - SOUTHBOUND-BAR REINFORCEMENT
7	NORTH ABUTMENT - SOUTHBOUND
8	NORTH ABUTMENT - SOUTHBOUND-BAR REINFORCEMENT
9	NORTH ABUTMENT - NORTHBOUND
10	NORTH ABUTMENT - NORTHBOUND-BAR REINFORCEMENT
11	ABUTMENT AND WINGWALL SECTIONS AND DETAILS
12	SUBSTRUCTURE DETAILS
13	PIERS 1 & 2 - SOUTHBOUND
14	PIER 3 - NORTHBOUND
15	PIER 4 - NORTHBOUND
16	PIER 5 - NORTHBOUND
17	FRAMING PLAN - SOUTHBOUND
18	FRAMING PLAN - NORTHBOUND
19	SOUTHBOUND STRINGER DETAILS
20	NORTHBOUND STRINGER DETAILS
21	BEARING SHOE DETAILS
22	EXPANSION JOINT STEEL DETAILS
23	BRIDGE DRAINAGE DETAILS
24	DECK CROSS SECTIONS
25	DECK SLAB PLAN - SOUTHBOUND
26	DECK SLAB PLAN - NORTHBOUND
27	APPROACH SLAB PLANS
28	DECK JOINT DETAILS
29	DECK JOINTS AT BARRIER RAILS
30	BAR LIST - SOUTH ABUTMENT - NORTHBOUND
31	BAR LIST - SOUTH ABUTMENT - SOUTHBOUND
32	BAR LIST - NORTH ABUTMENT - SOUTHBOUND
33	BAR LIST - NORTH ABUTMENT - NORTHBOUND
34	BAR LIST - SOUTHBOUND PIERS
35	BAR LIST - NORTHBOUND PIERS
36	BAR LIST - SOUTHBOUND DECK SLAB
37	BAR LIST - NORTHBOUND DECK SLAB
38	BORING LOGS

	Date	Revision
In Charge of N. Erikson	4-28-72	△ Correction & Relocation of Exist. 15" R.C.P. By C.H.H.
Designed by E. Hutchins		
Design Checked by N. Erikson		
Detailed by T. B. Wasylyk		
Detail Checked by N. Erikson		

DELAWARE
STATE HIGHWAY DEPARTMENT

GENERAL PLAN

APPROVED BY: John C. Funkhouser, BRIDGE ENGINEER — DATE JUN 3 0 1971

DWG. NO.	SCALE	DATE
1	1" = 20' & As Noted	May 1971

GOODKIND & O'DEA, INC. CONSULTING ENGINEERS

Prepared and Recommended: GOODKIND & O'DEA, INC. Consulting Engineers — Date MAY 25 1971

COUNTY	CONTRACT	P.R.A. REG. NO.	STATE	FED. AID PROJECT NO.	SHEET NO.	TOTAL SHEETS
NEW CASTLE	71-05-003	2	DEL.		47	161

INTERSTATE ROUTE 495 OVER NEW CASTLE AVE. & READING R.R. BRIDGE NO. 5

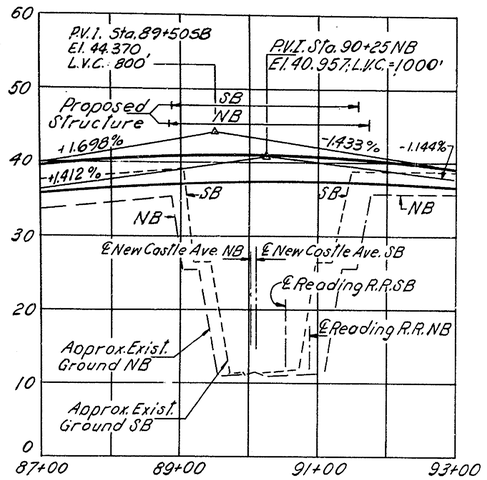

PROFILE INTERSTATE ROUTE 495

Scale: Hor: 1" = 100'; Vert: 1" = 10'

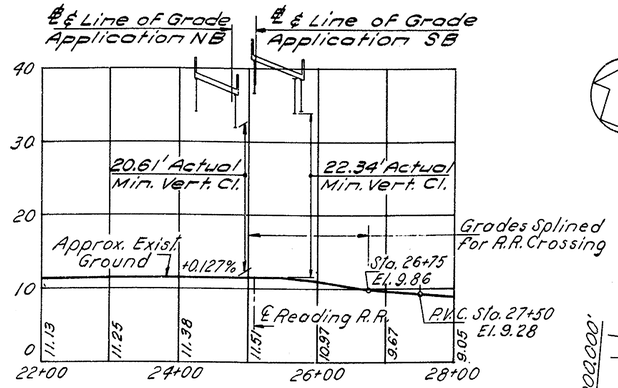

PROFILE NEW CASTLE AVENUE

Scale: Hor: 1" = 100'; Vert: 1" = 10'

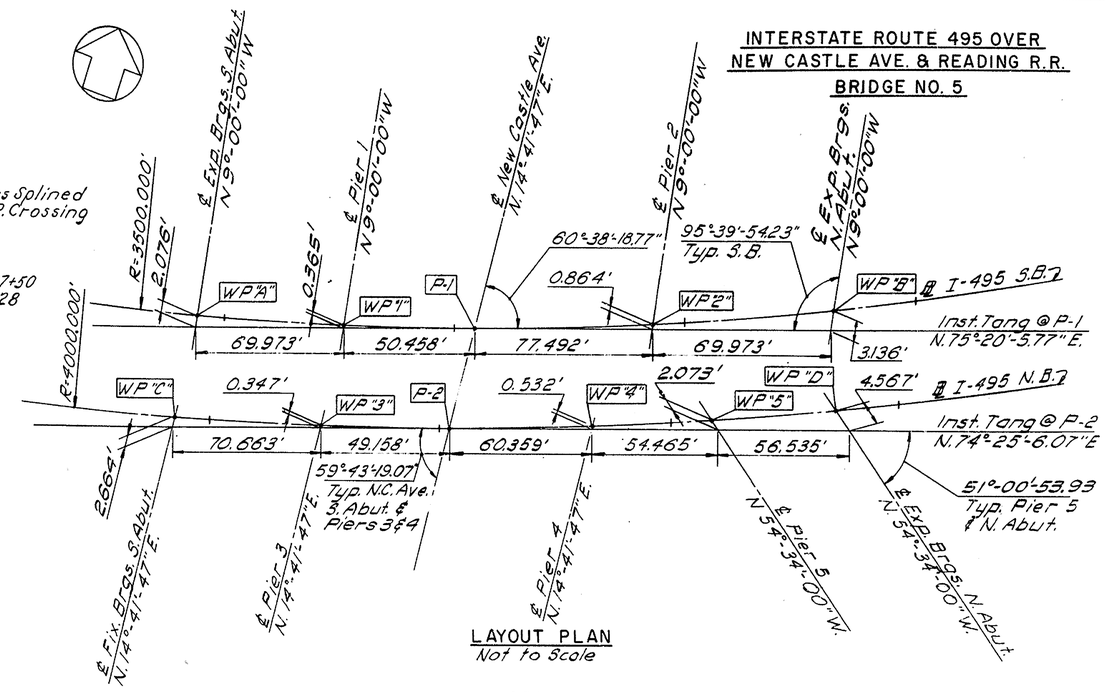

LAYOUT PLAN

Not to Scale

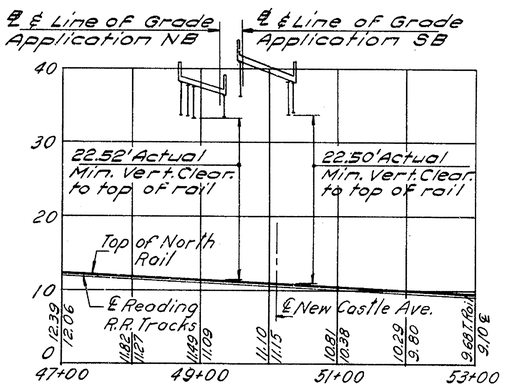

PROFILE READING RAILROAD

Scale: Hor: 1" = 100'; Vert: 1" = 10'

POINT	STATION	COORDINATES NORTH	COORDINATES EAST
P-1	I-495 S.B. STA. 90+08.423 = NEW CASTLE AVE. STA. 25+09.315	625508.407	463427.673
P-2	I-495 N.B. STA. 90+04.017 = NEW CASTLE AVE. STA. 24+75.956	625476.139	463419.210
WP 'A'	I-495 S.B. STA. 88+88.174	625479.968	463310.842
WP '1'	I-495 S.B. STA. 89+58.000	625495.993	463378.802
WP '2'	I-495 S.B. STA. 90+86.007	625528.879	463502.506
WP 'B'	I-495 S.B. STA. 91+56.241	625548.838	463569.843
WP 'C'	I-495 N.B. STA. 88+86.200	625446.169	463305.275
WP '3'	I-495 N.B. STA. 89+55.032	625463.271	463371.948
WP '4'	I-495 N.B. STA. 90+64.645	625492.867	463477.486
WP '5'	I-495 N.B. STA. 91+17.551	625508.184	463528.125
WP 'D'	I-495 N.B. STA. 91+72.551	625524.816	463580.551

QUANTITIES

NO.	SECTION	UNIT	QUANTITY
207	EXCAVATION FOR STRUCTURES	C.Y.	2100
210	SELECT BORROW	C.Y.	1400
401	HOT MIX. HOT LAID ASPHALTIC CONCRETE PAVEMENT	TONS	310
*602	PORTLAND CEMENT CONCRETE MASONRY - ABUTMENTS	C.Y.	671
*602	PORTLAND CEMENT CONCRETE MASONRY - PIER FOOTINGS	C.Y.	363
*602	PORTLAND CEMENT CONCRETE MASONRY - PIERS ABOVE FOOTINGS	C.Y.	323
*602	PORTLAND CEMENT CONCRETE MASONRY - SUPERSTRUCTURE	C.Y.	1102
*602	PORTLAND CEMENT CONCRETE MASONRY - APPROACH SLAB	C.Y.	398
611	SUBFOUNDATION CONCRETE	C.Y.	10
*605	BAR REINFORCEMENT (STRUCTURES)	LBS.	543300
606	STEEL STRUCTURE (APPROXIMATELY 1,079,300 LBS.)	L.S.	1
624	CAST-IN-PLACE CONCRETE PILES 12-IN. 7 GAGE	L.F.	6100
624	STEEL SHELL TEST PILES 12-IN. 7 GAGE	L.F.	360
624	CAST-IN-PLACE CONCRETE PILES 14-IN. 7 GAGE	L.F.	6440
624	STEEL SHELL TEST PILES 14-IN. 7 GAGE	L.F.	500
628	CONCRETE SLOPE PAVING 4 INCH	S.Y.	2950
734	6-IN. PERFORATED PIPE UNDERDRAINS	L.F.	392
S.P.	BRIDGE DRAINAGE, BRIDGE #5	L.S.	1
S.P.	REINFORCED ELASTOMERIC EXPANSION JOINT SEAL, 13 1/2" WIDE	L.F.	68
* S.P.	PREFABRICATED EXPANSION JOINT SYSTEM, 7/8" WIDE	L.F.	208
* S.P.	PREFABRICATED EXPANSION JOINT SYSTEM, 1 3/16" WIDE	L.F.	66
* S.P.	PREFABRICATED EXPANSION JOINT SYSTEM, 1 1/2" WIDE	L.F.	72

*NOTE: ITEMS INDICATED (*) ARE FIXED QUANTITY ITEMS.
SEE SECTION 109.06 OF THE STANDARD SPECIFICATIONS.

GENERAL NOTES

1. DESIGN SPECIFICATION; AASHO 1969 AND AASHO INTERIM SPECIFICATIONS 1970.
2. LOADING: HS 20-44 MODIFIED FOR INTERSTATE LOADING.
3. DESIGN MINIMUM VERTICAL CLEARANCE 22'-6" OVER READING RAILROAD.
4. MATERIAL AND FABRICATION: STATE OF DELAWARE, STATE HIGHWAY DEPARTMENT STANDARD SPECIFICATION, JUNE 1, 1970, AND SPECIAL PROVISIONS.
5. DESIGN: STRUCTURAL STEEL A.S.T.M. A36 (fs=20,000 p.s.i.)AND AS NOTED
   REINFORCING STEEL: fs=20,000 p.s.i.
   CONCRETE fc: 1,200 p.s.i. n=10
   STRENGTH OF CONCRETE SHALL BE 3,000 p.s.i. AT 28 DAYS.
   TEMPORARY INTERMEDIATE SUPPORTS FOR COMPOSITE CONSTRUCTION SHALL NOT BE USED.
6. ALL EXPOSED EDGES OF CONCRETE TO BE CHAMFERED 3/4" UNLESS SHOWN OTHERWISE.
7. FOUNDATION: ABUTMENTS AND PIERS SUPPORTED BY CAST-IN-PLACE CONCRETE PILES, DESIGN CAPACITY 35 TONS MINIMUM AT ABUTMENTS AND WALLS AND 50 TONS MINIMUM AT PIERS.

	Date	Revision
In Charge of N. Erikson		
Designed by N. Erikson		
Design Checked by E. Hutchins		
Detailed by O. Brooks		
Detail Checked by N. Erikson		

Prepared and Recommended
GOODKIND & O'DEA, INC. Consulting Engineers
Date MAY 25 1971

DELAWARE
STATE HIGHWAY DEPARTMENT

LAYOUT PLAN, GENERAL NOTES AND QUANTITIES

APPROVED BY John E. Cullity
BRIDGE ENGINEER
JUN 18 1971
DATE

DWG. NO.	SCALE	DATE	
2	As Noted	May 1971	GOODKIND & O'DEA, INC. CONSULTING ENGINEERS

COUNTY	CONTRACT	S. P. B. REG. NO.	STATE	FED. AID PROJECT NO.	SHEET NO.	TOTAL SHEETS
NEW CASTLE	71-05-003	2	DEL.		48	161

INTERSTATE ROUTE 495 OVER NEW CASTLE AVE. & READING R.R. BRIDGE NO. 5

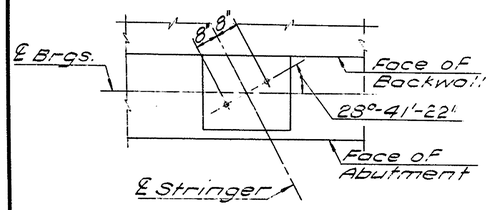

ANCHOR BOLT LAYOUT
Scale: 1/2" = 1'-0"

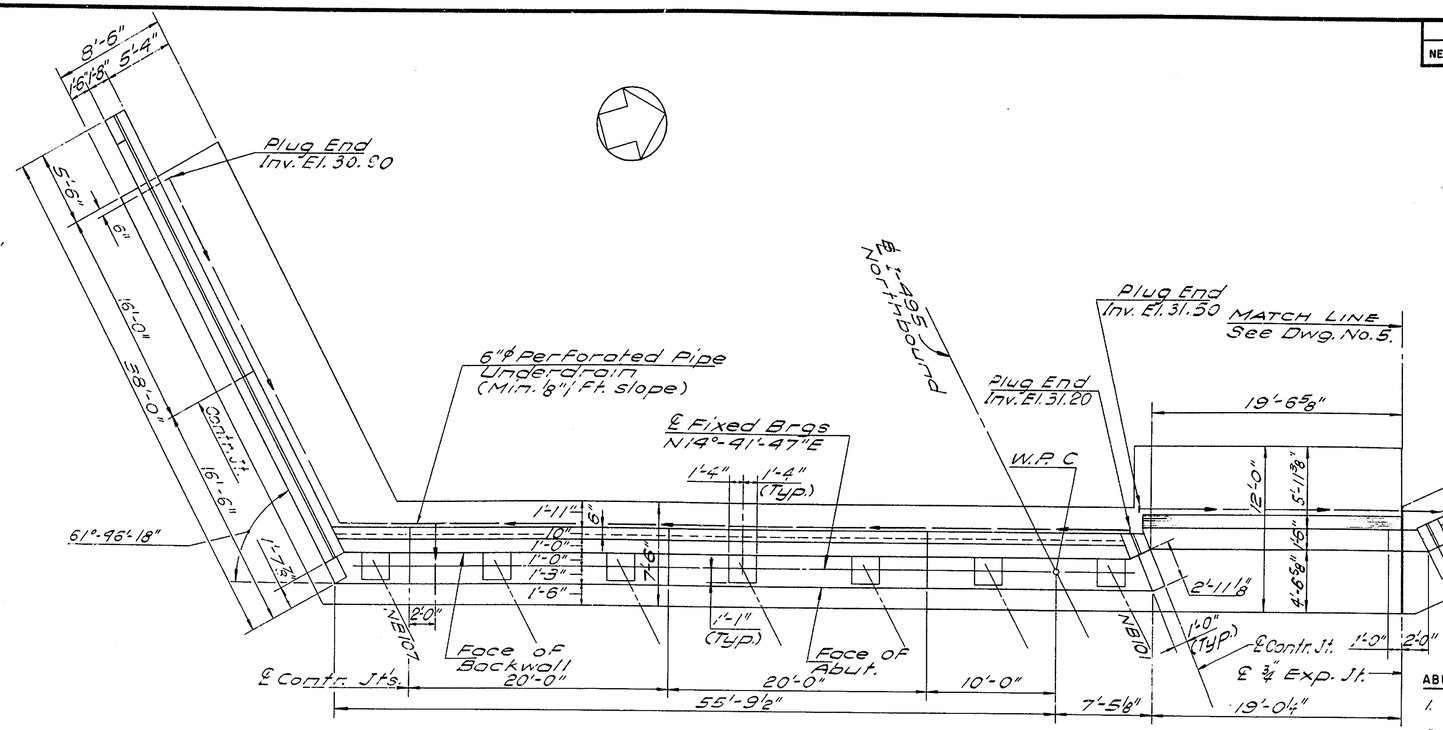

PLAN

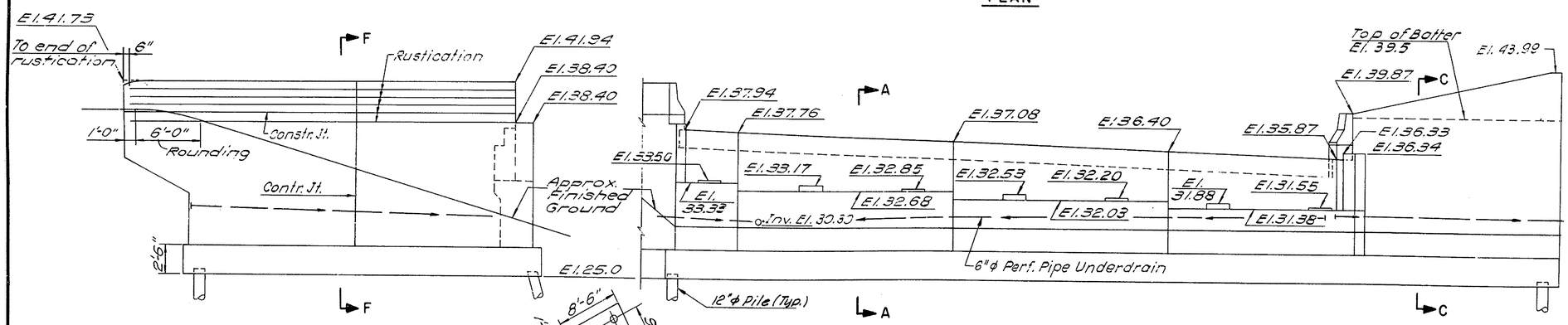

SOUTHEAST WALL

ELEVATION

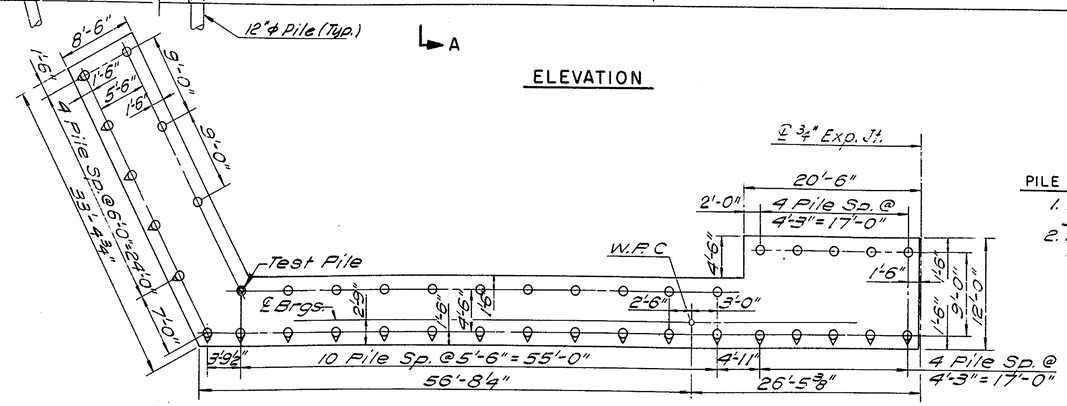

FOOTING PLAN AND PILE LAYOUT
Scale: 1/8" = 1'-0"

ABUTMENT REFERENCES

1. For Layout of Working Points, see Layout Plan on Dwg. No. 2.
2. For Abutment and Wingwall Sections and Cantilever Detail, see Dwg. No. 11.
3. For Anchor Bolt Detail, see Dwg. No. 21
4. For Excavation, Backfill and Drainage Details, see Miscellaneous Details, Dwg. No. 11.
5. For Contraction and Expansion Joint Details, see Dwg. No. 12.
6. For Pile Details and General Pile Notes, see Dwg. No. 12.

REFERENCES

1. For Stringer Layout dimensions see Dwg. No. 18.
2. For Bar Reinforcement Layout see Dwg. No. 4.

PILE NOTES:

1. Estimated length of 35 ton pile is 50'.
2. Length of test pile is 60'.

	Date	Revision
In Charge of N. Erikson		
Designed by M. Siebold		
Design Checked by P. Hermann		
Detailed by R. Metcalf		
Detail Checked by N. Melnber		

Prepared and Recommended
GOODKIND & O'DEA, INC.
Consulting Engineers
Date MAY 25 1971

DELAWARE STATE HIGHWAY DEPARTMENT

SOUTH ABUTMENT NORTHBOUND

APPROVED BY: John G. Cubitt
BRIDGE ENGINEER
JUN 18 1971
DATE

DWG. NO.	SCALE	DATE	
3	3/16" = 1'-0" & As Noted	May 1971	GOODKIND & O'DEA, INC. CONSULTING ENGINEERS

COUNTY	CONTRACT	S. F. R. REG. NO.	STATE	FED. AID PROJECT NO.	SHEET NO.	TOTAL SHEETS
NEW CASTLE	71-05-003	2	DEL.		49	161

INTERSTATE ROUTE 495 OVER NEW CASTLE AVE. & READING R.R. BRIDGE NO. 5

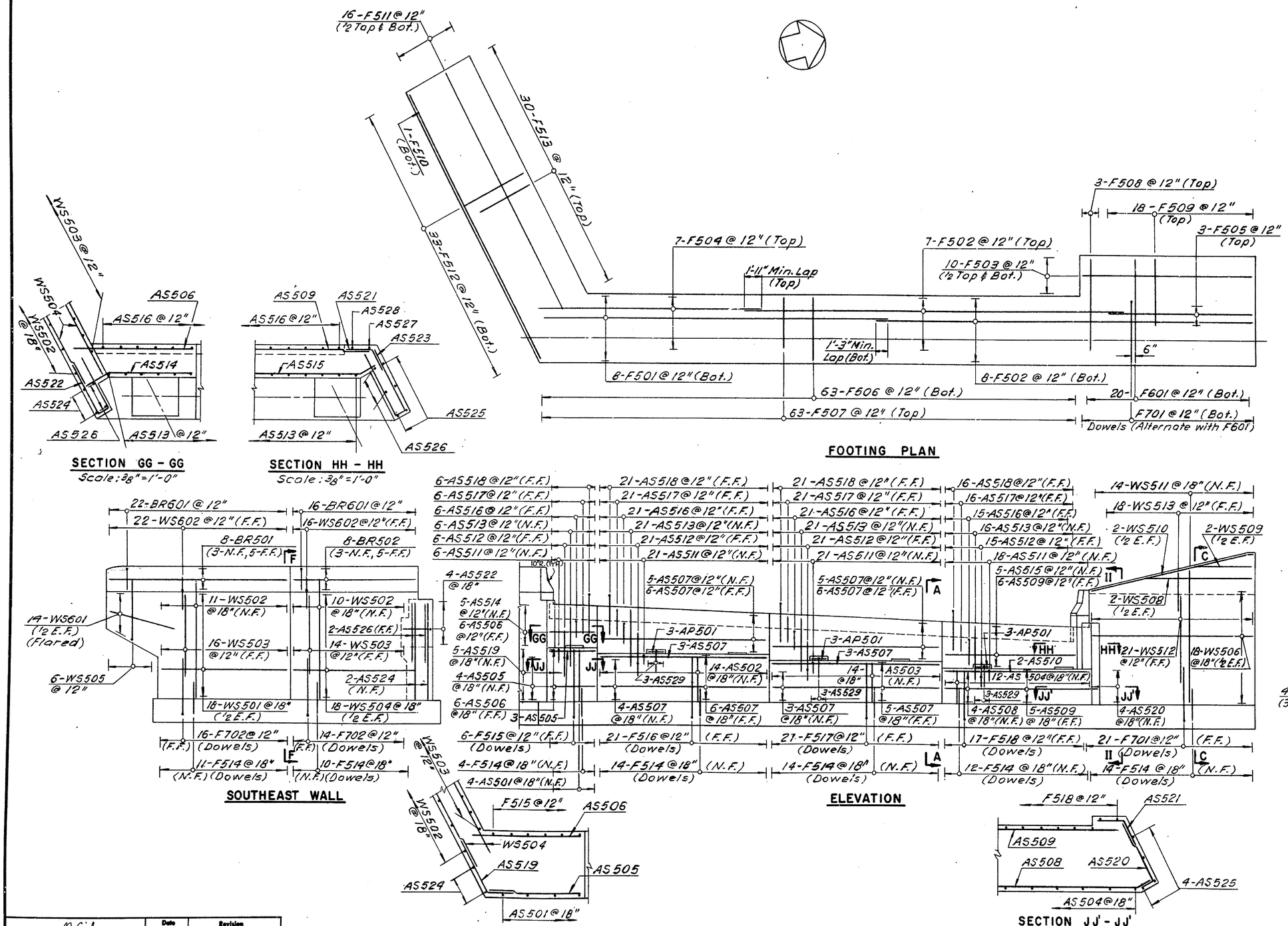

REFERENCES:

1. For Bar List, see Dwg. No. 30.
2. For Pad Reinforcement Detail, see Dwg. No. 6.
3. For Sections A-A, C-C and F-F, see Dwg. No. 11.

	Date	Revision
In Charge of N. Eikson		
Designed by M. Siebold		
Design Checked by E. Hiesener		
Detailed by B. Rumjoncew		
Detail Checked by M. Siebold		

Prepared and Recommended
GOODKIND & O'DEA, INC. Consulting Engineers
Date MAY 25 1971

DELAWARE
STATE HIGHWAY DEPARTMENT

SOUTH ABUTMENT – NORTHBOUND
BAR REINFORCEMENT

APPROVED BY: John E. Cubitt
BRIDGE ENGINEER
JUN 18 1971
DATE

DWG. NO.	SCALE	DATE
4	3/16" = 1'-0" & as Noted	May 1971

GOODKIND & O'DEA, INC.
CONSULTING ENGINEERS

COUNTY	CONTRACT	S. P. R. REG. NO.	STATE	FED. AID PROJECT NO.	SHEET NO.	TOTAL SHEETS
NEW CASTLE	71-05-003	2	DEL.		50	161

INTERSTATE ROUTE 495 OVER NEW CASTLE AVE. & READING R.R. BRIDGE NO. 5

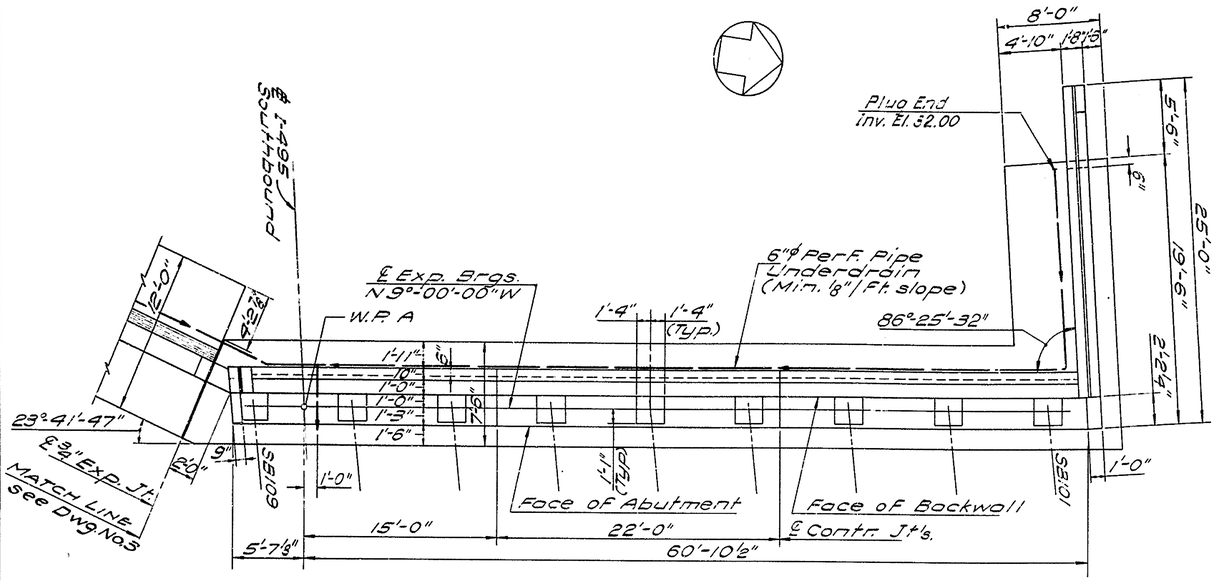

PLAN

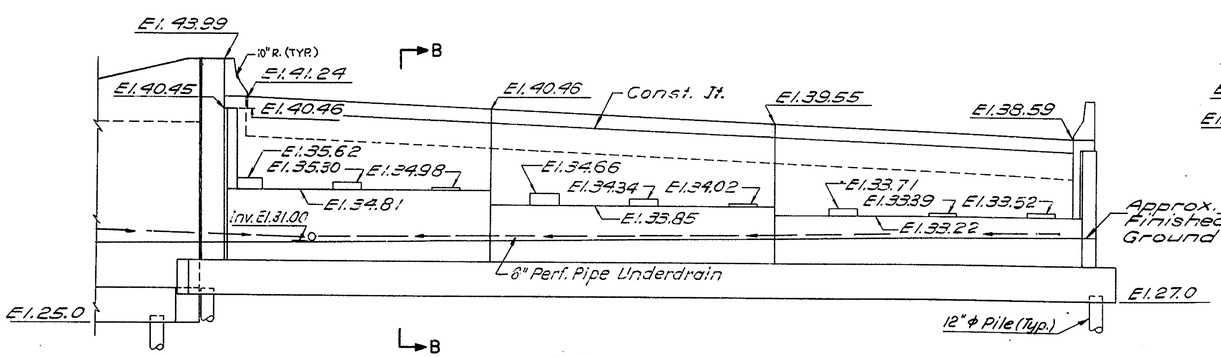

ELEVATION

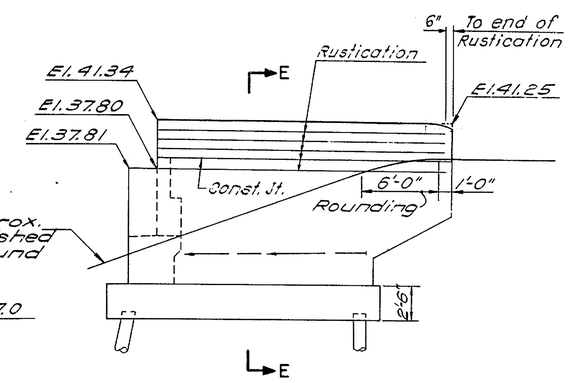

SOUTHWEST WALL

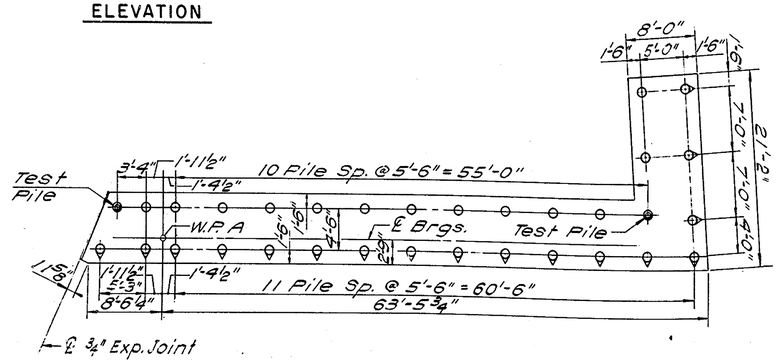

FOOTING PLAN AND PILE LAYOUT
Scale: ⅛" = 1'-0"

REFERENCES:

1. For Abutment References & Pile Notes see Dwg. No. 3.
2. For Stringer Layout-dimensions see Dwg. No. 17.
3. For Anchor Bolt Layout see Dwg. No. 7.
4. For Bar Reinforcement Layout see Dwg. No. 6.

	Date	Revision
In Charge of N. Eckman		
Designed by M. Siebold		
Design Checked by P. Hermann		
Detailed by R. McCoif		
Detail Checked by N. Malmberg		

Prepared and Recommended Date MAY 25 1971
GOODKIND & O'DEA, INC. Consulting Engineers

DELAWARE
STATE HIGHWAY DEPARTMENT

SOUTH ABUTMENT
SOUTHBOUND

APPROVED BY John W. Cubitt
BRIDGE ENGINEER
JUN 18 1971
DATE

DWG. NO.	SCALE	DATE	
5	⅛" = 1'-0" & As Noted	May 1971	GOODKIND & O'DEA, INC. CONSULTING ENGINEERS

COUNTY	CONTRACT	B.P.R. REF. NO.	STATE	FED. AID PROJECT NO.	SHEET NO.	TOTAL SHEETS
NEW CASTLE	71-05-003	2	DEL.		51	131

INTERSTATE ROUTE 495 OVER NEW CASTLE AVE. & READING R.R. BRIDGE NO. 5

SECTION KK-KK
Scale: 3/8" = 1'-0"

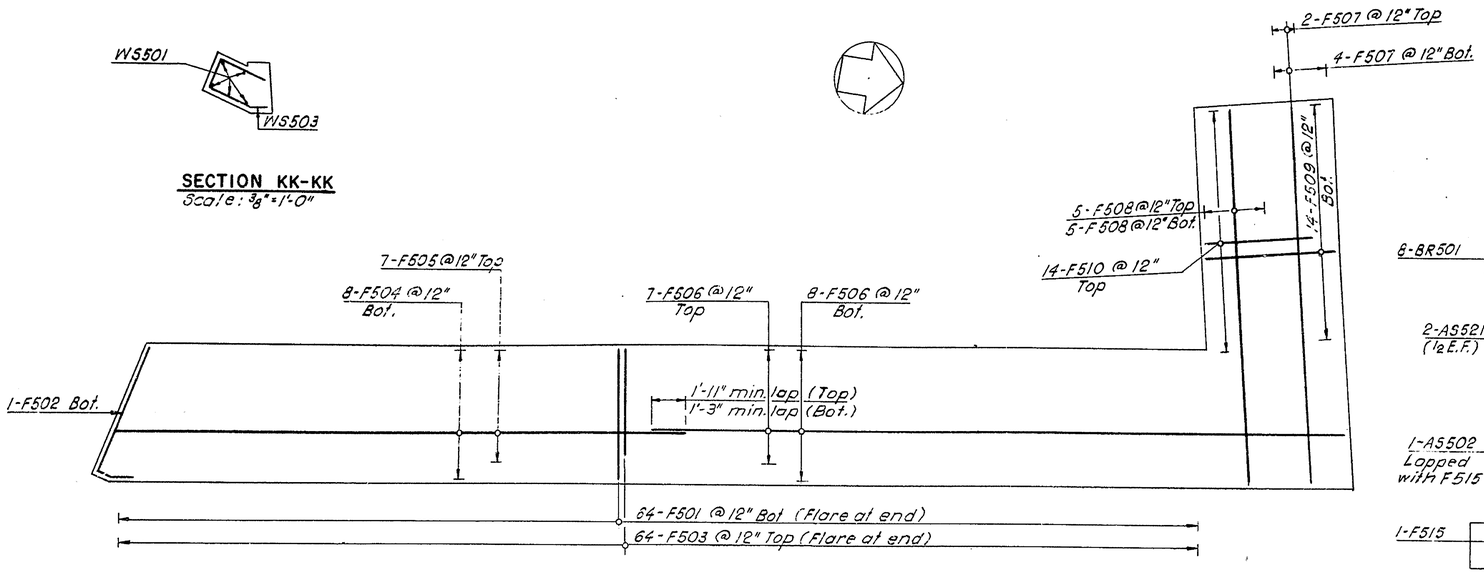

FOOTING PLAN
Scale: 1/4" = 1'-0"

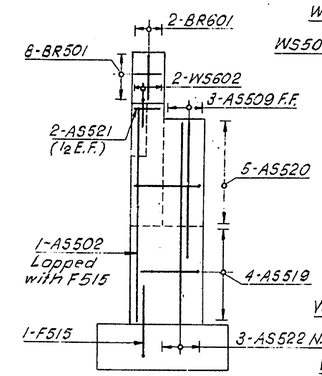

VIEW 00-00
Scale: 1/4" = 1'-0"

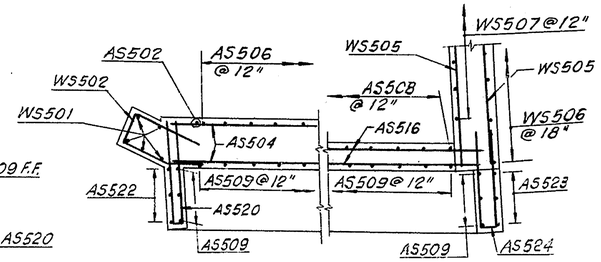

SECTION LL-LL
Scale: 3/8" = 1'-0"

SECTION MM-MM
Scale: 3/8" = 1'-0"

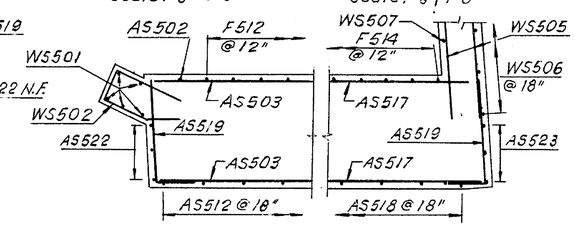

SECTION NN-NN
Scale: 3/8" = 1'-0"

SECTION NN'-NN'
Scale: 3/8" = 1'-0"

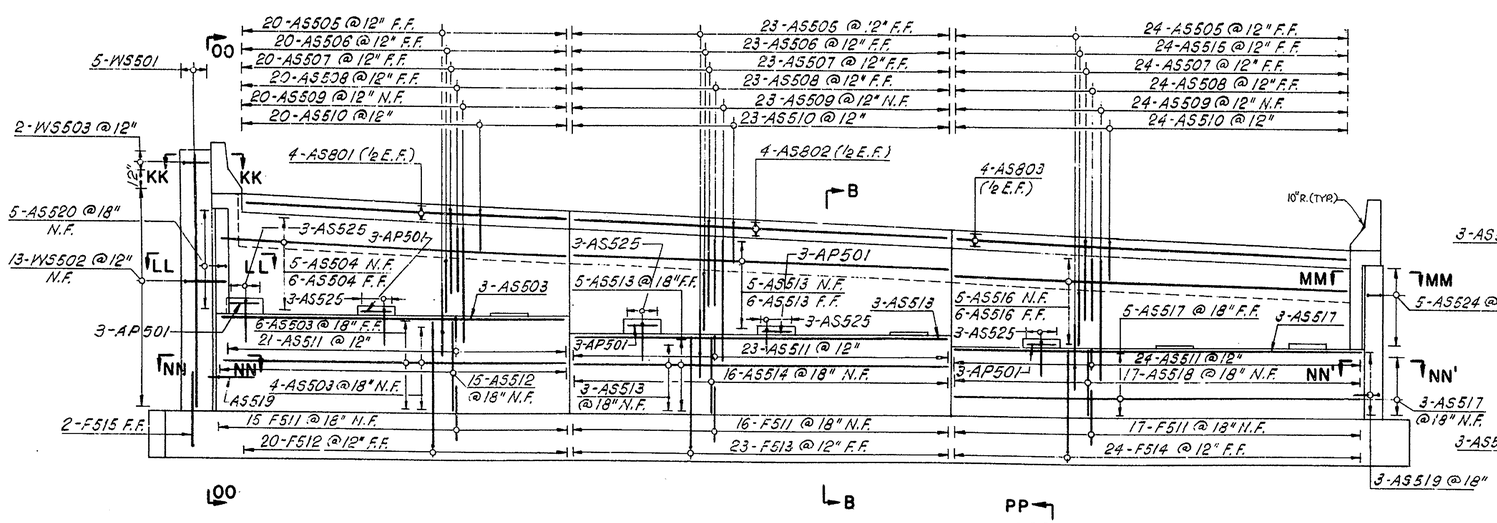

ELEVATION
Scale: 1/4" = 1'-0"

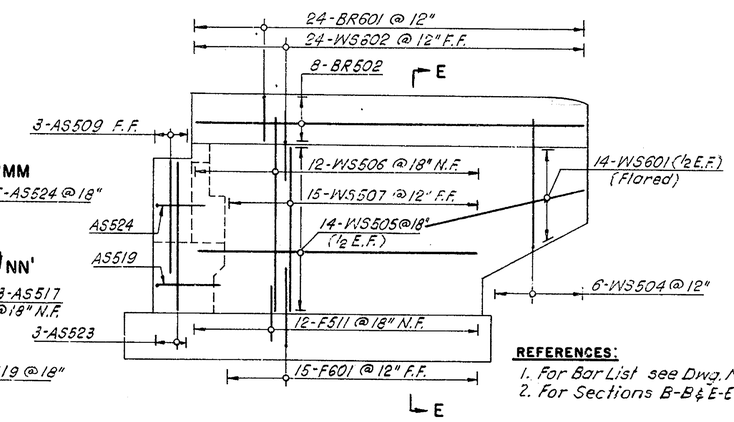

SOUTHWEST WALL
Scale: 1/4" = 1'-0"

REFERENCES:
1. For Bar List see Dwg. No. 30
2. For Sections B-B & E-E see Dwg. No. 11.

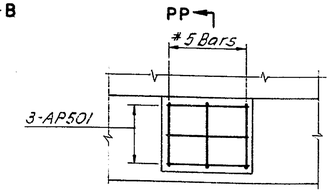

PAD REINFORCEMENT DETAIL
Scale: 1/2" = 1'-0"

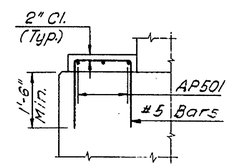

SECTION PP-PP

NOTE: Typical for Pads higher than 4".

Date	Revision

In Charge of N. Eriksen
Designed by M. Siebold
Design Checked by P. Hermann
Detailed by W.K. & A.C.
Detail Checked by M. Siebold

Prepared and Recommended
Donald Lurelbu
GOODKIND & O'DEA, INC. Consulting Engineers
Date MAY 25 1971

DELAWARE
STATE HIGHWAY DEPARTMENT

SOUTH ABUTMENT – SOUTHBOUND
BAR REINFORCEMENT

APPROVED BY: John E. Cubito
BRIDGE ENGINEER
DATE JUN 18 1971

DWG. NO.	SCALE	DATE	
6	As noted	May 1971	GOODKIND & O'DEA, INC. CONSULTING ENGINEERS

COUNTY	CONTRACT	B.P.R. REG. NO.	STATE	FED. AID PROJECT NO.	SHEET NO.	TOTAL SHEETS
NEW CASTLE	71-05-003	2	DEL.		52	161

INTERSTATE ROUTE 495 OVER NEW CASTLE AVE. & READING R.R. BRIDGE NO. 5

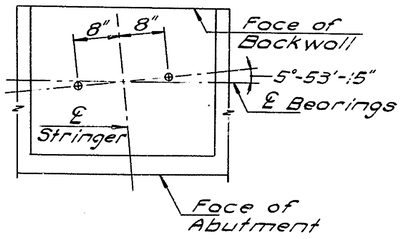

ANCHOR BOLT LAYOUT
Scale: 1"=1'-0"

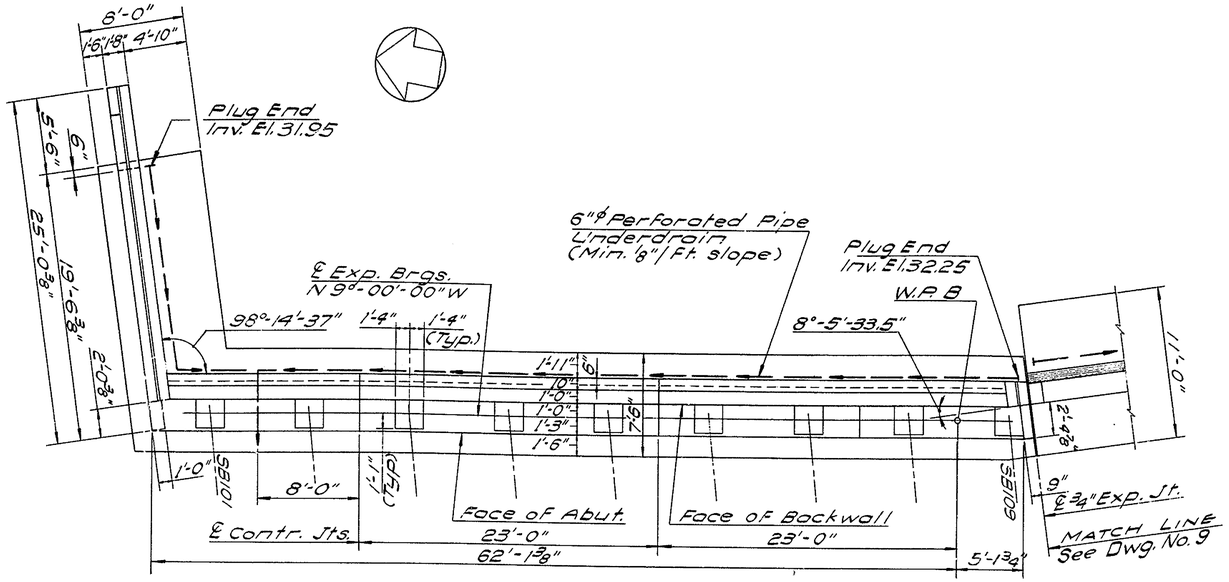

PLAN

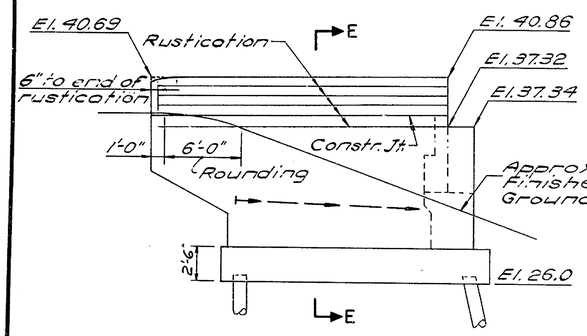

NORTHWEST WALL

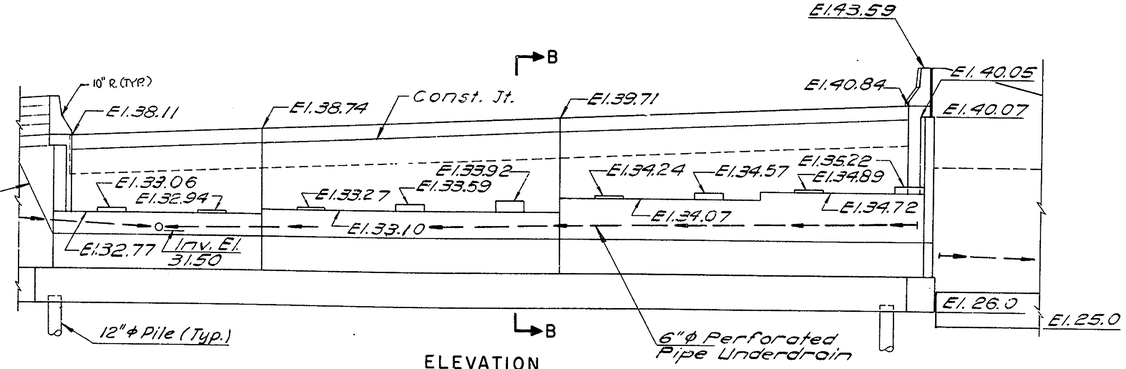

ELEVATION

REFERENCES:

1. For Abutment References & Pile Notes see Dwg. No. 3.
2. For Stringer Layout Dimensions, see Dwg. No. 17.
3. For Bar Reinforcement Layout see Dwg. No. 8.

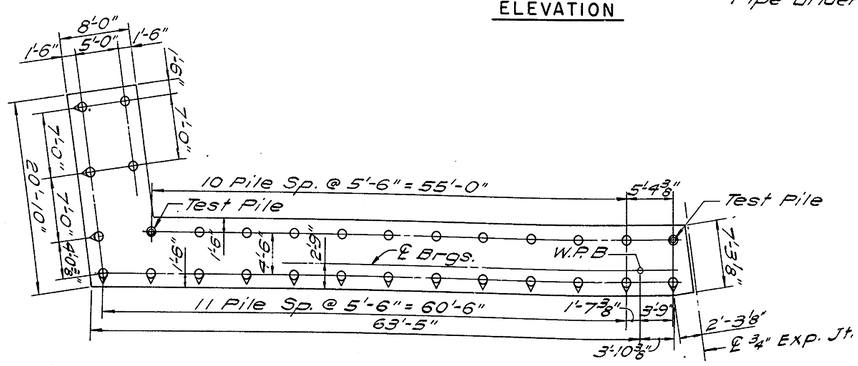

FOOTING PLAN AND PILE LAYOUT
Scale: 1/8"=1'-0"

	Date	Revision
In Charge of 91. Erikson		
Designed by M. Siebold		
Design Checked by E. Hermann		
Detailed by R. Metcalf		
Detail Checked by N. Mussbacher		

Prepared and Recommended
GOODKIND & O'DEA, INC.
Consulting Engineers
Date MAY 25 1971

DELAWARE
STATE HIGHWAY DEPARTMENT

NORTH ABUTMENT
SOUTHBOUND

APPROVED BY: John E. Fritel
BRIDGE ENGINEER
JUN 18 1971
DATE

DWG. NO.	SCALE	DATE	GOODKIND & O'DEA, INC. CONSULTING ENGINEERS
7	3/16"=1'-0" & As Noted	NOV 1971	

COUNTY	CONTRACT	S. F. S. REG. NO.	STATE	FED. AID PROJECT NO.	SHEET NO.	TOTAL SHEETS
NEW CASTLE	71-05-003	2	DEL.		53	161

INTERSTATE ROUTE 495 OVER NEW CASTLE AVE. & READING R.R. BRIDGE NO. 5

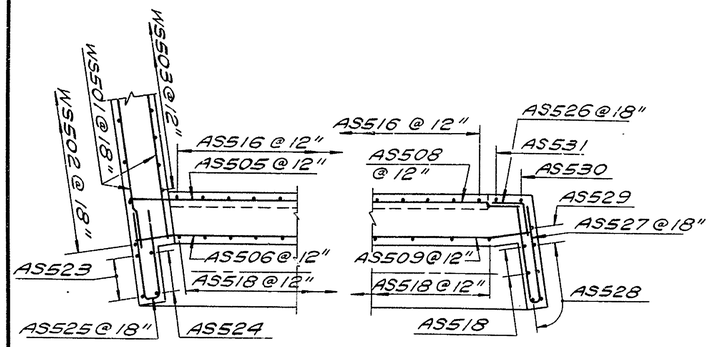

SECTION QQ-QQ
Scale: 3/8" = 1'-0"

SECTION RR-RR
Scale: 3/8" = 1'-0"

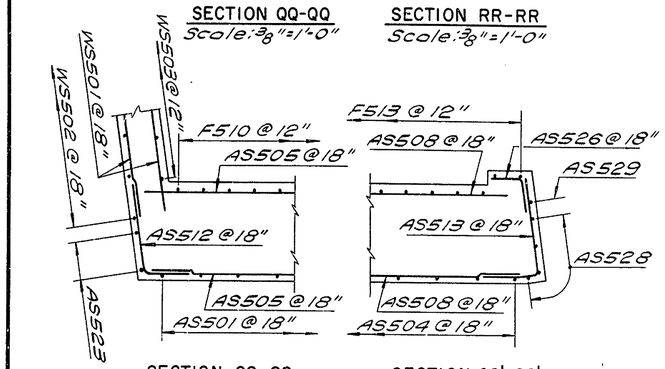

SECTION SS-SS
Scale: 3/8" = 1'-0"

SECTION SS'-SS'
Scale: 3/8" = 1'-0"

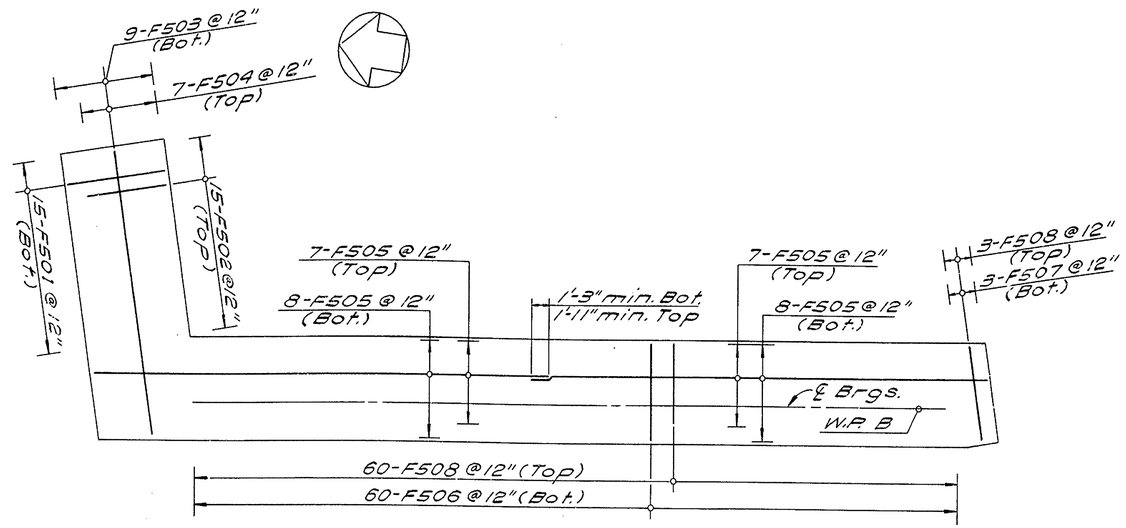

FOOTING PLAN

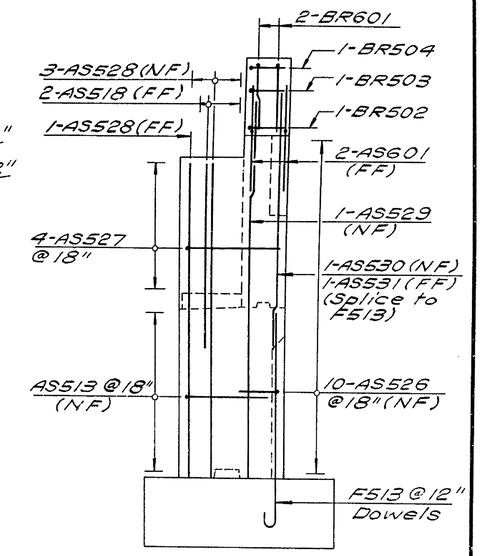

VIEW TT-TT
Scale: 3/8" = 1'-0"

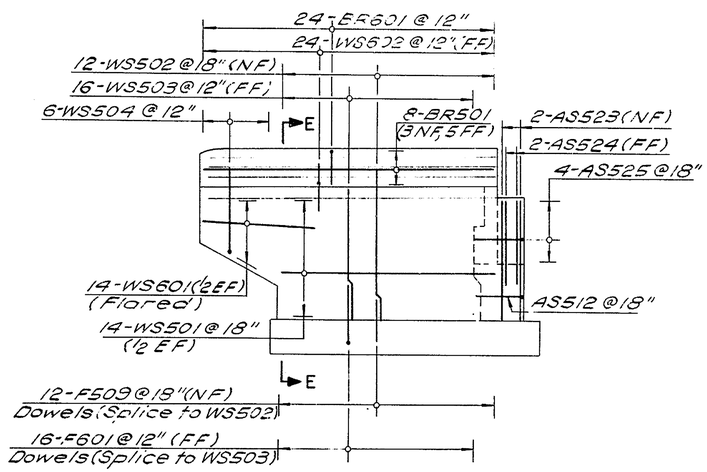

NORTHWEST WALL

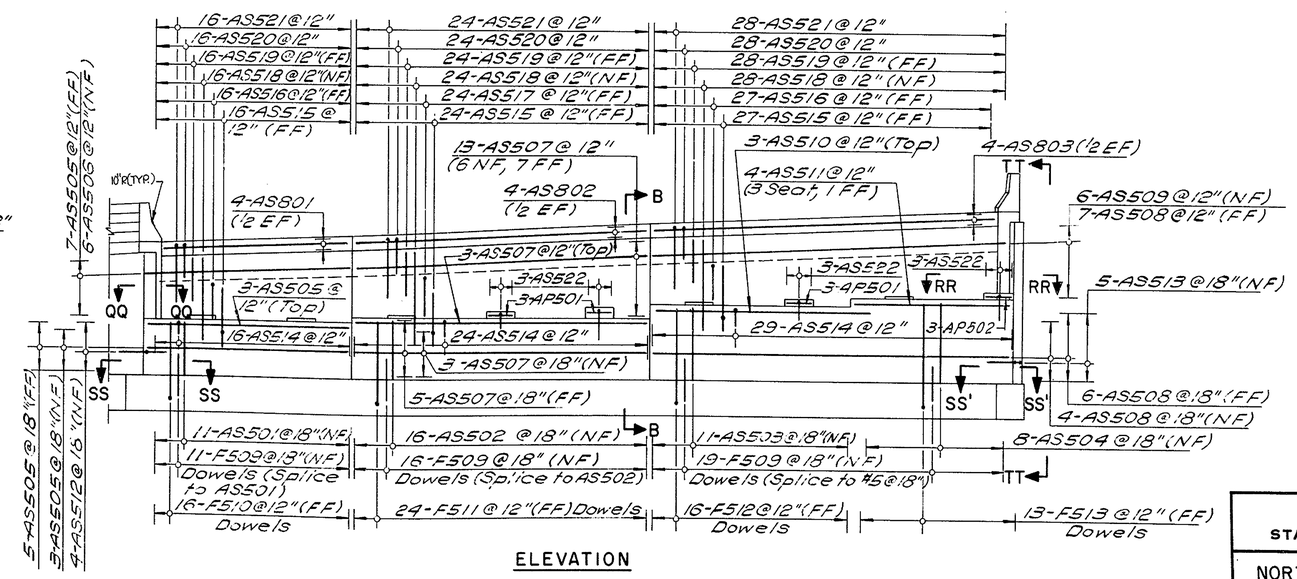

ELEVATION

REFERENCES:
1. For Bar List, see Dwg. No. 31.
2. For Sections B-B & E-E see Dwg. No. 11.
3. For Pad Reinforcing Detail see Dwg. No 6.

In Charge of	N. Erikson
Designed by	M. Siebold
Design Checked by	P. Hermann
Detailed by	R. Metcalf
Detail Checked by	E. Hutchins

Date	Revision

Prepared and Recommended
GOODKIND & O'DEA, INC.
Consulting Engineers
Date MAY 25 1971

DELAWARE
STATE HIGHWAY DEPARTMENT

NORTH ABUTMENT – SOUTHBOUND
BAR REINFORCEMENT

APPROVED BY: John E. Cubbage
BRIDGE ENGINEER
JUN 18 1971
DATE

DWG. NO.	SCALE	DATE
8	3/16" = 1'-0" & As Noted	May 1971

GOODKIND & O'DEA, INC.
CONSULTING ENGINEERS

COUNTY	CONTRACT	R.P.B. REG. NO.	STATE	FED. AID PROJECT NO.	SHEET NO.	TOTAL SHEETS
NEW CASTLE	71-05-003	2	DEL.		54	161

INTERSTATE ROUTE 495 OVER NEW CASTLE AVE. & READING R.R. BRIDGE NO. 5

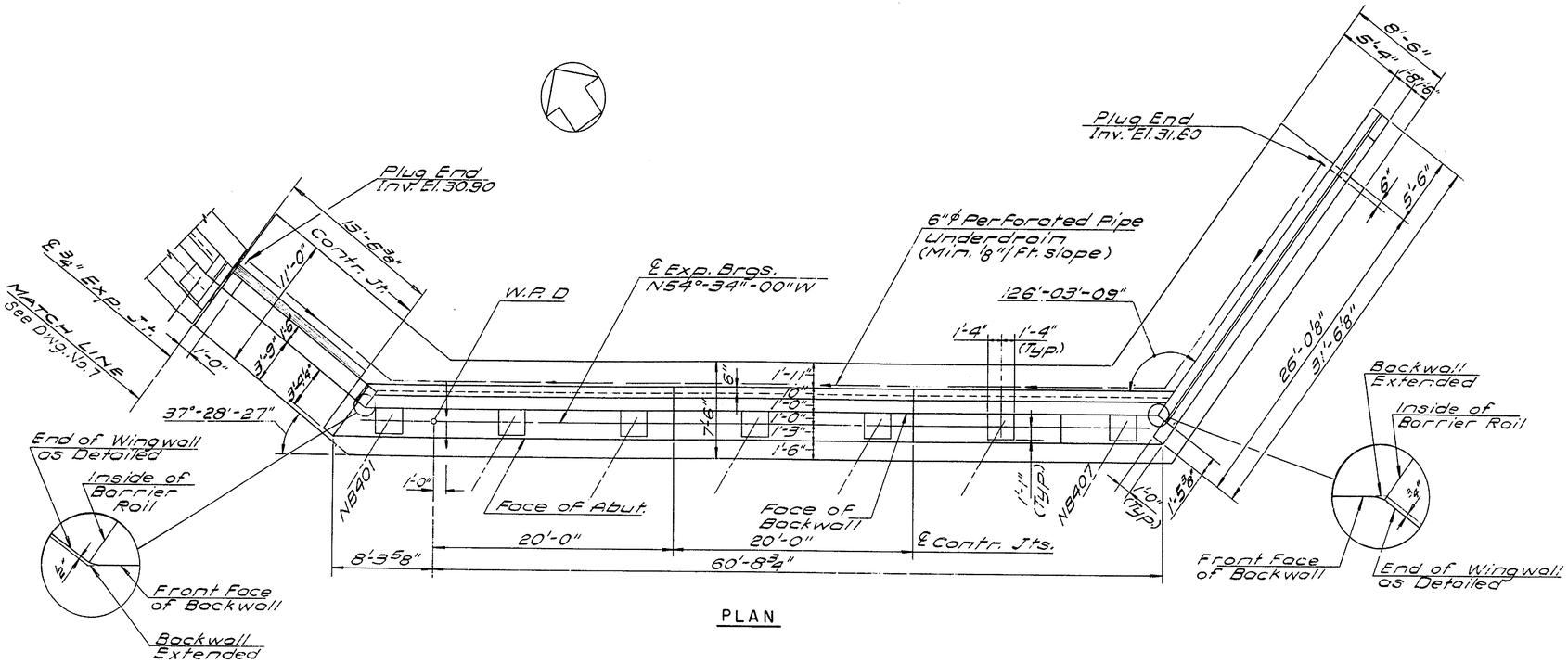

PLAN

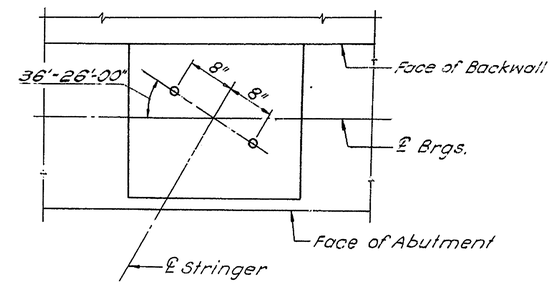

ANCHOR BOLT LAYOUT
Scale: 1" = 1'-0"

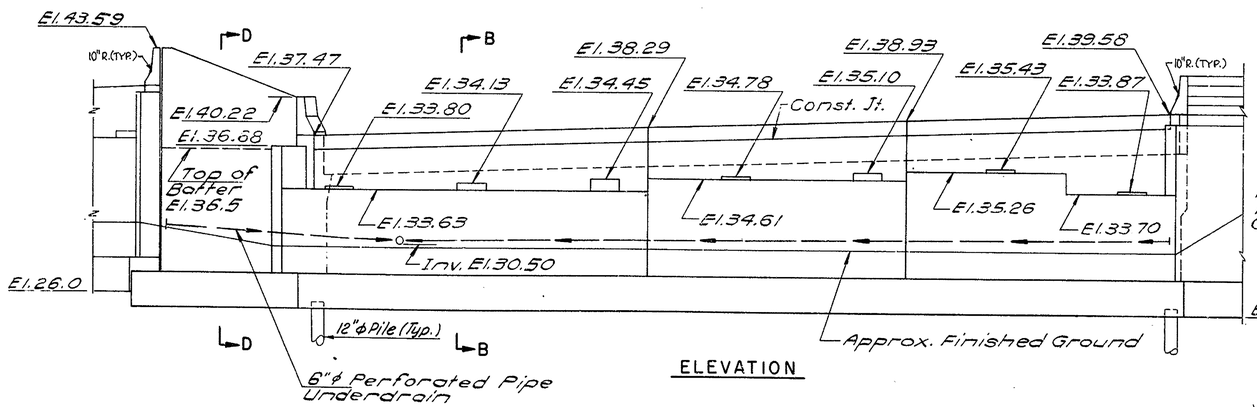

ELEVATION

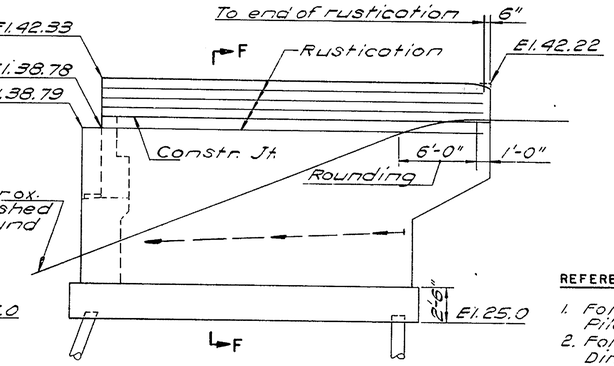

NORTHEAST WALL

REFERENCES:

1. For Abutment References & Pile Notes see Dwg. No. 3.
2. For Stringer Layout Dimensions see Dwg No. 18.
3. For Bar Reinforcement Layout, see Dwg No. 10.

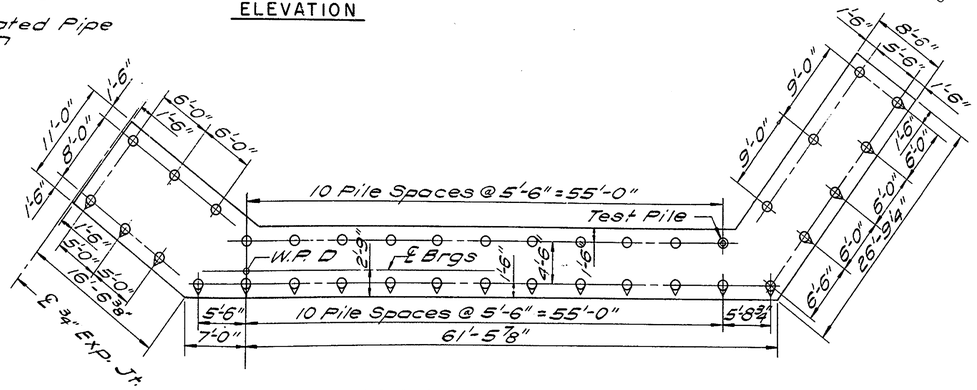

FOOTING PLAN AND PILE LAYOUT
Scale: 1/8" = 1'-0"

In Charge of	N. Eckman
Designed by	M. Siebold
Design Checked by	P. Hermann
Detailed by	R. Metcalf
Detail Checked by	N. Malinsky

Date	Revision

Prepared and Recommended
GOODKIND & O'DEA, INC.
Consulting Engineers
Date MAY 25 1971

DELAWARE
STATE HIGHWAY DEPARTMENT

NORTH ABUTMENT
NORTHBOUND

APPROVED BY: John S. Rudisill
BRIDGE ENGINEER
JUN 18 1971
DATE

DWG. NO.	SCALE	DATE	
9	3/16" = 1'-0" & As Noted	May 1971	GOODKIND & O'DEA, INC. CONSULTING ENGINEERS

COUNTY	CONTRACT	S. P. R. REG. NO.	STATE	FED. AID PROJECT NO.	SHEET NO.	TOTAL SHEETS
NEW CASTLE	71-05-003	2	DEL.		55	161

INTERSTATE ROUTE 495 OVER NEW CASTLE AVE. & READING R.R. BRIDGE NO. 5

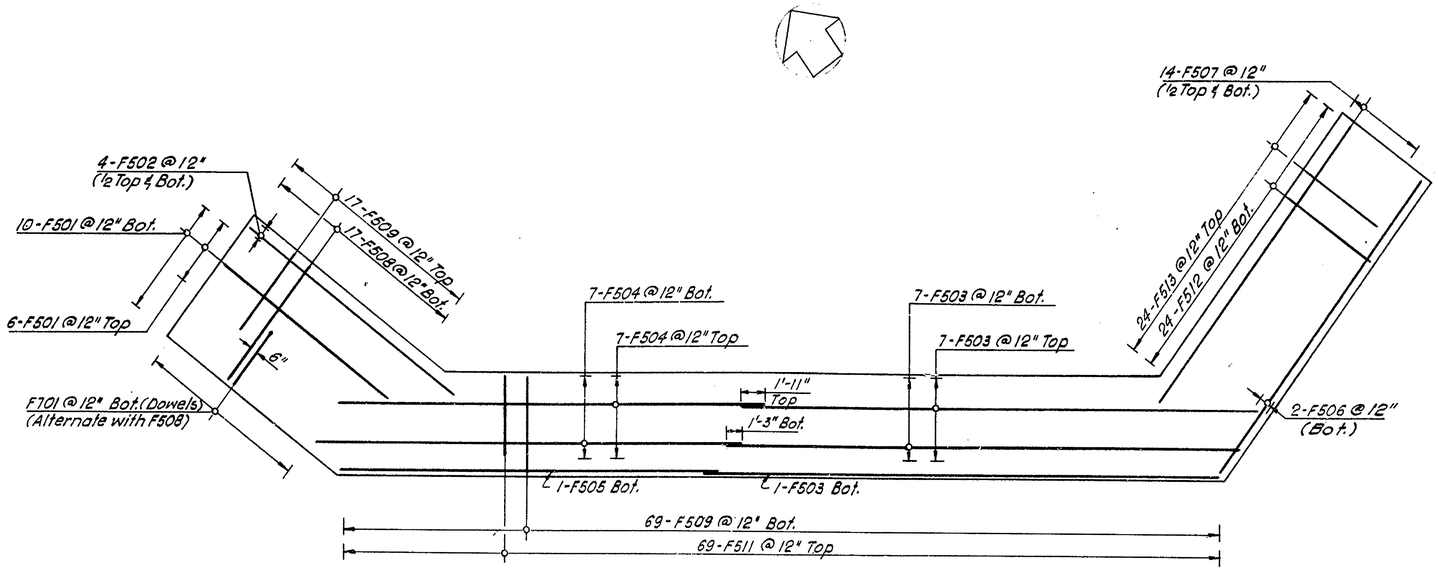

FOOTING PLAN

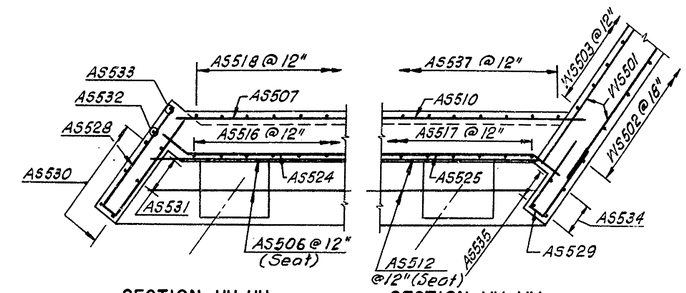

SECTION UU-UU
Scale: 3/8"=1'-0"

SECTION VV-VV
Scale: 3/8"=1'-0"

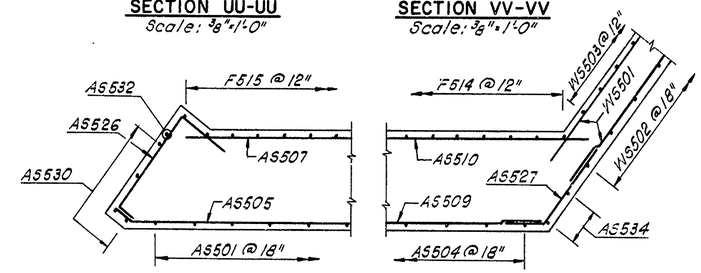

SECTION WW-WW
Scale: 3/8"=1'-0"

SECTION WW'-WW'
Scale: 3/8"=1'-0"

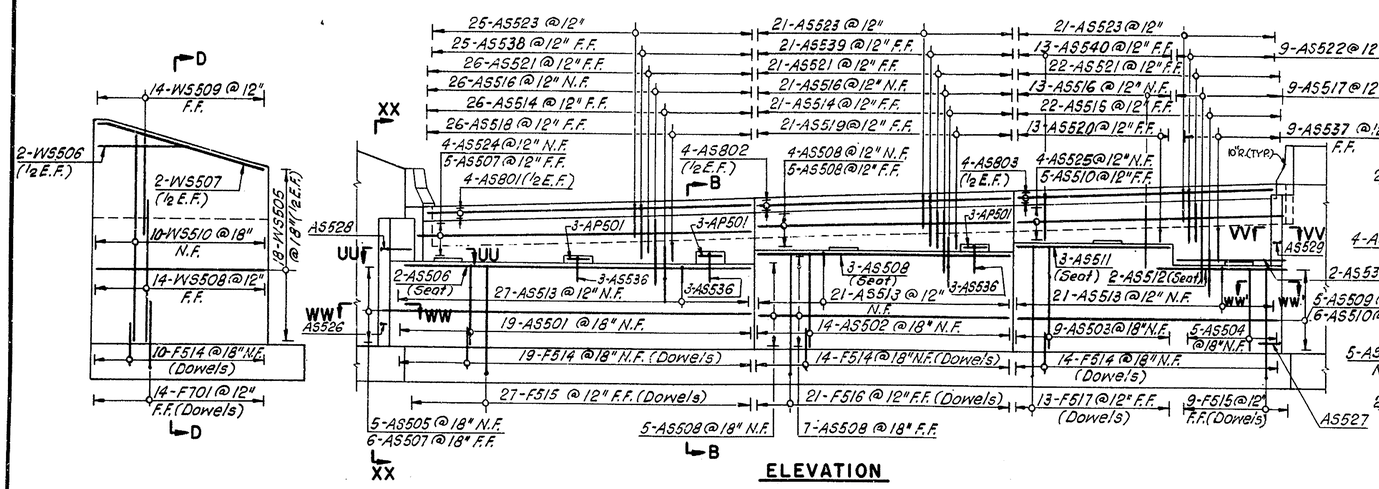

ELEVATION

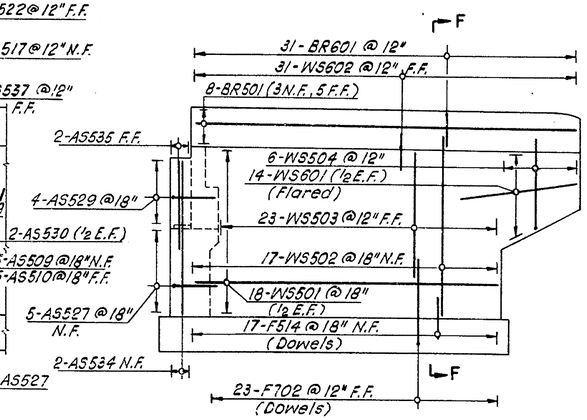

NORTHEAST WALL

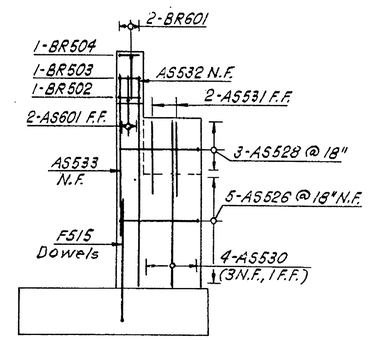

VIEW XX-XX
Scale: 1/4"=1'-0"

REFERENCES:

1. For Bar List see Dwg. No. 33
2. For Sections B-B, D-D & F-F see Dwg. No. 11.
3. For Pad Reinforcing Detail see Dwg. No. 6.

	Date	Revision
In Charge of N. Erikson		
Designed by M. Siebold		
Design Checked by A. Hermann		
Detailed by M. Siebold		
Detail Checked by R. Metcalf		

Prepared and Recommended
GOODKIND & O'DEA, INC. Consulting Engineers
Date MAY 25 1971

DELAWARE
STATE HIGHWAY DEPARTMENT

NORTH ABUTMENT – NORTHBOUND
BAR REINFORCEMENT

APPROVED BY: John S. Cullitz
BRIDGE ENGINEER
JUN 18 1971
DATE

DWG. NO.	SCALE	DATE	
10	3/16"=1'-0" & As noted	NOV 1971	GOODKIND & O'DEA, INC. CONSULTING ENGINEERS

COUNTY	CONTRACT	B.P.R. REG. NO.	STATE	FED. AID PROJECT NO.	SHEET NO.	TOTAL SHEETS
NEW CASTLE	71-05-003	2	DEL.		56	101

INTERSTATE ROUTE 495 OVER NEW CASTLE AVE. & READING R.R.

BRIDGE NO. 5

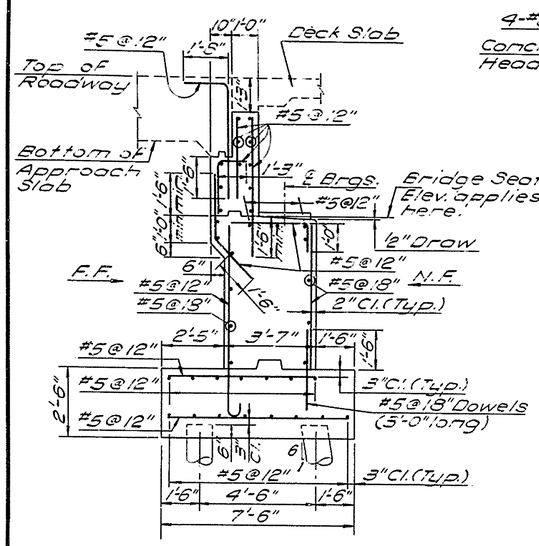

SECTION A-A

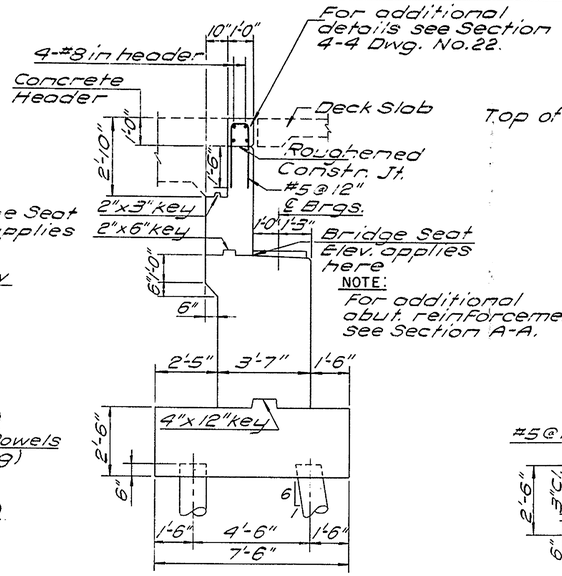

SECTION B-B

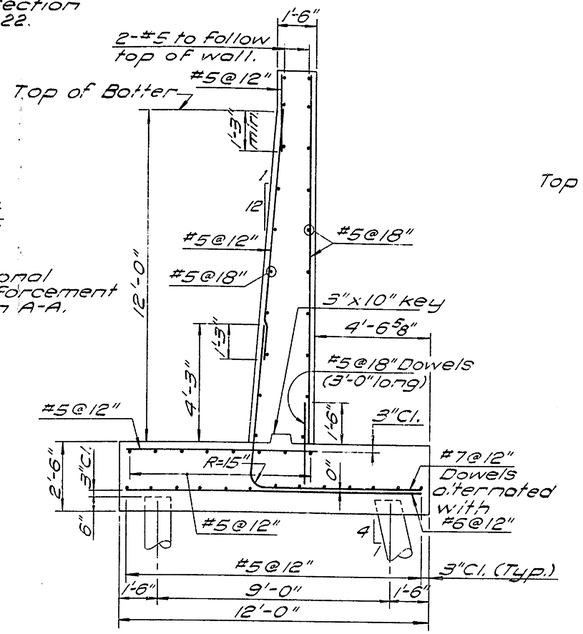

SECTION C-C

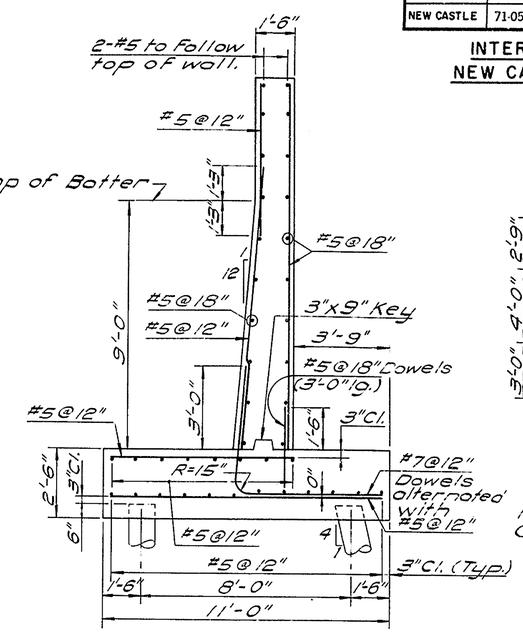

SECTION D-D

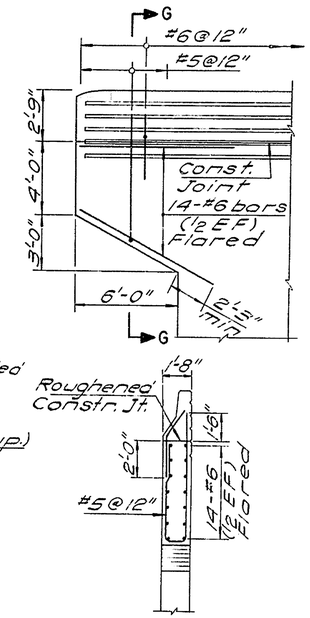

SECTION G-G

CANTILEVER DETAIL

Scale: 1/4" = 1'-0"

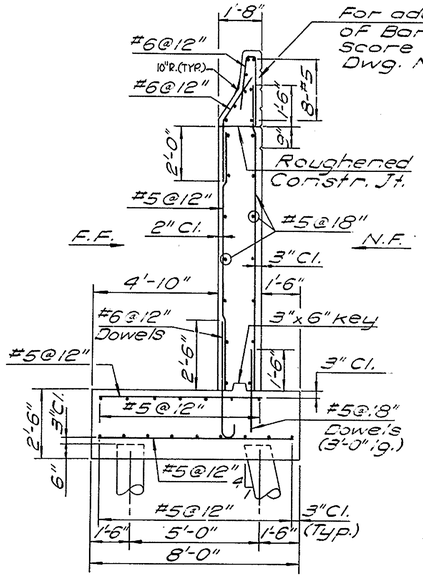

SECTION E-E

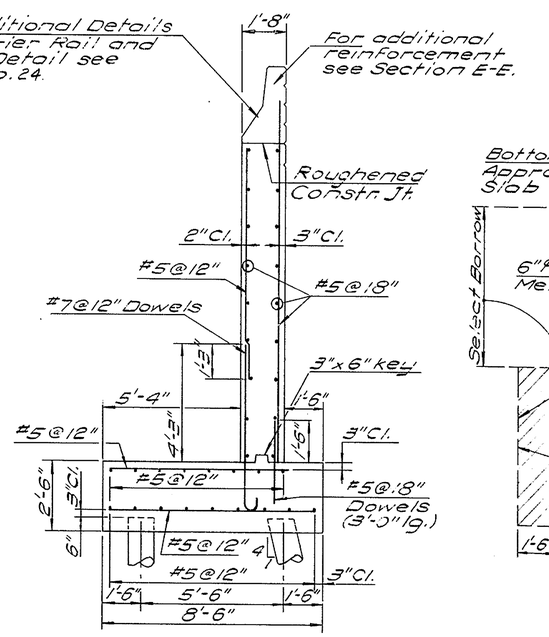

SECTION F-F

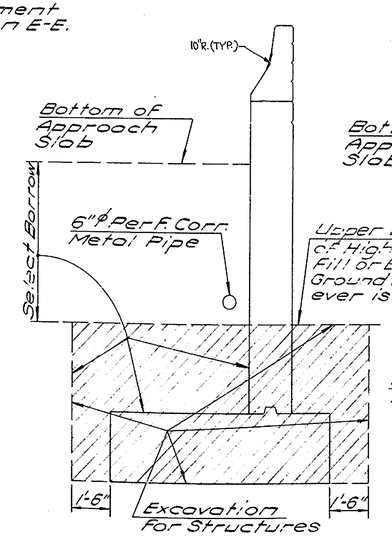

WINGWALL

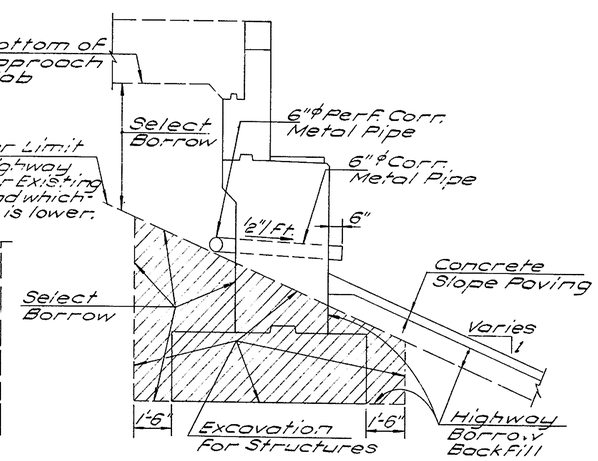

ABUTMENT

MISCELLANEOUS DETAILS

Not to Scale

	Date	Revision
In Charge of N. Erickson		
Designed by N. Chou		
Design Checked by M. Siebold		
Detailed by R. Metcalf		
Detail Checked by N. Erickson		

Prepared and Recommended GOODKIND & O'DEA, INC. Consulting Engineers

Date MAY 25 1971

DELAWARE STATE HIGHWAY DEPARTMENT

ABUTMENT AND WINGWALL SECTIONS AND DETAILS

APPROVED BY: John F. Ritter, BRIDGE ENGINEER — JUN 18 1971, DATE

DWG. NO.	SCALE	DATE	
1	3/8"=1'-0" & As Noted	Nov 1971	GOODKIND & O'DEA, INC. CONSULTING ENGINEERS

COUNTY	CONTRACT	B.P.R. REF. NO.	STATE	FED. AID PROJECT NO.	SHEET NO.	TOTAL SHEETS
NEW CASTLE	71-05-003	2	DEL.		57	151

INTERSTATE ROUTE 495 OVER NEW CASTLE AVE. & READING R.R. BRIDGE NO. 5

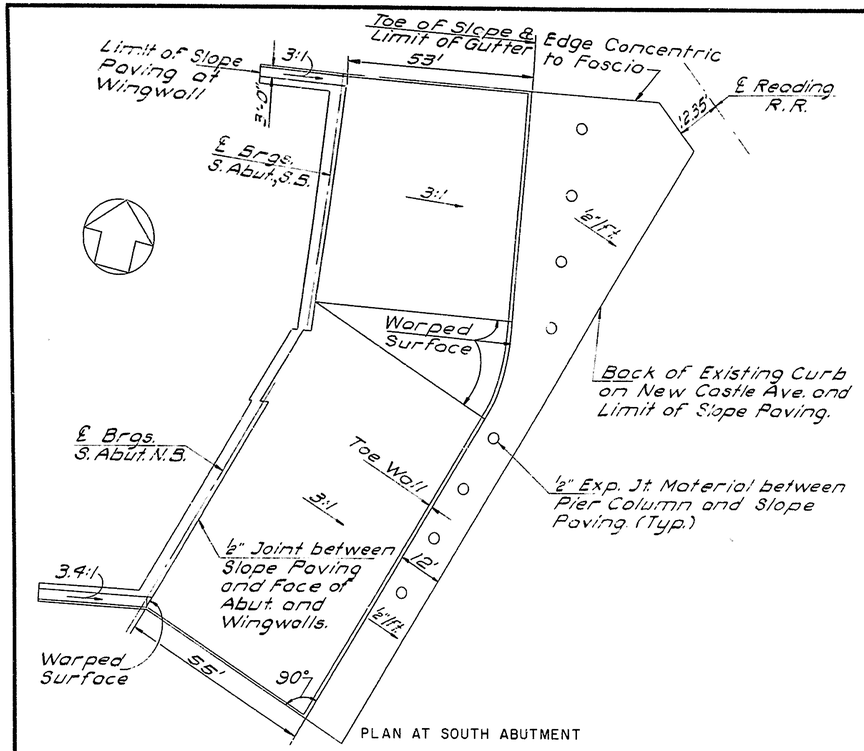

PLAN AT SOUTH ABUTMENT

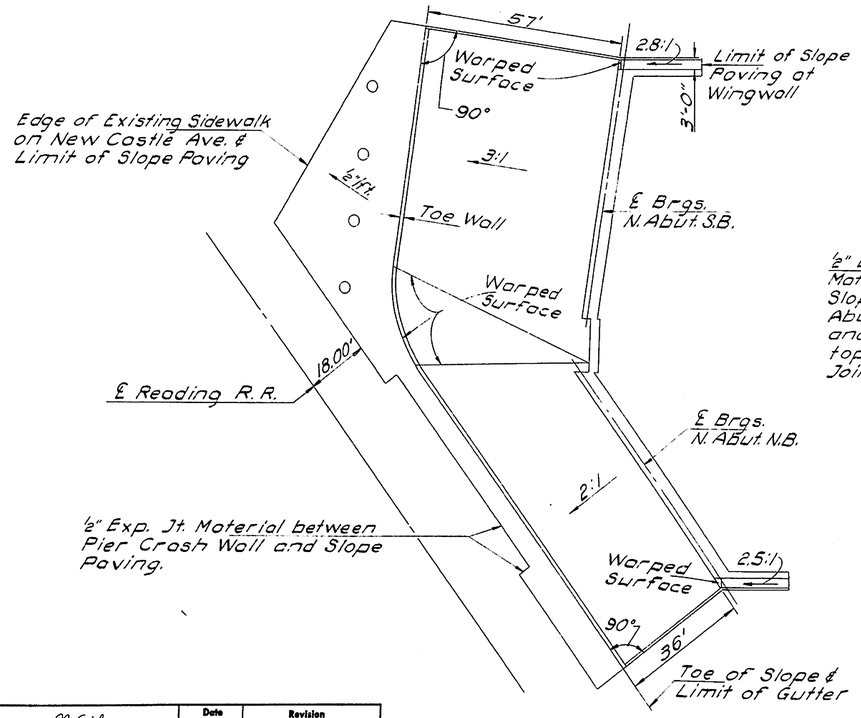

PLAN AT NORTH ABUTMENT

CONCRETE SLOPE PAVING

Not to Scale

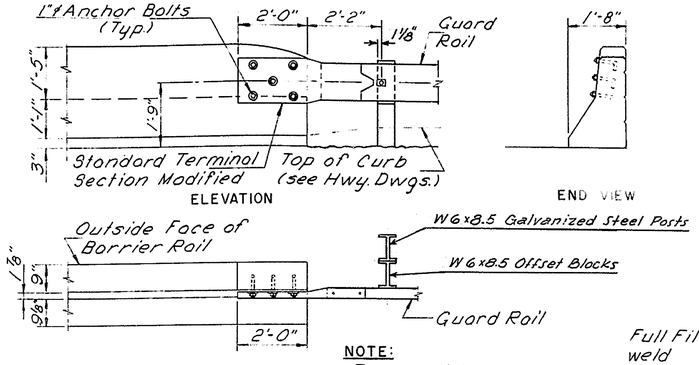

NOTE:
For additional details see Standard Sheet G-7.

PLAN

CONNECTION GUARD RAIL TO BARRIER RAIL

Scale: ½"=1'-0"

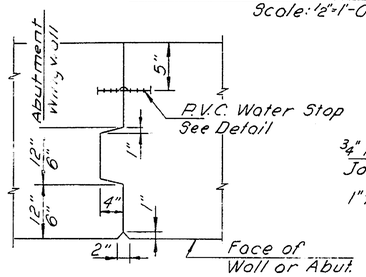

CONTRACTION JOINT DETAIL

Not to Scale

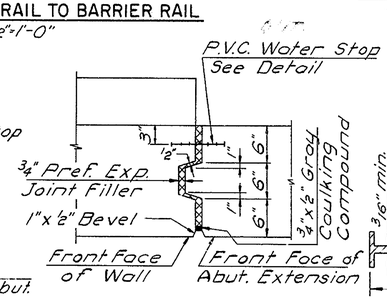

EXPANSION JOINT DETAIL

Not to Scale

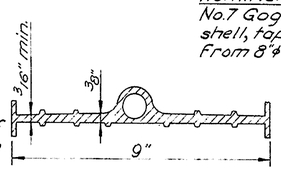

PVC WATER STOP

Not to Scale

JOINT NOTES:
1. Key to stop 1'-0" from top of Abutment seat or Wall.
2. Reinforcement shall not pass through contraction or expansion joints.

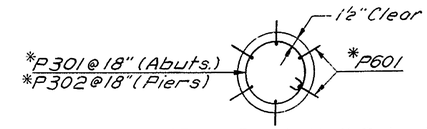

*Paid For in Unit Price Bid For Cost-In-Place Concrete Piles.

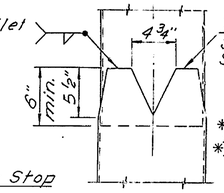

SHELL SPLICE

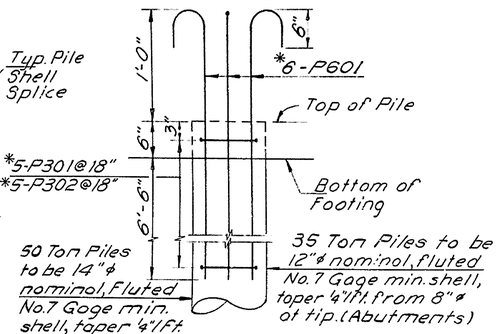

PILE DETAILS

Not to Scale

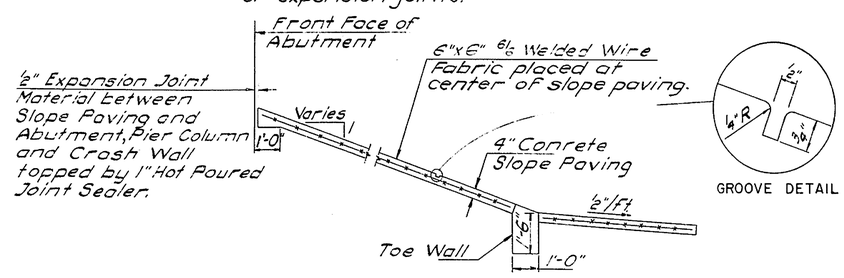

TYPICAL ELEVATION

CONCRETE SLOPE PAVING

Not to Scale

GROOVE DETAIL

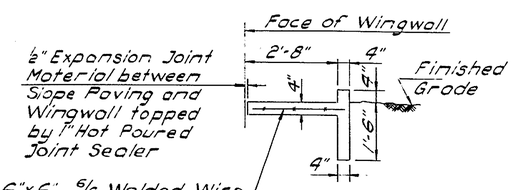

GUTTER DETAIL

Scale: 1½"=1'-0"

GENERAL PILE NOTES

1. ALL PILES SHALL CONFORM TO SECTION 624, "CAST-IN-PLACE CONCRETE PILES" OF THE STANDARD SPECIFICATIONS AND HAVE A MINIMUM BEARING VALUE OF 35 TONS AT ABUTMENTS AND WALLS, 50 TONS AT PIERS.
2. ANY ALTERNATE TYPE OF PILE COMPLYING WITH SECTION 624 WILL BE CONSIDERED FOR ACCEPTANCE.
3. ◎ INDICATES TEST PILE.
4. ○ INDICATES VERTICAL PILE.
5. ◁○ INDICATES PILE BATTERED IN DIRECTION OF ARROW: 1:6 FOR ABUTMENTS AND PIERS; 1:4 FOR WINGWALLS AND WALLS BETWEEN ABUTMENTS.

	Date	Revision
In Charge of N. Erikson		
Designed by N. Erikson		
Design Checked by E. Hutchins		
Detailed by O. Brooks		
Detail Checked by N. Erikson		

Prepared and Recommended
GOODKIND & O'DEA, INC. Consulting Engineers
Date MAY 25 1971

DELAWARE
STATE HIGHWAY DEPARTMENT

SUBSTRUCTURE DETAILS

APPROVED BY:
BRIDGE ENGINEER — DATE JUN 18 1971

DWG. NO.	SCALE	DATE	
12	As Noted	May 1971	GOODKIND & O'DEA, INC. CONSULTING ENGINEERS

COUNTY	CONTRACT	B. P. R. REF. NO.	STATE	FED. AID PROJECT NO.	SHEET NO.	TOTAL SHEETS
NEW CASTLE	71-05-003	2	DEL.		58	161

INTERSTATE ROUTE 495 OVER NEW CASTLE AVE. & READING R.R. BRIDGE NO. 5

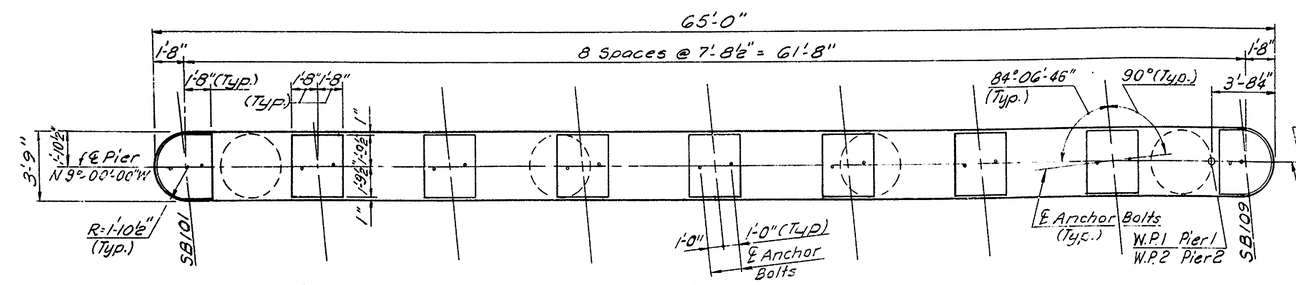

PLAN
Scale: ¼"=1'-0"

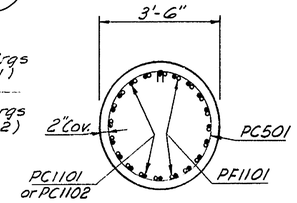

SECTION H-H
Scale: ½"=1'-0"

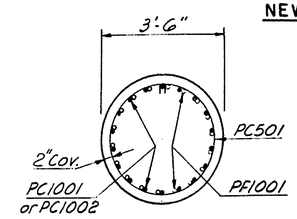

SECTION J-J
Scale: ½"=1'-0"

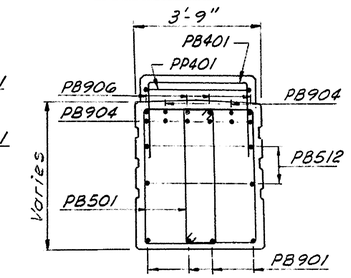

SECTION K-K
Scale: ½"=1'-0"

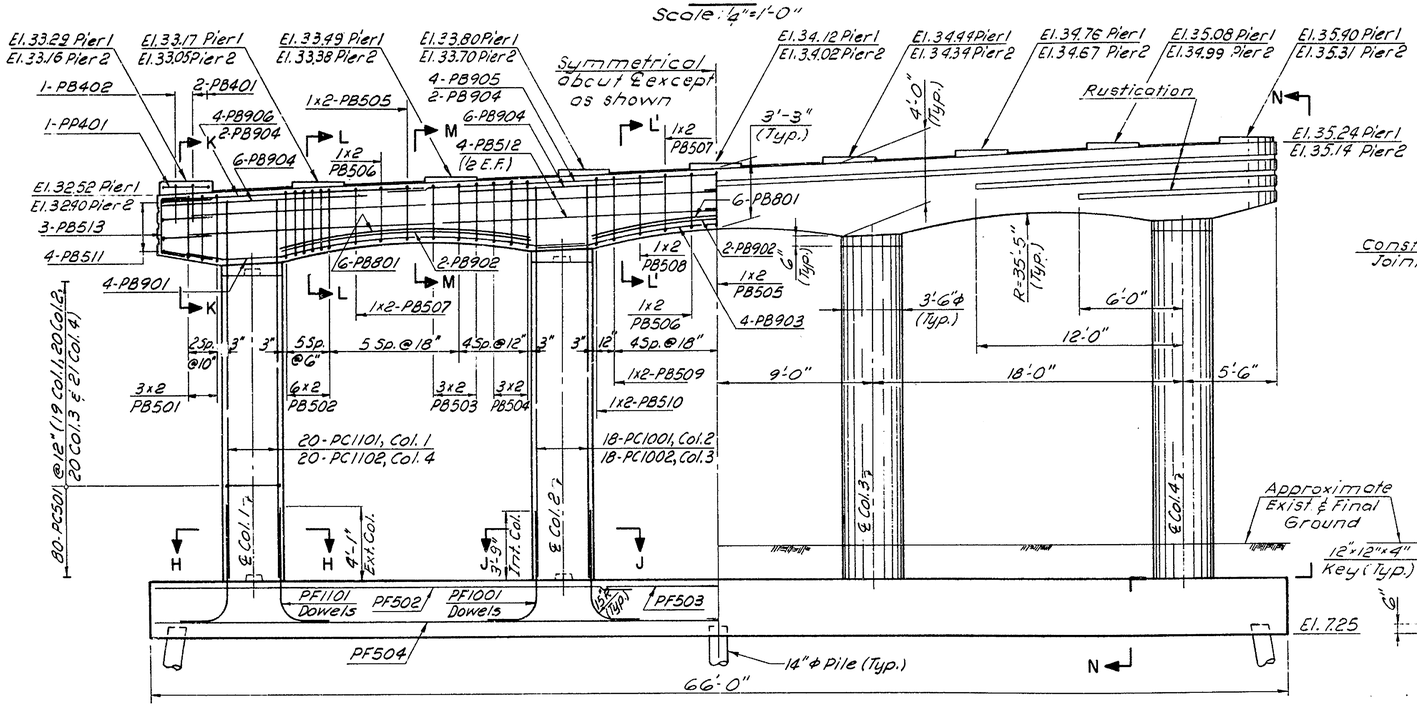

ELEVATION
Scale: ¼"=1'-0"

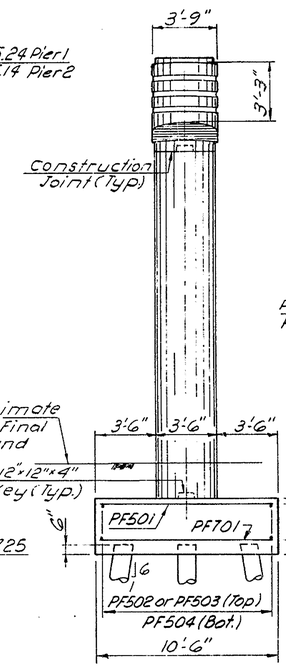

SECTION N-N
Scale: ¼"=1'-0"

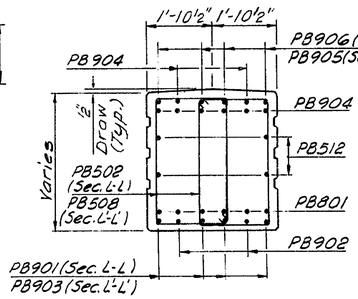

SECTION L-L
SECTION L'-L'
Scale: ½"=1'-0"

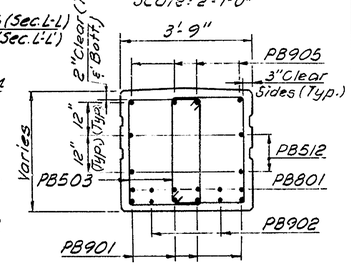

SECTION M-M
Scale: ½"=1'-0"

PILE NOTES

1. Estimated length of 50 ton piles is 40'.
2. Length of test pile is 50'.

REFERENCES

1. For layout of Working Points see Layout Plan on Dwg No. 2.
2. For Pile Details and General Pile Notes see Dwg No. 12.
3. For Bar List see Dwg No. 34.
4. For Excavation Limits see Dwg. No. 14.
5. For Anchor bolt details see Dwg. No. 21.

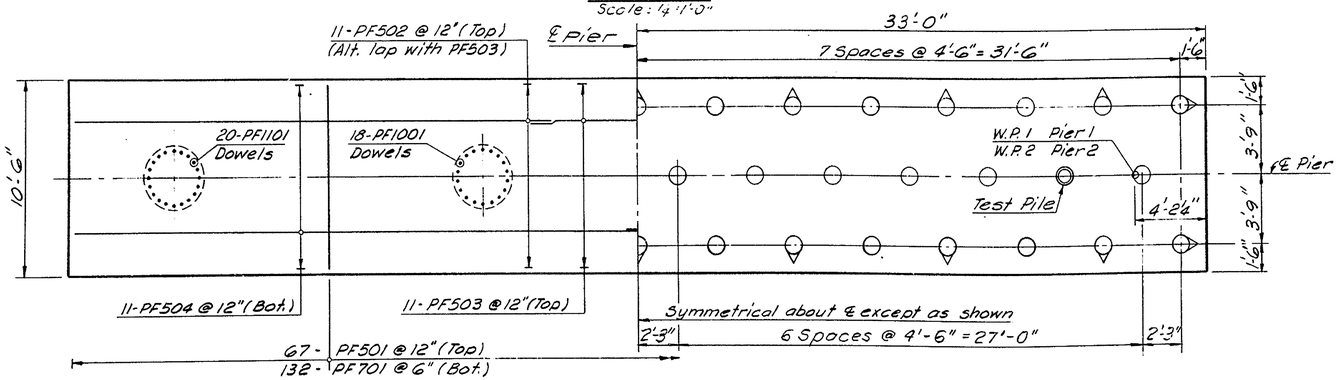

FOOTING PLAN
Scale: ¼"=1'-0"

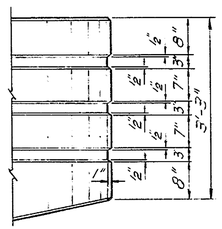

RUSTICATION DETAIL
Scale: ¾"=1'-0"

In Charge of	M. Erickson
Designed by	E. Hutchins
Design Checked by	P. Hermann
Detailed by	T.B. Wasylyk
Detail Checked by	N. Malunkey

Date	Revision

Prepared and Recommended
GOODKIND & O'DEA, INC. Consulting Engineers

Date MAY 25 1971

DELAWARE
STATE HIGHWAY DEPARTMENT

PIERS 1 AND 2
SOUTHBOUND

APPROVED BY: John E. Cullen
BRIDGE ENGINEER
JUN 18 1971
DATE

DWG. NO.	SCALE	DATE	
13	As Noted	May 1971	GOODKIND & O'DEA, INC. CONSULTING ENGINEERS

COUNTY	CONTRACT	B. P. R. REF. NO.	STATE	FED. AID PROJECT NO.	SHEET NO.	TOTAL SHEETS
NEW CASTLE	71-05-003	2	DEL.		59	131

INTERSTATE ROUTE 495 OVER NEW CASTLE AVE. & READING R.R. BRIDGE NO. 5

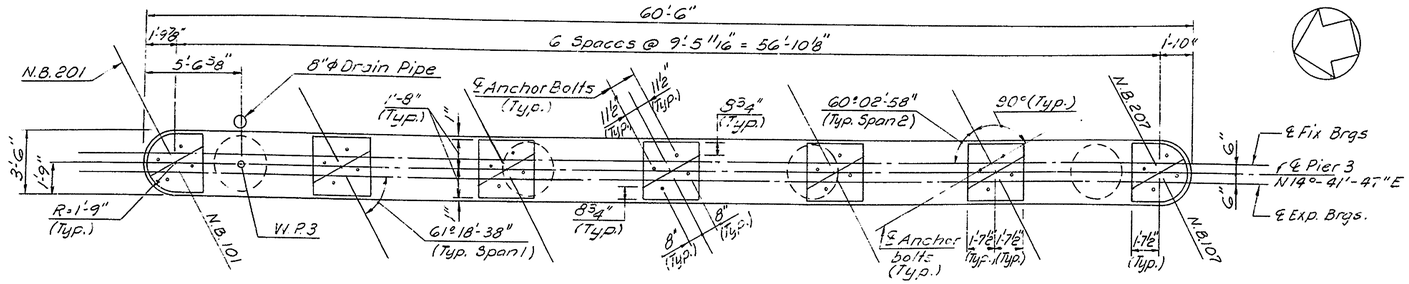

PLAN
Scale: 4" = 1'-0"

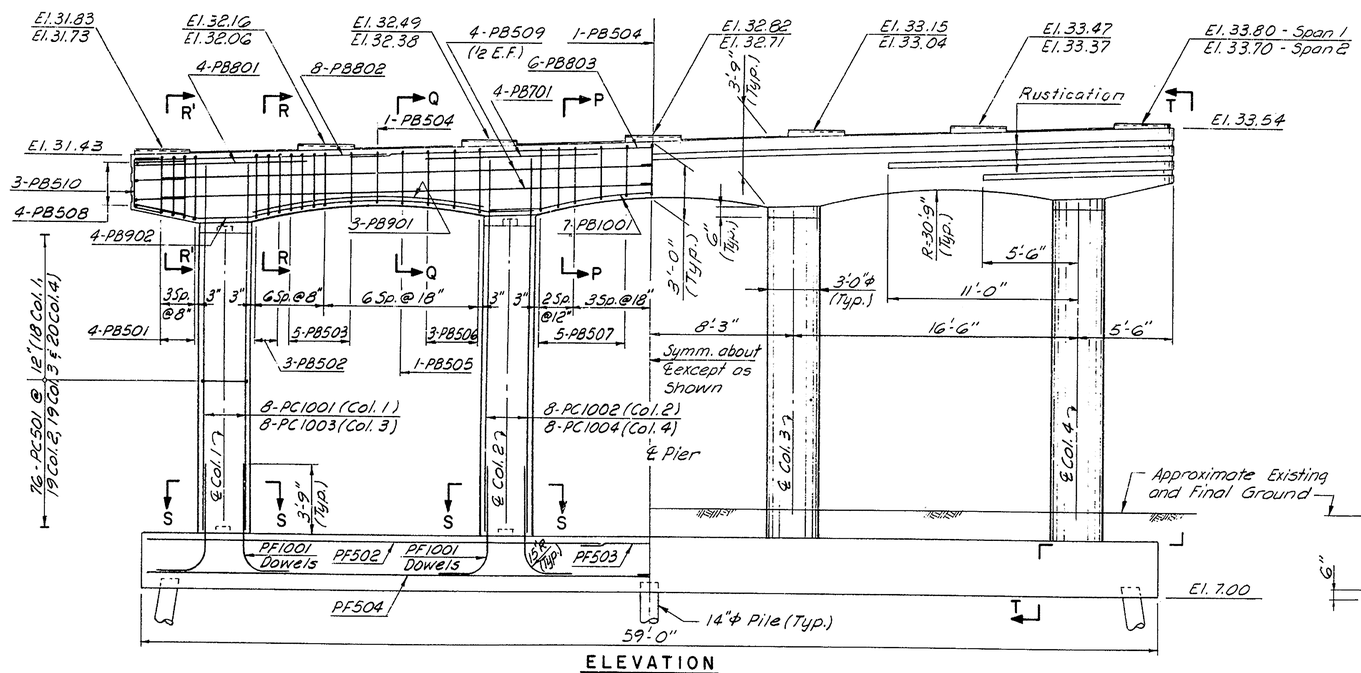

ELEVATION
Scale: ¼" = 1'-0"

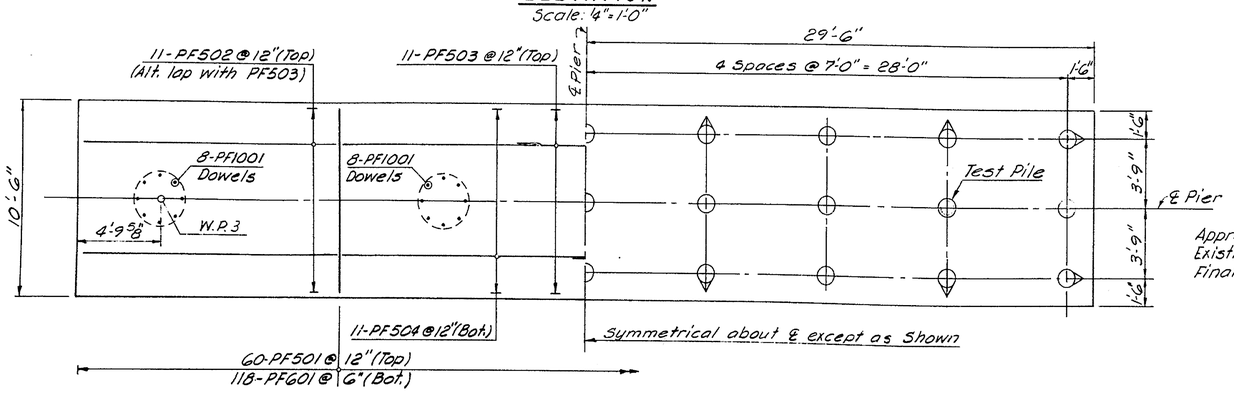

FOOTING PLAN
Scale: ¼" = 1'-0"

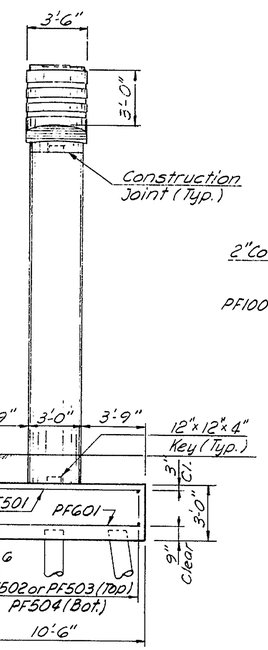

SECTION T-T
Scale: ¼" = 1'-0"

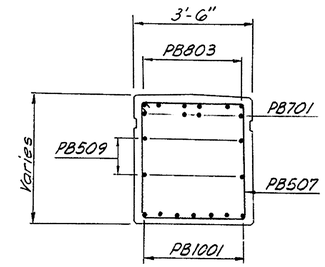

SECTION P-P
Scale: ½" = 1'-0"

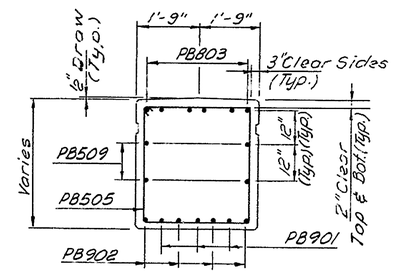

SECTION Q-Q
Scale: ½" = 1'-0"

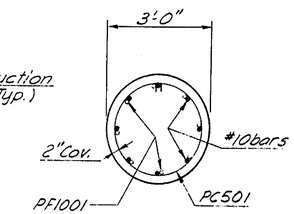

SECTION S-S
Scale: ½" = 1'-0"

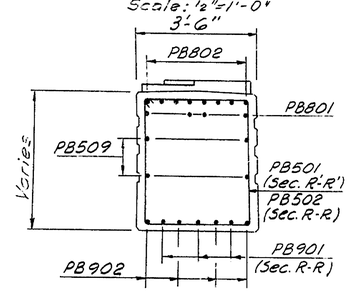

SECTION R-R
SECTION R' R'
Scale: ½" = 1'-0"

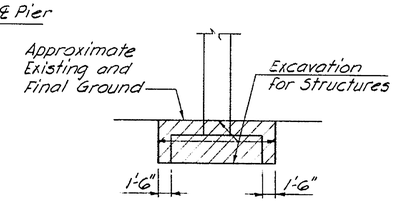

EXCAVATION LIMITS
Not to Scale

REFERENCES:

1. For Rustication Detail see Dwg No. 16.
2. For Drainage System on Pier see Dwg. No. 23.
3. For additional Pier References and Pile Notes see Dwg. No. 13.
4. For Bar List, see Dwg. No. 35.

	Date	Revision

In Charge of N. Eriksson
Designed by N. Chou
Design Checked by E. Hutchins
Detailed by T. B. Wasylyk
Detail Checked by R. Malenberg

Prepared and Recommended
GOODKIND & O'DEA, INC.
Consulting Engineers
Date MAY 25 1971

DELAWARE
STATE HIGHWAY DEPARTMENT

PIER 3 - NORTHBOUND

APPROVED BY: John E. Cubbage
BRIDGE ENGINEER
JUN 18 1971
DATE

DWG. NO.	SCALE	DATE	GOODKIND & O'DEA, INC. CONSULTING ENGINEERS
14	As Noted	May 1971	

COUNTY	CONTRACT	B. P. R. REG. NO.	STATE	FED. AID PROJECT NO.	SHEET NO.	TOTAL SHEETS
NEW CASTLE	71-05-003	2	DEL.		60	131

INTERSTATE ROUTE 495 OVER NEW CASTLE AVE. & READING R.R. BRIDGE NO. 5

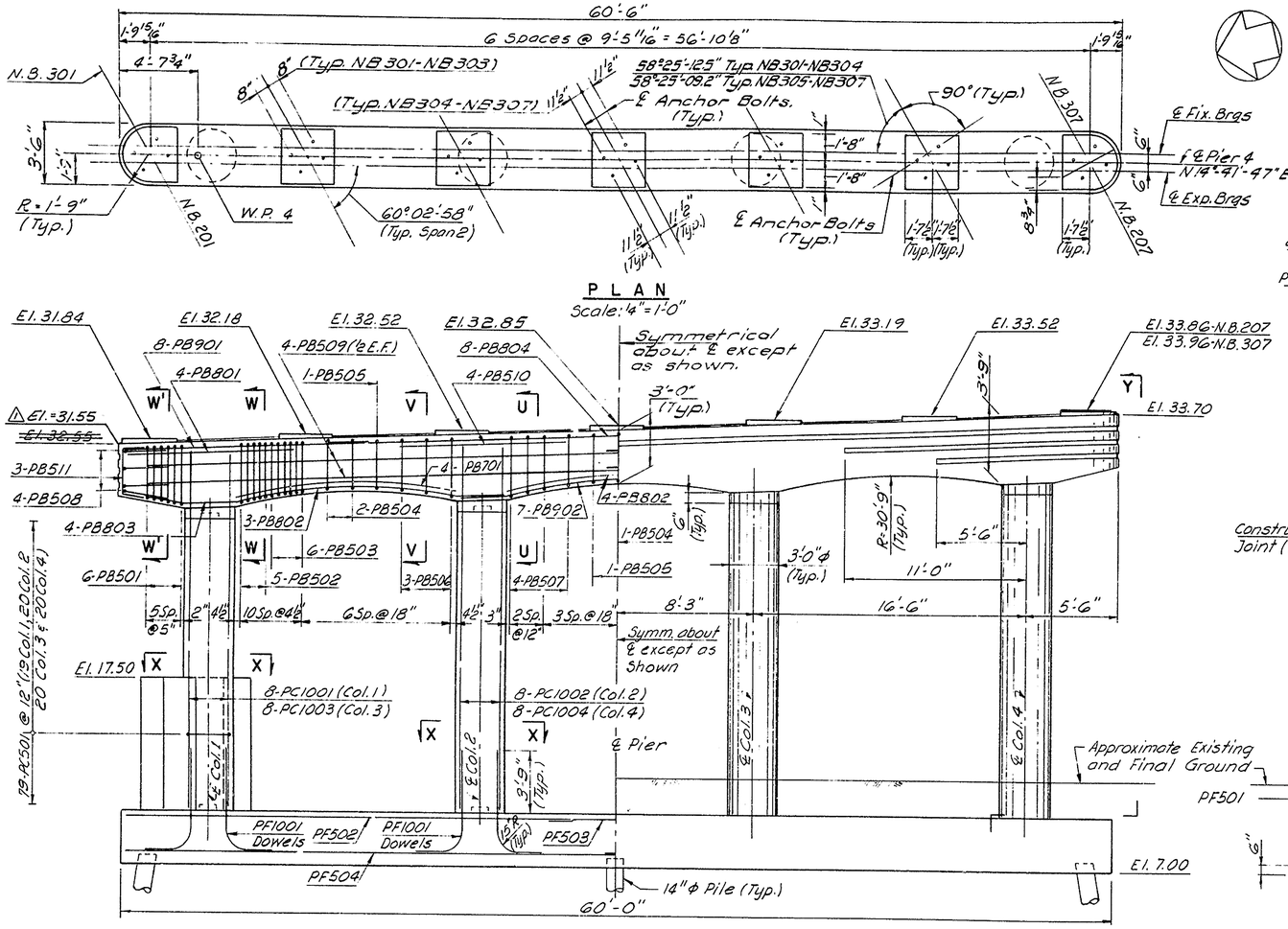

PLAN
Scale: 1/4" = 1'-0"

ELEVATION
Scale: 1/4" = 1'-0"

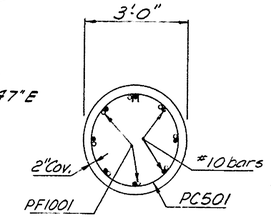

SECTION X-X
Scale: 1/2" = 1'-0"

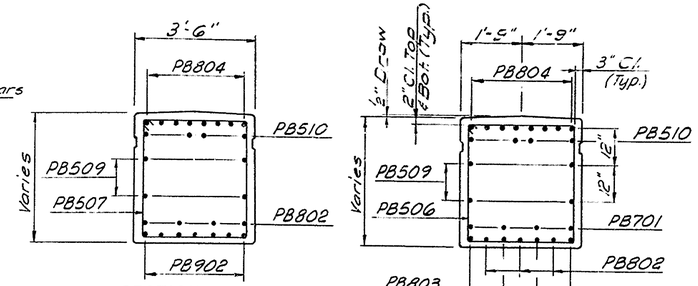

SECTION U-U
Scale: 1/2" = 1'-0"

SECTION V-V
Scale: 1/2" = 1'-0"

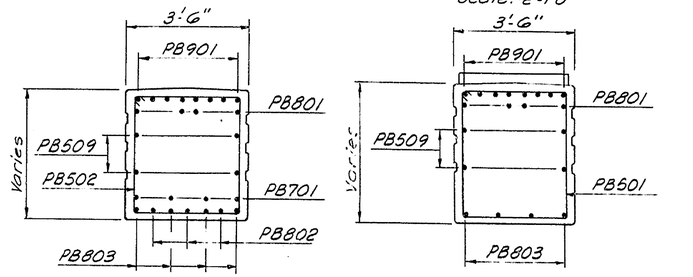

SECTION W-W
Scale: 1/2" = 1'-0"

SECTION W'-W'
Scale: 1/2" = 1'-0"

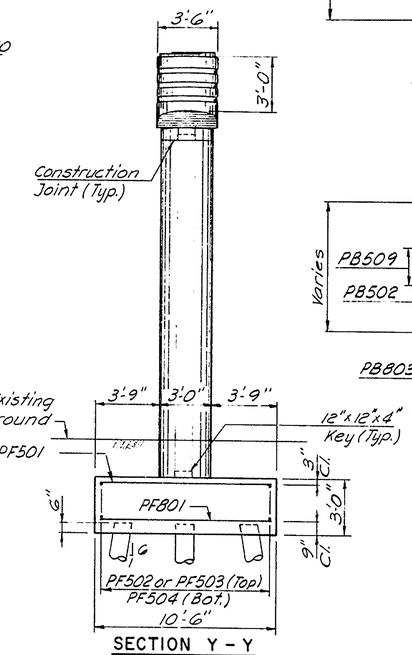

SECTION Y-Y
Scale: 1/2" = 1'-0"

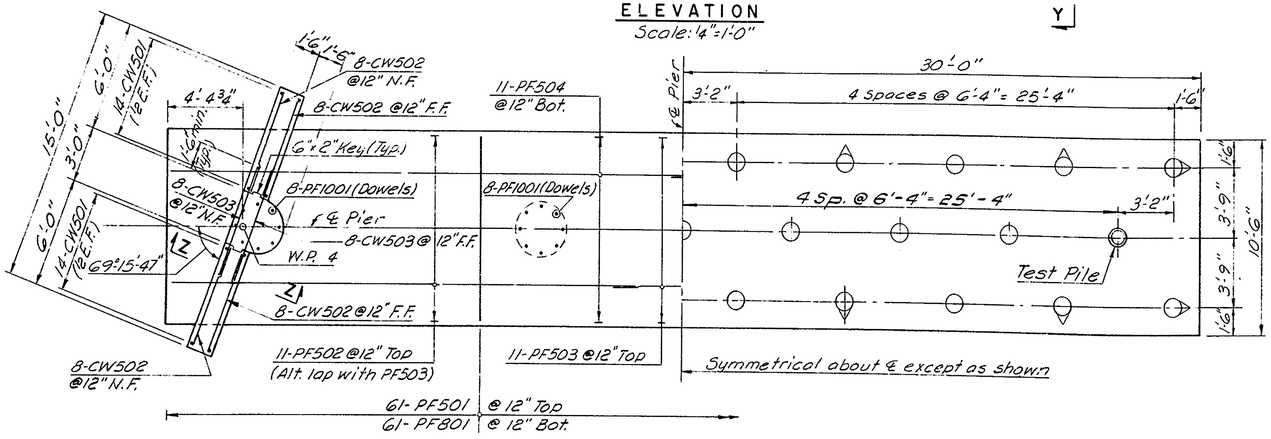

FOOTING PLAN
Scale: 1/4" = 1'-0"

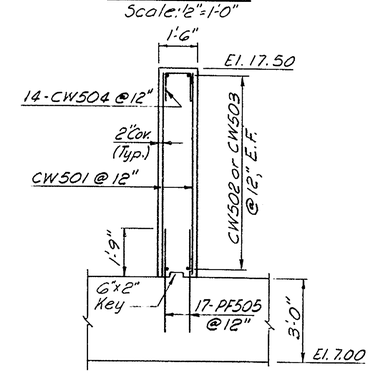

SECTION Z-Z
Scale: 3/8" = 1'-0"

REFERENCES:
1. For Rustication Detail, see Dwg. No. 16.
2. For additional Pier References and Pile Notes, see Dwg. No. 13.
3. For Bar List, see Dwg. No. 35.

	Date	Revision
In Charge of N. Eriksen	6/20/72	Revised Pier Cap Elev.
Designed by N. Chou		
Design Checked by E. Hutchins		
Detailed by T. B. Wasylyk		
Detail Checked by N. Ma'ru'ufi		

Prepared and Recommended
GOODKIND & O'DEA, INC. Consulting Engineers

Date MAY 25 1971

DELAWARE
STATE HIGHWAY DEPARTMENT

PIER 4 - NORTHBOUND

APPROVED BY: BRIDGE ENGINEER — DATE

DWG. NO.	SCALE	DATE	
15	As Noted	May 1971	GOODKIND & O'DEA, INC. CONSULTING ENGINEERS

COUNTY	CONTRACT	S. P. R. REG. NO.	STATE	FED. AID PROJECT NO.	SHEET NO.	TOTAL SHEETS
NEW CASTLE	71-05-003	2	DEL.		61	161

INTERSTATE ROUTE 495 OVER NEW CASTLE AVE. & READING R.R. BRIDGE NO. 5

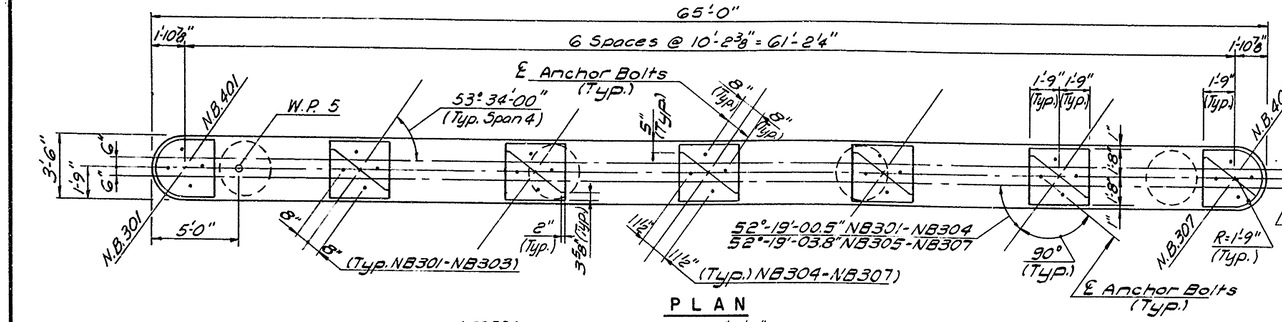

PLAN
Scale: 1/4" = 1'-0"

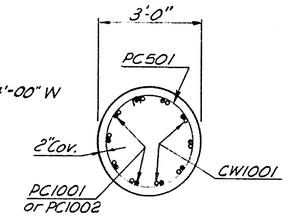

SECTION DD - DD
Scale: 1/2" = 1'-0"

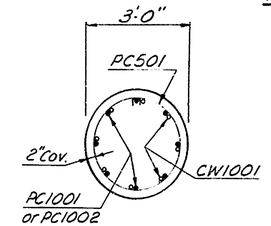

SECTION EE - EE
Scale: 1/2" = 1'-0"

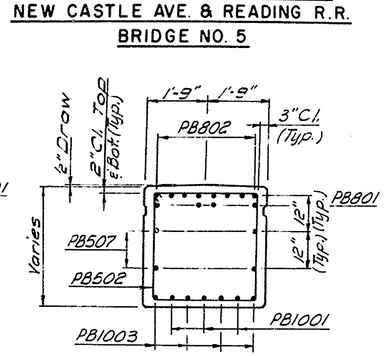

SECTION BB - BB
Scale: 1/2" = 1'-0"

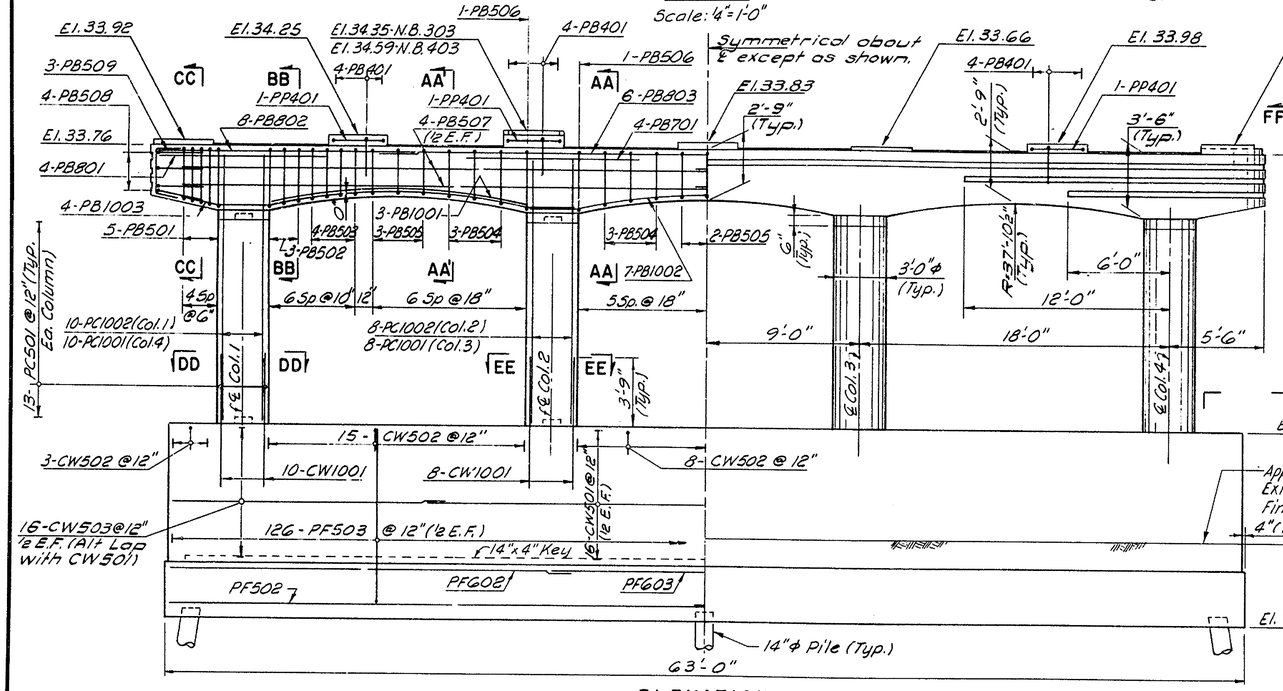

ELEVATION
Scale: 1/4" = 1'-0"

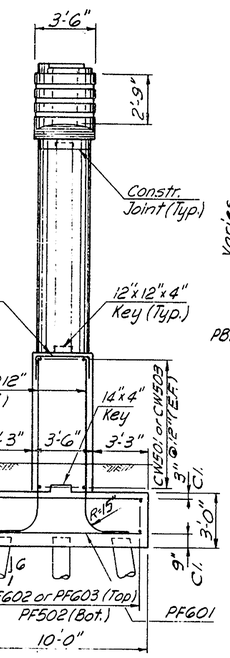

SECTION FF - FF
Scale: 1/4" = 1'-0"

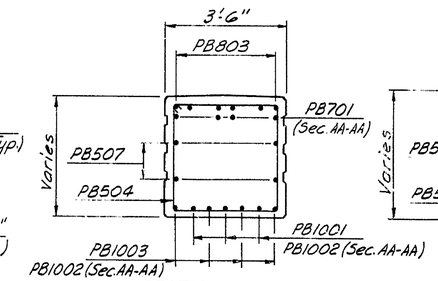

SECTION AA - AA
SECTION AA' - AA'
Scale: 1/2" = 1'-0"

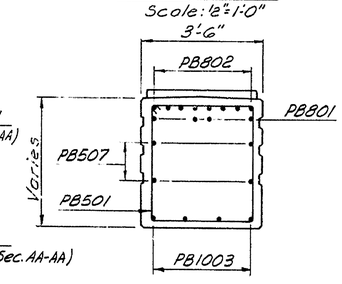

SECTION CC - CC
Scale: 1/2" = 1'-0"

REFERENCES:

1. For additional Pier References see Dwg. No. 13.
2. For Bar List, see Dwg. No. 35.
3. For Pile Notes, see Dwg. No. 13.

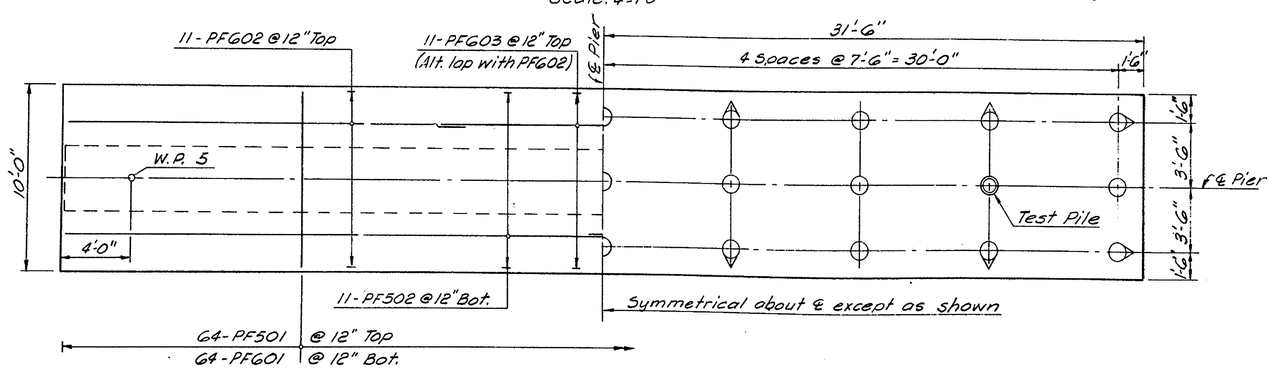

FOOTING PLAN
Scale: 1/4" = 1'-0"

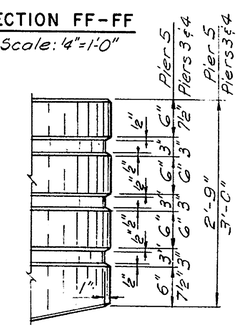

RUSTICATION DETAIL
Scale: 1 1/2" = 1'-0"

In Charge of N. Erikson	Date	Revision
Designed by N. Chou	7-13-72	Bearing Pad El. Change
Design Checked by E. Hutchins		
Detailed by T. B. Wasylyk		
Detail Checked by N. Mayberry		

Prepared and Recommended
GOODKIND & O'DEA, INC.
Consulting Engineers

Date MAY 25 1971

DELAWARE
STATE HIGHWAY DEPARTMENT

PIER 5 - NORTHBOUND

APPROVED BY: BRIDGE ENGINEER — DATE JUN 18 1971

DWG. NO.	SCALE	DATE	
16	As Noted	May 1971	GOODKIND & O'DEA, INC. CONSULTING ENGINEERS

COUNTY	CONTRACT	S. P. R. REG. NO.	STATE	FED. AID PROJECT NO.	SHEET NO.	TOTAL SHEETS
NEW CASTLE	71-05-003	2	DEL.		62	161

INTERSTATE ROUTE 495 OVER NEW CASTLE AVE. & READING R.R. BRIDGE NO. 5

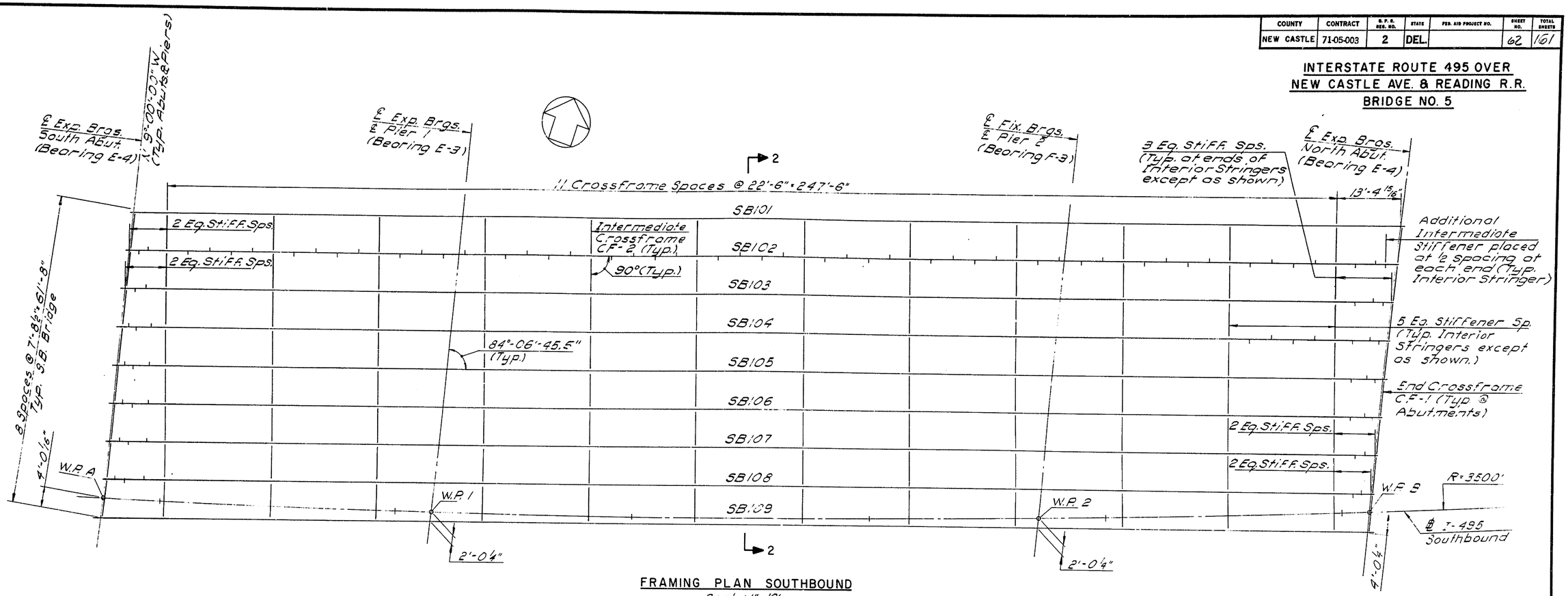

FRAMING PLAN SOUTHBOUND

Scale: 1" = 10'

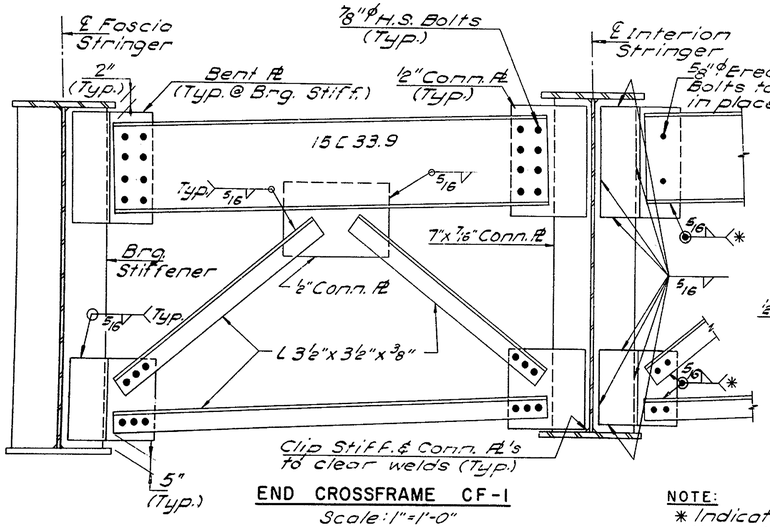

END CROSSFRAME CF-1

Scale: 1" = 1'-0"

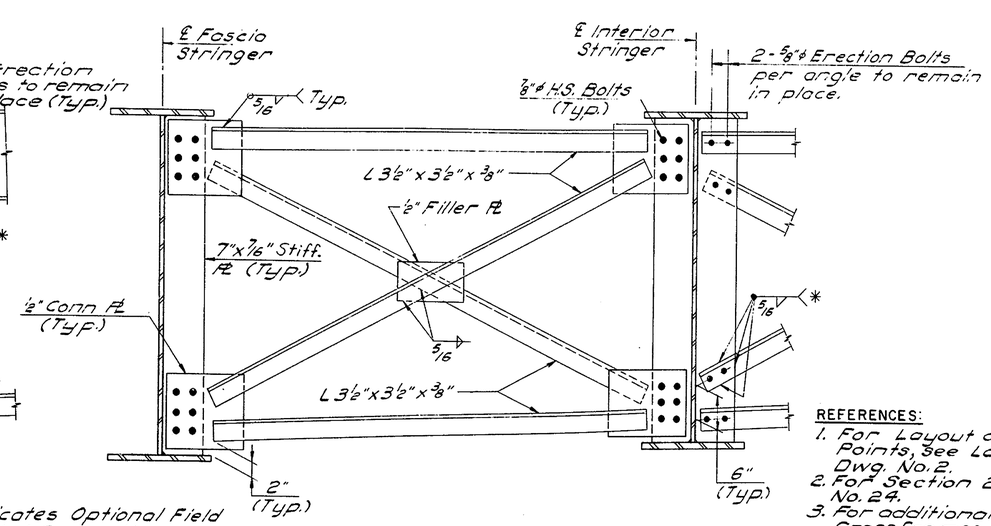

INTERMEDIATE CROSSFRAME CF-2

Scale: 1" = 1'-0"

NOTE:
* Indicates Optional Field Welded Connections.

STRUCTURAL STEEL NOTES

1. ALL STRUCTURAL STEEL IS ASTM A36 EXCEPT AS NOTED.
2. ANY WELDED JOINT PREQUALIFIED BY THE LATEST A.W.S. SPECIFICATIONS WILL BE ACCEPTABLE IN THE FABRICATION OF THE STRUCTURAL STEEL.
3. ENDS OF STRINGERS AND BEARING STIFFENERS ARE TO BE VERTICAL UNDER FULL DEAD LOAD.
4. INTERMEDIATE STIFFENERS SHALL BE PERPENDICULAR TO THE FLANGE AND WEB.
5. INTERMEDIATE STIFFENERS ARE NOT REQUIRED ON STRINGERS SB101, SB109, NB101, NB107, NB301-NB303 AND NB401-NB407.
6. FIT BOTH ENDS OF INTERMEDIATE STIFFENERS AND WELD TO THE COMPRESSION FLANGE ONLY. SEE STRINGER ELEVATION FOR LIMITS.
7. ALL WEB SPLICE WELDS SHALL BE MADE BEFORE FLANGE TO WEB WELDS.
8. THE CONTRACTOR SHALL HAVE THE OPTION OF PROVIDING EITHER BOLTED OR WELDED CONNECTIONS FOR THE CROSSFRAMES AND DIAPHRAGMS.

REFERENCES:

1. For Layout of Working Points, see Layout Plan, Dwg. No. 2.
2. For Section 2-2 see Dwg. No. 24.
3. For additional Details of End Crossframes see Dwg. No. 22.
4. For Stringer Details see Dwg. No. 19.
5. For Bearing Shoe Details see Dwg. No. 21.

Prepared and Recommended
GOODKIND & O'DEA, INC. Consulting Engineers
Date MAY 25 1971

	Date	Revision
In Charge of N. Eriksen		
Designed by M. Siebold		
Design Checked by P. Hermann		
Detailed by O. Brooks		
Detail Checked by N. Malubier		

DELAWARE
STATE HIGHWAY DEPARTMENT

FRAMING PLAN
SOUTHBOUND

APPROVED BY: John S. Baldwin, BRIDGE ENGINEER — DATE JUN 18 1971

DWG. NO.	SCALE	DATE	
17	As Noted	May 1971	GOODKIND & O'DEA, INC. CONSULTING ENGINEERS

COUNTY	CONTRACT	B.P.R. BRA. NO.	STATE	FED. AID PROJECT NO.	SHEET NO.	TOTAL SHEETS
NEW CASTLE	71-05-003	2	DEL.		63	151

INTERSTATE ROUTE 495 OVER NEW CASTLE AVE. & READING R.R. BRIDGE NO. 5

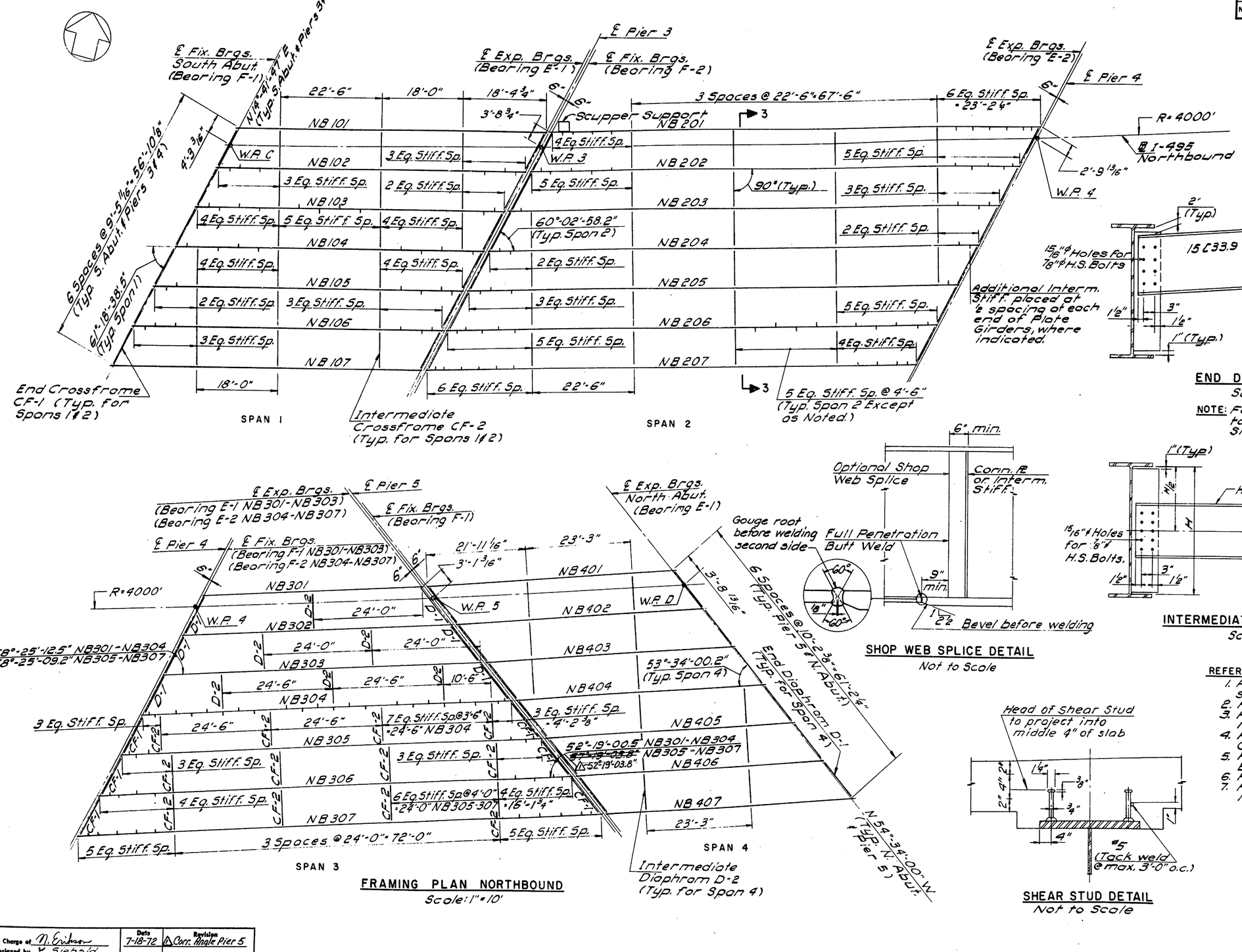

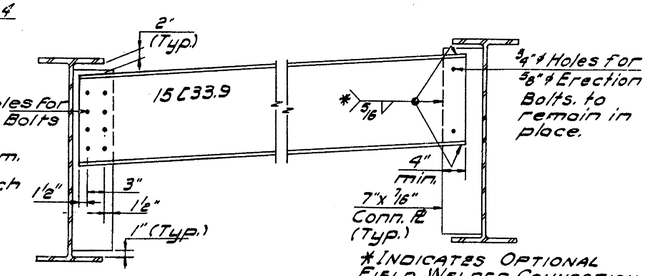

END DIAPHRAGM D-1

Scale: 1" = 1'-0"

NOTE: For connection of Diaphragm D-1 to Stringer NB 304 & NB 407 see CF-1, Sheet No. 17.

SHOP WEB SPLICE DETAIL

Not to Scale

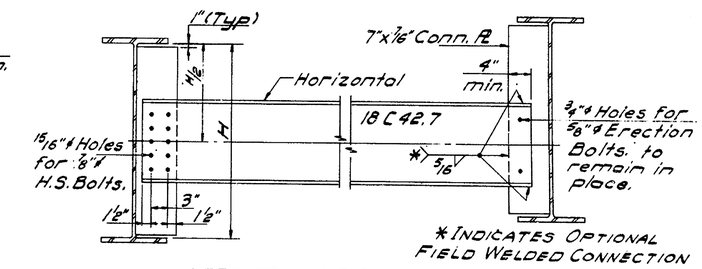

INTERMEDIATE DIAPHRAGM D-2

Scale: 1" = 1'-0"

FRAMING PLAN NORTHBOUND

Scale: 1" = 10'

SHEAR STUD DETAIL

Not to Scale

REFERENCES:

1. For Layout of Working Points see Layout Plan, Dwg. No. 2.
2. For Section 3-3 see Dwg. No. 24.
3. For Scupper Support Frame For NB 201, see Dwg. No. 23.
4. For details of Crossframes CF-1 and CF-2 see Dwg. No. 17.
5. For additional Details of End Diaphragms see Dwg. No. 22.
6. For Stringer Details see Dwg. No. 20.
7. For Bearing Shoe Details see Dwg. No. 21.

In Charge of	N. Erickson
Designed by	M. Siebold
Design Checked by	P. Hermann
Detailed by	O. Brooks
Detail Checked by	N. Malmberg

Date	Revision
7-18-72	△ Corr. Angle Pier 5

Prepared and Recommended
GOODKIND & O'DEA, INC. Consulting Engineers
Date MAY 25 1971

DELAWARE STATE HIGHWAY DEPARTMENT

FRAMING PLAN NORTHBOUND

APPROVED BY: John E. Cultel — BRIDGE ENGINEER — DATE JUN 18 1971

DWG. NO.	SCALE	DATE	
18	As Noted	May 1971	GOODKIND & O'DEA, INC. CONSULTING ENGINEERS

COUNTY	CONTRACT	R.P.B. RES. NO.	STATE	FED. AID PROJECT NO.	SHEET NO.	TOTAL SHEETS
NEW CASTLE	71-05-003	2	DEL.		64	

INTERSTATE ROUTE 495 OVER NEW CASTLE AVE. & READING R.R. BRIDGE NO. 5

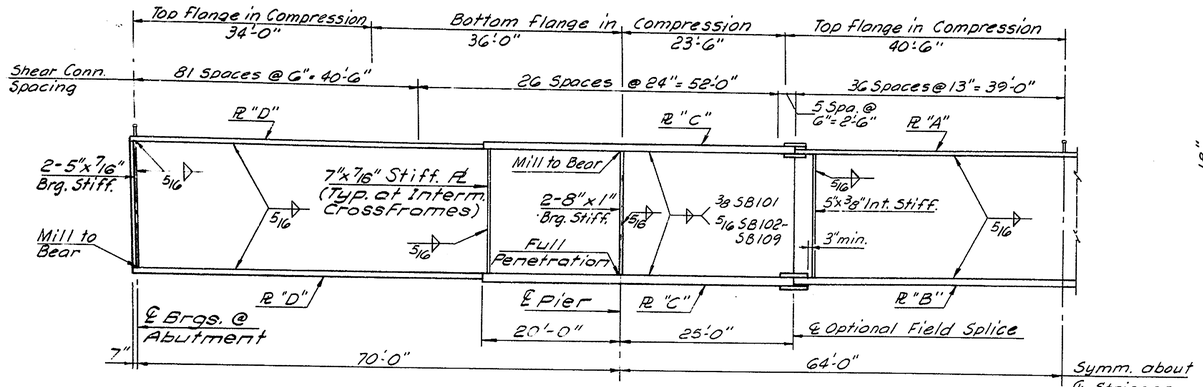

STRINGER ELEVATION

Not to Scale

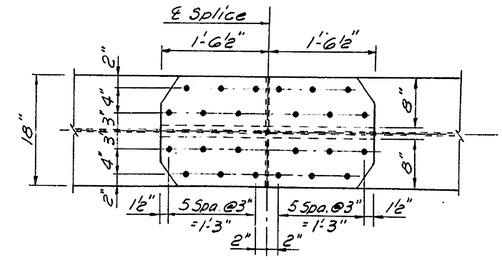

TOP FLANGE

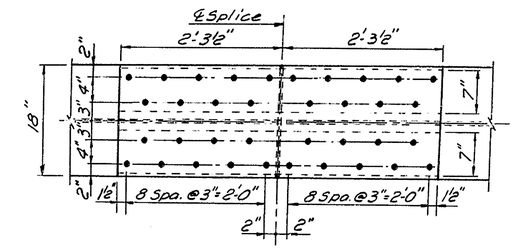

TOP AND BOTTOM FLANGE

STRINGER SCHEDULE									
STRINGER	WEB SIZE	PL "A"		PL "B"		PL "C"		PL "D"	
		SIZE	LENGTH	SIZE	LENGTH	SIZE	LENGTH	SIZE	LENGTH
SB101	48"x 1/2"	18"x 1 1/8"	78'-0"	18"x 1 1/8"	78'-0"	18"x 1 5/8"	45'-0"	18"x 1"	REM.
SB102-SB108	54"x 3/8"	18"x 3/4"	78'-0"	18"x 1"	78'-0"	18"x 1 1/4"	45'-0"	18"x 3/4"	REM.
SB109	54"x 1/2"	18"x 3/4"	78'-0"	18"x 1"	78'-0"	18"x 1 1/4"	45'-0"	18"x 3/4"	REM.

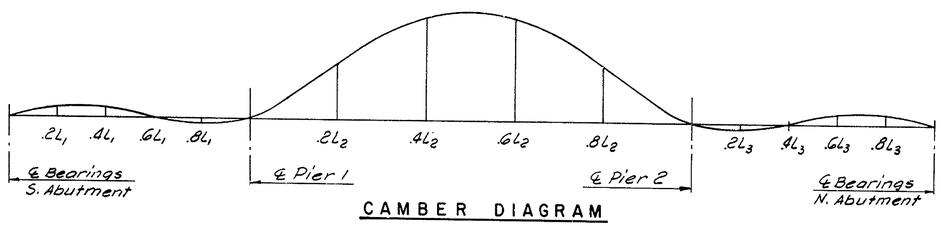

CAMBER DIAGRAM

Not to Scale

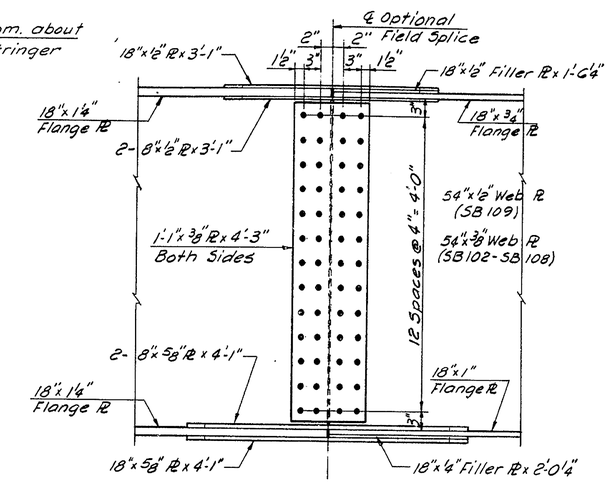

WEB

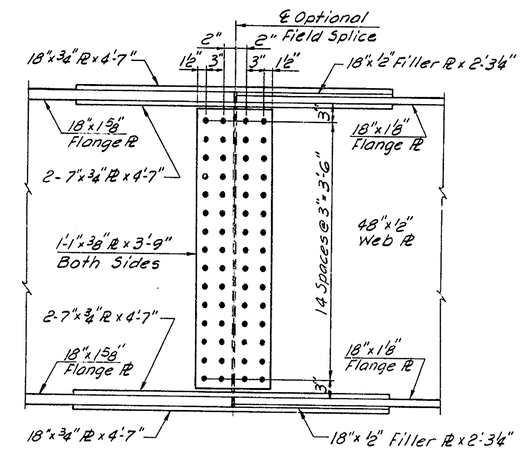

WEB
SB101

FIELD SPLICE NOTES

1. BOLTED FIELD SPLICES MAY BE USED, AT THE CONTRACTOR'S OPTION, AT THE LOCATIONS SHOWN ON THE STRINGER ELEVATION. THE SPLICE LOCATION MAY BE ADJUSTED AS REQUIRED TO CLEAR CROSSFRAMES.
2. CONTACT SURFACES OF THE SPLICE SHALL NOT BE PAINTED.
3. ALL BOLTS ARE TO BE 7/8"φ ASTM A325 WITH HEX NUTS AND HARDENED WASHERS.
4. HOLES IN PLATES ARE TO BE 15/16"φ FOR 7/8"φ BOLTS.

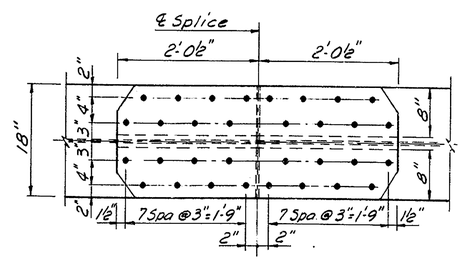

BOTTOM FLANGE
SB102-SB109

OPTIONAL FIELD SPLICE

Scale: 1" = 1'-0"

REFERENCES:

1. For Shear Stud Detail see Dwg. No. 18.
2. For Optional Shop Web Splice Detail see Dwg. No. 18.

DEFLECTION AND TOTAL CAMBER (INCHES)															
STRINGER		.2L1	.4L1	.6L1	.8L1	℄ PIER 1	.2L2	.4L2	.6L2	.8L2	℄ PIER 2	.2L3	.4L3	.6L3	.8L3
SB101	DLS	0	0	-1/16	-1/16	0	1/4	7/16	7/16	1/4	0	-1/16	-1/16	0	0
	DLC	0	-1/16	-1/8	-1/8	0	13/16	1 9/16	1 9/16	13/16	0	-1/8	-1/8	-1/16	0
	SDL	0	0	0	0	0	1/8	3/16	3/16	1/8	0	0	0	0	0
	VCC	1/8	3/16	3/16	1/8	0	7/16	11/16	11/16	7/16	0	1/8	3/16	3/16	1/8
	TOTAL	1/8	1/8	0	-1/16	0	1 5/8	2 7/8	2 7/8	1 5/8	0	-1/16	0	1/8	1/8
SB102-SB104	DLS	0	0	-1/16	-1/16	0	3/16	3/8	3/8	3/16	0	-1/16	-1/16	0	0
	DLC	0	-1/16	-1/8	-1/8	0	13/16	1 9/16	1 9/16	13/16	0	-1/8	-1/8	-1/16	0
	SDL	0	0	0	0	0	1/16	1/8	1/8	1/16	0	0	0	0	0
	VCC	1/8	3/16	3/16	1/8	0	7/16	11/16	11/16	7/16	0	1/8	3/16	3/16	1/8
	TOTAL	1/8	1/8	0	-1/16	0	1 1/2	2 3/4	2 3/4	1 1/2	0	-1/16	0	1/8	1/8
SB105-SB108	DLS	0	0	-1/16	-1/16	0	3/16	3/8	3/8	3/16	0	-1/16	-1/16	0	0
	DLC	0	-1/16	-1/8	-1/8	0	13/16	1 9/16	1 9/16	13/16	0	-1/8	-1/8	-1/16	0
	SDL	0	0	0	0	0	1/16	1/8	1/8	1/16	0	0	0	0	0
	VCC	1/8	3/16	3/16	1/8	0	7/16	5/8	5/8	7/16	0	1/8	3/16	3/16	1/8
	TOTAL	1/8	1/8	0	-1/16	0	1 1/2	2 11/16	2 11/16	1 1/2	0	-1/16	0	1/8	1/8
SB109	DLS	0	0	-1/16	-1/16	0	3/16	3/8	3/8	3/16	0	-1/16	-1/16	0	0
	DLC	0	-1/16	-1/8	-1/8	0	13/16	1 1/2	1 1/2	13/16	0	-1/8	-1/8	-1/16	0
	SDL	0	0	0	0	0	1/8	3/16	3/16	1/8	0	0	0	0	0
	VCC	1/8	3/16	3/16	1/8	0	7/16	5/8	5/8	7/16	0	1/8	3/16	3/16	1/8
	TOTAL	1/8	1/8	0	-1/16	0	1 9/16	2 11/16	2 11/16	1 9/16	0	-1/16	0	1/8	1/8

NOTE: DLS DENOTES DEFLECTION DUE TO STRUCTURAL STEEL
DLC DENOTES DEFLECTION DUE TO DECK SLAB
SDL DENOTES DEFLECTION DUE TO BARRIER RAILS
VCC DENOTES CAMBER DUE TO PROFILE GRADE OF BRIDGE

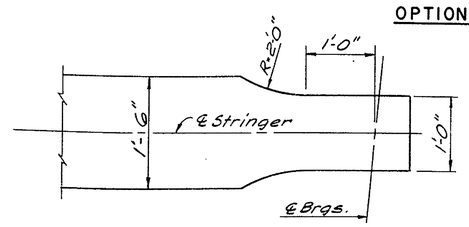

BOTTOM FLANGE DETAIL
AT ABUTMENTS

Scale: 1" = 1'-0"

	Date	Revision
In Charge of N. Erikson		
Designed by E.R. Hutchins		
Design Checked by N. Chou		
Detailed by T.B. Vasiliuk		
Detail Checked by N. Malumber		

Prepared and Recommended
GOODKIND & O'DEA, INC. Consulting Engineers
Date MAY 25 1971

DELAWARE
STATE HIGHWAY DEPARTMENT

SOUTHBOUND STRINGER DETAILS

APPROVED BY: BRIDGE ENGINEER
DATE JUN 18 1971

DWG. NO.	SCALE	DATE	
19	As Noted	May 1971	GOODKIND & O'DEA, INC. CONSULTING ENGINEERS

COUNTY	CONTRACT	B. P. R. REG. NO.	STATE	FED. AID PROJECT NO.	SHEET NO.	TOTAL SHEETS
NEW CASTLE	71-05-003	2	DEL.		65	[illegible]

INTERSTATE ROUTE 495 OVER NEW CASTLE AVE. & READING R.R. BRIDGE NO. 5

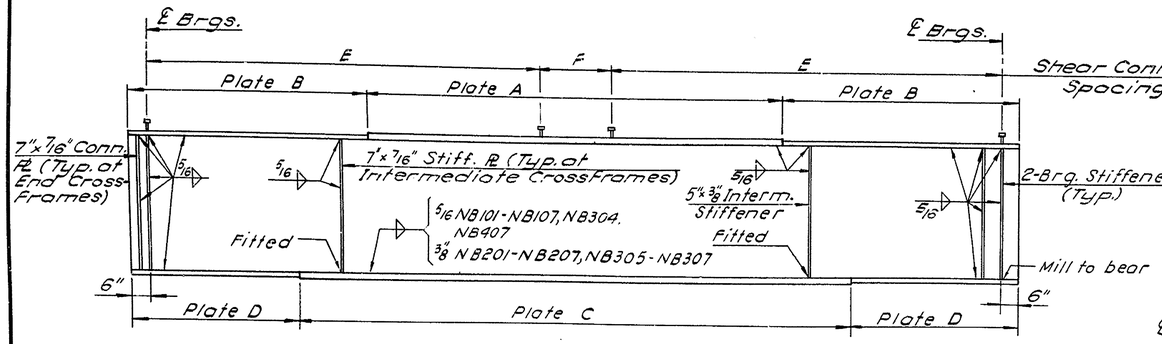

PLATE GIRDER ELEVATION

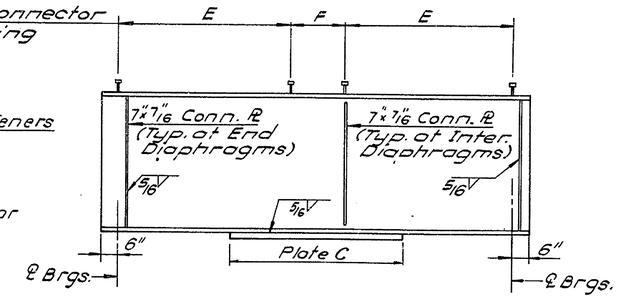

ROLLED BEAM ELEVATION

BEARING STIFFENERS	
STRINGER	STIFFENER SIZE
NB101-NB107 NB407	5" x 7/16"
NB201-NB207 NB304-NB307	8" x 3/4"

DEFLECTIONS AND TOTAL CAMBERS (INCHES)					
STRINGER	DEFLECTION AT MIDSPAN				TOTAL CAMBER
	DLS	DLC	SDL	VCC	
NB101&NB107	1/8	9/16	1/16	1/8	1 1/8
NB102-NB106	1/8	11/16	1/16	1/8	1 1/4
NB201&NB207	11/16	2 1/8	3/8	1/4	3 3/4
NB202-NB206	3/4	2 3/16	1/4	1/4	3 11/16
NB301	1/16	9/16	1/16	1/16	15/16
NB302	3/16	1	1/16	1/16	1 9/16
NB303	3/8	1 5/16	1/8	1/8	2 3/16
NB304	3/8	1 3/8	1/8	1/8	2 5/16
NB305	1/2	1 11/16	3/16	3/16	2 7/8
NB306	3/4	2 1/4	1/4	1/4	3 13/16
NB307	15/16	2 3/8	7/16	5/16	4 5/16
NB401	1/8	3/4	1/8	1/16	1 1/4
NB402-NB406	1/8	3/4	1/16	1/16	1 1/4
NB407	1/16	1/4	1/16	1/16	5/8

NOTE: DLS DENOTES DEFLECTION DUE TO STRUCTURAL STEEL
DLC DENOTES DEFLECTION DUE TO DECK SLAB
SDL DENOTES DEFLECTION DUE TO BARRIER RAILS
VCC DENOTES CAMBER DUE TO PROFILE GRADE OF BRIDGE

SHEAR CONNECTOR SPACING		
STRINGER	E	F
NB101-NB107	40 SP @ 10"=33'-4"	2 SP @ 8"=1'-4"
NB201-NB207	56 SP @ 11 1/2"=53'-8"	8"
NB301	35 SP @ 8"=23'-4"	3 SP =1'-7 13/16"
NB302	59 SP @ 6"=29'-6"	6 1/8"
NB303	60 SP @ 7"=35'-0"	8 1/2"
NB304	54 SP @ 9"=40'-6"	10 13/16"
NB305	55 SP @ 10"=45'-10"	2 SP =1'-5 3/16"
NB306	62 SP @ 10"=51'-8"	11 1/2"
NB307	47 SP @ 14 1/2"=56'-9 1/2"	2 SP =1'-10 7/8"
NB401-NB406	54 SP @ 6"=27'-0"	0
NB407	24 SP @ 13"=26'-0"	2 SP @ 12"=2'-0"

STRINGER SCHEDULE										
STRINGER	LENGTH ℄-℄ BRGS.	WEB SIZE	PL A		PL B		PL C		PL D	
			SIZE	LENGTH	SIZE	LENGTH	SIZE	LENGTH	SIZE	LENGTH
NB101&NB107	68'-0"	54" x 1/2"	12" x 3/4"	F.L.			12" x 1"	28'-0"	12" x 3/4"	REM.
NB102-NB106	68'-0"	54" x 3/8"	12" X 3/4"	F.L.			12" x 1"	28'-0"	12" x 3/4"	REM.
NB201&NB207	108'-0"	54" x 1/2"	18" x 1"	28'-0"	18" x 7/8"	REM.	18" x 1 7/8"	67'-0"	18" x 1"	REM.
NB202-NB206	108'-0"	54" x 3/8"	18" x 1"	28'-0"	18" x 7/8"	REM.	18" x 1 7/8"	67'-0"	18" x 1"	REM.
NB301	48'-3 13/16"	33 WF 118					10" x 3/8"	23'-6"		
NB302	59'-6 1/8"	33 WF 118					10" x 1 1/8"	42'-0"		
NB303	70'-8 1/2"	36 WF 150					10" x 1 3/8"	49'-0"		
NB304	81'-10 13/16"	42" x 3/8"	18" x 7/8"	F.L.			18" x 1 1/2"	48'-0"	18" x 7/8"	REM.
NB305	93'-1 3/16"	48" x 3/8"	18" x 7/8"	F.L.			18" x 1 5/8"	58'-0"	18" x 7/8"	REM.
NB306	104'-3 1/2"	48" x 3/8"	18" x 1 1/8"	37'-0"	18" x 7/8"	REM.	18" x 2"	69'-0"	18" x 1"	REM.
NB307	115'-5 7/8"	54" x 1/2"	18" x 1 1/8"	41'-0"	18" x 7/8"	REM.	18" x 2"	74'-0"	18" x 1"	REM.
NB401-NB406	54'-0"	33 WF 118					10" x 3/4"	34'-0"		
NB407	54'-0"	54" x 1/2"	12" x 3/4"	F.L.			12" x 3/4"	F.L.		

NOTE:
F.L. denotes full length.
Rem. denotes remainder.

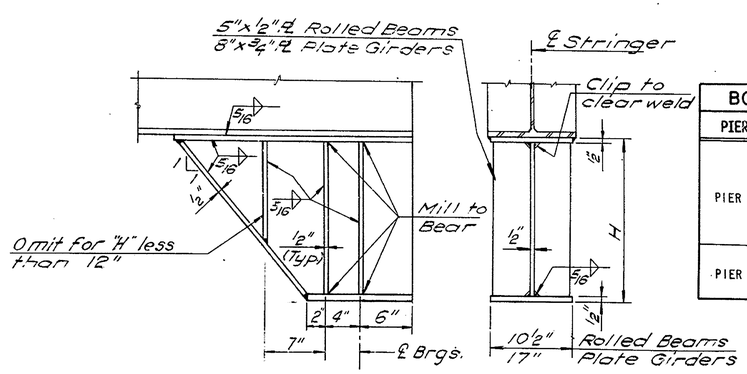

BOLSTER DETAILS

BOLSTER HEIGHT		
PIER	STRINGER	H
PIER 4	NB301	2'-1 1/4"
	NB302	2'-1 1/4"
	NB303	1'-10 1/2"
	NB304	1'-1 3/8"
	NB305	7 3/8"
	NB306	7 1/4"
PIER 5	NB404	1'-1 1/8"
	NB405	1'-7 1/8"
	NB406	1'-7 1/8"

REFERENCES:
1. For Shear Stud Detail, see Dwg. No. 18.
2. For Optional Shop Web Splice Detail see Dwg. No. 18.

In Charge of N. Erickson
Designed by E. Hutchins
Design Checked by N. Chou
Detailed by A. Centeld
Detail Checked by N. Malenberg

Date	Revision

Prepared and Recommended
GOODKIND & O'DEA, INC. Consulting Engineers
Date MAY 25 1971

DELAWARE
STATE HIGHWAY DEPARTMENT

NORTHBOUND STRINGER DETAILS

APPROVED BY: John E. Cullity
BRIDGE ENGINEER
JUN 18 1971
DATE

DWG. NO.	SCALE	DATE	
20	Not to scale	May 1971	GOODKIND & O'DEA, INC. CONSULTING ENGINEERS

COUNTY	CONTRACT	B.P.B. REG. NO.	STATE	FED. AID PROJECT NO.	SHEET NO.	TOTAL SHEETS
NEW CASTLE	71-05-003	2	DEL.		66	151

INTERSTATE ROUTE 495 OVER NEW CASTLE AVE. & READING R.R. BRIDGE NO. 5

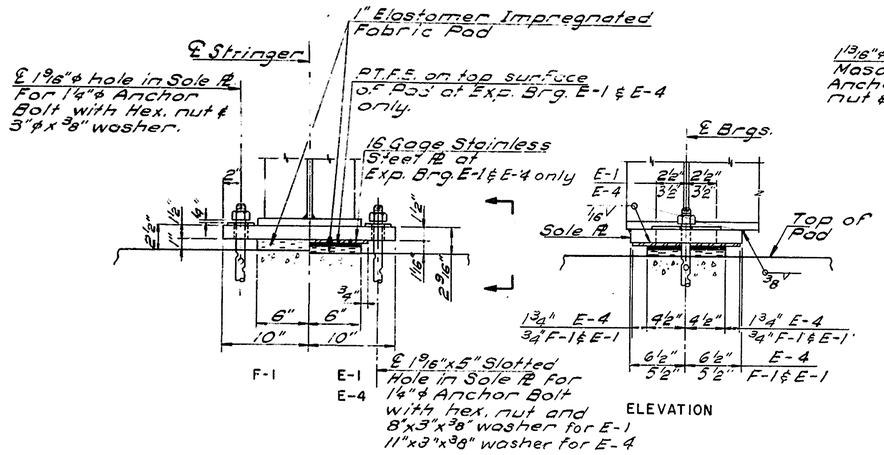

B E A R I N G S F-1, E-1 & E-4

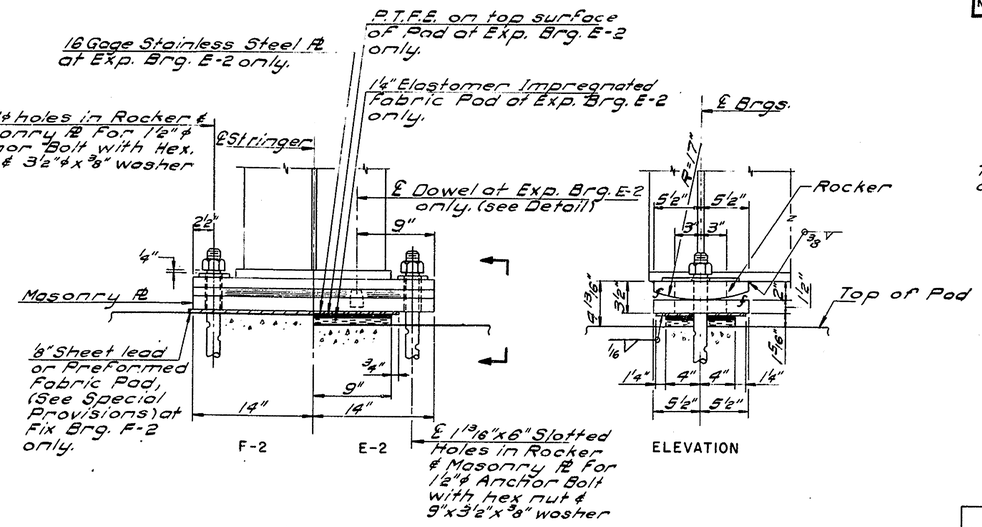

B E A R I N G S F-2 & E-2

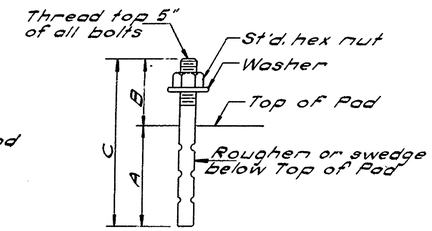

ANCHOR BOLT DETAIL
No Scale

ANCHOR BOLTS				
BEARING	A	B	C	DIAMETER
E-1, E-4 F-1	1'-0"	5"	1'-5"	1 1/4"
E-2 F-2	1'-3"	8"	1'-11"	1 1/2"
E-3 F-3	1'-3"	8 1/2"	1'-11 1/2"	1 1/2"

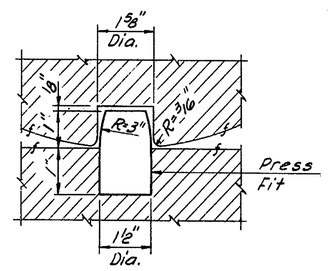

DOWEL DETAIL
Scale: Half Size

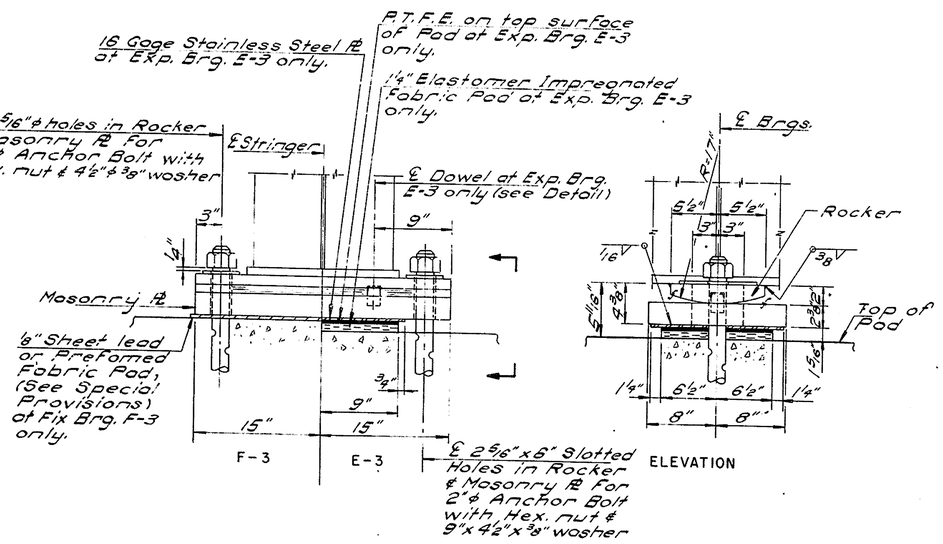

B E A R I N G S F-3 & E-3

BEARING NOTES:

1. SOLE PLATES, MASONRY PLATES AND ROCKERS TO BE ASTM A-36 STEEL AND SHALL BE PAINTED. STAINLESS STEEL PLATES SHALL NOT BE PAINTED.
2. THE MATING SURFACE OF THE STAINLESS STEEL PLATES SHALL HAVE AN A.I.S.I. TYPE 304, HALF HARD 2B FINISH.
3. P.T.F.E. DENOTES POLYTETRAFLUOROETHYLENE.
4. ∫ = A.S.A. FINISH OF 250 MICROINCHES OR FINER.
5. BURR THREADS ON ANCHOR BOLT ABOVE AND BELOW NUT.
6. ANCHOR BOLTS SHALL BE SET BY USE OF TEMPLATES.
7. SEE SPECIAL PROVISIONS FOR FASTENING OF FABRIC PAD TO CONCRETE.

	Date	Revision
In Charge of N. Erikson		
Designed by N. Malmberg		
Design Checked by E. Hutchins		
Detailed by O. Brooks		
Detail Checked by N. Melnberg		

Prepared and Recommended
GOODKIND & O'DEA, INC. Consulting Engineers
Date MAY 25 1971

DELAWARE
STATE HIGHWAY DEPARTMENT

BEARING SHOE DETAILS

APPROVED BY: John E. Fulitt
BRIDGE ENGINEER
JUN 18 1971
DATE

DWG. NO.	SCALE	DATE	
21	1"=1'-0" & As Noted	MAY 1971	GOODKIND & O'DEA, INC. CONSULTING ENGINEERS

COUNTY	CONTRACT	B.P.N. BRD. NO.	STATE	FED. AID PROJECT NO.	SHEET NO.	TOTAL SHEETS
NEW CASTLE	71-05-003	2	DEL.		67	161

INTERSTATE ROUTE 495 OVER NEW CASTLE AVE. & READING R.R.

BRIDGE NO. 5

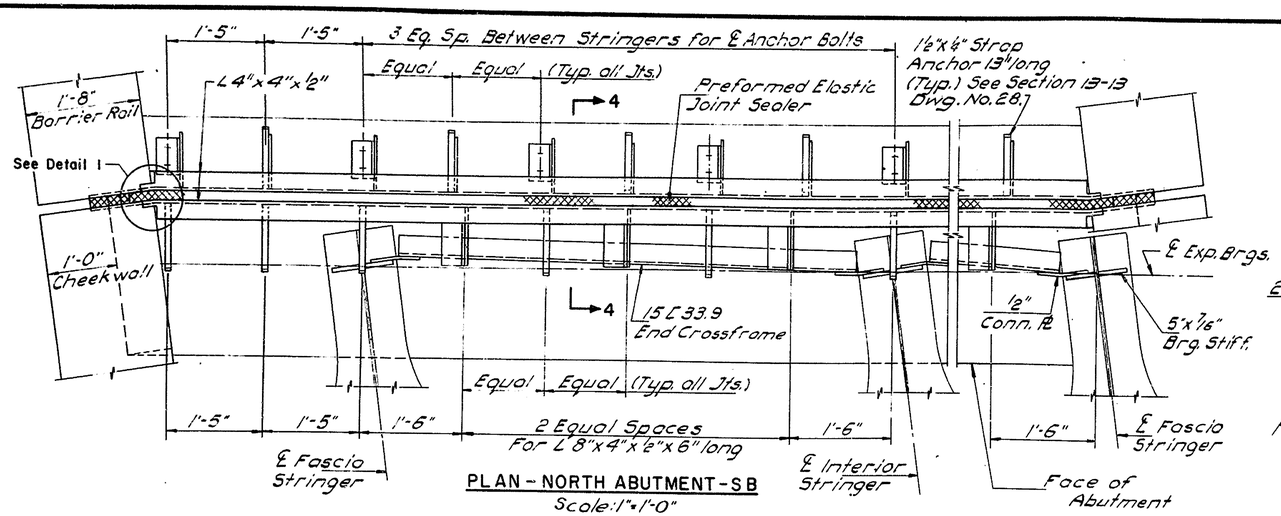

PLAN - NORTH ABUTMENT - SB
Scale: 1" = 1'-0"

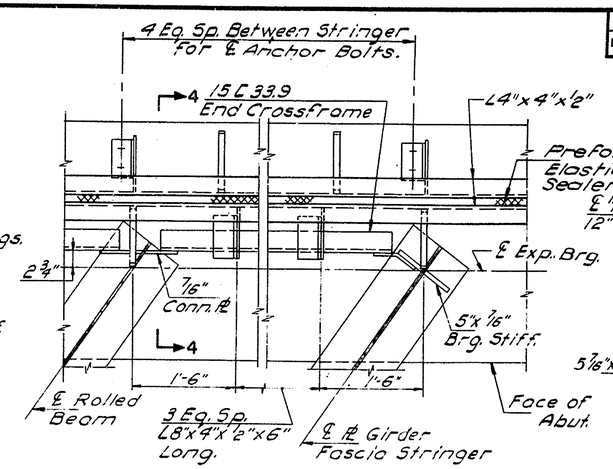

PLAN - NORTH ABUTMENT - NB
Scale: 1" = 1'-0"

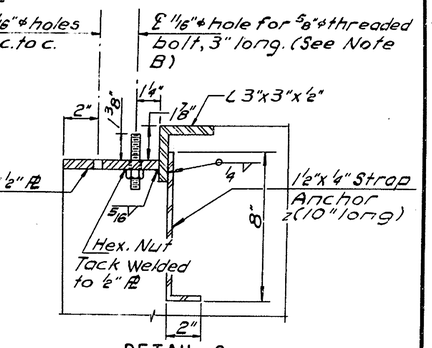

DETAIL 2
Scale: 3" = 1'-0"

NOTE B:
Bolt holes to be spaced at 12" on center in accordance with layout drawings or template supplied by the Steel Reinforced Elastomeric Expansion Joint Seal Manufacturer.

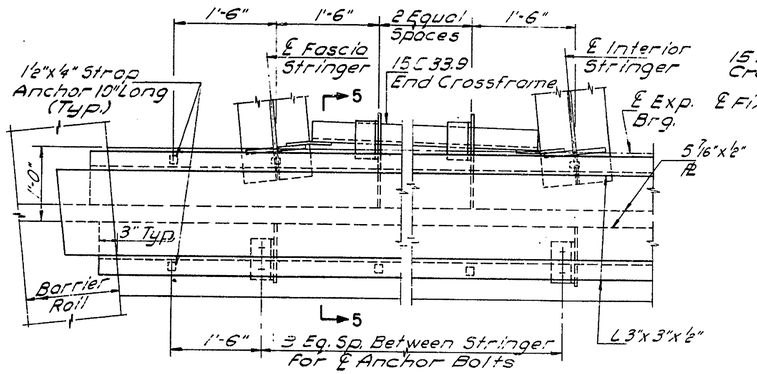

PLAN - SOUTH ABUTMENT - SB
Scale: 1" = 1'-0"

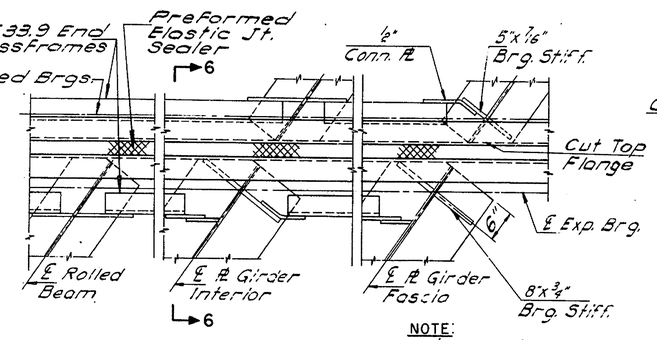

NOTE:
Pier 5 shown, other Piers similar

PLAN - PIER 5 - NB
Scale: 1" = 1'-0"

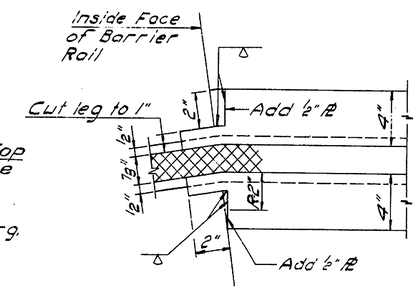

DETAIL 1
Scale: 3" = 1'-0"

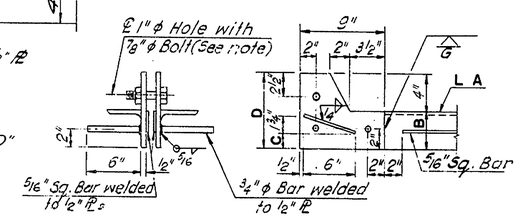

END VIEW — ELEVATION

LOCATION	L A	B	C	D
N. Abut. S.B. N. Abut. N.B. Pier 3	4"x4"x½"	4"	1¾"	8"
Pier 4	4"x4"x½"	4"	1¼"	8"
Pier 5	6"x4"x½"	6"	2½"	10"

EXPANSION JOINT STEEL DETAIL IN BARRIER RAIL
Not to scale

NOTE:
Remove ⅞"ϕ Bolts prior to placing concrete for Barrier Rail.

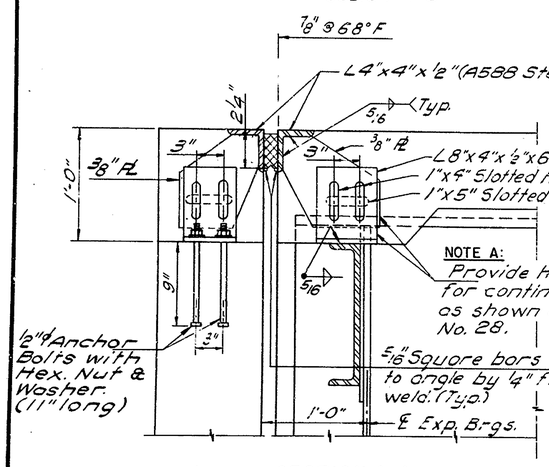

NOTE A:
Provide holes in angles and Pl. for continuity of reinforcement as shown on Sections on Dwg. No. 28.

SECTION 4-4
Scale: 1½" = 1'-0"

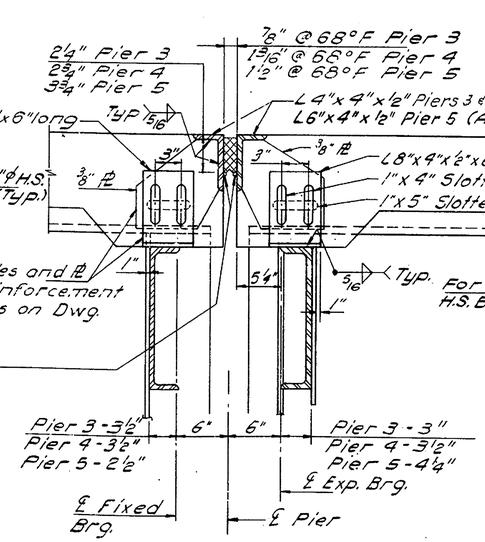

SECTION 6-6
Scale: 1½" = 1'-0"

NOTE:
Provide adjustable temporary connection between expansion joint angles. (See Special Provisions.)

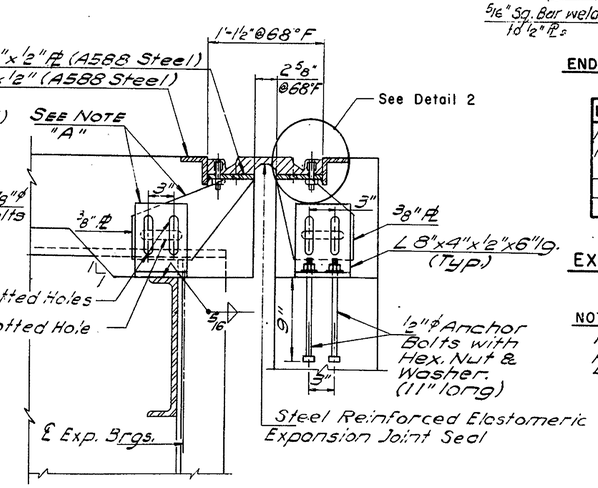

SECTION 5-5
Scale: 1½" = 1'-0"

In Charge of	N. Enkeson
Designed by	E. Hutchins
Design Checked by	M. Siebold
Detailed by	O. Brooks
Detail Checked by	N. Malmberg

Date	Revision

Prepared and Recommended
GOODKIND & O'DEA, INC. Consulting Engineers
Date MAY 25 1971

DELAWARE STATE HIGHWAY DEPARTMENT

EXPANSION JOINT STEEL DETAILS

APPROVED BY: John G. Leibold — BRIDGE ENGINEER — DATE JUN 18 1971

DWG. NO.	SCALE	DATE	
22	As Noted	May 1971	GOODKIND & O'DEA, INC. CONSULTING ENGINEERS

COUNTY	CONTRACT	S. P. R. DWG. NO.	STATE	FED. AID PROJECT NO.	SHEET NO.	TOTAL SHEETS
NEW CASTLE	71-05-003	2	DEL.		68	161

INTERSTATE ROUTE 495 OVER NEW CASTLE AVE. & READING R.R. BRIDGE NO. 5

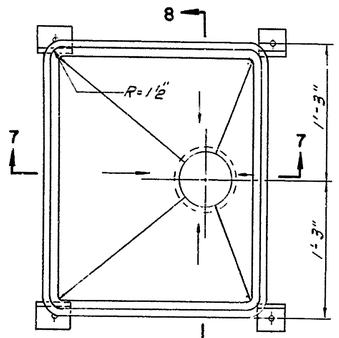

PLAN

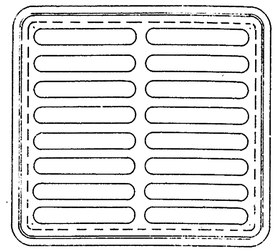

PLAN OF GRATING

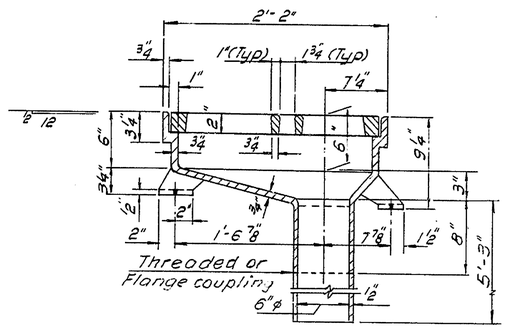

SECTION 7-7

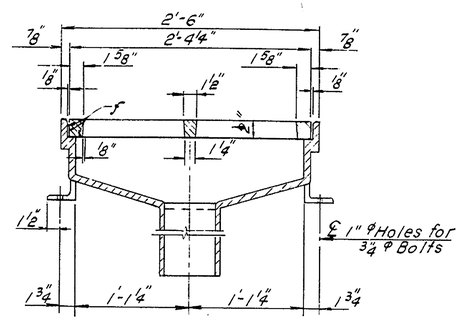

SECTION 8-8

SCUPPER DETAILS
Scale: 1½"=1'-0"

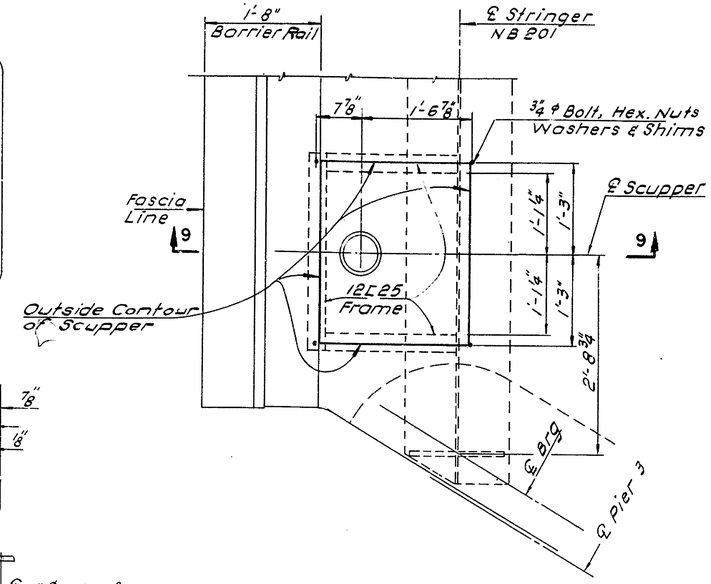

PLAN AT SCUPPER
Scale: 1"=1'-0"

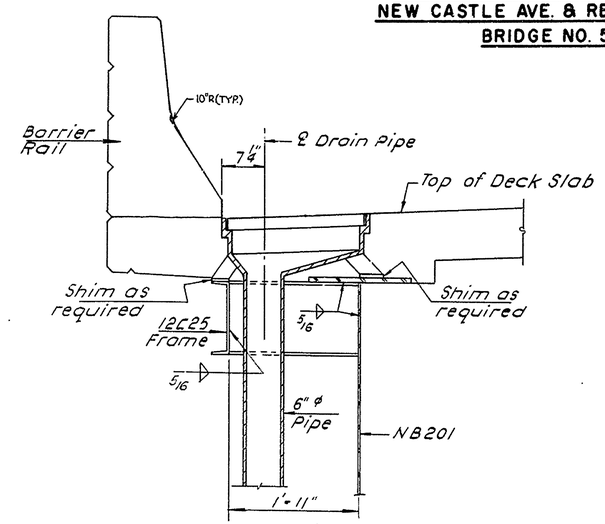

SECTION 9-9
Scale: 1"=1'-0"

REFERENCES

1. For Details of Stringer NB201 see Dwg Nos 18 and 20.
2. For Details of Pier 3 Northbound see Dwg No. 14.

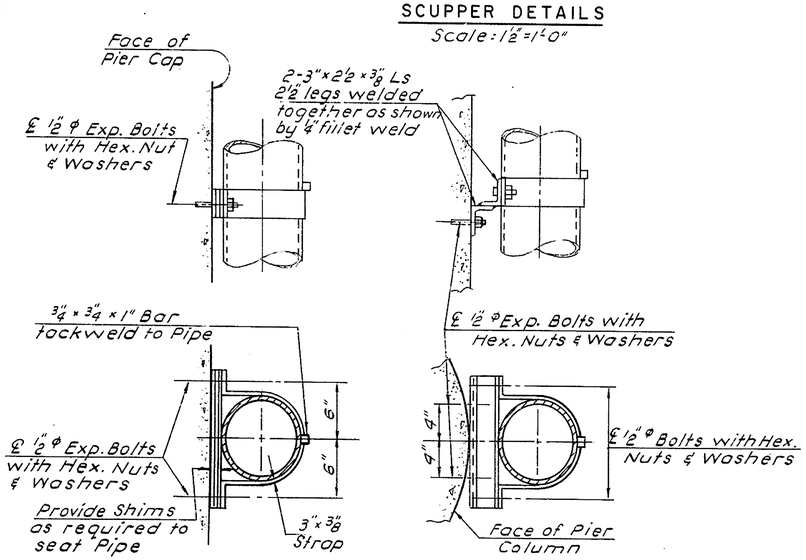

PIPE CLAMP DETAIL
Scale: 1½"=1'-0"

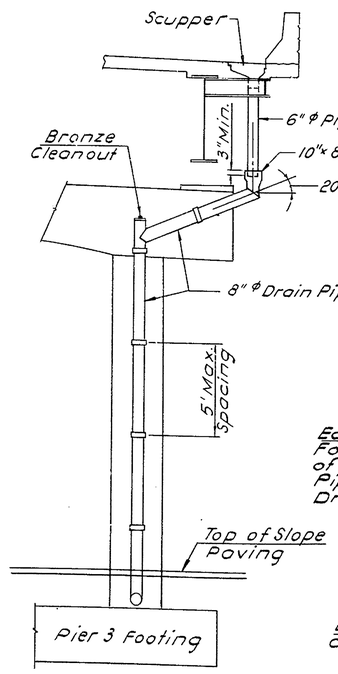

ELEVATION

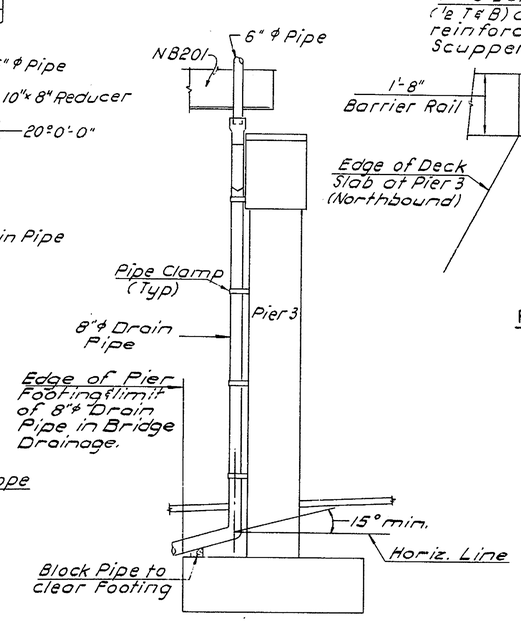

END VIEW

DRAINAGE SYSTEM
Scale: ¼"=1'-0"

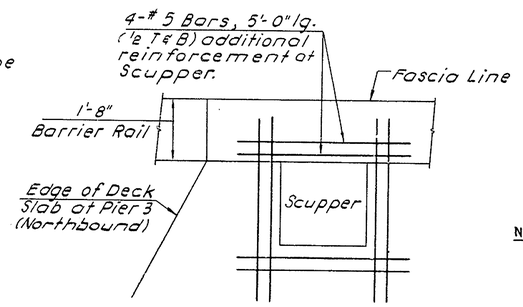

REINFORCEMENT AT SCUPPER
Scale: ½"=1'-0"

NOTES

1. Scupper material shall be ductile iron grade 65-45-12, A.S.T.M. 536-66.
2. Scupper Support material is included in Section No. 606 Structural Steel.
3. Payment for all Pipes, Fasteners, Clamps & Scuppers shall be included in Bridge Drainage.

	Date	Revision
In Charge of N. Erikson		
Designed by E. Hutchins		
Design Checked by N. Chow		
Detailed by A. Centeld		
Detail Checked by N. Malmberg		

Prepared and Recommended
GOODKIND & O'DEA, INC. Consulting Engineers
Date MAY 25 1971

DELAWARE
STATE HIGHWAY DEPARTMENT

BRIDGE DRAINAGE DETAILS

APPROVED BY: John E. Fielitz, BRIDGE ENGINEER — DATE JUN 18 1971

DWG. NO.	SCALE	DATE	GOODKIND & O'DEA, INC. CONSULTING ENGINEERS
23	As shown	May 1971	

COUNTY	CONTRACT	S. P. R. REV. NO.	STATE	FED. AID PROJECT NO.	SHEET NO.	TOTAL SHEETS
NEW CASTLE	71-05-003	2	DEL.		69	121

INTERSTATE ROUTE 495 OVER NEW CASTLE AVE. & READING R.R. BRIDGE NO. 5

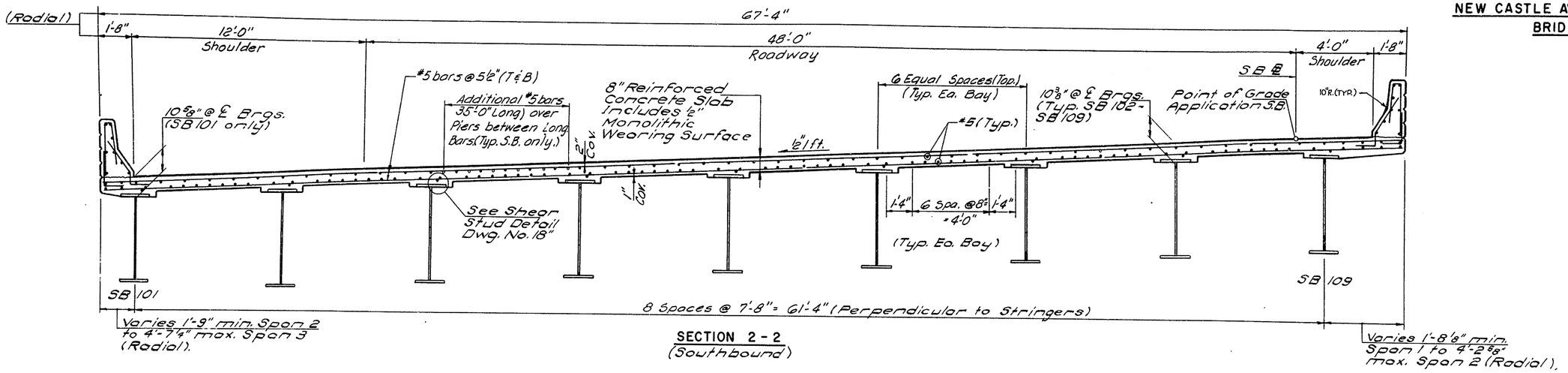

SECTION 2 - 2
(Southbound)

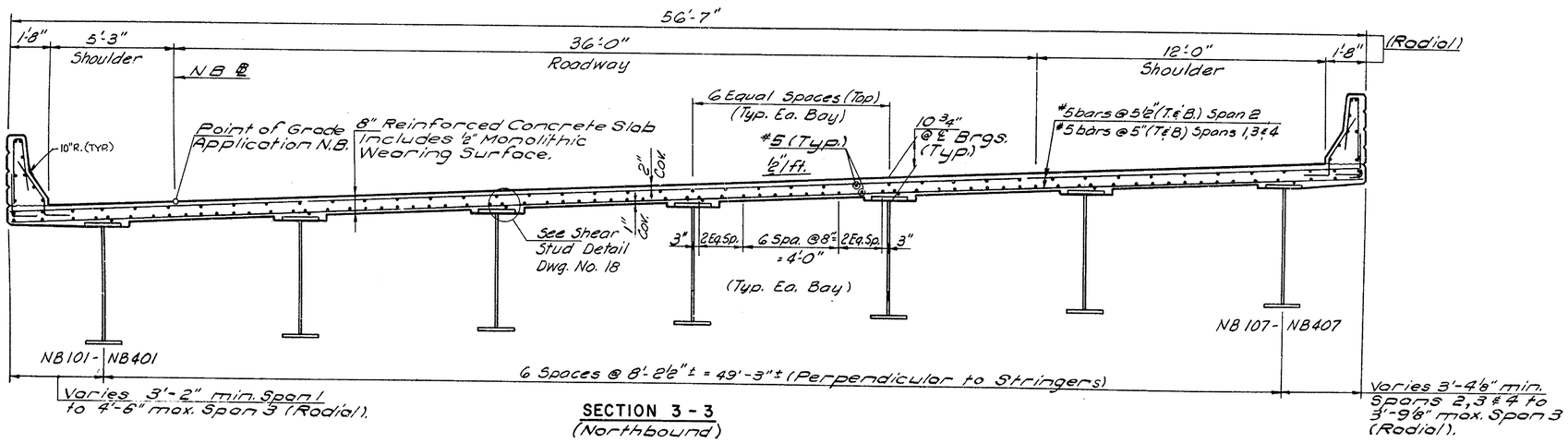

SECTION 3 - 3
(Northbound)

REFERENCES:

1. For Location of Section 2-2, see Dwg. Nos. 17 and 25.
2. For Location of Section 3-3, see Dwg. Nos. 18 and 26.

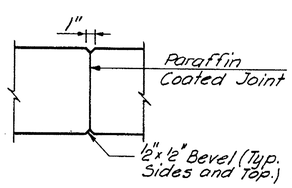

BARRIER RAIL JOINT DETAIL
Scale: 1 1/2" = 1'-0"

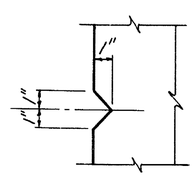

SCORE DETAIL
Scale: 3" = 1'-0"

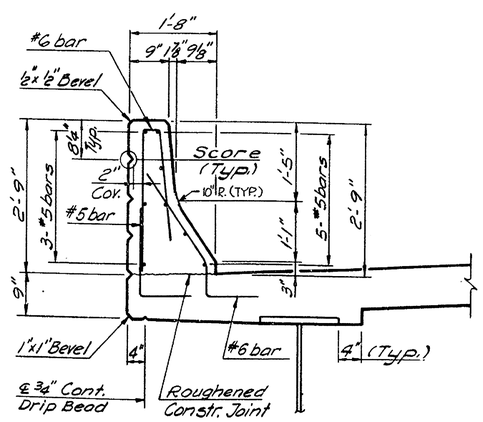

BARRIER RAIL DETAIL
Scale: 3/4" = 1'-0"

In Charge of N. Erickson	Date	Revision
Designed by M. J. Siebold		
Design Checked by E. Hutchins		
Detailed by T. B. Wasylyk		
Detail Checked by N. Malumbey		

Prepared and Recommended
GOODKIND & O'DEA, INC.
Consulting Engineers

Date MAY 25 1971

DELAWARE
STATE HIGHWAY DEPARTMENT

DECK CROSS SECTIONS

APPROVED BY: BRIDGE ENGINEER
DATE JUN 18 1971

DWG. NO.	SCALE	DATE	
24	3/8" = 1'-0" and As Noted	May 1971	GOODKIND & O'DEA, INC. CONSULTING ENGINEERS

COUNTY	CONTRACT	B. P. R. REG. NO.	STATE	FED. AID PROJECT NO.	SHEET NO.	TOTAL SHEETS
NEW CASTLE	71-05-003	2	DEL.		70	137

INTERSTATE ROUTE 495 OVER NEW CASTLE AVE. & READING R.R. BRIDGE NO. 5

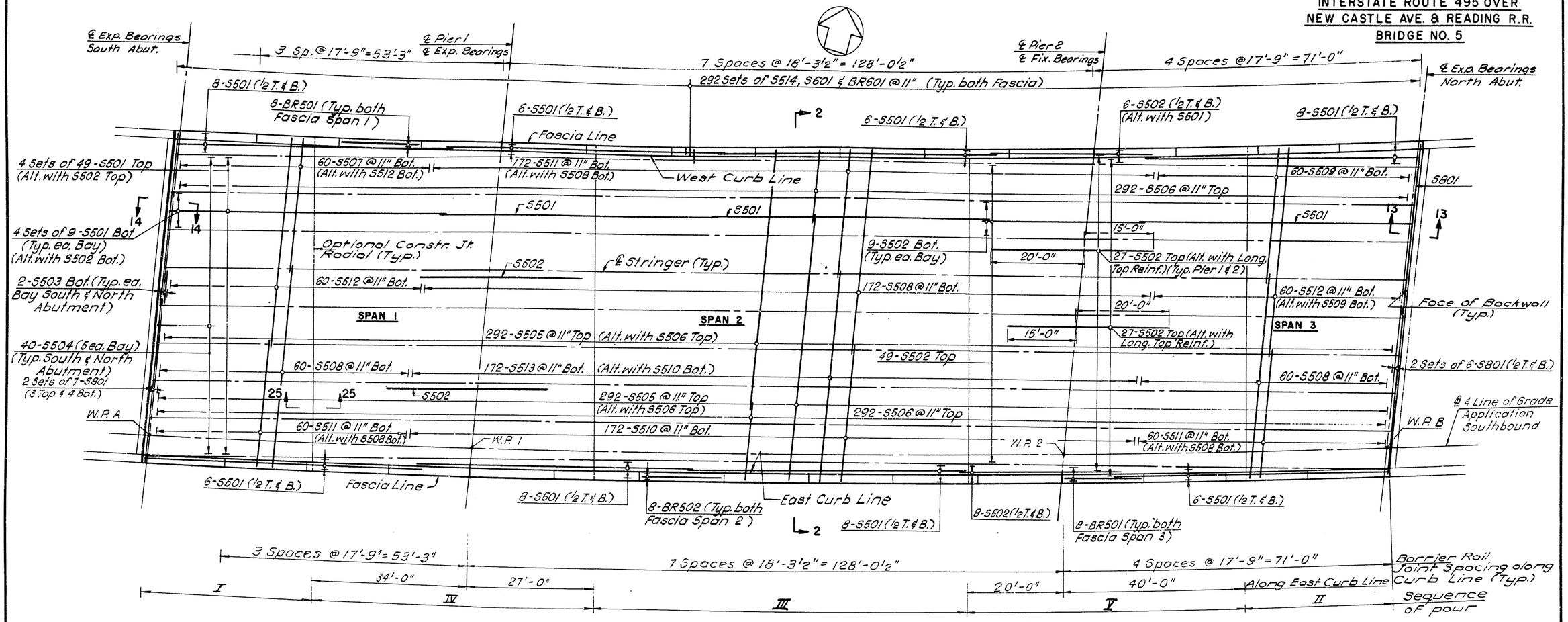

NOTE:
Each numbered pour (e.g. I) shall be made for the full width of the roadway slab before proceeding with the next numbered pour (e.g. II). See Special Provisions.

REFERENCES:
1. For Section 2-2 see Dwg. No. 24.
2. For Sections 13-13 & 14-14 see Dwg. No. 28.
3. For Barrier Rail Joint Detail see Dwg. No. 24.
4. For Bar List see Dwg. No. 34.

FINISHED DECK ELEVATIONS (FEET) - SOUTHBOUND BRIDGE

	SPAN 1						SPAN 2					SPAN 3				
STRINGER	℄ BRGS. S. ABUT.	.2 PT.	.4 PT.	.6 PT.	.8 PT.	℄ PIER 1	.2 PT.	.4 PT.	.6 PT.	.8 PT.	℄ PIER 2	.2 PT.	.4 PT.	.6 PT.	.8 PT.	℄ BRGS. N. ABUT.
SB101	38.70	38.72	38.75	38.76	38.77	38.78	38.77	38.75	38.70	38.64	38.56	38.51	38.45	38.39	38.32	38.24
SB102	39.02	39.04	39.07	39.08	39.09	39.10	39.09	39.07	39.02	38.96	38.88	38.83	38.77	38.71	38.64	38.57
SB103	39.34	39.36	39.38	39.40	39.41	39.42	39.41	39.39	39.34	39.28	39.21	39.15	39.10	39.04	38.97	38.90
SB104	39.65	39.68	39.70	39.72	39.73	39.73	39.73	39.71	39.67	39.61	39.53	39.48	39.42	39.36	39.29	39.22
SB105	39.97	40.00	40.02	40.04	40.05	40.05	40.05	40.03	39.99	39.93	39.85	39.80	39.75	39.69	39.62	39.55
SB106	40.29	40.32	40.34	40.36	40.37	40.37	40.37	40.35	40.31	40.25	40.17	40.12	40.07	40.01	39.94	39.87
SB107	40.61	40.64	40.66	40.68	40.69	40.69	40.69	40.67	40.63	40.57	40.50	40.45	40.39	40.33	40.27	40.20
SB108	40.93	40.96	40.98	41.00	41.01	41.01	41.01	40.99	40.95	40.89	40.82	40.77	40.72	40.66	40.59	40.52
SB109	41.25	41.28	41.30	41.31	41.33	41.33	41.33	41.31	41.27	41.22	41.14	41.09	41.04	40.98	40.92	40.85
DEFLECTION IN FEET*																
SB101 THRU SB109	0.00	0.00	-0.01	-0.01	-0.01	0.00	0.08	0.14	0.14	0.08	0.00	-0.01	-0.01	-0.01	0.00	0.00

*DEFLECTION DUE TO CONCRETE DECK SLAB AND BARRIER RAIL

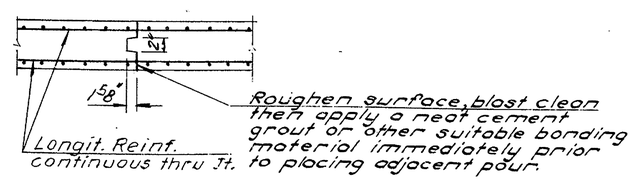

SECTION 25-25
Not to Scale

In Charge of N. Eriksen
Designed by M. J. Siebold
Design Checked by E. Hutchins
Detailed by T.B.W. & N.K.
Detail Checked by N. Malmberg

Date	Revision

Prepared and Recommended
GOODKIND & O'DEA, INC.
Consulting Engineers
Date MAY 25 1971

DELAWARE STATE HIGHWAY DEPARTMENT

DECK SLAB PLAN SOUTHBOUND

APPROVED BY: BRIDGE ENGINEER — DATE JUN 18 1971

DWG. NO.	SCALE	DATE	
25	1"=10' & As Noted	May 1971	GOODKIND & O'DEA, INC. CONSULTING ENGINEERS

COUNTY	CONTRACT	B.P.R. REG. NO.	STATE	FED. AID PROJECT NO.	SHEET NO.	TOTAL SHEETS
NEW CASTLE	71-05-003	2	DEL.		71	131

INTERSTATE ROUTE 495 OVER NEW CASTLE AVE. & READING R.R. BRIDGE NO. 5

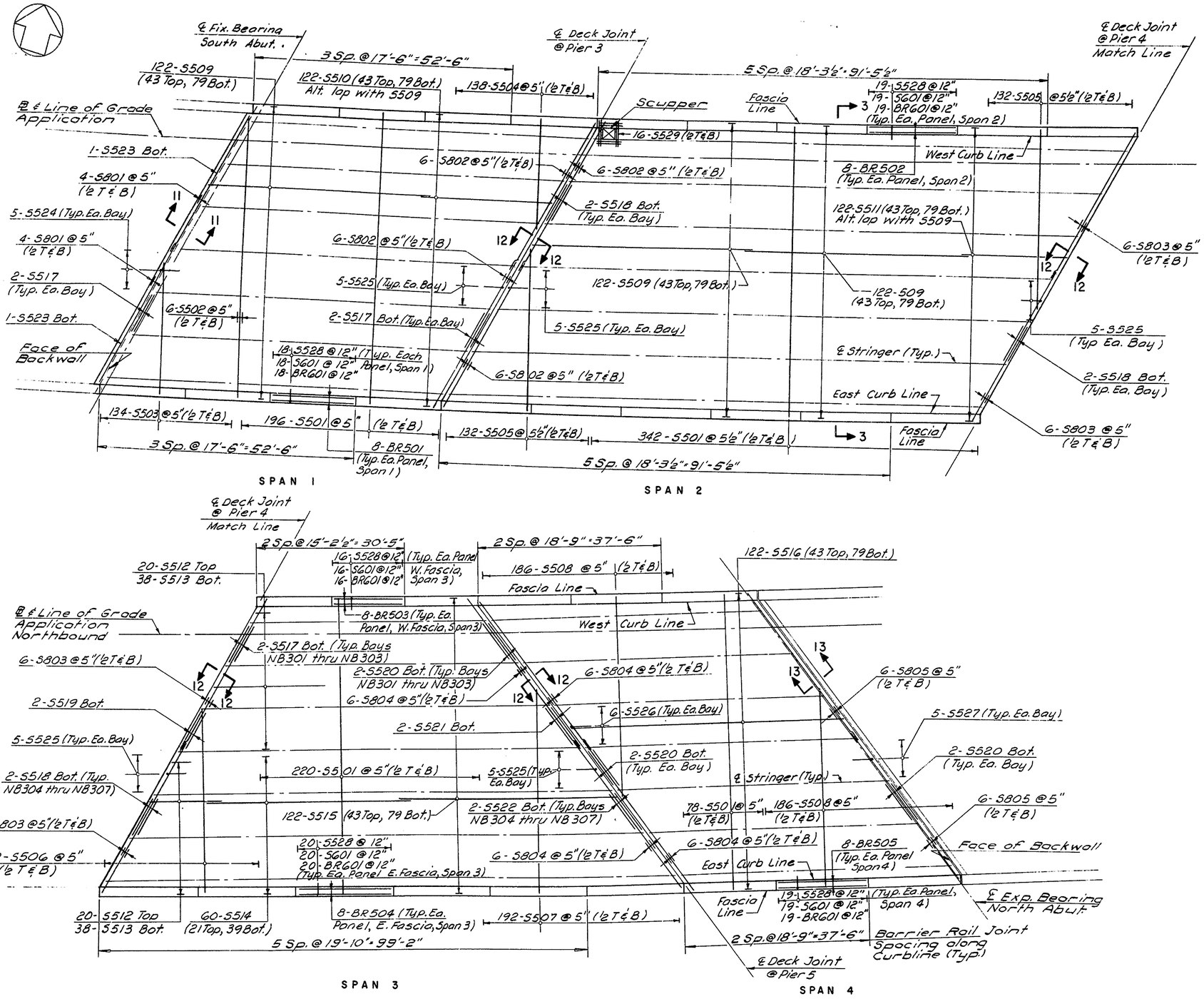

FINISHED DECK ELEVATIONS (FEET)

STRINGER	℄ FIX. BRGS.	1/4 PT.	1/2 PT.	3/4 PT.	℄ EXP. BRGS.
NB101	37.18	37.26	37.34	37.41	37.47
NB102	37.51	37.59	37.66	37.74	37.80
NB103	37.83	37.91	37.99	38.06	38.13
NB104	38.16	38.24	38.32	38.39	38.46
NB105	38.48	38.56	38.64	38.72	38.79
NB106	38.80	38.89	38.97	39.04	39.11
NB107	39.13	39.21	39.29	39.37	39.44
NB201	37.48	37.55	37.61	37.66	37.69
NB202	37.81	37.88	37.94	37.99	38.03
NB203	38.13	38.21	38.27	38.32	38.37
NB204	38.46	38.54	38.60	38.66	38.70
NB205	38.79	38.87	38.93	38.99	39.04
NB206	39.12	39.20	39.27	39.32	39.37
NB207	39.45	39.53	39.60	39.66	39.71
NB301	37.69	37.69	37.69	37.68	37.68
NB302	38.03	38.03	38.03	38.02	38.01
NB303	38.37	38.37	38.36	38.35	38.34
NB304	38.70	38.70	38.70	38.69	38.67
NB305	39.04	39.04	39.03	39.02	39.00
NB306	39.37	39.38	39.37	39.35	39.33
NB307	39.71	39.71	39.71	39.69	39.66
NB401	37.67	37.65	37.62	37.59	37.56
NB402	38.01	37.98	37.95	37.92	37.89
NB403	38.34	38.31	38.28	38.25	38.21
NB404	38.67	38.64	38.61	38.57	38.54
NB405	39.00	38.97	38.94	38.90	38.86
NB406	39.32	39.29	39.26	39.23	39.19
NB407	39.65	39.62	39.59	39.55	39.51

DEFLECTIONS IN FEET*

NB101 & NB107	0.00	0.04	0.05	0.04	0.00
NB102 - NB106	0.00	0.05	0.06	0.05	0.00
NB201 & NB207	0.00	0.16	0.21	0.16	0.00
NB202 - NB206	0.00	0.15	0.20	0.15	0.00
NB301	0.00	0.04	0.05	0.04	0.00
NB302	0.00	0.06	0.09	0.06	0.00
NB303	0.00	0.08	0.12	0.08	0.00
NB304	0.00	0.10	0.13	0.10	0.00
NB305	0.00	0.12	0.16	0.12	0.00
NB306	0.00	0.16	0.21	0.16	0.00
NB307	0.00	0.18	0.23	0.18	0.00
NB401 - NB406	0.00	0.05	0.07	0.05	0.00
NB407	0.00	0.02	0.03	0.02	0.00

*DEFLECTION DUE TO CONCRETE DECK SLAB AND BARRIER RAIL

REFERENCES:

1. For Section 3-3, see Dwg. No. 24.
2. For Sections 11-11, 12-12, and 13-13, see Dwg. No. 28.
3. For Barrier Rail Joint Detail see Dwg. No. 24.
4. For Bar List see Dwg. No. 37.

In Charge of	N. Erikson
Designed by	E. Hutchins
Design Checked by	M. Siebold
Detailed by	T. G. Wasylyk
Detail Checked by	E. Hiemer

Date	Revision

Prepared and Recommended
GOODKIND & O'DEA, INC. Consulting Engineers
Date MAY 25 1971

DELAWARE
STATE HIGHWAY DEPARTMENT

DECK SLAB PLAN
NORTHBOUND

APPROVED BY:
BRIDGE ENGINEER
JUN 18 1971
DATE

DWG. NO.	SCALE	DATE
26	1" = 10'	MAY 1971

GOODKIND & O'DEA, INC.
CONSULTING ENGINEERS

COUNTY	CONTRACT	S.P.R. RDS. NO.	STATE	FED. AID PROJECT NO.	SHEET NO.	TOTAL SHEETS
NEW CASTLE	71-05-003	2	DEL.		72	161

INTERSTATE ROUTE 495 OVER NEW CASTLE AVE. & READING R.R. BRIDGE NO. 5

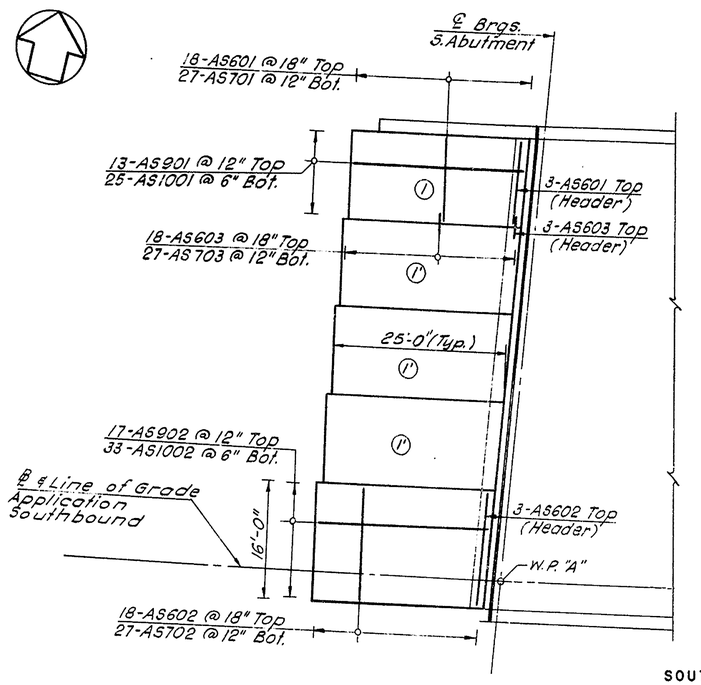

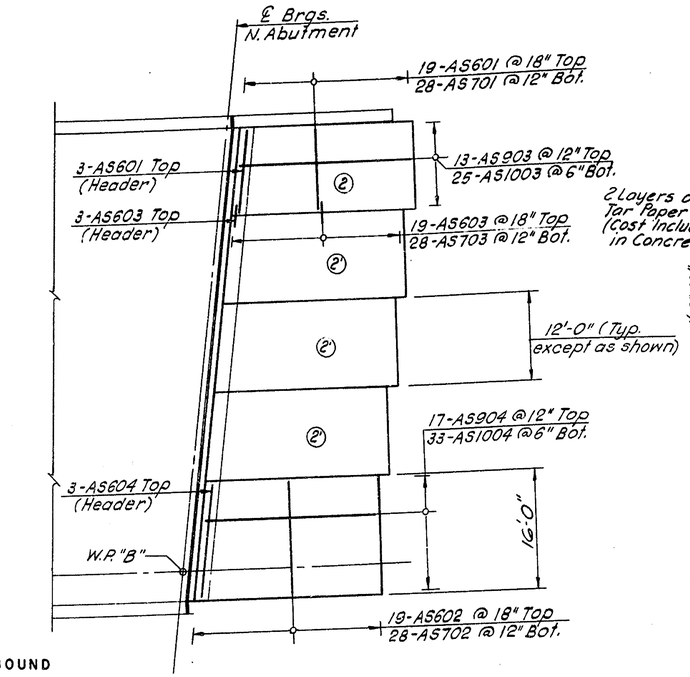

SOUTHBOUND

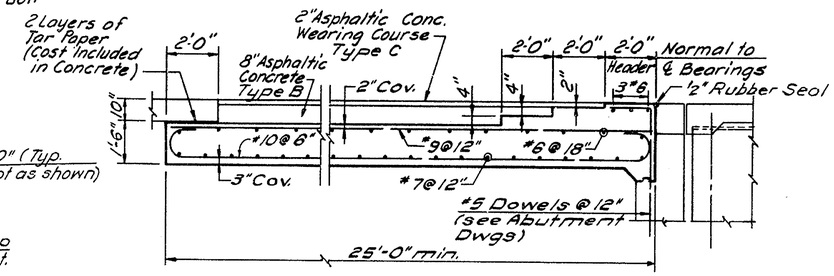

APPROACH SLAB SECTION

Scale: 3/8" = 1'-0"

NOTES:

1. Cost of approach slab reinforcement is to be included in price bid for Section 605.
2. Longitudinal joints in approach slabs are optional.

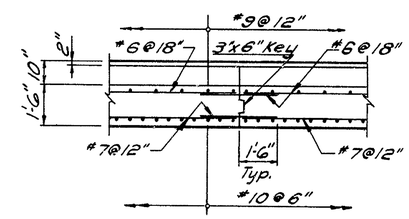

SECTION 10-10

Scale: 3/8" = 1'-0"

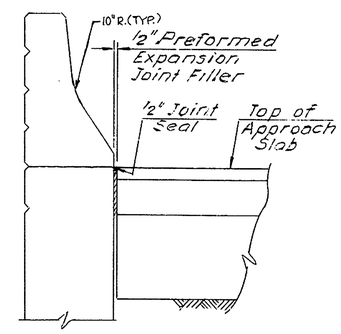

SECTION 26-26

Scale: 3/4" = 1'-0"

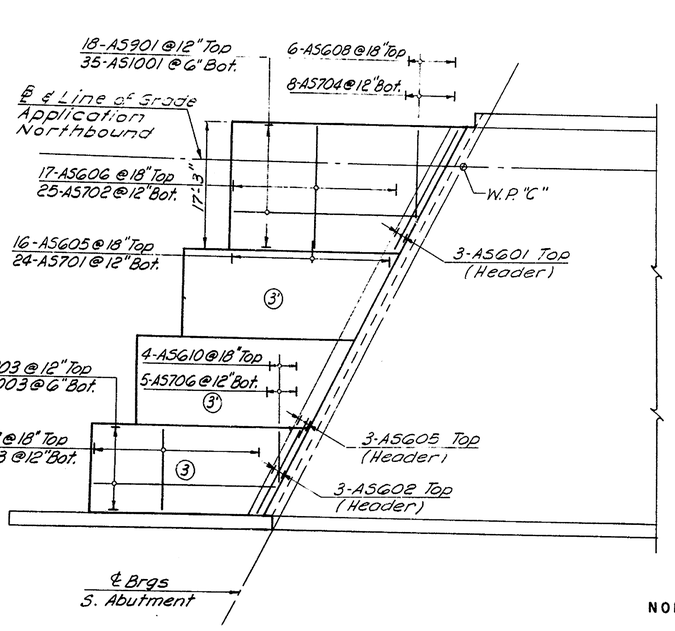

NORTHBOUND

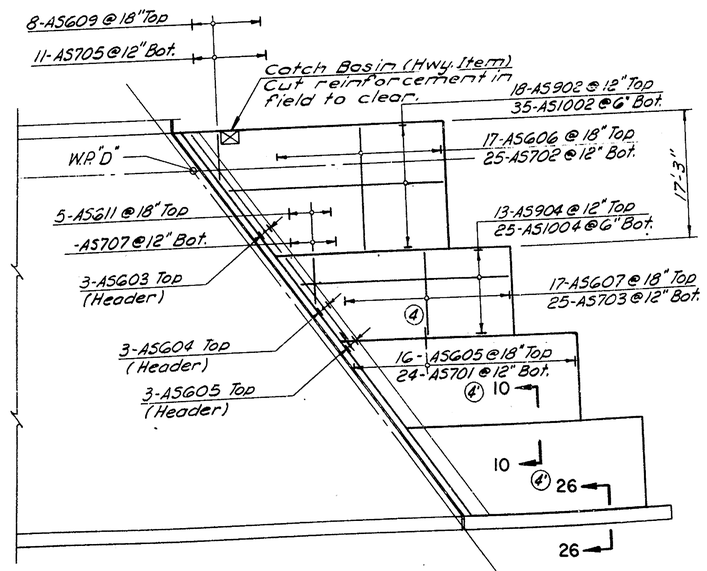

NOTE:

Reinforcing Steel in Slabs ① thru ④ are typical for Slabs ⓘ thru ⓓ respectively.

In Charge of	N. Erickson
Designed by	E. Bartolotta
Design Checked by	N. Chou
Detailed by	T.B.W. & W.K.
Detail Checked by	

Date	Revision

Prepared and Recommended: GOODKIND & O'DEA, INC. Consulting Engineers

Date MAY 25 1971

DELAWARE STATE HIGHWAY DEPARTMENT

APPROACH SLAB PLANS

APPROVED BY: BRIDGE ENGINEER — DATE JUN 18 1971

DWG. NO.	SCALE	DATE	
27	1"=10' and as noted	May 1971	GOODKIND & O'DEA, INC. CONSULTING ENGINEERS

COUNTY	CONTRACT	B.P.R. REG. NO.	STATE	FED. AID PROJECT NO.	SHEET NO.	TOTAL SHEETS
NEW CASTLE	71-05-003	2	DEL.		73	161

INTERSTATE ROUTE 495 OVER NEW CASTLE AVE. & READING R.R. BRIDGE NO. 5

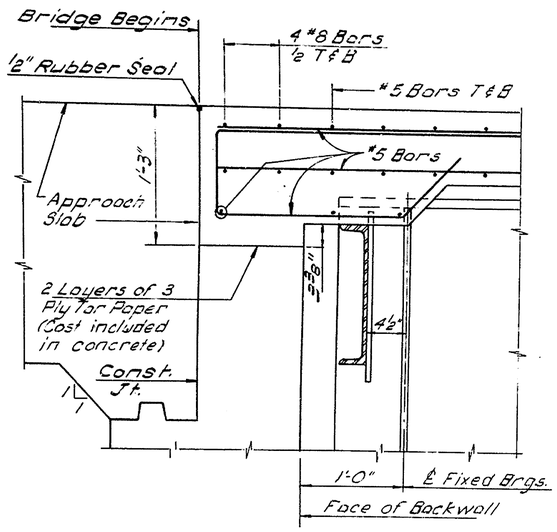

SECTION 11-11
Scale: 1½"=1'-0"

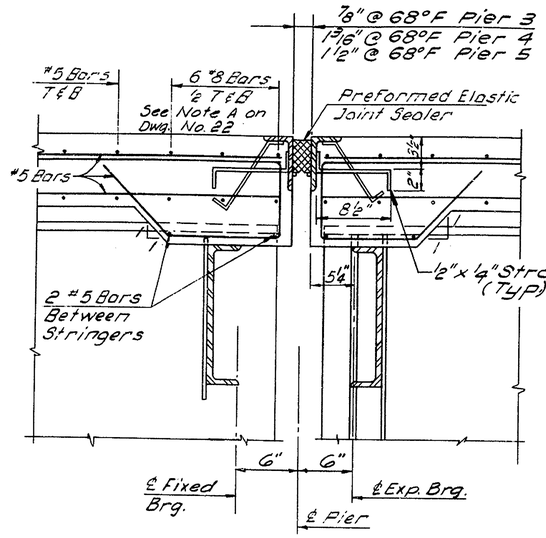

SECTION 12-12
Scale: 1½"=1'-0"

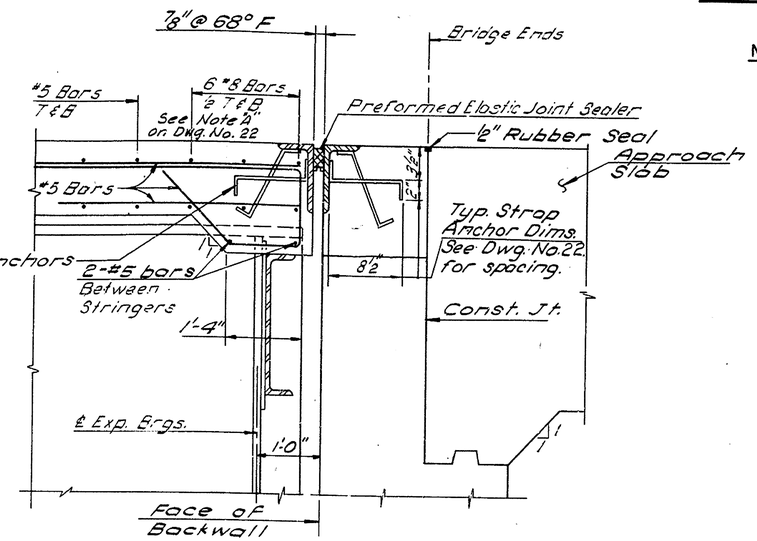

SECTION 13-13
Scale: 1½"=1'-0"

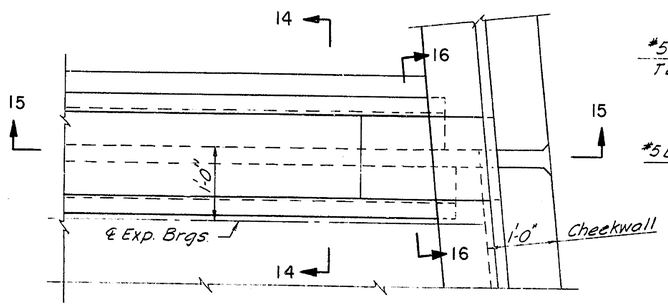

PARTIAL PLAN OF EXPANSION JOINT AT SOUTH ABUTMENT SOUTHBOUND
Scale: 1"=1'0

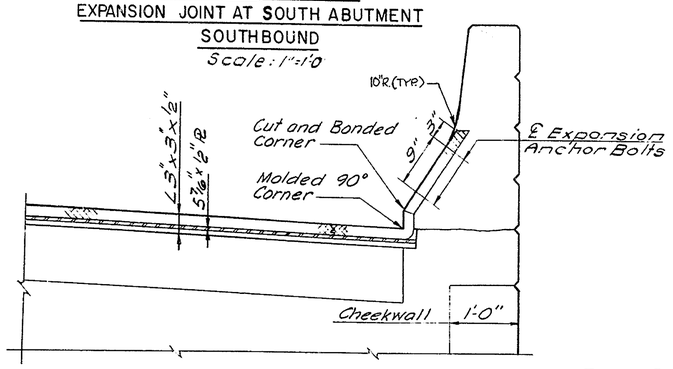

SECTION 15-15
Scale: 1"=1'-0"

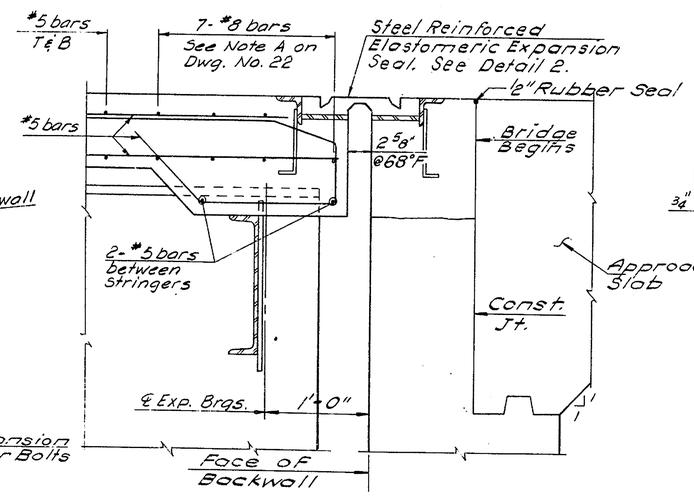

SECTION 14-14
Scale: 1½"=1'-0"

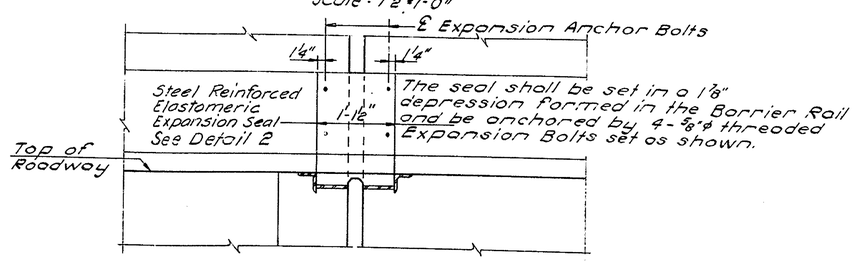

SECTION 16-16
Scale: 1"=1'-0"

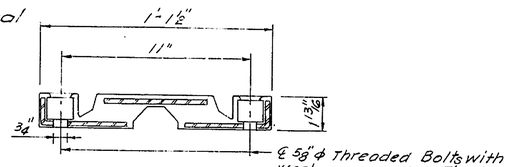

DETAIL 2
Scale: 3"=1'-0"

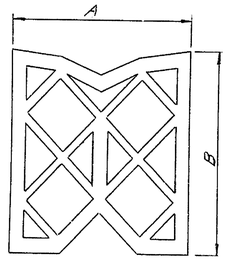

PREFORMED ELASTIC JOINT SEALER
Not to Scale

DIMENSIONS FOR PREFORMED ELASTIC JOINT SEALER

LOCATION	A	B
NORTH ABUT. NB NORTH ABUT. SB PIER 3	1 5/8"	1 5/8"
PIER 4	2"	2 1/16"
PIER 5	2 1/2"	2 3/4"

REFERENCES:
1. For Deck Joint Details at Barrier Rails see Dwg. No. 29.

In Charge of N. Eriksen
Designed by E. Hutchins
Design Checked by P. Hermann
Detailed by O.B. & T.B.W.
Detail Checked by N. Malkuchenz

Date	Revision

Prepared and Recommended
GOODKIND & O'DEA, INC. Consulting Engineers
Date MAY 25 1971

DELAWARE
STATE HIGHWAY DEPARTMENT

DECK JOINT DETAILS

APPROVED BY: John E. Cullen
BRIDGE ENGINEER
JUN 18 1971
DATE

DWG. NO.	SCALE	DATE	
28	As Noted	May 1971	GOODKIND & O'DEA, INC. CONSULTING ENGINEERS

COUNTY	CONTRACT	S.P.R. REG. NO.	STATE	FED. AID PROJECT NO.	SHEET NO.	TOTAL SHEETS
NEW CASTLE	71-05-003	2	DEL.		74	161

INTERSTATE ROUTE 495 OVER NEW CASTLE AVE. & READING R.R.
BRIDGE NO. 5

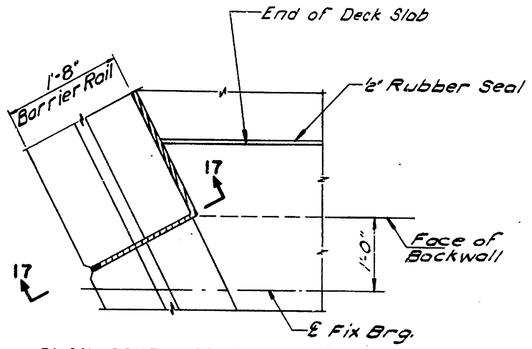

PLAN-SOUTH ABUTMENT-NB

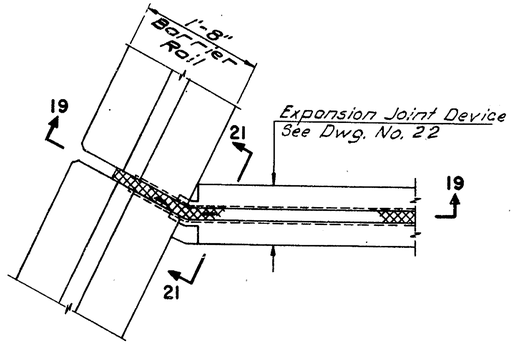

PLAN-PIER 5
(other Piers Similar)

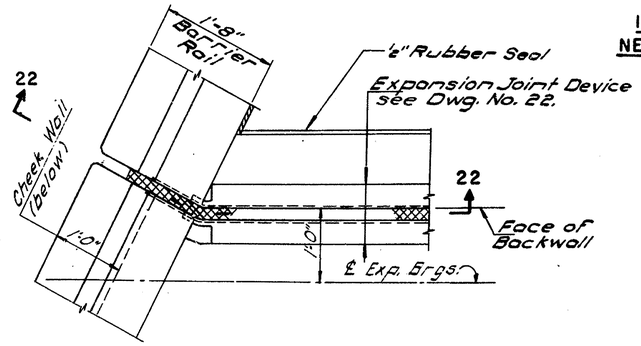

PLAN-NORTH ABUTMENT-NB
(SB Similar)

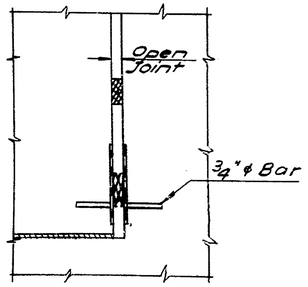

SECTION 24-24

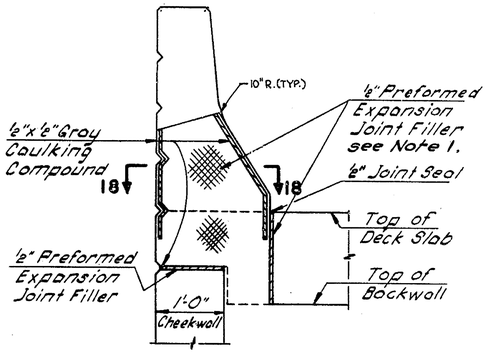

SECTION 17-17

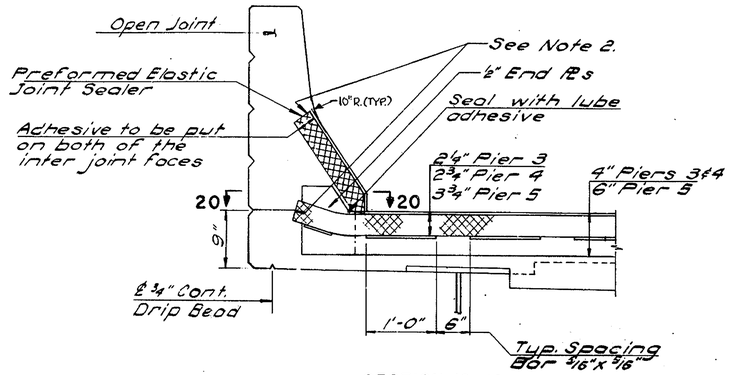

SECTION 19-19

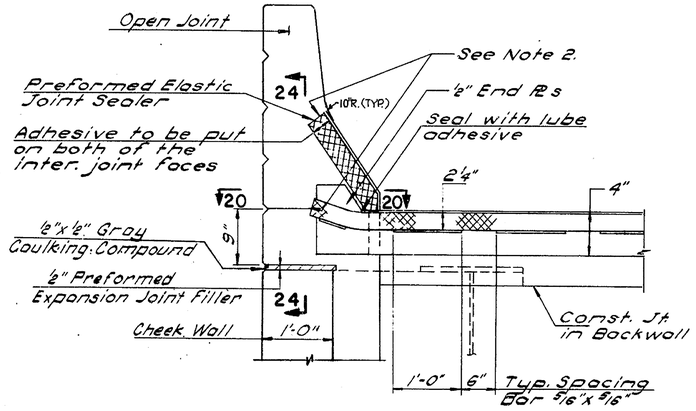

SECTION 22-22

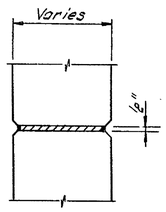

SECTION 18-18

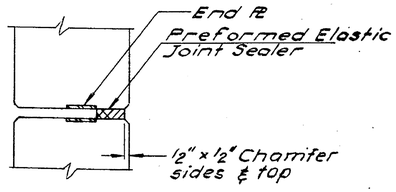

SECTION 20-20
Not to Scale

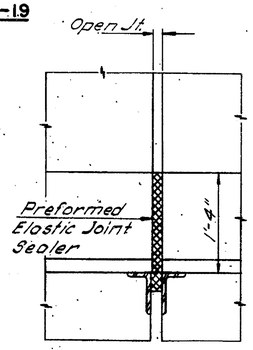

SECTION 21-21

REFERENCES:
1. For End Plates at Barrier Rail see Dwg. No. 22.

NOTES:
1. The Preformed Expansion Joint Filler is to be fastened with Galvanized Nails or Wire to at least one face of Barrier Rail.
2. Provide an extra 6" of seal at ends of the Preformed Elastic Joint Sealer. Cut away all but the top of the shell to provide an end flap. Bend flap down and seal with lubricant adhesive.

	Date	Revision
In Charge of N. Erickson		
Designed by E. Hutchins		
Design Checked by P. Hermann		
Detailed by O. Brooks		
Detail Checked by N. Malumber		

Prepared and Recommended
GOODKIND & O'DEA, INC. Consulting Engineers
Date MAY 25 1971

DELAWARE STATE HIGHWAY DEPARTMENT

DECK JOINTS AT BARRIER RAILS

APPROVED BY: John G. Schultz, BRIDGE ENGINEER — DATE JUN 18 1971

DWG. NO.	SCALE	DATE	
29	1"=1'-0" & As Noted	May 1971	GOODKIND & O'DEA, INC. CONSULTING ENGINEERS

COUNTY	CONTRACT	S. P. R. SEQ. NO.	STATE	FED. AID PROJECT NO.	SHEET NO.	TOTAL SHEETS
NEW CASTLE	71-05-003	2	DEL.		75	151

INTERSTATE ROUTE 495 OVER NEW CASTLE AVE & READING R.R. BRIDGE NO. 5

MARK	SIZE	TYPE	LENGTH	NO	A	B	C	D	E	REMARKS
SOUTH ABUTMENT - NORTHBOUND FOOTING										
F 501	5	STR	40-0	8						LONG BOT
F 502	5	STR	44-0	15						LONG TOP & BOT
F 503	5	STR	20-0	10						LONG TOP & BOT
F 504	5	STR	26-0	7						LONG TOP
F 505	5	STR	17-0	3						LONG TOP
F 506	5	STR	7-0	63						TRANS BOT
F 507	5	STR	5-9	63						TRANS TOP
F 508	5	STR	10-3	3						TRANS TOP
F 509	5	STR	7-3	18						TRANS TOP
F 510	5	STR	32-9	1						LONG BOT
F 511	5	STR	29-6	16						LONG TOP & BOT
F 512	5	STR	8-0	33						TRANS BOT
F 513	5	STR	7-0	30						TRANS TOP
F 514	5	STR	3-0	79						DOWEL NF
F 515	5	I	7-11	6	7-4	0-7	0-5	0-5		DOWEL FF
F 516	5	I	7-3	21	6-8	0-7	0-5	0-5		DOWEL FF
F 517	5	I	6-7	21	6-0	0-7	0-5	0-5		DOWEL FF
F 518	5	I	5-11	17	5-4	0-7	0-5	0-5		DOWEL FF
F 601	6	STR	11-6	20						TRANS BOT
F 701	7	IV	12-1	21	4-7	5-4	2-1.6	1-3		DOWEL FF
F 702	7	I	6-10	30	6-0	0-10	0-7	0-7		DOWEL FF
PILE REINFORCEMENT										
P 301	3	III	2-11	205	2-2.9	0-4.1	0-4.1	0-3.8		TIES
P 601	6	I	8-8	246	8-0	0-8	0-6	0-6		VERT

MARK	SIZE	TYPE	LENGTH	NO	A	B	C	D	E	REMARKS
ABUTMENT STEM										
AS 501	5	STR	5-7	4						VERT NF
AS 502	5	STR	4-11	14						VERT NF
AS 503	5	STR	4-3	14						VERT NF
AS 504	5	STR	3-7	12						VERT NF
AS 505	5	STR	5-3	7						HORIZ NF & SEAT
AS 506	5	STR	6-6	12						HORIZ FF & BKWL FF
AS 507	5	STR	19-6	46						HORIZ EF & SEAT & BKWL
AS 508	5	VIII	17-11	4	17-2	--	0-4.3	0-7.9	0-9	HORIZ NF
AS 509	5	STR	16-0	11						HORIZ FF & BKWL FF
AS 510	5	STR	16-9	2						SEAT
AS 511	5	II	4-2	66	--	3-3	1-0			TRANS SEAT
AS 512	5	VIII	5-3	63	--	3-0	1-7	1-7	2-3	VERT FF
AS 513	5	STR	6-4	64						VERT BKWL
AS 514	5	VIII	6-6	5	5-0	--	0-9	1-4.7	1-6	BKWL NF
AS 515	5	VIII	16-10	5	15-4	--	0-9	1-4.7	1-6	BKWL NF
AS 516	5	II	3-9	63	2-7	1-3	--			VERT BKWL
AS 517	5	STR	2-11	64						VERT BKWL
AS 518	5	II	5-9	64	4-2	1-8	--			VERT BKWL
AS 519	5	VIII	4-9	5	3-3	--	1-3.9	0-8.5	1-6	HORIZ NF
AS 520	5	II	4-5	4	3-9	0-9	--			HORIZ NF
AS 521	5	VIII	3-0	7	1-6	--	1-3.9	0-8.5	1-6	HORIZ NF
AS 522	5	II	6-11	4	3-3	0-7	3-3			HORIZ CKWL
AS 523	5	II	7-11	4	3-9	0-7	3-9			HORIZ CKWL
AS 524	5	STR	10-8	2						VERT CKWL NF
AS 525	5	STR	8-7	4						VERT CKWL EF
AS 526	5	STR	6-3	4						VERT CKWL FF
AS 527	5	STR	8-10	1						VERT NF
AS 528	5	STR	7-3	1						VERT NF
AS 529	5	II	5-8	9	2-1	1-8	2-1			VERT PAD
AS 601	6	VIII	4-0	2	--	2-2	1-0.5	1-6.3	1-10	VERT FF
PAD REINFORCEMENT										
AP 501	5	STR	2-0	9						HORIZ PAD
WINGWALL STEM										
WS 501	5	STR	15-2	18						HORIZ EF
WS 502	5	STR	13-1	21						VERT NF
WS 503	5	STR	9-5	30						VERT FF
WS 504	5	STR	14-6	18						HORIZ EF
WS 505	6	II	10-3 TO 15-5	6	3-9 TO 6-4	1-3 TO 1-3	5-5 TO 8-0			VERT CANTILEVER
WS 601	6	STR	8-10	14						HORIZ CANTILEVER
WS 602	6	VIII	4-0	38	--	2-2	1-0.5	1-6.3	1-10	VERT FF
BARRIER RAIL										
BR 501	5	STR	21-2	8						HORIZ
BR 502	5	STR	14-6	8						HORIZ
BR 503	5	II	3-7	1	1-0	1-2	1-7			HORIZ
BR 504	5	II	2-5	1	1-0	0-5	1-2			HORIZ
BR 505	5	II	2-3	1	1-0	0-4	1-1			HORIZ
BR 601	6	X	4-8	40	2-7	0-4	1-10	0-2.5	1-9.9	VERT
WALL BETWEEN ABUTMENTS - STEM										
WS 506	5	STR	19-2	18						HORIZ EF
WS 508	5	STR	12-0	2						HORIZ EF
WS 509	5	STR	6-0	2						HORIZ EF
WS 510	5	VIII	19-7	2	18-9	--	0-2.2	0-9.8	0-10	ALONG TOP EF
WS 511	5	STR	12-3 TO 16-4	14						VERT NF
WS 512	5	STR	9-0	21						VERT FF
WS 513	5	STR	1-9 TO 5-7	18						VERT FF

BAR BENDING DIAGRAMS

ALL DIMENSIONS ARE OUT TO OUT OF BARS

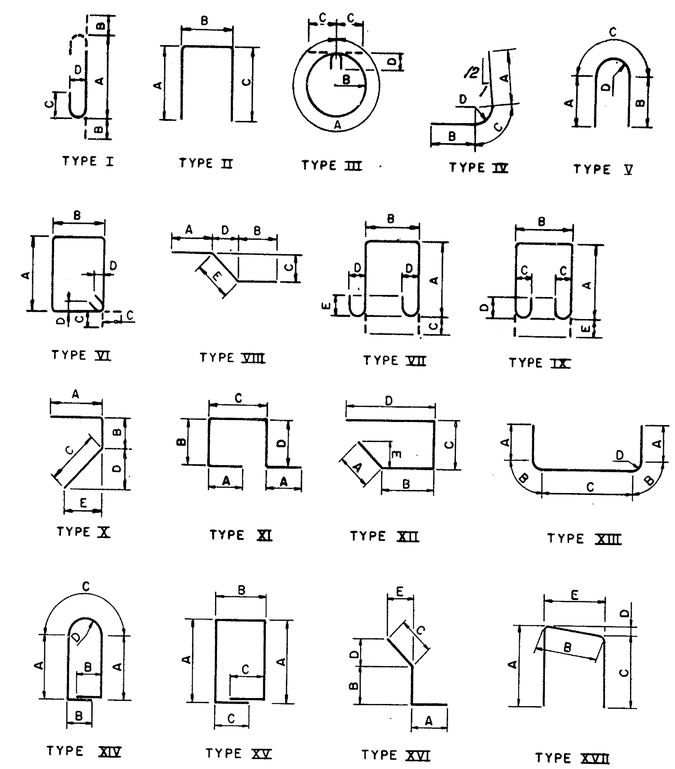

In Charge of N. Erikson	Date	Revision
Designed by M. Siebold		
Design Checked by P. Hermann		
Detailed by M. Siebold		
Detail Checked by D. Hearne		

Prepared and Recommended
GOODKIND & O'DEA, INC. Consulting Engineers
Date MAY 25 1971

DELAWARE
STATE HIGHWAY DEPARTMENT

BAR LIST
SOUTH ABUTMENT - NORTHBOUND

APPROVED BY: John G. Cubitt
BRIDGE ENGINEER
JUN 18 1971
DATE

DWG. NO.	SCALE	DATE	GOODKIND & O'DEA, INC. CONSULTING ENGINEERS
30		MOY 1971	

COUNTY	CONTRACT	S. P. R. DES. NO.	STATE	FED. AID PROJECT NO.	SHEET NO.	TOTAL SHEETS
NEW CASTLE	71-05-003	2	DEL.		76	161

INTERSTATE ROUTE 495 OVER NEW CASTLE AVE. & READING R.R. BRIDGE NO. 5

MARK	SIZE	TYPE	LENGTH	NO	A	B	C	D	E	REMARKS
SOUTH ABUTMENT - SOUTHBOUND										
FOOTING										
F 501	5	STR	7-0	64						TRANS BOT
F 502	5	X	9-11	1	7-4	0-8	2-0	1-10	0-10	TRANS BOT
F 503	5	STR	5-9	64						TRANS TOP
F 504	5	STR	31-0 TO 34-0	8						LONG BOT
F 505	5	STR	31-0 TO 33-6	7						LONG TOP
F 506	5	STR	40-0	15						LONG TOP&BOT
F 507	5	STR	20-5	6						LONG BOT
F 508	5	STR	20-1	10						LONG BOT
F 509	5	STR	7-6	14						TRANS BOT
F 510	5	STR	6-3	14						TRANS TOP
F 511	5	STR	3-0	60						DOWEL NF
F 512	5	I	7-5	20	6-10	0-7	0-5	0-5		DOWEL FF
F 513	5	I	6-5	23	5-10	0-7	0-5	0-5		DOWEL FF
F 514	5	I	5-10	24	5-3	0-7	0-5	0-5		DOWEL FF
F 515	5	I	4-5	3	3-10	0-7	0-5	0-5		DOWEL FF
F 601	6	I	4-11	15	4-3	0-8	0-6	0-6		DOWEL FF
PILE REINFORCEMENT										
P 301	3	III	2-11	160	2-2.9	0-4.1	0-4.1	0-3.8		TIE
P 601	6	I	8-8	192	8-0	0-8	0-6	0-6		VERT

MARK	SIZE	TYPE	LENGTH	NO	A	B	C	D	E	REMARKS
ABUTMENT STEM										
AS 502	5	STR	11-7	1						VERT
AS 503	5	STR	20-3	13						HORIZ EF
AS 504	5	STR	20-5	11						HORIZ BKWL
AS 505	5	VIII	5-6	67	--	3-3	1-7	1-7	2-3	VERT FF
AS 506	5	II	3-8	43	2-6	1-3	--			VERT FF BKWL
AS 507	5	II	5-9	67	4-2	1-8	--			VERT APPR SLAB
AS 508	5	STR	3-2	67						VERT FF BKWL
AS 509	5	STR	7-0	73						VERT NF BKWL + CKWL
AS 510	5	II	5-1	67	2-4	0-7	2-4			VERT HEADER
AS 511	5	II	4-2	68	3-3	1-0	--			HORIZ SEAT
AS 512	5	STR	5-1	15						VERT NF
AS 513	5	STR	21-8	22						HORIZ EF
AS 514	5	STR	4-1	16						VERT NF
AS 515	5	II	3-6	24	2-4	1-3	--			VERT FF
AS 516	5	STR	24-4	11						HORIZ BKWL
AS 517	5	STR	24-6	11						HORIZ EF
AS 518	5	STR	3-6	17						VERT
AS 519	5	II	5-2	7	3-9	1-6	--			HORIZ CORNER
AS 520	5	II	7-8	5	3-9	0-4	3-9			HORIZ CKWL
AS 521	5	STR	1-6	2						HORIZ
AS 522	5	STR	10-9	3						VERT
AS 523	5	STR	8-1	3						VERT NF
AS 524	5	II	7-5	5	3-6	0-7	3-6			HORIZ CKWL
AS 525	5	II	7-3	15	2-10	1-9	2-10			VERT PAD
AS 801	8	STR	18-8	4						HORIZ HEADER
AS 802	8	STR	21-8	4						HORIZ HEADER
AS 803	8	STR	22-10	4						HORIZ HEADER
PAD REINFORCEMENT										
AP 501	5	STR	2-4	15						HORIZ
WALL STEM										
WS 501	5	STR	14-4	5						VERT EF
WS 502	5	XII	7-0	13	1-6	1-9	1-2	2-9	0-7	HORIZ
WS 503	5	XII	5-3	2	0-8	1-9	1-2	1-10	0-3	HORIZ
WS 504	5	II	10-3 TO 15-5	6	3-9 TO 6-4	1-3 TO 1-3	5-5 TO 8-0			VERT CANTILEVER
WS 505	5	STR	16-6	14						HORIZ EF
WS 506	5	STR	10-7	12						VERT NF
WS 507	5	STR	8-10	15						VERT FF
WS 601	6	STR	8-10	14						HORIZ CANTILEVER
WS 602	6	VIII	4-0	26	--	2-2	1-0.5	1-6	1-10	VERT
BARRIER RAIL										
BR 501	5	STR	1-6	8						HORIZ
BR 502	5	STR	22-5	8						HORIZ
BR 601	6	X	4-8	26	2-7	0-4	1-10	0-2.7	1-9.9	VERT

BAR BENDING DIAGRAMS

ALL DIMENSIONS ARE OUT TO OUT OF BARS

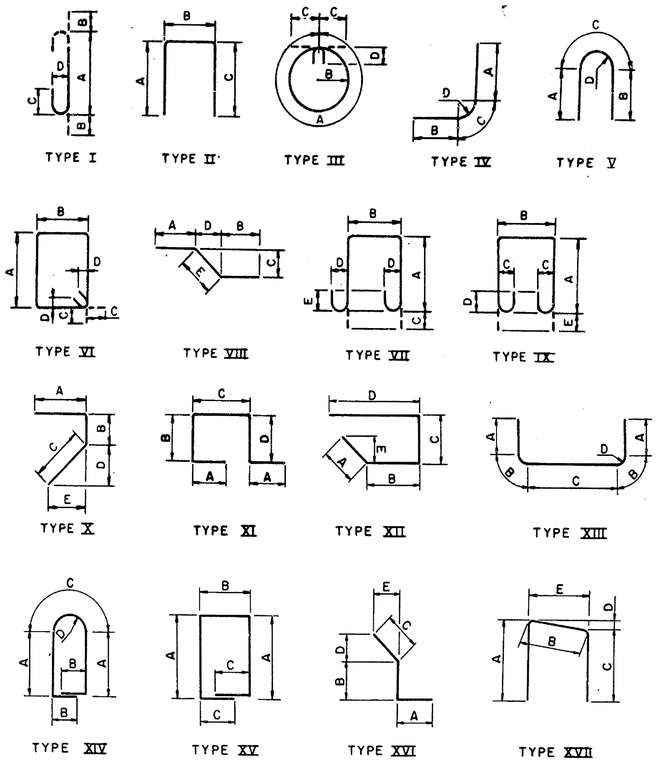

In Charge of N. Erikson	Date	Revision
Designed by M. Siebold		
Design Checked by P. Hermann		
Detailed by A. Cerefeld		
Detail Checked by W. Kowblansky		

Prepared and Recommended
GOODKIND & O'DEA, INC.
Consulting Engineers

Date MAY 25 1971

DELAWARE
STATE HIGHWAY DEPARTMENT

BAR LIST
SOUTH ABUTMENT - SOUTHBOUND

APPROVED BY:
BRIDGE ENGINEER
DATE JUN 18 1971

DWG. NO.	SCALE	DATE	GOODKIND & O'DEA, INC. CONSULTING ENGINEERS
31		NOV. 1971	

COUNTY	CONTRACT	S.P.R. DES. NO.	STATE	FED. AID PROJECT NO.	SHEET NO.	TOTAL SHEETS
NEW CASTLE	71-05-003	2	DEL.		77	161

INTERSTATE ROUTE 495 OVER NEW CASTLE AVE. & READING R.R. BRIDGE NO. 5

MARK	SIZE	TYPE	LENGTH	NO	A	B	C	D	E	REMARKS
NORTH ABUTMENT SOUTHBOUND FOOTING										
F 501	5	STR	7-6	15						TRANS BOT
F 502	5	STR	6-3	15						TRANS TOP
F 503	5	STR	20-4 TO 21-5	9						LONG BOT
F 504	5	STR	20-2	7						LONG TOP
F 505	5	STR	35-6	30						LONG TOP & BOT
F 506	5	STR	7-0	60						TRANS BOT
F 507	5	STR	6-9	3						TRANS BOT
F 508	5	STR	6-0	63						TRANS TOP
F 509	5	STR	3-0	58						DOWEL NF
F 510	5	I	6-5	16	5-10	0-7	0-5	0-5		DOWEL FF
F 511	5	I	6-9	24	6-2	0-7	0-5	0-5		DOWEL FF
F 512	5	I	7-9	16	7-2	0-7	0-5	0-5		DOWEL FF
F 513	5	I	8-4	13	7-9	0-7	0-5	0-5		DOWEL FF
F 601	6	I	4-11	16	4-3	0-8	0-6	0-6		DOWEL FF
PILE REINFORCEMENT										
P 301	3	III	2-11	150	2-2.9	0-4.1	0-4.1	0-3.8		TIES
P 601	6	I	8-8	180	8-0	0-8	0-6	0-6		VERT

MARK	SIZE	TYPE	LENGTH	NO	A	B	C	D	E	REMARKS
ABUTMENT STEM										
AS 501	5	STR	4-0	11						VERT NF
AS 502	5	STR	4-5	16						VERT NF
AS 503	5	STR	5-5	11						VERT NF
AS 504	5	STR	6-0	8						VERT NF
AS 505	5	STR	15-9	18						HORIZ NF.FF.SEAT & BKWL
AS 506	5	VIII	16-1	6	--	14-7	0-2.5	1-5.8	1-6	HORIZ NF BKWL
AS 507	5	STR	22-8	24						HORIZ NF.FF.SEAT & BKWL
AS 508	5	STR	27-10	17						HORIZ NF & FF
AS 509	5	VIII	28-3	6	--	26-9	0-2.5	1-5.8	1-6	HORIZ NF BKWL
AS 510	5	STR	16-10	3						HORIZ SEAT
AS 511	5	STR	12-5	4						HORIZ SEAT
AS 512	5	VIII	4-9	4	--	3-3	1-5.8	0-2.5	1-6	HORIZ NF
AS 513	5	X	5-7	5	3-8	0-6	1-6	1-5.8	0-2.5	HORIZ NF
AS 514	5	II	4-2	69	3-3	1-0	--			TRANS SEAT
AS 515	5	VIII	5-6	67	--	3-3	1-7	1-7	2-3	VERT FF
AS 516	5	II	3-5	43	2-3	1-3	--			VERT BKWL FF
AS 517	5	II	3-8	24	2-6	1-3	--			VERT BKWL FF
AS 518	5	STR	6-11	70						VERT BKWL NF CKWL FF
AS 519	5	STR	3-2	68						VERT BKWL FF
AS 520	5	II	5-2	68	2-4	0-8	2-4			VERT BKWL
AS 521	5	II	5-9	68	4-2	1-8	--			VERT BKWL
AS 522	5	II	5-11	12	2-2	1-9	2-2			VERT PAD REINF
AS 523	5	STR	8-7	2						VERT NF
AS 524	5	STR	5-11	2						VERT FF
AS 525	5	II	6-11	4	3-3	0-7	3-3			HORIZ CKWL
AS 526	5	VIII	2-6	10	--	1-3	1-3	0-2.3	1-3	HORIZ
AS 527	5	II	7-6	4	3-8	0-4	3-8			HORIZ CKWL
AS 528	5	STR	11-4	4						VERT CKWL NF & FF
AS 529	5	STR	13-10	1						VERT NF
AS 530	5	STR	9-1	1						VERT NF
AS 531	5	STR	7-5	1						VERT FF
AS 601	6	VIII	4-0	2	--	2-2	1-0.5	1-6.3	1-10	VERT FF
AS 801	8	STR	14-5	4						HORIZ HEADER
AS 802	8	STR	22-8	4						HORIZ HEADER
AS 803	8	STR	26-5	4						HORIZ HEADER
PAD REINFORCEMENT										
AP 501	5	STR	2-4	9						HORIZ PAD REINF
AP 502	5	STR	2-0	3						HORIZ PAD REINF
WINGWALL STEM										
WS 501	5	STR	16-8	14						HORIZ 1/2 EF
WS 502	5	STR	11-1	12						VERT NF
WS 503	5	STR	9-3	16						VERT FF
WS 504	5	II	10-3 TO 15-5	6	3-9 TO 6-4	1-3 TO 1-3	5-8 TO 8-0			VERT CANTILEVER
WS 601	6	STR	8-10	14						HORIZ CANTILEVER
WS 602	6	VIII	4-0	24	--	2-2	1-0.5	1-6.3	1-10	VERT FF
BARRIER RAIL										
BR 501	5	STR	22-8	8						HORIZ
BR 502	5	II	3-6	1	1-4	1-2	1-2			HORIZ
BR 503	5	II	2-8	1	1-3	0-5	1-2			HORIZ
BR 504	5	II	2-6	1	1-2	0-4	1-2			HORIZ
BR 601	6	X	4-8	26	2-7	0-4	1-10	0-2.7	1-9.9	VERT

BAR BENDING DIAGRAMS

ALL DIMENSIONS ARE OUT TO OUT OF BARS

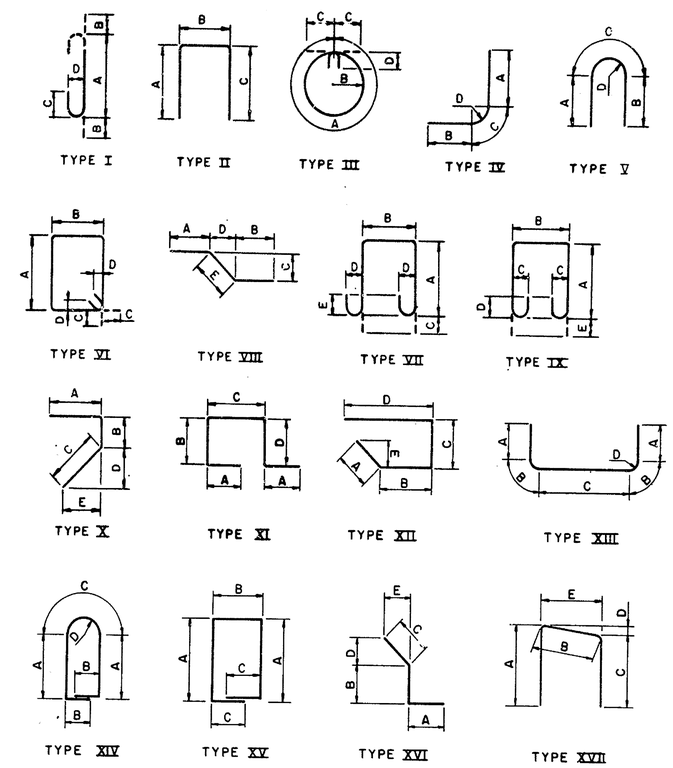

In Charge of N. Enkeur	Date	Revision
Designed by M. Siebold		
Design Checked by P. Hermann		
Detailed by R. Metcalf		
Detail Checked by E. Hutchins		

Prepared and Recommended
GOODKIND & O'DEA, INC. Consulting Engineers

Date MAY 25 1971

DELAWARE
STATE HIGHWAY DEPARTMENT

BAR LIST
NORTH ABUTMENT - SOUTHBOUND

APPROVED BY: John E. Kubitz BRIDGE ENGINEER — DATE JUN 18 1971

DWG. NO.	SCALE	DATE	GOODKIND & O'DEA, INC. CONSULTING ENGINEERS
32		MAY 1971	

COUNTY	CONTRACT	B.P.D. REG. NO.	STATE	FED. AID PROJECT NO.	SHEET NO.	TOTAL SHEETS
NEW CASTLE	71-05-003	2	DEL.		78	161

INTERSTATE ROUTE 495 OVER NEW CASTLE AVE. & READING R.R. BRIDGE NO. 5

MARK	SIZE	TYPE	LENGTH	NO	A	B	C	D	E	REMARKS
NORTH ABUTMENT - NORTHBOUND FOOTING										
F 501	5	STR	16-0	16						LONG TOP & BOT
F 502	5	STR	20-0	4						LONG TOP & BOT
F 503	5	STR	40-0	15						LONG TOP & BOT
F 504	5	STR	33-0	14						LONG TOP & BOT
F 505	5	STR	29-6	1						LONG BOT
F 506	5	STR	26-3	2						LONG BOT
F 507	5	STR	25-0	14						LONG TOP & BOT
F 508	5	STR	10-6	17						TRANS BOT
F 509	5	STR	7-0	86						TRANS TOP & BOT
F 511	5	STR	5-9	69						TRANS TOP
F 512	5	STR	8-0	24						TRANS BOT
F 513	5	STR	6-9	24						TRANS TOP
F 514	5	STR	3-0	74						DOWEL NF
F 515	5	I	8-3	36	7-8	0-7	0-5	0-5		DOWEL FF
F 516	5	I	9-2	21	8-7	0-7	0-5	0-5		DOWEL FF
F 517	5	I	9-10	13	9-3	0-7	0-5	0-5		DOWEL FF
F 701	7	IV	9-11	14	3-5	4-4	2-1.6	1-3		DOWEL FF
F 702	7	I	6-10	23	6-0	0-10	0-7	0-7		DOWEL FF
PILE REINFORCEMENT										
P 301	3	III	2-11	185	2-2.9	0-4.1	0-4.1	0-3.8		TIES
P 601	6	I	8-8	222	8-0	0-8	0-6	0-6		VERT
ABUTMENT STEM										
AS 501	5	STR	5-11	19						VERT NF
AS 502	5	STR	6-11	14						VERT NF
AS 503	5	STR	7-7	9						VERT NF
AS 504	5	STR	6-0	5						VERT NF
AS 505	5	VIII	28-9	5	--	28-0	0-5.5	0-7.1	0-9	HORIZ NF
AS 506	5	STR	27-0	2						SEAT
AS 507	5	STR	25-9	11						HORIZ FF & BKWL FF
AS 508	5	STR	19-8	24						HORIZ EF & SEAT & BKWL
AS 509	5	STR	20-4	5						HORIZ NF
AS 510	5	STR	22-3	11						HORIZ FF & BKWL FF
AS 511	5	STR	11-9	3						SEAT
AS 512	5	STR	10-6	2						SEAT
AS 513	5	II	4-2	69	--	3-3	1-0			TRANS SEAT
AS 514	5	VIII	4-6	47	--	2-3	1-7	1-7	2-3	VERT FF
AS 515	5	VIII	4-4	22	--	2-1	1-7	1-7	2-3	VERT FF
AS 516	5	STR	5-0	60						VERT BKWL NF
AS 517	5	STR	6-3	9						VERT BKWL NF
AS 518	5	II	2-0 TO 2-9	27	0-10 TO 1-7	1-3 TO 1-3	--			VERT BKWL FF
AS 519	5	II	1-10 TO 2-5	21	0-8 TO 1-3	1-3 TO 1-3	--			VERT BKWL FF
AS 520	5	II	1-10 TO 2-2	13	0-8 TO 1-0	1-3 TO 1-3	--			VERT BKWL FF
AS 521	5	STR	2-6	69						VERT BKWL
AS 522	5	II	5-9	9	4-2	1-8	--			VERT BKWL
AS 523	5	II	6-10	67	3-2	0-8	3-2			VERT BKWL

MARK	SIZE	TYPE	LENGTH	NO	A	B	C	D	E	REMARKS
ABUTMENT STEM - CONTINUED										
AS 524	5	VIII	26-9	4	--	25-6	0-9.2	0-11.9	1-3	HORIZ BKWL NF
AS 525	5	VIII	21-7	4	20-0	--	0-11.2	1-3.4	1-7	HORIZ BKWL NF
AS 526	5	II	7-0	5	0-9	4-5	2-0			HORIZ NF
AS 527	5	VIII	4-9	5	--	3-3	1-2.6	0-10.6	1-6	HORIZ NF
AS 528	5	II	9-1	3	4-4	0-7	4-4			HORIZ CKWL
AS 529	5	II	6-5	4	3-0	0-7	3-0			HORIZ CKWL
AS 530	5	STR	9-0	6						VERT CKWL EF & HORIZ BKWL
AS 531	5	STR	4-4	2						VERT CKWL FF
AS 532	5	STR	11-6	1						VERT NF
AS 533	5	STR	7-0	1						VERT NF
AS 534	5	STR	11-0	2						VERT CKWL NF
AS 535	5	STR	6-4	2						VERT CKWL FF
AS 536	5	II	5-11	9	2-2	1-9	2-2			VERT PAD REINF
AS 537	5	II	3-7	9	2-5	1-3	--			VERT BKWL FF
AS 538	5	II	5-2 TO 5-11	25	3-7 TO 4-4	1-8 TO 1-8	--			VERT BKWL
AS 539	5	II	5-0 TO 5-8	21	3-5 TO 4-1	1-8 TO 1-8	--			VERT BKWL
AS 540	5	II	5-0 TO 5-4	13	3-5 TO 3-9	1-8 TO 1-8	--			VERT BKWL
AS 601	6	VIII	4-0	2	--	2-2	1-0.5	1-6.3	1-10	VERT FF
AS 801	8	STR	24-8	4						HORIZ HEADER
AS 802	8	STR	19-8	4						HORIZ HEADER
AS 803	8	STR	19-11	4						HORIZ HEADER
PAD REINFORCEMENT										
AP 501	5	STR	2-4	9						HORIZ PAD
WINGWALL STEM										
WS 501	5	STR	23-8	18						HORIZ EF
WS 502	5	STR	13-6	17						VERT NF
WS 503	5	STR	9-0	23						VERT FF
WS 504	5	II	10-3 TO 15-5	6	3-9 TO 6-4	1-3 TO 1-3	5-5 TO 8-0			VERT CANTILEVER
WS 601	6	STR	8-10	14						HORIZ CANTILEVER
WS 602	6	VIII	4-0	31	--	2-2	1-0.5	1-6.3	1-10	VERT FF
BARRIER RAIL										
BR 501	5	STR	29-8	8						HORIZ
BR 502	5	II	3-4	1	1-2	1-2	1-2			HORIZ
BR 503	5	II	2-7	1	1-2	0-5	1-2			HORIZ
BR 504	5	II	2-6	1	1-2	0-4	1-2			HORIZ
BR 601	6	X	4-8	33	2-7	0-4	1-10	0-2.5	1-9.9	VERT
WALL BETWEEN ABUTMENTS - STEM										
WS 505	5	STR	13-0	18						HORIZ EF
WS 506	5	STR	6-6	2						HORIZ EF
WS 507	5	VIII	13-7	2	12-9	--	0-3	0-9.6	0-10	ALONG TOP EF
WS 508	5	STR	10-3	14						VERT FF
WS 509	5	STR	4-10 TO 8-2	14						VERT FF
WS 510	5	STR	12-7 TO 15-11	10						VERT NF

BAR BENDING DIAGRAMS

ALL DIMENSIONS ARE OUT TO OUT OF BARS

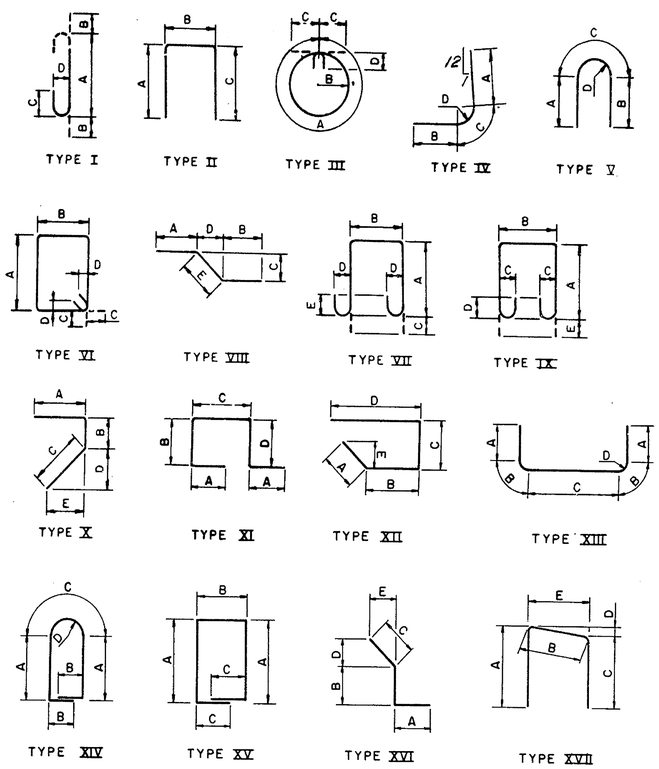

In Charge of	N. Erikson
Designed by	M. Siebold
Design Checked by	P. Hermann
Detailed by	M. Siebold
Detail Checked by	J. Mitchell

Date	Revision

Prepared and Recommended
GOODKIND & O'DEA, INC. Consulting Engineers

Date MAY 25 1971

DELAWARE
STATE HIGHWAY DEPARTMENT

BAR LIST
NORTH ABUTMENT - NORTHBOUND

APPROVED BY: John S. Fulton
BRIDGE ENGINEER

JUN 18 1971
DATE

DWG. NO.	SCALE	DATE	GOODKIND & O'DEA, INC. CONSULTING ENGINEERS
33		May 1971	

COUNTY	CONTRACT	R.P.B. REG. NO.	STATE	FED. AID PROJECT NO.	SHEET NO.	TOTAL SHEETS
NEW CASTLE	71-05-003	2	DEL.		79	151

INTERSTATE ROUTE 495 OVER NEW CASTLE AVE. & READING R.R. BRIDGE NO. 5

MARK	SIZE	TYPE	LENGTH	NO	A	B	C	D	E	REMARKS
SOUTHBOUND - PIER 1										
FOOTING										
PF 501	5	STR	10-0	67						TRANS TOP
PF 502	5	STR	27-9	11						LONG TOP
PF 503	5	STR	39-8	11						LONG TOP
PF 504	5	STR	33-6	22						LONG BOT
PF 701	7	STR	10-0	132						TRANS BOT
PF1001	10	IV	8-4	36	4-9	1-6	2-0.6	1-3		VERT DOWELS
PF1101	11	IV	8-8	40	5-1	1-6	2-0.7	1-3		VERT DOWELS
COLUMNS										
PC 501	5	III	10-11	80	9-9.6	1-6.4	0-6.9	0-5.8		HORIZ TIES
PC1001	10	STR	23-0	18						VERT
PC1002	10	STR	23-9	18						VERT
PC1101	11	STR	22-3	20						VERT
PC1102	11	STR	24-6	20						VERT
PIER CAP										
PB 401	4	II	7-0	2	2-0	3-2	2-0			TRANS
PB 402	4	II	6-6	1	2-0	2-8	2-0			TRANS
PB 501	5	VI	11-2 TO 11-9	12	3-3 TO 3-7	2-0.5 TO 2-0.5	0-5.5 TO 0-5.5	0-3.8 TO 0-3.8		STIRRUPS
PB 502	5	VI	11-0 TO 11-9	24	3-2 TO 3-7	2-0.5 TO 2-0.5	0-5.5 TO 0-5.5	0-3.8 TO 0-3.8		STIRRUPS
PB 503	5	VI	10-7 TO 10-10	12	2-11. TO 3-1.5	2-0.5 TO 2-0.5	0-5.5 TO 0-5.5	0-3.8 TO 0-3.8		STIRRUPS
PB 504	5	VI	11-2 TO 11-9	12	3-3 TO 3-7	2-0.5 TO 2-0.5	0-5.5 TO 0-5.5	0-3.8 TO 0-3.8		STIRRUPS
PB 505	5	VI	10-6	6	2-11	2-0.5	0-5.5	0-3.8		STIRRUPS
PB 506	5	VI	10-7	8	2-11.	2-0.5	0-5.5	0-3.8		STIRRUPS
PB 507	5	VI	10-9	8	3-0.5	2-0.5	0-5.5	0-3.8		STIRRUPS
PB 508	5	VI	11-0	4	3-2	2-0.5	0-5.5	0-3.8		STIRRUPS
PB 509	5	VI	11-6	4	3-5	2-0.5	0-5.5	0-3.8		STIRRUPS
PB 510	5	VI	11-10	4	3-7	2-0.5	0-5.5	0-3.8		STIRRUPS
PB 511	5	V	7-6	8	1-3	1-3	5-0.4	1-6.9		LONG END
PB 512	5	STR	31-3	8						LONG
PB 513	5	X	5-7	6	1-5	2-11	1-5	0-2.5	1-4.8	VERT END
PB 801	8	STR	14-6	18						LONG BOT
PB 901	9	VII	23-0	8	21-3	--	0-4.5	1-10.5	1-11	LONG BOT
PB 902	9	STR	14-6	6						LONG BOT
PB 903	9	STR	21-0	4						LONG BOT
PB 904	9	STR	12-0	32						LONG TOP
PB 905	9	STR	39-4	4						LONG TOP
PB 906	9	STR	15-11	8						LONG TOP
PIER PAD										
PP 401	4	XIV	12-1	1	1-6	2-1	5-0.5	1-7		LONG TIE
PIER PILES										
P 302	3	III	3-5	220	2-9.2	0-5.1	0-4.1	0-3.8		HORIZ TIES
P 601	6	I	8-8	264	8-0	0-8	0-6	0-6		VERT DOWELS

MARK	SIZE	TYPE	LENGTH	NO	A	B	C	D	E	REMARKS
SOUTHBOUND - PIER 2										
FOOTING										
PF 501	5	STR	10-0	67						TRANS TOP
PF 502	5	STR	27-9	11						LONG TOP
PF 503	5	STR	39-8	11						LONG TOP
PF 504	5	STR	33-6	22						LONG BOT
PF 701	7	STR	10-0	132						TRANS BOT
PF1001	10	IV	8-4	36	4-9	1-6	2-0.6	1-3		VERT DOWELS
PF1101	11	IV	8-8	40	5-1	1-6	2-0.7	1-3		VERT DOWELS
COLUMNS										
PC 501	5	III	10-11	80	9-9.6	1-6.4	0-6.9	0-5.8		HORIZ TIES
PC1001	10	STR	22-9	18						VERT
PC1002	10	STR	23-6	18						VERT
PC1101	11	STR	22-0	20						VERT
PC1102	11	STR	24-3	20						VERT
PIER CAP										
PB 401	4	II	7-0	2	2-0	3-2	2-0			TRANS
PB 402	4	II	6-6	1	2-0	2-8	2-0			TRANS
PB 501	5	VI	11-2 TO 11-9	12	3-3 TO 3-7	2-0.5 TO 2-0.5	0-5.5 TO 0-5.5	0-3.8 TO 0-3.8		STIRRUPS
PB 502	5	VI	11-0 TO 11-9	24	3-2 TO 3-7	2-0.5 TO 2-0.5	0-5.5 TO 0-5.5	0-3.8 TO 0-3.8		STIRRUPS
PB 503	5	VI	10-7 TO 10-10	12	2-11. TO 3-1.5	2-0.5 TO 2-0.5	0-5.5 TO 0-5.5	0-3.8 TO 0-3.8		STIRRUPS
PB 504	5	VI	11-2 TO 11-9	12	3-3 TO 3-7	2-0.5 TO 2-0.5	0-5.5 TO 0-5.5	0-3.8 TO 0-3.8		STIRRUPS
PB 505	5	VI	10-6	6	2-11	2-0.5	0-5.5	0-3.8		STIRRUPS
PB 506	5	VI	10-7	8	2-11.	2-0.5	0-5.5	0-3.8		STIRRUPS
PB 507	5	VI	10-9	8	3-0.5	2-0.5	0-5.5	0-3.8		STIRRUPS
PB 508	5	VI	11-0	4	3-2	2-0.5	0-5.5	0-3.8		STIRRUPS
PB 509	5	VI	11-6	4	3-5	2-0.5	0-5.5	0-3.8		STIRRUPS
PB 510	5	VI	11-10	4	3-7	2-0.5	0-5.5	0-3.8		STIRRUPS
PB 511	5	V	7-6	8	1-3	1-3	5-0.4	1-6.9		LONG END
PB 512	5	STR	31-3	8						LONG
PB 513	5	X	5-7	6	1-5	2-11	1-5	0-2.5	1-4.8	VERT END
PB 801	8	STR	14-6	18						LONG BOT
PB 901	9	VII	23-0	8	21-3	--	0-4.5	1-10.5	1-11	LONG BOT
PB 902	9	STR	14-6	6						LONG BOT
PB 903	9	STR	21-0	4						LONG BOT
PB 904	9	STR	12-0	32						LONG TOP
PB 905	9	STR	39-4	4						LONG TOP
PB 906	9	STR	15-11	8						LONG TOP
PIER PAD										
PP 401	4	XIV	12-1	1	1-6	2-1	5-0.5	1-7		LONG TIE
PIER PILES										
P 302	3	III	3-5	220	2-9.2	0-5.1	0-4.1	0-3.8		HORIZ TIES
P 601	6	I	8-8	264	8-0	0-8	0-6	0-6		VERT DOWELS

BAR BENDING DIAGRAMS

ALL DIMENSIONS ARE OUT TO OUT OF BARS

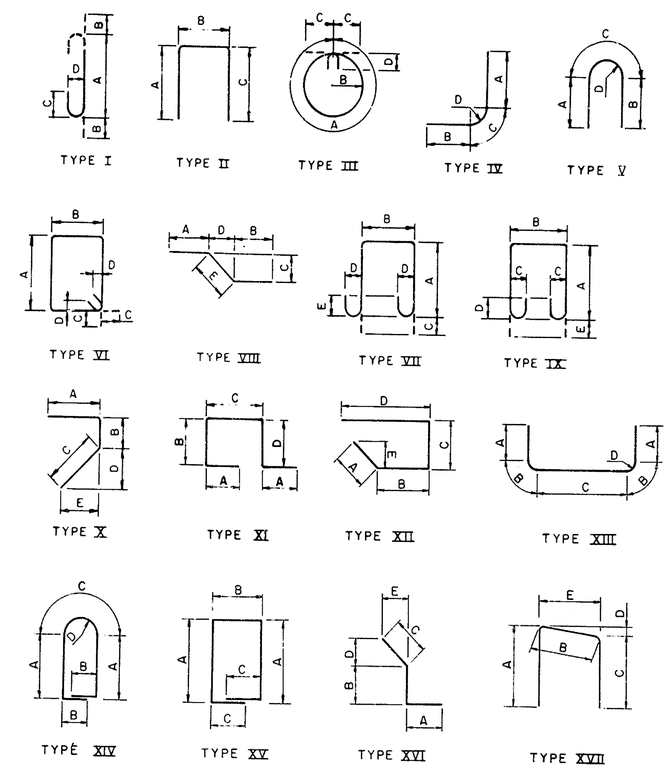

In Charge of N. Erikson
Designed by E. Hutchins
Design Checked by R. Hermann
Detailed by T. Wosylyk
Detail Checked by E. Hutchins

Date	Revision

Prepared and Recommended
GOODKIND & O'DEA, INC. Consulting Engineers
Date MAY 25 1971

DELAWARE
STATE HIGHWAY DEPARTMENT

BAR LIST
SOUTHBOUND PIERS

APPROVED BY: John G. Lehister
BRIDGE ENGINEER
JUN 18 1971
DATE

DWG. NO.	SCALE	DATE
34		MAY 1971

GOODKIND & O'DEA, INC.
CONSULTING ENGINEERS

COUNTY	CONTRACT	B. P. R. REF. NO.	STATE	FED. AID PROJECT NO.	SHEET NO.	TOTAL SHEETS
NEW CASTLE	71-05-003	2	DEL.		80	151

INTERSTATE ROUTE 495 OVER NEW CASTLE AVE. & READING R.R. BRIDGE NO. 5

MARK	SIZE	TYPE	LENGTH	NO	A	B	C	D	E	REMARKS
NORTHBOUND - PIER 3										
FOOTING										
PF 501	5	STR	10-0	60						TRANS TOP
PF 502	5	STR	24-6	11						LONG TOP
PF 503	5	STR	35-11	11						LONG TOP
PF 504	5	STR	30-0	22						LONG BOT
PF 601	6	STR	10-0	118						TRANS BOT
PF1001	10	IV	8-4	32	4-9	1-6	2-0.6	1-3		VERT DOWELS
COLUMNS										
PC 501	5	III	9-5	76	8-2.7	1-3.4	0-6.9	0-5.8		HORIZ TIES
PC1001	10	STR	21-4	8						VERT
PC1002	10	STR	21-11	8						VERT
PC1003	10	STR	22-6	8						VERT
PC1004	10	STR	23-1	8						VERT
PIER CAP										
PB 501	5	VI	12-6 TO 13-2	8	2-11. TO 3-4	3-0 TO 3-0	0-5.5 TO 0-5.5	0-3.8 TO 0-3.8		STIRRUPS
PB 502	5	VI	12-9 TO 13-2	6	3-1 TO 3-4	3-0 TO 3-0	0-5.5 TO 0-5.5	0-3.6 TO 0-3.8		STIRRUPS
PB 503	5	VI	11-11 TO 12-6	10	2-8 TO 3-0	3-0 TO 3-0	0-5.5 TO 0-5.5	0-3.8 TO 0-3.8		STIRRUPS
PB 504	5	VI	11-11	3	2-8	3-0	0-5.5	0-3.8		STIRRUPS
PB 505	5	VI	12-1	2	2-9	3-0	0-5.5	0-3.8		STIRRUPS
PB 506	5	VI	12-3 TO 13-2	6	2-10 TO 3-4	3-0 TO 3-0	0-5.5 TO 0-5.5	0-3.8 TO 0-3.8		STIRRUPS
PB 507	5	VI	11-11 TO 13-2	10	2-8 TO 3-4	3-0 TO 3-0	0-5.5 TO 0-5.5	0-3.8 TO 0-3.8		STIRRUPS
PB 508	5	V	7-2	8	1-3	1-3	4-7.6	1-5.4		LONG END
PB 509	5	STR	29-3	8						LONG
PB 510	5	X	5-4	6	1-5	2-8	1-5	0-2.5	1-4.6	VERT END
PB 701	7	STR	10-0	8						LONG TOP
PB 801	8	STR	10-0	8						LONG TOP
PB 802	8	STR	15-0	16						LONG TOP
PB 803	8	STR	35-11	6						LONG TOP
PB 901	9	STR	13-6	6						LONG BOT
PB 902	9	VIII	21-6	8	19-2	--	0-5.2	2-3.5	2-4	LONG BOT
PB1001	10	STR	19-0	7						LONG BOT
PIER PILES										
P 302	3	III	3-5	135	2-9.2	0-5.1	0-4.1	0-3.8		HORIZ TIES
P 601	6	I	8-8	162	8-0	0-8	0-6	0-6		VERT DOWELS
NORTHBOUND - PIER 4										
FOOTING										
PF 501	5	STR	10-0	61						TRANS TOP
PF 502	5	STR	25-3	11						LONG TOP
PF 503	5	STR	36-9	11						LONG TOP
PF 504	5	STR	30-9	22						LONG BOT
PF 505	5	STR	3-9	17						VERT DOWELS
PF 801	8	STR	10-0	61						TRANS BOT
PF1001	10	IV	8-4	32	4-9	1-6	2-0.6	1-3		VERT DOWELS
CRASH WALL										
CW 501	5	STR	7-4	28						VERT
CW 502	5	STR	5-8	32						LONG
CW 503	5	STR	6-0	16						LONG
CW 504	5	II	3-6	14	1-3	1-2	1-3			TRANS
COLUMNS										
PC 501	5	III	9-5	79	8-2.7	1-3.4	0-6.9	0-5.8		HORIZ TIES
PC1001	10	STR	22-5	8						VERT
PC1002	10	STR	22-8	8						VERT
PC1003	10	STR	23-1	8						VERT
PC1004	10	STR	23-4	8						VERT

MARK	SIZE	TYPE	LENGTH	NO	A	B	C	D	E	REMARKS
NORTHBOUND - PIER 4 - CONTINUED										
PIER CAP										
PB 501	5	VI	12-6 TO 13-3	12	2-11. TO 3-4.5	3-0 TO 3-0	0-5.5 TO 0-5.5	0-3.8 TO 0-3.8		STIRRUPS
PB 502	5	VI	12-7 TO 13-2	10	3-0 TO 3-4	3-0 TO 3-0	0-5.5 TO 0-5.5	0-3.8 TO 0-3.8		STIRRUPS
PB 503	5	VI	12-1 TO 12-5	12	2-9 TO 2-11.	3-0 TO 3-0	0-5.5 TO 0-5.5	0-3.8 TO 0-3.8		STIRRUPS
PB 504	5	VI	11-11	5	2-8	3-0	0-5.5	0-3.8		STIRRUPS
PB 505	5	VI	12-0	4	2-8.5	3-0	0-5.5	0-3.8		STIRRUPS
PB 506	5	VI	12-3 TO 13-2	6	2-10 TO 3-4	3-0 TO 3-0	0-5.5 TO 0-5.5	0-3.8 TO 0-3.8		STIRRUPS
PB 507	5	VI	12-3 TO 13-2	8	2-10 TO 3-4	3-0 TO 3-0	0-5.5 TO 0-5.5	0-3.8 TO 0-3.8		STIRRUPS
PB 508	5	V	7-2	8	1-3	1-3	4-7.6	1-5.4		LONG END
PB 509	5	STR	29-3	8						LONG
PB 510	5	STR	10-0	8						LONG TOP
PB 511	5	X	5-4	6	1-5	2-8	1-5	0-2.8	1-4.7	VERT END
PB 701	7	STR	13-6	8						LONG BOT
PB 801	8	STR	10-0	8						LONG TOP
PB 802	8	STR	13-6	10						LONG BOT
PB 803	8	VIII	21-7	8	19-3	--	0-5.2	2-3.5	2-4	LONG BOT
PB 804	8	STR	35-11	8						LONG TOP
PB 901	9	STR	15-0	16						LONG TOP
PB 902	9	STR	19-0	7						LONG BOT
PIER PILES										
P 302	3	III	3-5	145	2-9.2	0-5.1	0-4.1	0-3.8		HORIZ TIES
P 601	6	I	8-8	174	8-0	0-8	0-6	0-6		VERT DOWELS
NORTHBOUND - PIER 5										
FOOTING										
PF 501	5	STR	9-6	64						TRANS TOP
PF 502	5	STR	32-0	22						LONG BOT
PF 503	5	IV	11-10	126	8-4	1-6	2-0.1	1-3		VERT DOWELS
PF 601	6	STR	9-6	64						TRANS BOT
PF 602	6	STR	23-9	11						LONG TOP
PF 603	6	STR	41-0	11						LONG TOP
CRASH WALL										
CW 501	5	STR	49-0	16						LONG SIDES
CW 502	5	II	5-8	51	1-3	3-2	1-3			TRANS TOP
CW 503	5	STR	14-3	16						LONG SIDES
CW1001	10	STR	7-0	36						VERT DOWELS
COLUMNS										
PC 501	5	III	9-5	52	8-2.7	1-3.4	0-6.9	0-5.8		HORIZ TIES
PC1001	10	STR	15-8	18						VERT
PC1002	10	STR	15-11	18						VERT
PIER CAP										
PB 401	4	II	6-9	12	2-0	2-11	2-0			TRANS
PB 501	5	VI	12-3 TO 12-10	10	2-10 TO 3-2	3-0 TO 3-0	0-5.5 TO 0-5.5	0-3.8 TO 0-3.8		STIRRUPS
PB 502	5	VI	12-3 TO 12-10	6	2-10 TO 3-2	3-0 TO 3-0	0-5.5 TO 0-5.5	0-3.8 TO 0-3.8		STIRRUPS
PB 503	5	VI	11-7 TO 12-0	8	2-6 TO 2-9	3-0 TO 3-0	0-5.5 TO 0-5.5	0-3.8 TO 0-3.8		STIRRUPS
PB 504	5	VI	11-7 TO 12-2	12	2-6 TO 2-10	3-0 TO 3-0	0-5.5 TO 0-5.5	0-3.8 TO 0-3.8		STIRRUPS
PB 505	5	VI	11-5	9	2-5	3-0	0-5.5	0-3.8		STIRRUPS
PB 506	5	VI	12-11	4	3-2	3-0	0-5.5	0-3.8		STIRRUPS
PB 507	5	STR	31-6	8						LONG
PB 508	5	V	7-2	8	1-3	1-3	4-7.6	1-5.4		LONG END
PB 509	5	X	5-1	6	1-5	2-5	1-5	0-3.2	1-4.6	VERT END
PB 701	7	STR	10-0	8						LONG TOP
PB 801	8	STR	10-0	8						LONG TOP
PB 802	8	STR	15-9	16						LONG TOP
PB 803	8	STR	39-0	6						LONG TOP
PB1001	10	STR	15-0	6						LONG BOT
PB1002	10	STR	20-6	7						LONG BOT
PB1003	10	VIII	23-1	8	20-9	--	0-5	2-3.6	2-4	LONG BOT
PIER PAD										
PP 401	4	XV	13-2	3	3-2	3-0	2-1			HORIZ TIES
PIER PILES										
P 302	3	III	3-5	135	2-9.2	0-5.1	0-4.1	0-3.8		HORIZ TIES
P 601	6	I	8-8	162	8-0	0-8	0-6	0-6		VERT DOWELS

BAR BENDING DIAGRAMS

ALL DIMENSIONS ARE OUT TO OUT OF BARS

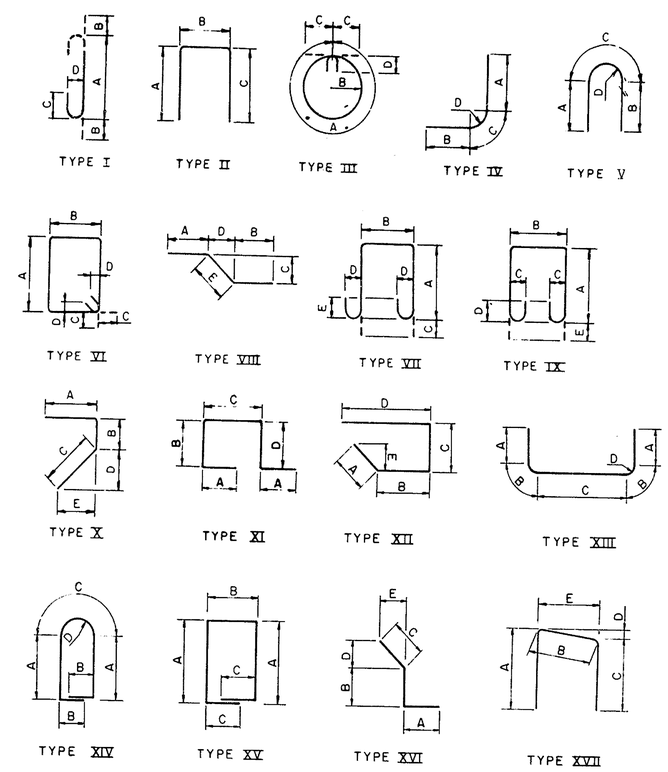

In Charge of N. Erikson
Designed by N. Chou
Design Checked by E. Hutchins
Detailed by T. Wosylyk
Detail Checked by E. Hutchins

Date	Revision

Prepared and Recommended
Donald Lee Oden
GOODKIND & O'DEA, INC. Consulting Engineers
Date MAY 25 1971

DELAWARE
STATE HIGHWAY DEPARTMENT

BAR LIST
NORTHBOUND PIERS

APPROVED BY: John E. Cubbitt
BRIDGE ENGINEER
JUN 18 1971
DATE

DWG. NO.	SCALE	DATE	GOODKIND & O'DEA, INC. CONSULTING ENGINEERS
35		NOV. 1971	

COUNTY	CONTRACT	S. P. R. DCK. NO.	STATE	FED. AID PROJECT NO.	SHEET NO.	TOTAL SHEETS
NEW CASTLE	71-05-003	2	DEL.		81	101

INTERSTATE ROUTE 495 OVER NEW CASTLE AVE. & READING R.R. BRIDGE NO. 5

APPROACH SLAB - SOUTHBOUND

MARK	SIZE	TYPE	LENGTH	NO	A	B	C	D	E	REMARKS
AS 601	6	STR	11-8	172						TRANS TOP
AS 602	6	STR	15-8	40						TRANS TOP
AS 603	6	STR	3-0	172						DOWEL TOP
AS 604	6	STR	15-10	3						TRANS TOP
AS 701	7	STR	11-8	220						TRANS BOT
AS 702	7	STR	15-8	55						TRANS BOT
AS 703	7	STR	3-0	220						DOWEL BOT
AS 901	9	STR	24-8 TO 25-4	52						4 SETS OF 13 TOP
AS 902	9	STR	24-8 TO 25-7	17						1 SET OF 17 TOP
AS 903	9	STR	24-8 TO 26-5	52						4 SETS OF 13 TOP
AS 904	9	STR	24-8 TO 27-1	17						1 SET OF 17 TOP
AS1001	10	I	27-6 TO 28-2	100	24-8 TO 25-4	1-5 TO 1-5	0-11.5 TO 0-11.5	1-1 TO 1-1		4 SETS OF 25 BOT
AS1002	10	I	27-6 TO 28-5	33	24-8 TO 25-7	1-5 TO 1-5	0-11.5 TO 0-11.5	1-1 TO 1-1		1 SET OF 33 BOT
AS1003	10	I	27-6 TO 29-3	100	24-8 TO 26-5	1-5 TO 1-5	0-11.5 TO 0-11.5	1-1 TO 1-1		4 SETS OF 25 BOT
AS1004	10	I	27-6 TO 29-11	33	24-8 TO 27-1	1-5 TO 1-5	0-11.5 TO 0-11.5	1-1 TO 1-1		1 SET OF 33 BOT

DECK SLAB - SOUTHBOUND

MARK	SIZE	TYPE	LENGTH	NO	A	B	C	D	E	REMARKS
S 501	5	STR	60-0	576						LONG TOP & BOT
S 502	5	STR	35-0	252						LONG TOP & BOT
S 503	5	STR	5-10	32						TRANS END OF SLAB
S 504	5	XII	6-8	80	1-0	1-1	0-9	4-0	0-8.5	LONG END OF SLAB
S 505	5	STR	54-6	584						TRANS TOP
S 506	5	STR	15-0	584						TRANS TOP
S 507	5	STR	28-6	60						TRANS BOT
S 508	5	STR	42-0	292						TRANS BOT
S 509	5	STR	29-0	60						TRANS BOT
S 510	5	STR	27-6	172						TRANS BOT
S 511	5	STR	26-6	292						TRANS BOT
S 512	5	STR	44-0	120						TRANS BOT
S 513	5	STR	43-0	172						TRANS BOT
S 514	5	II	2-7	584	1-8	1-0	--			DECK TO BARRIER
S 601	6	XVI	3-6	584	1-0	0-7	2-0	1-7.5	1-1.5	DECK TO BARRIER
S 801	8	STR	34-10	26						TRANS END OF SLAB
BR 501	5	STR	17-5	128						LONG BARRIER
BR 502	5	STR	17-11	112						LONG BARRIER
BR 601	6	X	5-1	584	2-7	0-4	2-3	0-3	2-3	VERT BARRIER

BAR BENDING DIAGRAMS

ALL DIMENSIONS ARE OUT TO OUT OF BARS

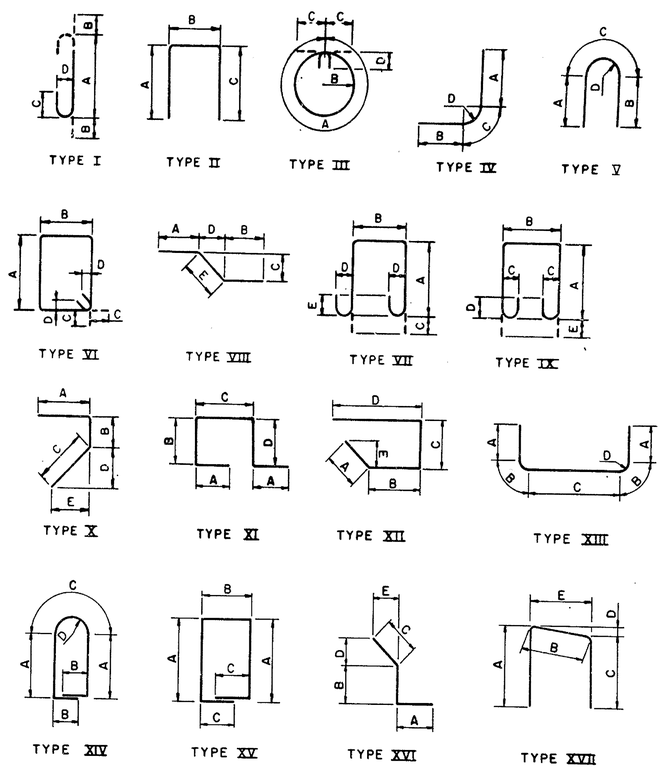

In Charge of N. Erikson
Designed by M. Siebold
Design Checked by E. Hutchins
Detailed by W. Kowblansky
Detail Checked by E. Hutchins

Date	Revision

Prepared and Recommended
GOODKIND & O'DEA, INC. Consulting Engineers
Date MAY 25 1971

DELAWARE
STATE HIGHWAY DEPARTMENT

BAR LIST
SOUTHBOUND DECK SLAB

APPROVED BY: John E. Whitely BRIDGE ENGINEER — DATE JUN 18 1971

DWG. NO.	SCALE	DATE
36		May 1971

GOODKIND & O'DEA, INC.
CONSULTING ENGINEERS

COUNTY	CONTRACT	S.P.D. REG. NO.	STATE	FED. AID PROJECT NO.	SHEET NO.	TOTAL SHEETS
NEW CASTLE	71-05-003	2	DEL.		82	161

INTERSTATE ROUTE 495 OVER NEW CASTLE AVE. & READING R.R. BRIDGE NO. 5

MARK	SIZE	TYPE	LENGTH	NO	A	B	C	D	E	REMARKS
NORTHBOUND - APPROACH SLAB										
AS 601	6	STR	19-2	3						HEADER
AS 602	6	STR	13-2	5						HEADER
AS 603	6	STR	21-0	3						HEADER
AS 604	6	STR	14-5	9						HEADER
AS 605	6	STR	3-0	114						DOWEL TOP
AS 606	6	STR	16-11	34						TRANS TOP
AS 607	6	STR	11-8	102						TRANS TOP
AS 608	6	STR	2-6 TO 15-4	6						TRANS TOP
AS 609	6	STR	2-6 TO 15-9	8						TRANS TOP
AS 610	6	STR	2-6 TO 10-0	12						TRANS TOP
AS 611	6	STR	2-6 TO 10-6	15						TRANS TOP
AS 701	7	STR	3-0	144						DOWEL BOT
AS 702	7	STR	16-11	50						TRANS BOT
AS 703	7	STR	11-8	150						TRANS BOT
AS 704	7	STR	2-6 TO 16-4	8						TRANS BOT
AS 705	7	STR	2-6 TO 16-8	11						TRANS BOT
AS 706	7	STR	2-6 TO 11-0	15						TRANS BOT
AS 707	7	STR	2-6 TO 11-5	24						TRANS BOT
AS 901	9	STR	24-9 TO 33-9	18						LONG TOP
AS 902	9	STR	24-9 TO 37-1	18						LONG TOP
AS 903	9	STR	24-9 TO 30-10	39						LONG TOP
AS 904	9	STR	24-9 TO 33-2	39						LONG TOP
AS1001	10	I	27-7 TO 36-7	35	24-9 TO 33-9	1-5 TO 1-5	0-11.5 TO 0-11.5	1-1 TO 1-1		LONG BOT
AS1002	10	I	27-7 TO 39-11	35	24-9 TO 37-1	1-5 TO 1-5	0-11.5 TO 0-11.5	1-1 TO 1-1		LONG BOT
AS1003	10	I	27-7 TO 33-8	75	24-9 TO 30-10	1-5 TO 1-5	0-11.5 TO 0-11.5	1-1 TO 1-1		LONG BOT
AS1004	10	I	27-7 TO 36-0	75	24-9 TO 33-2	1-5 TO 1-5	0-11.5 TO 0-11.5	1-1 TO 1-1		LONG BOT

MARK	SIZE	TYPE	LENGTH	NO	A	B	C	D	E	REMARKS
NORTHBOUND - DECK SLAB										
S 501	5	STR	56-1	836						TRANS
S 502	5	STR	54-6	6						TRANS
S 503	5	STR	3-5 TO 53-9	134						TRANS
S 504	5	STR	2-6 TO 53-10	138						TRANS
S 505	5	STR	2-6 TO 53-10	264						TRANS
S 506	5	STR	2-6 TO 53-11	152						TRANS
S 507	5	STR	2-6 TO 54-1	192						TRANS
S 508	5	STR	2-6 TO 54-0	372						TRANS
S 509	5	STR	45-0	366						LONG
S 510	5	STR	27-0	122						LONG
S 511	5	STR	22-0	122						LONG
S 512	5	STR	3-6 TO 38-3	40						LONG TOP
S 513	5	STR	4-6 TO 38-3	76						LONG BOT
S 514	5	STR	39-6	60						LONG
S 515	5	STR	45-3	122						LONG
S 516	5	STR	55-11	122						LONG
S 517	5	STR	8-0	28						ALONG JOINTS
S 518	5	STR	7-6	30						ALONG JOINTS
S 519	5	STR	7-9	2						ALONG JOINTS
S 520	5	STR	8-8	28						ALONG JOINTS
S 521	5	STR	8-4	2						ALONG JOINTS
S 522	5	STR	8-1	6						ALONG JOINTS
S 523	5	STR	30-9	2						ALONG FIX JOINT
S 524	5	XII	7-4	30	0-9	2-0	0-9	4-0	0-6.7	AT FIX JOINT
S 525	5	XII	6-2	150	0-9	0-10	0-9	4-0	0-6.7	AT JOINTS
S 526	5	XII	6-4	30	0-9	1-0	0-9	4-0	0-6.7	AT JOINTS
S 527	5	XII	6-7	30	0-9	1-3	0-9	4-0	0-6.7	AT EXP JOINT
S 528	5	II	2-7	654	1-8	1-0	--			DOWEL NF
S 529	5	STR	5-0	16						SCUPPER
S 601	6	XVI	3-6	654	1-0	0-7	2-0	1-7.5	1-1.5	DOWEL FF
S 801	8	STR	31-1	8						ALONG FIX JOINT
S 802	8	STR	33-3	24						ALONG JOINT
S 803	8	STR	33-9	24						ALONG JOINT
S 804	8	STR	36-2	24						ALONG JOINT
S 805	8	STR	35-10	12						ALONG EXP JOINT
NORTHBOUND - BARRIER RAIL										
BR 501	5	STR	17-2	64						LONG
BR 502	5	STR	17-11	96						LONG
BR 503	5	STR	14-10	24						LONG
BR 504	5	STR	19-6	48						LONG
BR 505	5	STR	18-5	48						LONG
BR 601	6	X	4-11	654	2-7	0-4	2-3	0-3	2-3	VERT

BAR BENDING DIAGRAMS

ALL DIMENSIONS ARE OUT TO OUT OF BARS

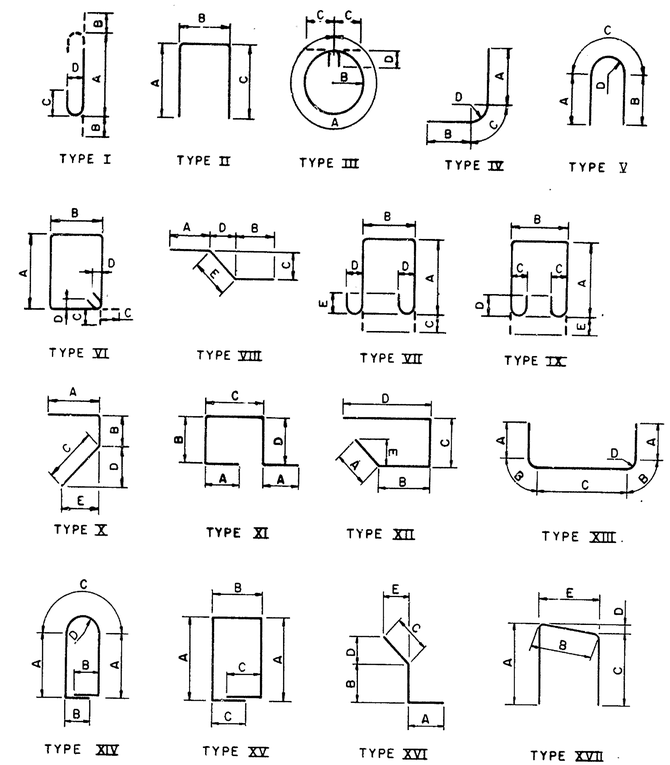

	Date	Revision
In Charge of N. Erikson		
Designed by E. Hutchins		
Design Checked by M. Siebold		
Detailed by T. Wasylyk		
Detail Checked by E. Hearner		

Prepared and Recommended
GOODKIND & O'DEA, INC. Consulting Engineers
Date MAY 25 1971

DELAWARE
STATE HIGHWAY DEPARTMENT

BAR LIST
NORTHBOUND DECK SLAB

APPROVED BY: John S. Cubito
BRIDGE ENGINEER
JUN 18 1971
DATE

DWG. NO.	SCALE	DATE	GOODKIND & O'DEA, INC. CONSULTING ENGINEERS
37		MAY 1971	

COUNTY	CONTRACT	FED. ROAD DIV. NO.	STATE	FED. AID PROJ. NO.	FISCAL YEAR	SHEET NO.	TOTAL SHEETS
NEW CASTLE	71-05-003	2	DEL.			83	161

INTERSTATE ROUTE 495
OVER NEW CASTLE AVE. & READING R. R.
BRIDGE NO. 5

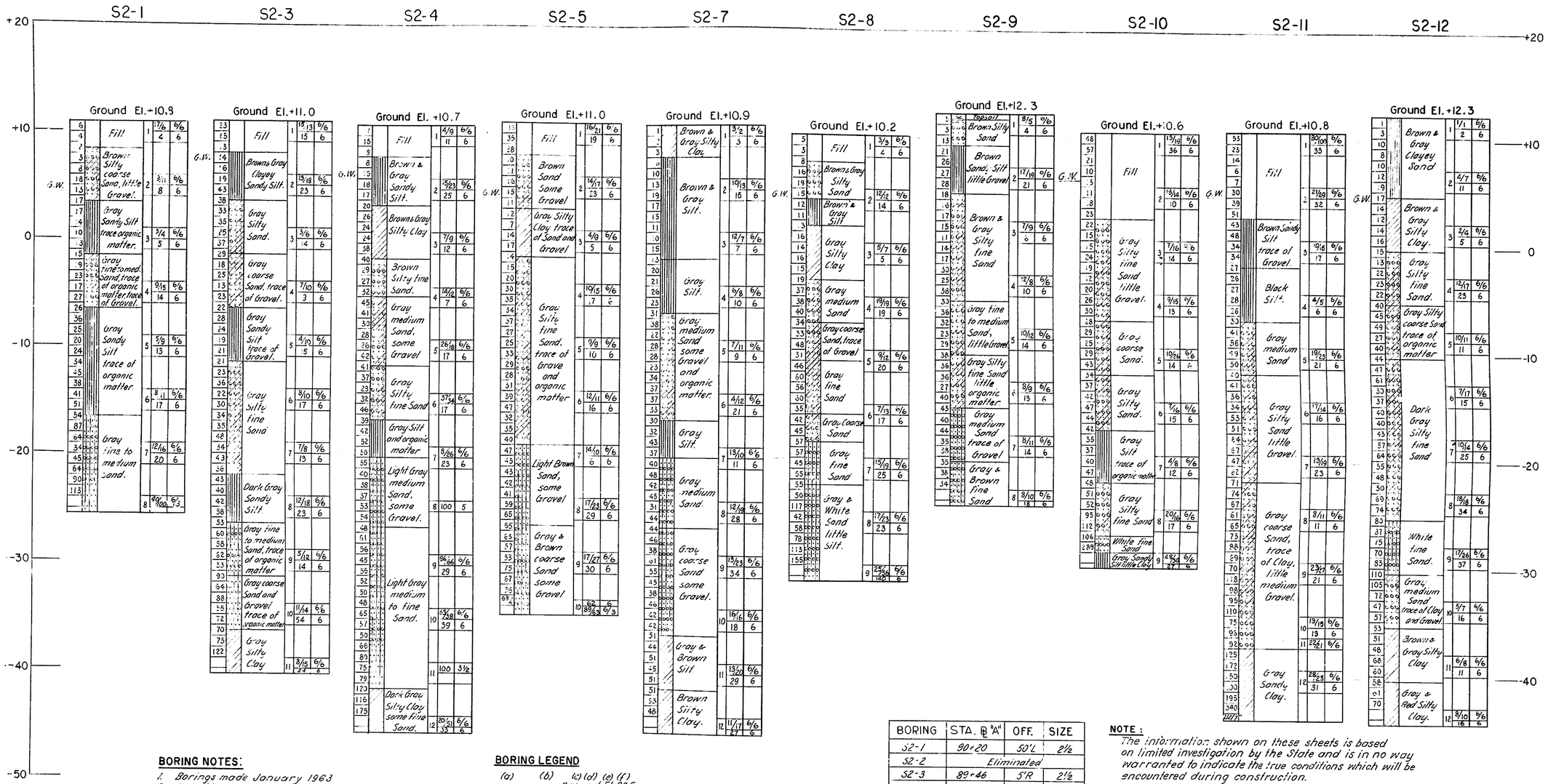

BORING NOTES:

1. Borings made January 1963
2. Location: see Boring Table.
3. Description: Casing-2½"
   Hammer Wt.-350#
   Drop -24"

   Sampler-1⅜" I.D.
   Hammer Wt.-140#
   Drop-30"

BORING LEGEND

(a)	(b)	(c)	(d)	(e)	(f)
			Ground El.605		
25	Gravel & Sandy Clay	1	3/12	6/6	
29			6/11	6/6	
11					
21					
30					558

(a) Hammer blows to drive casing one (1) foot.
(b) Description
(c) Sample number
(d) Blows on Sample Spoon
(e) Penetration of Sample Spoon
(f) Elevations

BORING	STA. ℄ "A"	OFF.	SIZE
S2-1	90+20	50'L	2½
S2-2	Eliminated		
S2-3	89+46	5'R	2½
S2-4	89+34	100'R	2½
S2-5	90+69	5'R	2½
S2-6	Eliminated		
S2-7	91+46	39'L	2½
S2-8	91+10	68'R	2½
S2-9	90+45	75'R	2½
S2-10	88+53	110'R	2½
S2-11	89+24	35'L	2½
S2-12	91+91	103'R	2½

NOTE:
The information shown on these sheets is based on limited investigation by the State and is in no way warranted to indicate the true conditions which will be encountered during construction.

In Charge of N. Erikson	Date	Revision
Designed by M. Benitez		
Drawn by J. Nynka, O. Ringoen		
Checked by A. Pullerits		

Prepared and Recommended
GOODKIND & O'DEA, INC. Consulting Engineers
Date MAY 25 1971

DELAWARE
STATE HIGHWAY DEPARTMENT

BORING LOGS

APPROVED BY: John S. Kulstad
BRIDGE ENGINEER
JUN 18 1971
DATE

DWG. NO.	SCALE	DATE	GOODKIND & O'DEA, INC. CONSULTING ENGINEERS
38	1"=5'		

D & W BLUEPRINT CO. 1740-B

COUNTY	CONTRACT	FED. ROAD DIV. NO.	STATE	FED. AID PROJ. NO.	FISCAL YEAR	SHEET NO.	TOTAL SHEETS
NEW CASTLE	71-05-003	2	DEL.		1971	84	161

INTERSTATE ROUTE 495 OVER TERMINAL THOROFARE IMPROVEMENT BRIDGE NO. 6

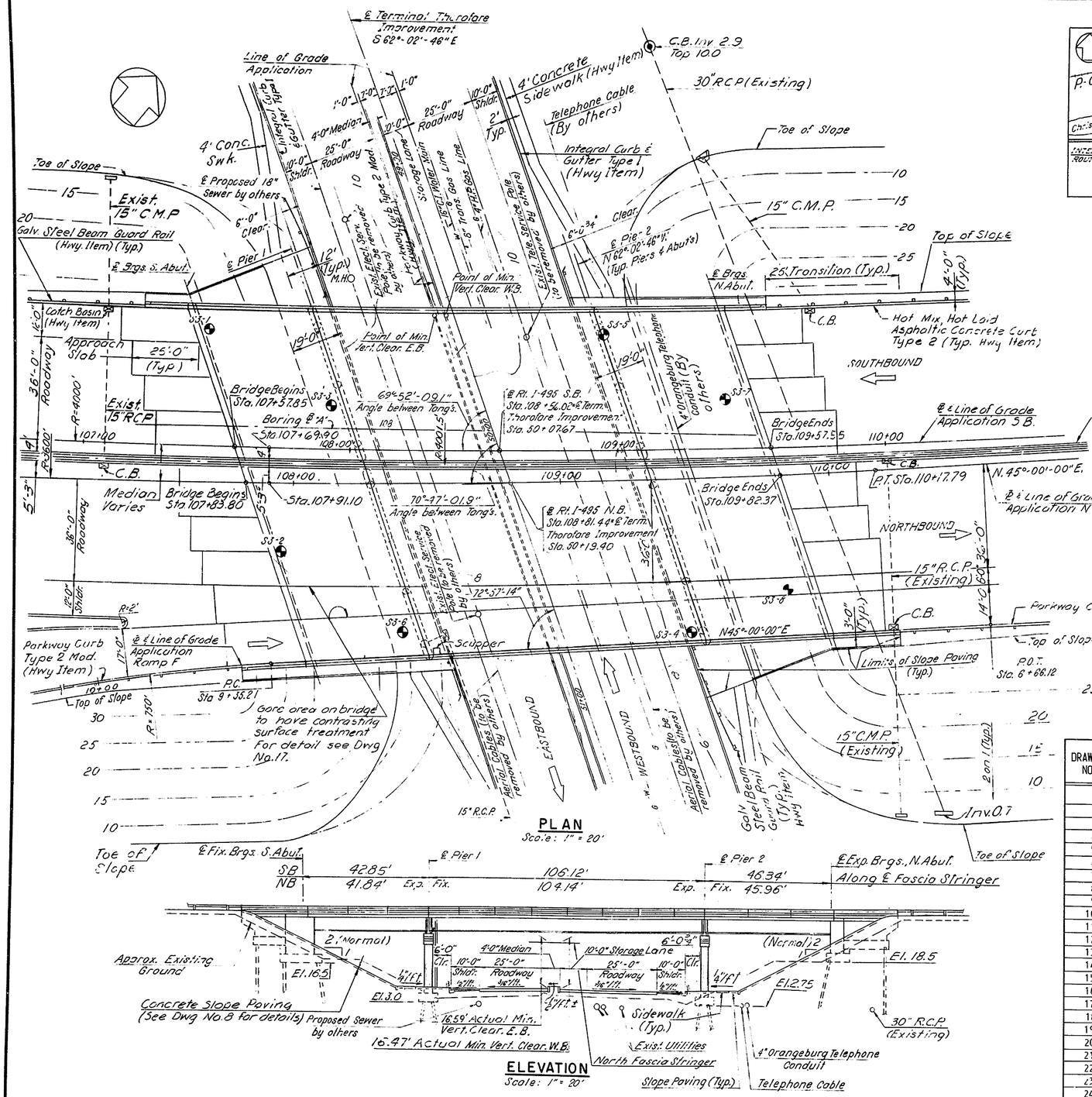

PLAN
Scale: 1" = 20'

ELEVATION
Scale: 1" = 20'

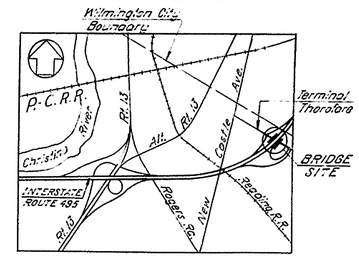

LOCATION PLAN
Scale: 1" = 2000'

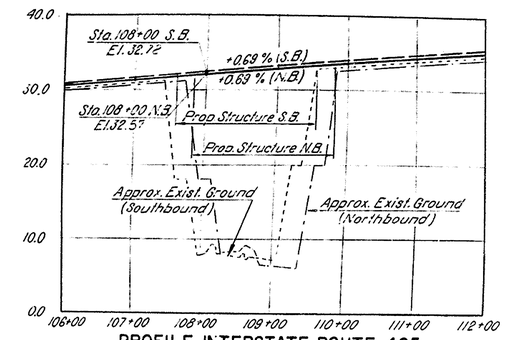

PROFILE INTERSTATE ROUTE 495
Scales: Horiz. = 1" = 100'
Vert. = 1" = 10'

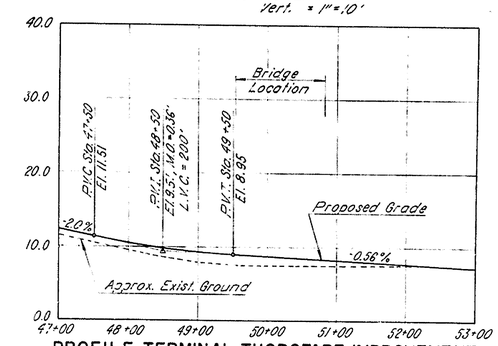

PROFILE TERMINAL THOROFARE IMPROVEMENT
Scales: Horiz. 1" = 100'
Vert. 1" = 10'

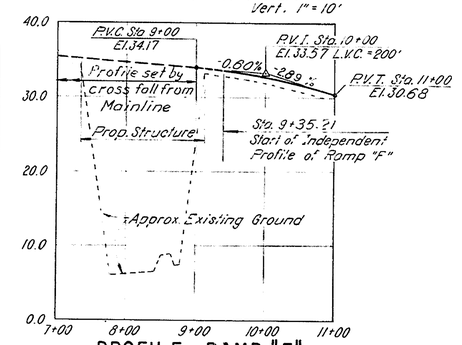

PROFILE RAMP "F"
Scales: Horiz. 1" = 100'
Vert. 1" = 10'

LEGEND
Boring
Existing Contours

INDEX OF DRAWINGS

DRAWING NO.	TITLE
1	GENERAL PLAN
2	LAYOUT PLAN, GENERAL NOTES AND QUANTITIES
3	SOUTH ABUTMENT
4	SOUTH ABUTMENT - BAR REINFORCEMENT
5	NORTH ABUTMENT
6	NORTH ABUTMENT - BAR REINFORCEMENT
7	WINGWALL AND ABUTMENT SECTIONS AND DETAILS
8	SUBSTRUCTURE DETAILS
9	SOUTHBOUND PIERS
10	NORTHBOUND PIERS
11	FRAMING PLAN
12	STRINGER SCHEDULE AND STEEL DETAILS
13	BEARING SHOE DETAILS
14	EXPANSION JOINT STEEL DETAILS
15	BRIDGE DRAINAGE DETAILS
16	DECK AND APPROACH SLAB PLAN
17	DECK CROSS SECTION AND BARRIER RAIL DETAILS
18	DECK JOINT DETAILS AND DECK ELEVATIONS
19	DECK JOINTS AT BARRIER RAILS
20	Median Barrier Curb Details
21	BAR LIST - SOUTH ABUTMENT
22	BAR LIST - NORTH ABUTMENT
23	BAR LIST - SOUTHBOUND PIERS
24	BAR LIST - NORTHBOUND PIERS
25	BAR LIST - SOUTHBOUND DECK SLABS
26	BAR LIST - NORTHBOUND DECK SLABS
27	BORING LOGS

Prepared and Recommended
GOODKIND, O'DEA INC. Consulting Engineers
Date MAY 05 1971

	Date	Revision
In Charge of N. Erikson		
Designed by N. Erikson		
Drawn by T.B. Wasylyk		
Checked by N. Mahmber		

DELAWARE
STATE HIGHWAY DEPARTMENT

GENERAL PLAN

APPROVED BY:
BRIDGE ENGINEER
JUN 18 1971
DATE

DWG. NO.	SCALE	DATE	
1	As Noted	NOV 1971	GOODKIND, O'DEA, INC. CONSULTING ENGINEERS

D & W BLUEPRINT CO. 1740-9

COUNTY	CONTRACT	P.R.A. REG. NO.	STATE	FED. AID PROJECT NO.	SHEET NO.	TOTAL SHEETS
NEW CASTLE	71-05-003	2	DEL.		85	1/1

INTERSTATE ROUTE 495 OVER TERMINAL THOROFARE IMPROVEMENT BRIDGE NO. 6

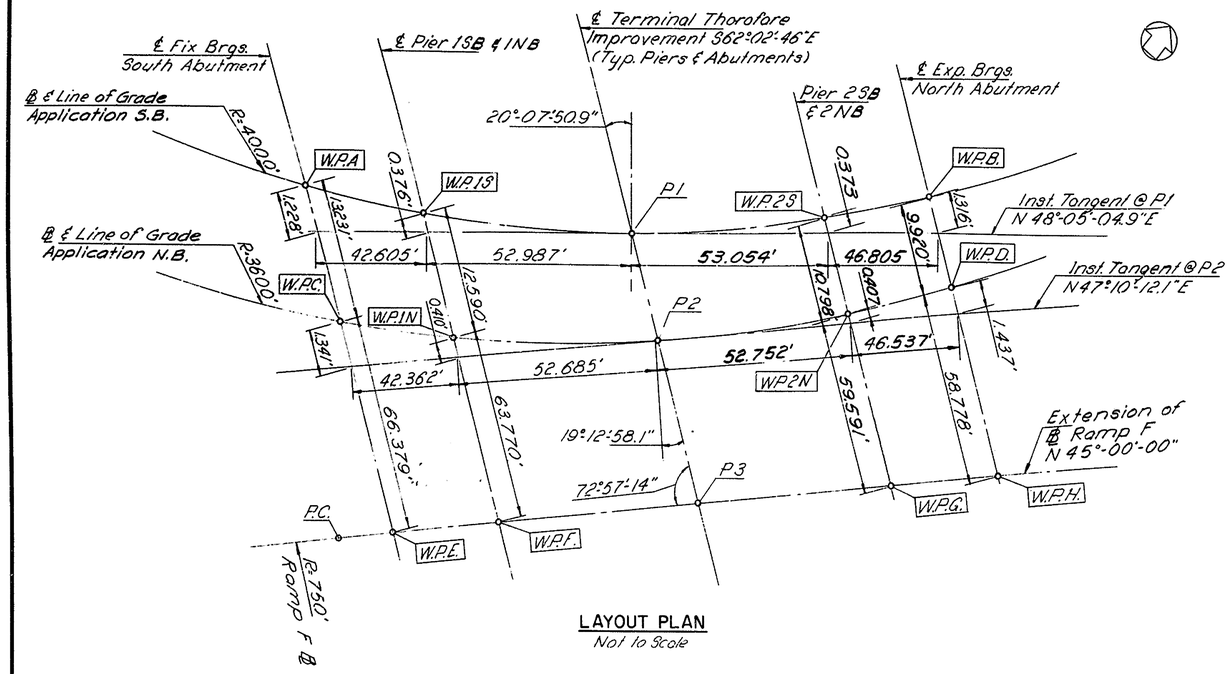

LAYOUT PLAN
Not to Scale

POINT	STATION	COORDINATES NORTH	COORDINATES EAST
P1	S.B. ℄ 108+56.023 = Term.Thor.℄ 50+07.674	626384.806	465034.953
P2	N.B. ℄ 108+81.441 = Term.Thor.℄ 50+19.403	626379.308	465045.313
P3	Ramp F ℄ 8+24.426* Term.Thor.℄ 50+80.676	626350.585	465099.438
P.C.	Ramp F ℄ 9+35.205	626272.252	465021.105
W.P.A	S.B. ℄ 107+60.000	626321.523	464962.735
W.P.1S	S.B. ℄ 108+02.905	626349.585	464995.192
W.P.2S	S.B. ℄ 109+08.950	626420.422	465074.102
W.P.B	S.B. ℄ 109+55.439	626452.131	465108.098
W.P.C	N.B. ℄ 107+85.938	626315.321	464974.423
W.P.1N	N.B. ℄ 108+28.616	626343.683	465006.313
W.P.2N	N.B. ℄ 109+34.058	626415.361	465083.640
W.P.D	N.B. ℄ 109+80.267	626447.480	465116.861
W.P.E	Ramp F ℄ 9+18.302*	626284.205	465033.057
W.P.F	Ramp F ℄ 8+76.462*	626313.790	465062.643
W.P.G	Ramp F ℄ 7+72.324*	626387.426	465136.279
W.P.H	Ramp F ℄ 7+26.361*	626419.928	465168.780

* Theoretical extension of Ramp F ℄

QUANTITIES

NO.	SECTION	UNIT	QUANTITY
207	EXCAVATION FOR STRUCTURES	C.Y.	1300
210	SELECT BORROW	C.Y.	1750
401	HOT MIX, HOT LAID ASPHALTIC CONCRETE PAVEMENT	TONS	190
*602	PORTLAND CEMENT CONCRETE MASONRY - ABUTMENTS	C.Y.	642
*602	PORTLAND CEMENT CONCRETE MASONRY - PIER FOOTINGS	C.Y.	263
*602	PORTLAND CEMENT CONCRETE MASONRY - PIERS ABOVE FOOTINGS	C.Y.	177
*602	PORTLAND CEMENT CONCRETE MASONRY - SUPERSTRUCTURE	C.Y.	696
*602	PORTLAND CEMENT CONCRETE MASONRY - APPROACH SLAB	C.Y.	382
611	SUBFOUNDATION CONCRETE	C.Y.	10
*605	BAR REINFORCEMENT (STRUCTURES)	LBS.	436200
606	STEEL STRUCTURE (APPROXIMATELY 669,600 LBS.)	L.S.	1
624	CAST-IN-PLACE CONCRETE PILES 12-IN. 7 GAGE	L.F.	10980
624	STEEL SHELL TEST PILES 12-IN. 7 GAGE	L.F.	452
628	CONCRETE SLOPE PAVING 4 INCH	S.Y.	1686
734	6 IN. PERFORATED PIPE UNDERDRAINS	L.F.	301
S.P.	BRIDGE DRAINAGE, BRIDGE #6	L.S.	1
S.P.	EPOXY COAL-TAR APPLICATION	S.Y.	179
*S.P.	PREFABRICATED EXPANSION JOINT SYSTEM, 7/8" WIDE	L.F.	260
*S.P.	PREFABRICATED EXPANSION JOINT SYSTEM, 1 3/16" WIDE	L.F.	125

*NOTE: ITEMS INDICATED (*) ARE FIXED QUANTITY ITEMS
SEE SECTION 109.06 OF THE STANDARD SPECIFICATIONS.

GENERAL NOTES

1. DESIGN SPECIFICATION: AASHO 1969 AND AASHO INTERIM SPECIFICATIONS 1970
2. LOADING: HS 20-44 MODIFIED FOR INTERSTATE LOADING
3. DESIGN MINIMUM VERTICAL CLEARANCE = 16'-4".
4. MATERIAL AND FABRICATION: STATE OF DELAWARE, STATE HIGHWAY DEPARTMENT STANDARD SPECIFICATION, JUNE 1, 1970, AND SPECIAL PROVISIONS.
5. DESIGN: STRUCTURAL STEEL A.S.T.M. A36 (fs = 20,000 p.s.i.) AND AS NOTED.
   REINFORCING STEEL: fs = 20,000 p.s.i..
   CONCRETE fc: 1,200 p.s.i. n = 10
   STRENGTH OF CONCRETE SHALL BE 3,000 p.s.i. AT 28 DAYS
   TEMPORARY INTERMEDIATE SUPPORTS FOR COMPOSITE CONSTRUCTION SHALL NOT BE USED.
6. ALL EXPOSED EDGES OF CONCRETE TO BE CHAMFERED 3/4" UNLESS SHOWN OTHERWISE.
7. FOUNDATION: ABUTMENTS AND PIERS SUPPORTED BY CAST-IN-PLACE CONCRETE PILES, DESIGN CAPACITY 35 TONS MINIMUM. AT ABUTMENTS PLACE FILL AS NEAR AS POSSIBLE TO PLANNED FOOTING GRADE PRIOR TO DRIVING PILES. PILES ADJACENT TO STEP WALLS SHALL BE DRIVEN PRIOR TO POURING WALL.

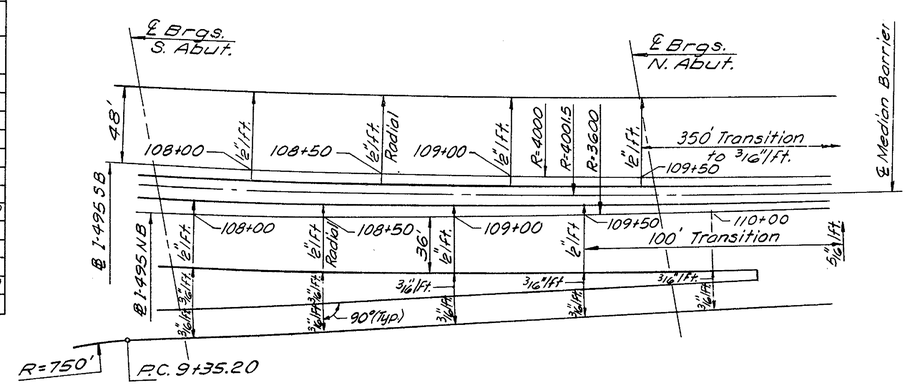

SUPERELEVATION PLAN
Not to Scale

In Charge of N. Erikson	Date	Revision
Designed by N. Erikson		
Design Checked by E. Hutchins		
Detailed by O. Brooks		
Detail Checked by A. Malubey		

Prepared and Recommended
GOODKIND & O'DEA, INC. Consulting Engineers
Date MAY 25 1971

DELAWARE
STATE HIGHWAY DEPARTMENT

LAYOUT PLAN, GENERAL NOTES AND QUANTITIES

APPROVED BY: John E. Cullity
BRIDGE ENGINEER
JUN 18 1971
DATE

DWG. NO.	SCALE	DATE	GOODKIND & O'DEA, INC. CONSULTING ENGINEERS
2	As Noted	May 1971	

COUNTY	CONTRACT	P. R. A. REG. NO.	STATE	FED. AID PROJECT NO.	SHEET NO.	TOTAL SHEETS
NEW CASTLE	71-05-003	2	DEL.		86	181

INTERSTATE ROUTE 495 OVER TERMINAL THOROFARE IMPROVEMENT BRIDGE NO. 6

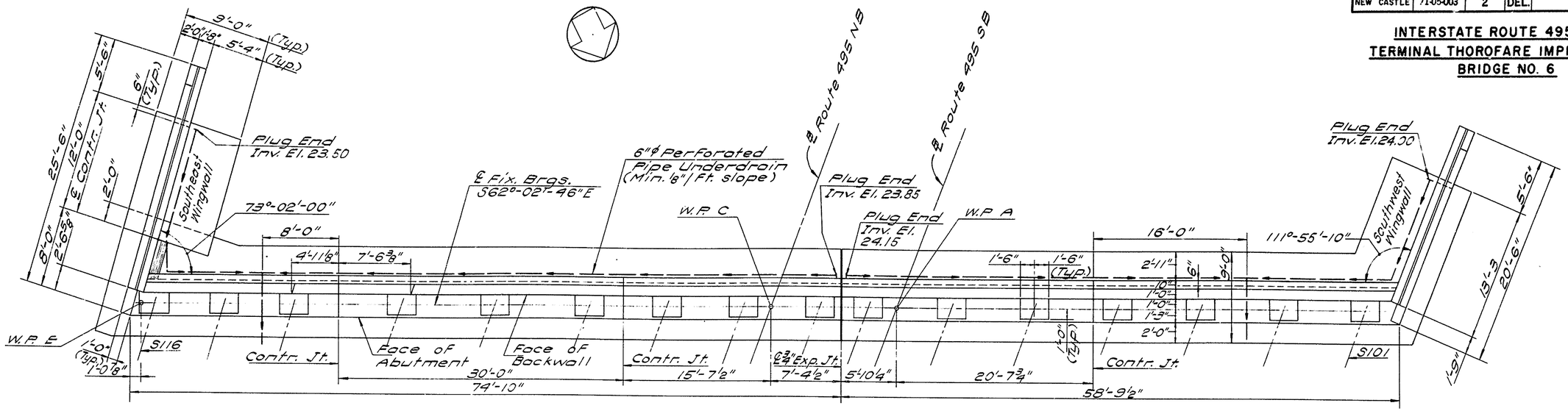

PLAN
Scale: 3/16" = 1'-0"

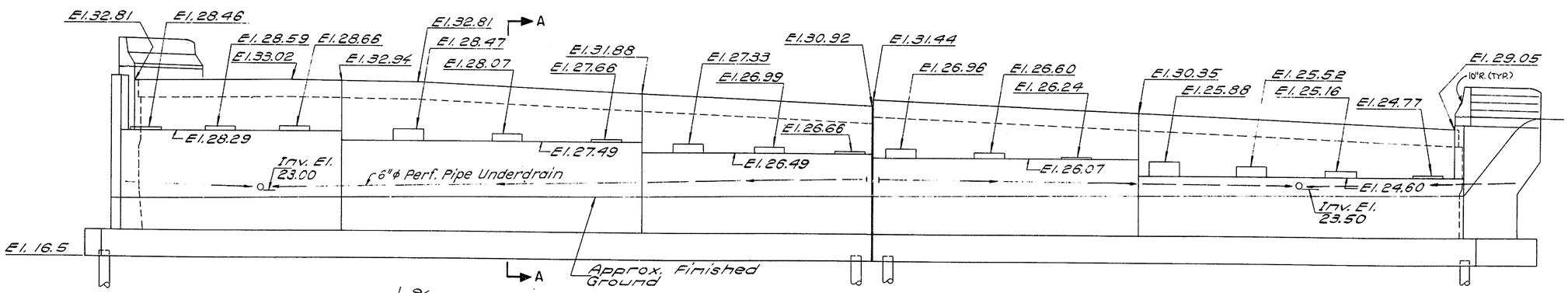

ELEVATION
Scale: 3/16" = 1'-0"

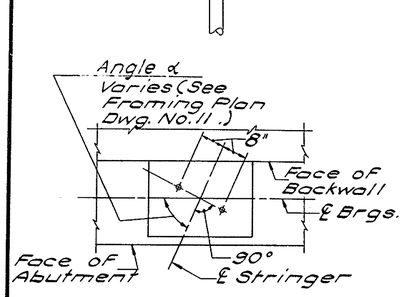

ANCHOR BOLT LAYOUT
Scale: ½" = 1'-0"

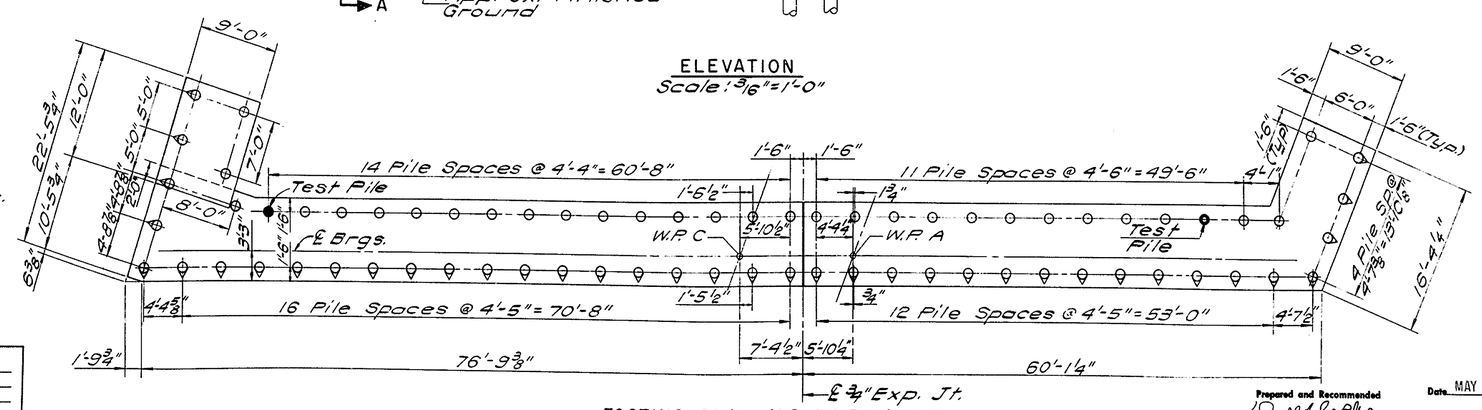

FOOTING PLAN AND PILE LAYOUT
Scale: ⅛" = 1'-0"

REFERENCES:

1. For Section A-A see Dwg. No. 7.
2. For Bar List see Dwg. No. 21.
3. For additional abutment references see Dwg. No. 5.
4. For Reinf. layout see Dwg. No. 4.
5. For Pile Notes see Dwg. No. 5.

In Charge of	N. Eriksen
Designed by	P. Hermann
Design Checked by	M. Siebold
Detailed by	R. Metcalf
Detail Checked by	Al. Melnikov

Date	Revision

Prepared and Recommended
GOODKIND & O'DEA, INC.
Consulting Engineers

Date MAY 25 1971

DELAWARE
STATE HIGHWAY DEPARTMENT

SOUTH ABUTMENT

APPROVED BY: John F. Cubbage
BRIDGE ENGINEER

JUN 18 1971
DATE

DWG. NO.	SCALE	DATE	
3	As Noted	May 1971	GOODKIND & O'DEA, INC. CONSULTING ENGINEERS

COUNTY	CONTRACT	S. P. R. REG. NO.	STATE	FED. AID PROJECT NO.	SHEET NO.	TOTAL SHEETS
NEW CASTLE	71-05-003	2	DEL.		87	181

INTERSTATE ROUTE 495 OVER TERMINAL THOROFARE IMPROVEMENT BRIDGE NO. 6

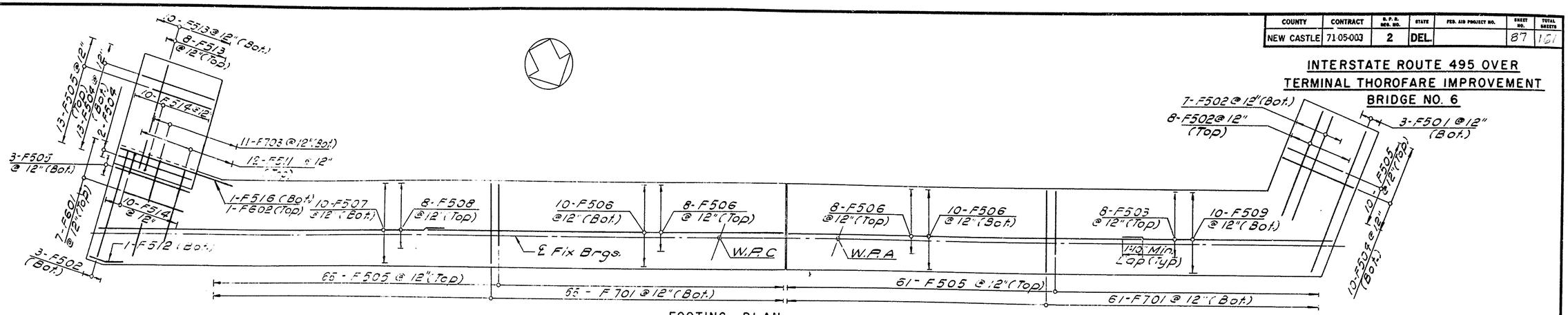

FOOTING PLAN

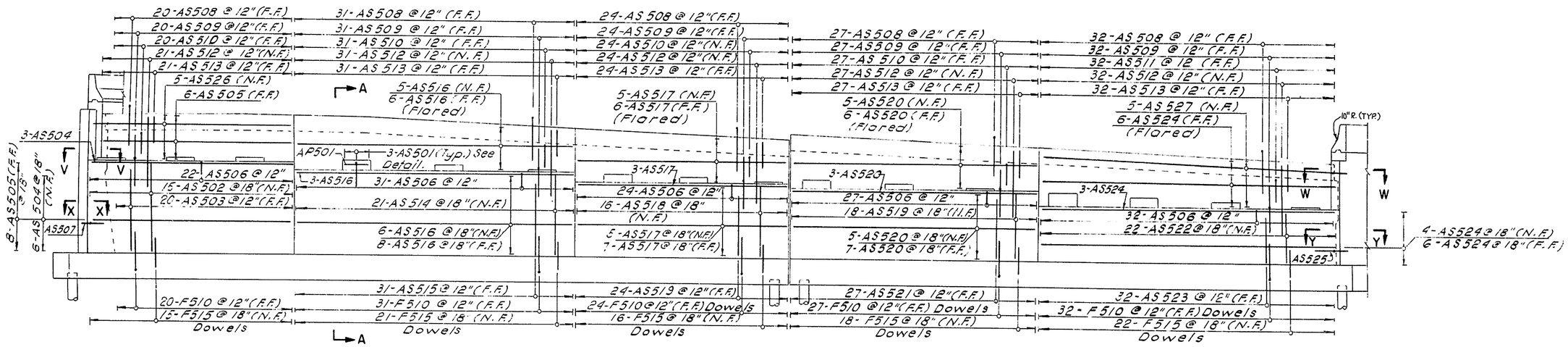

ELEVATION

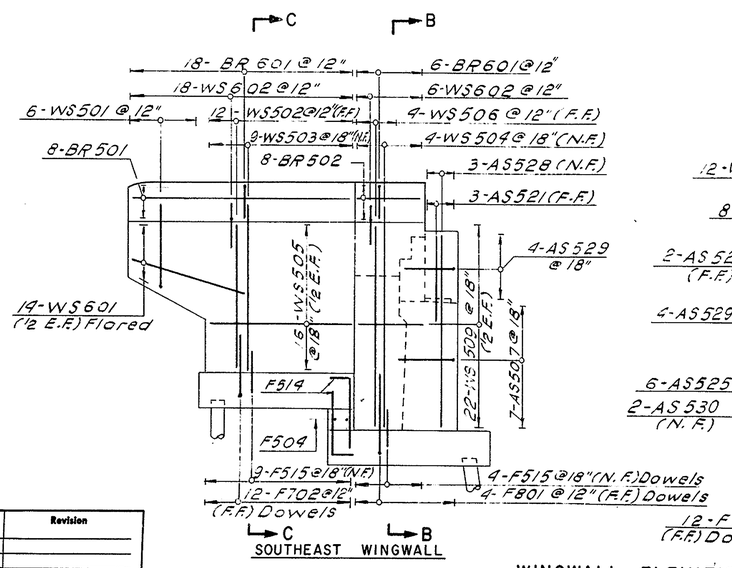

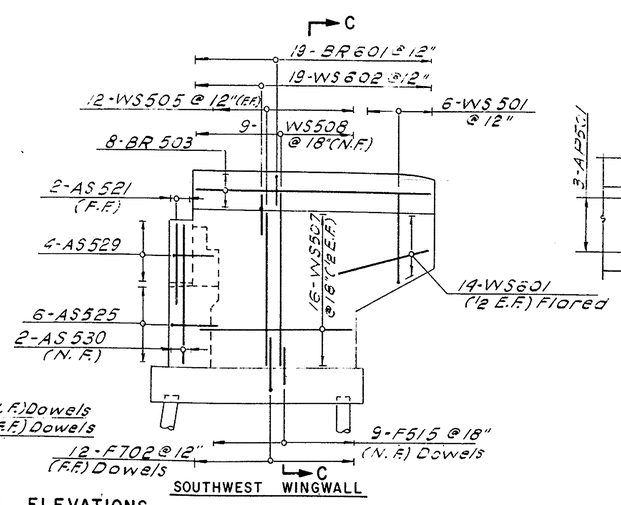

WINGWALL ELEVATIONS

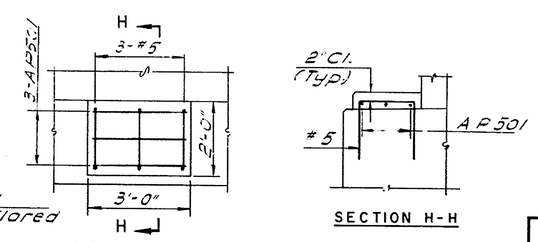

NOTE Typical for Pads higher than 4'.

PAD REINFORCEMENT DETAIL
Scale: 1/2" = 1'-0"

SECTION H-H

REFERENCES
1. For Sections see Dwg. No. 7
2. For South Abutment Dimensions and Details see Dwg. No. 3.
3. For Bar List see Dwg. No. 21.

In Charge of	N. Eriksen
Designed by	
Design Checked by	
Detailed by	A. Centeld
Detail Checked by	P. Hermann

Date	Revision

Prepared and Recommended
GOODKIND & O'DEA, INC. Consulting Engineers
Date MAY 25 1971

DELAWARE
STATE HIGHWAY DEPARTMENT

SOUTH ABUTMENT
BAR REINFORCEMENT

APPROVED BY:
BRIDGE ENGINEER
JUN 18 1971
DATE

DWG. NO.	SCALE	DATE	GOODKIND & O'DEA, INC. CONSULTING ENGINEERS
4	3/16" = 1'-0"	May 1971	

COUNTY	CONTRACT	P. R. A. REG. NO.	STATE	FED. AID PROJECT NO.	SHEET NO.	TOTAL SHEETS
NEW CASTLE	71-05-003	2	DEL.		88	161

INTERSTATE ROUTE 495 OVER TERMINAL THOROFARE IMPROVEMENT BRIDGE NO. 6

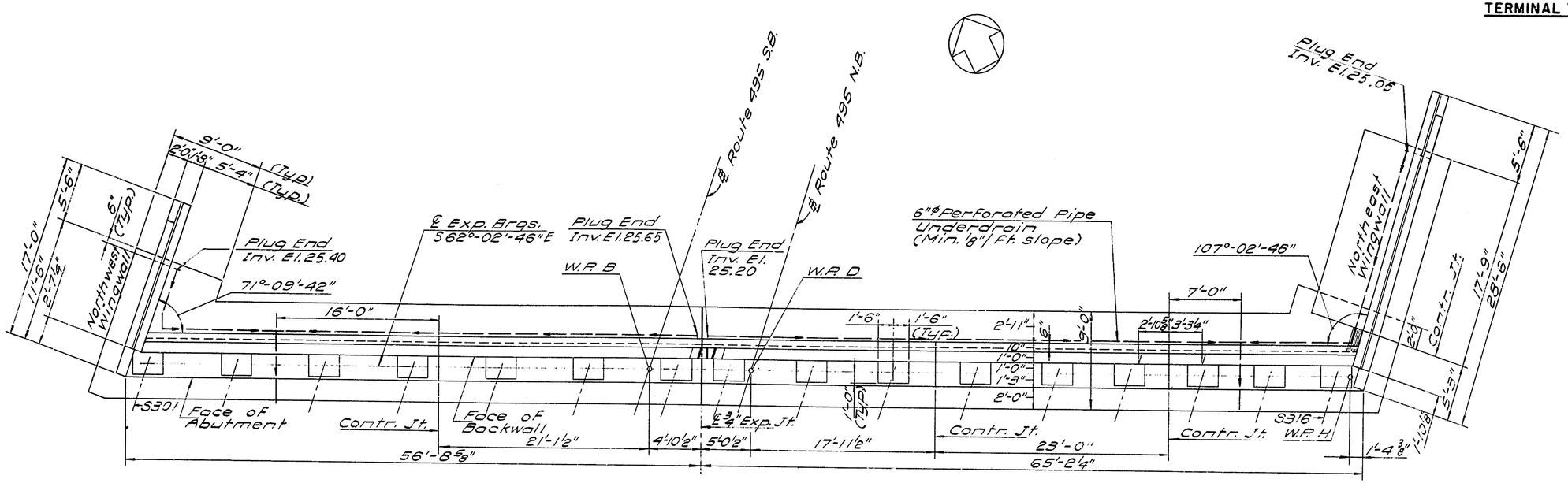

PLAN
Scale: 3/16" = 1'-0"

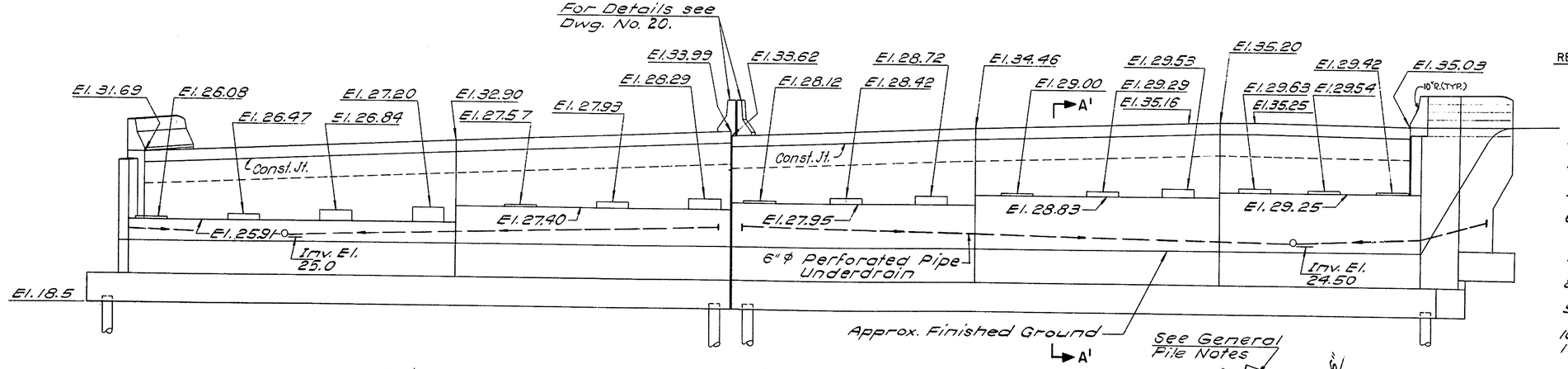

ELEVATION
Scale: 3/16" = 1'-0"

REFERENCES:

1. For Layout of Working Points see Layout Plan on Dwg. No. 2.
2. For Section A'-A', Wingwall Elevations, see Dwg. No. 7.
3. For Anchor Bolt Layout see Dwg. No. 3.
4. For Anchor Bolt Detail see Dwg. No. 12.
5. For stringer layout dimensions see Dwg. No. 11.
6. For excavation, back fill and Drainage details see Miscellaneous Details Dwg. No. 6.
7. For Contraction and Expansion Joint Details see Dwg. No. 8.
8. For Pile Details and General Pile Notes see Dwg. No. 8.
9. For abutment header details see Dwg. No. 18.
10. For Bar List see Dwg. No. 22.
11. For Reinf. Layout see Dwg. No. 6.

PILE NOTES:

1. Estimated pile length is 53 Ft. for abutments and 57 Ft. for stepped SE and NE Walls.
2. Length of test pile is 63 Ft.
3. One test pile at each Abutment to be augered though existing Fill.

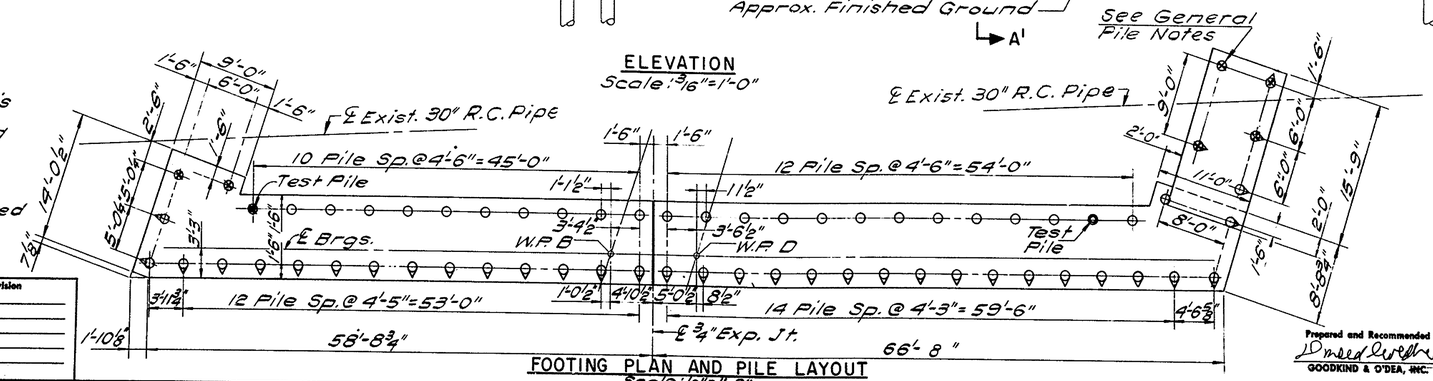

FOOTING PLAN AND PILE LAYOUT
Scale: ⅛" = 1'-0"

In Charge of	N. Erikson
Designed by	P. Hermann
Design Checked by	M. Siebold
Detailed by	R. Metcalf
Detail Checked by	D. Melnberg

Date	Revision

Prepared and Recommended
GOODKIND & O'DEA, INC. Consulting Engineers

Date MAY 25 1971

DELAWARE
STATE HIGHWAY DEPARTMENT

NORTH ABUTMENT

APPROVED BY: John Fountain
BRIDGE ENGINEER

JUN 18 1971
DATE

DWG. NO.	SCALE	DATE	
5	As Noted	May 1971	GOODKIND & O'DEA, INC. CONSULTING ENGINEERS

COUNTY	CONTRACT	S. P. R. REG. NO.	STATE	FED. AID PROJECT NO.	SHEET NO.	TOTAL SHEETS
NEW CASTLE	71-05-003	2	DEL.		89	161

INTERSTATE ROUTE 495 OVER TERMINAL THOROFARE IMPROVEMENT BRIDGE NO. 6

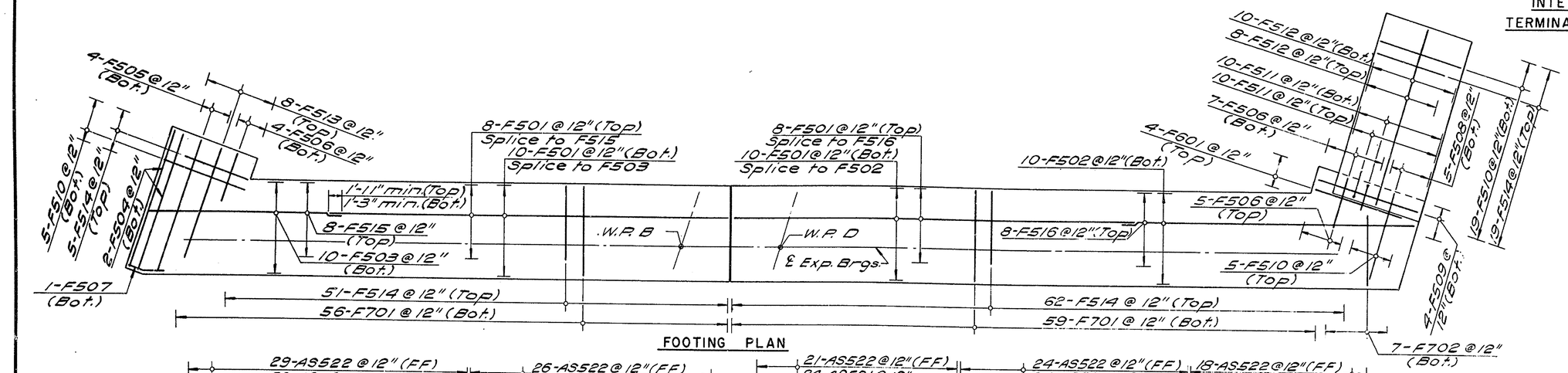

FOOTING PLAN

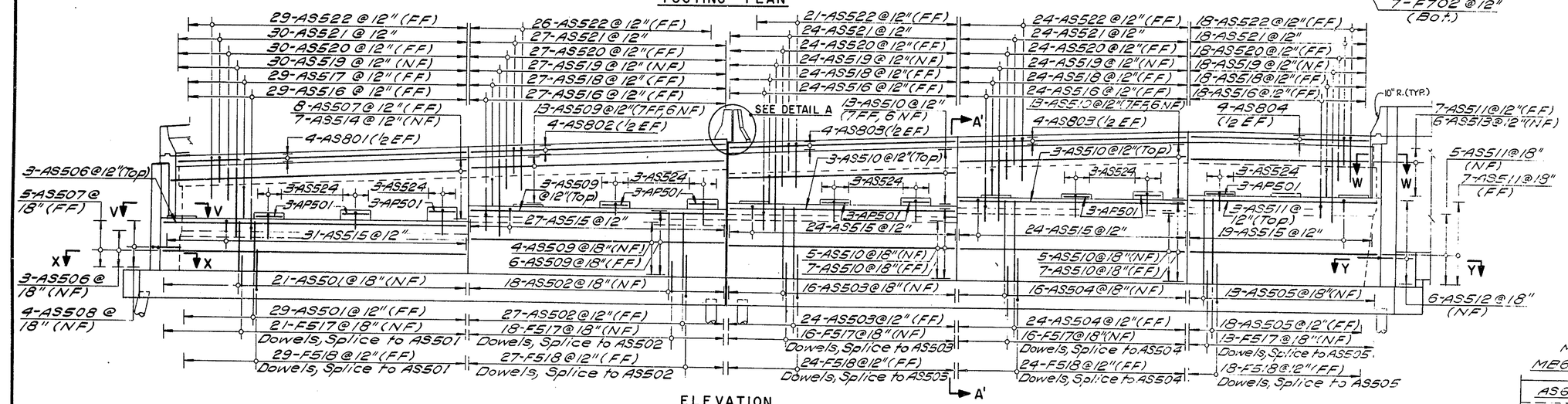

ELEVATION

REFERENCES:

1. For Sections see Dwg. No. 7.
2. For North Abutment Dimensions and Details see Dwg. No. 5
3. For Pot Reinforcement Detail see Dwg. No. 4
4. For Bar List see Dwg. No. 22.

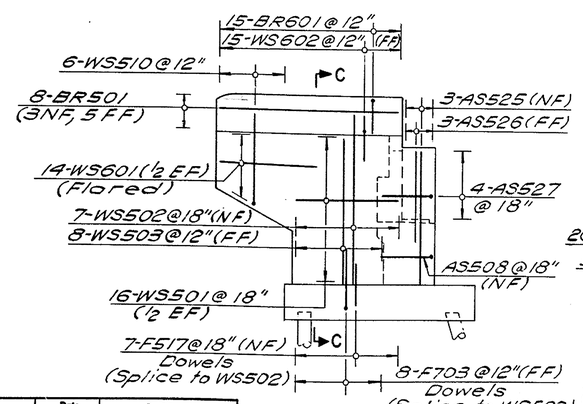

NORTHWEST WINGWALL

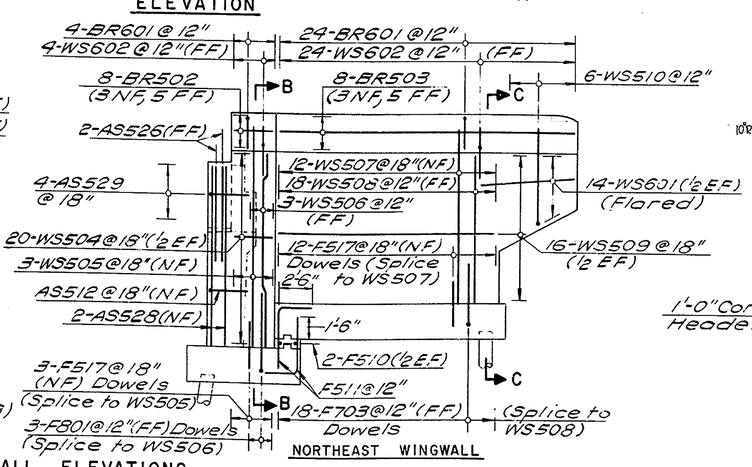

NORTHEAST WINGWALL

WINGWALL ELEVATIONS

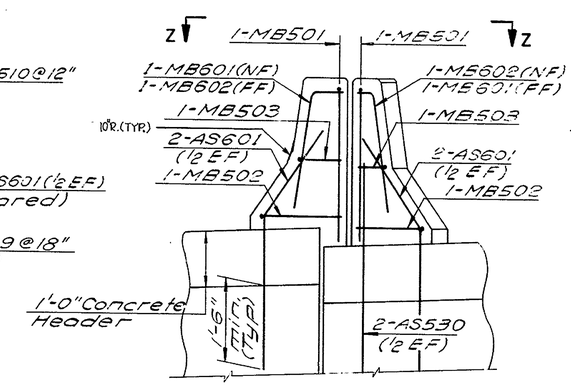

DETAIL A
Scale: ¾"=1'-0"

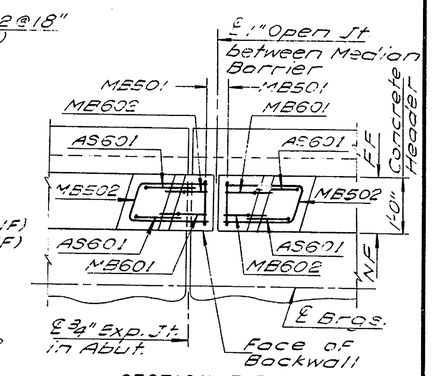

SECTION Z-Z
Scale: ¾"=1'-0"

In Charge of N. Erkan	Date	Revision
Designed by		
Design Checked by		
Detailed by R. Metcalf		
Detail Checked by E. Hutchins		

Prepared and Recommended
GOODKIND & O'DEA, INC. Consulting Engineers
Date MAY 25 1971

DELAWARE
STATE HIGHWAY DEPARTMENT

NORTH ABUTMENT
BAR REINFORCEMENT

APPROVED BY: John E. Cubbage
BRIDGE ENGINEER
JUN 18 1971
DATE

DWG. NO.	SCALE	DATE	
6	3/16"=1'-0" & As Noted	May 1971	GOODKIND & O'DEA, INC. CONSULTING ENGINEERS

COUNTY	CONTRACT	S. P. R. REG. NO.	STATE	FED. AID PROJECT NO.	SHEET NO.	TOTAL SHEETS
NEW CASTLE	71-05-003	2	DEL.		90	161

INTERSTATE ROUTE 495 OVER TERMINAL THOROFARE IMPROVEMENT BRIDGE NO. 6

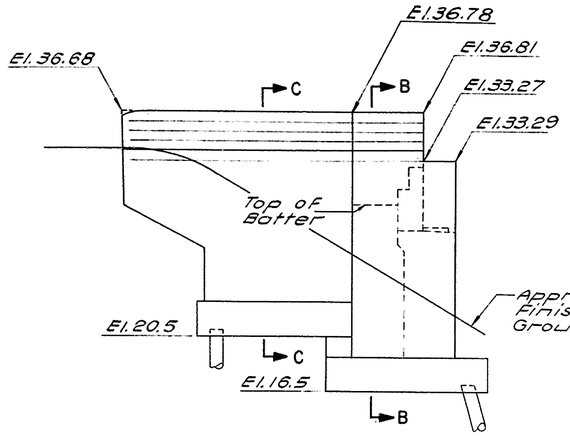

SOUTHEAST WINGWALL

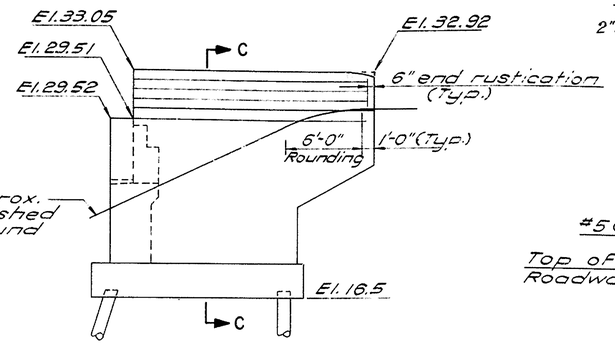

SOUTHWEST WINGWALL

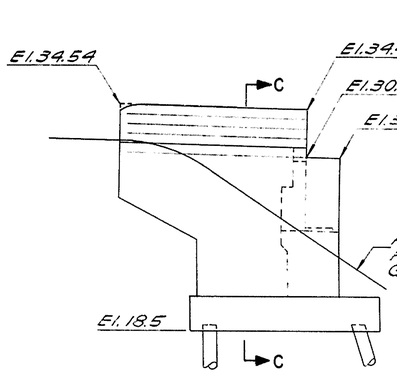

NORTHWEST WINGWALL

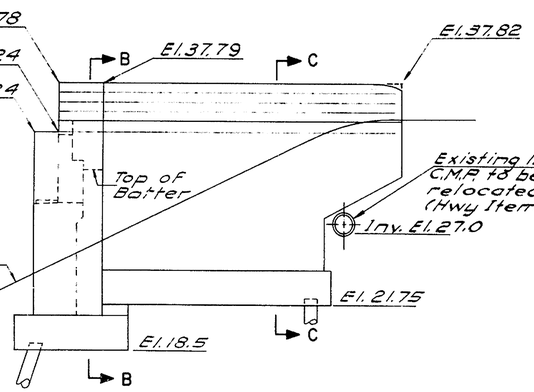

NORTHEAST WINGWALL

WINGWALL ELEVATIONS

Scale: 3/16"=1'-0"

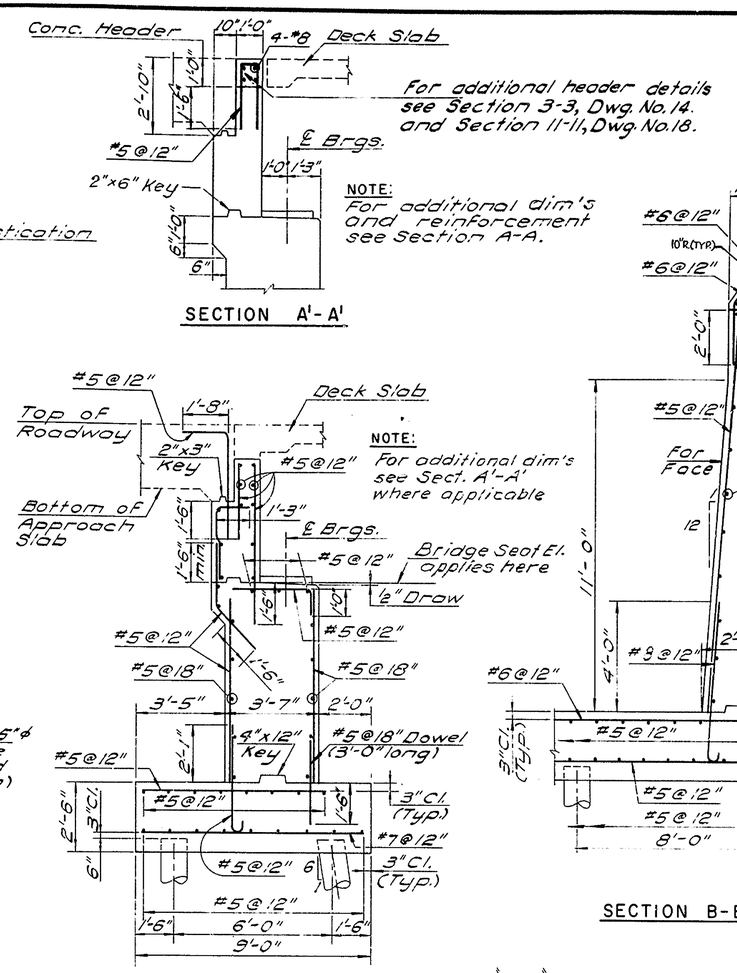

SECTION A'-A'

SECTION A-A

SECTION B-B

SECTION C-C

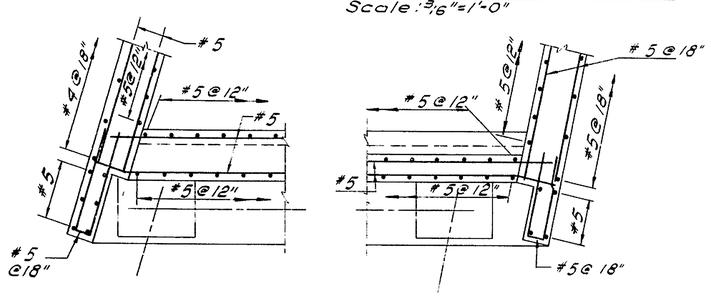

SECTION V-V

SECTION W-W

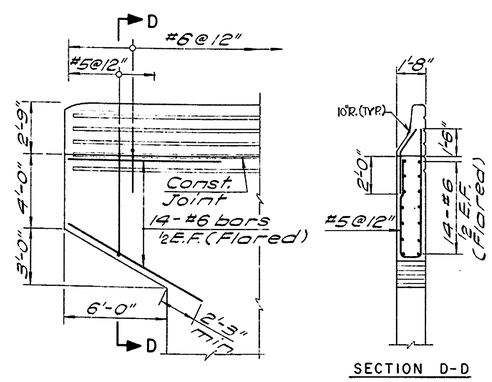

SECTION D-D

CANTILEVER DETAIL

Scale: 1/4"=1'-0"

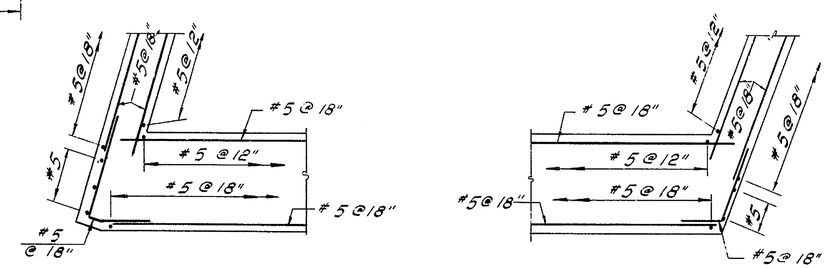

SECTION X-X

SECTION Y-Y

	Date	Revision
In Charge of M. Erikson		
Designed by P. Hermann		
Design Checked by M. Siebold		
Detailed by R. Metcalf		
Detail Checked by H. Mahnberg		

Prepared and Recommended GOODKIND & O'DEA, INC. Consulting Engineers

Date MAY 25 1971

DELAWARE STATE HIGHWAY DEPARTMENT

WINGWALL AND ABUTMENT SECTIONS AND DETAILS

APPROVED BY: John G. Cubbitt, BRIDGE ENGINEER — DATE JUN 18 1971

DWG. NO.	SCALE	DATE	
7	3/8"=1'-0" & As Noted	MAY 1971	GOODKIND & O'DEA, INC. CONSULTING ENGINEERS

COUNTY	CONTRACT	B.P.R. REG. NO.	STATE	FED. AID PROJECT NO.	SHEET NO.	TOTAL SHEETS
NEW CASTLE	71-05-003	2	DEL.		91	101

INTERSTATE ROUTE 495 OVER TERMINAL THOROFARE IMPROVEMENT BRIDGE NO. 6

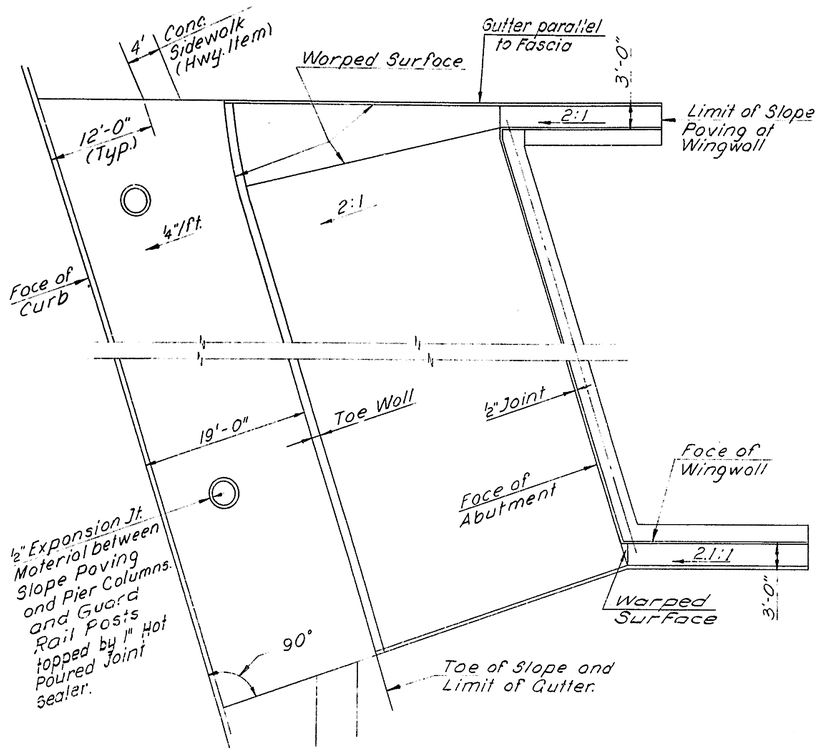

PLAN

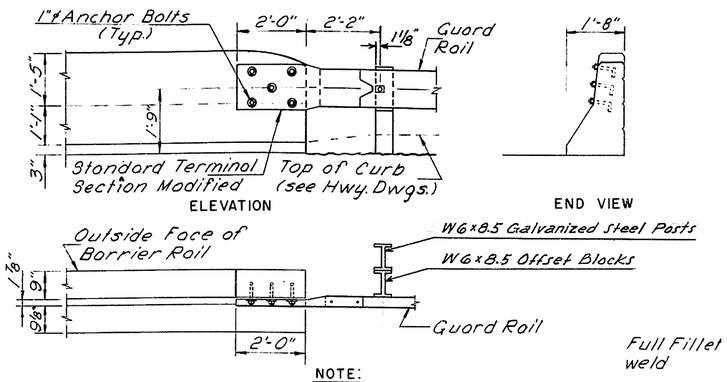

NOTE:
For additional details see Standard Sheet G-7

CONNECTION GUARD RAIL TO BARRIER RAIL
Scale: ½"=1'-0"

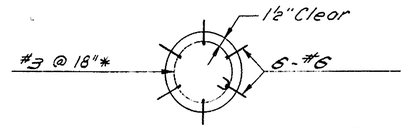

*Paid For in Unit Price Bid For cost-In-Place concrete Piles.

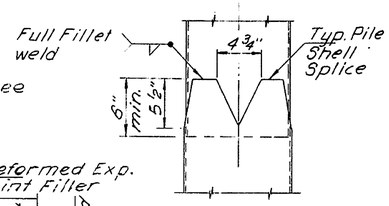

SHELL SPLICE

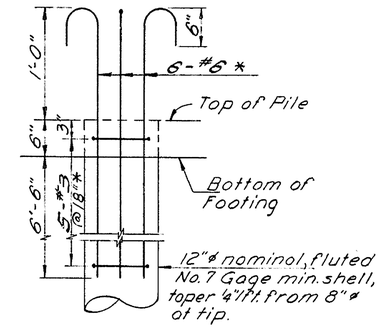

PILE DETAILS
Not to Scale

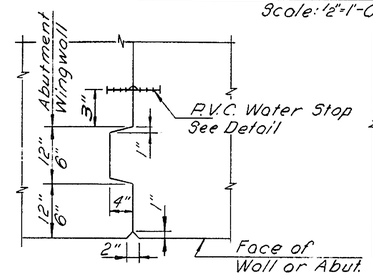

CONTRACTION JOINT DETAIL
Not to Scale

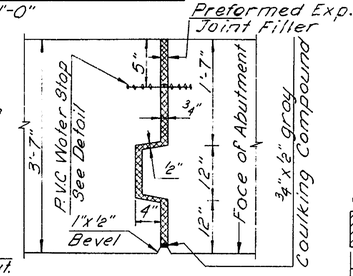

EXPANSION JOINT DETAIL
Not to Scale

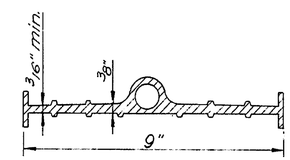

PVC WATER STOP
Not to Scale

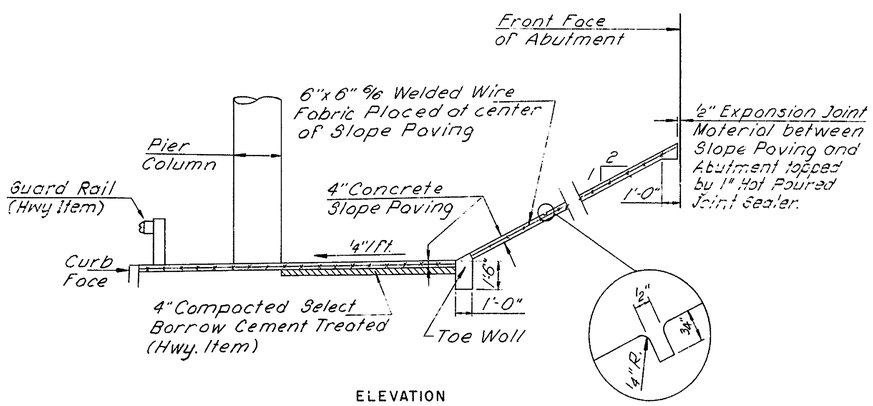

ELEVATION
CONCRETE SLOPE PAVING
Not to Scale

GROOVE DETAIL

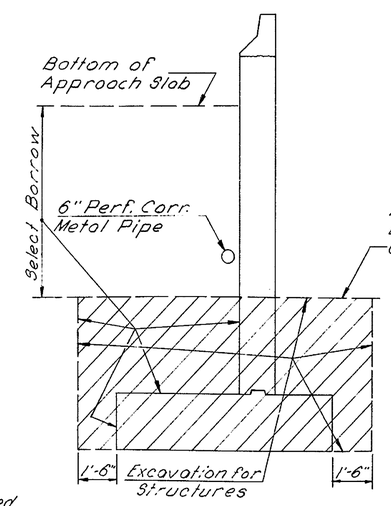

WINGWALL

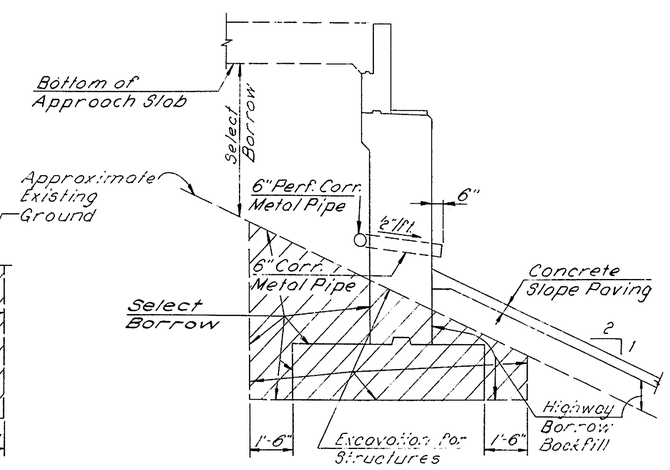

ABUTMENT

MISCELLANEOUS DETAILS
Not to Scale

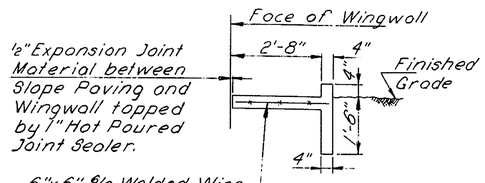

GUTTER DETAIL
Scale: ½"=1'-0"

GENERAL PILE NOTES

1. ALL PILES SHALL CONFORM TO SECTION 624, "CAST-IN-PLACE CONCRETE PILES" OF THE STANDARD SPECIFICATIONS AND HAVE A MINIMUM BEARING VALUE OF 35 TONS.
2. ANY ALTERNATE TYPE OF PILE COMPLYING WITH SECTION 624 WILL BE CONSIDERED FOR ACCEPTANCE.
3. ◎ INDICATES TEST PILE.
4. ○ INDICATES VERTICAL PILE.
5. ◁ INDICATES PILE BATTERED IN DIRECTION OF ARROW:
   1:6 FOR ABUTMENTS AND PIERS
   1:4 FOR WINGWALLS
6. NORTH ABUTMENT WINGWALL PILES IN THE VICINITY OF THE EXISTING 30" R.C.P. ARE TO BE AUGERED TO EL. 0.0. AUGERED PILES ARE INDICATED BY ⊗

	Date	Revision
In Charge of N. Erikson		
Designed by N. Erikson		
Design Checked by M.J. Siebold		
Detailed by O. Brooks		
Detail Checked by R. Mahnberg		

Prepared and Recommended
GOODKIND & O'DEA, INC.
Consulting Engineers

Date MAY 25 1971

DELAWARE
STATE HIGHWAY DEPARTMENT

SUBSTRUCTURE DETAILS

APPROVED BY: John G. Leslie
BRIDGE ENGINEER
JUN 18 1971
DATE

DWG. NO.	SCALE	DATE	
8	As Noted	May 1971	GOODKIND & O'DEA, INC. CONSULTING ENGINEERS

COUNTY	CONTRACT	P.R.A. REG. NO.	STATE	FED. AID PROJECT NO.	SHEET NO.	TOTAL SHEETS
NEW CASTLE	71-05-003	2	DEL.		92	161

INTERSTATE ROUTE 495 OVER TERMINAL THOROFARE IMPROVEMENT BRIDGE NO. 6

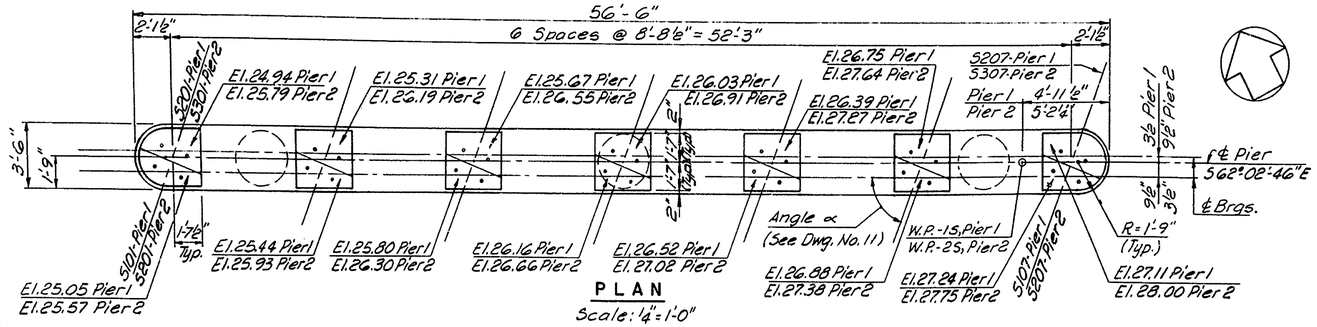

PLAN
Scale: ¼" = 1'-0"

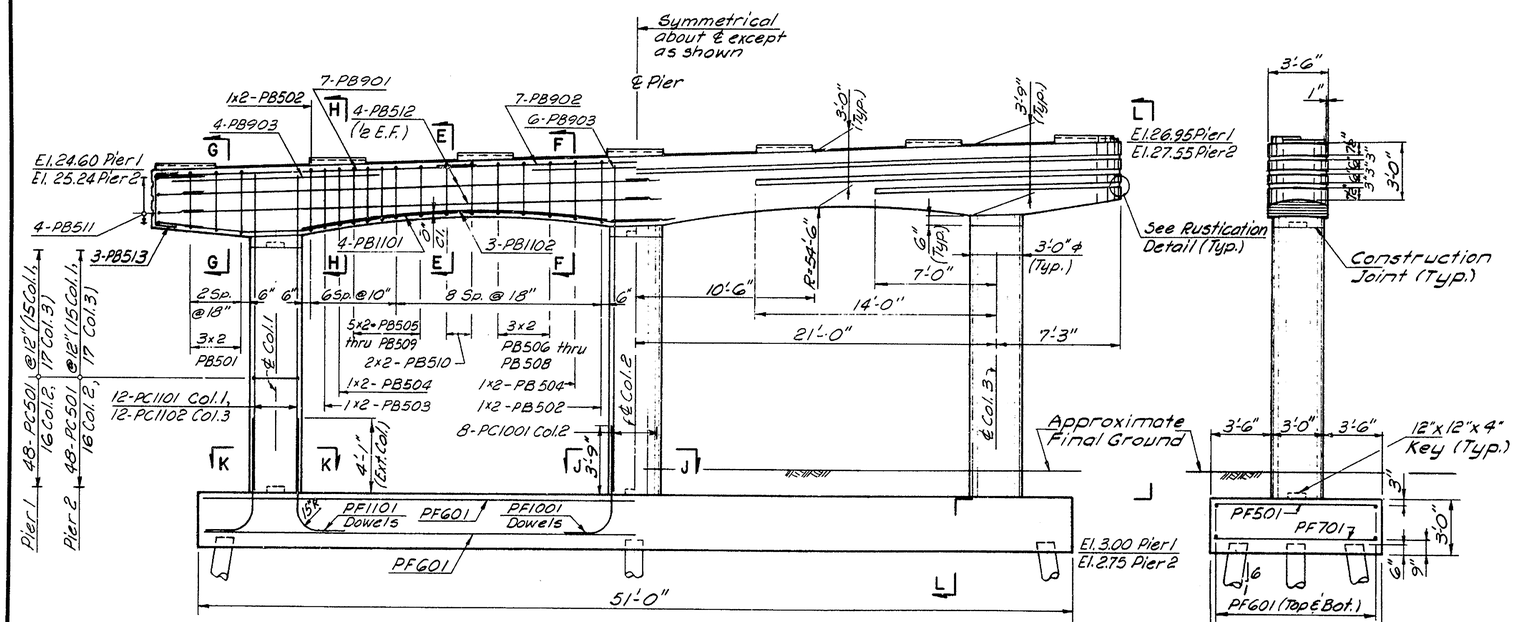

ELEVATION
Scale: ¼" = 1'-0"

SECTION L - L
Scale: ¼" = 1'-0"

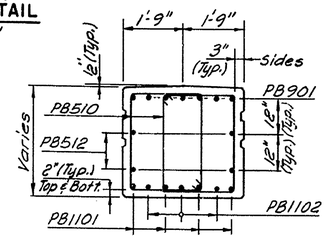

SECTION E - E
Scale: ½" = 1'-0"

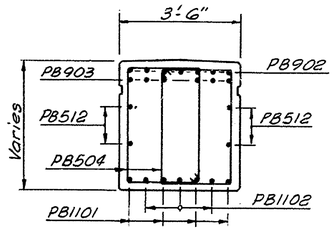

SECTION F - F
Scale: ½" = 1'-0"

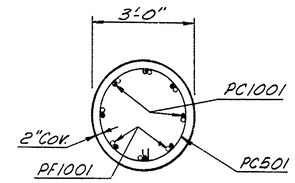

SECTION J - J
Scale: ½" = 1'-0"

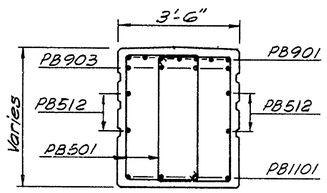

SECTION G - G
Scale: ½" = 1'-0"

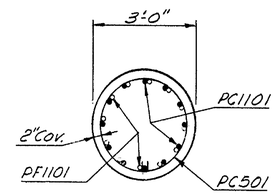

SECTION K - K
Scale: ½" = 1'-0"

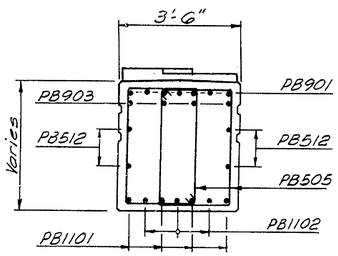

SECTION H - H
Scale: ½" = 1'-0"

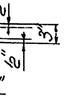

RUSTICATION DETAIL
Scale: 1" = 1'-0"

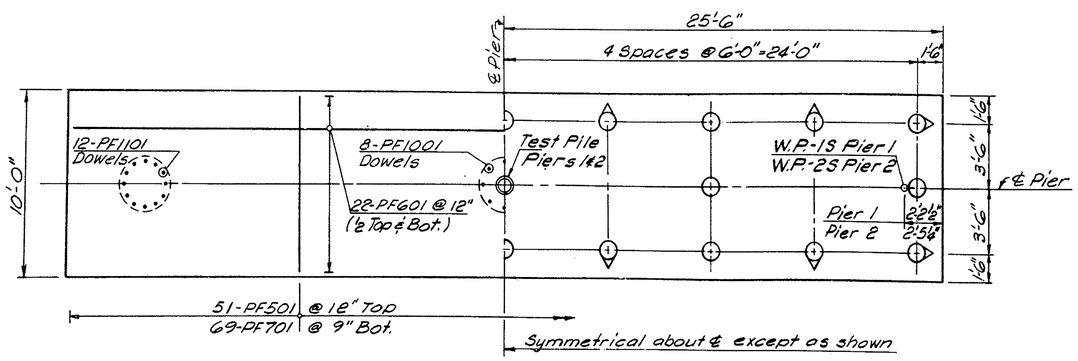

FOOTING PLAN
Scale: ¼" = 1'-0"

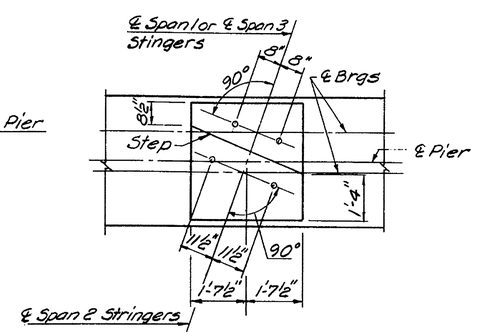

TYPICAL ANCHOR BOLT AND STEPPED PAD LAYOUT
Scale: ½" = 1'-0"

PILE NOTES

1. Estimated pile length is 40 ft. for all Piers.
2. Length of Test Pile is 50 ft.

REFERENCES

1. For layout of Working Points see Layout Plan on Dwg. No. 2.
2. For excavation limits see Dwg. No. 10.
3. For Pile Details and General Pile Notes see Dwg. No. 8.
4. For Bar List see Dwg. No. 23.
5. For Stringer layout details see Dwg. No 11.

In Charge of N. Erikson
Designed by N. Chou
Design Checked by M.J. Siebold
Detailed by T.B. Wasuluk
Detail Checked by N. Malulay

Date	Revision

Prepared and Recommended Date MAY 25 1971
GOODKIND & O'DEA, INC. Consulting Engineers

DELAWARE
STATE HIGHWAY DEPARTMENT

SOUTHBOUND PIERS

APPROVED BY: John E. Cullen
BRIDGE ENGINEER
JUN 18 1971
DATE

DWG. NO.	SCALE	DATE	
9	As Noted	May 1971	GOODKIND & O'DEA, INC. CONSULTING ENGINEERS

COUNTY	CONTRACT	F. B. A. REG. NO.	STATE	FED. AID PROJECT NO.	SHEET NO.	TOTAL SHEETS
NEW CASTLE	71-05-003	2	DEL.		93	167

INTERSTATE ROUTE 495 OVER TERMINAL THOROFARE IMPROVEMENT BRIDGE NO. 6

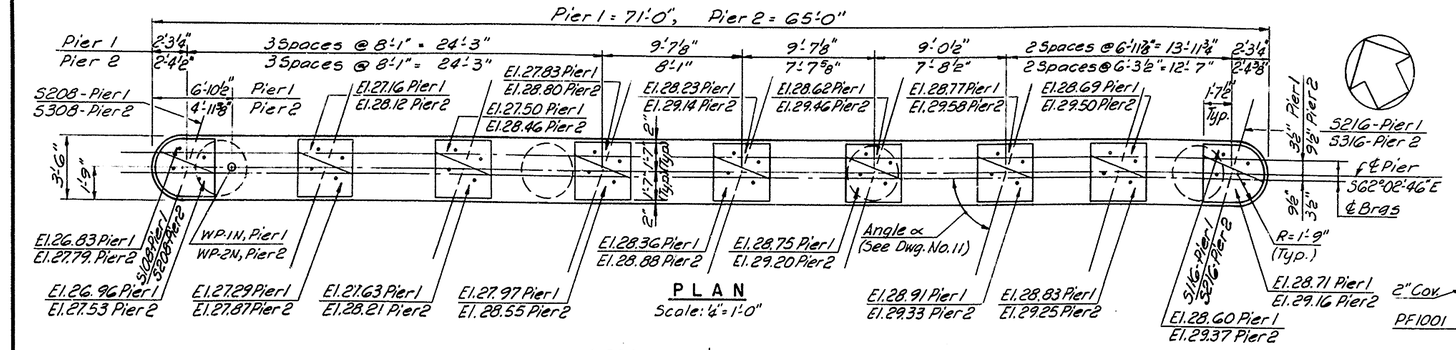

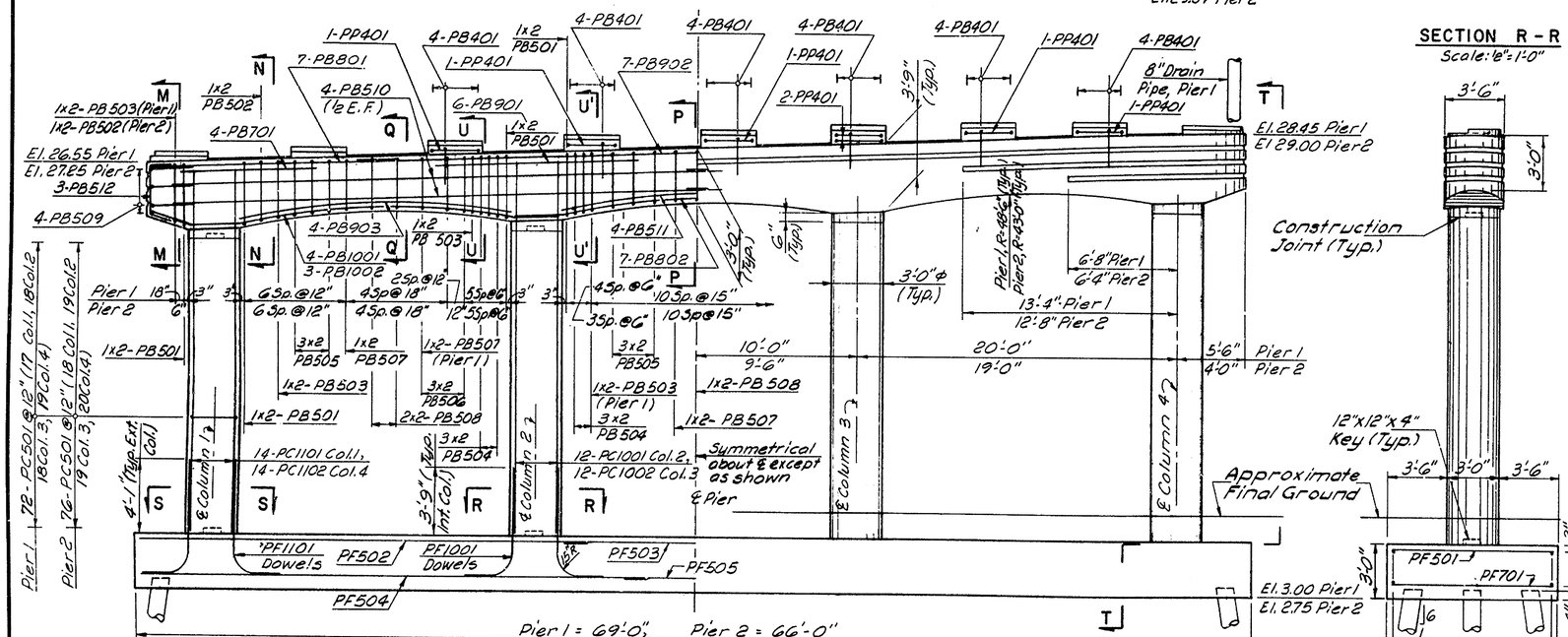

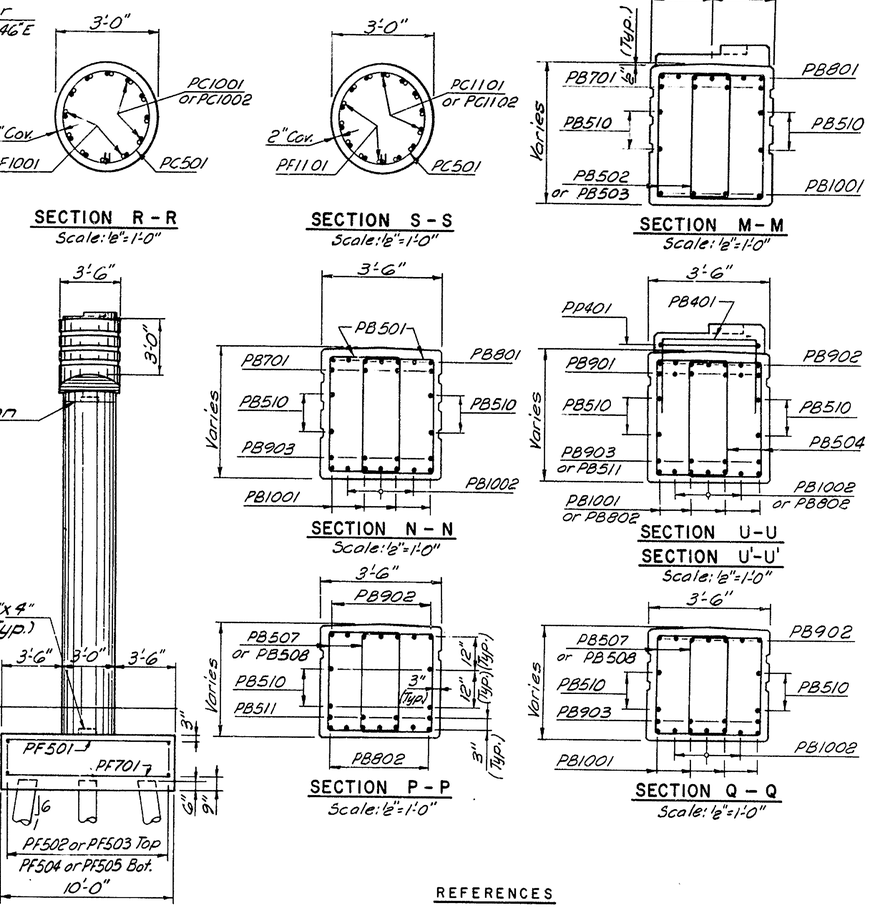

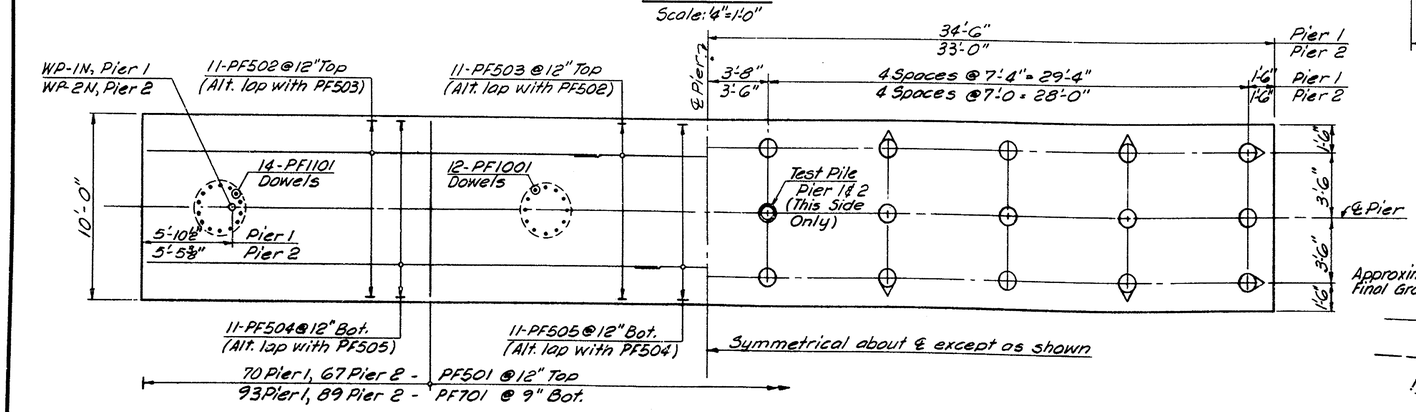

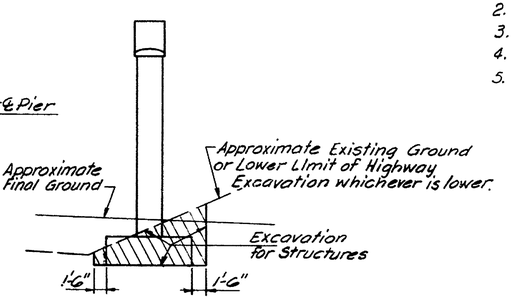

REFERENCES

1. For Pile Notes and pier cap Rustication Detail see Dwg. No. 9.
2. For Bar List see Dwg. No. 24.
3. For additional pier references see Dwg. No. 9
4. For Drainage System on Pier 1 see Dwg. No. 15.
5. For Anchor Bolt and Stepped Pad Layout see Dwg. No. 9.

Date	Revision

In Charge of N. Einhorn
Designed by N. Chou
Design Checked by M.J. Siebold
Detailed by T.B. Wasylik
Detail Checked by N. Malmberg

Prepared and Recommended GOODKIND & O'DEA, INC. Consulting Engineers
Date MAY 25 1971

DELAWARE STATE HIGHWAY DEPARTMENT

NORTHBOUND PIERS

APPROVED BY: BRIDGE ENGINEER — DATE JUN 18 1971

DWG. NO.	SCALE	DATE	
10	As Noted	May 1971	GOODKIND & O'DEA, INC. CONSULTING ENGINEERS

COUNTY	CONTRACT	P.R.A. REG. NO.	STATE	FED. AID PROJECT NO.	SHEET NO.	TOTAL SHEETS
NEW CASTLE	71-05-003	2	DEL.		94	161

INTERSTATE ROUTE 495 OVER TERMINAL THOROFARE IMPROVEMENT BRIDGE NO. 6

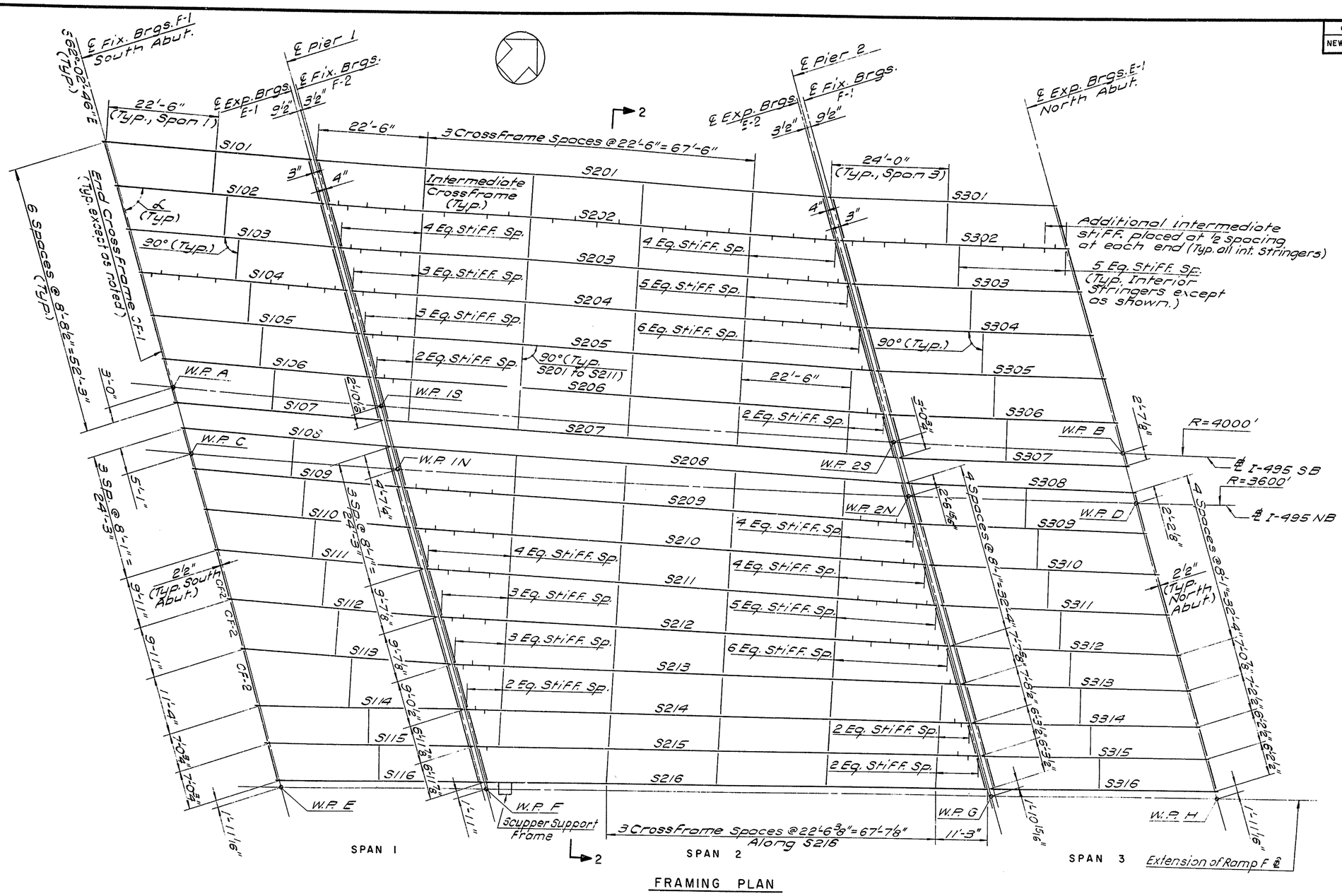

FRAMING PLAN

STRINGER GEOMETRY

STRINGER	ANGLE ∝	SPAN LENGTH C. TO C. BRGS.
S101 - S111	69°-00'-00.1"	42'-0"
S112	69°-24'-15.2"	41'-10 5/8"
S113	69°-48'-38.0"	41'- 9 3/8"
S114	72°-45'-14.3"	41'- 0 5/8"
S115	72°-50'-57.4"	41'- 0 3/8"
S116	72°-56'-40.7"	41'- 0 1/8"
S201 - S207	69°-45'-14.7"	105'-6"
S208 - S211	69°-44'-59.8"	105'-6"
S212	70°-31'-7.7"	104'-11 7/8"
S213	71°-31'-35.8"	104'-4 1/4"
S214	72°-13'-10.8"	103'-11 3/8"
S215	72°-35'-4.5"	103'-8 7/8"
S216	72°-57'-3.4"	103'-6 3/8"
S301 - S307	71°-30'-33.9"	45'-6"
S308 - S312	71°-31'-7.9"	45'-6"
S313	72°-10'-51.9"	45'-3 7/8"
S314	72°-46'-26.0"	45'-2 1/8"
S315	72°-52'-23.4"	45'-1 7/8"
S316	72°-58'-21.1"	45'-1 5/8"

STRUCTURAL STEEL NOTES

1. ALL STRUCTURAL STEEL IS ASTM A36 EXCEPT AS NOTED.
2. ANY WELDED JOINT PREQUALIFIED BY THE LATEST A.W.S. SPECIFICATIONS WILL BE ACCEPTABLE IN THE FABRICATION OF THE STRUCTURAL STEEL.
3. ENDS OF STRINGERS AND BEARING STIFFENERS ARE TO BE VERTICAL UNDER FULL DEAD.LOAD.
4. INTERMEDIATE STIFFENERS SHALL BE PERPENDICULAR TO THE TOP FLANGE AND WEB.
5. INTERMEDIATE STIFFENERS ARE NOT REQUIRED ON FASCIA STRINGERS 01, 07, 08, AND 16.
6. FIT BOTH ENDS OF INTERMEDIATE STIFFENERS AND WELD TO THE WEB AND TOP FLANGE.
7. ALL WEB SPLICE WELDS TO BE MADE BEFORE FLANGE TO WEB WELDS.

REFERENCES:

1. For Layout of Working Points see Layout Plan Dwg. No. 2.
2. For Section 2-2 see Dwg. No. 17.
3. For scupper support Frame for S216 see Dwg. No. 15.
4. For Stringer & Crossframes see Dwg. No. 12
5. For Brg. Shoes see Dwg. No. 13.

	Date	Revision
In Charge of N. Erikson		
Designed by E. Hutchins		
Design Checked by P. Hermann		
Detailed by R. Metcalf		
Detail Checked by N. Malushev		

Prepared and Recommended Date MAY 25 1971
Donald Goodkind
GOODKIND & O'DEA, INC. Consulting Engineers

DELAWARE
STATE HIGHWAY DEPARTMENT

FRAMING PLAN

APPROVED BY: John E. Kauffel
BRIDGE ENGINEER — JUN 18 1971 DATE

DWG. NO.	SCALE	DATE	GOODKIND & O'DEA, INC. CONSULTING ENGINEERS
11	1"=10'	May 1971	

COUNTY	CONTRACT	S. P. R. REG. NO.	STATE	FED. AID PROJECT NO.	SHEET NO.	TOTAL SHEETS
NEW CASTLE	71-05-003	2	DEL.		95	161

INTERSTATE ROUTE 495 OVER TERMINAL THOROFARE IMPROVEMENT
BRIDGE NO. 6

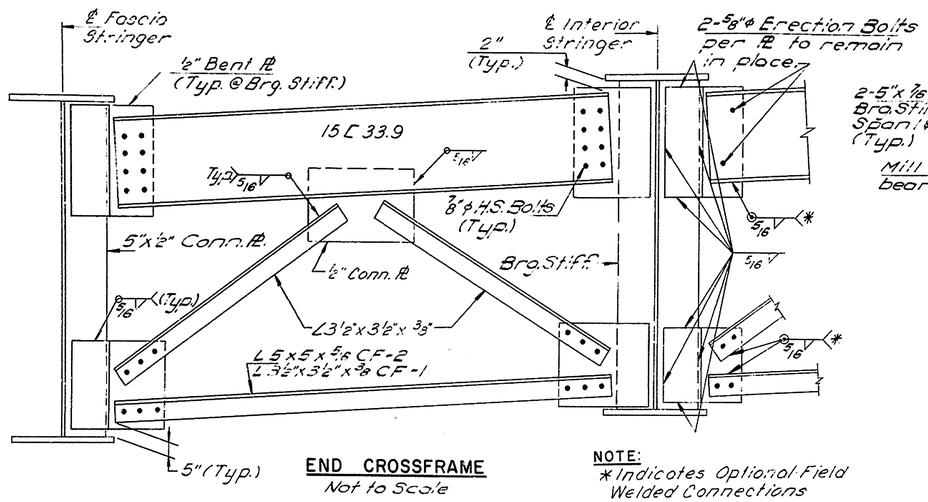

END CROSSFRAME
Not to Scale

NOTE:
*Indicates Optional Field Welded Connections

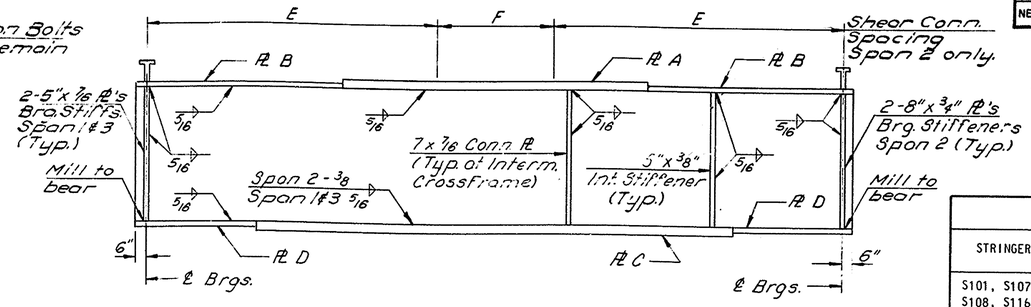

STRINGER ELEVATION
Not to Scale

STRINGER	SHEAR CONNECTOR SPACING	
	E	F
S201, S207 S208	45 SP @ 14" = 52'-6"	6"
S202-S206	54 SP @ 11 1/2" = 51'-9"	2 SP = 2'-0"
S209, S210	52 SP @ 12" = 52'-0"	2 SP = 1'-6"
S211	54 SP @ 11 1/2" = 51'-9"	2 SP = 2'-0"
S212	54 SP @ 11 1/2" = 51'-9"	2 SP = 1'-5 7/8"
S213	54 SP @ 11 1/2" = 51'-9"	10 1/4"
S214	49 SP @ 12 1/2" = 51'-0 1/2"	2 SP = 1'-10 3/8"
S215	44 SP @ 14" = 51'-4"	1'-0 7/8"
S216	44 SP @ 14" = 51'-4"	10 3/8"

CAMBER TABLE

STRINGER	DEFLECTIONS AT MIDSPAN (INCHES)				TOTAL CAMBER
	DLS	DLC	SDL	TOTAL	
S101, S107 S108, S116	1/16	1/8	—	3/16	3/8
S102-S106 S109-S115	—	3/16	—	3/16	3/8
S201, S207 S208, S216	11/16	2	1/4	2 15/16	3 7/16
S202-S206 S212-S213	11/16	2 1/8	3/16	3	3 1/2
S209&S210	5/8	2 1/16	1/8	2 13/16	3 5/16
S211	11/16	2 1/8	1/8	2 15/16	3 7/16
S214	5/8	2	1/8	2 3/4	3 1/4
S215	5/8	1 7/8	3/16	2 11/16	3 3/16
S301, S307 S308, S316	1/16	1/8	—	3/16	7/16
S302-S306 S309-S315	—	3/16	—	3/16	7/16

NOTES:
DLS DENOTES DEFLECTION DUE TO STRUCTURAL STEEL
DLC DENOTES DEFLECTION DUE TO DECK SLAB CONCRETE
SDL DENOTES DEFLECTION DUE TO BARRIER RAILS

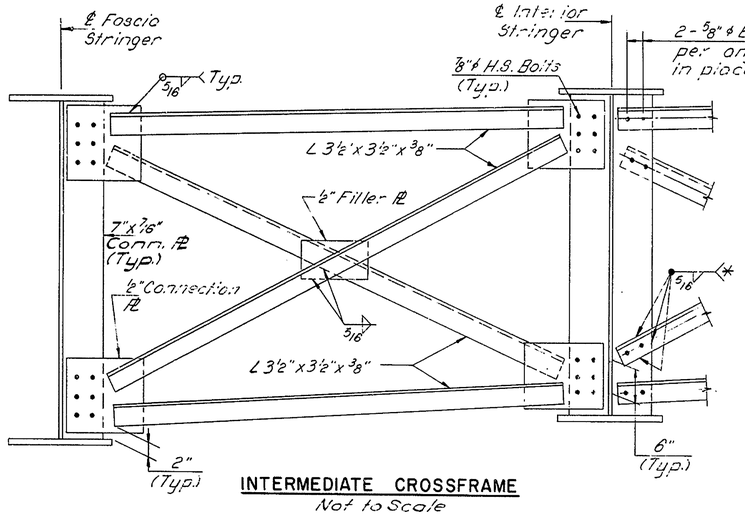

INTERMEDIATE CROSSFRAME
Not to Scale

NOTE:
The Contractor shall have the option of providing either bolted or welded connections for the crossframes.

STRINGER	WEB PLATE	PLATE A		PLATE B		PLATE C		PLATE D	
		SIZE	LENGTH	SIZE	LENGTH	SIZE	LENGTH	SIZE	LENGTH
S101,S107 S108,S116 S301,S307 S308,S316	54" X 1/2"	12" X 3/4"	FULL LENGTH	—	—	12" X 3/4"	FULL LENGTH	—	—
S102-S106 S109-S115 S302-S306 S309-S315	54" X 3/8"	12" X 3/4"	FULL LENGTH	—	—	12" X 3/4"	FULL LENGTH	—	—
S201,S207 S208,S216	54" X 1/2"	18" X 1"	18"-0"	18" X 7/8"	REMAINDER	18" X 1 3/4"	67'-6"	18" X 7/8"	REMAINDER
S202-S206 S212,S213	54" X 3/8"	18" X 1"	18'-0"	18" X 7/8"	REMAINDER	18" X 1 3/4"	67'-6"	18" X 7/8"	REMAINDER
S209,S210	54" X 3/8"	18" X 7/8"	FULL LENGTH	—	—	18" X 1 5/8"	64'-0"	18" X 7/8"	REMAINDER
S211	54" X 3/8"	18" X 1"	10'-0"	18" X 7/8"	REMAINDER	18" X 1 3/4"	67'-0"	18" X 7/8"	REMAINDER
S214	54" X 3/8"	18" X 7/8"	FULL LENGTH	—	—	18" X 1 1/2"	60'-0"	18" X 7/8"	REMAINDER
S215	54" X 3/8"	18" X 7/8"	FULL LENGTH	—	—	18" X 1 3/8"	54'-0"	18" X 7/8"	REMAINDER

REFERENCES:
1. For Framing Plan and Stringer lengths see Dwg. No. 11.

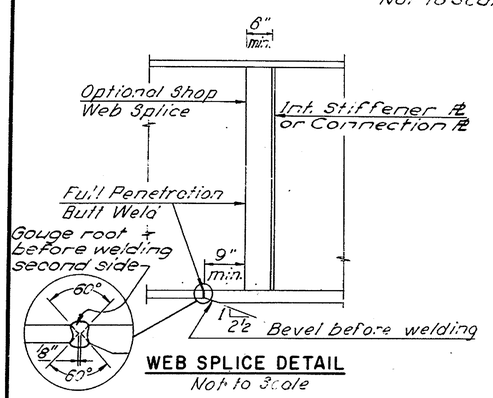

WEB SPLICE DETAIL
Not to Scale

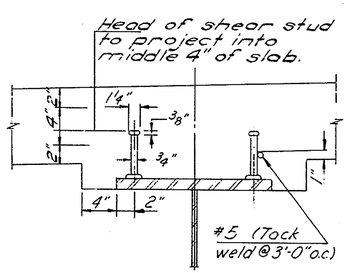

SHEAR STUD DETAIL
(Span 2 only)
Scale: 1½" = 1'-0"

	Date	Revision
In Charge of N. Eisman		
Designed by E. Hutchins		
Design Checked by P. Hermann		
Detailed by O. Brooks		
Detail Checked by N. Mauldin		

Prepared and Recommended
GOODKIND & O'DEA, INC. Consulting Engineers
Date MAY 25 1971

DELAWARE STATE HIGHWAY DEPARTMENT

STRINGER SCHEDULE AND STEEL DETAILS

APPROVED BY: John Eyrich
BRIDGE ENGINEER
JUN 18 1971
DATE

DWG. NO.	SCALE	DATE	GOODKIND & O'DEA, INC. CONSULTING ENGINEERS
12	As Noted	May 1971	

COUNTY	CONTRACT	B. F. B. BRK. NO.	STATE	FED. AID PROJECT NO.	SHEET NO.	TOTAL SHEETS
NEW CASTLE	71-05-003	2	DEL.		96	161

INTERSTATE ROUTE 495 OVER
TERMINAL THOROFARE IMPROVEMENT
BRIDGE NO. 6

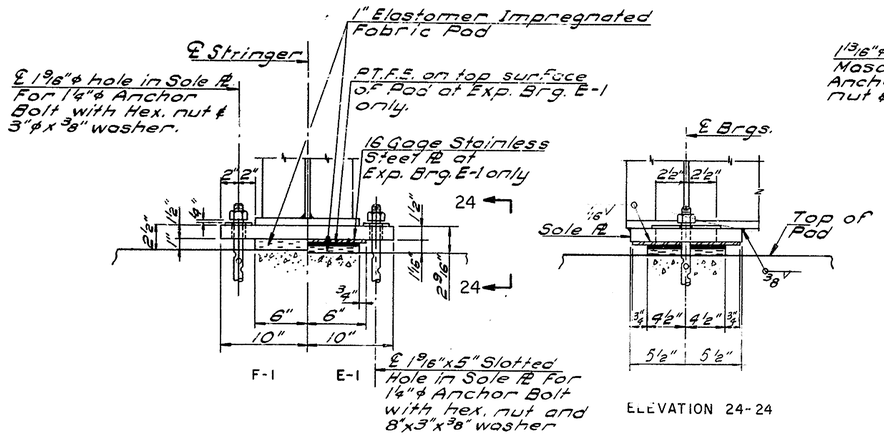

B E A R I N G S F-1 & E-1

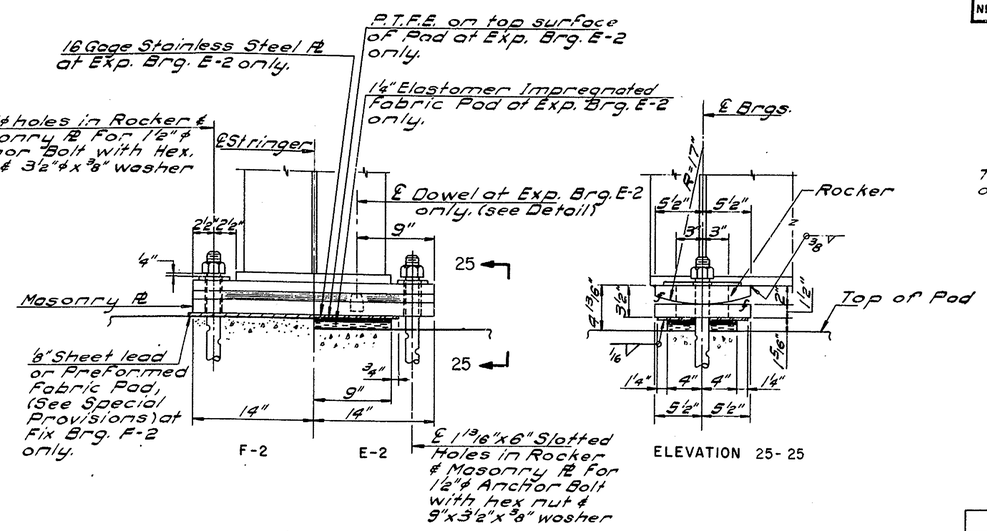

B E A R I N G S F-2 & E-2

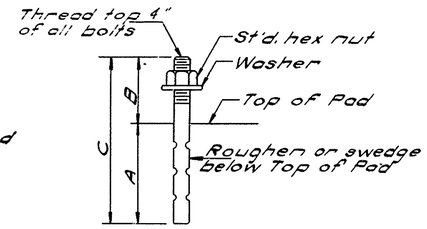

ANCHOR BOLT DETAIL
No Scale

ANCHOR BOLTS				
BEARING	A	B	C	DIAMETER
E-1 F-1	1'-0"	5"	1'-5"	1 1/4"
E-2	1'-3"	8"	1'-11"	1 1/2"
F-2	[illegible]	7"	1'-10"	1/2"

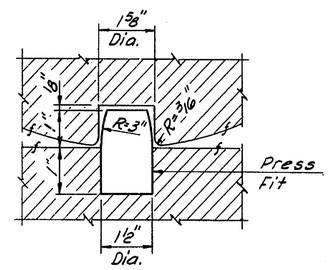

DOWEL DETAIL
Scale: Half Size

BEARING NOTES:

1. SOLE PLATES, MASONRY PLATES AND ROCKERS TO BE ASTM A-36 STEEL AND SHALL BE PAINTED. STAINLESS STEEL PLATES SHALL NOT BE PAINTED.
2. THE MATING SURFACE OF THE STAINLESS STEEL PLATES SHALL HAVE AN A.I.S.I. TYPE 304, HALF HARD 2B FINISH.
3. P.T.F.E. DENOTES POLYTETRAFLUOROETHYLENE.
4. f = A.S.A. FINISH OF 250 MICROINCHES OR FINER.
5. BURR THREADS ON ANCHOR BOLT ABOVE AND BELOW NUT.
6. ANCHOR BOLTS SHALL BE SET BY USE OF TEMPLATES.
7. SEE SPECIAL PROVISIONS FOR FASTENING OF FABRIC PAD TO CONCRETE.

REFERENCES:

1. For location of bearing shoes see Framing Plan Dwg. No. 11.

	Date	Revision
In Charge of N. Erikson		
Designed by N. Molmberg		
Design Checked by E. Hutchins		
Detailed by O. Brooks		
Detail Checks by N. Melnikov		

Prepared and Recommended
GOODKIND & O'DEA, INC. Consulting Engineers
Date MAY 25 1971

DELAWARE
STATE HIGHWAY DEPARTMENT

BEARING SHOE DETAILS

APPROVED BY: John G. Cullitel
BRIDGE ENGINEER
DATE JUN 18 1971

DWG. NO.	SCALE	DATE	GOODKIND & O'DEA, INC. CONSULTING ENGINEERS
13	1½"=1'-0" & As Noted	May 1971	

COUNTY	CONTRACT	S. P. R. REG. NO.	STATE	FED. AID PROJECT NO.	SHEET NO.	TOTAL SHEETS
NEW CASTLE	71-05-003	2	DEL.		97	151

INTERSTATE ROUTE 495 OVER TERMINAL THOROFARE IMPROVEMENT BRIDGE NO. 6

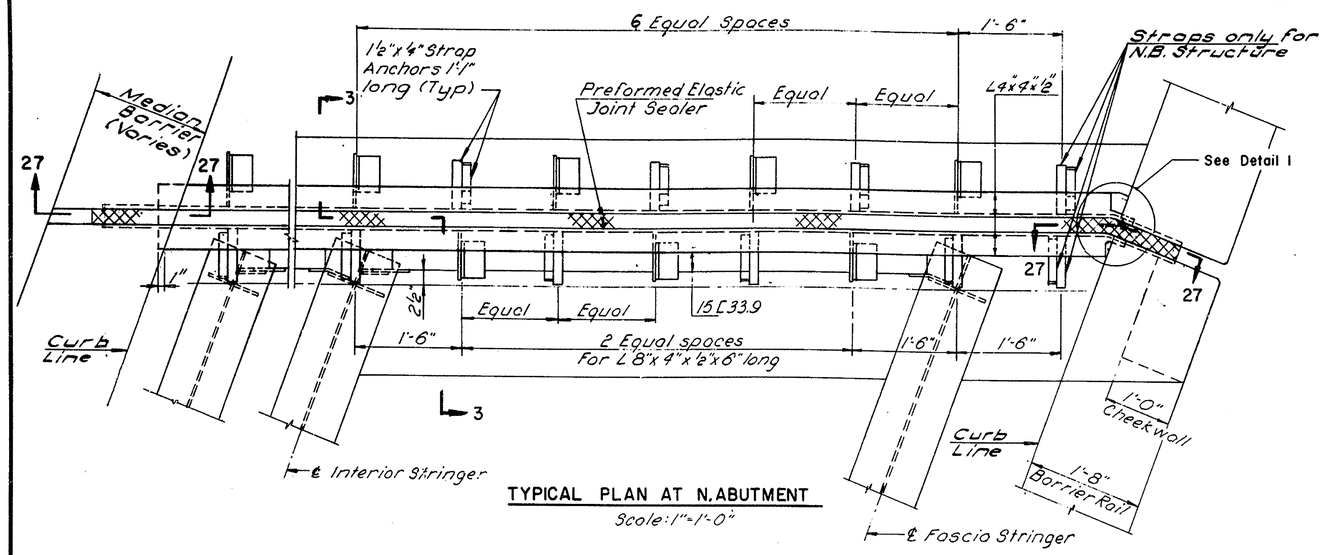

TYPICAL PLAN AT N. ABUTMENT
Scale: 1"=1'-0"

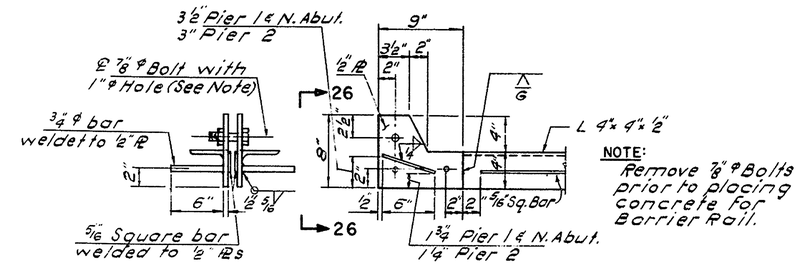

ELEVATION 26-26 · ELEVATION 27-27

END PLATES AT BARRIER RAIL & MEDIAN BARRIER
Scale: 1½"=1'-0"

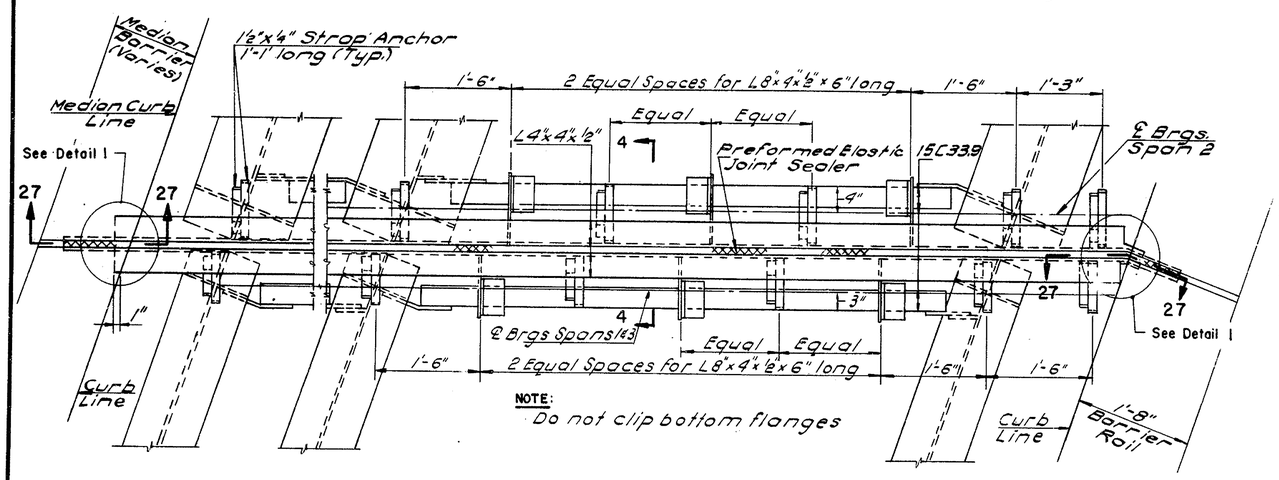

TYPICAL PLAN AT PIERS
Scale: 1"=1'-0"

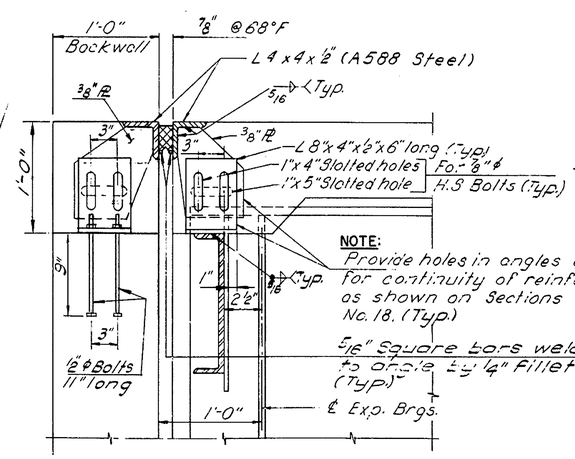

SECTION 3-3
Not to Scale

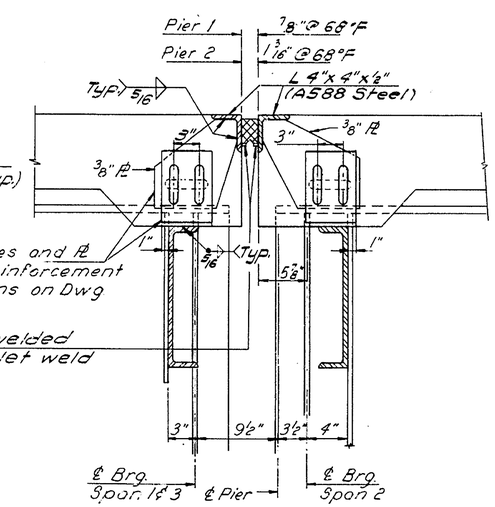

SECTION 4-4
Not to Scale

NOTE:
Provide adjustable temporary connection between expansion joint angles. (See Special Provisions)

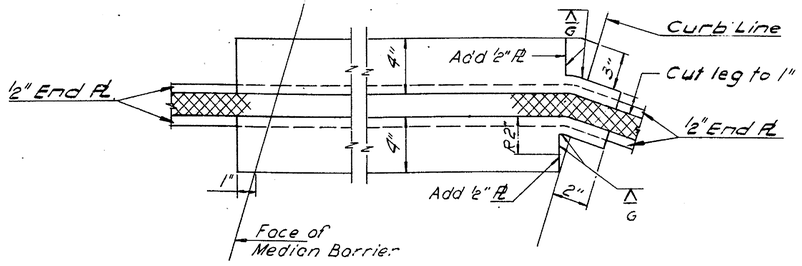

DETAIL I
Scale: 3"=1'-0"

In Charge of N. Erikson	Date	Revision
Designed by P. Hermann		
Design Checked by E. Hutchins		
Detailed by J. Brooks		
Detail Checked by N. Malmberg		

Prepared and Recommended
GOODKIND & O'DEA, INC. Consulting Engineers
Date MAY 25 1971

DELAWARE
STATE HIGHWAY DEPARTMENT

EXPANSION JOINT STEEL DETAILS

APPROVED BY: John S. Cubitt
BRIDGE ENGINEER
JUN 18 1971
DATE

DWG. NO.	SCALE	DATE	GOODKIND & O'DEA, INC. CONSULTING ENGINEERS
14	As noted	May 1971	

COUNTY	CONTRACT	B.P.D. REG. NO.	STATE	FED. AID PROJECT NO.	SHEET NO.	TOTAL SHEETS
NEW CASTLE	71-05-003	2	DEL.		98	121

INTERSTATE ROUTE 495 OVER TERMINAL THOROFARE IMPROVEMENT BRIDGE NO. 6

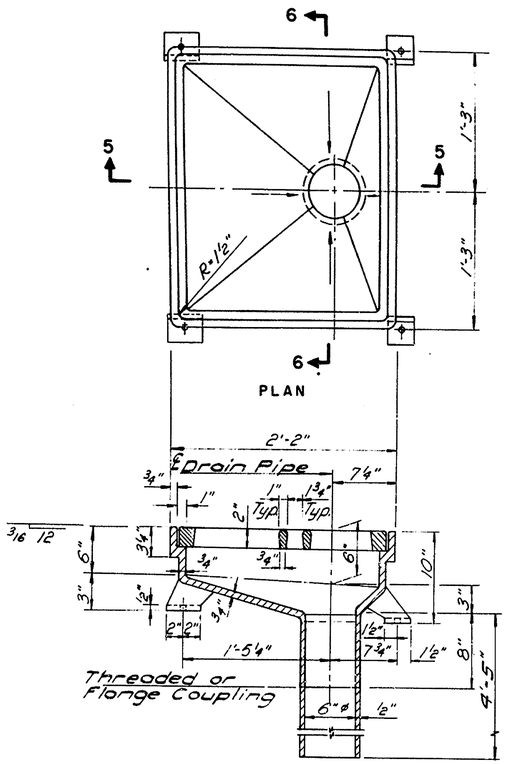

SECTION 5-5

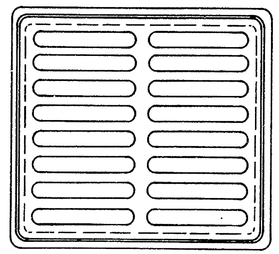

PLAN OF GRATING

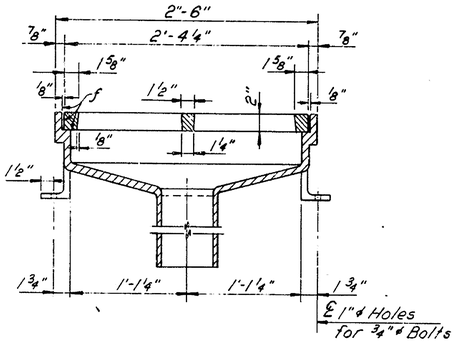

SECTION 6-6

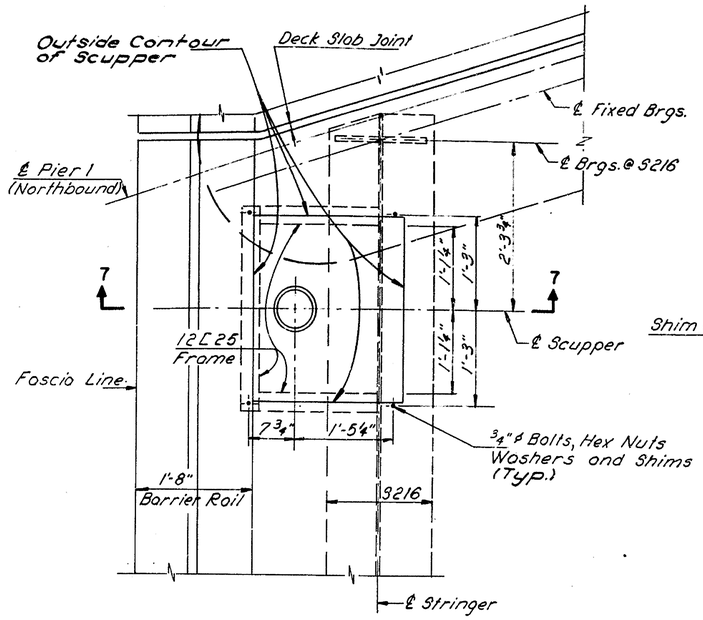

PLAN AT SCUPPER
Scale: 1" = 1'-0"

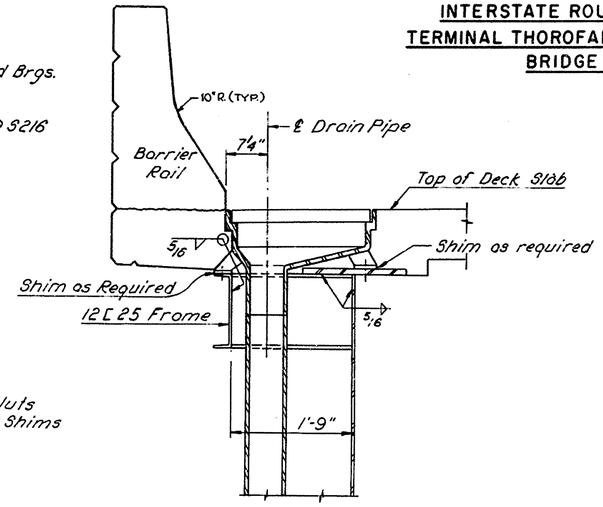

SECTION 7-7
Scale: 1" = 1'-0"

SCUPPER DETAILS
Scale: 1½" = 1'-0"

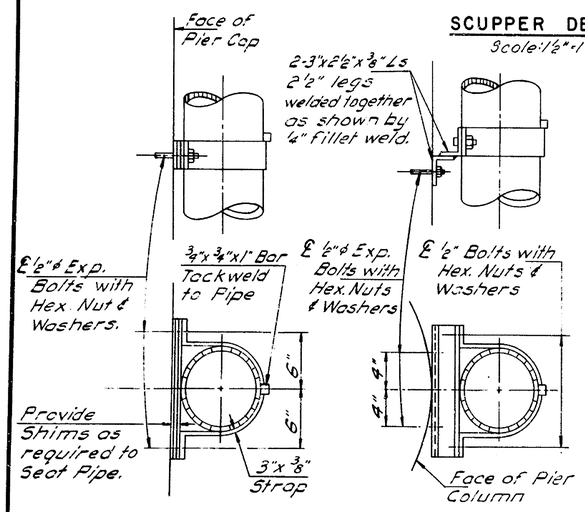

ON PIER CAP

ON PIER COLUMN

PIPE CLAMP DETAIL
Scale: 1½" = 1'-0"

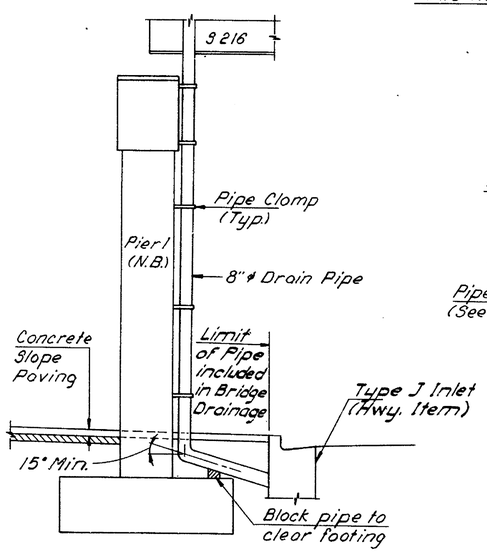

END VIEW

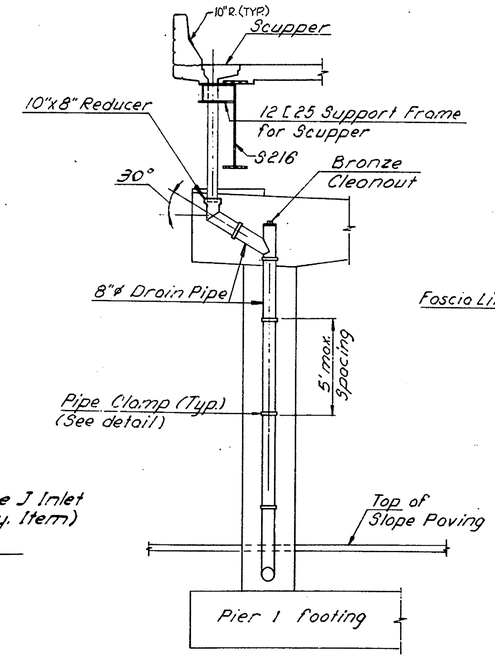

ELEVATION

DRAINAGE SYSTEM
Scale: ¼" = 1'-0"

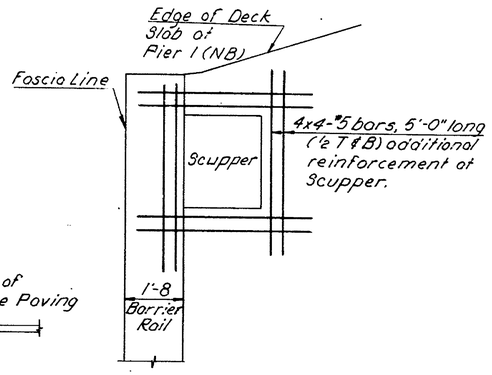

REINFORCEMENT AT SCUPPER
Scale: ¼" = 1'-0"

REFERENCES:

1. For details of S216 see Dwg. Nos. 11 and 12.
2. For details of Pier 1 Northbound see Dwg. No. 10.

NOTES:

1. Scupper material shall be ductile iron grade 65-45-12; ASTM 536-66.
2. Scupper Support material is included in Section No. 606 Structural Steel.
3. Payment for all pipes, fasteners, clamps and Scuppers shall be included in Bridge Drainage.

In Charge of	N. Erikson
Designed by	N. Erikson
Design Checked by	N. Chou
Detailed by	D. Brooks
Detail Checked by	N. Malinowski

Date	Revision

Prepared and Recommended
Donald Freeborn
GOODKIND & O'DEA, INC. Consulting Engineers

Date MAY 25 1971

DELAWARE
STATE HIGHWAY DEPARTMENT

BRIDGE DRAINAGE DETAILS

APPROVED BY: John G. Leite
BRIDGE ENGINEER

JUN 18 1971
DATE

DWG. NO.	SCALE	DATE	
15	As Noted	May 1971	GOODKIND & O'DEA, INC. CONSULTING ENGINEERS

COUNTY	CONTRACT	P. & A. REG. NO.	STATE	FED. AID PROJECT NO.	SHEET NO.	TOTAL SHEETS
NEW CASTLE	71-05-003	2	DEL.		99	161

INTERSTATE ROUTE 495 OVER TERMINAL THOROFARE IMPROVEMENT BRIDGE NO. 6

NOTE: Reinforcing and dimensions in ①②③ are similar.
Reinforcing and dimensions in ⑦⑧ are similar.

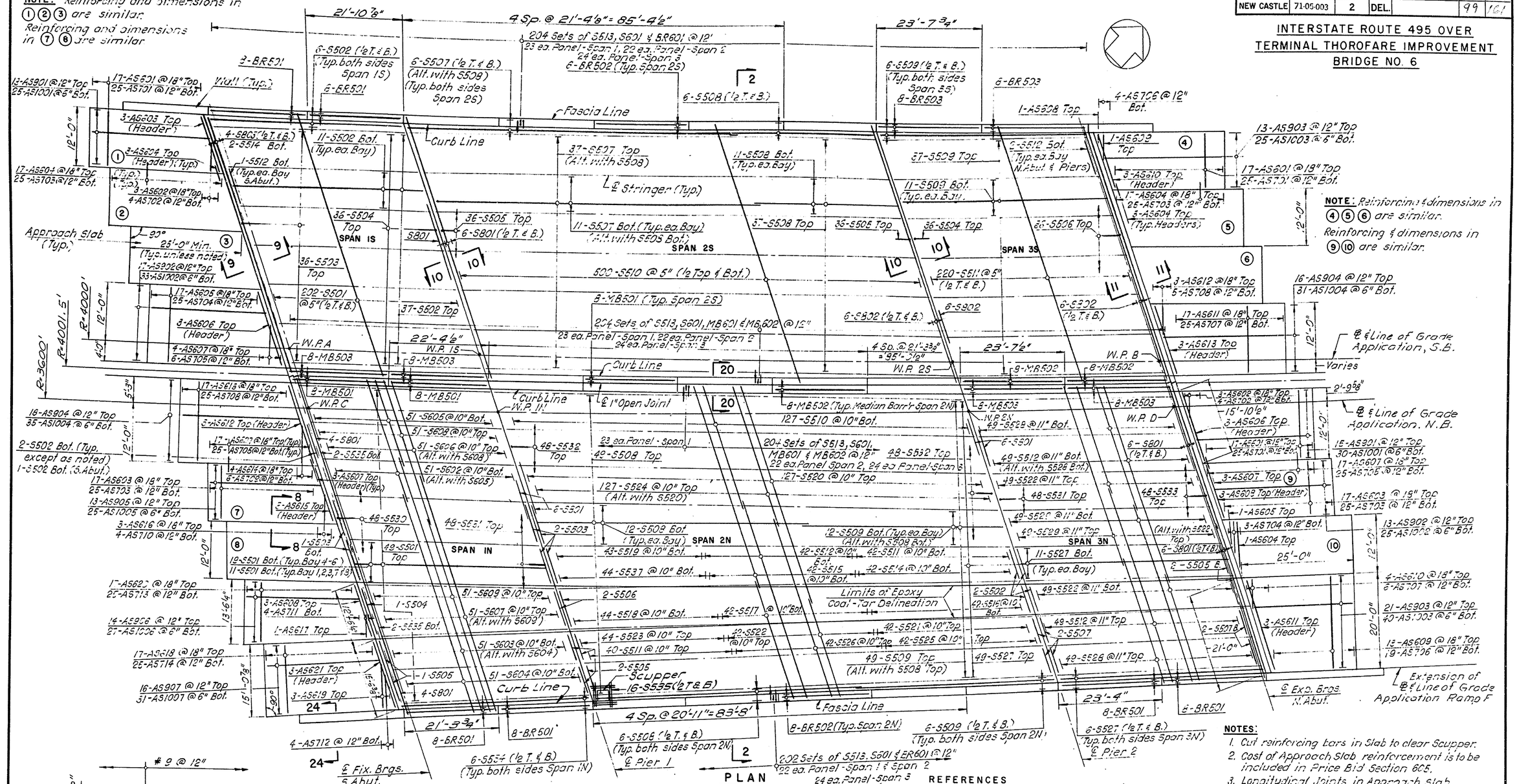

NOTE: Reinforcing & dimensions in ④⑤⑥ are similar.
Reinforcing & dimensions in ⑨⑩ are similar.

PLAN

Scale: 1" = 10'

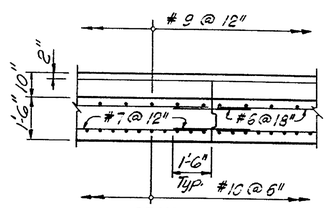

SECTION 8 – 8

Scale: 3/8" = 1'-0"

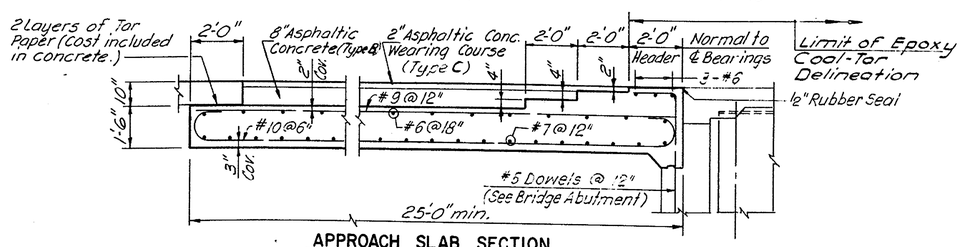

APPROACH SLAB SECTION

Scale: 3/8" = 1'-0"

NOTES:

1. Cut reinforcing bars in Slab to clear Scupper.
2. Cost of Approach Slab reinforcement is to be included in Price Bid Section 605.
3. Longitudinal Joints in Approach Slab are optional.

REFERENCES

1. For Section 2-2 and Limits of Epoxy Coal-Tar Delineation see Dwg. No. 17.
2. For Sections 9-9, 10-10 and 11-11 and Deck Elevation Table see Dwg. No. 18.
3. For Bar Lists see Dwg. Nos 25 and 26.
4. For Median Barrier Layout see Dwg. No. 20.
5. For Section 20-20 see Dwg. No. 20.
6. For Scupper location, see Dwg. No. 15.
7. For Section 24-24 see Dwg. No. 18.

Prepared and Recommended
GOODKIND & O'DEA, INC. Consulting Engineers
Date MAY 25 1971

In Charge of	N. Eriksen
Designed by	P. Hermann
Design Checked by	M. Siebels
Detailed by	T.B.H. & M.K.
Detail Checked by	

Date	Revision

DELAWARE
STATE HIGHWAY DEPARTMENT

DECK AND APPROACH SLAB PLAN

APPROVED BY: John E. Kauffold, BRIDGE ENGINEER — DATE JUN 18 1971

DWG. NO.	SCALE	DATE	
16	As Noted	May 1971	GOODKIND & O'DEA, INC. CONSULTING ENGINEERS

COUNTY	CONTRACT	F. B. A. REG. NO.	STATE	FED. AID PROJECT NO.	SHEET NO.	TOTAL SHEETS
NEW CASTLE	71-05-003	2	DEL.		100	161

INTERSTATE ROUTE 495 OVER TERMINAL THOROFARE IMPROVEMENT BRIDGE NO. 6

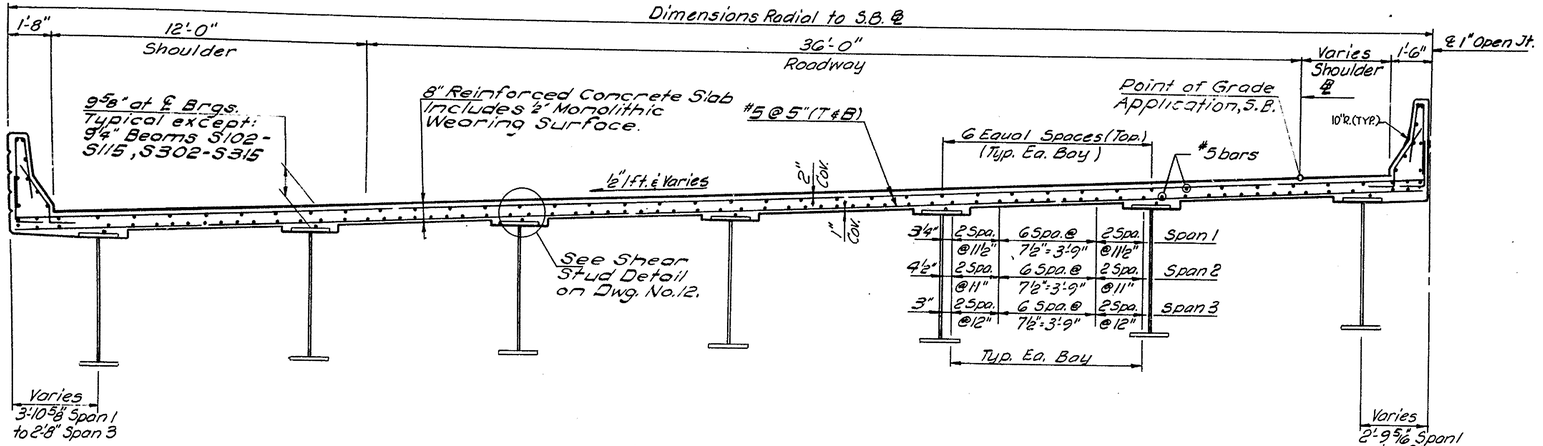

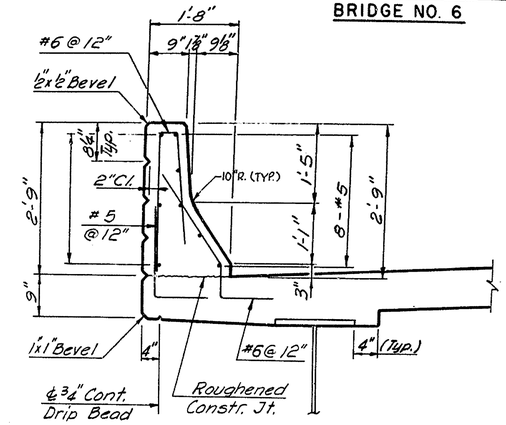

BARRIER RAIL DETAIL

Scale: ¾" = 1'-0"

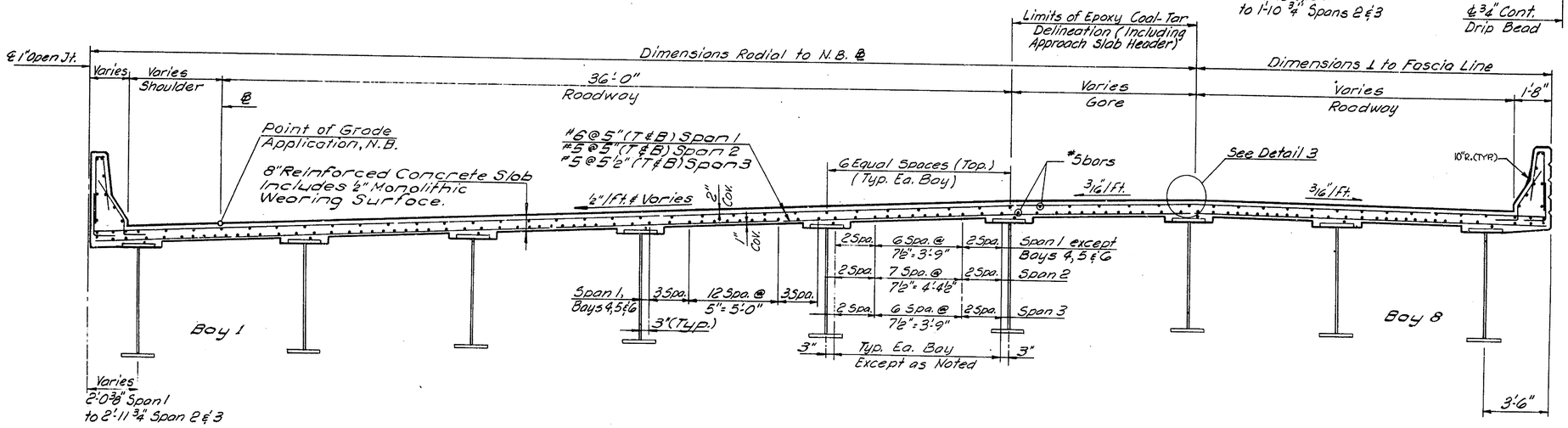

SECTION 2-2

Scale: ⅜" = 1'-0"

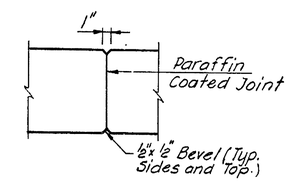

BARRIER RAIL JOINT DETAIL

Scale: 1½" = 1'-0"

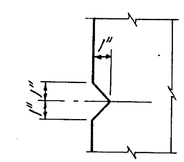

SCORE DETAIL

Scale: 3" = 1'-0"

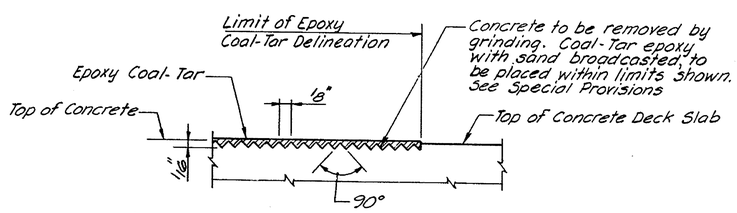

DETAIL 3

Not to Scale

REFERENCES

1. For location of Section 2-2 see Dwg. No. 16.
2. For Superelevation Plan see Dwg. No. 2.
3. For Details of Median Barrier see section 20-20 Dwg. No. 20.

In Charge of	N. Eriksen
Designed by	F. Hermann
Design Checked by	M. Siebold
Detailed by	T. B. Wasylyk
Detail Checked by	M. Siebold

Date	Revision

Prepared and Recommended
Donald Swallow
GOODKIND & O'DEA, INC. Consulting Engineers
Date MAY 25 1971

DELAWARE
STATE HIGHWAY DEPARTMENT

DECK CROSS SECTION AND BARRIER RAIL DETAILS

APPROVED BY: John G. Leibstle
BRIDGE ENGINEER
JUN 18 1971
DATE

DWG. NO.	SCALE	DATE	GOODKIND & O'DEA, INC. CONSULTING ENGINEERS
17	As Noted	May 1971	

COUNTY	CONTRACT	B. P. R. REG. NO.	STATE	FED. AID PROJECT NO.	SHEET NO.	TOTAL SHEETS
NEW CASTLE	71-05-003	2	DEL.		10	

INTERSTATE ROUTE 495 OVER TERMINAL THOROFARE IMPROVEMENT BRIDGE NO. 6

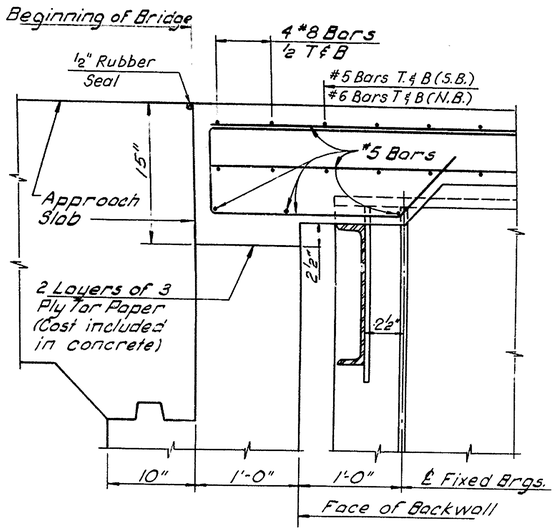

SECTION 9-9
Scale: 1½"=1'-0"

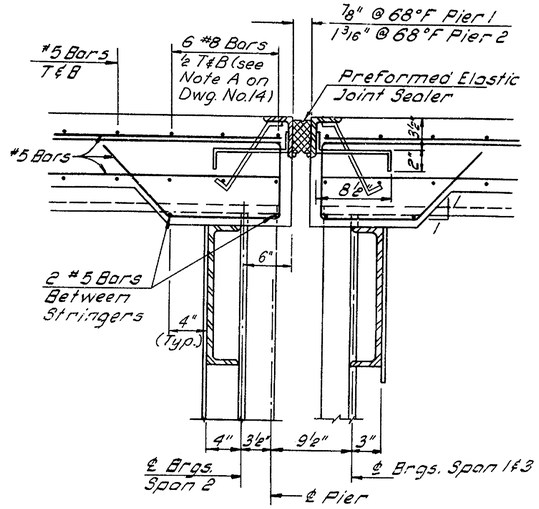

SECTION 10-10
Not to scale

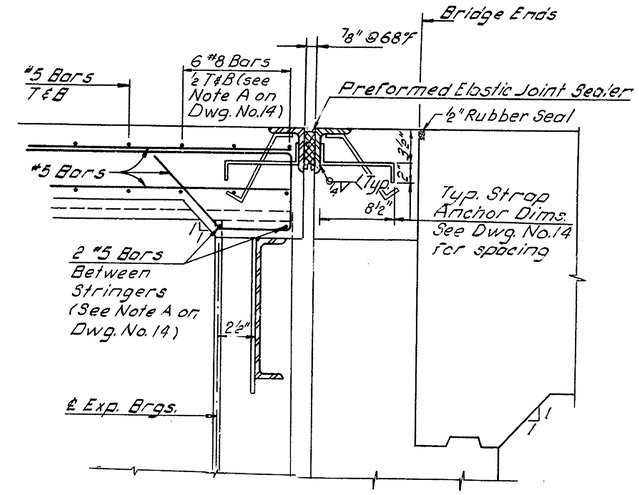

SECTION 11-11
Scale: 1½"=1'-0"

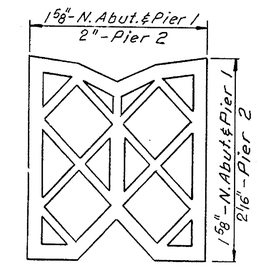

PREFORMED ELASTIC JOINT SEALER
Not to Scale

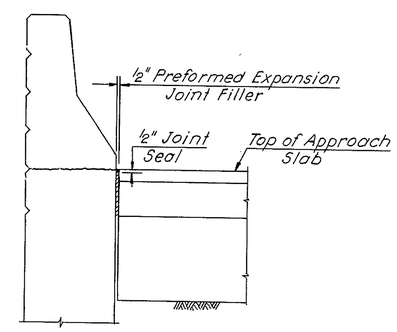

SECTION 24-24
Scale: ¾"=1'-0"

FINISHED DECK ELEVATIONS (FEET)

SOUTHBOUND STRINGER	℄ FIXED BRG.	1/4 PT.	1/2 PT.	3/4 PT.	℄ EXP. BRG.	NORTHBOUND STRINGER	℄ FIXED BRG.	1/4 PT.	1/2 PT.	3/4 PT.	℄ EXP. BRG.
S101	30.41	30.48	30.55	30.62	30.69	S108	32.26	32.34	32.41	32.49	32.57
S102	30.77	30.84	30.91	30.98	31.05	S109	32.60	32.67	32.75	32.82	32.90
S103	31.13	31.20	31.27	31.34	31.41	S110	32.93	33.01	33.08	33.16	33.24
S104	31.49	31.56	31.63	31.70	31.77	S111	33.27	33.34	33.42	33.50	33.58
S105	31.85	31.92	31.99	32.06	32.13	S112	33.68	33.75	33.82	33.90	33.97
S106	32.21	32.28	32.35	32.42	32.49	S113	34.07	34.14	34.22	34.29	34.36
S107	32.57	32.64	32.71	32.78	32.85	S114	34.27	34.33	34.39	34.45	34.51
S201	30.69	30.87	31.04	31.23	31.42	S115	34.19	34.25	34.31	34.38	34.44
S202	31.06	31.23	31.40	31.59	31.78	S116	34.10	34.16	34.22	34.28	34.35
S203	31.42	31.59	31.77	31.95	32.15	S208	32.58	32.77	32.96	33.17	33.38
S204	31.78	31.95	32.13	32.31	32.51	S209	32.91	33.10	33.30	33.51	33.72
S205	32.14	32.31	32.49	32.68	32.87	S210	33.25	33.44	33.64	33.84	34.06
S206	32.50	32.67	32.85	33.04	33.23	S211	33.58	33.77	33.97	34.18	34.40
S207	32.86	33.03	33.21	33.40	33.60	S212	33.98	34.16	34.34	34.53	34.73
S301	31.43	31.50	31.57	31.65	31.72	S213	34.37	34.54	34.70	34.87	35.05
S302	31.79	31.86	31.93	32.01	32.08	S214	34.52	34.69	34.85	35.01	35.18
S303	32.15	32.22	32.30	32.37	32.45	S215	34.44	34.60	34.77	34.93	35.10
S304	32.52	32.59	32.66	32.73	32.81	S216	34.35	34.52	34.68	34.85	35.01
S305	32.88	32.95	33.02	33.10	33.17	S308	33.39	33.47	33.56	33.64	33.73
S306	33.24	33.31	33.39	33.46	33.54	S309	33.73	33.81	33.88	33.96	34.03
S307	33.60	33.68	33.75	33.82	33.90	S310	34.07	34.15	34.20	34.26	34.32
						S311	34.40	34.47	34.52	34.57	34.61
						S312	34.74	34.80	34.83	34.86	34.90
						S313	35.06	35.09	35.11	35.12	35.14
						S314	35.19	35.20	35.22	35.23	35.24
						S315	35.10	35.11	35.13	35.14	35.15
						S316	35.01	35.02	35.03	35.05	35.06

STRINGER	DEFLECTION IN FEET* ℄ BRG.	1/4 PT.	1/2 PT.	3/4 PT.	℄ BRG.
S101, S107, S108, S116 S301, S307, S308, S316	0.00	0.01	0.01	0.01	0.00
S102-S106, S109-S115 S302-S306, S309-S315	0.00	0.01	0.02	0.01	0.00
S201, S207, S208, S216	0.00	0.14	0.19	0.14	0.00
S202-S206, S212, S213	0.00	0.14	0.19	0.14	0.00
S209, S210	0.00	0.14	0.18	0.14	0.00
S211	0.00	0.14	0.19	0.14	0.00
S214	0.00	0.14	0.17	0.14	0.00
S215	0.00	0.13	0.16	0.13	0.00

* DEFLECTION DUE TO CONCRETE DECK SLAB AND BARRIER RAIL.

REFERENCES:

1. For location of Sections 9-9, 10-10 11-11 and 24-24 See Dwg. No. 16.
2. For details of expansion joint device See Dwg. No. 14.
3. For additional joint details see Dwg. Nos. 19 & 20.

In Charge of N. Eriksen
Designed by E. Hutchins
Design Checked by N. Chou
Detailed by O. Brooks
Detail Checked by M. Siebold

Date	Revision

Prepared and Recommended
GOODKIND & O'DEA, INC. Consulting Engineers
Date MAY 25 1971

DELAWARE
STATE HIGHWAY DEPARTMENT

DECK JOINT DETAILS AND DECK ELEVATIONS

APPROVED BY: John T. Cullen
BRIDGE ENGINEER
JUN 18 1971
DATE

DWG. NO.	SCALE	DATE
18	As Noted	May 1971

GOODKIND & O'DEA, INC.
CONSULTING ENGINEERS

COUNTY	CONTRACT	S. P. S. SEQ. NO.	STATE	FED. AID PROJECT NO.	SHEET NO.	TOTAL SHEETS
NEW CASTLE	71-05-003	2	DEL.		102	151

INTERSTATE ROUTE 495 OVER TERMINAL THOROFARE IMPROVEMENT BRIDGE NO. 6

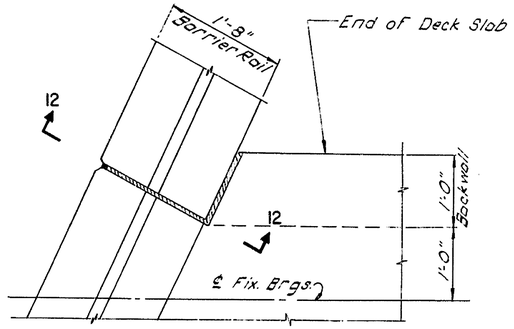

PLAN

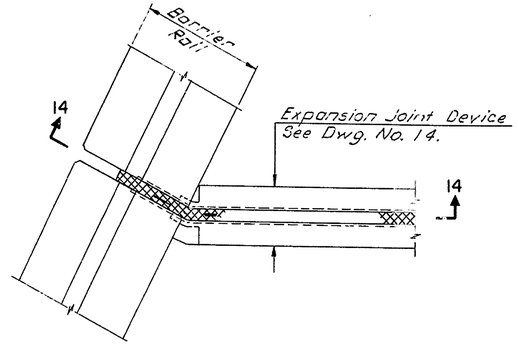

PLAN

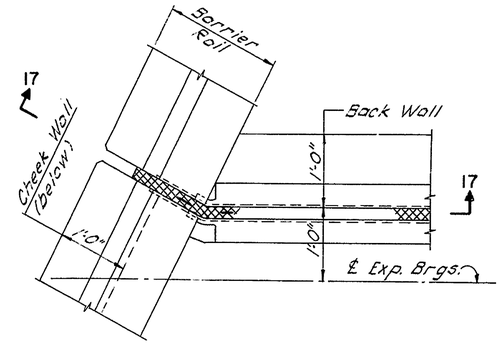

PLAN

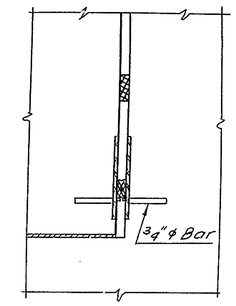

SECTION 19-19

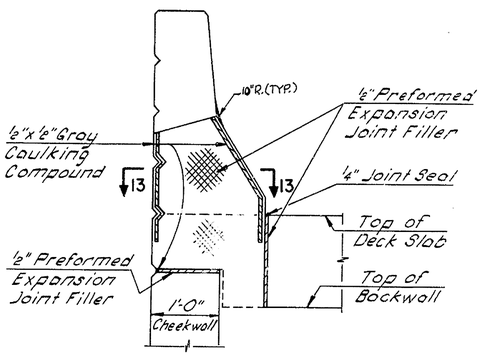

SECTION 12-12

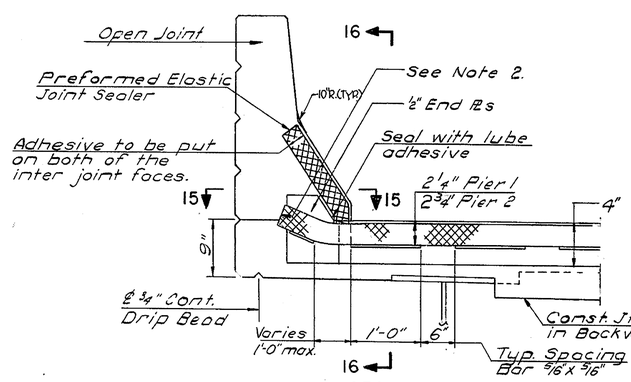

SECTION 14-14

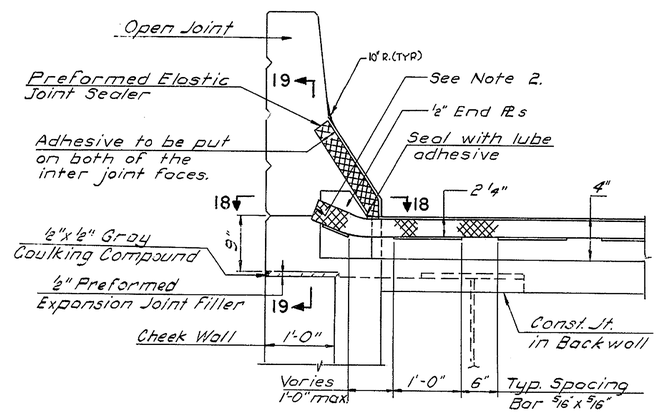

SECTION 17-17

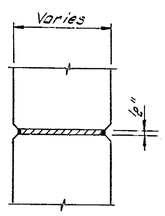

SECTION 13-13

FIXED JOINT AT SOUTH ABUTMENT

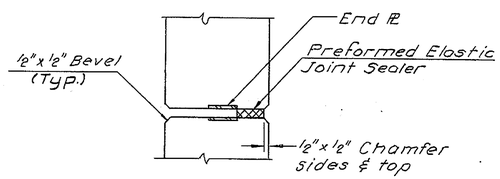

SECTION 15-15

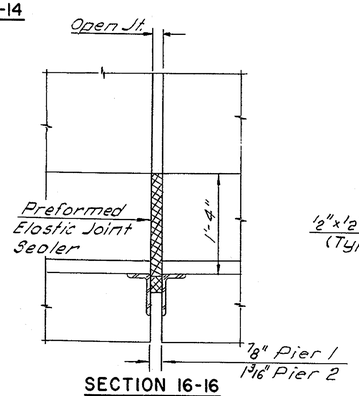

SECTION 16-16

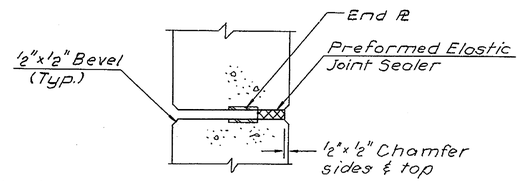

SECTION 18-18

EXPANSION JOINT AT PIERS

EXPANSION JOINT AT NORTH ABUTMENT

REFERENCES:

1. For Steel Detail in Barrier Rail see Dwg. No. 14.

NOTES:

1. The Preformed Expansion Joint Filler is to be fastened with galvanized nails or wire to at least one face of the Barrier Rail.
2. Provide an extra 4" of seal at Pier 1 & Abutment and 6" of seal at Pier 2 at ends of the Preformed Elastic Joint Sealer. Cut away all but the top of the shell to provide an end flap. Bend flap down and seal with lubricant adhesive.

	Date	Revision
In Charge of N. Eriksen		
Designed by E. Hutchins		
Design Checked by N. Chou		
Detailed by O. Brooks		
Detail Checked by M. Leibold		

Prepared and Recommended
GOODKIND & O'DEA, INC. Consulting Engineers
Date MAY 25 1971

DELAWARE
STATE HIGHWAY DEPARTMENT

DECK JOINTS AT BARRIER RAILS

APPROVED BY:
BRIDGE ENGINEER — DATE JUN 15 1971

DWG. NO.	SCALE	DATE	
19	1" = 1'-0" & As Noted	May 1971	GOODKIND & O'DEA, INC. CONSULTING ENGINEERS

COUNTY	CONTRACT	S.P.S. BRIDGE NO.	STATE	FED. AID PROJECT NO.	SHEET NO.	TOTAL SHEETS
NEW CASTLE	71-05-003	2	DEL.		103	161

INTERSTATE ROUTE 495 OVER TERMINAL THOROFARE IMPROVEMENT BRIDGE NO. 6

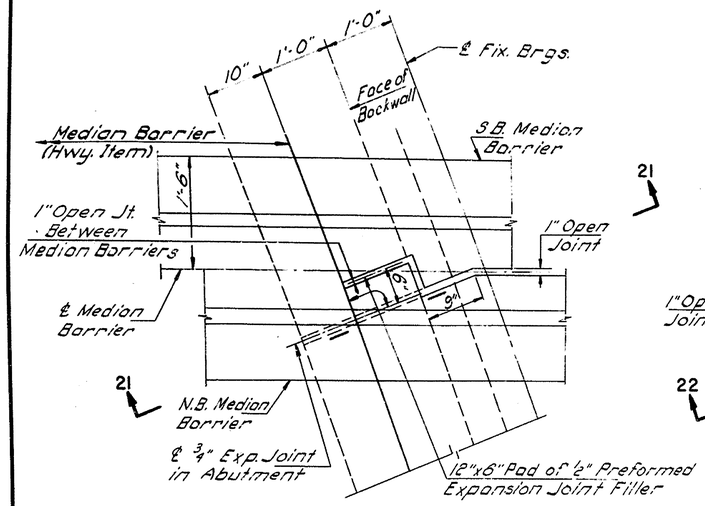

PLAN AT SOUTH ABUTMENT

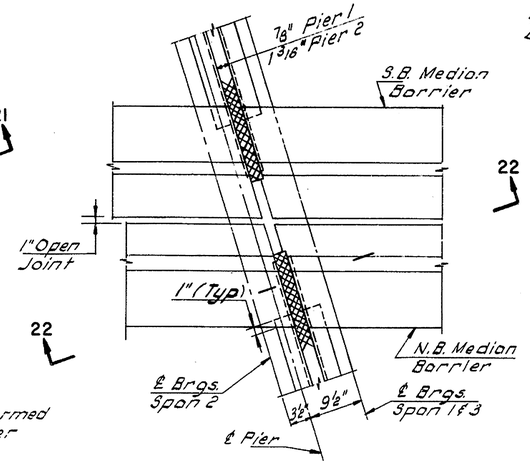

PLAN AT PIERS

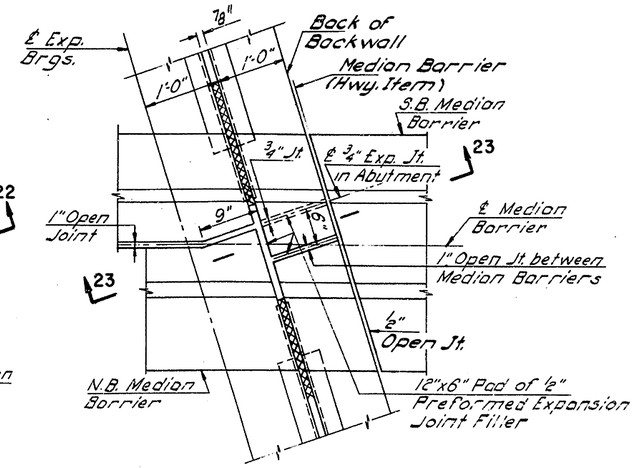

PLAN AT NORTH ABUTMENT

NOTE:
Preformed Elastic Joint Sealer to be turned up at Median Barrier Similar to detail shown for Barrier Rail on Dwg. No. 19.

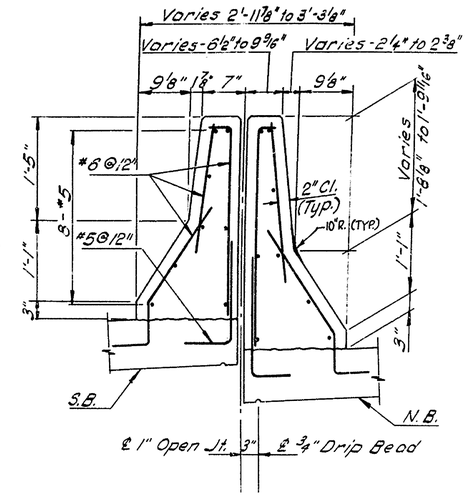

SECTION 20-20

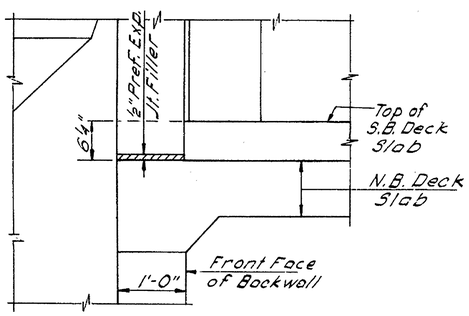

SECTION 21-21

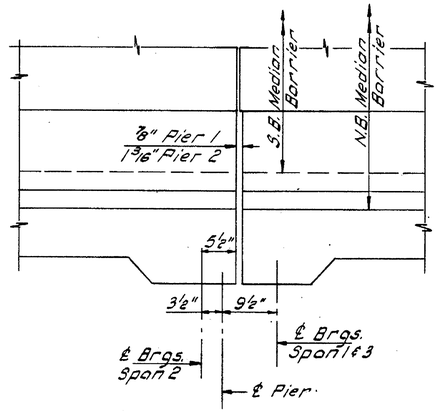

SECTION 22-22

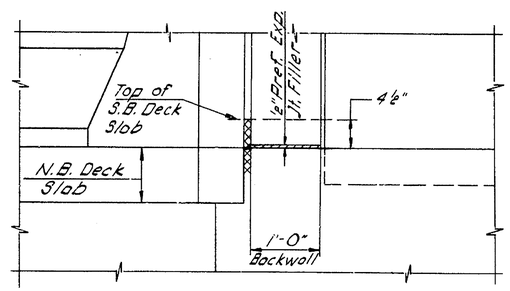

SECTION 23-23

REFERENCES:
1. For location of Section 20-20 see Dwg. No. 16.

MEDIAN BARRIER OFFSETS				
N.B. STATION	A	B	S.B. STATION	C
107+75	5'-3"	1'-6"	107+53.849	4'-0"
107+91.102	5'-3"	1'-6"	107+69.899	4"-0"
108+00	5'-1 7/8"	1'-6-3/8"	107+78.768	3'-11 1/2"
108+25	4'-10 1/2"	1'-7 3/8"	108+03.689	3'-9 7/8"
108+50	4'-7 1/8"	1'-8 1/8"	108+28.613	3'-8 3/8"
108+75	4'-3 3/4"	1'-8 5/8"	108+53.539	3'-6 7/8"
109+00	4'-0 1/2"	1'-9"	108+78.468	3'-5 1/4"
109+25	3'-9 1/8"	1'-9 1/8"	109+03.399	3'-3 3/4"
109+50	3'-5 3/4"	1'-9"	109+28.333	3'-2 1/4"
109+75	3'-2 3/8"	1'-8 3/4"	109+53.271	3'-0 5/8"

NOTE: A & B ARE RADIAL TO N.B. ℄
C IS RADIAL TO S.B. ℄

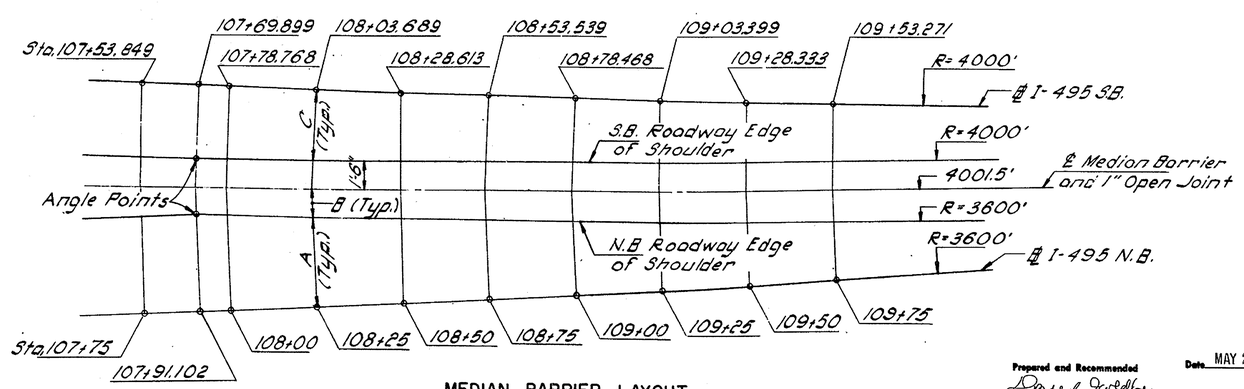

MEDIAN BARRIER LAYOUT
Not to Scale

In Charge of	N. Erikson
Designed by	E. Hutchins
Design Checked by	N. Chou
Detailed by	C. Brooks
Detail Checked by	M. Sabol

Date	Revision

Prepared and Recommended
GOODKIND & O'DEA, INC. Consulting Engineers
Date MAY 25 1971

DELAWARE
STATE HIGHWAY DEPARTMENT

MEDIAN BARRIER DETAILS

APPROVED BY: John G. Leibstein
BRIDGE ENGINEER
JUN 18 1971
DATE

DWG. NO.	SCALE	DATE	
20	1"=1'-0" & As Noted	May 1971	GOODKIND & O'DEA, INC. CONSULTING ENGINEERS

COUNTY	CONTRACT	S.F.A. SER. NO.	STATE	FED. AID PROJECT NO.	SHEET NO.	TOTAL SHEETS
NEW CASTLE	71-05-003	2	DEL.		103	161

INTERSTATE ROUTE 495 OVER TERMINAL THOROFARE IMPROVEMENT BRIDGE NO. 6

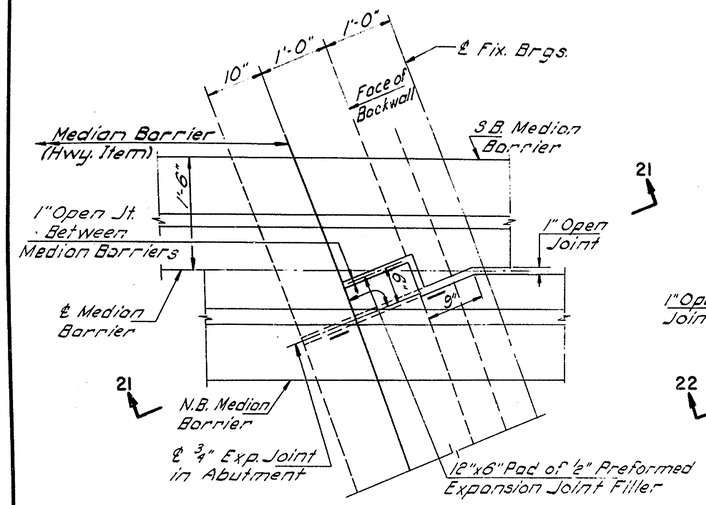

PLAN AT SOUTH ABUTMENT

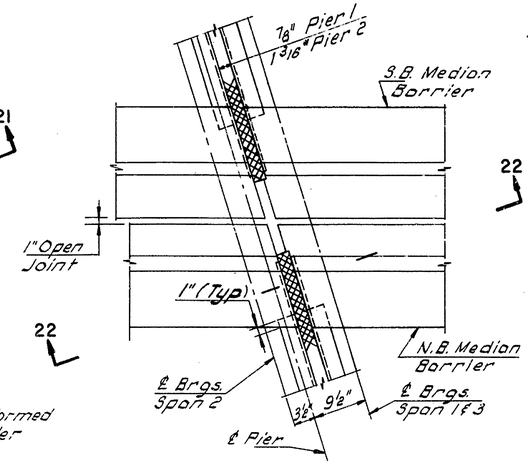

PLAN AT PIERS

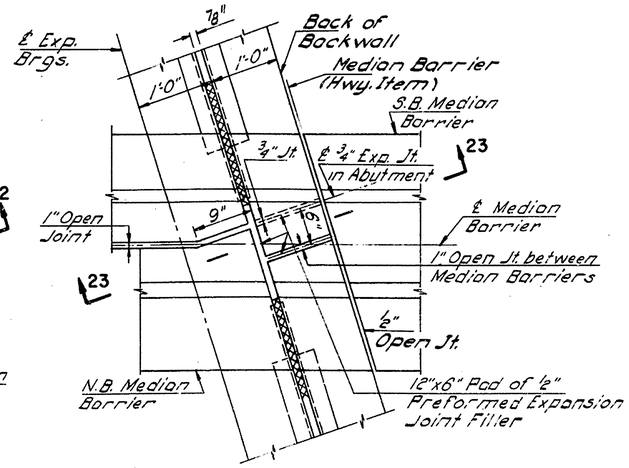

PLAN AT NORTH ABUTMENT

NOTE:
Preformed Elastic Joint Sealer to be turned up at Median Barrier Similar to detail shown for Barrier Rail on Dwg. No. 19.

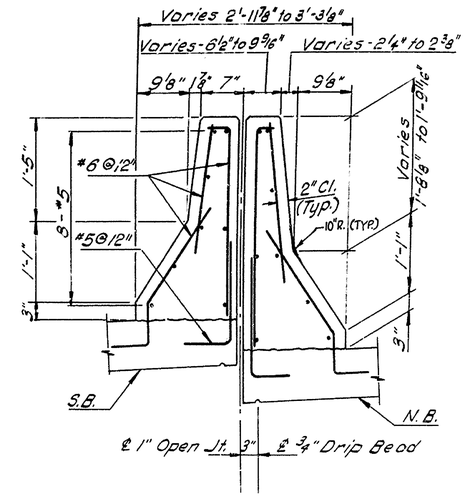

SECTION 20-20

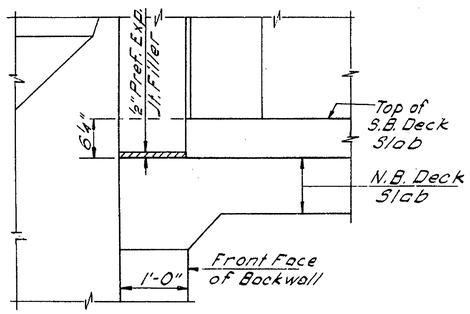

SECTION 21-21

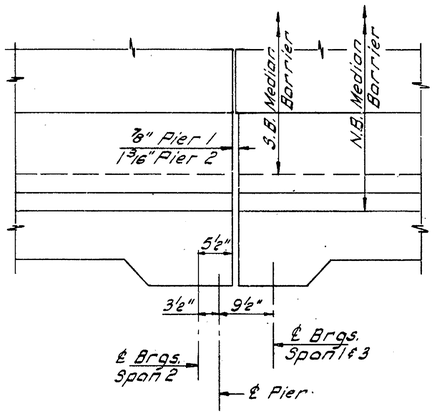

SECTION 22-22

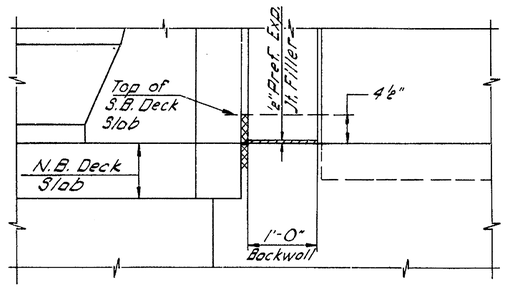

SECTION 23-23

REFERENCES:
1. For location of Section 20-20 see Dwg. No. 16.

MEDIAN BARRIER OFFSETS				
N.B. STATION	A	B	S.B. STATION	C
107+75	5'-3"	1'-6"	107+53.849	4'-0"
107+91.102	5'-3"	1'-6"	107+69.899	4"-0"
108+00	5'-1 7/8"	1'-6-3/8"	107+78.768	3'-11 1/2"
108+25	4'-10 1/2"	1'-7 3/8"	108+03.689	3'-9 7/8"
108+50	4'-7 1/8"	1'-8 1/8"	108+28.613	3'-8 3/8"
108+75	4'-3 3/4"	1'-8 5/8"	108+53.539	3'-6 7/8"
109+00	4'-0 1/2"	1'-9"	108+78.468	3'-5 1/4"
109+25	3'-9 1/8"	1'-9 1/8"	109+03.399	3'-3 3/4"
109+50	3'-5 3/4"	1'-9"	109+28.333	3'-2 1/4"
109+75	3'-2 3/8"	1'-8 3/4"	109+53.271	3'-0 5/8"

NOTE: A & B ARE RADIAL TO N.B. ℄
C IS RADIAL TO S.B. ℄

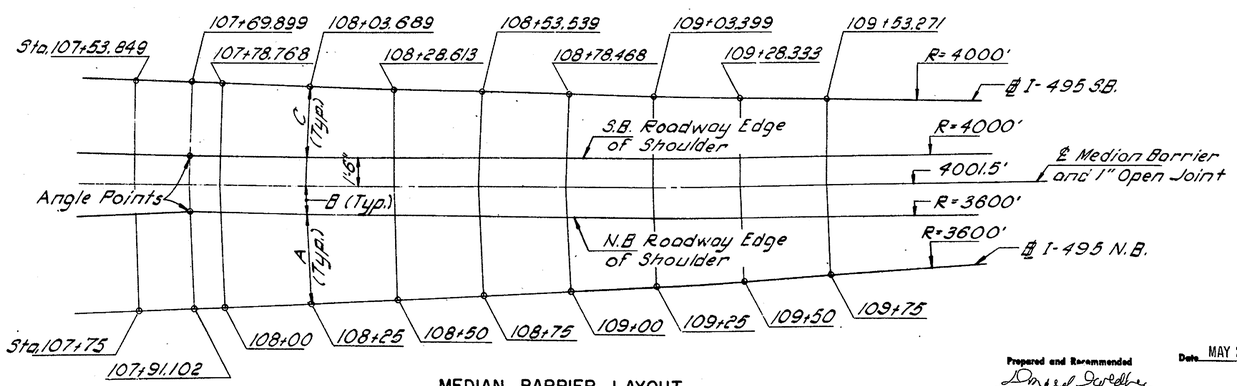

MEDIAN BARRIER LAYOUT
Not to Scale

	Date	Revision
In Charge of N. Erikson		
Designed by E. Hutchins		
Design Checked by N. Chou		
Detailed by O. Brooks		
Detail Checked by M. Lebold		

Prepared and Recommended
GOODKIND & O'DEA, INC. Consulting Engineers
Date MAY 25 1971

DELAWARE
STATE HIGHWAY DEPARTMENT

MEDIAN BARRIER DETAILS

APPROVED BY: John G. Leshé
BRIDGE ENGINEER
JUN 18 1971
DATE

DWG. NO.	SCALE	DATE	GOODKIND & O'DEA, INC. CONSULTING ENGINEERS
20	1"=1'-0" & As Noted	May 1971	

COUNTY	CONTRACT	S.P.R. REQ. NO.	STATE	FED. AID PROJECT NO.	SHEET NO.	TOTAL SHEETS
NEW CASTLE	71-05-003	2	DEL.		104	161

INTERSTATE ROUTE 495 OVER TERMINAL THOROFARE IMPROVEMENT BRIDGE NO. 6

MARK	SIZE	TYPE	LENGTH	NO	A	B	C	D	E	REMARKS
SOUTH ABUTMENT										
FOOTING										
F 501	5	STR	15-1	3						LONG BOT
F 502	5	STR	11-9	18						LONG TOP & BOT
F 503	5	STR	20-6 TO 23-0	8						LONG TOP
F 504	5	STR	8-6	25						TRANS BOT
F 505	5	STR	7-0	152						TRANS TOP
F 506	5	STR	40-0	36						LONG TOP & BOT
F 507	5	STR	37-6 TO 39-9	10						LONG BOT
F 508	5	STR	35-6 TO 37-9	8						LONG TOP
F 509	5	STR	22-0 TO 25-0	10						LONG BOT
F 510	5	I	4-5	134	3-10	0-7	0-5	0-5		DOWEL
F 511	5	STR	7-0 TO 10-0	12						LONG TOP
F 512	5	VIII	3-6	1	--	2-0	0-5	1-5.5	1-6	CORNER BOT
F 513	5	STR	11-6	18						LONG
F 514	5	II	6-5	20	5-0	1-6	--			VERT STEP
F 515	5	STR	3-0	114						DOWEL
F 516	5	STR	13-0	1						TRANS BOT
F 601	6	STR	7-0	7						TRANS TOP
F 602	6	STR	13-0	1						TRANS TOP
F 701	7	STR	8-6	126						TRANS BOT
F 702	7	I	5-4	24	4-6	0-10	0-7	0-7		DOWEL
F 703	7	STR	8-5 TO 11-6	11						LONG BOT
F 801	8	I	6-10	4	5-9	1-1	0-9	0-10		DOWEL
PILE REINFORCEMENT										
P 301	3	III	2-11	355	2-2.9	0-4.1	0-4.1	0-3.8		TIES
P 601	6	I	8-8	426	8-0	0-8	0-6	0-6		VERT

MARK	SIZE	TYPE	LENGTH	NO	A	B	C	D	E	REMARKS
ABUTMENT STEM										
AS 501	5	II	6-8	30	2-7	1-8	2-7			VERT PAD
AS 502	5	STR	9-1	16						VERT NF
AS 503	5	STR	9-1	20						VERT FF
AS 504	5	STR	21-6	9						HORIZ NF + SEAT
AS 505	5	STR	20-6	14						HORIZ FF
AS 506	5	II	4-2	136	--	3-3	1-0			HORIZ SEAT
AS 507	5	X	6-1	7	3-10	0-10.5	1-6	1-5	0-5.5	HORIZ
AS 508	5	II	5-9	134	4-2	1-8	--			VERT BKWL
AS 509	5	VIII	5-9	134	--	3-5.5	1-7	1-7	2-3	VERT FF
AS 510	5	II	3-8	102	2-6	1-3	--			VERT BKWL
AS 511	5	II	3-10	32	2-8	1-3	--			VERT BKWL
AS 512	5	STR	7-1	135						VERT BKWL NF
AS 513	5	STR	2-11	135						VERT BKWL FF
AS 514	5	STR	8-3	21						VERT NF
AS 515	5	STR	7-9	31						VERT FF
AS 516	5	STR	29-8	28						HORIZ NF & FF
AS 517	5	STR	22-8	26						HORIZ NF & FF
AS 518	5	STR	7-3	16						VERT NF + FF
AS 519	5	STR	6-1	42						VERT NF
AS 520	5	STR	26-2	26						HORIZ
AS 521	5	STR	6-1	32						VERT FF
AS 522	5	STR	5-5	22						VERT NF
AS 523	5	STR	5-0	32						VERT FF
AS 524	5	STR	31-11	19						HORIZ
AS 525	5	VIII	4-8	6	3-2	--	1-4.5	0-5.5	1-6	HORIZ NF
AS 526	5	VIII	21-7	5	--	20-2	0-5	1-4.5	1-5	HORIZ NF
AS 527	5	VIII	32-10	5	31-4	--	0-7	1-5	1-6	HORIZ
AS 528	5	STR	14-1	3						VERT
AS 529	5	II	8-1	8	3-10	0-7	3-10			HORIZ
AS 530	5	STR	10-4	2						VERT NF
PAD REINFORCEMENT										
AP 501	5	STR	2-8	30						
WINGWALL STEM										
WS 501	5	II	10-3 TO 15-5	12	3-9 TO 6-4	1-3 TO 1-3	5-5 TO 8-0			VERT CANTILEVER
WS 502	5	STR	10-10	12						VERT FF
WS 503	5	STR	12-6	9						VERT NF
WS 504	5	STR	16-6	4						VERT NF
WS 505	5	STR	11-2	28						HORIZ EF
WS 506	5	STR	14-11	4						VERT FF
WS 507	5	STR	12-5	16						HORIZ EF
WS 508	5	STR	12-9	9						VERT NF
WS 509	5	STR	5-3	22						HORIZ EF
WS 601	6	STR	8-10	28						HORIZ EF
WS 602	6	VIII	4-2	43	1-10	--	1-4	1-10.7	2-4	VERT
BARRIER RAIL										
BR 501	5	STR	17-2	8						HORIZ
BR 502	5	STR	5-2	9						HORIZ
BR 503	5	STR	18-5	8						HORIZ
BR 601	6	X	4-8	43	2-7	0-4	1-10	0-2.7	1-1.9	VERT

BAR BENDING DIAGRAMS

ALL DIMENSIONS ARE OUT TO OUT OF BARS

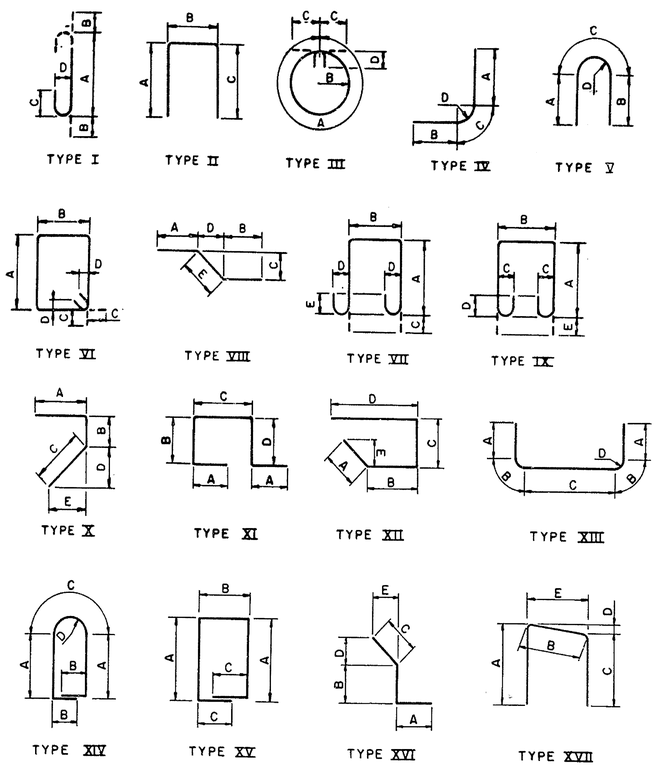

In Charge of N. Eriksen
Designed by P. Hermann
Design Checked by M. Siebold
Detailed by A. Cerfeld
Detail Checked by P. Hermann

Date	Revision

Prepared and Recommended
GOODKIND & O'DEA, INC.
Consulting Engineers
Date MAY 25 1971

DELAWARE
STATE HIGHWAY DEPARTMENT

BAR LIST
SOUTH ABUTMENT

APPROVED BY:
BRIDGE ENGINEER
JUN 18 1971
DATE

DWG. NO.	SCALE	DATE	
21		MAY 1971	GOODKIND & O'DEA, INC. CONSULTING ENGINEERS

COUNTY	CONTRACT	U. P. D. REG. NO.	STATE	FED. AID PROJECT NO.	SHEET NO.	TOTAL SHEETS
NEW CASTLE	71-05-003	2	DEL.	-	105*	161

INTERSTATE ROUTE 495 OVER TERMINAL THOROFARE IMPROVEMENT BRIDGE NO. 6

MARK	SIZE	TYPE	LENGTH	NO	A	B	C	D	E	REMARKS
NORTH ABUTMENT FOOTING										
F 501	5	STR	40-0	36						LONG TOP & BOT
F 502	5	STR	27-5 TO 30-1	10						LONG BOT
F 503	5	STR	18-4 TO 21-4	10						LONG BOT
F 504	5	STR	13-6	2						LONG BOT
F 505	5	STR	12-3 TO 13-3	4						LONG BOT
F 506	5	STR	4-9	16						LONG TOP & BOT
F 507	5	X	3-0	1	--	1-6	1-6	1-5	0-5.8	LONG BOT
F 508	5	STR	8-3	5						LONG BOT
F 509	5	STR	10-6	4						TRANS BOT
F 510	5	STR	8-6	31						TRANS BOT LONG TOP
F 511	5	II	6-5	20	4-0	2-6	--			LONG TOP & BOT
F 512	5	STR	17-3	18						LONG TOP & BOT
F 513	5	STR	11-0	8						LONG TOP
F 514	5	STR	7-0	137						TRANS TOP
F 515	5	STR	17-3 TO 19-6	8						LONG TOP
F 516	5	STR	26-11 TO 29-0	8						LONG TOP
F 517	5	STR	3-0	106						DOWEL NF
F 518	5	I	4-5	122	3-10	0-7	0-5	0-5		DOWEL FF
F 601	6	STR	9-0	4						TRANS TOP
F 701	7	STR	8-6	115						TRANS BOT
F 702	7	STR	6-9	7						TRANS BOT
F 703	7	I	5-4	26	4-6	0-10	0-7	0-7		DOWEL FF
F 801	8	I	6-10	3	5-9	1-1	0-9	0-10		DOWEL FF
PILE REINFORCEMENT										
P 301	3	III	2-11	320	2-2.9	0-4.1	0-4.1	0-3.8		TIES
P 601	6	I	8-8	384	8-0	0-8	0-6	0-6		VERT

MARK	SIZE	TYPE	LENGTH	NO	A	B	C	D	E	REMARKS
ABUTMENT STEM										
AS 501	5	STR	4-8	50						VERT NF & FF
AS 502	5	STR	6-2	45						VERT NF & FF
AS 503	5	STR	6-8	40						VERT NF & FF
AS 504	5	STR	7-7	40						VERT NF & FF
AS 505	5	STR	8-0	31						VERT NF & FF
AS 506	5	STR	30-4	6						HORIZ NF & SEAT
AS 507	5	STR	29-10	13						HORIZ FF & BKWL FF
AS 508	5	X	6-1	4	3-11	0-9.5	1-6	1-5	0-6	HORIZ NF
AS 509	5	STR	25-8	26						HORIZ NF FF SEAT & BKWL
AS 510	5	STR	22-8	56						HORIZ NF FF SEAT & BKWL
AS 511	5	STR	18-10	22						HORIZ NF FF SEAT & BKWL
AS 512	5	VIII	4-8	6	--	3-2	1-5.3	0-5.3	1-6	HORIZ NF
AS 513	5	VIII	19-5	6	--	17-11	0-5.3	1-5.3	1-6	HORIZ NF BKWL
AS 514	5	VIII	30-6	7	--	29-0	0-5.8	1-5	1-6	HORIZ NF BKWL
AS 515	5	II	4-2	125	3-3	1-0	--			TRANS SEAT
AS 516	5	VIII	5-8	122	--	3-5	1-7	1-7	2-3	VERT FF
AS 517	5	II	3-10	29	2-8	1-3	--			VERT BKWL FF
AS 518	5	II	3-7	93	2-5	1-3	--			VERT BKWL FF
AS 519	5	STR	7-4	123						VERT BKWL NF
AS 520	5	STR	3-2	123						VERT BKWL FF
AS 521	5	II	5-2	123	2-4	0-8	2-4			VERT BKWL
AS 522	5	II	5-9	118	4-2	1-8	--			VERT BKWL
AS 524	5	II	6-8	30	2-7	1-8	2-7			VERT PAD REINF
AS 525	5	STR	9-8	3						VERT CKWL NF
AS 526	5	STR	6-4	5						VERT CKWL FF
AS 527	5	II	8-3	4	3-11	0-7	3-11			HORIZ CKWL
AS 528	5	STR	13-1	2						VERT CKWL NF
AS 529	5	II	6-9	4	3-2	0-7	3-2			HORIZ CKWL
AS 530	5	STR	4-0	2						VERT BKWL 1/2 EF
AS 601	6	VIII	4-7	4	--	2-9	1-0.5	1-5.5	1-10	VERT BKWL 1/2 EF
AS 801	8	STR	28-7	4						HORIZ HEADER
AS 802	8	STR	25-8	4						HORIZ HEADER
AS 803	8	STR	22-8	8						HORIZ HEADER
AS 804	8	STR	17-9	4						HORIZ HEADER
PAD REINFORCEMENT										
AP 501	5	STR	2-8	30						HORIZ PAD REINF
MEDIAN BARRIER RAIL										
MB 501	5	II	5-10	2	2-8	0-8	2-8			VERT
MB 502	5	XVII	3-1	2	1-3	0-8	1-2	0-2.5		HORIZ
MB 503	5	XVII	1-7	2	0-7	0-8	0-4	0-2.5		HORIZ
MB 601	6	X	2-6	2	--	0-5	2-1	0-2.5	2-1	VERT
MB 602	6	X	2-4	2	--	0-3	2-1	0-2.5	2-1	VERT
WINGWALL STEM										
WS 501	5	STR	8-1	16						HORIZ 1/2 EF
WS 502	5	STR	12-3	7						VERT NF
WS 503	5	STR	10-6	8						VERT FF
WS 504	5	STR	3-1	20						HORIZ 1/2 EF
WS 505	5	STR	15-6	3						VERT NF
WS 506	5	STR	13-10	3						VERT FF
WS 507	5	STR	12-4	12						VERT NF
WS 508	5	STR	10-8	18						VERT FF
WS 509	5	STR	16-11	16						HORIZ 1/2 EF
WS 510	5	II	10-3 TO 15-5	12	3-9 TO 6-4	1-3 TO 1-3	5-5 TO 8-0			VERT CANTILEVER
WS 601	6	STR	8-10	28						HORIZ CANTILEVER
WS 602	6	VIII	4-0	43	--	2-2	1-0.5	1-6.3	1-10	VERT FF
BARRIER RAIL										
BR 501	5	STR	14-0	8						HORIZ
BR 502	5	STR	3-1	8						HORIZ
BR 503	5	STR	22-11	8						HORIZ
BR 601	6	X	4-8	43	2-7	0-4	1-10	0-2.7	1-9.9	VERT

BAR BENDING DIAGRAMS

ALL DIMENSIONS ARE OUT TO OUT OF BARS

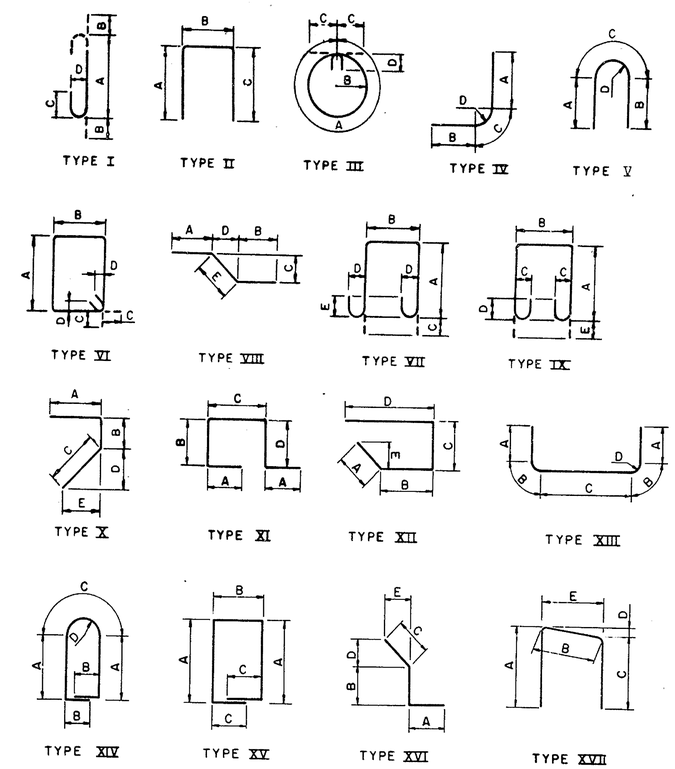

In Charge of	N. Erickson
Designed by	P. Hermann
Design Checked by	H. Siebold
Detailed by	R. Metcalf
Detail Checked by	E. Hutchins

Date	Revision

Prepared and Recommended
Donald DeBellis
GOODKIND & O'DEA, INC.
Consulting Engineers

Date MAY 25 1971

DELAWARE
STATE HIGHWAY DEPARTMENT

BAR LIST
NORTH ABUTMENT

APPROVED BY: John E. Sullivan
BRIDGE ENGINEER

JUN 18 1971
DATE

DWG. NO.	SCALE	DATE	GOODKIND & O'DEA, INC. CONSULTING ENGINEERS
22		NOV 1971	

COUNTY	CONTRACT	S. P. R. REF. NO.	STATE	FED. AID PROJECT NO.	SHEET NO.	TOTAL SHEETS
NEW CASTLE	71-05-003	2	DEL.	-	106	161

INTERSTATE ROUTE 495 OVER TERMINAL THOROFARE IMPROVEMENT BRIDGE NO. 6

MARK	SIZE	TYPE	LENGTH	NO	A	B	C	D	E	REMARKS
PIER 1 - SOUTHBOUND										
FOOTING										
PF 501	5	STR	9-6	51						TRANS TOP
PF 601	6	STR	50-6	22						LONG TOP & BOT
PF 701	7	STR	9-6	69						TRANS BOT
PF1001	10	IV	8-3	8	4-8	1-6	2-0.6	1-3		VERT DOWELS
PF1101	11	IV	8-8	24	5-1	1-6	2-0.7	1-3		VERT DOWELS
COLUMNS										
PC 501	5	III	9-5	48	8-2.7	1-3.4	0-6.9	0-5.8		HORIZ TIES
PC1001	10	STR	19-6	8						VERT
PC1101	11	STR	18-6	12						VERT
PC1102	11	STR	20-3	12						VERT
PIER CAP										
PB 501	5	VI	10-6 TO 11-2	12	2-11. TO 3-4	2-0 TO 2-0	0-5.5 TO 0-5.5	0-3.8 TO 0-3.8		STIRRUPS
PB 502	5	VI	11-3	8	3-4	2-0	0-5.5	0-3.8		STIRRUPS
PB 503	5	VI	11-0	4	3-2.5	2-0	0-5.5	0-3.8		STIRRUPS
PB 504	5	VI	10-9	8	3-1	2-0	0-5.5	0-3.8		STIRRUPS
PB 505	5	VI	10-7	4	3-0	2-0	0-5.5	0-3.8		STIRRUPS
PB 506	5	VI	10-5	8	2-11	2-0	0-5.5	0-3.8		STIRRUPS
PB 507	5	VI	10-3	8	2-10	2-0	0-5.5	0-3.8		STIRRUPS
PB 508	5	VI	10-1	8	2-9	2-0	0-5.5	0-3.8		STIRRUPS
PB 509	5	VI	10-0	4	2-8.5	2-0	0-5.5	0-3.8		STIRRUPS
PB 510	5	VI	9-11	8	2-8	2-0	0-5.5	0-3.8		STIRRUPS
PB 511	5	V	7-2	8	1-3	1-3	4-7.6	1-5.4		HORIZ END
PB 512	5	STR	27-3	8						LONG
PB 513	5	X	5-4	6	1-5	2-8	1-5	0-2.7	1-4.8	VERT END
PB 901	9	STR	19-2	14						LONG TOP
PB 902	9	STR	24-4	7						LONG TOP
PB 903	9	STR	12-0	14						LONG TOP
PB1101	11	VIII	27-9	8	23-9	--	0-6.3	3-11	4-0	LONG BOT
PB1102	11	STR	18-0	6						LONG BOT
PIER PILES										
P 301	3	III	2-11	115	2-2.9	0-4.1	0-4.1	0-3.8		TIES
P 601	6	I	8-8	138	8-0	0-8	0-6	0-6		DOWELS

MARK	SIZE	TYPE	LENGTH	NO	A	B	C	D	E	REMARKS
PIER 2 - SOUTHBOUND										
FOOTING										
PF 501	5	STR	9-6	51						TRANS TOP
PF 601	6	STR	50-6	22						LONG TOP & BOT
PF 701	7	STR	9-6	69						TRANS BOT
PF1001	10	IV	8-3	8	4-8	1-6	2-0.6	1-3		VERT DOWELS
PF1101	11	IV	8-8	24	5-1	1-6	2-0.7	1-3		VERT DOWELS
COLUMNS										
PC 501	5	III	9-5	48	8-2.7	1-3.4	0-6.9	0-5.8		HORIZ TIES
PC1001	10	STR	20-3	8						VERT
PC1101	11	STR	19-6	12						VERT
PC1102	11	STR	21-4	12						VERT
PIER CAP										
PB 501	5	VI	10-6 TO 11-2	12	2-11. TO 3-4	2-0 TO 2-0	0-5.5 TO 0-5.5	0-3.8 TO 0-3.8		STIRRUPS
PB 502	5	VI	11-3	8	3-4	2-0	0-5.5	0-3.8		STIRRUPS
PB 503	5	VI	11-0	4	3-2.5	2-0	0-5.5	0-3.8		STIRRUPS
PB 504	5	VI	10-9	8	3-1	2-0	0-5.5	0-3.8		STIRRUPS
PB 505	5	VI	10-7	4	3-0	2-0	0-5.5	0-3.8		STIRRUPS
PB 506	5	VI	10-5	8	2-11	2-0	0-5.5	0-3.8		STIRRUPS
PB 507	5	VI	10-3	8	2-10	2-0	0-5.5	0-3.8		STIRRUPS
PB 508	5	VI	10-1	8	2-9	2-0	0-5.5	0-3.8		STIRRUPS
PB 509	5	VI	10-0	4	2-8.5	2-0	0-5.5	0-3.8		STIRRUPS
PB 510	5	VI	9-11	8	2-8	2-0	0-5.5	0-3.8		STIRRUPS
PB 511	5	V	7-2	8	1-3	1-3	4-7.6	1-5.4		HORIZ END
PB 512	5	STR	27-3	8						LONG
PB 513	5	X	5-4	6	1-5	2-8	1-5	0-2.7	1-4.8	VERT END
PB 901	9	STR	19-2	14						LONG TOP
PB 902	9	STR	24-4	7						LONG TOP
PB 903	9	STR	12-0	14						LONG TOP
PB1101	11	VIII	27-9	8	23-9	--	0-6.3	3-11	4-0	LONG BOT
PB1102	11	STR	18-0	6						LONG BOT
PIER PILES										
P 301	3	III	2-11	115	2-2.9	0-4.1	0-4.1	0-3.8		TIES
P 601	6	I	8-8	138	8-0	0-8	0-6	0-6		DOWELS

BAR BENDING DIAGRAMS

ALL DIMENSIONS ARE OUT TO OUT OF BARS

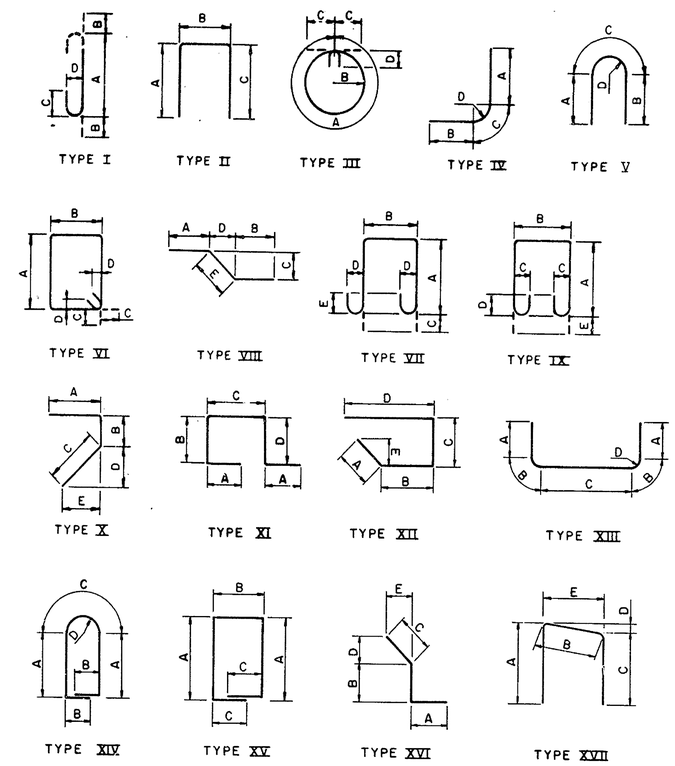

	Date	Revision
In Charge of N. Erikson		
Designed by N. Chou		
Design Checked by M. Siebold		
Detailed by T. Wasylyk		
Detail Checked by E. Hutchins		

Prepared and Recommended
Donald Degenhardt
GOODKIND & O'DEA, INC. Consulting Engineers

Date MAY 25 1971

DELAWARE
STATE HIGHWAY DEPARTMENT

BAR LIST
SOUTHBOUND PIERS

APPROVED BY: John G. Fulton
BRIDGE ENGINEER

JUN 18 1971
DATE

DWG. NO.	SCALE	DATE	GOODKIND & O'DEA, INC. CONSULTING ENGINEERS
23		MAY 1971	

COUNTY	CONTRACT	R.P.B. REG. NO.	STATE	FED. AID PROJECT NO.	SHEET NO.	TOTAL SHEETS
NEW CASTLE	71-05-003	2	DEL.	-	107	161

INTERSTATE ROUTE 495 OVER TERMINAL THOROFARE IMPROVEMENT BRIDGE NO. 6

MARK	SIZE	TYPE	LENGTH	NO	A	B	C	D	E	REMARKS
NORTHBOUND - PIER 1										
FOOTING										
PF 501	5	STR	9-6	70						TRANS TOP
PF 502	5	STR	28-1	11						LONG TOP
PF 503	5	STR	42-3	11						LONG TOP
PF 504	5	STR	31-3	11						LONG BOT
PF 505	5	STR	38-6	11						LONG BOT
PF 701	7	STR	9-6	93						TRANS BOT
PF1001	10	IV	8-4	24	4-9	1-6	2-0.6	1-3		VERT DOWELS
PF1101	11	IV	8-8	28	5-1	1-6	2-0.7	1-3		VERT DOWELS
COLUMNS										
PC 501	5	III	9-5	72	8-2.7	1-3.4	0-6.9	0-5.8		HORIZ TIES
PC1001	10	STR	21-0	12						VERT
PC1002	10	STR	21-6	12						VERT
PC1101	11	STR	20-5	14						VERT
PC1102	11	STR	22-1	14						VERT
PIER CAP										
PB 401	4	II	6-7	24	2-0	2-9	2-0			TRANS
PB 501	5	VI	11-3	16	3-4	2-0	0-5.5	0-3.8		STIRRUPS
PB 502	5	VI	10-11	4	3-2	2-0	0-5.5	0-3.8		STIRRUPS
PB 503	5	VI	10-8	16	3-0.5	2-0	0-5.5	0-3.8		STIRRUPS
PB 504	5	VI	10-9 TO 11-0	24	3-1 TO 3-3	2-0 TO 2-0	0-5.5 TO 0-5.5	0-3.8 TO 0-3.8		STIRRUPS
PB 505	5	VI	10-1 TO 10-4	24	2-9 TO 2-11	2-0 TO 2-0	0-5.5 TO 0-5.5	0-3.8 TO 0-3.8		STIRRUPS
PB 506	5	VI	10-3 TO 10-6	12	2-10 TO 3-0	2-0 TO 2-0	0-5.5 TO 0-5.5	0-3.8 TO 0-3.8		STIRRUPS
PB 507	5	VI	10-0	12	2-8.5	2-0	0-5.5	0-3.8		STIRRUPS
PB 508	5	VI	9-11	10	2-8	2-0	0-5.5	0-3.8		STIRRUPS
PB 509	5	V	7-2	8	1-3	1-3	4-8	1-5.5		HORIZ END
PB 510	5	STR	34-6	8						LONG
PB 511	5	STR	17-0	4						LONG BOT
PB 512	5	X	5-4	6	1-5	2-8	1-5	0-2.5	1-4.8	VERT END
PB 701	7	STR	12-0	8						LONG TOP
PB 801	8	STR	16-9	14						LONG TOP
PB 802	8	STR	22-6	7						LONG BOT
PB 901	9	STR	12-0	12						LONG TOP
PB 902	9	STR	43-4	7						LONG TOP
PB 903	9	STR	17-0	8						LONG BOT
PB1001	10	VIII	25-0	8	22-10	--	0-4.8	2-1.5	2-2	LONG BOT
PB1002	10	STR	17-0	6						LONG BOT
PIER PAD										
PP 401	4	XV	12-4	7	2-11	2-10	2-0			LONG
PIER PILES										
P 301	3	III	2-11	150	2-2.9	0-4.1	0-4.1	0-3.8		TIES
P 601	6	I	8-8	180	8-0	0-8	0-6	0-6		VERT

MARK	SIZE	TYPE	LENGTH	NO	A	B	C	D	E	REMARKS
NORTHBOUND - PIER 2										
FOOTING										
PF 501	5	STR	9-6	67						TRANS TOP
PF 502	5	STR	26-6	11						LONG TOP
PF 503	5	STR	40-6	11						LONG TOP
PF 504	5	STR	30-0	11						LONG BOT
PF 505	5	STR	36-9	11						LONG BOT
PF 701	7	STR	9-6	89						TRANS BOT
PF1001	10	IV	8-4	24	4-9	1-6	2-0.6	1-3		VERT DOWELS
PF1101	11	IV	8-8	28	5-1	1-6	2-0.7	1-3		VERT DOWELS
COLUMNS										
PC 501	5	III	9-5	76	8-2.7	1-3.4	0-6.9	0-5.8		HORIZ TIES
PC1001	10	STR	21-10	12						VERT
PC1002	10	STR	22-4	12						VERT
PC1101	11	STR	21-4	14						VERT
PC1102	11	STR	22-10	14						VERT
PIER CAP										
PB 401	4	II	6-7	24	2-0	2-9	2-0			TRANS
PB 501	5	VI	11-3	16	3-4	2-0	0-5.5	0-3.8		STIRRUPS
PB 502	5	VI	10-11	8	3-2	2-0	0-5.5	0-3.8		STIRRUPS
PB 503	5	VI	10-8	8	3-0.5	2-0	0-5.5	0-3.8		STIRRUPS
PB 504	5	VI	10-9 TO 11-0	24	3-1 TO 3-3	2-0 TO 2-0	0-5.5 TO 0-5.5	0-3.8 TO 0-3.8		STIRRUPS
PB 505	5	VI	10-1 TO 10-4	24	2-9 TO 2-11	2-0 TO 2-0	0-5.5 TO 0-5.5	0-3.8 TO 0-3.8		STIRRUPS
PB 506	5	VI	10-1 TO 10-6	12	2-9 TO 3-0	2-0 TO 2-0	0-5.5 TO 0-5.5	0-3.8 TO 0-3.8		STIRRUPS
PB 507	5	VI	10-0	8	2-8.5	2-0	0-5.5	0-3.8		STIRRUPS
PB 508	5	VI	9-11	10	2-8	2-0	0-5.5	0-3.8		STIRRUPS
PB 509	5	V	7-2	8	1-3	1-3	4-8	1-5.5		HORIZ END
PB 510	5	STR	31-6	8						LONG
PB 511	5	STR	16-0	4						LONG BOT
PB 512	5	X	5-4	6	1-5	2-9	1-5	0-2.5	1-4.3	VERT END
PB 701	7	STR	12-0	8						LONG TOP
PB 801	8	STR	14-9	14						LONG TOP
PB 802	8	STR	21-6	7						LONG BOT
PB 901	9	STR	12-0	12						LONG TOP
PB 902	9	STR	41-4	7						LONG TOP
PB 903	9	STR	16-0	8						LONG BOT
PB1001	10	VIII	22-6	8	21-10	--	0-2.5	0-7.5	0-8	LONG BOT
PB1002	10	STR	16-0	6						LONG BOT
PIER PAD										
PP 401	4	XV	12-4	7	2-11	2-10	2-0			LONG
PIER PILES										
P 301	3	III	2-11	150	2-2.9	0-4.1	0-4.1	0-3.8		TIES
P 601	6	I	8-8	180	8-0	0-8	0-6	0-6		VERT

BAR BENDING DIAGRAMS

ALL DIMENSIONS ARE OUT TO OUT OF BARS

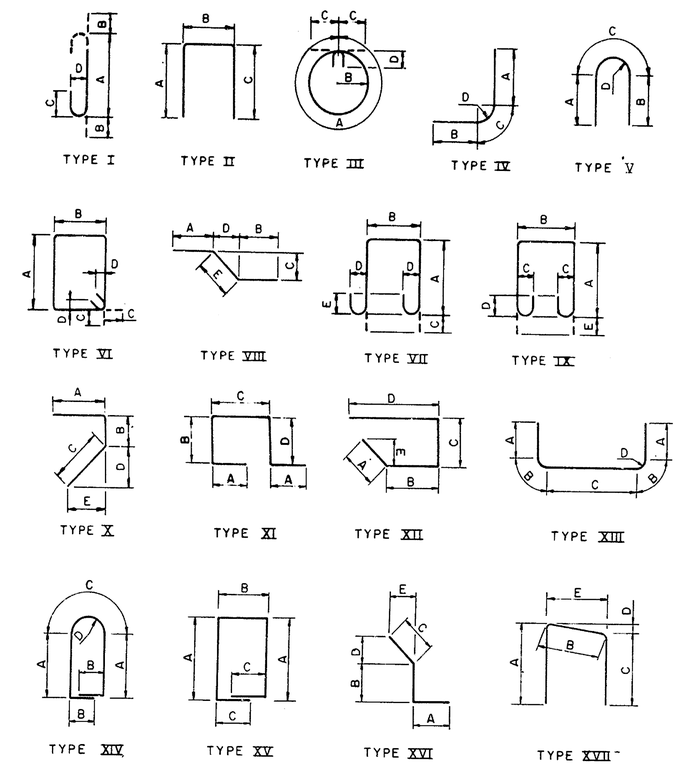

In Charge of N. Erikson
Designed by N. Chou
Design Checked by M. Siebold
Detailed by T. Woszylik
Detail Checked by E. Hitchins

Date	Revision

Prepared and Recommended
GOODKIND & O'DEA, INC.
Consulting Engineers

Date MAY 25 1971

DELAWARE
STATE HIGHWAY DEPARTMENT

BAR LIST
NORTHBOUND PIERS

APPROVED BY:
BRIDGE ENGINEER
DATE JUN 18 1971

DWG. NO.	SCALE	DATE
24		MAY 1971

GOODKIND & O'DEA, INC.
CONSULTING ENGINEERS

COUNTY	CONTRACT	B.P.R. REQ. NO.	STATE	FED. AID PROJECT NO.	SHEET NO.	TOTAL SHEETS
NEW CASTLE	71-05-003	2	DEL.	-	108	161

INTERSTATE ROUTE 495 OVER TERMINAL THOROFARE IMPROVEMENT BRIDGE NO. 6

APPROACH SLAB - SOUTHBOUND

MARK	SIZE	TYPE	LENGTH	NO	A	B	C	D	E	REMARKS
AS 601	6	STR	11-8	102						TRANS TOP
AS 602	6	STR	2-2 TO 9-9	9						
AS 603	6	STR	12-7	9						3 SETS OF 3 TOP
AS 604	6	STR	3-0	120						HEADER TOP
AS 605	6	STR	15-8	17						TRANS DOWELS TOP
AS 606	6	STR	16-10	3						TRANS TOP
AS 607	6	STR	2-4 TO 13-9	4						HEADER TOP
AS 608	6	STR	4-10	3						1 SET OF 4 TOP
AS 609	6	STR	9-3	3						TRANS TOP
AS 610	6	STR	12-4	9						TRANS TOP
AS 611	6	STR	14-7	17						HEADER TOP
AS 612	6	STR	2-10 TO 12-1	3						TRANS TOP
AS 613	6	STR	15-6	3						1 SET OF 3 TOP HEADER TOP
AS 701	7	STR	11-8	150						TRANS BOT
AS 702	7	STR	3-5 TO 10-10	12						3 SETS OF 4 BOT
AS 703	7	STR	3-0	150						TRANS DOWELS BOT
AS 704	7	STR	15-8	25						TRANS BOT
AS 705	7	STR	2-5 TO 14-10	6						1 SET OF 6 BOT
AS 706	7	STR	1-10 TO 10-10	4						1 SET OF 4 BOT
AS 707	7	STR	14-7	25						TRANS BOT
AS 708	7	STR	1-5 TO 13-7	5						1 SET OF 5 BOT
AS 901	9	STR	24-9 TO 29-5	39						3 SETS OF 13 TOP
AS 902	9	STR	24-9 TO 31-0	17						1 SET OF 17 TOP
AS 903	9	STR	24-9 TO 28-7	39						3 SETS OF 13 TOP
AS 904	9	STR	24-9 TO 29-5	16						1 SET OF 16 TOP
AS1001	10	I	27-7 TO 32-3	75	24-9 TO 29-5	1-5 TO 1-5	0-11.5 TO 0-11.5	1-1 TO 1-1		3 SETS OF 25 BOT
AS1002	10	I	27-7 TO 33-10	33	24-9 TO 31-0	1-5 TO 1-5	0-11.5 TO 0-11.5	1-1 TO 1-1		1 SET OF 33 BOT
AS1003	10	I	27-7 TO 31-5	75	24-9 TO 28-7	1-5 TO 1-5	0-11.5 TO 0-11.5	1-1 TO 1-1		3 SETS OF 25 BOT
AS1004	10	I	27-7 TO 32-3	31	24-9 TO 29-5	1-5 TO 1-5	0-11.5 TO 0-11.5	1-1 TO 1-1		1 SET OF 31 BOT

DECK SLAB - SOUTHBOUND

MARK	SIZE	TYPE	LENGTH	NO	A	B	C	D	E	REMARKS
S 501	5	STR	58-9	202						TRANS TOP & BOT
S 502	5	STR	44-0	122						LONG TOP & BOT
S 503	5	XII	7-5	36	1-0	1-10	0-9	4-0	0-8.5	JOINT S ABUT
S 504	5	XII	6-6	72	1-0	0-11	0-9	4-0	0-8.5	JOINT PIERS
S 505	5	XII	6-7	72	1-0	1-0	0-9	4-0	0-8.5	JOINT PIERS
S 506	5	XII	6-8	36	1-0	1-1	0-9	4-0	0-8.5	JOINT N ABUT
S 507	5	STR	60-0	122						LONG TOP & BOT
S 508	5	STR	47-5	122						LONG TOP & BOT
S 509	5	STR	46-6	122						LONG TOP & BOT
S 510	5	STR	57-9	500						TRANS TOP & BOT
S 511	5	STR	56-10	220						TRANS TOP & BOT
S 512	5	STR	7-2	66						TRANS BOT END
S 513	5	II	2-7	408	1-8	1-0	--			DECK TO BARRIER
S 514	5	STR	56-7	2						TRANS AT JOINT
S 601	6	XVI	3-6	408	1-0	0-7	7-0	1-7.5	1-1.5	DECK TO BARRIER
S 801	8	STR	58-6	12						TRANS AT JOINT
S 802	8	STR	56-10	18						TRANS AT JOINT
S 803	8	STR	56-7	4						TRANS AT JOINT
BR 501	5	STR	21-7	16						LONG BARRIER
BR 502	5	STR	21-0	40						LONG BARRIER
BR 503	5	STR	23-3	16						LONG BARRIER
BR 601	6	X	5-1	204	2-7	0-4	2-3	0-3	2-3	VERT BARRIER
MB 501	5	STR	21-0	40						LONG MED BARRIER
MB 502	5	STR	23-3	16						LONG MED BARRIER
MB 503	5	STR	22-0	16						LONG MED BARRIER
MB 601	6	II	2-10	204	2-7	0-4	--			VERT MED BARRIER
MB 602	6	STR	2-3	204						VERT MED BARRIER

BAR BENDING DIAGRAMS

ALL DIMENSIONS ARE OUT TO OUT OF BARS

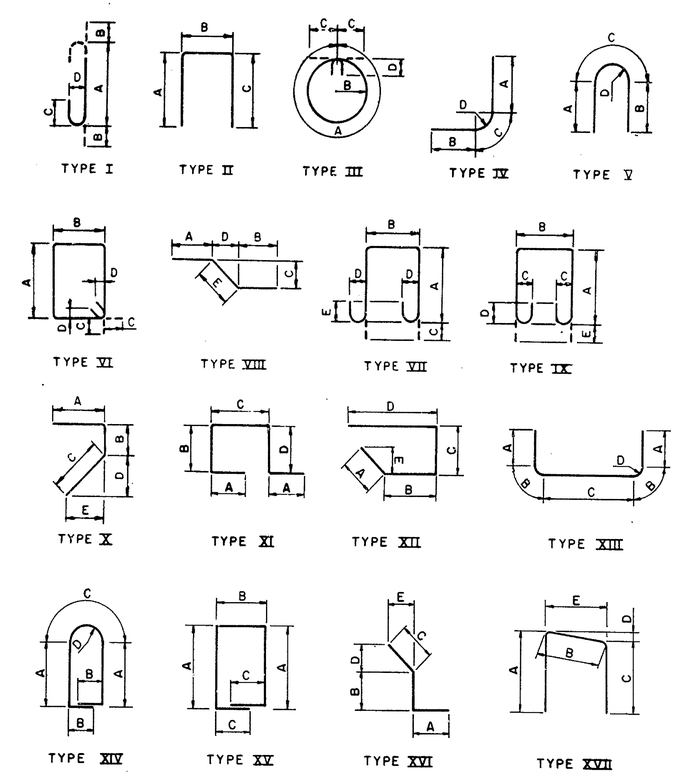

In Charge of N. Erikson
Designed by P. Hermann
Design Checked by M. Siebold
Detailed by W. Kowblansky
Detail Checked by E. Hutchins

Date	Revision

Prepared and Recommended
GOODKIND & O'DEA, INC.
Consulting Engineers

Date MAY 25 1971

DELAWARE
STATE HIGHWAY DEPARTMENT

BAR LIST
SOUTHBOUND DECK SLABS

APPROVED BY John E. Cubbit
BRIDGE ENGINEER

JUN 18 1971
DATE

DWG. NO.	SCALE	DATE	GOODKIND & O'DEA, INC. CONSULTING ENGINEERS
25		MAY 1971	

COUNTY	CONTRACT	B.P.R. REG. NO.	STATE	FED. AID PROJECT NO.	SHEET NO.	TOTAL SHEETS
NEW CASTLE	71-05-003	2	DEL.		109	161

INTERSTATE ROUTE 495 OVER TERMINAL THOROFARE IMPROVEMENT BRIDGE NO. 6

MARK	SIZE	TYPE	LENGTH	NO	A	B	C	D	E	REMARKS
APPROACH SLAB - NORTHBOUND										
AS 601	6	STR	14-6	17						TRANS TOP
AS 602	6	STR	2-4 TO 12-0	3						1 SET OF 3 TOP
AS 603	6	STR	11-8	68						TRANS TOP
AS 604	6	STR	9-0	2						TRANS TOP
AS 605	6	STR	3-11	2						TRANS TOP
AS 606	6	STR	15-6	3						HEADER TOP
AS 607	6	STR	3-0	140						TRANS DOWELS TOP
AS 608	6	STR	12-3	9						HEADER TOP
AS 609	6	STR	19-8	13						TRANS TOP
AS 610	6	STR	1-10 TO 16-3	4						1 SET OF 4 TOP
AS 611	6	STR	20-8	3						HEADER TOP
AS 612	6	STR	18-1	3						HEADER TOP
AS 613	6	STR	16-11	17						TRANS TOP
AS 614	6	STR	2-0 TO 14-8	4						1 SET OF 4 TOP
AS 615	6	STR	12-6	6						HEADER TOP
AS 616	6	STR	1-9 TO 9-8	6						2 SETS OF 3 TOP
AS 617	6	STR	5-8	1						TRANS TOP
AS 618	6	STR	14-9	17						TRANS TOP
AS 619	6	STR	1-8 TO 11-11	3						1 SET OF 3 TOP
AS 620	6	STR	11-8 TO 13-2	17						1 SET OF 17 TOP
AS 621	6	STR	15-2	3						HEADER TOP
AS 701	7	STR	14-6	25						TRANS BOT
AS 702	7	STR	4-1 TO 13-6	4						1 SET OF 4 BOT
AS 703	7	STR	11-8	100						TRANS BOT
AS 704	7	STR	4-0 TO 10-4	6						2 SETS OF 3 BOT
AS 705	7	STR	3-0	175						TRANS DOWELS BOT
AS 706	7	STR	19-8	19						TRANS BOT
AS 707	7	STR	1-10 TO 18-0	6						1 SET OF 6 BOT
AS 708	7	STR	16-11	25						TRANS BOT
AS 709	7	STR	3-0 TO 16-0	6						1 SET OF 6 BOT
AS 710	7	STR	3-1 TO 11-0	8						2 SETS OF 4 BOT
AS 711	7	STR	2-11 TO 10-5	4						1 SET OF 4 BOT
AS 712	7	STR	3-7 TO 13-6	4						1 SET OF 4 BOT
AS 713	7	STR	11-8 TO 13-2	25						1 SET OF 25 BOT
AS 714	7	STR	14-9	25						TRANS BOT
AS 901	9	STR	24-7 TO 29-4	15						1 SET OF 15 TOP
AS 902	9	STR	24-7 TO 28-3	26						2 SETS OF 13 TOP
AS 903	9	STR	18-6 TO 24-7	21						1 SET OF 21 TOP
AS 904	9	STR	24-8 TO 31-2	18						1 SET OF 18 TOP
AS 905	9	STR	24-8 TO 29-2	26						2 SETS OF 13 TOP
AS 906	9	STR	24-8 TO 29-2	14						1 SET OF 14 TOP
AS 907	9	STR	24-8 TO 28-11	16						1 SET OF 16 TOP
AS1001	10	I	27-5 TO 32-2	30	24-7 TO 29-4	1-5 TO 1-5	0-11.5 TO 0-11.5	1-1 TO 1-1		1 SET OF 30 BOT
AS1002	10	I	27-5 TO 31-1	50	24-7 TO 28-3	1-5 TO 1-5	0-11.5 TO 0-11.5	1-1 TO 1-1		2 SETS OF 25 BOT
AS1003	10	I	21-4 TO 27-5	40	18-6 TO 24-7	1-5 TO 1-5	0-11.5 TO 0-11.5	1-1 TO 1-1		1 SET OF 40 BOT
AS1004	10	I	27-6 TO 34-0	35	24-8 TO 31-2	1-5 TO 1-5	0-11.5 TO 0-11.5	1-1 TO 1-1		1 SET OF 35 BOT
AS1005	10	I	27-6 TO 32-0	50	24-8 TO 29-2	1-5 TO 1-5	0-11.5 TO 0-11.5	1-1 TO 1-1		2 SETS OF 25 BOT
AS1006	10	I	27-6 TO 32-0	27	24-8 TO 29-2	1-5 TO 1-5	0-11.5 TO 0-11.5	1-1 TO 1-1		1 SET OF 27 BOT
AS1007	10	I	27-6 TO 31-9	31	24-8 TO 28-11	1-5 TO 1-5	0-11.5 TO 0-11.5	1-1 TO 1-1		1 SET OF 31 BOT
DECK SLAB - NORTHBOUND										
S 501	5	STR	43-10	170						LONG TOP & BOT
S 502	5	STR	6-5	47						TRANS BOT END
S 503	5	STR	8-0	10						TRANS BOT END
S 504	5	STR	10-0	1						TRANS BOT END
S 505	5	STR	5-6	14						TRANS BOT END
S 506	5	STR	7-4	4						TRANS BOT END
S 507	5	STR	4-8	12						TRANS BOT END
S 508	5	STR	60-0	166						LONG TOP & BOT
S 509	5	STR	47-3	166						LONG TOP & BOT
S 510	5	STR	27-9	127						TRANS BOT
S 511	5	STR	42-0	82						TRANS BOT & TOP
S 512	5	STR	44-0	140						TRANS BOT
S 513	5	II	2-7	406	1-8	1-0	--			DECK TO BARRIER
S 514	5	STR	44-8	42						TRANS BOT
S 515	5	STR	45-10	42						TRANS BOT
S 516	5	STR	25-6	42						TRANS BOT
S 517	5	STR	26-3	42						TRANS BOT
S 518	5	STR	27-3	44						TRANS BOT
S 519	5	STR	46-3	43						TRANS BOT
S 520	5	STR	48-0	127						TRANS TOP
S 521	5	STR	22-0	42						TRANS TOP
S 522	5	STR	24-5	140						TRANS TOP & BOT
S 523	5	STR	25-11	44						TRANS TOP
S 524	5	STR	32-0	127						TRANS TOP
S 525	5	STR	38-0	42						TRANS TOP
S 526	5	STR	39-9	42						TRANS TOP
S 527	5	STR	46-0	158						LONG TOP & BOT
S 528	5	STR	28-6	98						TRANS BOT & TOP
S 529	5	STR	39-9	98						TRANS BOT & TOP
S 530	5	XII	7-5	48	1-0	1-10	0-9	4-0	0-8.5	JOINT S ABUT
S 531	5	XII	6-5	96	1-0	0-10	0-9	4-0	0-8.5	JOINT PIERS EXP
S 532	5	XII	6-7	96	1-0	1-0	0-9	4-0	0-8.5	JOINT PIERS FIX
S 533	5	XII	6-8	48	1-0	1-1	0-9	4-0	0-8.5	JOINT N ABUT
S 534	5	STR	42-3	12						LONG TOP & BOT
S 535	5	STR	36-5	4						TRANS BOT END
S 536	5	STR	5-0	16						SCUPPER
S 601	6	XVI	3-6	406	1-0	0-7	2-0	1-7.5	1-1.5	DECK TO BARRIER
S 602	6	STR	26-9	51						TRANS BOT
S 603	6	STR	54-7 TO 57-7	51						1 SET OF 51 BOT
S 604	6	STR	46-6 TO 49-6	51						1 SET OF 51 BOT
S 605	6	STR	18-8	51						TRANS BOT
S 606	6	STR	22-0	51						TRANS TOP
S 607	6	STR	51-3 TO 54-3	51						TRANS TOP
S 608	6	STR	31-0	51						TRANS TOP
S 609	6	STR	42-3 TO 45-3	51						TRANS TOP
S 801	8	STR	38-0	68						AT JOINT
BR 501	5	STR	21-0	32						LONG BARRIER
BR 502	5	STR	20-7	40						LONG BARRIER
BR 601	6	X	5-1	202	2-7	0-4	2-3	0-3	2-3	VERT BARRIER
MB 501	5	STR	22-0	16						LONG MED BARRIER
MB 502	5	STR	21-0	40						LONG MED BARRIER
MB 503	5	STR	23-3	16						LONG MED BARRIER
MB 601	6	II	3-0	204	2-10	0-3	--			VERT MED BARRIER
MB 602	6	STR	2-6	204						VERT MED BARRIER

BAR BENDING DIAGRAMS

ALL DIMENSIONS ARE OUT TO OUT OF BARS

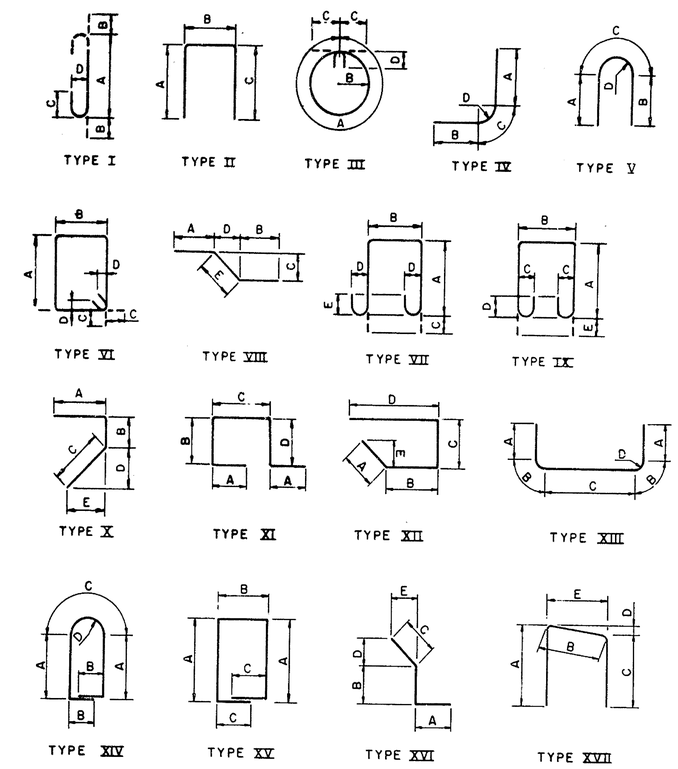

In Charge of N. Erickson
Designed by P. Hermann
Design Checked by M. Siebold
Detailed by W. Kowblonsky
Detail Checked by E. Hutchins

Date	Revision

Prepared and Recommended
Donald Goodkind
GOODKIND & O'DEA, INC. Consulting Engineers

Date MAY 25 1971

DELAWARE
STATE HIGHWAY DEPARTMENT

BAR LIST
NORTHBOUND DECK SLABS

APPROVED BY: John E. Cubbitt
BRIDGE ENGINEER

JUN 18 1971
DATE

DWG. NO.	SCALE	DATE
26		MAY 1971

GOODKIND & O'DEA, INC.
CONSULTING ENGINEERS

COUNTY	CONTRACT	FED. ROAD DIV. NO.	STATE	FED. AID PROJ. NO.	FISCAL YEAR	SHEET NO.	TOTAL SHEETS
NEW CASTLE	71-05-003	2	DEL.		1971	110	161

INTERSTATE ROUTE 495
OVER TERMINAL THOROFARE IMPROVEMENT
BRIDGE NO. 6

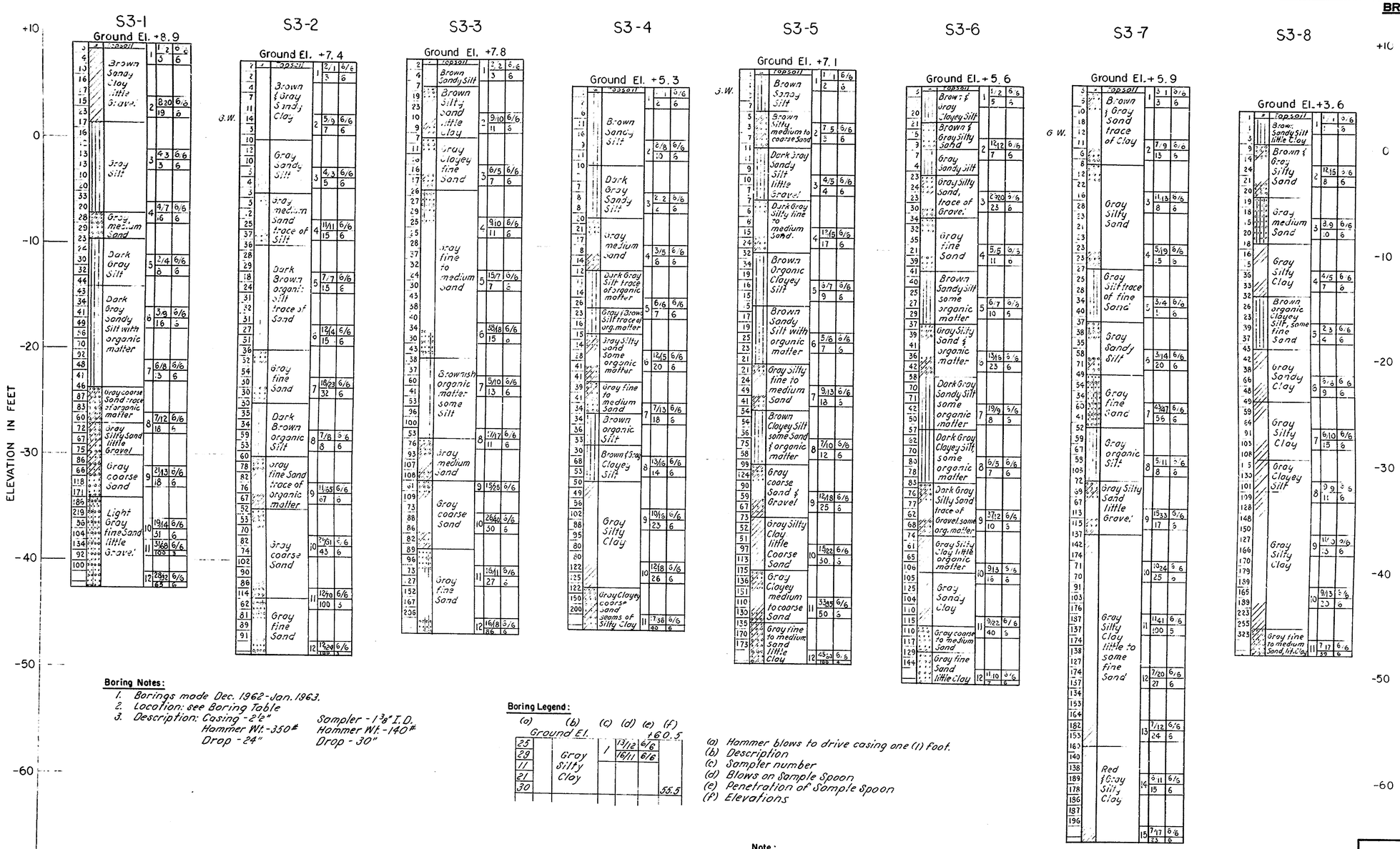

BORING	STA. ℄ "A"	OFF.	SIZE
S3-1	107+31	33'L	2½
S3-2	107+61	44'R	2½
S3-3	107+78	8'L	2½
S3-4	109+08	11'R	2½
S3-5	108+84	35'L	2½
S3-6	108+07	71'R	2½
S3-7	109+26	12'L	2½
S3-8	109+49	56'R	2½

Boring Notes:

1. Borings made Dec. 1962-Jan. 1963.
2. Location: see Boring Table
3. Description: Casing - 2½"
   Hammer Wt. - 350#
   Drop - 24"
   Sampler - 1⅜" I.D.
   Hammer Wt. - 140#
   Drop - 30"

Boring Legend:

(a)	(b)	(c)	(d)	(e)	(f)
	Ground El.				+60.5
25	Gray Silty Clay	1	13/12	6/6	
29			16/11	6/6	
11					
21					
30					55.5

(a) Hammer blows to drive casing one (1) foot.
(b) Description
(c) Sampler number
(d) Blows on Sample Spoon
(e) Penetration of Sample Spoon
(f) Elevations

Note:
The information shown on these sheets is based on limited investigation by the state and is in no way warranted to indicate the true conditions which will be encountered during construction.

Prepared and Recommended
Date MAY 25 1971
GOODKIND & O'DEA, INC. Consulting Engineers

		Date	Revision
In Charge of	N. Erikson		
Designed by	M. Benitez		
Drawn by	J. Nynka		
Checked by	A. Pullerits		

DELAWARE
STATE HIGHWAY DEPARTMENT

BORING LOGS

APPROVED BY: John E. Cullity, BRIDGE ENGINEER — DATE JUN 18 1971

DWG. NO.	SCALE	DATE	
27	1"-5"	Nov 1971	GOODKIND & O'DEA, INC. CONSULTING ENGINEERS

D & W BLUEPRINT CO. 17-49-9

COUNTY	CONTRACT	P. R. A. REG. NO.	STATE	FED. AID PROJECT NO.	SHEET NO.	TOTAL SHEETS
NEW CASTLE	71-05-003	2	DEL	I-495-3(28)14	111	161

ESTIMATED QUANTITIES

PREL. TRACING _____ DESIGN _____ CHKD. _____

REVISIONS

CONSTRUCTION ITEMS

NO.	ITEM DESCRIPTION	UNIT	ESTIMATED QUANTITIES I-495	RAMP "E"	RAMP "F"	RAMP "G"	RAMP "H"	RAMP "E-F"	TERMINAL THOROFARE FED. AID PARTICIPATING	TERMINAL THOROFARE FED. AID NON PARTICIPATING	FED. AID PARTICIPATING SUB TOTAL	FED. AID NON PARTICIPATING SUB TOTAL	PROPOSED TOTAL QUANTITIES
201	CLEARING & GRUBBING	LUMP SUM	—	—	—	—	—	—	—	—	L.S.	—	L.S.
202	EXCAVATION & EMBANKMENT	C.Y.	1,200	800	200	300	100	2,100	9,300	2,200	14,000	2,200	16,200
207	EXCAVATION FOR STRUCTURES	C.Y.	3,400	—	—	—	—	—	—	—	3,400	—	3,400
208	EXCAVATION AND BACKFILL FOR PIPE TRENCHES	C.Y.	1,655	20	—	141	—	95	618	73	2,529	73	2,602
209	BORROW	C.Y.	1000	—	—	—	—	—	—	—	1000	—	1000
206	ROCK EXCAVATION FOR STRUCTURES AND TRENCHES	C.Y.	100								100		100
205	ROCK EXCAVATION ROADWAY	C.Y.	100	—	—	—	—	—	—	—	100	—	100
210	SELECT BORROW	C.Y.	17,900	2,900	2,000	2,600	1,600	3,000	—	—	30,000	—	30,000
606	STEEL STRUCTURES, BRIDGE #5 (APPROX. 1,079,300 LBS.)	L.S.	—	—	—	—	—	—	—	—	L.S.	—	L.S.
606	STEEL STRUCTURES, BRIDGE #6 (APPROX. 669,600 LBS.)	L.S.	—	—	—	—	—	—	—	—	L.S.	—	L.S.
211	REMOVAL OF STRUCTURES & OBSTRUCTIONS	LUMP SUM	—	—	—	—	—	—	—	—	L.S.	—	L.S.
*303	CRUSHER RUN BASE COURSE, VARIABLE THICKNESS	C.Y.	974	—	—	—	—	37	4,166	1,494	5,177	1,494	6,671
303	CRUSHER RUN BASE COURSE, 7" THICK	S.Y.	3,650	—	—	—	—	—	—	—	3,650	—	3,650
401	HOT-MIX, HOT-LAID ASPHALTIC CONCRETE PAVEMENT	TON	2,163	—	—	—	—	—	307	639	2,470	639	3,109
501	PORTLAND CEMENT CONCRETE PAVEMENT, 9" THICK	S.Y.	—	—	—	—	—	—	10,667	1,095	10,667	1,095	11,762
501	PORTLAND CEMENT CONCRETE PAVEMENT, 10" THICK	S.Y.	6,217	2,632	1,856	2,168	1,812	3,600	—	—	18,285	—	18,285
501	TRANSVERSE SAWED JOINTS FOR PORTLAND CEMENT CONCRETE PAVEMENT	L.F.	825	516	376	408	331	700	2,170	210	5,326	210	5,536
*602	PORTLAND CEMENT CONCRETE MASONRY - APPROACH SLABS	C.Y.	780	—	—	—	—	—	—	—	780	—	780
*602	PORTLAND CEMENT CONCRETE MASONRY - ABUTMENTS	C.Y.	1,313	—	—	—	—	—	—	—	1,313	—	1,313
*602	PORTLAND CEMENT CONCRETE MASONRY - PIER FOOTINGS	C.Y.	626	—	—	—	—	—	—	—	626	—	626
*602	PORTLAND CEMENT CONCRETE MASONRY - PIERS ABOVE FOOTING	C.Y.	500	—	—	—	—	—	—	—	500	—	500
*602	PORTLAND CEMENT CONCRETE MASONRY - SUPERSTRUCTURE	C.Y.	1,798	—	—	—	—	—	—	—	1,798	—	1,798
611	SUBFOUNDATION CONCRETE	C.Y.	20	—	—	—	—	—	—	—	20	—	20
S.P.	PORTLAND CEMENT CONCRETE MEDIAN BARRIER CURB	C.Y.	711	—	—	—	—	—	—	—	711	—	711
605	BAR REINFORCEMENT (STRUCTURES)	LBS.	979,500	—	—	—	—	—	—	—	979,500	—	979,500
605	BAR REINFORCEMENT - P.C.C. MEDIAN BARRIER CURB	LBS.	69,236	—	—	—	—	—	—	—	69,236	—	69,236
615	15" REINFORCED CEMENT CONCRETE PIPE, CLASS 3	L.F.	1,868	—	—	320	—	—	272	—	2,460	—	2,460
615	18" REINFORCED CEMENT CONCRETE PIPE, CLASS 3	L.F.	108	—	—	—	—	164	812	134	1,084	134	1,218
615	24" REINFORCED CEMENT CONCRETE PIPE, CLASS 3	L.F.	44	—	—	—	—	—	160	—	204	—	204
617	15" C.M.P. GALVANIZED BITUMINOUS COATED PAVED INVERT, 16 GAGE	L.F.	192	42	—	—	—	—	—	—	234	—	234
617	18" C.M.P. GALVANIZED BITUMINOUS COATED PAVED INVERT, 16 GAGE	L.F.	140	—	—	—	—	—	—	—	140	—	140
620	15" R.C.P. FLARED END SECTIONS	EACH	1	—	—	1	—	3	3	—	8	—	8
617	24" C.M.P. GALVANIZED BITUMINOUS COATED PAVED INVERT, 16 GAGE	L.F.	52	—	—	—	—	—	—	—	52	—	52
620	18" R.C.P. FLARED END SECTIONS	EACH	—	—	—	—	—	2	2	—	4	—	4
620	15" C.M.P. GALVANIZED FLARED END SECTIONS	EACH	3	1	—	—	—	—	—	—	4	—	4

* Fixed Quantity Item - Section 109.06 of Standard Specifications

COUNTY	CONTRACT	P.R.A. REG. NO.	STATE	FED. AID PROJECT NO.	SHEET NO.	TOTAL SHEETS
NEW CASTLE	71-05-003	2	DEL.	I-495-3(22)14	112	161

ESTIMATED QUANTITIES

PREL. TRACING _____ DESIGN _____ CHKD. _____

REVISIONS

CONSTRUCTION ITEMS

NO.	ITEM DESCRIPTION	UNIT	ESTIMATED QUANTITIES I-495	RAMP "E"	RAMP "F"	RAMP "G"	RAMP "H"	RAMP "E-F"	TERMINAL THOROFARE FED. AID PARTICIPATING	TERMINAL THOROFARE FED. AID NON PARTICIPATING	FED. AID PARTICIPATING SUB TOTAL	FED. AID NON PARTICIPATING SUB TOTAL	PROPOSED TOTAL QUANTITIES
620	18" C.M.P. GALVANIZED FLARED END SECTION	EACH	1	—	—	—	—	—	—	—	1	—	1
620	24" C.M.P. GALVANIZED FLARED END SECTION	EACH	1	—	—	—	—	—	—	—	1	—	1
624	CAST-IN-PLACE CONCRETE PILES, 12", 7 GAGE	L.F.	17,080	—	—	—	—	—	—	—	17,080	—	17,080
624	CAST-IN-PLACE CONCRETE PILES, 14", 7 GAGE	L.F.	6,440	—	—	—	—	—	—	—	6,440	—	6,440
624	STEEL SHELL TEST PILES, 12", 7 GAGE	L.F.	812	—	—	—	—	—	—	—	812	—	812
624	STEEL SHELL TEST PILES, 14", 7 GAGE	L.F.	500	—	—	—	—	—	—	—	500	—	500
628	CONCRETE SLOPE PAVING, 4" R.C.	S.Y.	4,636	—	—	—	—	—	—	—	4,636	—	4,636
706	PORTLAND CEMENT CONCRETE PARKWAY CURB, TYPE 2, MODIFIED	L.F.	2,110	1,904	1,464	1,430	1,400	2,677	2,600	—	13,585	—	13,585
707	INTEGRAL PORTLAND CEMENT CONCRETE CURB & GUTTER, TYPE 1	L.F.	—	—	—	—	—	—	2,910	340	2,910	340	3,250
708	PORTLAND CEMENT CONCRETE SIDEWALK, 4" THICK	S.F.	—	—	—	—	—	—	24,002	1,492	24,002	1,492	25,494
709	HOT-MIX, HOT-LAID ASPHALTIC CONCRETE CURB, TYPE 2	L.F.	2,490	—	—	—	—	—	—	—	2,490	—	2,490
711	CATCH BASINS, TYPE A-1 MODIFIED	EACH	10	—	—	—	—	—	—	—	10	—	10
711	CATCH BASINS, TYPE B-2	EACH	5	—	—	—	—	—	—	2	5	2	7
711	CATCH BASINS, TYPE J	EACH	—	—	—	—	—	—	12	—	12	—	12
711	CATCH BASINS, TYPE X MODIFIED	EACH	13	—	—	2	—	—	—	—	15	—	15
711	CATCH BASINS, TYPE A-A MODIFIED	EACH	11	4	2	2	—	—	2	—	21	—	21
711	CATCH BASINS, DOUBLE TYPE A-1 MODIFIED	EACH	6	—	—	—	—	—	—	—	6	—	6
711	CATCH BASINS, DOUBLE TYPE X MODIFIED	EACH	1	—	—	—	—	—	—	—	1	—	1
711	LAWN CATCH BASINS	EACH	2	—	—	—	—	—	—	—	2	—	2
713	SET STD. FRAME & GRATE FOR TYPE A-A CATCH BASIN, MODIFIED	EACH	3	—	—	1	3	6	—	—	13	—	13
713	SET STD. FRAME & GRATE FOR TYPE J CATCH BASIN	EACH	—	—	—	—	—	—	1	—	1	—	1
715	GALVANIZED STEEL BEAM GUARD RAIL (STEEL POSTS)	L.F.	3,242.5	1,380	1,240	655	455	—	354.5	—	7,327	—	7,327
716	TWISTED END ANCHORAGES	EACH	2	1	1	1	—	—	2	—	7	—	7
718	MEDIAN BARRIER BEAM GUARD RAIL (STEEL POSTS)	L.F.	—	—	—	—	—	612.5	—	—	612.5	—	612.5
720	6' CHAIN LINK FENCE	L.F.	2,900	995	—	875	800	760	2,150	—	8480.0	—	8480.0
720	TERMINAL POSTS FOR 6' CHAIN LINK FENCE	EACH	26	8	—	8	3	6	12	—	63	—	63
721	VEHICULAR GATE 16' WIDE FOR 6' CHAIN LINK FENCE (DOUBLE SWING)	EACH	4	—	—	—	—	—	1	—	5	—	5
722	TOPSOIL, 4" THICK	S.Y.	8,566	2,408	1,367	1,243	1,694	2,618	4,077	1,310	21,973	1,310	23,283
724	SEEDING	ACRES	0.7	0.4	0.2	0.2	0.3	0.5	0.8	0.3	3.1	0.3	3.4
725	MULCHING	S.Y.	3,492	1,794	742	963	1,372	2,618	4,077	1,310	15,058	1,310	16,368
730	LATERAL DITCHING	L.F.	80	—	—	—	40	—	—	—	120	—	120

COUNTY	CONTRACT	P.R.A. REG. NO.	STATE	FED. AID PROJECT NO.	SHEET NO.	TOTAL SHEETS
NEW CASTLE	71-05-003	2	DEL.	I-495-3(22)14	113	161

ESTIMATED QUANTITIES

PREL. TRACING _____ DESIGN _____ CHKD. _____

REVISIONS

CONSTRUCTION ITEMS

NO.	ITEM DESCRIPTION	UNIT	ESTIMATED QUANTITIES I-495	RAMP "E"	RAMP "F"	RAMP "G"	RAMP "H"	RAMP "E-F"	TERMINAL THOROFARE FED. AID PARTICIPATING	TERMINAL THOROFARE FED. AID NON PARTICIPATING	FED. AID PARTICIPATING SUB TOTAL	FED. AID NON PARTICIPATING SUB TOTAL	PROPOSED TOTAL QUANTITIES
731	CALCIUM CHLORIDE FOR DUST CONTROL	TONS	21	2	2	2	1	3	9	1	40	1	41
732	RIPRAP, PLAIN	S.Y.	231	17	—	17	58	—	17	—	340	—	340
734	6" PERFORATED PIPE UNDERDRAINS	L.F.	693	—	—	—	—	—	—	—	693	—	693
735	FLAGMAN	HOUR	—	—	—	—	—	—	—	—	500	—	500
S.P.	FIELD OFFICE	L.S.	—	—	—	—	—	—	—	—	L.S.	—	L.S.
	CHECK BORINGS	L.F.	—	—	—	—	—	—	—	—	150	—	150
	MAINTENANCE OF HIGHWAY TRAFFIC	L.S.	—	—	—	—	—	—	—	—	L.S.	—	L.S.
	MOBILIZATION	L.S.	—	—	—	—	—	—	—	—	L.S.	—	L.S.
	PORTLAND CEMENT CONCRETE PAVEMENT, CONTINOUSLY REINFORCED	S.Y.	17,708	—	—	—	—	—	—	—	17,708	—	17,708
	TERMINAL CONSTRUCTION JOINT	Ea.	8	—	—	—	—	—	—	—	8	—	8
	PORTLAND CEMENT TREATED BASE COURSE, 4" DEPTH	S.Y./IN	115,724	12,300	8,792	10,328	8,480	16,872	—	—	172,496	—	172,496
	SOIL STERILIZATION AND BITUMINOUS SURFACE TREATMENT	S.Y.	2,577	638	576	316	202	—	208	—	4,517	—	4,517
	BRIDGE DRAINAGE, BRIDGE #5	L.S.	—	—	—	—	—	—	—	—	L.S.	—	L.S.
	BRIDGE DRAINAGE, BRIDGE #6	L.S.	—	—	—	—	—	—	—	—	L.S.	—	L.S.
	EPOXY COAL-TAR APPLICATION	S.Y.	179	—	—	—	—	—	—	—	179	—	179
	REINFORCED ELASTOMERIC EXPANSION JOINT SEAL, 13½" WIDE	L.F.	68	—	—	—	—	—	—	—	68	—	68
	*PREFABRICATED EXPANSION JOINT SYSTEM, ⅞" WIDE	L.F.	468	—	—	—	—	—	—	—	468	—	468
	*PREFABRICATED EXPANSION JOINT SYSTEM, 1 3/16" WIDE	L.F.	191	—	—	—	—	—	—	—	191	—	191
	*PREFABRICATED EXPANSION JOINT SYSTEM, 1½" WIDE	L.F.	72	—	—	—	—	—	—	—	72	—	72
	EROSION CONTROL, EXCAVATION & EMBANKMENT	C.Y.	—	—	—	—	—	—	—	—	500	—	500
	EROSION CONTROL, EXCELSIOR BLANKET, NET, OR JUTE MESH	SQUARES	—	—	—	—	—	—	—	—	50	—	50
	EROSION CONTROL, SEEDING	ACRES	—	—	—	—	—	—	—	—	5	—	5
	EROSION CONTROL, MULCHING	ACRES	—	—	—	—	—	—	—	—	5	—	5
	EROSION CONTROL, SODDING	S.Y.	—	—	—	—	—	—	—	—	200	—	200
	CROWNVETCH, SEEDING AND MULCHING	S.Y.	7,476	1,737	1,014	668	750	368	—	—	12,013	—	12,013
	SOIL STERILIZATION AND WOOD CHIP MULCH	S.Y.	1,167	—	—	—	—	—	—	—	1,167	—	1,167
S.P.	TRAINEE	EACH	—	—	—	—	—	—	—	—	3	—	3
	HOT-MIX ASPH. CONC. OR COLD LAID BIT. CONC. (TRM)	TON	20						70	10	90	10	100
	SELECT BORROW (TRM)	C.Y.	20						70	10	90	10	100
	CRUSHER RUN (TRM)	TON	20						70	10	90	10	100
	4" NON-METALLIC CONDUIT UNDER EXISTING PAVEMENT	L.F.							191		191		191
	4" NON-METALLIC CONDUIT UNDER NEW PAVEMENT OR SOFT SURFACE	L.F.							24		24		24
	2½" GALVANIZED CONDUIT UNDER NEW PAVEMENT OR SOFT SURFACE	L.F.							103		103		103
	1½" GALVANIZED CONDUIT UNDER NEW PAVEMENT OR SOFT SURFACE	L.F.							505		505		505
	CONDUIT JUNCTION WELL	Ea.							14		14		14
	STEEL POLE BASE	Ea.							4		4		4
	P CABINET BASE	Ea.							2		2		2
	2½" GALVANIZED CONDUIT UNDER EXISTING PAVEMENT	L.F.							282		282		282
	DEMOLITION OF BUILDINGS	L.S.	L.S.						L.S.		L.S.		L.S.

* Fixed Quantity Item - Section 109.06 of Standard Specifications