R-5 # 9-4

COUNTY	CONTRACT	F.R.A. DIV. NO.	STATE	FED. AID PROJ. NO.	FISCAL YEAR	SHEET NO.	TOTAL SHEETS
NEW CASTLE	71-05-007	2	DEL.	I-495-3(21)15		1	44

INTERSTATE HIGHWAY ROUTE I-495
CHRISTINA RIVER BRIDGE - SUPERSTRUCTURE

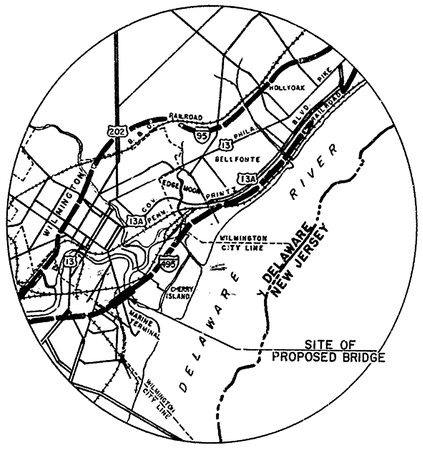

SCALE: 1" = 7500'

THE STATE OF DELAWARE

State of Delaware

DEPARTMENT OF HIGHWAYS & TRANSPORTATION

DIVISION OF HIGHWAYS

PLAN
FOR
CONSTRUCTION OF CONTRACT № 71-05-007

STA. 348+21.46 TO STA. 392+16.57

4,395.11 FEET: 0.832 MILES

SCALE: PLAN: 1 IN.= 50 FT.
PROFILE: HOR. 1 IN.= 50 FT.
VERT. 1 IN.= 50 FT.

EQUATION

120+13.61 I-495 N.B., Bk.=
119+91.70 I-495 S.B., Bk.=
348+21.46 ℄ I-495, Ah.

DESIGN DATA

FEDERAL CLASS	URBAN
Design Speed	70 mph
ADT (1970)	31,200
ADT (1992)	56,200
DHV (1992)	6,745
Directional Distribution	60%
Percentage of Trucks (ADT)	13%

FEDERAL AID PROJECT № I-495-3(21)15
(THIS IS A CONTROLLED ACCESS HIGHWAY)
AS BUILT PLANS ~3-18-1975 T.F.F.

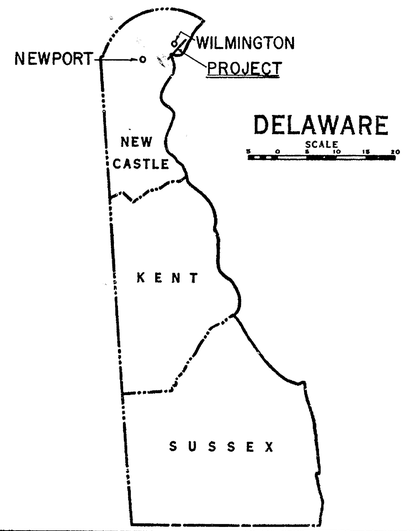

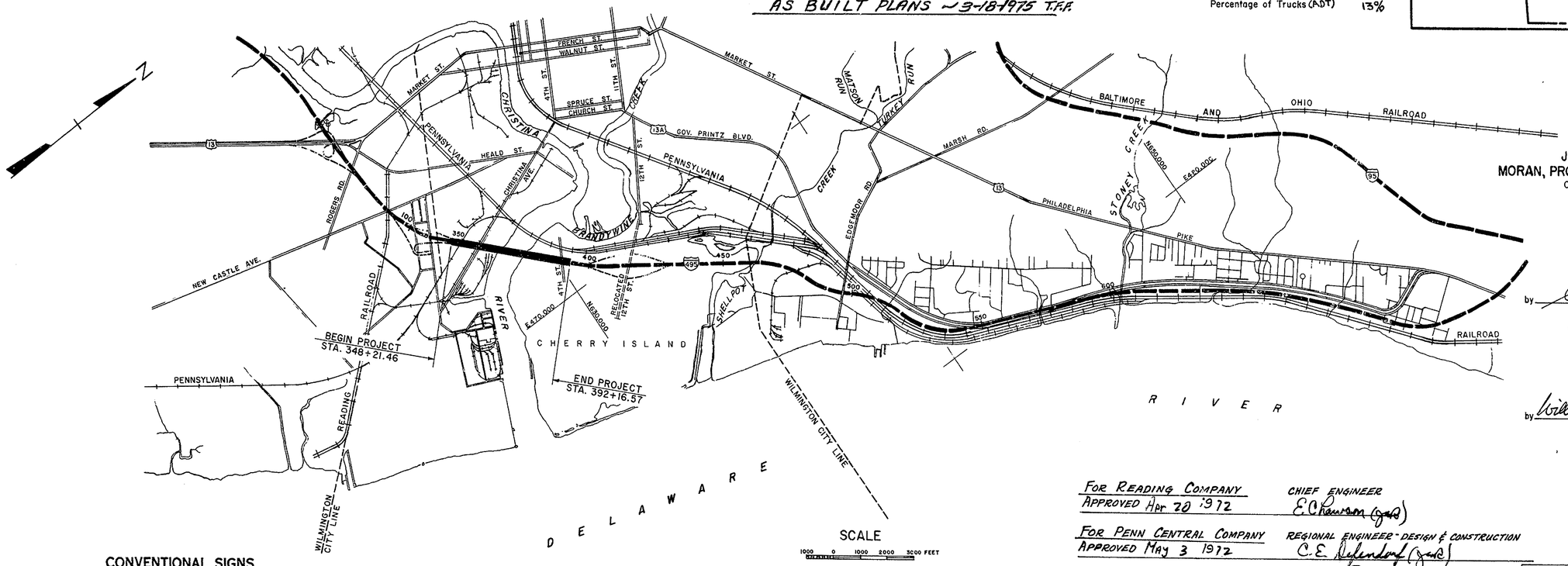

J. E. GREINER CO.
MORAN, PROCTOR, MUESER & RUTLEDGE
CONSULTING ENGINEERS

by E. J. Donnelly

by William H. Muesser

WILLIAM H. MUESER REGISTERED No. 1007 DELAWARE PROFESSIONAL ENGINEER

SCALE
1000 0 1000 2000 3000 FEET

FOR READING COMPANY APPROVED Apr 20 1972 — CHIEF ENGINEER E. Chawson (jas)

FOR PENN CENTRAL COMPANY APPROVED May 3 1972 — REGIONAL ENGINEER - DESIGN & CONSTRUCTION C. E. Defendorf (jas)

RECOMMENDED 4/12 1972 — CHIEF PLANS & DESIGN E. B. Palmerski

RECOMMENDED 19 — ASST. CHIEF ENGINEER

APPROVED 19 — CHIEF ENGINEER

APPROVED 4/12 1972 — DIRECTOR OF OPERATIONS

DEPARTMENT OF TRANSPORTATION
FEDERAL HIGHWAY ADMINISTRATION

APPROVED:

DIVISION ENGINEER — DATE

CONVENTIONAL SIGNS

COUNTY LINE		WIRE FENCE	
CITY OR TOWN LINE		PRESENT CULVERT	
RIGHT OF WAY LINE		PROPOSED CULVERT	
CENTRE LINE, PROPOSED ROAD	240	TELEGRAPH POLE	
MACADAM, TRAVELLED ROAD		TREE	
TROLLEY OR RAILROAD			

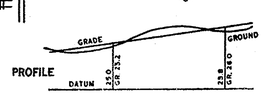

INDEX OF SHEETS

Sheet No. 1 Title Sheet
Sheet Nos. 2-4 General Plan, Elevations & Quantities
Sheet Nos. 5-10 North Abutment & Pier 37
Sheet Nos. 11-26 Approach Spans
Sheet Nos. 27-32 Main Span
Sheet No. 33 Inspection Facilities
Sheet Nos. 34-39 Approach Slabs, Pier Elevations, Lighting & Slope Paving
Sheet Nos. 40-44 Legends & Index for Borings & Test Piles

D C B A A B C D

COUNTY	CONTRACT	P. & R. REG. NO	STATE	FED. AID PROJECT NO	FISCAL YEAR	SHEET NO.	TOTAL SHEETS
New Castle	71-05-007	2	DEL.	I-495-3(21)15		2	44

Sta. 120+13.61 ℄ I-495 N.B.(6' Lt.) Bk.=
Sta. 119 +91.70 ℄ I-495 S.B.(6' Rt.) Bk.=
Sta. 348+21.46 ℄ I-495 Ah.

℄ Brg. South Abut.
MODULE SEAL - 1-3/4" x 2" For detail see sheet No. 24.
Sta. 349+27.38
℄ Penna. R.R.
Modular Seal
Proposed R/W & Controlled Access Line
Modular Seal
Sta. 355+76.46
℄ Readina R.R.
Sta. 356+29.34
℄ Christina Ave.
Modular Seal
97'-0" .O. to O. Slab
Module Seal - 4" x 4-3/8"
1.50'
8' Median
36' Rdwy.
Paving Notch
66°-25'-20"
350+00
31'-0"
45'-3" Rdwy.
75'
355+00
66°-29'-30"
66°-21'-00"
℄ I-495 & ℄ Bridge
Southbound Roadway
360+00
N 45°-00'-00" E
Northbound Roadway
End of Approach Slab
Sta. 348+21.46
Sign Support Bracket at Sta. 354+17.38
21'-0" x 2'-6" Manhole and Ladder at all Piers (Typical)
℄ Brg. ℄ Brg.
65.00' 82.00' 65.00'
Proposed R/W & Controlled Access Line
4 Spans @ 98.00' = 392.00'
112.00' 143.00' 112.00'
4 Spans @ 109.00' = 436.00'

1410-C 1416-D 1418-E 1416-S 1410-F 1416-T

PLAN
1" = 50'

+0.69% +3.00%
Vertical Clearance = 23'-0" Min.
Vertical Clearance = 23'-0" Min

	Sta.	P.G.EL.
℄ Brg. Abut.	348+23.88	41.46
℄ Pier 1	348+88.88	42.51
P.V.I.	348+97.42	EL. 41.508 V.C. = 400'
℄ Pier 2	349+70.88	44.17
℄ Pier 3	350+36.63	45.79
℄ Pier 4	351+35.38	48.65
℄ Pier 5	352+33.38	51.59
℄ Pier 6	353+31.38	54.53
℄ Pier 7	354+30.13	57.49
℄ Pier 8	355+42.88	60.87
℄ Pier 9	356+85.88	65.16
℄ Pier 10	357+98.63	68.54
℄ Pier 11	359+08.38	71.84
℄ Pier 12	360+17.38	75.02
℄ Pier 13	361+26.38	77.81
℄ Pier 14 E	362+36.30	80.19
℄ Pier 14 W	362+36.38	80.19

16'-0" Min. CL.
12'-4-1/4" Min. CL.
12'-4-1/2" Min. CL.
32'-6" Min. CL.
Fence
Span Nos. 1 2 3 4 5 6 7 8 9 10 11 12 13 14
℄ Pennsylvania R.R. New Castle Cut-off
Existing Ground Line at ℄ I-495
℄ Reading R.R.
℄ Christina Ave.
0 Datum
Span Nos.

NOTE: EMBANKMENT AND SUBSTRUCTURE CONSTRUCTION BY OTHERS.

ELEVATION
1" = 50'

GENERAL NOTES

SPECIFICATIONS: Design criteria are based on 1961 Standard Specifications for Highway Bridges, American Association of State Highway Officials, with Interim Specifications, 1961, 1962, and 1964.
Material and workmanship are to conform with State of Delaware, State Highway Department Standard Specifications dated June 1, 1970, unless otherwise noted and/or specified by Special Provisions.

DEAD LOAD: Concrete - 150 lbs. per cu. ft.

LIVE LOAD: H20-S16-44 modified for Interstate Loading.

ELEVATIONS: Elevations are based on U.S.C. & G.S. Datum, 1929.

PORTLAND CEMENT CONCRETE MASONRY: Cover over bar reinforcement shall be 2" except as otherwise noted on the plans.
All exposed edges of concrete shall be chamfered 1/2" or 3/4" unless otherwise shown.
Unit stresses: f'_c = 4,500 psi, f_c = 1,200 psi.

BAR REINFORCEMENT: Bar reinforcement shall meet requirements of ASTM designation A615-68, grade 40. Lapped splices, unless otherwise noted, are to be 30 bar diameters.
Unit stress: f_s = 20,000 psi.

~~EPOXY COATING~~ OF STRUCTURAL STEEL: At pier 15 & 18 all ~~exposed~~ surfaces of expansion dams (except for roadway surface), all exposed surfaces of girders and bracing for a distance of two feet each side of centerline of expansion dams, and exposed surfaces of bearing details at expansion dams shall be painted with an epoxy coating. See Special Provisions

CLEAR EPOXY PROTECTIVE COATING - BRIDGE SUBSTRUCTURE: The tops and sides of caps and tops of pier ~~bridge~~ seats (Piers 15, 16, 17, 18), exclusive of bearing areas to be covered by shoes, shall be painted with a clear, epoxy protective coating.

DIMENSION VERIFICATION OF SUBSTRUCTURE & EXPANSION JOINTS: Dimensions throughout the design are determined from average conditions of temperature of 60°F. The Contractor shall verify all dimensions and shall be responsible for any discrepancies before proceeding with the substructure before commencing the superstructure.

DELAWARE DEPARTMENT OF HIGHWAYS & TRANSPORTATION
DIVISION OF HIGHWAYS

INTERSTATE ROUTE I-495

CHRISTINA RIVER BRIDGE
GENERAL PLAN & ELEVATION
SPANS 1 TO 14

DATE
SCALE
DRAWN
CHECKED

DESIGNED BY GREINER INC.
MORAN, PROCTOR, MUELLER & RUTLEDGE
(CONSULTING ENGINEERS)

Where contract drawings is in error on this sheet, the dimensions noted on this sheet shall govern. March 22, 1973 865

D C B A 1 5 10 A B C D

(R-5) 7.4

COUNTY	CONTRACT	F. R. A. REG. NO.	STATE	FED. AID PROJECT NO.	FISCAL YEAR	SHEET NO.	TOTAL SHEETS
New Castle	71-05-007	2	DEL.	I-495-3(21)15		2	44

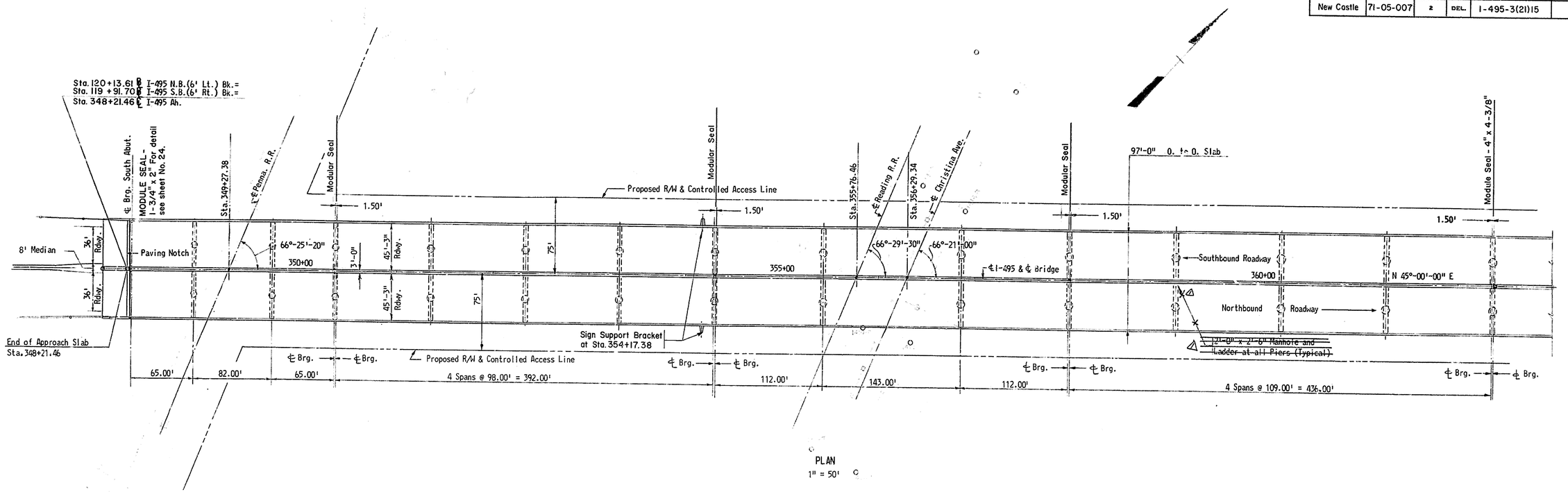

PLAN
1" = 50'

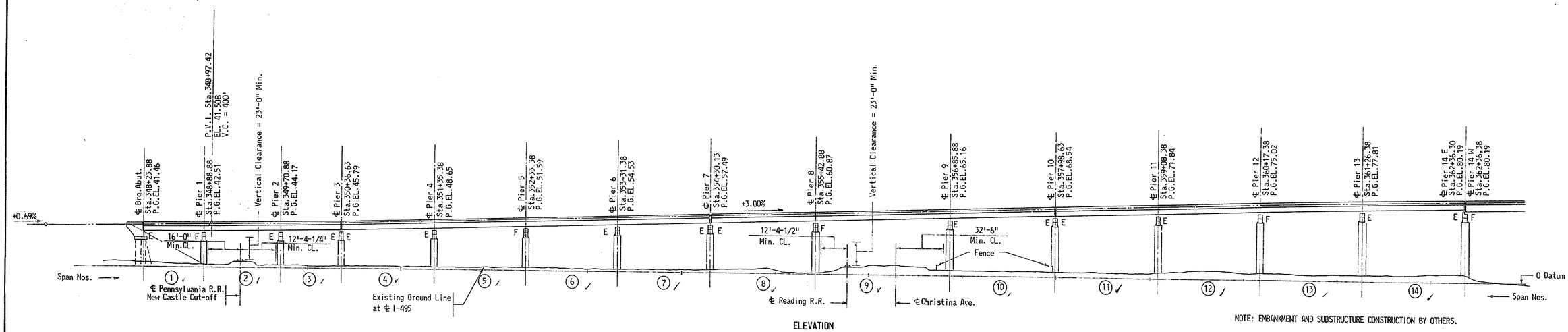

ELEVATION
1" = 50'

NOTE: EMBANKMENT AND SUBSTRUCTURE CONSTRUCTION BY OTHERS.

GENERAL NOTES

SPECIFICATIONS: Design criteria are based on 1961 Standard Specifications for Highway Bridges, American Association of State Highway Officials, with Interim Specifications, 1961, 1962, and 1964.
Material and workmanship are to conform with State of Delaware, State Highway Department Standard Specifications dated June 1, 1970, unless otherwise noted and/or specified by Special Provisions.

DEAD LOAD: Concrete - 150 lbs. per cu. ft.

LIVE LOAD: H20-S16-44 modified for Interstate Loading.

ELEVATIONS: Elevations are based on U.S.C. & G.S. Datum, 1929.

PORTLAND CEMENT CONCRETE MASONRY: Cover over bar reinforcement shall be 2" except as otherwise noted on the Plans.
All exposed edges of concrete shall be chamfered 3/4" x 3/4" unless otherwise shown.
Unit stresses: f'_c = 4,500 psi, f_c = 1,200 psi.

BAR REINFORCEMENT: Bar reinforcement shall meet requirements of ASTM designation A615-68 grade 40. Lapped splices, unless otherwise noted, are to be 24 bar diameters. Unit stress: f_s = 20,000 psi.

EPOXY COATING OF STRUCTURAL STEEL: At pier 15 & 18 all exposed surfaces of expansion dams (except for roadway surface), all exposed surfaces of girders and bracing for a distance of two feet each side of centerline of expansion dams, and exposed surfaces of bearing details at expansion dams shall be painted with an epoxy coating. See Special Provisions

CLEAR EPOXY PROTECTIVE COATING - BRIDGE SUBSTRUCTURE: The tops and sides of caps and tops of pier bridge seats (Piers 15, 16, 17, 18), exclusive of bearing areas to be covered by shoes, shall be painted with a clear epoxy protective coating.

DIMENSION VERIFICATION OF SUBSTRUCTURE & EXPANSION JOINTS: Dimensions throughout the design are determined for the average setting temperature of 68°F of the superstructure deck. It is the contractors responsibility, to verify all dimensions of existing substructure before commencing with superstructure construction.

DELAWARE DEPARTMENT OF HIGHWAYS & TRANSPORTATION
DIVISION OF HIGHWAYS

INTERSTATE ROUTE I-495

CHRISTINA RIVER BRIDGE GENERAL PLAN & ELEVATION SPANS 1 TO 14

J. E. GREINER CO.
MORAN, PROCTOR, MUESER & RUTLEDGE
CONSULTING ENGINEERS

D. J.M.M.
T. I.L.K.
C. J.M.M.

SCALE 1"=50'
DATE 7/1/71

APPROVED BY:
BRIDGE ENGINEER

Sheet and therefore has been deleted. March 22, '73 BES

COLLVUE PRESS, INC. — D-287 4249

COUNTY	CONTRACT	P. R. A. REG. NO.	STATE	FED. AID PROJECT NO.	FISCAL YEAR	SHEET NO.	TOTAL SHEETS
NEW CASTLE	71-05-007	2	DEL.	I-495-3(21)15		3	44

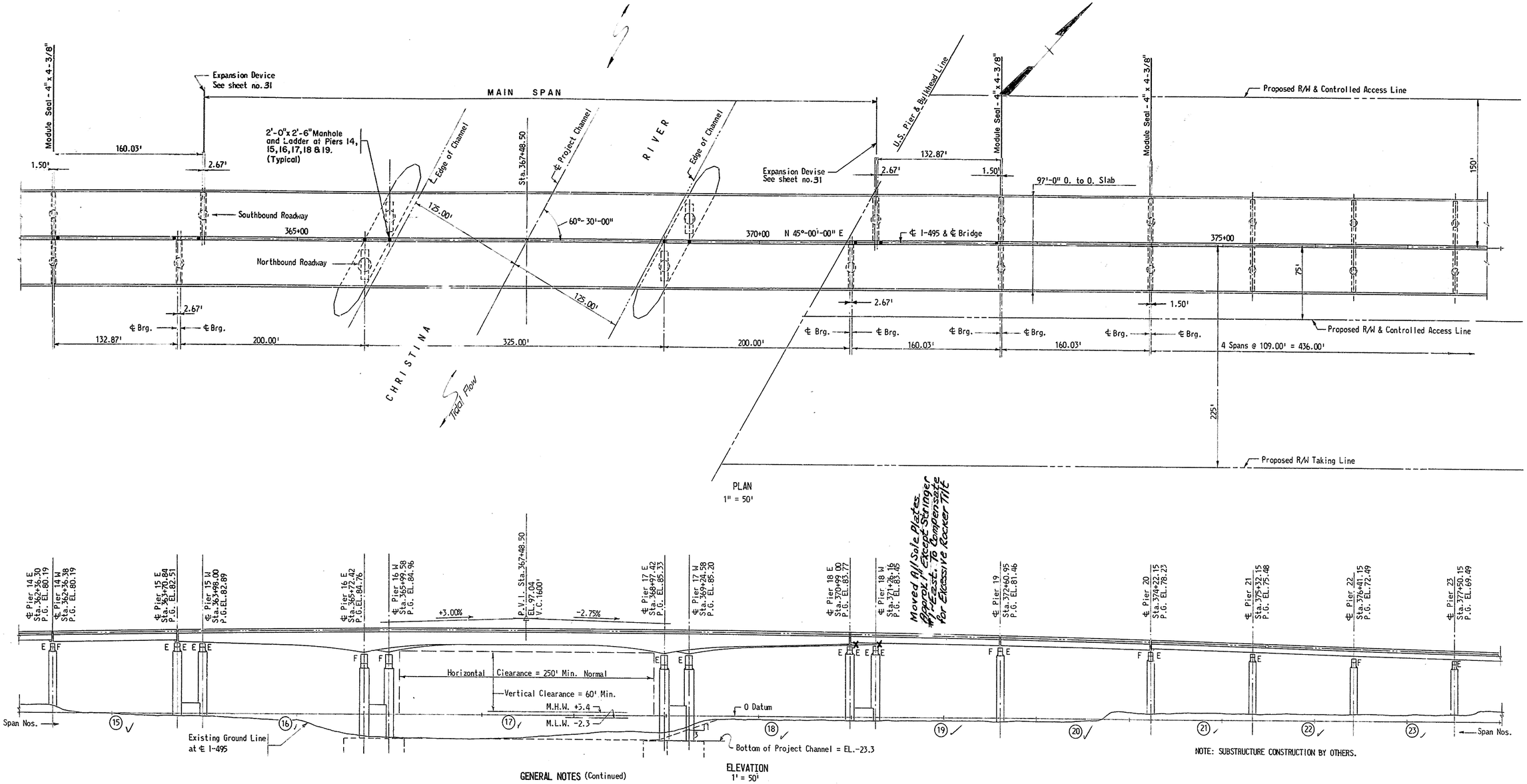

GENERAL NOTES (Continued)

STRUCTURAL STEEL AND STEELWORK: All structural steel shall conform with the requirements of (A.S.T.M. Designation A-36) A.A.S.H.O. Designation M183.

Unit stress: f_s = 20,000 psi.

All welding shall conform to the Standard Specifications for Welded Highway and Railway Bridges of The American Welding Society, with current corrections and addenda.

All dimensions shown on the Plans are for the structure at a normal temperature of + 68° F.

To avoid oversight the shop drawings shall show clearly the nature, dimensions, and locations of all welds, bolt sizes, open holes, painting, etc. Girders shall be cambered as shown on the drawings, allowing for loss of camber due to welding. No welded field splices will be permitted unless noted on the drawings. Do not paint steel surfaces in contact with concrete. The bearing shoes, when in final position, are to be painted in order to prevent rust stains on the concrete. All bolts shall be 7/8"ϕ high strength bolts unless otherwise shown.

All pertinent substructure dimensions shall be verified by the Contractor prior to ordering superstructure steel.

ANCHOR BOLTS: Anchor bolts for all approach spans shall be placed and set in grout under this Contract. Immediately after the grout has attained its initial set the anchor bolts shall be thoroughly coated with an approved heavy grease and securely wrapped in burlap. Payment for these rust preventative measures shall be included in the price bid for Sect. 606.

Anchor bolts, sleeves, and washer plates for the main span shoes at Piers 15, 16, 17 and 18 are existing in place.

MATERIALS EXISTING IN PLACE: In addition to anchor bolts, sleeves and washer plates for the main shoes at Piers 15, 16, 17 and 18 the following items are existing in place:

1. Sleeves in approach span piers and anchor bolts in So. Abut.
2. Bolts for platform supports at Piers as shown on Sheet Nos. 29 and 33.

It shall be the responsibility of the Superstructure Contractor to verify the location of existing anchor bolts and bolts for platform supports and existing masonry elevations and dimensions, and make any necessary changes in the structural details to assure a proper fit. Any changes in details shall be subject to approval by the Director.

PERMANENT METAL SLAB FORM: Permanent metal slab forms which remain in place for concrete floor slabs of bridges shall be used by the Contractor. Design and material of the forms shall be such as defined in Special Provisions and shown in Contract drawings. The pay quantity of concrete in the floor slabs shall be based on dimensions shown in the plans with no allowance for form deflection.

SHEAR CONNECTORS: Three general types of shear connectors are eligible for use at the Contractor's option:

1. Structural Shapes.
2. Welded Studs (Details based on the use of welded studs are shown on the Contract Plans).

Should the Contractor elect to use a different type of shear connector from that shown and detailed on the Contract Plans, he shall submit, for approval, complete detailed shop drawings and all other pertinent data concerning the shear connector he proposes to use. The proposed shear connector shall develop the equivalent resistance to shear of the connector shown on the Plans, and shall be subject to approval.

OGILVIE PRESS, INC. — D-127 4248

J. E. GREINER CO.
MORAN, PROCTOR, MUESER & RUTLEDGE
CONSULTING ENGINEERS

DELAWARE DEPARTMENT OF HIGHWAYS & TRANSPORTATION
DIVISION OF HIGHWAYS

INTERSTATE ROUTE I-495

CHRISTINA RIVER BRIDGE GENERAL PLAN & ELEVATION SPANS 15 TO 23

D. J.M.M.	SCALE 1"=50'	APPROVED BY:
T. I.L.K.		
C. J.M.M.	DATE 7/1/71	BRIDGE ENGINEER

COUNTY	CONTRACT	P. R. A. REG. NO.	STATE	FED. AID PROJECT NO.	FISCAL YEAR	SHEET NO.	TOTAL SHEETS
New Castle	71-05-007	2	DEL.	I-495-3(21)15		4	44

392+16.57
348+21.46
43 95.11

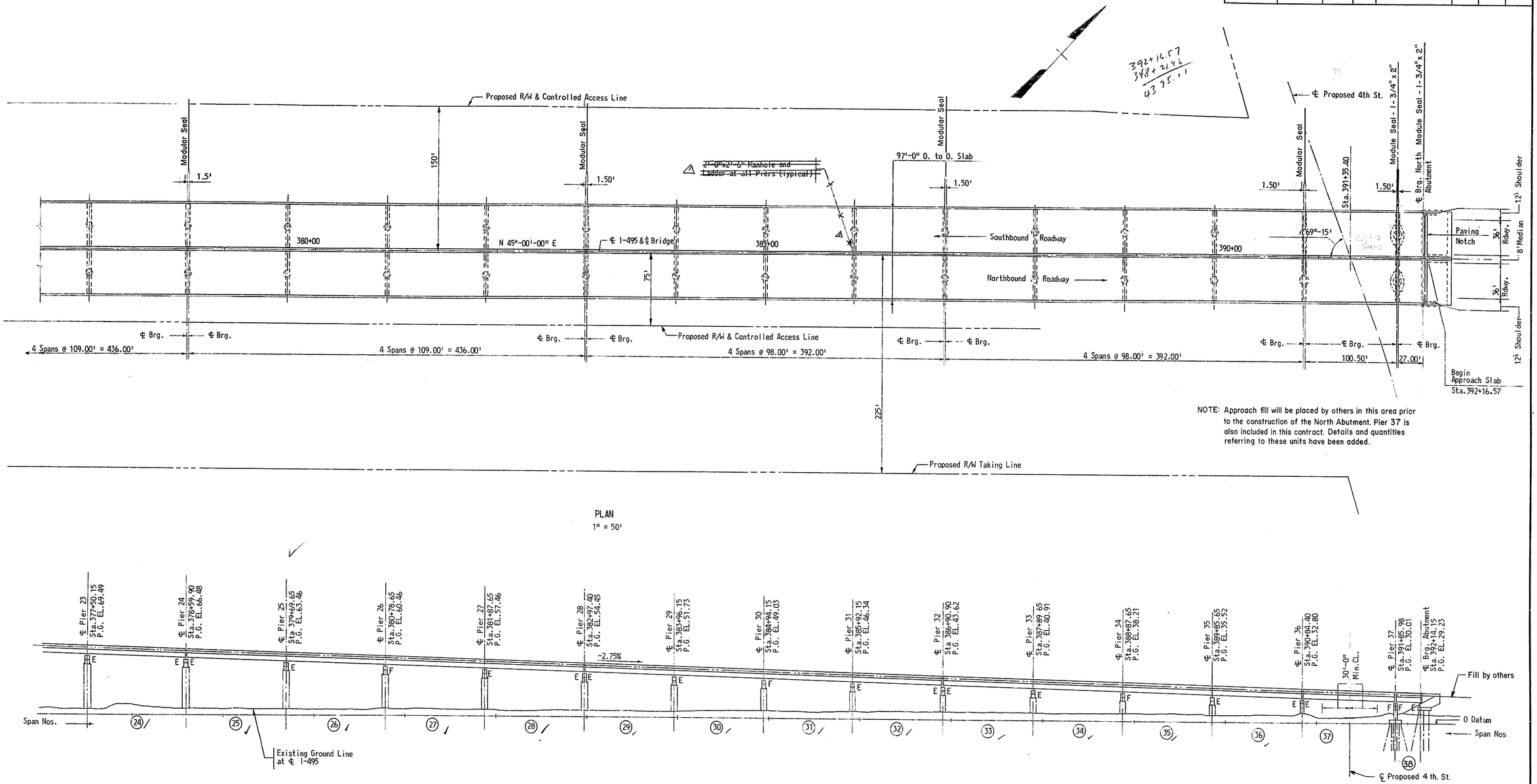

NOTE: Approach fill will be placed by others in this area prior to the construction of the North Abutment. Pier 37 is also included in this contract. Details and quantities referring to these units have been added.

PLAN
1" = 50'

NOTE: Embankment and substructure construction except Pier 37 and North Abutment by others.

ELEVATION
1" = 50'

* Estimated Fixed Quantity Item - Section 109.06 of Standard Specifications

PROPOSAL QUANTITIES

ITEM	207		210	602					605	624				628	704	S.P.	S.P.	S.P.	S.P.	606		S.P.			S.P.
DESCRIPTION	Excavation for Structures		Select Borrow	Portland Cement Concrete Masonry *					Bar *	Cast-in-place Concrete Piles		Steel Shell Test Piles		Concrete Slope	Portland Cement	Trainees	Painting Metal Structures	Clear Epoxy Protection Coating Bridge Substructure Approx. Area=1030sy.	Electrical Work	Steel Structures		Prefabricated Expansion Joint System *			Mobilization
	Abutment	Pier 37		Super-structure	Approach Slab	Abutment	Pier Footing	Pier Above Footing	Reinforcement	Abutment (12" Dia.)	Pier 37 (16" Dia.)	At Abut. (12" Dia.)	At Pier 37 (16" Dia.)	Paving t=4"	Concrete Gutter t=4"					Approach Spans (11,070,000 lbs.)	Main Spans (4,010,000 lbs.)	Module 1¾"x2"	Module 4"x4⅜"	Modular 2-4"x4⅜"	
UNIT	C.Y.	C.Y.	C.Y.	C.Y.	C.Y.	C.Y.	C.Y.	C.Y.	LB.	L.F.	L.F.	L.F.	L.F.	S.Y.	S.Y.	Each	L.S.	L.S.	L.S.	L.S.	L.S.	L.F.	L.F.	L.F.	L.S.
SUPER-STRUCTURE				~~12,719~~	143				~~3,739,295~~ -3,735,880-							4	L.S.	L.S.	L.S.	L.S	L.S.	288	288	672	
NORTH APPROACH ABUTMENT	270		350			214			20,300	3,510		130		275	105										
NORTH APPROACH PIER 37		195					86.5	121.5	31,150		1,540		120												
PROPOSAL	465		350	~~12,719~~	143	214	86.5	121.5	~~3,787,330~~	3,510	1,540	130	120	275	105	4	L.S.	L.S.	L.S.	L.S.	L.S.	288	288	672	L.S.

△ 12,731 △ 3,789,735

OBSLVIE PRESS, INC. — D-187 4848

DELAWARE DEPARTMENT OF HIGHWAYS & TRANSPORTATION
DIVISION OF HIGHWAYS

INTERSTATE ROUTE I-495

CHRISTINA RIVER BRIDGE GENERAL PLAN & ELEVATION SPANS 24 TO 38

D. J.M.M.	SCALE 1"=50'	APPROVED BY:
T. I.L.K.		
C. J.M.M.	DATE 7/1/71	BRIDGE ENGINEER

△ Sidewalk and Parapet has been deleted - March 22, 73 BES
△ Eliminate Curb Openings & Adjust Quantities March 30, 73 BES

R-5 (94)

COUNTY	CONTRACT	F. A. RES. NO.	STATE	FED. AID PROJECT NO.	FISCAL YEAR	SHEET NO.	TOTAL SHEETS
NEW CASTLE	71-05-007	2	DEL.	I-495-3(21)15		5	44

REINFORCING SCHEDULE
(2 REQUIRED)

BENT BARS (All dimensions are out to out)

MARK	NO.	SIZE	LENGTH	TYPE	A	B	C	D	E	F	G	REMARKS
551	13	#5	4-7	I	1-6	3-1						
552	56	"	3-10	I	0-9	3-1						
553	49		5-5	I	0-9	4-8						
554	8		6-9	I	3-6	3-3						
555	8		8-2	I	3-6	4-8						
556	8		8-4	I	3-6	4-10						
557	16		8-6	I	3-6	5-0						
558	8		8-2	I	3-6	4-8						
559	49		9-7	I	1-9	7-10						
560	12		3-2	I	1-7	1-7						
561	8		13-0	II	11-0	2-0				1-2	1-8	
562	6		18-0 to 24-8	IV	2-0	6-8 to 10-0	1-2	8-2 to 11-6		1-8	1-2	Increment 0'-8"
563	4		12-2 to 16-8	III	2-0	4-1 to 6-1	0-7 to 1-1	5-6 to 7-6		1-8	1-2	Equal increment on sides shown
564	21		5-5	V	see	diagram						
565	6	#5	6-0	II	4-0	2-0				1-2	1-8	
651	2	#6	13-6	II	11-7	1-11						
652	18	"	10-0	III	8-0	1-0	1-0	0-11	0-6	0-6	0-11	
653	1	"	2-8	I	1-11	3-9						
654	4	"	20-4	II	15-10	4-6				0-3	4-6	
655	4	#6	4-7	I	1-1	3-6						
1051	4	#10	34-10	I	3-2	31-8						

STRAIGHT BARS

MARK	NO.	SIZE	LENGTH	REMARKS
501	6	#5	40-0	
502	6	"	10-1	
503	31	"	7-9	
504	2	"	13-9	
505	47	"	3-7	
506	11	"	13-0	
507	2	"	3-3	
510	4	"	12-0 to 16-6	Increment 1'-6"
511	3	"	16-0 to 19-0	Increment 1'-6"
512	9	"	19-8	
514	3	#5	9-0	
515	40	#5	8-0	
601	21	#6	30-0	
602	17	"	20-1	

MARK	NO.	SIZE	LENGTH	REMARKS
603	1	#6	9'-0 to 13'-6	Increment 1'-6"
604	3	"	14'-11 to 19'-11	Increment 1'-6"
605	9	"	19-8	
607	7	"	7-6	
608	1	"	10-0	
609	1	#6	39-6	
701	61	#7	7-9	
702	4	"	13-9	
703	2	#7	7-6	
1001	9	#10	40-6	
1002	9	"	11-2	
1003	8	#10	10-10	

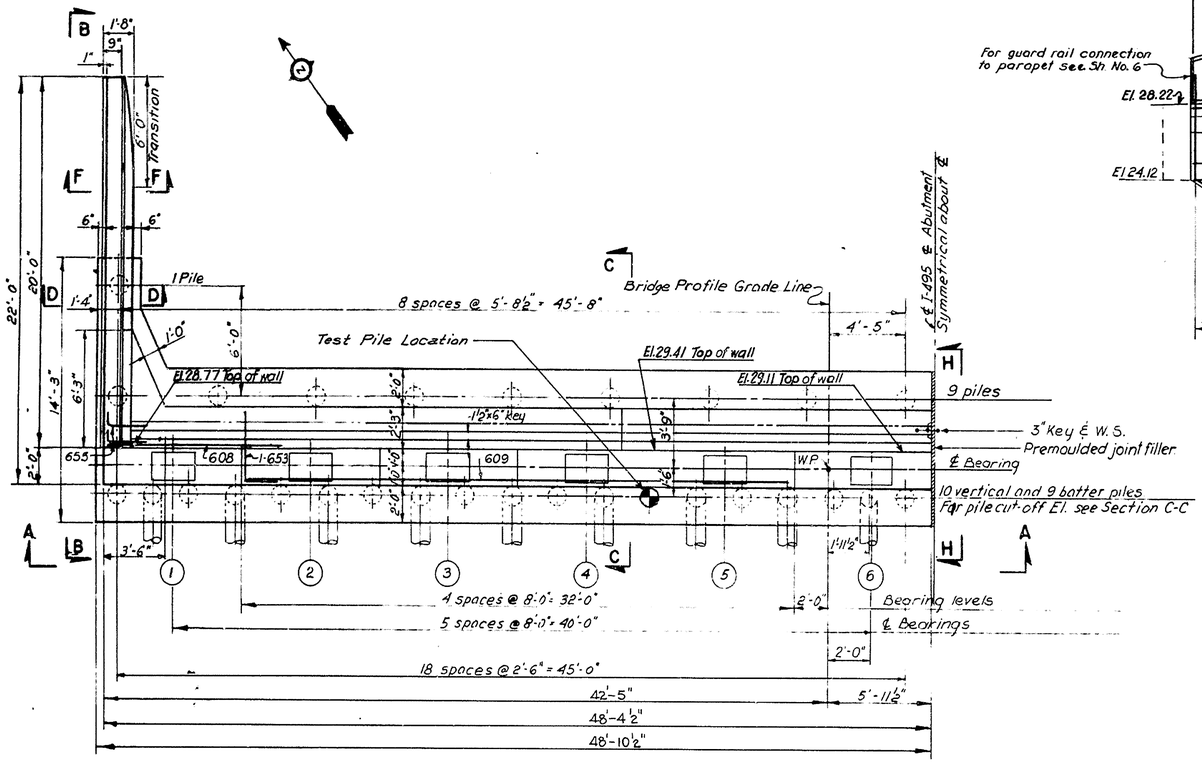

PLAN

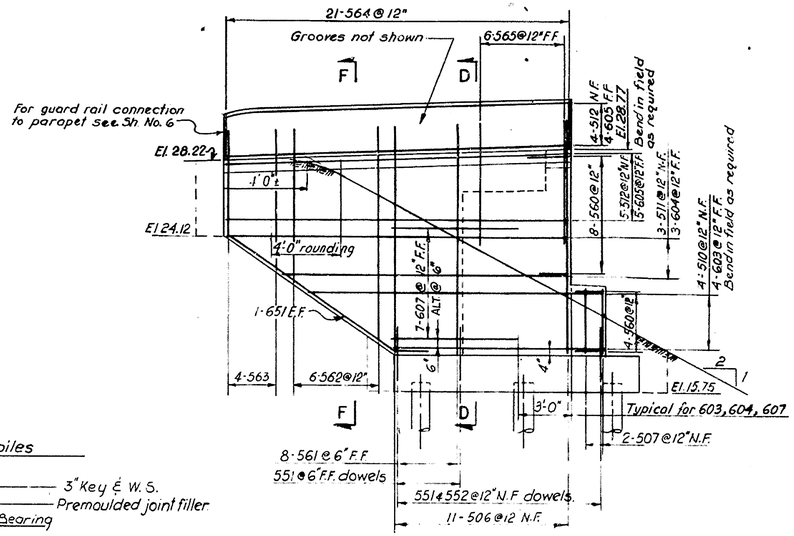

ELEVATION B-B

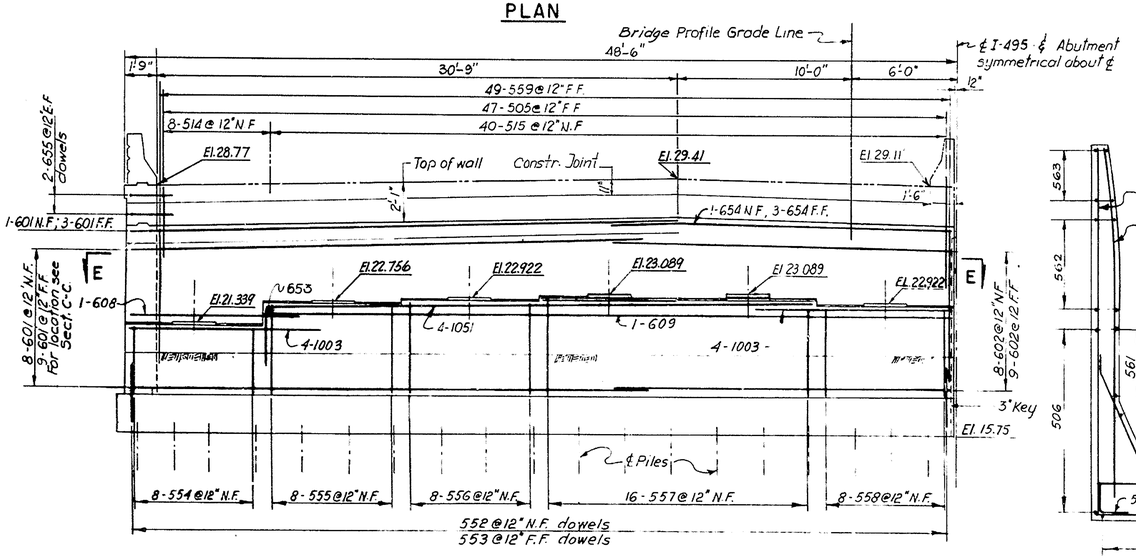

ELEVATION A-A

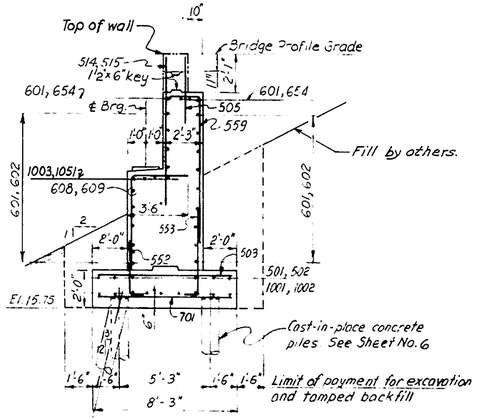

SECTION C-C

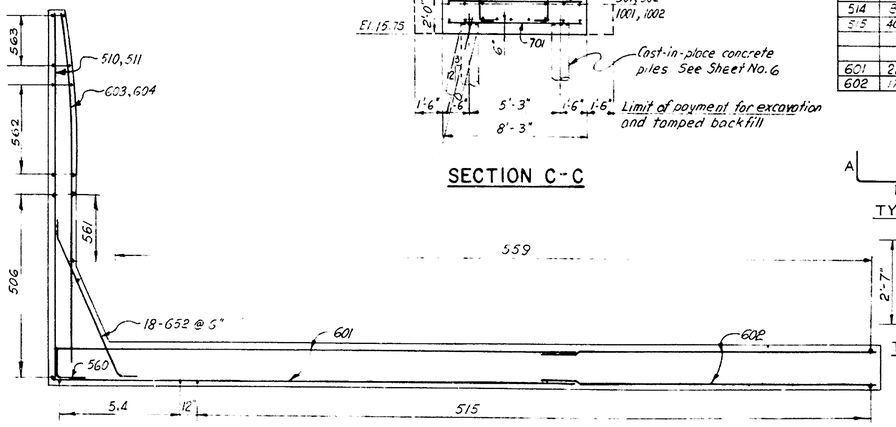

SECTION E-E

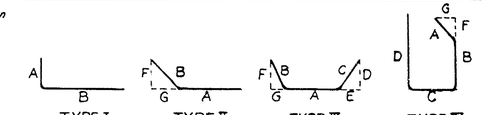

NOTES

1. For General Notes see Sheet No. 2
2. For Sections D-D, F-F & H-H see Sheet No. 6

DELAWARE DEPARTMENT
OF HIGHWAYS & TRANSPORTATION
DIVISION OF HIGHWAYS

INTERSTATE ROUTE I-495

CHRISTINA RIVER BRIDGE
NORTH ABUTMENT

J. E. GREINER CO.
MORAN, PROCTOR, MUESER & RUTLEDGE
CONSULTING ENGINEERS

D. R.C.H.
T. P.O.
C. W.W.

SCALE 1/4" = 1'-0"

DATE 7/1/71

APPROVED BY:

BRIDGE ENGINEER

REVISIONS

GOELYNE PRESS, INC. — 8-127 4246

D C B A 1 5 10 A B C D

COUNTY	CONTRACT	F. A. REG. NO.	STATE	FED. AID PROJECT NO.	FISCAL YEAR	SHEET NO.	TOTAL SHEETS
NEW CASTLE	71-05-007	2	DEL.	I-495-3(21)15		6	44

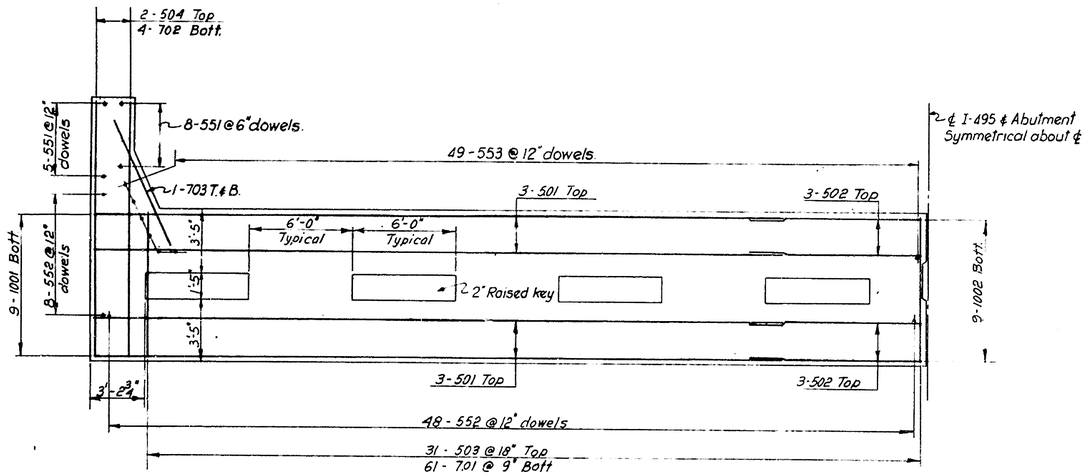

FOOTING REINFORCING PLAN

Scale: 1/4" = 1'-0"

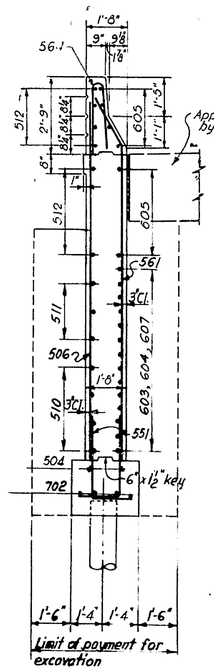

SECTION D-D

Scale: 3/8" = 1'-0"

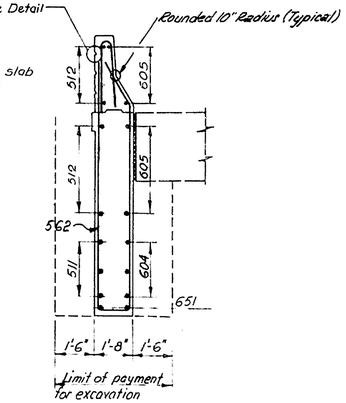

PLAN

CONC. PAD UNDER BEARING PLATES

Scale: 1/2" = 1'-0"

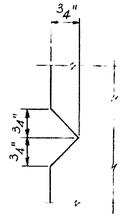

DETAIL OF GROOVE

N.T.S.

SECTION J-J

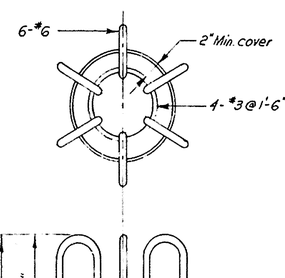

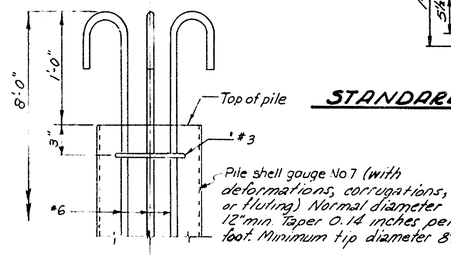

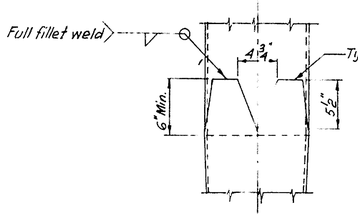

PILE DETAIL

N.T.S.

NOTE: Alternate type of piles meeting State of Delaware Standard Specifications will be accepted

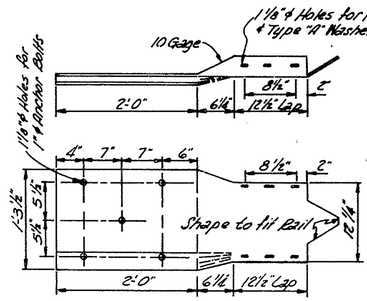

STANDARD TERMINAL SECTION MODIFIED

Scale 1"=1'0"

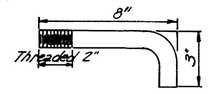

1"ϕ ANCHOR BOLT

Scale: 1/4"=1"

NOTE:
This detail for location of Anchor Bolts only. Do not install Terminal Section.

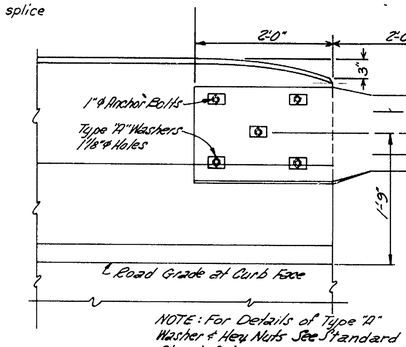

NOTE: For Details of Type "A" Washer & Hex. Nuts See Standard Sheet G.4.

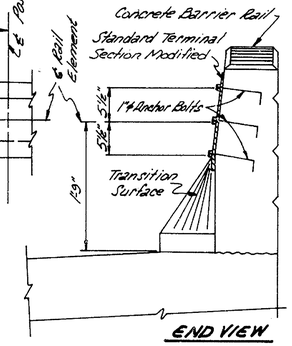

GUARDRAIL JUNCTION AT BRIDGE BARRIER RAIL ~ NEW CONSTRUCTION

Scale: 1"=1'0"

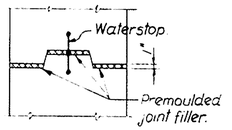

SECTION M-M

N.T.S.

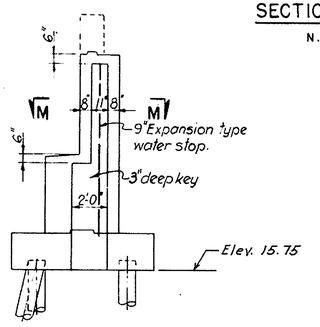

SECTION H-H

Scale: 1/4" = 1'-0"

NOTES

1. For General Notes see Sheet No. 2
2. Cast-in-place concrete piles for Abutments shall be driven to develop a minimum 35 ton bearing capacity. See Specifications.
3. Approximate Pile Tip Elevations for estimating purposes only:
   North Abutment El.-45.0.

REVISIONS

DELAWARE DEPARTMENT OF HIGHWAYS & TRANSPORTATION	
DIVISION OF HIGHWAYS	
INTERSTATE ROUTE I-495	
CHRISTINA RIVER BRIDGE ABUTMENT DETAILS	
J. E. GREINER CO. MORAN, PROCTOR, MUESER & RUTLEDGE CONSULTING ENGINEERS	D. R.C.H. .T. P.O. C. W.W
SCALE AS NOTED	APPROVED BY:
DATE 7/1/71	BRIDGE ENGINEER

COUNTY	CONTRACT	F. P. A. REG. NO.	STATE	FED. AID PROJECT NO.	FISCAL YEAR	SHEET NO.	TOTAL SHEETS
NEW CASTLE	71-05-007	2	DEL.	I-495-3(21)15		7	44

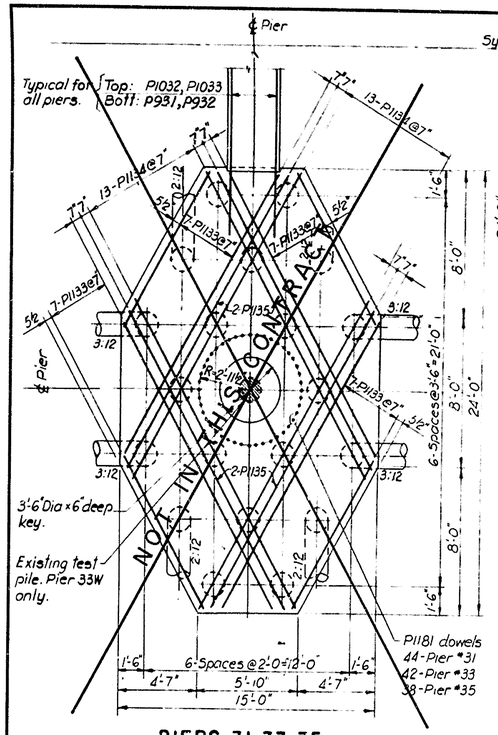

PIERS 31, 33, 35

Scale : 1/4" = 1'-0"

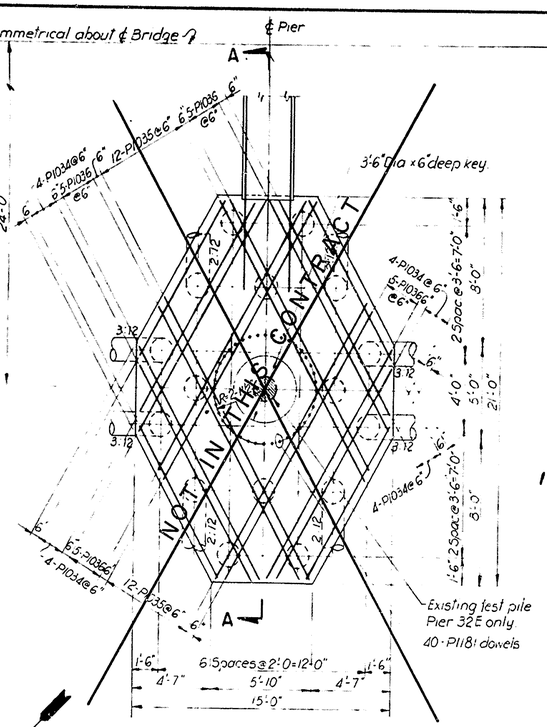

PIER 32

Scale : 1/4" = 1'-0"

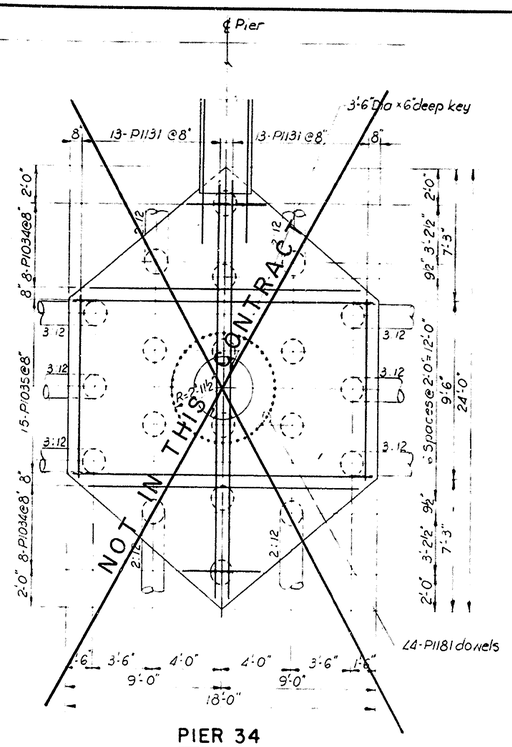

PIER 34

Scale : 1/4" = 1'-0"

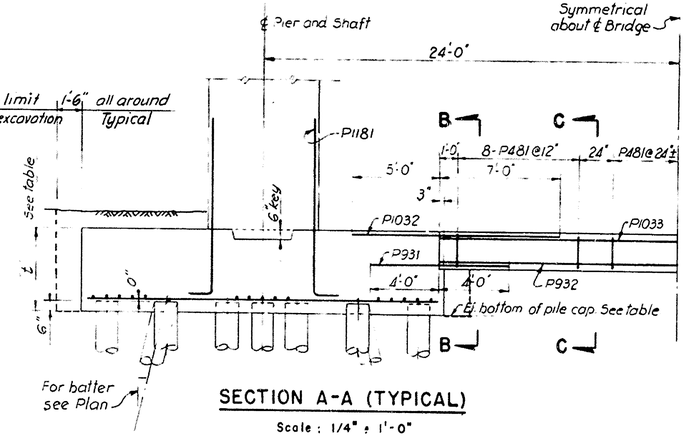

SECTION A-A (TYPICAL)

Scale : 1/4" = 1'-0"

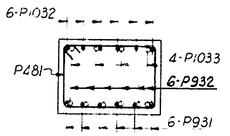

SECTION B-B

Scale : 1/2" = 1'-0"

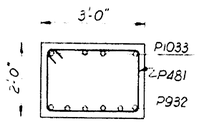

SECTION C-C

Scale : 1/2" = 1'-0"

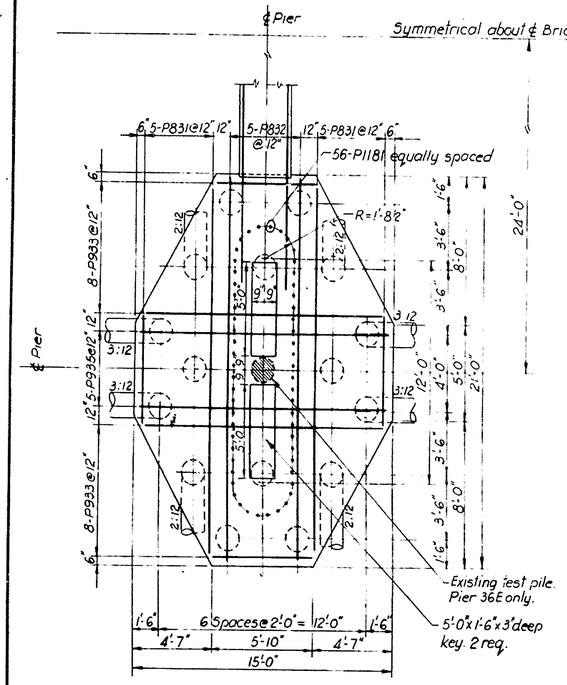

PIER 36

Scale : 1/4" = 1'-0"

NOTE: Piling layout not in this contract.

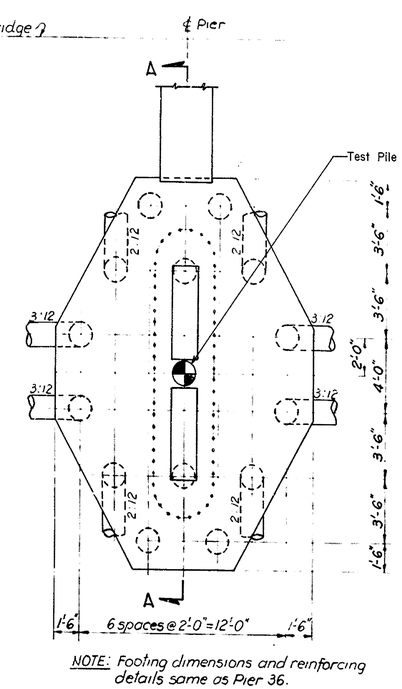

NOTE: Footing dimensions and reinforcing details same as Pier 36.

PIER 37

Scale : 1/4" = 1'-0"

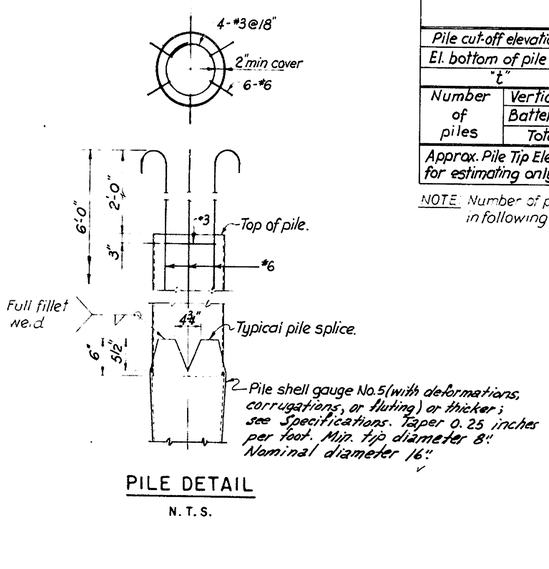

PILE DETAIL

N. T. S.

TABULATION OF FOOTING PROPERTIES

		PIER NO						
		31	32	33	34	35	36	37
Pile cut-off elevations		+2.402	+3.124	+1.971	+2.844	+3.581	+3.292	+3.300
El. bottom of pile cap		+1.902	+2.624	+1.471	+2.344	+3.081	+2.792	+2.800
"t"		5'-0"	4'-6"	5'-0"	5'-0"	5'-0"	4'-6"	4'-6"
Number of piles	Vertical	13	9	13	10	13	9	7
	Batter	8	8	8	10	8	8	8
	Total	21	17	21 *	20	21	17 *	15
Approx. Pile Tip Elev. for estimating only.		-73.0	-67.0	-73.0	-77.0	-72.0	-62.0	-50.0

NOT IN THIS CONTRACT

NOTE. Number of piles shown includes one test pile driven by others in following footings 32E, 33W & 36E *.

NOTES:

1. For General Notes see Sheet No. 2
2. For Reinforcing Bar Schedule see Sheet No. 9.
3. Cast-in-place concrete piles for Pier 37 shall be driven to develop a minimum bearing capacity of 60 tons. See Specifications.

DELAWARE DEPARTMENT OF HIGHWAYS & TRANSPORTATION
DIVISION OF HIGHWAYS

INTERSTATE ROUTE I-495

CHRISTINA RIVER BRIDGE
FOOTINGS FOR PIER 37
EAST & WEST

J. E. GREINER CO.
MORAN, PROCTOR, MUESER & RUTLEDGE
CONSULTING ENGINEERS

D. A. L. A.
T. P. F.
C. W. W.

SCALE AS NOTED

DATE 7/1/71

APPROVED BY: [signature]
BRIDGE ENGINEER

QUILVIE PRESS, INC. — D-187

COUNTY	CONTRACT	F. A. PROJ. NO.	STATE	FED. AID PROJECT NO.	FISCAL YEAR	SHEET NO.	TOTAL SHEETS
NEW CASTLE	71-05-007	2	DEL	I-495-3(21)15		8	44

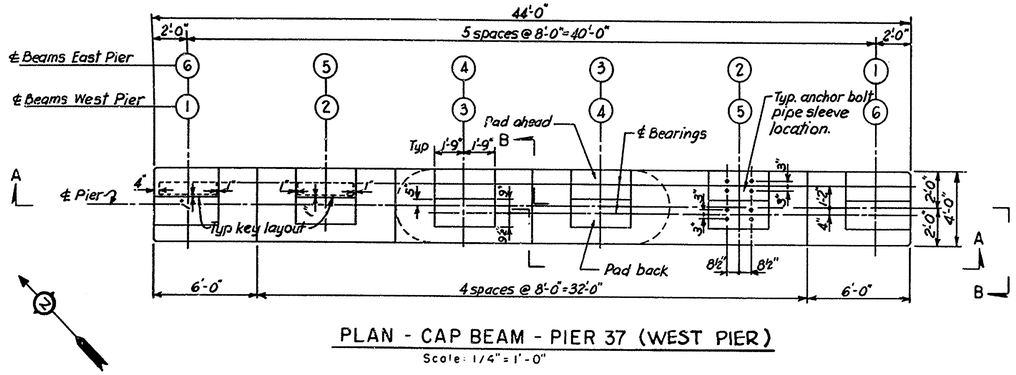

PLAN - CAP BEAM - PIER 37 (WEST PIER)

Scale: 1/4" = 1'-0"

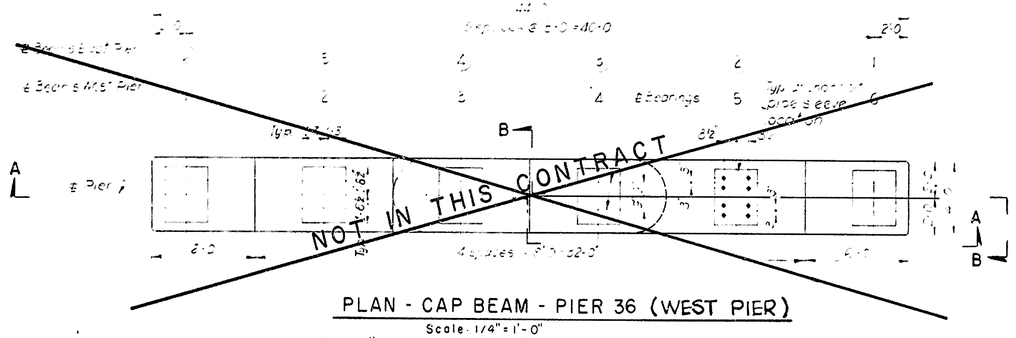

PLAN - CAP BEAM - PIER 36 (WEST PIER)

Scale: 1/4" = 1'-0"

Pier #37-East Seats #1, 3, & 5 - Each have 3/8" Fill Plates
Ref. Correspondance June 1, 1973 To B.A. & F.C. Wagman
from B.C. Furman.

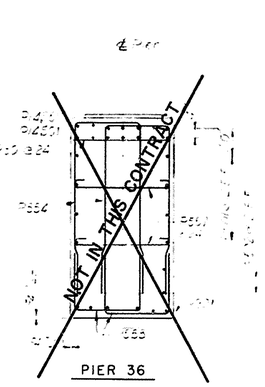

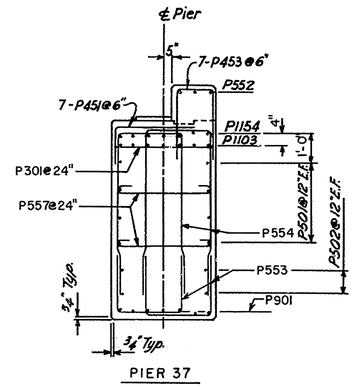

SECTION C-C

Scale: 3/8" = 1'-0"

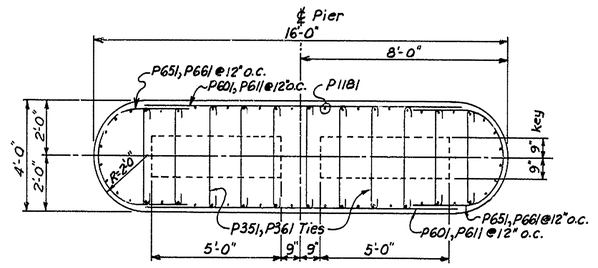

SECTION D-D

Scale: 3/8" = 1'-0"

TABULATION OF ELEVATIONS AND HEIGHTS OF PIERS

PIER NO.

	36	37 AHEAD	37 BACK
EL. TOP OF PAD ①	24.496	22.352	22.352
②	25.042	23.769	22.550
③	25.209	23.936	22.717
④	25.376	24.102	22.883
⑤	25.376	24.102	22.883
⑥	25.209	23.935	22.716
EL. BOTTOM OF CAP BEAM	17.942	14.55	
EL. TOP OF FOOTING	7.292	7.300	
DIMENSION "h"	9'-10"	7'-3"	

TABULATION OF ELEVATIONS AND HEIGHTS OF PIERS

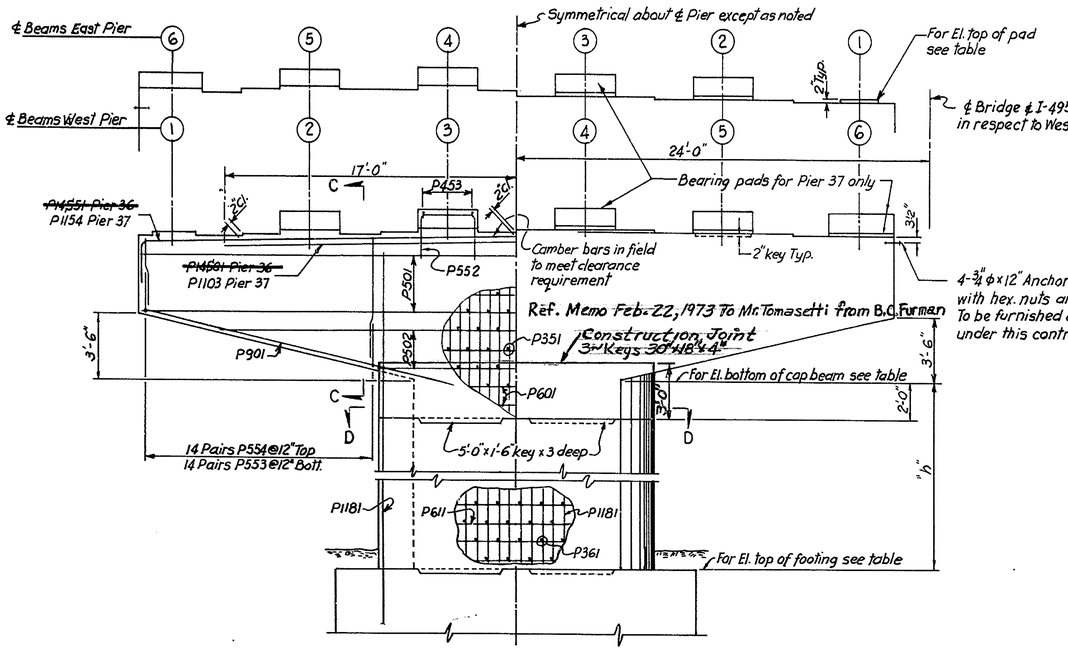

HALF SECTION A-A HALF ELEVATION A-A

Scale: 1/4" = 1'-0"

NOTE: View of pier looking North

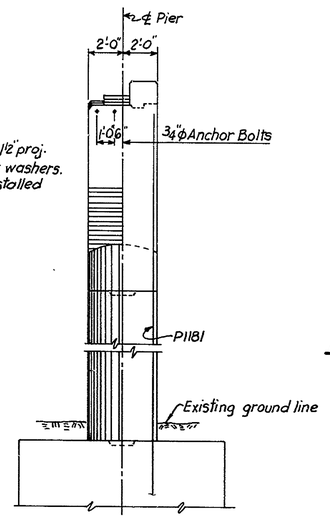

HALF ELEVATION B-B HALF SECTION B-B

Scale: 1/4" = 1'-0"

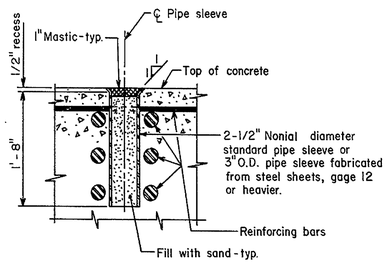

ANCHOR BOLT PIPE SLEEVE

N.T.S.

NOTES

1. For General Notes see Sheet No. 2
2. For Footing Details see Sheet No. 7
3. For Reinforcing Bar Schedule see Sheet No. 9

DELAWARE DEPARTMENT OF HIGHWAYS & TRANSPORTATION
DIVISION OF HIGHWAYS

INTERSTATE ROUTE I-495

CHRISTINA RIVER BRIDGE
PIER 37 - EAST & WEST

J. E. GREINER CO.
MORAN, PROCTOR, MUESER & RUTLEDGE
CONSULTING ENGINEERS

D. Y. U
T. P. F. / H.D.
C. W. W

SCALE AS NOTED

DATE 7/1/71

APPROVED BY

BRIDGE ENGINEER

41

COUNTY	CONTRACT	P. P. & REG. NO.	STATE	FED. AID PROJECT NO.	FISCAL YEAR	SHEET NO.	TOTAL SHEETS
NEW CASTLE	71-05-007	R	DEL.	I-495-3(21)15		9	44

STRAIGHT BARS

	MARK	SIZE	PIER 29 REQ.	29 LENGTH	30 REQ.	30 LENGTH	31 REQ.	31 LENGTH	32 REQ.	32 LENGTH	33 REQ.	33 LENGTH	34 REQ.	34 LENGTH	35 REQ.	35 LENGTH	36 REQ.	36 LENGTH	37 REQ.	37 LENGTH	REMARKS
CAP BEAMS	P301	#3	64	3-8	64	3-8	64	3-8	64	3-8	64	3-8	64	3-8	64	3-8	36	3-8	36	3-8	
	P501	#5	16	43-8	16	43-8	16	43-8	16	43-8	16	43-8	16	43-8	16	43-8	16	43-8	16	43-8	
	P502	#5	12	9-0 to 34-0 INCREMENT 8'-8"	12	9-0 to 34-0	12	9-0 to 34-0	12	9-0 to 34-0	12	9-0 to 34-0	12	9-0 to 34-0	12	9-0 to 34-0	8	15-0 to 33-4 INCREMENT 9'-2"	12	15-0 to 33-4	7 BARS OF EACH
	P601	#6		-		-		-		-				-		-	8	12-0	8	12-0	
	P901	#9	24	25-0	24	25-0	24	25-0	24	25-0	24	25-0	24	25-0	24	25-0	28	18-6	24	18-6	
	P1102	#11	32	13-0	32	13-0	32	13-0	32	13-0	24	12-0	24	13-0	24	13-0		-		-	
	P1103	#11		-		-		-		-		-		-		-		-	14	34-0	
	P1401	#14	16	34-0	16	34-0	16	34-0	16	34-0	16	34-0	16	34-0	16	34-0	14	34-0		-	
SHAFTS	P611	#6		-		-		-		-		-		-		-	32	12-0	20	12-0	
	P1111	#11	36	26-10	36	24-10	52	21-10	44	19-10	48	16-10	52	14-4	44	11-6		-		-	
	P1112	#11	28	35-0	32	33-0	36	30-0	36	28-0	26	25-0	36	22-6	32	19-6		-		-	
	P1113	#11	32	26-10	36	24-10		-		-		-		-		-		-		-	

NOT IN THIS CONTRACT

STRAIGHT BARS

	MARK	SIZE	PIER 29 REQ.	29 LENGTH	30 REQ.	30 LENGTH	31 REQ.	31 LENGTH	32 REQ.	32 LENGTH	33 REQ.	33 LENGTH	34 REQ.	34 LENGTH	35 REQ.	35 LENGTH	36 REQ.	36 LENGTH	37 REQ.	37 LENGTH	REMARKS
FOOTINGS	P831	#8		-		-		-		-		-		-		-	20	6-0 to 20-0 INCREMENT 3'-8" 4 BARS OF EACH	20	6'-0 to 20'-0 Increment 3'-6" 4 bars of each	
	P832	#8		-		-		-		-		-		-		-	10	20-6	10	20-6	
	P931	#9	20	10-0	20	10-0	12	8-0	12	12-0	12	8-0	12	8-0	12	8-0	12	12-0	12	8'-0	
	P932	#9	5	33-0	5	33-0	6	24-0	6	27-0	6	24-0	6	27-0	6	24-0	6	27-0	6	27-0	
	P933	#9	48	8-6 to 13-6 INCREMENT 1'-0" 8 BARS OF EACH	48	8-6 to 13-6 INCREMENT 1'-0" 8 BARS OF EACH		-		-		-		-		-	32	5'-10 to 19-0 INCREMENT 1'-2" 4 BARS OF EACH	32	5'-10 to 19-0 INCREMENT 1'-2" 4 BARS OF EACH	
	P935	#9	68	14-6	68	14-6		-		-		-		-		-	10	14-6	10	14-6	
	P1031	#10	10	14-0	10	14-0		-		-		-		-		-		-		-	
	P1032	#10	10	12-0	10	12-0	12	12-0	12	12-0	12	12-0	12	12-0	12	12-0	12	12-0	12	12-0	
	P1033	#10	5	33-0	5	33-0	4	24-0	4	27-0	4	24-0	4	27-0	4	24-0	4	27-0	4	27-0	
	P1034	#10		-		-		-	32	9-9 to 13-3 INCREMENT 1'-2" 4 BARS OF EACH		-	32	8-2 to 15-10 INCREMENT 1'-8" 4 BARS OF EACH		-		-		-	
	P1035	#10		-		-		-	28	17-4		-	30	17-4		-		-		-	
	P1036	#10		-		-		-	40	14-5 to 16-9 INCREMENT 0'-7" 8 BARS OF EACH		-		-		-		-		-	
	P1131	#11		-		-		-		-		-	52	9-10 to 22-10 INCREMENT 1'-1" 4 BARS OF EACH		-		-		-	
	P1133	#11		-		-	56	9-9 to 17-9 INCREMENT 1'-4" 8 BARS OF EACH		-	56	9-9 to 17-9 INCREMENT 1'-4" 8 BARS OF EACH		-	56	9-9 to 17-9 INCREMENT 1'-8" 8 BARS OF EACH		-		-	
	P1134	#11		-		-	52	19-2		-	52	19-2		-	52	19-2		-		-	
	P1135	#11		-		-	8	18-6		-	8	18-6		-	8	18-6		-		-	

NOT IN THIS CONTRACT

BENT BARS (ALL DIMENSIONS ARE OUT TO OUT)

	MARK	SIZE	PIER 29 REQ.	29 LENGTH	30 REQ.	30 LENGTH	31 REQ.	31 LENGTH	32 REQ.	32 LENGTH	33 REQ.	33 LENGTH	34 REQ.	34 LENGTH	35 REQ.	35 LENGTH	36 REQ.	36 LENGTH	37 REQ.	37 LENGTH	REMARKS
CAP BEAMS	P351	#3		-		-		-		-		-		-		-	184	4-6	198	4-6	
	P451	#4																	70	5'-0	
	P452	#4	12	5-0	12	5-0	12	5-0	12	5-0	12	5-0	12	5-0	12	5-0		-		-	
	P453	#4																	70	6'-9	
	P551	#5	32	15-7	32	15-7	32	15-7	32	15-7	32	15-7	32	15-7	32	15-7		-		-	
	P552	#5		-		-		-		-									30	8-8	
	P553	#5	224	7-2	224	7-2	224	7-2	224	7-2	224	7-2	224	7-2	224	7-2	112	7-0	112	7-0	
	P554	#5	152	9-6 to 18-6	152	9-6 to 18-6	152	9-6 to 18-6	152	9-6 to 18-6	152	9-6 to 18-6	152	9-6 to 18-6	152	9-6 to 18-6	112	9-6 to 16-0	112	9-6 to 16-0	
	P556	#5	72	9-8 to 18-2	72	9-8 to 18-2	72	9-8 to 18-2	72	9-8 to 18-2	72	9-8 to 18-2	72	9-8 to 18-2	72	9-8 to 18-2		-		-	
	P557	#6	80	4-10	80	4-10	80	4-10	80	4-10	80	4-10	80	4-10	80	4-10	56	4-10	56	4-10	
	P651	#6		-		-		-		-		-		-		-	8	9-9	8	9-9	
	P1151	#11	4	36-8	4	36-8	4	36-8	4	36-8	4	36-8	4	36-8	4	36-8		-		-	
	P1152	#11	4	32-6	4	32-6	4	32-6	4	32-6	4	32-6	4	32-6	4	32-6		-		-	
	P1153	#11	4	48-2	4	48-2	4	48-2	4	48-2	4	48-2	4	48-2	4	48-2		-		-	
	P1154	#11		-		-		-		-		-		-		-		-	14	46-8	
	P1401	#14	16	46-10	16	46-10	16	46-10	16	46-10	16	46-10	16	46-10	16	46-10	14	46-10		-	
SHAFTS	P381	#3		-				-		-		-		-		-	176	4-6	110	4-6	
	P481	#4	2	1112-0	2	1032-0	2	913-0	2	835-0	2	715-0	2	615-0	2	497-0		-		-	
	P661	#6	36	17-3	34	17-3		-		-		-		-		-	32	9-9	20	9-9	

NOT IN THIS CONTRACT

BENT BARS (ALL DIMENSIONS ARE OUT TO OUT)

	MARK	SIZE	PIER 29 REQ.	29 LENGTH	30 REQ.	30 LENGTH	31 REQ.	31 LENGTH	32 REQ.	32 LENGTH	33 REQ.	33 LENGTH	34 REQ.	34 LENGTH	35 REQ.	35 LENGTH	36 REQ.	36 LENGTH	37 REQ.	37 LENGTH	REMARKS
FOOTINGS	P481	#4	38	7-0	38	7-0	20	7-10	21	7-10	20	8-10	21	8-10	20	8-10	21	8-10	21	8-10	
	P1181	#11	96	12-6	114	12-6	88	12-6	80	12-0	84	12-6	88	12-0	76	12-6	112	23-0	112	21-6	

NOT IN THIS CONTRACT

NOTES

1. For General Notes see Sheet No. 2
2. For Reinforcing Bar Details see Sheet No. 10

J. E. GREINER CO.
MORAN, PROCTOR, MUESER & RUTLEDGE
CONSULTING ENGINEERS

DELAWARE DEPARTMENT OF HIGHWAYS & TRANSPORTATION
DIVISION OF HIGHWAYS

INTERSTATE ROUTE I-495

CHRISTINA RIVER BRIDGE
BAR REINFORCING SCHEDULE
PIER 37

D. P. F.
T. V. R. W.
C. W. W.

SCALE NONE
DATE 7/1/71

APPROVED BY:
BRIDGE ENGINEER

OGILVIE PRESS, INC. — D-187

COUNTY	CONTRACT	P. R. A. REG. NO	STATE	FED AID PROJECT NO	FISCAL YEAR	SHEET NO	TOTAL SHEETS
NEW CASTLE	71-05-007	2	DEL.	I-495-3(21)15		10	44

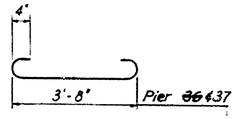

P351 & P361

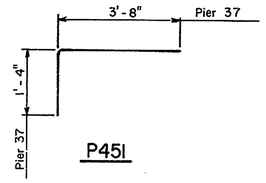

P451

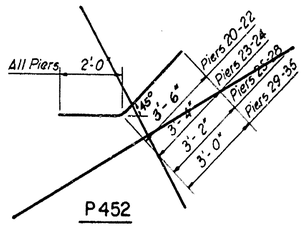

P452

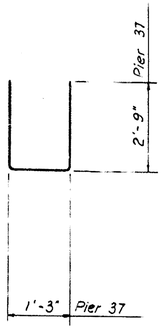

P453

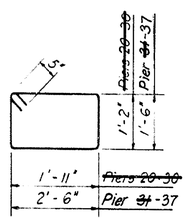

P481

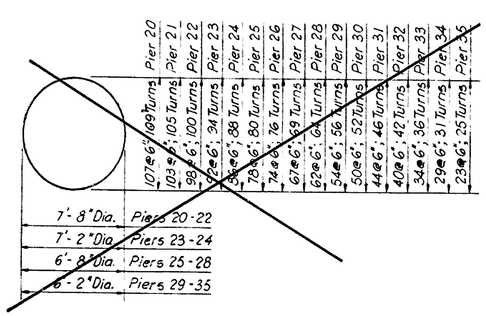

P461

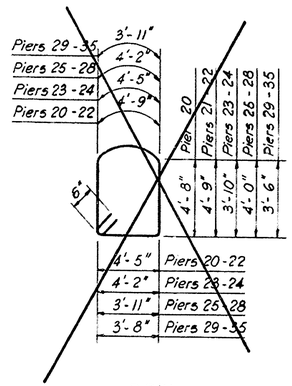

P551

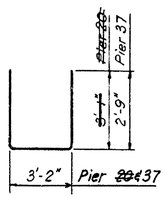

P552

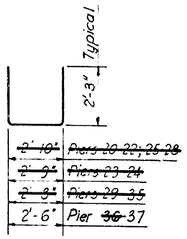

P553

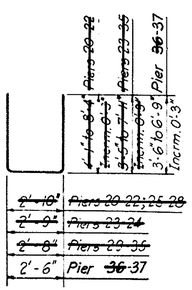

P554

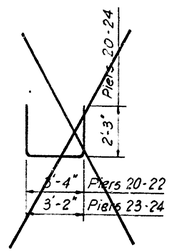

P555

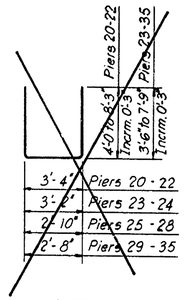

P556

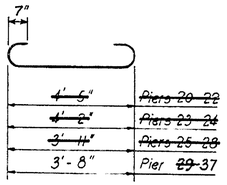

P557

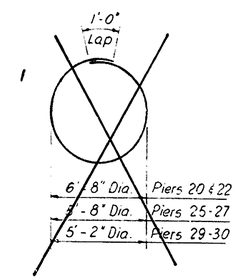

P561

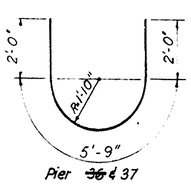

P651 & P661

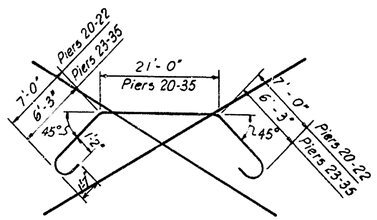

P 1151

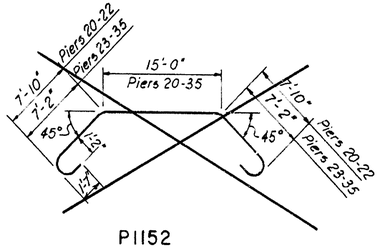

P1152

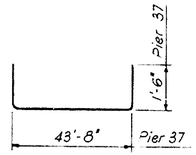

P1154

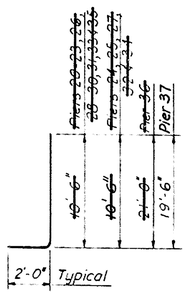

P1181

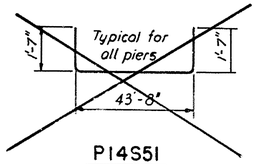

P14S51

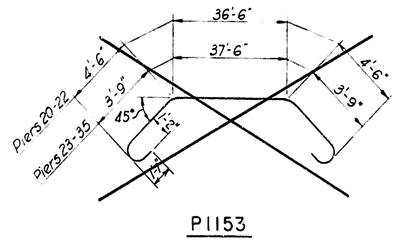

P1153

NOTES

1. For General Notes see Sheet No. 2
2. For Bar Reinforcement Schedule see Sheet No. 9

J. E. GREINER CO. MORAN, PROCTOR, MUESER & RUTLEDGE CONSULTING ENGINEERS	D. P. F. T. R. B. C. W. W.	SCALE NONE DATE 7/1/71	APPROVED BY: BRIDGE ENGINEER

DELAWARE DEPARTMENT
OF HIGHWAYS & TRANSPORTATION
DIVISION OF HIGHWAYS

INTERSTATE ROUTE I-495

CHRISTINA RIVER BRIDGE
BAR REINFORCEMENT DETAILS
PIER 37

OBILVIE PRESS, INC. — B-127

COUNTY	CONTRACT	P. R. A. REG. NO.	STATE	FED. AID PROJECT NO.	FISCAL YEAR	SHEET NO.	TOTAL SHEETS
New Castle	71-05-007	2	DEL.	I-495-3(21)15		11	44

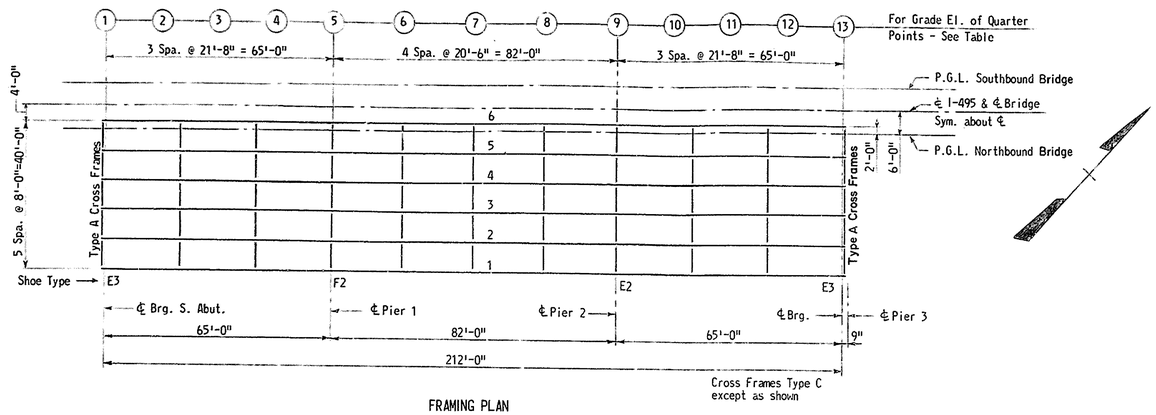

FRAMING PLAN
1" = 20'

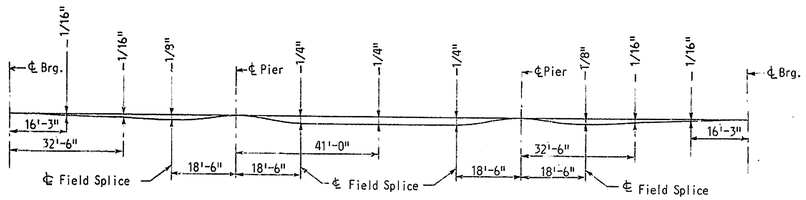

CAMBER DIAGRAM

NOTE: Cambers given are measured from a chord line between ℄ of bearings. (-) means camber down.

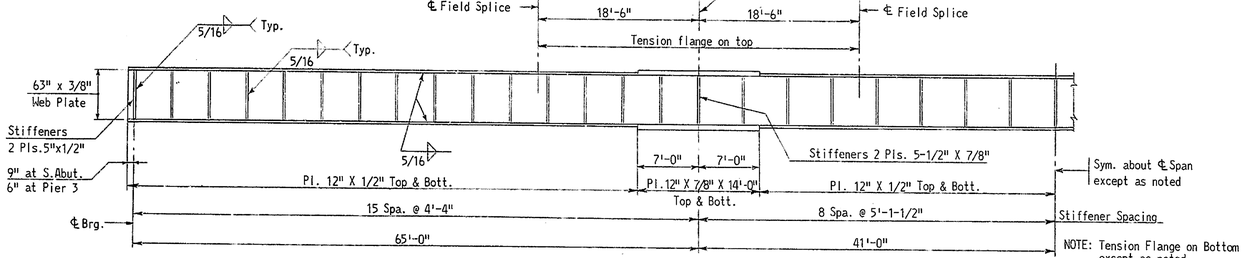

GIRDER ELEVATION
1/8" = 1'-0"

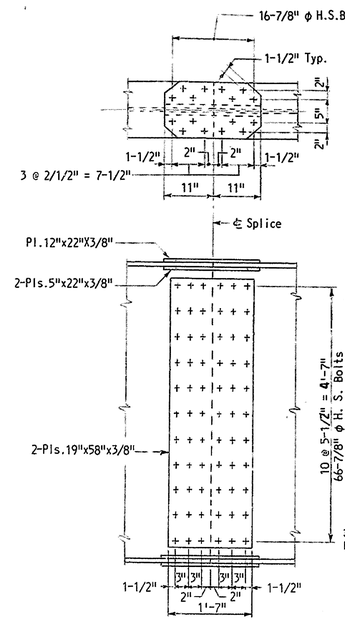

FIELD SPLICE DETAIL
3/4" = 1'-0"

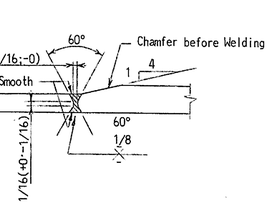

SHOP FLANGE SPLICE DETAIL
No Scale

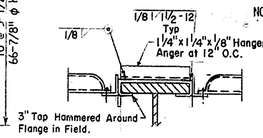

TENSION FLANGE DETAIL

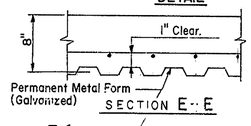

SECTION E-E

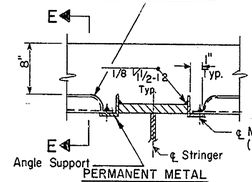

PERMANENT METAL SLAB FORM
(See Special Provisions)

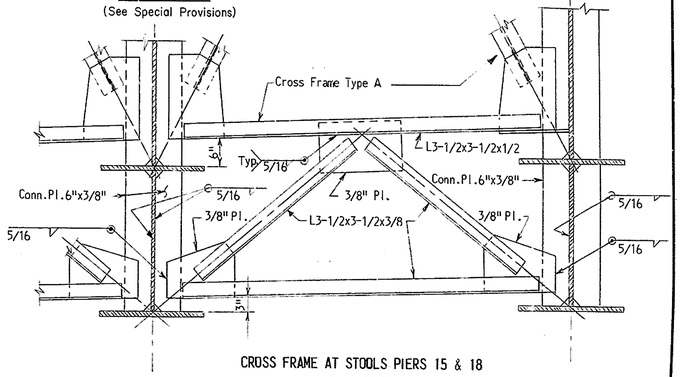

CROSS FRAME AT STOOLS PIERS 15 & 18
3/4" = 1'-0"

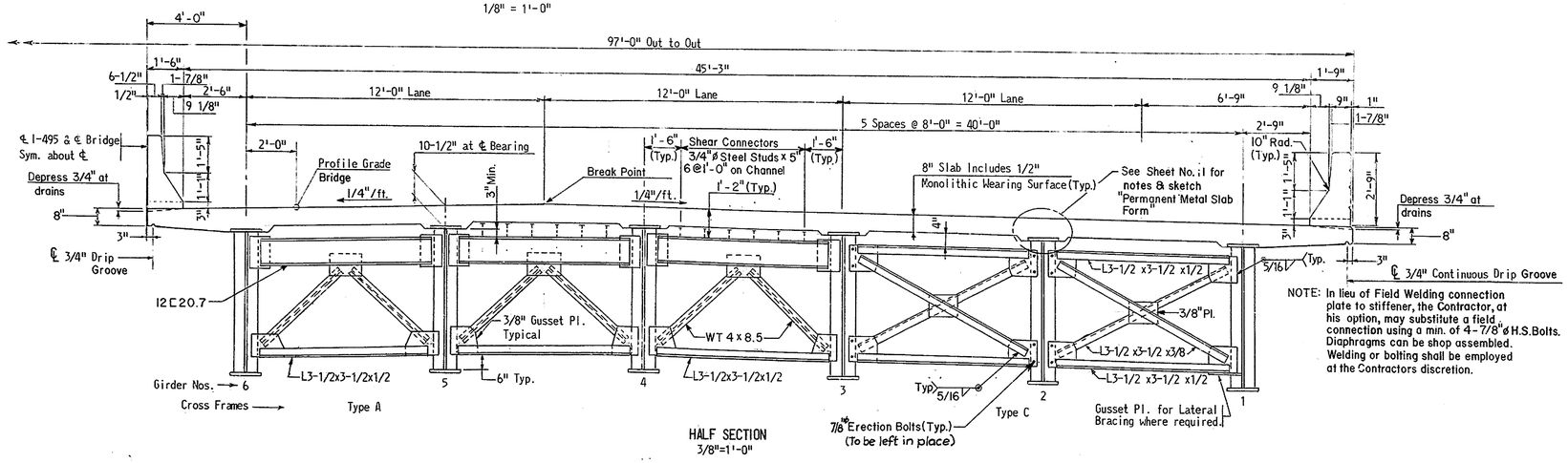

HALF SECTION
3/8"=1'-0"

NOTE: In lieu of Field Welding connection plate to stiffener, the Contractor, at his option, may substitute a field connection using a min. of 4-7/8" ϕ H.S.Bolts. Diaphragms can be shop assembled. Welding or bolting shall be employed at the Contractors discretion.

TABLE OF GRADE ELEVATIONS AND DEAD LOAD DEFLECTIONS IN FEET

Stringer	1	2	3	4	4 & 5	6	Deflections			
Point	Grade Elevation	Grade Elevation	Grade Elevation	Grade Elevation	Grade Elevation	Grade Elevation	STRUCTURAL STEEL	CONCRETE SLAB	BARRIER RAIL	FULL DEAD LOAD
1	41.088	41.254	41.421	41.671	41.587	41.421	0.000	0.000	0.000	0
2	41.326	41.493	41.659	41.909	41.826	41.659	0.003	0.014	0.003	0.020
3	41.580	41.746	41.913	42.163	42.079	41.913	0.003	0.017	0.003	0.023
4	41.849	42.015	42.182	42.432	42.348	42.182	0.001	0.007	0.001	0.010
5	42.133	42.300	42.466	42.716	42.632	42.466	0.000	0.000	0.000	0.000
6	42.513	42.680	42.846	43.096	43.013	42.846	0.002	0.012	0.002	0.016
7	42.918	43.084	43.251	43.501	43.417	43.251	0.004	0.021	0.004	0.029
8	43.346	43.513	43.680	43.929	43.846	43.679	0.002	0.012	0.002	0.016
9	43.799	43.966	44.133	44.382	44.299	44.132	0.000	0.000	0.000	0.000
10	44.176	44.343	44.509	44.759	44.676	44.509	0.001	0.007	0.001	0.010
11	44.567	44.734	44.901	45.150	45.067	44.900	0.003	0.017	0.003	0.023
12	44.974	45.141	45.308	45.557	45.474	43.307	0.003	0.014	0.003	0.020
13	45.396	45.563	45.730	45.979	45.896	45.729	0.000	0.000	0	0.000

NOTES:

For General Notes see Sheet Nos. 2 and 3.
For Expansion Dam Details see Sheet Nos. 24 and 25.
For Bearing Details see Sheet No. 26.

For Inspection Facilities see Sheet No. 33
For Location of Manholes see Deck Plans.
For Details of Concrete Diaphragm see Sheet No. 25.

Dimensions shown are measured horizontally between bearings. All bearing stiffeners shall be set vertical and all intermediate stiffeners normal to grade.

Girders shall be cambered for dead load deflections and vertical curve as indicated the Camber Diagram.

After all girders are in place, elevations shall be taken along the top of girder at points where the grade elevations are shown. The difference between these two elevations plus the flange plate thickness, plus the sum of the deflections shown in the table for "Concrete Slab" and "Barrier Rail" is the thickness of slab and haunch over top of girder at centerline of girder. The minimum slab plus haunched depth shall not be less than 10".

Mill stiffeners to bear on tension flange and weld stiffeners to compression flange with 5/16" fillet welds.

Permanent Metal Slab forms shall be used by the Contractor (see page 3 & Special Provisions).

DELAWARE DEPARTMENT OF HIGHWAYS & TRANSPORTATION
DIVISION OF HIGHWAYS

INTERSTATE ROUTE I-495

CHRISTINA RIVER BRIDGE FRAMING PLAN 65'-82'-65' SPANS

J. E. GREINER CO.
MORAN, PROCTOR, MUESER & RUTLEDGE
CONSULTING ENGINEERS

D.T.L.G.
T.H.A.
C.K.K.S.

SCALE: As Noted
DATE: 7/1/71

APPROVED BY:

BRIDGE ENGINEER

OGILVIE PRESS, INC. — D-127 4348

COUNTY	CONTRACT	P. R. & REG. NO.	STATE	FED. AID PROJECT NO.	FISCAL YEAR	SHEET NO.	TOTAL SHEETS
New Castle	71-05-007	2	DEL.	I-495-3(21)15		12	44

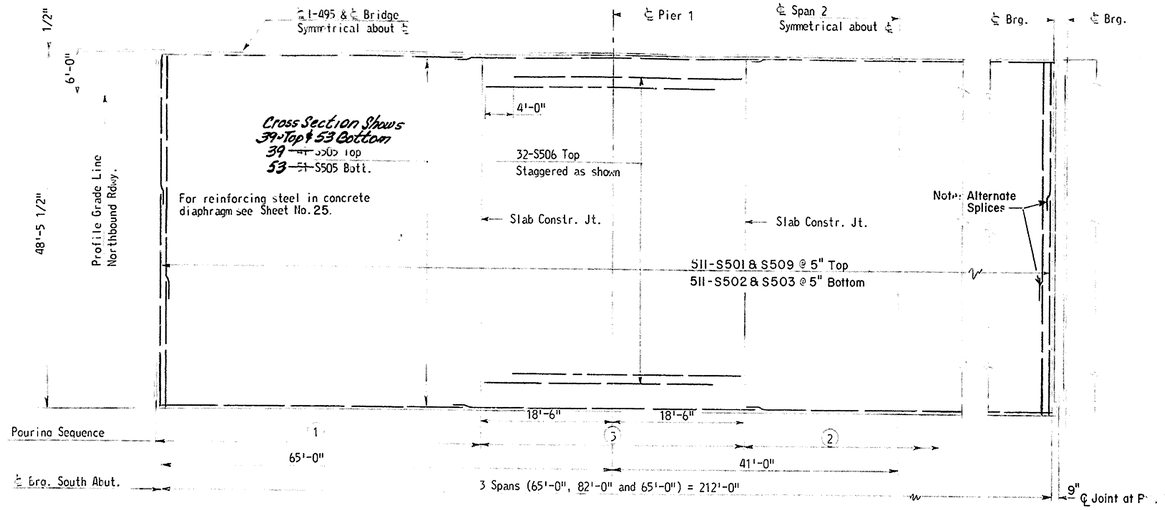

DECK PLAN

1" = 10'

Note: Concrete pouring sequence 3 must not be poured until concrete in adjacent pouring sequences 1 and 2 are complete and set up. However, a continuous pour with proper control of retardation may be made if approved by Director.

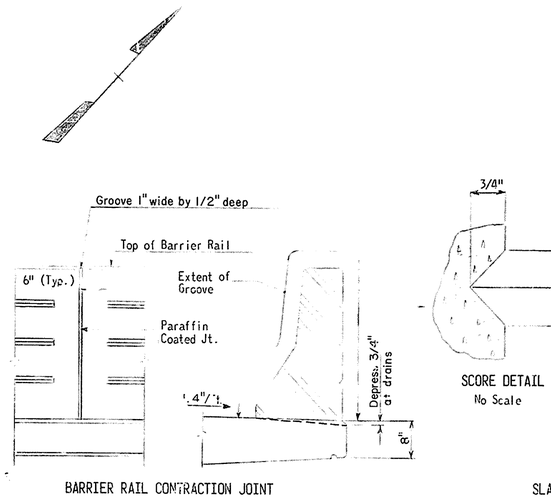

BARRIER RAIL CONTRACTION JOINT

Median Barrier Rail Similar

3/4" = 1'-0"

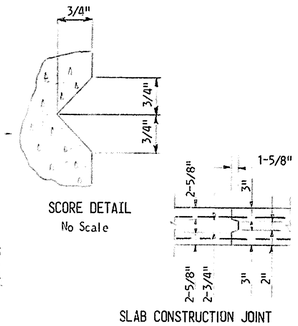

SCORE DETAIL

No Scale

SLAB CONSTRUCTION JOINT

3/4" = 1'-0"

NOTE: Longitudinal reinforcing in Barrier Rail will not pass through Contraction Joint.

REINFORCING SCHEDULE

MARK	Number Required Southbound Rdwy. Spans 1-3	Number Required Northbound Rdwy. Spans 1-3	LENGTH
Straight Bars			
S502	511	511	20'-6"
S503	511	511	29'-0"
S505	460	460	44'-0"
S506	64	64	33'-0"
R701	128	128	13'-0"
R702	128	128	13'-0"
S701	20	20	7'-4"
Bent Bars			
S501	511	511	32'-6"
S507	80	80	4'-6"
S509	511	511	17'-0"
R501	254	254	4'-11"
R502	266	266	4'-9"
R602	164	164	6'-11"
R603	140	140	6'-8"
R604	90	90	3'-5"
R605	126	126	3'-2"
S702	8	8	22-11"

BENDING DIAGRAMS

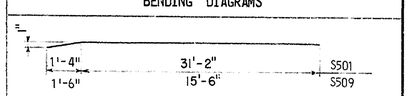

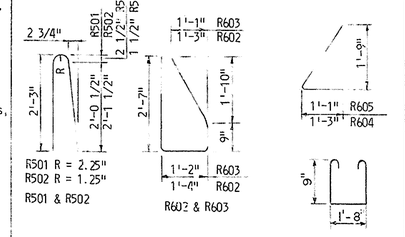

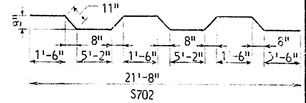

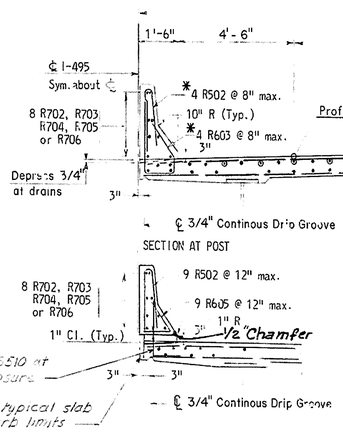

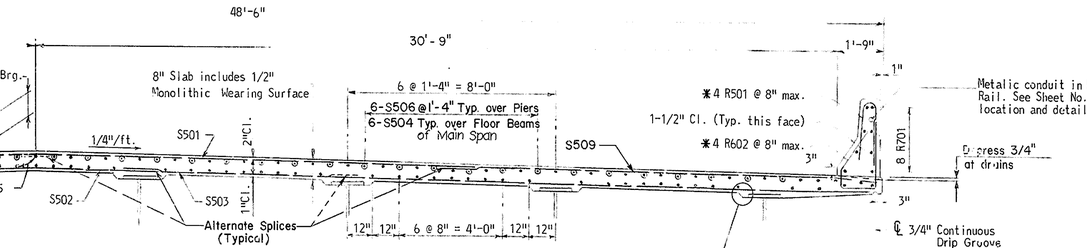

* Note: In Barrier Rails with no curb opening R501, R602 and R603 are placed at equal spacings not exceed 12".

Spacing as shown is typical in Posts.

See Sheet No. 11 for Notes & Sketch "Permanent Metal Slab Forms"

Revision By J.J.S. Placed 1/2" Chamfer over drain slots so cars would not break off sharp edges. O.K. by Bridge Division & F.H.W.A.

TYPICAL SECTION

3/8" = 1'-0"

NOTES:

For General Notes, see Sheet Nos. 2 and 3.

Bar size is indicated in the bar mark. The first digit when 3 digits are used indicates the bar size. All bar dimensions are out to cut of bar.

For Manhole Details, see Sheet No. 33

For Details of Concrete Diaphragm, see Sheet No. 25.

For Median Barrier Rail Elevation see Sheet No. 14

For Location and Details of Posts at Lighting Standards and Electrical Details, see Sheet Nos. 36, 37 and 38

For Reinforcing at Manholes see Sheet No. 33

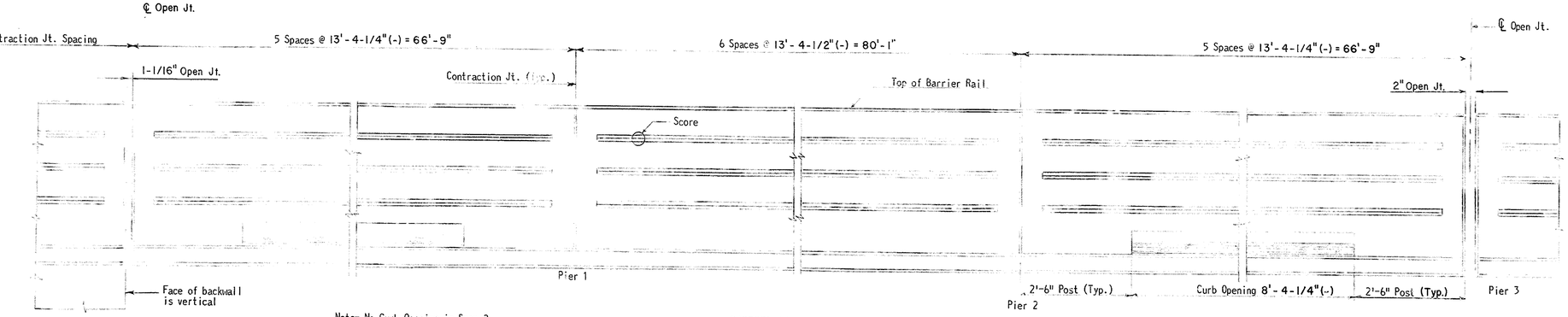

Note- No Curb Opening in Span 2

BARRIER RAIL ELEVATION SPANS 1-3

3/4" = 1'-0"

Modify detail at closed curb inlet openings in Span 11/13/73.

INTERSTATE ROUTE I-495	
CHRISTINA RIVER BRIDGE DECK PLAN 65'-82'-65' SPANS	
D. J. M. M. / T. H. A. / C. K. K. S.	SCALE AS NOTED; DATE 7/1/71
J. E. GREINER CO. MORAN, PROCTOR, MUESER & RUTLEDGE CONSULTING ENGINEERS	APPROVED BY: BRIDGE ENGINEER

OGILVIE PRESS, INC. — D-127 4248

COUNTY	CONTRACT	P. R. A. REG. NO.	STATE	FED. AID PROJECT NO.	FISCAL YEAR	SHEET NO.	TOTAL SHEETS
New Castle	71-05-007	2	DEL.	I-495-3(21)15		13	44

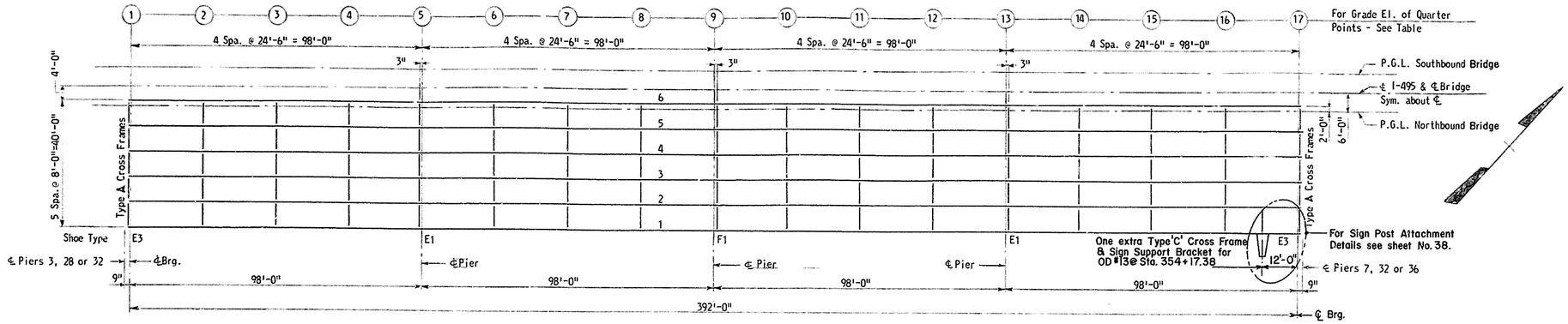

FRAMING PLAN
1" = 20'

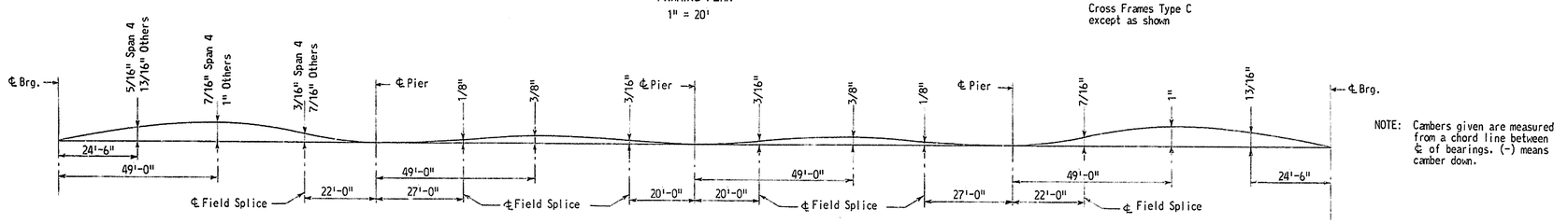

CAMBER DIAGRAM

Cross Frames Type C except as shown

NOTE: Cambers given are measured from a chord line between ℄ of bearings. (-) means camber down.

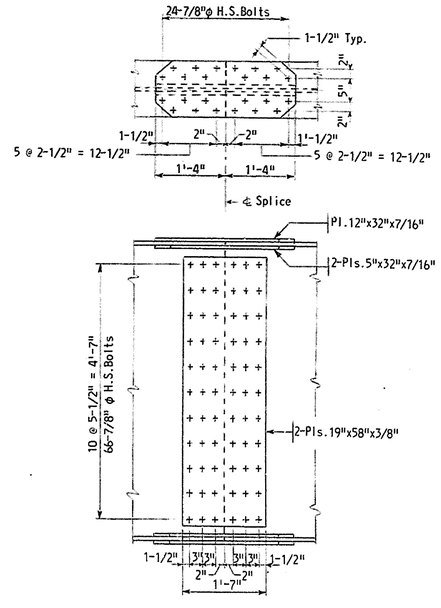

FIELD SPLICE DETAIL
3/4" = 1'-0"

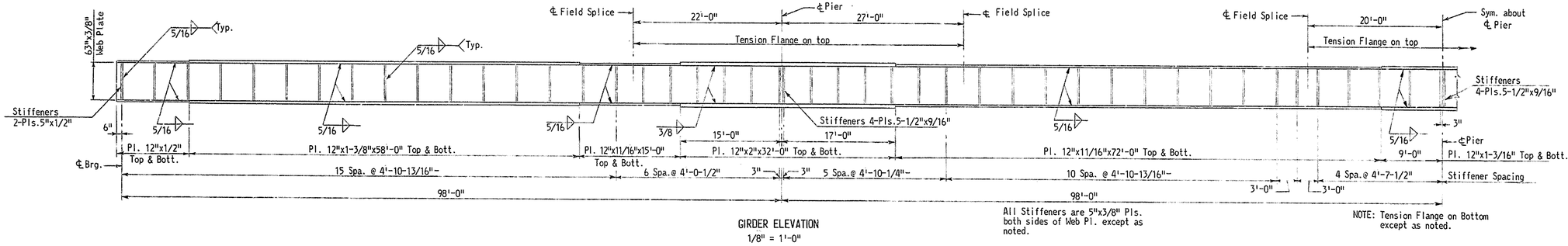

GIRDER ELEVATION
1/8" = 1'-0"

All Stiffeners are 5"x3/8" Pls. both sides of Web Pl. except as noted.

NOTE: Tension Flange on Bottom except as noted.

TABLE OF GRADE ELEVATIONS AND DEAD LOAD DEFLECTIONS IN FEET

SPANS 4-7

Stringer Point	1 Grade El.	2 Grade El.	3 Grade El.	4 Grade El.	4 & 5 Grade El.	6 Grade El.
1	45.436	45.603	45.769	46.019	45.936	45.769
2	46.104	46.270	46.437	46.687	46.603	46.437
3	46.806	46.972	47.139	47.389	47.305	47.139
4	47.537	47.704	47.870	48.120	48.037	47.870
5	48.272	48.438	48.605	48.855	48.771	48.605
6	49.007	49.173	49.340	49.590	49.506	49.340
7	49.742	49.908	50.075	50.325	50.241	50.075
8	50.477	50.643	50.810	51.060	50.976	50.810
9	51.212	51.378	51.545	51.795	51.711	51.545
10	51.947	52.113	52.280	52.530	52.446	52.280
11	52.682	52.848	53.015	53.265	53.181	53.015
12	53.417	53.583	53.750	54.000	53.916	53.750
13	54.162	54.318	54.485	54.735	54.651	54.485
14	54.887	55.053	55.220	55.470	55.386	55.220
15	55.622	55.788	55.955	56.205	56.121	55.955
16	56.357	56.523	56.690	56.940	56.856	56.690
17	57.092	57.258	57.425	57.675	57.591	57.425

SPANS 29-32

Stringer Point	1 Grade El.	2 Grade El.	3 Grade El.	4 Grade El.	4 & 5 Grade El.	6 Grade El.
1	54.050	54.147	54.383	54.633	54.550	54.383
2	53.376	53.543	53.710	53.959	53.876	53.709
3	52.702	52.869	53.036	53.285	53.202	53.035
4	52.029	52.195	52.362	52.612	52.528	52.362
5	51.355	51.502	51.688	51.938	51.855	51.688
6	50.681	50.848	51.015	51.264	51.181	51.014
7	50.007	50.174	50.341	50.590	50.507	50.340
8	49.334	49.500	49.667	49.917	49.833	49.667
9	48.660	48.827	48.993	49.243	49.160	48.993
10	47.986	48.153	48.320	48.569	48.486	48.319
11	47.312	47.479	47.646	47.895	47.812	47.645
12	46.639	46.805	46.972	47.222	47.138	46.972
13	45.965	46.132	46.298	46.548	46.465	46.298
14	45.291	45.458	45.625	45.874	45.791	45.624
15	44.617	44.784	44.951	45.200	45.117	44.950
16	43.944	44.110	44.277	44.527	44.443	44.277
17	43.270	43.437	43.603	43.853	43.770	43.603

SPANS 33-36

Stringer Point	1 Grade El.	2 Grade El.	3 Grade El.	4 Grade El.	4 & 5 Grade El.	6 Grade El.
1	43.229	43.395	43.562	43.812	43.728	43.562
2	42.555	42.722	42.888	43.138	43.055	42.888
3	41.881	42.048	42.215	42.464	42.381	42.214
4	41.207	41.374	41.541	41.790	41.707	41.540
5	40.534	40.700	40.867	41.117	41.033	40.867
6	39.860	40.027	40.193	40.443	40.360	40.193
7	39.186	39.353	39.520	39.769	39.686	39.519
8	38.512	38.679	38.846	39.095	39.012	38.845
9	37.839	38.005	38.172	38.422	38.338	38.172
10	37.165	37.332	37.498	37.748	37.665	37.498
11	36.491	36.658	36.825	37.074	36.991	36.824
12	35.817	35.984	36.151	36.400	36.317	36.150
13	35.144	35.310	35.477	35.727	35.643	35.477
14	34.470	34.637	34.803	35.053	34.970	34.803
15	33.796	33.963	34.130	34.379	34.296	34.129
16	33.122	33.289	33.456	33.705	33.622	33.455
17	32.449	32.615	32.782	33.032	32.948	32.782

DEFLECTIONS

Structural Steel	Concrete Deck Slab	Barrier Rail	Full Dead Load
0.000	0.000	0.000	0.000
0.011	0.047	0.009	0.067
0.013	0.057	0.011	0.081
0.007	0.029	0.006	0.042
0.000	0.000	0.000	0.000
0.002	0.007	0.001	0.010
0.005	0.023	0.004	0.032
0.003	0.013	0.003	0.019
0.000	0.000	0.000	0.000
0.003	0.013	0.003	0.019
0.005	0.023	0.004	0.032
0.002	0.007	0.001	0.010
0.000	0.000	0.000	0.000
0.007	0.029	0.006	0.042
0.013	0.057	0.011	0.081
0.011	0.047	0.009	0.067
0.000	0.000	0.000	0.000

NOTES:
For General Notes see Sheet Nos. 2 and 3.
For other notes see Sheet No. 11
For Details of Cross Frames see Sheet No. 11
For Flange Splice Detail see Sheet No. 11

DELAWARE DEPARTMENT
OF HIGHWAYS & TRANSPORTATION
DIVISION OF HIGHWAYS

INTERSTATE ROUTE I-495

CHRISTINA RIVER BRIDGE
FRAMING PLAN
98'-98'-98'-98' SPANS

J. E. GREINER CO.
MORAN, PROCTOR, MUESER & RUTLEDGE
CONSULTING ENGINEERS

D. T. L. G.
T. H. A.
C. K. K. S.

SCALE: As Noted
DATE: 7/1/71

APPROVED BY: BRIDGE ENGINEER

OGILVIE PRESS, INC. — D-127 4248

COUNTY	CONTRACT	P. R. A. REG. NO.	STATE	FED. AID PROJECT NO.	FISCAL YEAR	SHEET NO.	TOTAL SHEETS
New Castle	71-05-007	2	DEL.	I-495-3(21)15		14	44

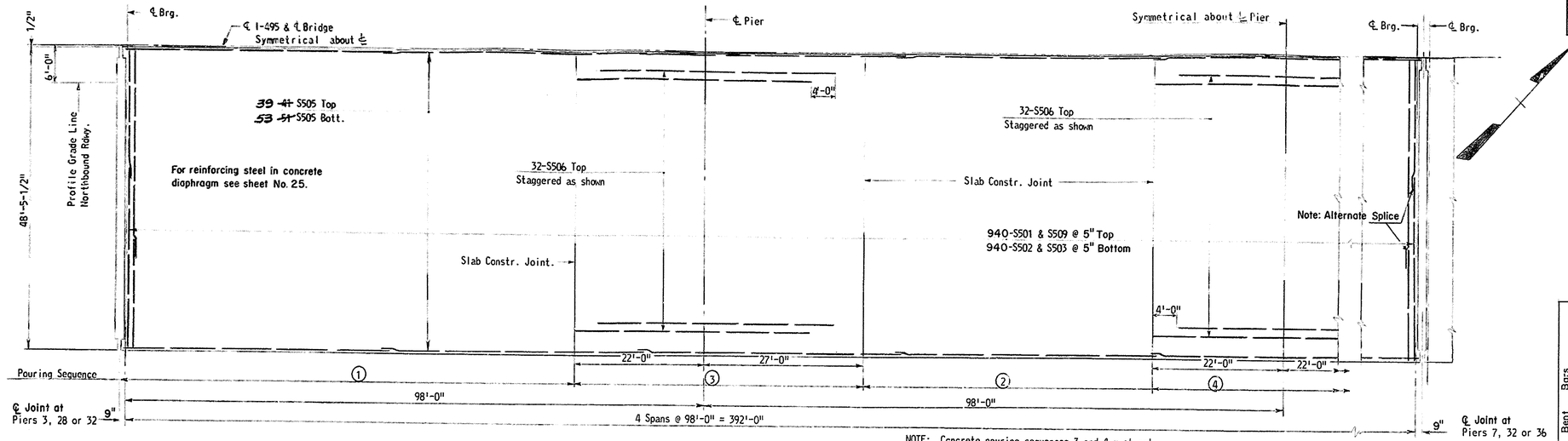

NOTE: Concrete pouring sequences 3 and 4 must not be poured until Concrete in adjacent pouring sequences 1 and 2 are complete and set up.

DECK PLAN
1" = 10'

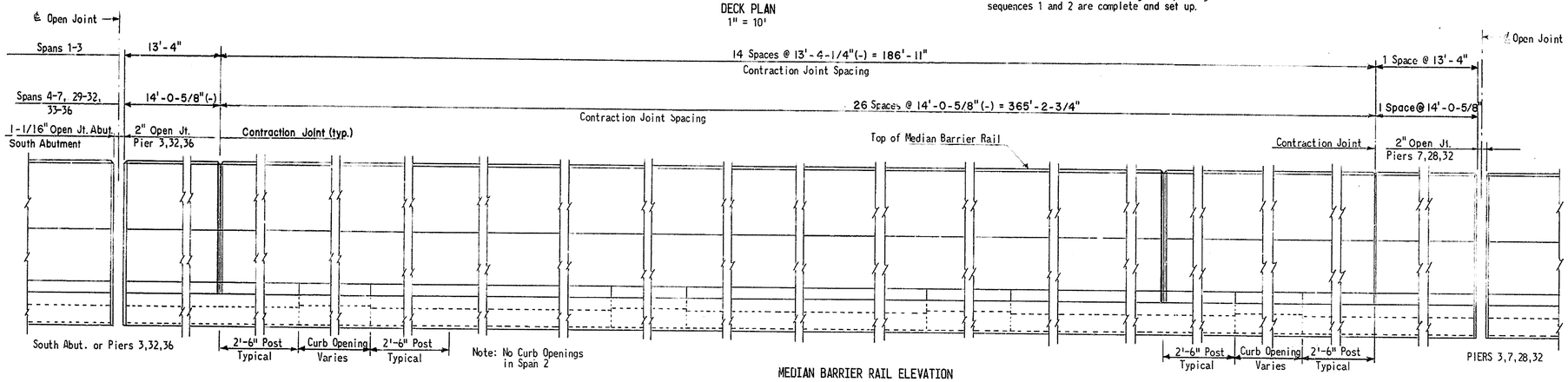

MEDIAN BARRIER RAIL ELEVATION
SPANS 1-3. 4-7. 29-32 & 33-36
3/4" = 1'-0"

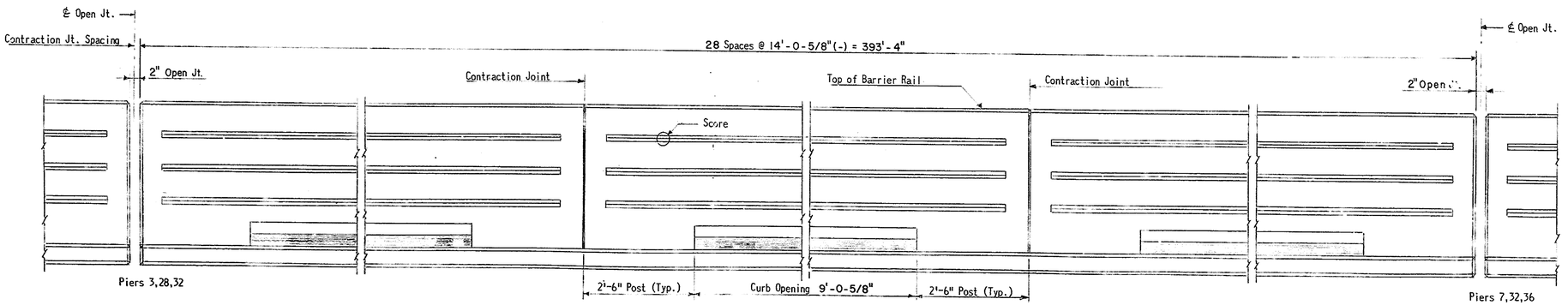

BARRIER RAIL ELEVATION
SPANS 4-7. 29-32 & 33-36
3/4" = 1'-0"

REINFORCING SCHEDULE

	MARK	Number Required Southbound Rdwy. SPANS 4-7	SPANS 29-32	SPANS 33-36	Northbound Rdwy. SPANS 4-7	SPANS 29-32	SPANS 33-36	LENGTH
	Straight Bars							
	S502	940	940	940	940	940	940	20'-6"
	S503	940	940	940	940	940	940	29'-0"
	S505	828	828	828	828	828	828	44'-10"
	S506	96	96	96	96	96	96	40'-0"
	S701	20	20	20	20	20	20	7'-3"
	R701	224	224	224	224	224	224	13'-8"
	R702	224	224	224	224	224	224	13'-8"
	S507	80	80	80	80	80	80	4'-6"
	S702	8	8	8	8	8	8	22'-11"
	S501	940	940	940	940	940	940	32'-6"
Bent Bars	S509	940	940	940	940	940	940	17'-0"
	R501	476	476	476	476	476	476	4'-11"
	R502	470	470	470	470	470	470	4'-9"
	R602	224	224	224	224	224	224	6'-11"
	R603	236	236	236	236	236	236	6'-8"
	R604	252	252	252	252	252	252	3'-5"
	R605	234	234	234	234	234	234	3'-2"

BENDING DIAGRAMS

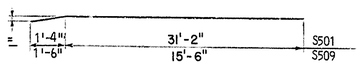

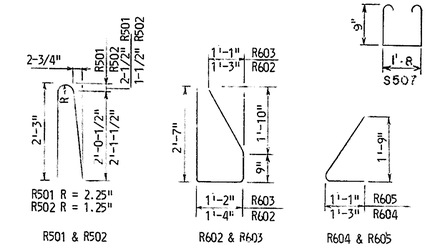

NOTE: See sheet No.12 for detail of bar S702.

NOTES:

For General Notes, see Sheet Nos. 2 and 3.
For other notes, see Sheet No. 12
For deck details and slab reinforcing steel, see Sheet No. 12.

DELAWARE DEPARTMENT OF HIGHWAYS & TRANSPORTATION
DIVISION OF HIGHWAYS

INTERSTATE ROUTE I-495

CHRISTINA RIVER BRIDGE
DECK PLAN
98'-98'-98'-98' SPANS

J. E. GREINER CO.
MORAN, PROCTOR, MUESER & RUTLEDGE
CONSULTING ENGINEERS

D. J.M.M.
T. H.A.
C. K.K.S.

SCALE As Noted
DATE 7/1/71

APPROVED BY
BRIDGE ENGINEER

OGILVIE PRESS, INC. — D-137 4248

COUNTY	CONTRACT	P. R. A. REG. NO.	STATE	FED. AID PROJECT NO.	FISCAL YEAR	SHEET NO.	TOTAL SHEETS
New Castle	71-05-007	2	DEL.	I-495-3(21)15		15	44

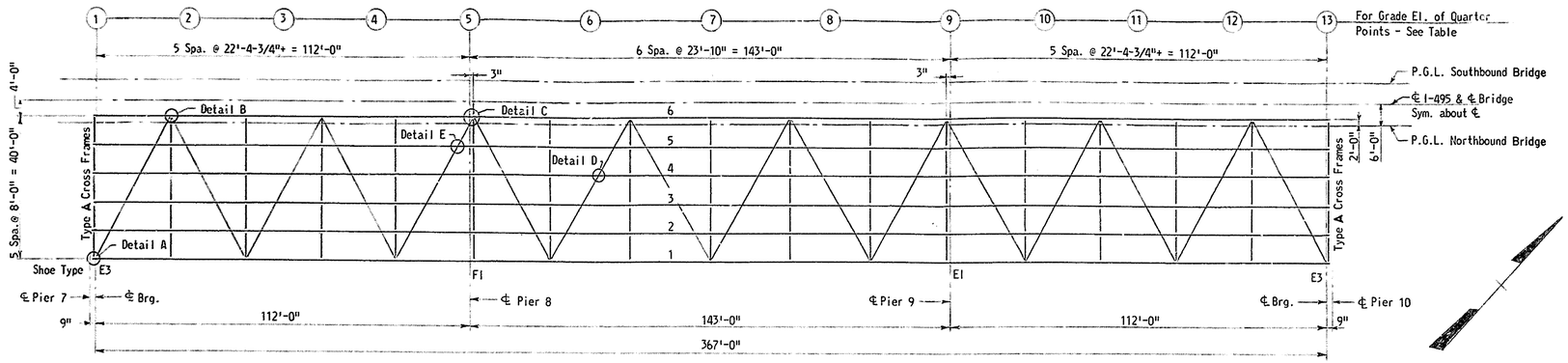

FRAMING PLAN
1" = 20'

Cross Frames Type C except as shown
All diagonal bracing members WT 4 x 8.5

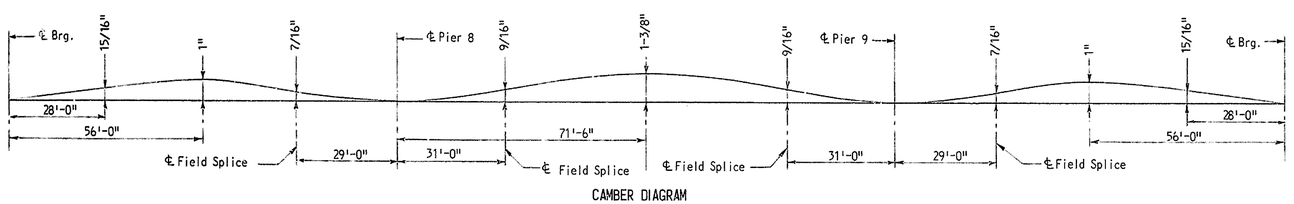

CAMBER DIAGRAM

Note: Cambers given are measured from a chord line between ℄ of bearings.

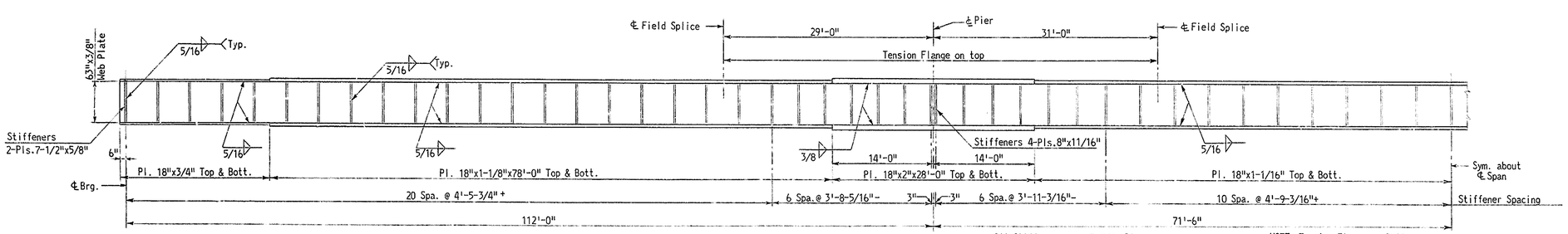

GIRDER ELEVATION
1/8" = 1'-0"

All Stiffeners are 5"x3/8" Pls. both sides of Web Pl. except as noted.

NOTE: Tension Flange on Bottom except as noted.

TABLE OF GRADE ELEVATIONS AND DEAD LOAD DEFLECTIONS IN FEET

Stringer	1	2	3	4	4 & 5	6	Deflections			
Point	Grade Elevation	Grade Elevation	Grade Elevation	Grade Elevation	Grade Elevation	Grade Elevation	Structural Steel	Concrete Slab	Barrier Rail	Full Dead Load
1	57.137	57.303	57.470	57.720	57.636	57.470	0.000	0.000	0.000	0.000
2	57.977	58.143	58.310	58.560	58.476	58.310	0.016	0.051	0.009	0.076
3	58.817	58.983	59.150	59.400	59.316	59.150	0.018	0.057	0.011	0.086
4	59.657	59.823	59.990	60.240	60.156	59.990	0.007	0.022	0.004	0.033
5	60.497	60.663	60.830	61.080	60.996	60.830	0.000	0.000	0.000	0.000
6	61.569	61.736	61.903	62.152	62.069	61.902	0.013	0.041	0.007	0.061
7	62.642	62.808	62.975	63.225	63.141	62.975	0.025	0.077	0.014	0.116
8	63.714	63.881	64.048	64.297	64.214	64.047	0.013	0.041	0.007	0.061
9	64.787	64.953	65.120	65.370	65.286	65.120	0.000	0.000	0.000	0.000
10	65.627	65.793	65.960	66.210	66.126	65.960	0.007	0.022	0.004	0.033
11	66.467	66.633	66.800	67.050	66.966	66.800	0.018	0.057	0.011	0.086
12	67.307	67.473	67.640	67.890	67.806	67.640	0.016	0.051	0.009	0.076
13	68.147	68.313	68.480	68.730	68.646	68.480	0.000	0.000	0.000	0.000

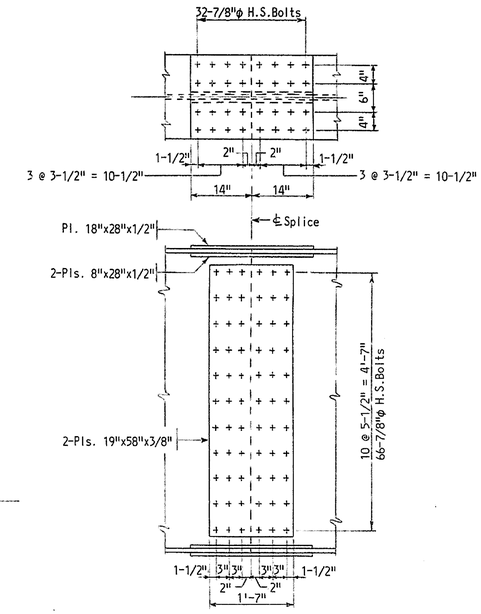

FIELD SPLICE DETAIL
3/4" = 1'-0"

NOTES:
For General Notes see Sheet Nos. 2 and 3.
For other notes see Sheet No. 11
For Details of Cross Frames see Sheet No. 11
For Flange Splice Detail see Sheet No. 11

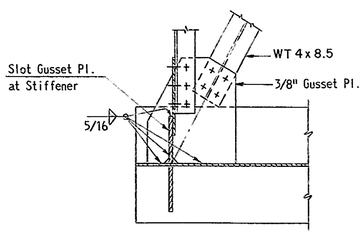

DETAIL A

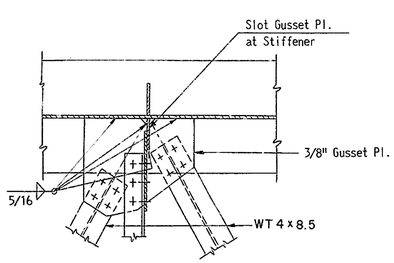

DETAIL B

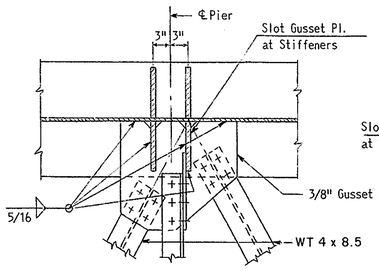

DETAIL C

LATERAL BRACING
1" = 1'-0"

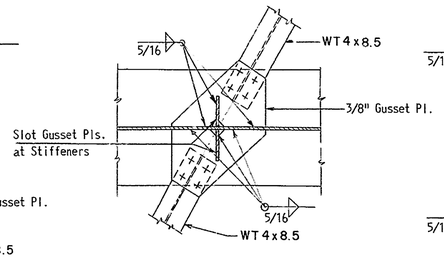

DETAIL D

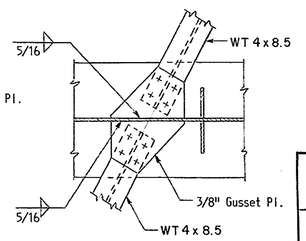

DETAIL E

DELAWARE DEPARTMENT
OF HIGHWAYS & TRANSPORTATION
DIVISION OF HIGHWAYS

INTERSTATE ROUTE I-495

CHRISTINA RIVER BRIDGE
FRAMING PLAN
112'-143'-112' SPANS

J. E. GREINER CO.
MORAN, PROCTOR, MUESER & RUTLEDGE
CONSULTING ENGINEERS

D. T. L. G.
T. H. A./H. D.
C. K. K. S.

SCALE: As Noted
DATE: 7/1/71

APPROVED BY:
BRIDGE ENGINEER

GUILFORD PRESS, INC. — D-127 4588

COUNTY	CONTRACT	P. B. A. REG. NO.	STATE	FED. AID PROJECT NO.	FISCAL YEAR	SHEET NO.	TOTAL SHEETS
New Castle	71-05-007	2	DEL.	I-495-3(21)15		16	44

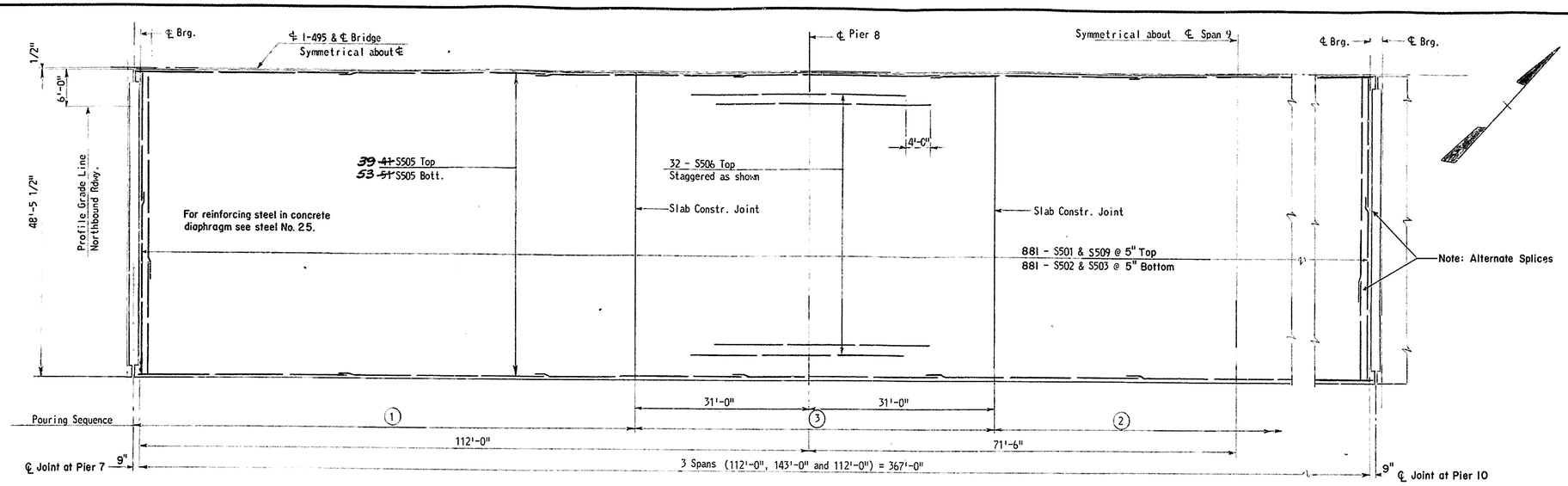

NOTE: Concrete pouring sequence 3 must not be poured until concrete in adjacent pouring sequences 1 and 2 are complete and set up.

DECK PLAN
1" = 10'

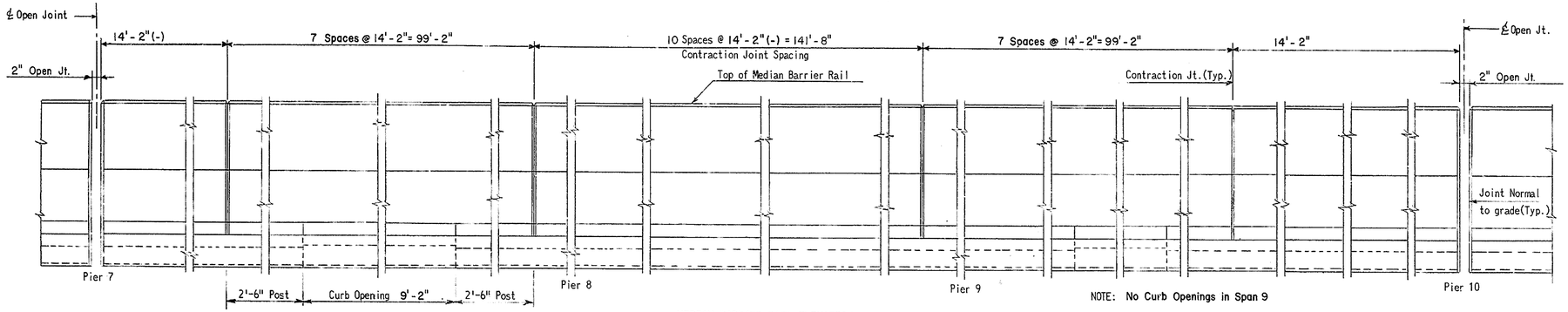

NOTE: No Curb Openings in Span 9

MEDIAN BARRIER RAIL ELEVATION
SPANS 8.9 & 10
3/4" = 1'-0"

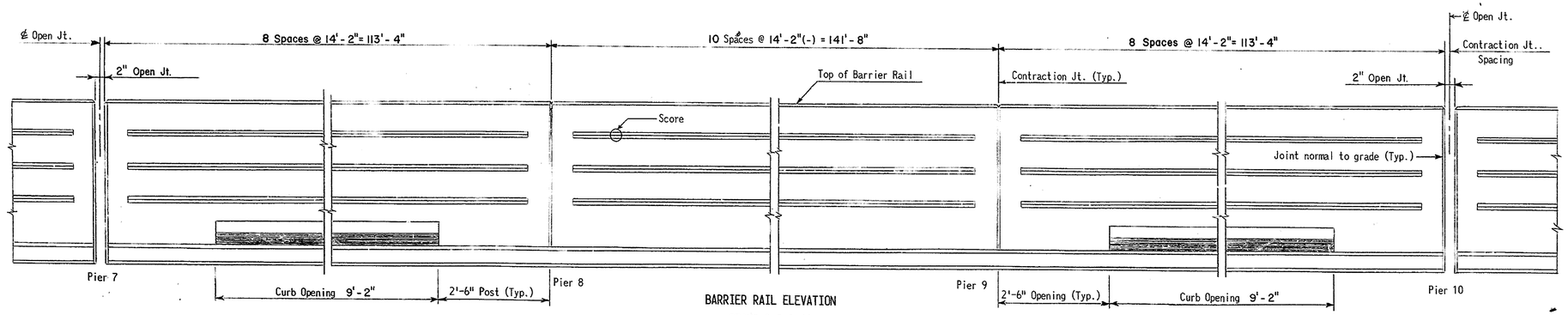

NOTE: No Curb Openings in Span 9

BARRIER RAIL ELEVATION
SPANS 8.9 & 10
3/4" = 1'-0"

REINFORCING SCHEDULE

MARK	Number Required: Southbound Roadway	Number Required: Northbound Roadway	LENGTH
Straight Bars			
S502	881	881	20'-6"
S503	881	881	29'-0"
S505	828	828	42'-0"
S506	64	64	20'-0"
S701	20	20	7'-4"
R701	208	208	13'-10"
R702	208	208	13'-10"
Bent Bars			
S507	80	80	4'-3"
S501	881	881	32'-6"
S509	881	881	17'-0"
S702	8	8	22'-1"
R501	422	422	4'-11"
R502	418	418	4'-9"
R602	278	278	6'-11"
R603	292	292	6'-8"
R604	144	144	3'-5"
R605	126	126	3'-2"

BENDING DIAGRAMS

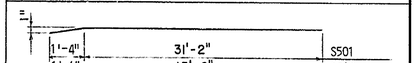

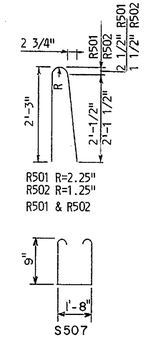

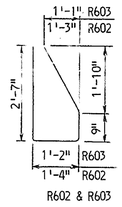

NOTE: See sheet No.12 for detail of bar S702.

NOTES:
For General Notes, see sheet Nos. 2 and 3.
For other notes see sheet No. 12.
For deck details and slab reinforcing steel, see sheet No. 12.

DELAWARE DEPARTMENT
OF HIGHWAYS & TRANSPORTATION
DIVISION OF HIGHWAYS

INTERSTATE ROUTE I-495

CHRISTINA RIVER BRIDGE
DECK PLAN
112'-143'-112' SPANS

D. J.M.M. T. H.A. C. K.K.S.	SCALE As Noted DATE 7/1/71	APPROVED BY BRIDGE ENGINEER

J. E. GREINER CO.
MORAN, PROCTOR, MUESER & RUTLEDGE
CONSULTING ENGINEERS

OGILVIE PRESS, INC. — D-127 4548

COUNTY	CONTRACT	P. R. A. REQ. NO.	STATE	FED. AID PROJECT NO.	FISCAL YEAR	SHEET NO.	TOTAL SHEETS
New Castle	71-05-007	2	DEL.	I-495-3(21)15		17	44

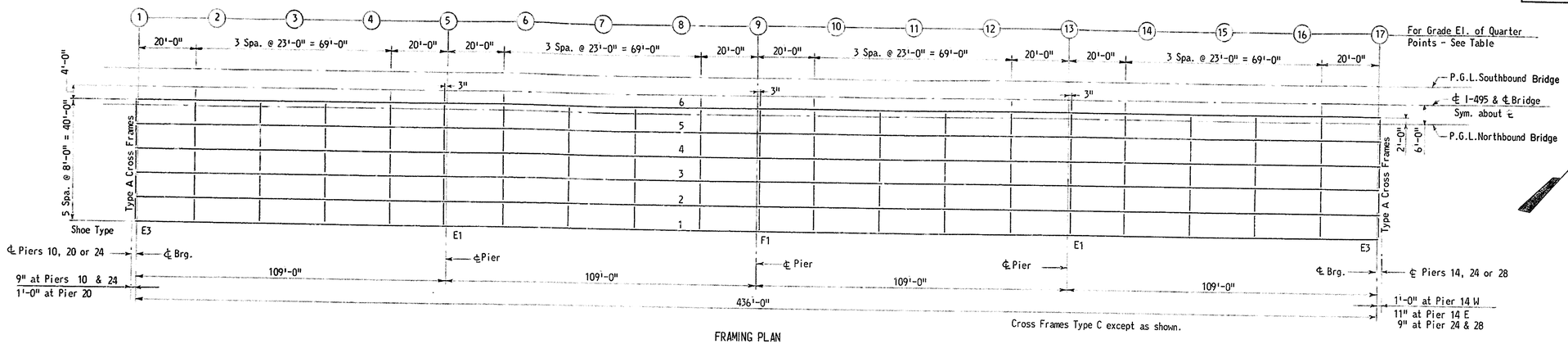

FRAMING PLAN
1" = 20'

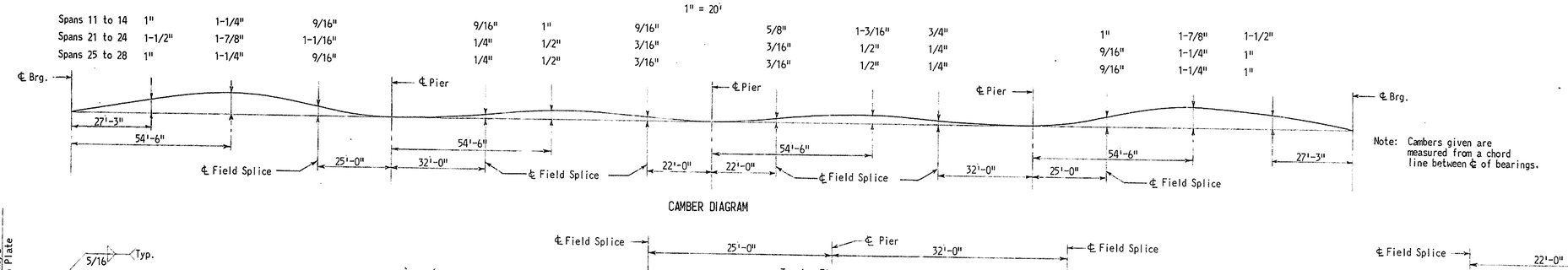

CAMBER DIAGRAM

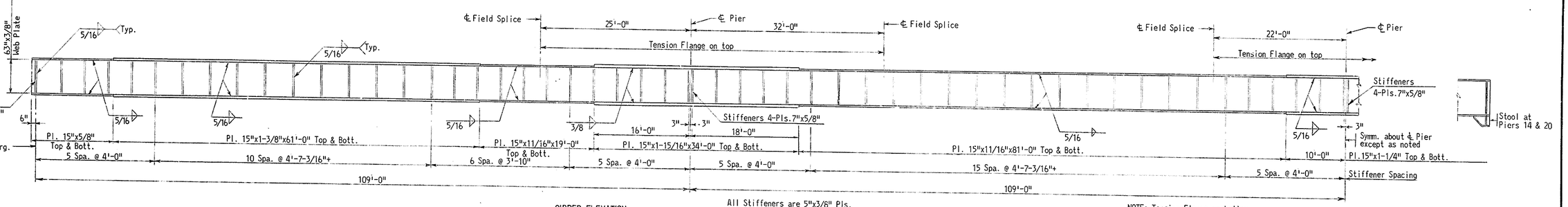

GIRDER ELEVATION
1/8" = 1'-0"

All Stiffeners are 5"x3/8" Pls. both sides of Web Plate except as noted.

NOTE: Tension Flange on bottom except as noted.

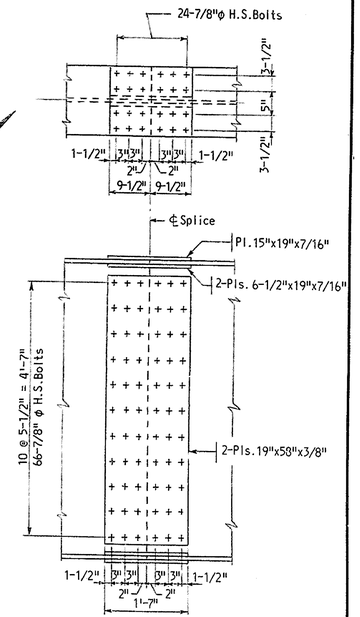

FIELD SPLICE DETAIL
3/4" = 1'-0"

TABLE OF GRADE ELEVATIONS AND DEAD LOAD DEFLECTIONS IN FEET

SPANS 11 - 14

Stringer Point	1 Grade El.	2 Grade El.	3 Grade El.	4 Grade El.	4 & 5 Grade El.	6 Grade El.
1	68.192	68.358	68.525	68.775	68.691	68.525
2	69.009	69.176	69.343	69.592	69.509	69.342
3	69.827	69.993	70.160	70.410	70.326	70.160
4	70.644	70.811	70.978	71.227	71.144	70.977
5	71.462	71.628	71.795	72.045	71.961	71.795
6	72.279	72.446	72.612	72.862	72.779	72.612
7	73.093	73.260	73.426	73.676	73.593	73.426
8	73.883	74.050	74.216	74.466	74.383	74.216
9	74.646	74.813	74.980	75.229	75.146	74.979
10	75.383	75.550	75.717	75.966	75.883	75.716
11	76.093	76.260	76.427	76.676	76.593	76.426
12	76.777	76.943	77.110	77.360	77.276	77.110
13	77.433	77.600	77.767	78.016	77.933	77.766
14	78.063	78.230	78.396	78.646	78.563	78.396
15	78.666	78.833	79.000	79.249	79.166	78.999
16	79.243	79.410	79.576	79.826	79.743	79.576
17	79.793	79.960	80.126	80.376	80.293	80.126

SPANS 21 - 24

Stringer Point	1 Grade El.	2 Grade El.	3 Grade El.	4 Grade El.	4 & 5 Grade El.	6 Grade El.
1	77.830	77.997	78.163	78.413	78.330	78.163
2	77.190	77.357	77.523	77.773	77.690	77.523
3	76.524	76.690	76.857	77.107	77.023	76.857
4	75.830	75.997	76.164	76.413	76.330	76.163
5	75.110	75.277	75.443	75.693	75.610	75.443
6	74.366	74.532	74.699	74.949	74.865	74.699
7	73.616	73.783	73.950	74.199	74.116	73.949
8	72.867	73.034	73.200	73.450	73.367	73.200
9	72.117	72.284	72.451	72.700	72.617	72.450
10	71.368	71.535	71.701	71.951	71.868	71.701
11	70.619	70.785	70.952	71.202	71.118	70.952
12	69.869	70.036	70.203	70.452	70.369	70.202
13	69.120	69.287	69.453	69.703	69.620	69.453
14	68.371	68.537	68.704	68.954	68.870	68.704
15	67.621	67.788	67.955	68.204	68.121	67.954
16	66.872	67.039	67.205	67.455	67.372	67.205
17	66.122	66.289	66.456	66.705	66.622	66.455

SPANS 25 - 28

Stringer Point	1 Grade El.	2 Grade El.	3 Grade El.	4 Grade El.	4 & 5 Grade El.	6 Grade El.
1	66.081	66.248	66.415	66.664	66.581	66.414
2	65.332	65.499	65.665	65.915	65.832	65.665
3	64.582	64.749	64.916	65.165	65.082	64.915
4	63.833	64.000	64.166	64.416	64.333	64.166
5	63.084	63.250	63.417	63.667	63.583	63.417
6	62.334	62.501	62.668	62.917	62.834	62.667
7	61.585	61.752	61.918	62.168	62.085	61.918
8	60.836	61.002	61.169	61.419	61.335	61.169
9	60.086	60.252	60.420	60.669	60.586	60.419
10	59.337	59.504	59.670	59.920	59.837	59.670
11	58.587	58.754	58.921	59.170	59.087	58.920
12	57.838	58.005	58.171	58.421	58.338	58.171
13	57.089	57.255	57.422	57.672	57.588	57.422
14	56.339	56.506	56.673	56.922	56.839	56.672
15	55.590	55.757	55.923	56.173	56.090	55.923
16	54.841	55.007	55.174	55.424	55.340	55.174
17	54.091	54.258	54.425	54.674	54.591	54.424

DEFLECTIONS

Structural Steel	Concrete Slab	Barrier Rail	Full Dead Load
0.000	0.000	0.000	0.000
0.018	0.057	0.011	0.086
0.021	0.070	0.013	0.104
0.011	0.036	0.007	0.053
0.000	0.000	0.000	0.000
0.003	0.009	0.002	0.014
0.009	0.030	0.005	0.044
0.005	0.018	0.003	0.026
0.000	0.000	0.000	0.000
0.005	0.018	0.003	0.026
0.009	0.030	0.005	0.044
0.003	0.009	0.002	0.014
0.000	0.000	0.000	0.000
0.011	0.036	0.007	0.053
0.021	0.070	0.013	0.104
0.018	0.057	0.011	0.086
0.000	0.000	0.000	0.000

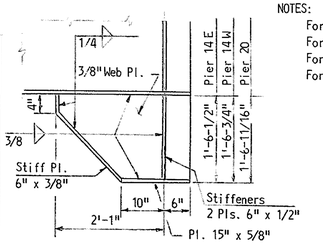

PIERS 14 & 20
STOOL DETAIL
3/4" = 1'-0"

NOTES:
For General Notes see Sheet Nos. 2 and 3.
For other notes see Sheet No. 11.
For Details of Cross Frames see Sheet No. 11
For Flange Splice Detail see Sheet No. 11

DELAWARE DEPARTMENT OF HIGHWAYS & TRANSPORTATION
DIVISION OF HIGHWAYS

INTERSTATE ROUTE I-495

CHRISTINA RIVER BRIDGE FRAMING PLAN 109'-109'-109'-109' SPANS

J. E. GREINER CO.
MORAN, PROCTOR, MUESER & RUTLEDGE
CONSULTING ENGINEERS

D. T. L.G.
T. H. A./H.D.
C. K.K.S.

SCALE As Noted
DATE 7/1/71

APPROVED BY:
BRIDGE ENGINEER

OGILVIE PRESS, INC. — D-127 4348

COUNTY	CONTRACT	P. P. & L.E.D. NO.	STATE	FED. AID PROJECT NO.	FISCAL YEAR	SHEET NO.	TOTAL SHEETS
New Castle	71-05-007	2	DEL.	I-495-3(21)15		18	44

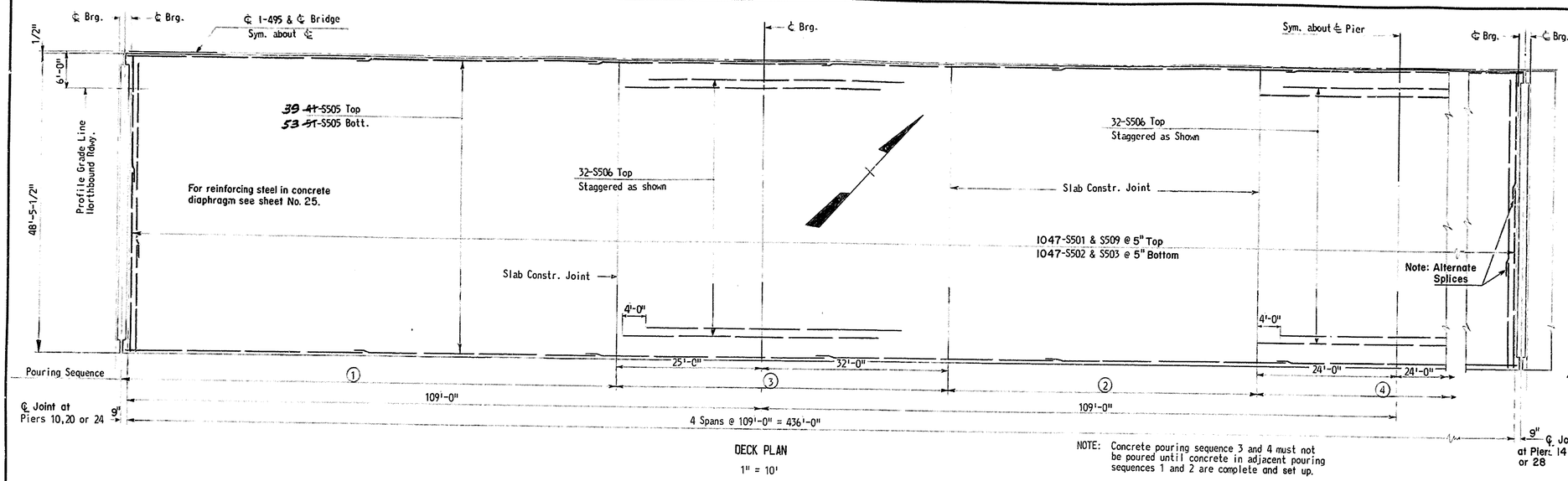

DECK PLAN

1" = 10'

NOTE: Concrete pouring sequence 3 and 4 must not be poured until concrete in adjacent pouring sequences 1 and 2 are complete and set up.

REINFORCING SCHEDULE

MARK	Number Required: Southbound Rdwy. Spans 11-14	Southbound Rdwy. Spans 21-24	Southbound Rdwy. Spans 25-28	Northbound Rdwy. Spans 11-14	Northbound Rdwy. Spans 21-24	Northbound Rdwy. Spans 25-28	LENGTH
Straight Bars							
S502	1047	1047	1047	1047	1047	1047	20'-6"
S503	1047	1047	1047	1047	1047	1047	29'-0"
S505	1012	1012	1012	1012	1012	1012	41'-0"
S506	96	96	96	96	96	96	44'-0"
S701	20	20	20	20	20	20	7' 4"
R701	256	256	256	256	256	256	13'-4"
R702	256	256	256	256	256	256	13'-4"
Bent Bars							
S507	80	80	80	80	80	80	4'-6"
S501	1047	1047	1047	1047	1047	1047	32'-6"
S509	1047	1047	1047	1047	1047	1047	17'-0"
S510	384	—	—	384	—	—	3'-0"
S702	8	8	8	8	8	8	22'-1"
R501	544	544	544	544	544	544	4'-11"
R502	541	541	541	541	541	541	4'-9"
R602	256	256	256	256	256	256	6'-11"
R603	262	262	262	262	262	262	6'-8"
R604	288	288	288	288	288	288	3'-5"
R605	279	279	279	279	279	279	3'-2"

BENDING DIAGRAMS

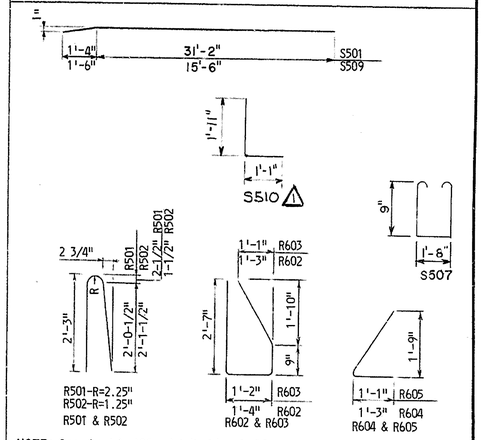

NOTE: See sheet No.12 for detail of bar S502.

NOTES:

For General Notes, see Sheet Nos. 2 and 3.

For other notes, see Sheet No. 12.

For deck details and slab reinforcing steel, see Sheet No. 12.

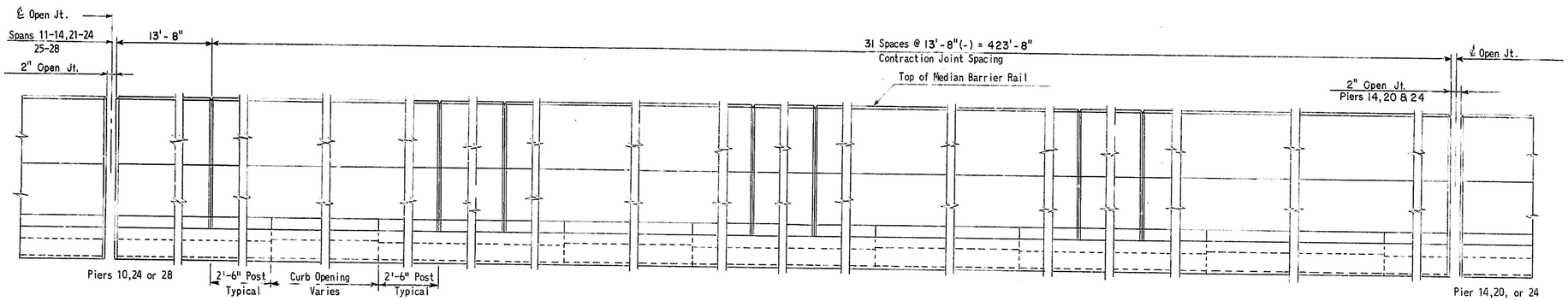

MEDIAN BARRIER RAIL ELEVATION

SPANS 11-14, 21-24, & 25-28

3/4" = 1'-0"

⚠ Note: No curb openings in Span 11, 12 & 13

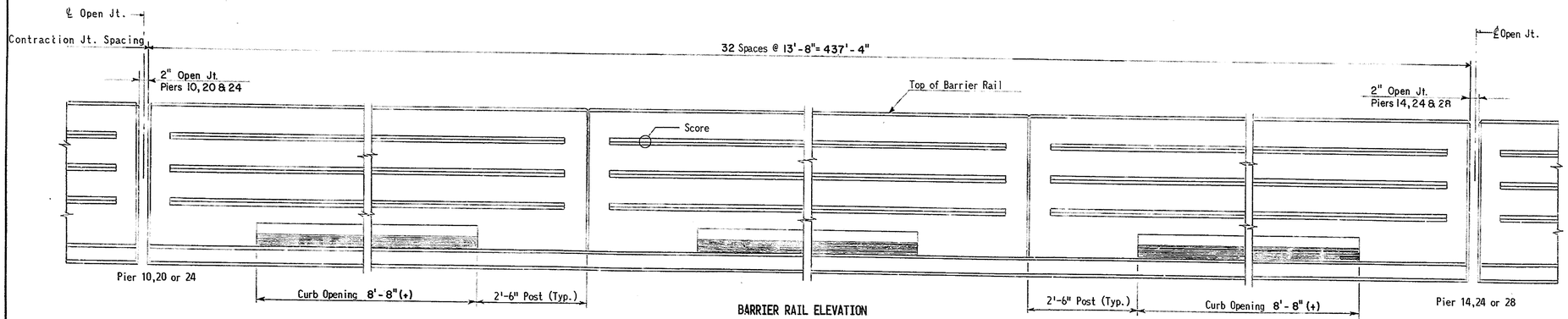

BARRIER RAIL ELEVATION

SPANS 11-14, 21-24 & 25-28

3/4" = 1'-0"

⚠ Note: No curb openings in Span 11, 12 & 13

⚠ Close curb openings in Spans 11, 12 & 13 4-17-73 B.L.S.

DELAWARE DEPARTMENT OF HIGHWAYS & TRANSPORTATION DIVISION OF HIGHWAYS		
INTERSTATE ROUTE I-495		
CHRISTINA RIVER BRIDGE DECK PLAN 109'-109'-109'-109' SPANS		
D. T. L, G, T. H. A, C. K. K. S.	SCALE As Noted	APPROVED BY: BRIDGE ENGINEER
	DATE 7/1/71	

J. E. GREINER CO.
MORAN, PROCTOR, MUESER & RUTLEDGE
CONSULTING ENGINEERS

OGILVIE PRESS, INC. — D-187 4249

COUNTY	CONTRACT	P. R. A. RTE. NO.	STATE	FED. AID PROJECT NO.	FISCAL YEAR	SHEET NO.	TOTAL SHEETS
New Castle	71-05-007	2	DEL.	I-495-3(21)15		19	44

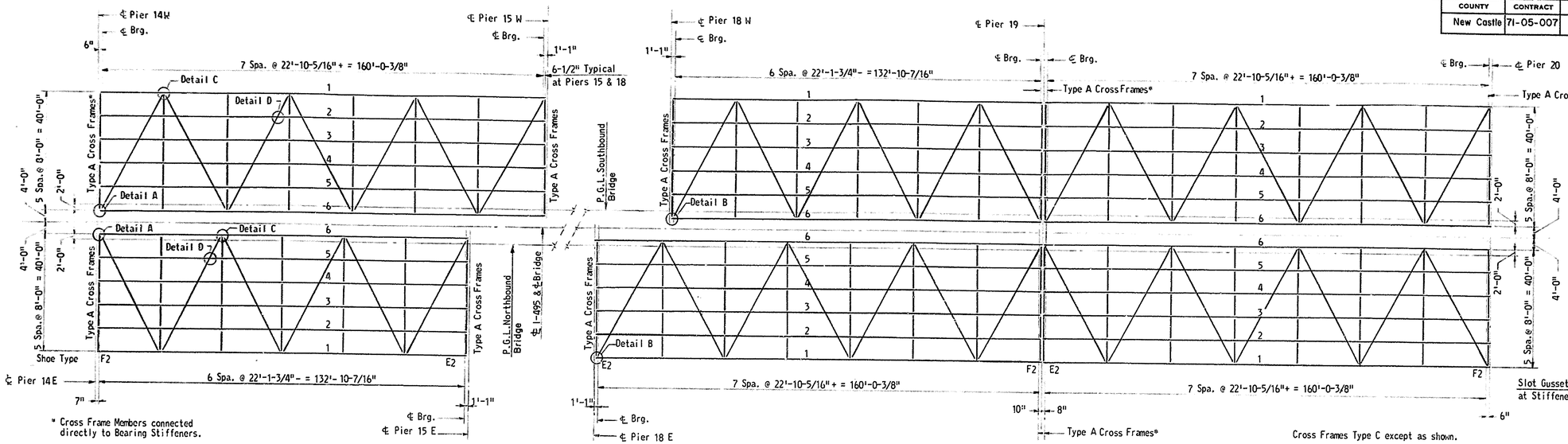

FRAMING PLAN
1" = 20'

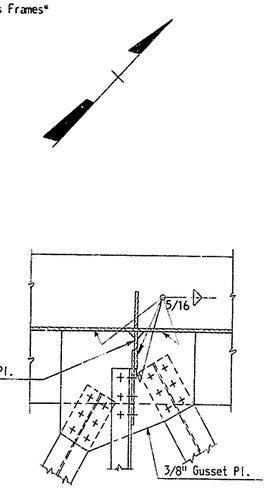

DETAIL C

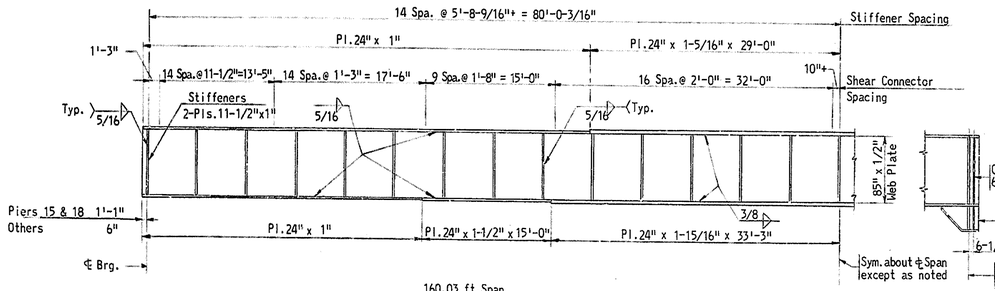

160.03 ft.Span
GIRDER ELEVATION
1/8" = 1'-0"

All Stiffeners are 6" X 3/8" Pls. both sides of Web Pl. except as noted.

CAMBER INCREMENTS (INCHES) - 160.03' SPAN				
	Girders 1 & 6		Girders 2 - 5	
	1/4 L	1/2 L	1/4 L	1/2 L
Structural Steel	1-3/16	1-5/8	1-1/4	1-5/8
Concrete Deck Slab	2-1/16	2-13/16	2-5/16	3-1/16
Barrier Rail	3/16	1/4	3/16	1/4
Full Dead Load	3-7/16	4-11/16	3-3/4	4-15/16
Vertical Curve	1-1/16	1-3/8	1-1/16	1-3/8
Total Camber at 1/2 L	6-1/16		6-5/16	

For 130.87' Span angle is connected to vertical gusset plate, See Half Section, Sheet No. 11.

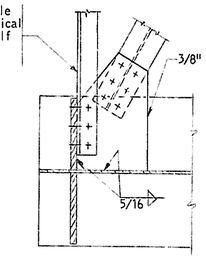

DETAIL A

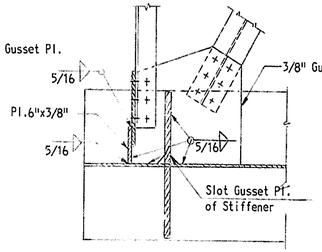

DETAIL B

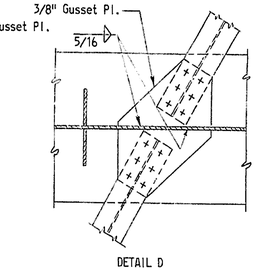

DETAIL D

For 160.03 ft. Span: Diagonals WT 5 x 12.5, 6-7/8" ϕ H.S. Bolts
For 132.87 ft Span: Diagonals WT 5 x 10.5, 4-7/8" ϕ H.S. Bolts

LATERAL BRACING
1" = 1'-0"

CAMBER INCREMENTS (INCHES) - 132.87' SPAN				
	Girders 1 & 6		Girders 2 - 5	
	1/4 L	1/2 L	1/4 L	1/2 L
Structural Steel	11/16	7/8	11/16	7/8
Concrete Deck Slab	1-9/16	2-1/8	1-11/16	2-1/4
Barrier Rail	1/8	3/16	1/8	3/16
Full Dead Load	2-3/8	3-3/16	2-1/2	3-5/16
Vertical Curve	11/16	15/16	11/16	15/16
Total Camber at 1/2 L	4-1/8		4-1/4	

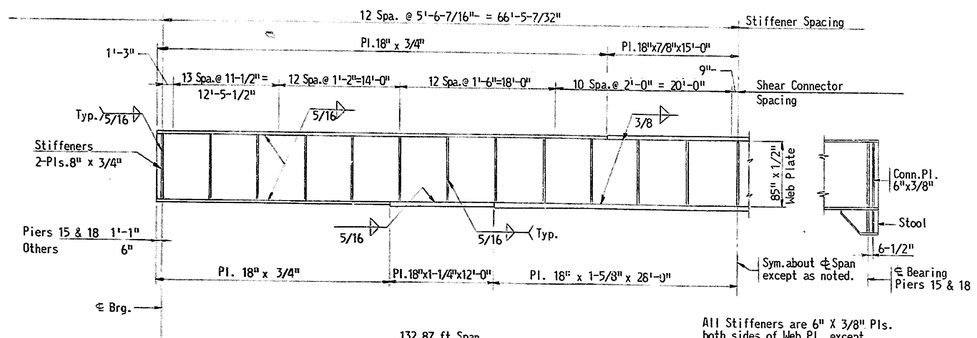

132.87 ft.Span
GIRDER ELEVATION
1/8" = 1'-0"

All Stiffeners are 6" X 3/8" Pls. both sides of Web Pl. except as noted

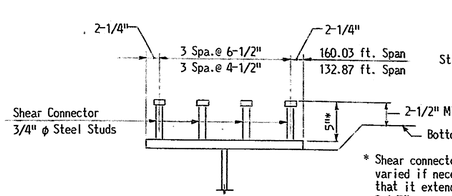

SHEAR CONNECTOR DETAIL
No. Scale

* Shear connector length shall be varied if necessary to insure that it extends a minimum of 2-1/2" and a maximum of 5" into deck slab.

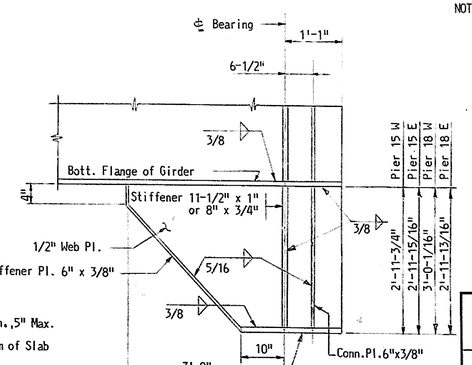

Piers 15 & 18
STOOL DETAIL
3/4" = 1'-0"

NOTES:

For General Notes see Sheet Nos. 2 and 3.
For other notes see Sheet No. 11.
For Details of Cross Frames see Sheet No. 11.
For Flange Splice Detail see Sheet No. 11.
The installation of shear connectors will not be permitted prior to the erection of the structural steel and placing of the deck forms.
For Table of Grade Elevations over Stringers at Quarter Points see Sheet No. 22

DELAWARE DEPARTMENT
OF HIGHWAYS & TRANSPORTATION
DIVISION OF HIGHWAYS

INTERSTATE ROUTE I-495

CHRISTINA RIVER BRIDGE
FRAMING PLAN
132.87' SPAN & 160.03' SPAN

J. E. GREINER CO.
MORAN, PROCTOR, MUESER & RUTLEDGE
CONSULTING ENGINEERS

D. T. L. G.
T. R. F.
C. K. K. S.

SCALE: As Noted
DATE: 7/1/71
APPROVED BY:
BRIDGE ENGINEER

OGILVIE PRESS, INC. — D-137

COUNTY	CONTRACT	P. R. A. REQ. NO.	STATE	FED. AID PROJECT NO.	FISCAL YEAR	SHEET NO.	TOTAL SHEETS
New Castle	71-05-007	2	DEL.	I-495-3(21)15		20	44

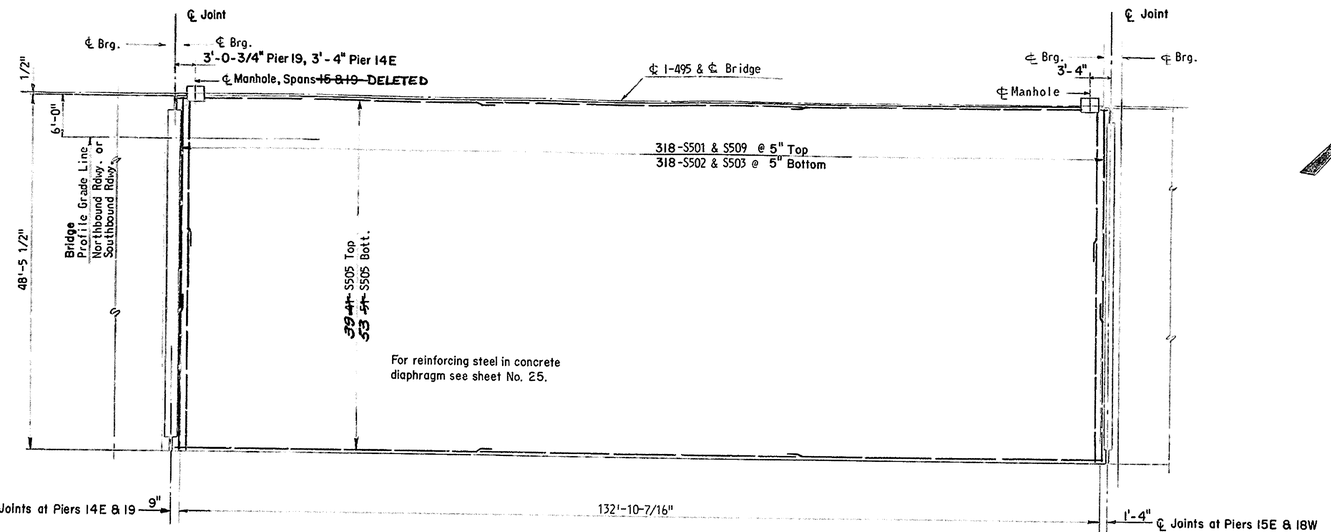

DECK PLAN
1" = 10'

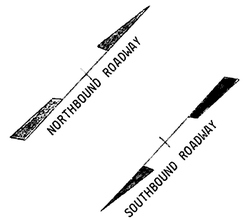

NOTE: Longitudinal bars in the deck are to be cut in field to clear manholes.

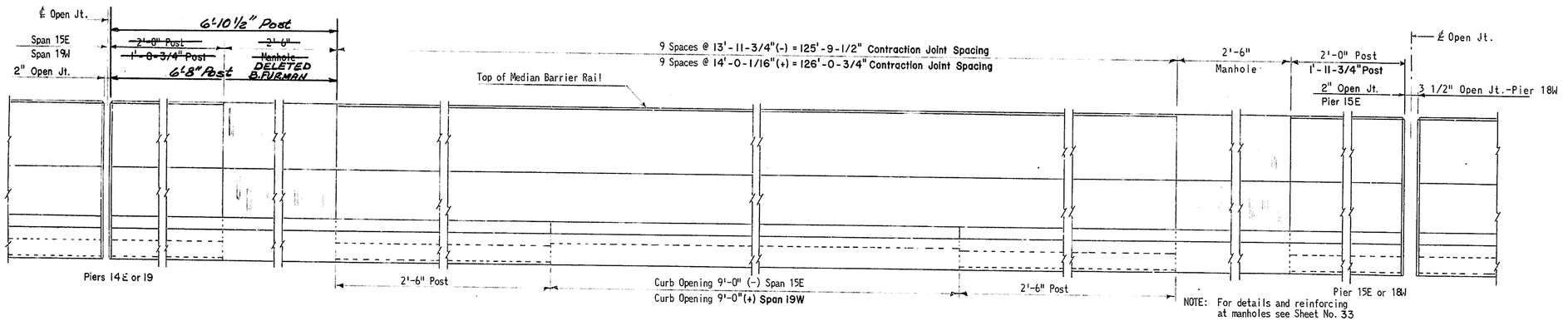

NOTE: For details and reinforcing at manholes see Sheet No. 33

MEDIAN BARRIER RAIL ELEVATION
SPANS 15E & 19W
3/4" = 1'-0"

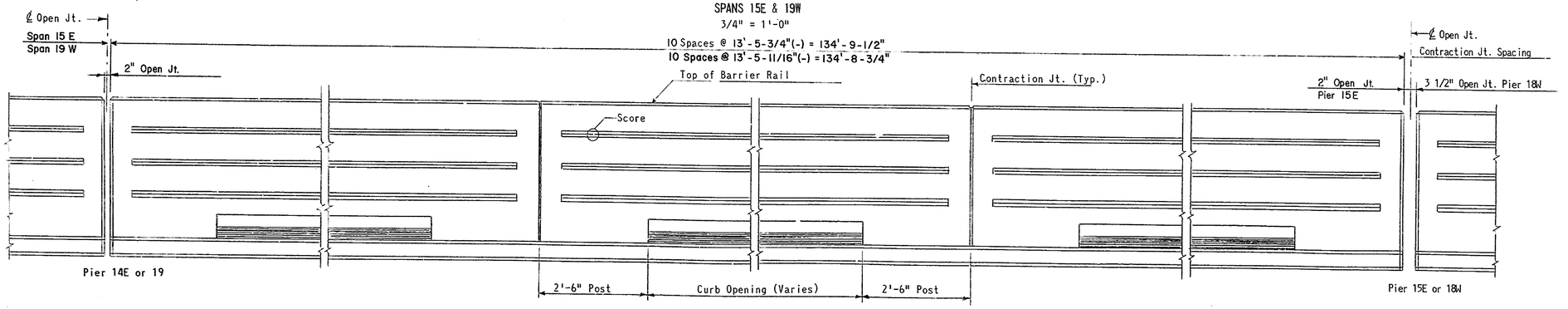

BARRIER RAIL ELEVATION
SPANS 15E & 19W
3/4" = 1'-0"

REINFORCING SCHEDULE

MARK	Number Required: Southbound Rdwy. Span 19	Number Required: Northbound Rdwy. Span 15	LENGTH
Straight Bars			
S502	318	318	20'-6"
S503	318	318	29'-0"
S505	368	368	34'-7"
S701	10	10	7'-4"
R701	80	80	13'-2"
R702	8	16	1'-8"
R703	8	—	1'-4"
R704	72	72	13'-8"
Bent Bars			
S702	4	4	22'-11"
S501	318	318	32'-6"
S509	318	318	17'-0"
S507	40	40	4'-6"
R501	170	170	4'-11"
R502	161	161	4'-9"
R602	80	80	6'-11"
R603	80	80	6'-8"
R604	90	90	3'-5"
R605	81	81	3'-2"

BENDING DIAGRAMS

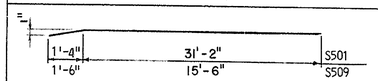

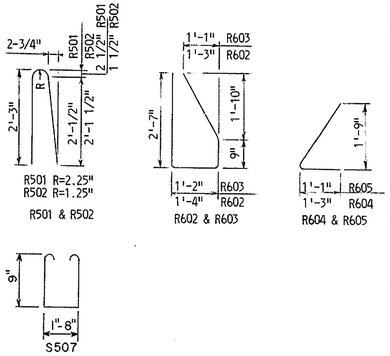

NOTE: See sheet No. 12 for detail of bar S702

NOTES:

For General Notes, see sheet Nos. 2 and 3.
For other notes, see sheet No. 12.
For deck details and slab reinforcing steel, see sheet No. 12

DELAWARE DEPARTMENT
OF HIGHWAYS & TRANSPORTATION
DIVISION OF HIGHWAYS

INTERSTATE ROUTE I-495

CHRISTINA RIVER BRIDGE
DECK PLAN
132.87' SPAN

J. E. GREINER CO.
MORAN, PROCTOR, MUESER & RUTLEDGE
CONSULTING ENGINEERS

D.J.M.M.
T. H.A.
C. K.K.S.

SCALE: As Noted
DATE: 7/1/71

APPROVED BY:
BRIDGE ENGINEER

OGILVIE PRESS, INC. — D-127 4249

COUNTY	CONTRACT	F. P. A. REG. NO.	STATE	FED. AID PROJECT NO.	FISCAL YEAR	SHEET NO.	TOTAL SHEETS
New Castle	71-05-007	2	DEL.	I-495-3(21)15		21	44

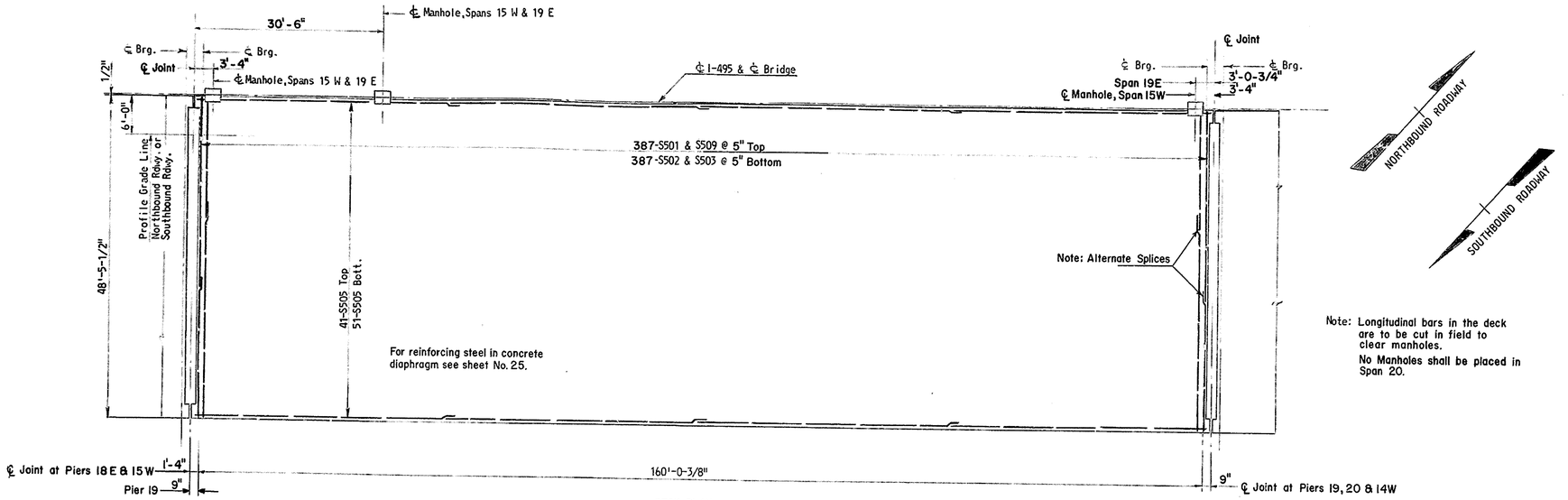

Note: Longitudinal bars in the deck are to be cut in field to clear manholes.

No Manholes shall be placed in Span 20.

DECK PLAN

1" = 10'

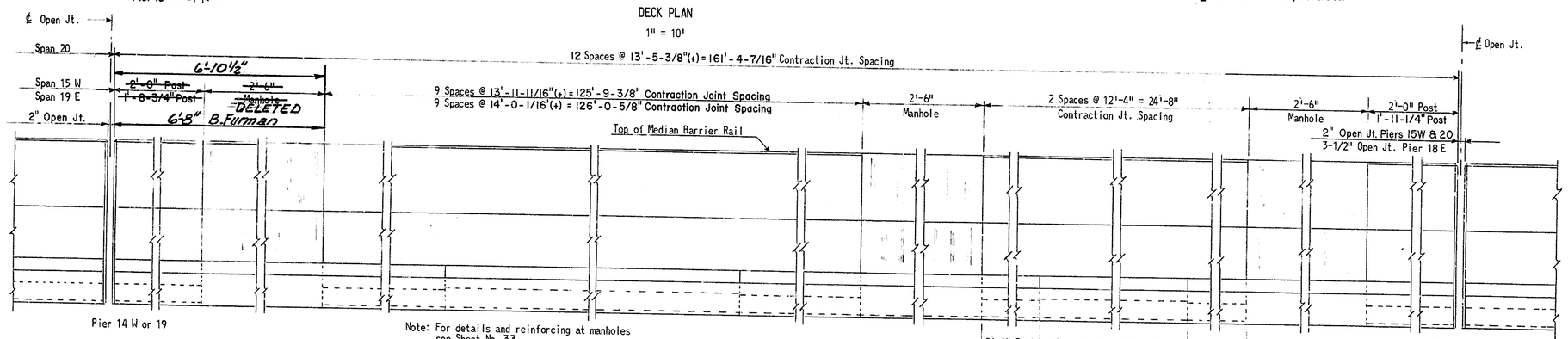

MEDIAN BARRIER RAIL ELEVATION

SPANS 15 W. 19 E & 20

3/4" = 1'-0"

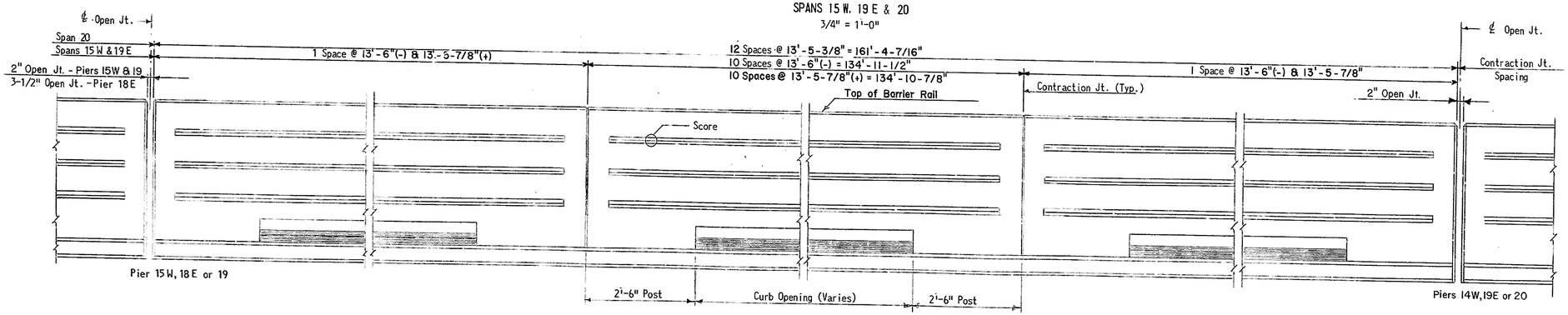

BARRIER RAIL ELEVATION

SPANS 15W, 19E & 20

3/4" = 1'-0"

REINFORCING SCHEDULE

	MARK	Number Required: Southbound Rdwy. Span 15	Southbound Rdwy. Span 20	Northbound Rdwy. Span 19	Northbound Rdwy. Span 20	LENGTH
	Straight Bars					
	S502	387	387	387	387	20'-6"
	S503	387	387	387	387	29'-0"
	S505	368	368	368	368	41'-5"
	S701	10	20	10	20	7'-4"
	R701	96	192	96	192	13'-2"
	R702	16	-	8	-	1'-8"
	R703	-	-	8	-	1'-4"
	R704	72	-	72	-	13'-8"
	R705	16	-	16	-	12'-0"
Bent Bars	S507	40	80	40	80	4'-6"
Bent Bars	S702	4	8	4	8	22'-11"
Bent Bars	S501	387	387	387	387	32'-6"
Bent Bars	S509	387	387	387	387	17'-0"
Bent Bars	R501	204	204	204	204	4'-11"
Bent Bars	R502	195	204	195	204	4'-9"
Bent Bars	R602	96	96	96	96	6'-11"
Bent Bars	R603	96	96	96	96	6'-8"
Bent Bars	R604	108	108	108	108	3'-5"
Bent Bars	R605	99	108	99	108	3'-2"

BENDING DIAGRAMS

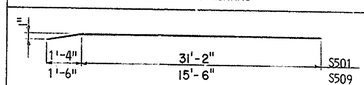

NOTE: See sheet No. 12 for detail of bar S702.

NOTES:

For General Notes, see sheet Nos. 2 and 3.

For other notes, see sheet No. 12.

For deck details and slab reinforcing steel, see sheet No. 12.

DELAWARE DEPARTMENT
OF HIGHWAYS & TRANSPORTATION
DIVISION OF HIGHWAYS

INTERSTATE ROUTE I-495

CHRISTINA RIVER BRIDGE
DECK PLAN
160.03' SPAN

J. E. GREINER CO.
MORAN, PROCTOR, MUESER & RUTLEDGE
CONSULTING ENGINEERS

D. J. M. M.
T. H. A.
C. K. K. S.

SCALE: As Noted
DATE: 7/1/71

APPROVED BY:

BRIDGE ENGINEER

OGILVIE PRESS, INC. — D-127 4248

COUNTY	CONTRACT	F. P. A. REG. NO.	STATE	FED. AID PROJECT NO.	FISCAL YEAR	SHEET NO.	TOTAL SHEETS
New Castle	71-05-007	2	DEL.	I-495-3(2I)15		22	44

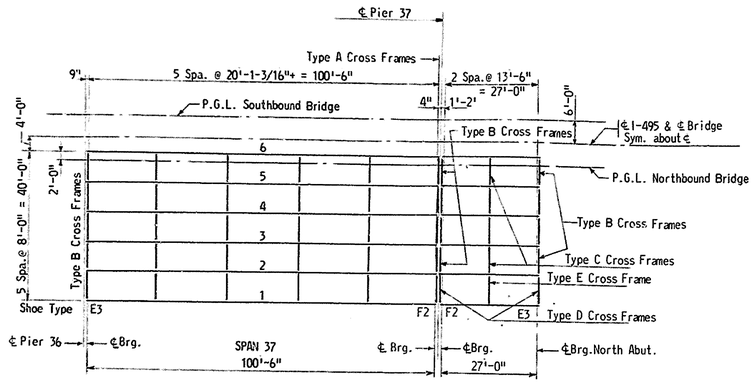

FRAMING PLAN
1" = 20'

Interior Cross Frames in Span 37 are Type C.
For Type A Cross Frames, see Sheet No. 11.

CAMBER INCREMENTS (INCHES) - 100.50' SPAN				
	GIRDERS 1 & 6		GIRDERS 2 - 5	
	1/4L	1/2L	1/4L	1/2L
Structural Steel	3/8	1/2	3/8	1/2
Concrete Deck Slab	1-1/4	1-5/8	1-3/8	1-13/16
Barrier Rail	1/8	3/16	1/8	3/16
Full Dead Load	1-3/4	2-5/16	1-7/8	2-1/2
Vertical Curve	--	--	--	--
Total Camber at 1/2L	2-5/16		2-1/2	

TABLE OF GRADE ELEVATIONS

Span	Stringer Point	1 Grade Elevation	2 Grade Elevation	3 Grade Elevation	4 Grade Elevation	4 & 5 Grade Elevation	6 Grade Elevation
15 N.B. Rdwy.	1	79.822	79.989	80.156	80.405	80.322	80.155
	2	80.455	80.622	80.788	81.038	80.955	80.788
	3	81.048	81.214	81.381	81.631	81.547	81.381
	4	81.601	81.767	81.934	82.184	82.100	81.934
	5	82.114	82.281	82.448	82.697	82.614	82.447
15 S.B. Rdwy.	1	79.822	79.989	80.156	80.405	80.322	80.155
	2	80.579	80.746	80.913	81.162	81.079	80.912
	3	81.279	81.445	81.612	81.862	81.778	81.612
	4	81.920	82.087	82.254	82.503	82.420	82.253
	5	82.505	82.671	82.838	83.088	83.004	82.838
19 N.B. Rdwy.	1	83.384	83.550	83.717	83.967	83.883	83.717
	2	82.899	83.066	83.233	83.482	83.399	83.232
	3	82.358	82.524	82.691	82.941	82.857	82.691
	4	81.758	81.925	82.092	82.341	82.258	82.091
	5	81.101	81.268	81.435	81.684	81.601	81.434
19 S.B. Rdwy.	1	83.061	83.228	83.394	83.644	83.561	83.394
	2	82.631	82.797	82.963	83.214	83.130	82.964
	3	82.161	82.327	82.494	82.744	82.660	82.494
	4	81.651	81.818	81.984	82.234	82.151	81.984
	5	81.101	81.268	81.435	81.684	81.601	81.434
20 N.B. Rdwy. 20 S.B. Rdwy.	1	81.076	81.242	81.409	81.659	81.575	81.409
	2	80.359	80.526	80.693	80.942	80.859	80.692
	3	79.585	79.752	79.919	80.168	80.085	79.918
	4	78.754	78.920	79.087	79.337	79.253	79.087	
	5	77.865	78.031	78.198	78.448	78.364	78.198
37 N.B. Rdwy. 37 S.B. Rdwy.	1	32.407	32.574	32.741	32.990	32.907	32.740
	2	31.717	31.883	32.050	32.300	32.216	32.050
	3	31.026	31.192	31.359	31.609	31.525	31.359
	4	30.335	30.501	30.668	30.918	30.834	30.668
	5	29.644	29.810	29.977	30.227	30.143	29.977
38 N.B. Rdwy. 38 S.B. Rdwy.	1	29.602	29.769	29.936	30.185	30.102	29.935
	2	29.417	29.584	29.750	30.000	29.917	29.750
	3	29.231	29.398	29.565	29.814	29.731	29.564
	4	29.046	29.212	29.379	29.629	29.545	29.379
	5	28.860	29.027	29.193	29.443	29.360	29.193

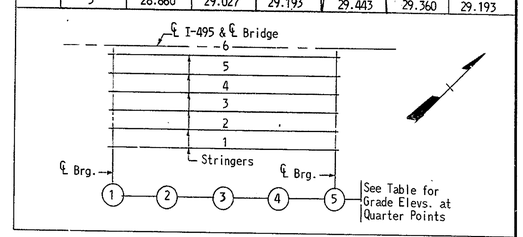

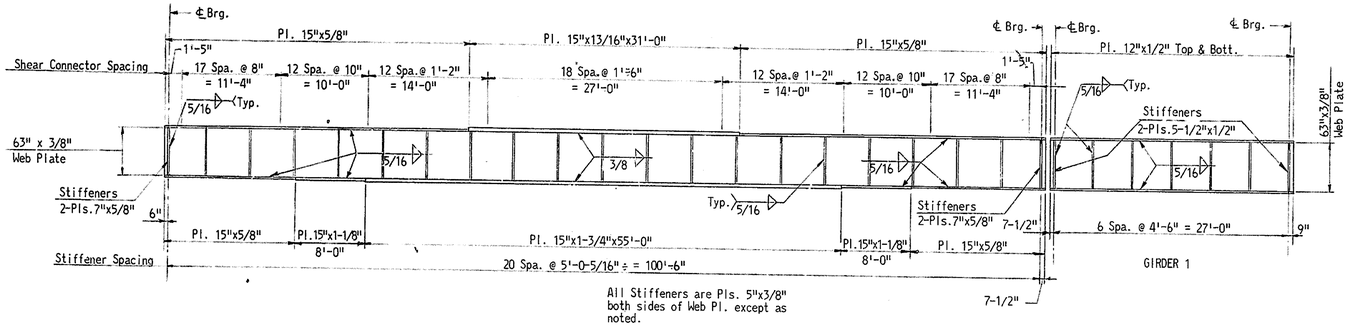

All Stiffeners are Pls. 5"x3/8" both sides of Web Pl. except as noted.

GIRDER 1

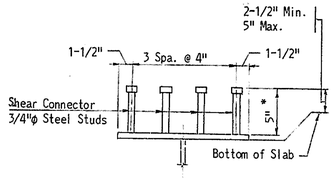

SHEAR CONNECTOR DETAIL
1-1/2" = 1'-0"

* Shear connector length shall be varied if necessary to insure that it extends a minimum of 2-1/2" and a maximum of 5" into deck slab.

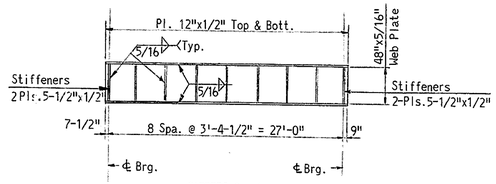

GIRDERS 2 - 6

GIRDER ELEVATIONS
1/8" = 1'-0"

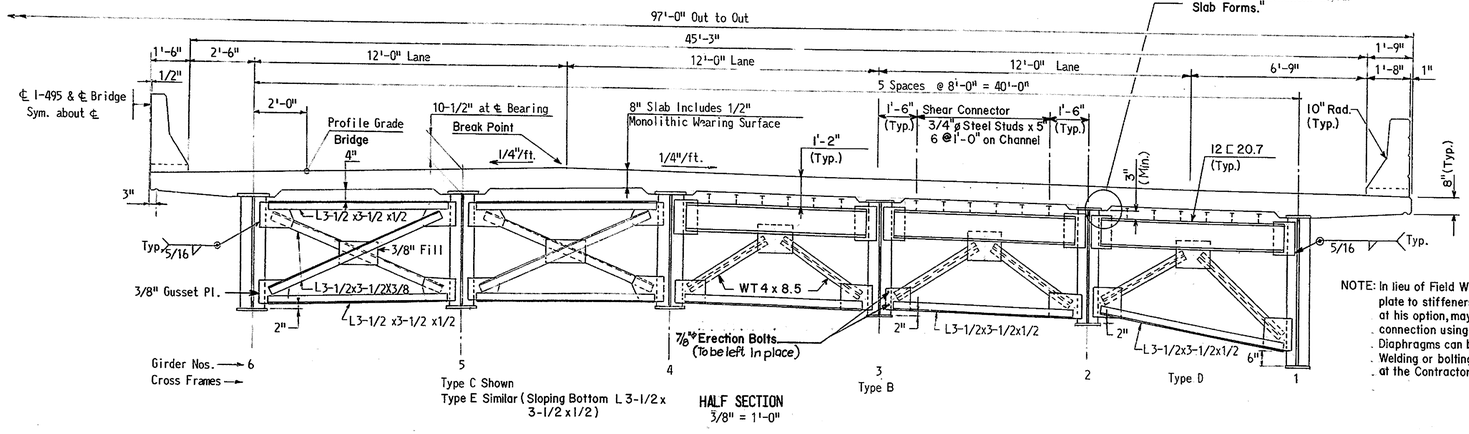

HALF SECTION
3/8" = 1'-0"

NOTE: In lieu of Field Welding connection plate to stiffeners the Contractor, at his option, may substitute a field connection using a min. of 4-7/8"øH.S. Bolts.
- Diaphragms can be shop assembled.
- Welding or bolting shall be employed at the Contractors discretion.

NOTES:
For General Notes see Sheet Nos. 2 and 3.
For other notes see Sheet No. 11.
For Flange Splice Detail see Sheet No. 11
The installation of shear connectors will not be permitted prior to the erection of the structural steel and placing of the deck forms.

DELAWARE DEPARTMENT OF HIGHWAYS & TRANSPORTATION
DIVISION OF HIGHWAYS

INTERSTATE ROUTE I-495

CHRISTINA RIVER BRIDGE FRAMING PLAN 100.50' SPAN & 27' SPAN

J. E. GREINER CO.
MORAN, PROCTOR, MUESER & RUTLEDGE
CONSULTING ENGINEERS

D. T. L. G.
T. R. F. / H. D.
C. K. S.

SCALE: As Noted
DATE: 7/1/71

APPROVED BY:
BRIDGE ENGINEER

OGILVIE PRESS, INC. — D-127 4249

COUNTY	CONTRACT	P. R. A. REG. NO.	STATE	FED. AID PROJECT NO.	FISCAL YEAR	SHEET NO.	TOTAL SHEETS
New Castle	71-05-007	2	DEL.	I-495-3(21)15		23	44

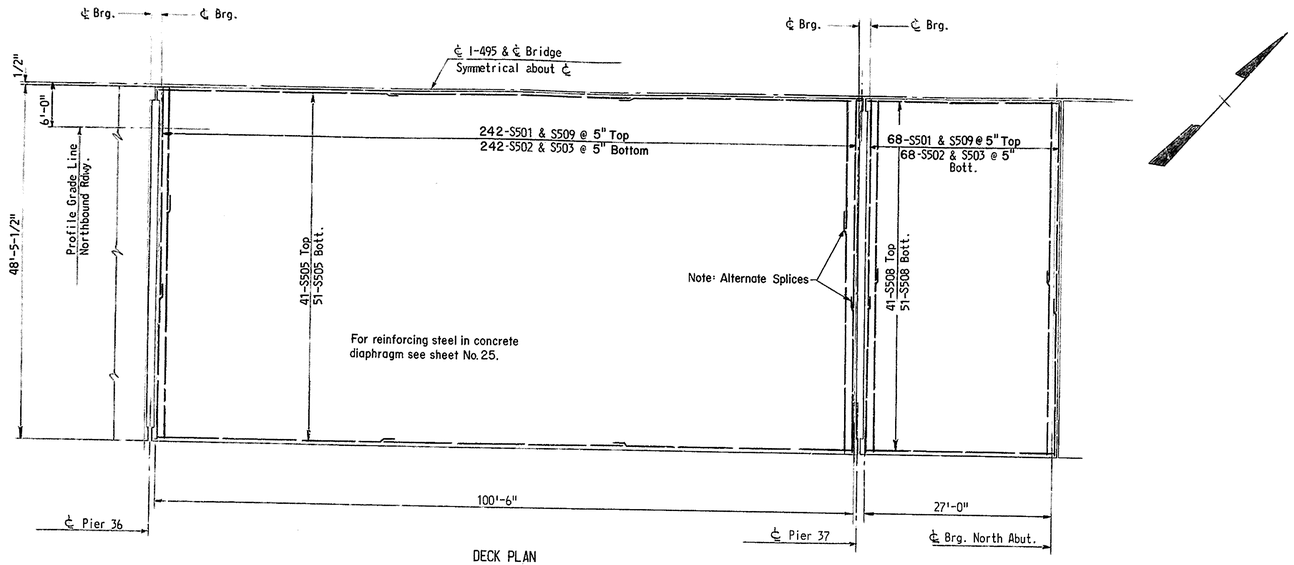

DECK PLAN
1" = 10'

REINFORCING SCHEDULE

MARK	Number Required Southbound Rdwy. Span 37	Southbound Rdwy. Span 38	Northbound Rdwy. Span 37	Northbound Rdwy. Span 38	LENGTH
Straight Bars					
S502	242	68	242	68	20'-6"
S503	242	68	242	68	29'-0"
S505	276		276		34'-8"
S508		92		92	27'-11"
S701	20	20	20	20	7'-4"
R701	112	—	112	—	14'-3"
R702	-	32	-	32	14'-0"
Bent Bars					
S501	242	68	242	68	32'-6"
S507	80	80	80	80	41'-6"
S509	242	68	242	68	17'-0"
S702	8	8	8	8	22'-11"
R501	105	34	105	34	41'-11"
R502	105	34	105	34	41'-9"
R602	105	16	105	16	6'-11"
R603	105	16	105	16	6'-8"
R604	—	18	—	18	3'-5"
R605	—	18	—	18	3'-2"

BENDING DIAGRAMS

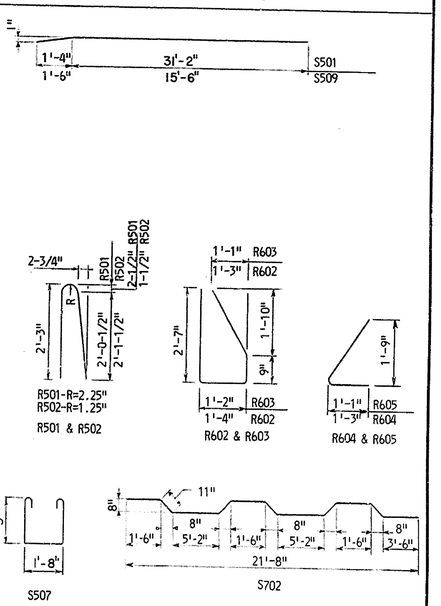

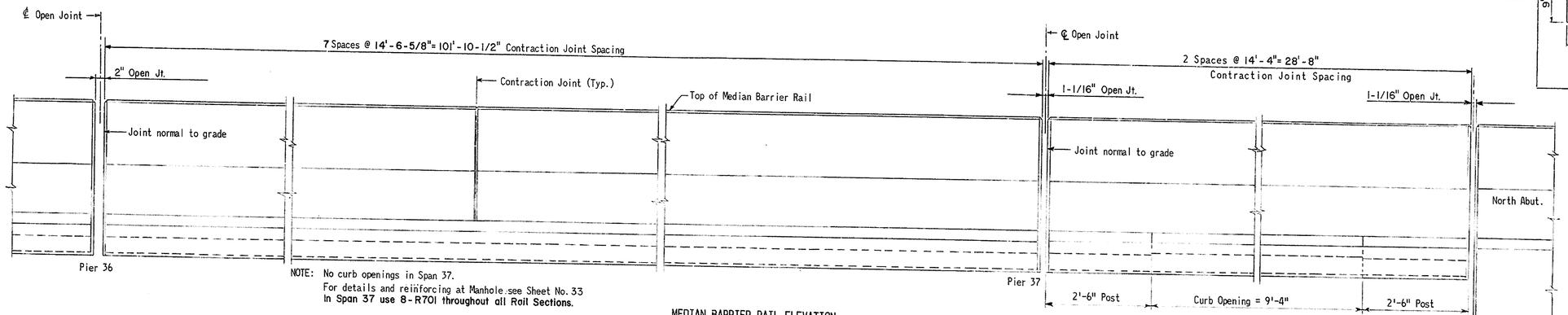

MEDIAN BARRIER RAIL ELEVATION
SPANS 37 AND 38
3/4" = 1'-0"

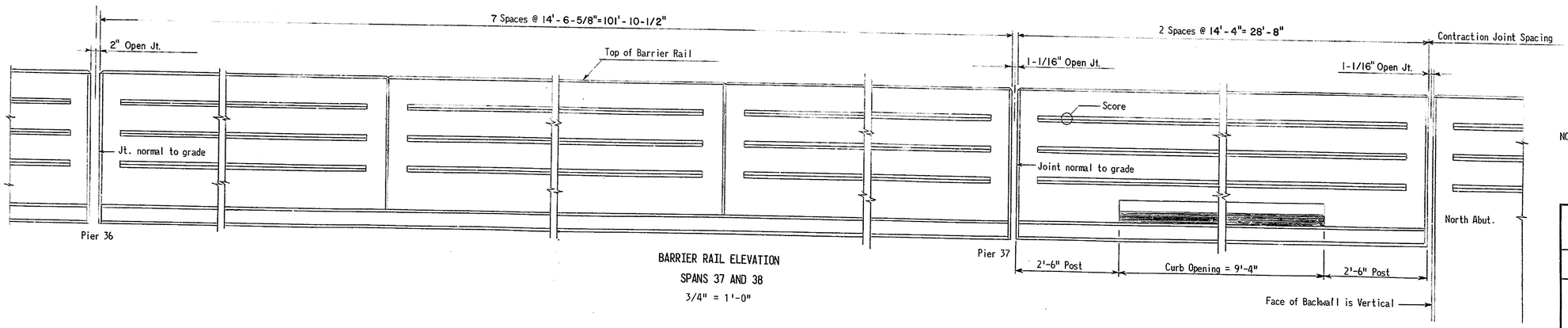

BARRIER RAIL ELEVATION
SPANS 37 AND 38
3/4" = 1'-0"

NOTES:
For General Notes, see Sheet Nos. 2 and 3.
For other notes, see Sheet No. 12.
For deck details and slab reinforcing steel, see Sheet No. 12.

J. E. GREINER CO.
MORAN, PROCTOR, MUESER & RUTLEDGE
CONSULTING ENGINEERS

DELAWARE DEPARTMENT
OF HIGHWAYS & TRANSPORTATION
DIVISION OF HIGHWAYS

INTERSTATE ROUTE I-495

CHRISTINA RIVER BRIDGE
DECK PLAN
100.50' SPAN & 27' SPAN

D. T. L. G.
T. R. F.
C. I. L. K.

SCALE As Noted
DATE 7/1/71

APPROVED BY:
BRIDGE ENGINEER

OGILVIE PRESS, INC. — D-127 4748

COUNTY	CONTRACT	P.E.A. REG. NO	STATE	FED. AID PROJECT NO.	SHEET NO.	TOTAL SHEETS
NEW CASTLE	71-05-007	2	DEL.	I-495-3(21)15	24	44

END DIAPHRAGMS

NO.	REVISIONS	BY	DATE

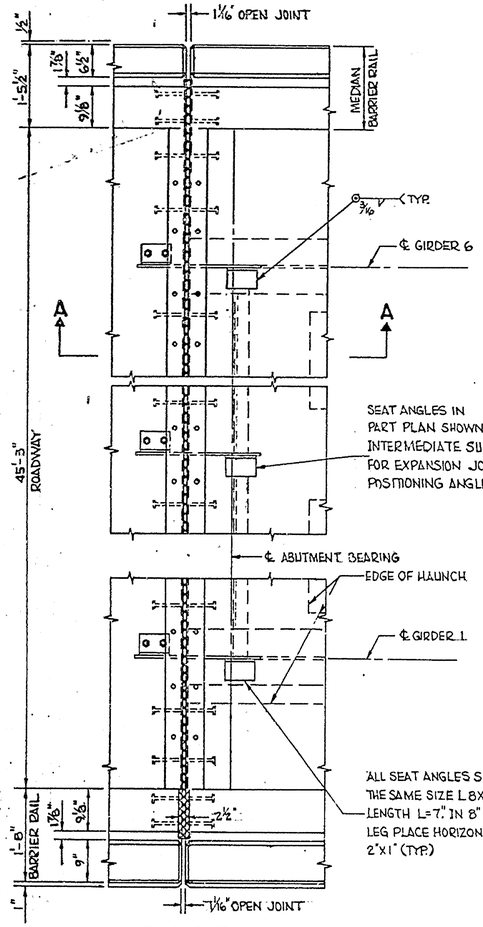

PART PLAN
AT ABUTMENTS & PIER 37

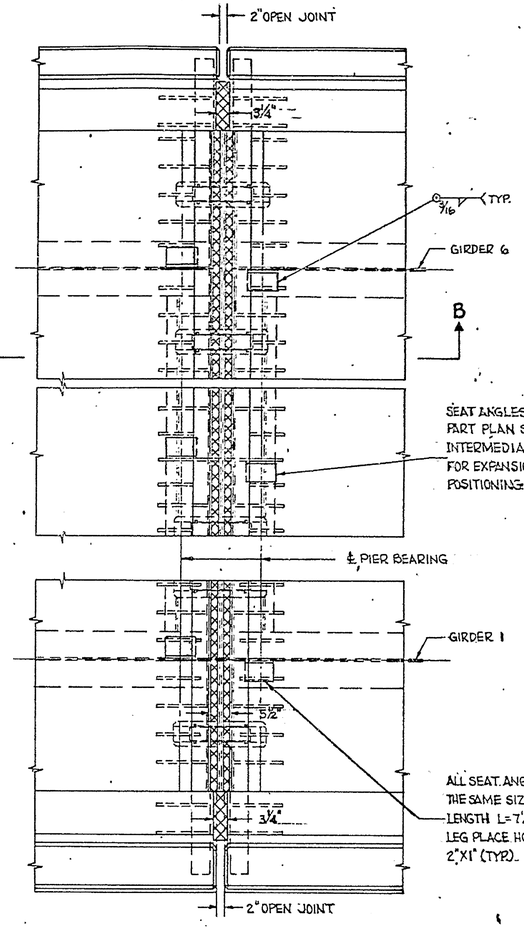

PART PLAN
PIERS 3,7,10,24,28,32 & 36

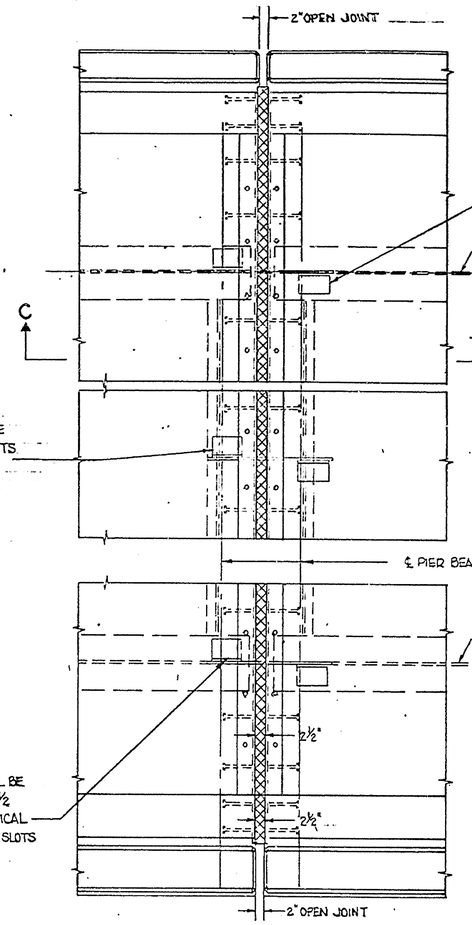

PART PLAN
PIERS 14E & W, 19, 20

GENERAL NOTES

GENERAL :
NEOPRENE COMPRESSION SEALS ARE MANUFACTURED BY VARIOUS COMPANIES, THEREFORE THEY DO NOT HAVE IDENTICAL COMPRESSION-DEFLECTION CHARACTERISTICS AND NOMINAL DIMENSION. MATERIALS USED SHALL MEET DETAILS INDICATED.

DESIGN :
THE DESIGN USED MAY BE MODIFIED BY THE CONTRACTOR. HOWEVER, THE GENERAL DIMENSION SHALL NOT BE CHANGED SUBSTANTIALLY.

DETAILS AND PLANS :
THE COMPLETE DETAILS, SUCH AS THE SIZE OF SEAL, JOINT OPENING AT THE TIME OF INSTALLATION SHALL BE SHOWN ON THE SHOP DRAWINGS.

SUGGESTED INSTALLATION PROCEDURE :
THE SUGGESTED INSTALLATION PROCEDURES HAVE TO BE DIVIDED INTO TWO DISTINCT OPERATIONS BECAUSE OF THE COMPRESSION SEAL LOCATIONS INVOLVED.
LOCATION A : EXPANSION JOINT ASSEMBLY INSTALLATIONS AT ABUTMENTS.
LOCATION B : EXPANSION JOINT ASSEMBLY INSTALLATIONS AT PIERS.
THE SUGGESTED INSTALLATION PROCEDURES SHALL BE LISTED ON THE SHOP DRAWINGS AND APPROVED BY THE BRIDGE ENGINEER. ALL EXPANSION JOINTS SHALL BE FACTORY ASSEMBLED AND THE SEALERS ARE TO BE FACTORY BONDED TO THE STEEL WITH BON-LASTIC ADHESIVE. SAND BLASTING FOR ALL METAL SURFACES IS REQUIRED PRIOR TO APPLICATION OF BON-LASTIC ADHESIVE.

BIDDING :
ALL PARTS OF EXPANSION JOINT SYSTEM, MATERIAL, TOOLS, LABOR, AND INCIDENTALS NECESSARY TO COMPLETE THE INSTALLATION OF THIS ITEM SHALL BE PAID FOR IN SECTION "PREFAB. EXPANSION JOINT SYSTEM".

GENERAL SEALER REQUIREMENTS :

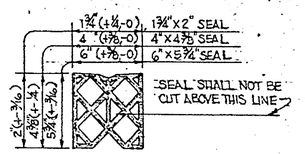

TYPICAL SHAPE
PREFORMED ELASTIC JOINT SEALER

COMPENSATION FOR CURB SEALING SHALL BE MADE UNDER THE ITEM OF JOINT SEALERS.

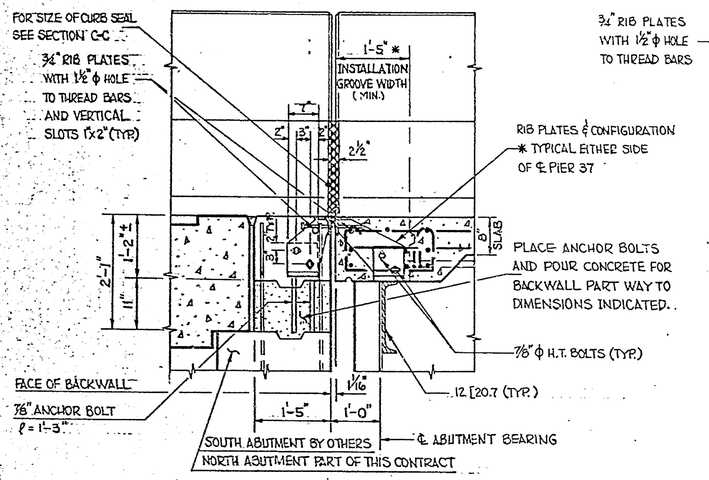

SECTION A-A
SCALE: ¾" = 1'-0"

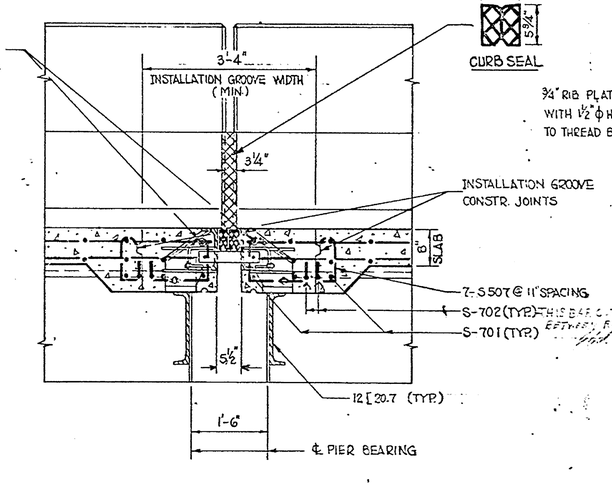

SECTION B-B
SCALE: ¾" = 1'-0"

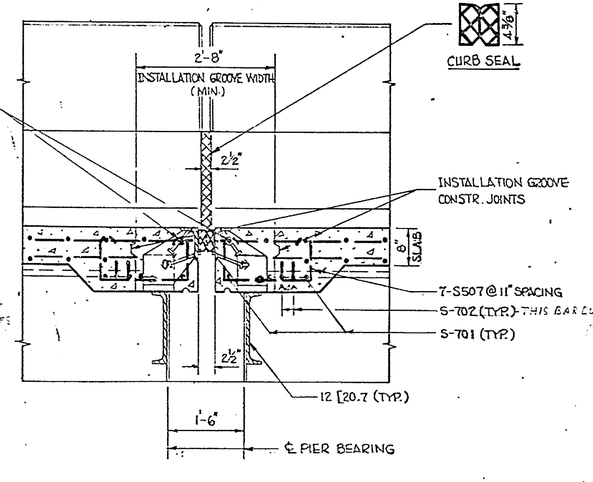

SECTION C-C
SCALE: ¾" = 1'-0"

DELAWARE DEPARTMENT OF HIGHWAYS & TRANSPORTATION
DIVISION OF HIGHWAYS

CHRISTINA RIVER BRIDGE
EXPANSION DAM DETAILS
APPROACH SPANS

D. RBF.	SCALE	APPROVED:
T. RBF	AS SHOWN	BRIDGE ENGINEER
C. BGS.		

COUNTY	CONTRACT	F.A.P. REG. NO.	STATE	FED. AID PROJECT NO.	SHEET NO.	TOTAL SHEETS
NEW CASTLE	71-05-007	2	DEL.	I-495-3(21)15	25	44

END DIAPHRAGMS

NO.	REVISIONS	BY	DATE

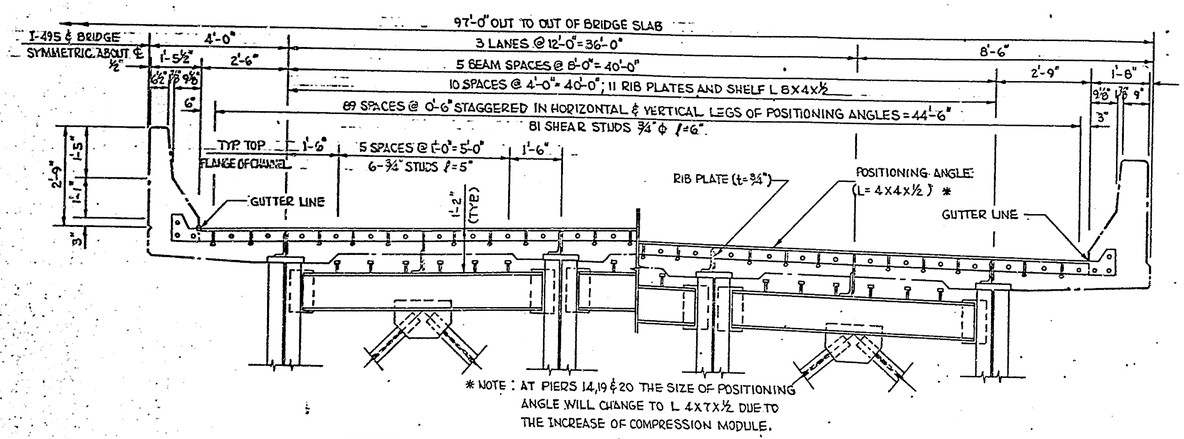

SECTION NEAR ℄ ABUTMENT BEARING & PIERS 14, 19, 20 & 37 (MODULE SEAL)

SCALE: ½" = 1'-0"

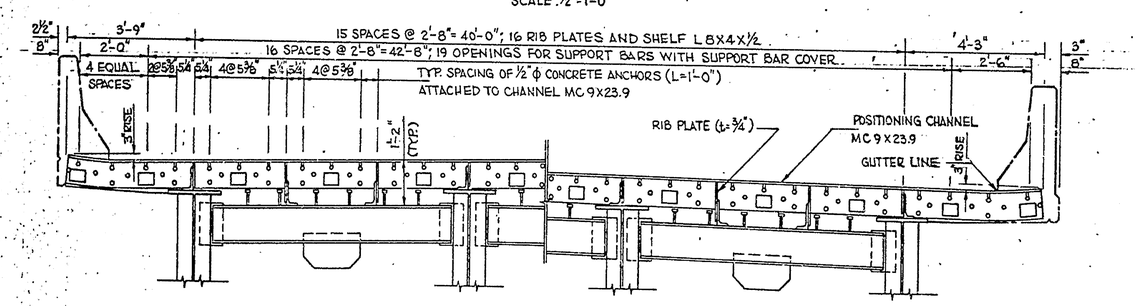

SECTION NEAR ℄ PIERS 3, 7, 10, 24, 28, 32 & 36 (MODULAR SEAL)

SCALE: ½" = 1'-0"

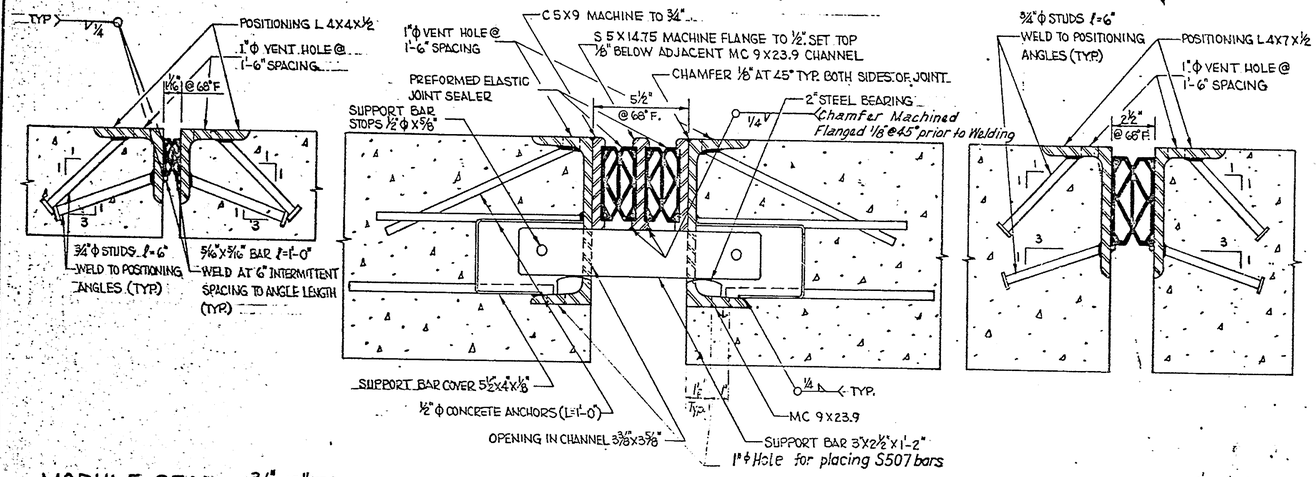

MODULE SEAL - 1¾"x2" (B)

SCALE: ¼" = 0'-1"

MODULAR SEAL - 4"x4⅜" (2M)

SCALE: ¼" = 0'-1"

MODULE SEAL - 4"x4⅜" (H)

SCALE: ¼" = 0'-1"

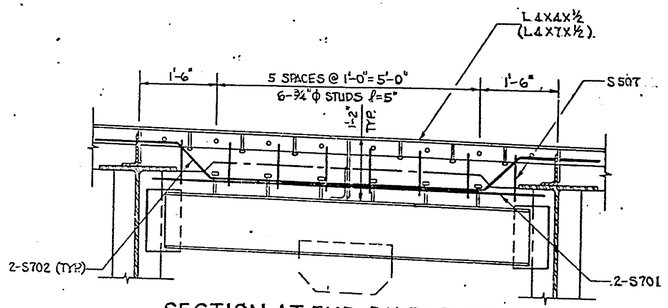

SECTION AT END DIAPHRAGMS WITH MODULE SEALS

SCALE: ¾" = 1'-0"

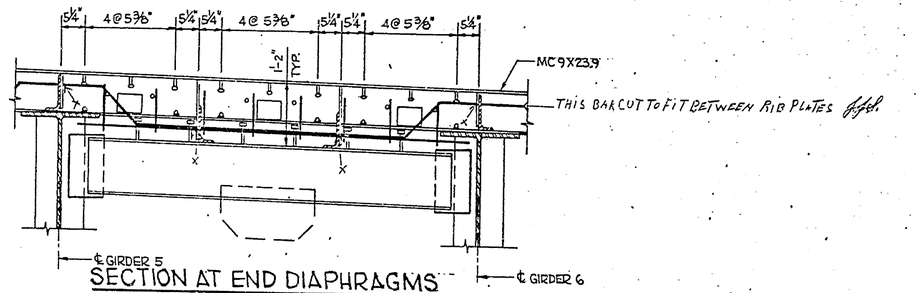

SECTION AT END DIAPHRAGMS WITH MODULAR SEAL

SCALE: ¾" = 1'-0"

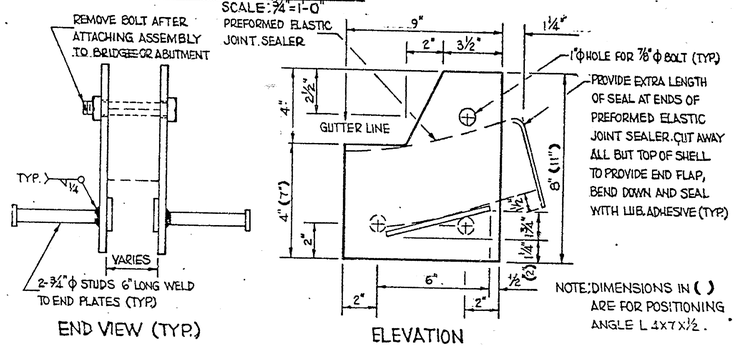

BARRIER RAIL END PLATE DETAILS

SCALE: ¼" = 0'-1"

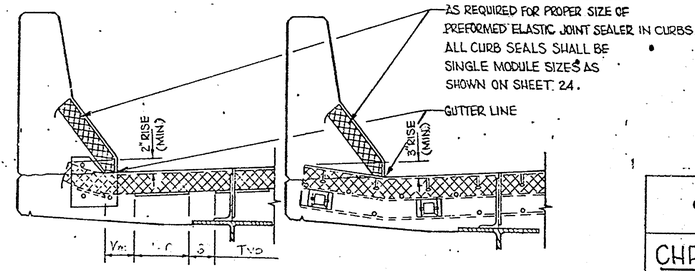

TYPICAL JOINT DEVELOPMENT AT BARRIER RAIL

SCALE: ¾" = 1'-0"

DELAWARE DEPARTMENT OF HIGHWAYS & TRANSPORTATION
DIVISION OF HIGHWAYS

CHRISTINA RIVER BRIDGE EXPANSION DAM DETAILS APPROACH SPANS

D. RBF.	SCALE	APPROVED BY
T. RBF.	AS SHOWN	BRIDGE ENGINEER
C. BGS.		

© 1976 DELDOT

COUNTY	CONTRACT	P. B. A. REG. NO.	STATE	FED. AID PROJECT NO.	FISCAL YEAR	SHEET NO.	TOTAL SHEETS
New Castle	71-05-007	2	DEL.	I-495-3(2I)15		26	44

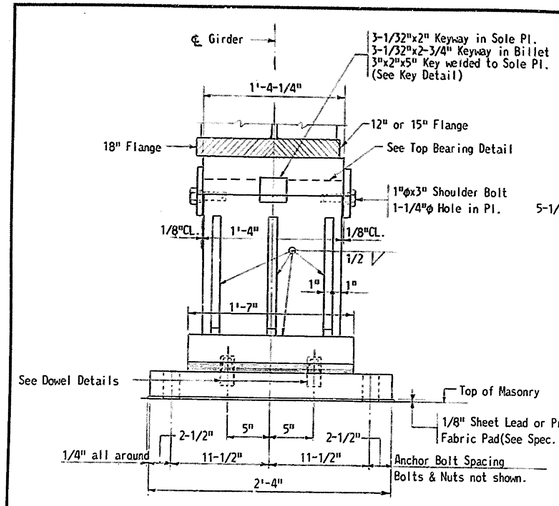

EXPANSION - TYPE E-1
1-1/2" = 1'-0"

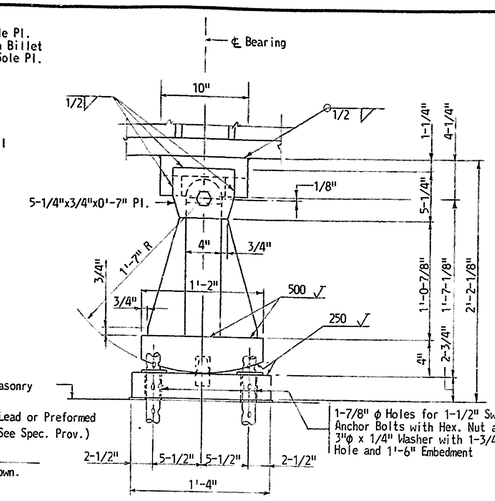

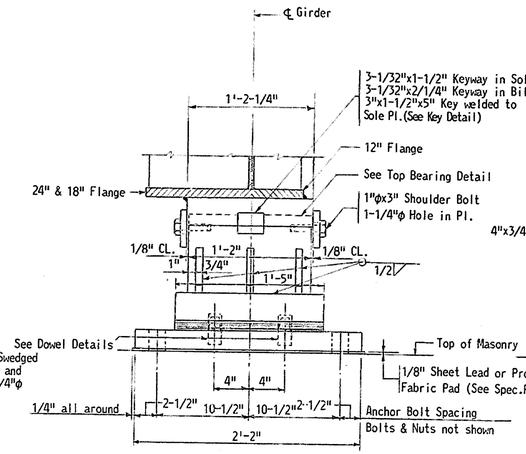

EXPANSION - TYPE E-2
1-1/2" = 1'-0"

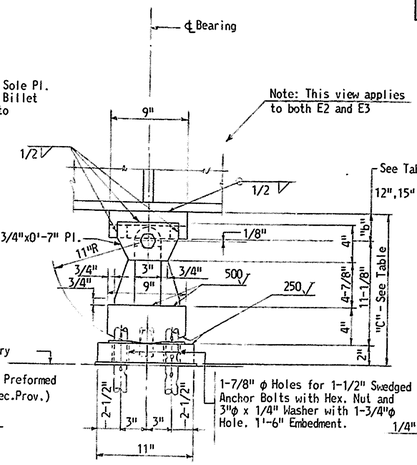

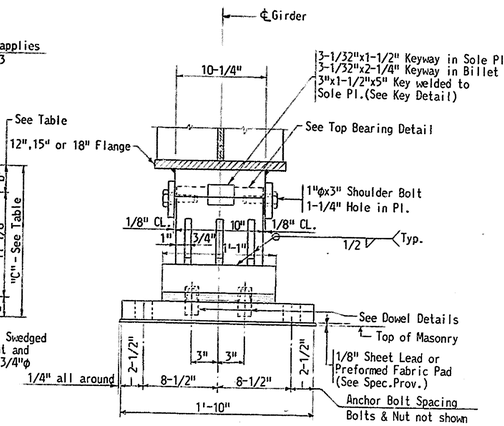

EXPANSION - TYPE E-3
1-1/2" = 1'-0"

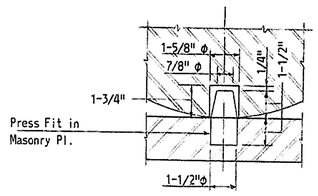

DOWEL DETAIL
3" = 1'-0"

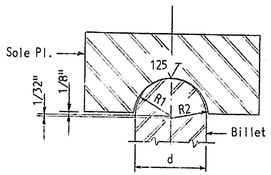

R_1 (billet) = d/2 + 1/16"
R_2 (Sole Pl.) = d/2 + 3/32"

TOP BEARING DETAIL
3" = 1'-0"

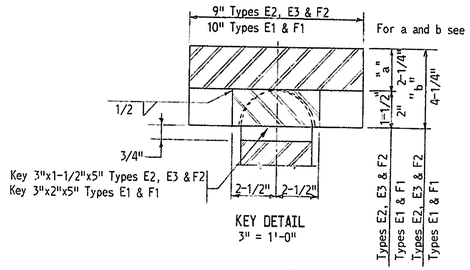

KEY DETAIL
3" = 1'-0"

VARIABLE DIMENSIONS FOR E-2, E-3 & F-2			
LOCATION	a	b	c
Pier 3, Span 4	1-15/16"	3-7/16"	1'-4-9/16"
Pier 7, Span 8	1-13/16"	3-5/16"	1'-4-7/16"
Pier 10, Span 11	2-3/16"	3-11/16"	1'-4-13/16"
Pier 24, Span 24	2"	3-1/2"	1'-4-5/8"
Pier 28, Span 28	1-7/8"	3-3/8"	1'-4-1/2"
Pier 32, Span 32	2"	3-1/2"	1'-4-5/8"
Pier 36, Span 36	2-1/8"	3-5/8"	1'-4-3/4"
Pier 37, Span 37 (Girder No. 1 only)	1-7/8"	3-3/8"	1'-1-1/4"
All Others E-2 & E-3	1-1/2"	3"	1'-4-1/8"
All Others F-2	1-1/2"	3"	1'-0-7/8"

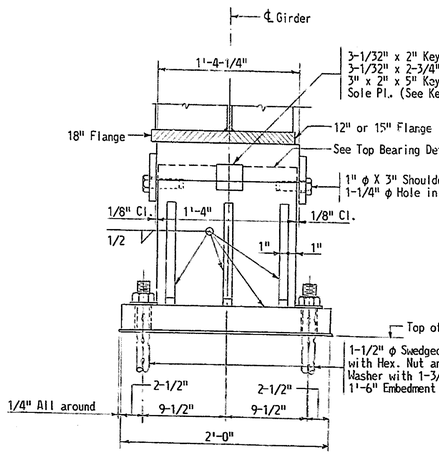

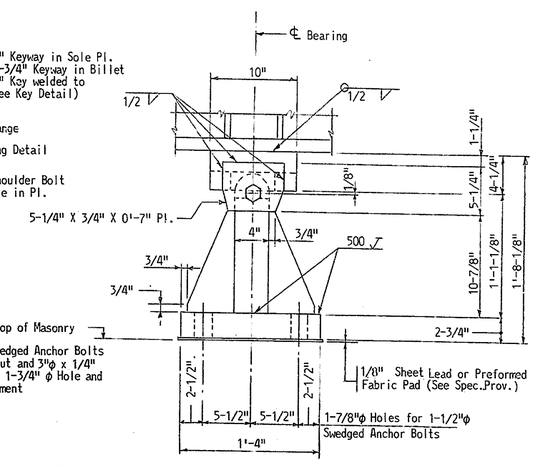

FIXED - TYPE F-1
1-1/2" = 1'-0"

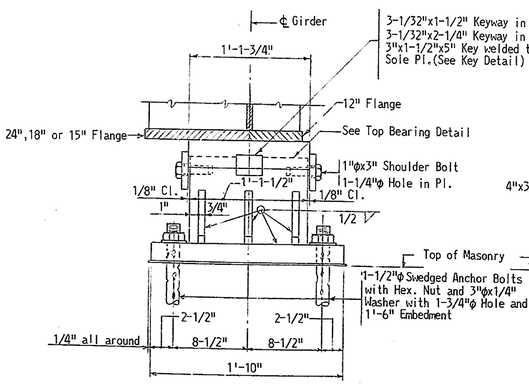

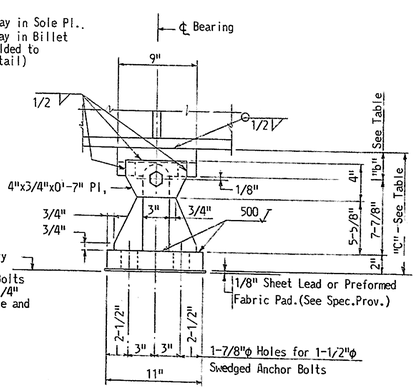

FIXED - TYPE F-2
1-1/2" = 1'-0"

NOTES:

For General Notes see Sheet Nos. 2 and 3.

For other notes see Sheet No. 11.

Minimum steel requirements for Bearings: Yield Point = 36,000 p.s.i.

The surface finish of metal in contact indicated by the symbol √ shall meet the requirements as defined in American Standard Association Specification A.S.A. B-4-6.1.

Fill voids between anchor bolts and masonry plates with molten zinc after all dead load has been placed on structure.

J. E. GREINER CO.
MORAN, PROCTOR, MUESER & RUTLEDGE
CONSULTING ENGINEERS

DELAWARE DEPARTMENT
OF HIGHWAYS & TRANSPORTATION
DIVISION OF HIGHWAYS

INTERSTATE ROUTE I-495

CHRISTINA RIVER BRIDGE
BEARING DETAILS
APPROACH SPANS

D. T. L. G.
T. I. L. K.
C. K. K. S.

SCALE: As Noted
DATE: 7/1/71

APPROVED BY:
BRIDGE ENGINEER

OGILVIE PRESS, INC. — D-127 4244

COUNTY	CONTRACT	P. B. A. REQ. NO	STATE	FED. AID PROJECT NO.	FISCAL YEAR	SHEET NO	TOTAL SHEETS
New Castle	71-05-007	2	DEL.	I-495-3(21)15		27	44

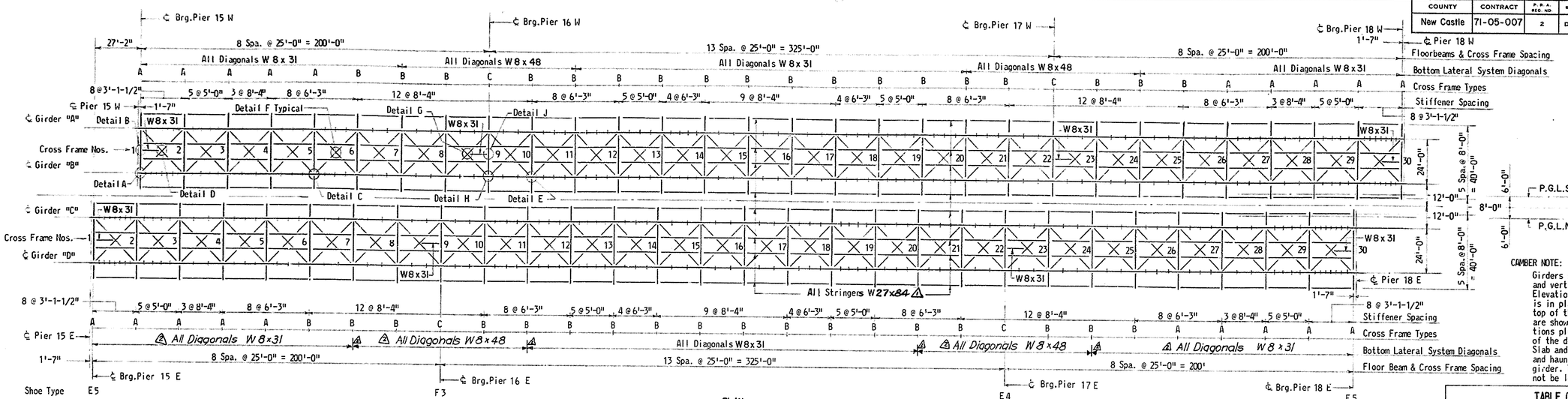

PLAN
1" = 30'

CAMBER NOTE:

Girders shall be cambered for dead load deflections and vertical curve as shown in the "Table of Grade Elevations ---- etc." After all structural steel is in place, elevations shall be taken along the top of the girder at points where grade elevations are shown. The difference between these two elevations plus the flange plate thickness plus the sum of the deflections shown in the table for Concrete Slab and Barrier Rail is the thickness of slab and haunch over top of girder at centerline of girder. The minimum slab plus haunch depth shall not be less than 1'-0-1/2".

NOTE: Provide 2 Stiffener Plates 13"x7/8" at intermediate Cross Frames.

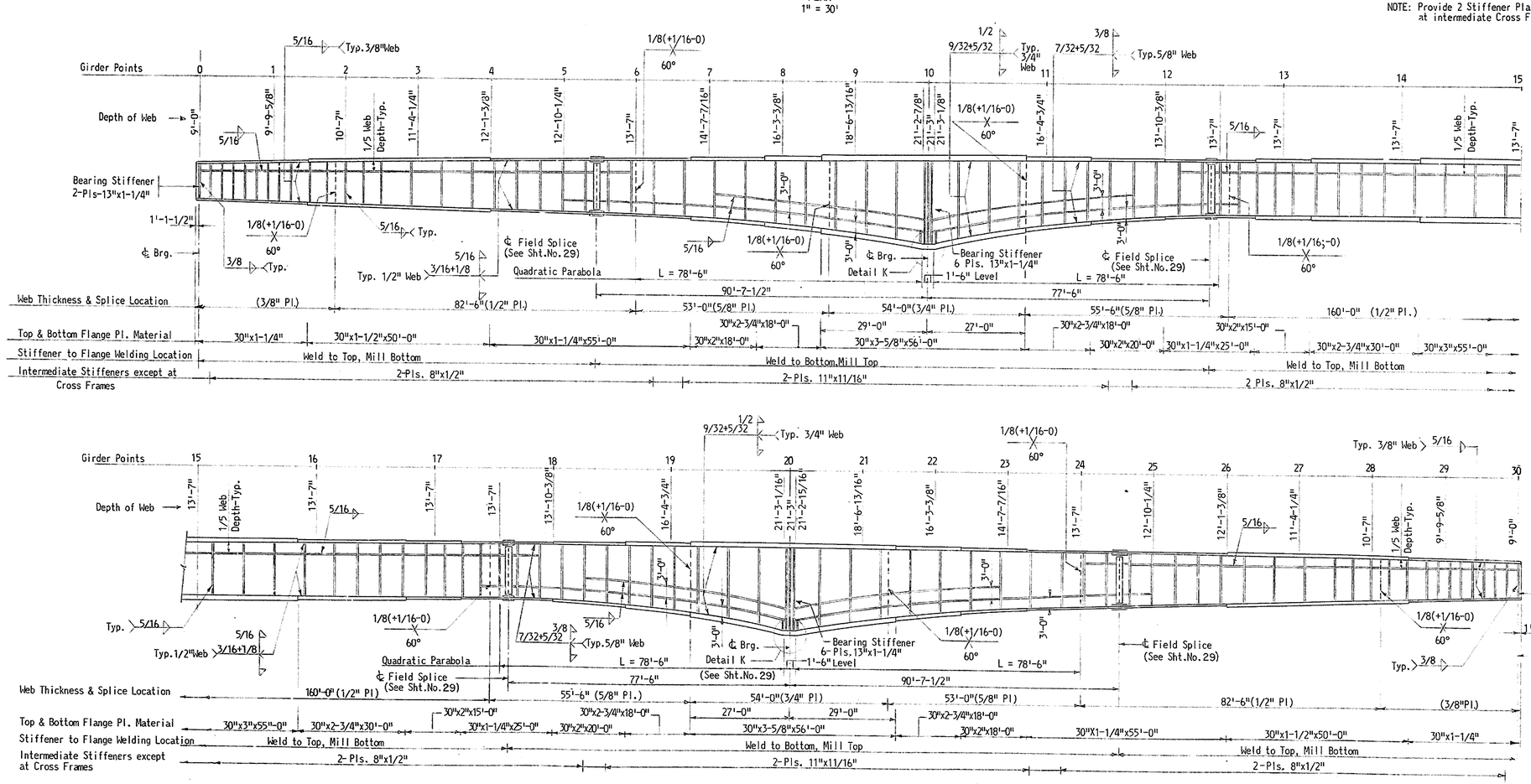

NOTE: (1) All longitudinal stiffeners Pl. 7-1/2"x1/2". Place on inside of girders only.
(2) Place intermediate stiffeners normal to grade and bearing stiffeners vertical.

TABLE OF GRADE ELEVATIONS AND GIRDER DEFLECTIONS IN FEET

GIRDER POINT	ELEVATIONS GIRDER "A"	GIRDER "B"	GIRDER "C"	GIRDER "D"	DEFLECTIONS STRUCTURAL STEEL	CONCRETE DECK SLAB	BARRIER RAIL	FULL DEAD LOAD
0	82.708	83.041	82.653	82.320	0.000	0.000	0.000	0.000
1	82.977	83.310	82.942	82.609	0.016	0.029	0.005	0.050
2	83.231	83.564	83.215	82.882	0.026	0.047	0.009	0.082
3	83.471	83.804	83.475	83.142	0.029	0.051	0.009	0.089
4	83.696	84.029	83.720	83.387	0.024	0.044	0.008	0.076
5	83.907	84.240	83.950	83.617	0.015	0.026	0.004	0.045
6	84.104	84.437	84.167	83.834	0.003	0.006	0.001	0.010
7	84.287	84.620	84.368	84.035	-0.006	-0.010	-0.001	-0.017
8	84.455	84.788	84.556	84.223	-0.009	-0.015	-0.003	-0.027
9	84.608	84.941	84.729	84.396	-0.007	-0.012	-0.003	-0.022
10	84.747	85.080	84.888	84.555	0.000	0.000	0.000	0.000
11	84.943	85.276	85.115	84.782	0.021	0.038	0.007	0.066
12	85.101	85.434	85.304	84.971	0.056	0.101	0.017	0.174
13	85.220	85.553	85.456	85.123	0.095	0.169	0.031	0.295
14	85.302	85.635	85.569	85.236	0.123	0.218	0.040	0.381
15	85.346	85.679	85.645	85.312	0.132	0.236	0.043	0.411
16	85.351	85.684	85.682	85.349	0.123	0.218	0.040	0.381
17	85.319	85.652	85.682	85.349	0.095	0.169	0.031	0.295
18	85.249	85.582	85.643	85.310	0.056	0.101	0.017	0.174
19	85.141	85.474	85.567	85.234	0.021	0.038	0.007	0.066
20	84.995	85.328	85.453	85.120	0.000	0.000	0.000	0.000
21	84.886	85.219	85.363	85.030	-0.007	-0.012	-0.003	-0.022
22	84.763	85.096	85.260	84.927	-0.009	-0.015	-0.003	-0.027
23	84.626	84.959	85.142	84.809	-0.006	-0.010	-0.001	-0.017
24	84.474	84.807	85.010	84.677	0.003	0.006	0.001	0.010
25	84.308	84.641	84.863	84.530	0.015	0.026	0.004	0.045
26	84.127	84.460	84.702	84.369	0.024	0.044	0.008	0.076
27	83.932	84.265	84.526	84.193	0.029	0.051	0.009	0.089
28	83.723	84.056	84.336	84.003	0.026	0.047	0.009	0.082
29	83.499	83.832	84.132	83.799	0.016	0.029	0.005	0.050
30	83.261	83.594	83.914	83.581	0.000	0.000	0.000	0.000

NOTES: For General Notes see Sheet Nos. 2 and 3.
For other notes see Sheet No. 28.
Dimensions shown are measured horizontally between bearings.
For details see Sheet Nos. 28 and 29.
Deflection dimensions given are measured from a chord line between ℄ of bearings.
(-) means deflection up.

DELAWARE DEPARTMENT OF HIGHWAYS & TRANSPORTATION
DIVISION OF HIGHWAYS

INTERSTATE ROUTE I-495

CHRISTINA RIVER BRIDGE FRAMING PLAN & GIRDER DETAILS 200'-325'-200' SPANS

J. E. GREINER CO.
MORAN, PROCTOR, MUESER & RUTLEDGE
CONSULTING ENGINEERS

D. F. P.
T. L. L. K.
C. K. K. S.

SCALE As Noted
DATE 7/1/71

APPROVED BY
BRIDGE ENGINEER

Addendum-Stringers changed from W24x68 to W27x84 4/28/72 TRF
Northbound Bridge Diagonals clarified 9/17/72 BGS

COUNTY	CONTRACT	F. R. A. REG. NO.	STATE	FED. AID PROJECT NO.	FISCAL YEAR	SHEET NO.	TOTAL SHEETS
New Castle	71-05-007	2	DEL.	I-495-3(21)15		28	44

Cantiler and Floorbeam Stiffener to Flange Attachments | Weld to bottom Mill top | Weld to top, Mill bottom 97'-0" Out to Out | Weld to bottom Mill top

48'-6"
45'-3"
1'-6" 1/2" 2'-6" 12'-0" Lane 12'-0" Lane 12'-0" Lane 6'-9" 1'-9" 1'-8" 1"
5 Spaces @ 8'-0" = 40'-0"
2'-0" 2'-9"

Bridge Profile Grade
Break Point
1/4"/ft.
1/4" per foot
8" Slab Includes 1/2" Monolithic Wearing Surface
9-9/16"
8-7/8" Top of Slab to top of Flange Typical at Stringers
1'-1-3/16" Typical at Girders
9" Typ.

Stringers W27x84
Slot
5/16" Web Plate
Varies
4" Typ.
5/16" Web Plate
Slot
L5x5x3/8 8-1/2" Lg.
48" Web at ℄
Slot Web 10"X1" for Splice Pl.
Slot

Stiffener Pl.5"x5/16"
Level
Flange Pl.12"x11/16"
Stiffener Pls. 5"x5/16"
WT 5 x 16.5 - Type A
WT 6 x 25 - Type B
7/8"Pl.or 1-1/4"Pl.
6-7/8"ϕH.S.Bolts-Type A
10-7/8"ϕ H.S.Bolts-Type B
W8 x 31
3/8"Pl.
6-7/8" ϕ H.S.Bolts for Cross Frame 1 & 30
12-7/8"ϕ H.S.Bolts,Others
3'-9-1/4"
Varies
10-1/2"
℄ I-495 & ℄ Bridge

NOTE: All Stringers are normal to roadway cross slope.

Typical Stiffener Spacing
2 Spa.@ 1'-10-5/8" 2'-0-1/4" 2'-1 3/4" 2'-2 1/8" 2'-2 1/8" 2'-5 3/4" 6 Spaces @ 2'-5-1/2" = 14'-9" 2'-5 3/4" 2'-2 1/8" 2'-1 3/4" 2'-3 1/4" 2'-1 3/4" 2'-0-1/2" 2 Spa.@ 1'-10-5/8"

12'-0" 12'-0"
℄ Girder
TYPE A CROSS FRAME SHOWN TYPE B SIMILAR

12-7/8"ϕ H.S.Bolts
3'-5"
2-WT6x25
6"x1-1/4" Fill Pl.
1-1/4"
4-7/8"ϕ H.S.Bolts
1-1/4" Pl.
W8x31
1/2" Pl.
20-7/8"ϕ H.S.Bolts
4-11/16"
21'-3"
16'-6 3/16"
10-1/2"
4"
12'-0"
TYPE C CROSS FRAME

NOTE: Intermediate Floorbeams to be set normal to grade. Floorbeams at bearings to be set vertical.

For additional stiffeners at Floorbeams 1 and 30 see Section C-C this sheet, and Expansion Dams, Sheet No. 31.

Bearing Stiffener Pls. 13"x1-1/4"
Slot Gusset Pls. Typ. at all Stiffeners
℄ Floorbeam
Mill to Bear
Plate 6-1/2"x1/2"
AT FLOORBEAMS 1 & 30

EXTERIOR AND INTERIOR STRINGER CONNECTION
3/4" = 1'-0"

Splice Plate 14"x7/8" Typ.@Stringers
C
W27x84
Slot Gusset Pls.
5@4"=1'-8"
2-Web Splice Plates 12-1/2"x5/16"x1'-11"
2"
1-1/2"
3-1/2"

10 Spa. @ 3" = 2'-6" 2'-11" 10 Spa. @ 3" = 2'-6"
22-7/8"ϕ H.S. Bolts 22-7/8"ϕ H.S. Bolts
1/2"
3-1/2" 2-1/2"
12-7/8"ϕ H.S.Bolts
℄ Floor Beam
Wedge Pl.13"xtx2'-6" t = Varies
Tension Pl.12"x7/8"x2'-0"
2-1/2"
PLAN TOP FLANGE
5/16

1/4" per foot
Wedge Pl.
On Cross Slope of Roadway
Stiffener Pls. 5"x5/16"
Fills as req'd.
7 Equal Spaces 32-7/8"ϕ H.S. Bolts
2-Pls. 13"x5/16"
Slot & Shop weld Compr. Plate to Stiffener
5/16
Slot & Shop weld Compr. Plate to Stiffener
Fit to bear Filler Plate 4"x1/2"x0'-6"
1-1/2" 3" 3" 1-1/2" 1-1/2" 3" 3" 1-1/2"
2'-1-3/4" 2'-1-3/4"
ELEVATION

HALF SECTION
3/8" = 1'-0"

℄ Girder
℄ Floor Beam
Compr.Pl.12"x7/8"x Var.
2-1/2"
3-1/2"
3-1/2"
2-1/2"
10 Spa.@ 3"= 2'-6" 1'-3-1/4" 1'-3-1/4" 10 Spa.@ 3"= 2'-6"
22-7/8"ϕ H.S.Bolts 22-7/8"ϕ H.S.Bolts
PLAN BOTTOM FLANGE

FLOORBEAM TO GIRDER CONNECTION
3/4" = 1'-0"

℄ Stringer
℄ Floorbeam
VIEW B-B

B B
9"
W27x84
Flange Plate 12"x 11/16" Face normal to roadway Cross Slope.
9"Rad.
AT FLOORBEAMS 2 - 29

8-3/4"
1-1/2" 5 Spa.@ 3" 5 Spa.@ 3" 1-1/2"
℄ Stringer
Flange Splice Plates 9"x3/4"x4'-2-1/2"
12-7/8"ϕ H.S.Bolts
L5x5x3/8 x 10" Lg.
2-1/4"
5-1/2"
2-1/4"
4-7/8" ϕ H.S.Bolts Bott. Pl. & Angle Only.
℄ Floorbeam

24-7/8"ϕ H.S.Bolts
℄ Floorbeam
Conn.Pl. 6-1/2"x7/16"
1-1/2"
5 Spa.@ 4"
4" Haunch (Typ.)
W27x84
W27x84
2-Web Splice Plates 12-1/2"x5/16"x1'-11"
5/16
Typ. all Connection Plate attachments
1-1/2"
3" 3" 3"
1-1/2"
Flange Splice Plates 9"x 3/4"x 4'-2-1/2"
1-1/2"
3-7/8"ϕH.S. Bolts
L5x5x3/8
AT FLOORBEAMS 2 - 29

EXTERIOR AND INTERIOR STRINGER CONNECTION
3/4" = 1'-0"

℄ Girder
12'-0"
5/16
7/8" or 1-1/4" Gusset Pl.
3/8" Gusset Pls.
Bearing Stiffener Pl.13"x1-1/4"
16-7/8"ϕ H.S.Bolts
12-7/8"ϕ H.S.Bolts
Slot Gusset Pls.
5/16
℄ Cross Frame 1 & 30
DETAIL A

3/8" Gus. Pl.
12-7/8"ϕ H.S.Bolts
1'-8"
DETAIL B

12-7/8"ϕ H.S.Bolts
20-7/8"ϕ H.S.Bolts
3/8" Gusset Pls.
DETAIL D

This detail at Cross Frames 2 to 8 incl., 11 to 20 incl. and 23 to 29 inclusive.
3/8" Gusset Pls.
Cross Frame
12-7/8"ϕ H.S.Bolts
Slot Gusset Pls.
5/16
DETAIL C

12-7/8"ϕ H.S.Bolts
3/8" Gusset Pls.
16-7/8"ϕ H.S.Bolts (For Panels 9-10 & 21-22)
12-7/8"ϕ H.S.Bolts Others
DETAIL F
Detail G Similar

℄ Cross Frames 9 & 22
25'-0"
W8x48
16-7/8"ϕ H.S.Bolts
℄ Cross Frames 10 & 21
12-7/8"ϕ H.S.Bolts
W8 x 48
3/8" Gusset Pls.
DETAIL E

NOTE: All Members W 8 x 31 except as noted

W8x48
12-7/8"ϕ H.S.Bolts
Bend Lines for Gusset Pls.
1/2" Gusset Pls.
10"
10"
20-7/8"ϕ H.S.Bolts
Cross Frames 9 & 22
W8x48
16-7/8"ϕ H.S.Bolts
Bearing Stiffener Pl. 13"x1-1/4"
DETAIL H

12-7/8"ϕ H.S.Bolts
3/8" Gusset Pls.
1-1/4" Gusset Pls.
3/8
5/16
DETAIL J

LATERAL BRACING
3/4" = 1'-0"

NOTES:
For General Notes see Sheet Nos. 2 and 3.
For Expansion Dam Details see Sheet No. 31.
For Bearing Details see Sheet No. 32.

For Inspection Facilities see Sheet No. 29.
For Location of Manholes see Sheet No. 30.

4 ~~Field welded splices for exterior stringers shall be radiographed.~~

Stiffeners shall be welded to flange as shown on Plans with a 5/16" fillet weld.

DELAWARE DEPARTMENT OF HIGHWAYS & TRANSPORTATION
DIVISION OF HIGHWAYS

INTERSTATE ROUTE I-495

CHRISTINA RIVER BRIDGE FRAMING DETAILS-I 200'-325'-200' SPANS

J. E. GREINER CO.
MORAN, PROCTOR, MUESER & RUTLEDGE
CONSULTING ENGINEERS

D. F.P.
T. I.L.K.
C. K.K.S.

SCALE As Noted
DATE 7/1/71

APPROVED BY
BRIDGE ENGINEER

OGILVIE PRESS, INC. — D-127 4848

D C B A 1 5 10 A B C D

COUNTY	CONTRACT	P. B. A. REG. NO.	STATE	FED. AID PROJECT NO.	FISCAL YEAR	SHEET NO.	TOTAL SHEETS
New Castle	71-05-007	2	DEL.	I-495-3(21)15		29	44

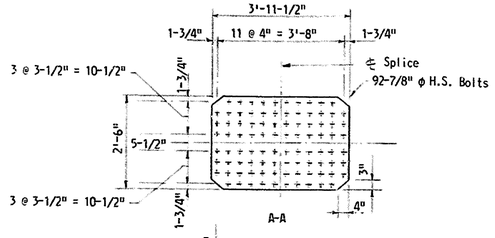

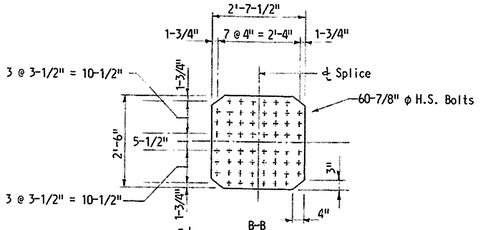

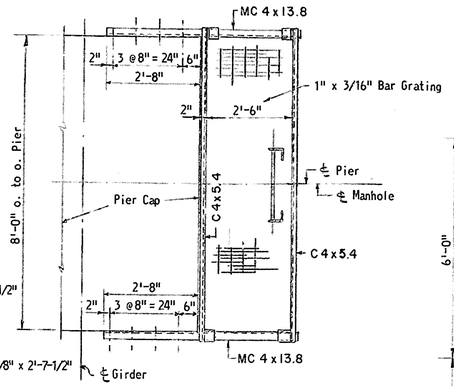

PLATFORM AT PIERS 16 & 17
1/2" = 1'-0"

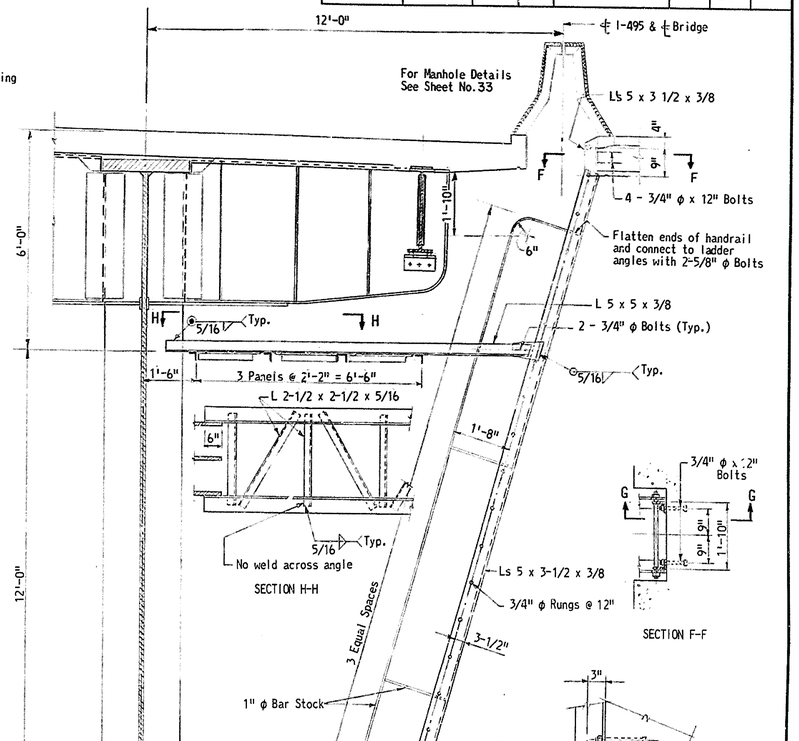

INSPECTION FACILITIES AT PIERS 16 & 17
1/2" = 1'-0"

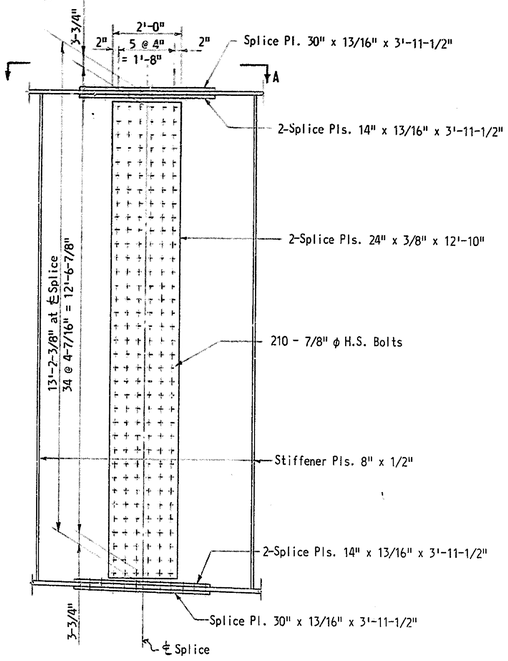

END SPAN - FIELD SPLICE
1/2" = 1'-0"

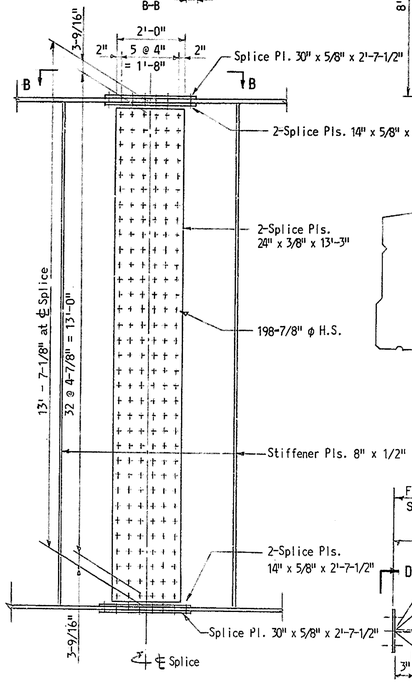

CENTER SPAN - FIELD SPLICE
1/2" = 1'-0"

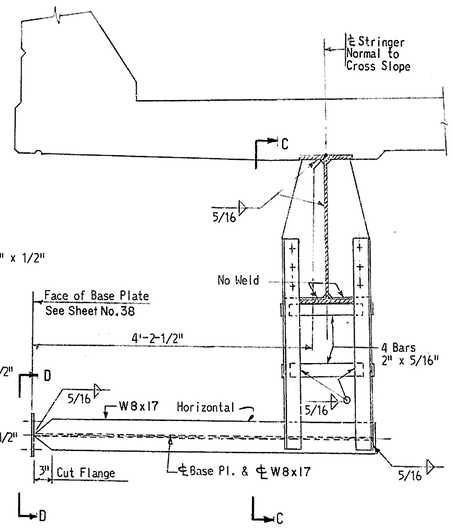

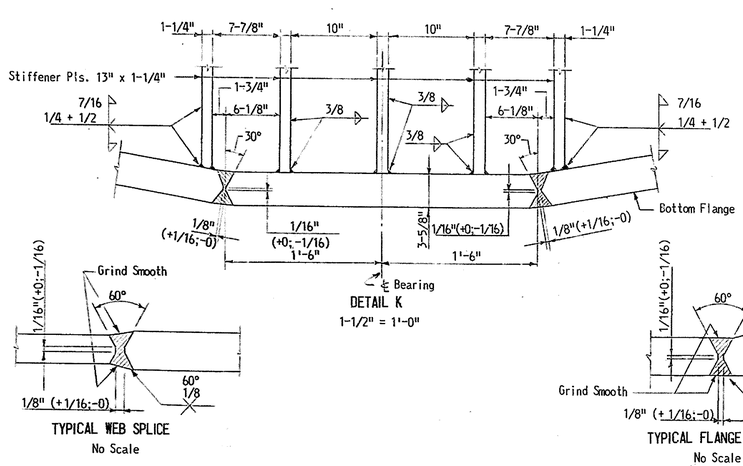

DETAIL K
1-1/2" = 1'-0"

TYPICAL WEB SPLICE
No Scale

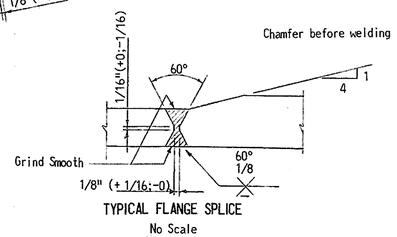

TYPICAL FLANGE SPLICE
No Scale

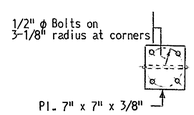

SECTION D-D

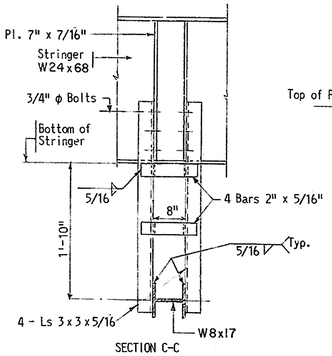

SECTION C-C

BRACKET FOR NAVIGATION LIGHT
1" = 1'-0"

NOTES:
For Generai Notes see Sheet Nos. 2 and 3.
For other notes see Sheet No. 28.

DELAWARE DEPARTMENT
OF HIGHWAYS & TRANSPORTATION
DIVISION OF HIGHWAYS

INTERSTATE ROUTE I-495

CHRISTINA RIVER BRIDGE
FRAMING DETAILS-II
200'-325'-200' SPANS

J. E. GREINER CO.
MORAN, PROCTOR, MUESER & RUTLEDGE
CONSULTING ENGINEERS

D. F.P.
T. I.L.K.
C. J.M.M.

SCALE As Noted

DATE 7/1/71

APPROVED BY

BRIDGE ENGINEER

OGILVIE PRESS, INC. — D-127 4/68

COUNTY	CONTRACT	P. R. A. RES. NO.	STATE	FED. AID PROJECT NO.	FISCAL YEAR	SHEET NO.	TOTAL SHEETS
New Castle	71-05-007	2	DEL.	I-495-3(21)15		30	44

An Additional Construction Joint was placed in Northbound Slab Due to break down of pump. Ref. Memo May 28, 1974 to B.C. Furman from T.J. Schmidt.

Note: Northbound Rdwy. Shown
Southbound Rdwy. Similar

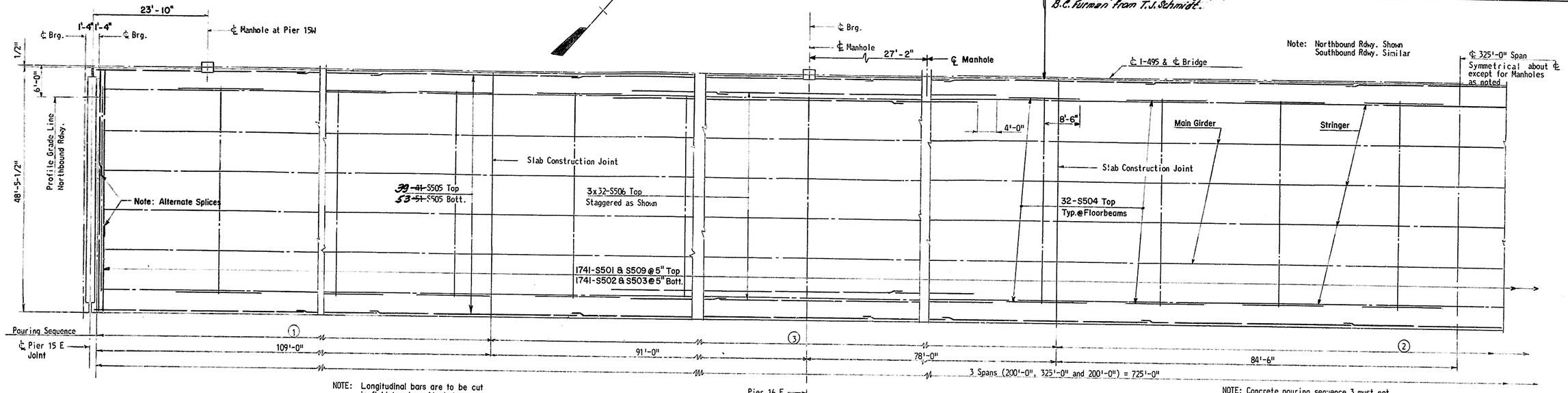

NOTE: Longitudinal bars are to be cut in field to clear Manholes.

NOTE: Concrete pouring sequence 3 must not be poured until concrete in adjacent pouring sequences 1 and 2 are complete and set up.

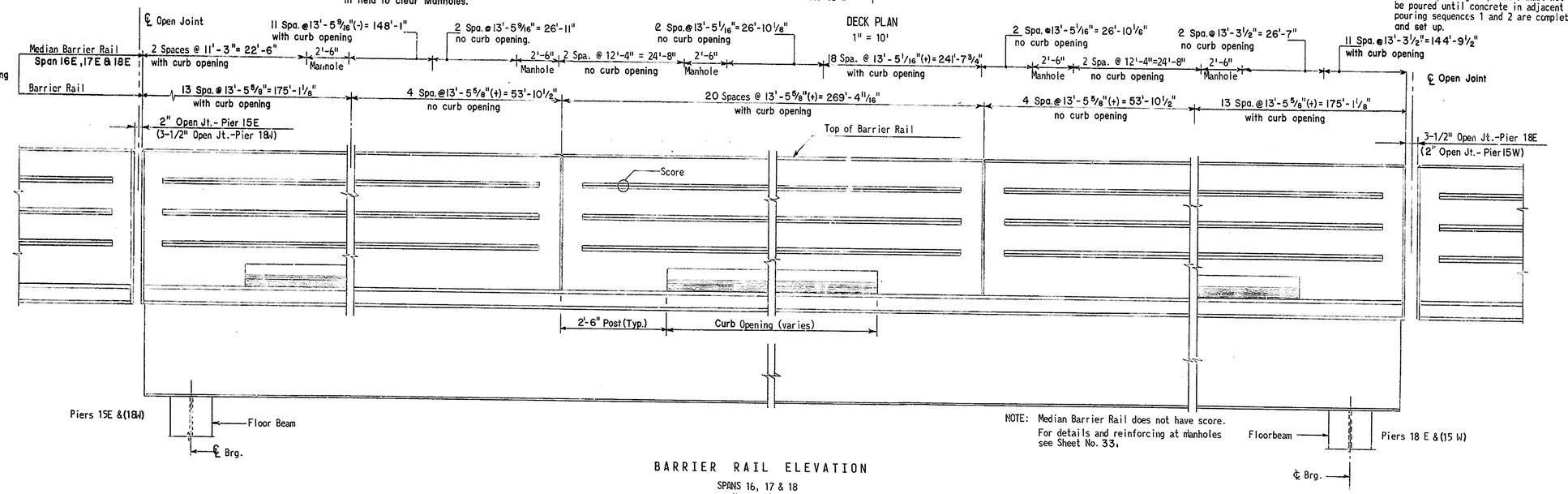

NOTE: Median Barrier Rail does not have score.
For details and reinforcing at manholes see Sheet No. 33.

BARRIER RAIL ELEVATION
SPANS 16, 17 & 18
3/4" = 1'-0"

REINFORCING SCHEDULE

MARK	Number Required Southbound Roadway	Number Required Northbound Roadway	LENGTH
Straight Bars			
S502	1741	1741	20'-6"
S503	1741	1741	29'-0"
S504	576	576	17'-0"
S505	1564	1564	44'-0"
S506	192	192	43'-6"
R701	432	432	13'-1"
R702	16	16	11'-0"
R703	280	280	13'-1"
R704	104	104	13'-0"
R705	32	32	12'-0"

MARK	Number Required Southbound Roadway	Number Required Northbound Roadway	LENGTH
Bent Bars			
S501	1741	1741	32'-6"
S509	1741	1741	17'-0"
R501	894	894	4'-11"
R502	882	882	4'-9"
R602	480	480	6'-11"
R603	504	504	6'-8"
R604	414	414	3'-5"
R605	378	378	3'-2"

BENDING DIAGRAMS

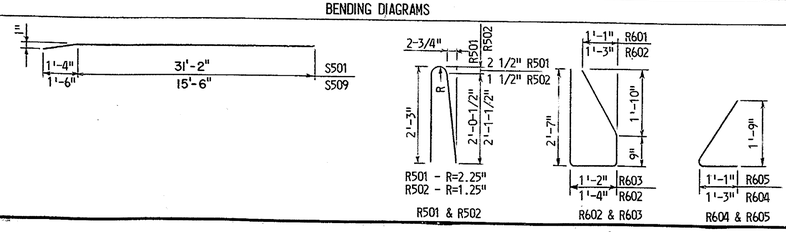

NOTES:
For General Notes, see Sheet Nos. 2 and 3.
For other notes, see Sheet No. 12.
For deck details and slab reinforcing steel, see Sheet No. 12.

J. E. GREINER CO.
MORAN, PROCTOR, MUESER & RUTLEDGE
CONSULTING ENGINEERS

DELAWARE DEPARTMENT
OF HIGHWAYS & TRANSPORTATION
DIVISION OF HIGHWAYS

INTERSTATE ROUTE I-495

CHRISTINA RIVER BRIDGE
DECK PLAN
200'-325'-200' SPANS

D. J. M. M.
T. H. A.
C. I. L. K.

SCALE: As Noted
DATE: 7/1/71

APPROVED BY:
BRIDGE ENGINEER

OSILVIE PRESS, INC. — D-127 4269

COUNTY	CONTRACT	P. R. A. REG. NO.	STATE	FED. AID PROJECT NO.	FISCAL YEAR	SHEET NO.	TOTAL SHEETS
New Castle	71-05-007	2	DEL.	I-495-3(21)15		31	44

drawing W105 dated 11/28/72 - March 14, 73 BCS

⚠ Note: Reinforcing bars to be field adjusted by bending.

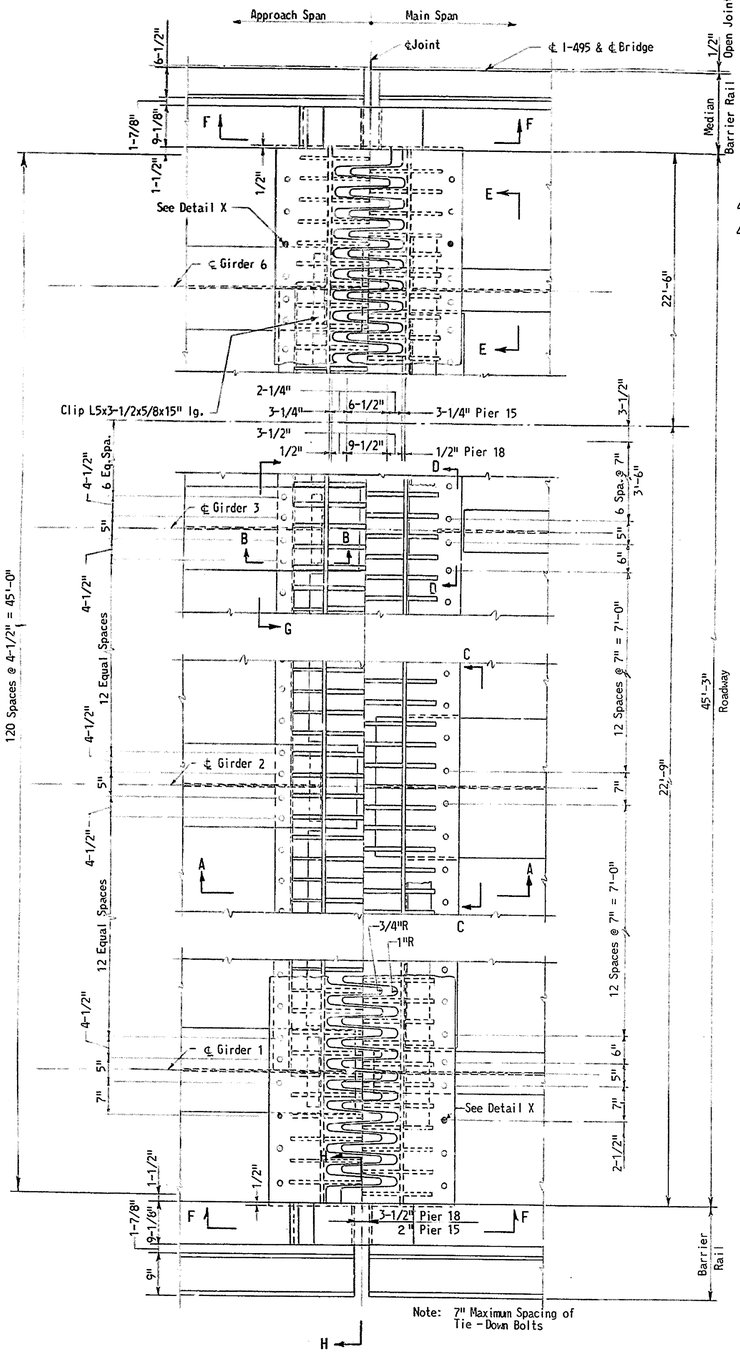

PLAN AT PIER 15 E (OTHERS SIMILAR)
3/4" = 1'-0"

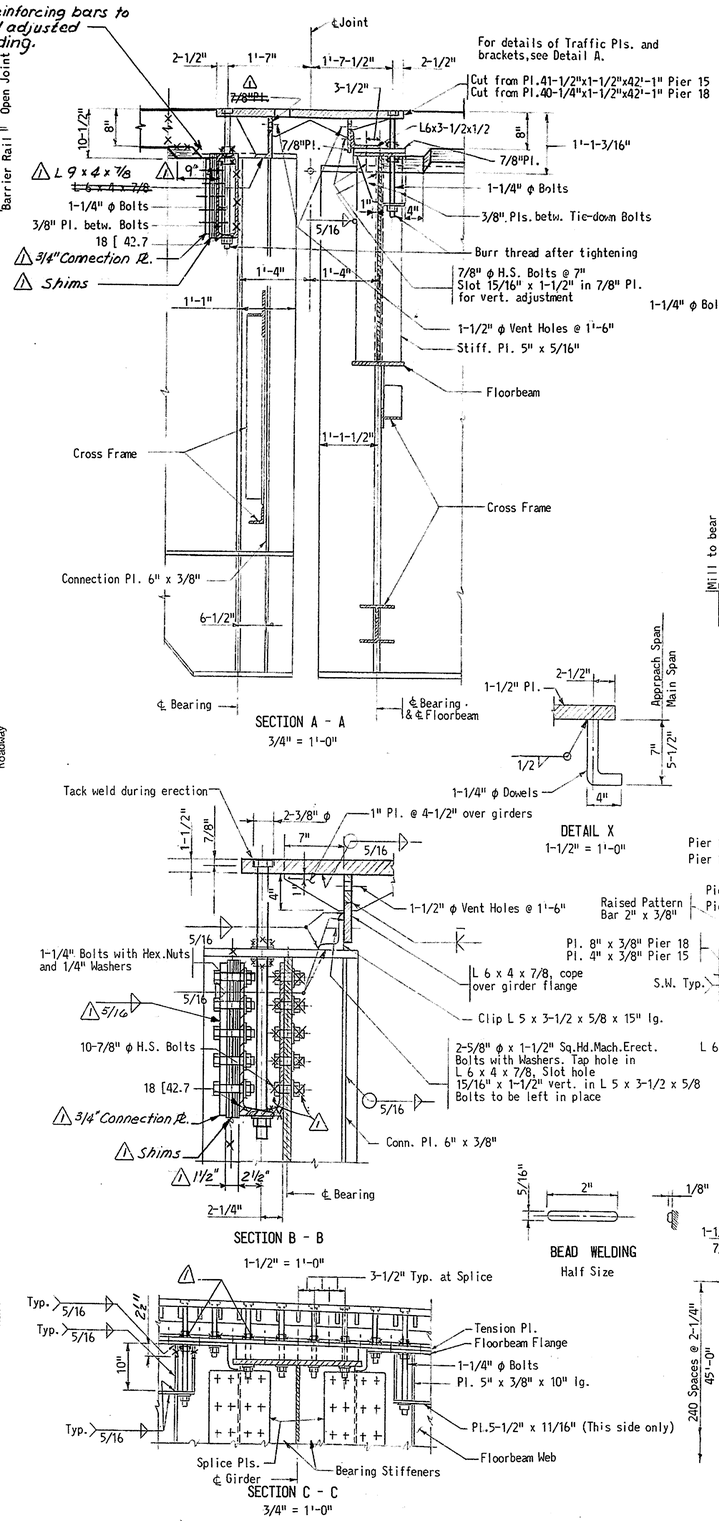

SECTION A - A
3/4" = 1'-0"

DETAIL X
1-1/2" = 1'-0"

SECTION B - B
1-1/2" = 1'-0"

SECTION C - C
3/4" = 1'-0"

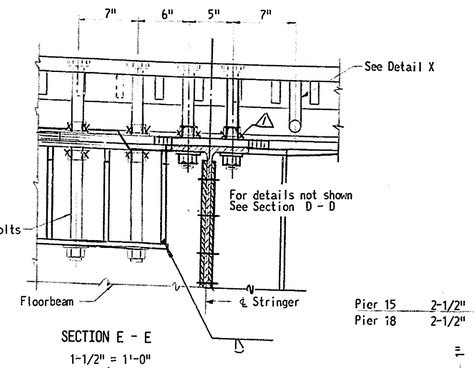

SECTION E - E
1-1/2" = 1'-0"

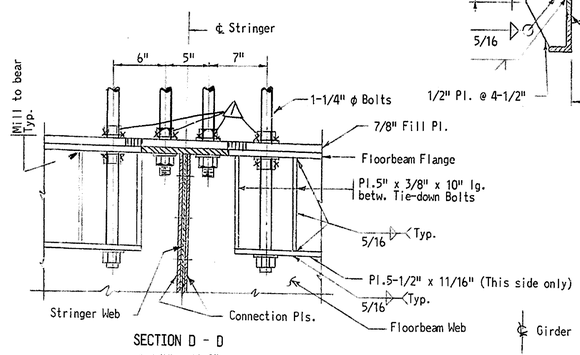

SECTION D - D
1-1/2" = 1'-0"

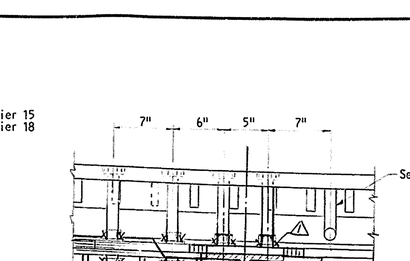

SECTION F - F
3/4" = 1'-0"

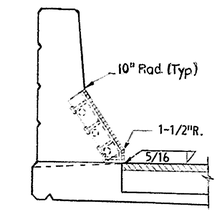

SECTION H - H
3/4" = 1'-0"

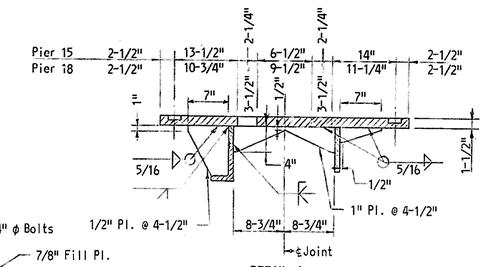

DETAIL A
1" = 1'-0"

RAISED PATTERN DETAIL
1-1/2" = 1'-0"

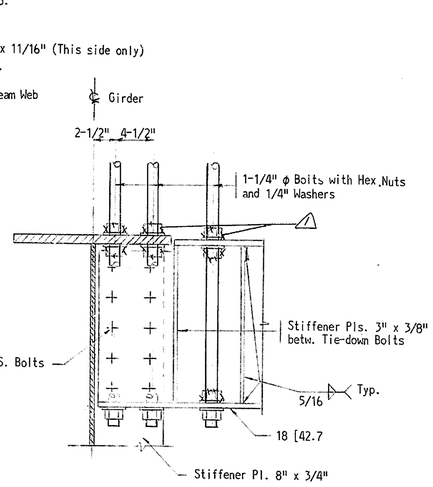

SECTION G - G
1-1/2" = 1'-0"

NOTES:
For General Notes, see Sheet Nos. 2 and 3
For other notes, see Sheet No. 28.

DELAWARE DEPARTMENT
OF HIGHWAYS & TRANSPORTATION
DIVISION OF HIGHWAYS

INTERSTATE ROUTE I-495

CHRISTINA RIVER BRIDGE EXPANSION DAM DETAILS 200'-325'-200' SPANS

J. E. GREINER CO.
MORAN, PROCTOR, MUESER & RUTLEDGE
CONSULTING ENGINEERS

D. F. P.	SCALE	APPROVED BY:
T. T. Von R.	As Noted	
C. K. K. S.	DATE 7/1/71	BRIDGE ENGINEER

OGILVIE PRESS, INC. — D-127 4248

COUNTY	CONTRACT	P. R. A. RES. NO.	STATE	FED. AID PROJECT NO.	FISCAL YEAR	SHEET NO.	TOTAL SHEETS
New Castle	71-05-007	2	DEL.	I-495-3(2)15		32	44

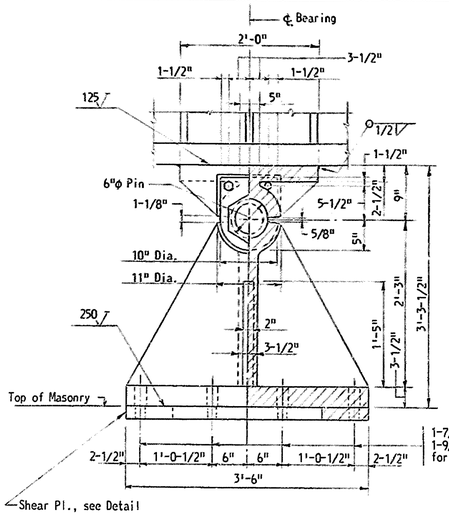

FIXED - TYPE F-3
1' = 1'-0"

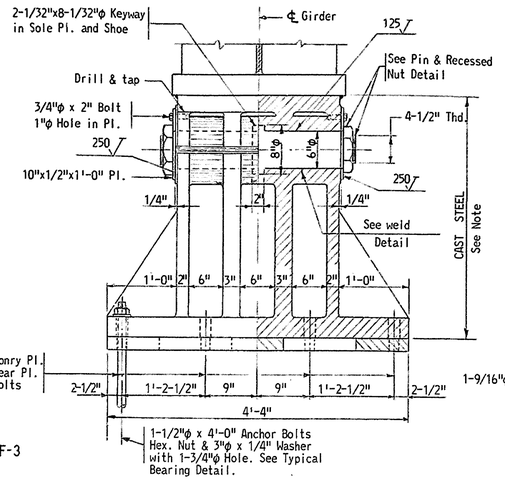

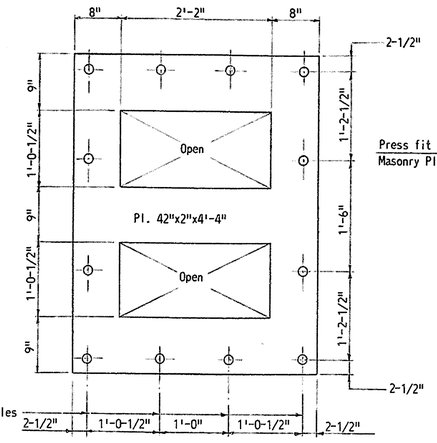

SHEAR PLATE - TYPE F-3
1" = 1'-0"

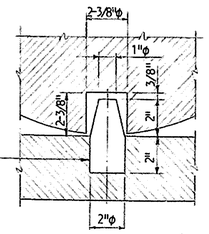

DOWEL DETAIL
3" = 1'-0"

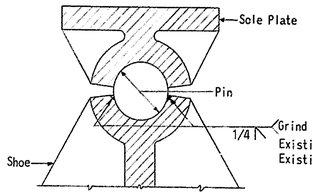

WELD DETAIL
No Scale

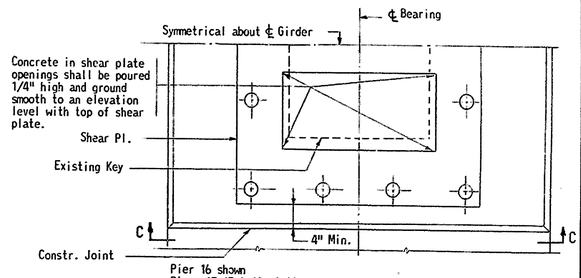

PLAN

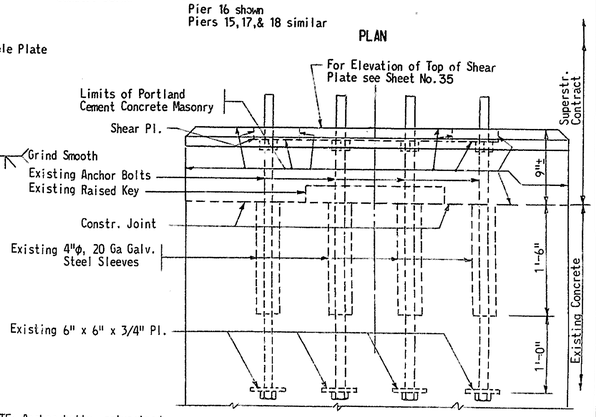

C - C
TYPICAL BEARING DETAIL
1" = 1'-0"

NOTE: Anchor bolts, galvanized steel sleeves and washer plates are existing in place.

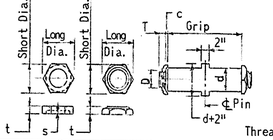

Thread: 6 UN Class 2A/2B

Diameter of Pin d	PIN Grip	PIN Thread D	PIN Thread T	PIN Thread c	NUT Thickness t	NUT Diameter Recess Short Diam.	NUT Diameter Recess Long Diam.	NUT Recess Rough Diam.	NUT Recess s
3"	2'-1-1/2"	2-1/2"	1-1/4"	1/8"	1-1/8"	4-3/8"	5"	3-7/8"	3/8"
6"	2'-5-1/2"	4-1/2"	1-3/4"	1/4"	1-5/8"	7"	8-1/8"	6-1/2"	5/8"

PIN AND RECESSED NUT DETAIL
No Scale

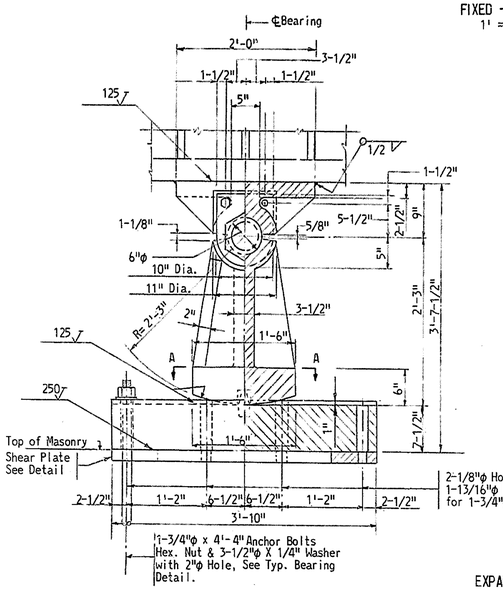

EXPANSION - TYPE E-4
1" = 1'-0"

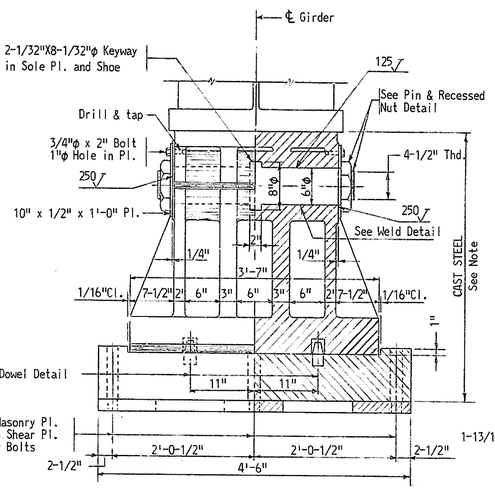

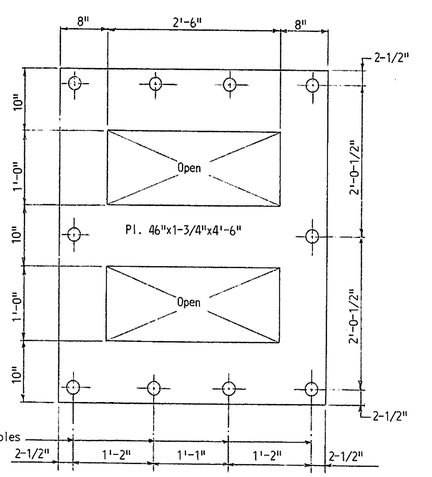

SHEAR PLATE - TYPE E-4
1" = 1'-0"

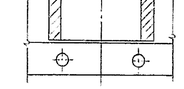

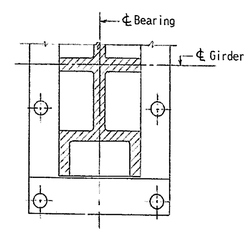

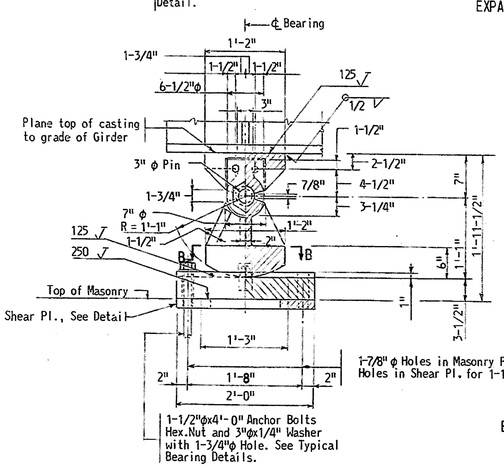

EXPANSION - TYPE E5
1" = 1'-0"

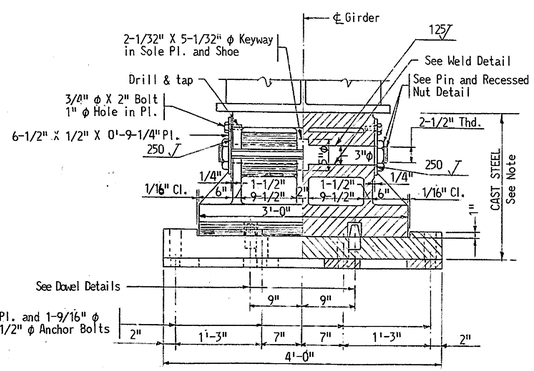

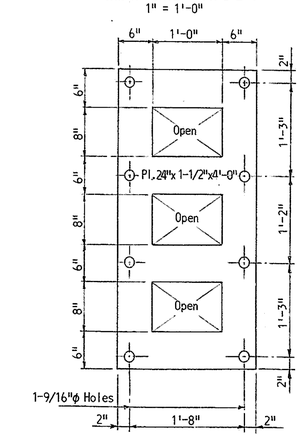

SHEAR PLATE - TYPE E-5
1" = 1'-0"

NOTES:

For General Notes, see Sheet Nos. 2 and 3. For other notes, see Sheet No. 28.

Cast Steel for Shoes Type F3 and E4 shall be in accordance with AASHO Designation M192-60 Class 90.

Cast Steel for Shoes Type E5 shall be in accordance with AASHO Designation M-192-60 Class 70.

Pins for shoes shall be Carbon Steel Forgings for General Industrial Use - AASHO Designation M102 (ASTM A-235)(Class C-1).

Shear Plates shall be ASTM A-36 Carbon Steel.

Fill voids between anchor bolts and masonry plates with molten zinc after all dead load has been placed on structure.

The surface finish of metal in contact indicated by the symbol ✓ shall meet the requirements as defined in American Standard Association Specification A.S.A.-B-46.1.

Recessed nuts on pins shall have a snug fit against the outside plate of sole plate. Burr threads of pin after tightening.

DELAWARE DEPARTMENT
OF HIGHWAYS & TRANSPORTATION
DIVISION OF HIGHWAYS

INTERSTATE ROUTE I-495

CHRISTINA RIVER BRIDGE
BEARING DETAILS
200'-325'-200' SPANS

J. E. GREINER CO.
MORAN, PROCTOR, MUESER & RUTLEDGE
CONSULTING ENGINEERS

D. F. P.
T. T. L. G.
C. K. K. S.

SCALE: As Noted
DATE: 7/1/71

APPROVED BY:

BRIDGE ENGINEER

OGILVIE PRESS, INC. — D-127 4249

COUNTY	CONTRACT	F. A. A. REG. NO.	STATE	FED. AID PROJECT NO.	FISCAL YEAR	SHEET NO.	TOTAL SHEETS
New Castle	71-05-007	2	DEL.	I-495-3(21)15		33	44

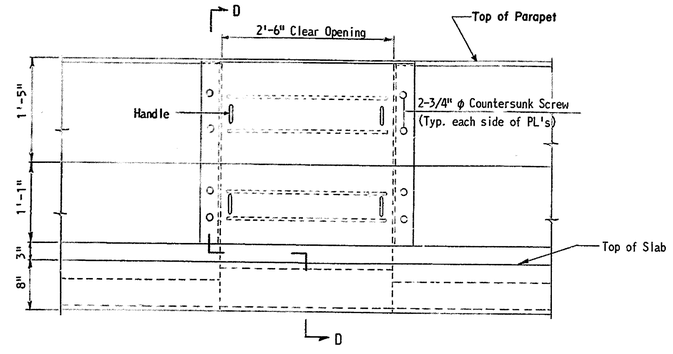

ELEVATION

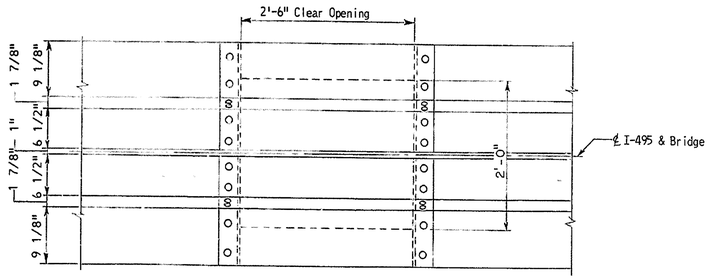

PLAN

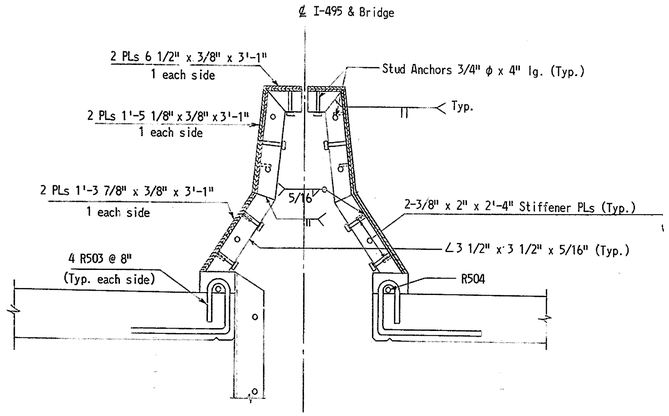

SECTION D-D

Manholes are located at piers 14, 15E & W, 16E & W, 17E & W, 18E & W & 19.

BARRIER RAIL DETAILS AT MANHOLES
1"= 1'-0"

REINFORCING STEEL REQUIRED AT MANHOLES		
MARK	NUMBER	LENGTH
Straight Bars		
R504	20	5'-0"
Bent Bars		
R503	80	3'-3"
BENDING DIAGRAM		

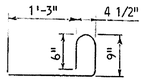

R503

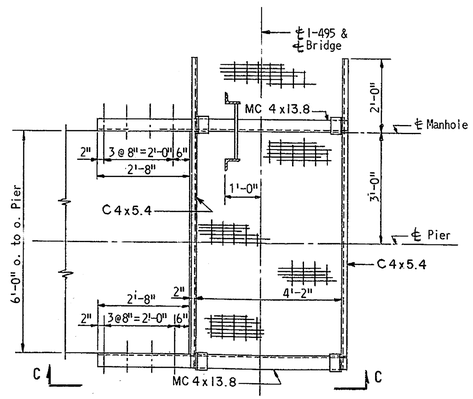

AT PIERS 15 & 18

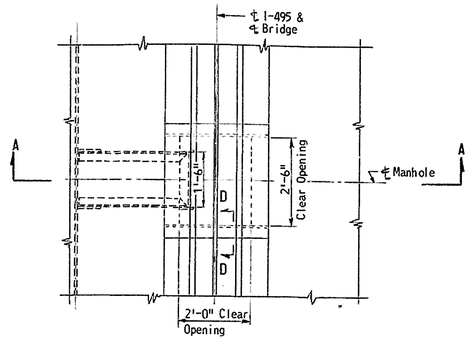

PLAN

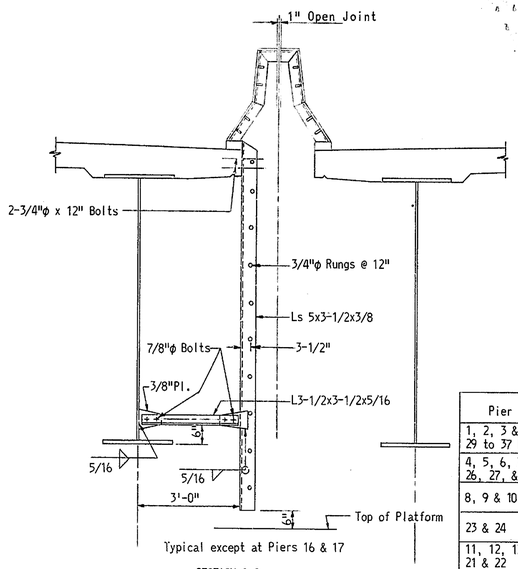

Typical except at Piers 16 & 17

SECTION A-A

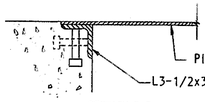

SECTION D-D
1-1/2" = 1'-0"

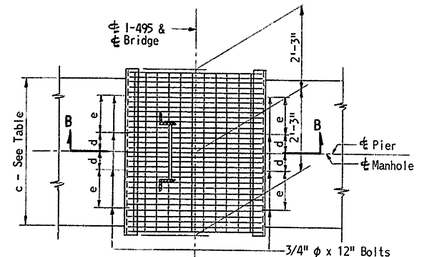

AT INTERMEDIATE PIERS OF APPROACH SPANS

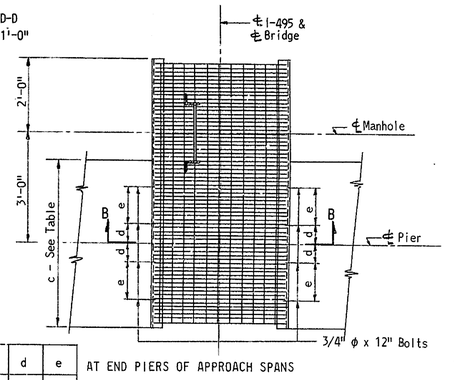

AT END PIERS OF APPROACH SPANS

Pier Nos.	c	d	e
1, 2, 3 & 29 to 37 Incl.	4'-0"	6"	1'-0"
4, 5, 6, 7, 25, 26, 27, & 28	4'-3"	6"	1'-0"
8, 9 & 10	4'-6"	6"	1'-0"
23 & 24	4'-6"	7"	1'-2"
11, 12, 13, 20, 21 & 22	4'-9"	8"	1'-4"
14 & 19	5'-0"	8"	1'-4"

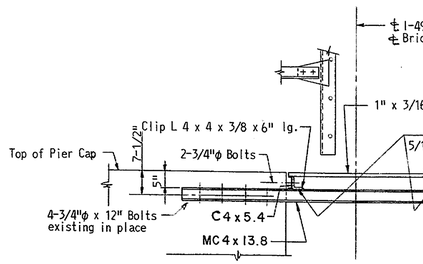

SECTION C-C

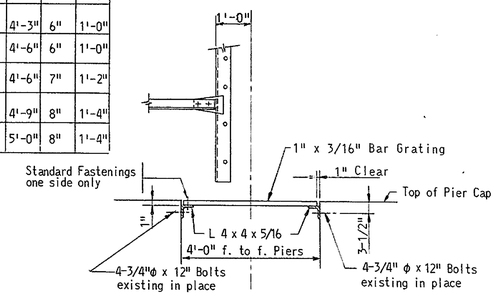

SECTION B-B

MANHOLE, LADDER & PLATFORM
1/2" = 1'-0"

NOTES:

For General Notes, see Sheet Nos. 2 and 3.
For other notes, see Sheet No. 12.
All grating shall be similar to Borden, Irvico, Gary or an approved equal.
Grating and all support members shall be hot-dip galvanized.
Capacity of grating to be 200 psf.
All 3/4"ϕ Bolts in pier caps are existing in place with hex. nuts and lock washers.
Bolts project 1-1/2".

J. E. GREINER CO.
MORAN, PROCTOR, MUESER & RUTLEDGE
CONSULTING ENGINEERS

DELAWARE DEPARTMENT
OF HIGHWAYS & TRANSPORTATION
DIVISION OF HIGHWAYS

INTERSTATE ROUTE I-495

CHRISTINA RIVER BRIDGE INSPECTION FACILITIES

D. K. K. S.
T. L. K.
C. K. K. S.

SCALE: As Noted
DATE: 7/1/71

APPROVED BY:

BRIDGE ENGINEER

OGILVIE PRESS, INC. — D-127 4748

COUNTY	CONTRACT	F. P. A. REG. NO	STATE	FED. AID PROJECT NO.	FISCAL YEAR	SHEET NO.	TOTAL SHEETS
NEW CASTLE	71-05-007	2	DEL.	I-495-3(21)15		34	44

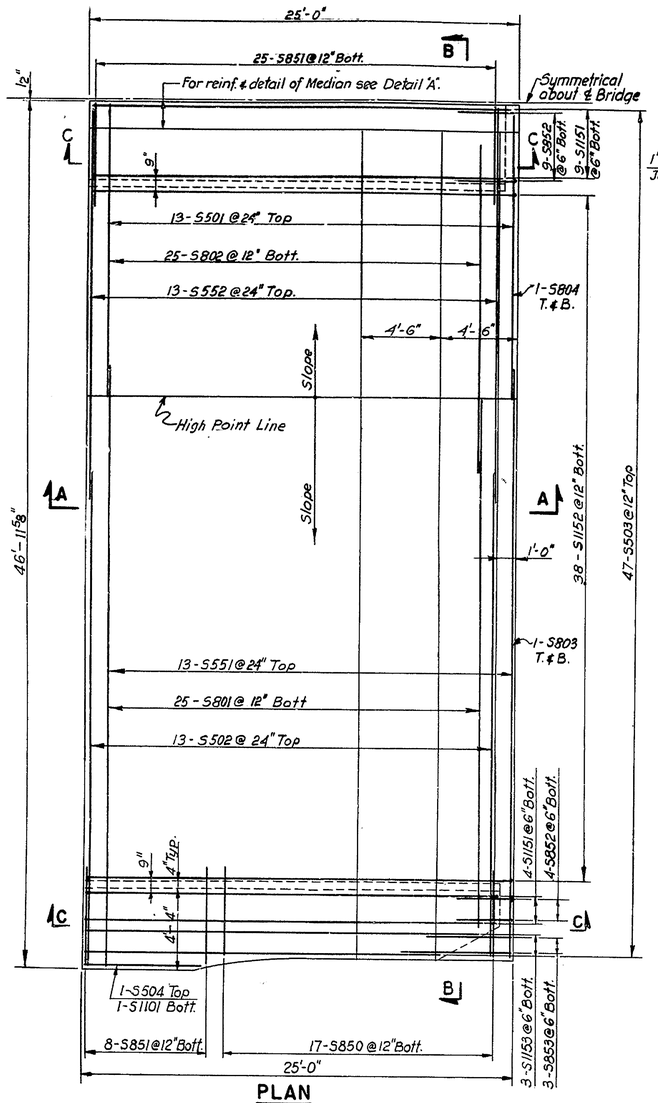

PLAN

2-OPPOSITE HAND
Scale: ¼"=1'-0"

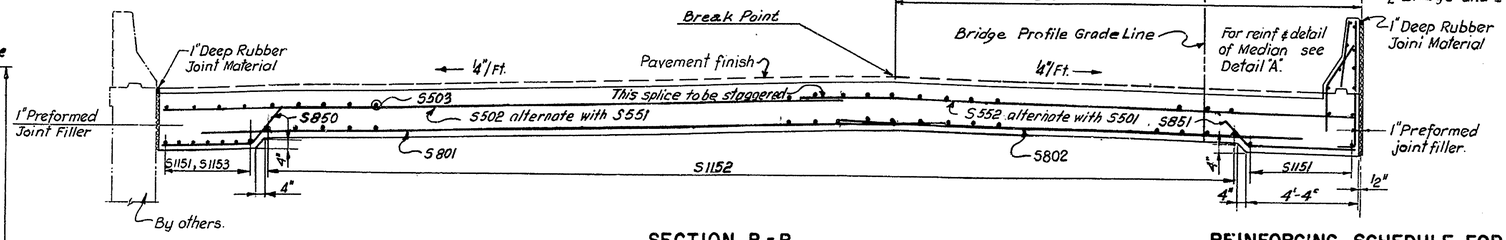

SECTION B-B

Scale; 3/8"=1'-0"

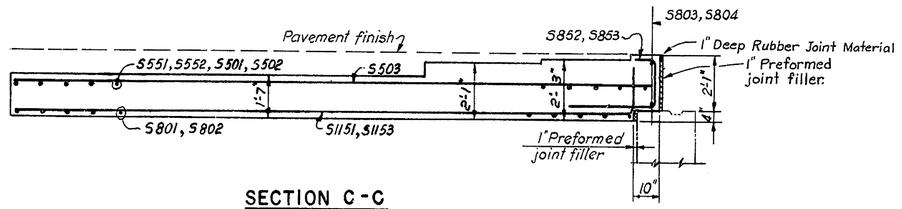

SECTION C-C

Scale: 3/8"=1'-0"

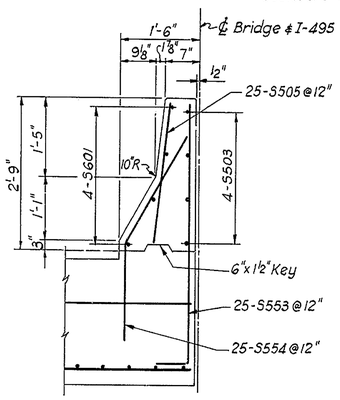

DETAIL "A"

Scale: 3/4"=1'-0"

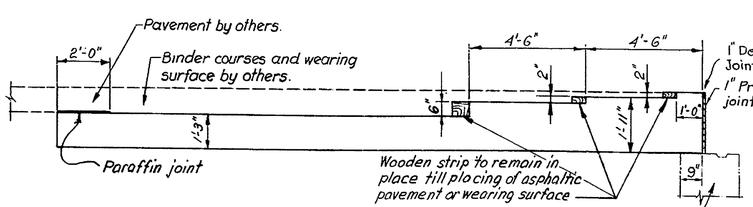

SECTION A-A

Scale: 3/8"=1'-0"

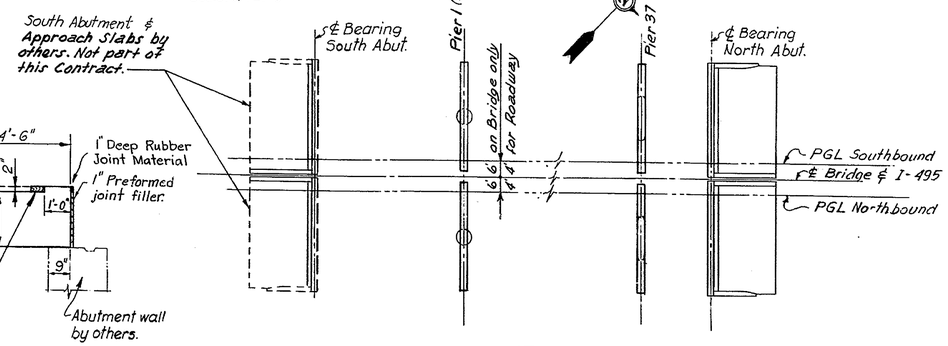

KEY PLAN

N.T.S.

REINFORCING SCHEDULE FOR ONE SLAB

2 REQUIRED EXCEPT AS NOTED

BENT BARS- (Dimensions are out to out)

MARK	NO.	SIZE	LENGTH	TYPE	A	B	C	D	E	F	G	REMARKS
S551	13	#5	32-4	II	30'9	1-7	0-1	1-7				
S552	13	"	21-4	II	15-9	5-7	0-3	5-7				
S553	25	"	5-1	I	4-7	0-6						
S554	25	#5	4-0	II	1-10	2-2	1-2	1-10				
S850	17	#8	5-0	II	3-3	1-9	1-3	1-3				
S851	33	#8	5-9	II	4-0	1-9	1-3	1-3				
S852	13	#8	5-7	I	3-3	1-8	0-8					
S853	3	#8	6-6 to 8-6	I	4-2 to 6-2	1-8	0-8					Increment 1'-0"
S1151	13	#11	25-8	I	23-10	1-10						
S1152	38	#11	26-2	I	24-6	1-8						
S1153	3	#11	22-8 to 24-8	I	21-0 to 23-0	1-8						Increment 1'-0"

STRAIGHT BARS			
MARK	NO.	SIZE	LENGTH REMARKS
S501	13	#5	15-9
S502	13	"	26-9
S503	51	"	24-8
S504	1	#5	6-6
S505	25	#5	2-6
S601	4	#6	24-8
S801	25	#8	29-0
S802	25	"	18-0
S803	2	"	30-10
S804	2	#8	19-10
S1101	1	#11	6-6

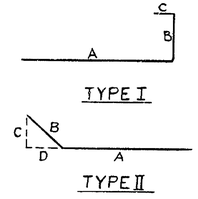

NOTE

For General Notes see Sheet Nos. 2 & 3.

REVISIONS

DELAWARE DEPARTMENT OF HIGHWAYS & TRANSPORTATION
DIVISION OF HIGHWAYS

INTERSTATE ROUTE I-495

CHRISTINA RIVER BRIDGE APPROACH SLABS

J. E. GREINER CO.
MORAN, PROCTOR, MUESER & RUTLEDGE
CONSULTING ENGINEERS

D. R.C.H.
T. P.O.
C. W. W.

SCALE AS NOTED

DATE 7/1/71

APPROVED BY:

BRIDGE ENGINEER

COUNTY	CONTRACT	P R A REG. NO.	STATE	FED AID PROJECT NO.	SHEET NO.	TOTAL SHEETS
New Castle	71-05-007	2	DEL.	I-495-3(21)15	35	44

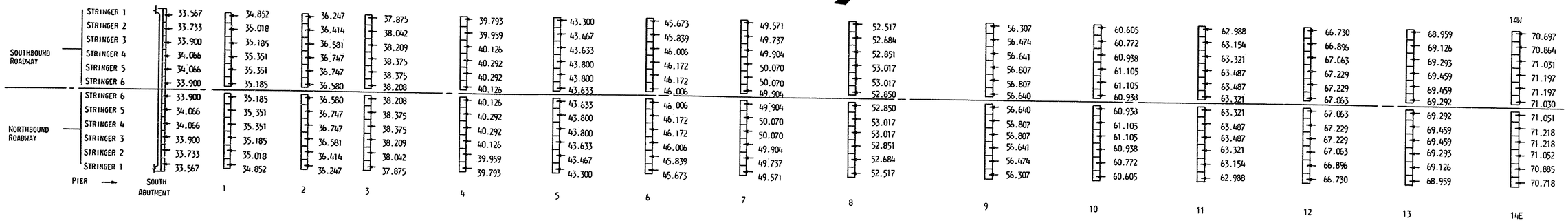

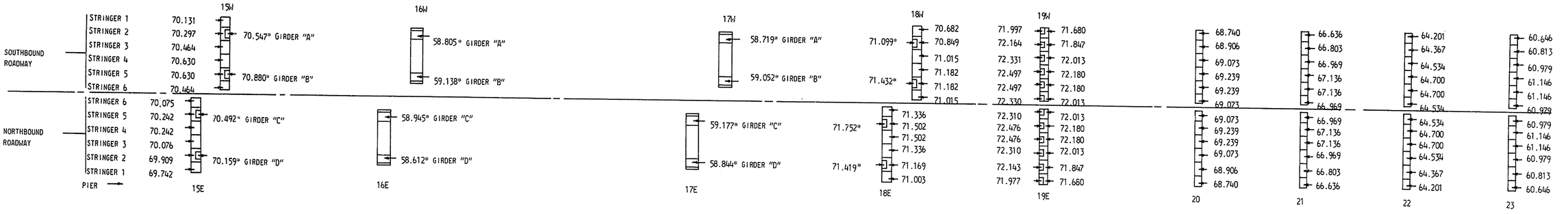

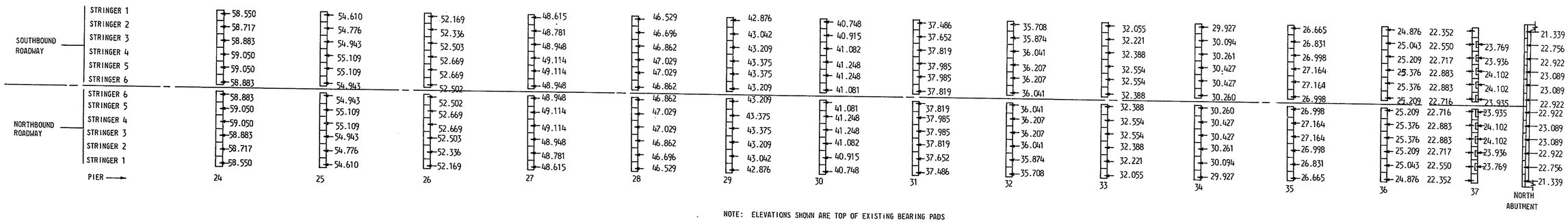

NOTE: ELEVATIONS SHOWN ARE TOP OF EXISTING BEARING PADS EXCEPT AT MAIN SPANS WHERE * INDICATES ELEVATION OF TOP OF SHEAR PLATE.

NOTES:
FOR GENERAL NOTES SEE SHEET NOS. 2 AND 3
FOR BEARING DETAILS AND SHEAR PLATES SEE SHEET NOS. 26 AND 32.

DELAWARE DEPARTMENT OF HIGHWAYS & TRANSPORTATION
DIVISION OF HIGHWAYS

INTERSTATE ROUTE I-495

CHRISTINA RIVER BRIDGE BEARING PAD ELEVATIONS

D.
T. H.H.D.
C. B.G.S.

SCALE None

DATE 7/1/71

APPROVED BY:

BRIDGE ENGINEER

COUNTY	CONTRACT	P. R. A. REQ. NO.	STATE	FED. AID PROJECT NO.	FISCAL YEAR	SHEET NO.	TOTAL SHEETS
New Castle	71-05-007	2	DEL.	I-495-3(21)15		36	44

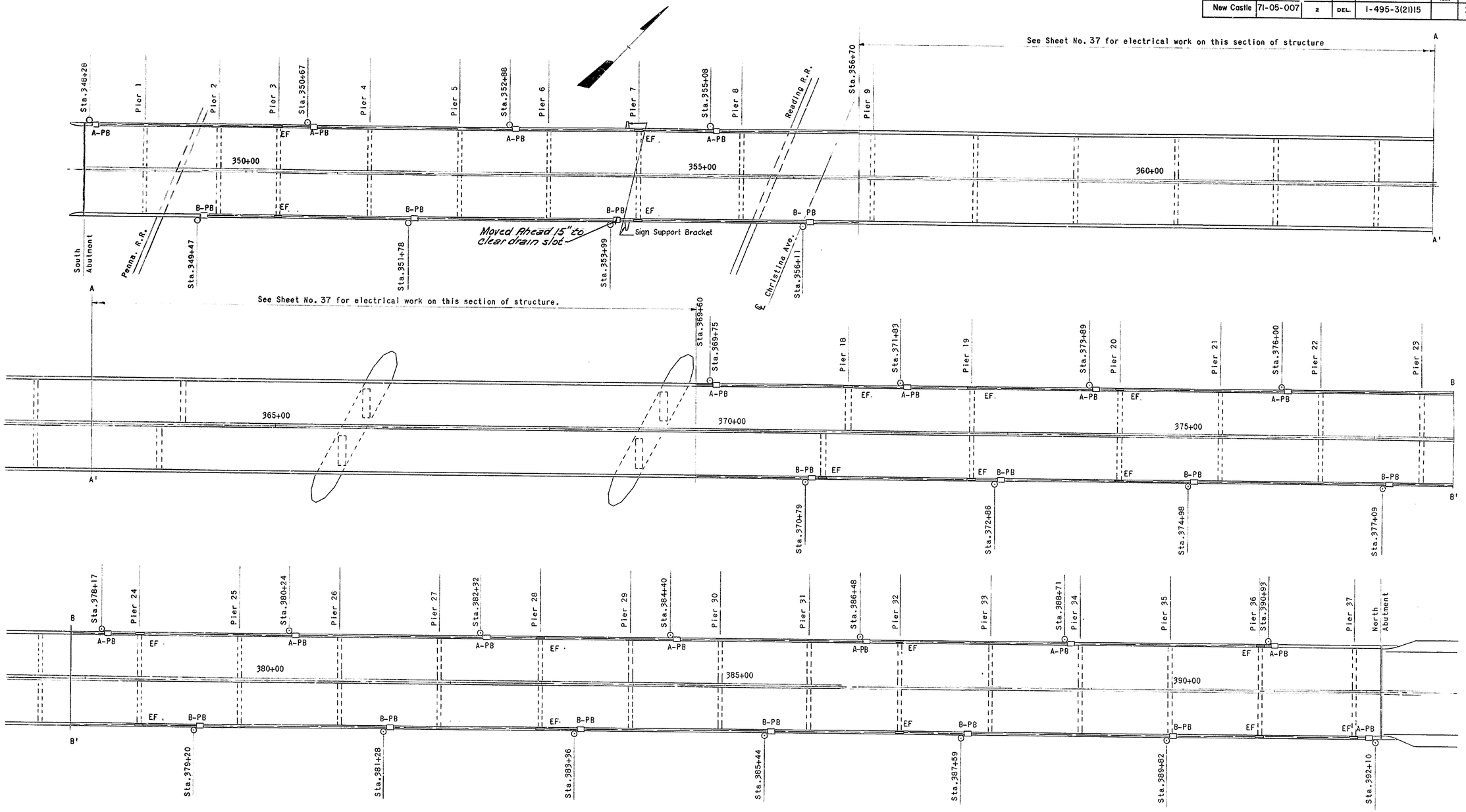

NOTE:
For Notes, See Sheet No. 37.

LEGEND

- ⊙ Lighting Standard Foundation
- Cast iron pull box, hot dip galvanized, flush mounted in Barrier Rail.
- EF Expansion fitting.
- Rigid galv. W.I. conduit embedded in concrete structure. (1-1/2" except as noted)
- Rigid galv. W.I. conduit, exposed. (Size as indicated)

DELAWARE DEPARTMENT
OF HIGHWAYS & TRANSPORTATION
DIVISION OF HIGHWAYS

INTERSTATE ROUTE I-495

CHRISTINA RIVER BRIDGE LIGHTING-I

J. E. GREINER CO.
MORAN, PROCTOR, MUESER & RUTLEDGE
CONSULTING ENGINEERS

D. R.L.S.
T. J.F.N.
C. R.L.S.

SCALE 1" = 50'

DATE 7/1/71

APPROVED BY:

BRIDGE ENGINEER

COUNTY	CONTRACT	P.E.A. REG. NO.	STATE	FED. AID PROJECT NO.	FISCAL YEAR	SHEET NO.	TOTAL SHEETS
New Castle	71-05-007	2	DEL.	I-495-3(21)15		37	44

See Sheet No. 36 for continuation of electrical work

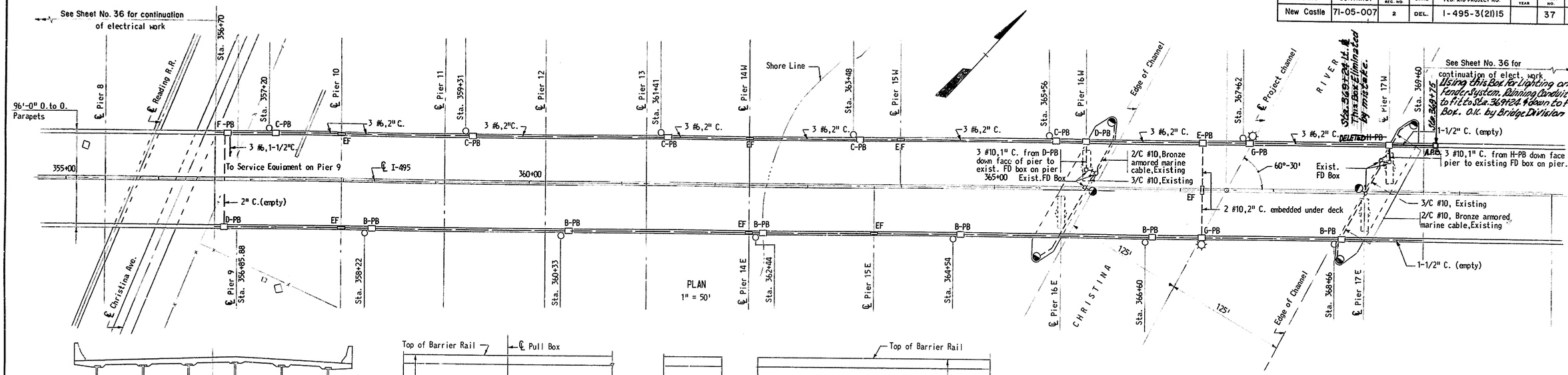

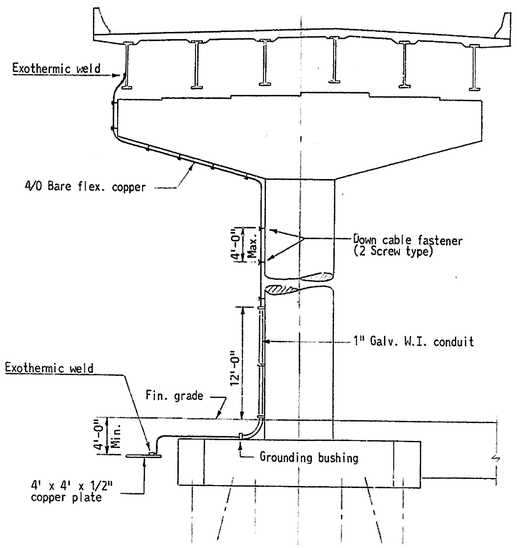

SUPERSTRUCTURE GROUNDING
1/8" = 1'-0"
(Required on Piers 3E, 3W, 26E, 26W, 36E & 36W)

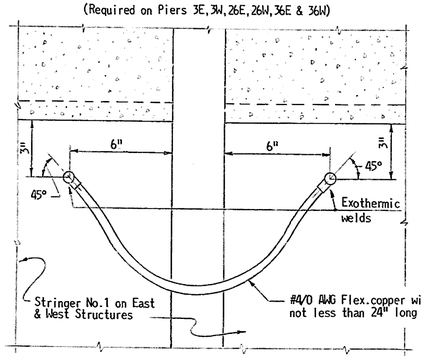

TYPICAL BONDING JUMPER AT EXPANSION JOINTS
3" = 1'-0"
(One required for each structure at Piers 3,7,10,14,15,18,19,20,24,28,32,36 & 37)

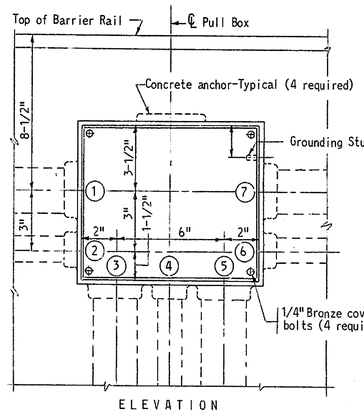

ELEVATION

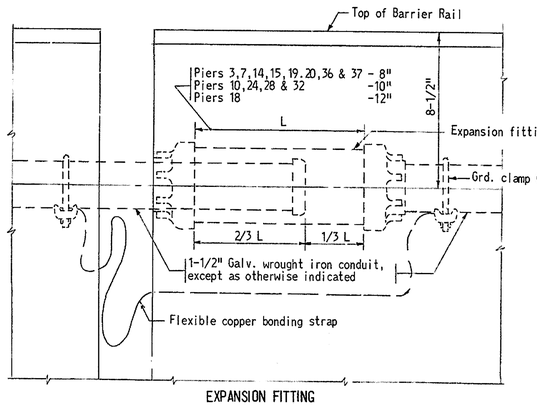

EXPANSION FITTING
3" = 1'-0"

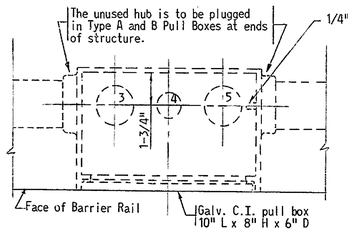

PLAN

TYPICAL PULL BOX
3" = 1'-0"

SCHEDULE OF CONDUIT HUB SIZES

TYPE OF PULL BOX	LOCATION OF HUB						
	1	2	3	4	5	6	7
A	1-1/2"	1"					1-1/2"
B	1-1/2"					1"	1-1/2"
C	2"	1"					2"
D	1-1/2"				2"		1-1/2"
E	2"		2"				2"
F	2"		2"		1-1/2"		2"
G	2"	1"		1"			2"
H	2"			1"			1-1/2"

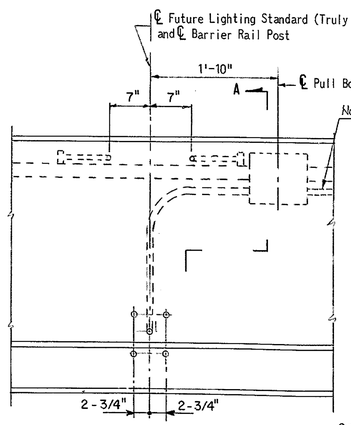

ELEVATION

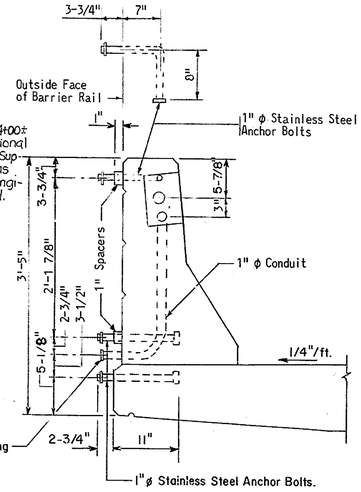

SECTION A-A

PARAPET AND CURB AT LIGHTING STANDARD
1" = 1'-0"

NOTES:
For General Notes, see Sheet Nos. 2 and 3.
For Other Notes, see Sheet No. 12.
Lighting standards and their supporting brackets are not in this Contract.
All anchor bolts and conduit on facia of structure shall be set with a template.
℄ Lighting Standard Foundations are to coincide with the ℄ of Barrier Rail Post at the approximate stations shown on the Plan Views.

DELAWARE DEPARTMENT OF HIGHWAYS & TRANSPORTATION
DIVISION OF HIGHWAYS

INTERSTATE ROUTE I-495

CHRISTINA RIVER BRIDGE LIGHTING-II

J. E. GREINER CO.
MORAN, PROCTOR, MUESER & RUTLEDGE
CONSULTING ENGINEERS

D. R.L.S.
T. J.F.N.
C. R.L.S.

SCALE As Noted
DATE 7/1/71

APPROVED BY:
BRIDGE ENGINEER

COUNTY	CONTRACT	F. H. A. REG. NO.	STATE	FED. AID PROJECT NO.	FISCAL YEAR	SHEET NO.	TOTAL SHEETS
New Castle	71-05-007	2	DEL.	I-495-3(21)15		38	44

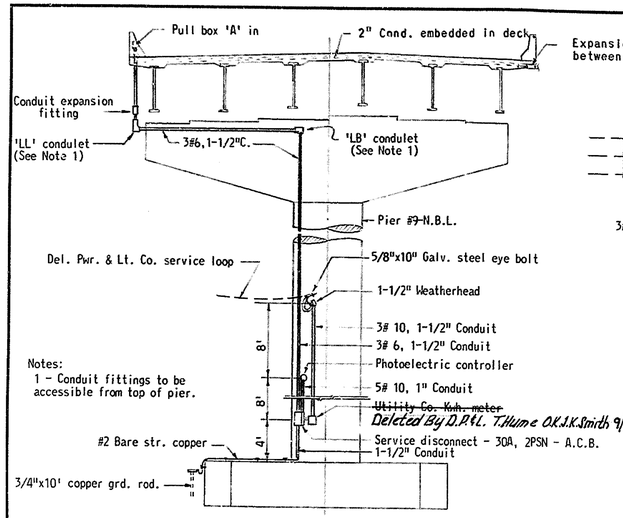

SERVICE INSTALLATION DETAILS AT PIER 9W
1/8" = 1'-0"

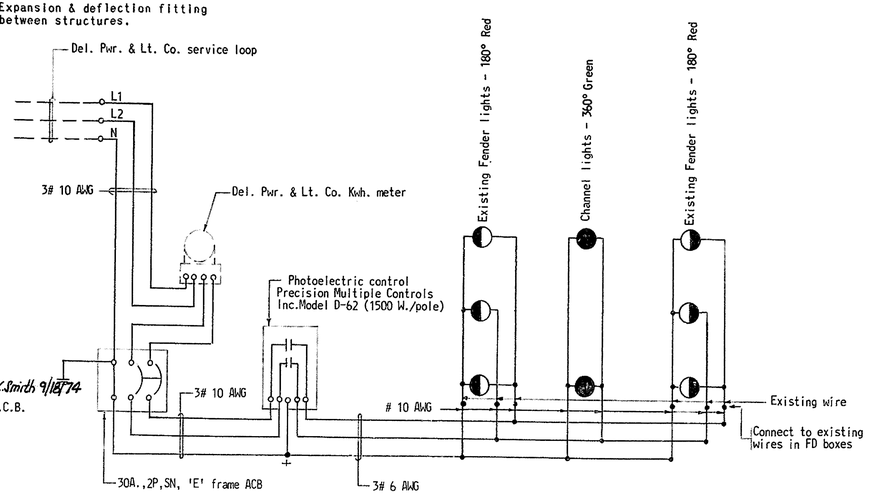

SCHEMATIC WIRING DIAGRAM

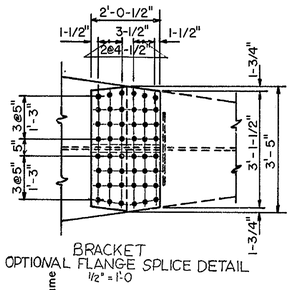

BRACKET
OPTIONAL FLANGE SPLICE DETAIL
1/2" = 1'-0

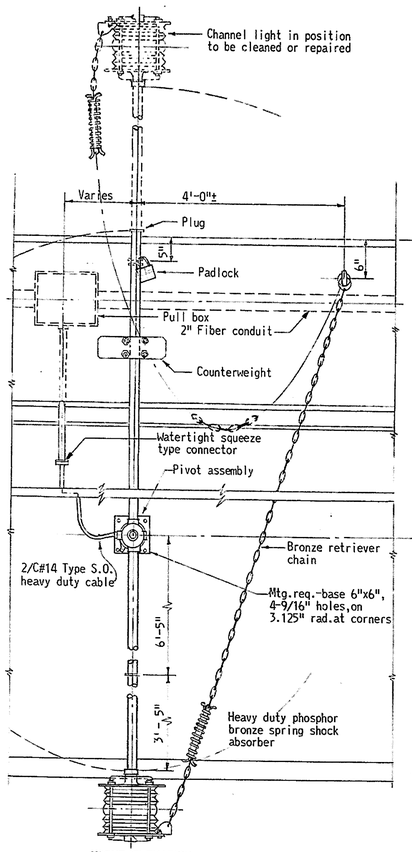

FRONT ELEVATION

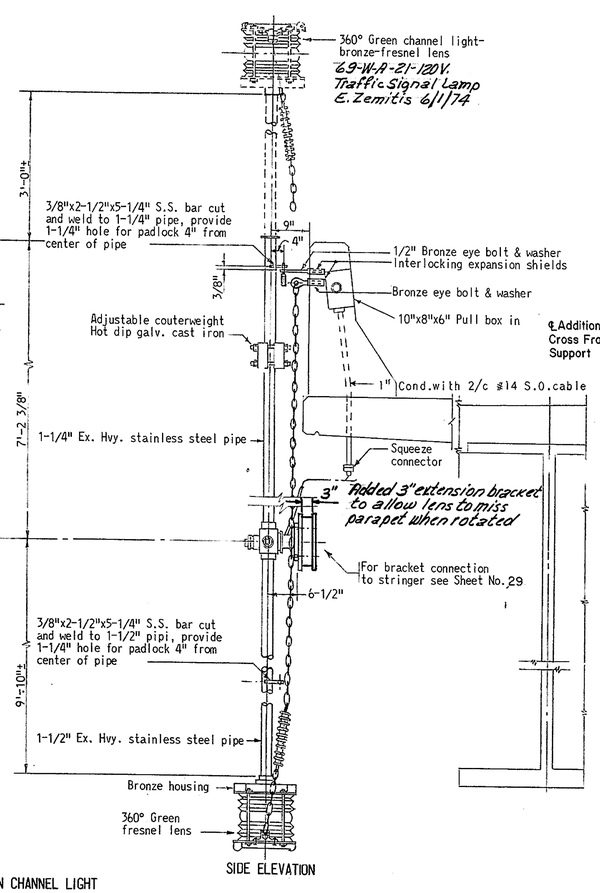

SIDE ELEVATION

360° GREEN CHANNEL LIGHT
3/4" = 1'-0"

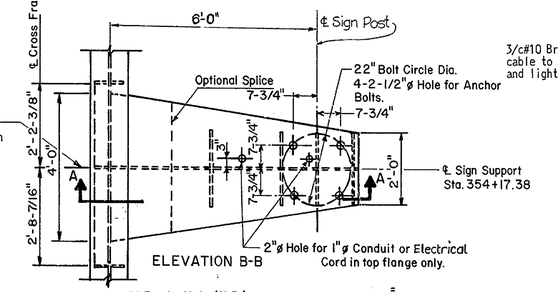

ELEVATION B-B

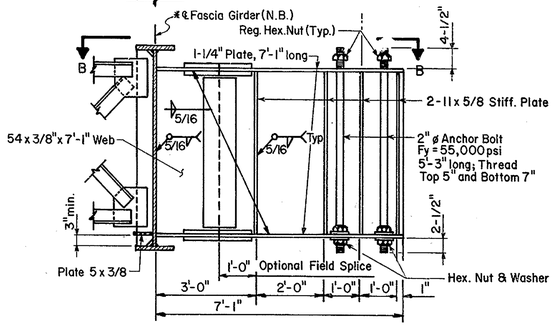

SECTION A-A
SIGN SUPPORT FOR OD#13
1/2"= 1'-0"
*NOTE: Bracket for Fascia Girder South Bound opposite.

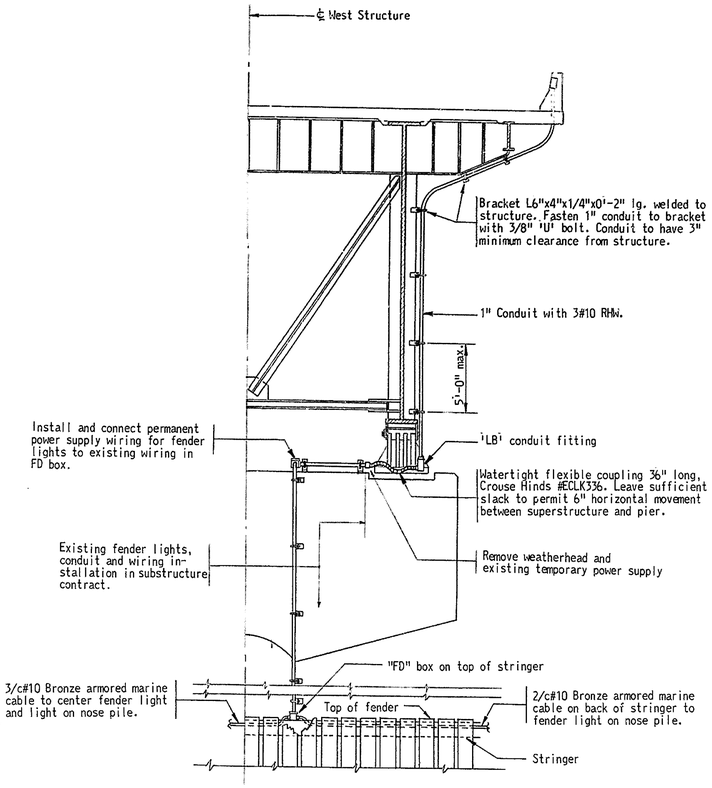

CONDUIT ARRANGEMENT AT PIER 17 W
PIER 16 W SIMILAR
3/16" = 1'-0"

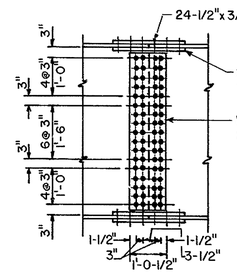

NOTES:
For General Notes, see Sheet Nos. 2 and 3
2-19-1/2"x 3/4"x 2'-0-1/2" (Narrow 19-1/2 to 17-3/4)
Web Splice
2-Plate 12-1/2"x 3/8"x 4'-3"

BRACKET
OPTIONAL WEB SPLICE DETAIL
1/2"= 1'-0"

DELAWARE DEPARTMENT OF HIGHWAYS & TRANSPORTATION
DIVISION OF HIGHWAYS

INTERSTATE ROUTE I-495

CHRISTINA RIVER BRIDGE LIGHTING-III

J. E. GREINER CO.
MORAN, PROCTOR, MUESER & RUTLEDGE
CONSULTING ENGINEERS

D. R.L.S.
T. J. H.
C. R.L.S.

SCALE: As Noted
DATE: 7/1/71

APPROVED BY:

BRIDGE ENGINEER

OGILVIE PRESS, INC. — D-137 4348

COUNTY	CONTRACT	P. B. A. REC. NO	STATE	FED. AID PROJECT NO	FISCAL YEAR	SHEET NO.	TOTAL SHEETS
NEW CASTLE	71-05-007	2	DEL.	I-495-3(21)15		39	44

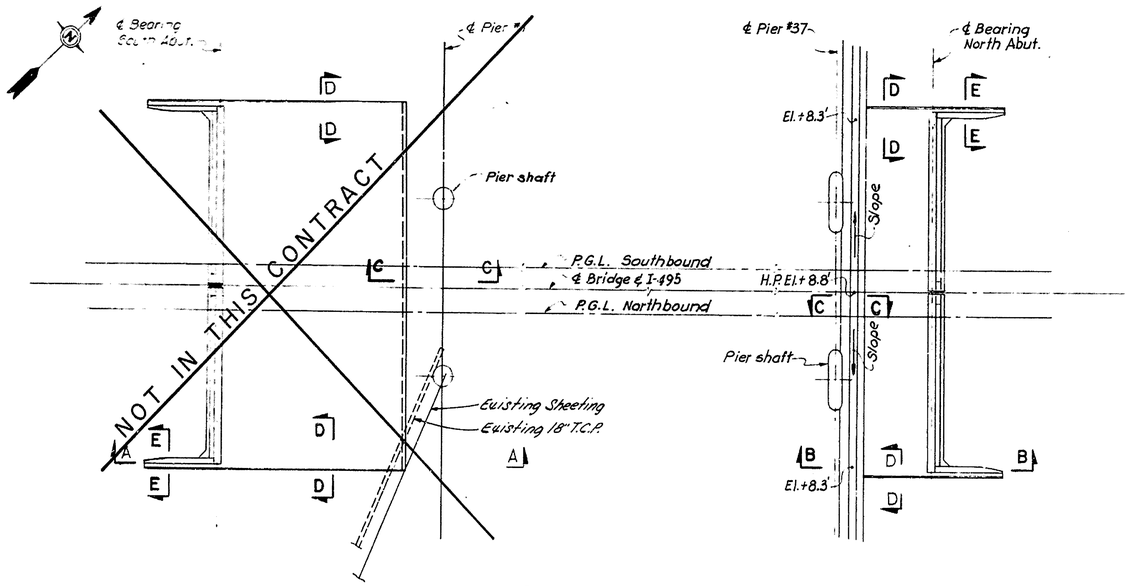

PLAN
Scale: 1" = 20'-0"

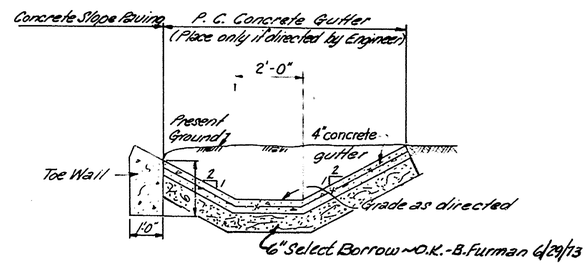

SECTION C-C
Scale: 1/2" = 1'-0"

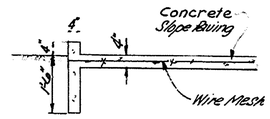

SECTION D-D
Scale: 1/2" = 1'-0"

NOTES

1. For General Notes see Sheet No. 2
2. SLOPE PROTECTION: Slope protection to the extent indicated on the drawings shall be as specified in the Special Provisions.

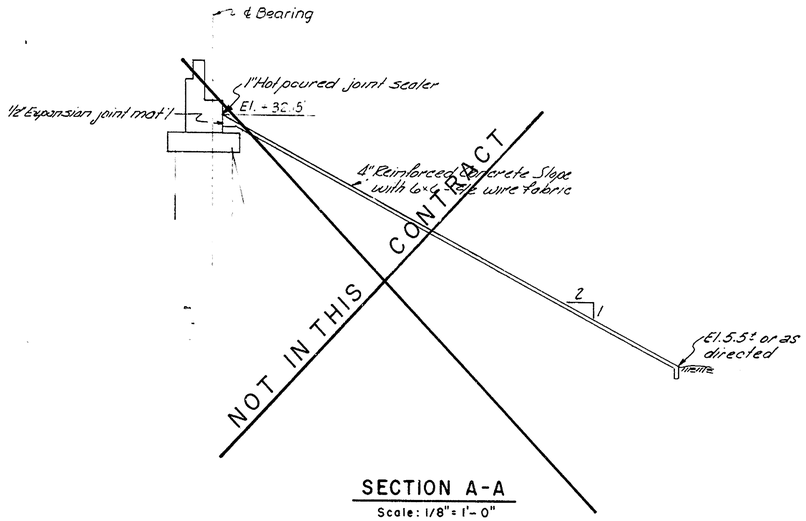

SECTION A-A
Scale: 1/8" = 1'-0"

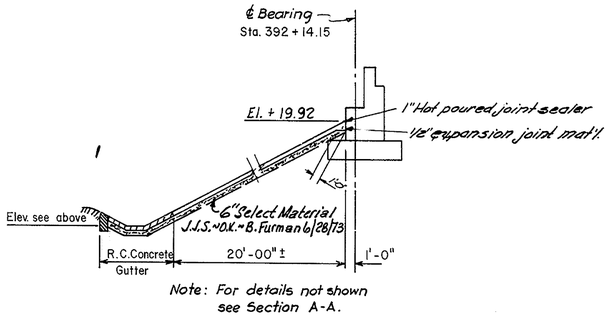

Note: For details not shown see Section A-A.

SECTION B-B
Scale: 1/8" = 1'-0"

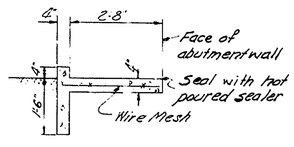

SECTION E-E
Scale: 1/2" = 1'-0"

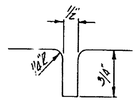

GROVE DETAIL
(For location see Special Provs.)

DELAWARE DEPARTMENT OF HIGHWAYS & TRANSPORTATION DIVISION OF HIGHWAYS		
INTERSTATE ROUTE I-495		
CHRISTINA RIVER BRIDGE SLOPE PAVING DETAILS		
J. E. GREINER CO. MORAN, PROCTOR, MUESER & RUTLEDGE CONSULTING ENGINEERS	D. S. L. T. T. R. B./H. D. C. W. W.	SCALE AS NOTED; DATE 7/1/71
		APPROVED BY: BRIDGE ENGINEER

1-9-9

COUNTY	CONTRACT	F. A. PROJ. NO.	STATE	FED. AID PROJECT NO.	FISCAL YEAR	SHEET NO.	TOTAL SHEETS
NEW CASTLE	71-05-007	2	DEL.	I-495-3(21)15		40	44

INDEX

SHEET	TITLE	CONTENTS
AA	TITLE SHEET	PROJECT TITLE & SITE PLAN
BB	GENERAL NOTES, LEGENDS & INDEX	AS SHOWN
A	BORING LOCATION PLAN - STA. 341+00 TO STA. 459+27	LOCATION PLAN FOR SECTIONS 1-1 TO 17-17
B	" " " - STA. 459+27 TO STA. 561+50	" " " " 17-17 TO 36-36
C	" " " - STA. 561+50 TO STA. 625+00	" " " " 37-37 TO 43-43
D	BORINGS & GEOLOGIC SECTIONS - STA. 341+00 TO STA. 353+20	SECTIONS 1-1 AND 2-2; DATA FOR PIEZOMETER PB-2
E	" " " " - STA. 353+20 TO STA. 362+20	" 3-3 AND 4-4
F	" " " " - STA. 362+20 TO STA. 374+20	" 5-5
G	" " " " - STA. 374+20 TO STA. 386+30	" 6-6 AND DATA FOR PIEZOMETER PB-17
H	" " " " - STA. 386+30 TO STA. 399+10	" 7-7 " " " " PB-28
I	" " " " - STA. 385+10, 393+10, 397+60	" 8-8, 9-9 AND 10-10
J	" " " " - STA. 399+10 TO STA. 411+10	" 11-11
K	" " " " - STA. 411+10 TO STA. 423+60	" 12-12 AND DATA FOR PIEZOMETER PB-39U
L	" " " " - STA. 423+60 TO STA. 436+10	" 13-13
M	" " " " - STA. 436+10 TO STA. 448+80	" 14-14 AND DATA FOR PIEZOMETER PB-47
N	" " " " - STA. 448+80 TO STA. 466+90	" 15-15, 16-16 AND 17-17
O	" " " " - STA. 466+90 TO STA. 479+60 & STA. 488+60	" 18-18, 19-19 AND 20-20; DATA FOR PIEZOMETER PB-63
P	" " " " - STA. 479+60 TO STA. 490+70 & STA. 476+11, STA. 477+75	" 21-21, 22-22, 23-23 AND 24-24; DATA FOR PIEZOMETER PB-73 & PB-78
Q	" " " " - STA. 490+70 TO STA. 500+70	" 25-25, 26-26, 27-27 AND 28-28 DATA FOR PIEZOMETER PB-100
R	" " " " - STA. 500+70 TO STA. 511+80	" 29-29, 30-30, 31+31 AND 32-32 DATA FOR PIEZOMETER PB-109
S	" " " " - STA. 511+80 TO STA. 534+10	" 33-33 AND 34-34; DATA FOR PIEZOMETER PB-113
T	" " " " - STA. 534+10 TO STA. 561+20	" 35-35 AND 36-36 " " " " PB-125
U	" " " " - STA. 561+20 TO STA. 591+60	" 37-37 AND 38-38 " " " " PB-137
V	" " " " - STA. 591+60 TO STA. 610+60	" 39-39 AND 40-40
W	" " " " - STA. 610+60 TO STA. 622+60 & STA. 602+77, STA. 604+03	" 41-41, 42-42 AND 43-43; DATA FOR PIEZOMETER PB-153
X	DELAWARE RIVER BORING LOCATION PLAN AND BORING LOGS W-12 TO W-19	AS SHOWN
Y	DELAWARE RIVER BORING LOGS W-20 TO W-34	AS SHOWN
Z	TYPICAL PIEZOMETER INSTALLATION & TIDE READINGS.	AS SHOWN

NOT IN CONTRACT

NOTES AND LEGEND FOR BORING LOCATION PLAN

1. TOPOGRAPHY SHOWN ON PLANS WAS COMPILED BY PHOTOGRAMMETRIC METHODS FROM DATA OBTAINED BY AIR SURVEY CORPORATION IN THE SPRING OF 1962 AND SUPPLEMENTED BY INSTRUMENT SURVEYS MADE BY THE J.E. GREINER COMPANY AND MORAN, PROCTOR, MUESER & RUTLEDGE.
2. 1 2 - INDICATES LIMITS AND NUMBER OF GEOLOGIC SECTION.
3. B-7 - SYMBOL AND NUMBER DESIGNATION OF DRY SAMPLE BORING.
   B - BORINGS LOCATED ON LAND
   W - BORINGS MADE ON WATER
   BW - BORINGS SCHEDULED TO BE MADE ON LAND THAT WERE ACTUALLY MADE ON WATER.
4. B-8U - SYMBOL AND NUMBER DESIGNATION OF UNDISTURBED SAMPLE BORING.
5. B-2 - SYMBOL DESIGNATION WHERE PIEZOMETER WAS INSTALLED WITHIN OR ADJACENT TO THE BORING INDICATED.
6. 2 - SYMBOL AND NUMBER DESIGNATION FOR 8 BORINGS MADE IN 1957 BY SPRAGUE AND HENWOOD, INC. FOR MICHAEL BAKER JR., INC. LOGS OF THESE BORINGS ARE AVAILABLE AT THE DELAWARE DEPARTMENT OF HIGHWAYS AND TRANSPORTION UPON REQUEST.
7. LOCATION PLAN OF BORINGS MADE FOR BORROW INVESTIGATION IN THE DELAWARE RIVER CAN BE OBTAINED FROW THE DELAWARE DEPARTMENT OF HIGHWAYS AND TRANSPORTION UPON REQUEST.
8. BORING LOCATIONS AND ELEVATIONS WERE ESTABLISHED IN THE FIELD BY J.E. GREINER COMPANY AND MORAN, PROCTOR, MUESER & RUTLEDGE.

LEGEND FOR BORING LOGS

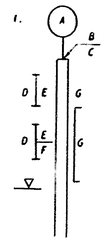

1. A = BORING LOCATION AND NUMBER; SUFFIXED BY A LETTER "U" INDICATES UNDISTURBED SAMPLE BORINGS USING 3-1/2" DIAMETER CASING. ALL OTHER BORINGS ARE DRY SAMPLE BORINGS USING 2-1/2" DIAMETER CASING EXCEPT BORINGS B-152A AND B-152B WHICH WERE MADE WITH AN 1" DIAMETER RETRACTABLE PLUG SAMPLER.

   B = ELEVATION OF GROUND SURFACE AT LAND BORING LOCATIONS OR ELEVATION OF MUD LINE AT WATER BORING LOCATIONS.

   C = DISTANCE AND DIRECTION OF OFFSET OF BORINGS FROM CENTERLINE OF ROUTE I-495, LOOKING AT INCREASING STATIONS.

   D = TYPE AND NUMBER OF SAMPLE:
   - D - DRY SAMPLES TAKEN WITH A 2" O.D. SPLIT SPOON
   - U - UNDISTURBED SAMPLES RECOVERED WITH A 3" DIAMETER FIXED-PISTON SAMPLER
   - S - 3" DIAMETER OPEN END "SHELBY" TUBE SAMPLES
   - W - SAMPLES RECOVERED FROM WASH WATER
   - UD,SD - JAR SAMPLES FROM AN UNACCEPTABLE UNDISTURBED OR "SHELBY" SAMPLES
   - V - VANE SHEAR TESTS, MADE WITH A TAPPERED 2-1/2"x6-3/4" VANE.
   - NR - NO RECOVERY
   - CORE - 1-3/16" ROCK CORE

   E = PENETRATION RESISTANCE DURING ADVANCING OF SAMPLER RECORDED IN NUMBER OF BLOWS OF 140 LB. HAMMER, FALLING 30" PER FOOT OF PENETRATION OR AS OTHERWISE NOTED. BLOWS INDICATED ARE FOR LAST 12" OF AN 18" DRIVE. ALSO INDICATES PER CENT RECOVERY OF ROCK CORE.
   - P - INDICATES SAMPLER PUSHED DOWN BY HAND FOR DRY SAMPLES AND BY USE OF MACHINE FOR UNDISTURBED SAMPLES.
   - T - INDICATES SAMPLER DRIVEN DOWN BY 340 LB. HAMMER WITH A VARIABLE HEIGHT OF FALL. BLOWS NOT SHOWN.
   - WH - ADVANCED UNDER WEIGHT OF SAMPLE HAMMER.
   - WR - ADVANCED UNDER WEIGHT OF "A" DRILL RODS.
   - HD - SAMPLE WAS HAND-DUG.

   F = WATER CONTENT OF SOIL SAMPLE EXPRESSED IN PER CENT OF DRY WEIGHT.

   G = PENETRATION RESISTANCE ENCOUNTERED IN ADVANCING CASING, RECORDED IN NUMBER OF BLOWS OF 300 LB. HAMMER FOR DRY SAMPLE HOLES AND 340 LB. HAMMER FOR UNDISTURBED SAMPLE HOLES WITH 24" FALL PER FOOT OF PENETRATION.

   [G] PENETRATION RESISTANCE OF CASING DRIVEN AFTER HOLE HAD BEEN WASHED AHEAD.

   ▽ MOST RELIABLE GROUND WATER LEVEL AS OBSERVED IN BORED HOLE.

   ▽▽ RANGE OF GROUND WATER LEVELS OBSERVED IN PIEZOMETER.

2. DESCRIPTIONS OF MATERIAL PERTAIN TO INDIVIDUAL SAMPLES AND ARE BASED ON LABORATORY TESTS AND MAY OR MAY NOT AGREE WITH THOSE ON THE FIELD BORING LOGS OR THE DRILLERS' LOGS.
3. ALL TIMES INDICATED ON THE WATER LEVEL OBSERVATIONS FROM PIEZOMETERS ARE EASTERN DAYLIGHT SAVING TIME.

NOTES FOR GEOLOGIC SECTIONS

1. STRATIFICATIONS FOR GEOLOGIC SECTIONS ARE INTERPOLATIONS FROM INDIVIDUAL BORINGS AND MAY NOT REPRESENT THE EXISTING CONDITIONS. THE CONTRACTOR SHALL MAKE HIS OWN INTERPRETATION WHICH MAY AFFECT HIS METHODS AND COST OF CONSTRUCTION.
2. SUBSOIL STRATIFICATIONS ARE BASED ON LABORATORY TESTS AND GEOLOGICAL CONSIDERATIONS WITH EACH GROUP REPRESENTED BY THE ENCIRCLED NUMERAL. THE APPROPRIATE DESCRIPTIONS FOR NUMERAL DESIGNATIONS ARE INCLUDED IN THE "LEGEND FOR STRATIFICATION".
3. DESCRIPTIONS AND DIVISIONS OF SUBSOIL STRATA WERE DETERMINED BY J.E. GREINER COMPANY AND MORAN, PROCTOR, MUESER & RUTLEDGE FROM EXAMINATION OF SAMPLES AND LABORATORY TESTS AND MAY OR MAY NOT AGREE WITH THOSE ON THE FIELD BORING LOGS OR THE DRILLERS' LOGS.
4. STRATIFICATIONS SHOWN ON THE LONGITUDINAL GEOLOGIC SECTIONS ARE PROJECTIONS FROM INDIVIDUAL BORINGS ON THE PLANE PASSING THROUGH THE CENTERLINE OF ROUTE I-495 EXCEPT SECTIONS 35 TO 40 INCLUSIVE. SECTIONS 35 TO 40 ARE PROFILES OF PLANES PASSING THROUGH BORINGS SHOWN. ALL BORINGS ON THE LONGITUDINAL SECTIONS ARE SHOWN AT THE PROPER LOCATIONS WITH RESPECT TO THE STATIONS ALONG THE CENTERLINE. THESE LOCATIONS MAY OR MAY NOT REPRESENT THE ACTUAL DISTANCE BETWEEN INDIVIDUAL BORINGS.
5. NO EXISTING STRUCTURES OR UTILITY LINES INTERSECTED BY THE GEOLOGIC SECTIONS ARE SHOWN.
6. ALL ELEVATIONS REFER TO U.S.C.& G. SURVEY DATUM; MEAN SEA LEVEL AT SANDY HOOK = 0.00 FT.
7. TIDE READINGS OBTAINED BY J.E. GREINER COMPANY AND MORAN, PROCTOR, MUESER & RUTLEDGE ARE FROM TWO TIDE GAUGES IN THE CHRISTINA RIVER ADJACENT TO THE PROPOSED RIVER CROSSING, LOCATED APPROXIMATELY 1/2 MILE UPSTREAM FROM THE WILMINGTON MARINE TERMINAL.

LEGEND FOR STRATIFICATION

J.E.G. CO. & M.P.M.& R. DESIGNATION	DELAWARE DESIGNATION	SOIL DESCRIPTION
I	A-7 & A-8	SOFT DARK GRAY ORGANIC SILTY CLAY, TRACE TO SOME VEGETATION AND TRACE PEAT LAYERS.
II	A-4	LOOSE TO MEDIUM COMPACT BROWN AND GRAY FINE TO MEDIUM SANDY SILT TO SILTY FINE SAND.
III	A-1	COMPACT TO VERY COMPACT BROWN COARSE TO FINE SAND, SOME GRAVEL, TRACE SILT AND MICA.
IV	A-6	MEDIUM TO STIFF GRAY AND BROWN SILTY CLAY AND CLAYEY SILT WITH GRAY FINE SAND LAYERS.
V	A-6	STIFF MOTTLED RED WITH GRAY SILTY CLAY, TRACE TO SOME SAND AND GRAVEL, LENSES OF GRAY FINE SANDY SILT.
VI	A-4	COMPACT TO VERY COMPACT RED, BROWN AND GRAY FINE SANDY SILT TO SILTY FINE SAND, SOME CLAY.
VII	A-6	STIFF TO HARD VARICOLORED SILTY CLAY TO CLAYEY FINE SAND AND FINE SAND.
VIII	—	BEDROCK - RELATIVELY SOUND FRACTURED DARK GRAY QUARTZ DIORITE.

ABBREVIATIONS

b	BOTTOM	lt	LIGHT
bk	BLACK	m, med	MEDIUM
brn	BROWN	m-c	MEDIUM TO COARSE
c	COARSE	mic	MICACEOUS
cl	CLAY OR CLAYEY	mid	MIDDLE
comp	COMPACT	mtld	MOTTLED
dec	DECOMPOSED, DECAYED	org	ORGANIC
dk	DARK	si	SILT, SILTY
f	FINE	sm	SOME
fgmt	FRAGMENTS	t	TOP
grn	GREEN	tr	TRACE
gry	GRAY	veg	VEGETATION, VEGETABLE MATTER
gvl	GRAVEL	yel	YELLOW

FOR INFORMATION ONLY

DELAWARE DEPARTMENT OF HIGHWAYS & TRANSPORTATION
DIVISION OF HIGHWAYS

INTERSTATE ROUTE I-495

GENERAL NOTES
LEGENDS AND INDEX

J. E. GREINER CO.
MORAN, PROCTOR, MUESER & RUTLEDGE
CONSULTING ENGINEERS

D. RCH
T. VRW
C. RCH

SCALE NONE

DATE 7/1/71

APPROVED BY

BRIDGE ENGINEER

ORILYE PRESS, INC. — B-127 4048

COUNTY	CONTRACT	P.R.A. REG. NO.	STATE	FED. AID PROJECT NO.	FISCAL YEAR	SHEET NO.	TOTAL SHEETS
NEW CASTLE	71-05-007	2	DEL.	I-495-3(21)15		41	44

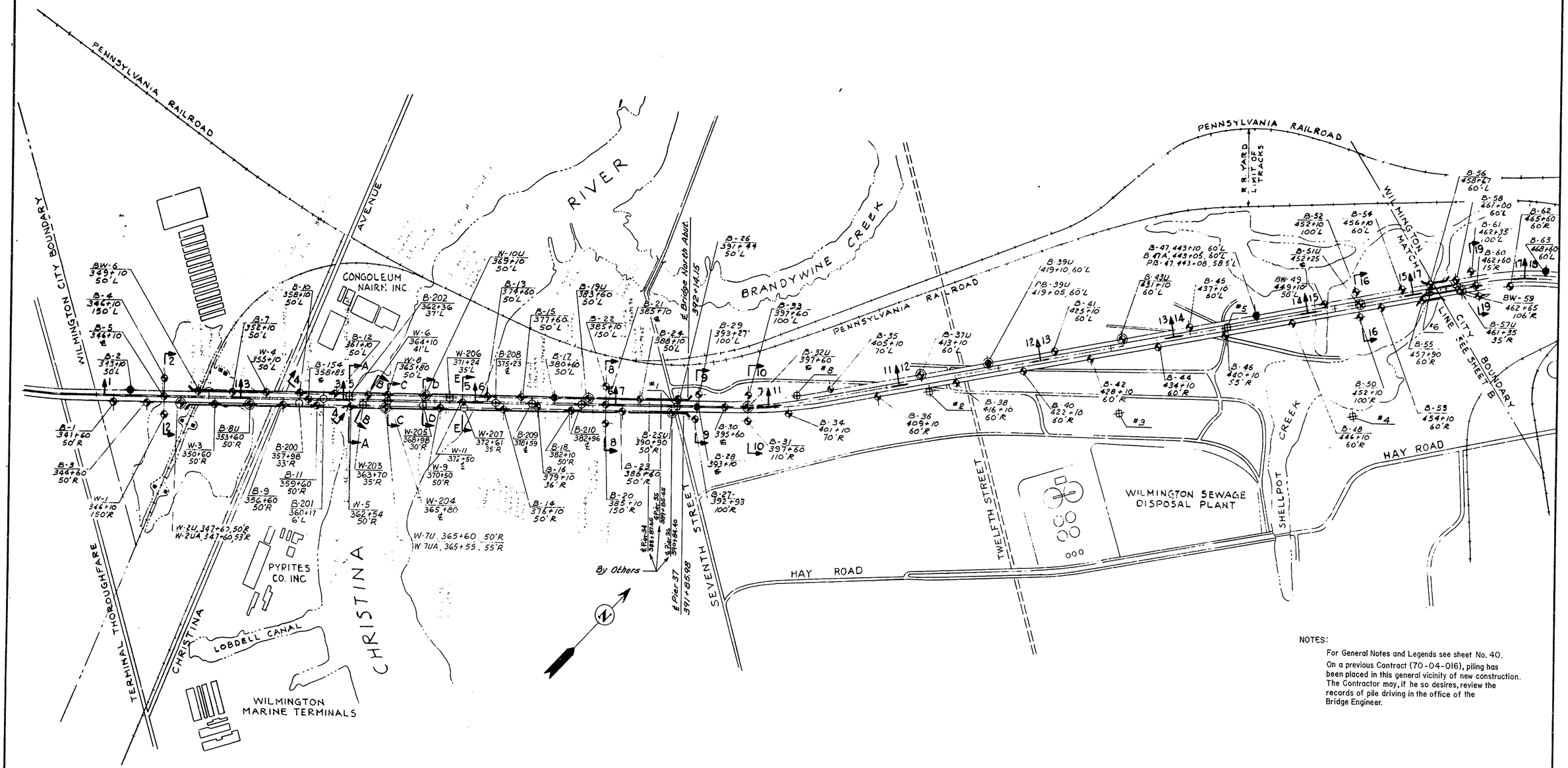

NOTES:

For General Notes and Legends see sheet No. 40.

On a previous Contract (70-04-016), piling has been placed in this general vicinity of new construction. The Contractor may, if he so desires, review the records of pile driving in the office of the Bridge Engineer.

GRAPHIC SCALE

400' 200' 0 400' 800' 1200'

FOR INFORMATION ONLY

J. E. GREINER CO.
MORAN, PROCTOR, MUESER & RUTLEDGE
CONSULTING ENGINEERS

DELAWARE DEPARTMENT OF HIGHWAYS & TRANSPORTATION DIVISION OF HIGHWAYS

INTERSTATE ROUTE I-495

BORING LOCATION PLAN

STATION 341+00 TO STATION 459+27

D. S.L.T.	SCALE 1" = 400'	APPROVED BY:
T. L. S.	DATE 3/1/63-7/1/71	BRIDGE ENGINEER
C. R. C. H.		

COUNTY	CONTRACT	F.A.P. OR S.H.R. NO.	STATE	FED. AID PROJECT NO	FISCAL YEAR	SHEET NO.	TOTAL SHEETS
NEW CASTLE	71-05-007	2	DEL.	I-495-3(21)15		42	44

ELEVATION IN FEET

Match Section 6-6 (Sheet G)

Match Section 7-7 (Sheet J)

Sta. 387+00 Sta. 390+00 Sta. 395+00 Sta. 399+00

SEVENTH STREET

Water Lever Observation Piezometer No. PB-28

B23 B24 B25U B26 B28 B30 B32U

El. + 8.0 50'R

El. + 7.7 50'L

El. + 7.7 50'@ 55°R.

El. + 5.2 50'L

El. + 9.7

El. + 11.1

El. + 11.7

+10 0 -10 -20 -30 -40 -50 -60 -70 -80 -90 -100 -110 -120 -130 -140

1D 4/36 — Gray silt, trace roots & fine sand

2D 2/89.0 — Soft gray organic silty clay, trace vegetation

3D 2/54.5 — do

4D WH/81.4 — do

5D 2/105 — do, some vegetation

6D 3/129 — do

7D 2/93.7 — do

8D 2/72.3 — do, some veg.

9D 2/84.5 — do

10D 58/76.5 — T. do B. Gray silty f-c sand & gravel

11D 69 — Brown silty coarse sand & gravel

12D 10/5.3 — Hard gray silty clay, trace silt

13D 24/13.9 — Gray silty fine sand, some clay

14D 19/16.8 — Stiff gray silty clay & fine sand

15D 33/16.5 — do, blue & red

16D 89/13.3 — Gray & brown silty f. sand

17D 50/8.21 — T. Hard blue-gray fine sandy clay B. Hard brown-red & greenish-gray mottled silty clay

NR 53 / NR 24

18D 24/12.7 — Stiff light gray fine sandy clay

19D 80/16.4 — Hard red-brown & blue-gray mottled fine sandy clay

NR 6 / 200 72/11.8 — T. do B. Greenish-gray silty f-m sand, tr. clay

21D 38/17.6 — Red-brown gray, sh-green silty clay, some fine sand

(* 300lb Hammer, 24"± fall)

1D 7/45.0 — Stiff gray clayey silt, trace vegetation

2D 2/75.1 — Soft gray organic silty clay, trace vegetation

3D 2/85.6 — do

4D 2/72.0 — do

5D 2/69.7 — do, trace vegetation

6D 2/82.8 — do, some vegetation

7D 2/84.6 — do, trace vegetation

8D 3/102 — do, some vegetation

9D 2/68.9 — do, trace vegetation

10D 2/81.2 — do

11D 4/12.6 — Soft gray organic silty clay

12D 36 — Gray silty f-c sand & gravel

13D 25 — do

14D 46/17.6 — Hard red-brown & green-gray silty clay, trace f. sand

15D 61/17.0 — Hard red-brown & blue-gray silty clay, trace fine sand

16D 119/17.1 — Green silty fine sand, trace red-brown fine sand layers

17D 23/10.8 — Stiff red-brown & gray fine Sandy clay

18D 56/13.1 — Light gray m-f sand, trace silt

19D 79/14.1 — Blue-gray fine sand, trace silt

20D 58/18.3 — Hard red-brown & yellow-gray silty clay, trace fine sand

(* 300lb Hammer, 24"± fall)

1D 3/48.8 — Soft gray clayey silt, tr. roots & fine sand

2D 5/54.2 — T. do B. Soft gray org. silty clay

3U P/64.9 4V — Soft dark gray organic silty clay, tr veg.

5D P/81.2 8V/91.9 — T. Soft brn. peat & gray silty clay B. Soft gray org. silty clay, sm veg.

6UD P/76.2 7U 8V/86.6 — Soft dk gry. org. silty clay, saveg. do., tr veg

9UD P/93.7 10U 11V — Soft gry. org. silty clay, sm. veg. Soft dark gray org. silty clay, some veg.

12D 72 — Gray f-c. sand & gravel

13D 46/5* — Gray silty f-m sand, some gravel

14D 16* — Brown f-c sand & gravel

15D 20*/75.3 — Red-brown silty fine sand

16D 10*/14.7 — Brown f-m sand, sm. clay

17D 9/8.0 — T. do B. Red gry & brn. silty clay, sm. f. sand

18 S 11.0 — Stiff red-brown sandy clay

19S 7/16.8 — Stiff brn. grn. gry. f-m sandy clay

20D 28*/17.1 — Gray, brown & red silty fine sand, some clay

21D 16.8/25.7 — T. Brn. grn. & gry. f sandy clay B. Red, gry. & brn. silty clay, sm. f. sand.

22D 47/17.1 — Red, gray, green & brown, f-m sand, some clay

23D 69/13.9 — Gray & green silty f-m sand

24D 14/14.9 — Gray & green clayey f-m sand

25D 40/21.8 — Hard red-gray, brown & green silty clay, some fine sand

26D 39/17.6 — Hard gray, green & brown silty clay, some fine sand

27D 69/15.1 — do, few fine sand layers

28D 47/20.8 — Hard red, purple, brown green silty clay, tr f.sa. & gravel

29D 41/20.9 — T. Grn & brn clayey f-m sa., tr. gvl B. Hard brn. & grn si clay, sm. f. sand

30D 25/20.5 — Hard green, white & brown silty clay, some fine sand

31D 53/26.8 — T do B. Red brown silty clay

32D 46/24.9 — Hard red-brown silty clay tr. fine sand

33D 48/39.3 — Hard green, brown & white silty clay, sm. f. sand & gravel

(* 340 lb Hammer, 20"± Fall.)

⑧ Boring abandoned after sample 13D and moved 5' due to obstruction

1D 3/62.7 — Soft brown silty clay, trace fine sand & roots

2D 3/64.6 — Soft gray organic silty clay clay, trace vegetation

3D 2/52.3 — do

4D 2/108.0 — Soft gray organic silty clay, some vegetation

5D 2/84.5 — do

6D 2/78.1 — do

7D 2/83.2 — do

8D 2/105.0 — do

9D 10 — T. do B. Gray fine-coarse sand, some silt, trace gravel

10D 72 — Gray f-c sand, some silt & gravel

11D 99/11.5 — do

12D 50/6* — do

13D 12/6* — Brown fine-coarse sand & gravel, trace silt

14D 81/21.1 — Hard red-brown & gray silty clay, trace fine sand

15D 25/16.0 — Hard yellow-brown silty clay, trace sand lenses

16D 65/14.5 — Hard red-brown & gray-blue silty clay, some f sand

17D 65/20.1 — Red-green, blue & gray silty fine sand, some clay

18D 78/17.4 — Hard red, green & brown silty clay, trace fine sand

(* 300lb. Hammer, 24"± fall)

1D 10/19.2 — Brown & gray silt, trace roots

2D 9/90.6 — Medium gray organic silty clay, trace vegetation & brown sandy silt

3D WH/42.9 — Soft gray organic silty clay, trace vegetation

4D 2/62.8 — do

5D 2/12.9 — do

6D 2/12.9 — do

7D 2/73.0 — do

8D 2/65.0 — do

9D 4/17.6 — do, peaty & layer of peat

10D 60/12.4 — Gray silty fine-coarse sand & gravel

11D 96/9.4 — Gray fine-coarse silty sand & gravel, trace mica

12D 137* — do

13D 131* — do

14D 99/7.9* — do

15D 60* — do

NR 40

16D 32/18.9 — Hard gray & red silty clay, trace fine sand

17D 96/15.0 — Gray fine-medium sand, trace silt

18D 101/22.4 — Hard red & gray silty clay, trace fine sand

19D 35/15.4 — Hard red & gray silty clay some fine sand

20D 103/14.7 — do

21D 38/17.3 — do

22D 47/20.7 — Greenish brown & blue silty clay, some fine sand

23D 125/12.8 — T. Red-brown clayey medium sand & sandy clay B. Greenish brown & white clayey sand & clay, trace mica

24D 126/19.0 — do

25D 91/21.9 — do

26D 88/24.1 — T do B. Mottled red, green silty clay, trace fine sand

27D 54/28.3 — Hard red silty clay, trace fine sand

28D 119/21.1 — Hard white & greenish gray silty clay, some fine sand

29D 113/22.4 — do

30D 126/18.5 — do

31D 58/22.0 — do

(* 300lb Hammer, 24"± fall)

1D 4/37.3 — Soft gray-brown silty clay, trace roots & fine sand

2D 2/35.8 — do

3D 2/33.0 — T. do, some fine sand B. Soft gray org. silty clay

4UD P/26.0 5U 6V 15.3 — Soft gray org. silty clay, tr. veg. Soft dark gray org. silty clay, tr. veg.

7U P/25.3 8V — do

9D 12 — Gray silty fine sand, trace clay

10D 72 — Gray f-c sand & gravel

11D 56 — do, some gravel

12D 67 — do

13D #9 — do

14D 77/11.8 — Gray silty f-c sand & gravel

15D 85/* — do

16D 50/13.8 — do

17D 110 — do

18D 150/6* — do

19D 62* — do

20D 20/26.3 — Hard mottled red, brown & green silty clay, trace fine sand

NR 7 / NR 7 / 21S 7/22.1 — Hard mottled red, brown, green, gray silty clay, trace fine sand pockets

22S 35/13.6* — Hard green, blue brown & red silty clay some fine sand

23D 22*/13.3 — Stiff blue-gray silty clay, some fine sand.

24S 31/14.5* — Hard green, red, brown, & blue silty clay, some fine sand.

(* 340 lb Hammer, 20"± Fall)

WATER LEVEL OBSERVATIONS FROM PIEZOMETER PB-28

DATE	9-6-62	9-7	9-11	9-12	9-18	9-18	9-18	9-20	9-21	10-5	10-12	10-19	11-6	11-7	11-28
TIME	1000	0815	1530	0835	0835	1120	1530	0745	1420	1345	0845	1530	1530	1010	1600
WL ELEV.	+1.4	+1.2	+1.4	+1.2	-1.8	-1.3	-1.6	-2.3	-2.7	-2.6	-1.3	-0.3	+0.7	+0.4	+0.5

SECTION 7 - 7

NOTES:
1. For General Notes & Legends see Sheet 40 & 41.
2. For Plan see Sheet 41

GRAPHIC SCALES

Horizontal 40' 20' 10' 0 40' 80 120'

Vertical 10' 5' 0 10' 20' 30'

FOR INFORMATION ONLY

DELAWARE DEPARTMENT OF HIGHWAYS & TRANSPORTATION
DIVISION OF HIGHWAYS

INTERSTATE ROUTE I-495

BORINGS AND GEOLOGIC SECTIONS
STA. 386+30 TO STA. 399+10

J. E. GREINER CO.
MORAN, PROCTOR, MUESER & RUTLEDGE
CONSULTING ENGINEERS

D. S.L.T.
T. L.S.
C. R.C.H.

SCALE AS SHOWN

DATE 3/1/63 - 7/1/71

APPROVED BY: BRIDGE ENGINEER

GEILVIE PRESS, INC. — D-187

COUNTY	CONTRACT	P. E. & REG. NO.	STATE	FED. AID PROJECT NO.	FISCAL YEAR	SHEET NO.	TOTAL SHEETS
NEW CASTLE	71-05-007	2	DEL.	I-495-3(21)15		43	44

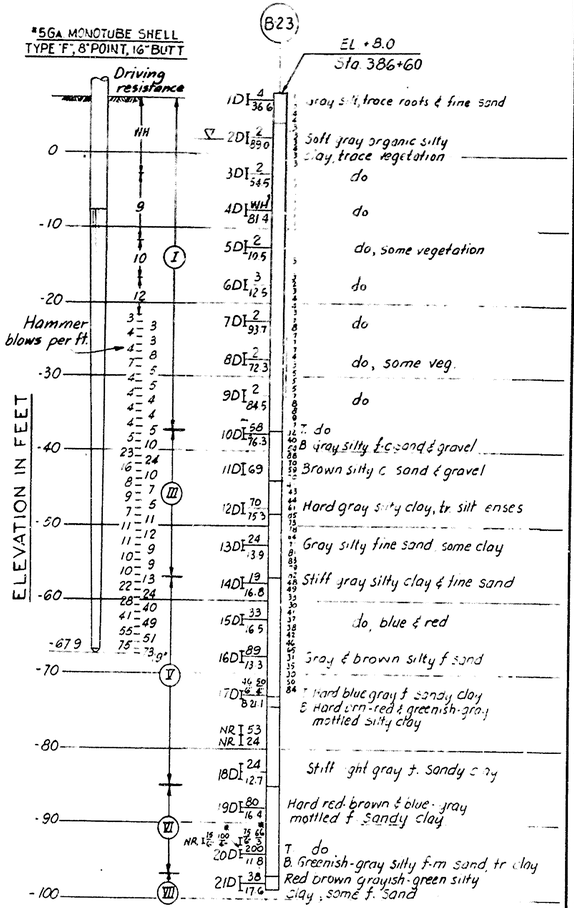

TEST PILE NO. 5

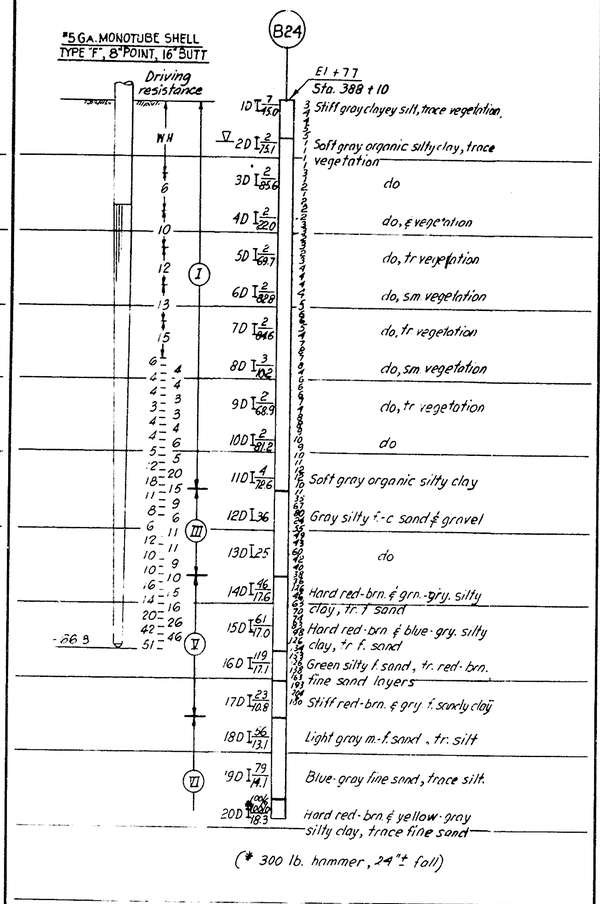

TEST PILE NO. 6

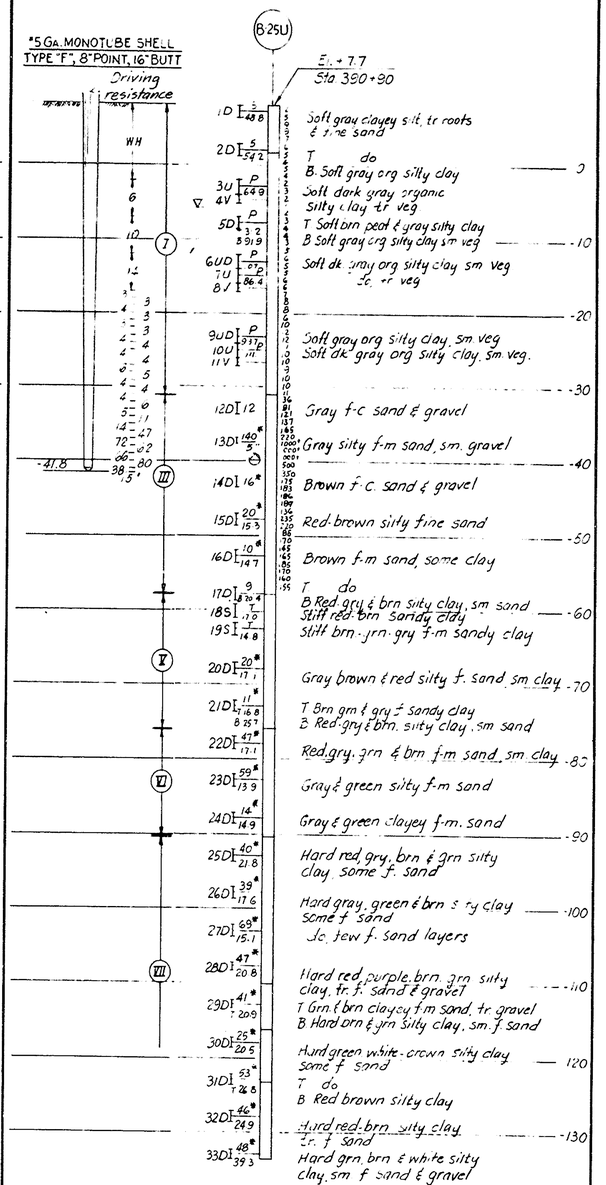

TEST PILE NO. 7

LEGEND:

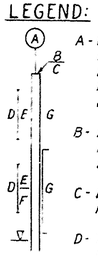

A - Boring location and number, Suffixed by a letter "U" indicates undisturbed sample boring using 3½" diameter casing. All other borings are dry sample borings using 2½" diameter casing.

B - Elevation of ground surface at land boring locations or elevation of mud line at water boring locations

C - Location of boring referenced to center-line stationing of Rte. I-495

D - Type and number of sample:
D - Dry samples taken w/a 2" O.D. split spoon
U - Undisturbed samples recovered w/a 3" diameter fixed-piston sampler
S - 3" diameter open end "shelby" tube samples
NR - No recovery
Core - 1 3/16" rock core.

E - Penetration resistance during advancing of sampler recorded in number of blows of 140 lb hammer, falling 30" per foot of penetration or as otherwise noted. Blows indicated are for last 12" of an 18" drive. Also indicates per cent recovery of rock core
P - Indicates sampler pushed down by hand for dry samples and by use of machine for undisturbed samples.
T - Indicates sampler driven down by 340 lb hammer with a variable height of fall. Blows not shown
WH - Advanced under weight of sample hammer
WR - Advanced under weight of "A" drill rods

F - Water content of soil sample expressed in per cent of dry weight

G - Penetration resistance encountered in advancing casing. Recorded in number of blows of 300 lb. hammer for dry sample holes and 340 lb. hammer for undisturbed sample holes with 24" fall per foot of penetration

[G - Penetration resistance of casing driven after hole had been washed ahead

▽ - Most reliable ground water level as observed in bored hole

NOTES:

1. Soils descriptions were made by the Consulting Engineer and pertain to individual samples
2. The Consulting Engineer and the State do not represent that these logs show completely the existing conditions and do not guarantee the correctness of this information or any interpretations made from them
3. All elevations refer to U.S.C.&G. Survey Datum: Mean Sea Level at Sandy Hook = 0.00 ft.
4. Test piles in sketches are not drawn to scale
5. Pile driving resistance in blows per foot is shown in column at left of boring log. Monotube piles were driven with Vulcan 06 hammer. H-piles with McKiernan-Terry S10.
6. For location of test piles see Plan - Dwgs. No 41.

FOR INFORMATION ONLY

DELAWARE DEPARTMENT
OF HIGHWAYS & TRANSPORTATION
DIVISION OF HIGHWAYS

INTERSTATE ROUTE I-495

CHRISTINA RIVER BRIDGE
TEST PILE DRIVING RECORDS

J. E. GREINER CO.
MORAN, PROCTOR, MUESER & RUTLEDGE
CONSULTING ENGINEERS

D. P. O.
T. R. B.
C. J.P.G.

SCALE

DATE 3/1/63 - 7/1/71

APPROVED BY:

BRIDGE ENGINEER

©KEUFFEL & ESSER CO. INC — 8-127 4540

COUNTY	CONTRACT	P. O. & SEC. NO.	STATE	FED. AID PROJECT NO.	FISCAL YEAR	SHEET NO.	TOTAL SHEETS
NEW CASTLE	71-05-007	8	DEL.	I-495-3(21)15		44	44

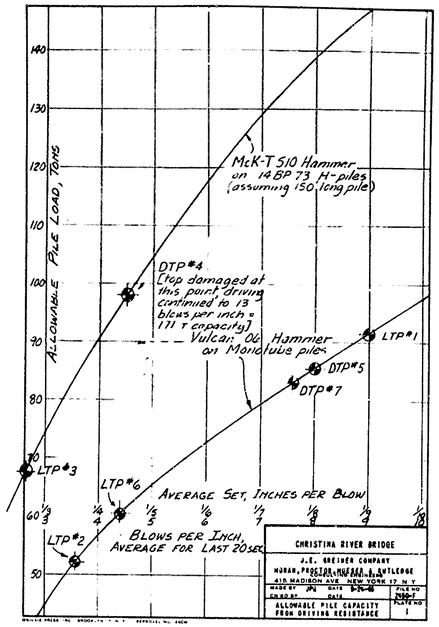

CHRISTINA RIVER BRIDGE
J.E. GREINER COMPANY
MORAN, PROCTOR, MUESER & RUTLEDGE
CONSULTING ENGINEERS
415 MADISON AVE. NEW YORK 17 N.Y.
MADE BY JPL DATE 9-24-68 | FILE NO 2460-F
CHECKED BY DATE | PLATE NO 1
ALLOWABLE PILE CAPACITY FROM DRIVING RESISTANCE

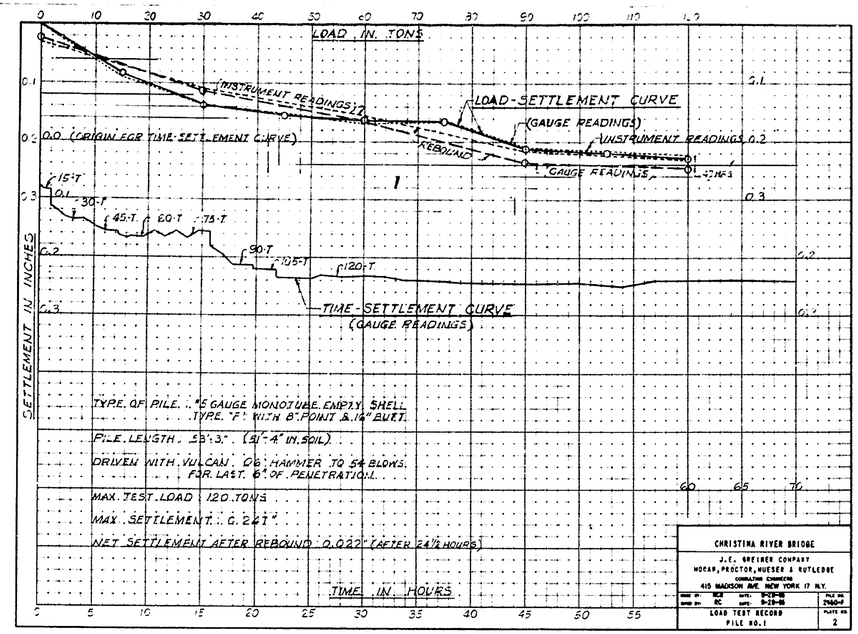

CHRISTINA RIVER BRIDGE
J.E. GREINER COMPANY
MORAN, PROCTOR, MUESER & RUTLEDGE
CONSULTING ENGINEERS
415 MADISON AVE. NEW YORK 17 N.Y.
DRWN BY: BCR DATE: 9-20-68 | FILE NO 2460-F
CHKD BY: RC DATE: 9-23-68 | PLATE NO 2
LOAD TEST RECORD
FILE NO. 1

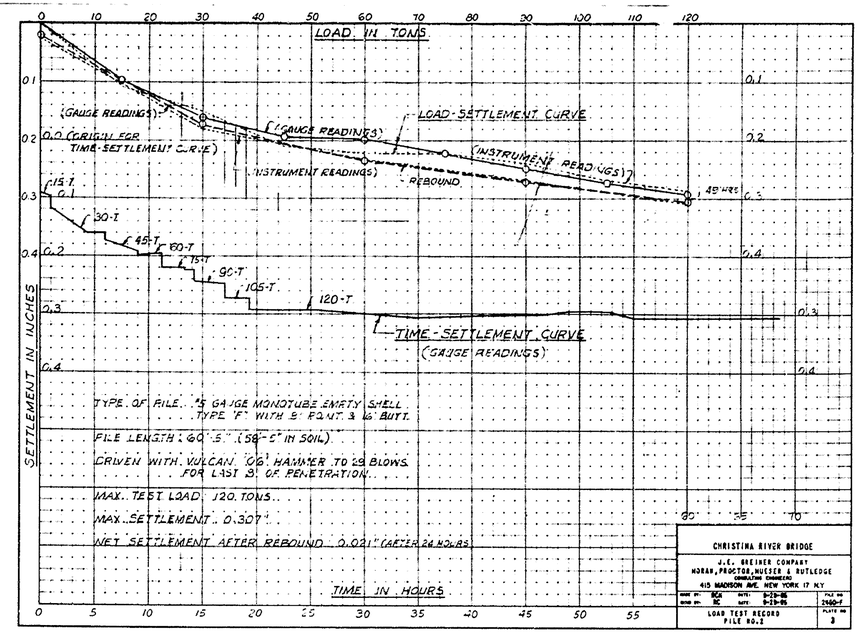

CHRISTINA RIVER BRIDGE
J.E. GREINER COMPANY
MORAN, PROCTOR, MUESER & RUTLEDGE
CONSULTING ENGINEERS
415 MADISON AVE. NEW YORK 17 N.Y.
DRWN BY: BCR DATE: 9-20-68 | FILE NO 2460-F
CHKD BY: RC DATE: 9-23-68 | PLATE NO 3
LOAD TEST RECORD
FILE NO. 2

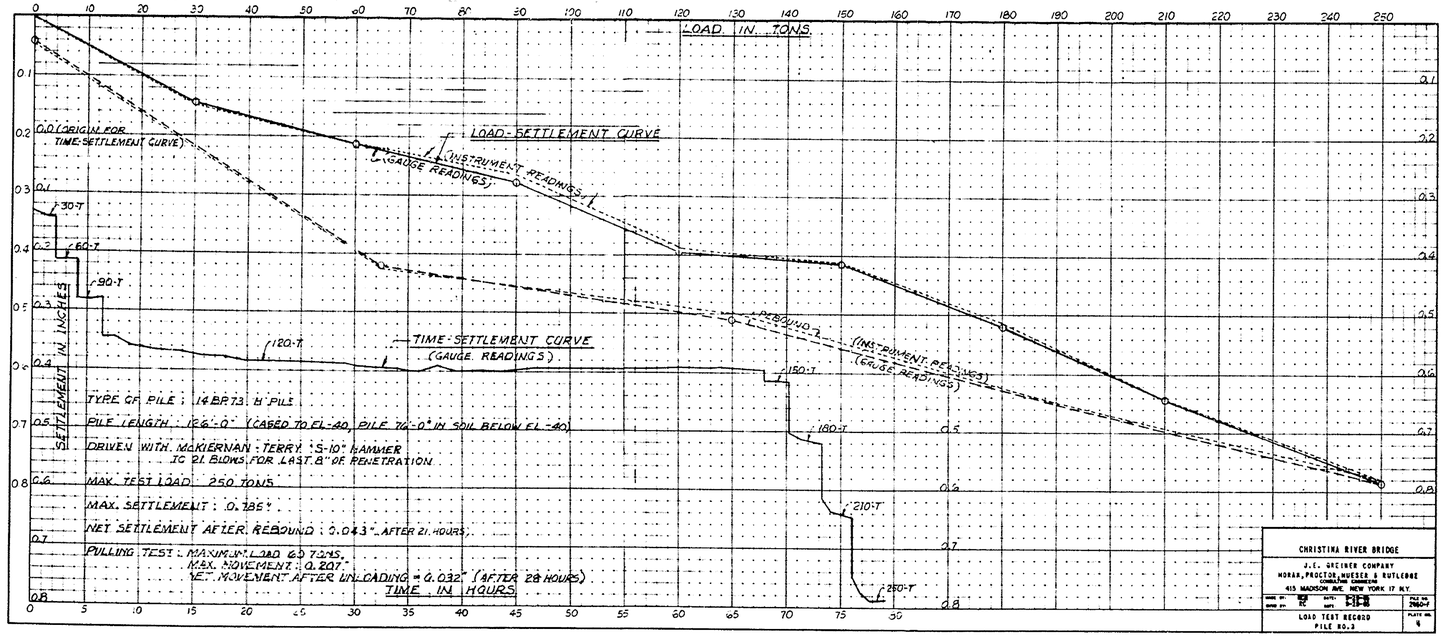

CHRISTINA RIVER BRIDGE
J.E. GREINER COMPANY
MORAN, PROCTOR, MUESER & RUTLEDGE
CONSULTING ENGINEERS
415 MADISON AVE. NEW YORK 17 N.Y.
DRWN BY: BCR DATE: 9-20-68 | FILE NO 2460-F
CHKD BY: RC DATE: 9-23-68 | PLATE NO 4
LOAD TEST RECORD
FILE NO. 3

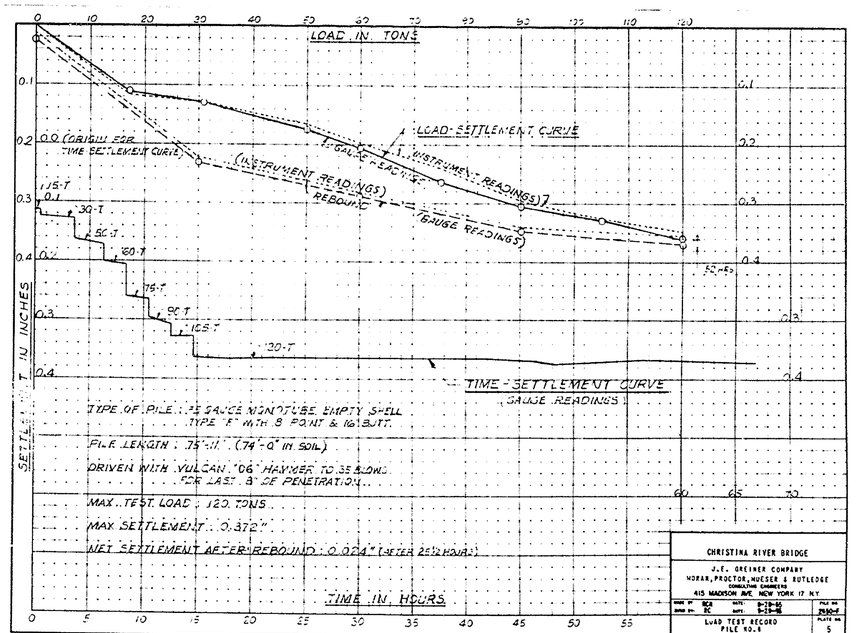

CHRISTINA RIVER BRIDGE
J.E. GREINER COMPANY
MORAN, PROCTOR, MUESER & RUTLEDGE
CONSULTING ENGINEERS
415 MADISON AVE. NEW YORK 17 N.Y.
DRWN BY: BCR DATE: 9-20-68 | FILE NO 2460-F
CHKD BY: RC DATE: 9-23-68 | PLATE NO 5
LOAD TEST RECORD
FILE NO. 4

Note:
For location of test piles see Plan Dwg No's. 41.

FOR INFORMATION ONLY

DELAWARE DEPARTMENT OF HIGHWAYS & TRANSPORTATION
DIVISION OF HIGHWAYS

INTERSTATE ROUTE I-495

CHRISTINA RIVER BRIDGE
PILE TEST RECORDS

J. E. GREINER CO.
MORAN, PROCTOR, MUESER & RUTLEDGE
CONSULTING ENGINEERS

D.
T. H. D.
C.

SCALE NONE
DATE 7/1/71

APPROVED BY
BRIDGE ENGINEER

REVISIONS