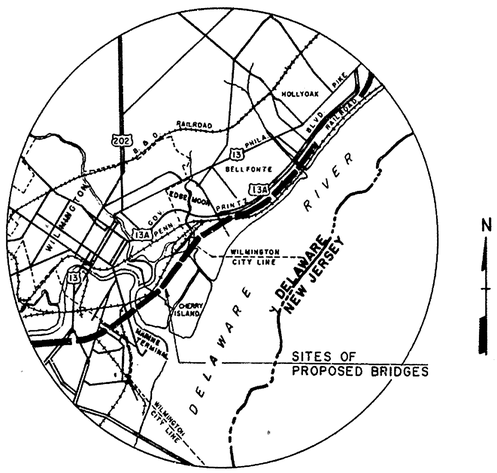

SCALE: 1" = 7500'

THE STATE OF DELAWARE

DEPARTMENT OF HIGHWAYS & TRANSPORTATION
DIVISION OF HIGHWAYS
PLAN
FOR
CONSTRUCTION OF CONTRACT Nº 73-10-014

DESIGN CRITERIA	
FEDERAL CLASS	INTERSTATE
A.D.T. (1991)	42900
D.H.V. (1991)	5150
PERCENTAGE OF TRUCKS	13%
DESIGN SPEED	70 M.P.H.
MIN. STOPPING SIGHT DISTANCE	600 FT.

AS BUILT PLANS
MARCH 26, 1993 — K.B.E.

RELOCATED 12TH ST. BRI. OVER P.C.T. CO.	STA.	31+21.75	TO STA.	34+07.56	285.81 FT.
RELOCATED 12TH ST. BRI. OVER I-495	STA.	39+56.52	TO STA.	41+45.40	188.88 FT.
		474.69	FEET:	0.0899	MILES

SCALE: PLAN: 1 IN.= 50 FT.
PROFILE: HOR. 1 IN.= 50 FT.
VERT. 1 IN.= 5 FT.

FEDERAL AID PROJECT Nº I-495-3(28)16
(THIS IS A CONTROLLED ACCESS HIGHWAY)

COUNTY	CONTRACT	F.A.P. DIV. NO.	STATE	FED AID PROJ. NO.	FISCAL YEAR	SHEET NO.	TOTAL SHEETS
New Castle	73-10-014	2	DEL.	I-495-3(28)16		1	43

INTERSTATE HIGHWAY ROUTE I-495
STRUCTURES

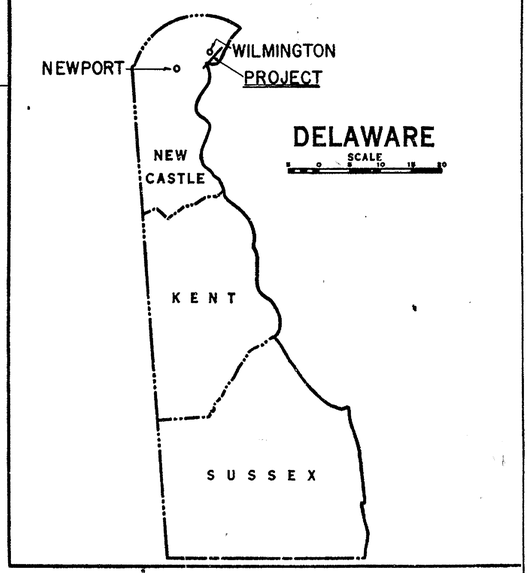

BOOK NUMBER

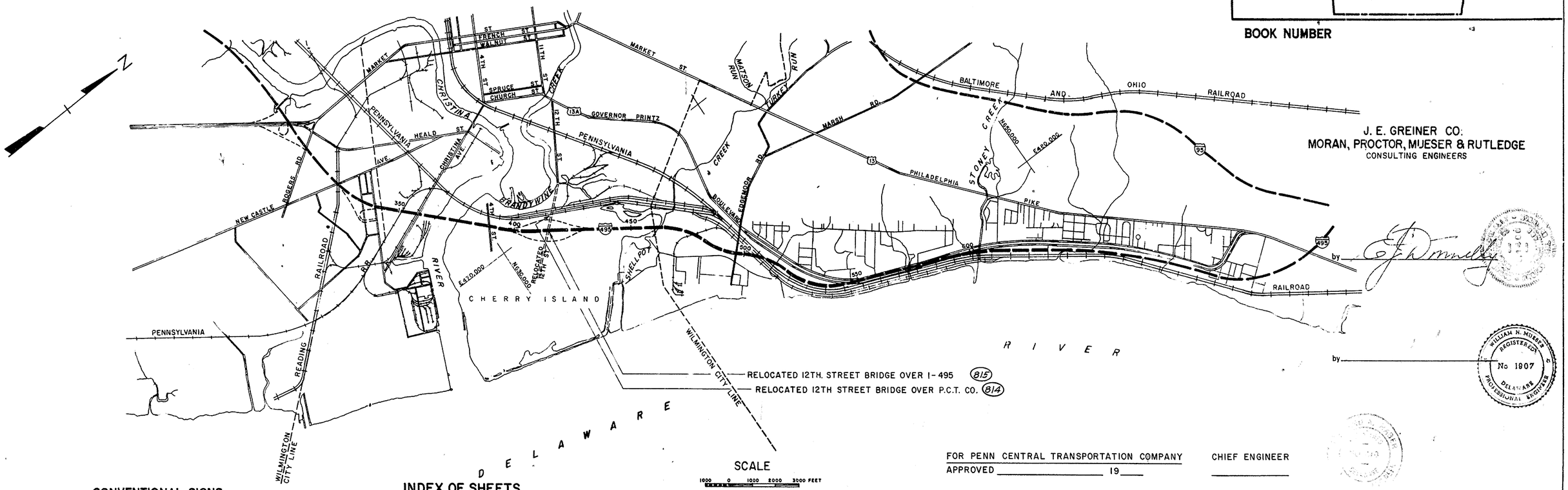

SCALE
1000 0 1000 2000 3000 FEET

J. E. GREINER CO.
MORAN, PROCTOR, MUESER & RUTLEDGE
CONSULTING ENGINEERS

by _____

WILLIAM H. MUESER
REGISTERED
No 1807
DELAWARE
PROFESSIONAL ENGINEER

FOR PENN CENTRAL TRANSPORTATION COMPANY
APPROVED _____ 19____

CHIEF ENGINEER _____

CONVENTIONAL SIGNS

COUNTY LINE		WIRE FENCE	
CITY OR TOWN LINE		PRESENT CULVERT	
RIGHT OF WAY LINE		PROPOSED CULVERT	
CENTRE LINE, PROPOSED ROAD	240	TELEGRAPH POLE	
MACADAM, TRAVELLED ROAD		TREE	
TROLLEY OR RAILROAD			
CONC. INTAKE APRON, TYPE 2			
CONDUIT			

PROFILE
GRADE
GROUND
DATUM
250 GR. 252
288 GR. 290

INDEX OF SHEETS

SHEET NO.1	TITLE SHEET
2	GENERAL NOTES & QUANTITIES
3-18	RELOCATED 12 TH STREET BRIDGE OVER P.C.T. CO.
19-28	RELOCATED 12 TH STREET BRIDGE OVER I-495
29-37	MODIFICATIONS TO R.R. ELECTRIFICATION FACILITIES
38-40	BORING LOCATION PLANS, GENERAL NOTES, LEGEND AND INDEX
41-43	BORINGS AND GEOLOGICAL SECTION

DIVISION OF HIGHWAYS		DEPARTMENT OF TRANSPORTATION FEDERAL HIGHWAY ADMINISTRATION
RECOMMENDED 5/8 19 74 John A. Lewis — REVIEW ENGINEER	RECOMMENDED 5-8 19 74 G. E. Greiner — CHIEF ENGINEER	APPROVED _____ 19____
RECOMMENDED 5/8 19 74 A. B. Cullen Jr. — ASSISTANT CHIEF ENGINEER	APPROVED 5-8 19 74 R. D. Weber — DIRECTOR OF HIGHWAYS	DIVISION ENGINEER

COUNTY	CONTRACT	P.B.A. REG. NO.	STATE	FED. AID PROJECT NO.	SHEET NO.	TOTAL SHEETS
New Castle	73-10-014	2	DEL	I-495-3(28)16	2	43

INTERSTATE ROUTE I-495

NO.	REVISIONS	BY	DATE
1	Addendum N°1 - Delete Item 739, Field Office	J.A.L.	3-19-75
2	Revised Fixed Quantity Items	T.F.F.	6-16-75

— GENERAL NOTES —

SPECIFICATIONS: Design criteria are based on 1973 Standard Specifications for Highway Bridges, American Association of State Highway Officials.
Material and workmanship are to conform with State of Delaware, Department Of Highways And Transportation, Standard Specifications dated January 1, 1974 unless otherwise noted and/or specified by Special Provisions.

BORINGS: The subsoil data and interpretations do not form a part of the contract, and will be available to the bidders for their information only. Available soil samples taken at the site may be examined by arrangement with Delaware Department of Highways. The contractor shall make his own interpretation and judgments of the boring results and assume full responsibility for same.

ELEVATIONS: Elevations are based on U.S.C. & G.S. datum, 1929.

FOUNDATIONS: All piles are cast-in-place concrete piles. The nominal diameter and shell thickness of the steel casings or shells shall be as shown in the Specifications or on the Plans or as approved by the Director.

Piles shall be driven to develop a minimum bearing capacity of 35 tons for 12" ϕ piles and 45 tons for 14" ϕ piles. In abutment areas predrilling through fill will be required.

A minimum of one test pile shall be driven at a permanent pile location in all abutment and pier footings as directed by the Engineer.

PORTLAND CEMENT CONCRETE MASONRY: All concrete shall be controlled concrete with a minimum compressive strength of 4000 p.s.i in 28 days. Cover over reinforcing bars shall be 2" except as otherwise noted on the drawings. All exposed edges of concrete shall be chamfered 3/4" x 3/4" unless otherwise shown. Concrete in areas under bearing plates shall be constructed to a minimum of 1/4" above finished elevations and ground to grade.

BAR REINFORCEMENT: Reinforcement bars shall meet the requirements for deformed billet steel bars for concrete reinforcement, A.S.T.M. A 615 Grade 40 or Grade 60. Lapped splices, unless otherwise noted, to be 24 bar diameters or a min. length of 1'-6". Top deck reinforcing steel shall be Epoxy coated

DECK SLAB: Longitudinal construction joints in the superstructure deck slab of bridges are optional with the Contractor. Location and type of joints, if used, shall be approved by the Engineer. Stay-in-place forms for the decks will be permitted as an alternate.
All shop drawings for stay-in-place metal forms shall be submitted to the Engineer for approval. For details see sheet 25.
No additional costs to the Delaware Department of Highways and Transportation shall result from changes requested by the Contractor and approved by the Engineer.

SHEAR CONNECTORS: Two general types of welded stud shear connectors are eligible for use at the Contractor's option: (a) Solid-flux-filled welding end, (b) Granular-flux-filled welding end. (Detailed on Contract Plans).
Should the Contractor elect to use a different type of shear connector than shown on the Plans, he shall submit for approval complete detailed shop drawings and all other pertinent data concerning the shear connector he proposes to use. The proposed shear connector shall develop the equivalent resistance to shear of the shear connector shown on the plans, and shall be approved by the Engineer. Shear connectors must be field installed.

STRUCTURAL STEEL (STEELWORK): All structural carbon steel shall conform with the requirements of AASHO Designation M-183 (ASTM A 36). Unit Stress f_s: 20,000 p.s.i.
All welding shall conform to the Standard Specifications for Welded Highway and Railway Bridges of the American Welding Society, with current corrections and addenda.
All dimensions shown on the drawings are for the structures at a normal temperature of +68° F. To avoid oversight the shop drawings shall show clearly the nature, dimensions and locations of all welds, bolt sizes, open holes, painting, etc.
Rolled beams and girders shall be cambered as shown on the drawings, allowing for loss of camber due to welding.
Do not paint steel surfaces in contact with concrete. The bearing shoes, when in final position, are to be painted in order to prevent rust stains on the concrete.

Anchor bolts shall be drilled in place and set in non-shrink grout. Immediately after the grout has attained its initial set the anchor bolts shall be thoroughly coated with approved heavy grease and securely wrapped to burlap. Payment for these rust preventative measures shall be included in the price bid for Section 606.
No welded field splices will be permitted.
All stiffener plates are to be in a truly vertical plane when beams are in final erected position with the slab in place.

EXCAVATION ADJACENT TO RAILROAD TRACKS: Plans for all sheeting and shoring required for excavation adjacent to railroad tracks shall be prepared by a registered professional engineer and submitted to the Delaware Department of Highways and Transportation, Division of Highways for approval by the P.C.T. Co.

ELECTRIFICATION FACILITY CONSTRUCTION

SECTION	ITEM	UNIT	PROPOSAL
S.P.	EXCAVATION FOR STRUCTURES	L.S.	L.S.
S.P.	TIMBER PILES	L.S.	L.S.
S.P.	PORTLAND CEMENT CONCRETE STRUCTURES	L.S.	L.S.
S.P.	METAL STRUCTURES	L.S.	L.S.
S.P.	BONDING AND GROUNDING INSERTS OVERHEAD BRIDGE	L.S.	L.S.
S.P.	GUY ASSEMBLIES	L.S.	L.S.
S.P.	CONDUCTOR RELOCATIONS	L.S.	L.S.
S.P.	REMOVAL AND DISPOSAL	L.S.	L.S.

PROPOSAL QUANTITIES

SECTION	207	207	602					605		606		607	624				628	704			720		S.P.	S.P.			S.P.	S.P.	739	S.P.
ITEM	EXCAVATION AND BACKFILL FOR STRUCTURES IN COFFERDAM	* EXCAVATION AND BACKFILL FOR STRUCTURES OPEN EXCAVATION	* PORTLAND CEMENT CONCRETE MASONRY: ABUTMENTS	PIER FOOTINGS	PIER ABOVE FOOTINGS	SUPER-STRUCTURE	APPROACH SLABS	* BAR REINFORCEMENT: PLAIN	EPOXY COATED	STEEL STRUCTURES: EST. WEIGHT LBS.		METAL BRIDGE RAILING	12" ϕ CAST-IN-PLACE CONCRETE PILES (35 T) ▲	14" ϕ CAST-IN-PLACE CONCRETE PILES (45 T) ▲	STEEL SHELL TEST PILES ▲: 12" ϕ	14" ϕ	CONCRETE SLOPE PAVING	PORTLAND CEMENT CONCRETE GUTTER			CHAIN LINK FENCE (H = 4'-6")		Mobilization	* PREFABRICATED EXPANSION JOINT SYSTEMS: SEAL SIZE: 2 x 2 1/16	1 5/8 x 1 5/8	4 x 4 3/4	PROTECTIVE BARRIER	TEMPORARY PROTECTIVE SHIELD	FIELD OFFICE	TRAINEE
UNIT	C.Y.	C.Y.	C.Y.	C.Y.	C.Y.	C.Y.	C.Y.	Lbs.	Lbs.	L.S.	L.S.	L.F.	L.F.	L.F.	L.F.	L.F.	S.Y.	S.Y.			L.F.		L.S.	L.F.			L.F.	L.S.	L.S.	EACH
Relocated 12th. Street Bridge Over P.C.T. Co.	280	442	290	103	214	689	275	206,665	79,600	(123,000)		270	5,305	3,370	160	120	1,050	140			—		L.S.	—	70	140	342	L.S.	L.S.	1
Relocated 12th. Street Over I-495	—	738	444	75	58	577	310	148,522	57,380		(708,000)	73	6,904	2,522	130	60	420	85			370			160	—	—	—	—	—	1
PROPOSAL	280	1,180 *	~~734~~ * 733.90 *	178 *	~~274~~ * 272.70 *	~~1,286~~ * 1275.10 *	585 *	~~355,187~~ * 354,875 *	136,980 *	L.S.	L.S.	343	12,209	5,892	290	180	1,470	225			370		L.S.	160 *	70 *	140 *	342	L.S.	L.S.	2

* Fixed Quantity Item, See Sect. 109.06 of Standard Specifications.

▲ No.7 Gauge

DELAWARE
DEPARTMENT OF HIGHWAYS & TRANSPORTATION
DIVISION OF HIGHWAYS

GENERAL NOTES & QUANTITIES

D.
T. R.B.F.
C.

SCALE

APPROVED BY:

BRIDGE ENGINEER

COUNTY	CONTRACT	P. R. J. REQ. NO.	STATE	FED. AID PROJECT NO.	FISCAL YEAR	SHEET NO.	TOTAL SHEETS
New Castle	73-10-014	2	DEL.	I-495-3(28)16		3	43

INTERSTATE ROUTE I-495
RELOCATED 12th STREET BRIDGE OVER P.C.T. CO.

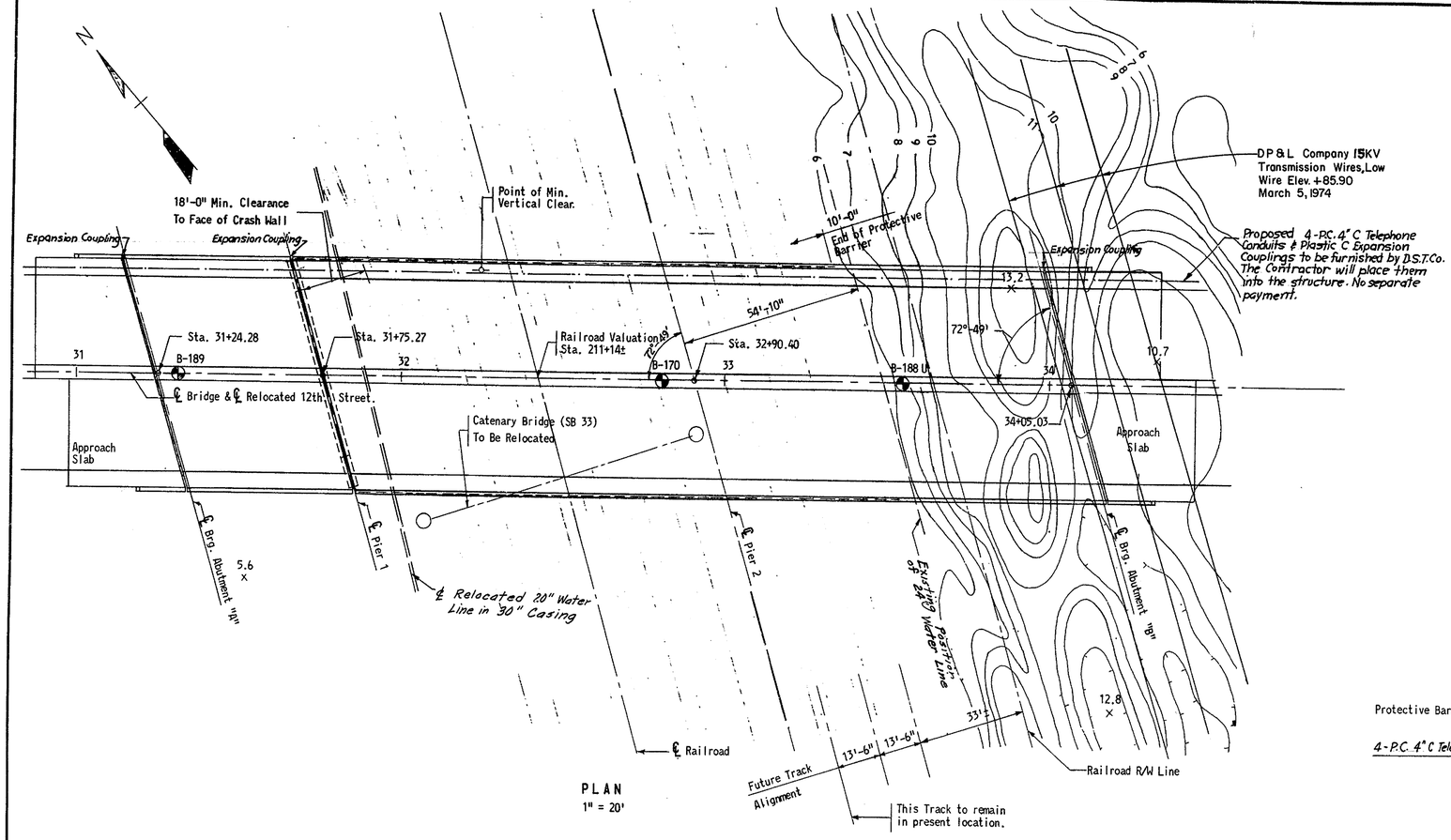

PLAN
1" = 20'

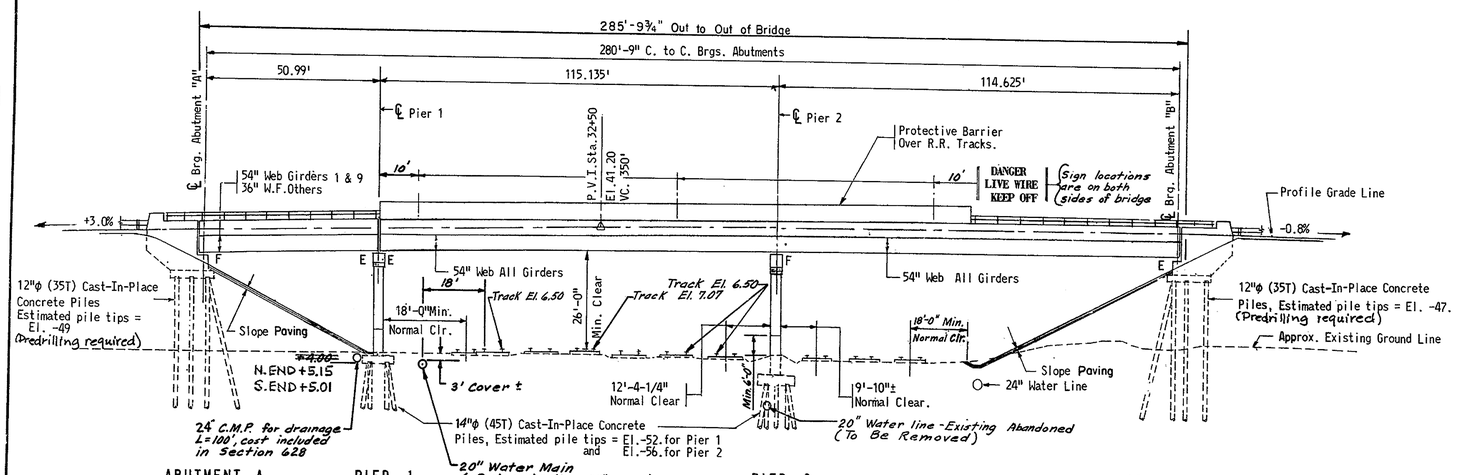

ELEVATION
1" = 20'

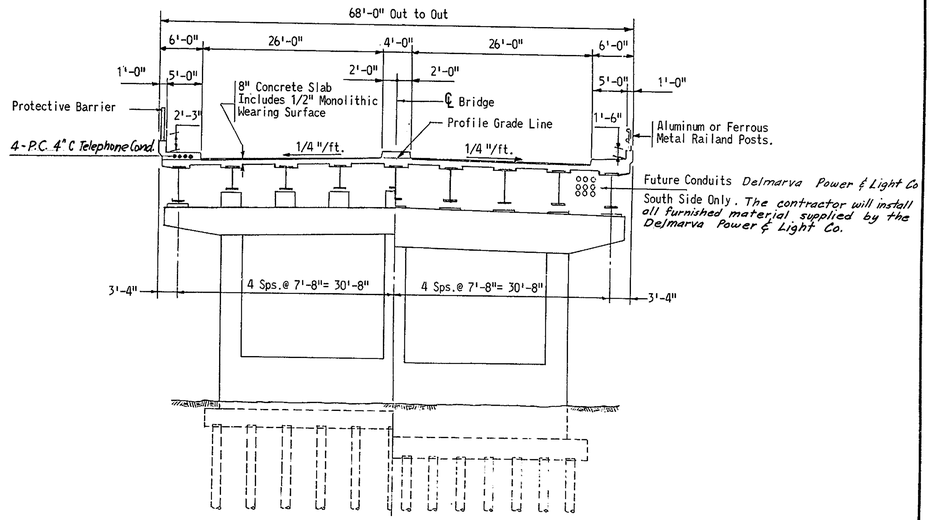

Elevation Pier 1 Elevation Pier 2
Pier Elevations
1" = 10'

NOTES:
For General Notes, see Sheet No. 2
SUPERSTRUCTURE: Concrete Deck - Continuous Steel Beam Construction
Composite Action under Live Load.
BORINGS: Locations shown thus ⊕ B-146.

REVISIONS

DELAWARE DEPARTMENT
OF HIGHWAYS & TRANSPORTATION
DIVISION OF HIGHWAYS

INTERSTATE ROUTE I-495

SITE PLAN

J. E. GREINER CO.
MORAN, PROCTOR, MUESER & RUTLEDGE
CONSULTING ENGINEERS

D. W. G.
T. W. G
C. C. R.

SCALE AS NOTED
DATE 7-1-1968

APPROVED BY:
BRIDGE ENGINEER

COUNTY	CONTRACT	P. R. A. REG. NO.	STATE	FED. AID PROJECT NO	FISCAL YEAR	SHEET NO.	TOTAL SHEETS
New Castle	73-10-014	2	DEL.	I-495-3(28)16		4	43

INTERSTATE ROUTE I-495
RELOCATED 12th STREET BRIDGE OVER P.C.T. CO.

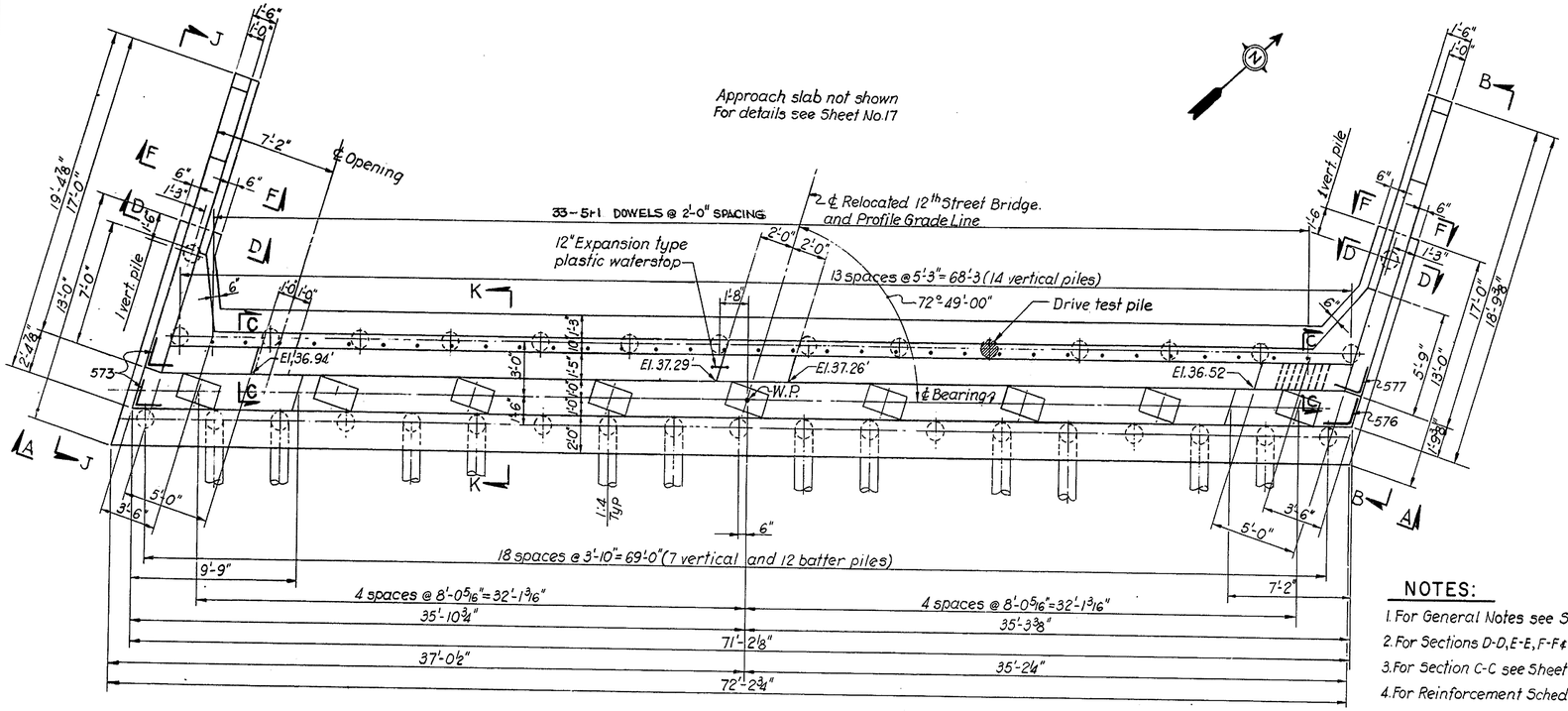

PLAN
Scale: 1/4" = 1'-0"

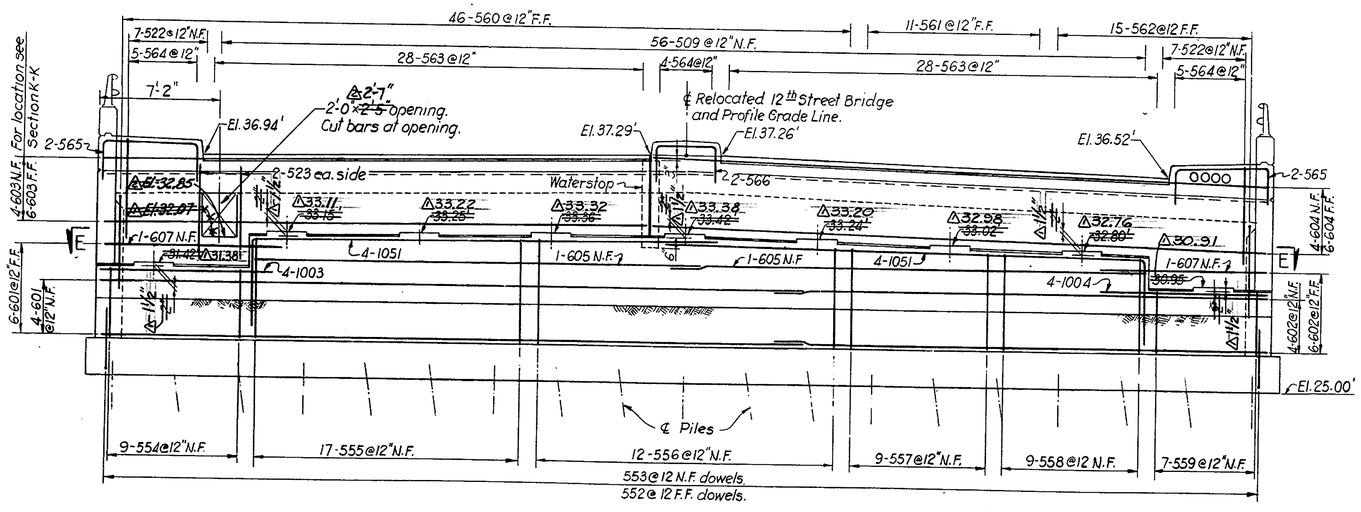

ELEVATION A-A
Scale: 1/4" = 1'-0"

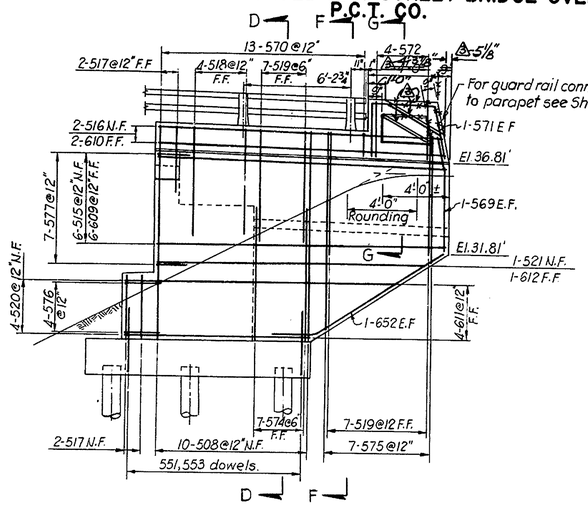

ELEVATION B-B
Scale: 1/4" = 1'-0"

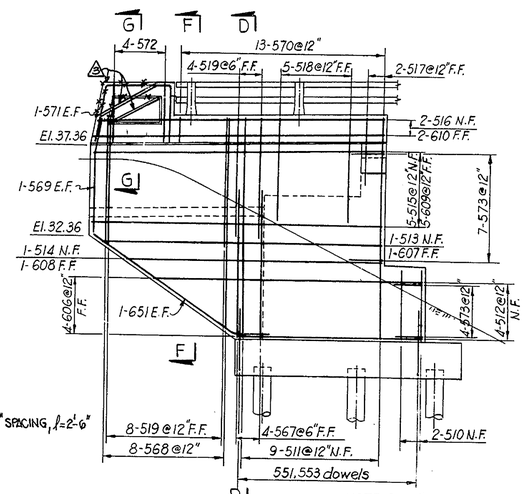

NOTE: For dimensions and details not shown see Elev. B-B

ELEVATION J-J
Scale: 1/4" = 1'-0"

NOTES:
1. For General Notes see Sheet No.2.
2. For Sections D-D, E-E, F-F & G-G see Sheet No.6.
3. For Section C-C see Sheet No.15.
4. For Reinforcement Schedule see Sheet No.7.

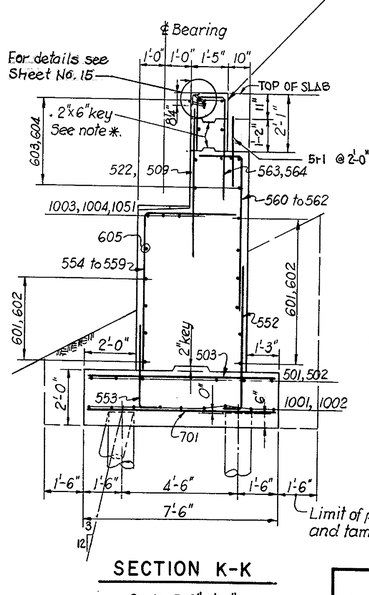

SECTION K-K
Scale: 3/8" = 1'-0"

* Optional Construction Joint. Contractor to coordinate pouring of abutment wall above bearing seat, so as to allow for proper setting of the expansion dam. Provide necessary dowels in wing walls to match horizontal reinf. above joint.

DELAWARE DEPARTMENT OF HIGHWAYS & TRANSPORTATION
DIVISION OF HIGHWAYS

INTERSTATE ROUTE I-495

ABUTMENT "A"

J. E. GREINER CO.
MORAN, PROCTOR, MUESER & RUTLEDGE
CONSULTING ENGINEERS

D. S.L.T. T. P.F. C. I.L., S.P.	SCALE AS NOTED	APPROVED BY:
	DATE 7-1-1968	BRIDGE ENGINEER

Revised Elevation A-A & K-K
Revised Elevation B-B & Plan
Revised Elevation A-A

COUNTY	CONTRACT	P. B. A. REG. NO.	STATE	FED. AID PROJECT NO	FISCAL YEAR	SHEET NO.	TOTAL SHEETS
New Castle	73-10-014	2	DEL.	I-495-3(28)16		5	43

INTERSTATE ROUTE I-495
RELOCATED 12th STREET BRIDGE OVER P.C.T. CO.

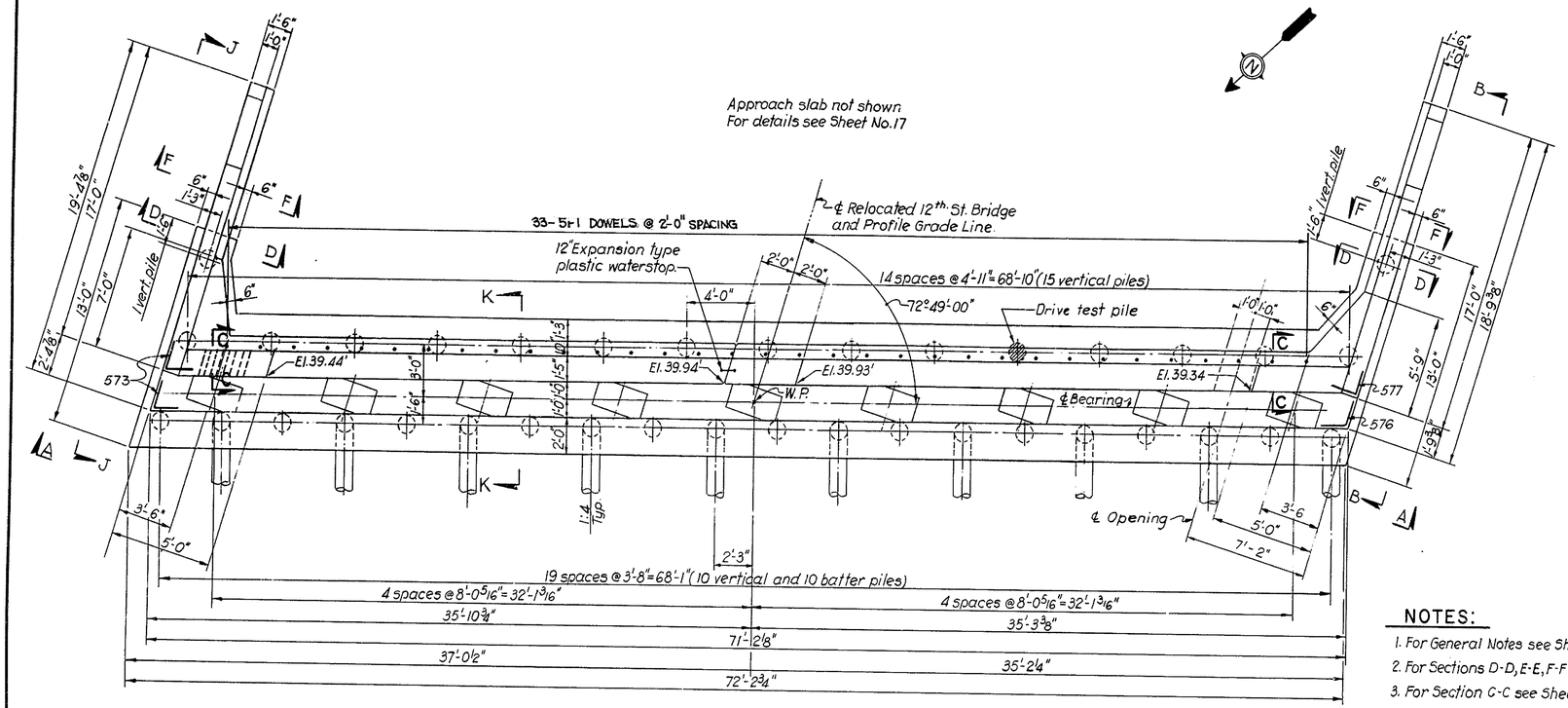

PLAN
Scale: 1/4"=1'-0"

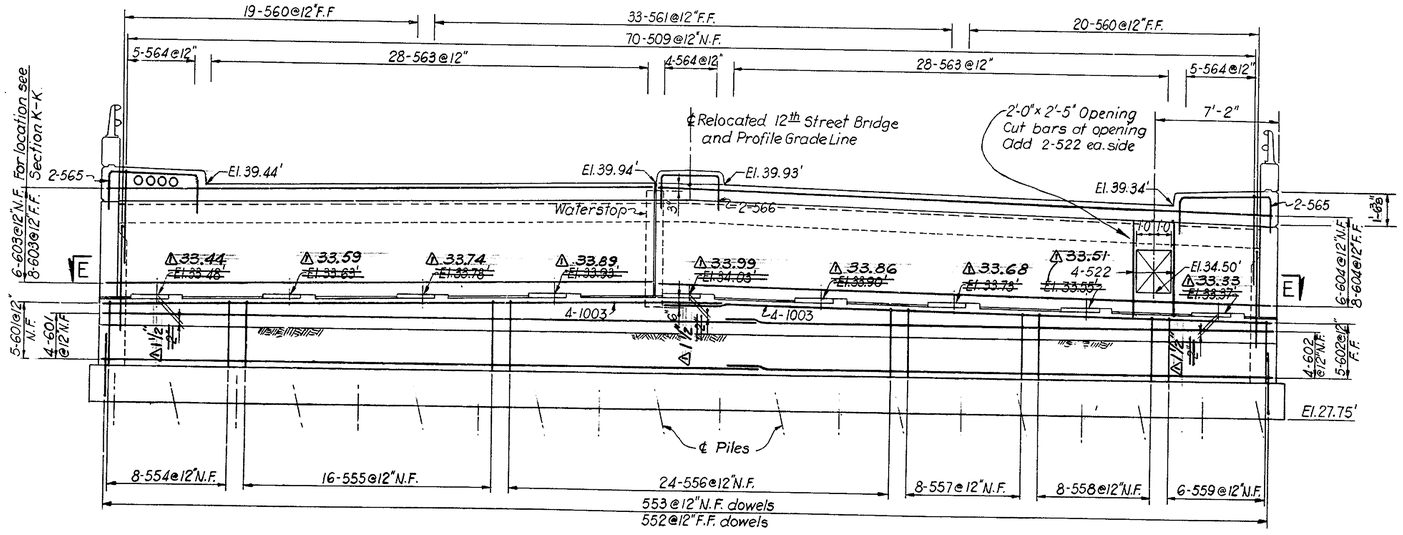

ELEVATION A-A
Scale: 1/4"=1'-0"

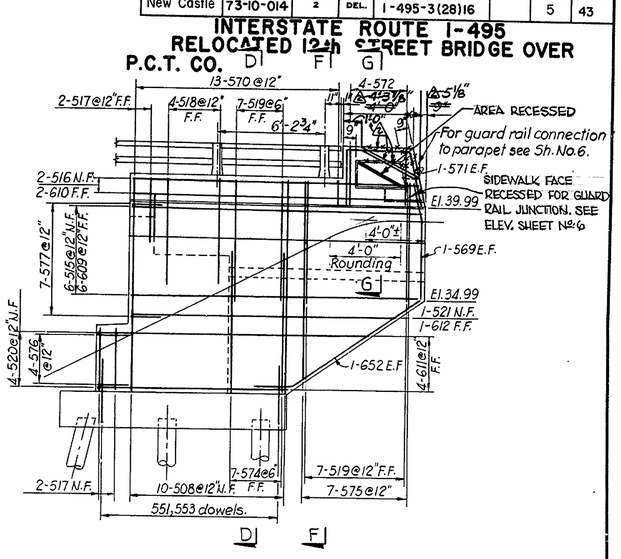

ELEVATION B-B
Scale: 1/4"=1'-0"

NOTES:

1. For General Notes see Sheet No.2.
2. For Sections D-D, E-E, F-F & G-G see Sheet No 6.
3. For Section C-C see Sheet No.15.
4. For Reinforcement Schedule see Sheet No.7.

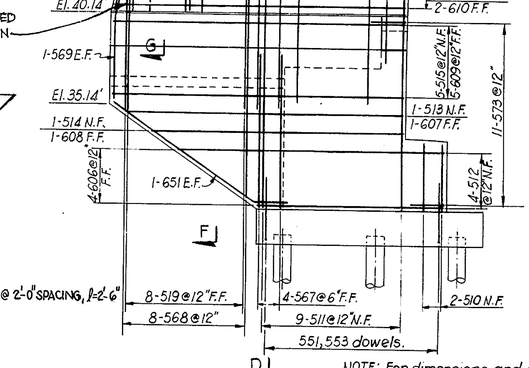

NOTE: For dimensions and details not shown see Elevation B-B

ELEVATION J-J
Scale: 1/4"=1'-0"

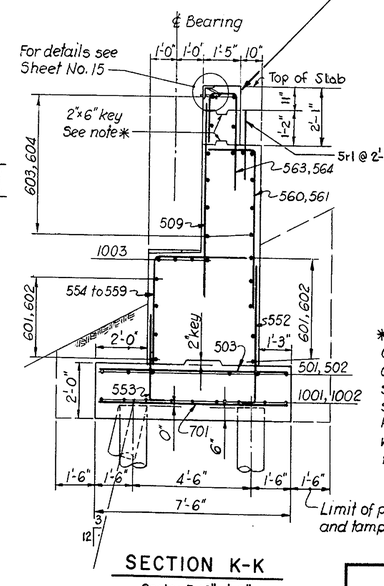

SECTION K-K
Scale: 3/8"=1'-0"

*Optional Construction Joint. Contractor to coordinate pouring of abutment wall above bearing seat, so as to allow for proper setting of the expansion dam. Provide necessary dowels in wing walls to match horizontal reinf. above joint.

J. E. GREINER CO.
MORAN, PROCTOR, MUESER & RUTLEDGE
CONSULTING ENGINEERS

DELAWARE DEPARTMENT OF HIGHWAYS & TRANSPORTATION
DIVISION OF HIGHWAYS

INTERSTATE ROUTE I-495

ABUTMENT "B"

D. S.L.T.	SCALE AS NOTED	APPROVED BY:
T. P.F.		
C. I.L., S.P.	DATE 7-1-1968	BRIDGE ENGINEER

△ Revised Elevation A-A - Bed Elevations T.F.F. 6-9-75
△ Revised Elevation B-B & K-K T.F.F. 10-6-75

COUNTY	CONTRACT	P. B. A. REG. NO.	STATE	FED. AID PROJECT NO.	FISCAL YEAR	SHEET NO.	TOTAL SHEETS
New Castle	73-10-014	2	DEL.	I-495-3(28)16		6	43

INTERSTATE ROUTE I-495
RELOCATED 12th STREET BRIDGE OVER P.C.T. CO.

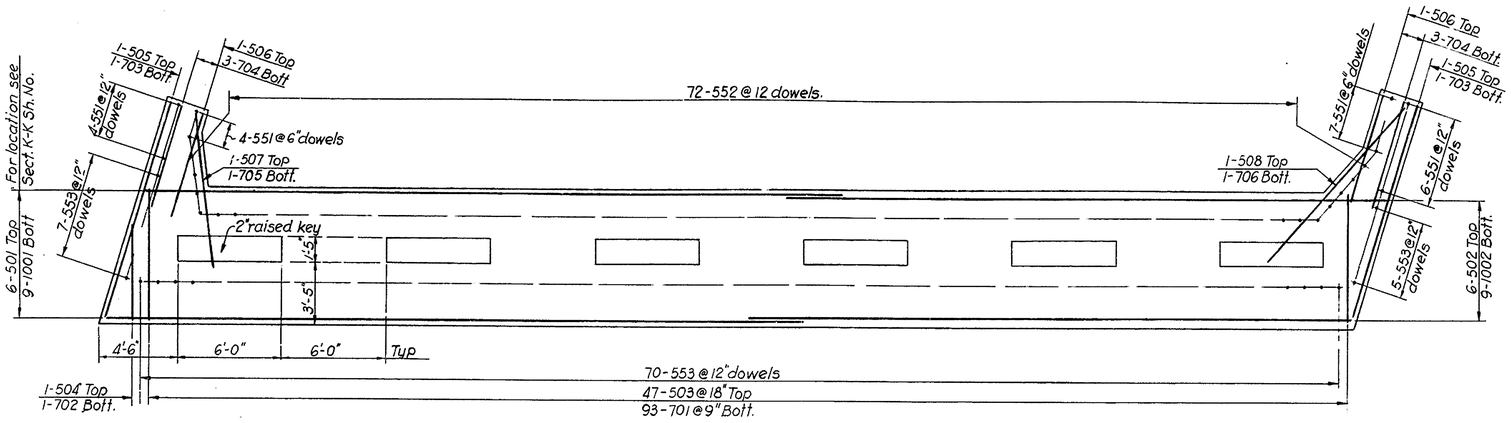

FOOTING REINFORCING PLAN
Scale: 1/4"=1'-0"

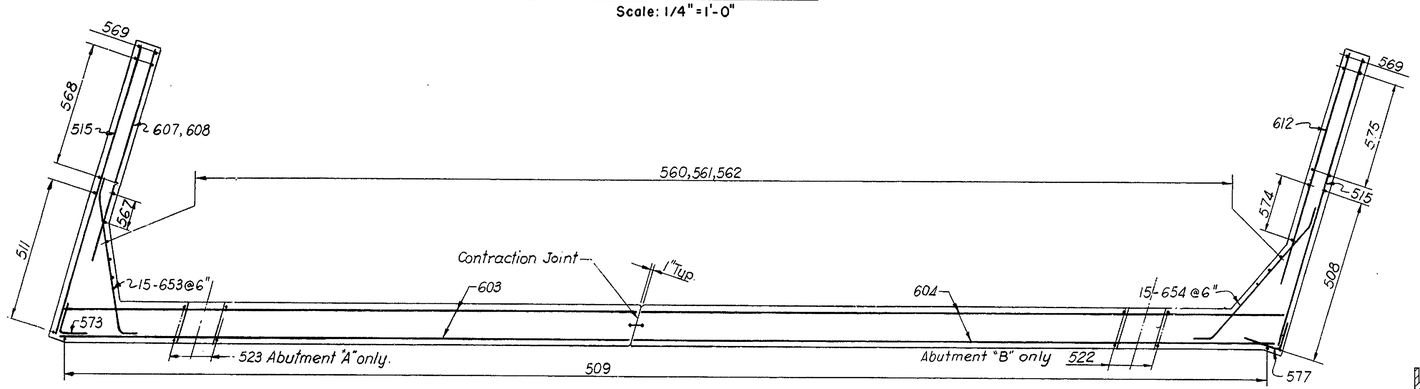

SECTION E-E
Scale: 1/4"=1'-0"

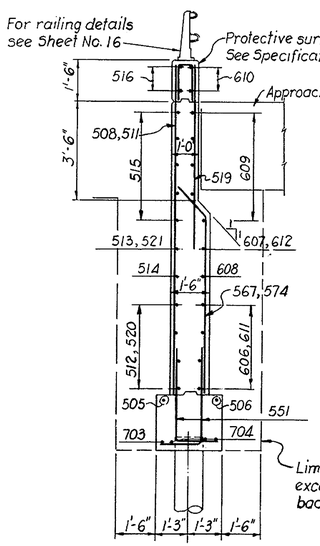

SECTION D-D
Scale: 3/8"=1'-0"

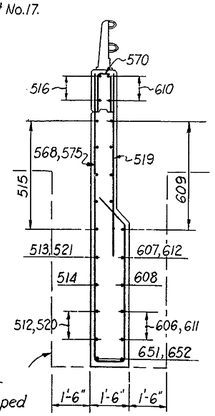

SECTION F-F
Scale: 3/8"=1'-0"

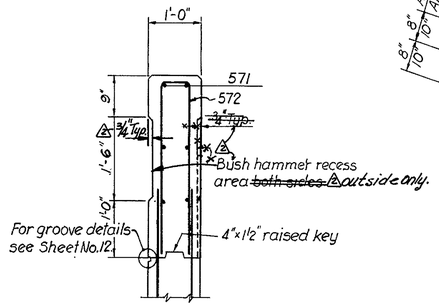

SECTION G-G
Scale: 3/4"=1'-0"

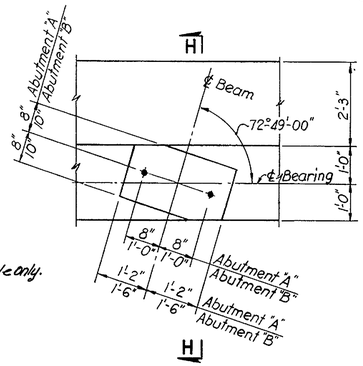

PLAN

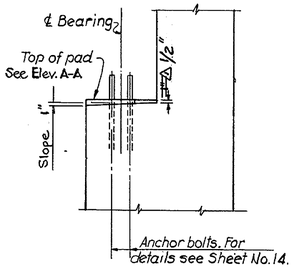

SECTION H-H

TYPICAL PAD UNDER BEARING PLATE
N.T.S.

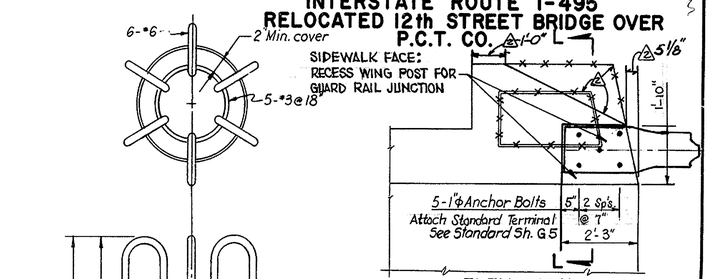

TYPICAL GUARD RAIL JUNCTION AT BRIDGE PARAPET
Scale: 1/2"=1'-0"

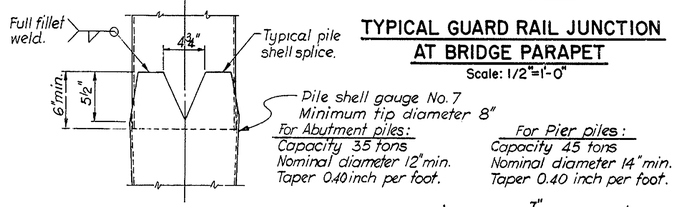

NOTE: Alternate type of piles meeting State of Delaware Standard Specifications will be accepted.

TYPICAL PILE DETAIL
N.T.S.

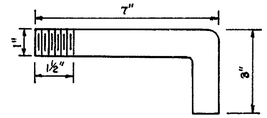

1"ϕ ANCHOR BOLT DETAIL
Scale: 3/8"=1"

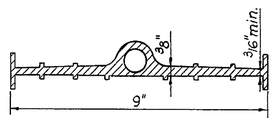

DETAIL OF WATERSTOP
N.T.S.

NOTES:

1. For General Notes see Sheet No. 2.
2. For Key plan see Sheet No. 9.
3. For railing details see Sheet No. 16.
4. For slope protection details see Sheet No. 18.
5. For shoe and anchor bolt details see Sheet No. 14.
6. Elevations shown on beam bearing are finished top of pad elevations. See Section H-H on this sheet.
7. Cast-in-place concrete piles shall be driven to develop a safe bearing value of at least: For Abutments 35 tons; For Piers 45 tons. Minimum penetration to be determined by the Director from the results of driving of steel shell test piles.
8. Chamfer all corners ¾" except where otherwise shown.
9. For Reinforcement Schedule see Sheet No. 7.

DELAWARE DEPARTMENT OF HIGHWAYS & TRANSPORTATION
DIVISION OF HIGHWAYS

INTERSTATE RUUTE I-495

ABUTMENT DETAILS

J. E. GREINER CO. MORAN, PROCTOR, MUESER & RUTLEDGE CONSULTING ENGINEERS	D. S.L.T. T. P.F. C. I.L., S.P.	SCALE AS NOTED	APPROVED BY:
		DATE 7-1-1968	BRIDGE ENGINEER

Δ Revised Section H-H — Dimension T.F.F. 6-13-75
Δ Revised Section G-G, L-L, Elevation T.F.F. 10-16-75

COUNTY	CONTRACT	P. R. A. SEC. NO.	STATE	FED. AID PROJECT NO.	FISCAL YEAR	SHEET NO.	TOTAL SHEETS
New Castle	73-10-014	2	DEL.	I-495-3(28)16		7	43

INTERSTATE ROUTE I-495
RELOCATED 12th STREET BRIDGE OVER P.C.T. CO.

ABUTMENT "A" W=14,814 Lbs.

STRAIGHT BARS

MARK	NUMBER REQUIRED	LENGTH	REMARKS
BAR NUMBER 5			
501	6	40-0	
502	6	33-4	
503	47	7-0	
504	1	5-0	
505	2	12-6	
506	2	6-0	
507	1	8-6	
508	11	11-6	
509	56	5-6	
510	2	3-10	
511	9	11-10	
512	4	10-8 to 15-2	INCREMENT 1'-6"
513	1	14-6	
514	1	16-0	
515	11	16-6	
516	4	16-2	
517	6	3-5	
518	9	5-9	
519	26	6-6	
520	4	10-8 to 15-8	INCREMENT 1'-8"
521	1	15-6	
522	14	7-10	
523	4	5-2	
5r1	33	2-6	DOWEL
BAR NUMBER 6			
601	10	40-0	
602	10	32-3	
603	10	33-3	
604	10	37-5	
605	2	28-3	
606	4	3-8 to 8-2	INCREMENT 1'-6"
607	1	11-0	
608	1	11-6	
609	11	16-6	
610	4	14-5	
611	4	5-8 to 10-8	INCREMENT 1'-8"
612	1	12-0	
BAR NUMBER 7			
701	93	7-0	
702	1	5-0	
703	2	12-6	
704	6	6-0	
705	1	8-6	
706	1	11-6	
BAR NUMBER 10			
1001	9	40-0	
1002	9	35-0	
1003	4	13-0	
10004	4	10-6	

BENT BARS (Dimensions are out to out)

MARK	NUMBER REQUIRED	LENGTH	TYPE	A	B	C	D	E	F	G	△H	REMARKS
BAR NUMBER 5												
551	21	4-10	I	1-6	3-4							
552	72	6-3	I	0-9	5-6							
553	82	4-3	I	0-9	3-6							
554	9	7-3	I	3-6	4-1							
555	17	9-0	I	3-6	5-10							
556	20	9-1	I	3-6	5-11							
557	9	8-11	I	3-6	5-9							
558	9	8-8	I	3-6	5-6							
559	7	6-10	I	3-6	3-8							
560	46	7-9	I	1-10	5-11							
561	11	7-4	I	1-10	5-6							
562	15	6-11	I	1-10	5-1							
563	56	6-4½	I	1-8	1-0	3-8						
564	14	7-10	I	2-5	1-0	4-5						
565	4	9-10	I	2-0	5-10	2-0						
566	2	7-10	I	2-0	3-10	2-0						
567	4	8-0	II	6-5	1-7				1-1	1-1		
568	8	10-5 to 19-3	V	1-7	1-3 to 5-8	1-0	6-7 to 11-0		1-1	1-1		INCREMENT 0'-7½"
569	4	6-7	II	5-0	1-7				0-5	1-6		
570	26	3-4	I	1-4	0-8	1-4						
571	4	~~△8-11 3-11~~	~~△IV VI~~	~~3-8~~ 5-3	~~3-4~~ △3'0	~~3-4~~ △0'9"	~~3-4~~ 1'-8"	△3-3	~~3-4~~ 1'-4"	~~3-4~~ 1'-8"	△0'-4½"	
572	2	~~△4-6~~ △4-6 to 6-10	I	3-1	△10'-11" 0-8	3-1	△10'-11"					△Inc. = 0'-5"
573	11	3-2	III	1-7	1-7				1-6	0-5		
574	7	7-7	II	6-0	1-7				1-1	1-1		
575	7	10-4 to 18-4	V	1-7	1-3 to 5-3	1-0	6-6 to 10-6		1-1	1-1		INCREMENT 0'-8"
576	4	3-2	II	1-7	1-7				1-6	0-5		
577	7	3-2	I	1-7	1-7							
BAR NUMBER 6												
651	2	11-11	II	10-0	1-11				0-11	1-4		
652	2	10-11	II	9-0	1-11				0-11	1-4		
653	15	10-0	IV	8-0	1-0	1-0	1-0	0-2	0-5	0-10		
654	15	11-0	IV	9-0	1-0	1-0	0-5	0-10	0-9	0-8		
BAR NUMBER 10												
1051	8	34-1	I	4-7	29-0							

ABUTMENT "B" W=14,614 Lbs.

STRAIGHT BARS

MARK	NUMBER REQUIRED	LENGTH	REMARKS
BAR NUMBER 5			
501	6	40-0	
502	6	33-4	
503	47	7-0	
504	1	5-0	
505	2	12-6	
506	2	6-0	
507	1	8-6	
508	11	11-6	
509	70	6-11	
510	2	3-6	
511	9	11-9	
512	4	10-7 to 15-4	INCREMENT 1'-7"
513	1	14-5	
514	1	16-0	
515	11	16-6	
516	4	16-2	
517	6	3-5	
518	9	5-9	
519	11	6-6	
520	4	10-7 to 15-1	INCREMENT 1'-6"
521	1	14-9	
522	4	5-2	
5r1	33	2-6	DOWEL
BAR NUMBER 6			
601	9	40-0	
602	9	32-3	
603	14	33-3	
604	14	37-5	
606	4	3-7 to 8-4	INCREMENT 1'-7"
607	1	9-7	
608	1	11-0	
609	11	16-6	
610	4	14-5	
611	4	5-7 to 10-1	INCREMENT 1'-6"
612	1	11-3	
BAR NUMBER 7			
701	93	7-0	
702	1	5-0	
703	2	12-6	
704	6	6-0	
705	1	8-6	
706	1	11-6	
BAR NUMBER 10			
1001	9	40-0	
1002	9	35-0	
1003	8	36-10	

BENT BARS (Dimensions are out to out)

MARK	NUMBER REQUIRED	LENGTH	TYPE	A	B	C	D	E	F	G	△H	REMARKS
BAR NUMBER 5												
551	21	4-10	I	1-6	3-4							
552	72	6-3	I	0-9	5-6							
553	82	4-3	I	0-9	3-6							
554	8	6-11	I	3-6	3-5							
555	16	7-0	I	3-6	3-6							
556	24	7-3	I	3-6	3-9							
557	8	7-1	I	3-6	3-7							
558	8	6-10	I	3-6	3-4							
559	6	6-9	I	3-6	3-3							
560	39	7-3	I	1-10	5-5							
561	33	7-6	I	1-10	5-8							
563	56	6-5	I	1-8	1-1	3-8						
564	14	7-11	I	2-5	1-1	4-5						
565	4	9-10	I	2-0	5-10	2-0						
566	2	7-8	I	2-0	3-8	2-0						
567	4	8-0	II	6-5	1-7				1-1	1-1		
568	8	10-5 to 19-3	V	1-7	1-3 to 5-8	1-0	6-7 to 11-0		1-1	1-1		INCREMENT 0'-7½"
569	4	6-7	II	5-0	1-7				0-5	1-6		
570	26	3-4	I	1-4	0-8	1-4						
571	4	~~△8-11 3-11~~	~~△IV VI~~	~~3-8~~ 5-3	~~3-4~~ △3'0	~~3-4~~ △0'9"	~~3-4~~ 1'-8"	△3-3	~~3-4~~ 1'-4"	~~3-4~~ 1'-8"	△0'-4½"	
572	2	~~△4-6~~ △4-6 to 6-10	I	3-1	△10'-11" 0-8	3-1	△10'-11"					INC. = △-0'-5"
573	11	3-2	III	1-7	1-7				1-6	0-5		
574	7	7-10	II	6-3	1-7				1-1	1-1		
575	7	10-5 to 18-5	V	1-7	1-3 to 5-3	1-0	6-7 to 10-7		1-1	1-1		INCREMENT 0'-8"
576	4	3-2	II	1-7	1-7				1-6	0-5		
577	7	3-2	I	1-7	1-7							
BAR NUMBER 6												
651	2	11-8	II	9-9	1-11				0-11	1-4		
652	2	11-2	II	9-3	1-11				0-11	1-4		
653	15	10-0	IV	8-0	1-0	1-0	1-0	0-2	0-5	0-10		
654	15	11-0	IV	9-0	1-0	1-0	0-5	0-10	0-9	0-8		

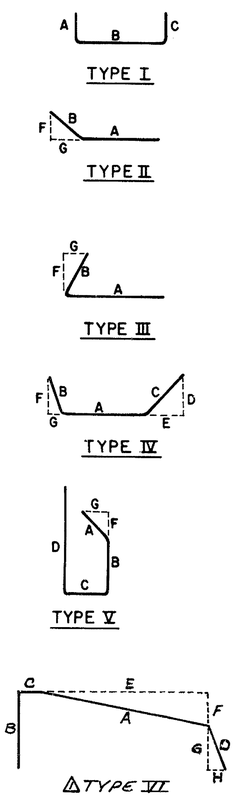

NOTE:

FOR GENERAL NOTES SEE SHEET NO.2

REVISIONS
△Revised Bent A 18" Rebar 5714572 TEE 10-16-75

J. E. GREINER CO. MORAN, PROCTOR, MUESER & RUTLEDGE CONSULTING ENGINEERS	DELAWARE DEPARTMENT OF HIGHWAYS & TRANSPORTATION DIVISION OF HIGHWAYS INTERSTATE ROUTE I-495 **ABUTMENTS REINFORCEMENT SCHEDULE**
D. S.L.T. T. M.L.M. C. I. L.	SCALE DATE 7-1-1968 APPROVED BY: BRIDGE ENGINEER

COUNTY	CONTRACT	P. R. A. REG. NO.	STATE	FED. AID PROJECT NO.	FISCAL YEAR	SHEET NO.	TOTAL SHEETS
New Castle	73-10-014	2	DEL.	I-495-3(28) 16		8	43

INTERSTATE ROUTE I-495
RELOCATED 12th STREET BRIDGE OVER P.C.T. CO.

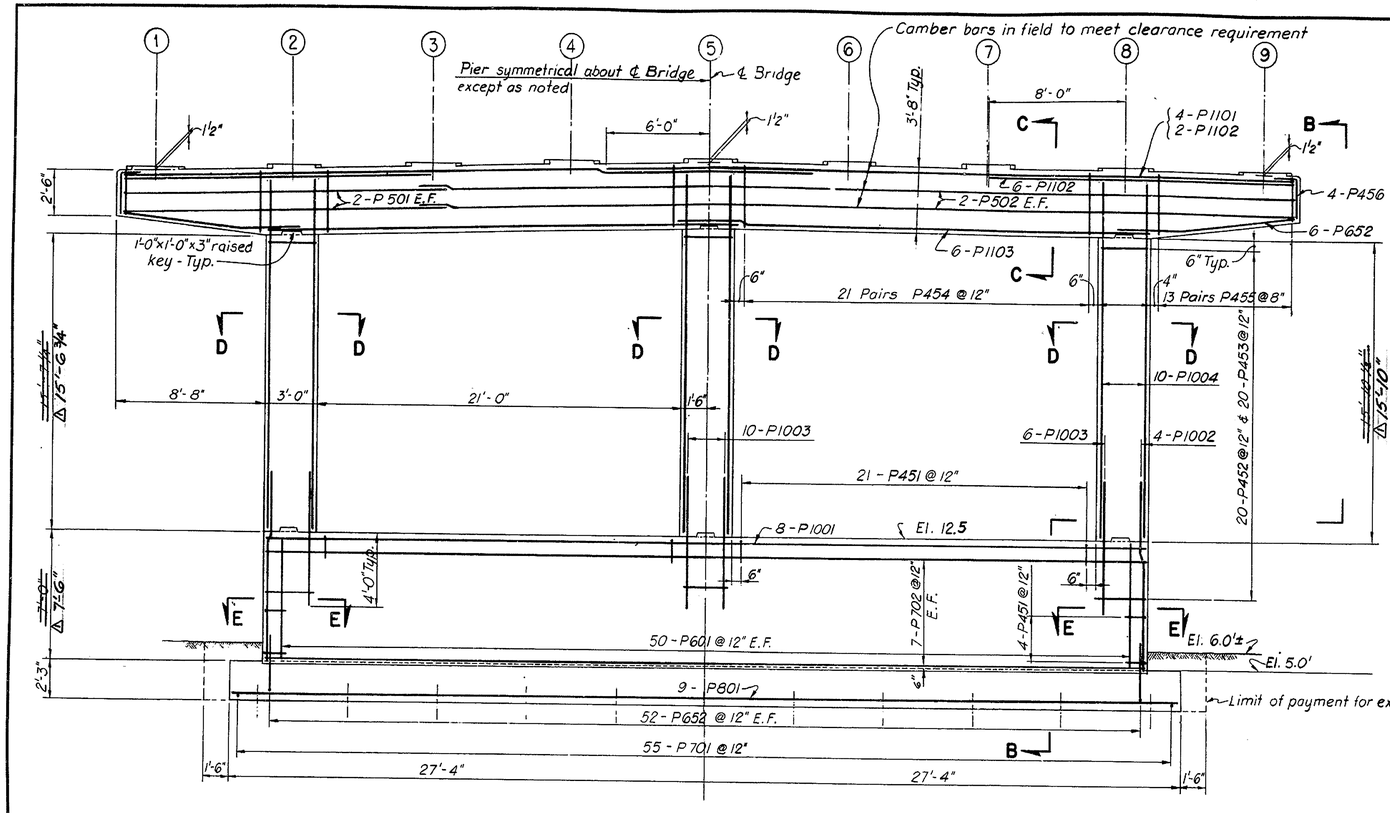

SECTION A-A
Scale: 1/4"=1'-0"

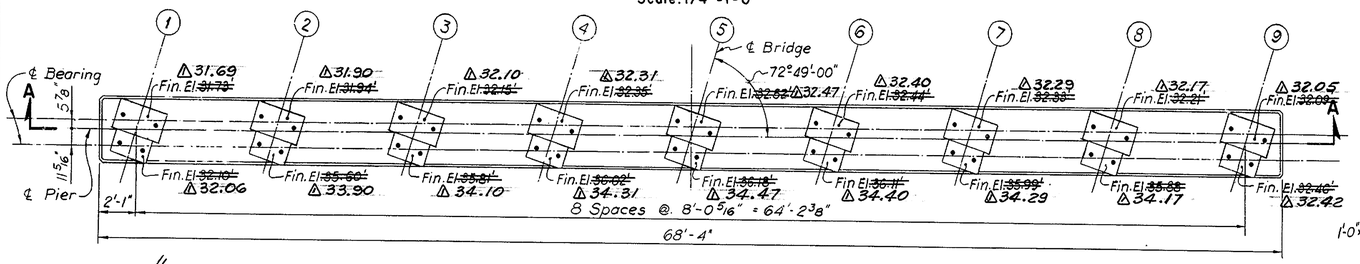

PLAN - CAP BEAM PIER I
Scale: 1/4"=1'-0"

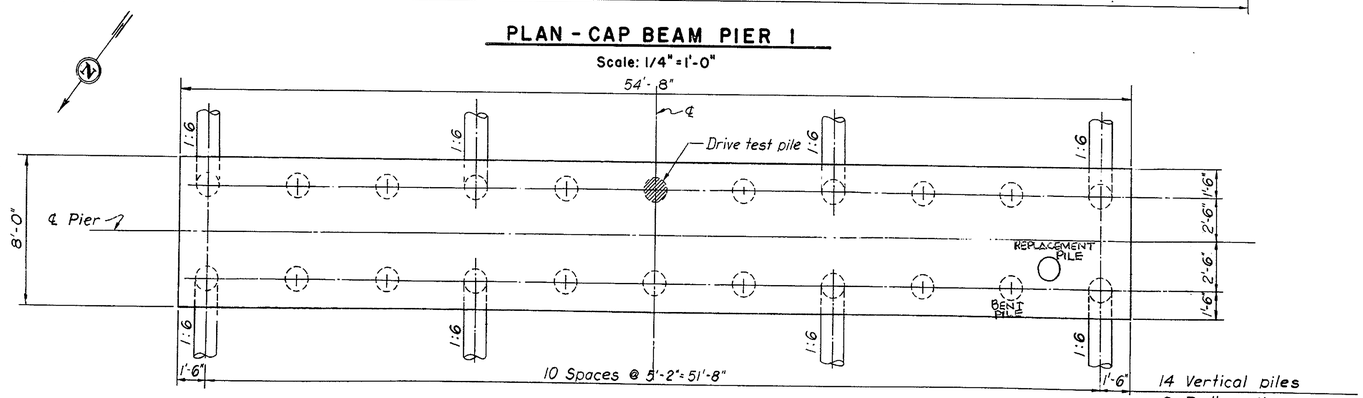

PILE PLAN
Scale: 1/4"=1'-0"

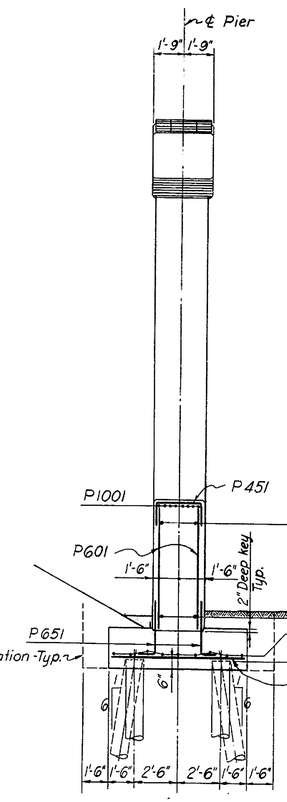

ELEVATION B-B
Scale: 1/4" = 1'-0"

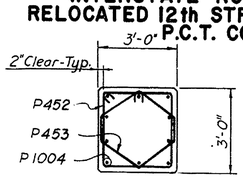

SECTION D-D
Scale: 3/8"=1'-0"

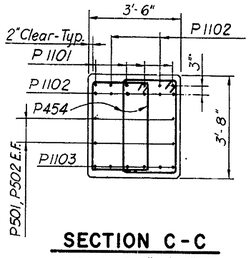

SECTION C-C
Scale: 3/8"=1'-0"

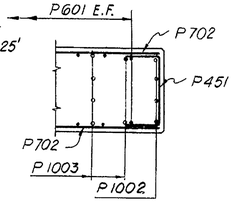

SECTION E-E
Scale: 3/8"=1'-0"

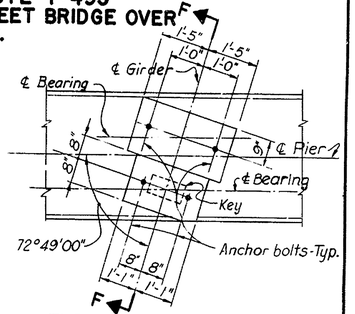

TYPICAL CONC. PAD UNDER BEARING PLATE
Scale: 1/2"=1'-0"

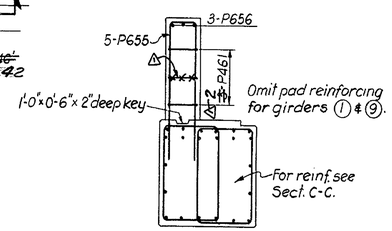

SECTION F-F
Scale: 3/8"=1'-0"

NOTES:

1. For General Notes see Sheet No. 2.
2. For Key Plan see Sheet No. 9.
3. For Reinforcement Schedule see Sheet No. 10.
4. For pile detail see Sheet No. 6.

Δ Revised Plan-Cap Beam, Section H-H, Section F-F 7-FF 6-3-75

J. E. GREINER CO.
MORAN, PROCTOR, MUESER & RUTLEDGE
CONSULTING ENGINEERS

DELAWARE DEPARTMENT
OF HIGHWAYS & TRANSPORTATION
DIVISION OF HIGHWAYS

INTERSTATE ROUTE I-495

PIER I

D. S.L.T.
T. M.L.M.
C. I. L.

SCALE AS NOTED
DATE 7-1-1968

APPROVED BY:
BRIDGE ENGINEER

COUNTY	CONTRACT	P. B. J. RES. NO.	STATE	FED. AID PROJECT NO.	FISCAL YEAR	SHEET NO.	TOTAL SHEETS
New Castle	73-10-014	2	DEL.	I-495-3 (28) 16		9	43

INTERSTATE ROUTE I-495
RELOCATED 12th STREET BRIDGE OVER P.C.T. CO.

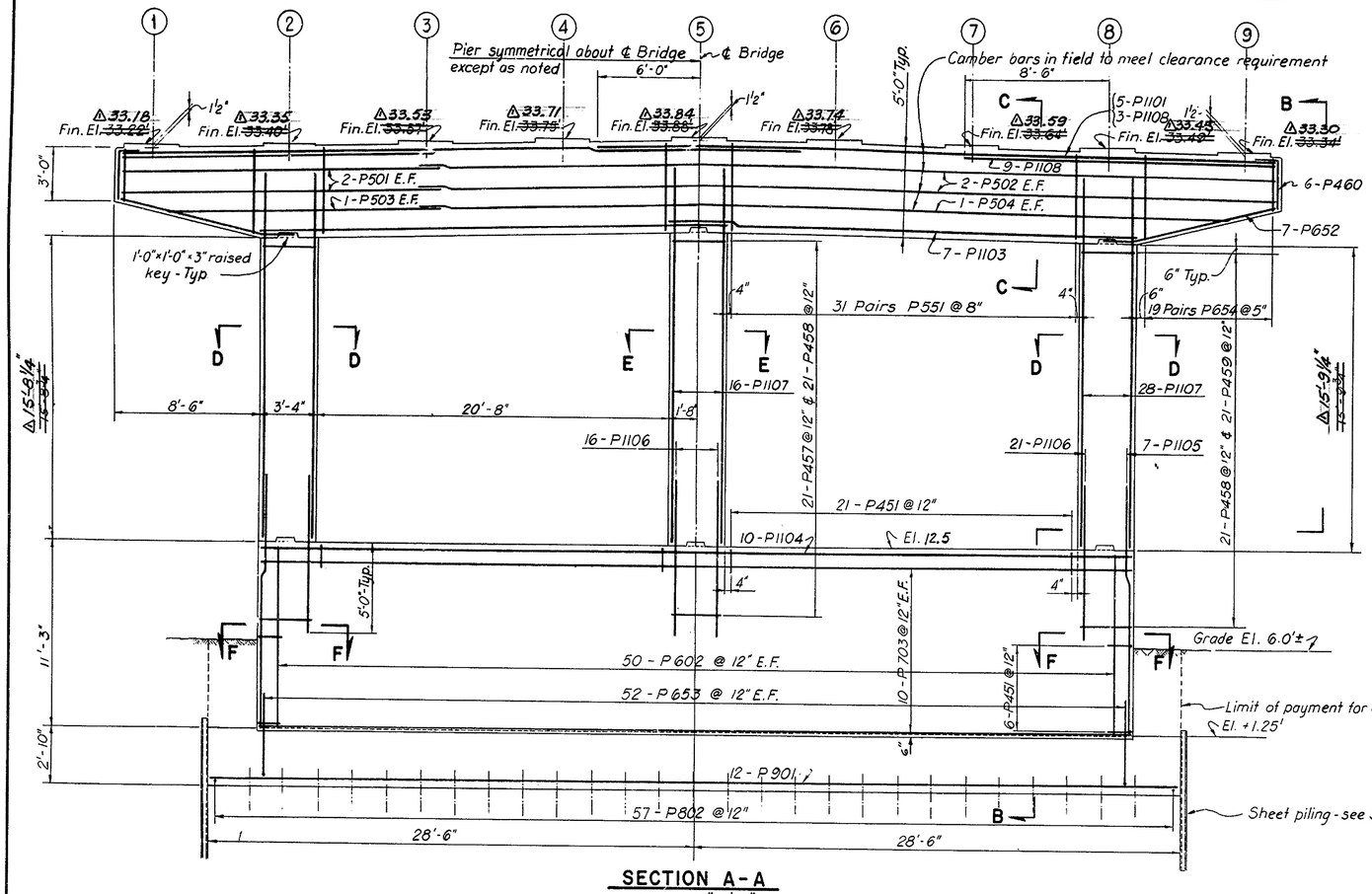

SECTION A-A
Scale: 1/4" = 1'-0"

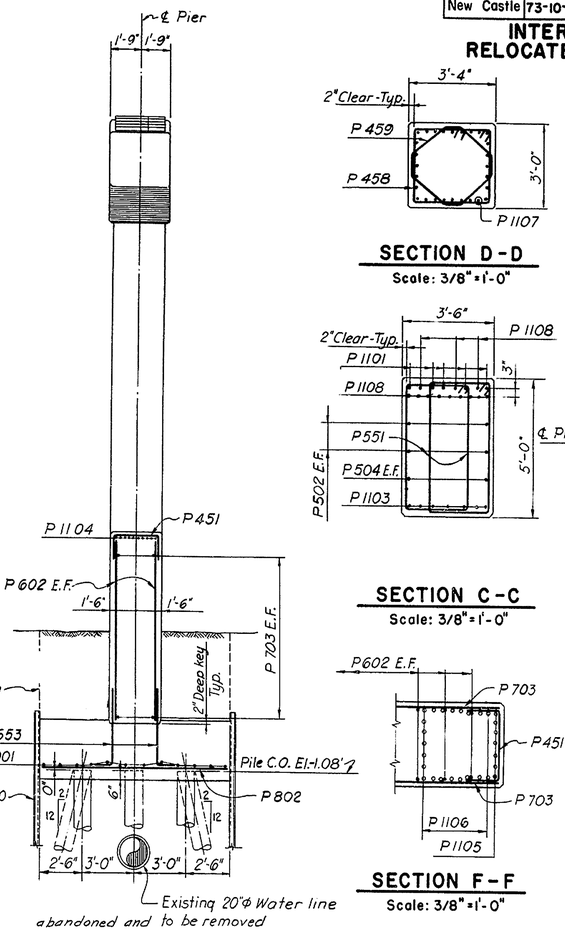

ELEVATION B-B
Scale: 1/4" = 1'-0"

SECTION D-D
Scale: 3/8" = 1'-0"

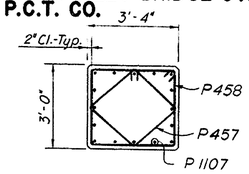

SECTION E-E
Scale: 3/8" = 1'-0"

SECTION C-C
Scale: 3/8" = 1'-0"

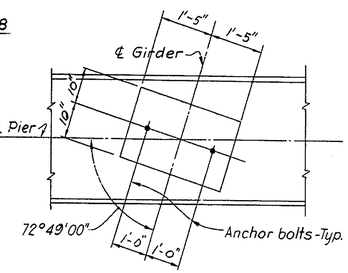

TYPICAL CONC. PAD UNDER BEARING PLATE
Scale: 1/2" = 1'-0"

SECTION F-F
Scale: 3/8" = 1'-0"

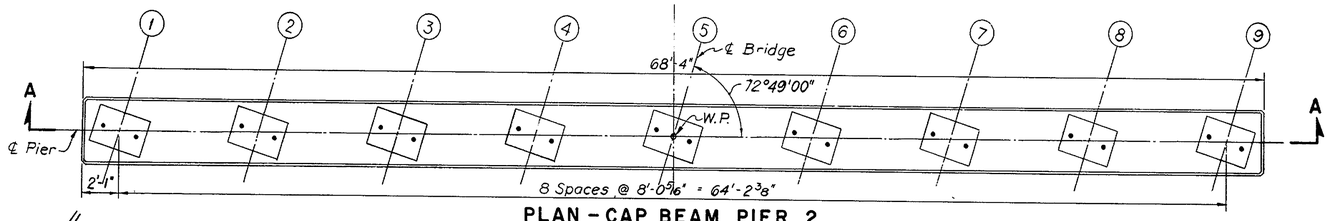

PLAN - CAP BEAM PIER 2
Scale: 1/4" = 1'-0"

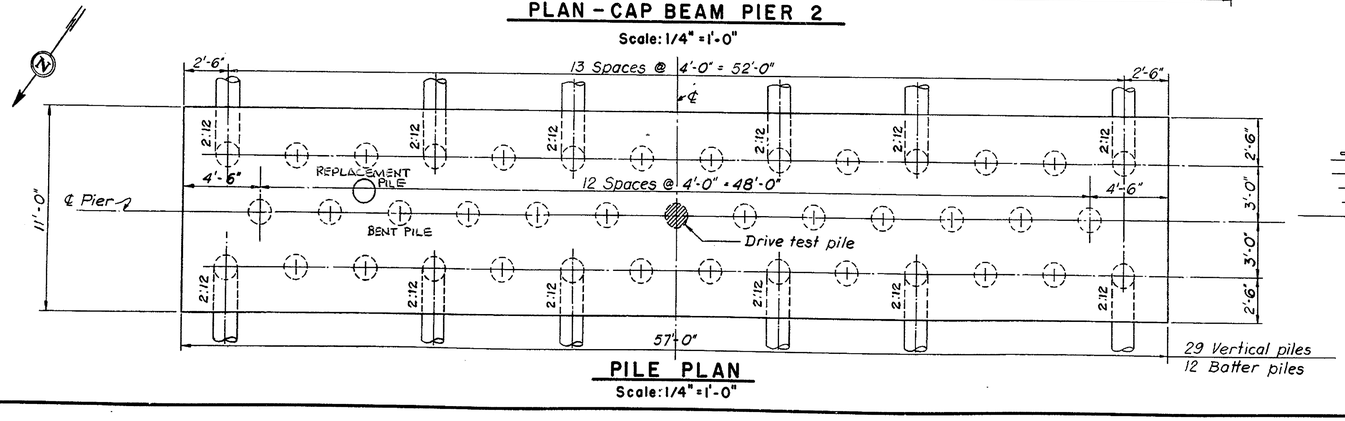

PILE PLAN
Scale: 1/4" = 1'-0"

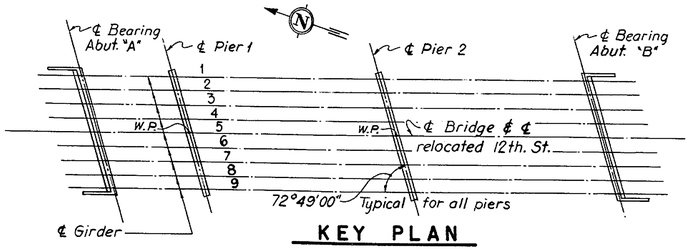

KEY PLAN
N.T.S.

NOTES:

1. For General Notes see Sheet No.2.
2. Work this drawing with Sheet No.10.
3. For pile detail see Sheet No.6.

△ Revised Section A-A — Elevations (Pier) & Dimensions T.F.F. 6-13-75

J. E. GREINER CO.
MORAN, PROCTOR, MUESER & RUTLEDGE
CONSULTING ENGINEERS

DELAWARE DEPARTMENT OF HIGHWAYS & TRANSPORTATION
DIVISION OF HIGHWAYS

INTERSTATE ROUTE I-495

PIER 2

D. S.L.T.	SCALE AS NOTED	APPROVED BY:
T. M.L.M.	DATE 7-1-1968	BRIDGE ENGINEER
C. I. L.		

COUNTY	CONTRACT	P. S. A. REG. NO.	STATE	FED. AID PROJECT NO	FISCAL YEAR	SHEET NO.	TOTAL SHEETS
New Castle	73-10-014	2	DEL.	I-495-3(28)16		10	43

INTERSTATE ROUTE I-495
RELOCATED 12th STREET BRIDGE OVER P.C.T. CO.

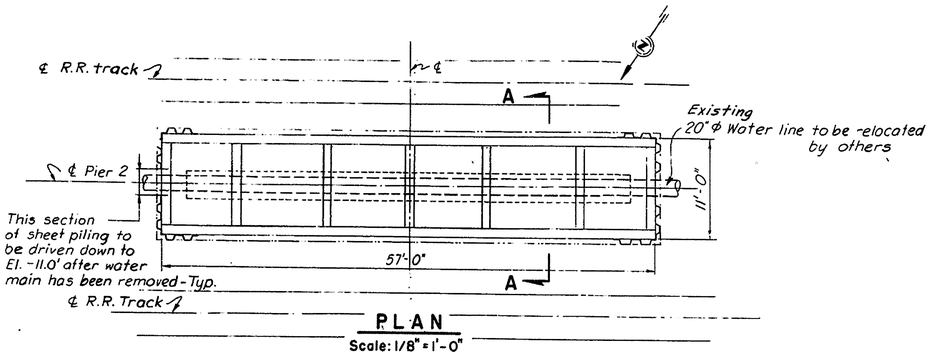

PLAN
Scale: 1/8" = 1'-0"

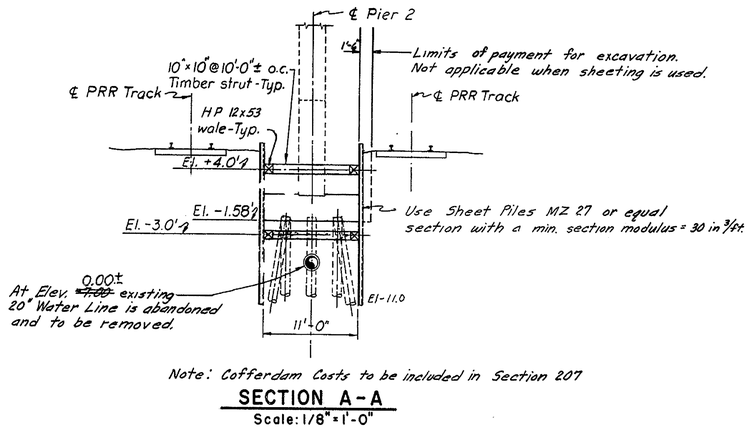

Note: Cofferdam Costs to be included in Section 207

SECTION A-A
Scale: 1/8" = 1'-0"

CONSTRUCTION PROCEDURE FOR PIER 2

1. Drive sheeting after existing 20"Φ water line has been cut off by the Delaware Water Company.
2. Excavate to one foot below bottom respective bracing and install wales and struts (two tiers of bracing).
3. Remove existing 20"Φ pipe line within the limits of cofferdam.
4. Place tamped backfill to El. -1.58' and remove lower brace.
5. Drive piles. Rebrace as required.
6. Complete construction and remove upper brace.
7. Backfill to original ground after pier has been constructed above grade. Top of sheeting to be kept 1'-6" below grade. and left in place.

NOTES:

1. Work this drawing with Sheets No.8 and No.9.
2. The Contractor shall submit for Engineer's approval all calculations and details of sheeting and bracing prepared by a registered professional engineer. In no case shall any construction proceed before approval is obtained.
3. Contractor shall assume full responsibility for safeguarding of railroad facilities and operations and he shall secure all necessary permits from the Railroad Company prior to commencement of construction. He shall also notify the Engineer and Railroad Company of interference of his work with underground utilities and allow sufficient time for the relocation of such utilities.
4. The Contractor shall maintain, at all times, the groundwater level at least one foot below excavation or subgrade until footings have been completed.
5. The Contractor shall coordinate his work with the ~~Delaware~~ Water Company work when removing the 20"Φ water line.
6. Cofferdam was designed for an invert Elev. of -7.0 for the existing water line. The 20"Φ line elevation is to be verified by the contractor Engineer prior to placing the cofferdam.
7. Stay-in-place forms will not be permited for columns and piers. All forms shall be removed by the Contractor prior to backfilling unless otherwise noted.
8. For excavation adjacent to tracks requiring sheeting and shoring the plans and calculations for such sheeting and shoring shall be prepared by a registered professional engineer and submited to the Delaware Department of Highways and Transportation, Division of Highways for approval by the P.C.T. Co.

PIER REINFORCEMENT SCHEDULE

W=53,443 Lbs.

LOCATION	STRAIGHT BARS MARK	REQUIRED PIER 1	REQUIRED PIER 2	TOTAL	SIZE	LENGTH
FOOTING	P701	55		55	#7	7-6
	P801	9		9	#8	54-2
	P802		57	57	#8	10-6
	P901		12	12	#9	56-6
SHAFT & WALL	P601	100		100	#6	6-11
	P602		100	100	#6	10-8
	P702	14		14	#7	50-8
	P703		20	20	#7	51-0
	P1001	8		8	#10	50-8
	P1002	8		8	#10	10-0
	P1003	22		22	#10	7-2
	P1004	30		30	#10	19-2
	P1104		10	10	#11	51-0
	P1105		14	14	#11	15-0
	P1106		58	58	#11	8-7
	P1107		72	72	#11	20-0
CAP BEAM	P501	4	4	8	#5	19-7
	P502	4	4	8	#5	50-0
	P503		2	2	#5	16-7
	P504		2	2	#5	47-0
	P1101	8	10	18	#11	40-0
	P1102	16		16	#11	18-0
	P1103	12	14	26	#11	27-6
	P1108		24	24	#11	18-6

LOCATION	BENT BARS MARK	REQUIRED PIER 1	REQUIRED PIER 2	TOTAL	SIZE	LENGTH
FOOTING	P651	104		104	#6	4-8
	P653		104	104	#6	5-3
SHAFT & WALL	P451	50	54	104	#4	6-2
	P452	60		60	#4	11-4
	P453	60		60	#4	8-10
	P457		21	21	#4	8-8
	P458		63	63	#4	12-0
	P459		42	42	#4	9-8
CAP BEAM	P454	84		84	#4	11-2
	P455	52		52	#4	9-0 to 11-0
	P456	8		8	#4	3-3
	P460		12	12	#4	3-9
	P461	~~=~~ △14	-	~~=~~ △14	#4	6-8
	P551		124	124	#5	14-8
	P652	12	14	26	#6	10-5
	P654		76	76	#6	11-0 to 14-0
	P655	35	-	35	#6	~~=~~ △7'-8"
	P656	21	-	21	#6	~~=~~ △8'-6"

BENDING DIAGRAMS

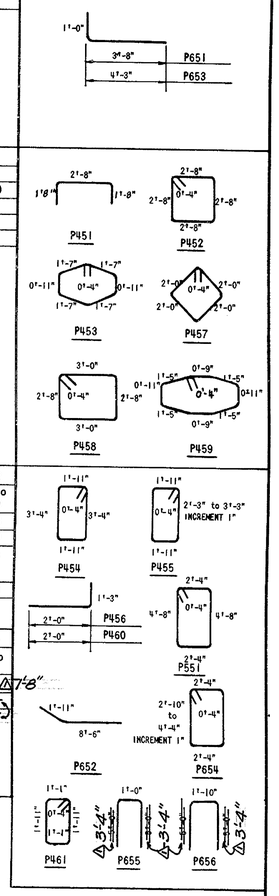

J. E. GREINER CO.	DELAWARE DEPARTMENT OF HIGHWAYS & TRANSPORTATION DIVISION OF HIGHWAYS
MORAN, PROCTOR, MUESER & RUTLEDGE CONSULTING ENGINEERS	INTERSTATE ROUTE I-495
	PIER COFFERDAM AND REINFORCEMENT
D. S.L.T. T. M.L.M. C. I. L.	SCALE AS NOTED; DATE 7-1-1968; APPROVED BY: BRIDGE ENGINEER

Superseded Pier No. 1 Schedule - Sheet No. 675-13 - I.A.

COUNTY	CONTRACT	P. R. A. REG. NO.	STATE	FED. AID PROJECT NO.	FISCAL YEAR	SHEET NO.	TOTAL SHEETS
New Castle	73-10-014	2	DEL.	I-495-3(28)16		11	43

INTERSTATE ROUTE I-495
RELOCATED 12th STREET BRIDGE OVER P.C.T. CO.

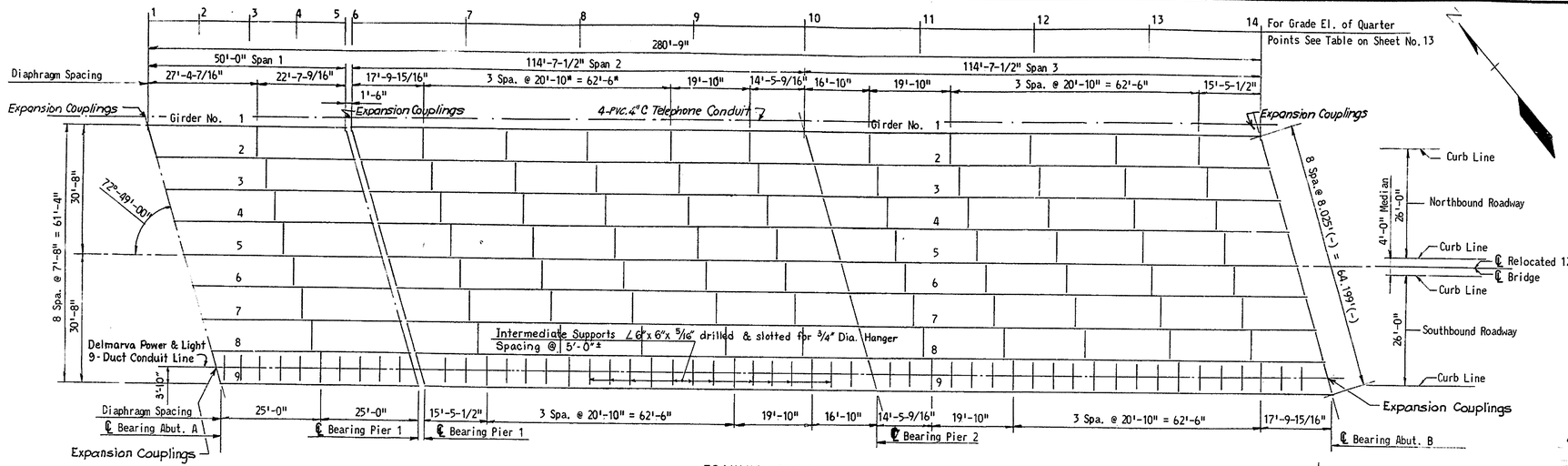

FRAMING PLAN
Scale: 1/16" = 1'-0"

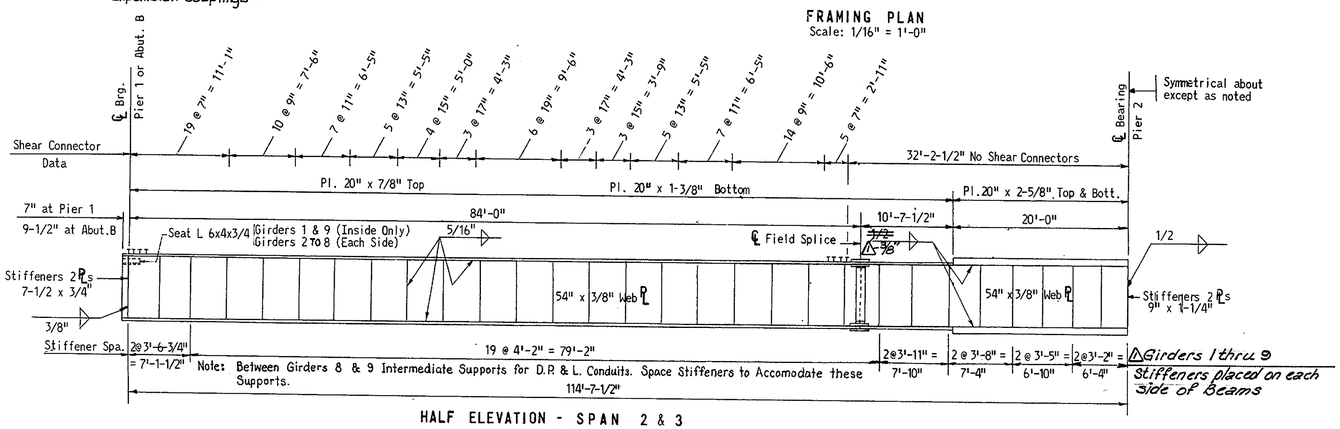

HALF ELEVATION - SPAN 2 & 3
No Scale

Note: Top Flg. Compression - Bott. Flg. Tension from Pier 1 to 1st. Splice, and from 2nd. Splice to Abutment B.
Top Flg. Tension - Bott. Flg. Compression between splices.

All stiffeners - 2 Pls 7" x 7/16" except as noted

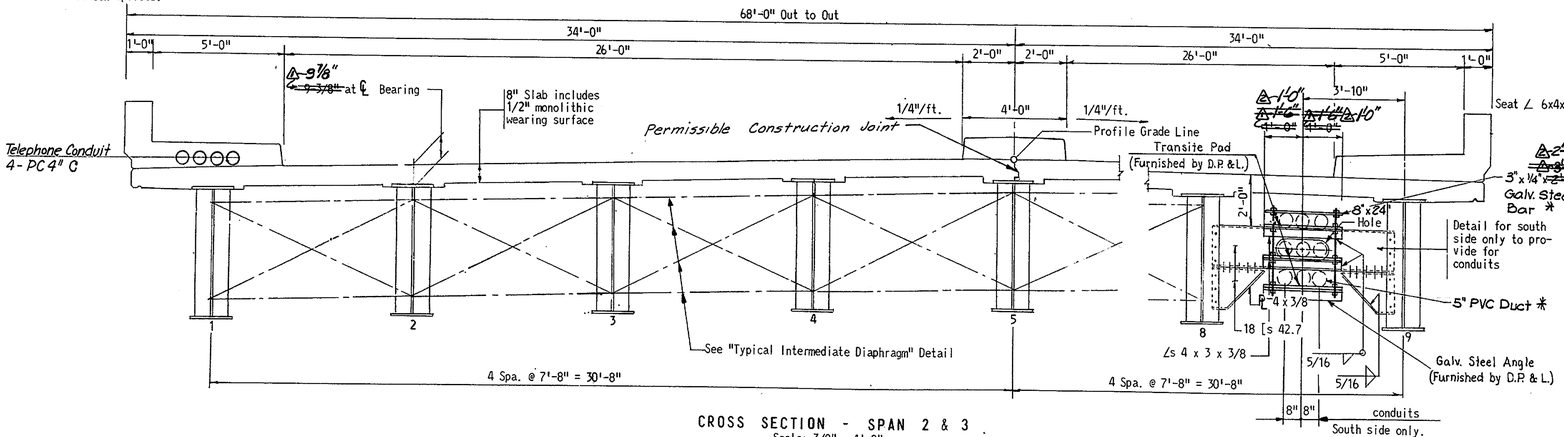

CROSS SECTION - SPAN 2 & 3
Scale: 3/8" = 1'-0"

NOTE:
Clamps, PVC Duct and Hanger to be furnished by Delmarva Power & Light Company and to be installed by Contractor.

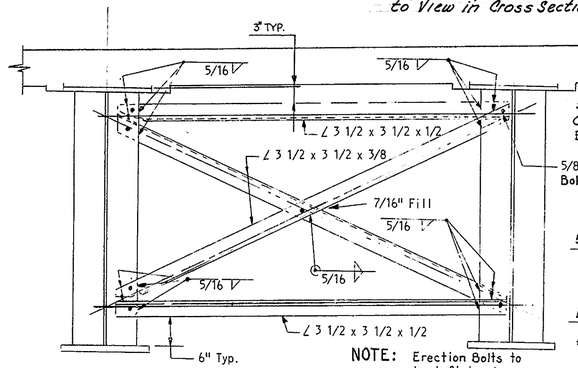

NOTE: Erection Bolts to be left in place.

TYPICAL INTERMEDIATE DIAPHRAGM - SPAN 2 & 3
Scale: 3/4" = 1'-0"

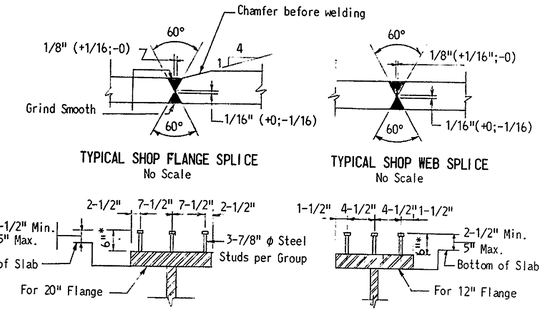

TYPICAL SHOP FLANGE SPLICE
No Scale

TYPICAL SHOP WEB SPLICE
No Scale

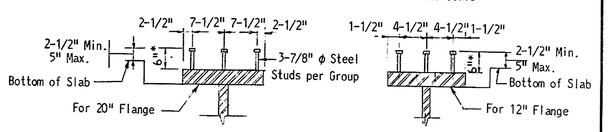

SHEAR CONNECTOR DETAILS
No Scale

△NOTE: If Hanger Rods are threaded adjust to proper Elevation according to View in Cross Section - Span 2 & 3

* Shear connector length shall be varied if necessary to insure that it extends a minimum of 2-1/2" and a maximum of 5" into deck slab.

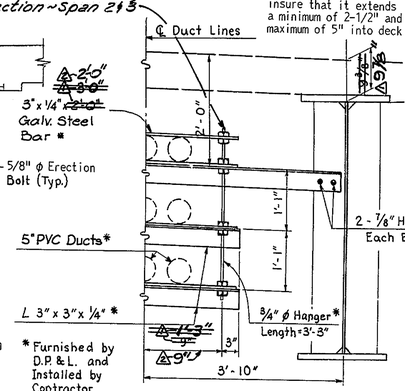

INTERMEDIATE DUCT SUPPORT
Scale: 3/4" = 1'-0"

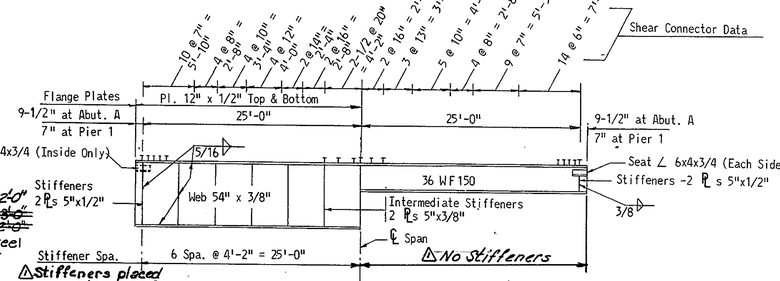

HALF ELEVATION GIRDERS 1 & 9

HALF ELEVATION GIRDERS 2.3.4.5.6.7 & 8

SPAN 1
No Scale

NOTES:
For General Notes see Sheet No. 2
For Superstructure Details see Sheet No. 13
For Protective Barrier and Shoes see Sheet No. 14
For Railing Details see Sheet No. 16
For Expansion Details see Sheet No. 15
Mill stiffeners to bear on tension flange and weld stiffeners to compression flange with 5/16" fillet welds.

DELAWARE DEPARTMENT OF HIGHWAYS & TRANSPORTATION
DIVISION OF HIGHWAYS

INTERSTATE ROUTE I-495

FRAMING PLAN

J. E. GREINER CO.
MORAN, PROCTOR, MUESER & RUTLEDGE
CONSULTING ENGINEERS

D. E. G. R.	SCALE AS NOTED	APPROVED BY:
T. H. W.	DATE 7-1-1968	BRIDGE ENGINEER
C. C. R.		

Added Stiffener Note to Half Elevation Span 1 & 3 - Revised Dimension Base to original Dimension - T.F.F. 9/16/75
Revised Dimension Base to original Dimension - T.F.F. 9/15/75

COUNTY	CONTRACT	P. R. A. REG. NO.	STATE	FED. AID PROJECT NO.	FISCAL YEAR	SHEET NO.	TOTAL SHEETS
New Castle	73-10-014	2	DEL.	I-495-3(28)16		12	43

INTERSTATE ROUTE I-495
RELOCATED 12th STREET BRIDGE OVER P.C.T. CO.

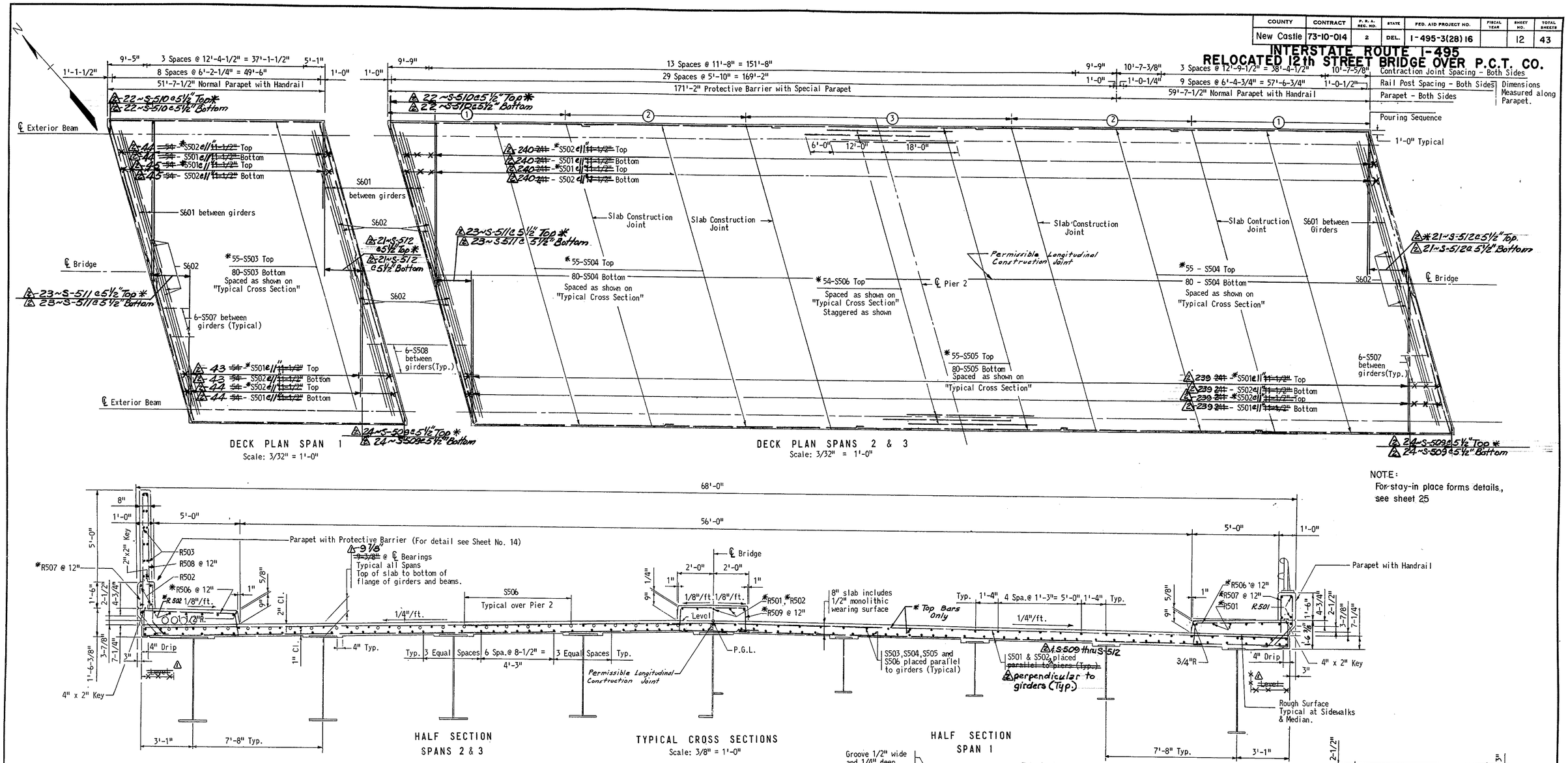

DECK PLAN SPAN 1
Scale: 3/32" = 1'-0"

DECK PLAN SPANS 2 & 3
Scale: 3/32" = 1'-0"

NOTE:
For stay-in place forms details, see sheet 25

HALF SECTION SPANS 2 & 3

TYPICAL CROSS SECTIONS
Scale: 3/8" = 1'-0"

HALF SECTION SPAN 1

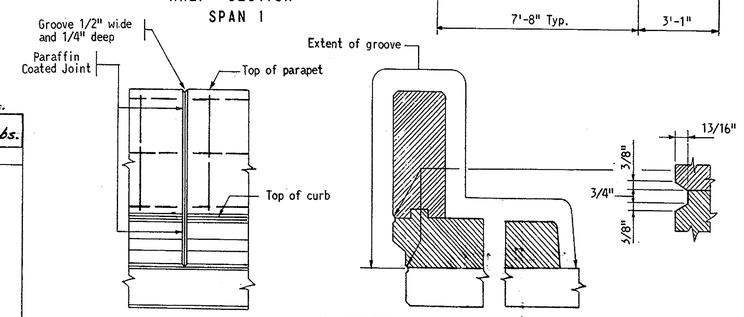

PARAPET AND SIDEWALK CONTRACTION JOINT

Contraction Joints in Protective Barrier will match those in Parapet and Sidewalk. At such joints the "Extent of groove" will include the Protective Barrier.

Longitudinal reinforcing bars in parapet, sidewalk, median curb and protective barrier are to be cut in field to accommodate contraction joints as indicated on Deck Plan. Median contraction joints similar.

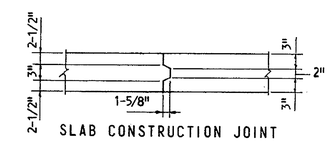

SLAB CONSTRUCTION JOINT
Scale: 3/4" = 1'-0"

NOTE:
Bar size is indicated in the bar mark. The first digit when 3 digits are used indicates the bar size. All bar dimensions are out to out of bar.

* All bars in top mat shall be epoxy coated.

REINFORCING SCHEDULE

(Epoxy = ~~79,600 lbs.~~ 79,452 Lbs. Plain = ~~81,700 lbs.~~ 81,660 Lbs.)
Total = ~~W-161,380 Lbs.~~ 161,112 Lbs.

STRAIGHT BARS				BENT BARS			
MARK	NUMBER REQUIRED EPOXY COATED	NUMBER REQUIRED PLAIN	LENGTH	MARK	NUMBER REQUIRED EPOXY COATED	NUMBER REQUIRED PLAIN	LENGTH
S501	~~590~~ 567	~~590~~ 567	~~33'-0"~~ 31'-7"	S507	0	96	4'-10"
S502	~~590~~ 567	~~590~~ 567	~~38'-7"~~ 36'-10"	S508	0	96	4'-7"
S503	55	80	51'-2"				
S504	220	320	46'-6"	S602	0	16	36'-0"
S505	55	80	49'-6"				
S506	54	0	30'-0"				
S-509	48	48	2 EA. 1'-11" TO 35'-10 1/4"				
S601	0	64	7'-2"				
S-510	44	44	2 EA. 1'-11" TO 32'-10 3/4"				
R501	19	8	51'-2"	R506	572	0	8'-9"
R502	95	40	47'-2"	R507	572	0	7'-6"
R503	0	96	43'-8"	R508	0	344	12'-9"
S-511	46	46	2 EA. 4'-0 1/2" TO 36'-7"	R509	286	0	6'-10"
S-512	42	42	2 EA. 1'-9" TO 31'-4"				

BENDING DIAGRAMS

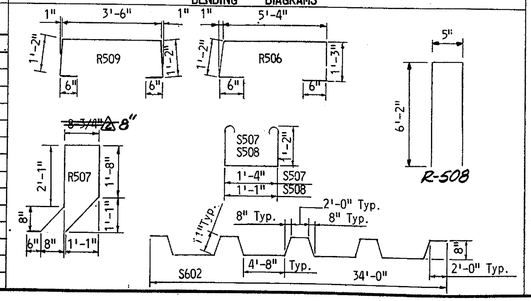

DELAWARE DEPARTMENT OF HIGHWAYS & TRANSPORTATION
DIVISION OF HIGHWAYS

INTERSTATE ROUTE I-495

SUPERSTRUCTURE - DECK

J. E. GREINER CO.
MORAN, PROCTOR, MUESER & RUTLEDGE
CONSULTING ENGINEERS

D. W. G.
T. W. G.
C. C. R.

SCALE: AS NOTED
DATE: 7-1-1968
APPROVED BY:
BRIDGE ENGINEER

1 Revised Typical Cross Section - Dimension T.F.F. 6-13-75
2 Revised Rebar in Deck Slab (S-501, S-502) added S-509 thru S-512 T.F.F. 9-12-75
3 Revised Total Weights of Bars in Schedule T.F.F. 12-1-75

COUNTY	CONTRACT	P. R. A. REQ. NO.	STATE	FED. AID PROJECT NO.	FISCAL YEAR	SHEET NO.	TOTAL SHEETS
New Castle	73-10-014	2	DEL.	I-495-3(28)16		13	43

INTERSTATE ROUTE I-495
RELOCATED 12th STREET BRIDGE OVER P.C.T. CO.

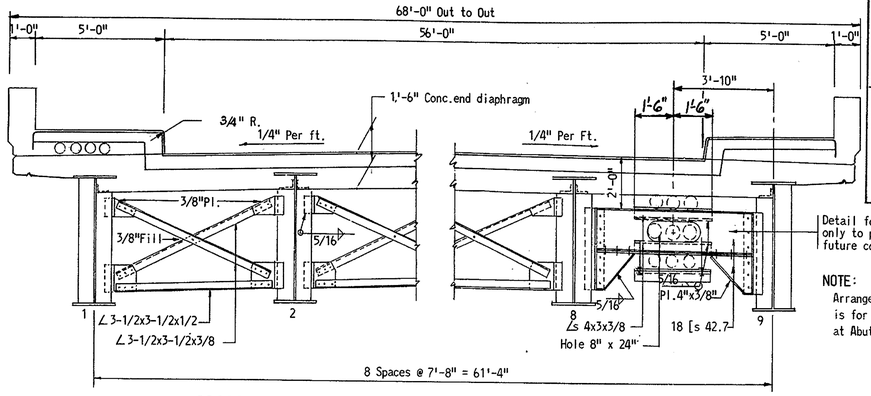

CROSS SECTION - SPANS 2 & 3 AT PIER 1 AND ABUTMENT B
Scale: 3/8" = 1'-0"

Detail for south side only to provide for future conduits.

NOTE:
Arrangement of conduits shown is for Pier 1. For arrangement at Abutment B, See Detail A

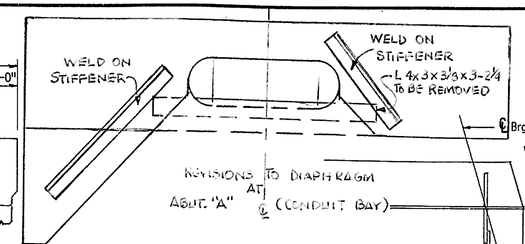

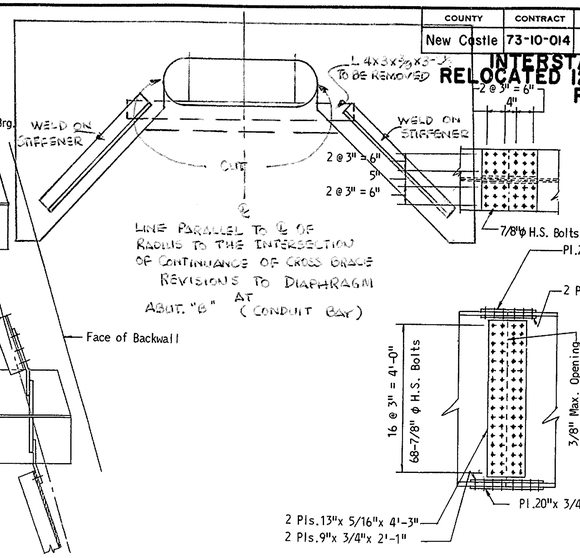

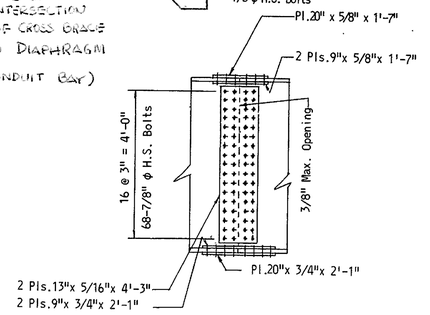

DIAPHRAGM CONNECTIONS AT ABUTMENT B
Details at Pier 1, Pier 2, and Abutment "A" Similar
Scale: 3/4" = 1'-0"

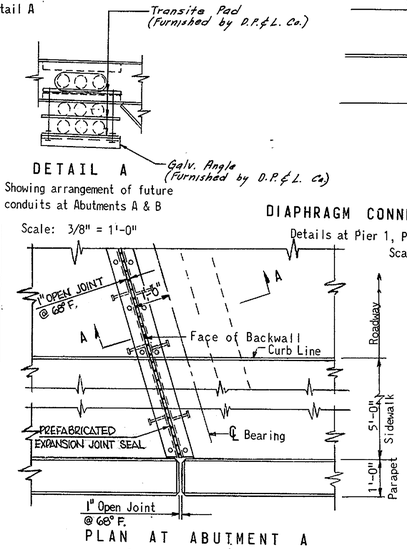

DETAIL A
Showing arrangement of future conduits at Abutments A & B
Scale: 3/8" = 1'-0"

PLAN AT ABUTMENT A
Scale: 1/2" = 1'-0"

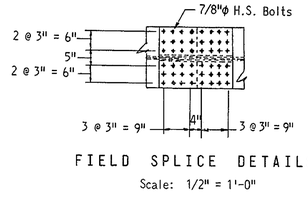

FIELD SPLICE DETAILS
Scale: 1/2" = 1'-0"

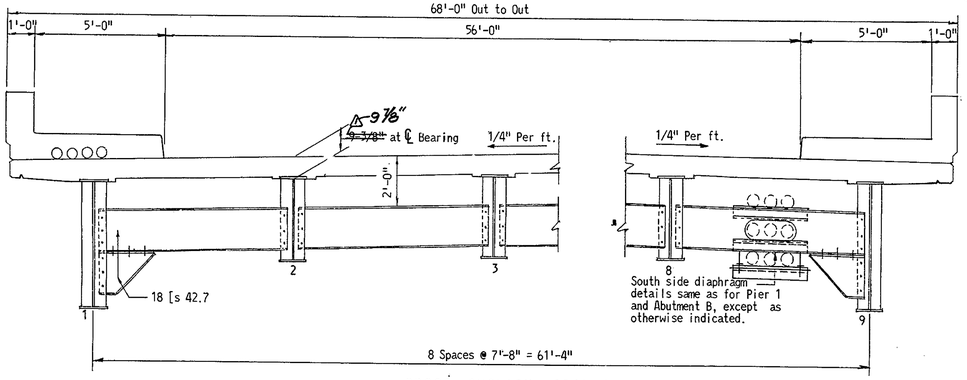

CROSS SECTION - SPAN 1
Scale: 3/8" = 1'-0"

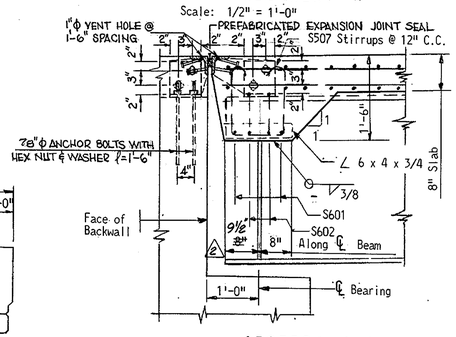

SECTION A-A
Scale: 3/4" = 1'-0"

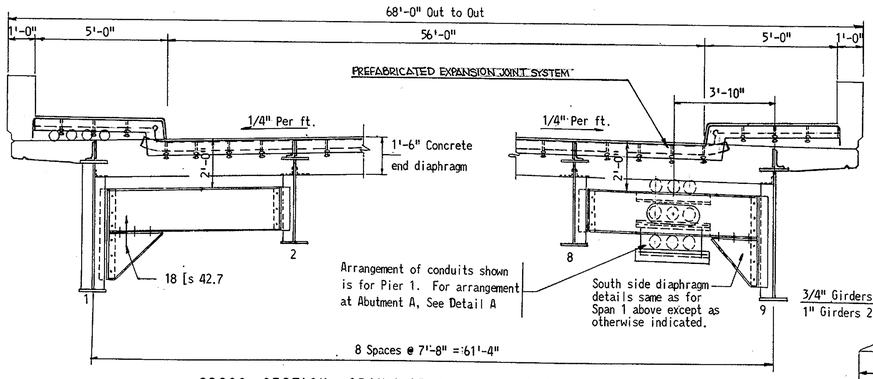

CROSS SECTION - SPAN 1 AT ABUTMENT A AND PIER 1
Scale: 3/8" = 1'-0"

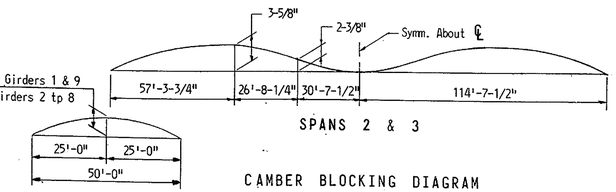

SPANS 2 & 3

CAMBER BLOCKING DIAGRAM

Note: Cambers given are measured from a chord line between ℄ of bearings. Camber shown includes vertical curve camber.

TABLE OF GRADE ELEVATIONS AND DEAD LOAD DEFECTIONS IN FEET

GIRDER	1	2	3	4	5	6	7	8	9	Deflections			
POINT	Grade El.	Grade El.	Grade El.	Grade El.	Grade El.	Grade El.	Grade El.	Grade El.	Grade El	Structural Steel	Concrete Slab	Curb & Parapet	Full Dead Load
SPAN 1													
1	36.461	36.681	36.901	37.120	37.297	37.237	37.134	37.032	36.928	0.000	0.000	0.000	0.000
2	36.773	36.990	37.207	37.423	37.596	37.533	37.428	37.322	37.215	0.003* 0.005**	0.017* 0.029**	0.005* 0.005**	0.025* 0.039**
3	37.069	37.283	37.496	37.709	37.879	37.813	37.704	37.595	37.485	0.004* 0.007**	0.022* 0.038**	0.007* 0.007**	0.033* 0.052**
4	37.347	37.558	37.768	37.977	38.145	38.075	37.963	37.851	37.738	0.003* 0.005**	0.017* 0.029**	0.005* 0.005**	0.025* 0.039**
5	37.609	37.816	38.023	38.229	38.393	38.321	38.205	38.090	37.973	0.000	0.000	0.000	0.000
SPANS 2 & 3													
6	37.639	37.846	38.053	38.259	38.422	38.349	38.233	38.117	38.001	0.000	0.000	0.000	0.000
7	38.170	38.370	38.569	38.767	38.924	38.843	38.720	38.597	38.473	0.029	0.068	0.017	0.114
8	38.612	38.804	38.996	39.187	39.336	39.248	39.118	38.987	38.856	0.032	0.077	0.020	0.129
9	38.965	39.150	39.334	39.518	39.659	39.564	39.426	39.288	39.149	0.014	0.032	0.010	0.056
10	39.229	39.406	39.583	39.759	39.893	39.791	39.646	39.500	39.354	0.000	0.000	0.000	0.000
11	39.403	39.573	39.743	39.912	40.038	39.928	39.776	39.623	39.469	0.014	0.032	0.010	0.056
12	39.488	39.651	39.813	39.975	40.094	39.977	39.817	39.657	39.496	0.032	0.077	0.020	0.129
13	39.484	39.640	39.795	39.949	40.061	39.936	39.769	39.601	39.433	0.029	0.068	0.017	0.114
14	39.391	39.539	39.687	39.834	39.938	39.806	39.631	39.456	39.281	0.000	0.000	0.000	0.000

* Girders 1 & 9 ** Girders 2 to 8 incl.

CAMBER: Girders shall be cambered for dead load deflection and vertical curve as indicated in the Camber Blocking Diagram. After all girders are in place, elevations shall be taken along the top of the girder at points where the grade elevations are shown. The difference between these two elevations plus the flange plate thickness, plus the sum of the deflections shown in the table for "Concrete Slab" and "Curb & Parapet" is the thickness of slab and haunch over top of web at centerline of girder. The minimum slab plus haunched depth shall not be less than 9".

DELAWARE DEPARTMENT OF HIGHWAYS & TRANSPORTATION
DIVISION OF HIGHWAYS

INTERSTATE ROUTE I-495

SUPERSTRUCTURE-DETAILS

J. E. GREINER CO.
MORAN, PROCTOR, MUESER & RUTLEDGE
CONSULTING ENGINEERS

D. H. W.
T. H. W.
C. C.R.

SCALE AS NOTED
DATE 7-1-1968

APPROVED BY:
BRIDGE ENGINEER

& Revised beam End Dimension at Abutment A C.H. 7-29-75

COUNTY	CONTRACT	P. R. A. REG. NO.	STATE	FED. AID PROJECT NO.	FISCAL YEAR	SHEET NO.	TOTAL SHEETS
New Castle	73-10-C:4	2	DEL.	I-495-3(28)16		14	43

INTERSTATE ROUTE I-495
RELOCATED 12th STREET BRIDGE OVER P.C.T. CO.

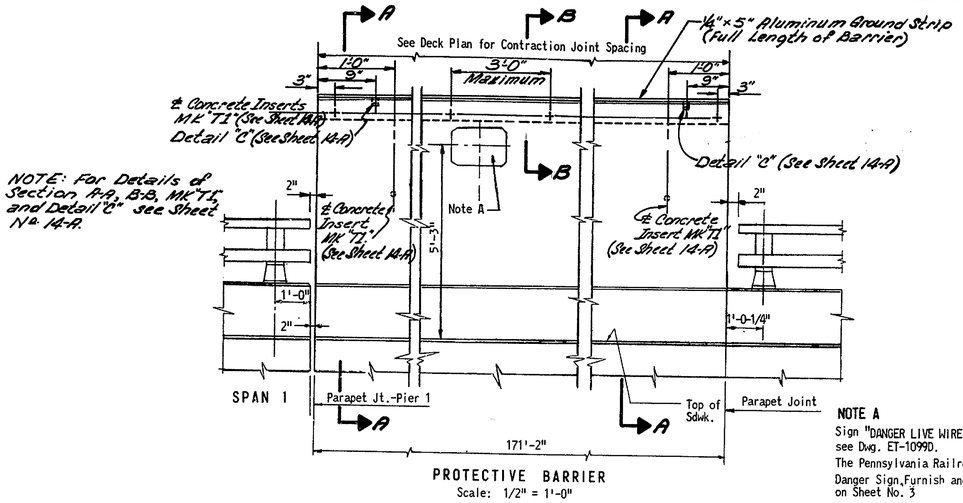

PROTECTIVE BARRIER
Scale: 1/2" = 1'-0"

NOTE A
Sign "DANGER LIVE WIRE KEEP OFF", see Dwg. ET-1099D.
The Pennsylvania Railroad Electrified Territory.
Danger Sign, Furnish and Install 6 at locations on Sheet No. 3

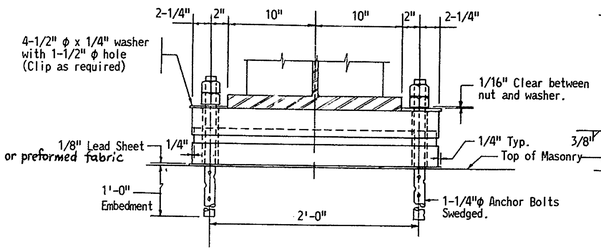

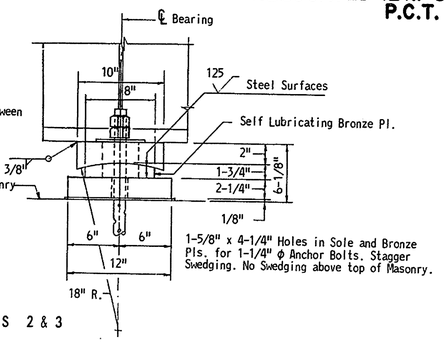

EXPANSION - SPANS 2 & 3

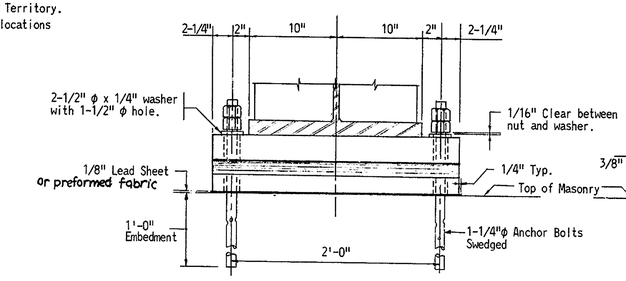

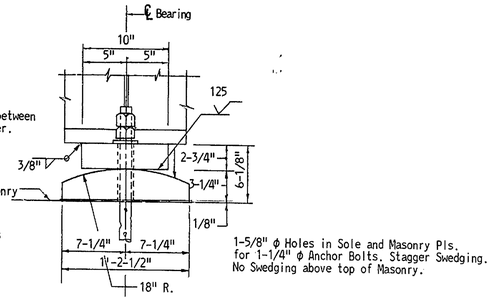

FIXED - SPANS 2 & 3

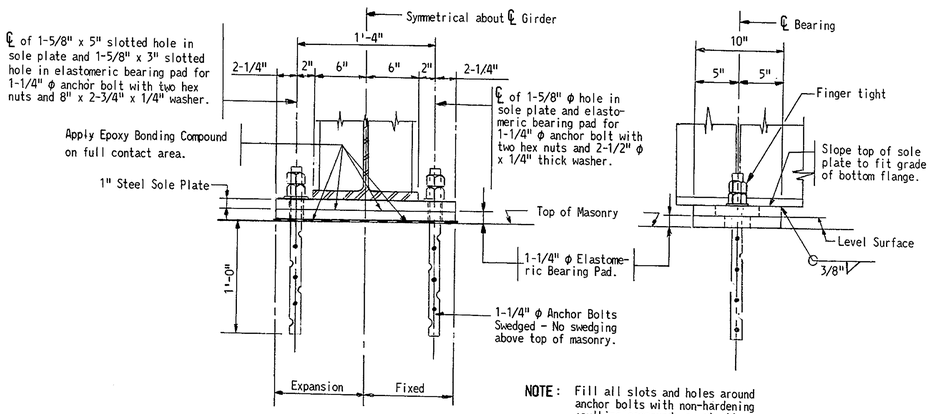

EXPANSION & FIXED - SPAN 1

BEARING DETAILS
Scale: 1 1/2" = 1'-0"

NOTES:
1. For General Notes see Sheet No. 2
2. Bronze plates for expansion shoes shall conform to A.S.T.M., B22, Alloy A.
3. The surface finish of metal in contact and indicated by the symbol √ shall meet the requirements as defined in American Standard Association Specification A.S.A.B. - 46.1. All sliding surfaces to be finished in the direction of expansion or rotation.
4. Mill stiffeners to bear on tension flanges and weld stiffeners to compression flanges with 5/16" fillet.

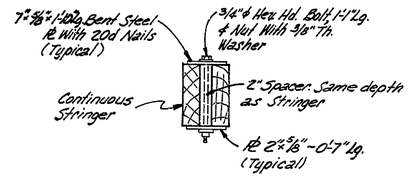

SECTION D-D
No Scale

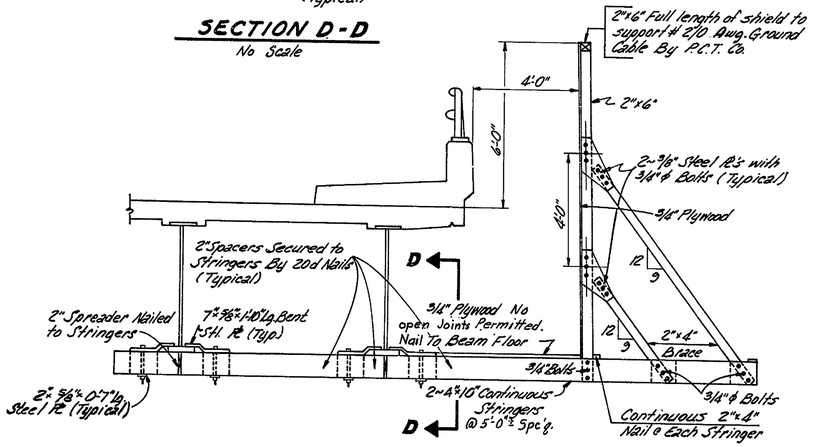

SUGGESTED TEMPORARY PROTECTIVE SHIELD
Note: Protective Shield for 12th Street Bridge only.
Scale: 3/8" = 1'-0"

NOTE:
All Timber shall be Structural Grade 1600F Southern Pine.
Protective Shield shall be erected on both sides of the Superstructure before placement of Concrete Deck & Protective Barrier. Length of Protective Shield to be the same length of Protective Barrier.
Protective Shield shall be placed with Continuous Stringers parallel to the Overhead Catenary Lines and No Continuous Stringers shall be placed closer than 2'-6" to the Overhead Catenary Lines.
Total construction depth of temporary protective shield shall not exceed 1'-0", measured from bottom of steel.

DELAWARE DEPARTMENT
OF HIGHWAYS & TRANSPORTATION
DIVISION OF HIGHWAYS

INTERSTATE ROUTE I-495

PROTECTIVE BARRIER & SHOES

J. E. GREINER CO.
MORAN, PROCTOR, MUESER & RUTLEDGE
CONSULTING ENGINEERS

D. Y. W.
T. Y. W.
C. V. A. F.

SCALE AS NOTED
DATE 7-1-1968

APPROVED BY:
BRIDGE ENGINEER

COUNTY	CONTRACT	P.A.A. REG. NO	STATE	FED. AID PROJECT NO	SHEET NO	TOTAL SHEETS
New Castle	73-10-014	2	DEL.	I-495-3(28)16	14-A	43

INTERSTATE ROUTE I-495
RELOCATED 12th STREET BRIDGE OVER P.C.T. CO.

NO.	REVISIONS	BY	DATE

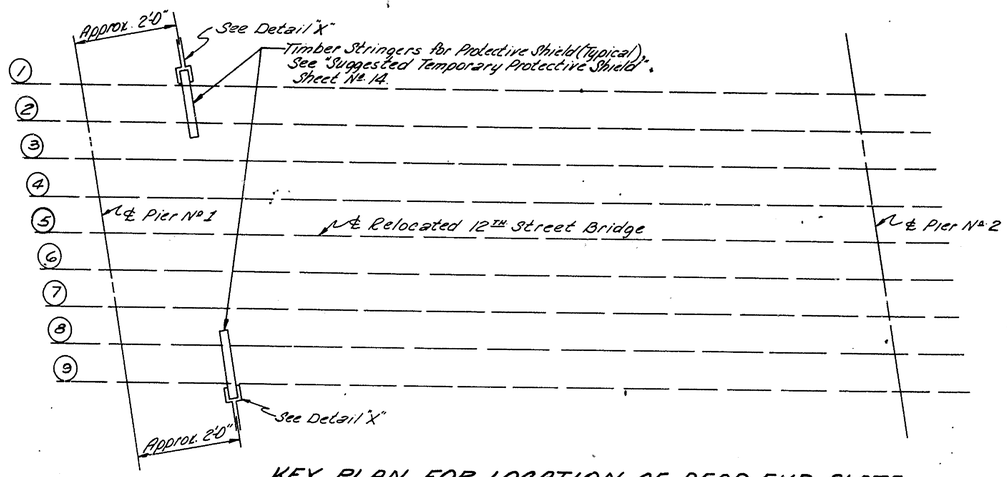

KEY PLAN FOR LOCATION OF DEAD END PLATE ASSEMBLY "DETAIL X"
Not To Scale

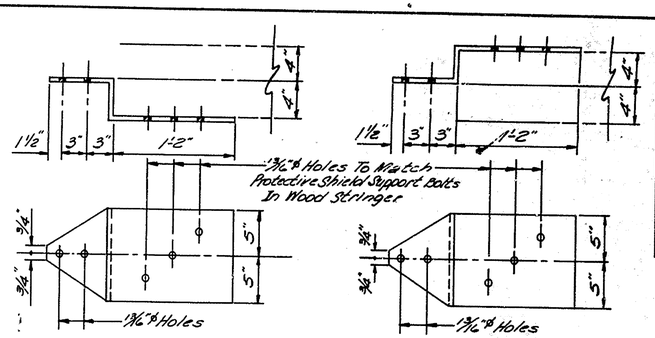

℄ 10" × ⅜" × 2'-2½"
MK-Pa (Galv.)

℄ 10" × ⅜" × 2'-2¼"
MK-Pb (Galv.)

Scale: 1½"=1'-0"

NOTE: For assembly of MK-Pa and MK-Pb see Detail 'X'

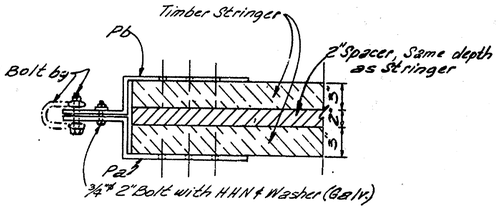

PLAN
DETAIL "X" (2-REQD)
Scale: 1½"=1'-0"

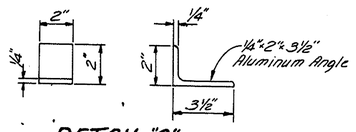

DETAIL "C"
Not To Scale

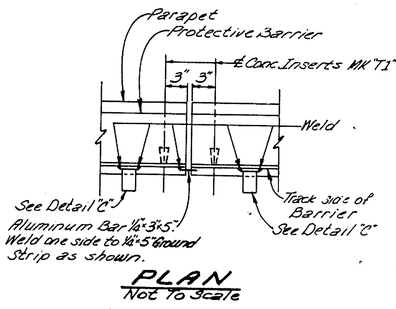

PLAN
Not To Scale

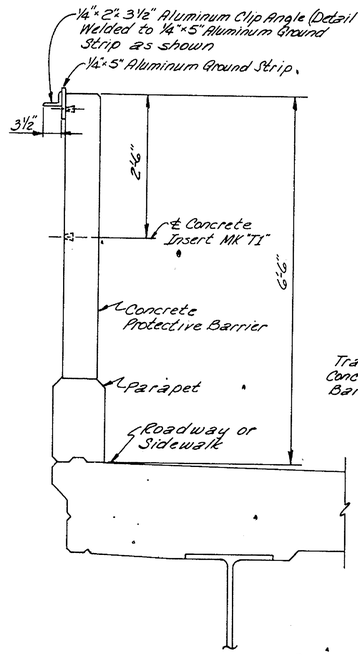

SECTION "A-A"
Not To Scale

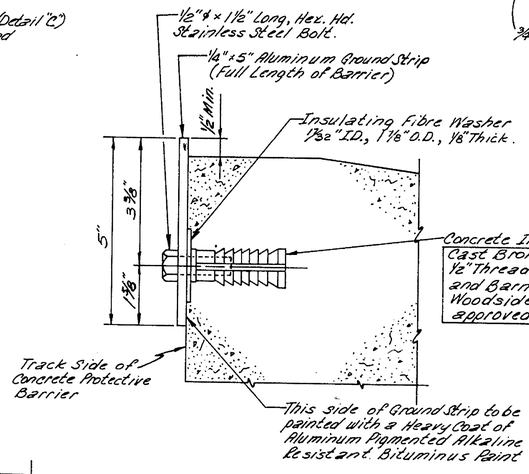

SECTION "B-B"
Not To Scale

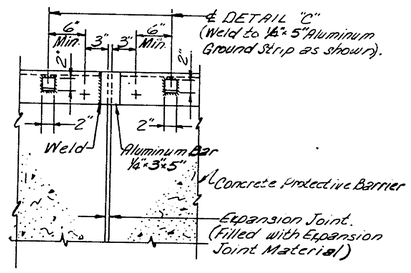

ELEVATION
Clip Angles for Expansion Joint Jumper
NOTE: Also Applies where Ground Strip is not continuous
Not To Scale

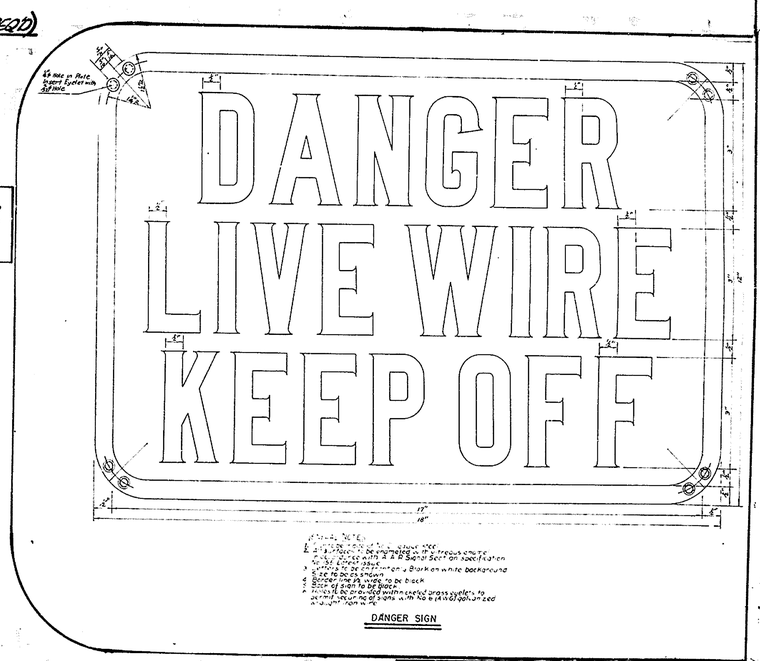

DANGER SIGN

DELAWARE DEPARTMENT
OF HIGHWAYS & TRANSPORTATION
DIVISION OF HIGHWAYS

INTERSTATE ROUTE I-495

PROTECTIVE BARRIER

D. E.Z.	SCALE	APPROVED BY:
T. T.F.F.	AS SHOWN	
C. E.Z.		BRIDGE ENGINEER

COUNTY	CONTRACT	P.R.A. REG. NO.	STATE	FED. AID PROJECT NO.	SHEET NO.	TOTAL SHEETS
New Castle	73-10-014	2	DEL.	I-495-3(28)16	15	43

INTERSTATE ROUTE I-495
RELOCATED 12th STREET BRIDGE OVER P.C.T. CO.

NO.	REVISIONS	BY	DATE
1	Section A-A	C.H.	7/21/75
2	Section B-B	C.H.	7/21/75
3	Expansion Joint at Pier 1	C.H.	7/21/75
4	Curb Opening at Abutment B	C.H.	7/21/75
5	Curb Opening at Pier 1	C.H.	7/21/75
6	Joint Seal for Abutment B & Pier 1	C.H.	7/21/75

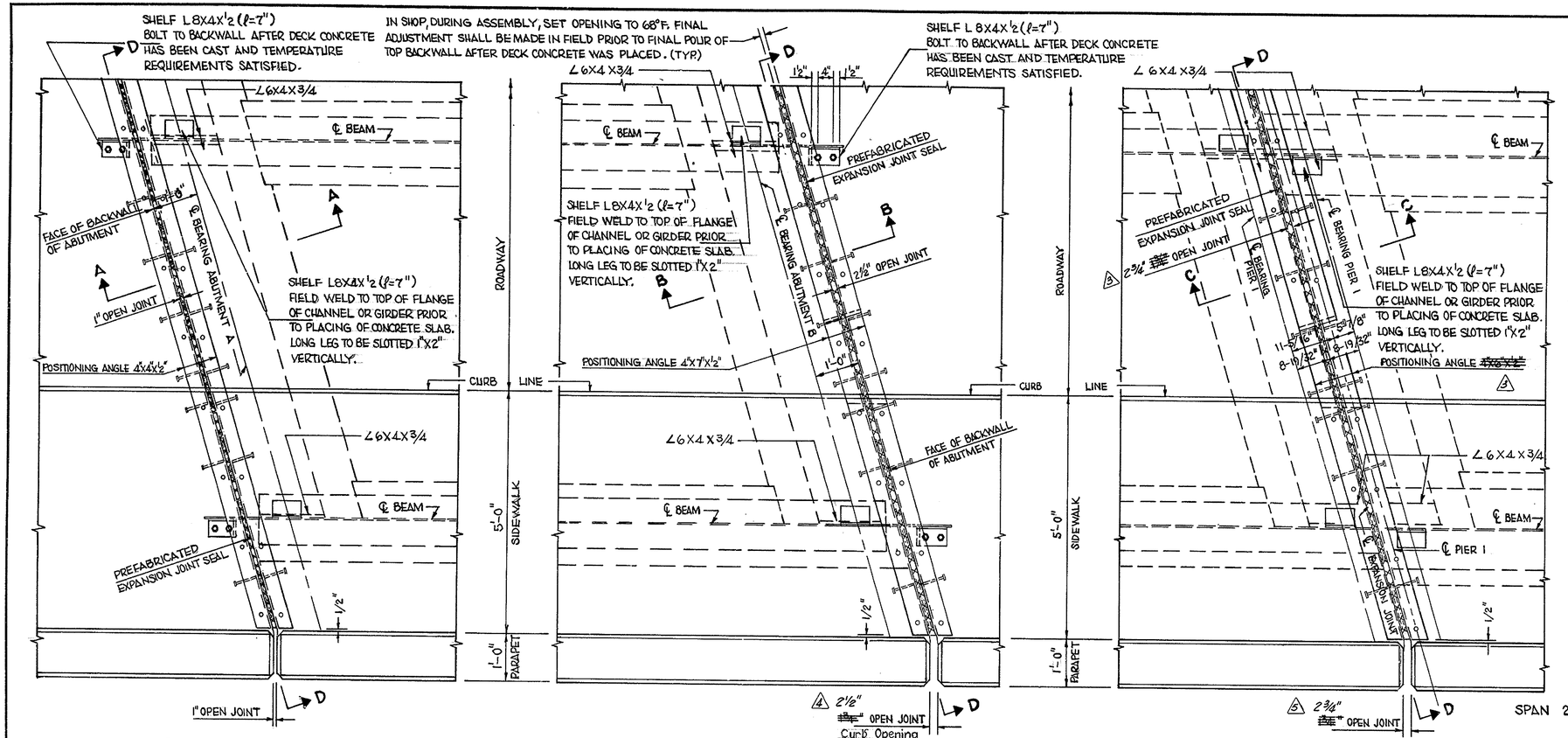

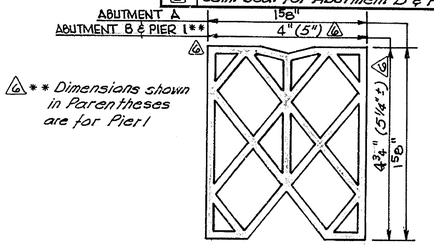

⚠6 ** Dimensions shown in Parentheses are for Pier 1

SECTION THROUGH SEAL

PREFABRICATED EXPANSION JOINT SEAL
N.T.S.

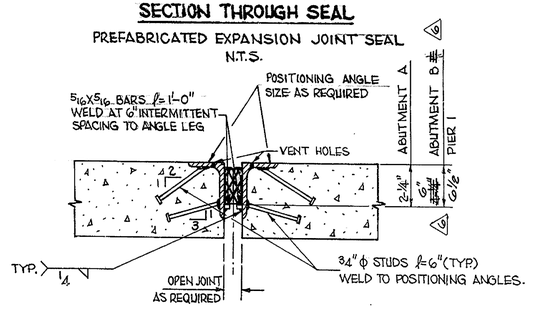

PREFABRICATED EXPANSION JOINT SEAL
TYPICAL SECTION
SCALE: 1½"=1'-0"

EXPANSION JOINTS
SCALE: ¾"=1'-0"

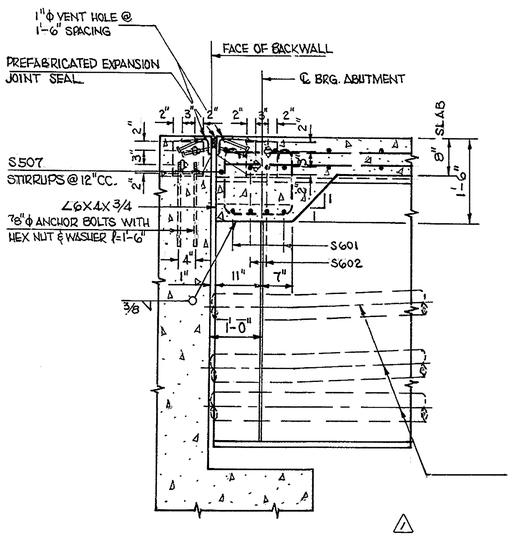

SECTION A-A *
SCALE: ¾"=1'-0"

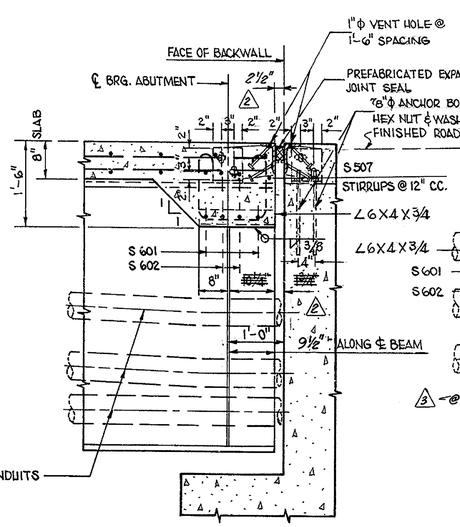

SECTION B-B
SCALE: ¾"=1'-0"

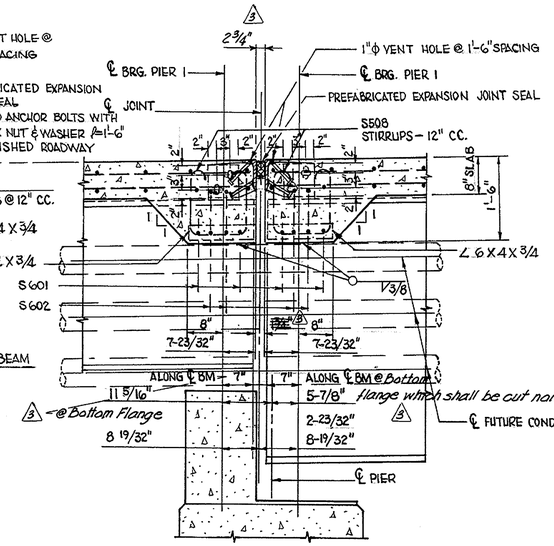

SECTION C-C
SCALE: ¾"=1'-0"

flange which shall be cut normally to Beam Direction

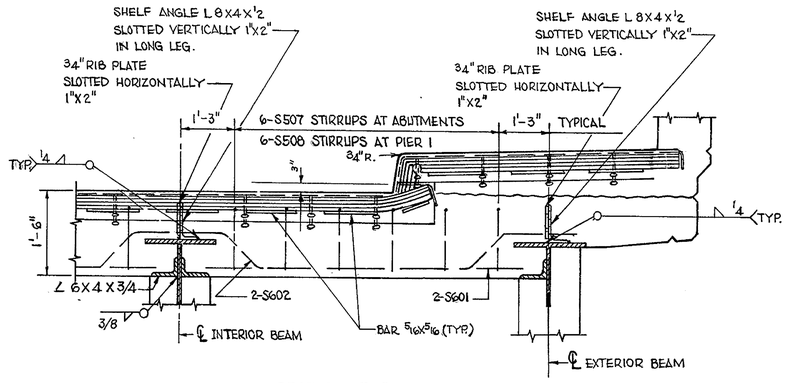

SECTION D-D
NO SCALE

NOTES:
FOR GENERAL NOTES, SEE SHEET № 2

⚠1 * Section A-A of sheet No. 13 shall govern for any contradiction in dimensions and shapes.

DELAWARE
DEPARTMENT OF HIGHWAYS & TRANSPORTATION
DIVISION OF HIGHWAYS

INTERSTATE ROUTE I-495

EXPANSION JOINTS

D. T. R.B.F. C.	SCALE AS SHOWN	APPROVED BY:
	DATE 10-8-1971	BRIDGE ENGINEER

8 KE PAPER 10 1253

COUNTY	CONTRACT	F.A.A. REG. NO.	STATE	FED. AID PROJECT NO.	SHEET NO.	TOTAL SHEETS
New Castle	73-10-014	2	DEL.	I-495-3(28) 16	16	43

INTERSTATE ROUTE I-495
RELOCATED 12th STREET BRIDGE OVER P.C.T. CO.

NO.	REVISIONS	BY	DATE
1	Added: Grinding & Welding End Caps	BGS.	3/9/67

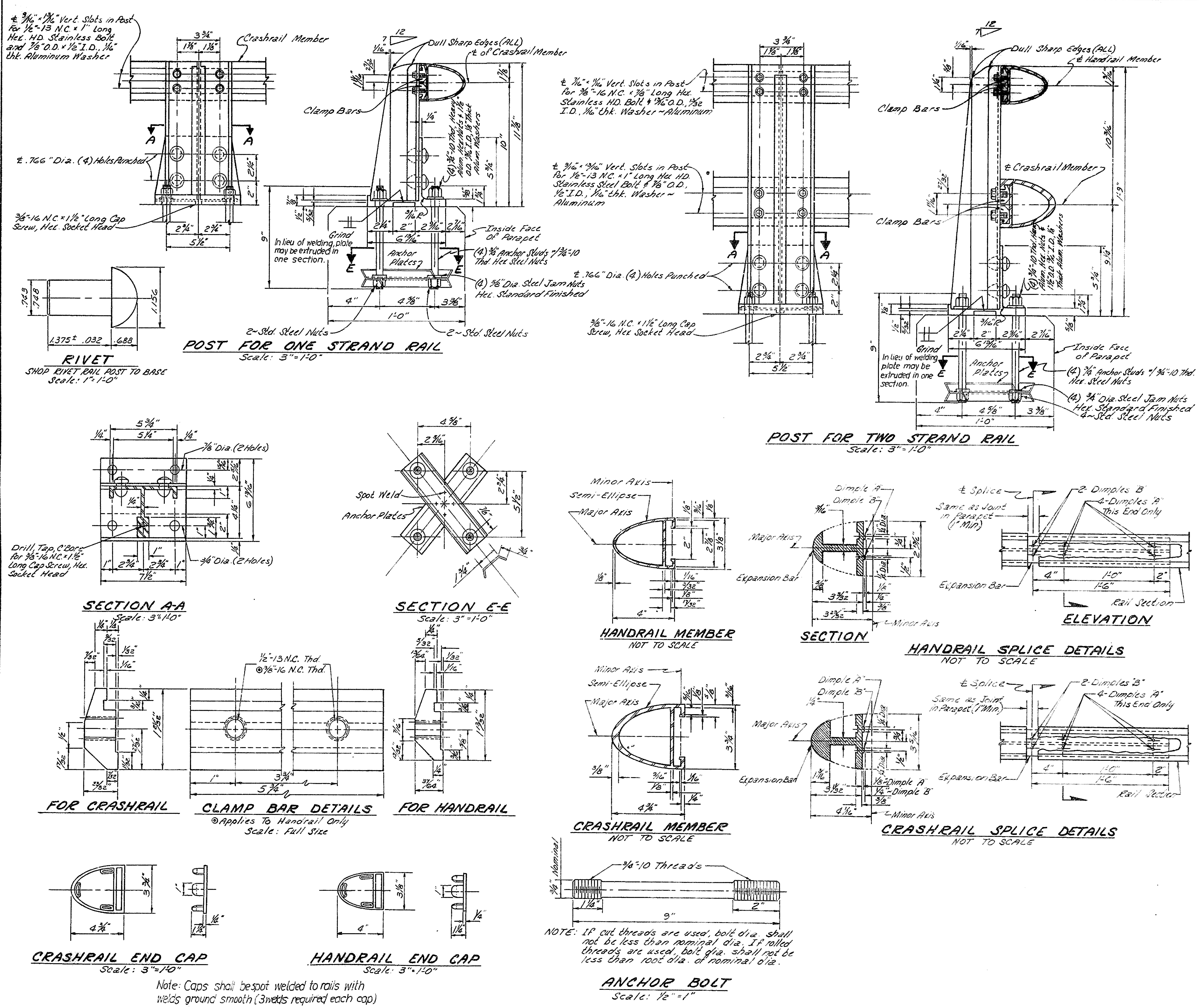

GENERAL NOTES

1- Posts shall be set perpendicular to grade.
2- Maximum post spacing = 6'-6"
3- Rails shall be continuous from end to end of Bridge with splices, as necessary, unless the continuity is interrupted by light standards or traffic sign supports.
4- Rails shall be continuous over four posts without splices where possible.
5- The centerline of any splice and/or expansion joint is to be located at least 2'-0" away from centerline of a post except where indicated otherwise on plans. Expansion and/or splice joints for each strand of two strand railing are to be placed in the same location and in the same panel.
6- Bottom of post bases shall be thoroughly coated with an approved caulking compound or an approved zinc chromate paint.
7- Where shims are required for post alignment, said shims shall conform with ASTM B-209, alloy 1100-O.
8- Design - In accordance with A.A.S.H.O. interim specs. 1964.
9- See Bridge Plan Sheet for rail spacing and location.
10- At the contractors option metal rail may be either Aluminum or Galvanized Steel in accordance with the requirements of the General Notes and the following specifications for the alternate materials; However the contractor will be required to use the same rail material on all structures on the contract for which metal rail is designated. Details shown on this sheet are for aluminum. If Galvanized Steel Rails are to be used the contractor shall submit details for approval.

MATERIAL NOTES

GALVANIZED STEEL RAILS

1- Rail Post and Post Base: ASTM-A-36 grade Structural Steel-Galv. to ASTM A-123
2- Rail and Expansion Bar: ASTM A-36 grade Structural Steel-Galvanized to ASTM A-123.
3- Rail End Cap: Steel A-245 grade C-Galvanized to ASTM A-123.
4- Nuts and Washers for Top End of Anchor Assembly for Steel Rail shall be Type 430 Stainless Steel.
5- The Cut Ends of Galvanized Steel Railing, after grinding smooth, shall be given two coats of Zinc Paint meeting the requirements of Federal Specification MIL-P26915 U.S.A.F. Type I.

ALUMINUM RAILS

1- Rails, Posts, Post Bases, Splices and Clamp Bars	ASTM B-221 Alloy 6061-T6
2- Rivets ~ High Button Head	ASTM B-316, B-211
3- Aluminum Washers	ASTM B-209 Alloy Alclad 2024-T4
4- Stainless Steel Cap Screws	ASTM A-193 Grade B-8
5- End Plugs	ASTM B-26, B-108, Alloy 356-T6
6- Anchor Studs	ASTM A-276 Type 430 (threads to be rolled not cut)
7- Aluminum Nuts	ASTM B-211, Aluminum Alloy 6061-T6
8- Anchor Plates	A-7, A-36 or A-107 Grade 1020
9- Steel Nuts	A-307 Steel

DELAWARE DEPARTMENT OF HIGHWAYS & TRANSPORTATION
DIVISION OF HIGHWAYS

INTERSTATE ROUTE I-495

RAILING DETAILS

	SCALE	APPROVED BY:
D.		
T. T.F.F.	AS SHOWN	
C.		BRIDGE ENGINEER

COUNTY	CONTRACT	P. R. A. REG. NO.	STATE	FED. AID PROJECT NO.	SHEET NO.	TOTAL SHEETS
New Castle	73-10-014	2	DEL	I-495-3(28)16	17	43

INTERSTATE ROUTE I-495
RELOCATED 12th STREET BRIDGE OVER P.C.T. CO.

NO.	REVISIONS	BY	DATE

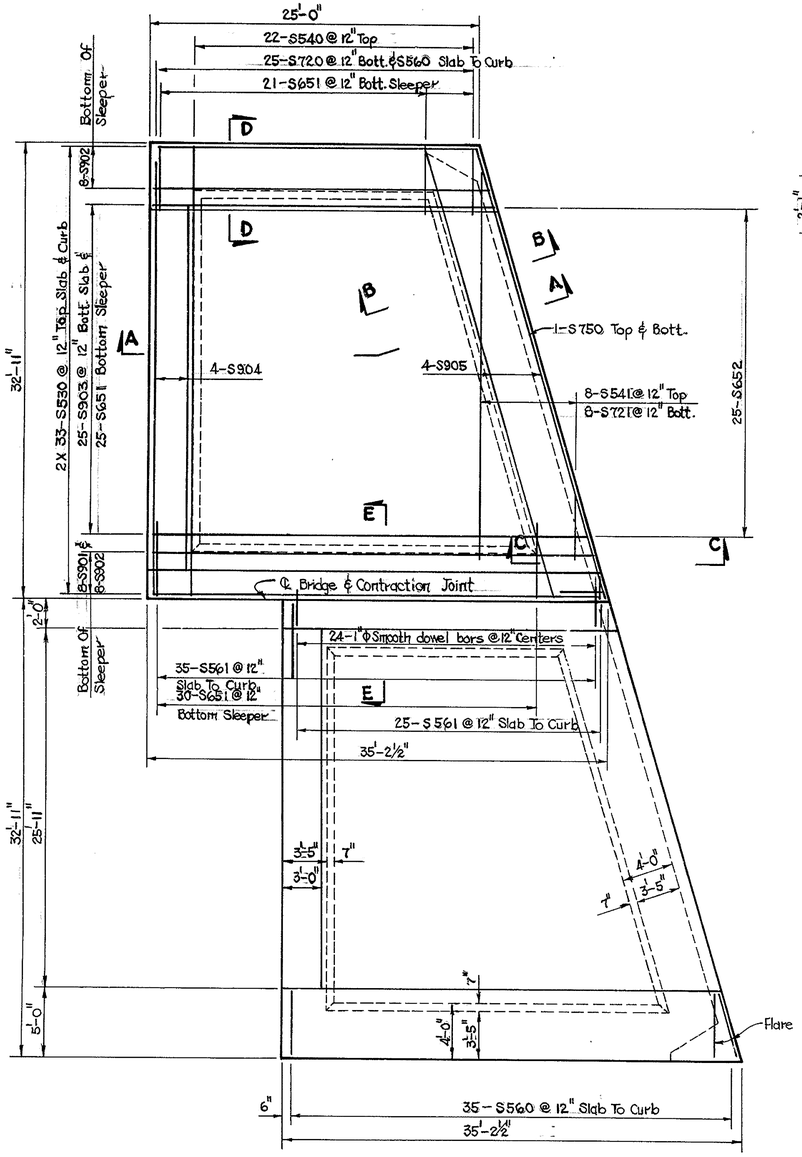

PLAN
Scale: 3/16" = 1'-0"

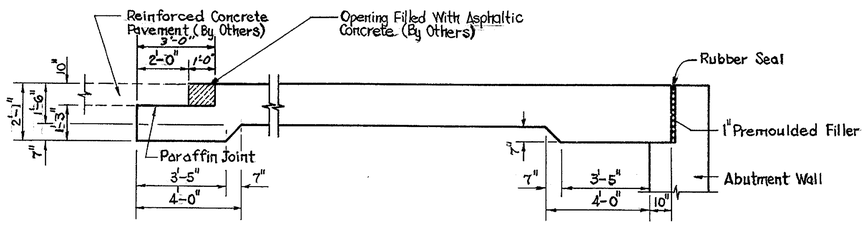

SECTION A-A
Scale: 3/8" = 1'-0"

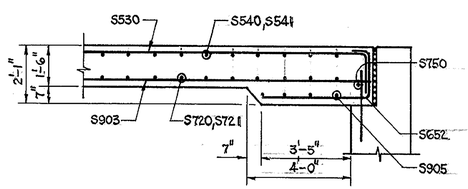

SECTION B-B (SLAB AREA)
Scale: 3/8" = 1'-0"

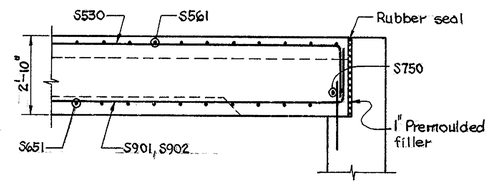

SECTION C-C (CURB AREA)
Scale: 3/8" = 1'-0"

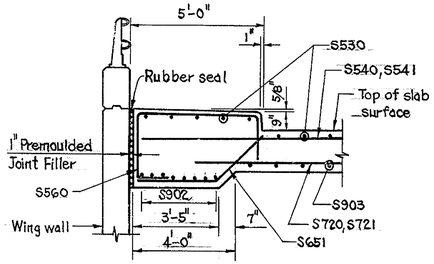

SECTION D-D
Scale: 3/8" = 1'-0"

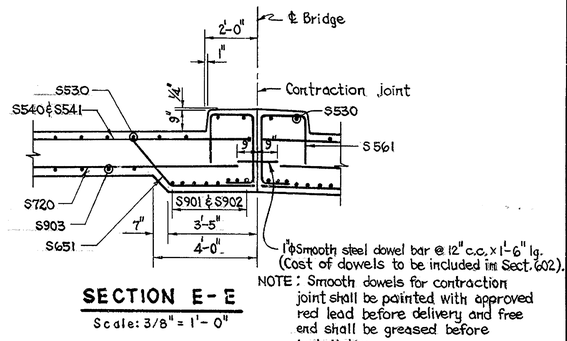

NOTE: Smooth dowels for contraction joint shall be painted with approved red lead before delivery and free end shall be greased before installation.

SECTION E-E
Scale: 3/8" = 1'-0"

REINFORCING BAR SCHEDULE (4-SLABS)

STRAIGHT BARS				BENT BARS			
Mark	Size	Number	Length	Mark	Size	Number	Length
S901	9	32	12'-6"	S902	9	8X8	26'-0" to 27'-0"
S903	9	4X25	25'-9" to 33'-6"				
S904	9	16	32'-0"				
S905	9	16	33'-6"	S651	6	304	5'-3"
				S652	6	100	6'-0"
S720	7	100	29'-0"	S530	5	8X33	15'-0" to 20'-0"
S721	7	4X8	6'-6" to 28'-0"				
S540	5	88	32'-6"	S560	5	120	9'-6"
S541	5	4X8	7'-0" to 30'-0"	S561	5	120	6'-6"
S750	7	4	33'-0"				
Dowel	1"φ	48	1'-6"				

BENDING DIAGRAM

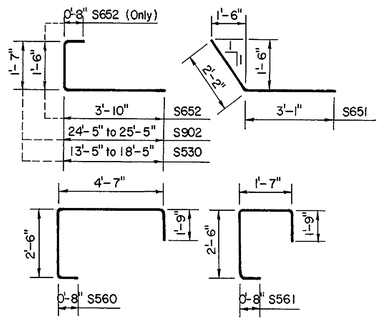

Note: All dimensions are out to out.

ESTIMATED QUANTITIES (4-SLABS)

Section	Item	Unit	Proposal
602	Portland Cement Concrete Masonry	C.Y.	275
605	Bar Reinforcement	Lbs.	42,014

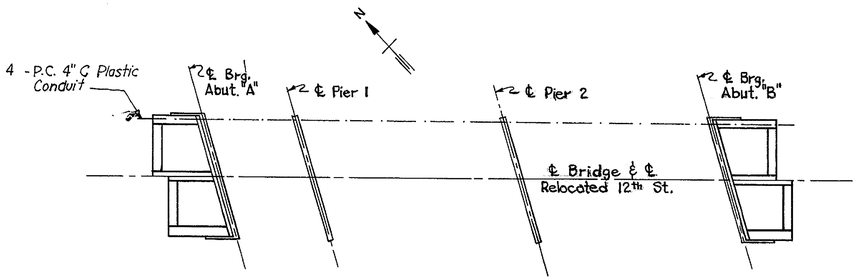

KEY PLAN
N.T.S.

DELAWARE
DEPARTMENT OF HIGHWAYS & TRANSPORTATION
DIVISION OF HIGHWAYS

APPROACH SLABS

D. T. R.B.F. C.	SCALE AS SHOWN	APPROVED BY: BRIDGE ENGINEER

D C B A 1 5 10 A B C D

COUNTY	CONTRACT	P. R. A. REG. NO.	STATE	FED. AID PROJECT NO.	FISCAL YEAR	SHEET NO.	TOTAL SHEETS
New Castle	73-10-014	2	DEL.	I-495-3(28) 16		18	43

INTERSTATE ROUTE I-495
RELOCATED 12th STREET BRIDGE OVER P.C.T. CO.

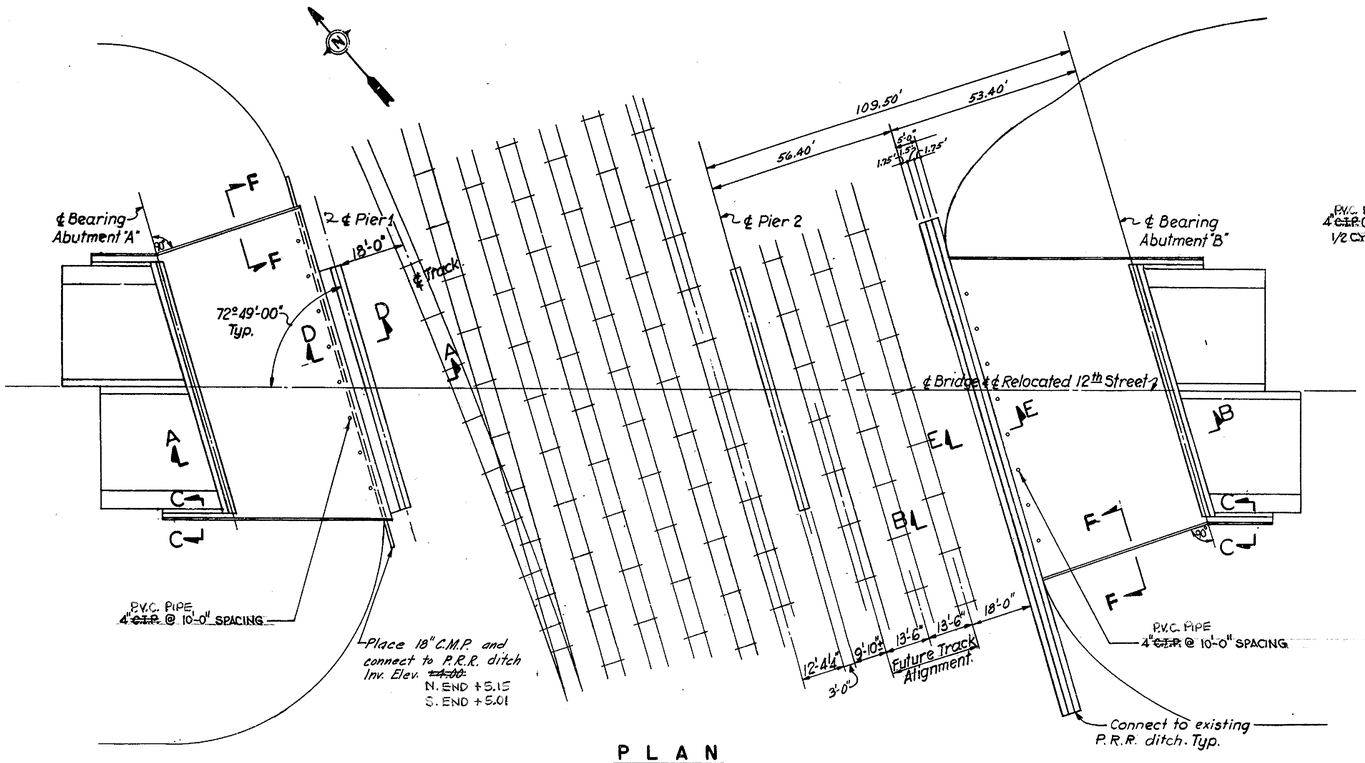

PLAN
Scale: 1" = 20'-0"

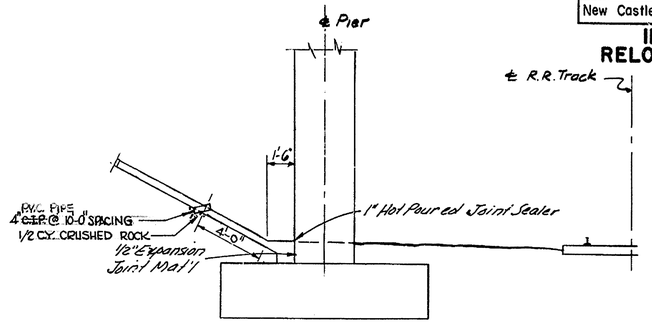

SECTION D-D
Scale: 1/4" = 1'-0"

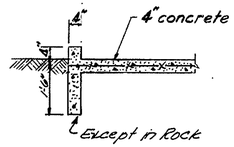

SECTION F-F: ALTERNATE I
Scale: 1/2" = 1'-0"

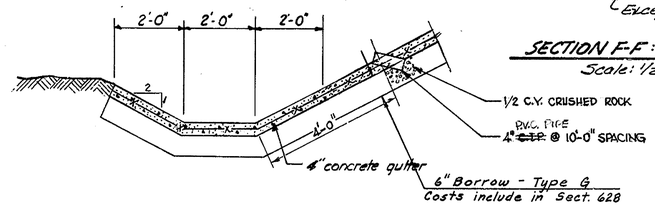

SECTION E-E
Scale: 1/2" = 1'-0"

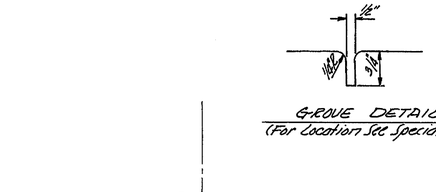

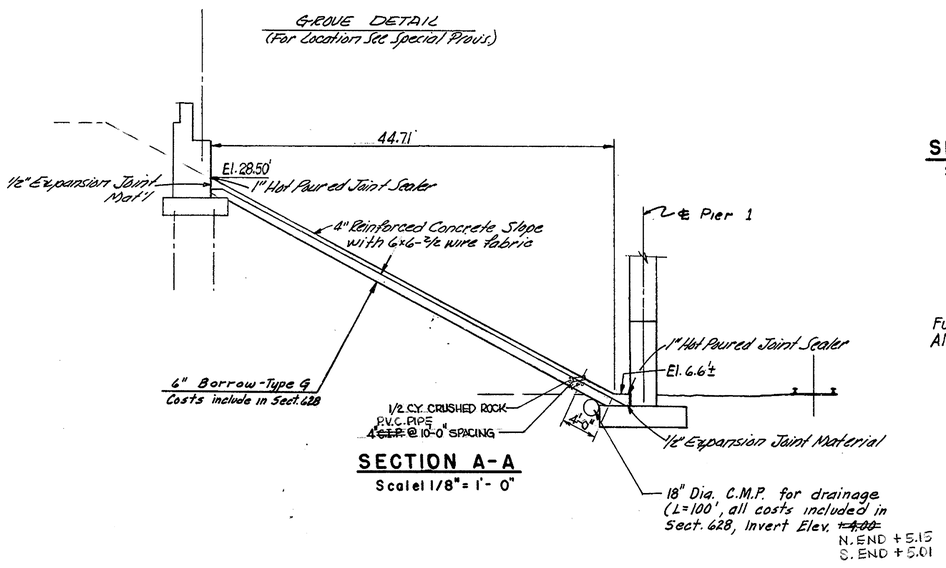

SECTION A-A
Scale: 1/8" = 1'-0"

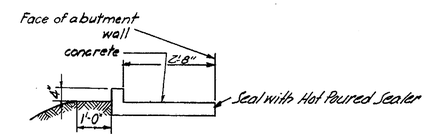

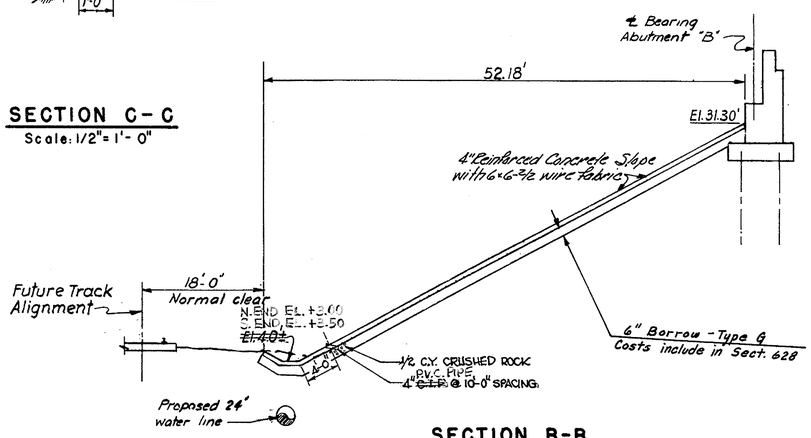

SECTION B-B
Scale: 1/8" = 1'-0

SECTION C-C
Scale: 1/2" = 1'-0"

NOTES:
1. For General Notes see Sheet No.2.
2. The concrete slabs for Slope Protection must have construction joints located not more than 12'0" apart.

J. E. GREINER CO.
MORAN, PROCTOR, MUESER & RUTLEDGE
CONSULTING ENGINEERS

DELAWARE DEPARTMENT
OF HIGHWAYS & TRANSPORTATION
DIVISION OF HIGHWAYS

INTERSTATE ROUTE I-495

SLOPE PROTECTION DETAILS

D. S.L.T. T. L.S. C. I.L.	SCALE AS NOTED	APPROVED BY:
	DATE 7-1-1968	BRIDGE ENGINEER

COUNTY	CONTRACT	P. R. A. REG. NO	STATE	FED. AID PROJECT NO.	FISCAL YEAR	SHEET NO.	TOTAL SHEETS
New Castle	73-10-014	2	DEL.	I-495-3(28)16		19	43

INTERSTATE ROUTE I-495
RELOCATED 12th STREET BRIDGE OVER I-495

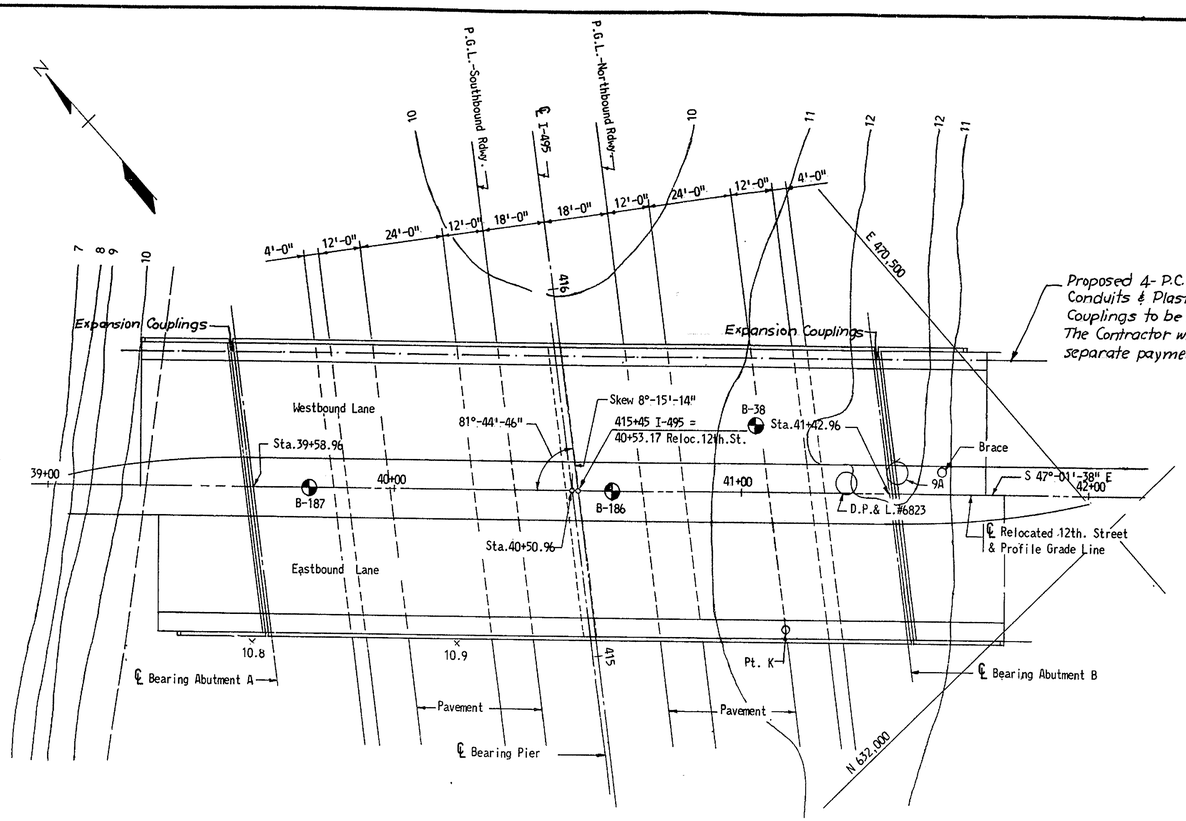

PLAN
Scale: 1" = 20'

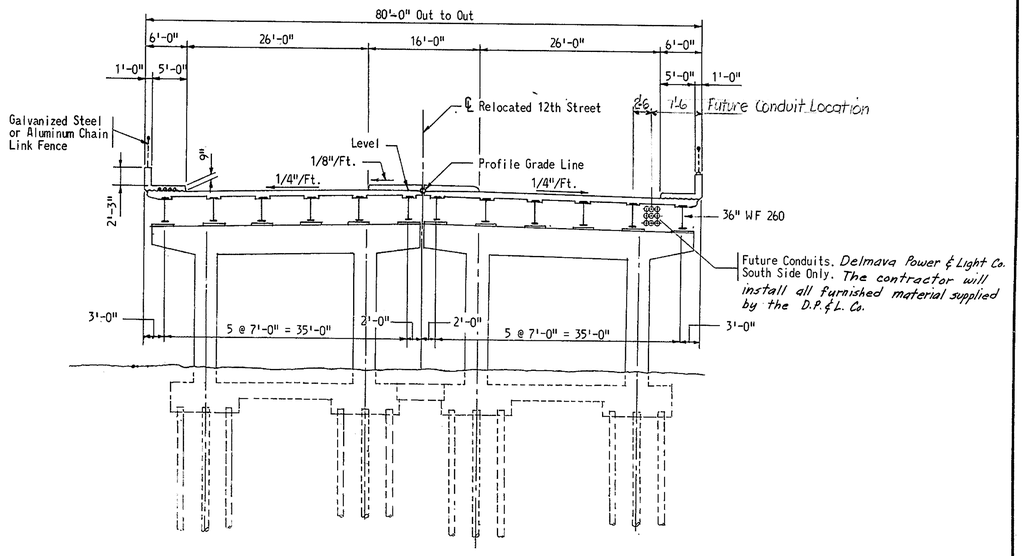

SECTION
Scale: 1" = 10'

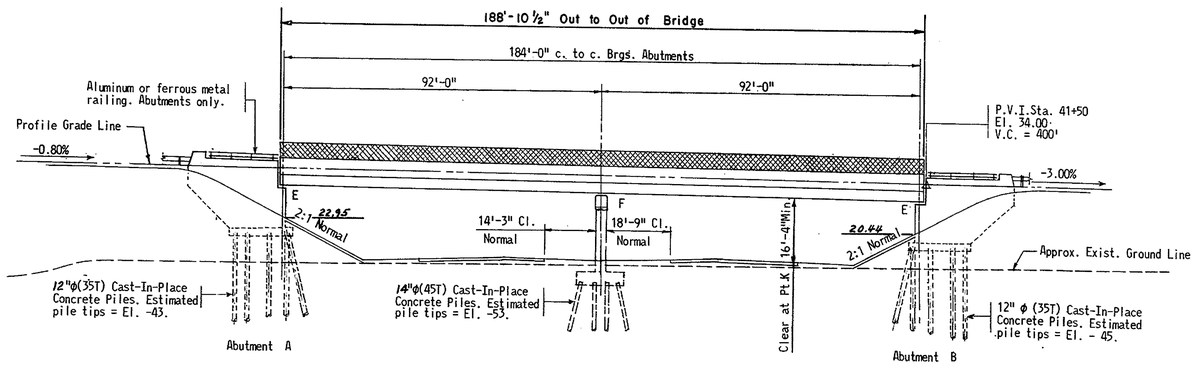

ELEVATION
Scale: 1" = 20'

NOTES:

For General Notes, See Sheet No. 2

SUPERSTRUCTURE: Concrete Deck - Continuous Steel Beam Construction Composite Action under Live Load.

BORINGS: Locations shown thus ◐ B-146

DELAWARE DEPARTMENT
OF HIGHWAYS & TRANSPORTATION
DIVISION OF HIGHWAYS

INTERSTATE ROUTE I-495

SITE PLAN

J. E. GREINER CO.
MORAN, PROCTOR, MUESER & RUTLEDGE
CONSULTING ENGINEERS

D. J.J.H.
T. W.G.
C. E.G.R.

SCALE: AS SHOWN
DATE: 7-1-1968

APPROVED BY:
BRIDGE ENGINEER

COUNTY	CONTRACT	P. R. A. REG. NO.	STATE	FED. AID PROJECT NO.	FISCAL YEAR	SHEET NO.	TOTAL SHEETS
New Castle	73-10-014	2	DEL.	I-495-3(28) 16		20	43

INTERSTATE ROUTE I-495
RELOCATED 12th STREET BRIDGE OVER I-495

Approach slabs not shown
For details see Sheet No.27

81° 44'-46"

98° 15'-14"

38 - 5r1 @ 2'-0" SPACING

℄ Relocated 12th Street and Profile Grade Line

2 Vertical piles

8 spaces @ 4'-9" = 38'-0"
9 vertical piles

5 - 561 @ 12"

El. 34.96 "A"
El. 32.57 "B"

El. 35.53 "A"
El. 33.04 "B"

El. 35.55 "A"
El. 32.99 "B"

Drive test pile

El. 35.04 "A"
El. 32.38 "B"

℄ Bearing

℄ Opening Abut. "A" only.

℄ Opening Abutment "B" only

1" Expan. Joint with premoulded filler.

Telephone Conduits in Abutment A

Telephone Conduits in Abutment B

12 Vertical piles
22 batter piles.

For piles cut-off elevation see Section M-M

5 Spaces @ 7.073'+ = 35.366'
5 Spaces @ 7'-0" = 35'-0"
10 Spaces @ 3'-6" = 35'-0"
40'-6¾"

80'-10 1/16"

41'-10 3/8"

82'-10 5/16"

40'-11 15/16"

Abut. "A" = 28'-0" (Abut. "B" = 26'-0")
Abut. "A" = 27'-10½" (Abut. "B" = 23'-10½")

PLAN

ELEVATION J - J

3 Spaces @ 6'-1½" = 18'-4½"

2-509 @ 12" E.F.

SIDEWALK FACE; RECESS WING POST FOR GUARD RAIL JUNCTION

22 - 565 @ 12"

℄ Joint 4½"

5-508 @ 12" F.F.

14 - 507 @ 6" F.F.

12 - 507 @ 12" F.F.

4-564 @ 12"

1-563 E.F.
El. 36.05 "A"
El. 32.66 "B"

1-562 E.F.
El. 31.05 "A"
El. 27.66 "B"

2-512 N.F.
2-602 F.F.

2-854 F.F.

5-513 @ 12" N.F.
5-603 @ 12" F.F.
5-570 @ 12" Dow.

4'0" min.

4'-0" Rounding

2-511 N.F.

11-515 @ 12" N.F.
11-570 @ 12 Dow.

14 - 568 @ 6" F.F.

1-651 E.F.

23-652 @ 6" F.F. (See Sect E-E)

11-806 @ 12" F.F. (See Sect E-E)

11-805 @ 12" F.F. (Alt 804 @ 6")

12 - 566 @ 12"
El. 18.36 "A"
El. 16.08 "B"

551 @ 12" Dow.

552 @ 12" Dow.

14 - 510 @ 12" N.F.

For guard rail connection to parapet see Sh. No. 6.

ELEVATION B - B

78 - 505 @ 12" N.F.
75 - 506 @ 12" F.F.
75 - 560 @ 12" F.F.

6 - 559 @ 12"
7'-6"

26 - 558 @ 12"

8 - 559 @ 12"

2'-0" x 2'-1" ± Opening
Cut bars at opening
Add 2 - 516 ea. side.
Abutment "B" only

El. 34.96 "A"
El. 32.57 "B"

2 - 571

2'-0" x 2'-1" ± opening. Abut "A" only.
Cut bars at opening.

El. 35.53 "A"
El. 33.04 "B"

2 - 567

El. 35.55 "A"
El. 32.99 "B"

El. 35.04 "A"
El. 32.38 "B"

El. 30.59 "A"
El. 28.25 "B"

El. 30.75 "A"
El. 28.37 "B"

El. 30.90 "A"
El. 28.50 "B"

El. 31.06 "A"
El. 28.63 "B"

El. 31.21 "A"
El. 28.76 "B"

El. 31.24 "A"
El. 28.76 "B"

El. 31.25 "A"
El. 28.75 "B"

El. 31.24 "A"
El. 28.71 "B"

El. 31.10 "A"
El. 28.54 "B"

El. 30.96 "A"
El. 28.38 "B"

El. 30.82 "A"
El. 28.21 "B"

El. 30.69 "A"
El. 28.05 "B"

El. 28.21

El. 30.81

2-516 ea side

4-516

℄ 1101

℄ 1101

6 - 553 @ 12" N.F.
7 - 554 @ 12" N.F.
7 - 555 @ 12" N.F.
7 - 556 @ 12" N.F.
13 - 557 @ 12" N.F.
13 - 557 @ 12" N.F.
7 - 556 @ 12" N.F.
7 - 555 @ 12" N.F.
7 - 554 @ 12" N.F.
6 - 553 @ 12" N.F.

60 @ 12" N.F.
60 @ 12" F.F.
60 @ 12" N.F.
60 @ 12" F.F.

El. 18.36 "A"
El. 16.08 "B"

551 @ 12" Dowels E.F.

℄ Piles - Typ.

ELEVATION A - A

NOTE:

For dimensions and details not shown see Elev. J-J

LEGEND:

"A" - Abutment A
"B" - Abutment B

NOTES:

1. For General Notes see Sheet No. 2.
2. For Sections D-D, E-E, F-F, G-G L-L & M-M - see Sheet No. 21.
3. For Section C-C see Sheet No. 15.
4. For Reinforcement Schedule see Sheet No. 22.

DELAWARE DEPARTMENT OF HIGHWAYS & TRANSPORTATION
DIVISION OF HIGHWAYS

INTERSTATE ROUTE I-495

ABUTMENTS "A" & "B"

J. E. GREINER CO.
MORAN, PROCTOR, MUESER & RUTLEDGE
CONSULTING ENGINEERS

D. S. L. T
T. R. B / A. R
C. P. F.

SCALE 1/4 = 1'-0"

DATE 7-1-1968

APPROVED BY:

BRIDGE ENGINEER

Revised Elevation A-3 & J-1 T.F.F. 10-8-75
Revised Elevation M-M appears identical to the original T.F.F. 6-18-75

COUNTY	CONTRACT	P. R. A. SEQ. NO.	STATE	FED. AID PROJECT NO.	FISCAL YEAR	SHEET NO.	TOTAL SHEETS
New Castle	73-10-014	2	DEL.	I-495-3(28)16		21	43

INTERSTATE ROUTE I-495

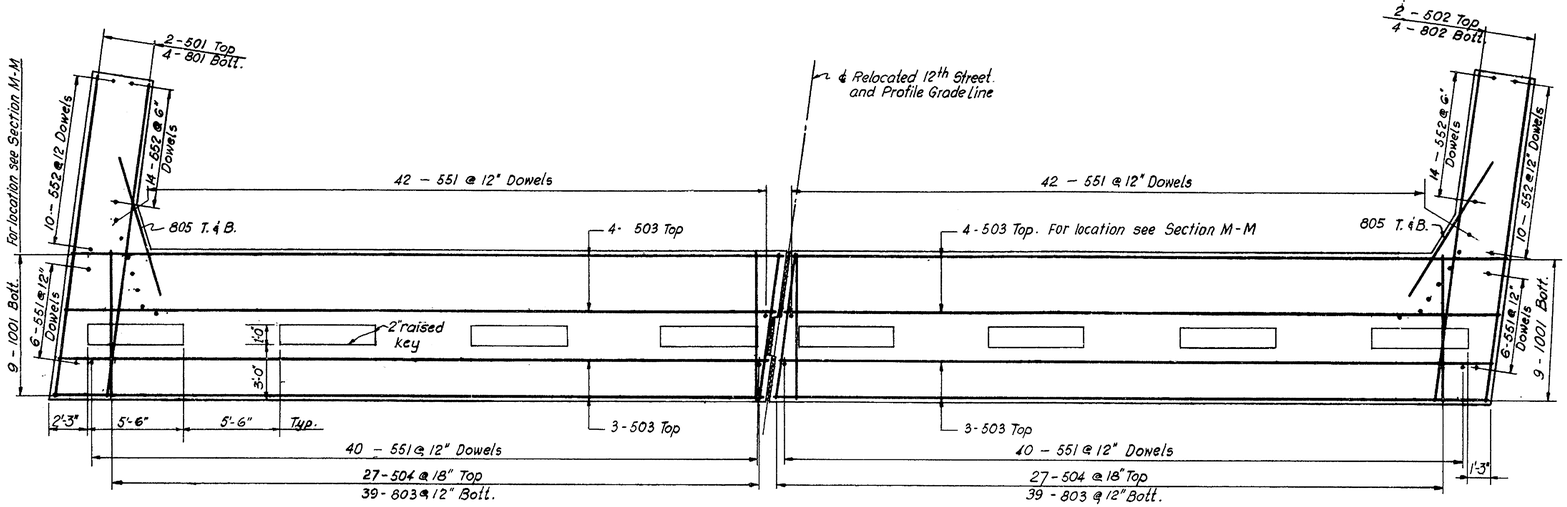

FOOTING REINF. PLAN
Scale: 1/4"=1'-0"

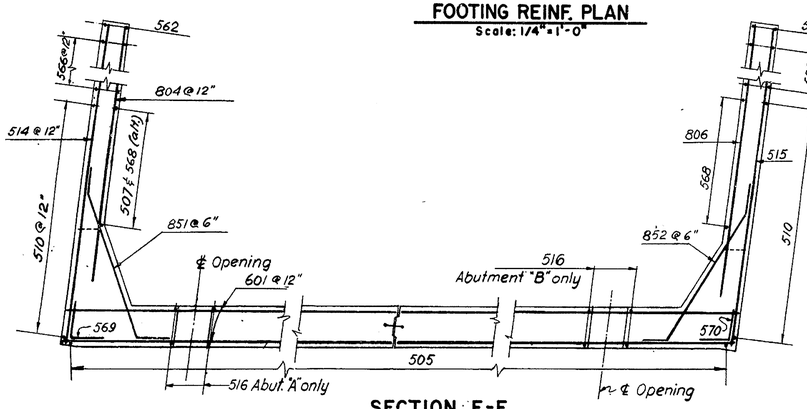

SECTION E-E
Scale: 1/4"=1'-0"

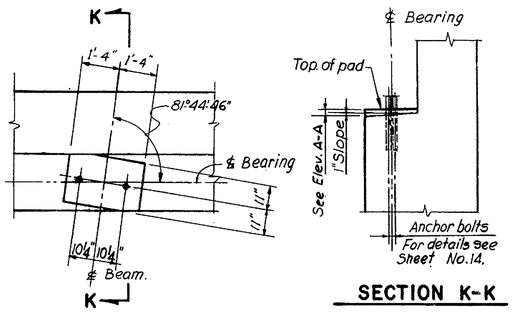

TYPICAL CONC. PAD UNDER BEARING PLATES
Scale: 3/8"=1'-0"

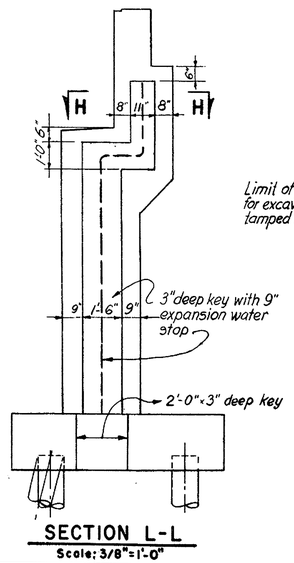

SECTION L-L
Scale: 3/8"=1'-0"

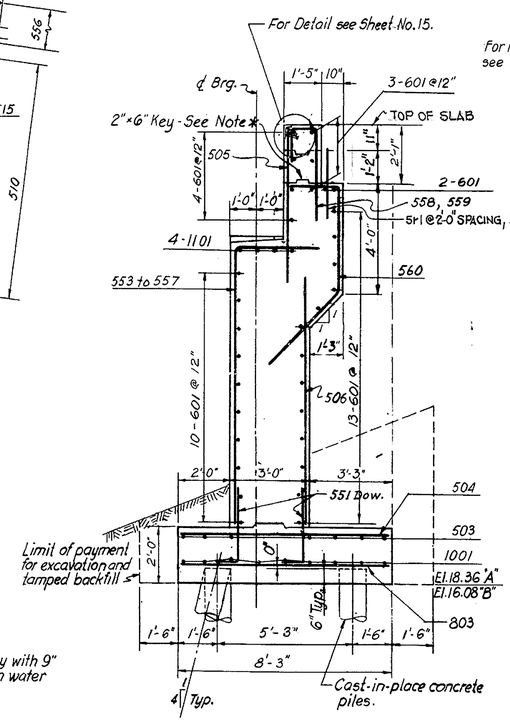

SECTION M-M
Scale: 3/8"=1'-0"

Note *: Optional Construction Joint. Contractor to coordinate pouring of abutment wall above bearing seat, so as to allow for proper setting of the expansion dam. Provide necessary dowels in wing walls to match horizontal reint. above joint.

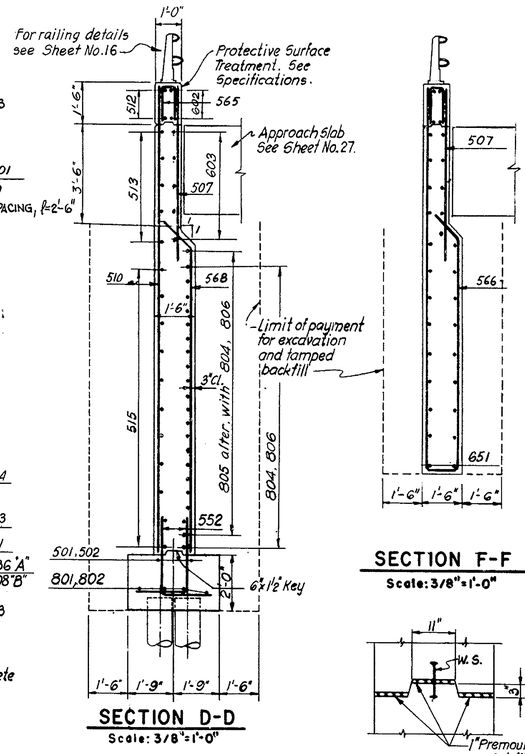

SECTION D-D
Scale: 3/8"=1'-0"

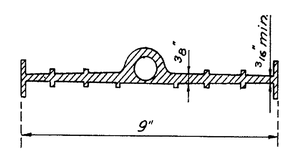

DETAIL OF WATERSTOP
N.T.S.

SECTION F-F
Scale: 3/8"=1'-0"

SECTION H-H
N.T.S.

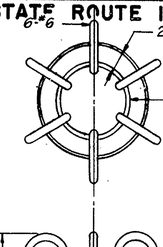

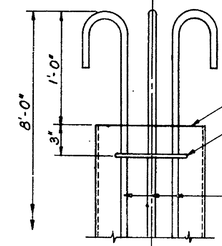

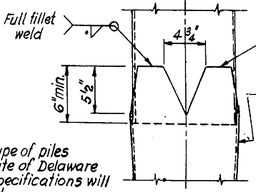

PILE DETAIL
N.T.S.

NOTE:
Alternate type of piles meeting State of Delaware Standard Specifications will be accepted

NOTES:

1. For General Notes see Sheet No.2.
2. For Key plan see Sheet No.23.
3. For railing details see Sheet No.16.
4. For Slope protection details see Sheet No.28.
5. For Shoe and Anchor bolt details see Sheet No.14.
6. Elevations shown on beam bearing are finished top of pad elevations. See Section K-K on this Sheet.
7. Cast-in-place concrete piles shall be driven to develop a safe bearing value of at least: For Abutments 35 tons
   For Piers 45 tons
   Minimum penetration to be determined by the Director from the results of driving of steel shell test piles.
8. Chamfer all corners ¾" except where otherwise shown.
9. For Reinforcement Schedule see Sheet No.22.
10. For details of Guard Rail Junction at Bridge Parapet see Sheet No.6.

DELAWARE DEPARTMENT
OF HIGHWAYS & TRANSPORTATION
DIVISION OF HIGHWAYS

INTERSTATE ROUTE I-495

ABUTMENT DETAILS

J. E. GREINER CO.
MORAN, PROCTOR, MUESER & RUTLEDGE
CONSULTING ENGINEERS

D. S.L.T	SCALE AS SHOWN	APPROVED BY:
T. R.B / A.R.		
C. P.F.	DATE 7-1-1968	BRIDGE ENGINEER

US Revised Section 6-8 T.R.A. 10-16-75

COUNTY	CONTRACT	P. S. A. RES. NO.	STATE	FED. AID PROJECT NO.	FISCAL YEAR	SHEET NO.	TOTAL SHEETS
New Castle	73-10-014	2	DEL.	I-495-3(28)16		22	43

INTERSTATE ROUTE I-495
RELOCATED 12th STREET BRIDGE OVER I-495

ABUTMENT "A"

W=23,694 Lbs.

STRAIGHT BARS

MARK	NUMBER REQUIRED	LENGTH	REMARKS
BAR NUMBER 4			
BAR NUMBER 5			
501	2	17-4	
502	2	17-8	
503	14	40-8	
504	54	7-9	
505	80	6-0	
506	75	9-3	
507	52	6-6	
508	10	5-9	
509	4	3-6	
510	28	16-9	
511	4	10-1	
512	4	25-4	
513	10	25-8	
514	11	15-10 to 27-6	INCREMENT 1'-2"
515	11	15-6 to 26-9	INCREMENT 1'-1½"
516	4	5-2	
5r1	38	2-6	DOWEL
BAR NUMBER 6			
601	64	39-10	
602	4	23-5	
603	10	25-8	
BAR NUMBER 8			
801	4	17-4	
802	4	17-8	
803	78	7-9	
804	11	9-4 to 21-0	INCREMENT 1'-2"
805	26	8-6	
806	11	9-0 to 20-3	INCREMENT 1'-1½"
BAR NUMBER 10			
1001	18	40-10	
BAR NUMBER 11			
1101	8	39-10	

BENT BARS (Dimensions are out to out)

MARK	NUMBER REQUIRED	LENGTH	TYPE	A	B	C	D	E	F	G	△H	REMARKS
BAR NUMBER 4												
BAR NUMBER 5												
551	176	3-10	I	0-9	3-1							
552	48	5-1	↑	2-0	3-1							
553	12	13-7		3-6	10-1							
554	14	13-9		3-6	10-3							
555	14	13-11		3-6	10-5							
556	14	14-1		3-6	10-7							
557	26	14-3		3-6	10-9							
558	52	6-2	↓	1-7	0-11	3-8						
559	28	7-7	I	2-3	0-11	4-5						
560	74	8-8	V	3-6	3-8	1-6	-	-	2-6	2-6		
561	10	14-4	I	2-0	12-4				-	-		
562	4	6-9	II	5-0	1-9				0-6	1-8		
563	4	△8'-11" ~~3-11~~	~~V~~	~~3-6~~ △3-6"	△~~3-0~~ 3'0"	~~2-0~~ 2'-09"	~~3-1~~ △1'-6"	~~3-3~~ △3'-3"	~~0-6~~	~~1-8~~	△0'-4½"	
564	2×4 @ △4'-6" to 6-10△		I	3-△6'-11"	0-8	3-△ to 1'-11"			△1'-4"	△1'-8"	△Inc.=0'-5"	
565	44	3-4	I	1-4	0-8	1-4						
566	24	10-8 to 30-0	V	1-7	1-3 to 10-11	1-0	6-10 to 16-6	-	1-1	1-1		INCREMENT 0'-10½" 2 BARS OF EACH
567	4	11-8	I	2-0	7-8	2-0						
568	28	12-9	II	11-2	1-7				1-1	1-1		
569	16	3-2	III	1-7	1-7				1-7	0-2½		
570	16	3-2	II	1-7	1-7				1-7	0-2½		
571	4	9-6	I	2-0	5-6	2-0						
BAR NUMBER 6												
651	4	17-9	II	15-9	2-0				1-5	1-6		
BAR NUMBER 8												
851	23	14-0	IV	9-0	2-6	2-6	2-4	0-9	1-1	2-3		
852	23	14-0	IV	9-0	2-6	2-6	1-1	2-3	2-1	1-4		
853	2	10-3	II	6-6	2-6	1-3	1-1	0-7	2-4	0-9		
854	2	10-3	II	6-6	2-6	1-3	1-2	0-6	2-2	1-4		

ABUTMENT "B"

W=23,625 Lbs.

STRAIGHT BARS

MARK	NUMBER REQUIRED	LENGTH	REMARKS
BAR NUMBER 4			
BAR NUMBER 5			
501	2	17-4	
502	2	17-8	
503	14	40-9	
504	54	7-9	
505	80	6-0	
506	75	9-3	
507	52	6-6	
508	10	5-9	
509	4	3-6	
510	28	16-2	
511	4	9-10	
512	4	25-4	
513	10	25-8	
514	11	15-10 to 27-6	INCREMENT 1'-2"
515	11	15-6 to 27-7	INCREMENT 1'-2⅛"
516	4	5-2	
5r1	38	2-6	DOWEL
BAR NUMBER 6			
601	64	39-10	
602	4	23-5	
603	10	25-8	
BAR NUMBER 8			
801	4	17-4	
802	4	17-8	
803	78	7-9	
804	11	9-4 to 21-0	INCREMENT 1'-2"
805	26	8-6	
806	11	9-0 to 21-1	INCREMENT 1'-2½"
BAR NUMBER 10			
1001	18	40-10	
BAR NUMBER 11			
1101	8	39-10	

BENT BARS (Dimensions are out to out)

MARK	NUMBER REQUIRED	LENGTH	TYPE	A	B	C	D	E	F	G	△H	REMARKS
BAR NUMBER 4												
BAR NUMBER 5												
551	176	3-10	I	0-9	3-1							
552	48	5-1	↑	2-0	3-1							
553	12	13-4		3-6	9-10							
554	14	13-6		3-6	10-0							
555	14	13-8		3-6	10-2							
556	14	13-10		3-6	10-4							
557	26	14-0		3-6	10-6							
558	52	6-2	↓	1-7	0-11	3-8						
559	28	7-7	I	2-3	0-11	4-5						
560	74	8-8	V	3-6	3-8	1-6			2-6	2-6		
561	10	14-4	I	2-0	12-4							
562	4	6-9	II	5-0	1-9				0-6	1-8		
563	4	△8'-11" ~~3-11~~	~~V~~	~~3-6~~ △3'-6"	△~~3-0~~ 3'-0"	~~2-0~~ 2'-09"	~~3-1~~ △1'-2"	~~3-3~~ △3'-3"	~~0-6~~	~~1-8~~	△0'-4½"	
564	2×4 @ △4'-6" to 6-10△		I	3-△6'-11"	0-8	3-△ to 1'-11"			△1'-4"	△1'-8"	△Inc.=0'-5"	
565	44	3-4	I	1-4	0-8	1-4						
566	24	10-1 to 28-5	V	1-7	1-1 to 10-3	1-0	6-5 to 15-7	-	1-1	1-1		INCREMENT 0'-10" 2 BARS OF EACH
567	4	11-8	I	2-0	7-8	2-0						
568	28	12-3	II	10-8	1-7				1-1	1-1		
569	16	3-2	III	1-7	1-7				1-7	0-2½		
570	16	3-2	II	1-7	1-7				1-7	0-2½		
571	4	9-6	I	2-0	5-6	2-0						
BAR NUMBER 6												
651	4	17-4	II	15-4	2-0				1-4	1-7		
BAR NUMBER 8												
851	23	14-0	IV	9-0	2-6	2-6	2-4	0-9	1-1	2-3		
852	23	14-0	IV	9-0	2-6	2-6	1-1	2-3	2-1	1-4		
853	2	10-3	II	6-6	2-6	1-3	1-1	0-7	2-4	0-9		
854	2	10-3	II	6-6	2-6	1-3	1-1	0-6	2-2	1-4		

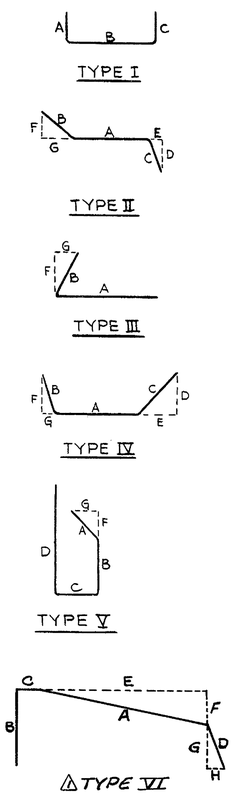

For General Notes see Sheet No.2.

△ Revised Bars. A28 Rebar 5638 564. T.F.F. 10-16-75

DELAWARE DEPARTMENT OF HIGHWAYS & TRANSPORTATION DIVISION OF HIGHWAYS	
INTERSTATE ROUTE I-495	
ABUTMENTS REINFORCEMENT SCHEDULE	
J. E. GREINER CO. MORAN, PROCTOR, MUESER & RUTLEDGE CONSULTING ENGINEERS	D. A. R. T. A. R. C. P. F.
SCALE	
DATE 7-1-1968	APPROVED BY: BRIDGE ENGINEER

COUNTY	CONTRACT	P. B. A. REQ. NO	STATE	FED. AID PROJECT NO	FISCAL YEAR	SHEET NO.	TOTAL SHEETS
New Castle	73-10-014	2	DEL.	I-495-3(28)16		23	43

INTERSTATE ROUTE I-495
RELOCATED 12th STREET BRIDGE OVER I-495

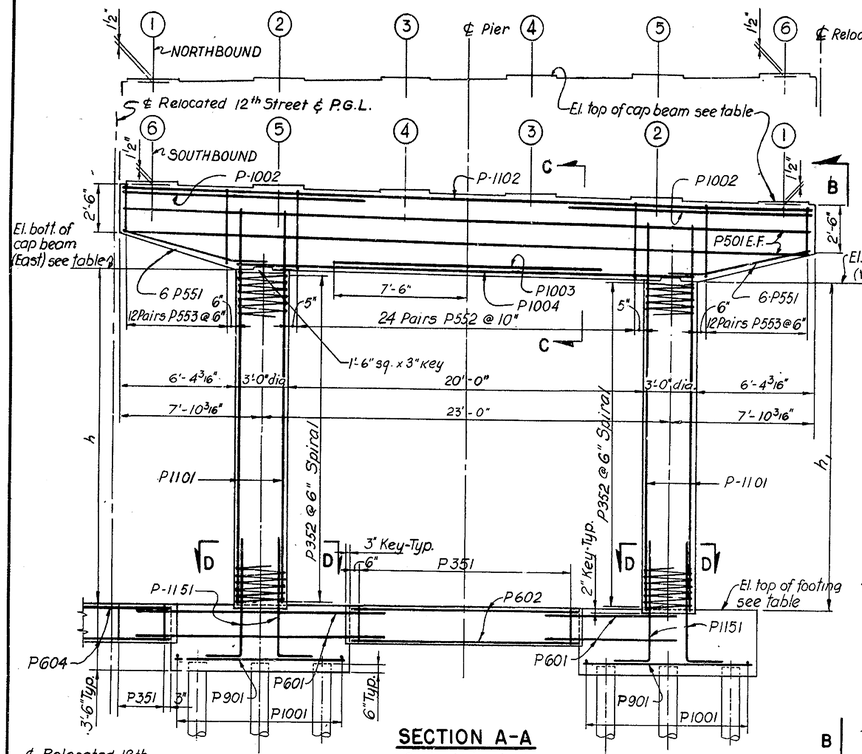

SECTION A-A
Scale: 1/4" = 1'-0"

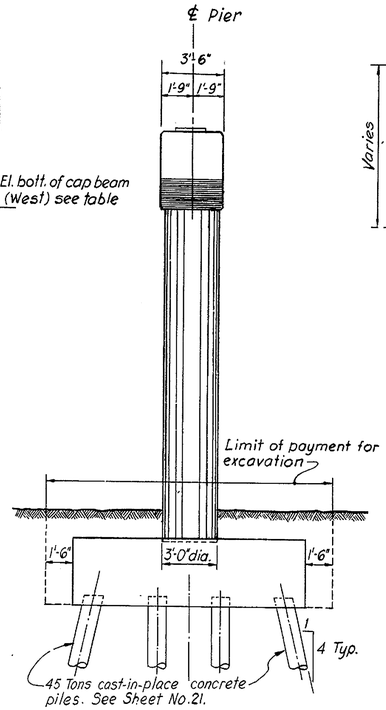

ELEVATION B-B
Scale: 1/4"=1'-0"

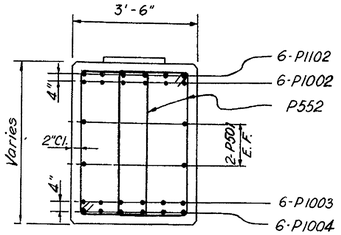

SECTION C-C
Scale 1/2"=1'-0"

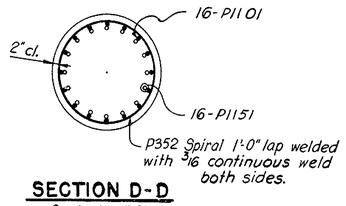

SECTION D-D
Scale: 1/2"=1'-0"

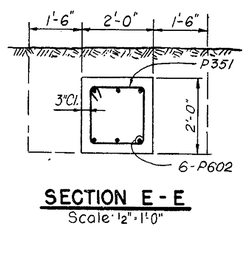

SECTION E-E
Scale: 1/2"=1'-0"

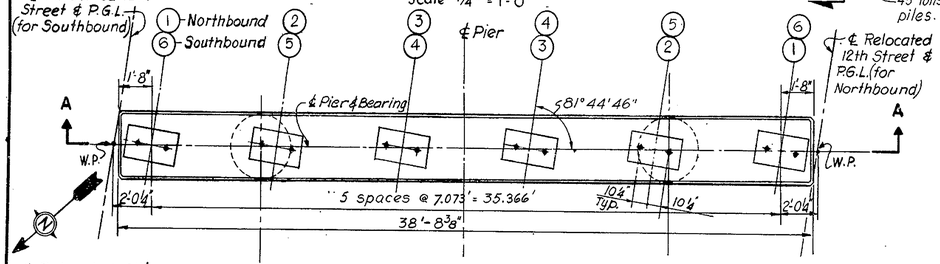

PLAN CAP BEAM
Scale: 1/4"=1'-0"

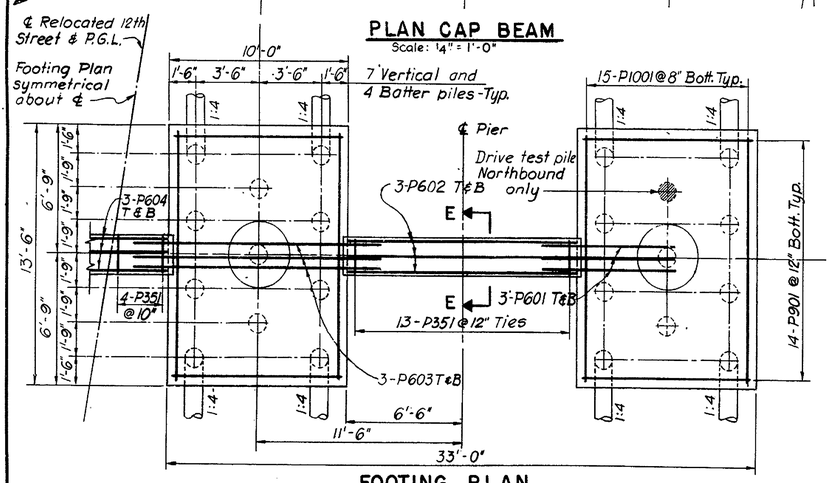

FOOTING PLAN
Scale. 1/4"=1'-0"

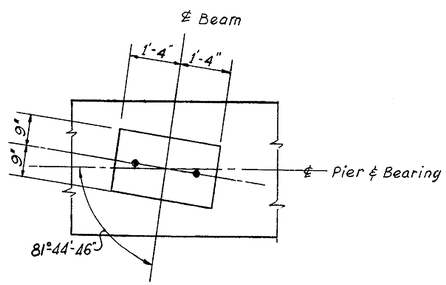

TYPICAL CONC PAD UNDER BEARING PLATES
Scale: 1/2"=1'-0"

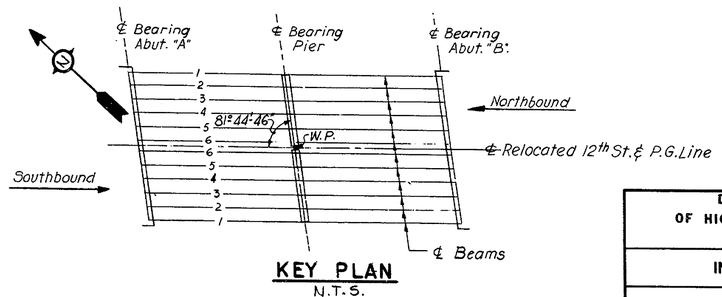

KEY PLAN
N.T.S.

REINFORCING SCHEDULE FOR PIER
W=25,028 Lbs.

LOCATION	STRAIGHT BARS MARK	REQ'D	SIZE	LENGHT	BENT BARS MARK	REQ'D	SIZE	LENGHT
FOOTING	P601	6	#6	7'-5"	P351	17	#3	6'-8"
	P602	6	#6	13'-0"				
	P603	6	#6	13'-2"	P1151	32	#11	8'-5"
	P604*	6*	#6	6'-4"				
	P901	28	#9	9'-6"				
	P1001	30	#10	13'-0"				
SHAFT	P1101	32	#11	20'-7"	P352	2	#3	620'-0"
CAP BEAM	P501	4	#5	38'-4"				
	P1002	12	#10	13'-6"				
	P1003	6	#10	15'-0"	P551	12	#5	7'-10"
	P1004	6	#10	26'-0"	P552	48	#5	12'-4"
					P553	48	#5	9'-4" to 12'-1"
	P1102	6	#11	38'-4"				

BENDING DIAGRAMS — All dimensions are out to out

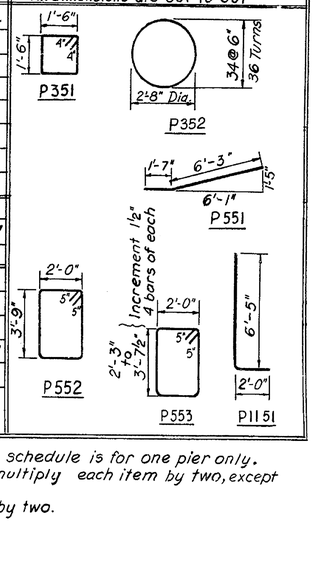

NOTE: Reinforcing shown in this schedule is for one pier only. For total number of bars multiply each item by two, except as noted.
* Do not multiply this bars by two.

CAP BEAM ELEVATION & PIER DATA

Location		Northbound	Southbound
Top of pads	Elevation ①	29.558	29.412
	②	29.716	29.598
	③	29.849	29.758
	④	29.981	29.918
	⑤	30.113	30.078
	⑥	30.120	30.112
El. bottom of cap beam (East)		25.436	25.828
El. bottom of cap beam (West)		25.833	25.348
El. top of footing		8.416	8.416
Pile cut-off elevation		~~4.920~~ (5.42)	~~4.920~~ (5.42)
Dimension h - (East)		17.020	17.418
Dimension h, - (West)		17.417	16.932

NOTE:
1.- For General Notes - see Sheet No.2.
2.- For bearing plate and Anchor bolt details see Sheet No.14.
3.- For pile detail see Sheet No.21.

J. E. GREINER CO.
MORAN, PROCTOR, MUESER & RUTLEDGE
CONSULTING ENGINEERS

DELAWARE DEPARTMENT OF HIGHWAYS & TRANSPORTATION
DIVISION OF HIGHWAYS

INTERSTATE ROUTE I-495

PIERS

D. S. L. T.	SCALE AS SHOWN	APPROVED BY:
T. A. R.		
C. W. W	DATE 7-1-1968	BRIDGE ENGINEER

COUNTY	CONTRACT	P. R. A. REQ. NO.	STATE	FED. AID PROJECT NO.	FISCAL YEAR	SHEET NO.	TOTAL SHEETS
New Castle	73-10-014	2	DEL.	I-495-3(28)16		24	43

INTERSTATE ROUTE I-495

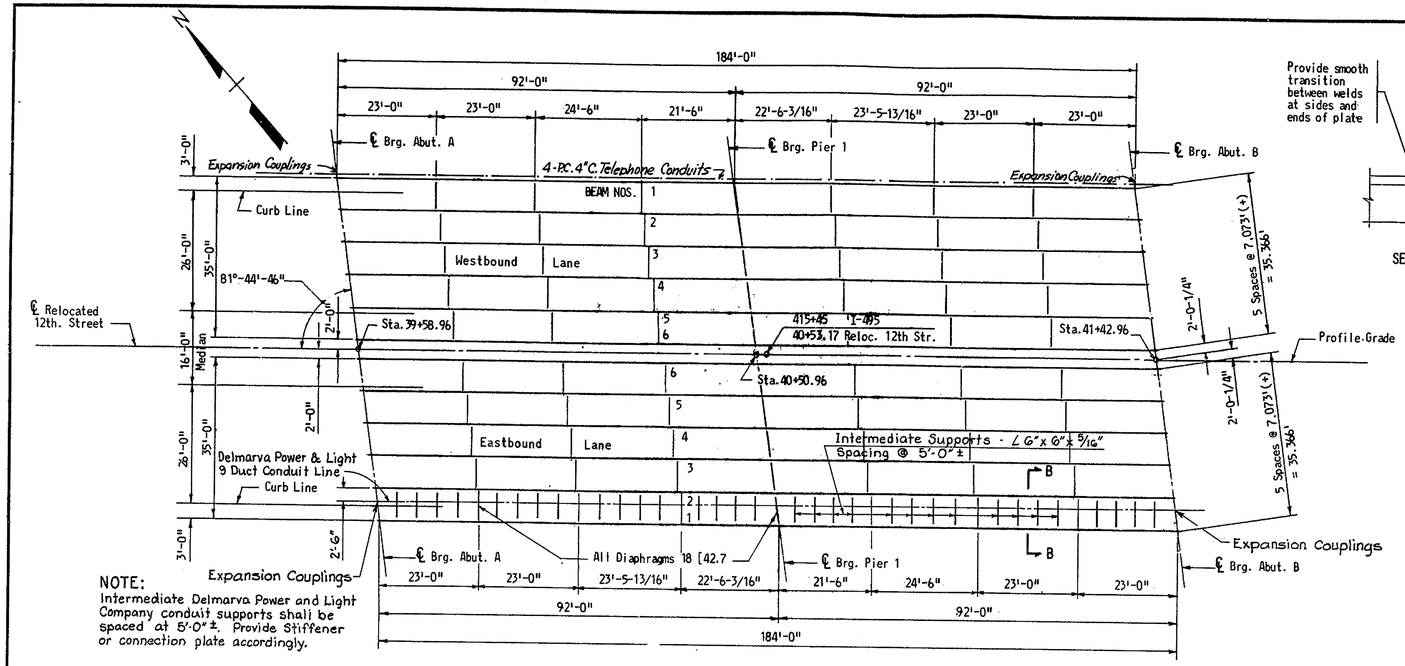

NOTE:
Intermediate Delmarva Power and Light Company conduit supports shall be spaced at 5'-0"±. Provide Stiffener or connection plate accordingly.

FRAMING PLAN
1/16" = 1'-0"

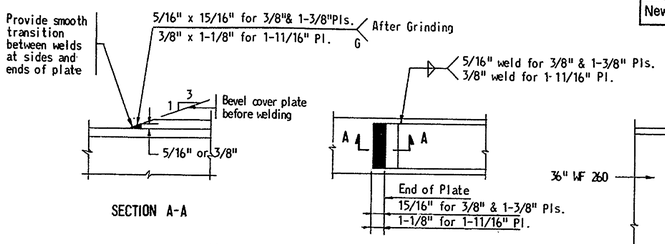

COVER PLATE DETAILS
No Scale

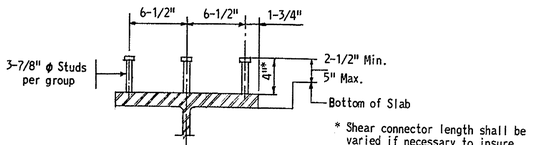

SHEAR CONNECTOR DETAIL
1-1/2" = 1'-0"

* Shear connector length shall be varied if necessary to insure that it extends a minimum of 2-1/2" and a maximum of 5" into deck slab.

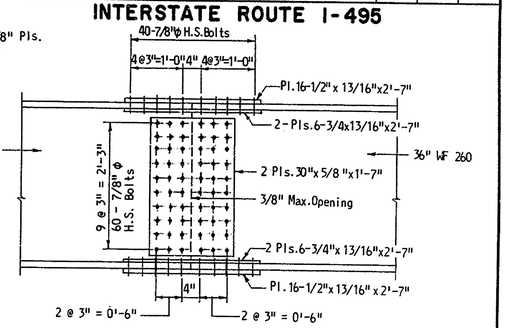

SPLICE DETAIL
3/4" = 1'-0"

TABLE OF GRADE ELEVATIONS AND DEAD LOAD DEFLECTIONS IN FEET

BEAM	1	2	3	4	5	6	Deflections			
POINT	Grade El.	Grade El.	Grade El.	Grade El.	Grade El.	Grade El.	STRUCTURAL STEEL	CONCRETE SLAB	CURB & PARAPET	FULL DEAD LOAD
WESTBOUND LANE										
1	34.967	35.104	35.242	35.379	35.516	35.529	0.000	0.000	0.000	0.000
2	34.764	34.900	35.036	35.172	35.308	35.319	0.022	0.053	0.028	0.103
3	34.531	34.666	34.801	34.936	35.071	35.080	0.025	0.061	0.033	0.119
4	34.270	34.404	34.537	34.671	34.804	34.813	0.011	0.025	0.015	0.051
5	33.980	34.112	34.244	34.377	34.509	34.516	0.000	0.000	0.000	0.000
6	33.660	33.791	33.922	34.053	34.184	34.190	0.011	0.025	0.015	0.051
7	33.312	33.441	33.571	33.701	33.831	33.835	0.025	0.061	0.033	0.119
8	32.934	33.063	33.191	33.319	33.448	33.451	0.022	0.053	0.028	0.103
9	32.527	32.654	32.782	32.909	33.036	33.038	0.000	0.000	0.000	0.000
EASTBOUND LANE										
1	34.876	35.030	35.185	35.340	35.494	35.524	0.000	0.000	0.000	0.000
2	34.659	34.815	34.971	35.127	35.283	35.313	0.022	0.053	0.028	0.103
3	34.413	34.570	34.728	34.885	35.042	35.074	0.025	0.061	0.033	0.119
4	34.138	34.297	34.455	34.614	34.772	34.806	0.011	0.025	0.015	0.051
5	33.834	33.994	34.154	34.314	34.473	34.508	0.000	0.000	0.000	0.000
6	33.501	33.662	33.823	33.985	34.145	34.181	0.011	0.025	0.015	0.051
7	33.139	33.302	33.464	33.626	33.788	33.826	0.025	0.061	0.033	0.119
8	32.748	32.912	33.075	33.239	33.402	33.441	0.022	0.053	0.028	0.103
9	32.327	32.493	32.657	32.822	32.987	33.027	0.000	0.000	0.000	0.000

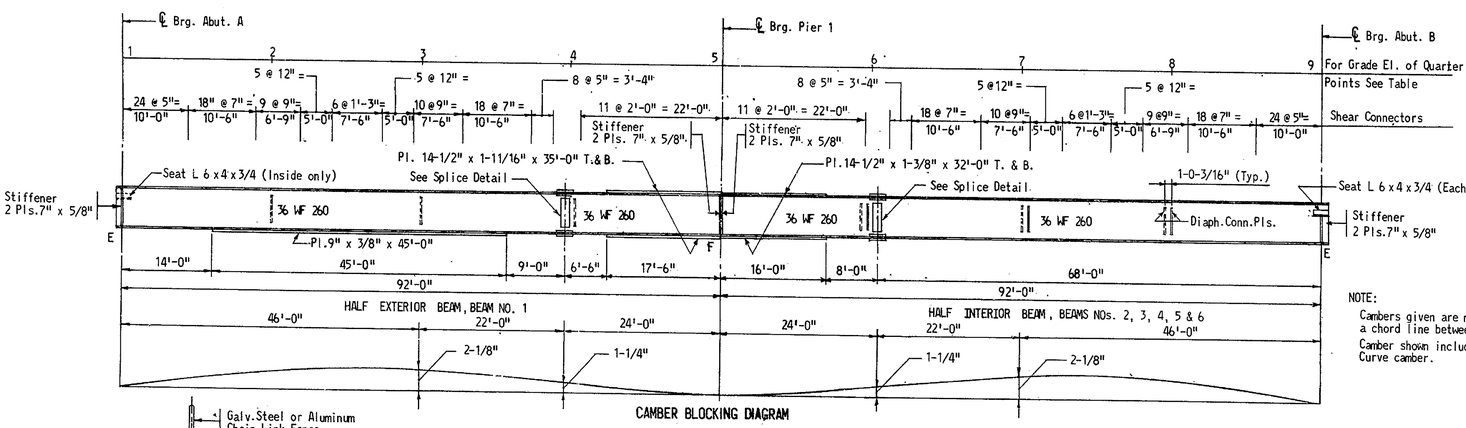

CAMBER BLOCKING DIAGRAM

NOTE:
Cambers given are measured from a chord line between ℄ of bearings.
Camber shown includes Vertical Curve camber.

CAMBER: Beams shall be cambered for dead load deflections and vertical curve as indicated in the Camber Blocking Diagram. Beams shall not be cambered more than shown even though the camber is less than that likely to remain permanent.

Beams shall be assembled in the shop to the correct blocking elevations of splices before reaming or drilling splices.

If beam sections over the piers do not have the indicated camber then the blocking elevations for the remaining beam sections shall be adjusted accordingly.

After all beams are in place, elevations shall be taken along the tops of beams at points where the grade elevations are shown. The difference between these two elevations plus the sum of the deflections shown in the table for "Concrete Slab" and "Curb & Parapet" is the thickness of the slab and haunch over the top of beam at the centerline of beam. The minimum slab over the centerline of beam shall not be less than 8-1/4".

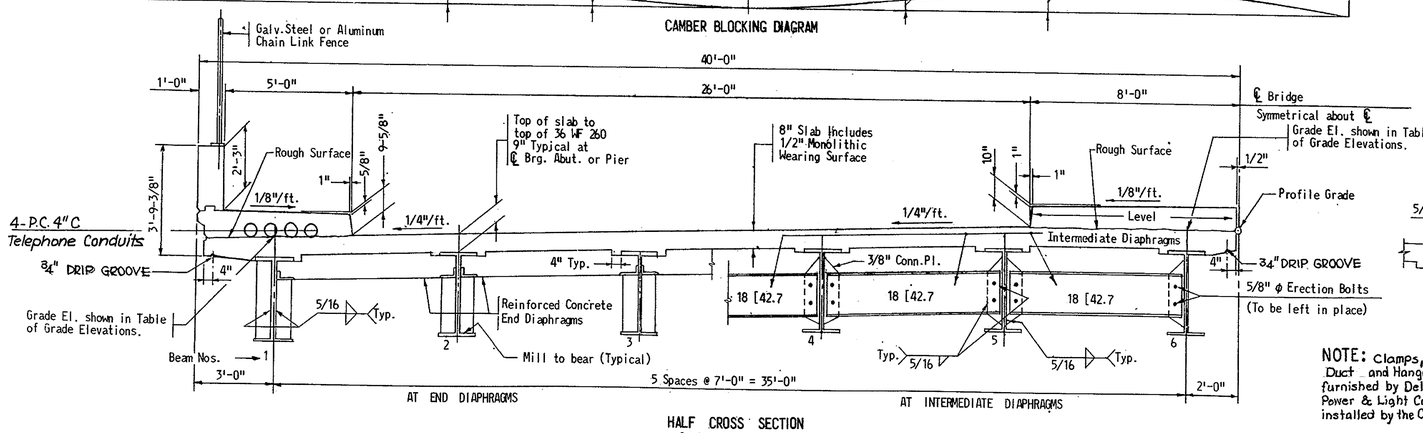

HALF CROSS SECTION
Scale: 3/8" = 1'-0"

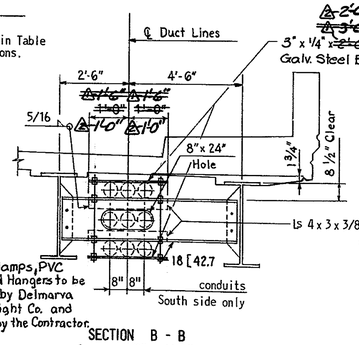

NOTE: Clamps, PVC Duct and Hangers to be furnished by Delmarva Power & Light Co. and installed by the Contractor.

SECTION B - B
Scale: 3/8" = 1'-0"

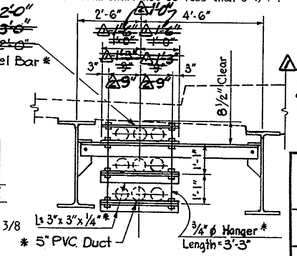

*Furnished by D.P.& L. and installed by Contractor.

INTERMEDIATE DUCT SUPPORT
Scale: 3/8" = 1'-0"

NOTE: If Hanger Rods are threaded, adjust to proper Elevation according to Section B-B

J. E. GREINER CO.
MORAN, PROCTOR, MUESER & RUTLEDGE
CONSULTING ENGINEERS

DELAWARE DEPARTMENT OF HIGHWAYS & TRANSPORTATION
DIVISION OF HIGHWAYS

INTERSTATE ROUTE I-495

FRAMING PLAN

D. J.J.H.	SCALE AS SHOWN	APPROVED BY:
T. J.J.H		
C. C.R.	DATE 7-1-1968	BRIDGE ENGINEER

Revised Dimension Back To Original Dimension T.J.E. 4-16-75

COUNTY	CONTRACT	P. R. A. REG. NO.	STATE	FED. AID PROJECT NO.	FISCAL YEAR	SHEET NO	TOTAL SHEETS
New Castle	73-10-014	2	DEL.	I-495-3(28)16		25	43

INTERSTATE ROUTE I-495
RELOCATED 12th STREET BRIDGE OVER I-495

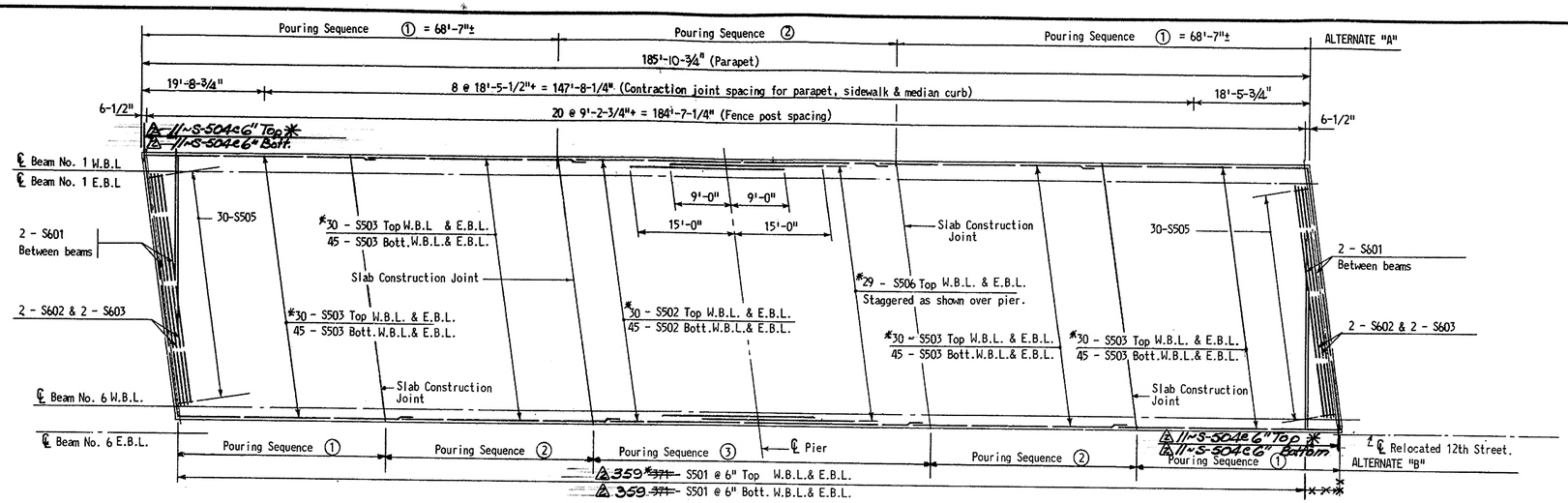

HALF DECK PLAN
Scale: 3/32" = 1'-0"

Westbound lane shown. Eastbound lane similar.
Contraction joints normal to ℄ bridge.

CONCRETE POURING SEQUENCE:
ALTERNATES
A. Pours ① must be done simultaneously or use retarders to prevent set until both ends are complete.
B. No requirements on time of completion

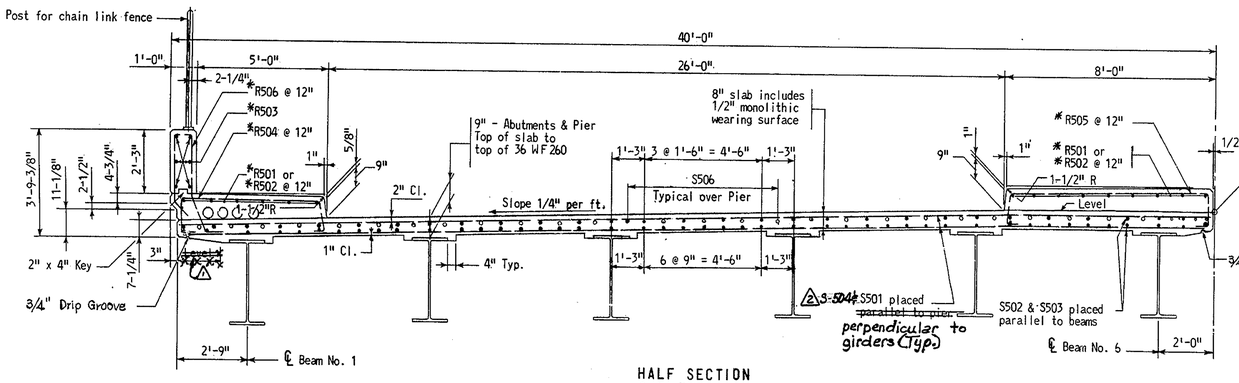

HALF SECTION
Scale: 3/8" = 1'-0"

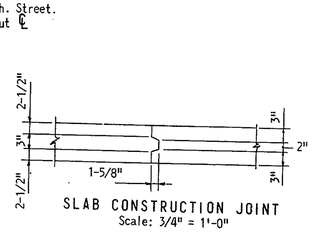

SLAB CONSTRUCTION JOINT
Scale: 3/4" = 1'-0"

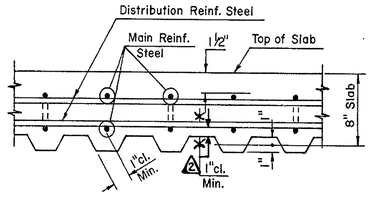

STEEL FORM SECTION
Not To Scale

Note: The Bridge Form shall have a min. 16 gage thickness.

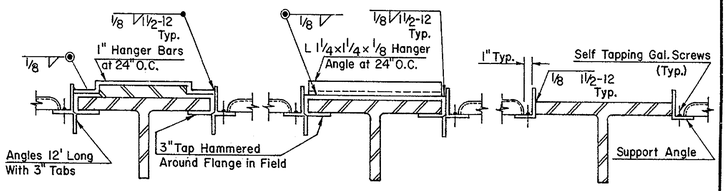

BEAM WITH COVER PLATE TENSION FLANGE DETAIL | BEAM WITHOUT COVER PLATE | COMPRESSION FLANGE DETAIL

REINFORCING SCHEDULE

Total = W = 12,432 lbs. Epoxy Coated Bars = 6,390 Lbs.
~~TOTAL = W 13,337 Lbs.~~ (Weight of Epoxy Coated Bars ~~5,380 lb~~)

STRAIGHT BARS

MARK	NUMBER REQUIRED Eastbound Roadway Epoxy Coated	Eastbound Roadway Plain	Westbound Roadway Epoxy Coated	Westbound Roadway Plain	LENGTH
S501 △2 5-504	~~359~~ 371	~~359~~ 371	~~359~~ 371	~~359~~ 371	39'-~~6~~ 5"
S502	30	45	30	45	48'-4"
S503	120	180	120	180	35'-6"
△2 5-504	2x11	2x11	2x11	2x11	Varies 2-7/8" to 3'-1 7/8"
S506	29	0	29	0	24'-0"
S601	0	20	0	20	6'-6"
R501	60	0	60	0	35'-6"
R502	15	0	15	0	48'-4"
R503	0	30	0	30	38'-1"

BENT BARS

MARK	NUMBER REQUIRED Eastbound Roadway Epoxy Coated	Eastbound Roadway Plain	Westbound Roadway Epoxy Coated	Westbound Roadway Plain	LENGTH
S505	0	60	0	60	4'-10"
S602	0	4	0	4	24'-3"
S603	0	4	0	4	16'-8"
R504	186	0	186	0	8'-9"
R505	186	0	186	0	11'-0"
R506	186	0	186	0	8'-0"

BENDING DIAGRAMS

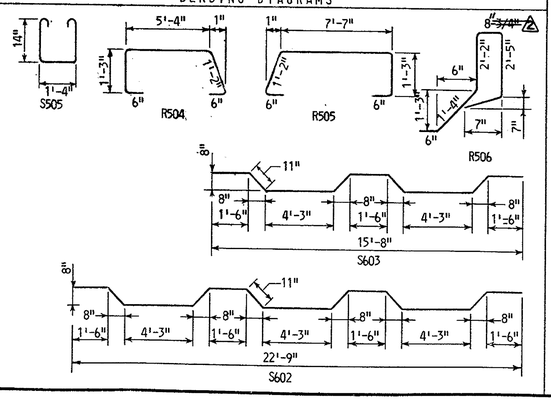

NOTE:
Bar size is indicated in the bar mark.
The first digit when 3 digits are used indicates the bar size.
All bar dimensions are out to out of bar.
For Contraction Joints see Sheet No. 26

* Bars in top mat are to be epoxy coated.

△1 Revised Steel Weights & Bar Schedule per 9-12-75
△2 Revised Steel Weights & Bars Schedule per 12-2-75

DELAWARE DEPARTMENT OF HIGHWAYS & TRANSPORTATION
DIVISION OF HIGHWAYS

INTERSTATE ROUTE I-495

SUPERSTRUCTURE - DECK

J. E. GREINER CO.
MORAN, PROCTOR, MUESER & RUTLEDGE
CONSULTING ENGINEERS

D. A.B.M.
T. A.B.M.
C. C.R.

SCALE AS SHOWN
DATE 7-1-1968

APPROVED BY:
BRIDGE ENGINEER

15/1

COUNTY	CONTRACT	P. R. A. REG. NO.	STATE	FED. AID PROJECT NO.	FISCAL YEAR	SHEET NO.	TOTAL SHEETS
New Castle	73-10-014	2	DEL.	I-495-3(28)16		26	43

INTERSTATE ROUTE I-495
RELOCATED 12th STREET BRIDGE OVER I-495

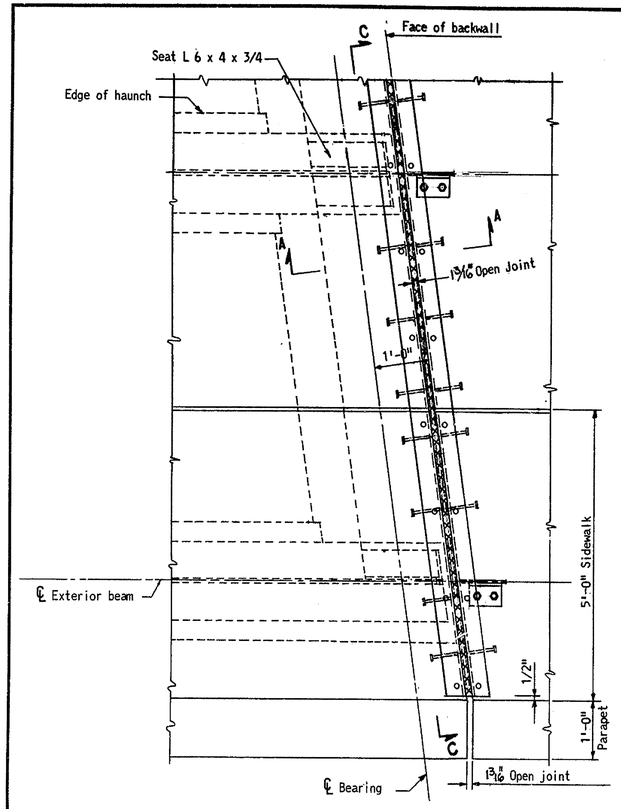

PLAN AT ABUTMENT B

Details at Abutment "A" Similar

Scale: 3/4" = 1'-0"

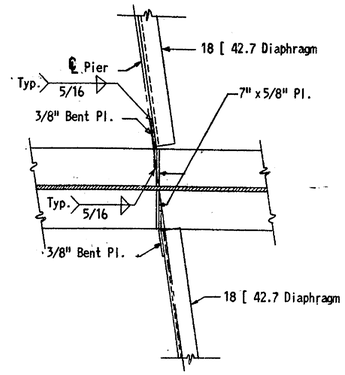

DIAPHRAGM CONNECTION AT PIER

Scale: 3/4" = 1'-0"

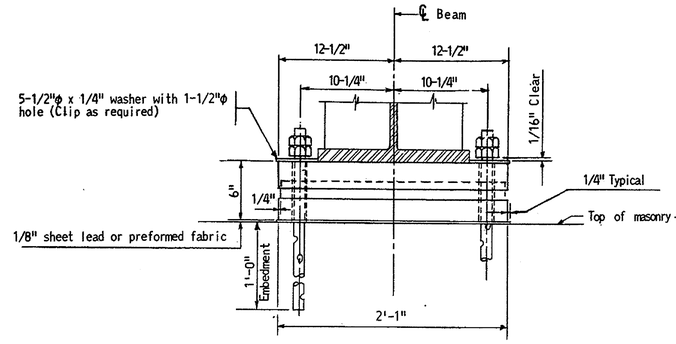

EXPANSION

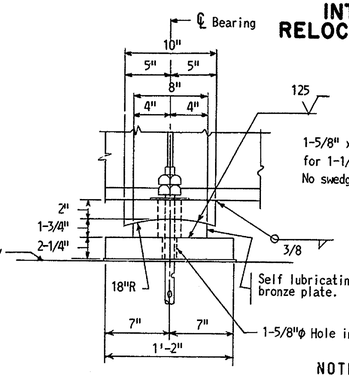

1-5/8" x 4-1/4" hole in sole and bronze plates, for 1-1/4"ϕ anchor bolts. Stagger swedging. No swedging above top of masonry.

NOTE:

Bronze plates for Expansion Type Shoes shall conform to ASTM B22, Alloy A.

The surface finish of metal in contact indicated by the symbol √ shall meet the requirements as defined in American Standard Association Specification A.S.A. B-461. All sliding surfaces to be finished in the direction of expansion or rotation.

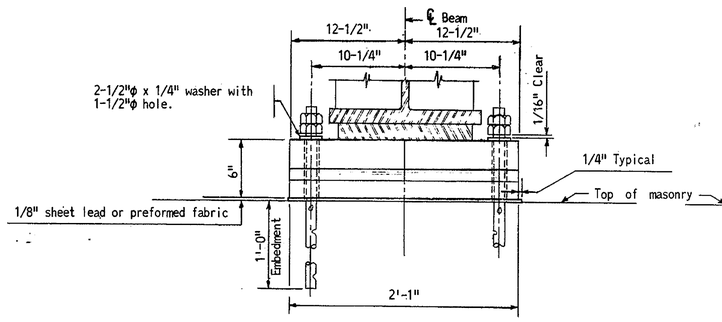

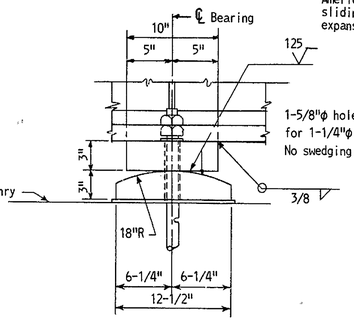

1-5/8"ϕ hole in sole and masonry plates for 1-1/4"ϕ anchor bolts. Stagger swedging No swedging above top of masonry.

FIXED BEARING DETAILS

Scale: 1-1/2" = 1'-0"

NOTE:

Chain link fence fabric shall be continuous across parapet contraction joint and shall be woven from 6061-T94 wire 0.148" in diameter having a 1" diamond mesh.

All posts and rails shall be 2" O.D. with 1/8" wall thickness.

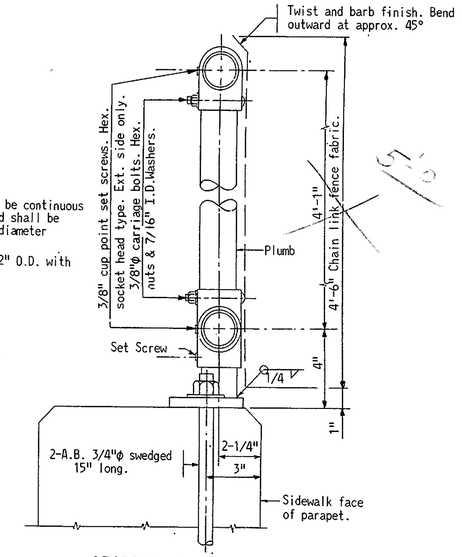

SECTION E-E

Scale: 3" = 1'-0"

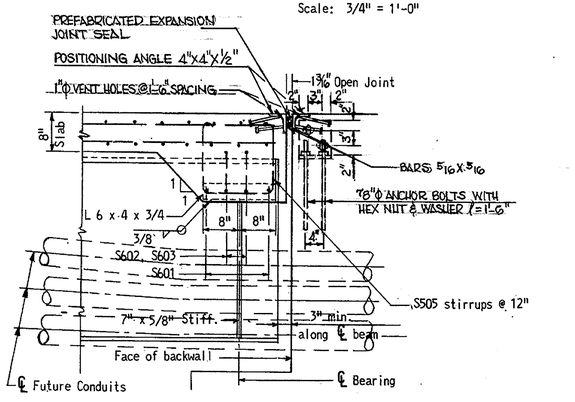

SECTION A-A

Scale: 3/4" = 1'-0"

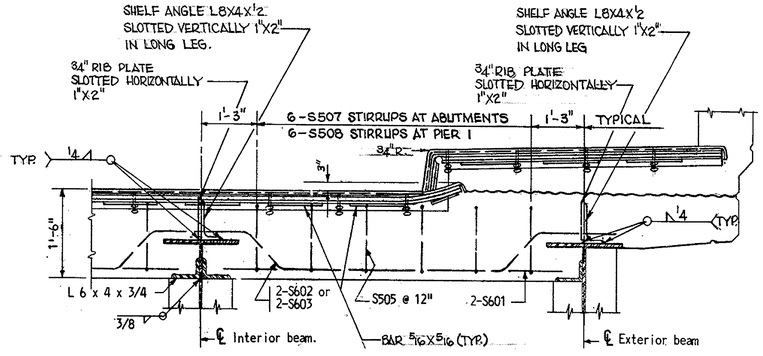

SECTION C-C

NO SCALE

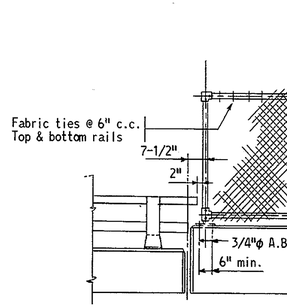

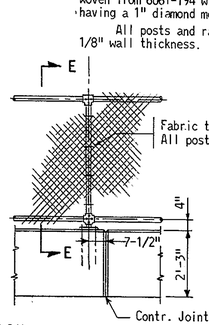

ELEVATION

Scale: 3/8" = 1'-0"

CHAIN LINK FENCE DETAILS.

NOTES:

For General Notes see Sheet No. 2

For Section C-C and details of elastomeric expansion joint and details at curbs see Sheet No. 15 "Relocated 12th Street Bridge over Pennsylvania R.R."

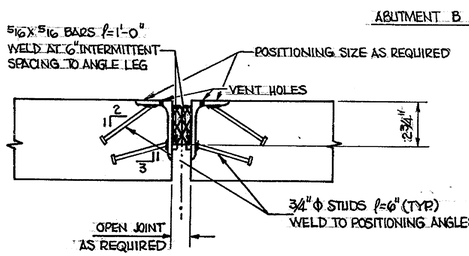

PREFABRICATED EXPANSION JOINT SEAL

TYPICAL SECTION

SCALE: 1½"=1'-0"

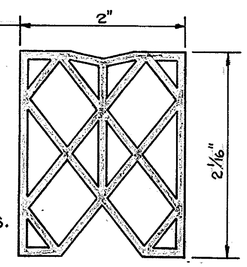

SECTION THROUGH SEAL

PREFABRICATED EXPANSION JOINT SEAL

NOT TO SCALE

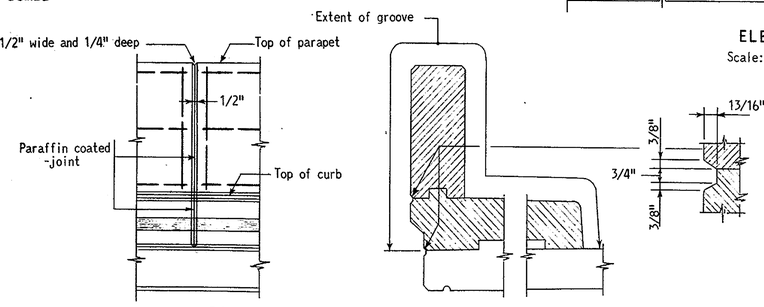

PARAPET AND SIDEWALK CONTRACTION JOINT

Scale: 3/4" = 1'-0"

Longitudinal bars in parapet, sidewalk and median curb are to be cut in field. See Superstructure-Deck for Contraction Joint spacing. Median contraction joint similar.

DELAWARE DEPARTMENT OF HIGHWAYS & TRANSPORTATION
DIVISION OF HIGHWAYS

INTERSTATE ROUTE I-495

SUPERSTRUCTURE - DETAILS

J. E. GREINER CO.
MORAN, PROCTOR, MUESER & RUTLEDGE
CONSULTING ENGINEERS

D. R. V. R.	SCALE AS SHOWN	APPROVED BY:
T. R. V. R.		
C. E. G. R.	DATE 7-1-1968	BRIDGE ENGINEER

COUNTY	CONTRACT	P.R.A. REG. NO.	STATE	FED. AID PROJECT NO.	SHEET NO.	TOTAL SHEETS
New Castle	73-10-014	2	DEL.	I-495-3(28)16	27	43

INTERSTATE ROUTE I-495
RELOCATED 12th STREET BRIDGE OVER I-495

NO.	REVISIONS	BY	DATE

REINFORCING BAR SCHEDULE (4 SLABS)

STRAIGHT BARS				BENT BARS			
Mark	Size	Number	Length	Mark	Size	Number	Length
S901	9	32	9'-6"	S902	9	8×8	26'-0" to 26'-6"
S903	9	4×31	25'-0" to 29'-6"				
S904	9	32	38'-6"				
				S530	5	8×39	13'-0" to 15'-0"
S720	7	100	35'-0"				
S721	7	4×5	6'-0" to 30'-0"	S560	5	112	9'-6"
				S561	5	2×31	10'-9" to 12'-6"
S540	5	88	38'-6"	S562	5	50	12'-6"
S541	5	4×5	7'-6" to 31'-6"				
S750	7	4	38'-0"	S651	6	316	5'-3"
				S652	6	124	6'-0"

BENDING DIAGRAM

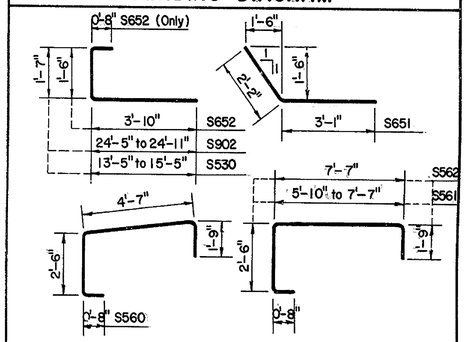

Note: All dimensions are out to out.

ESTIMATED QUANTITIES (4 SLABS)

Section	Item	Unit	Proposal
602	Portland Cement Concrete Masonry	C.Y.	310
605	Bar Reinforcement	Lbs.	45,245

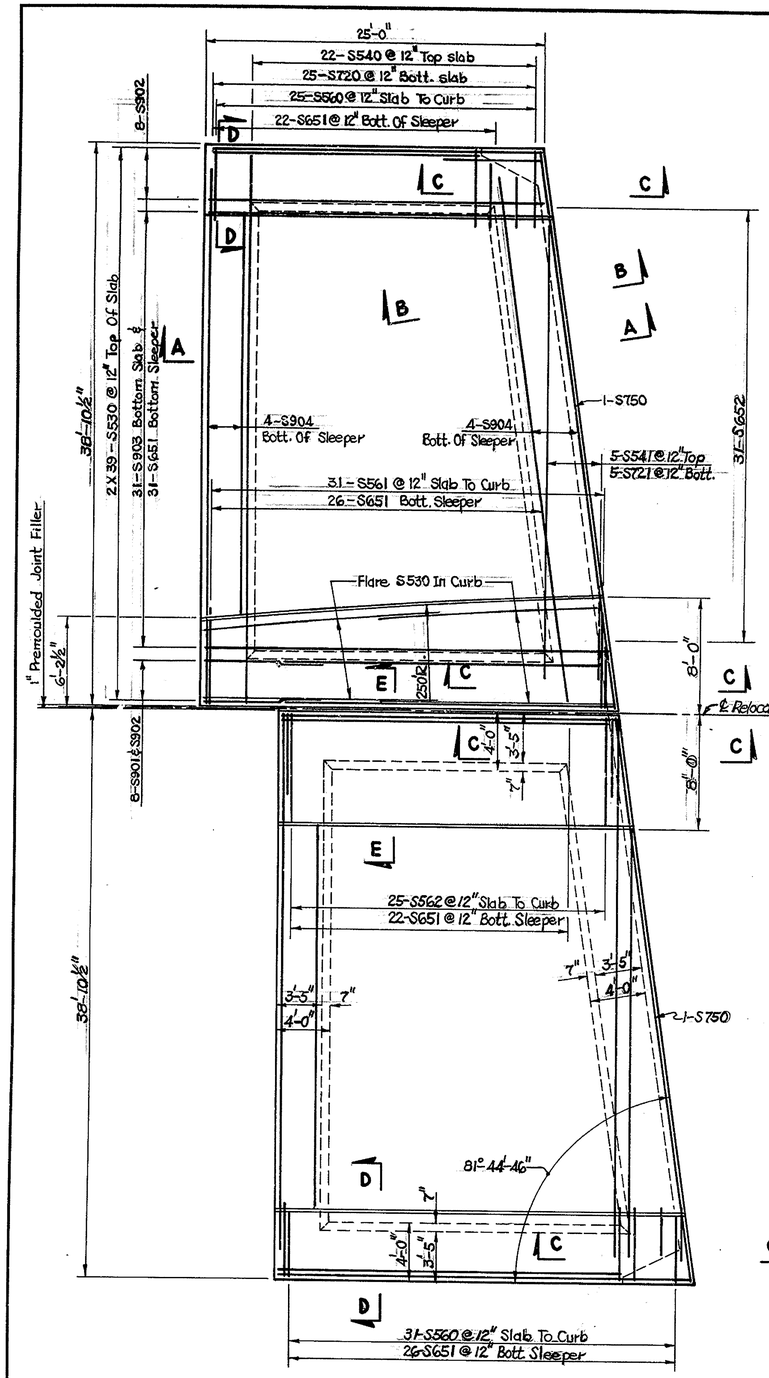

PLAN
Scale: 3/16" = 1'-0"

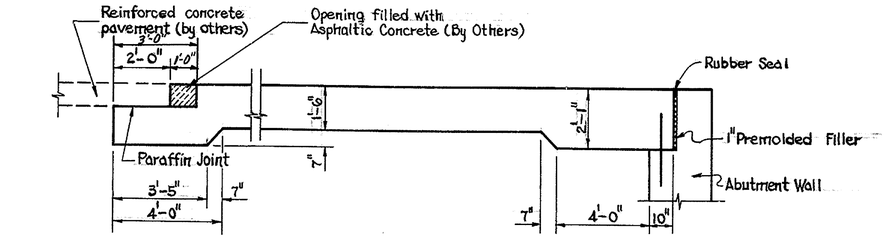

SECTION A-A
Scale: 3/8" = 1'-0"

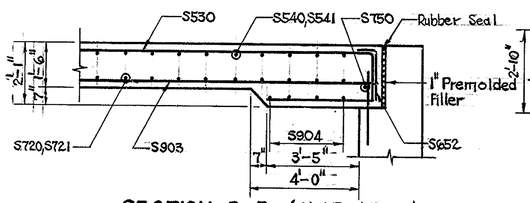

SECTION B-B (SLAB AREA)
Scale: 3/8" = 1'-0"

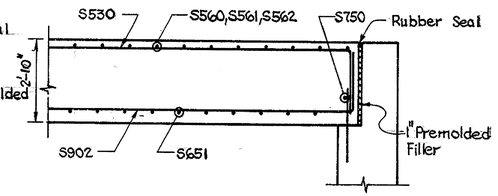

SECTION C-C (CURB AREA)
Scale: 3/8" = 1'-0"

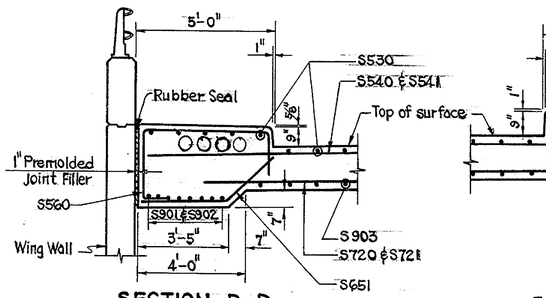

SECTION D-D
Scale: 3/8" = 1'-0"

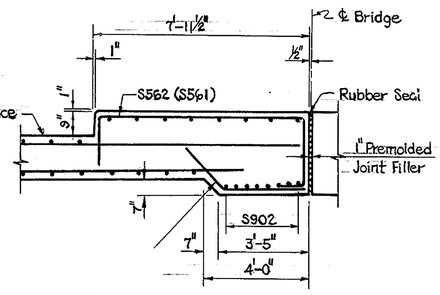

SECTION E-E
Scale: 3/8" = 1'-0"

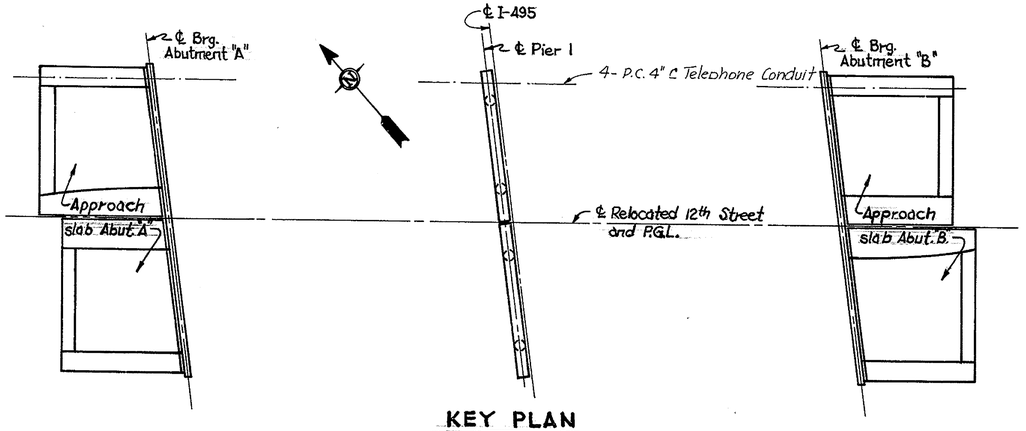

KEY PLAN
N.T.S.

DELAWARE
DEPARTMENT OF HIGHWAYS & TRANSPORTATION
DIVISION OF HIGHWAYS

APPROACH SLABS

D.	SCALE	APPROVED BY:
T. R.B.F.	AS SHOWN	
C.		BRIDGE ENGINEER

DIETZGEN 19 1253

COUNTY	CONTRACT	P. R. A. REG. NO.	STATE	FED. AID PROJECT NO.	FISCAL YEAR	SHEET NO.	TOTAL SHEETS
New Castle	73-10-014	2	DEL.	I-495-3(28)16		28	43

INTERSTATE ROUTE I-495
RELOCATED 12th STREET BRIDGE OVER I-495

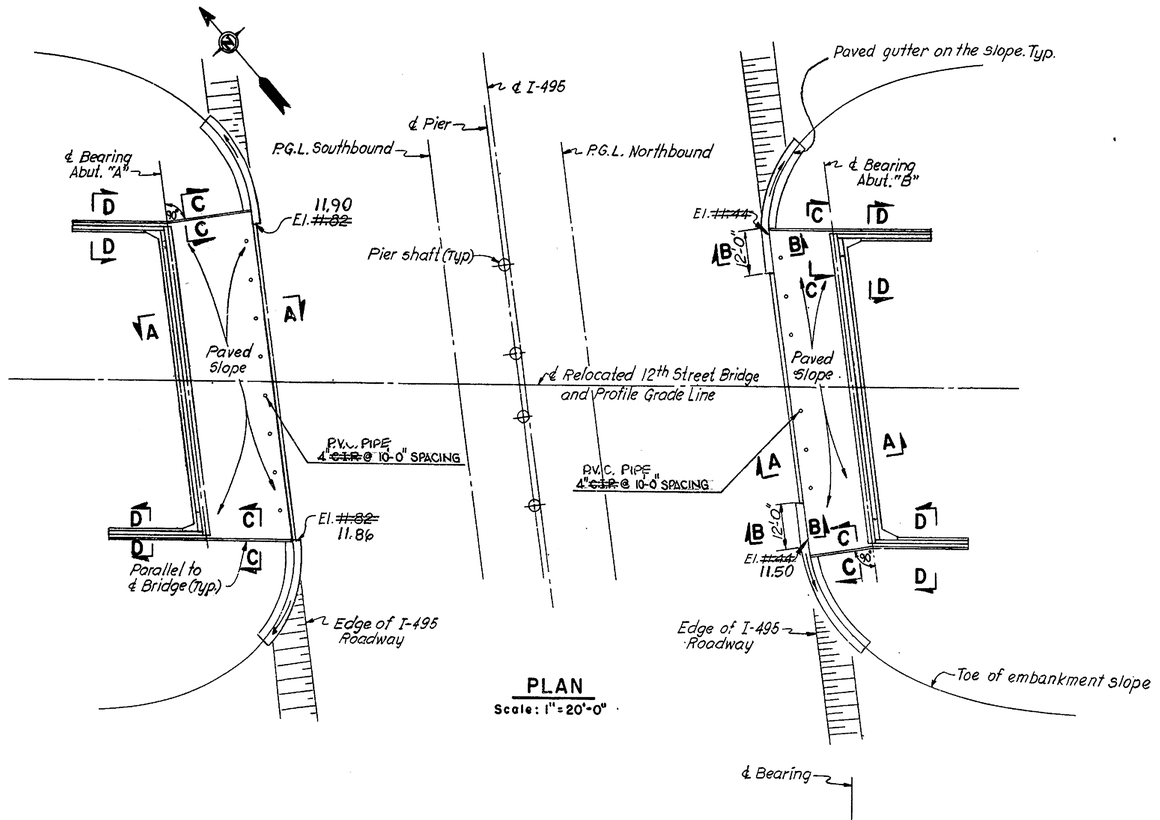

PLAN
Scale: 1" = 20'-0"

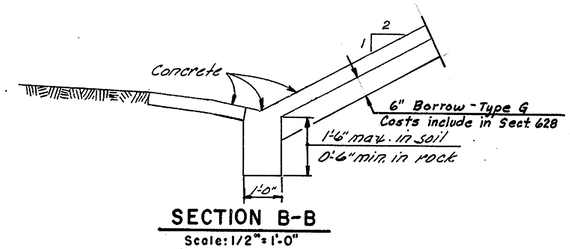

SECTION B-B
Scale: 1/2" = 1'-0"

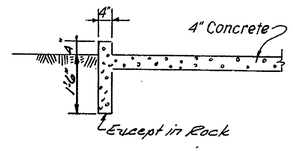

SECTION C-C
(ALTERNATE 1)
Scale: 1/2" = 1'-0"

NOTES:

1. For General Notes see Sheet No. 2.
2. The concrete slabs on Slope Protection must have construction joints located not more than 120" apart.

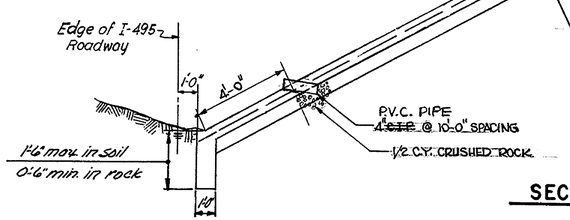

SECTION A-A
N.T.S.

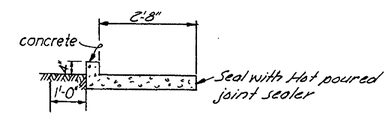

SECTION D-D
Scale: 1/2" = 1'-0"

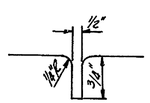

GROOVE DETAIL
(For Location see Special Provs)

DELAWARE DEPARTMENT OF HIGHWAYS & TRANSPORTATION
DIVISION OF HIGHWAYS

INTERSTATE ROUTE I-495

SLOPE PROTECTION DETAILS

J. E. GREINER CO.
MORAN, PROCTOR, MUESER & RUTLEDGE
CONSULTING ENGINEERS

D. S.L.T.
T. R. B.
C. W. W.

SCALE AS SHOWN

DATE 7-1-1968

APPROVED BY:

BRIDGE ENGINEER

COUNTY	CONTRACT	P.B.A. REQ. NO.	STATE	FED AID PROJECT NO	FISCAL YEAR	SHEET NO	TOTAL SHEETS
NEW CASTLE	73-10-014	2	DEL.	I-495-3(28)16		29	43

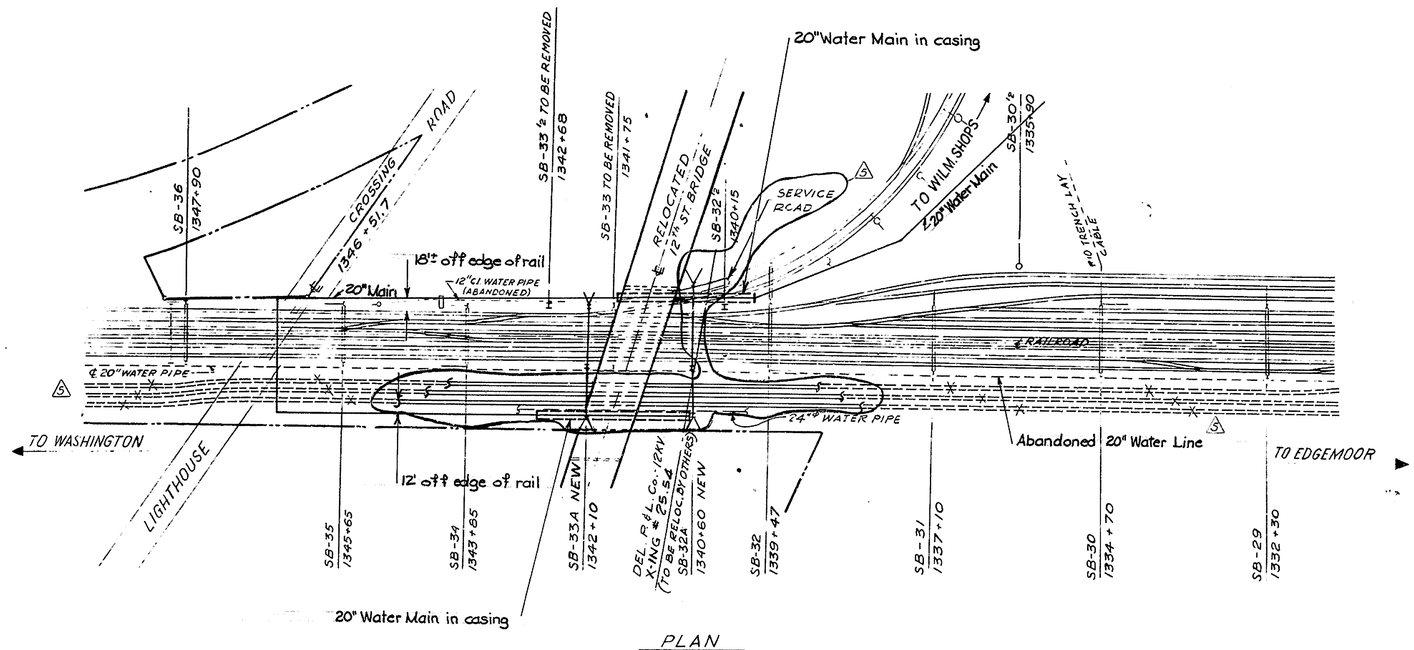

PLAN
SCALE: 1"=100'

LEGEND

- NEW OR RELOCATED
- EXISTING TO REMAIN
- EXISTING TO BE REMOVED
- TEMPORARY

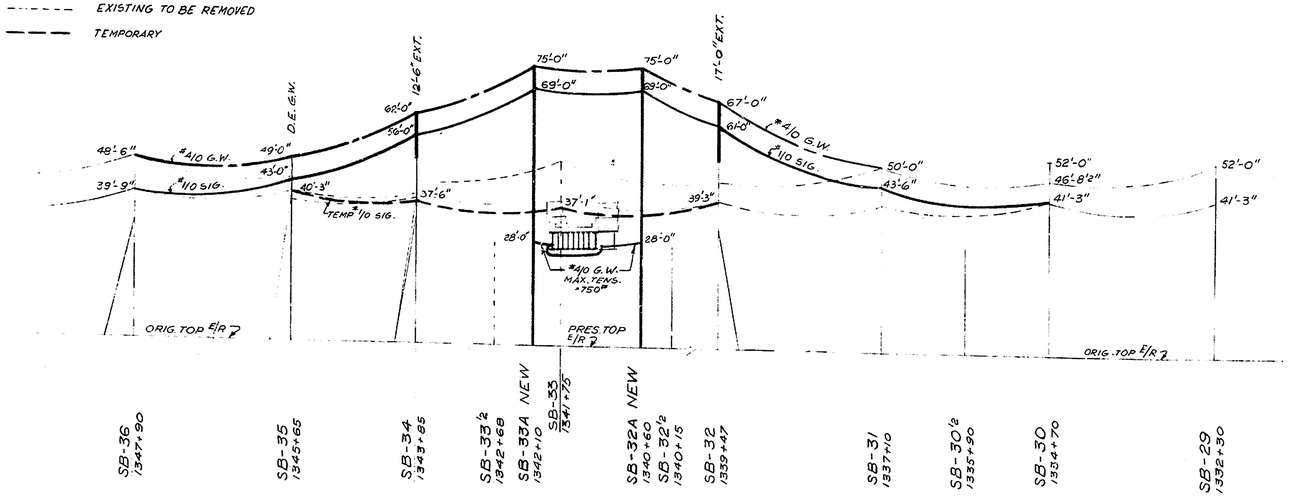

PROFILE
SCALE: HOR.: 1"=100'
VERT.: 1"=20'

GENERAL NOTES

STEEL:

1) STRUCTURAL STEEL SHALL CONFORM TO THE CURRENT REQUIREMENTS OF ASTM - SPECIFICATION. DESIGNATION A36.
2) CONNECTION BOLTS SHALL BE BEARING TYPE HEX HEAD. HEX NUT AND WASHER AND CONFORM TO THE CURRENT REQUIREMENTS OF ASTM-SPECIFICATIONS. DESIGNATION A325. AND AS CALLED FOR ON THE DRAWINGS.
3) CAST IRON SHALL CONFORM TO CLASS-30 OF THE CURRENT ASTM-SPECIFICATION. DESIGNATION A48.
4) GALVANIZING SHALL CONFORM TO THE CURRENT REQUIREMENTS OF ASTM-SPECIFICATION. DESIGNATIONS A123 AND A153.
5) BOLTS 7/8"ø: HOLES 15/16ø UNLESS OTHERWISE NOTED.
6) STEEL EMBEDDED IN CONCRETE TO BE UNPAINTED.
7) SHIPPING MARK AND THE LETTER "T" SHALL BE PAINTED ON FACE "T" ABOUT 15' FROM BOTTOM OF POLE.
8) PAINT TO BE IN ACCORDANCE WITH "SPECIAL PROVISIONS FOR MODIFICATIONS TO ELECTRIFICATION FACILITIES.

CONCRETE:

1) CONCRETE MASONRY SHALL BE IN ACCORDANCE WITH ITEM 18 OF THE STANDARD SPECIFICATIONS. DATED JUNE. 1965 AND HAVE A COMPRESSIVE STRENGTH AT 28 DAYS OF 4000 PSI.
2) REINFORCING BARS SHALL BE DEFORMED TYPE. BILLET-STEEL AND CONFORM TO THE STANDARD SPECIFICATIONS.
3) STRUCTURAL STEEL FOR GUY RODS SHALL CONFORM TO GRADE "B" OF THE CURRENT ASTM-SPECIFICATION. DESIGNATION A307.
4) STRUCTURAL STEEL FOR PIPES SHALL CONFORM TO THE CURRENT REQUIREMENTS OF ASTM-SPECIFICATION. DESIGNATION A53.
5) CAST IRON FOR WASHERS SHALL CONFORM TO CLASS-30. OF THE CURRENT ASTM-SPECIFICATION. DESIGNATION A48.
6) STRUCTURAL STEEL FOR FOUNDATION TUBES SHALL CONFORM TO THE CURRENT REQUIREMENTS OF ASTM-SPECIFICATION. DESIGNATION A36 OR AISI-1010 OR AISI-1012.
7) WELDING AND WELD MATERIAL TO BE ACCORDANCE WITH THE CURRENT AMERICAN WELDING SOCIETY SPECIFICATION FOR WELDED HIGHWAY AND RAILWAY BRIDGES D2.0-69 ALL WELDS TO BE CONTINUOUS UNLESS OTHERWISE NOTED

20" Water Main- All depths approximately 3' to top of pipe.

LIST OF DRAWINGS

PLAN AND PROFILE - DWG. NO. 2033 S-1
ERECTION DIAGRAM OF CATENARY BRIDGES SB-32A & SB-33A - - - - - - - - - - - - - - - - DWG. NO. 2033 S-2
MODIFICATIONS TO BEAM BRIDGES SB-32 & SB-34 - - - - - - DWG. NO. 2033 S-3
MODIFICATIONS TO BEAM BRIDGES SB-31. SB-33 & SB-35 AND REMOVAL DIAGRAM OF SB-33 & SB-33 1/2 - - - - - - - - - - - - - DWG. NO 2033 S-4
POLE EXTENSIONS AND CROSS ARM DETAILS - - - - - - - - - DWG NO. 2033 S-5
POLES AND FIELD DRILLING DETAILS - - - - - - - - - - - - DWG NO 2033 S-6
FOUNDATION. ANCHOR & HARDWARE DETAILS - - - - - - - - - DWG NO 2033 S-7
OVERHEAD BRIDGE STRUCTURE GROUNDING - - - - - - - - - - DWG. NO. 2033 S-8
HARDWARE DETAILS AND WIRE STRINGING CHARTS - - - - - - - DWG. NO. 2033 S-9

REFERENCE DRAWINGS

STATE OF DELAWARE
INTERSTATE ROUTE I-495
RELOCATED 12TH STREET BRIDGE OVER P.C.T. CO SHEET NO. 3 TO 18

ISSUE NO.	DATE	DWN.	CHKD.	APPROVALS						ISSUED FOR	RCT. CO. APPROVAL
5	5/6/75	P.D.C.	R.M.							REVISED FOR CONSTRUCTION	
4	1-9-75	P.D.C.	R.M.							STRUCTURAL APPROVAL	
3	10-17-72	F.S.	R.M.							REVISED FOR CONSTRUCTION	
2	6-1-70	F.O.	R.M.	–						CONSTRUCTION	
1	5-5-70	F.O.	R.M.	–	–					STRUCTURAL APPROVAL	

Gibbs & Hill, Inc.
ENGINEERS, DESIGNERS, CONSTRUCTORS
NEW YORK
JOB NO. 2033 A

SCALE AS NOTED

2033 S-1-5

DELAWARE
STATE HIGHWAY DEPARTMENT
INTERSTATE ROUTE I-495
RELOCATED 12TH STREET BRIDGE OVER P.C.T.CO
PLAN AND PROFILE

SCALE
DATE
APPROVED BY:
BRIDGE ENGINEER

COUNTY	CONTRACT	A.B.A. REG. NO.	STATE	FED. AID PROJECT NO.	FISCAL YEAR	SHEET NO.	TOTAL SHEETS
NEW CASTLE	73-10-014	2	DEL.	I-495-3(28)16		30A	43

NEW SHEET
10-16-75

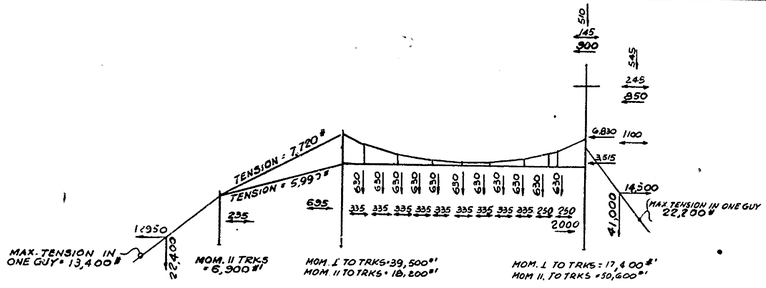

LOADING DIAGRAM FOR BRIDGE SB-32A

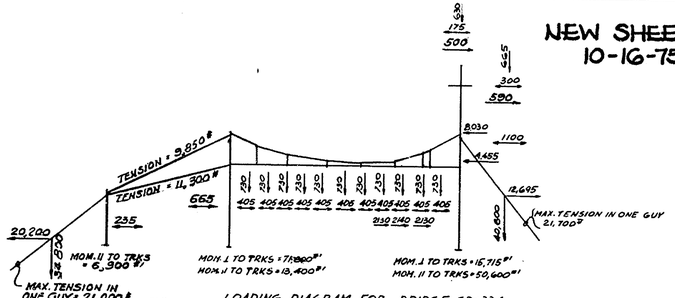

LOADING DIAGRAM FOR BRIDGE SB-33A

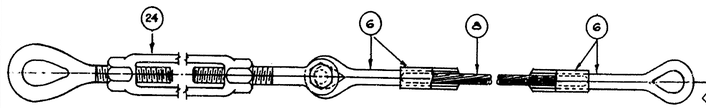

CROSS SPAN ASSEMBLY

SCALE: NONE

ITEM NO.	DESCRIPTION	CATALOG NO.	NO. REQ'D
	XSAIE (MAX. WORKING TENSILE STRENGTH 11,400#)		
6	EYE TYPE DEAD END ASS'Y. WITH AL. PROTECTIVE SLEEVE FOR 19 NO. 9 A.W.G. ALUMOWELD STRAND	ALCOA: 4627.199	2
8	19 NO. 9 A.W.G. ALUMOWELD STRAND	——	*FT.
24	TURNBUCKLE - 1¼" x 12" D.F.S., GALV.	CROSBY-LAUGHLIN G-227	1

* FOR LENGTH SEE ERECTION DIAGRAM

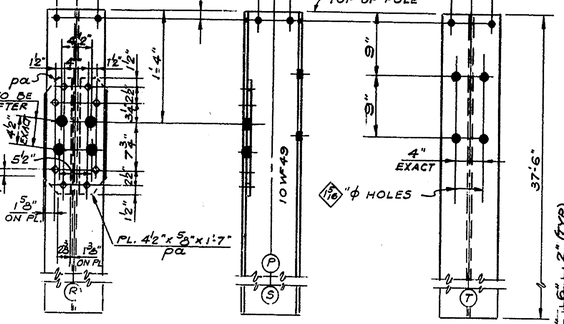

POLE SB-32A-C & SB-33A-C

SCALE: NONE

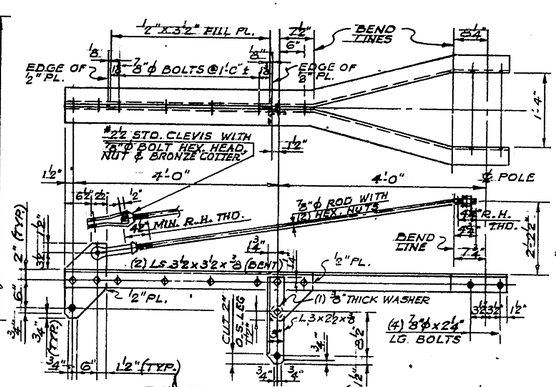

CROSS ARM CA-1 (GALV.)

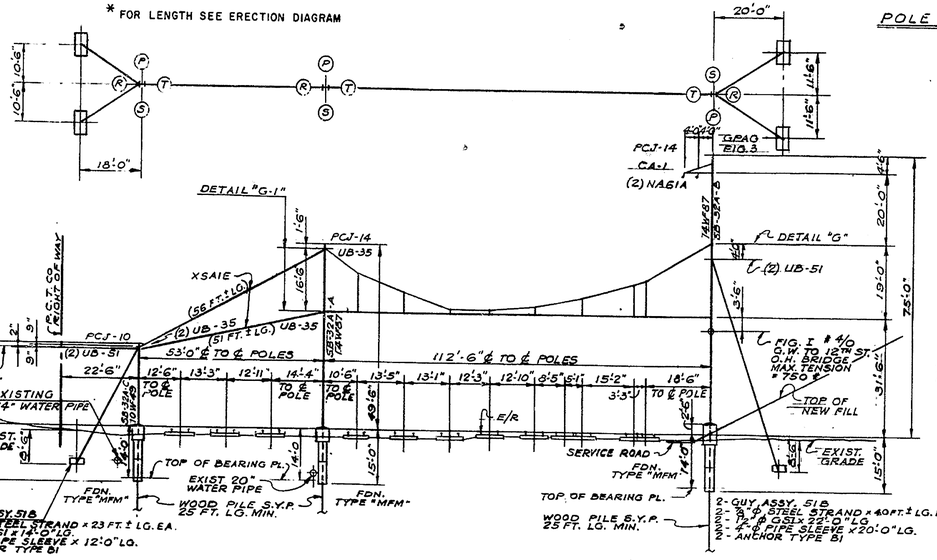

BRIDGE SB-32A

STA. 1340+60

LOOKING TOWARD WASHINGTON

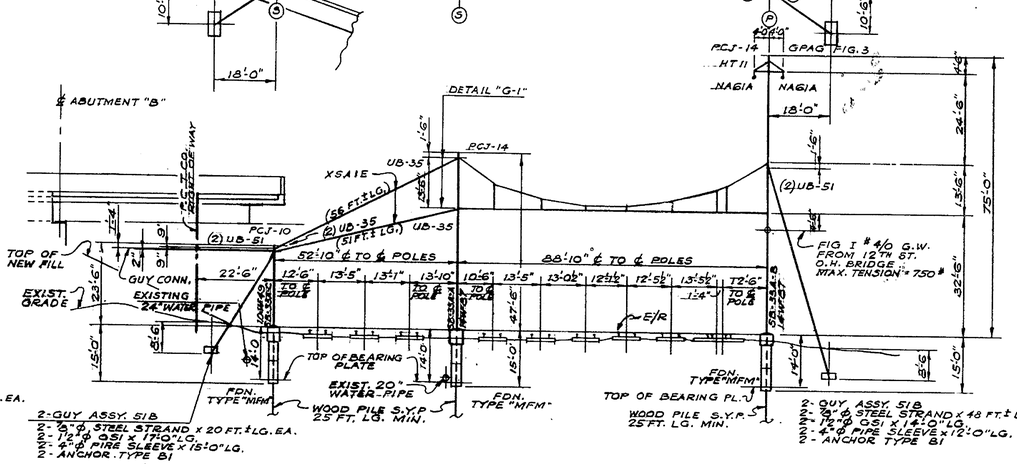

BRIDGE SB-33A

STA. 1342+10

LOOKING TOWARD WASHINGTON

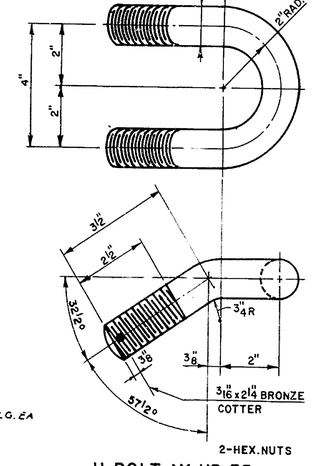

U-BOLT, MK UB-35

MATERIAL: A235, CLASS "G" (GALVANIZED)

OR AISI A1141, OIL QUENCHED

SCALE NONE

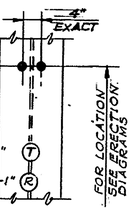

DETAIL "G"
DETAIL "G-1"

BILL OF MATERIAL

MARK	DWG. NO.	DESCRIPTION	UNIT.	QUAN.
		BRIDGE SB-32A		
SB-32A-A	20335-6	POLE 14 WF 87	EA.	1
SB-32A-B	"	POLE 14 WF 87	"	1
CA-1	THIS DWG.	CROSS ARM	"	1
"G" "G-1"	"	FIELD DRILLING DETAIL	"	1/2
UB-51	20335-7	U-BOLT	"	4
"MF M"	"	FOUNDATION	"	3
B-1	"	ANCHOR GSI 4"ϕ PIPE SLEEVE (FOR LENGTH SEE ERECTION DIAG.)	"	4
51 B	"	GUY ASSEM.-⅜" ϕ STEEL STR.	"	4
NA G1 A	20335-9	SUSPENSION INSULATOR ASSEMBLY	"	2
S.Y.P.	THIS DWG.	WOOD PILE (25'-0" LG.-MIN.)	"	3
GPAG FIG. 3	20335-9	GROUND WIRE ASSEMBLY	"	1
* FIG. 1	"	BONDING ASSEMBLY	"	1
XSAIE	THIS DWG.	CROSS SPAN ASSY.- 19 #9 AW. STR.	"	2
UB-35	"	U-BOLT	"	4
SB-32A-C	"	POLE 10WF49	"	1
PCJ-10 PCJ-14	20335-7	POLE CAP	"	1/2
		BRIDGE SB-33A		
"G-1"	THIS DWG.	FIELD DRILLING DETAIL	EA.	2
UB-51	20335-7	U-BOLT	"	4
"MF M"	"	FOUNDATION	"	3
B-1	"	ANCHOR GSI 4"ϕ PIPE SLEEVE (FOR LENGTH SEE ERECTION DIAG.)	"	4
51 B	"	GUY ASSEM.-⅜" ϕ STEEL STR.	"	4
NA G1 A	20335-9	SUSPENSION INSULATOR ASSEMBLY	"	2
S.Y.P.	THIS DWG.	WOOD PILE (25'-0" LG.-MIN.)	"	3
GPAG FIG. 3	20335-9	GROUND WIRE ASSEMBLY	"	1
FIG. 1	"	BONDING ASSEMBLY	"	1
XSAIE	THIS DWG.	CROSS SPAN ASSY.- 19 #9 AW. STR.	"	2
UB-35	"	U-BOLT	"	4
SB-33A-A	20335-6	POLE 14WF87	"	1
SB-33A-B	"	POLE 14WF87	"	1
HT 11	20335-5	CROSS ARM	"	1
SB-33A-C	THIS DWG.	POLE 10WF49	"	1
PCJ-10 PCJ-14	20335-7	POLE CAP	"	1/2

* MATERIAL SUPPLIED & INSTALLED BY P.C.T. CO. FORCES

NOTES:
1. FOR GENERAL NOTES, LIST OF DRAWINGS & LIST OF REFERENCE DRAWINGS SEE DWG. No. 20335-1
2. FOR BONDING MATERIAL SUPPLIED BY P.C.T. CO. FORCES SEE P.C.T. Co. BILL OF MATERIAL 46 ML-114

ISSUE NO.	DATE	DWN.	CHK'D.	APPROVALS	ISSUED FOR	P.C.T.CO. APPROVAL
6	9/23/76	GRS	R.M.		REVISED FOR CONSTRUCTION	
5	9-9-75	GRS	R.M.		STRUCTURAL APPROVAL	
4	10-17-73	RS	R.M.		REVISED FOR CONSTRUCTION	
3	9-14-72	M.G.	R.M.		ADDED BONDING	
2	6-1-72	F.C.	R.M.	— — — — — —	CONSTRUCTION	
1	5-5-70	F.C.	R.M.	— — — — — —	STRUCTURAL APPROVAL	

ABBR. CAT. STRUCT. MECH. ELEC. P.E.

Gibbs & Hill, Inc.
ENGINEERS, DESIGNERS, CONSTRUCTORS
NEW YORK
JOB NO. 2033 A

SCALE 1" = 20' UNLESS NOTED
2033 S-2-6

DELAWARE
STATE HIGHWAY DEPARTMENT

INTERSTATE ROUTE I-495

RELOCATED 12TH STREET BRIDGE OVER P.C.T CO.

ERECTION DIAGRAM OF CATENARY BRIDGES SB-32A & SB-33A

SCALE

DATE

APPROVED BY:

BRIDGE ENGINEER

REVISIONS

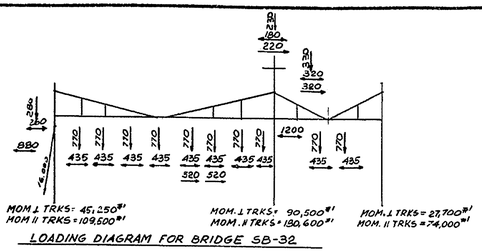

LOADING DIAGRAM FOR BRIDGE SB-32

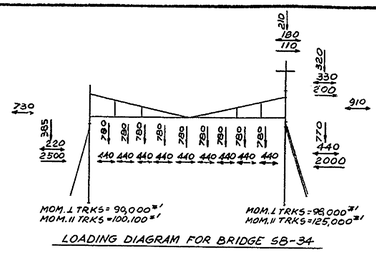

LOADING DIAGRAM FOR BRIDGE SB-34

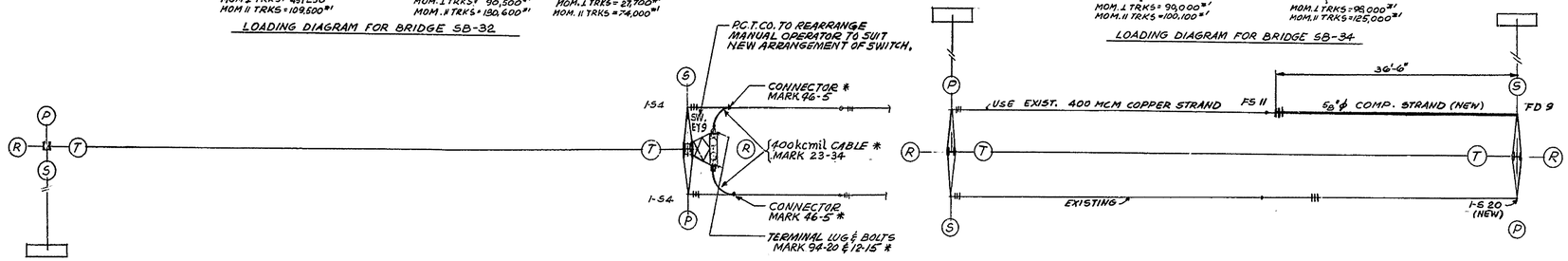

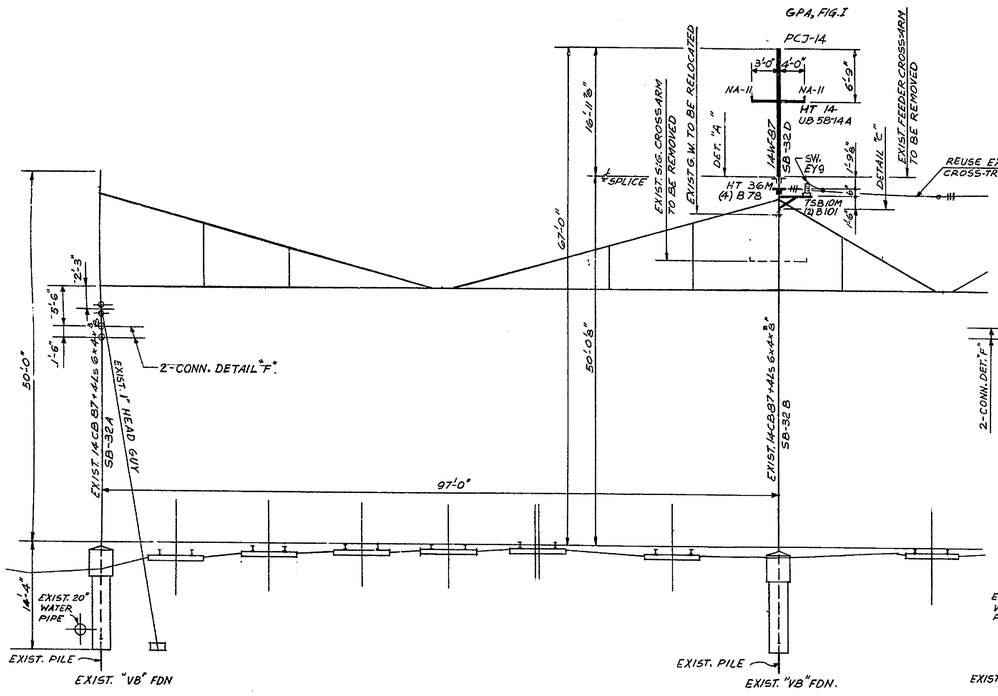

BRIDGE SB-32
STA. 1339+47
LOOKING TOWARD WASHINGTON

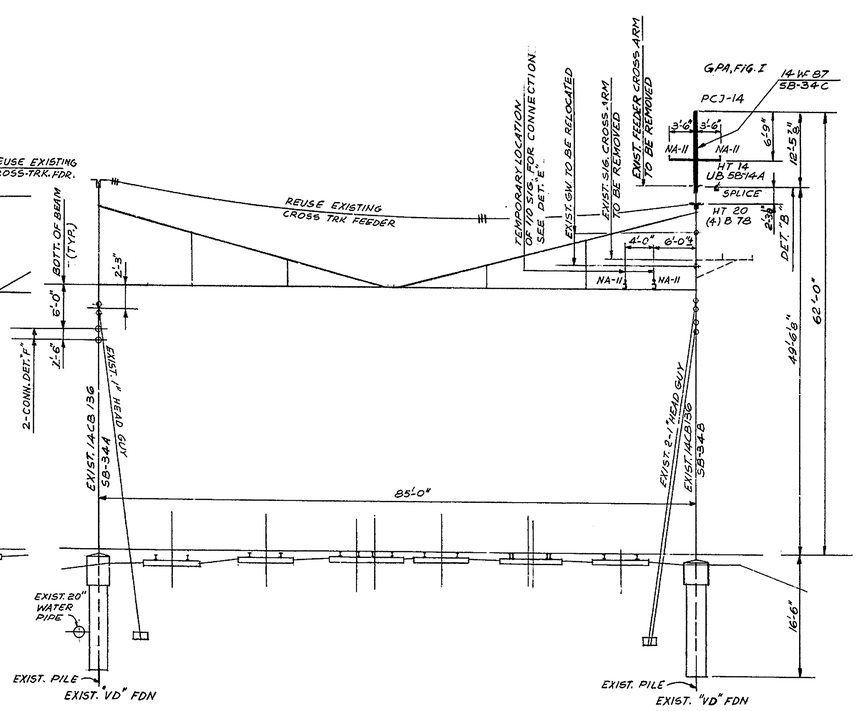

BRIDGE SB-34
STA. 1343+85
LOOKING TOWARD WASHINGTON

COUNTY	CONTRACT	A.B.A. REG. NO.	STATE	FED. AID PROJECT NO.	FISCAL YEAR	SHEET NO.	TOTAL SHEETS
NEW CASTLE	73-10-014	2	DEL.	I-495-3(28)16		31	43

BILL OF MATERIAL

	MARK	DWG. NO.	DESCRIPTION	UNIT	QUANT.
			BRIDGE SB-32		
	SB-32 D	20335-5	POLE EXTENSION 14 WF 87	EA.	1
	HT 14	"	CROSS ARM	"	1
	HT 36M	"	" "	"	1
	TSB10M	"	SWITCH SUPPORT	"	1
	UB 5B14A	"	U-BOLT	"	1
	B 78	"	BOLT	"	4
	B 101	"	BOLT	"	2
	PCJ-14	20335-7	POLE CAP	"	1
	"A"	20335-6	CONNECTION DETAIL	"	1
	"C"	"	" "	"	1
	NA-11	20335-9	PIN INSULATOR ASSEMBLY 6.6 KV.	"	2
*	S 4	ET-305E	SHACKLE	"	2
	GPA FIG. I	20335-9	GROUND WIRE ASSEMBLY	"	1
	F	20335-6	CONNECTION DETAIL	"	2
			BRIDGE SB-34		
	SB-34 C	20335-5	POLE EXTENSION 14 WF 87	EA.	1
	HT 14	"	CROSS ARM	"	1
	HT 20	"	" "	"	1
	UB 5B14A	"	U-BOLT	"	1
	B 78	"	BOLT	"	4
	PCJ-14	20335-7	POLE CAP	"	1
	"B"	20335-6	CONNECTION DETAIL	"	1
	"E"	"	" "	"	2
	NA-11	20335-9	PIN INSULATOR ASSEMBLY 6.6 KV.	"	2
*	FD 9	ET-1105C	INSULATOR ASSEMBLY 11. KV	"	1
*	S 20	ET-305E	SHACKLE	"	1
*	FS 11	ET-1105C	INSULATOR ASSEMBLY 11 KV.	"	1
*	-	-	CABLE, COMP., BARE 5/8"ϕ, 19 WIRES	FT.	407
	GPA FIG. I	20335-9	GROUND WIRE ASSEMBLY	EA.	1
	12-15		BOLT, BRONZE, HEX. HD. & NUT, 1/2" x 2" LONG. H.M. HARPER CO. MORTON GROVE, ILL.	"	8
	94-20		TERMINAL LUG FOR 400 kcmil CABLE SIMILAR TO DELTA STAR TYPE "FU" CAT. NO. FU-132 SHOWN IN DELTA STAR BULLETIN 38E - SECTION 10 - PAGE 6 EXCEPT 9/16" HOLES SHOWN IN FIG. 3 SHALL BE DRILLED WITH 1 3/8" CENTERS. DELTA STAR FU-132	"	2
	46-5		CONNECTOR, PARALLEL, BRONZE, TYPE LC-1100 ANDERSON ELECTRIC LC-1155	"	2
	23-34		CABLE, COPPER, BARE, CIRC. 112-C 400,000 CIR MILS, 37 WIRES, H.D. W.B. SIEGFRIED ASSOC., PHILA. PA.	FT.	20
	F	20335-6	CONNECTION DETAIL	EA.	2

* MATERIAL SUPPLIED AND INSTALLED BY P.C.T. CO. FORCES

NOTES:
1- FOR GENERAL NOTES, LIST OF DRAWINGS & LIST OF REFERENCE DRAWINGS SEE DWG. NO. 20335-1
2- FOR MATERIAL SUPPLIED BY P.C.T. CO. FORCES SEE P.C.T. CO. BILL OF MATERIAL 46ML-114
3- EXISTING CROSS ARMS TO BE REMOVED BY CONTRACTOR

Ernest P. Foley

ISSUE NO.	DATE	DWN.	CHKD.	APPROVALS					ISSUED FOR	P.C.T.CO. APPROVAL
				ARCH.	CAT.	STRUCT.	MECH.	ELEC.		
4	10-17-73	R.S.	R.M.						REVISED FOR CONSTRUCTION	
3	9-14-70	R.G.	R.M.						ADDED BUNDING	
2	6-1-70	F.O.	R.M.	—		—	—	—	CONSTRUCTION	
1	5-5-70	F.O.	R.M.	—	—	—	—	—	STRUCTURAL APPROVAL	

Gibbs & Hill, Inc.
ENGINEERS, DESIGNERS, CONSTRUCTORS
NEW YORK

JOB NO. 2033A

SCALE: 1" = 10'

2033 S-3-4

DELAWARE
STATE HIGHWAY DEPARTMENT

INTERSTATE ROUTE I-495

RELOCATED 12TH STREET BRIDGE OVER P.C.T.CO.
MODIFICATION TO BEAM BRIDGES
SB-32 & SB-34

SCALE

DATE

APPROVED BY:

BRIDGE ENGINEER

COUNTY	CONTRACT	P.O.A. REG. NO.	STATE	FED AID PROJECT NO.	FISCAL YEAR	SHEET NO.	TOTAL SHEETS
NEW CASTLE	7310-014	2	DEL.	I-495-3(28)16		32	43

BILL OF MATERIAL

MARK	DWG. NO.	DESCRIPTION	UNIT	QUANT.
		BRIDGE SB-31		
HT 42	2033 S-5	CROSS ARM	EA	1
UB 5B14C	"	U-BOLT	"	1
NA-11	20335-9	PIN INSULATOR ASSEMBLY 6,6 KV	"	2
		BRIDGE SB-33		
"E"	2033 S-6	CONNECTION DETAIL	EA.	1
NA-11	20335-9	PIN INSULATOR ASSEMBLY 6,6 KV	"	2
		BRIDGE SB-35		
HT 14	20335-5	CROSS ARM	EA.	1
UB5B-14A	"	U-BOLT	"	1
PCJ-14	20335-7	POLE CAP	"	1
"D"	20335-6	CONNECTION DETAIL	"	1
NA-11	20335-9	PIN INSULATOR ASSEMBLY 6,6 KV	"	2
G.P.H.G. FIG. 5	20335-9	GROUND WIRE ASSEMBLY	"	1

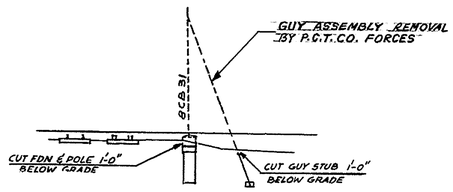

REMOVAL DIAGRAM P.O.P. SB-33½
STA. 1342+68
LOOKING TOWARD WASHINGTON
SCALE: 1"=20'

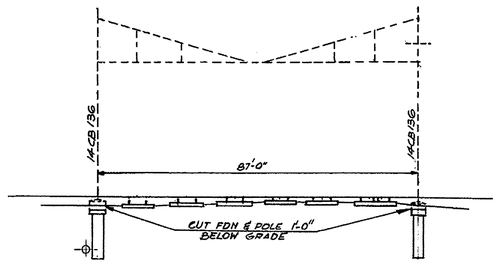

REMOVAL DIAGRAM BRIDGE SB-33
STA. 1341+75
LOOKING TOWARD WASHINGTON
SCALE: 1"=20'

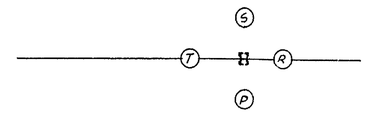

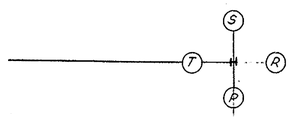

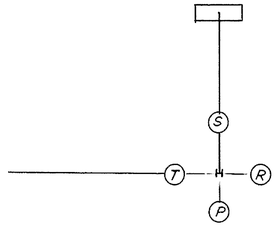

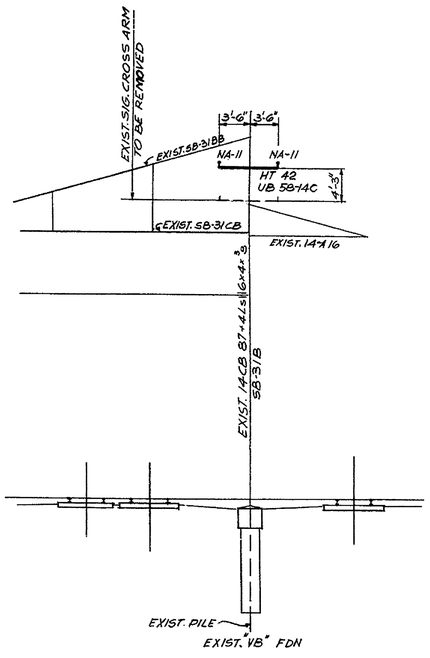

BRIDGE SB-31
(PARTIAL ERECTION DIAGRAM)
STA. 1337+10
LOOKING TOWARD WASHINGTON

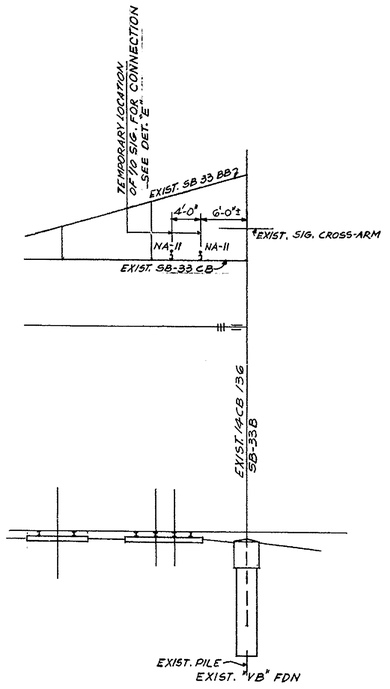

BRIDGE SB-33
(PARTIAL ERECTION DIAGRAM)
STA. 1341+75
LOOKING TOWARD WASHINGTON
TEMPORARY MODIFICATIONS

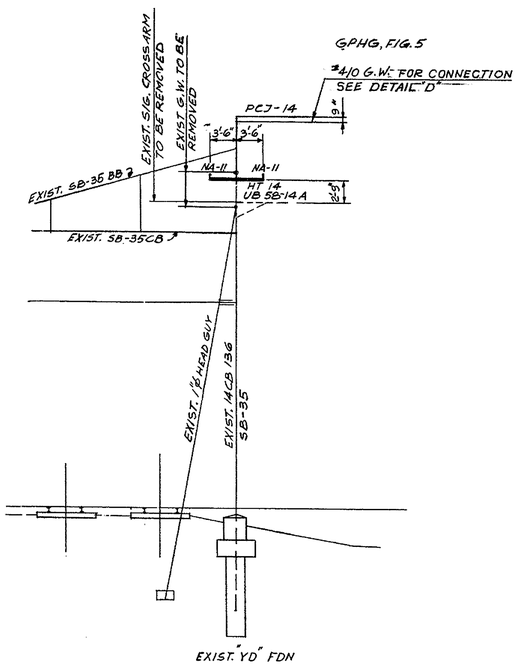

BRIDGE SB-35
(PARTIAL ERECTION DIAGRAM)
STA. 1345+65
LOOKING TOWARD WASHINGTON

NOTES:
1- FOR GENERAL NOTES, LIST OF DRAWINGS & LIST OF REFERENCE DRAWINGS SEE DWG. NO. 2033S-1
2- ALL REMOVAL AND DISPOSAL BY CONTRACTOR EXCEPT AS NOTED

ISSUE NO.	DATE	DWN.	CHKD	ARCH.	CAT.	STRUCT.	MECH.	ELEC.	F.E.	ISSUED FOR	P.C.T.CO. APPROVAL
4	10-17-75	R.M.		Dmm	JmR			W&K	GH	REVISED FOR CONSTRUCTION	
3	9-14-70	R.G.	R.O.E.					F.A.S.	JDM	ADDED BONDING	
2	6-1-70	F.O.	R.M.	—	Dmm	GCG	—	W&K	WC	CONSTRUCTION	
1	5-5-70	F.O.	R.M.	—	—	GCG	—	—	WC	STRUCTURAL APPROVAL	

APPROVALS

Gibbs & Hill, Inc.
ENGINEERS, DESIGNERS, CONSTRUCTORS
NEW YORK
JOB NO. 2033A

SCALE: 1" = 10' & NOTED

2033 S-4-4

DELAWARE
STATE HIGHWAY DEPARTMENT

INTERSTATE ROUTE I-495

RELOCATED 12TH STREET BRIDGE OVER P.C.T.CO.
MODIFICATION TO BEAM BRIDGES
SB-31, SB-33 & SB-35
AND REMOVAL DIAGRAM OF SB-33 & SB-33½

SCALE

DATE

APPROVED BY:

BRIDGE ENGINEER

Ernest P. Foley

COUNTY	CONTRACT	R.B.A. REG. NO.	STATE	FED. AID PROJECT NO.	FISCAL YEAR	SHEET NO.	TOTAL SHEETS
NEW CASTLE	73-10-014	2	DEL.	I-495-3(28)16		33	43

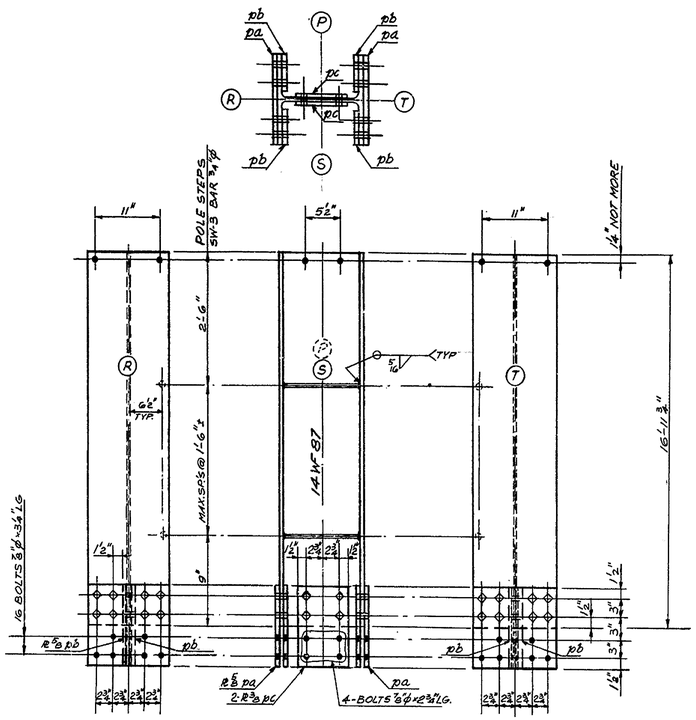

POLE EXTENSION SB-32 D

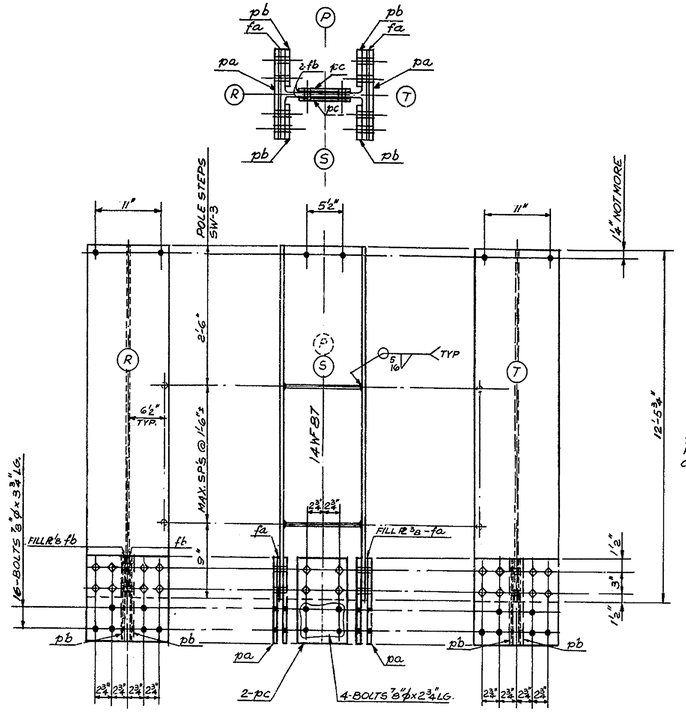

POLE EXTENSION SB-34C

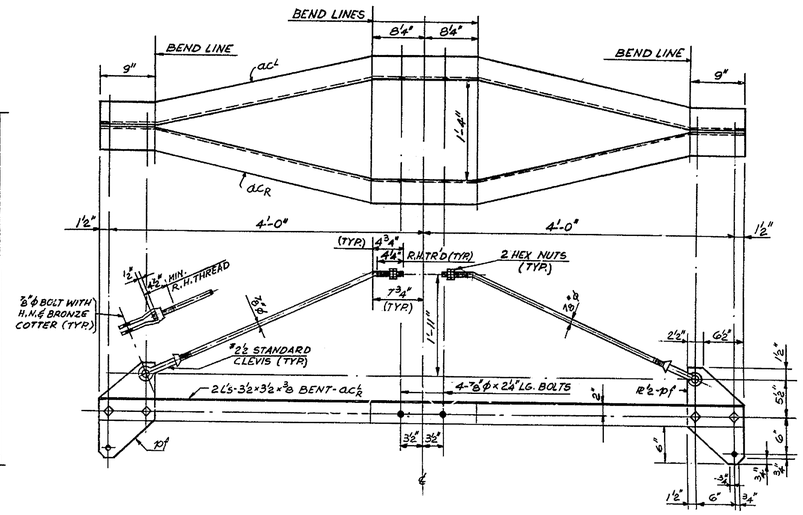

CROSS ARM HT 11
(GALVANIZED)

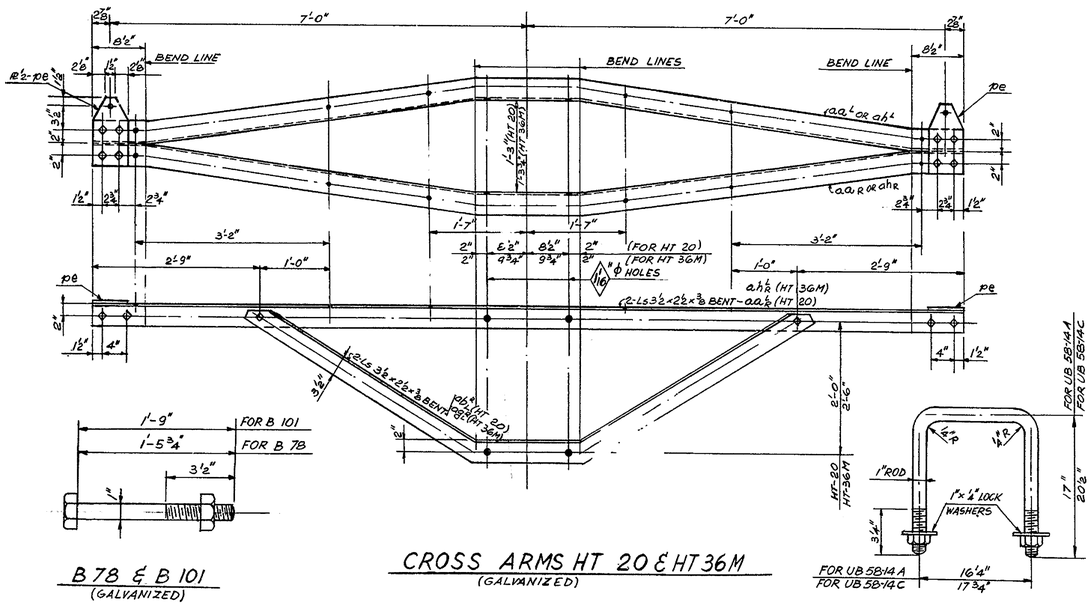

B 78 & B 101
(GALVANIZED)

CROSS ARMS HT 20 & HT 36M
(GALVANIZED)

UB 58-14A & UB 58-14C
(GALVANIZED)
MATERIAL: A 235, CLASS "G"

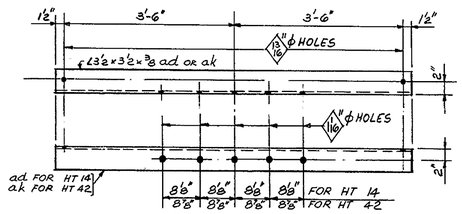

CROSS ARM HT 14 & HT 42
(GALVANIZED)

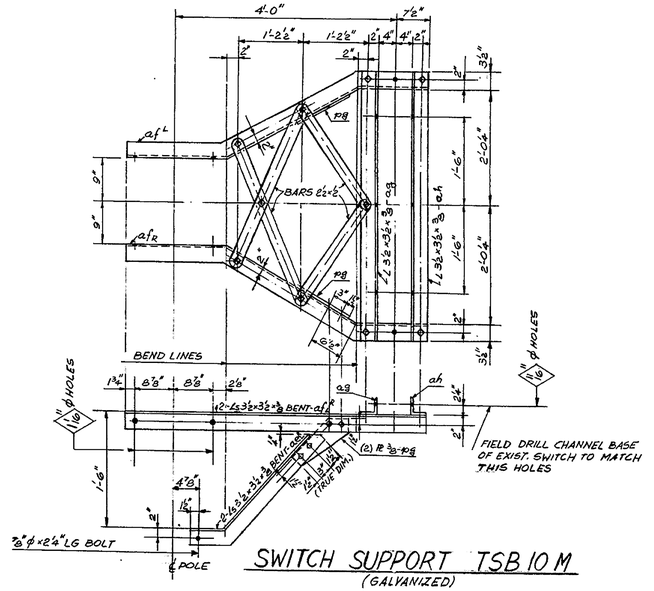

SWITCH SUPPORT TSB 10 M
(GALVANIZED)

NOTES
1. FOR GENERAL NOTES, LIST OF DRAWINGS & LIST OF REFERENCE DRAWINGS SEE DWG NO. 2033 S-1

ISSUE NO.	DATE	DWN.	CHKD.	ANCH.	CAT.	STRUCT.	MECH.	ELEC.	E.	ISSUED FOR	P.C.T.CO. APPROVAL
3	10-17-73	P.S.	R.M.	—	—	9-11-73	9-11-73	9-11-73	9-11-73	REVISED FOR CONSTRUCTION	
2	6-1-70	P.D.	R.M.	—	—	9-11-73	9-11-73	9-11-73	9-11-73	CONSTRUCTION	
1	6-5-70	P.D.	R.M.	—	—	9-11-73	—	—	9-11-73	STRUCTURAL APPROVAL	

APPROVALS

Ernest P. Foley

Gibbs & Hill, Inc.
ENGINEERS, DESIGNERS, CONSTRUCTORS
NEW YORK
JOB NO. 2033 A

SCALE: NONE

2033 S-5-3

DELAWARE
STATE HIGHWAY DEPARTMENT

INTERSTATE ROUTE I-495

RELOCATED 12TH STREET BRIDGE OVER P.C.T.CO.

POLE EXTENSIONS, AND CROSS ARM DETAILS

SCALE

APPROVED BY:

DATE

BRIDGE ENGINEER

COUNTY	CONTRACT	P.D.E. REG.NO.	STATE	FED. AID PROJECT NO.	FISCAL YEAR	SHEET NO.	TOTAL SHEETS
NEW CASTLE	73-10-014	2	DEL.	I-495-3(28) 16		34	43

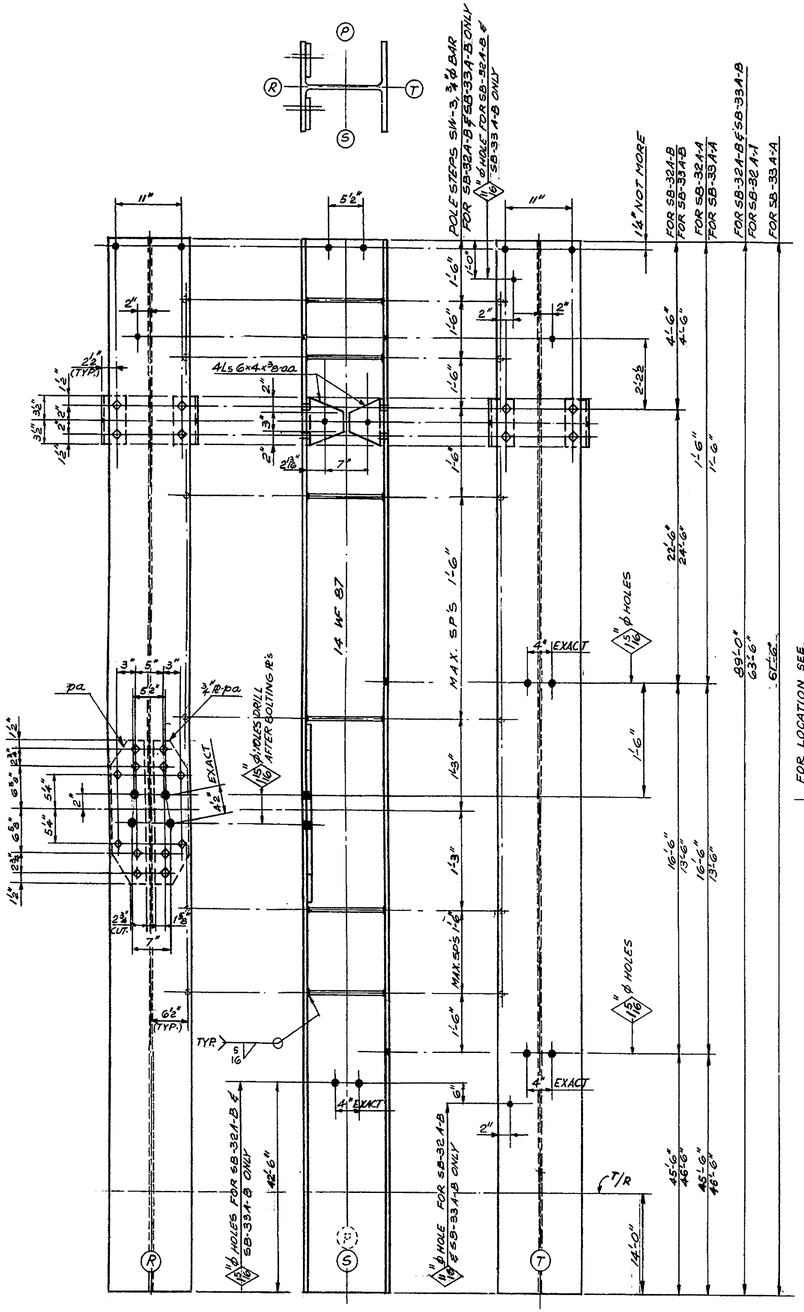

POLE SB-32A-A, SB-32A-B, SB-33A-A & SB-33A-B

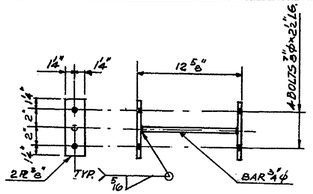

POLE STEP PS-1

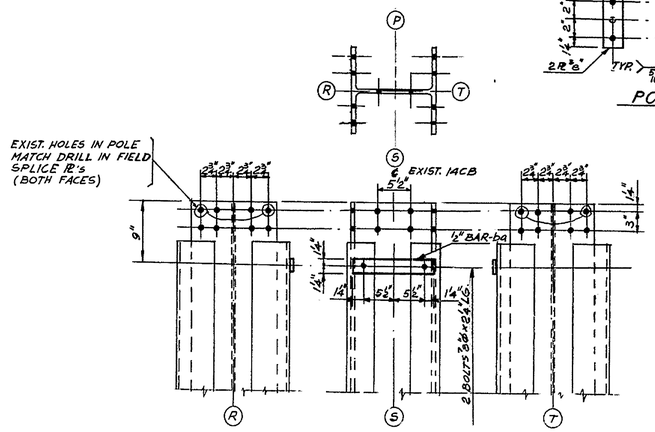

DETAIL "A"

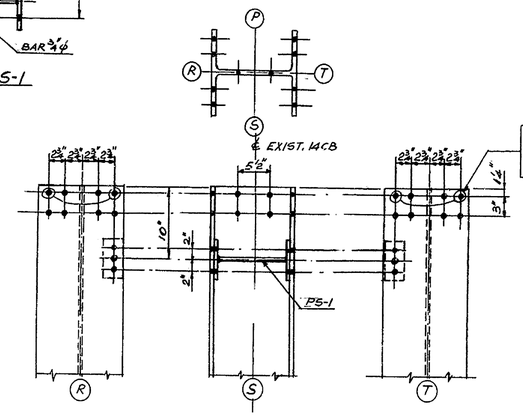

DETAIL "B"

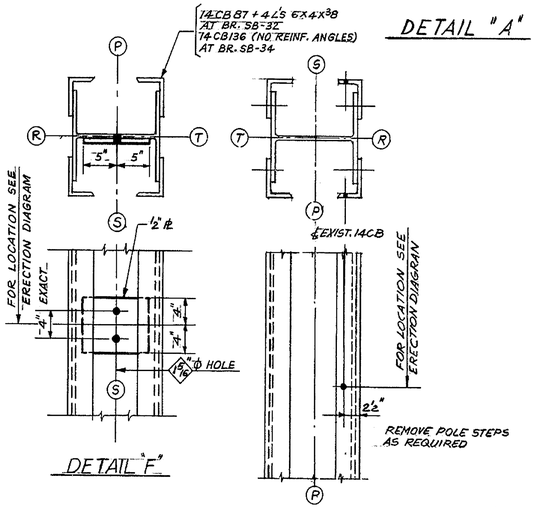

DETAIL "F"

DETAIL "C"

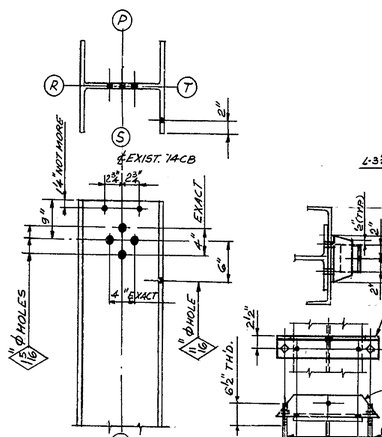

DETAIL "D"

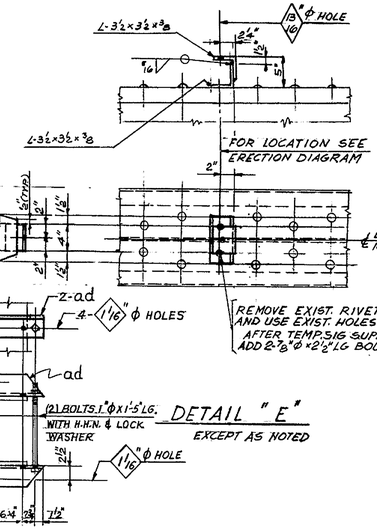

DETAIL "E"
EXCEPT AS NOTED

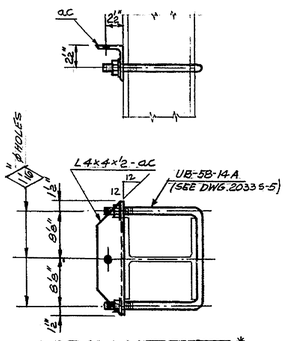

ST 14A ASSEMBLY *
8-REQUIRED
(GALVANIZED)

"ST-X" PULL-OFF ASSEMBLIES
2-REQUIRED (GALVANIZED)

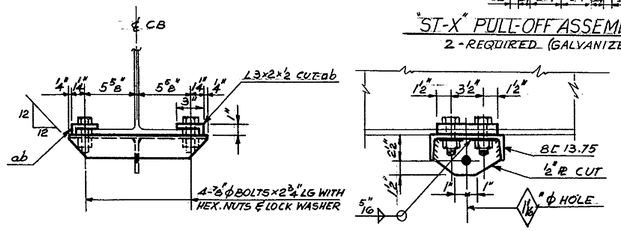

CATENARY SUPPORT CLAMP MK-CSC 10 *
(GALVANIZED)
12-REQUIRED

NOTES
1. FOR GENERAL NOTES, LIST OF DRAWINGS & LIST OF REFERENCE DRAWINGS SEE DWG. NO. 2033 S-1.
2. * MATERIAL SUPPLIED BY CONTRACTOR AND INSTALLED BY P.C.T.CO. FORCES

ERNEST P. FOLEY REGISTERED PROFESSIONAL ENGINEER No. 2755 DELAWARE
Ernest P. Foley

ISSUE NO.	DATE	DWN.	CHKD.	APPROVALS					ISSUED FOR	P.C.T.Co APPROVAL
				ARCH.	CAT.	STRUCT.	MECH.	ELEC.	P.E.	
3	10-17-72	P.S.	W.M.	—	mm	W.R	—	11/4	W	REVISED FOR CONSTRUCTION
2	6-1-70	F.O.	R.M.	—	mm	C.C.	—	11/4	W	CONSTRUCTION
1	5-5-70	F.O.	R.M.	—	—	C.C.	—	—	W	STRUCTURAL APPROVAL

Gibbs & Hill, Inc.
ENGINEERS, DESIGNERS, CONSTRUCTORS
New York
JOB NO. 2033 A

SCALE: NONE

2033 S-6-3

DELAWARE
STATE HIGHWAY DEPARTMENT

INTERSTATE ROUTE I-495

RELOCATED 12TH STREET BRIDGE OVER P.C.T.CO.

POLE'S AND FIELD DRILLING DETAILS

SCALE

DATE

APPROVED BY:

BRIDGE ENGINEER

COUNTY	CONTRACT	P.R.A. REQ. NO.	STATE	FED. AID PROJECT NO.	FISCAL YEAR	SHEET NO.	TOTAL SHEETS
NEW CASTLE	73-10-014	2	DEL.	I-495-3(28)10		35	43

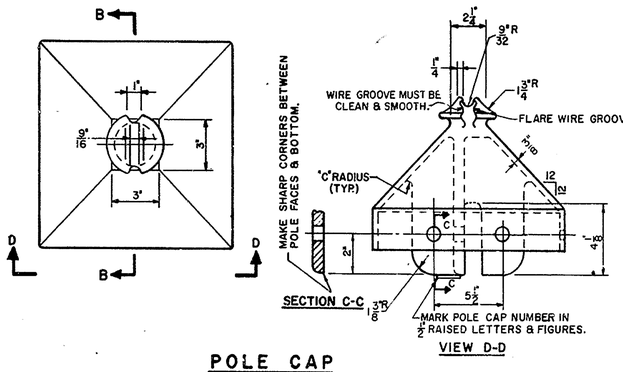

POLE CAP

(MAT'L CAST IRON ASTM A 48-CLASS 30)
MANUFACTURED BY S & B. FOUNDRY CO.
BLOOMSBURG, PA. OR EQUAL
CONNECTION BOLTS:
(2) 7/8 x 2 1/2 LG. WITH NUT (MATERIAL A 325, GALV.)

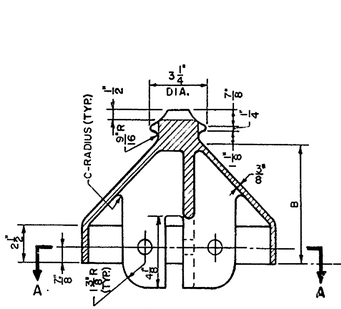

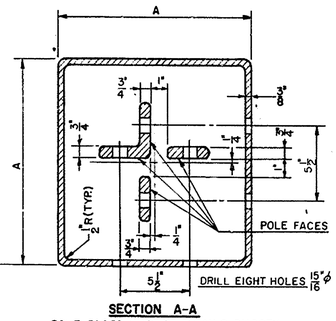

TABLE OF DIMENSIONS			
POLE CAP №	A	B	C-RADIUS
~~PCJ-10~~	~~11"~~	~~6 3/4"~~	~~1"~~
~~PCJ-10~~	~~11 1/2"~~	~~6 3/4"~~	~~1 1/2"~~
~~PCJ-12~~	~~13 1/2"~~	~~7 3/4"~~	~~1"~~
PCJ-14	17"	9 1/2"	1"

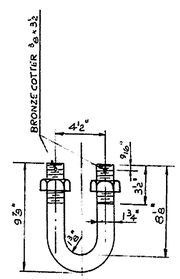

(MATERIAL: A235, CLASS "G")

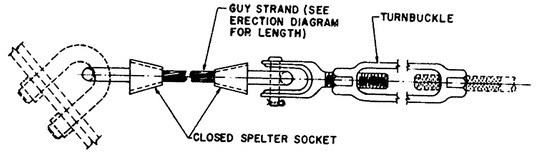

GUY STRAND ASSEMBLY

NO REQ'D	DESCRIPTION	CATALOG NO.
	51-B	
1	1 1/2 ø x 18" TURNBUCKLE G-228 (OMIT R.H JAW)	CROSBY-LAUGHLIN #950-5 OR EQUAL
2	CLOSED SPELTER SOCKETS FOR 7/8 ø STRAND	do-FIG. G-417
	7/8 ø STEEL BRIDGE STRAND, 19 WIRE (GALV.)	BETHLEHEM STEEL CO. OR EQUAL

GALVANIZING OF BRIDGE STRAND SHALL CONFORM TO THE CURRENT REQUIREMENTS OF ASTM-SPECIFICATION, DESIGNATION A 586, CLASS "A".

STEEL WEDGES ARRANGEMENT

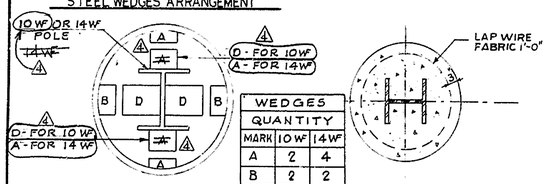

WEDGES QUANTITY		
MARK	10WF	14WF
A	2	4
B	2	2
D	4	2

SECTION 4-4

WEDGES	
MARK	QUANT.
A	4
B	2
D	2

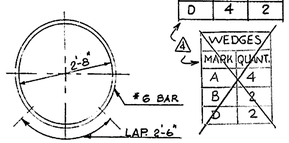

DETAIL OF HOOP F601

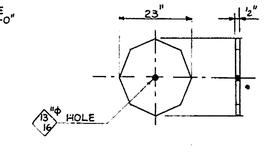

MATERIAL: A36 STEEL, NO PAINT

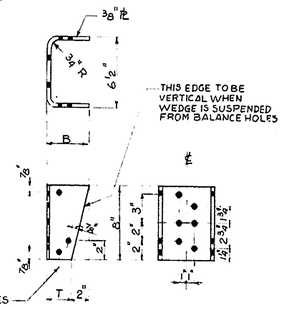

MARK	T	B	REMARKS
A	2 3/4"	4 3/4"	OMIT BALANCE HOLE AT "T" END
B	4 3/4"	6 3/4"	
D	8 3/4"	10 3/4"	

NOTES:

1. ALL HOLES TO BE PUNCHED 15/16 ø BUT NEED NOT BE IN ACCURATE ALIGNMENT.
2. WEDGES TO BE OF STEEL CONFORMING TO A.S.T.M. SPECIFICATION DES. A36.
3. NO PAINT.

POLE WEDGES

* FOR QUANTITIES SEE STEEL WEDGES ARRANGMENT THIS DWG.

NOTE:
BUTT WELD NOT TO BE IN LINE WITH SEAM WELD. WELD TO DEVELOP FULL STRENGTH OF BAND

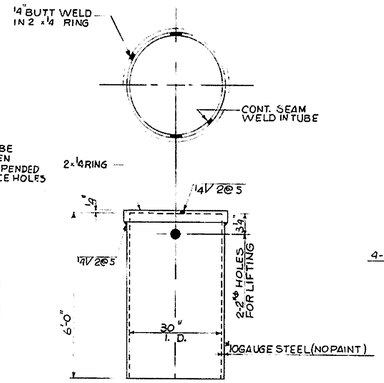

TUBE CCa-6'-0"

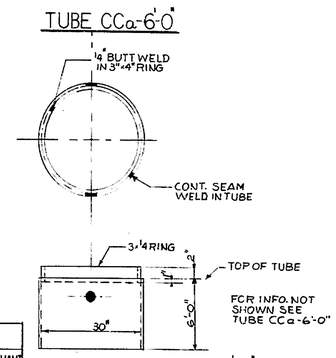

DETAIL OF TUBE CCb-6'-0"

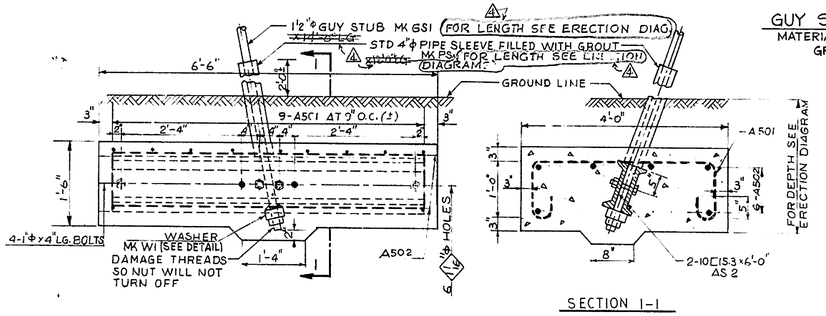

SECTION 1-1

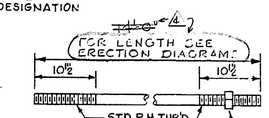

GUY STUB MK GS1
MATERIAL STEEL A-307 GRADE "B"

GUY ANCHOR TYPE B1

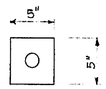

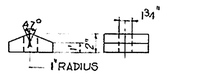

WASHER MK W1, CAST IRON
NO PAINT (MATERIAL: A-48, CLASS 30)

BILL OF MATERIAL FOR B1.				
MARK	DWG. NO.	DESCRIPTION	UNIT.	QUANT.
A	——	CONCRETE, READY MIX.	CU. YDS.	1.6
——	THIS DWG.	REINFORCING BAR "S" INTERM. GR. DEF.	LBS.	120
AS-2	" "	10 [15.3 x 6'-0" LG (A36) NO PAINT OR OIL	EA.	2
GS-1	" "	1 1/2 ø GUY STUB (NO PAINT)	" "	1
PS	" "	4" ø PIPE SLEEVE (NO THREADS)	" "	1
W1	" "	WASHER	" "	1
——	——	BOLT 1" ø x 4" LG (H.H.N & W.)	" "	4

NOTE

FOR GENERAL NOTES, LIST OF DRAWINGS & LIST OF REFERANCE DRAWINGS SEE, DWG. No. 2033 S-1

TYPE "MFM" FOUNDATION

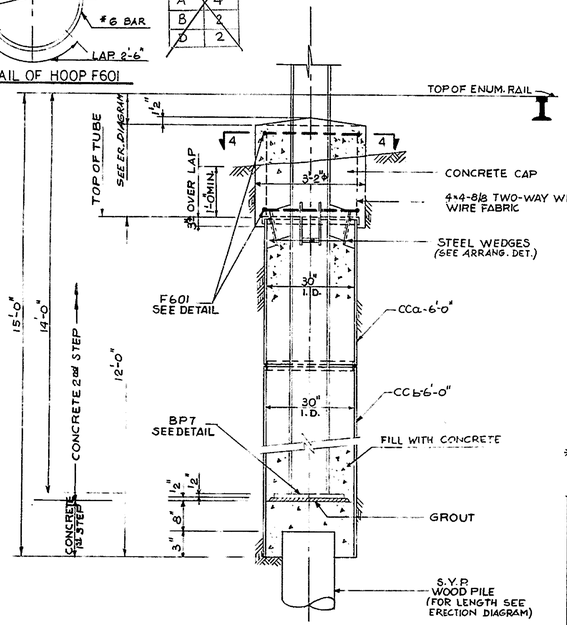

BILL OF MATERIAL FOR "MFM"				
MARK	DWG. NO.	DESCRIPTION	UNIT.	QUANT.
BP7	THIS DWG.	PLATE, BEARING, STRUCT. STEEL, NO PAINT, 1/2"	EA.	1
CCa	" "	TUBE, STEEL, 10 GAUGE, 30" I.D. & 2'-1/4 RING BAR	"	1
CCb	" "	TUBE, STEEL, 10 GAUGE, 30" I.D. & 3 x 1/4 RING R	"	1
——	" "	REINF. WIRE MESH 4x4-8/8 TWO WAY WELDED WIRE FABRIC A.S.T.M. A185 STEEL	SQ. FT.	22
——	" "	CONCRETE, READY MIXED	CU. YD.	2.5
F601	" "	REINF. HOOP 3/4 ø STEEL INTERM. GR. 2'-8" I.D. TO BE LAPPED 2'-6"	LBS.	33
A	" "	WEDGE, POLE, STRUCT. STEEL	"	4*
B	" "	WEDGE, POLE, STRUCT. STEEL	"	2*
D	" "	WEDGE, POLE, STRUCT. STEEL	"	2*

ISSUE NO.	DATE	DWN.	CHK'D.	APPROVALS					ISSUED FOR	P.C.T.Co APPROVAL
4	9/23/75	P.S.	R.N.						REVISED FOR CONSTRUCTION	
3	10-17-73	P.S.	R.M.						REVISED FOR CONSTRUCTION	
2	6-1-70	F.O.	E.M.	—					CONSTRUCTION	
1	6-5-70	S.B.	R.M.	—	—				STRUCTURAL APPROVAL	

Ernest P. Foley

Gibbs & Hill, Inc.
ENGINEERS, DESIGNERS, CONSTRUCTORS
NEW YORK
JOB NO. 2033A

SCALE NONE

2033 S-7-4

DELAWARE
STATE HIGHWAY DEPARTMENT

INTERSTATE ROUTE I-495

RELOCATED 12TH STREET BRIDGE OVER P.C.T. CO.
FOUNDATION, ANCHOR & HARDWARE DETAILS

SCALE

DATE

APPROVED BY:

BRIDGE ENGINEER

REVISIONS
⚠ Revised For Construction 10-10-75

D C B A 1 5 10 A B C D

COUNTY	CONTRACT	P.R.A. PROJ. NO.	STATE	FED. AID PROJECT NO.	FISCAL YEAR	SHEET NO.	TOTAL SHEETS
NEW CASTLE	73-10-014	2	DEL.	I-495-3(28) 16		36	43

BILL OF MATERIAL

MARK	DWG. No.	DESCRIPTION	UNIT	QUANT
* TI	THIS DWG.	INSERT, THREADED, CAST BRONZE, 1" HD FOR 1"ø BOLT, HOHMANN & BARNARD OR EQUAL	EA.	24

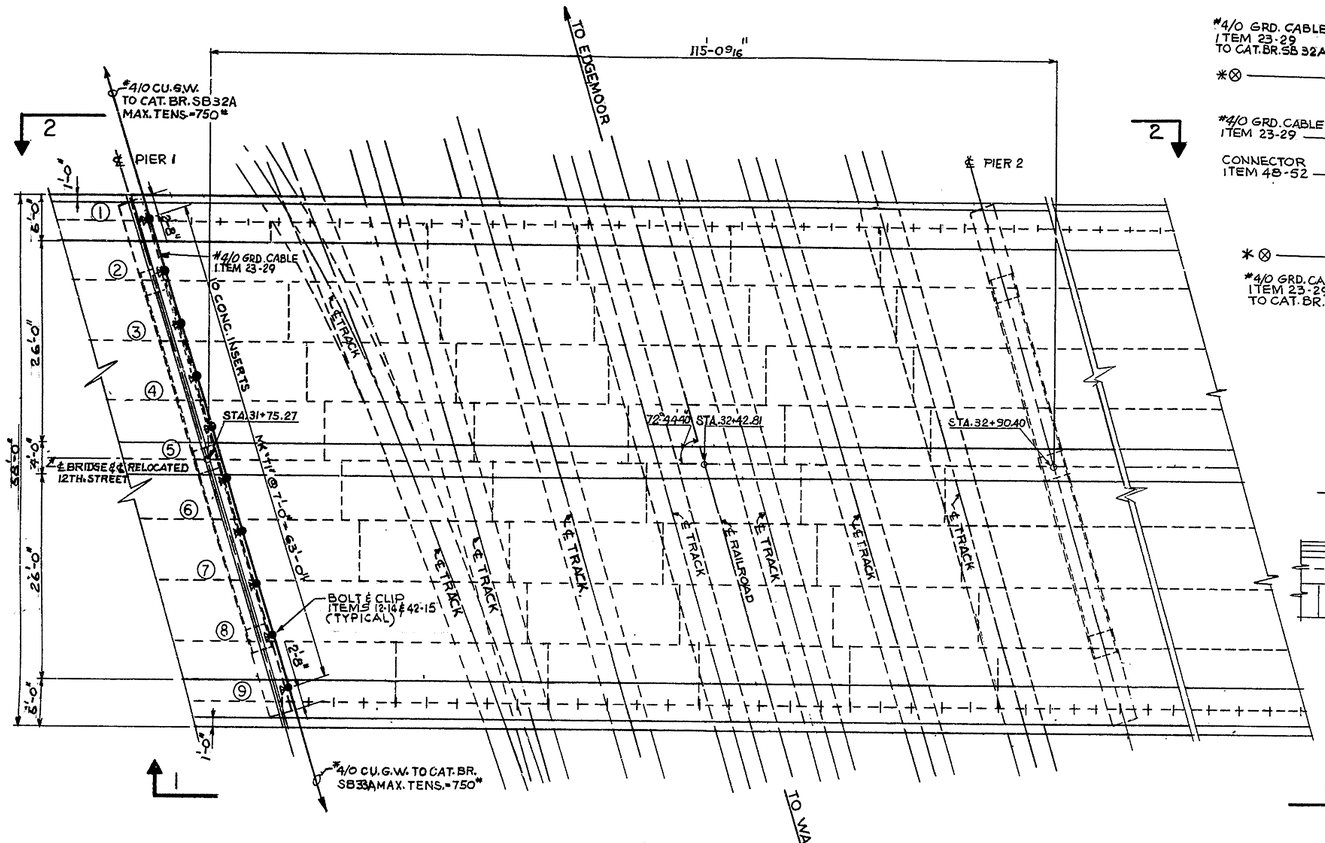

PLAN
SCALE: 1"=10'

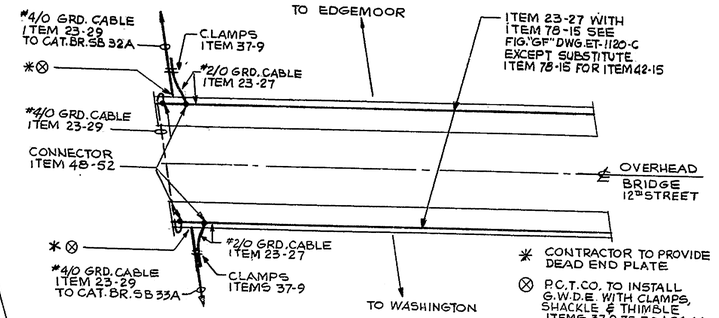

BONDING PLAN
FOR TEMPORARY CONSTRUCTION
N.T.S.

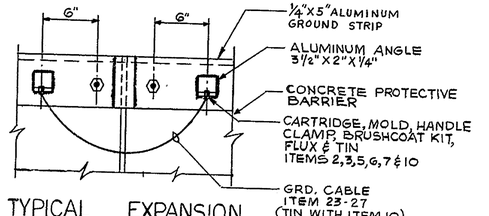

TYPICAL EXPANSION
JOINT JUMPER DETAIL
N.T.S.

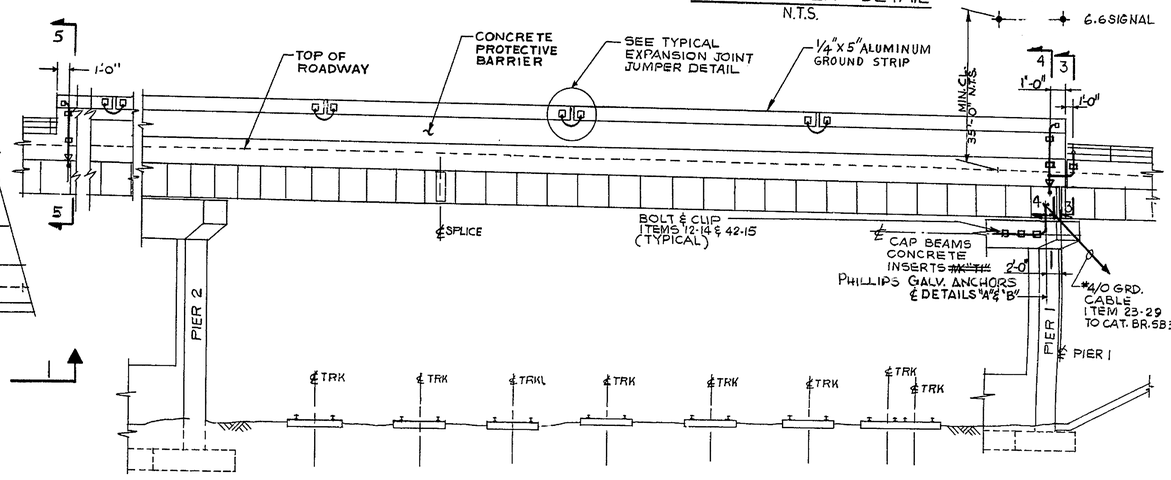

ELEVATION 2-2
SCALE: 1"=10'

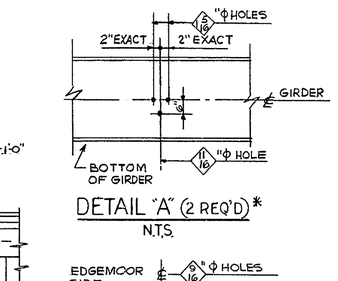

DETAIL "A" (2 REQ'D)*
N.T.S.

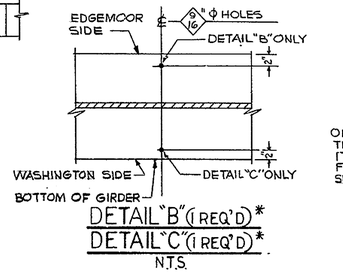

DETAIL "B" (1 REQ'D)*
DETAIL "C" (1 REQ'D)*
N.T.S.

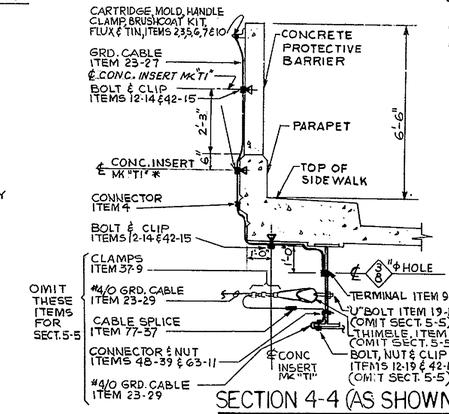

SECTION 4-4 (AS SHOWN)
SECTION 5-5 (AS NOTED)
N.T.S.

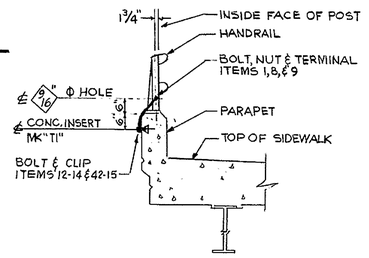

SECTION 3-3
N.T.S.

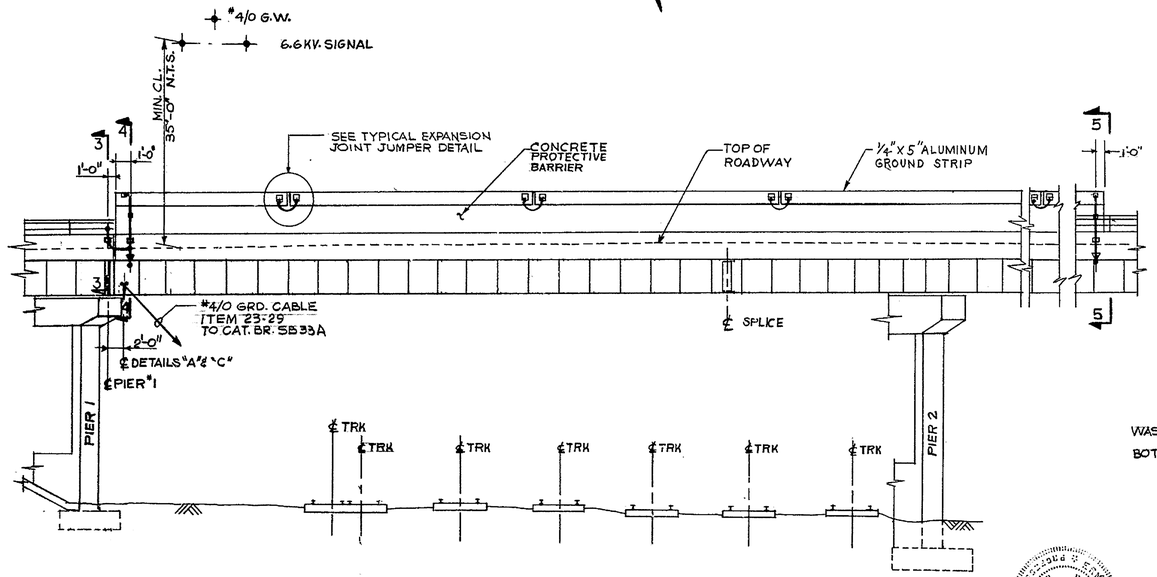

ELEVATION 1-1
SCALE: 1"=10'

NOTES

1— FOR GENERAL NOTES, LIST OF DRAWINGS & LIST OF REFERENCE DRAWINGS SEE DWG. NO 2033S-1

2— ALL MATERIAL ON THIS DWG. (EXCEPT AS NOTED) SUPPLIED AND INSTALLED BY P.C.T. CO. FOR MATERIAL SEE P.C.T. CO. BILL OF MATERIAL 46 ML-114.

3-* MATERIAL SUPPLIED AND INSTALLED OR DRILLING BY CONTRACTOR

ISSUE NO.	DATE	DWN.	CHK'D.	APPROVALS: ARCH.	CAT.	STRUCT.	MECH.	ELEC.	P.E.	ISSUED FOR	APPROVAL
4	10-17-73	P.S.	R.M.	Sm	JmK			WSK	LH	REVISED FOR CONSTRUCTION	
3	9-14-70	R.G.	R.M.					CAS	JDM	ADDED BONDING	
2	6-1-70	F.O.	R.M.	—	Sm	GCG	—	WSK	HC	CONSTRUCTION	
1	5-5-70	S.B.	C.C.O.	—	—	RCG	—	WSK	HC	STRUCTURAL APPROVAL	

Ernest P. Tolley

Gibbe & Hill, Inc.
ENGINEERS, DESIGNERS, CONSTRUCTORS
New York
JOB NO. 2033A

SCALE: AS NOTED
2033 S-8-4

DELAWARE
STATE HIGHWAY DEPARTMENT

INTERSTATE ROUTE I-495

RELOCATED 12TH STREET BRIDGE OVER P. C. T. CO.
OVERHEAD BRIDGE STRUCTURE GROUNDING

SCALE
DATE
APPROVED BY:
BRIDGE ENGINEER

COUNTY	CONTRACT	P.D.A. REG. NO.	STATE	FED. AID PROJECT NO.	FISCAL YEAR	SHEET NO.	TOTAL SHEETS
NEW CASTLE	73-10-014	2	DEL.	I-495-3(28)16		37	43

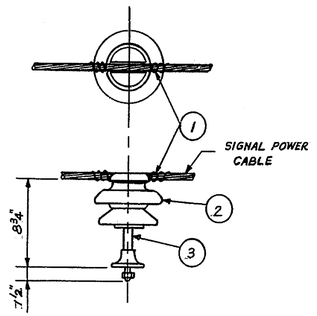

ASSEMBLY NA-11

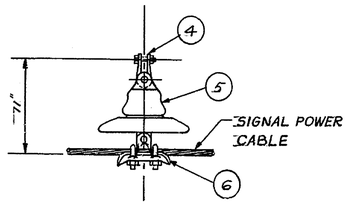

ASSEMBLY NA-61A

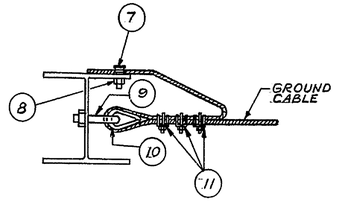

ASSEMBLY FIG. 1

*

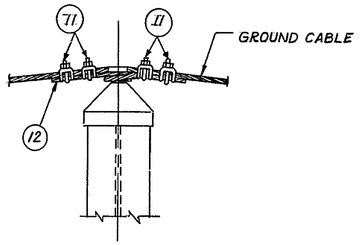

ASSEMBLY GPA, FIG. 1

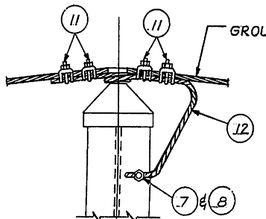

ASSEMBLY GPAG, FIG. 3

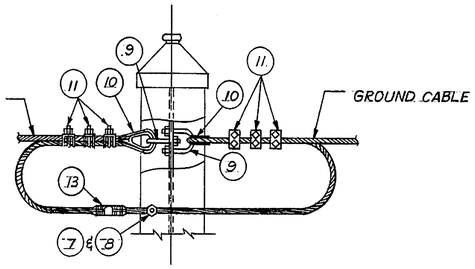

ASSEMBLY GPHG, FIG. 5

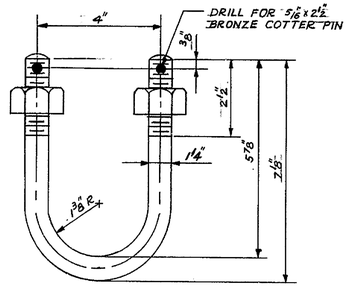

UB-34 DETAIL
(GALVANIZED)
MATERIAL: A-235 CLASS "G"

BILL OF MATERIAL

ITEM NO.	DESCRIPTION	MFR'S. NAME & CATALOG NO. OR APPROVED EQUAL	QUANTITIES: NA-11	NA-61A	FIG. 1 & 3	GPA FIG. 1	GPAG FIG. 3	GPHG FIG. 5	GROUND WIRE SUSPENSION CLAMP	GROUND WIRE SUSPENSION CLAMP
1	CABLE, COPPER, BARE, #4 AWG. SOLID SOFT DRAWN	W.B. SIEGFRIED ASSOC. PHILA. PA.	4 FT.							
2	INSULATOR, PIN TYPE	OHIO BRASS CO. # 3824-6	1							
3	PIN, INSULATOR SUPPORT, GALV., 1⅜" COB, ¾" Ø STUD	OHIO BRASS CO. # 7135	1							
4	SHACKLE, CHAIN, FORGED STEEL WITH BOLT	HUBBARD # 6808		1						
5	INSULATOR, SUSPENSION CLEVIS TYPE, 5¾" X 10"	OHIO BRASS CO. # 324-39		1						
6	CLAMP, SUSPENSION, MALLEABLE IRON, GALV., WITH COPPER LINER	OHIO BRASS CO. # 83064		1						
7	CONNECTOR, SERVIT POST, FOR #4/0 CU CABLE, STUD 5/8-11 NC x 2¼" LG.	BURNDY-SERVIT POST, TYPE KC			1		1	1		
8	NUT, LOCK, BRONZE, HEX., 5/8", 11 NC, STOVER	LAMSON & SESSIONS			1		1	1		
9	BOLT, "U", STEEL, GALV., 1¼" x 4" x 5⅞" (SEE UB-34 DETAIL)	—			1			2		
10	THIMBLE, BRONZE, FOR #4/0 CU. CABLE	BURNDY CORP. M50			1			2		
11	CLAMP, CABLE, COMPLETE, 9/16", TYPE BC	BURNDY CORP. BC30			3	4	4	6		
12	TIE WIRE, #4/0, 19 STR. BARE COPPER, SOFT DRAWN	W.B. SIEGFRIED ASSOC. PHILA. PA.				5 FT.	6 FT.			
13	CABLE CONNECTOR, LOOP, HYSPLICE, FOR #4/0 CU STRAND	BURNDY CORP. YCS-28						1		
14	CABLE, COPPER, BARE, CIRC. 112-C, NO 4/0 AWG, 7 WIRES, H.D.	W.B. SIEGERIED ASSOC.							25 FT.	
15	" , " , " , " , NO 1/0 AWG, 7 WIRES, H.D.	BOX 205 DREXEL HILL, PHILA. PA.							200 FT.	
16	SPLICE, CABLE, COMP. TYPE, FULL TENSION SLEEVE, FOR NO. 4/0 AWG, STRANDED COPPER CABLE, HY SPLICE, (USE DIE INDEX 165 CONSISTING OF Y35 HYPRESS AND DIE SET U165)	BURNDY CORP. OR APPROVED EQUAL YDS 28							2	
17	SPLICE, CABLE, COMP. TYPE, FULL TENSION SLEEVE FOR NO 1/0 AWG. STRANDED COPPER CABLE, HY SPLICE, (USE DIE INDEX 165 CONSISTING OF Y35 HYPRESS AND DIE SET U165)	BURNDY CORP. OR APPROVED EQUAL YDS 25							8	

* MATERIAL SUPPLIED AND INSTALLED BY P.C.T. CO. FORCES

STRINGING SAGS AND TENSION DATA - UNLOADED
HEAVY LOADING DISTRICT (NESC)

#1/0 H.D. COPPER STRANDED SIGNAL

RATED BREAKING STRENGTH: 4750# WT/FT.: 0.3258#/FT.
GOVERNING TENSION: AT MAX. LOAD: 0°F; 1/2" ICE, 8#/SQ.FT. WIND = 2207# (46.5% OF ULTIMATE)
60°F NO WIND = 733# (15.5% OF ULTIMATE)

SAGS BASED ON 5'-0" SAG IN 300'-0" SPAN

TEMPERATURE	0°		20°		40°		60°		80°		100°		120°	
SPAN (FT.)	SAG (FT.)	TENSION (#)	SAG (FT.)	TENSION (#)	SAG (FT.)	TENSION (#)	SAG (FT.)	TENSION (#)	SAG (FT.)	TENSION (#)	SAG (FT.)	TENSION (#)	SAG (FT.)	TENSION (#)
115	.535	1022	.602	905	.674	810	.744	733	.813	671	.880	620	.945	577
150	.896	1022	1.012	905	1.131	810	1.250	733	1.365	671	1.478	620	1.587	577
180	1.291	1022	1.458	905	1.629	810	1.800	733	1.967	671	2.129	620	2.285	577
225	1.929	1022	2.178	905	2.434	810	2.688	733	2.938	671	3.180	620	3.414	577
240	2.296	1022	2.593	905	2.897	810	3.200	733	3.496	671	3.785	620	4.063	577

#4/0 H.D. COPPER STRANDED GROUND WIRE

RATED BREAKING STRENGTH: 9154 #, WT/FT.: 0.6533#/FT.
GOVERNING TENSION: AT MAX. LOAD: 0°F, 1/2" ICE, 8#/SQ.FT. WIND = 3417# (37.3% OF ULTIMATE)
60°F NO WIND = 1470# (16.% OF ULTIMATE)

SAGS BASED ON 5'-0" SAG IN 300'-0" SPAN

TEMPERATURE	0°		20°		40°		60°		80°		100°		120°	
SPAN (FT.)	SAG (FT.)	TENSION (#)	SAG (FT.)	TENSION (#)	SAG (FT.)	TENSION (#)	SAG (FT.)	TENSION (#)	SAG (FT.)	TENSION (#)	SAG (FT.)	TENSION (#)	SAG (FT.)	TENSION (#)
115	.513	2048	.580	1814	.647	1624	.794	1470	.867	1345	.938	1243	1.010	1158
150	.896	2048	1.012	1814	1.131	1624	1.250	1470	1.365	1345	1.478	1243	1.587	1158
180	1.291	2048	1.458	1814	1.629	1624	1.800	1470	1.967	1345	2.129	1243	2.285	1158
225	1.929	2048	2.178	1814	2.434	1624	2.688	1470	2.938	1345	3.180	1243	3.414	1158
240	2.296	2048	2.593	1814	2.897	1624	3.200	1470	3.496	1345	3.785	1243	4.063	1158

NOTE:
FOR GENERAL NOTES, LIST OF DRAWINGS AND LIST OF REFERENCE DRAWINGS SEE DRAWING 2033 S-1

ISSUE NO.	DATE	DWN.	CHKD.	APPROVALS	ISSUED FOR	APPROVAL
1	10-17-75	P.S	R.M	ELEC.	FABRICATION	

Gibbe & Hill, Inc.
ENGINEERS, DESIGNERS, CONSTRUCTORS
NEW YORK
JOB NO. 2033A

SCALE: NONE
2033 S-9-1

DELAWARE
STATE HIGHWAY DEPARTMENT
INTERSTATE ROUTE I-495
RELOCATED 12TH. STREET BRIDGE OVER P.C.T.CO.
HARDWARE DETAILS AND WIRE STRINGING CHARTS

SCALE
DATE
APPROVED BY:
BRIDGE ENGINEER

COUNTY	CONTRACT	P. R. A. REG. NO.	STATE	FED. AID PROJECT NO.	FISCAL YEAR	SHEET NO.	TOTAL SHEETS
New Castle	73-10-014	2	DEL.	I-495-3 (28) 16		38	43

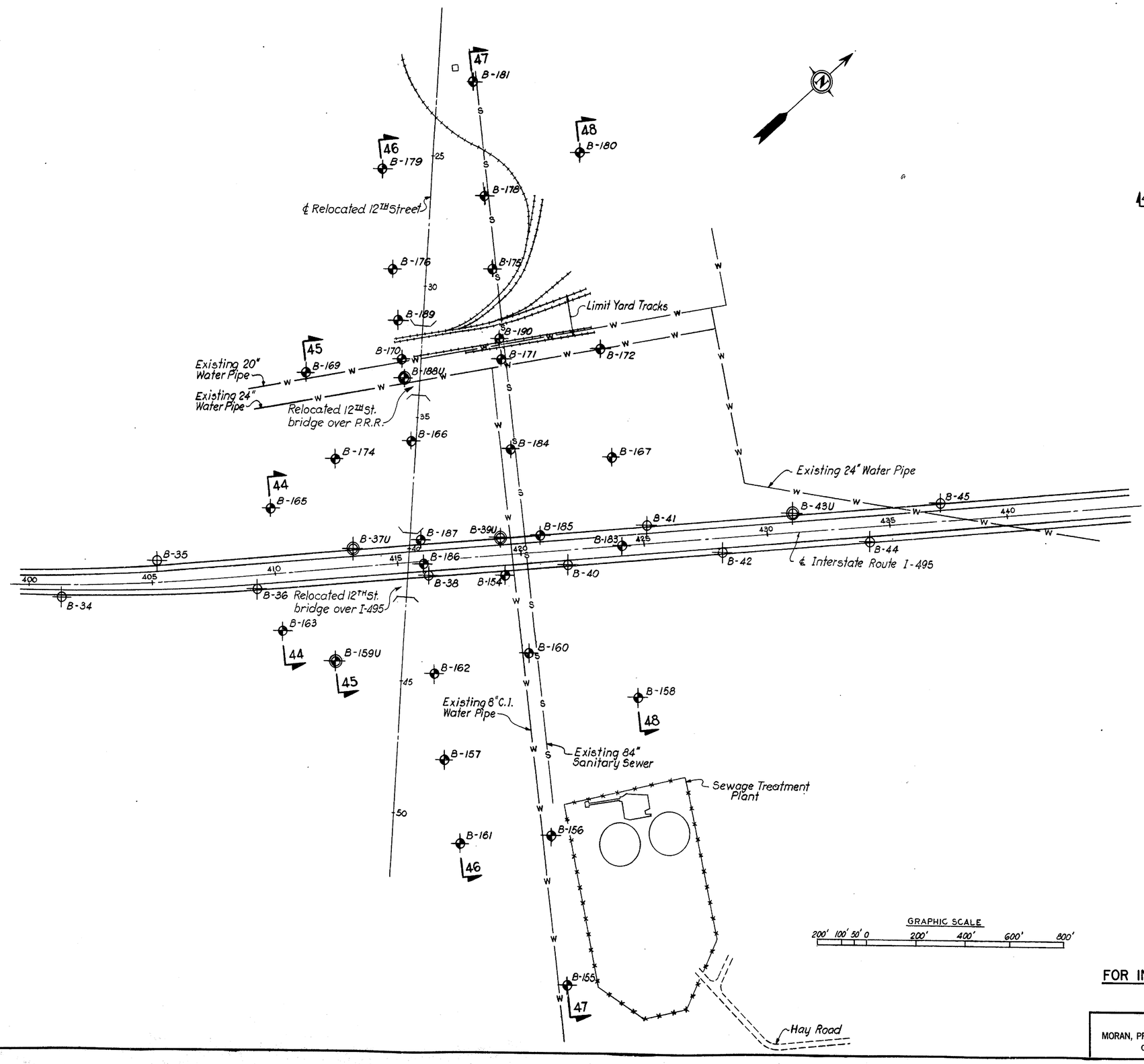

LEGEND

- ⊕ - Dry sample borings made in September and October 1962 by Warren George Inc.
- ⊕ - Undisturbed sample borings made in September and October 1962 by Warren George Inc.
- ⊕ - Dry sample borings made in October and November 1964 by Site Engineers Inc.
- ⊕ - Undisturbed sample borings made in October and November 1964 by Site Engineers Inc.
- 46 46 Indicates limits and number of geologic section.

NOTES

1. Topography shown was compiled by photogrammetric methods from data obtained by Air Survey Corporation in the spring of 1962 and supplemented by instrument surveys made by J. E. Greiner Company and Moran, Proctor, Mueser and Rutledge.
2. Boring locations and elevations were established in the field by J. E. Greiner Company and Moran, Proctor, Mueser and Rutledge.
3. Borings made by Site Engineers, Inc. between October 1, 1964 and November 9, 1964 were supervised by J. E. Greiner Company - Moran, Proctor, Mueser & Rutledge. Laboratory tests performed on samples obtained in this work were performed in the New York Laboratory of Mueser, Rutledge, Wentworth and Johnston.

FOR INFORMATION ONLY

J. E. GREINER CO.
MORAN, PROCTOR, MUESER & RUTLEDGE
CONSULTING ENGINEERS

DELAWARE DEPARTMENT
OF HIGHWAYS & TRANSPORTATION
DIVISION OF HIGHWAYS

INTERSTATE ROUTE I-495

BORING LOCATION PLAN
12TH STREET INTERCHANGE

D. L. S.	SCALE AS SHOWN	APPROVED BY:
T. R. B.	DATE 7-1-1968	BRIDGE ENGINEER
C. A.M.M.		

M

COUNTY	CONTRACT	P. R. A. REG. NO.	STATE	FED. AID PROJECT NO.	FISCAL YEAR	SHEET NO.	TOTAL SHEETS
New Castle	73-10-014	2	DEL.	I-495-3(28) 16		39	43

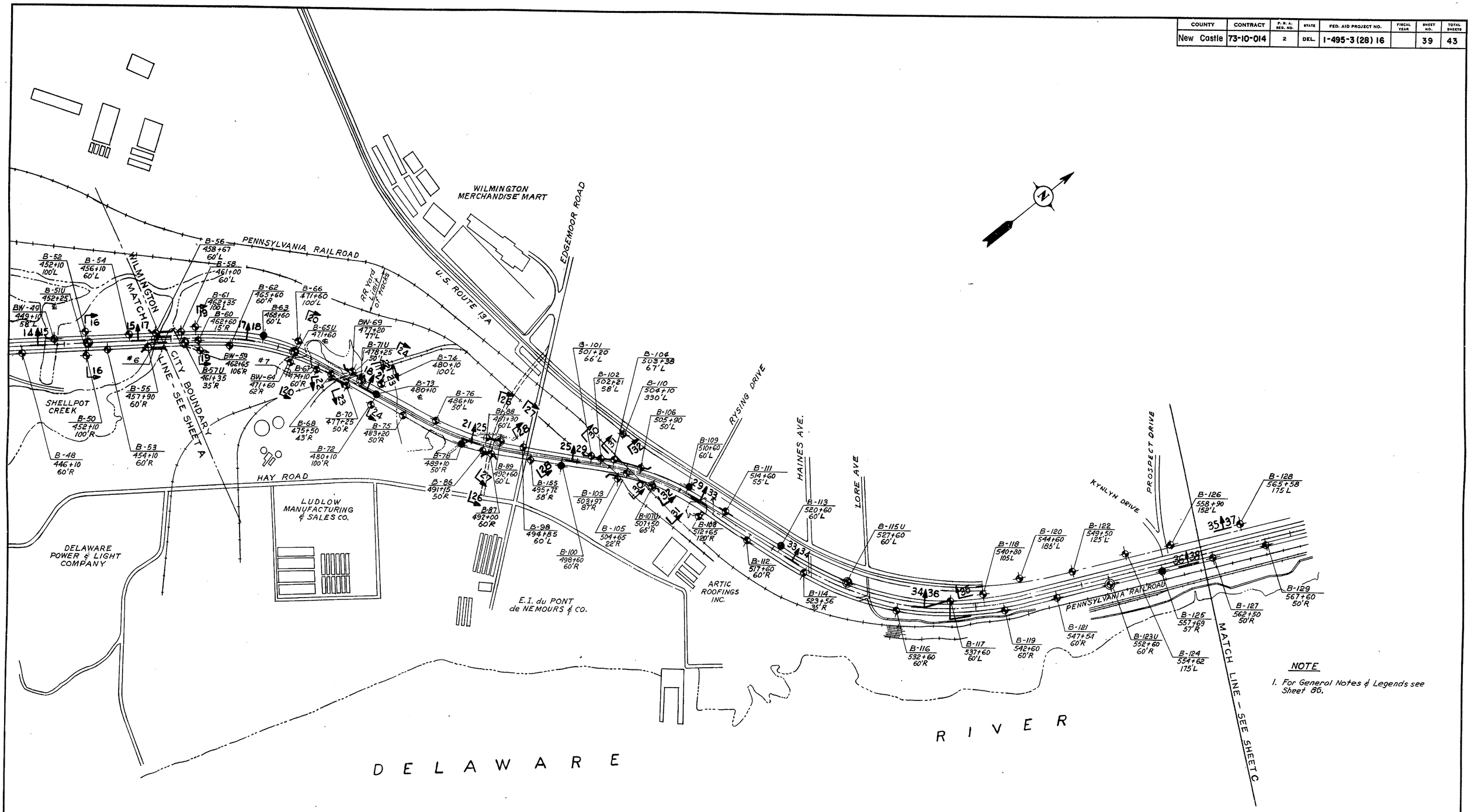

GRAPHIC SCALE

400' 200' 0 400' 800' 1200'

NOTE

1. For General Notes & Legends see Sheet 86.

FOR INFORMATION ONLY

J. E. GREINER CO.
MORAN, PROCTOR, MUESER & RUTLEDGE
CONSULTING ENGINEERS

DELAWARE DEPARTMENT
OF HIGHWAYS & TRANSPORTATION
DIVISION OF HIGHWAYS

INTERSTATE ROUTE I-495

BORING LOCATION PLAN
STATION 459+27 TO STATION 561+50

D. S. L. T.
T. P. O.
C. R. C. H.

SCALE 1" = 400'

DATE 7-1-1968

APPROVED BY:

BRIDGE ENGINEER

M2450

B

COUNTY	CONTRACT	P. B. A. REG. NO.	STATE	FED. AID PROJECT NO.	FISCAL YEAR	SHEET NO.	TOTAL SHEETS
New Castle	73-10-014	2	DEL.	I-495-3(28)16		40	43

INDEX

SHEET	TITLE	CONTENTS
AA	TITLE SHEET	PROJECT TITLE & SITE PLAN
BB	GENERAL NOTES, LEGENDS & INDEX	AS SHOWN
A	BORING LOCATION PLAN - STA. 341+00 TO STA. 459+27	LOCATION PLAN FOR SECTIONS 1-1 TO 17-17
B	" " " - STA. 459+27 TO STA. 561+50	" " " " 17-17 TO 36-36
C	" " " - STA. 561+50 TO STA. 625+00	" " " " 37-37 TO 43-43
D	BORINGS & GEOLOGIC SECTIONS - STA. 341+00 TO STA. 353+20	SECTIONS 1-1 AND 2-2; DATA FOR PIEZOMETER PB-2
E	" " " " - STA. 353+20 TO STA. 362+20	" 3-3 AND 4-4
F	" " " " - STA. 362+20 TO STA. 374+20	" 5-5
G	" " " " - STA. 374+20 TO STA. 386+30	" 6-6 AND DATA FOR PIEZOMETER PB-17
H	" " " " - STA. 386+30 TO STA. 399+10	" 7-7 " " " " " PB-28
I	" " " " - STA. 385+10, 393+10, 397+60	" 8-8, 9-9 AND 10-10
J	" " " " - STA. 399+10 TO STA. 411+10	" 11-11
K	" " " " - STA. 411+10 TO STA. 423+60	" 12-12 AND DATA FOR PIEZOMETER PB-39U
L	" " " " - STA. 423+60 TO STA. 436+10	" 13-13
M	" " " " - STA. 436+10 TO STA. 448+80	" 14-14 AND DATA FOR PIEZOMETER PB-47
N	" " " " - STA. 448+80 TO STA. 466+90	" 15-15, 16-16 AND 17-17
O	" " " " - STA. 466+90 TO STA. 479+60 & STA. 462+60	" 18-18, 19-19 AND 20-20; DATA FOR PIEZOMETER PB-63
P	" " " " - STA. 479+60 TO STA. 490+70 & STA. 476+11, STA. 477+75	" 21-21, 22-22, 23-23 AND 24-24; DATA FOR PIEZOMETER PB-73 & PB-78
Q	" " " " - STA. 490+70 TO STA. 500+70	" 25-25, 26-26, 27-27 AND 28-28 DATA FOR PIEZOMETER PB-100
R	" " " " - STA. 500+70 TO STA. 511+80	" 29-29, 30-30, 31-31 AND 32-32 DATA FOR PIEZOMETER PB-109
S	" " " " - STA. 511+80 TO STA. 534+10	" 33-33 AND 34-34; DATA FOR PIEZOMETER PB-113
T	" " " " - STA. 534+10 TO STA. 561+20	" 35-35 AND 36-36 " " " PB-125
U	" " " " - STA. 561+20 TO STA. 591+60	" 37-37 AND 38-38 " " " PB-137
V	" " " " - STA. 591+60 TO STA. 610+60	" 39-39 AND 40-40
W	" " " " - STA. 610+60 TO STA. 622+60 & STA. 602+77, STA. 604+03	" 41-41, 42-42 AND 43-43; DATA FOR PIEZOMETER PB-153
X	DELAWARE RIVER BORING LOCATION PLAN AND BORING LOGS W-12 TO W-19	AS SHOWN
Y	DELAWARE RIVER BORING LOGS W-20 TO W-34	AS SHOWN
Z	TYPICAL PIEZOMETER INSTALLATION & TIDE READINGS.	AS SHOWN

NOTES AND LEGEND FOR BORING LOCATION PLAN

1. TOPOGRAPHY SHOWN ON PLANS WAS COMPILED BY PHOTOGRAMMETRIC METHODS FROM DATA OBTAINED BY AIR SURVEY CORPORATION IN THE SPRING OF 1962 AND SUPPLEMENTED BY INSTRUMENT SURVEYS MADE BY THE J.E. GREINER COMPANY AND MORAN, PROCTOR, MUESER & RUTLEDGE.
2. 1 2 - INDICATES LIMITS AND NUMBER OF GEOLOGIC SECTION.
3. B-7 - SYMBOL AND NUMBER DESIGNATION OF DRY SAMPLE BORING.
   B - BORINGS LOCATED ON LAND
   W - BORINGS MADE ON WATER
   BW - BORINGS SCHEDULED TO BE MADE ON LAND THAT WERE ACTUALLY MADE ON WATER.
4. B-8U - SYMBOL AND NUMBER DESIGNATION OF UNDISTURBED SAMPLE BORING.
5. B-2 - SYMBOL DESIGNATION WHERE PIEZOMETER WAS INSTALLED WITHIN OR ADJACENT TO THE BORING INDICATED. (FOR TYPICAL DETAILS OF PIEZOMETER INSTALLATION, SEE SHEET Z).
6. 2 - SYMBOL AND NUMBER DESIGNATION FOR 8 BORINGS MADE IN 1957 BY SPRAGUE AND HENWOOD, INC. FOR MICHAEL BAKER JR., INC. LOGS OF THESE BORINGS ARE AVAILABLE AT THE DELAWARE STATE HIGHWAY DEPARTMENT.
7. LOCATION PLAN OF BORINGS MADE FOR BORROW INVESTIGATION IN THE DELAWARE RIVER IS SHOWN ON SHEET X. BORING LOGS ARE ON SHEETS X AND Y.
8. BORING LOCATIONS AND ELEVATIONS WERE ESTABLISHED IN THE FIELD BY J.E. GREINER COMPANY AND MORAN, PROCTOR, MUESER & RUTLEDGE.

LEGEND FOR BORING LOGS

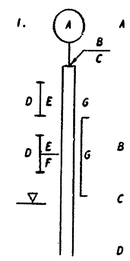

1. A = BORING LOCATION AND NUMBER; SUFFIXED BY A LETTER "U" INDICATES UNDISTURBED SAMPLE BORINGS USING 3-1/2" DIAMETER CASING. ALL OTHER BORINGS ARE DRY SAMPLE BORINGS USING 2-1/2" DIAMETER CASING EXCEPT BORINGS B-152A AND B-152B WHICH WERE MADE WITH AN 1" DIAMETER RETRACTABLE PLUG SAMPLER.

   B = ELEVATION OF GROUND SURFACE AT LAND BORING LOCATIONS OR ELEVATION OF MUD LINE AT WATER BORING LOCATIONS.

   C = DISTANCE AND DIRECTION OF OFFSET OF BORINGS FROM CENTERLINE OF ROUTE I-495, LOOKING AT INCREASING STATIONS.

   D = TYPE AND NUMBER OF SAMPLE:
   - D - DRY SAMPLES TAKEN WITH A 2" O.D. SPLIT SPOON
   - U - UNDISTURBED SAMPLES RECOVERED WITH A 3" DIAMETER FIXED-PISTON SAMPLER
   - S - 3" DIAMETER OPEN END "SHELBY" TUBE SAMPLES
   - W - SAMPLES RECOVERED FROM WASH WATER
   - UD,SD - JAR SAMPLES FROM AN UNACCEPTABLE UNDISTURBED OR "SHELBY" SAMPLES
   - V - VANE SHEAR TESTS, MADE WITH A TAPPERED 2-1/2"x6-3/4" VANE.
   - NR - NO RECOVERY
   - CORE - 1-3/16" ROCK CORE

   E = PENETRATION RESISTANCE DURING ADVANCING OF SAMPLER RECORDED IN NUMBER OF BLOWS OF 140 LB. HAMMER, FALLING 30" PER FOOT OF PENETRATION OR AS OTHERWISE NOTED. BLOWS INDICATED ARE FOR LAST 12" OF AN 18" DRIVE. ALSO INDICATES PER CENT RECOVERY OF ROCK CORE.
   - P - INDICATES SAMPLER PUSHED DOWN BY HAND FOR DRY SAMPLES AND BY USE OF MACHINE FOR UNDISTURBED SAMPLES.
   - T - INDICATES SAMPLER DRIVEN DOWN BY 340 LB. HAMMER WITH A VARIABLE HEIGHT OF FALL. BLOWS NOT SHOWN.
   - WH - ADVANCED UNDER WEIGHT OF SAMPLE HAMMER.
   - WR - ADVANCED UNDER WEIGHT OF "A" DRILL RODS.
   - HD - SAMPLE WAS HAND-DUG.

   F = WATER CONTENT OF SOIL SAMPLE EXPRESSED IN PER CENT OF DRY WEIGHT.

   G = PENETRATION RESISTANCE ENCOUNTERED IN ADVANCING CASING, RECORDED IN NUMBER OF BLOWS OF 300 LB. HAMMER FOR DRY SAMPLE HOLES AND 340 LB. HAMMER FOR UNDISTURBED SAMPLE HOLES WITH 24" FALL PER FOOT OF PENETRATION.

   [G] PENETRATION RESISTANCE OF CASING DRIVEN AFTER HOLE HAD BEEN WASHED AHEAD.

   ▽ MOST RELIABLE GROUND WATER LEVEL AS OBSERVED IN BORED HOLE.

   ▽ RANGE OF GROUND WATER LEVELS OBSERVED IN PIEZOMETER.

2. DESCRIPTIONS OF MATERIAL PERTAIN TO INDIVIDUAL SAMPLES AND ARE BASED ON LABORATORY TESTS AND MAY OR MAY NOT AGREE WITH THOSE ON THE FIELD BORING LOGS OR THE DRILLERS' LOGS.
3. ALL TIMES INDICATED ON THE WATER LEVEL OBSERVATIONS FROM PIEZOMETERS ARE EASTERN DAYLIGHT SAVING TIME.

NOTES FOR GEOLOGIC SECTIONS

1. STRATIFICATIONS FOR GEOLOGIC SECTIONS ARE INTERPOLATIONS FROM INDIVIDUAL BORINGS AND MAY NOT REPRESENT THE EXISTING CONDITIONS. THE CONTRACTOR SHALL MAKE HIS OWN INTERPRETATION WHICH MAY AFFECT HIS METHODS AND COST OF CONSTRUCTION.
2. SUBSOIL STRATIFICATIONS ARE BASED ON LABORATORY TESTS AND GEOLOGICAL CONSIDERATIONS WITH EACH GROUP REPRESENTED BY THE ENCIRCLED NUMERAL. THE APPROPRIATE DESCRIPTIONS FOR NUMERAL DESIGNATIONS ARE INCLUDED IN THE "LEGEND FOR STRATIFICATION".
3. DESCRIPTIONS AND DIVISIONS OF SUBSOIL STRATA WERE DETERMINED BY J.E. GREINER COMPANY AND MORAN, PROCTOR, MUESER & RUTLEDGE FROM EXAMINATION OF SAMPLES AND LABORATORY TESTS AND MAY OR MAY NOT AGREE WITH THOSE ON THE FIELD BORING LOGS OR THE DRILLERS' LOGS.
4. STRATIFICATIONS SHOWN ON THE LONGITUDINAL GEOLOGIC SECTIONS ARE PROJECTIONS FROM INDIVIDUAL BORINGS ON THE PLANE PASSING THROUGH THE CENTERLINE OF ROUTE I-495 EXCEPT SECTIONS 35 TO 40 INCLUSIVE. SECTIONS 35 TO 40 ARE PROFILES OF PLANES PASSING THROUGH BORINGS SHOWN. ALL BORINGS ON THE LONGITUDINAL SECTIONS ARE SHOWN AT THE PROPER LOCATIONS WITH RESPECT TO THE STATIONS ALONG THE CENTERLINE. THESE LOCATIONS MAY OR MAY NOT REPRESENT THE ACTUAL DISTANCE BETWEEN INDIVIDUAL BORINGS.
5. NO EXISTING STRUCTURES OR UTILITY LINES INTERSECTED BY THE GEOLOGIC SECTIONS ARE SHOWN.
6. ALL ELEVATIONS REFER TO U.S.C.& G. SURVEY DATUM; MEAN SEA LEVEL AT SANDY HOOK = 0.00 FT.
7. TIDE READINGS OBTAINED BY J.E. GREINER COMPANY AND MORAN, PROCTOR, MUESER & RUTLEDGE ARE FROM TWO TIDE GAUGES IN THE CHRISTINA RIVER ADJACENT TO THE PROPOSED RIVER CROSSING, LOCATED APPROXIMATELY 1/2 MILE UPSTREAM FROM THE WILMINGTON MARINE TERMINAL. (SEE SHEET Z).

LEGEND FOR STRATIFICATION

J.E.G. CO. & M.P.M.& R. DESIGNATION	DELAWARE DESIGNATION	SOIL DESCRIPTION
I	A-7 & A-8	SOFT DARK GRAY ORGANIC SILTY CLAY, TRACE TO SOME VEGETATION AND TRACE PEAT LAYERS.
II	A-4	LOOSE TO MEDIUM COMPACT BROWN AND GRAY FINE TO MEDIUM SANDY SILT TO SILTY FINE SAND.
III	A-1	COMPACT TO VERY COMPACT BROWN COARSE TO FINE SAND, SOME GRAVEL, TRACE SILT AND MICA.
IV	A-6	MEDIUM TO STIFF GRAY AND BROWN SILTY CLAY AND CLAYEY SILT WITH GRAY FINE SAND LAYERS.
V	A-6	STIFF MOTTLED RED WITH GRAY SILTY CLAY, TRACE TO SOME SAND AND GRAVEL, LENSES OF GRAY FINE SANDY SILT.
VI	A-4	COMPACT TO VERY COMPACT RED, BROWN AND GRAY FINE SANDY SILT TO SILTY FINE SAND, SOME CLAY.
VII	A-6	STIFF TO HARD VARICOLORED SILTY CLAY TO CLAYEY FINE SAND AND FINE SAND.
VIII	—	BEDROCK - RELATIVELY SOUND FRACTURED DARK GRAY QUARTZ DIORITE.

ABBREVIATIONS

b	BOTTOM	lt	LIGHT
bk	BLACK	m, med	MEDIUM
brn	BROWN	m-c	MEDIUM TO COARSE
c	COARSE	mic	MICACEOUS
cl	CLAY OR CLAYEY	mid	MIDDLE
comp	COMPACT	mtld	MOTTLED
dec	DECOMPOSED, DECAYED	org	ORGANIC
dk	DARK	si	SILT, SILTY
f	FINE	sm	SOME
fgmt	FRAGMENTS	t	TOP
grn	GREEN	tr	TRACE
gry	GRAY	veg	VEGETATION, VEGETABLE MATTER
gvl	GRAVEL	yel	YELLOW

FOR INFORMATION ONLY

DELAWARE DEPARTMENT
OF HIGHWAYS & TRANSPORTATION
DIVISION OF HIGHWAYS

INTERSTATE ROUTE I-495

GENERAL NOTES LEGENDS AND INDEX

J. E. GREINER CO.
MORAN, PROCTOR, MUESER & RUTLEDGE
CONSULTING ENGINEERS

D. RCH
T. VRW
C. RCH

SCALE NONE

DATE 7-1-1968

APPROVED BY:

BRIDGE ENGINEER

M2450

BB

COUNTY	CONTRACT	F. R. A. REG. NO.	STATE	FED. AID PROJECT NO.	FISCAL YEAR	SHEET NO.	TOTAL SHEETS
New Castle	73-10-014	2	DEL.	I-495-3(28)16		41	43

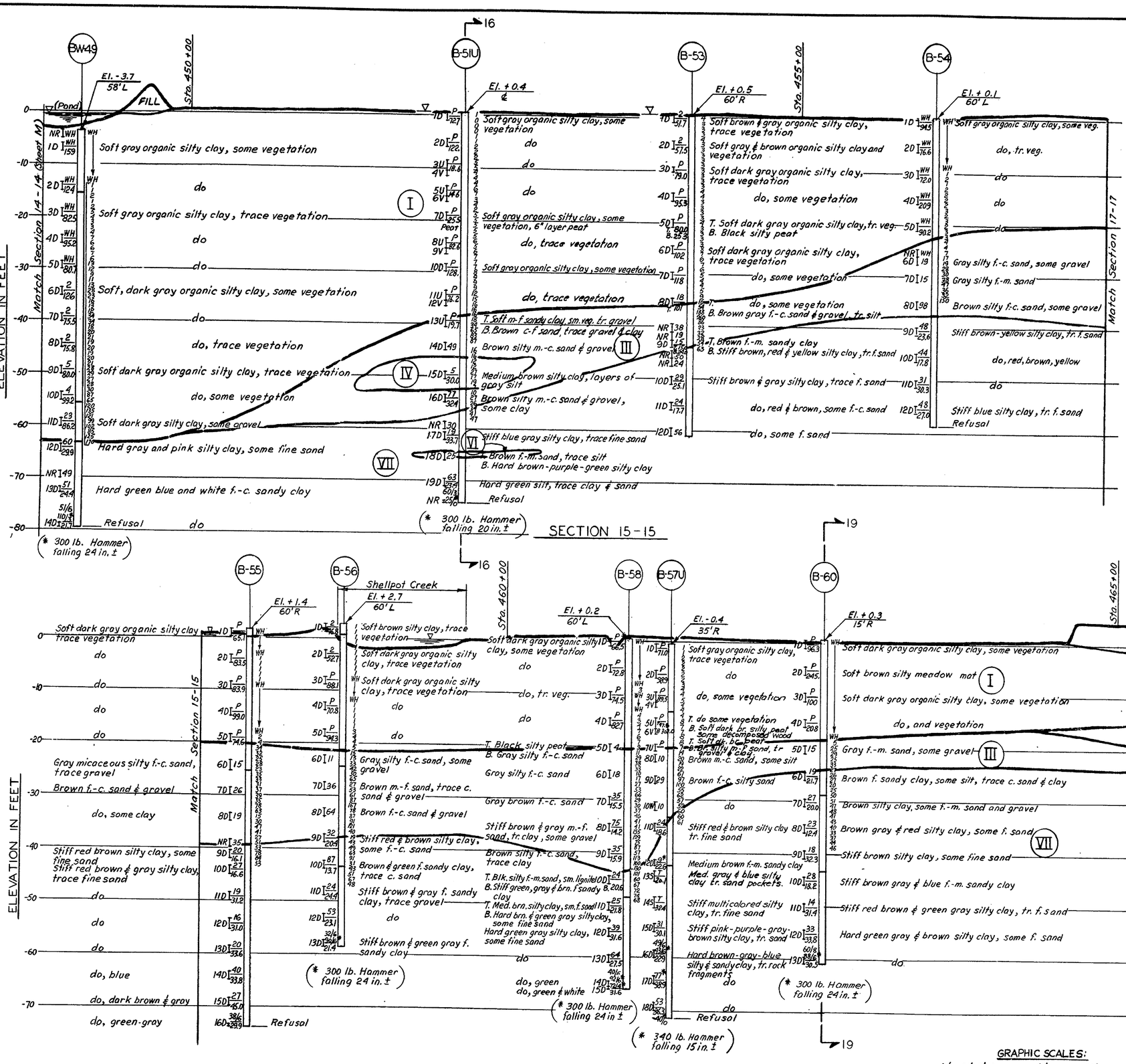

NOTES:

1. For General Notes & Legends see Sheet 86.
2. For Plan see Sheet 84 & 85.

GRAPHIC SCALES:

Horizontal 40' 20' 10' 0 40' 80' 120'

Vertical 10' 5' 0 10' 20' 30'

FOR INFORMATION ONLY

DELAWARE DEPARTMENT OF HIGHWAYS & TRANSPORTATION
DIVISION OF HIGHWAYS

INTERSTATE ROUTE I-495

BORINGS AND GEOLOGIC SECTIONS
STA. 448+80 TO STA. 466+90

J. E. GREINER CO.
MORAN, PROCTOR, MUESER & RUTLEDGE
CONSULTING ENGINEERS

D. S.L.T.
T. P.O.
C. R.C.H.

SCALE AS SHOWN

DATE 7-1-1968

APPROVED BY:

BRIDGE ENGINEER

M2450

N

COUNTY	CONTRACT	P. R. A. REG. NO.	STATE	FED. AID PROJECT NO.	FISCAL YEAR	SHEET NO.	TOTAL SHEETS
New Castle	73-10-014	2	DEL.	I-495-3(28) 16		42	43

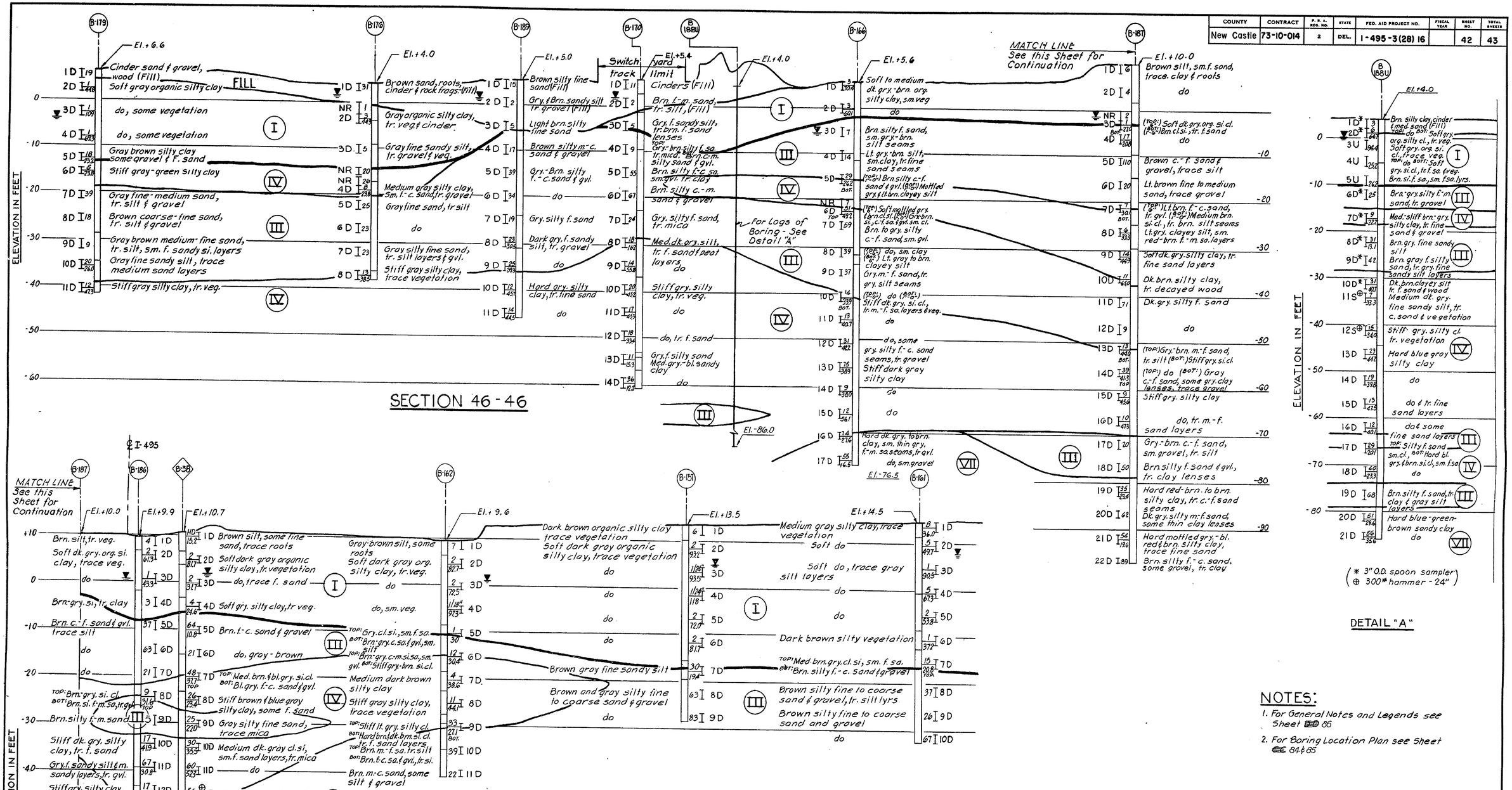

J. E. GREINER CO.
MORAN, PROCTOR, MUESER & RUTLEDGE
CONSULTING ENGINEERS

DELAWARE DEPARTMENT
OF HIGHWAYS & TRANSPORTATION
DIVISION OF HIGHWAYS

INTERSTATE ROUTE I-495

GEOLOGIC SECTION
46-46

D. A.M.M.	SCALE AS SHOWN	APPROVED BY:
T. C.F.C.		
C. A.M.M.	DATE 7-1-1968	BRIDGE ENGINEER

COUNTY	CONTRACT	P. R. A. REG. NO.	STATE	FED. AID PROJECT NO.	FISCAL YEAR	SHEET NO.	TOTAL SHEETS
New Castle	73-10-014	2	DEL.	I-495-3 (28) 16		43	43

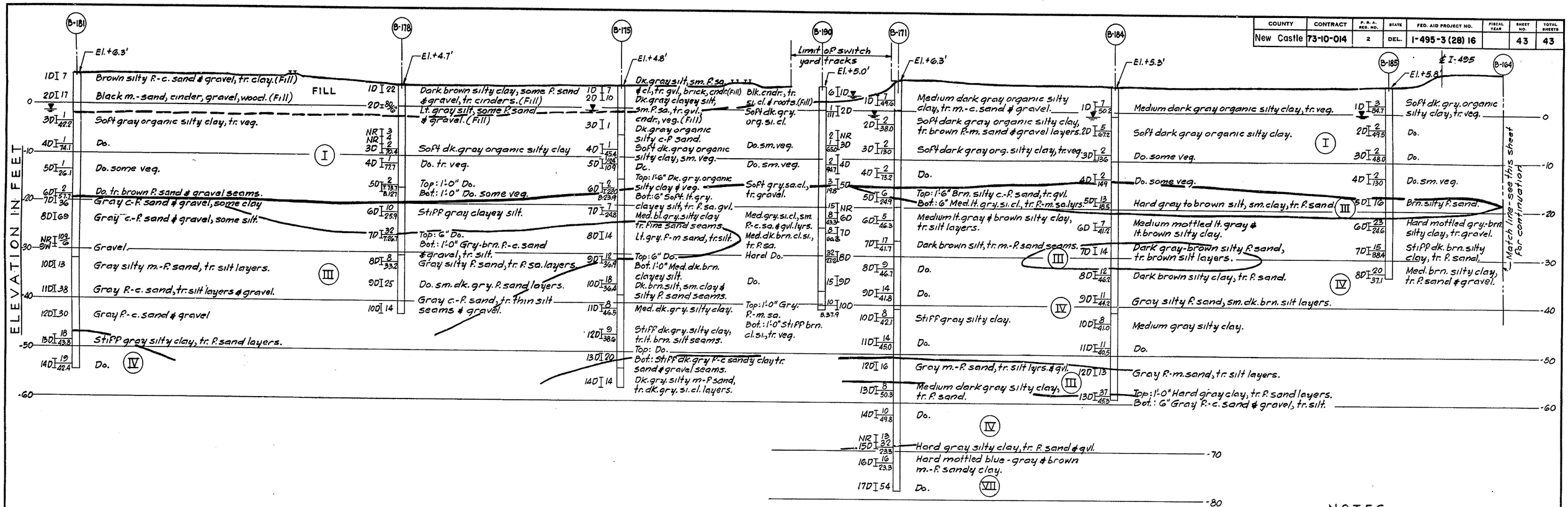

SECTION 47-47

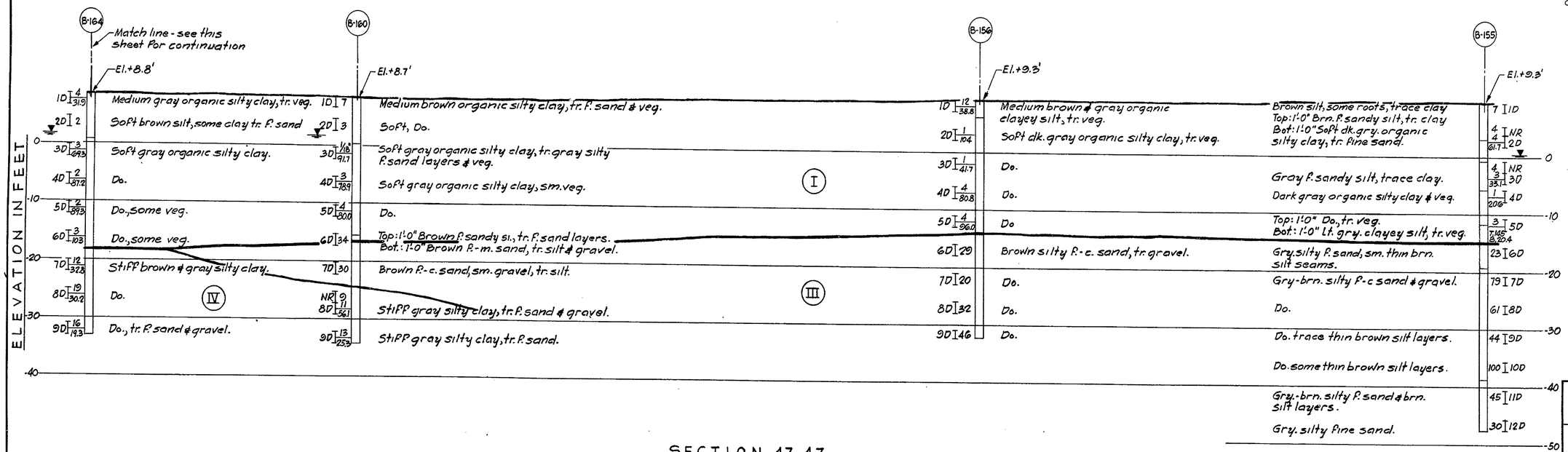

SECTION 47-47

NOTES

1. For General Notes and Legends see sheet ~~P.R.~~ 86.
2. For Boring Location Plan see sheets ~~C.C.~~ 84 & 85.

FOR INFORMATION ONLY

GRAPHIC SCALE

Horizontal: 60 50 40 30 20 10 0 — 60 120 180 240 300

Vertical: 10 5 0 — 10 20 30 40 50

J. E. GREINER CO.
MORAN, PROCTOR, MUESER & RUTLEDGE
CONSULTING ENGINEERS

DELAWARE DEPARTMENT OF HIGHWAYS & TRANSPORTATION
DIVISION OF HIGHWAYS

INTERSTATE ROUTE I-495

GEOLOGIC SECTION
47-47

D. A.M.M.	SCALE AS SHOWN	APPROVED BY:
T. D.D.	DATE 7-1-1968	BRIDGE ENGINEER
C. A.M.M.		

M-2450-A