STATE OF DELAWARE

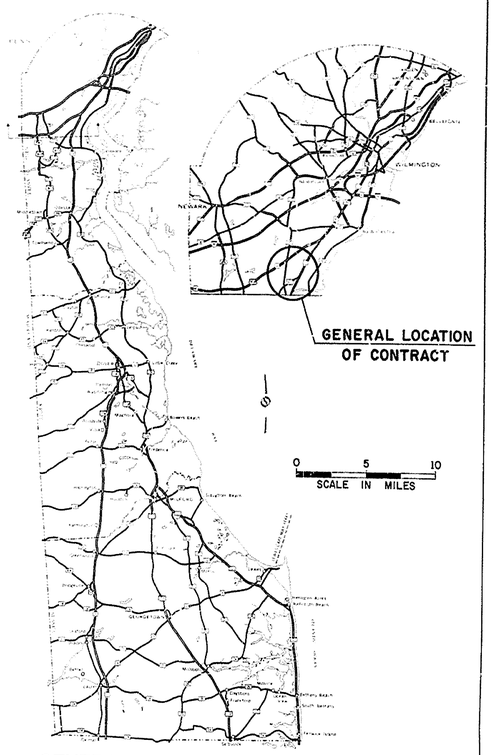

GENERAL LOCATION OF CONTRACT

Ramp	Design Speed
A	60 mph.
B	30 mph.
C	30 mph.
D	60 mph.

REVISIONS

1 DEVELOPER'S RD ADDED 3.18.88

THE STATE OF DELAWARE

DEPARTMENT OF TRANSPORTATION
DIVISION OF HIGHWAYS

SPECIFICATION AND CONSTRUCTION PLANS FOR:

S.R.7
US 13 TO S. of US 40

CONTRACT NUMBER 83-101-04
FEDERAL AID PROJECT NUMBER F-1045 (20)

ROADWAY LENGTH 10,955 [1] FEET= 2.075 [1] MILES
STRUCTURE LENGTH 455 [1] FEET= 0.086 [1] MILES
TOTAL LENGTH 11,409 [1] FEET= 2.161 [1] MILES

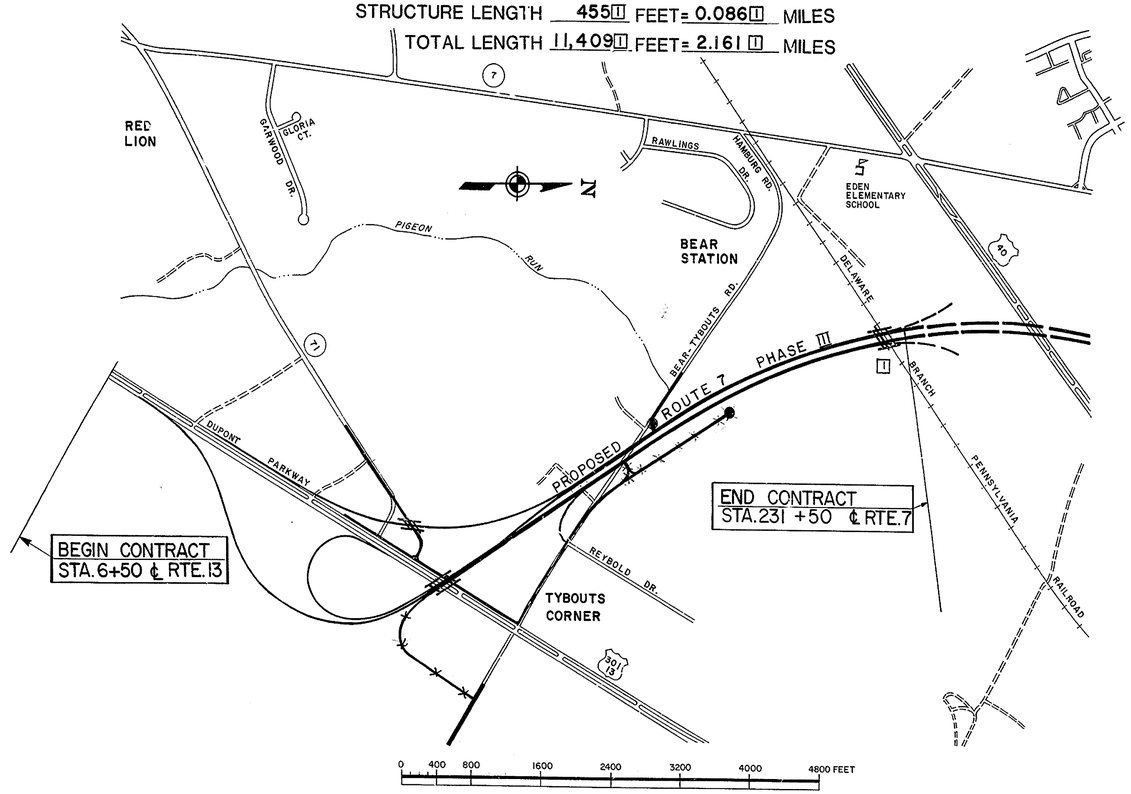

CONTRACT	COUNTY	STATE	F.H.W.A. REG. NO	FEDERAL AID PROJECT NUMBER	SHEET NUMBER	TOTAL SHEETS
83-101-04	NEW CASTLE	DEL.	3	F-1045 (20)	1	

DESIGN DESIGNATION

FUNCTIONAL CLASS ARTERIAL
TYPE OF CONSTRUCTION NEW CONSTR.
A.D.T. CURRENT 0
A.D.T. PROJECTED YR 2000 - 28283
D.H.V. PROJECTED 4242
DESIGN SPEED 60 MPH
% TRUCKS 12
DIRECTION DISTRIBUTION % 53

SCALES

PLAN SHEET: 1" = 30 Feet
PROFILE SHEET:
Horizontal: 1" = 30 Feet
Vertical: 1" = 3 Feet
DETAIL SHEET: 1" = AS SHOWN Feet

INDEX OF SHEETS

	SHEET Nº	TABLE OF CONTENTS
	1	TITLE SHEETS
	2-3	INDEX OF SHEETS
	4	GENERAL NOTES
	Q-1 TO Q-5 (5-9)	QUANTITY SHEETS
[1]	T-1 TO T-5, T-6 * (10-14)	TYPICAL SECTION
[1]	P-1 TO P-24A (15-38)	PLAN SHEETS
[1]	PR-1 TO PR-22, 23 * (39-60)	PROFILE SHEETS
	TC-1 TO TC-5 (61-65)	TRAFFIC CONTROL PLAN SHEETS
[1]	GG-1 TO GG-23A (66-88)	GRADE AND GEOMETRICS SHEETS
	A-1 TO A-3 (89-91)	ALIGNMENT SHEETS
	M-1 TO M-3 (92-94)	MISCELLANEOUS DETAIL SHEETS
	BL-1 TO BL-7 (95-101)	BORING LOG SHEETS
	EC-1 TO EC-7 (102-108)	EROSION CONTROL SHEETS
	B-1 TO B-52 (109-160)	BRIDGE SHEETS
	TR-1 TO TR-45 (161-205)	TRAFFIC SHEETS
	206-228	STANDARD SHEETS (C-1, C-2, C-3, C-4, D-1-11, D-2-4, D-7-5, D-14-2, D-15, D-16, G-2-9, G-3-5, G-4-6, G-5, G-9 G-6-6, G-7-1, M-3, P-1, P-2, S-1, S'-2, & S-3)

UTILITIES:

DELMARVA POWER (GAS)
DIAMOND STATE TELEPHONE
GETTY EASTERN PIPELINE CO.
WILMINGTON SUBURBAN WATER CO.

* T-6 SHEET ADDED
PR-23 SHEET ADDED

PREPARED AND RECOMMENDED
URS COMPANY, INC.
770 SEVENTH AVENUE, NEW YORK
NEW YORK 10019
DATE 4-16-87
EDWARD J. KICK
DELAWARE PROF. ENGINEER LICENSE NO. 6479

DIVISION OF HIGHWAYS

RECOMMENDED	RECOMMENDED	RECOMMENDED	RECOMMENDED	APPROVED
Robert T. Cain, PROJECT ENGINEER	C. David Jamison, REVIEW DESIGN ENGINEER	Chas. N. Hu, BRIDGE ENGINEER	Raymond M. Harbeson Jr., DEPUTY DIRECTOR OF HIGHWAYS	John T. Davis, DIRECTOR OF HIGHWAYS
RECOMMENDED July 10 1987	RECOMMENDED July 10 1987	RECOMMENDED 7-24 1987	RECOMMENDED July 10, 1987	APPROVED 7/23/ 1987
SEAL (ROBERT T. CAIN, REGISTERED, DELAWARE, PROFESSIONAL ENGINEER)	SEAL (C. DAVID JAMISON, REGISTERED, NO. 4814, DELAWARE, PROFESSIONAL ENGINEER)	SEAL	SEAL (RAYMOND M. HARBESON JR., REGISTERED, NO. 4072, DELAWARE, PROFESSIONAL ENGINEER)	SEAL (JOHN TYLER DAVIS, REGISTERED, NO. 4376)

DEPARTMENT OF TRANSPORTATION
FEDERAL HIGHWAY ADMINISTRATION

APPROVED _____ 19 ____

DIVISION ADMINISTRATOR

CONTRACT	COUNTY	FEDERAL AID PROJECT Nº	SHEET Nº	TOTAL SHEETS
83-101-04	NEW CASTLE	F-1045 (20)	TR-1	

TRAFFIC

161

TRAFFIC SIGN LOCATION PLAN
AND SIGNAL COORDINATION

VOID JUNE 1989
REPLACED BY SHEET TR-1A

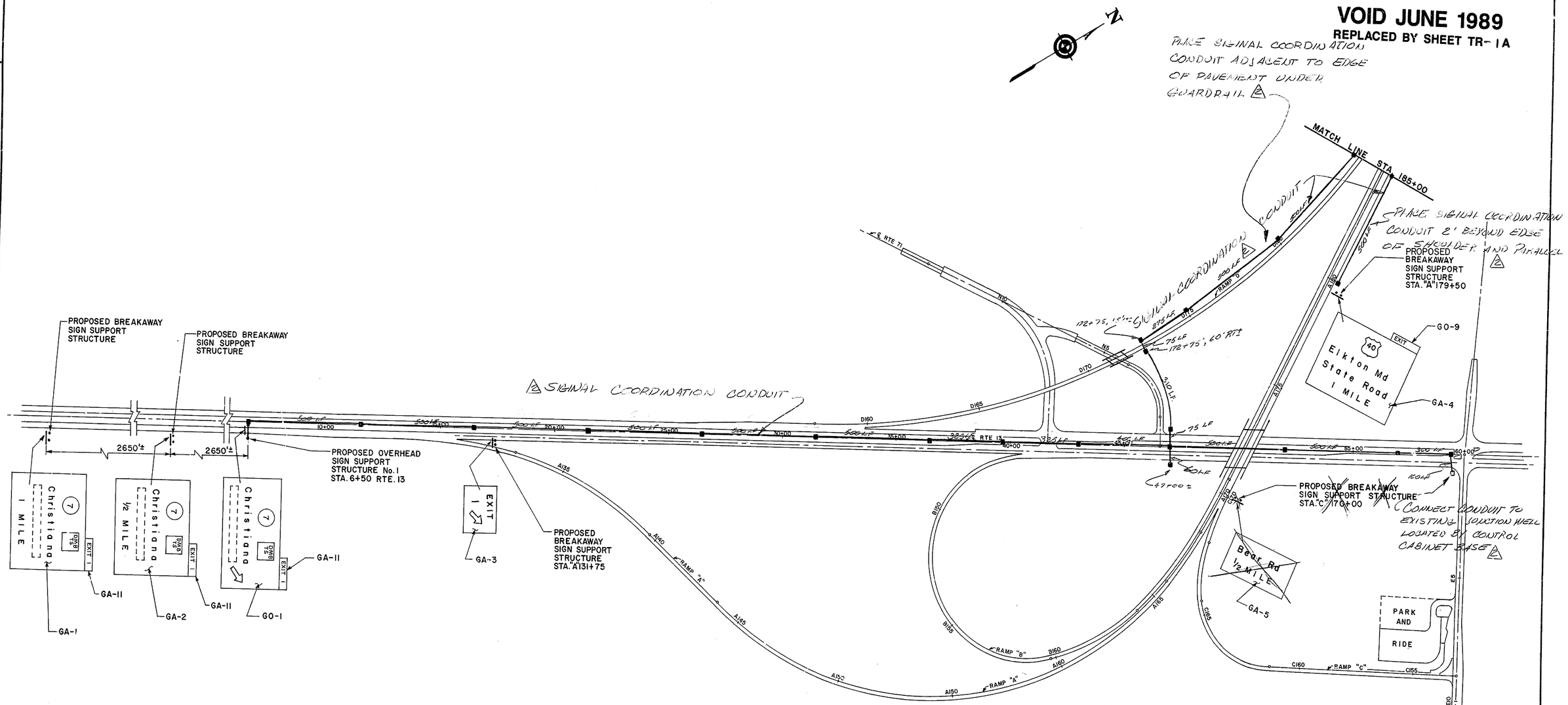

TRAFFIC SIGN LOCATION PLAN No. 1

1"=200' 0 100' 200' 400'

TOTAL SIGNAL COORDINATION THIS SHEET

7,510	L.F. 2½" GALVANIZED CONDUIT UNDER NEW PAVEMENT OR SODDED TRENCH
235	L.F. 2½" GALVANIZED CONDUIT UNDER EXISTING PAVEMENT
20 EA.	CONDUIT JUNCTION WELLS, TYPE 1

LEGEND

SIGNAL COORDINATION CONDUIT ———

CONDUIT JUNCTION WELL, TYPE 1 ■

REVISIONS

PREL. TRACING ____ DESIGN ____ CHKD. ____

CONTRACT	COUNTY	FEDERAL AID PROJECT Nº	SHEET Nº	TOTAL SHEETS
83-101-04	NEW CASTLE	F-1045 (20)	TR-1A	

TRAFFIC

TRAFFIC SIGN LOCATION PLAN

AND SIGNAL COORDINATION

161

3 NEW SHEET - JUNE 1989

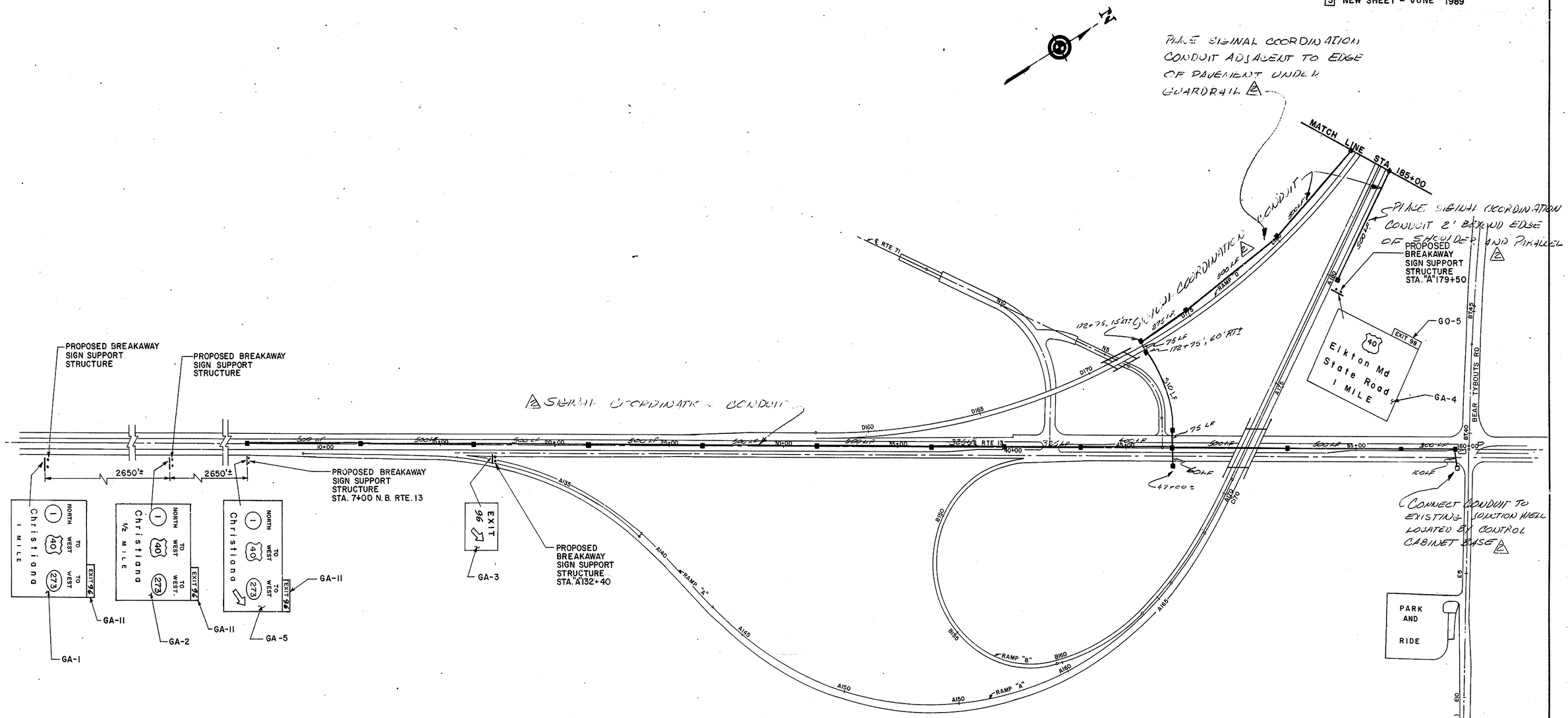

TRAFFIC SIGN LOCATION PLAN No. 1

1"=200' 0 100' 200' 400'

TOTAL SIGNAL COORDINATION THIS SHEET

7,510	L.F. 2½" GALVANIZED CONDUIT UNDER LEVEL PAVEMENT OR SODDED TRENCH
235	L.F. 2½" GALVANIZED CONDUIT UNDER EXISTING PAVEMENT
20 EA	CONDUIT JUNCTION WELLS, TYPE I

LEGEND

SIGNAL COORDINATION CONDUIT ———

CONDUIT JUNCTION WELL, TYPE I ■

PRELIM. TRACING ____ DESIGN ____ CHKD. ____

3 NEW SHEET - JUNE 1989

Added Signal Coordination

RE-2

RD. SIGN

DELETE BEARD SIGN

CONTRACT	COUNTY	FEDERAL AID PROJECT Nº	SHEET Nº	TOTAL SHEETS
83-101-04	NEW CASTLE	F-1045 (20)	TR-2	

162

TRAFFIC

TRAFFIC SIGN LOCATION PLAN
AND SIGNAL COORDINATION

VOID JUNE 1989

REPLACED BY SHEET TR-2A

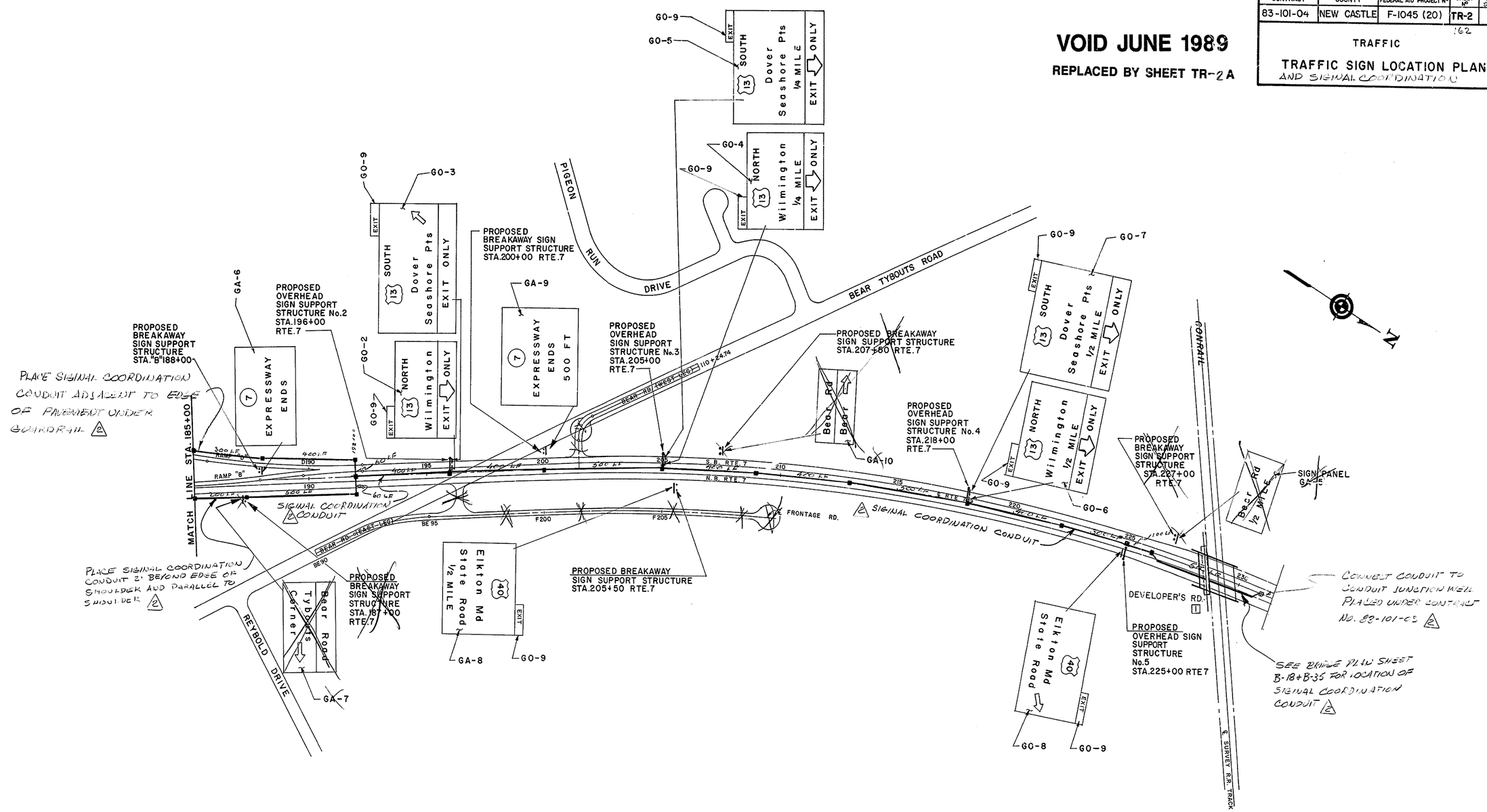

TRAFFIC SIGN LOCATION PLAN No. 2

1"=200' 0 100' 200' 400'

TOTAL SIGNAL COORDINATION THIS SHEET

5,420 L.F. 2½" GALVANIZED CONDUIT UNDER NEW PAVEMENT OR SODDED TRENCH

16 EA CONDUIT JUNCTION WELLS, TYPE 1

LEGEND

SIGNAL COORDINATION CONDUIT ——— 500 L.F.

CONDUIT JUNCTION WELL, TYPE 1 ■

REVISIONS
Add variable ⚠ Adjust signals coordination ⚠ Bridge Const. Project 3-12-99
Add 2 signal ⚠ Rev. Rel. Market 3-18-99
Add 2 signal ⚠ Rev. Rel. Market 3-18-99
Rte 896 & Rte 7 Rd. signals relocated
Rte 896 & Bear Rd signals relocated
Rte 7 & Bear Rd interconnect

DESIGN ____ CHKD. ____
PRELI. TRACING ____

CONTRACT	COUNTY	FEDERAL AID PROJECT Nº	SHEET Nº	TOTAL SHEETS
83-101-04	NEW CASTLE	F-1045 (20)	TR-2A	162

TRAFFIC

TRAFFIC SIGN LOCATION PLAN
AND SIGNAL COORDINATION

3 NEW SHEET - JUNE 1989

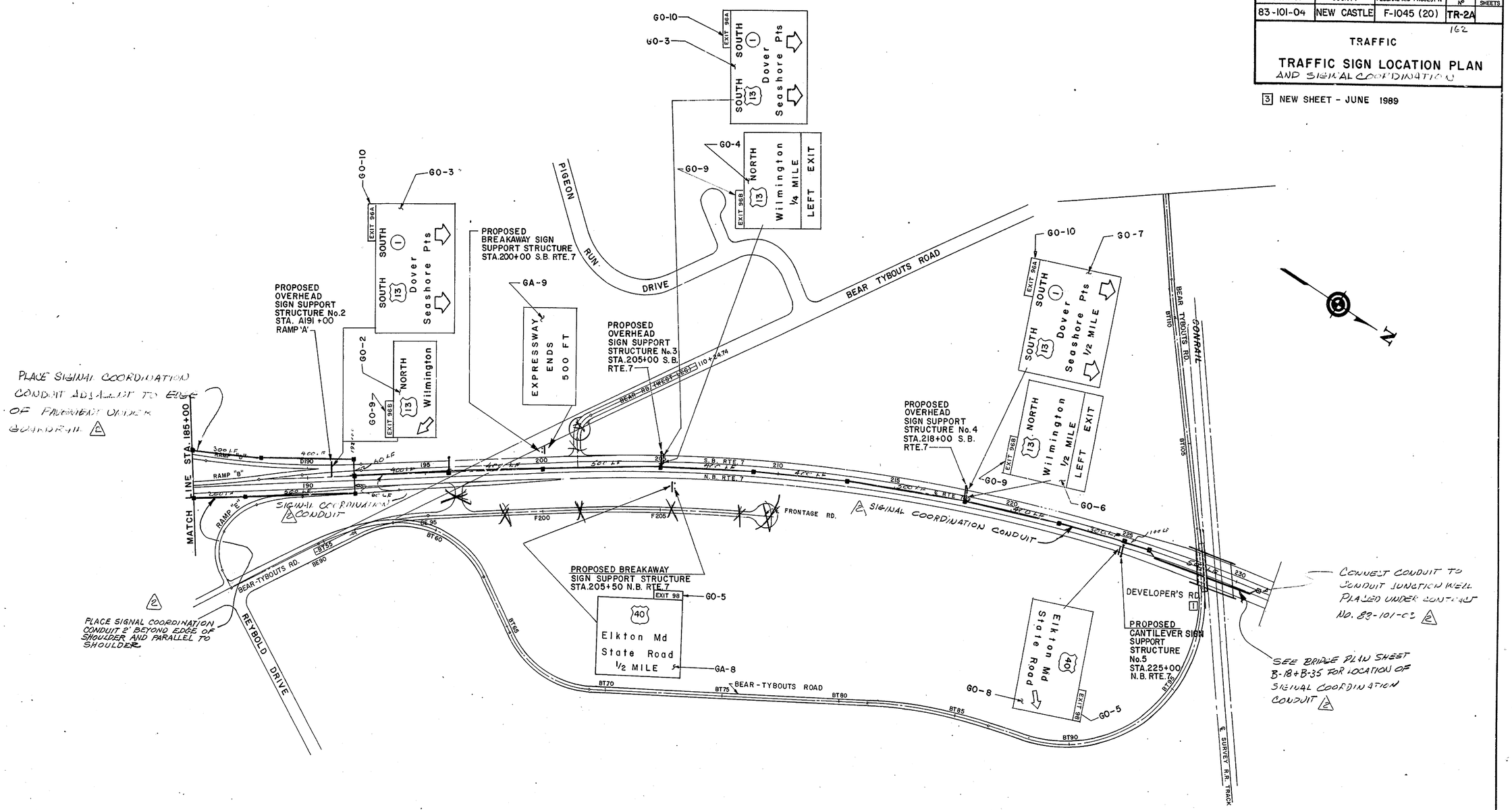

TRAFFIC SIGN LOCATION PLAN No. 2

1"=200' 0 100' 200' 400'

TOTAL SIGNAL COORDINATION THIS SHEET

5,420 L.F 2 1/2" GALVANIZED CONDUIT UNDER NEW PAVEMENT OR SODDED TRENCH

16 EA CONDUIT JUNCTION WELLS, TYPE 1

LEGEND

SIGNAL COORDINATION CONDUIT ——— 500 L.F.

CONDUIT JUNCTION WELL, TYPE 1 ■

Revisions No.	Description	Date	Approved
1	Add signal coordination	3-17-89	
2	Revised sign locations, add signal coordination	3-17-89	
3	NEW SHEET - JUNE 1989		

PREL. TRACING DESIGN CHKD.

COUNTY	CONTRACT	P.B.A. SIG. NO.	STATE	FED. AID PROJECT NO.	SHEET NO.	TOTAL SHEETS
NC	83-101-04	2	DEL.	F-1045 (20)	TR-3	

TRAFFIC

VOID JUNE 1989

REPLACED BY SHEET TR-3A

DELETE BLACK RD SIGNS 9/19/88

PANEL NO.	SHEET NO.	QUANTITY	LEGEND	SIZE WIDTH	SIZE HEIGHT	COLOR LEGEND	COLOR BACKGRD	BORDER WIDTH	BORDER RADIUS	ARROW	SHIELD	U.C.	L.C.	No SIZE	VERT. SPACING, IN	REMARKS
GA-1		1	(7) Christiana 1 MILE	13'-6"	12'-0"	WHITE	GREEN	2"	12"		36"x36"	16" 10"	12"	15"	12" 12" 40" 13"	LOCATION: N.B. RTE. 13 1 MILE SOUTH FROM OVERHEAD STRUCTURE NO. 1 SIGN AREA 162.0 S.F.
GA-2		1	(7) Christiana ½ MILE	13'-6"	12'-0"	WHITE	GREEN	2"	12"		36"x36"	16" 10"	12"	10" 22"(W) x15"	12" 12" 40" 13"	LOCATION: N.B. RTE. 13 ½ MILE SOUTH FROM OVERHEAD STRUCTURE NO. 1 SIGN AREA 162.0 S.F.
GA-3		1	EXIT 1 ⇗	6'-0"	5'-0"	WHITE	GREEN	1½"	8"	12½"(W)x16⅓" TYPE "B" 45°		10"		15"	8" 10" 11"	LOCATION: RAMP "A" STA. 131+75 SIGN AREA 30.0 S.F.
GA-4		1	(40) Elkton Md. State Road 1 MILE	14'-6"	12'-0"	WHITE	GREEN	2"	12"		36"x36"	16" 16" 10"	12" 12"	15"	11" 12" 12" 14"	LOCATION: RAMP "C" STA. 179+50 SIGN AREA 174.0 S.F.
~~GA-5~~		2	Bear Rd. ½ MILE	9'-6"	5'-0"	WHITE	GREEN	2"	8"			13.33" 8"	10"	8" 10"(W) x12"	13" 9" 13"	LOCATION: RAMP "C" STA. 170+00 & S.B. RTE. 7 STA. 227+00 TOTAL SIGN AREA 95.0 S.F.
GA-6		1	(7) EXPRESSWAY ENDS	14'-0"	9'-0"	BLACK	YELLOW	2"	12"		36"x36"	12" 12"			12" 12" 10" 14"	LOCATION: RAMP "A" STA. 188+00 SIGN AREA 126.0 S.F.
~~GA-7~~		1	Bear Road / Tybouts Corner ⇨	12'-6"	8'-0"	WHITE	GREEN	2"	12"	8¼"(W)x 29¼" TYPE "A" HORIS.		13.33" 13.33" 13.33"	10" 10" 10"		14" 9" 9" 10" 14"	LOCATION: N.B. RTE. 7 STA. 187+00 SIGN AREA 100.0 S.F.
GA-8		1	(40) Elkton Md. State Road ½ MILE	14'-6"	12'-0"	WHITE	GREEN	2"	12"		36"x36"	16" 16" 10"	12" 12"	10" 22"(W) x15"	11" 12" 12" 12" 14"	LOCATION: N.B. RTE. 7 STA. 205+50 SIGN AREA 174.0 S.F.
GA-9		1	(7) EXPRESSWAY ENDS 500 FT.	14'-0"	11'-0"	BLACK	YELLOW	2"	12"		36"x36"	12" 12" 10"		15"	12" 12" 10" 10" 13"	LOCATION: S.B. RTE. 7 STA. 200+00 SIGN AREA 154.0 S.F.
~~GA-10~~		1	Bear Rd. / Bear ⇨	10'-0"	6'-0"	WHITE	GREEN	2"	9"	18¼"(W) x 29¼" TYPE "A" HOR'Z.		13.33" 13.33"	10" 10"		14" 9" 9" 13"	LOCATION: S.B. RTE. 7 STA. 207+50 SIGN AREA 60.0 S.F.
GA-11		3	EXIT 1	8'-6"	2'-6"	WHITE	GREEN	1"	3"			10"		15"	7" 8"	LOCATION: RIGHT HAND ABOVE SIGN PANELS GA-1, GA-2, & GO-1 TOTAL SIGN AREA 63.75 S.F.

DELAWARE
STATE HIGHWAY DEPARTMENT

SIGN PANELS

D. T. C.	SCALE	APPROVED BY: BRIDGE ENGINEER

[2] NEW SHEET - JUNE 1989

COUNTY	CONTRACT	P.R.A. REG. NO.	STATE	FED. AID PROJECT NO.	SHEET NO.	TOTAL SHEETS
N.C.	83-101-04	2	DEL.	F-1045 (20)	TR-3A	103

TRAFFIC

[1] DELETE BEAR RD SIGNS 9/19/88

PANEL NO	SHEET NO	QUANTITY	LEGEND	SIZE WIDTH	SIZE HEIGHT	COLOR LEGEND	COLOR BACKGRD	BORDER WIDTH	BORDER RADIUS	ARROW	SHIELD	U.C.	L.C.	No SIZE	VERT. SPACING, IN	REMARKS
GA-1		1	NORTH (1) TO WEST (40) TO WEST (273) Christiana 1 MILE	14'-0"	11'-6"	WHITE	GREEN	2"	12"		36"x36" 45"x36"	10" 10" 13⅓" 10"	10" 12"		10 6 7 12 12 10	LOCATION: N.B. RTE. 13 1 MILE SOUTH FROM GA-5 SIGN AREA 161.0 S.F.
GA-2		1	NORTH (1) TO WEST (40) TO WEST (273) Christiana ½ MILE	14'-0"	11'-6"	WHITE	GREEN	2"	12"		36"x36" 45"x36"	10" 10" 13⅓ 10	10 22"(W) x15"		9 6 7 12 9	LOCATION: N.B. RTE. 13 ½ MILE SOUTH FROM GA-5 SIGN AREA 161.0 S.F.
GA-3		1	EXIT 96 ⇗	6'-0"	5'-0"	WHITE	GREEN	1½"	8"	23"x23" TYPE "A" 45°		12"		18"	8" 8" 14"	LOCATION: RAMP "A" STA. 132+40 SIGN AREA 30.0 S.F.
GA-4		1	(40) Elkton Md. State Road 1 MILE	14'-6"	12'-0"	WHITE	GREEN	2"	12"		36"x36"	16" 16" 10"	12" 12" 15"		12" 12" 12" 12" 13"	LOCATION: RAMP "A" STA. 179+50 SIGN AREA 174.0 S.F.
GA-5		1	NORTH (1) TO WEST (40) TO WEST (273) Christiana ⇗	14'-6"	10'-6"	WHITE	GREEN	2"	12"	23"x23" TYPE A 45°	36"x36" 45"x36"	10 10 13⅓	10		10 6 7 24 10	LOCATION: N.B. RTE. 13 STA. 74+00 SIGN AREA 152.25 S.F.
GA-6		1	(7) EXPRESSWAY ENDS	14'-0"	9'-0"	BLACK	YELLOW	2"	12"		36"x36"	12" 12"			12" 12" 10" 14"	LOCATION: RAMP "B" STA. 188+00 SIGN AREA 126.0 S.F.
~~GA-7~~		1	Bear Road Tybouts Corner ⇨	12'-6"	8'-0"	WHITE	GREEN	2"	12"	8¼"(W)x 29¼" TYPE "A" HORIZ.		13.33" 13.33" 13.33"	10" 10" 10"		14" 9" 9" 10" 14"	LOCATION: N.B. RTE. 7 STA. 187+00 SIGN AREA 100.0 S.F.

PANEL NO	SHEET NO	QUANTITY	LEGEND	SIZE WIDTH	SIZE HEIGHT	COLOR LEGEND	COLOR BACKGRD	BORDER WIDTH	BORDER RADIUS	ARROW	SHIELD	U.C.	L.C.	No SIZE	VERT. SPACING, IN	REMARKS
GA-8		1	(40) Elkton Md. State Road ½ MILE	14'-6"	12'-0"	WHITE	GREEN	2"	12"		36"x36"	16" 16" 10"	12" 12"	10" 22"(W) x15"	12" 12" 12" 12" 13"	LOCATION: N.B. RTE. 7 STA. 205+50 SIGN AREA 174.0 S.F.
GA-9		1	EXPRESSWAY ENDS 500 FT.	14'-0"	7'-0"	BLACK	YELLOW	2"	12"			12" 12" 10"		15"	12" 10" 10" 13"	LOCATION: S.B. RTE. 7 STA. 200+00 SIGN AREA 98.0 S.F.
~~GA-10~~		1	Bear Rd. Bear ⇨	10'-0"	6'-0"	WHITE	GREEN	2"	9"	18¼"(W) x29¼" TYPE "A" HORIZ.		13.33" 13.33"	10" 10"		14" 9" 9" 13"	LOCATION: S.B. RTE. 7 STA. 207+50 SIGN AREA 60.0 S.F.
GA-11		3	EXIT 96	9'0"	2'-6"	WHITE	GREEN	1"	3"			10"		15"	12" 10"	LOCATION: RIGHT HAND ABOVE SIGN PANELS GA-1, GA-2, & GA-5 TOTAL SIGN AREA 63.75 S.F.

[1] DELETE BEAR RD. SIGN 9-9-88
[2] NEW SHEET - JUNE 1989

PREL. TRACING _____ DESIGN _____ CHKD. _____

DELAWARE
STATE HIGHWAY DEPARTMENT

SIGN PANELS

D.
T.
C.

SCALE

APPROVED BY:

BRIDGE ENGINEER

COUNTY	CONTRACT	F.B.A. REG. NO.	STATE	FED. AID PROJECT NO.	SHEET NO.	TOTAL SHEETS
N.C.	83-101-04	2	DEL.	F-1045 (20)	TR-4	

TRAFFIC

164

VOID JUNE 1989

REPLACED BY SHEET TR-4A

PANEL No.	SHEET No.	QUANTITY	LEGEND	SIZE WIDTH	SIZE HEIGHT	COLOR LEGEND	COLOR BACKGRD	BORDER WIDTH	BORDER RADIUS	ARROW	SHIELD	U.C.	L.C.	No SIZE	VERT. SPACING, IN	REMARKS
GO-1		1	(7) Christiana ⇗	17'-0"	10'-0"	WHITE	GREEN	2"	12"	28"x28" TYPE "A" 45°	36"x36"	16"	12"		12" 12" 44"	LOCATION: OVERHEAD SIGN STRUCTURE NO. 1 STA. 6+50 RTE. 13 N.B. SIGN AREA 170 S.F.
GO-2		1	(13) NORTH Wilmington EXIT ⇩ ONLY	15'-0"	11'-0"	WHITE BLK	GREEN YELLOW	2"	12"	32"(W)x22" TYPE "C"	36"	12" 16" 12"	12"		14" 10" 12" 10" 12"	LOCATION: OVERHEAD SIGN STRUCTURE NO. 2 STA. 196+00 RTE. 7 SB. SIGN AREA 165.0 S.F.
GO-3		1	(13) SOUTH Dover Seashore Pts. ⇗ EXIT ONLY	20'-0"	13'-0"	WHITE BLK	GREEN YELLOW	2"	12"	28"x28" TYPE "A" 45°	36"	12" 16" 16" 12"	12" 12"		14" 12" 12" 12" 14"	LOCATION: OVERHEAD SIGN STRUCTURE NO. 2 STA. 196+00 RTE. 7 SB. SIGN AREA 260.0 S.F.
GO-4		1	(13) NORTH Wilmington 1/4 MILE EXIT ⇩ ONLY	15'-0"	13'-6"	WHITE BLK	GREEN YELLOW	2"	12"	32"(W)x22" TYPE "C"	36"	12" 16" 10" 12"	12"	10" 22" x15"	14" 10" 15" 12" 10" 12"	LOCATION: OVERHEAD SIGN STRUCTURE NO. 3. STA. 205+00 RTE. 7 S.B. SIGN AREA 202.5 S.F.
GO-5		1	(13) SOUTH Dover Seashore Pts. 1/4 MILE EXIT ⇩ ONLY	16'-6"	16'-0"	WHITE BLK	GREEN YELLOW	2"	12"	32"(W)x22" TYPE "C"	36"	12" 16" 16" 10" 12"	12" 12"	10" 22" x15"	14" 12" 12" 15" 12" 10" 12"	LOCATION: OVERHEAD SIGN STRUCTURE NO. 3. STA. 205+00 RTE. 7 S.B. SIGN AREA 264.0 S.F.
GO-6		1	(13) NORTH Wilmington 1/2 MILE EXIT ⇩ ONLY	15'-0"	13'-6"	WHITE BLK	GREEN YELLOW	2"	12"	32"(W)x22" TYPE "C"	36"	12" 16" 10" 12"	12"	10" 22" x15"	14" 10" 15" 12" 10" 12"	LOCATION: OVERHEAD SIGN STRUCTURE NO. 4. STA. 218+00 RTE. 7 S.B. SIGN AREA 202.5 S.F.
GO-7		1	(13) SOUTH Dover Seashore Pts. 1/2 MILE EXIT ⇩ ONLY	16'-6"	16'-0"	WHITE BLK	GREEN YELLOW	2"	12"	32"(W)x22" TYPE "C"	36"	12" 16" 16" 10" 12"	12" 12"	10" 22" x15"	14" 12" 12" 15" 12" 10" 12"	LOCATION: OVERHEAD SIGN STRUCTURE NO. 4. STA. 218+00 RTE. 7 S.B. SIGN AREA 264.0 S.F.
GO-8		1	(40) Elkton Md. State Road ⇗	17'-6"	9'-6"	WHITE	GREEN	2"	12"	28"x28" TYPE "A" 45°	36"	16" 16"	12" 12"		10" 12" 12" 12"	LOCATION: OVERHEAD SIGN STRUCTURE No. 5. STA. 225+00 RTE. 7 N.B. SIGN AREA 166.25 S.F.
GO-9		9	EXIT – –	8'-6"	2'-6"	WHITE	GREEN	1"	3"	–	–	10"		15"	12" 8"	LOCATION: RIGHT HAND ABOVE SIGN PANELS GA-4, GA-8, GO-3, GO-5, GO-8, GO-9. LEFT HAND ABOVE SIGN PANELS GO-2, GO-4, GO-6, GO-7. TOTAL SIGN AREA 191.25 S.F.

DELAWARE
STATE HIGHWAY DEPARTMENT

SIGN PANELS

D. T. C.	SCALE	APPROVED BY: BRIDGE ENGINEER

[1] NEW SHEET - JUNE 1989

COUNTY	CONTRACT	P. B. & RTE. NO.	STATE	FED AID PROJECT NO.	SHEET NO.	TOTAL SHEETS
N.C.	83-101-04	2	DEL.	F-1045 (20)	TR-4A	

TRAFFIC

PANEL NO.	SHEET NO.	QUANTITY	LEGEND	SIZE WIDTH	SIZE HEIGHT	COLOR LEGEND	COLOR BACKGRD	BORDER WIDTH	BORDER RADIUS	ARROW	SHIELD	U.C.	L.C.	No SIZE	VERT. SPACING, IN	REMARKS
GO-1		1	(7) Christiana ⇗	17'-0"	10'-0"	WHITE	GREEN	2"	12"	28"x28" TYPE "A" 45°	36"x36"	16"	12"		12" 12" 44"	LOCATION: OVERHEAD SIGN STRUCTURE NO. 1 STA. 7+00 RTE. 13 N.B. SIGN AREA 170 S.F.
GO-2		1	(13) NORTH ⇖ Wilmington	18'-0"	8'-0"	WHITE	GREEN	2"	12"	28"x28" TYPE "A" 45°	36"	12" 16"	12"		12" 20" 12"	GO-3 LOCATION: OVERHEAD SIGN STRUCTURE NO. 3 STA. 205+00 RTE. 7 S.B. SIGN AREA 246.5 S.F.
GO-3		2	SOUTH (13) ⇩ Dover Seashore Pts. SOUTH (1) ⇩	17'-0"	14'-6"	WHITE	GREEN	2"	12"	32"(W)x22" TYPE "C"	36"	12" 16" 16"	12" 12"		12" 12" 12" 12" 12"	GO-2, GO-3 LOCATION: OVERHEAD SIGN STRUCTURE NO. 2 STA. 191+00 RAMP A SIGN AREA 246.5x2=493.0 S.F.
GO-4		1	(13) NORTH Wilmington 1/4 MILE LEFT EXIT	14'-6"	12'-0"	WHITE BLK	GREEN YELLOW	2"	12"		36"	12" 16" 10" 12"	12"	10" 22" x 5"	11" 11" 12" 11" 10" 10"	LOCATION: OVERHEAD SIGN STRUCTURE NO. 3 STA. 205+00 RTE. 7 S.B. SIGN AREA 174.0 S.F.
GO-5		3	EXIT 98	9'-0"	2'-6"	WHITE	GREEN	1"	3"	-	-	10"		15"	10" 10"	LOCATION: RIGHT HAND ABOVE SIGN PANELS GO-8, GA-4, GA-8 TOTAL SIGN AREA 67.5 S.F.
GO-6		1	(13) NORTH Wilmington 1/2 MILE LEFT EXIT	14'-6"	12'-0"	WHITE BLK	GREEN YELLOW	2"	12"		36"	12" 16" 10" 12"	12"	10" 22" x 5"	11" 11" 12" 11" 10" 10"	LOCATION: OVERHEAD SIGN STRUCTURE NO. 4 STA. 218+00 RTE. 7 S.B. SIGN AREA 174.0 S.F.
GO-7		1	SOUTH (13) ⇩ Dover Seashore Pts. SOUTH (1) ⇩ 1/2 MILE	17'-0"	14'-6"	WHITE	GREEN	2"	12"	32"(W)x22" TYPE "C"	36"	12" 16" 16" 10"	12" 12"	10" 22" x 5"	12" 12" 12" 12" 12" 12"	LOCATION: OVERHEAD SIGN STRUCTURE NO. 4 STA. 218+00 RTE. 7 S.B. SIGN AREA 246.5 S.F.

PANEL NO.	SHEET NO.	QUANTITY	LEGEND	SIZE WIDTH	SIZE HEIGHT	COLOR LEGEND	COLOR BACKGRD	BORDER WIDTH	BORDER RADIUS	ARROW	SHIELD	U.C.	L.C.	No SIZE	SPACING, IN	REMARKS
GO-8		1	(40) Elkton Md. State Road ⇗	17'-6"	9'-6"	WHITE	GREEN	2"	12"	28"x28" TYPE "A" 45°	36"	16" 16"	12" 12"		10" 12" 12" 12"	LOCATION: CANTILEVER SIGN STRUCTURE No. 8 STA. 225+00 RTE. 7 N.B. SIGN AREA 166.25 S.F.
GO-9		3	EXIT 96 B	9'-0"	2'-6"	WHITE	GREEN	1"	3"	—	—	10"		15"	10" 10"	LOCATION: LEFT HAND ABOVE SIGN PANELS GO-4, GO-6 TOTAL SIGN AREA 67.5 S.F.
GO-10		3	EXIT 96 A	9'-0"	2'-6"	WHITE	GREEN	1"	3"	—	—	10"		15"	10" 10"	LOCATION: RIGHT HAND ABOVE SIGN PANELS GO-3, GO-7 TOTAL SIGN AREA 67.5 S.F.

DELAWARE
STATE HIGHWAY DEPARTMENT

SIGN PANELS

D. T. C.	SCALE	APPROVED BY: BRIDGE ENGINEER

PREL. TRACING ____ DESIGN ____ CHKD. ____

COUNTY	CONTRACT	P. & A. REG. NO.	STATE	FED. AID PROJECT NO.	SHEET NO.	TOTAL SHEETS
N.C.	83-101-04	2	DEL	F-1045 (20)	TR-5	

165

TRAFFIC

NO.	REVISIONS	BY	DATE

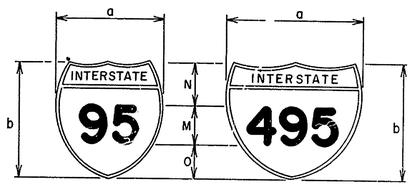

	12" Numerals		18" Numerals		24" Numerals	
DIGITS	2	3	2	3	2	3
a	24	30	36	45	48	60
b	24	24	36	36	48	48
N	6 1/2		9 3/4		13	
M	12		18		24	
O	5 1/2		8 1/4		11	

Dimensions in "Inches"

INTERSTATE SHIELDS

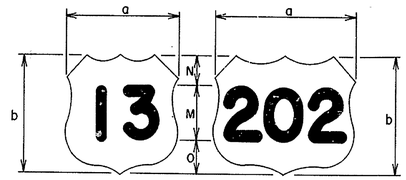

	12" Numerals		18" Numerals		24" Numerals	
DIGITS	2	3	2	3	2	3
a	24	30	36	45	48	60
b	24	24	36	36	48	48
N	5 1/2		8 1/4		11	
M	12		18		24	
O	6 1/2		9 3/4		13	

Dimensions in "Inches"

U.S. SHIELDS

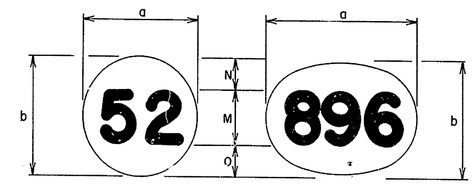

	12" Numerals			18" Numerals			24" Numerals		
DIGITS	1	2	3	1	2	3	1	2	3
a	24		30	36		45	48		60
b	24		24	36		36	48		48
N	6			9			12		
M	12			18			24		
O	6			9			12		

Dimensions in "Inches"

STATE SHIELDS

NOTES:

1. COLORS, SHAPES, LETTERING AND ARRANGEMENT SHALL CONFORM TO THE REQUIREMENTS OF "MANUAL ON UNIFORM TRAFFIC CONTROL DEVICES" FOR STREETS AND HIGHWAYS.
2. IN CASE THAT TWO ONES (1's) APPEAR IN A THREE DIGIT ROAD NUMBER, USE OF TWO DIGIT NUMBER SHIELD INSTEAD OF THREE DIGIT SHIELD IS PERMITTED WITH THE APPROVAL OF THE ENGINEER.
3. SHAPES AND DIMENSIONS OF INTERSTATE AND NON-INTERSTATE ARROWS ARE TAKEN FROM THE 3M COMPANY "SIGN LAYOUT GUIDE" FOR INTERSTATE AND DEFENSE HIGHWAYS, TURNPIKE AND EXPRESSWAYS.

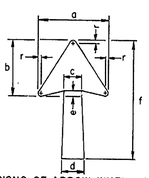

DIMENSIONS OF ARROW WHEN USED WITH VARIOUS LETTER SIZES

"A" VERTICAL OR DIAGONAL ARROW

Letter Size	Arrow Dimensions In Inches							
	a	b	c	d	e	f	r	
4-6" CAPS	11 1/4	8 3/4	3 1/8	3 7/8	7/8	18 1/4	5/8	
8" CAPS	15 1/8	11 9/16	3 3/4	5	1 5/16	24 1/4	13/16	
10.67 U.C., 13 1/3 U.C., 10-12" CAPS	18 1/4	14	4 1/2	6	1 1/2	29 1/4	3/4	
15" CAPS-16" U.C.	22 1/4	17	5 3/8	7 1/8	1 3/4	35 5/8	1	

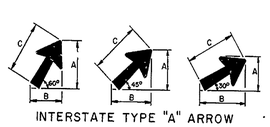

INTERSTATE TYPE "A" ARROW

Angle ∠	Arrow Size Type "A"	A	B	C
30°	4-6" CAPS	11 3/4	17	18 1/4
	8" CAPS	15 5/8	22 1/4	24 1/4
	10.67-13 1/3 U.C., 10-12" CAPS	18 1/2	27	29 1/4
	15" CAPS-16" U.C.	22 5/8	32 3/4	35 5/8
45°	4-6" CAPS	14 1/2	14 1/2	18 1/4
	8" CAPS	19 1/8	19 1/8	24 1/4
	10.67-13 1/3 U.C. 10-12" CAPS	23	23	29 1/4
	15" CAPS-16" U.C.	28	28	35 5/8
60°	4-6" CAPS	17	12	18 1/4
	8" CAPS	22 3/8	15 5/8	24 1/4
	10.67-13 1/3 U.C., 10-12" CAPS	27	19	29 1/4
	15" CAPS-16" U.C.	32 3/4	[illegible]	35 5/8

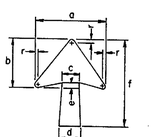

"B" VERTICAL OR DIAGONAL ARROW

Letter Size	Arrow Dimensions In Inches							
	a	b	c	d	e	f	r	
4-6" CAPS	8 7/16	5 7/16	2 5/16	2 5/16	5/8	9 9/16	1/2	
10.67 U.C. 8-10" CAPS	14 1/4	9 13/16	3 3/8	4 1/2	1 5/16	17 1/4	3/4	
13 1/3" U.C., 12" CAPS	17 1/2	11 3/4	4 3/8	5 5/8	1 1/2	20 1/4	7/8	
15" CAPS-16" U.C.	21 7/8	14 1/4	5	6 3/4	1 3/4	25	1	

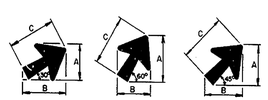

INTERSTATE TYPE "B" ARROW

Angle ∠	Arrow Size Type "B"	A	B	C
30°	4-6" CAPS	7 1/2	9 3/8	9 9/16
	8-10 CAPS, 10.67 U.C.	12 1/2	16 1/4	17 1/4
	13 1/3" U.C., 12" CAPS	15 1/2	19 1/8	20 1/4
	15" CAPS-16" U.C.	19 1/8	23 1/2	25
45°	4-6" CAPS	8	8	9 9/16
	8-10 CAPS, 10.67 U.C.	16 1/8	12 1/2	17 1/4
	13 1/3" U.C., 12" CAPS	16 5/8	16 5/8	20 1/4
	15" CAPS-16" U.C.	20 3/8	20 3/8	25
60°	4-6" CAPS	9 1/8	7 1/2	9 9/16
	8-10 CAPS, 10.67 U.C.	14	14	17 1/4
	13 1/3" U.C., 12" CAPS	19	15 1/2	20 1/4
	15" CAPS-16" U.C.	23 1/2	19 1/4	25

INTERSTATE ARROWS

Letter Size	Vertical or Diagonal Double Line Arrow		Double Line Curve Arrow	
	A	B	A	B
4-6" CAPS	20	11 1/4	20	15
8" CAPS	26	15 1/8	26	19 1/2
10" CAPS-10.67" U.C.	34	18 1/4	34	25 1/2
12" CAPS-13.33" U.C.	42	18 1/4	42	31 1/2
15" CAPS-16" U.C.	48	22 1/4	48	36

Letter Size	Single Line Turn Arrow		Single Line Curve Arrow	
	A	B	A	B
4-6" CAPS	10	10	10	9 1/2
10.67" U.C.-8-10" CAPS	17 1/4	17 1/4	17 1/4	15 3/4
13.33" U.C.-12" CAPS	20 1/4	20 1/4	20 1/4	18 1/2
15" CAPS-16" U.C.	25	25	25	23 1/2

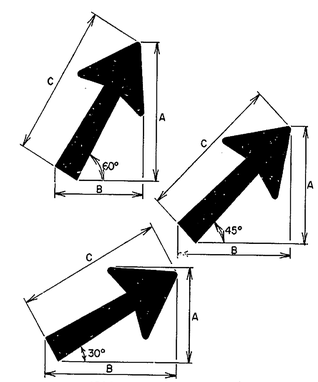

SPACING FOR DOUBLE LINE VERTICAL OR DIAGONAL ARROW

Angles	Arrow Size (Double Line)	A	B	C
30°	4-6" CAPS	12 5/8	18 3/8	20
	8" CAPS	16 1/2	24	26
	10" CAPS-10.67" U.C.	20 7/8	31 1/4	34
	12" CAPS-13.33" U.C.	24 7/8	38	42
	15" CAPS-16" U.C.	28 7/8	43 1/2	48
45°	4-6" CAPS	15 3/4	15 3/4	20
	8" CAPS	20 1/4	20 1/4	26
	10" CAPS-10.67" U.C.	26 3/8	26 3/8	34
	12" CAPS-13.33" U.C.	32	32	42
	15" CAPS-16" U.C.	36 3/4	36 3/4	[illegible]
60°	4-6" CAPS	18 3/8	12 3/4	20
	8" CAPS	23 7/8	16 3/8	26
	10" CAPS-10.67" U.C.	31	21	34
	12" CAPS-13.33" U.C.	38	25	42
	15" CAPS-16" U.C.	43 1/2	29	48

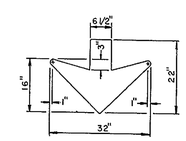

"C" VERTICAL DOWN ARROW

NON-INTERSTATE ARROWS

DELAWARE
DEPARTMENT OF TRANSPORTATION
DIVISION OF HIGHWAYS

SHIELDS & ARROWS
(STANDARD SHEET)

D.G.R.D.	SCALE	APPROVED BY
T.G.R.D.	N.T.S.	
C.		

ROBERT C. McDOWELL REGISTERED PROFESSIONAL ENGINEER NO. 3069

COUNTY	CONTRACT	F. B. A. REG. NO.	STATE	FED. AID PROJECT NO.	SHEET NO.	TOTAL SHEETS
N.C.	83-101-04	2	DEL.	F-1045 (20)	TR-6	

166

TRAFFIC

NO.	REVISIONS	BY	DATE

VOID JUNE 1989

REPLACED BY SHEET TR-6A

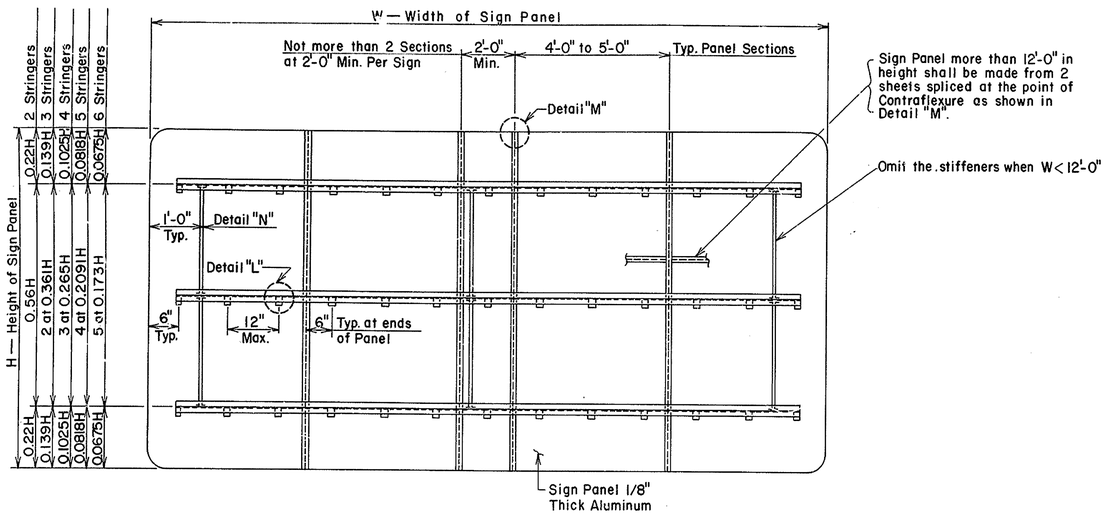

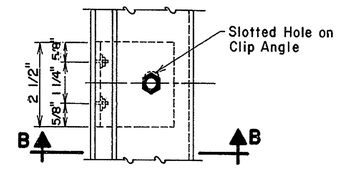

DETAIL "L"
(Stringer Attachment)

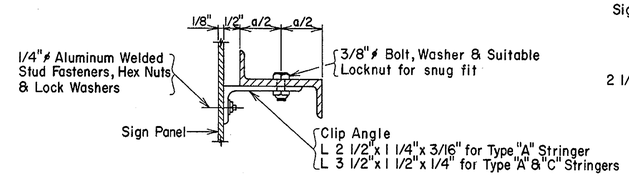

SECTION "B-B"

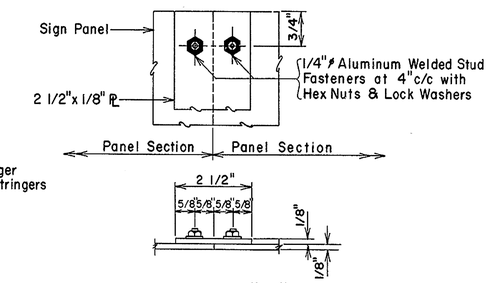

DETAIL "M"
(Backing Strip)

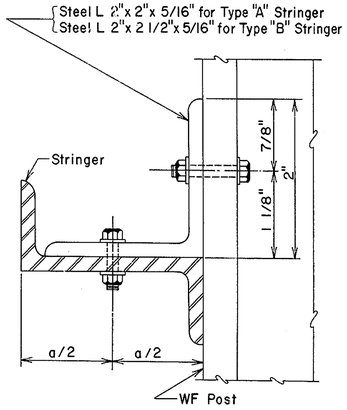

SECTION "A-A"

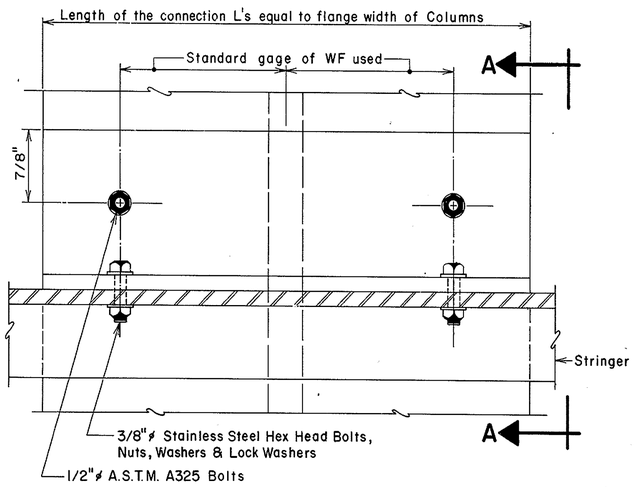

STEEL WF POST FOR ROADSIDE SIGNS
POST ATTACHMENT

SIGN	W	H	NO. OF STRINGERS	TYPE
GA - 1	13'-6"	12'-0"	5	A
GA - 2	13'-6"	12'-0"	5	A
GA - 3	6'-0"	5'-0"	2	A
GA - 4	14'-6"	12'-0"	5	A
GA - 5	9'-6"	5'-0"	2	A
GA - 6	14'-0"	9'-0"	4	A
GA - 7	12'-6"	8'-0"	3	A
GA - 8	14'-6"	12'-0"	5	A
GA - 9	14'-0"	11'-0"	4	A
GA - 10	10'-0"	6'-0"	3	A

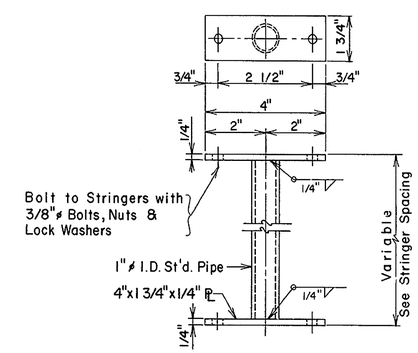

DETAIL "N"
(Vertical Stiffener)

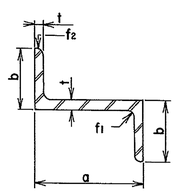

HORIZONTAL STRINGERS

HORIZONTAL STRINGERS							
Max. W (ft.)	Type	a	b	t	Wt. #	f1	f2
20	A	2 3/8"	1 1/4"	3/16"	1.00	3/16"	1/8"
24	B	3"	2 11/16"	1/4"	2.33	5/16"	1/4"
30	C	3"	2 11/16"	1/2"	4.35	5/16"	1/4"

DELAWARE
DEPARTMENT OF HIGHWAYS & TRANSPORTATION
DIVISION OF HIGHWAYS

SIGN PANELS
GROUND MOUNTED-BREAKAWAY

(STANDARD SHEET)

D. T. G.R.D. C.	SCALE NO SCALE	APPROVED BY: BRIDGE ENGINEER

COUNTY	CONTRACT	P & A REG NO	STATE	FED AID PROJECT NO	SHEET NO	TOTAL SHEETS
N.C.	83-101-04	2	DEL	F-1045 (20)	TR-6A	166

TRAFFIC

NO.	REVISIONS	BY	DATE

1 NEW SHEET - JUNE 1989

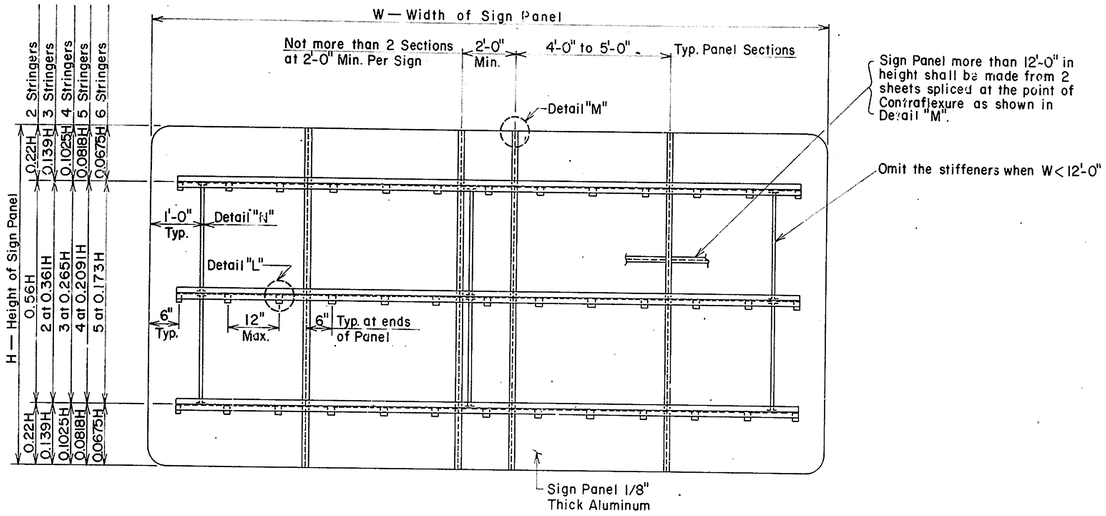

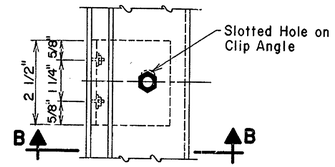

DETAIL "L"
(Stringer Attachment)

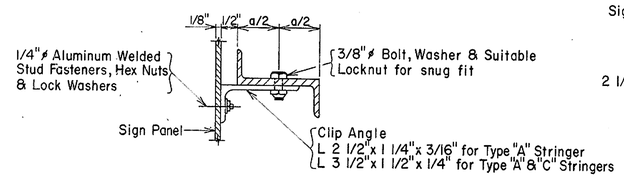

SECTION "B-B"

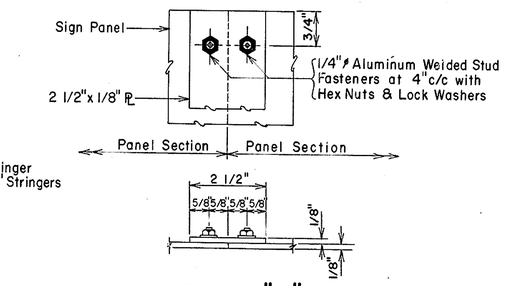

DETAIL "M"
(Backing Strip)

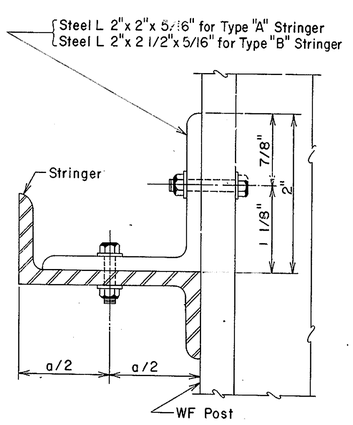

SECTION "A-A"

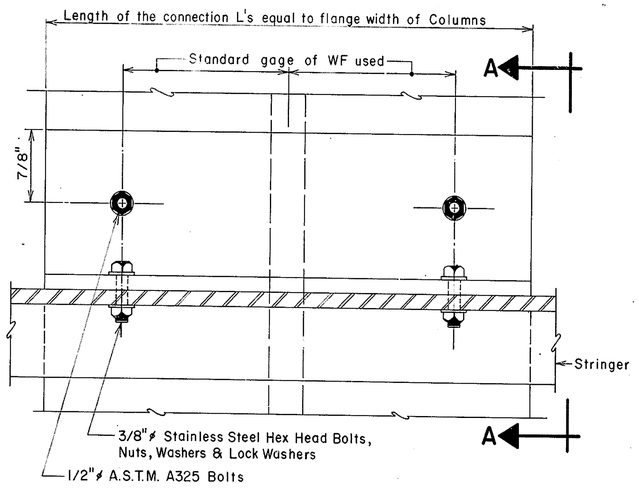

STEEL WF POST FOR ROADSIDE SIGNS
POST ATTACHMENT

SIGN	W	H	NO. OF STRINGERS	TYPE
GA - 1	14'-0"	11'-6"	5	A
GA - 2	14'-0"	11'-6"	5	A
GA - 3	6'-0"	5'-0"	2	A
GA - 4	14'-6"	12'-0"	5	A
GA - 5	14'-6"	10'-6"	4	A
~~GA - 6~~	~~14'-0"~~	~~9'-0"~~	~~4~~	~~A~~
~~GA - 7~~	~~12'-6"~~	~~8'-0"~~	~~3~~	~~A~~
GA - 8	14'-6"	12'-0"	5	A
GA - 9	14'-0"	7'-0"	3	A
~~GA - 10~~	~~10'-0"~~	~~6'-0"~~	~~3~~	~~A~~

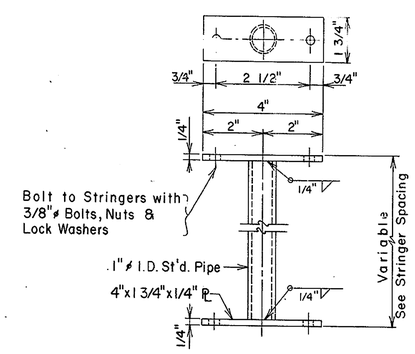

DETAIL "N"
(Vertical Stiffener)

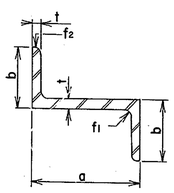

HORIZONTAL STRINGERS

HORIZONTAL STRINGERS							
Max. W (ft.)	Type	a	b	t	Wt. #	f1	f2
20	A	2 3/8"	1 1/4"	3/16"	1.00	3/16"	1/8"
24	B	3"	2 11/16"	1/4"	2.33	5/16"	1/4"
30	C	3"	2 11/16"	1/2"	4.35	5/16"	1/4"

DELAWARE
DEPARTMENT OF HIGHWAYS & TRANSPORTATION
DIVISION OF HIGHWAYS

SIGN PANELS
GROUND MOUNTED-BREAKAWAY

(STANDARD SHEET)

D. T.G.R.D. C.	SCALE NO SCALE	APPROVED BY: BRIDGE ENGINEER

REVISIONS
1 NEW SHEET - JUNE 1989

CHKD. DESIGN PREL. TRACING

COUNTY	CONTRACT	P.R.A. REG. NO.	STATE	FED. AID PROJECT NO.	SHEET NO.	TOTAL SHEETS
N.C.	83-101-04	2	DEL	F-1045 (20)	TR-7	

167

TRAFFIC

NO.	REVISIONS	BY	DATE

VOID JUNE 1989
REPLACED BY SHEET TR-7A

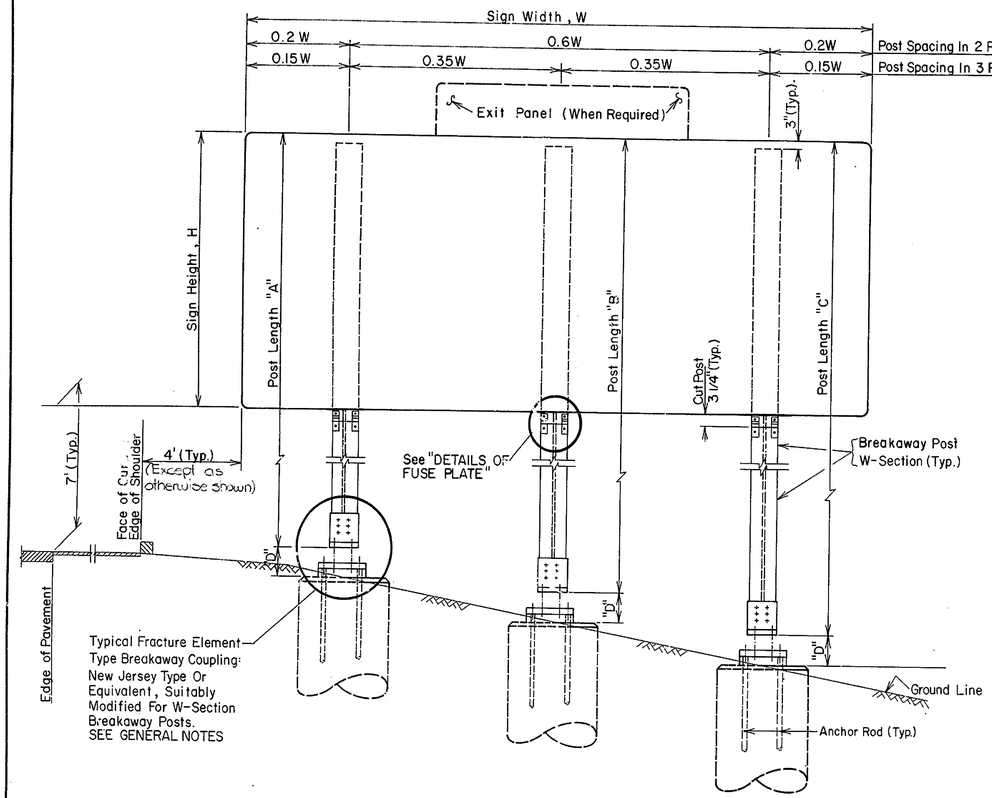

TYPICAL BREAKAWAY SIGN STRUCTURE

BREAKAWAY SIGN STRUCTURE DATA TABLE

SIGN LOCATION	SHEET NO.	SIGN WIDTH, W	SIGN HEIGHT, H	SIZE	EXIT PANEL SIZE	NO. POSTS	POST SPACING	POST SIZE	POST LENGTH* A	B	C	FOOTING DIA., Ø	DEPTH, d
GA - 1		13'-6"	12'-0"		8'-6" × 2'-6"	2	8'-6"	W10 x 33	20'-0"	–	21'-6"	2'-6"	6'-0"
GA - 2		13'-6"	12'-0"		8'-6" × 2'-6"	2	8'-6"	W10 x 33	20'-0"	–	21'-6"	2'-6"	6'-0"
GA - 3		6'-0"	5'-0"		–	2	3'-6"	W 5 x 19	12'-0"	–	12'-6"	2'-0"	4'-6"
GA - 4		14'-6"	12'-0"		8'-6" × 2'-6"	2	8'-6"	W10 x 33	19'-6"	–	21'-0"	2'-6"	6'-0"
GA - 5		9'-6"	5'-0"		–	2	5'-6"	W 5 x 19	14'-0"	–	16'-9"	2'-0"	4'-6"
GA - 6		14'-0"	9'-0"		–	2	8'-0"	W 6 x 25	16'-0"	–	16'-6"	2'-0"	4'-6"
GA - 7		12'-6"	8'-0"		–	2	7'-6"	W 10 x 33	15'-6"	–	16'-9"	2'-0"	4'-6"
GA - 8		14'-6"	12'-0"		8'-6" × 2'-6"	2	8'-6"	W 10 x 33	19'-6"	–	21'-0"	2'-6"	6'-0"
GA - 9		14'-0"	11'-0"		–	2	8'-0"	W10 x 33	18'-9"	–	20'-0"	2'-0"	4'-6"
GA - 10		10'-0"	6'-0"		–	2	6'-0"	W 5 x 19	13'-6"	–	14'-6"	2'-0"	4'-6"

NOTE: Post Length "A" is always adjacent to roadway. The post length are tabulated based on the assumption that dimension "D" is 6 1/2".

* These dimensions must be verified in the field prior to ordering materials.

GENERAL NOTES

1. Design criteria are based on "Standard Specifications for Structural Supports for Highway Signs, Luminaires and and Traffic Signals, 1975" by AASHTO. Materials and Workmanship shall conform to The Delaware Department of Highways and Transportation, 1985-Standard Specifications and Special Provisions for this project.
2. Breakaway Posts shall conform to AASHTO M188 (ASTM A441) and be galvanized in accordance with AASHTO M111 (ASTM A123). Class "B" Concrete with ultimate compressive strength fc'=3,000 psi. shall be used in all footings; bar reinforcement shall conform to AASHTO M31 (ASTM A615).
3. An Auger shall be used to drill through the soil up to the desired depth of foundation. Reinforced concrete shall be placed on undisturbed soil to secure a firm contact between soil and conc. Footing tops shall be formed to a depth of 3" below ground surface.
4. Maximum projection above ground line for footing or anchor plate shall be limited to 4". Where necessary, a portion of concrete in the foundation shall be chamfered parallel to the earth slope in order to minimize footing projection above ground.
5. Complete details of Breakaway Couplings, Anchor Plates and Bolts shall be submitted by the contractor for approval by the Bridge Engineer.
6. The Contractor shall be required to submit vehicle crash testing reports indicating satisfactory performance of the breakaway mechanism with breakaway couplings and fuse plates under the following conditions:
   - Weight of vehicle = 2250 lbs. or equivalent.
   - Range of speed at impact = 20mph to 60mph.
   - Impact angle = upto 25° measured from the direction of roadway.
   - Maximum change of momentum = 750 lb-sec.
   - Average vehicle deceleration = 6g or less.

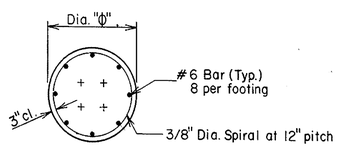

SECTION X-X

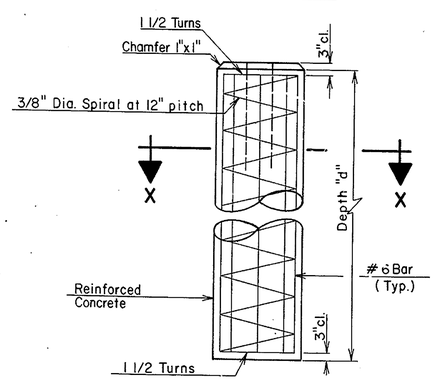

DETAILS OF FOUNDATION

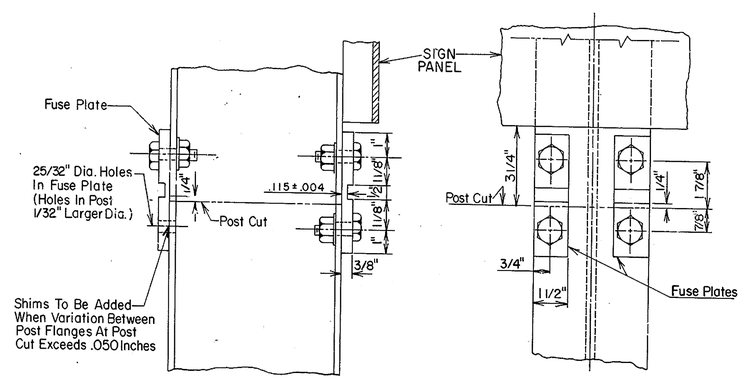

SIDE VIEW

FRONT ELEVATION

DETAILS OF FUSE PLATE

NOTE:

Fuse plates shall be made from alloy steel which conforms to AISI 4340, 4130 or an equivalent material and shall have a minimum tensile yield stress of 90,000 psi.
Bolts and nuts shall be made from alloy steel AASHTO M164 (ASTM A325).
All steel parts shall be hot dip galvanized in conformance with AASHTO M111 (ASTM A123).

DELAWARE
DEPARTMENT OF HIGHWAYS & TRANSPORTATION
DIVISION OF HIGHWAYS

GROUND MOUNT BREAKAWAY TYPE SIGN SUPPORTS & FOUNDATIONS

D. U. P.	SCALE	APPROVED BY:
T. G.R.D.	N.T.S.	BRIDGE ENGINEER
C. C.R.L.		

© MYLAR PRINT 19 1253

1 NEW SHEET - JUNE 1989

COUNTY	CONTRACT	P.B.A. REG. NO.	STATE	FED. AID PROJECT NO.	SHEET NO.	TOTAL SHEETS
N.C.	83-101-04	2	DEL	F-1045 (20)	TR-7A	167

TRAFFIC

NO.	REVISIONS	BY	DATE

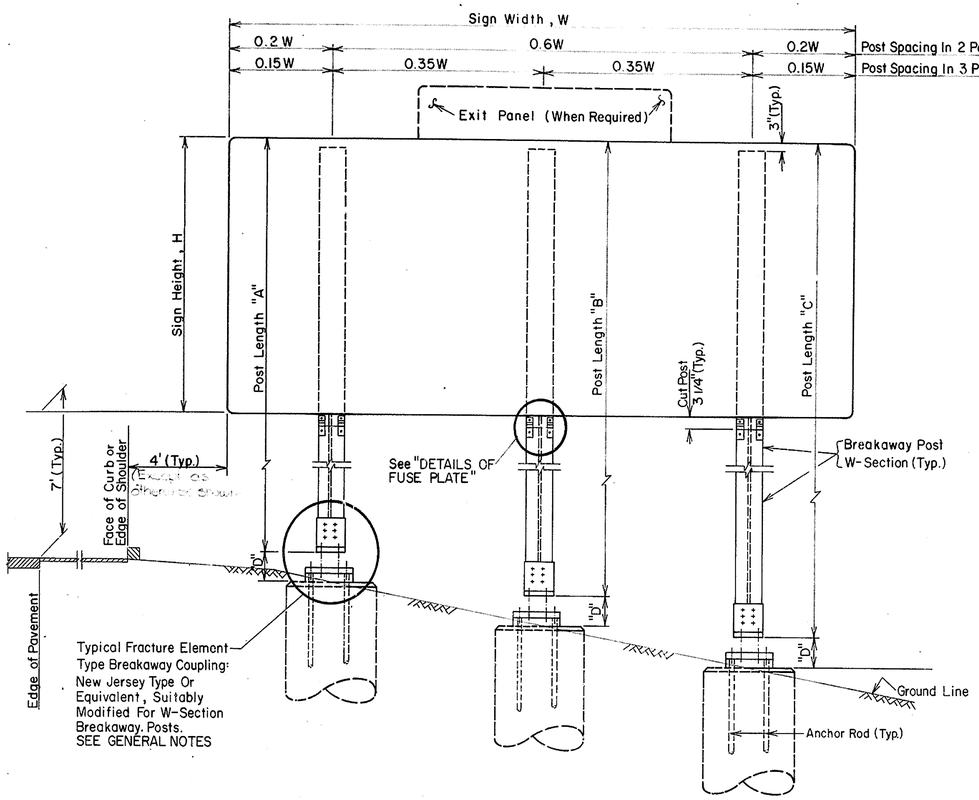

TYPICAL BREAKAWAY SIGN STRUCTURE

BREAKAWAY SIGN STRUCTURE DATA TABLE

SIGN LOCATION	SHEET NO.	SIGN WIDTH, W	SIZE HEIGHT, H	EXIT PANEL SIZE	NO. POSTS	POST SPACING	POST SIZE	POST LENGTH* A	B	C	FOOTING DIA., Ø	DEPTH, d
GA - 1		14'-0"	11'-6"	8'-6" × 2'-6"	2	8'-6"	W10 × 33	19'-6"	–	21'-0"	2'-6"	6'-0"
GA - 2		14'-0"	11'-6"	8'-6" × 2'-6"	2	8'-6"	W10 × 33	19'-6"	–	21'-0"	2'-6"	6'-0"
GA - 3		6'-0"	5'-0"	–	2	3'-6"	W 5 × 19	12'-0"	–	12'-6"	2'-0"	4'-6"
GA - 4		14'-6"	12'-0"	8'-6" × 2'-6"	2	8'-6"	W10 × 33	19'-6"	–	21'-0"	2'-6"	6'-0"
GA - 5		14'-6"	10'-6"	8'-6" × 2'-6"	2	8'-6"	W 5 × 19	14'-0"	–	16'-9"	2'-0"	4'-6"
~~GA - 6~~		~~14'-0"~~	~~9'-0"~~	–	~~2~~	~~8'-0"~~	~~W 6 × 25~~	~~16'-0"~~	–	~~16'-6"~~	~~2'-0"~~	~~4'-6"~~
~~GA - 7~~		~~12'-6"~~	~~8'-0"~~	–	~~2~~	~~7'-6"~~	~~W 10 × 33~~	~~15'-6"~~	–	~~16'-9"~~	~~2'-0"~~	~~4'-6"~~
GA - 8		14'-6"	12'-0"	8'-6" × 2'-6"	2	8'-6"	W 10 × 33	19'-6"	–	21'-0"	2'-6"	6'-0"
GA - 9		14'-0"	7'-0"	–	2	8'-0"	W8 × 24	18'-9"	–	20'-0"	2'-0"	4'-6"
~~GA - 10~~		~~10'-0"~~	~~6'-0"~~	–	~~2~~	~~6'-0"~~	~~W 5 × 19~~	~~13'-6"~~	–	~~14'-6"~~	~~2'-0"~~	~~4'-6"~~

NOTE: Post Length "A" is always adjacent to roadway. The post length are tabulated based on the assumption that dimension "D" is 6 1/2".

* These dimensions must be verified in the field prior to ordering materials.

—GENERAL NOTES—

1. Design criteria are based on "Standard Specifications for Structural Supports for Highway Signs, Luminaires and Traffic Signals, 1975" by AASHTO. Materials and Workmanship shall conform to The Delaware Department of Highways and Transportation, 1985-Standard Specifications and Special Provisions for this project.

2. Breakaway Posts shall conform to AASHTO M188 (ASTM A441) and be galvanized in accordance with AASHTO M111 (ASTM A123). Class "B" Concrete with ultimate compressive strength fc'=3,000 psi. shall be used in all footings; bar reinforcement shall conform to AASHTO M31 (ASTM A615).

3. An Auger shall be used to drill through the soil up to the desired depth of foundation. Reinforced concrete shall be placed on undisturbed soil to secure a firm contact between soil and conc. Footing tops shall be formed to a depth of 3" below ground surface.

4. Maximum projection above ground line for footing or anchor plate shall be limited to 4". Where necessary, a portion of concrete in the foundation shall be chamfered parallel to the earth slope in order to minimize footing projection above ground.

5. Complete details of Breakaway Couplings, Anchor Plates and Bolts shall be submitted by the contractor for approval by the Bridge Engineer.

6. The Contractor shall be required to submit vehicle crash testing reports indicating satisfactory performance of the breakaway mechanism with breakaway couplings and fuse plates under the following conditions:
   - Weight of vehicle = 2250 lbs. or equivalent.
   - Range of speed at impact = 20 mph to 60 mph.
   - Impact angle = upto 25° measured from the direction of roadway.
   - Maximum change of momentum = 750 lb-sec.
   - Average vehicle deceleration = 6g or less.

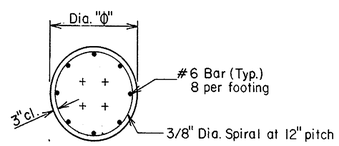

SECTION X-X

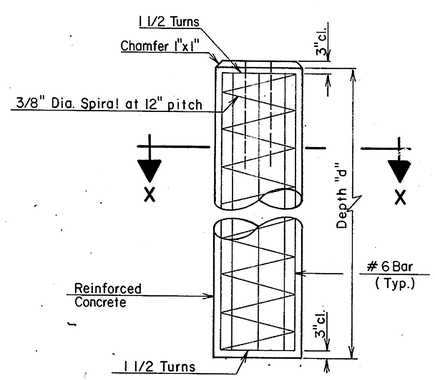

DETAILS OF FOUNDATION

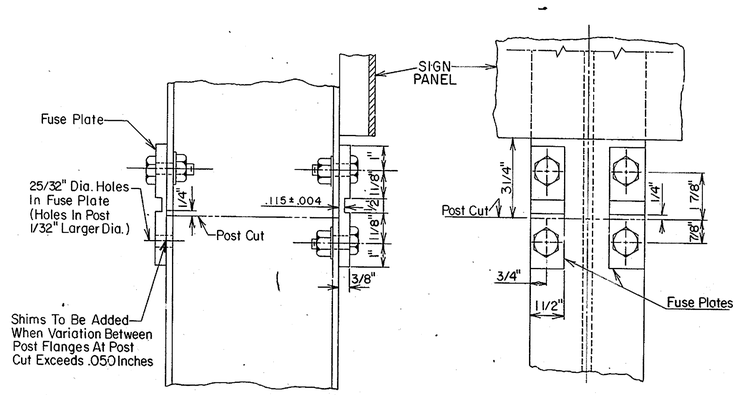

SIDE VIEW

FRONT ELEVATION

DETAILS OF FUSE PLATE

NOTE:

Fuse plates shall be made from alloy steel which conforms to AISI 4340, 4130 or an equivalent material and shall have a minimum tensile yield stress of 90,000 psi.
Bolts and nuts shall be made from alloy steel AASHTO M164 (ASTM A325).
All steel parts shall be hot dip galvanized in conformance with AASHTO M111 (ASTM A123).

DELAWARE
DEPARTMENT OF HIGHWAYS & TRANSPORTATION
DIVISION OF HIGHWAYS

GROUND MOUNT BREAKAWAY TYPE SIGN SUPPORTS & FOUNDATIONS

D. U.P.	SCALE	APPROVED BY:
T. G.R.D.	N.T.S.	H. C. McDonald
C. C.R.L.		BRIDGE ENGINEER

1 NEW SHEET - JUNE 1989

DESIGN ____ CHKD. ____

PREL. TRACING ____

CONTRACT	COUNTY	FEDERAL AID PROJECT No	SHEET No	TOTAL SHEETS
83-101-04	NEW CASTLE	F-1045 (20)	TR-8	168

TRAFFIC

OVERHEAD SIGN SUPPORT STRUCTURE
LINE DIAGRAMS

VOID JUNE 1989

REPLACED BY SHEET TR-8A

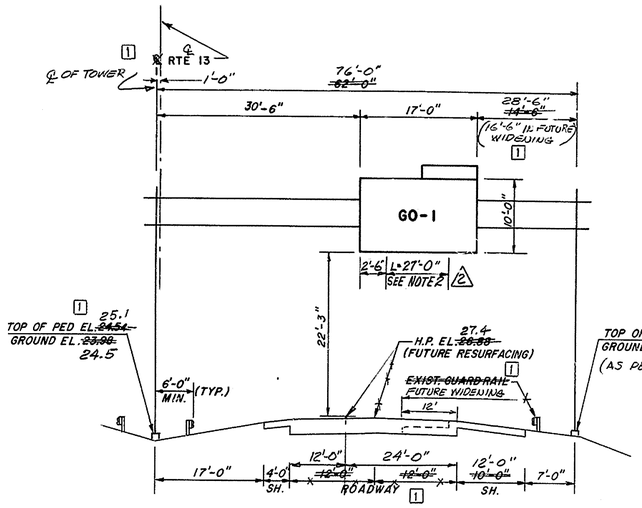

LINE DIAGRAM - OVERHEAD SIGN SUPPORT STRUCTURE NO. 1

RTE 13 N.B. STA. 6+50

SCALE: NONE

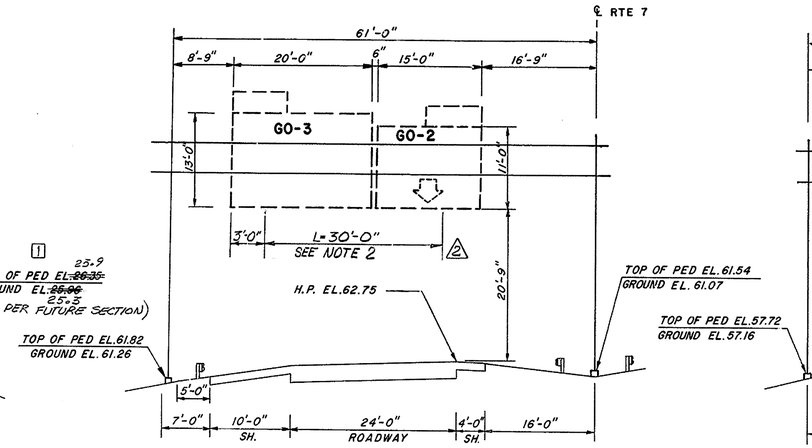

LINE DIAGRAM - OVERHEAD SIGN SUPPORT STRUCTURE NO. 2

RTE 7 S.B. STA. 196+00

SCALE: NONE

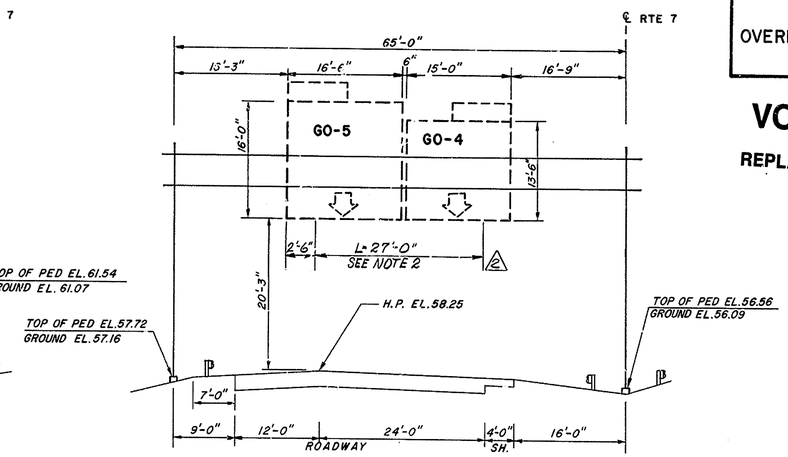

LINE DIAGRAM - OVERHEAD SIGN SUPPORT STRUCTURE NO. 3

RTE 7 S.B. STA. 205+00

SCALE: NONE

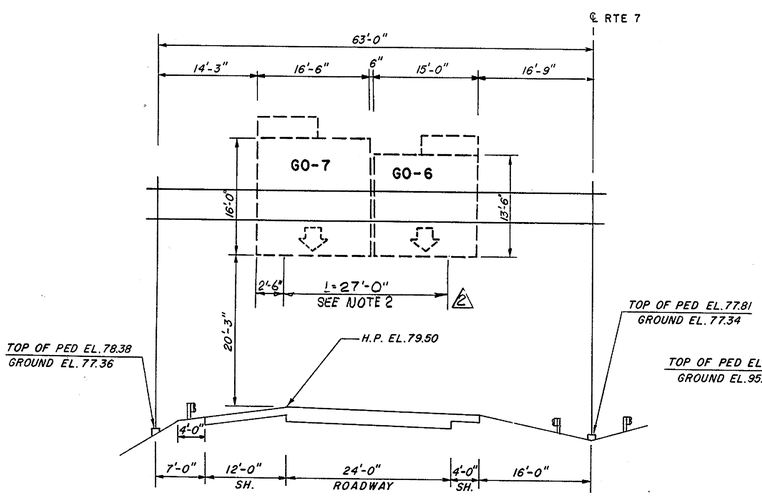

LINE DIAGRAM - OVERHEAD SIGN SUPPORT STRUCTURE NO. 4

RTE 7 S.B. STA. 218+00

SCALE: NONE

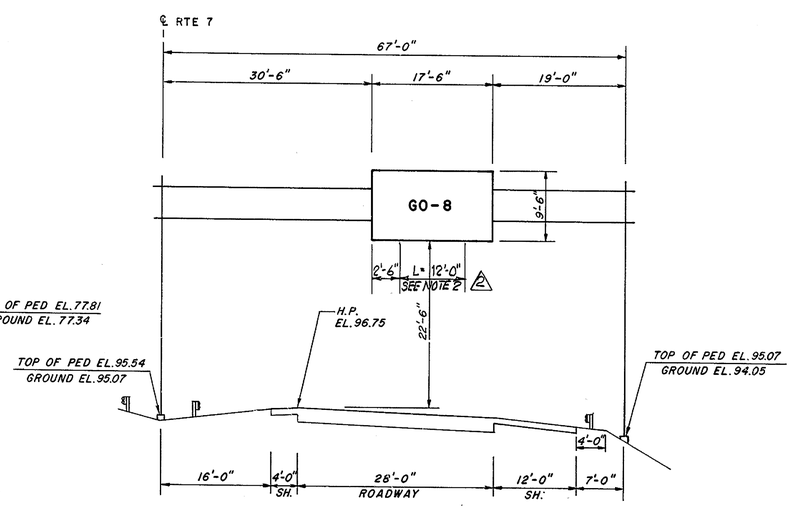

LINE DIAGRAM - OVERHEAD SIGN SUPPORT STRUCTURE NO. 5

RTE 7 N.B. STA. 225+00

SCALE: NONE

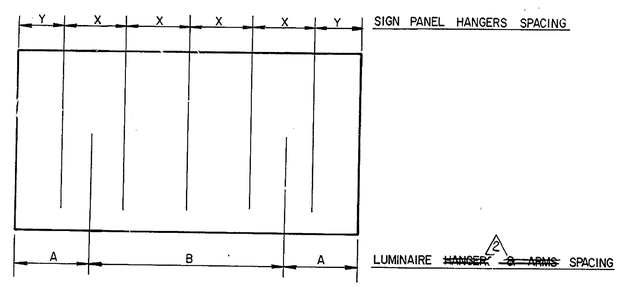

SIGN
DIAGRAM OF ▲ HANGER ASSEMBLIES
AND LUMINAIRE LOCATION 2

SIGN No:	SIGN HANGERS			LUMINAIRES ~~HANGERS~~		
	X	Y	NO OF HANGERS	A	B	NO. OF ~~HANGERS~~ LUMINAIRES 2
GO - 1	4'-0"	2'-6"	4	4'-6"	8'-0"	2
GO - 2	4'-0"	1'-6"	4	7'-6"	—	1
GO - 3	4'-0"	2'-0"	5	5'-0"	10'-0"	2
GO - 4	4'-0"	1'-6"	4	7'-6"	—	1
GO - 5	4'-0"	-3"	4	4'-6"	7'-6"	2
GO - 6	4'-0"	1'-6"	4	7'-6"	—	1
GO - 7	4'-0"	2'-3"	4	4'-6"	7'-6"	2
GO - 8	4'-6"	2'-0"	4	4'-0"	9'-6"	2

SIGN
TABLE OF ▲ HANGER ASSEMBLIES
AND LUMINAIRE LOCATION 2

2 NOTE:
1. FOR SIGN HANGER AND LUMINAIRE SUPPORT DETAILS SEE DRAWING NO. TR15
2. L - DENOTES LENGTH OF LUMINAIRE SUPPORT CHANNELS

Addendum No. 2 Added Luminaire Location + Note 1 Revised 7-27-88 BRP
Revision No. 1 Structure No. 1 Revised 2-24-86 BRP

PRELIM. TRACING ____ DESIGN ____ CHKD. ____

CONTRACT	COUNTY	FEDERAL AID PROJECT Nº	SHEET Nº	TOTAL SHEETS
83-101-04	NEW CASTLE	F-1045 (20)	TR-8A	168

TRAFFIC

OVERHEAD SIGN SUPPORT STRUCTURE LINE DIAGRAMS

3 NEW SHEET - JUNE 1989

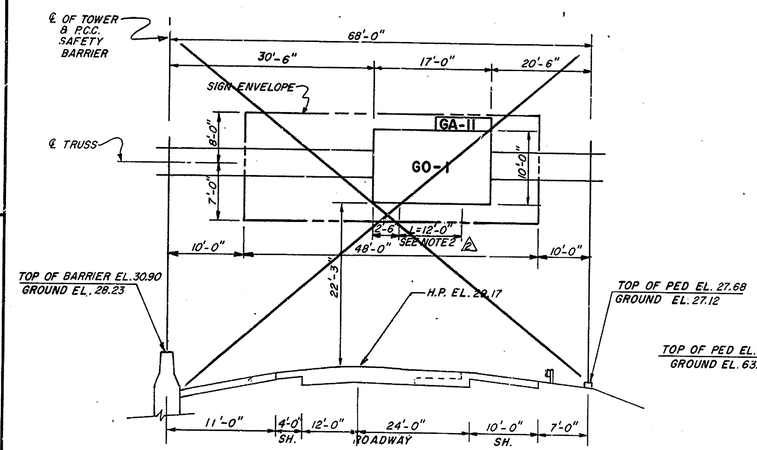

DELETED

~~LINE DIAGRAM - OVERHEAD SIGN SUPPORT STRUCTURE NO.1~~

~~RTE 13 N.B. STA. 7+00~~

SCALE: NONE

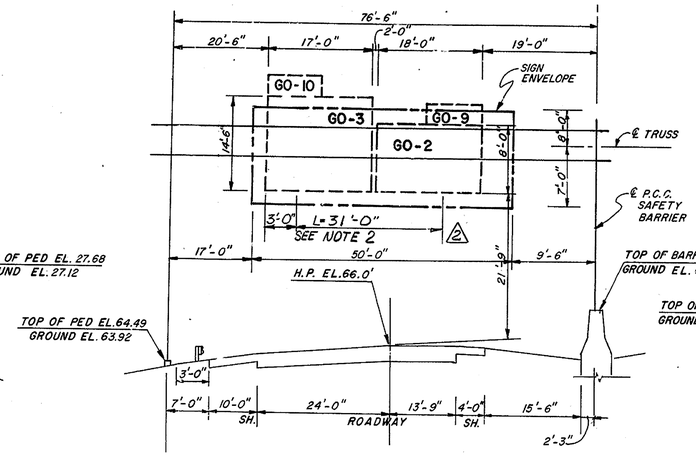

LINE DIAGRAM - OVERHEAD SIGN SUPPORT STRUCTURE NO.2

RAMP "A" S.B. STA. A191+00

SCALE: NONE

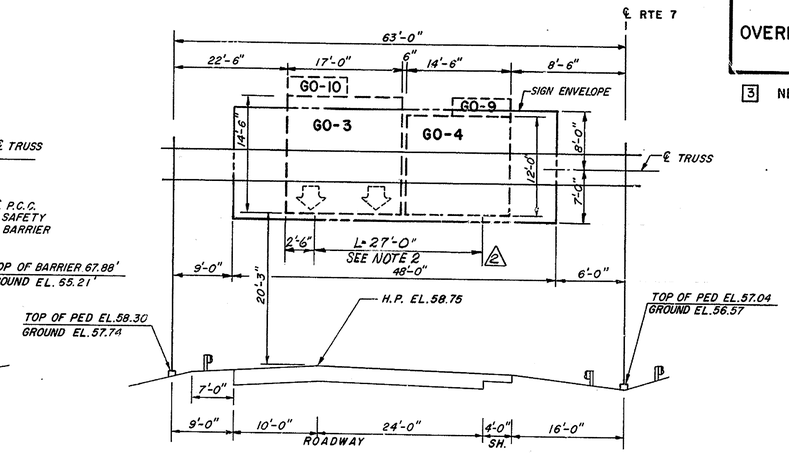

LINE DIAGRAM - OVERHEAD SIGN SUPPORT STRUCTURE NO.3

RTE 7 S.B. STA. 205+00

SCALE: NONE

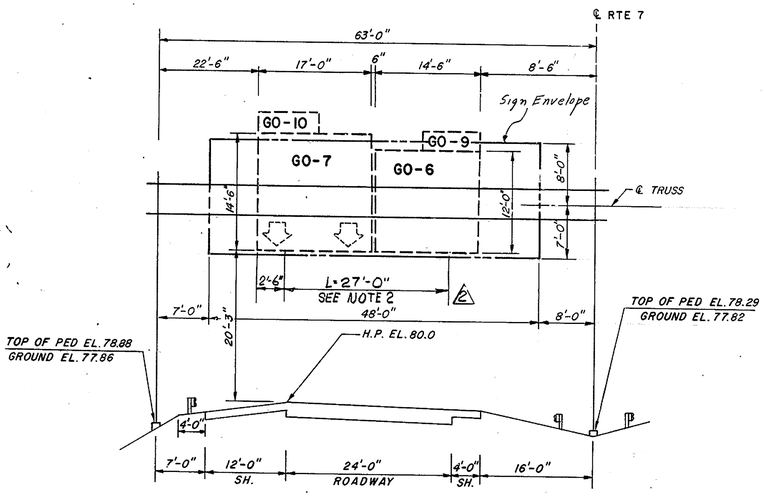

LINE DIAGRAM - OVERHEAD SIGN SUPPORT STRUCTURE NO.4

RTE 7 S.B. STA. 218+00

SCALE: NONE

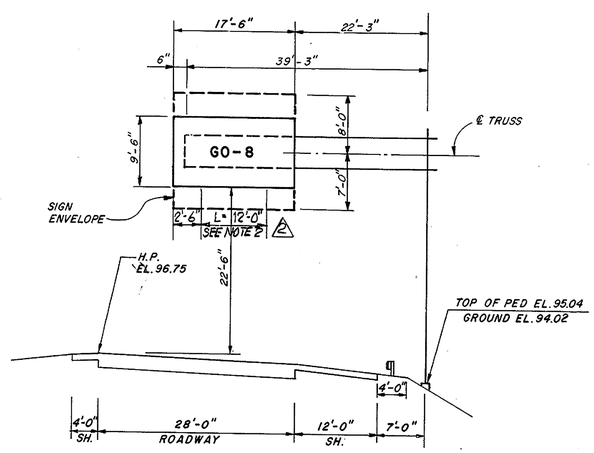

LINE DIAGRAM - OVERHEAD SIGN SUPPORT STRUCTURE NO.5

RTE 7 N.B. STA. 225+00

SCALE: NONE

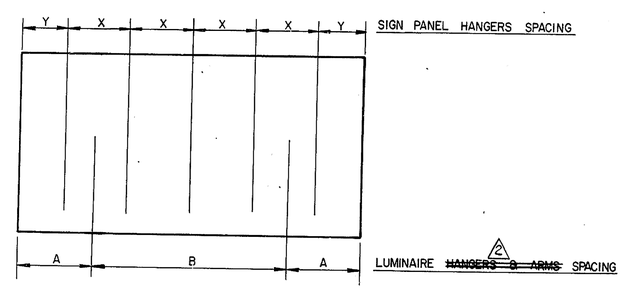

SIGN DIAGRAM OF HANGER ASSEMBLIES AND LUMINAIRE LOCATION

SIGN No:	SIGN HANGERS			LUMINAIRES ~~HANGERS~~		
	X	Y	NO OF HANGERS	A	B	NO. OF ~~HANGERS~~ LUMINAIRES
~~GO-1~~	~~4'-0"~~	~~2'-6"~~	~~4~~	~~4'-6"~~	~~8'-0"~~	~~2~~
GO-2	4'-0"	1'-0"	5	4'-6"	9'-0"	2
GO-3	3'-0"	1'-0"	6	4'-6"	8'-0"	2
GO-4	4'-0"	1'-3"	4	7'-3"	—	1
~~GO-5~~	~~4'-0"~~	~~2'-3"~~	~~4~~	~~4'-6"~~	~~7'-6"~~	~~2~~
GO-6	4'-0"	1'-3"	4	7'-3"	—	1
GO-7	3'-0"	1'-0"	6	4'-6"	8'-0"	2
GO-8	4'-6"	2'-0"	4	4'-0"	9'-6"	2

SIGN TABLE OF HANGER ASSEMBLIES AND LUMINAIRE LOCATION

NOTE:
1. FOR SIGN HANGER AND LUMINAIRE SUPPORT DETAILS SEE DRAWING NO. TR15
2. L - DENOTES LENGTH OF LUMINAIRE SUPPORT CHANNELS
3. FOR CONCRETE BARRIER DETAILS SEE DRAWING NO M-5

Addendum No. 2 Added luminaire Locations + Notes 11/16/89 RRP
Revision No. 1 Structure No. 1 Revised 2-24-88 RCP
3 NEW SHEET - JUNE 1989

PREL. TRACING ____ DESIGN ____ CHKD. ____

Revision No. 1 Changed Sign Support Quantities 2-24-88 RPR

CONTRACT	COUNTY	FEDERAL AID PROJECT Nº	SHEET Nº	TOTAL SHEETS
83-101-04	NEW CASTLE	F-1045 (20)	TR-9	169

TRAFFIC

Addendum No. 2 Revise Index 11/16/87 RPR

VOID JUNE 1989
REPLACED BY SHEET TR-9A

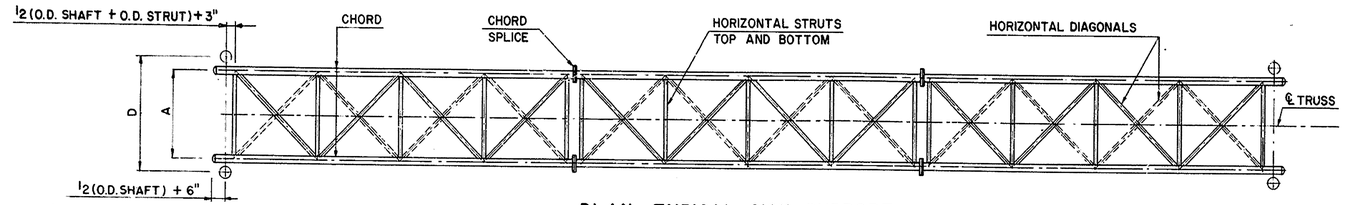

PLAN TYPICAL SIGN SUPPORT

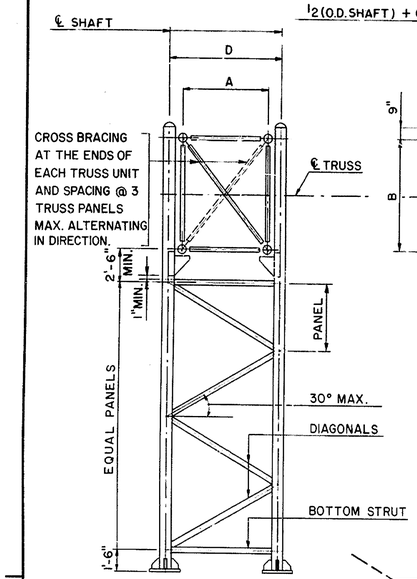

END ELEVATION
N.T.S.

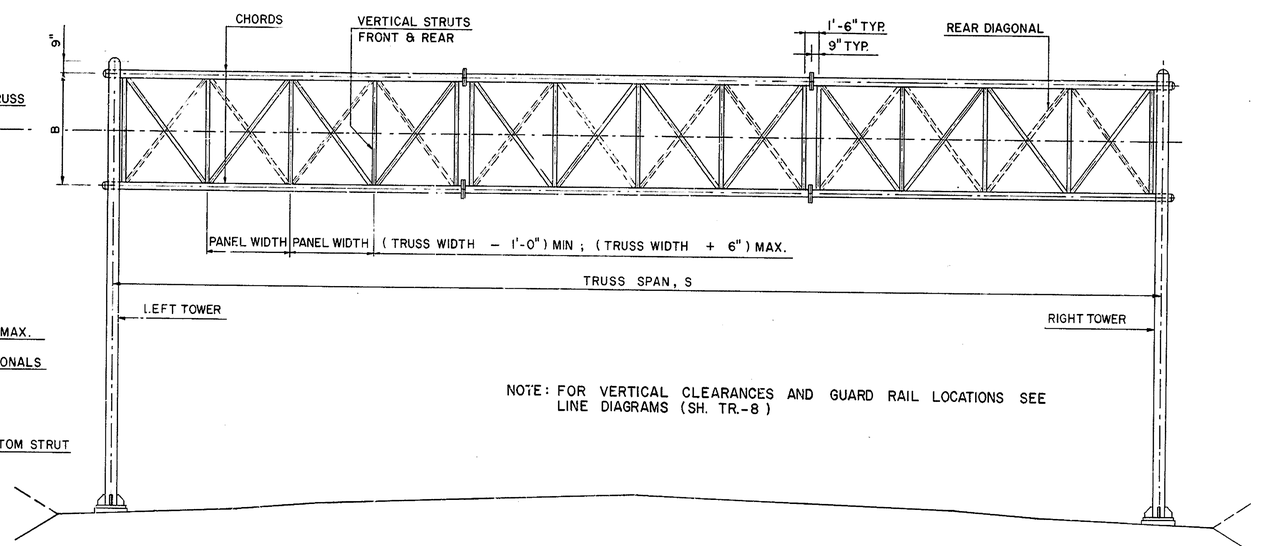

NOTE: FOR VERTICAL CLEARANCES AND GUARD RAIL LOCATIONS SEE LINE DIAGRAMS (SH. TR.-8)

ELEVATION TYPICAL SIGN SUPPORT
N.T.S.

FOR INFORMATION ONLY

OVERHEAD SIGN SUPPORT QUANTITIES

	UNIT	ITEM	STRUCTURE No.	1	2	3	4	5	TOTAL
1	C.Y.	EXCAVATION AND BACKFILL FOR STRUCTURES		~~92~~ 220	96	92	92	92	~~464~~ 592
1	SQ. FT.	TEMPORARY SHEETING	1,630	~~980~~	–	–	–	–	~~980~~ 1630
1	C.Y.	P.C.C. MASONRY, O.S.S. FOOTING, CLASS B.		~~35~~ 35	31	30	30	30	~~154~~ 156
1	LBS	REINFORCEMENT STEEL	3,200	~~2,700~~	3,000	2,800	3,000	3,000	~~14,500~~ 15,000
1	LBS	STEEL STRUCTURES	30,500	~~21,600~~	23,600	23,800	23,800	24,800	~~117,600~~ 126,500
1	C.Y.	BORROW, TYPE F		200	–	–	–	–	200

CONSTRUCTION

THE CONTRACTOR SHALL MAKE HIMSELF AWARE OF ALL UTILITIES WITHIN THE PROPOSED STRUCTURE AREAS AND SHALL DIG TEST HOLES TO DETERMINE IF CONFLICTS WITH EXISTING UNDERGROUND UTILITIES ARE INEVITABLE. THE COST THEREOF SHALL BE INCLUDED IN THE VARIOUS SECTION SCHEDULED IN THE PROPOSAL.
THE CONTRACTOR SHALL VERIFY THE ROAD CROSS SECTION AT THE SIGN LOCATIONS AND IS RESPONSIBLE TO PROVIDE ALL CLEARANCES REQUIRED.
IF CURBING OR SIDEWALKS MUST BE REMOVED DURING CONSTRUCTION, THEN THESE ITEMS SHALL BE REPLACED AND PAYMENT INCLUDED IN THE UNIT BID PRICE FOR EACH RESPECTIVE SIGN LOCATION.

GENERAL NOTES:

DESIGN SPECIFICATIONS:

1983 AASHTO STANDARD SPECIFICATIONS FOR HIGHWAY BRIDGES

AND 1975 AASHTO SPECIFICATIONS FOR STRUCTURAL SUPPORTS FOR HIGHWAY SIGNS, LUMINAIRES AND TRAFFIC SIGNALS.

DESIGN CRITERIA:

DESIGN WIND VELOCITY	85	MILES PER HOUR
DESIGN ICE LOAD	3	P.S.F.

CONCRETE DESIGN STRESSES:

(A) SPECIFIED COMPRESSIVE STRENGTH (f'c)	3,000 P.S.I.
(B) EXTREME FIBER COMPRESSIVE STRESS (fc)	1,200 P.S.I.

REINFORCEMENT STEEL:

(A) A.S.T.M. A615 GRADE 60	
(B) TENSILE STRESS (fs)	24,000 P.S.I.

STRUCTURAL STEEL YIELD STRENGTH:

(A) PIPES AND TUBES (Fy)	35,000 P.S.I.
(B) OTHERS (Fy)	36,000 P.S.I.

MAXIMUM FOUNDATION BEARING PRESSURE 1.25 TONS PER SQUARE FOOT

FOOTING DESIGNED SUCH THAT A MINIMUM OF 75 PERCENT OF THE FOOTING IS ALWAYS IN CONTACT, A MAXIMUM OF 25 PERCENT OF THE FOOTING IS IN UPLIFT.

PERMANENT CAMBER EQUAL TO L/1000 HAS BEEN PROVIDED IN ADDITION TO DEAD LOAD CAMBER.

CONSTRUCTION SPECIFICATIONS:

STANDARD SPECIFICATIONS FOR ROAD AND BRIDGE CONSTRUCTION 1985 AND SPECIAL PROVISIONS FOR THIS PROJECT.

MATERIALS:

THE MATERIAL FOR CAPS, FOR ENDS OF CHORDS AND TOPS OF SHAFTS, SHALL BE THE SAME AS THE CAPPED TUBE UNLESS OTHERWISE AUTHORIZED AND APPROVED BY THE ENGINEER.

GALVANIZED STEEL:

STEEL PIPE SHALL CONFORM TO A.S.T.M. DESIGNATION A53, TYPE S OR TYPE E, GRADE B. ALL OTHER STEEL SHALL CONFORM TO A.S.T.M. SPECIFICATION A36.

ALL FASTENERS SHALL BE STAINLESS STEEL, CONFORMING TO CURRENT A.S.T.M. SPECIFICATION A320 GRADE B8 CLASS 2 (A.I.S.I. TYPE 304), STRAIN HARDENED.

STEEL ANCHOR BOLTS, NUTS AND WASHERS SHALL CONFORM TO A.S.T.M. SPECIFICATIONS A36 AND 307, AND THE TOP 12 INCHES OF BOLTS SHALL BE HOT-DIP GALVANIZED, AS PER SPECIFICATION.
STEEL CAP CASTINGS SHALL CONFORM TO THE REQUIREMENTS OF CURRENT A.S.T.M. SPECIFICATIONS A27 GRADE 70-36.

WELDING SHALL BE AS SPECIFIED IN THE CONSTRUCTION SPECIFICATIONS

AFTER COMPLETE FABRICATION, EACH STEEL SECTION SHALL BE HOT-DIP GALVANIZED CONFORMING TO THE REQUIREMENTS OF A.S.T.M. 123 AS MODIFIED BY THE CONSTRUCTION SPECIFICATIONS.

ALUMINUM: (ALTERNATE AT CONTRACTOR'S OPTION):

ALUMINUM SHALL CONFORM TO THE CURRENT A.S.T.M. SPECIFICATIONS AND ALLOY LISTED BELOW:

APPLICATION	A.S.T.M. DESIGNATION	A.S.T.M. ALLOY
ROLLED OR EXTRUDED SHAPES	B308	6061-T6
PLATE	B209	6061-T6
DRAWN TUBE	B210	6061-T6
EXTRUDED TUBE	B221	6061-T6
SHIMS	B209	1100-0

FILLER METAL FOR WELDING ALUMINUM SHALL CONFORM TO CURRENT A.S.T.M. SPECIFICATION B285, A.W.S.- A.S.T.M. CLASSIFICATION ER5556 OR ER5356.

STAINLESS STEEL BOLTS, NUTS AND WASHERS SHALL CONFORM TO CURRENT A.S.T.M. SPECIFICATION A320 GRADE B8 CLASS 2 (A.I.S.I. TYPE 304), AND SHALL BE STRAIN HARDENED.
ALUMINUM CAP CASTINGS SHALL CONFORM TO THE REQUIREMENTS OF CURRENT A.S.T.M. SPECIFICATIONS B108 OR B26, ALLOY 356-F.
ALUMINUM WELDING SHALL BE AS SPECIFIED IN THE CONSTRUCTION SPECIFICATIONS.

REINFORCEMENT STEEL:

REINFORCEMENT STEEL SHALL BE A.S.T.M. DESIGNATION A615, GRADE 60. MIN. COVER SHALL BE 2" IN PEDESTAL AND 3" IN FOOTING.

CONCRETE:

ALL CONCRETE SHALL BE CLASS B CONCRETE IN STRUCTURES.

ALTERNATE DESIGN

IN PLACE OF PLAN CONSTRUCTION DETAILS, THE CONTRACTOR MAY AT HIS OPTION SUBMIT TO THE ENGINEER FOR THE APPROVAL OTHER GALVANIZED STEEL OR ALUMINIUM STRUCTURES MEETING THE STUCTURAL DESIGN SPECIFICATIONS. CSR ≤ 0.9, ALTERNATE FOUNDATION DESIGN MAY ALSO BE SUBMITTED FOR APPROVAL TO CONFORM WITH THE ALTERNATE SUPERSTRUCTURE DESIGN.

INDEX

SHEET NO.	DESCRIPTION
TR-9	GENERAL NOTES AND ELEVATION
TR-10	SCHEDULE OF STRUCTURES
TR-11	SIGN SUPPORT FOUNDATION
TR-12	STEEL TRUSS DETAILS
TR-13	STEEL TOWER DETAILS
TR-14	TOWER TRUSS SEAT TABLES
2 ~~TR-15~~	~~MAINTENANCE WALKWAY DETAILS~~
TR-16	TYPICAL ELECTRICAL DETAILS
2 TR-15	SIGN HANGER AND LUMINAIRE SUPPORT DETAILS

DELAWARE
DEPARTMENT OF TRANSPORTATION
DIVISION OF HIGHWAYS

OVERHEAD SIGN SUPPORT STRUCTURE

GENERAL NOTES AND ELEVATION

D T C	SCALE N.T.S.	APPROVED BY BRIDGE ENGINEER

E184-B3

CHK. BY
CHK. BY
CHK. BY
CHK. BY

CONTRACT	COUNTY	FEDERAL AID PROJECT Nº	SHEET Nº	TOTAL SHEETS
83-101-04	NEW CASTLE	F-1045 (20)	TR-9A	169

TRAFFIC

Addendum No 2 Revise Index 11/16/87 RFR

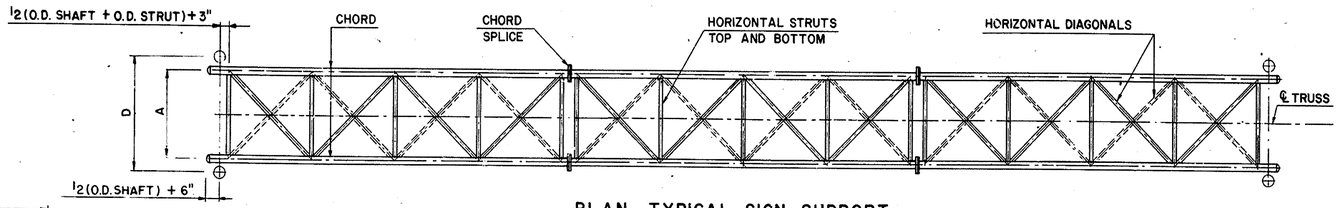

PLAN TYPICAL SIGN SUPPORT

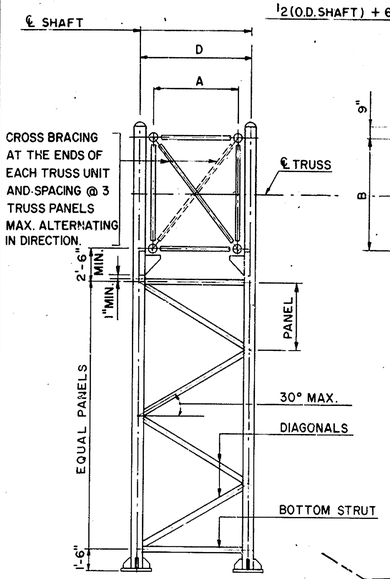

END ELEVATION

N.T.S.

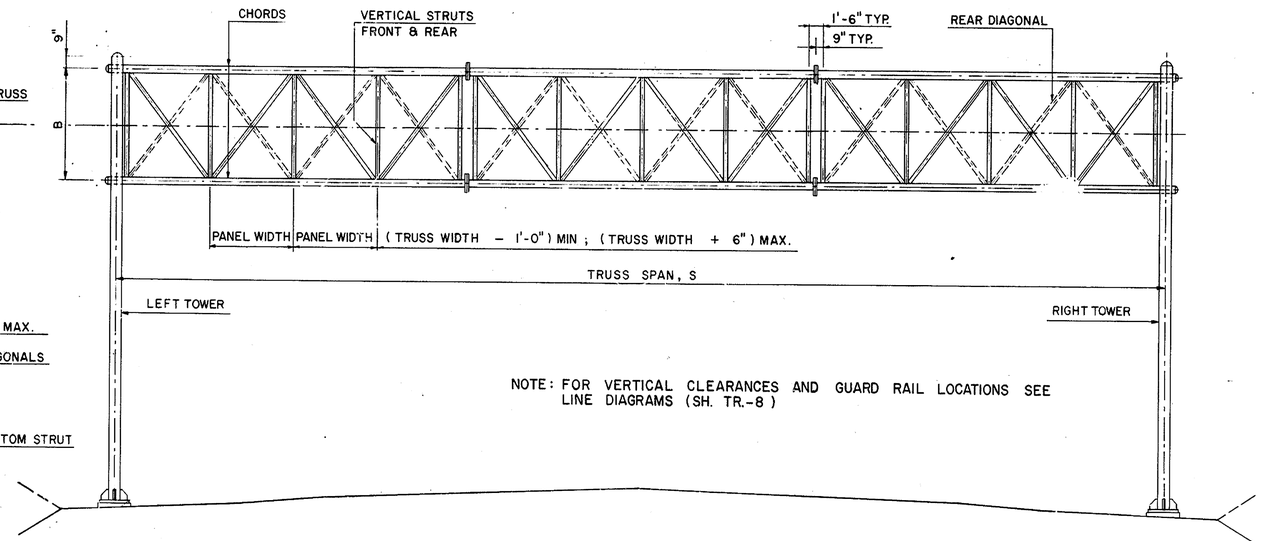

NOTE: FOR VERTICAL CLEARANCES AND GUARD RAIL LOCATIONS SEE LINE DIAGRAMS (SH. TR.-8)

ELEVATION TYPICAL SIGN SUPPORT

N.T.S.

FOR INFORMATION ONLY

OVERHEAD SIGN SUPPORT QUANTITIES

UNIT	ITEM \ STRUCTURE No.		2	3	4		TOTAL
C.Y.	EXCAVATION AND BACKFILL FOR STRUCTURES		210	196	132		538
SQ. FT.	TEMPORARY SHEETING		–	–	–		
C.Y.	P.C.C. MASONRY, O.S.S. FOOTING, CLASS B.		68*	31	31		130
LBS	REINFORCEMENT STEEL		4,600*	3,100	3,100		10,800
LBS	STEEL STRUCTURES		31,400	24,400	23,500		79,300

*QUANTITIES INCLUDES BARRIER TRANSITIONS FOR STRUCTURE NO. 2 (SEE SHEET M-5)

CONSTRUCTION

THE CONTRACTOR SHALL MAKE HIMSELF AWARE OF ALL UTILITIES WITHIN THE PROPOSED STRUCTURE AREAS AND SHALL DIG TEST HOLES TO DETERMINE IF CONFLICTS WITH EXISTING UNDERGROUND UTILITIES ARE INEVITABLE. THE COST THEREOF SHALL BE INCLUDED IN THE VARIOUS SECTION SCHEDULED IN THE PROPOSAL.

THE CONTRACTOR SHALL VERIFY THE ROAD CROSS SECTION AT THE SIGN LOCATIONS AND IS RESPONSIBLE TO PROVIDE ALL CLEARANCES REQUIRED.

IF CURBING OR SIDEWALKS MUST BE REMOVED DURING CONSTRUCTION, THEN THESE ITEMS SHALL BE REPLACED AND PAYMENT INCLUDED IN THE UNIT BID PRICE FOR EACH RESPECTIVE SIGN LOCATION.

GENERAL NOTES:

DESIGN SPECIFICATIONS:

1983 AASHTO STANDARD SPECIFICATIONS FOR HIGHWAY BRIDGES

AND 1975 AASHTO SPECIFICATIONS FOR STRUCTURAL SUPPORTS FOR HIGHWAY SIGNS, LUMINAIRES AND TRAFFIC SIGNALS.

DESIGN CRITERIA:

DESIGN WIND VELOCITY	85	MILES PER HOUR
DESIGN ICE LOAD	3	P.S.F.

CONCRETE DESIGN STRESSES:

(A) SPECIFIED COMPRESSIVE STRENGTH (f'c)	3,000 P.S.I.
(B) EXTREME FIBER COMPRESSIVE STRESS (fc)	1,200 P.S.I.

REINFORCEMENT STEEL:

(A) A.S.T.M. A615 GRADE 60	
(B) TENSILE STRESS (fs)	24,000 P.S.I.

STRUCTURAL STEEL YIELD STRENGTH:

(A) PIPES AND TUBES (Fy)	35,000 P.S.I.
(B) OTHERS (Fy)	36,000 P.S.I.

MAXIMUM FOUNDATION BEARING PRESSURE 1.25 TONS PER SQUARE FOOT

FOOTING DESIGNED SUCH THAT A MINIMUM OF 75 PERCENT OF THE FOOTING IS ALWAYS IN CONTACT, A MAXIMUM OF 25 PERCENT OF THE FOOTING IS IN UPLIFT.

PERMANENT CAMBER EQUAL TO L/1000 HAS BEEN PROVIDED IN ADDITION TO DEAD LOAD CAMBER.

3 NEW SHEET - JUNE 1989

CONSTRUCTION SPECIFICATIONS:

STANDARD SPECIFICATIONS FOR ROAD AND BRIDGE CONSTRUCTION 1985 AND SPECIAL PROVISIONS FOR THIS PROJECT.

MATERIALS:

THE MATERIAL FOR CAPS, FOR ENDS OF CHORDS AND TOPS OF SHAFTS, SHALL BE THE SAME AS THE CAPPED TUBE UNLESS OTHERWISE AUTHORIZED AND APPROVED BY THE ENGINEER.

GALVANIZED STEEL:

STEEL PIPE SHALL CONFORM TO A.S.T.M. DESIGNATION A53, TYPE S OR TYPE E, GRADE B. ALL OTHER STEEL SHALL CONFORM TO A.S.T.M. SPECIFICATION A36.

ALL FASTENERS SHALL BE STAINLESS STEEL, CONFORMING TO CURRENT A.S.T.M. SPECIFICATION A320 GRADE B8 CLASS 2 (A.I.S.I. TYPE 304), STRAIN HARDENED.

STEEL ANCHOR BOLTS, NUTS AND WASHERS SHALL CONFORM TO A.S.T.M. SPECIFICATIONS A36 AND 307, AND THE TOP 12 INCHES OF BOLTS SHALL BE HOT-DIP GALVANIZED, AS PER SPECIFICATION. STEEL CAP CASTINGS SHALL CONFORM TO THE REQUIREMENTS OF CURRENT A.S.T.M. SPECIFICATIONS A27 GRADE 70-36.

WELDING SHALL BE AS SPECIFIED IN THE CONSTRUCTION SPECIFICATIONS

AFTER COMPLETE FABRICATION, EACH STEEL SECTION SHALL BE HOT-DIP GALVANIZED CONFORMING TO THE REQUIREMENTS OF A.S.T.M. 123 AS MODIFIED BY THE CONSTRUCTION SPECIFICATIONS.

ALUMINUM: (ALTERNATE AT CONTRACTOR'S OPTION):

ALUMINUM SHALL CONFORM TO THE CURRENT A.S.T.M. SPECIFICATIONS AND ALLOY LISTED BELOW:

APPLICATION	A.S.T.M DESIGNATION	A.S.T.M. ALLOY
ROLLED OR EXTRUDED SHAPES	B308	6061-T6
PLATE	B209	6061-T6
DRAWN TUBE	B210	6061-T6
EXTRUDED TUBE	B221	6061-T6
SHIMS	B209	1100-0

FILLER METAL FOR WELDING ALUMINUM SHALL CONFORM TO CURRENT A.S.T.M. SPECIFICATION B285, A.W.S.- A.S.T.M. CLASSIFICATION ER5556 OR ER5356.

STAINLESS STEEL BOLTS, NUTS AND WASHERS SHALL CONFORM TO CURRENT A.S.T.M. SPECIFICATION A320 GRADE B8 CLASS 2 (A.I.S.I. TYPE 304), AND SHALL BE STRAIN HARDENED.
ALUMINUM CAP CASTINGS SHALL CONFORM TO THE REQUIREMENTS OF CURRENT A.S.T.M. SPECIFICATIONS B108 OR B26, ALLOY 356-F.
ALUMINUM WELDING SHALL BE AS SPECIFIED IN THE CONSTRUCTION SPECIFICATIONS.

REINFORCEMENT STEEL:

REINFORCEMENT STEEL SHALL BE A.S.T.M. DESIGNATION A615, GRADE 60. MIN. COVER SHALL BE 2" IN PEDESTAL AND 3" IN FOOTING.

CONCRETE:

ALL CONCRETE SHALL BE CLASS B CONCRETE IN STRUCTURES.

ALTERNATE DESIGN

IN PLACE OF PLAN CONSTRUCTION DETAILS, THE CONTRACTOR MAY AT HIS OPTION SUBMIT TO THE ENGINEER FOR THE APPROVAL OTHER GALVANIZED STEEL OR ALUMINIUM STRUCTURES MEETING THE STUCTURAL DESIGN SPECIFICATIONS. C S R ≤ 0.9. ALTERNATE FOUNDATION DESIGN MAY ALSO BE SUBMITTED FOR APPROVAL TO CONFORM WITH THE ALTERNATE SUPERSTRUCTURE DESIGN. THE ALTERNATE DESIGN IS TO ALLOW FOR A "SIGN ENVELOPE" FOR SIGN STRUCTURES 2, 3, 4 & 5 AS SHOWN ON THE LINE DIAGRAMS - SHEET TR-8A.

INDEX

SHEET NO.	DESCRIPTION
TR-9A	GENERAL NOTES AND ELEVATION
TR-10A	SCHEDULE OF STRUCTURES
TR-11A	SIGN SUPPORT FOUNDATION
TR-12A	STEEL TRUSS DETAILS
TR-13A	STEEL TOWER DETAILS
TR-14	TOWER TRUSS SEAT TABLES
~~TR-15~~	~~MAINTENANCE WALKWAY DETAILS~~
TR-16	TYPICAL ELECTRICAL DETAILS
TR-15	SIGN HANGER AND LUMINAIRE SUPPORT DETAILS

DELAWARE
DEPARTMENT OF TRANSPORTATION
DIVISION OF HIGHWAYS

OVERHEAD SIGN SUPPORT STRUCTURE

GENERAL NOTES AND ELEVATION

D T C	SCALE N.T.S.	APPROVED BY BRIDGE ENGINEER

REVISIONS

3 NEW SHEET - JUNE 1989

DESIGN CHKD. PREL. TRACING

Revision No. 7 Revised Steel Material For Sign Support No. 1. 2-24-88 RFR

CONTRACT	COUNTY	FEDERAL AID PROJECT Nº	SHEET Nº	TOTAL SHEETS
83-101-04	NEW CASTLE	F-1045 (20)	TR-10	170

TRAFFIC

VOID JUNE 1989
REPLACED BY SHEET TR-10A

Addendum No 2 Delete Note 5, Add Note 7 11/16/87 RFR

OVERHEAD SIGN SUPPORT STRUCTURES (ALUMINUM MATERIAL).

SIGN SUPPORTS		ELEVATION			SPAN	TRUSS						TOWER			
No.	STATION	℄ TRUSS	BOT. OF BASE PLATE LEFT	BOT. OF BASE PLATE RIGHT	S	A x B	CHORD O.D. x THICK.	DIAGONAL O.D. x THICK.	STRUT O.D. x THICK.	No. OF TRUSS UNITS	CAMBER	D	SHAFT O.D. x THICK.	DIAGONAL O.D. x THICK.	STRUT O.D. x THICK.

OVERHEAD SIGN SUPPORT STRUCTURES (STEEL MATERIAL)

SIGN SUPPORTS		ELEVATION			SPAN	TRUSS						TOWER			
No.	STATION	℄ TRUSS	BOT. OF BASE PLATE LEFT	BOT. OF BASE PLATE RIGHT	S	A x B	CHORD O.D. x THICK.	DIAGONAL O.D. x THICK.	STRUT O.D. x THICK.	No. OF TRUSS UNITS	CAMBER	D	SHAFT O.D. x THICK.	DIAGONAL O.D. x THICK.	STRUT O.D. x THICK.
		54.65	25.40	26.20	76'-0"		6.625x0.280					6'-0"	14.000x0.500	5.563x0.258	
1	6+50 RTE. 13 N.B.	~~54.13~~	~~24.79~~	~~26.80~~	~~62'-0"~~	4' x 4'	~~4.000x0.318~~	2.875 x 0.276	2.875 x 0.276	3	3.00"	~~5'-8"~~	~~12.750x0.375~~	~~3.500 x 0.300~~	3.500 x 0.300
2	196+00 RTE. 7 S.B.	90.00	62.07	61.79	61'-0"	4' x 4'	4.000 x 0.318	2.875 x 0.276	2.875 x 0.276	3	3.00"	5'-8"	12.750x0.500	3.500 x 0.300	3.500 x 0.300
3	205+00 RTE. 7 S.B.	85.50	57.97	56.81	65'-0"	4' x 4'	4.000 x 0.318	2.875 x 0.276	2.875 x 0.276	3	3.00"	5'-8"	12.750x0.500	3.500 x 0.300	3.500 x 0.300
4	218+00 RTE. 7 S.B.	106.75	78.63	78.06	63'-0"	4' x 4'	4.000 x 0.318	2.875 x 0.276	2.875 x 0.276	3	3.00"	5'-8"	12.750x0.500	3.500 x 0.300	3.500 x 0.300
5	225+00 RTE. 7 N.B.	124.00	95.79	95.32	67'-0"	4' x 4'	5.563 x 0.258	2.875 x 0.276	2.875 x 0.276	3	3.00"	5'-10"	12.750x0.500	3.500 x 0.300	3.500 x 0.300

OVERHEAD SIGN SUPPORT STRUCTURES (ALUMINUM TRUSSES AND STEEL TOWERS)

SIGN SUPPORTS		ELEVATION			SPAN	TRUSS						TOWER			
No.	STATION	℄ TRUSS	BOT. OF BASE PLATE LEFT	BOT. OF BASE PLATE RIGHT	S	A x B	CHORD O.D. x THICK.	DIAGONAL O.D. x THICK.	STRUT O.D. x THICK.	No. OF TRUSS UNITS	CAMBER	D	SHAFT O.D. x THICK.	DIAGONAL O.D. x THICK.	STRUT O.D. x THICK.

NOTES:

ALL ELEVATIONS SHALL BE VERIFIED IN THE FIELD BEFORE FABRICATION AND INSTALLATION.

LEFT AND RIGHT TOWER ARE VIEWED LOOKING UP STATION.

NUMBER OF TRUSS UNITS AS SHOWN IN SCHEDULE OF STRUCTURES ARE OPTIONAL.

THE WEB MEMBERS IN EACH FACE OF THE TRUSS MUST FORM CONTINUOUS TRUSSING IN THE STRUCTURE FROM SHAFT TO SHAFT.

NOTES:

1. FOR GENERAL INFORMATION SEE SHEET NO. TR-9
2. FOR SCHEDULE OF FOUNDATIONS SEE SHEET NO. TR-11
3. FOR TRUSS DETAILS SEE SHEET NO. TR-12.
4. FOR TOWER DETAILS SEE SHEET NO. TR-13 AND TR-14.
5. ~~FOR MAINTENANCE WALKWAY DETAILS SEE SHEET NO. TR-15~~
6. FOR TYPICAL ELECTRICAL DETAILS SEE SHEET NO. TR-16
7. FOR SIGN HANGER AND LUMINAIRE SUPPORT DETAILS SEE SHEET NO. TR-15

DELAWARE
DEPARTMENT OF TRANSPORTATION
DIVISION OF HIGHWAYS

OVERHEAD SIGN SUPPORT STRUCTURE

SCHEDULE OF STRUCTURES

D T C	SCALE	APPROVED BY
		BRIDGE ENGINEER

E184-83

CHK. BY
CHK. BY
CHK. BY
CHK. BY

CONTRACT	COUNTY	FEDERAL AID PROJECT Nº	SHEET Nº	TOTAL SHEETS
83-101-04	NEW CASTLE	F-1045 (20)	TR-10A	

170

TRAFFIC

[2] NEW SHEET - JUNE 1989

Addendum No [2] Delete Note 5, Add Note 7 11/14/87 RFR

OVERHEAD SIGN SUPPORT STRUCTURES (ALUMINUM MATERIAL).

SIGN SUPPORTS		ELEVATION			SPAN	TRUSS						TOWER			
No.	STATION	℄ TRUSS	BOT. OF BASE PLATE LEFT	BOT. OF BASE PLATE RIGHT	S	AxB	CHORD O.D. x THICK.	DIAGONAL O.D. x THICK.	STRUT O.D. x THICK.	No. OF TRUSS UNITS	CAMBER	D	SHAFT O.D. x THICK.	DIAGONAL O.D. x THICK.	STRUT O.D. x THICK.

OVERHEAD SIGN SUPPORT STRUCTURES (STEEL MATERIAL)

SIGN SUPPORTS		ELEVATION			SPAN	TRUSS						TOWER			
No.	STATION	℄ TRUSS	BOT. OF BASE PLATE LEFT	BOT. OF BASE PLATE RIGHT	S	AxB	CHORD O.D. x THICK.	DIAGONAL O.D. x THICK.	STRUT O.D. x THICK.	No. OF TRUSS UNITS	CAMBER	D	SHAFT O.D. x THICK.	DIAGONAL O.D. x THICK.	STRUT O.D. x THICK.
[2] ~~1A~~	~~7+00 RTE. 13 N.B.~~	~~56.42~~	~~31.15~~	~~27.93~~	~~66'-0"~~	~~4' x 4'~~	~~5.563x0.258~~	~~2.875 x 0.276~~	~~2.875 x 0.276~~	~~3~~	~~3.00"~~	~~5'-10"~~	~~12.750 x 0.500~~	~~3.500 x 0.300~~	~~3.500 x 0.300~~
2	191+00 RTE. 7 S.B.	93.25	64.74	68.13	76'-6"	4' x 4'	6.625 x 0.280	2.875 x 0.276	2.875 x 0.276	3	3.00"	6'-0"	14.000 x 0.500	5.563 x 0.258	3.500 x 0.300
3	205+00 RTE. 7 S.B.	86.00	57.66	56.82	63'-0"	4' x 4'	4.000 x 0.318	2.875 x 0.276	2.875 x 0.276	3	3.00"	5'-8"	12.750 x 0.500	3.500 x 0.300	3.500 x 0.300
4	218+00 RTE. 7 S.B.	107.25	79.13	78.54	63'-0"	4' x 4'	4.000 x 0.318	2.875 x 0.276	2.875 x 0.276	3	3.00"	5'-8"	12.750 x 0.500	3.500 x 0.300	3.500 x 0.300

OVERHEAD SIGN SUPPORT STRUCTURES (ALUMINUM TRUSSES AND STEEL TOWERS)

SIGN SUPPORTS		ELEVATION			SPAN	TRUSS						TOWER			
No.	STATION	℄ TRUSS	BOT. OF BASE PLATE LEFT	BOT. OF BASE PLATE RIGHT	S	AxB	CHORD O.D. x THICK.	DIAGONAL O.D. x THICK.	STRUT O.D. x THICK.	No. OF TRUSS UNITS	CAMBER	D	SHAFT O.D. x THICK.	DIAGONAL O.D. x THICK.	STRUT O.D. x THICK.

NOTES:

ALL ELEVATIONS SHALL BE VERIFIED IN THE FIELD BEFORE FABRICATION AND INSTALLATION.

LEFT AND RIGHT TOWER ARE VIEWED LOOKING UP STATION.

NUMBER OF TRUSS UNITS AS SHOWN IN SCHEDULE OF STRUCTURES ARE OPTIONAL.

THE WEB MEMBERS IN EACH FACE OF THE TRUSS MUST FORM CONTINUOUS TRUSSING IN THE STRUCTURE FROM SHAFT TO SHAFT.

NOTES:

1. FOR GENERAL INFORMATION SEE SHEET NO. TR-9
2. FOR SCHEDULE OF FOUNDATIONS SEE SHEET NO. TR-11
3. FOR TRUSS DETAILS SEE SHEET NO. TR-12.
4. FOR TOWER DETAILS SEE SHEET NO. TR-13 AND TR-14.
5. ~~FOR MAINTENANCE WALKWAY DETAILS SEE SHEET NO. TR15~~ [2]
6. FOR TYPICAL ELECTRICAL DETAILS SEE SHEET NO. TR-16
7. FOR SIGN HANGER AND LUMINAIRE SUPPORT DETAILS SEE SHEET NO. TR15 [2]

DELAWARE
DEPARTMENT OF TRANSPORTATION
DIVISION OF HIGHWAYS

OVERHEAD SIGN SUPPORT STRUCTURE

SCHEDULE OF STRUCTURES

D T C | SCALE | APPROVED BY | BRIDGE ENGINEER

REVISIONS

[2] NEW SHEET - JUNE 1989

CHKD. ____ DESIGN ____ PREL. TRACING ____

CONTRACT	COUNTY	FEDERAL AID PROJECT No.	SHEET No.	TOTAL SHEETS
83-101-04	NEW CASTLE	F-1045 (20)	TP-1	171

TRAFFIC

SCHEDULE OF FOUNDATION

OVER-HEAD SIGN SUPPORT No.	FOOTING SIZE FL x FW FT.	FOOTING VOLUME WITH PILES CU. YD.	FOOTING VOLUME W/O PILES CU. YD.	No. OF PILES IN ROW M	No. OF PILES IN ROW N	PILE LGTH FT.	REINFORCING BARS No. 8 SIZE FLB	FSB	FLT	FST	WGHT LBS	EXCAVATION VOLUME WITH PILES CU. YD.	EXCAVATION VOLUME W/O PILES CU. YD.
1	19x9	—	12.7	—	—	—	10#6	20#5	11#5	20#5	923	—	46
2	20x9	—	13.3	—	—	—	11#6	21#5	13#5	21#5	1030	—	48
3	19x9	—	12.7	—	—	—	10#6	20#5	11#5	20#5	923	—	46
4	19x9	—	12.7	—	—	—	10#6	20#5	11#5	20#5	923	—	46
5	19x9	—	12.7	—	—	—	10#6	20#5	11#5	20#5	923	—	46
1A	20x10	28.5	~~14.8~~	5	3	30	12#6	21#5	14#5	21#5	1132	138*	220

OVER-HEAD SIGN SUPPORT No.	BARRIER SIZE BWT x BL x H FT.	BARRIER VOL. CU YD.	TYPE B-1 No. 8 SIZE	A FT.-IN.	L FT.-IN.	TYPE B-2 No. 8 SIZE	B FT.-IN.	C FT.-IN.	L FT.-IN.	TYPE B-3 No. 8 SIZE	E FT.-IN.	F FT.-IN.	L FT.-IN.	TYPE B-4 No. 8 SIZE	E FT.-IN.	G FT.-IN.	L FT.-IN.	WGHT LBS.
1	—	—	—	—	—	—	—	—	—	—	—	—	—	—	—	—	—	—
2	—	—	—	—	—	—	—	—	—	—	—	—	—	—	—	—	—	—
3	—	—	—	—	—	—	—	—	—	—	—	—	—	—	—	—	—	—
4	—	—	—	—	—	—	—	—	—	—	—	—	—	—	—	—	—	—
5	—	—	—	—	—	—	—	—	—	—	—	—	—	—	—	—	—	—
1A	—	—	—	—	—	—	—	—	—	—	—	—	—	—	—	—	—	—

OVER-HEAD SIGN SUPPORT No.	PEDESTAL SIZE O.D. x H FT.	VOL. CU YD.	TYPE P-1 No. 8 SIZE	A FT.-IN.	L FT.-IN.	TYPE P-2 No. 8 SIZE	L FT.-IN.	WGHT LBS.
1	2.75x4.5	1.0	12#7	0'-10"	6'-10"	8#4	8'-7"	46
2	2.75x4.5	1.0	13#7	0'-10"	6'-10"	8#4	8'-7"	46
3	2.75x4.5	1.0	13#7	0'-10"	6'-10"	8#4	8'-7"	46
4	2.75x6.0	1.3	13#7	0'-10"	8'-4"	8#4	8'-7"	46
5	2.75x6.0	1.3	13#7	0'-10"	8'-4"	8#4	8'-7"	46
1A	3.00x4.5	1.2	14#7	0'-10"	6'-10"	2#4	9'-5"	51

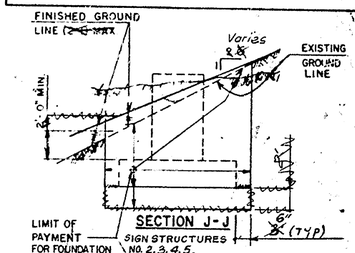

SECTION J-J

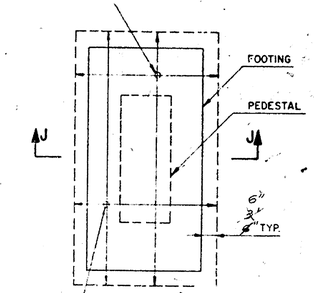

PLAN

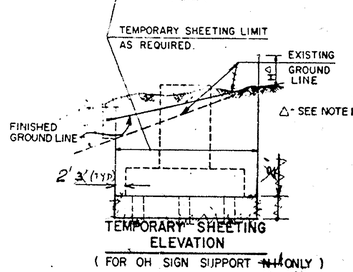

TEMPORARY SHEETING ELEVATION

(FOR OH SIGN SUPPORT ~~No. 1~~ No. 1A ONLY)

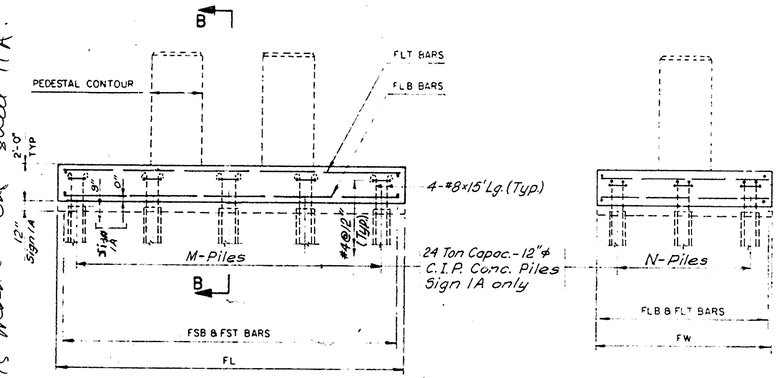

SECTION A-A

SECTION B-B

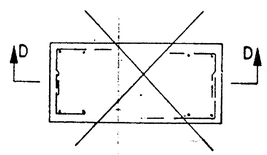

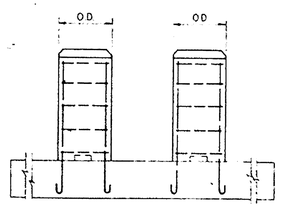

SECTION F-F

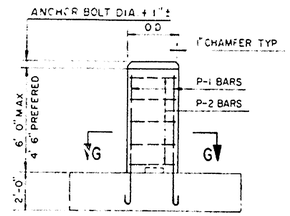

SECTION H-H

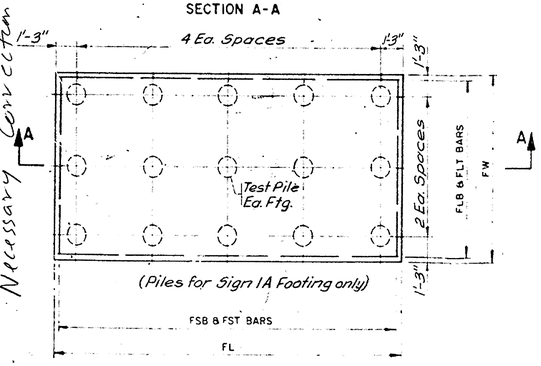

PLAN

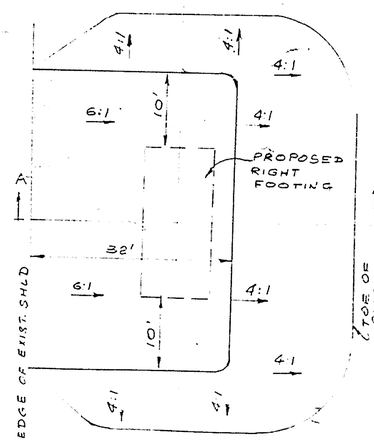

PLAN

FILL AROUND RIGHT FOOTING. (SIGN STRUCTURE No. 1A)

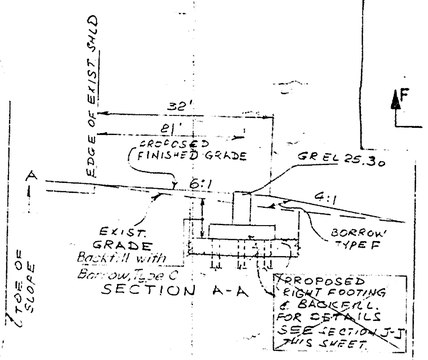

SECTION A-A

CONTRACTOR IS TO BACKFILL TO FINISHED GRADE PRIOR TO ERECTING SIGN STRUCTURE No. 1A

SECTION E-E

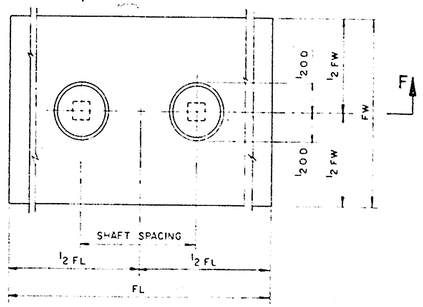

PLAN

PEDESTAL

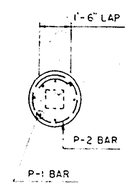

SECTION G-G

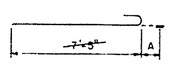

TYPE "P-1"

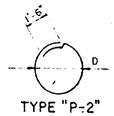

TYPE "P-2"

NOTES:

1. WHEN TEMPORARY SHEETING IS REQUIRED, H IS 3'-0" WHEN ADJACENT TO PEDESTRIAN OR VEHICULAR TRAFFIC AND 1'-0" MINIMUM FOR ALL OTHERS.
2. FOR GENERAL NOTES SEE SHEET NO. TR-9.
3. EXPOSED CONCRETE EDGES SHALL BE CHAMFERED 1" x 1" EXCEPT AS NOTED.
4. REINFORCEMENT BARS SHALL CONFORM TO THE DIMENSIONS SHOWN ON THE DRAWING.
5. BARS SHALL NOT BE SPLICED EXCEPT AS PROVIDED ON THIS DRAWING OR AUTHORIZED BY THE ENGINEER. WHEN SPLICING IS APPROVED, THE REINFORCEMENT BARS SHALL BE LAPPED FOR A LENGTH OF AT LEAST 36 DIAMETERS AND SHALL BE SECURELY WIRED TOGETHER.
6. PAYMENT FOR TEMPORARY SHEETING SHALL BE FROM THE FINISHED GRADE IF GRADING IS REQUIRED AND FROM THE EXISTING GROUND LINE IF GRADING IS NOT REQUIRED.

(OH SIGN SUPPORT NO 1A)

DELAWARE
DEPARTMENT OF TRANSPORTATION
DIVISION OF HIGHWAYS

OVERHEAD SIGN SUPPORT STRUCTURE

SCHEDULE OF FOUNDATION

D T C	SCALE	APPROVED BY
		BRIDGE ENGINEER

REVISIONS

SIGN STRUCTURE N.1 PLACED BY SIGN STRUCTURE N.1A

This Sheet is used in place of Original Sheet 11A

Necessary Correction is made on Sheet 11A

E1 84-B3

D C E A 1 5 10 A B C D

2-24-86 Revision No. 1 Voids this sheet and replaces it with sheet No. TR-11A/171A

CONTRACT	COUNTY	FEDERAL AID PROJECT Nº	SHEET Nº	TOTAL SHEETS
83-101-04	NEW CASTLE	F-1045 (20)	TR-11	

TRAFFIC 171

SCHEDULE OF FOUNDATION

OVER-HEAD SIGN SUPPORT	FOOTING													BARRIER																		PEDESTAL						
	SIZE	VOLUME		No. OF PILES IN ROW		PILE LGTH	REINFORCING BARS							SIZE	VOL.	REINFORCING BARS																SIZE	VOL.	REINFORCING BARS					
		WITH PILES	W/O PILES				No. & SIZE				WGHT	EXCAVATION VOLUME				TYPE B-1			TYPE B-2				TYPE B-3				TYPE B-4						TYPE P-1			TYPE P-2		
							FLB	FSB	FLT	FST		WITH PILES	W/O PILES			No. & SIZE	A	L	No. & SIZE	B	C	L	No. & SIZE	E	F	L	No. & SIZE	E	G	L	WGHT	O.D. x H		No. & SIZE	A	L	No. & SIZE	L	WGHT
No.	FT.	CU. YD.	CU. YD.	M	N	FT.					LBS.	CU. YD.	CU. YD.	FT.	CUYD.		FT.-IN.	FT.-IN.		FT.-IN.	FT.-IN.	FT.-IN.		FT.-IN.	FT.-IN.	FT.-IN.		FT.-IN.	FT.-IN.	FT.-IN.	LBS.	FT.	CU.YD.		FT.-IN.	FT.-IN.		FT.-IN.	LBS.
1	19x9	—	12.7	—	—	—	10 #6	20 #5	11 #5	20 #5	923	—	46	—	—	—	—	—	—	—	—	—	—	—	—	—	—	—	—	—	—	2.75x4.5	1.0	12 #7	0'-10"	6'-10"	8 #4	8'-7"	46
2	20x9	—	13.3	—	—	—	11 #6	21 #5	13 #5	21 #5	1030	—	48	—	—	—	—	—	—	—	—	—	—	—	—	—	—	—	—	—	—	2.75x4.5	1.0	13 #7	0'-10"	6'-10"	8 #4	8'-7"	46
3	19x9	—	12.7	—	—	—	10 #6	20 #5	11 #5	20 #5	923	—	46	—	—	—	—	—	—	—	—	—	—	—	—	—	—	—	—	—	—	2.75x4.5	1.0	13 #7	0'-10"	6'-10"	8 #4	8'-7"	46
4	19x9	—	12.7	—	—	—	10 #6	20 #5	11 #5	20 #5	923	—	46	—	—	—	—	—	—	—	—	—	—	—	—	—	—	—	—	—	—	2.75x6.0	1.3	13 #7	0'-10"	8'-4"	8 #4	8'-7"	46
5	19x9	—	12.7	—	—	—	10 #6	20 #5	11 #5	20 #5	923	—	46	—	—	—	—	—	—	—	—	—	—	—	—	—	—	—	—	—	—	2.75x6.0	1.3	13 #7	0'-10"	8'-4"	8 #4	8'-7"	46

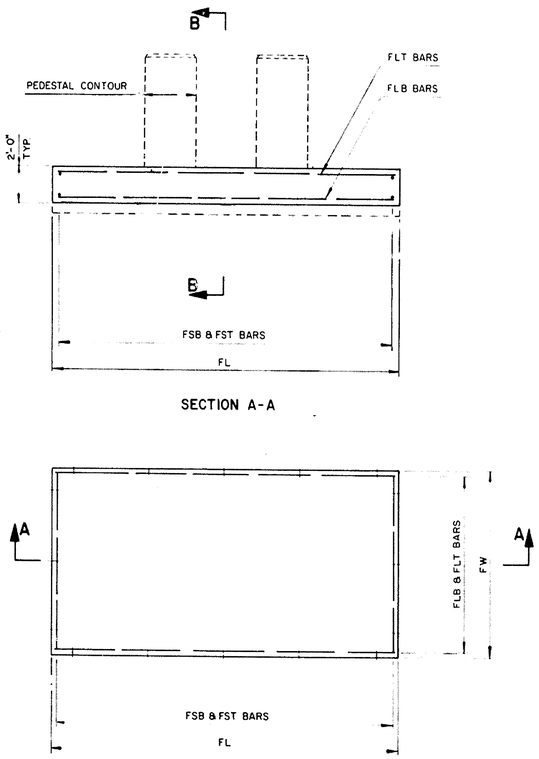

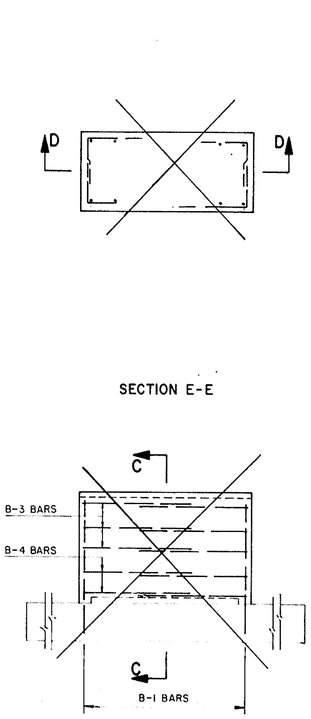

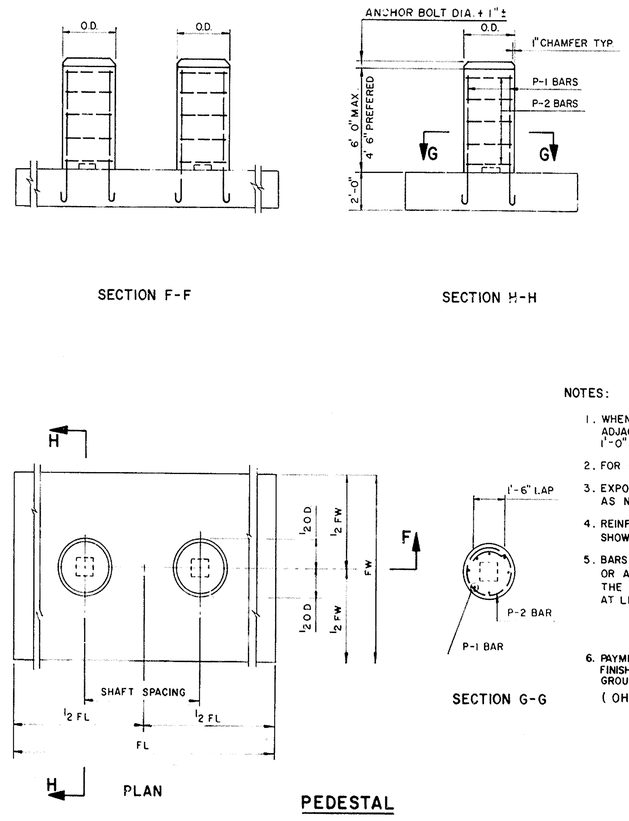

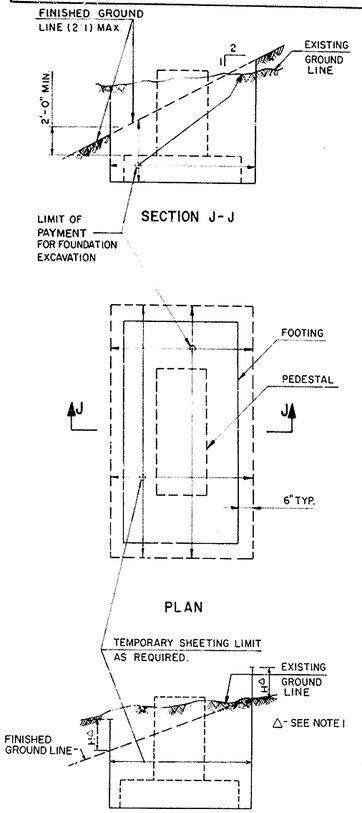

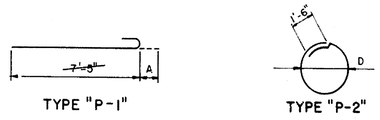

NOTES:

1. WHEN TEMPORARY SHEETING IS REQUIRED, H IS 3'-0" WHEN ADJACENT TO PEDESTRIAN OR VEHICULAR TRAFFIC AND 1'-0" MINIMUM FOR ALL OTHERS.
2. FOR GENERAL NOTES SEE SHEET NO. TR-9.
3. EXPOSED CONCRETE EDGES SHALL BE CHAMFERED 1" x 1" EXCEPT AS NOTED.
4. REINFORCEMENT BARS SHALL CONFORM TO THE DIMENSIONS SHOWN ON THE DRAWING.
5. BARS SHALL NOT BE SPLICED EXCEPT AS PROVIDED ON THIS DRAWING OR AUTHORIZED BY THE ENGINEER. WHEN SPLICING IS APPROVED, THE REINFORCEMENT BARS SHALL BE LAPPED FOR A LENGTH OF AT LEAST 36 DIAMETERS AND SHALL BE SECURELY WIRED TOGETHER.
6. PAYMENT FOR TEMPORARY SHEETING SHALL BE FROM THE FINISHED GRADE IF GRADING IS REQUIRED AND FROM THE EXISTING GROUND LINE IF GRADING IS NOT REQUIRED. (OH SIGN SUPPORT NO. 1)

DELAWARE
DEPARTMENT OF TRANSPORTATION
DIVISION OF HIGHWAYS

OVERHEAD SIGN SUPPORT STRUCTURE

SCHEDULE OF FOUNDATION

D T C	SCALE	APPROVED BY BRIDGE ENGINEER

E1 84 - B3

CHK. BY
CHK. BY
CHK. BY
CHK. BY

CONTRACT	COUNTY	FEDERAL AID PROJECT Nº	SHEET Nº	TOTAL SHEETS
83-101-04	NEW CASTLE	F-1045 (20)	TR-11A	

TRAFFIC

17A

[2] NEW SHEET - JUNE 1989

SCHEDULE OF FOUNDATION

OVER-HEAD SIGN SUPPORT	FOOTING SIZE	FOOTING VOLUME WITH PILES	FOOTING VOLUME W/O PILES	No. OF PILES IN ROW		PILE LGTH	REINFORCING BARS No. & SIZE FLB	FSB	FLT	FST	WGHT	EXCAVATION VOLUME WITH PILES	EXCAVATION VOLUME W/O PILES	BARRIER SIZE	VOL.	TYPE B-1 No. & SIZE	A	L	TYPE B-2 No. & SIZE	B	C	L	TYPE B-3 No. & SIZE	E	F	L	TYPE B-4 No. & SIZE	E	G	L	WGHT	PEDESTAL SIZE	VOL. (EA.)	TYPE P-1 No. & SIZE	A	L	TYPE P-2 No. & SIZE	L	WGHT
No.	FL x FW	CU. YD.	CU. YD.	M	N	FT.					LBS.	CU. YD.	CU. YD.	BWT x BL x H FT.	CU.YD.		FT.-IN.	FT.-IN.		FT.-IN.	FT.-IN.	FT.-IN.		FT.-IN.	FT.-IN.	FT.-IN.		FT.-IN.	FT.-IN.	FT.-IN.	LBS.	O.D. x H FT.	CU.YD.		FT.-IN.	FT.-IN.		FT.-IN.	LBS.
~~1A~~ DELETED	~~20x9~~	~~20.0~~		~~5~~	~~3~~	~~30~~	~~11 #6~~	~~21 #5~~	~~13 #5~~	~~21 #5~~	~~1030~~	~~58.5~~	—	~~2.5x20.0x6.0~~	~~13.5~~	~~62 #5~~	~~0'-7"~~	~~8'-5"~~	~~11 #4~~	~~2'-0"~~	~~1'-0"~~	~~4'-0"~~	~~12 #4~~	~~5'-8"~~	~~1'-11"~~	~~9'-6"~~	~~8 #4~~	~~5'-8"~~	~~2'-3"~~	~~10'-2"~~	~~700~~	~~2.75x4.5~~	~~1.0~~	~~13 #7~~	~~0'-10"~~	~~7'-2"~~	~~8 #4~~	~~8'-7"~~	~~228~~ DELETED
2	20x10	—	14.8	—	—	—	12 #6	21 #5	14 #5	21 #5	1132	—	54.2	2.75x20.0x6.0	16.4	62 #5	0'-7"	8'-2"	11 #4	2'-3"	1'-0"	4'-3	12 #4	6'-4"	2'-0"	10'-4"	8 #4	6'-4"	2'-5"	11'-2"	702	3.00x4.5	1.2	14 #7	0'-10"	6'-10"	8 #4	9'-5"	284
3	20x9	—	13.3	—	—	—	11 #6	21 #5	13 #5	21 #5	1030	—	98	—	—	—	—	—	—	—	—	—	—	—	—	—	—	—	—	—	—	2.75x4.5	1.0	13 #7	0'-10"	6'-10"	8 #4	8'-7"	228
4	20x9	—	13.3	—	—	—	11 #6	21 #5	13 #5	21 #5	1030	—	46	—	—	—	—	—	—	—	—	—	—	—	—	—	—	—	—	—	—	2.75x6.0	1.3	13 #7	0'-10"	8'-4"	8 #4	8'-7"	246

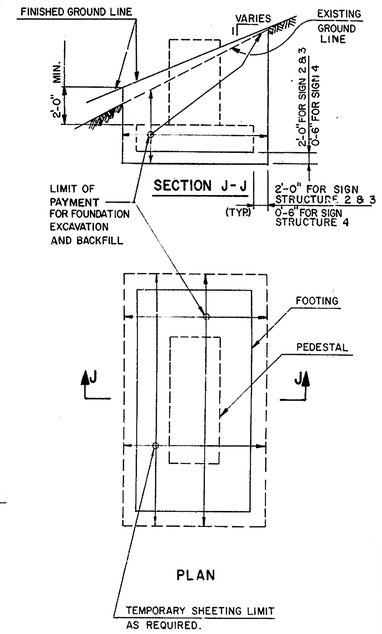

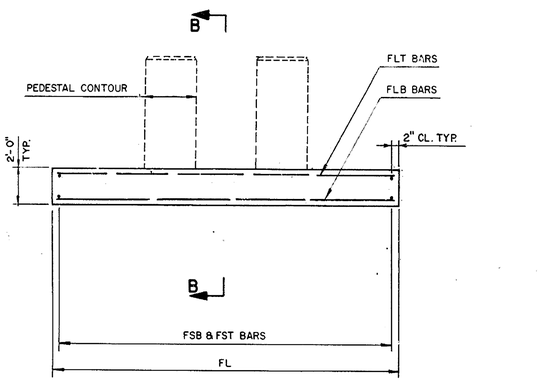

SECTION A-A

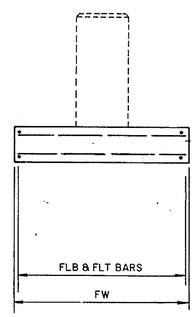

SECTION B-B

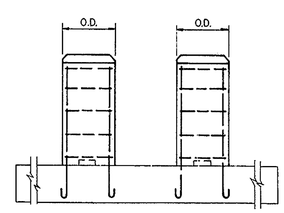

SECTION F-F

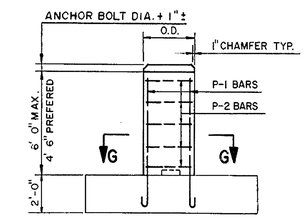

SECTION H-H

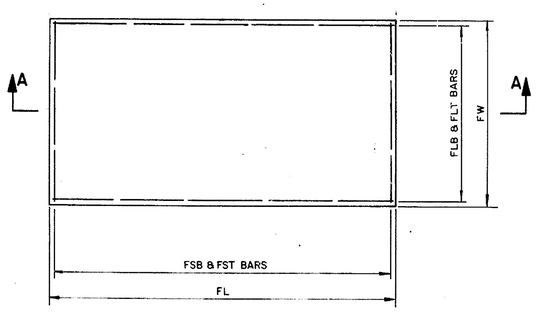

PLAN

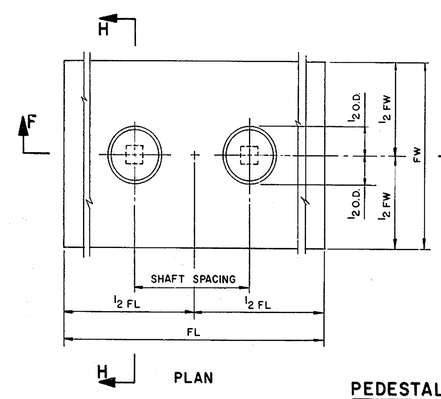

PLAN

PEDESTAL

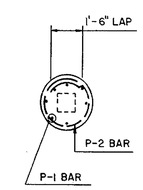

SECTION G-G

NOTES:

1. WHEN TEMPORARY SHEETING IS REQUIRED, H IS 3'-0" WHEN ADJACENT TO PEDESTRIAN OR VEHICULAR TRAFFIC AND 1'-0" MINIMUM FOR ALL OTHERS.
2. FOR GENERAL NOTES SEE SHEET NO. TR-9.
3. EXPOSED CONCRETE EDGES SHALL BE CHAMFERED 1" x 1" EXCEPT AS NOTED.
4. REINFORCEMENT BARS SHALL CONFORM TO THE DIMENSIONS SHOWN ON THE DRAWING.
5. BARS SHALL NOT BE SPLICED EXCEPT AS PROVIDED ON THIS DRAWING OR AUTHORIZED BY THE ENGINEER. WHEN SPLICING IS APPROVED, THE REINFORCEMENT BARS SHALL BE LAPPED FOR A LENGTH OF AT LEAST 36 DIAMETERS AND SHALL BE SECURELY WIRED TOGETHER.
6. FOR FOUNDATION AND BARRIER DETAILS FOR SIGN SUPPORT STRUCTURES NO. 2 SEE SHEET NO. M-5.

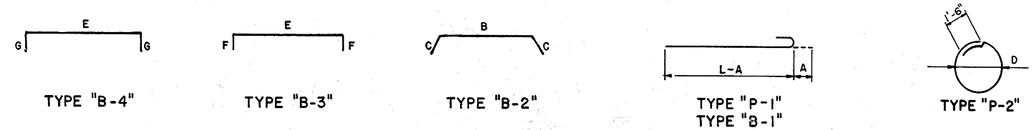

TYPE "B-4" TYPE "B-3" TYPE "B-2" TYPE "P-1" TYPE "B-1" TYPE "P-2"

BAR BENDING DETAILS

DELAWARE
DEPARTMENT OF TRANSPORTATION
DIVISION OF HIGHWAYS

OVERHEAD SIGN SUPPORT STRUCTURE

SCHEDULE OF FOUNDATION

D	SCALE	APPROVED BY
T		
C		BRIDGE ENGINEER

REVISIONS

[1] SIGN STRUCTURE NO.: REPLACED BY SIGN STRUCTURE NO. 1A

[2] NEW SHEET - JUNE 1989

DESIGN ____ CHKD. ____

PREL. TRACING ____

2-24-88 Revision No. 1 Voids this sheet and replaces it with sheet No. TR-12A/172A

CONTRACT	COUNTY	FEDERAL AID PROJECT Nº	SHEET Nº	TOTAL SHEETS
83-101-04	NEW CASTLE	F-1045 (20)	TR-12	

TRAFFIC 172

NOTE:
THE SIZE OF THE CROSS BRACINGS TO BE THE SAME AS THAT OF THE DIAGONALS.

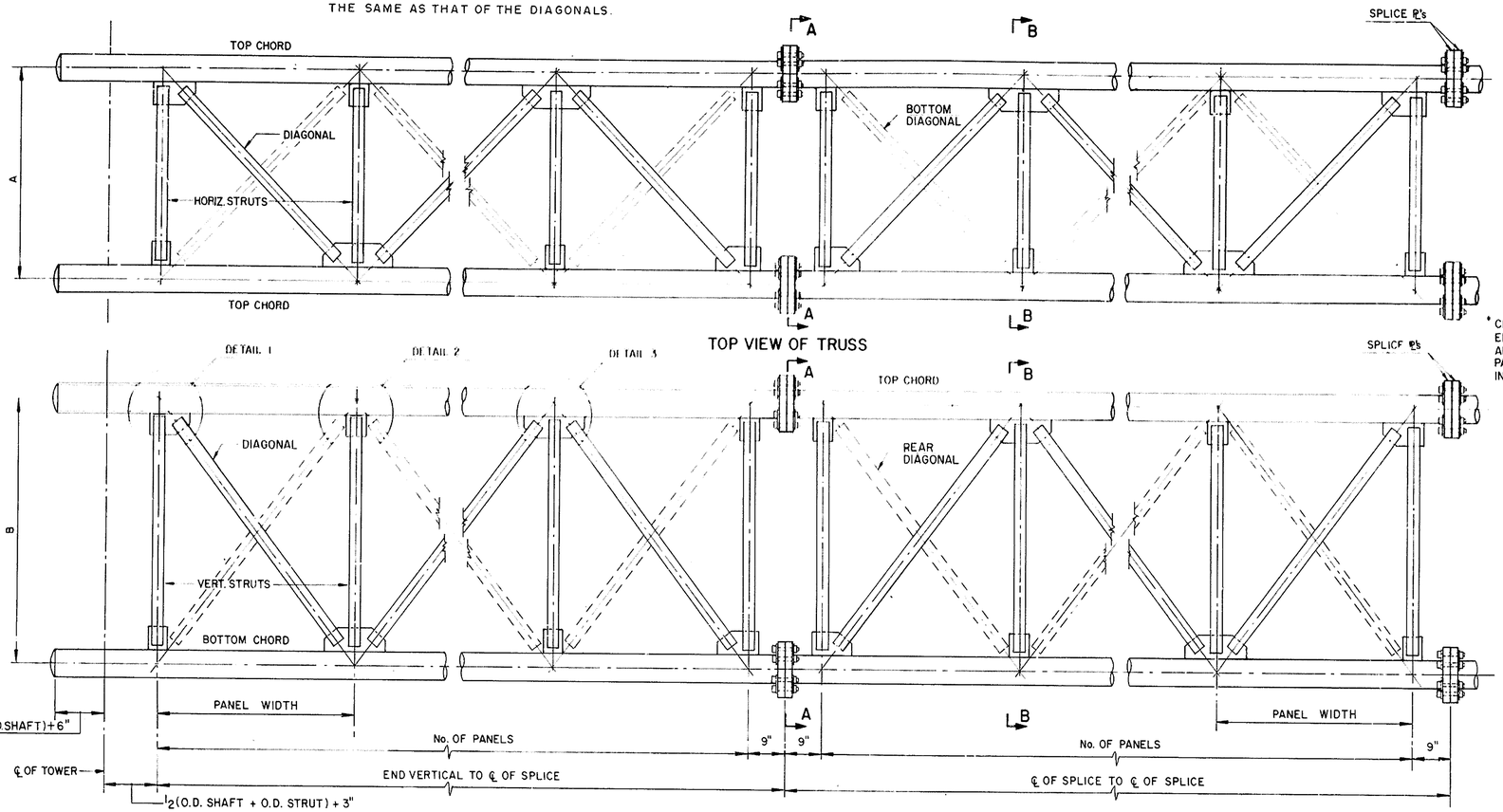

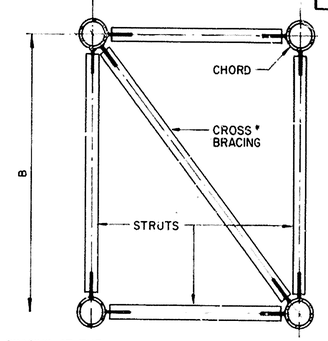

* CROSS BRACING AT THE ENDS OF EACH TRUSS UNIT AND SPACING @ 3 TRUSS PANELS MAX., ALTERNATING IN DIRECTION.

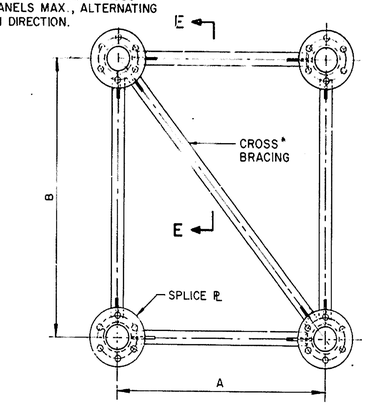

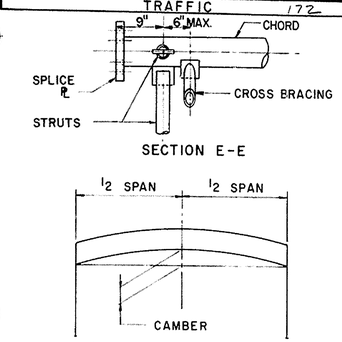

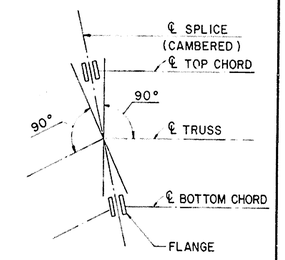

NOTE:
CAMBER SHALL BE OBTAINED BY INCREASING THE TOP CHORD LENGTH AND DECREASING THE BOTTOM CHORD LENGTH AS SHOWN.
CHORD SPLICE FLANGES SHALL BE SKEWED TO THE ANGLE SO OBTAINED BEFORE WELDING TO CHORDS. NO FORCE SHALL BE APPLIED IN PROVIDING CAMBER.

CHORD SPLICES							
CHORDS	SPLICE PLATE			BOLTS			FILLET WELD
O.D. x THICK IN.	a IN.	c IN.	WEIGHT LBS.	b IN.	No. & SIZE Ø x L (IN.)	WEIGHT LBS.	tw IN.
~~3.500 x .300~~	~~7~~	~~7/8~~	~~8.1~~	~~5½~~	~~6 Ø½" x 3"~~	~~1.8~~	~~5/16~~
4.000 x .318	8½	1	12.0	6½	6 Ø⅝" x 3"	3.0	5/16
5.563 x .258	10½	1	17.1	8½	6 Ø⅝" x 3"	3.0	¼
~~6.625 x .280~~	~~12~~	~~1¼~~	~~30.0~~	~~9¾~~	~~6 Ø¾" x 3½"~~	~~4.9~~	~~9/32~~
~~6.625 x .432~~	~~13½~~	~~1½~~	~~44.2~~	~~10½~~	~~8 Ø⅞" x 4½"~~	~~10.8~~	~~7/16~~
~~10.750 x .365~~	~~18~~	~~1½~~	~~67.0~~	~~15~~	~~8 Ø1" x 4½"~~	~~14.6~~	~~3/8~~
~~12.750 x .375~~	~~22~~	~~1½~~	~~103.2~~	~~18~~	~~8 Ø1¼" x 4½"~~	~~24.9~~	~~3/8~~
~~12.750 x .500~~	~~22~~	~~1½~~	~~103.2~~	~~18~~	~~8 Ø1¼" x 4½"~~	~~24.9~~	~~½~~
~~12.750 x .562~~	~~23½~~	~~2½~~	~~184.0~~	~~19~~	~~10 Ø1½" x 6½"~~	~~58.5~~	~~9/16~~

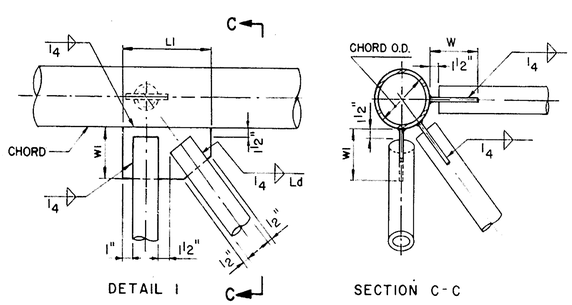

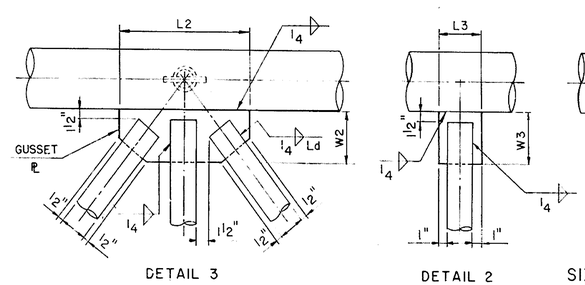

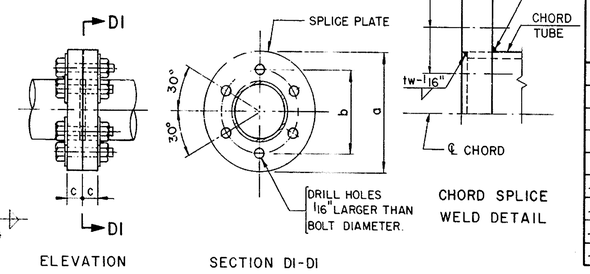

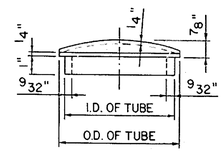

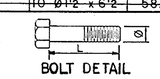

VERTICAL TRUSS GUSSET PLATE										HORIZONTAL TRUSS GUSSET PL.										DIAG. FIL. WELDS
CHORD	END ½" GUSSET			INTERM. ½" GUSSET			STRUT ½" GUSSET			CHORD	END ½" GUSSET			INTERM. ½" GUSSET			STRUT ½" GUSSET			
O.D. IN.	L1 IN.	W1 IN.	WT. LBS.	L2 IN.	W2 IN.	WT. LBS.	L3 IN.	W3 IN.	WT. LBS.	O.D. IN.	L4 IN.	W4 IN.	WT. LBS.	L5 IN.	W5 IN.	WT. LBS.	L6 IN.	W6 IN.	WT. LBS.	Ld IN.
~~3.500~~	~~9½~~	~~6~~	~~5.9~~	~~14~~	~~6~~	~~8.5~~	~~4~~	~~5~~	~~2.8~~	~~3.500~~	~~9½~~	~~5½~~	~~5.8~~	~~14½~~	~~5½~~	~~8.0~~	~~4~~	~~5~~	~~2.8~~	~~2~~
4.000	9½	6	5.3	14	6	7.6	4	5	2.8	4.000	10	5½	6.0	14½	5½	8.8	4	5	2.8	2
5.563	9½	6	5.7	14	6	7.9	4	5	2.8	5.563	10½	5½	6.5	16½	5½	9.6	4	5	2.8	2
~~6.625~~	~~11~~	~~6½~~	~~8.6~~	~~17~~	~~6~~	~~12.5~~	~~4½~~	~~6~~	~~3.8~~	~~6.625~~	~~12½~~	~~6½~~	~~9.5~~	~~19½~~	~~6½~~	~~14.6~~	~~4½~~	~~6~~	~~3.8~~	~~3~~
~~10.750~~	~~13½~~	~~7~~	~~11.2~~	~~21~~	~~7½~~	~~18.5~~	~~4½~~	~~7~~	~~4.5~~	~~10.750~~	~~15½~~	~~7½~~	~~13.9~~	~~25~~	~~7½~~	~~22.1~~	~~4½~~	~~7~~	~~4.5~~	~~4~~
~~12.750~~	~~15~~	~~8~~	~~14.6~~	~~24~~	~~8~~	~~23.5~~	~~4½~~	~~7~~	~~4.5~~	~~12.750~~	~~17~~	~~8~~	~~16.7~~	~~29~~	~~8~~	~~27.7~~	~~4½~~	~~7~~	~~4.5~~	~~5~~

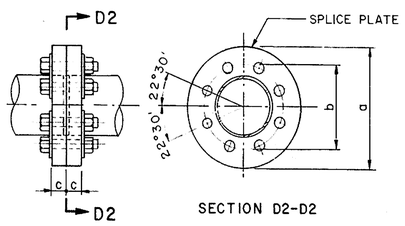

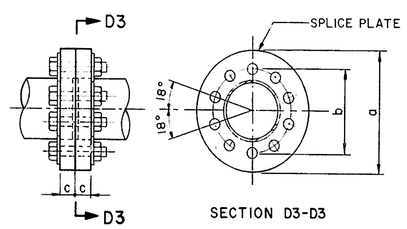

DELAWARE
DEPARTMENT OF TRANSPORTATION
DIVISION OF HIGHWAYS

OVERHEAD SIGN SUPPORT STRUCTURE

STEEL TRUSS DETAILS

D T C	SCALE	APPROVED BY BRIDGE ENGINEER

EI 84-83

CONTRACT	COUNTY	FEDERAL AID PROJECT Nº	SHEET Nº	TOTAL SHEETS
83-101-04	NEW CASTLE	F-1045 (20)	TR-12A	

TRAFFIC

NEW SHEET ADDED 2-24-86

NOTE:
THE SIZE OF THE CROSS BRACINGS TO BE THE SAME AS THAT OF THE DIAGONALS.

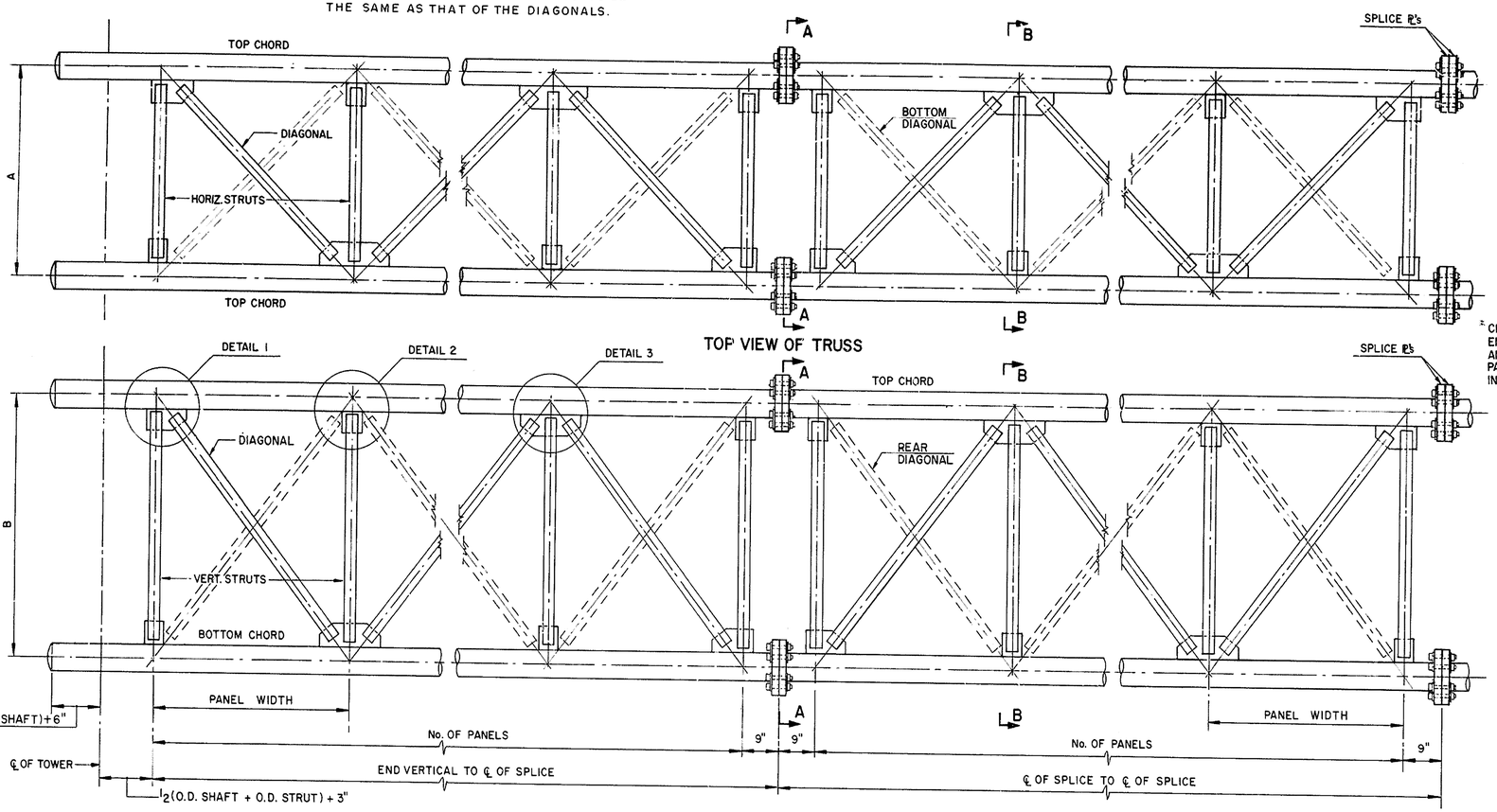

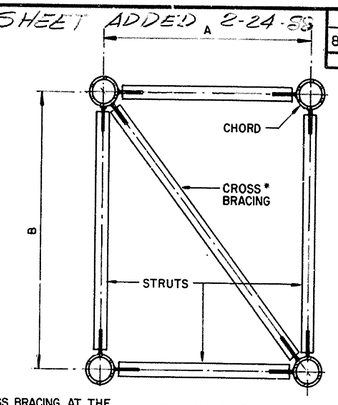

* CROSS BRACING AT THE ENDS OF EACH TRUSS UNIT AND SPACING @ 3 TRUSS PANELS MAX., ALTERNATING IN DIRECTION.

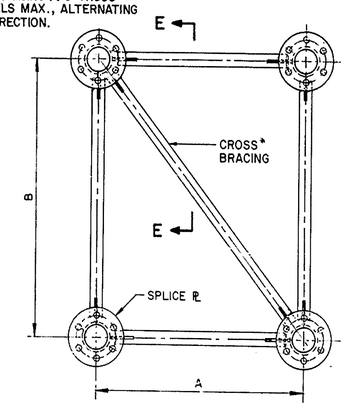

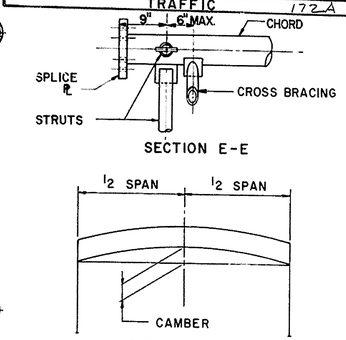

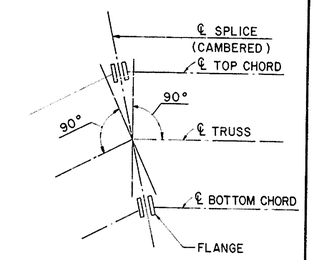

NOTE:
CAMBER SHALL BE OBTAINED BY INCREASING THE TOP CHORD LENGTH AND DECREASING THE BOTTOM CHORD LENGTH AS SHOWN.
CHORD SPLICE FLANGES SHALL BE SKEWED TO THE ANGLE SO OBTAINED BEFORE WELDING TO CHORDS. NO FORCE SHALL BE APPLIED IN PROVIDING CAMBER.

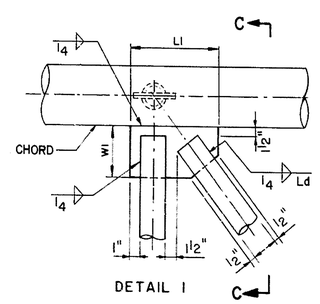

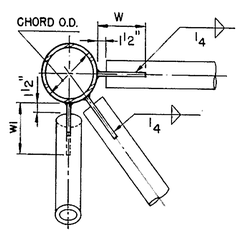

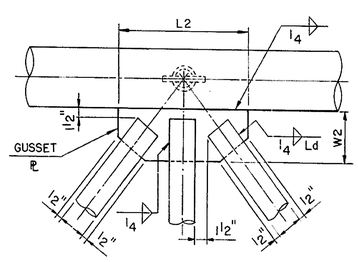

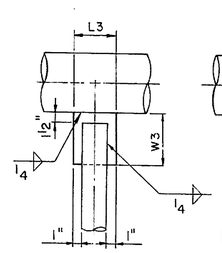

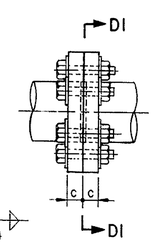

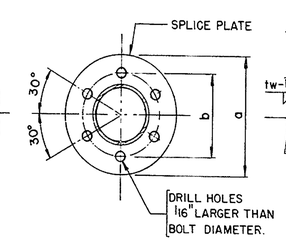

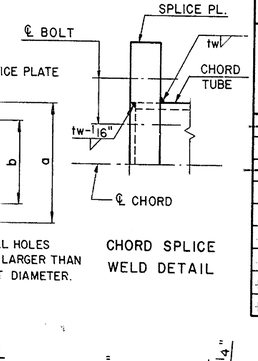

CHORD SPLICES							
CHORDS	SPLICE PLATE			BOLTS			FILLET WELD
O.D. x THICK IN.	a IN.	c IN.	WEIGHT LBS.	b IN.	No. & SIZE Ø x L (IN.)	WEIGHT LBS.	tw IN.
~~3.500 x .300~~	~~7~~	~~7/8~~	~~8.1~~	~~5 1/2~~	~~6 Ø 1/2" x 3"~~	~~1.8~~	~~5/16~~
4.000 x .318	8 1/2	1	12.0	6 1/2	6 Ø 5/8" x 3"	3.0	5/16
~~5.563 x .258~~	~~10 1/2~~	~~1~~	~~17.1~~	~~8 1/2~~	~~6 Ø 5/8" x 3"~~	~~3.0~~	~~1/4~~
6.625 x .280	12	1 1/4	30.0	9 3/4	6 Ø 3/4" x 3 1/2"	4.9	9/32
~~6.625 x .432~~	~~13 1/2~~	~~1 1/2~~	~~44.2~~	~~10 1/2~~	~~8 Ø 7/8" x 4 1/2"~~	~~10.8~~	~~7/16~~
~~10.750 x .365~~	~~18~~	~~1 1/2~~	~~67.0~~	~~15~~	~~8 Ø 1" x 4 1/2"~~	~~14.6~~	~~3/8~~
~~12.750 x .375~~	~~22~~	~~1 1/2~~	~~103.2~~	~~18~~	~~8 Ø 1 1/4" x 4 1/2"~~	~~24.9~~	~~3/8~~
~~12.750 x .500~~	~~22~~	~~1 1/2~~	~~103.2~~	~~18~~	~~8 Ø 1 1/4" x 4 1/2"~~	~~24.9~~	~~1/2~~
~~12.750 x .562~~	~~23 1/2~~	~~2 1/2~~	~~184.0~~	~~19~~	~~10 Ø 1 1/2" x 6 1/2"~~	~~58.5~~	~~9/16~~

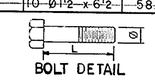

VERTICAL TRUSS GUSSET PLATE										HORIZONTAL TRUSS GUSSET PL.										DIAG. FIL. WELDS
CHORD	END 1/2" GUSSET			INTERM. 1/2" GUSSET			STRUT 1/2" GUSSET			CHORD	END 1/2" GUSSET			INTERM. 1/2" GUSSET			STRUT 1/2" GUSSET			
O.D. IN.	L1 IN.	W1 IN.	WT. LBS.	L2 IN.	W2 IN.	WT. LBS.	L3 IN.	W3 IN.	WT. LBS.	O.D. IN.	L4 IN.	W4 IN.	WT. LBS.	L5 IN.	W5 IN.	WT. LBS.	L6 IN.	W6 IN.	WT. LBS.	Ld IN.
~~3.500~~	~~9 1/2~~	~~6~~	~~5.9~~	~~14~~	~~6~~	~~8.5~~	~~4~~	~~5~~	~~2.8~~	~~3.500~~	~~9 1/2~~	~~5 1/2~~	~~5.8~~	~~14 1/2~~	~~5 1/2~~	~~8.0~~	~~4~~	~~5~~	~~2.8~~	~~2~~
4.000	9 1/2	6	5.3	14	6	7.6	4	5	2.8	4.000	10	5 1/2	6.0	14 1/2	5 1/2	8.8	4	5	2.8	2
~~5.563~~	~~9 1/2~~	~~6~~	~~5.7~~	~~14~~	~~6~~	~~7.9~~	~~4~~	~~5~~	~~2.8~~	~~5.563~~	~~10 1/2~~	~~5 1/2~~	~~6.5~~	~~16 1/2~~	~~5 1/2~~	~~9.6~~	~~4~~	~~5~~	~~2.8~~	~~2~~
6.625	11	6 1/2	8.6	17	6	12.5	4 1/2	6	3.8	6.625	12 1/2	6 1/2	9.5	19 1/2	6 1/2	14.6	4 1/2	6	3.8	3
~~10.750~~	~~13 1/2~~	~~7~~	~~11.2~~	~~2[illegible]~~	~~7 1/2~~	~~18.5~~	~~4 1/2~~	~~7~~	~~4.5~~	~~10.750~~	~~15 1/2~~	~~7 1/2~~	~~13.9~~	~~25~~	~~7 1/2~~	~~22.1~~	~~4 1/2~~	~~7~~	~~4.5~~	~~4~~
~~12.750~~	~~15~~	~~8~~	~~1[illegible]~~	~~24~~	~~8~~	~~23.5~~	~~4 1/2~~	~~7~~	~~4.5~~	~~12.750~~	~~17~~	~~8~~	~~16.7~~	~~29~~	~~8~~	~~27.7~~	~~4 1/2~~	~~7~~	~~4.5~~	~~5~~

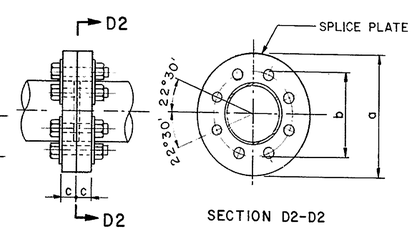

EIGHT-BOLT CHORD SPLICE DETAIL

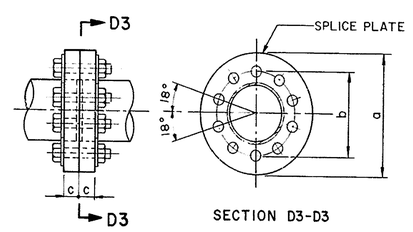

TEN-BOLT CHORD SPLICE DETAIL

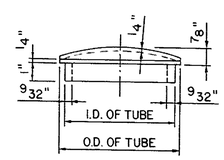

CHORD CAP DETAIL

DELAWARE
DEPARTMENT OF TRANSPORTATION
DIVISION OF HIGHWAYS

OVERHEAD SIGN SUPPORT STRUCTURE

STEEL TRUSS DETAILS

D T C	SCALE	APPROVED BY BRIDGE ENGINEER

EI 84-83

JHK BY
CHK. BY
CHK. BY
CHK. BY

Revision No. 1 Voids this sheet and replaces it with sheet No. TR-13A/173A

CONTRACT	COUNTY	FEDERAL AID PROJECT	SHEET NO.	TOTAL SHEETS
83-101-04	NEW CASTLE	F-1045 (20)	TR-13	

TRAFFIC

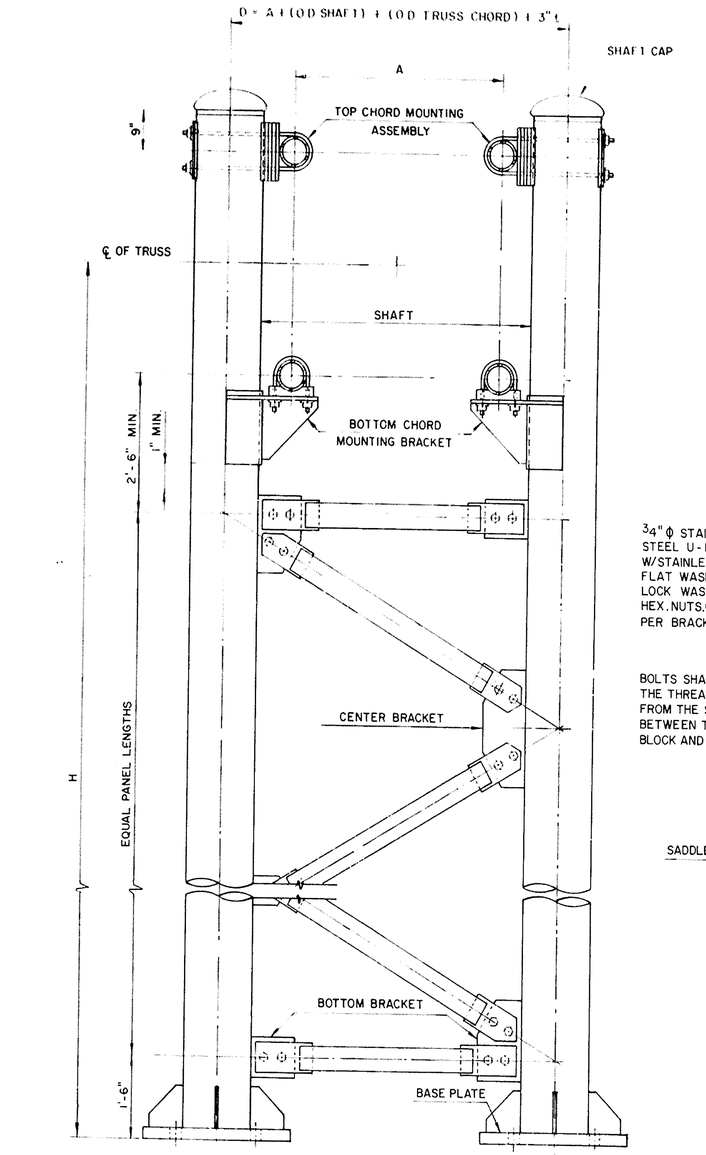

TOWER ELEVATION

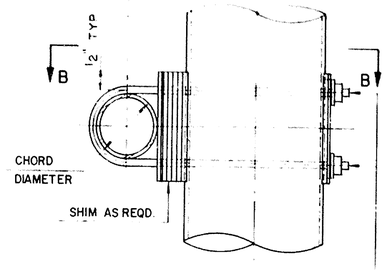

ELEVATION

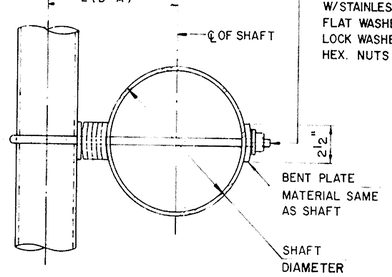

SECTION B-B

TOP CHORD MOUNTING ASSEMBLY DETAIL

3/4" ϕ STAINLESS STEEL U-BOLTS W/STAINLESS STEEL FLAT WASHERS, LOCK WASHERS AND HEX. NUTS.(2U-BOLTS PER BRACKET).

BOLTS SHALL HAVE THE THREADS EXCLUDED FROM THE SHEAR PLANE BETWEEN THE SADDLE BLOCK AND THE BRACKET

℄ 3/4" ϕ STAINLESS STEEL U-BOLTS W/STAINLESS STEEL FLAT WASHERS, LOCK WASHERS AND HEX. NUTS.

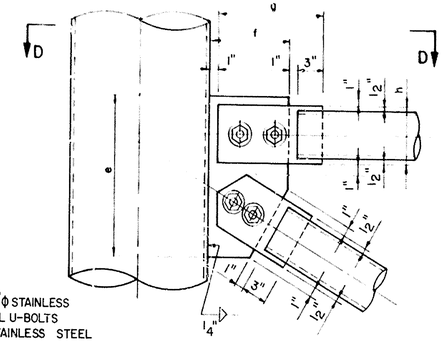

ELEVATION

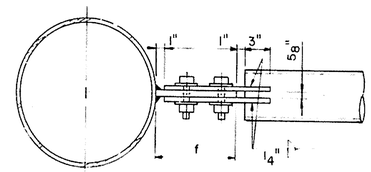

SECTION D-D

TOP BRACKET DETAIL (ONE SIDE)

BOTTOM CONNECTION SIMILAR

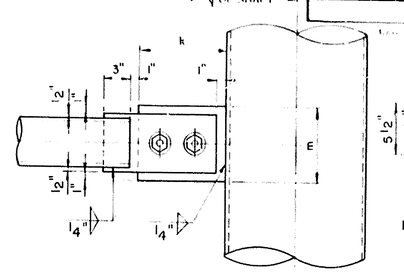

ELEVATION

TOP BRACKET DETAIL (OTHER SIDE)

BOTTOM CONNECTION SIMILAR

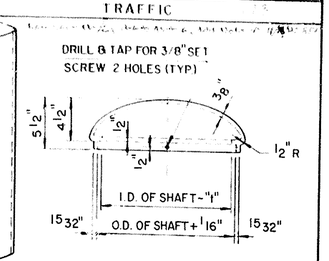

ELEVATION

SHAFT CAP DETAIL

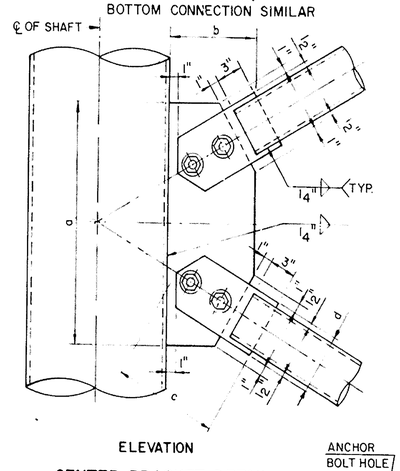

ELEVATION

CENTER BRACKET DETAIL

TOWER SHAFT BASE												
SHAFT O.D. x THICK. IN.	BASE PLATE B	BASE PLATE T IN.	BASE PLATE Ø IN.	BASE PLATE WT.* LBS.	BRACKET PLATES WT. LBS.	TOTAL LBS.	ANCHOR BOLTS BOLT CIRCLE C	ANCHOR BOLTS SIZE DIA x LENGTH IN.	ANCHOR BOLTS PROJ. IN.	ANCHOR BOLTS THRD. IN.	ANCHOR BOLTS WT. LBS.	ANCHOR PLATE m	FILLET WELD t
~~10.750 x .365~~	~~1'-11"~~	~~1 3/4~~	~~2 1/8~~	~~158~~	~~16~~	174	~~1'-6"~~	~~1 3/4 x 32~~	7 1/2	9	100	~~1'-0 3/4"~~	~~5/16"~~
12.750 x .375	2'-3"	2 1/4	2 3/8	354	19	373	1'-9"	2 x 36	8	10	146	1'-2 7/8"	3/8"
12.750 x .500	2'-3"	2 1/4	2 3/8	354	19	373	1'-9"	2 x 36	8	10	146	1'-2 7/8"	3/8"
~~14.000 x .375~~	~~2'-8"~~	~~2 1/2~~	~~2 7/8~~	552	24	576	2'-0"	2 1/2 x 46	9 1/2	11	291	1'-5"	~~3/8"~~
14.000 x .500	2'-8"	2 1/2	2 7/8	552	24	576	2'-0"	2 1/2 x 46	9 1/2	11	291	1'-5"	1/2"
16.000 x .375	2'-10"	2 3/4	2 7/8	688	24	712	2'-2"	2 1/2 x 46	9 1/2	11	291	1'-6 3/8"	3/8"
16.000 x .500	2'-10"	2 3/4	2 7/8	684	24	708	2'-2"	2 1/2 x 46	9 1/2	11	291	1'-6 3/8"	1/2"
18.000 x .375	3'-1"	2 3/4	3 1/8	815	25	840	2'-5"	2 3/4 x 51	10	12	388	1'-8 1/2"	3/8"
18.000 x .500	3'-1"	2 3/4	3 1/8	815	25	840	2'-5"	2 3/4 x 51	10	12	388	1'-8 1/2"	1/2"
20.000 x .375	3'-5"	3 1/4	3 3/8	1183	27	1210	2'-9"	3 x 53	10 1/2	13	486	1'-11 3/8"	3/8"
20.000 x .500	3'-5"	3 1/4	3 3/8	1183	27	1210	2'-9"	3 x 53	10 1/2	13	486	1'-11 3/8"	1/2"

* ONE SHAFT PLATE ONLY

TOWER CONNECTION																	
SHAFT O.D. IN.	5/8" GUSSET SIZE a IN.	5/8" GUSSET SIZE b IN	5/8" GUSSET WT. OF 1 LBS.	5/8" GUSSET SIZE e IN.	5/8" GUSSET SIZE f IN	5/8" GUSSET WT. OF 2 LBS.	3/8" PLATE SIZE c IN.	3/8" PLATE SIZE d IN.	3/8" PLATE WT. OF 4 LBS.	3/8" PLATE SIZE g IN.	3/8" PLATE SIZE h IN.	3/8" PLATE WT. OF 8 LBS.	3/8" PLATE SIZE k IN.	3/8" PLATE SIZE m IN.	3/8" PLATE WT. OF 2 LBS.	BOLT SIZE d x m IN.	BOLT WT. OF 4 LBS.
10.750	~~18 3/4~~	~~7 1/2~~	~~21.7~~	~~13 1/2~~	~~7 1/2~~	~~29.4~~	9 1/2	~~4 1/2~~	~~17.1~~	~~10 1/2~~	~~4 1/2~~	~~20.2~~	~~10 1/2~~	~~6 1/2~~	~~14.5~~	~~3/4 x 3 1/4~~	~~3.34~~
12.750	19 3/4	7 1/2	23.0	14	7 1/2	30.6	9 1/2	4 1/2	17.1	10 1/2	4 1/2	20.2	10 1/2	6 1/2	14.5	3/4 x 3 1/4	3.34
~~14.000~~	~~23 1/2~~	~~9~~	~~31.8~~	~~17 1/2~~	~~9~~	~~44.4~~	10 3/4	6 3/4	~~28.1~~	~~12~~	~~6 1/2~~	~~33.2~~	~~12~~	~~8 5/8~~	~~22.0~~	~~7/8 x 3 1/4~~	~~4.84~~
16.000	25 1/2	9 3/4	38.4	18 1/2	~~9 3/4~~	~~52.4~~	11 1/2	6 3/4	30.3	12 3/4	6 1/2	~~34.6~~	~~12 3/4~~	8 5/8	23.4	7/8 x 3 1/4	4.84
18.000	27 1/2	10	41.6	19 3/4	10	~~56.0~~	11 1/2	7 3/4	34.4	13	7 1/2	41.4	13	9 5/8	26.6	1 x 3 1/2	6.60
~~20.000~~	~~28 1/2~~	~~10~~	~~43.4~~	20 1/4	10	57.8	~~11 1/2~~	~~7 3/4~~	34.4	~~13~~	~~7 1/2~~	41.4	~~13~~	~~9 5/8~~	26.6	~~1 x 3 1/2~~	~~6.60~~

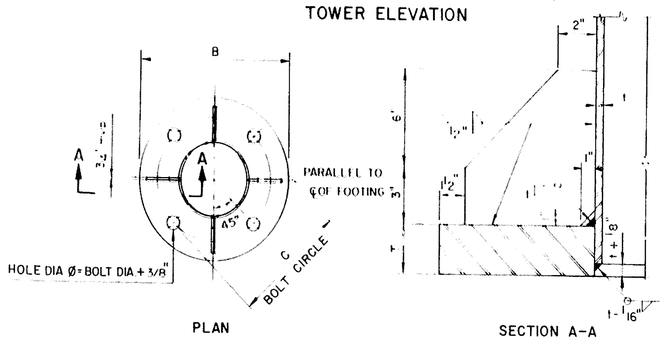

PLAN

SECTION A-A

SHAFT BASE DETAIL TYPE "A"

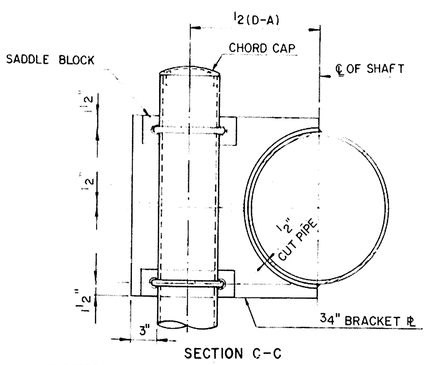

SECTION C-C

BOTTOM CHORD MOUNTING ASSEMBLY DETAIL

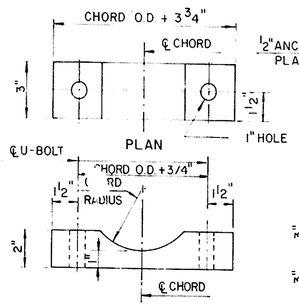

PLAN

ELEVATION

SADDLE BLOCK DETAIL

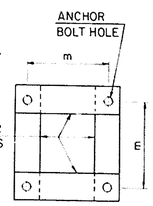

PLAN

ANCHOR PLATES

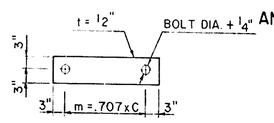

ANCHOR PLATE

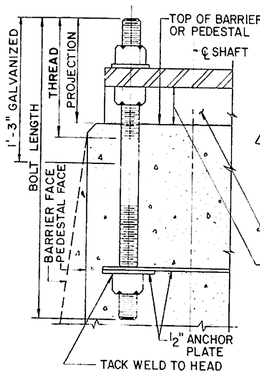

ANCHOR ASSEMBLY DETAIL

NOTES:

1. FOR GENERAL INFORMATION SEE SHEET NO. TR-9
2. FOR SCHEDULE OF STRUCTURES SEE SHEET NO. TR-10
3. FOR SCHEDULE OF FOUNDATIONS SEE SHEET NO. TR-11
4. FOR TRUSS DETAILS SEE SHEET NO. TR-12
5. FOR TOWER TRUSS SEAT DETAILS SEE NO. TR-14
6. ~~FOR MAINTENANCE WALKWAY DETAILS SEE NO. TR-15~~
7. FOR TYPICAL ELECTRICAL DETAILS SEE NO. TR-16
8. ANCHOR BOLTS ARE HEAVY HEX. BOLTS WITH HEAVY HEX. NUTS.
9. BOLTS SHALL BE GALVANIZED AFTER THREADING.
10. FOR SIGN HANGER AND LUMINAIRE SUPPORT DETAILS SEE SHEET TR15

DELAWARE
DEPARTMENT OF TRANSPORTATION
DIVISION OF HIGHWAYS

OVERHEAD SIGN SUPPORT STRUCTURE

STEEL TOWER DETAILS

D	SCALE	APPROVED BY
T		
C		BRIDGE ENGINEER

NEW SHEET ADDED 2-24-86

CONTRACT	COUNTY	FEDERAL AID PROJECT Nº	SHEET Nº	TOTAL SHEETS
83-101-04	NEW CASTLE	F-1045 (20)	TR-13A	

TRAFFIC 173A

Addendum No 2 Delete Note 6, Add Note 10 11/19/81 RFK

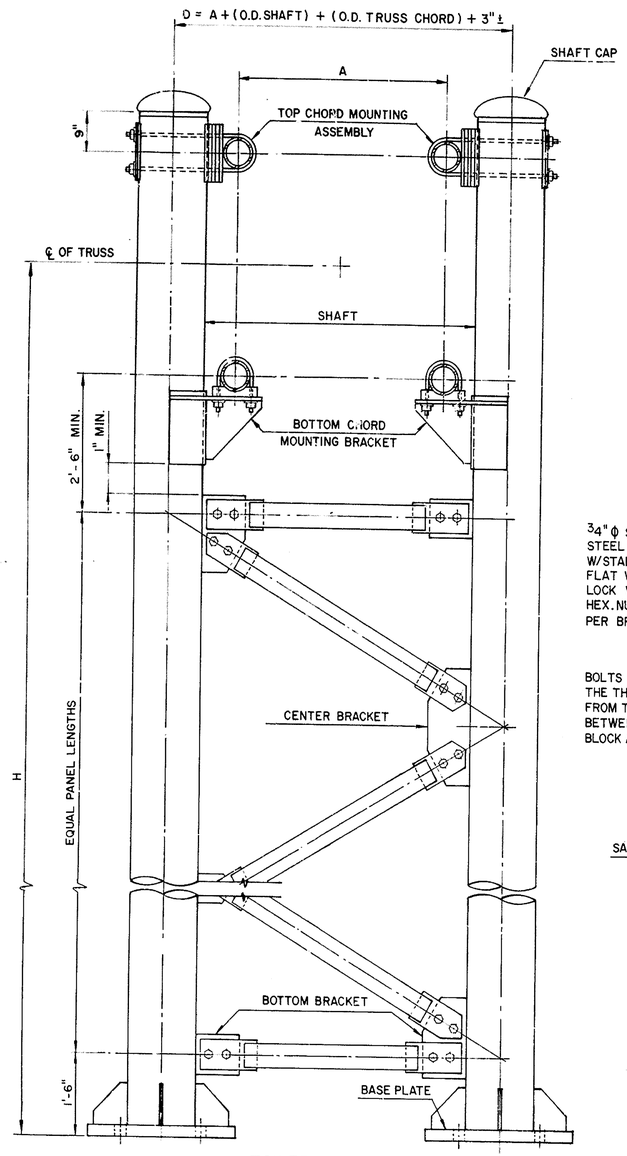

TOWER ELEVATION

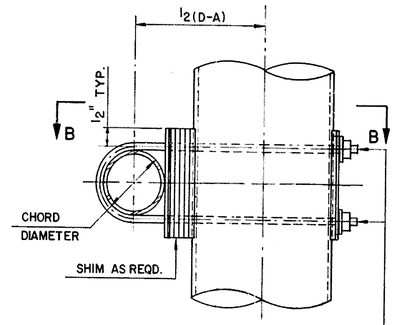

ELEVATION

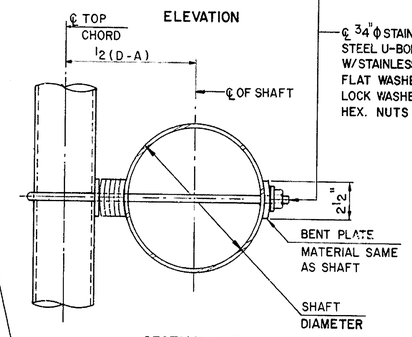

SECTION B-B

TOP CHORD MOUNTING ASSEMBLY DETAIL

℄ 3/4" ϕ STAINLESS STEEL U-BOLTS W/STAINLESS STEEL FLAT WASHERS, LOCK WASHERS AND HEX. NUTS.

3/4" ϕ STAINLESS STEEL U-BOLTS W/STAINLESS STEEL FLAT WASHERS, LOCK WASHERS AND HEX. NUTS.(2 U-BOLTS PER BRACKET).

BOLTS SHALL HAVE THE THREADS EXCLUDED FROM THE SHEAR PLANE BETWEEN THE SADDLE BLOCK AND THE BRACKET

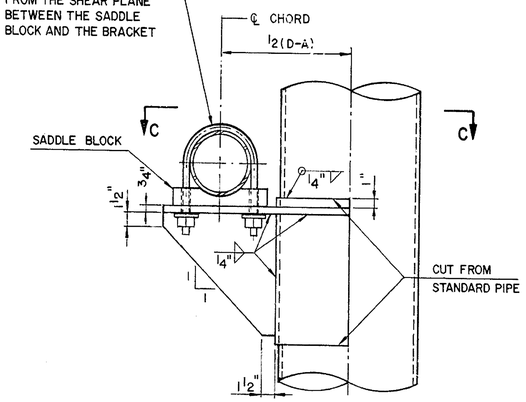

ELEVATION

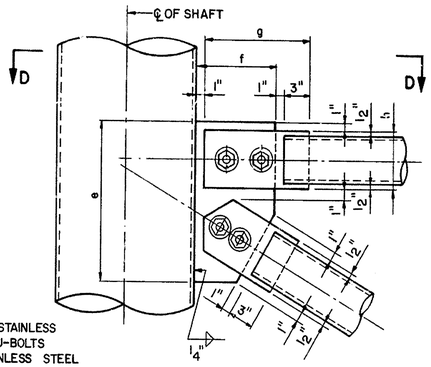

ELEVATION

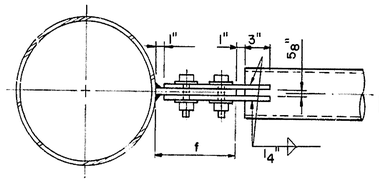

SECTION D-D

TOP BRACKET DETAIL (ONE SIDE)

BOTTOM CONNECTION SIMILAR

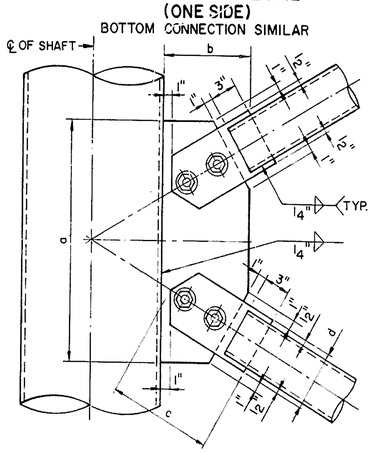

ELEVATION

CENTER BRACKET DETAIL

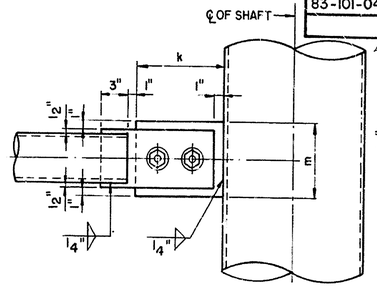

ELEVATION

TOP BRACKET DETAIL (OTHER SIDE)

BOTTOM CONNECTION SIMILAR

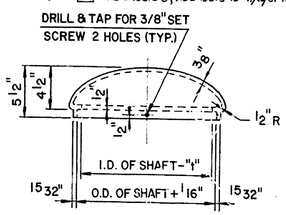

ELEVATION

SHAFT CAP DETAIL

TOWER SHAFT BASE

SHAFT O.D. x THICK. IN.	BASE PLATE B	BASE PLATE T IN.	BASE PLATE Ø IN.	BASE PLATE WT.* LBS.	BRACKET PLATES WT. LBS.	TOTAL LBS.	ANCHOR BOLTS BOLT CIRCLE C	ANCHOR BOLTS SIZE DIA.x LENGTH IN.	ANCHOR BOLTS PROJ. IN.	ANCHOR BOLTS THRD. IN.	ANCHOR BOLTS WT. LBS.	ANCHOR PLATE m.	FILLET WELD t.
~~10.750 x .365~~	~~1'-11"~~	~~1 3/4~~	~~2 1/8~~	~~158~~	~~16~~	~~174~~	~~1'-6"~~	~~1 3/4 x 32~~	~~7 1/2~~	~~9~~	~~100~~	~~1'-0 3/4"~~	~~5/16"~~
~~12.750 x .375~~	~~2'-3"~~	~~2 1/4~~	~~2 3/8~~	~~354~~	~~19~~	~~373~~	~~1'-9"~~	~~2 x 36~~	~~8~~	~~10~~	~~146~~	~~1'-2 7/8"~~	~~3/8"~~
12.750 x .500	2'-3"	2 1/4	2 3/8	354	19	373	1'-9"	2 x 36	8	10	146	1'-2 7/8"	3/8"
~~14.000 x .375~~	~~2'-8"~~	~~2 1/2~~	~~2 7/8~~	~~552~~	~~24~~	~~576~~	~~2'-0"~~	~~2 1/2 x 46~~	~~9 1/2~~	~~11~~	~~291~~	~~1'-5"~~	~~3/8"~~
14.000 x .500	2'-8"	2 1/2	2 7/8	552	24	576	2'-0"	2 1/2 x 46	9 1/2	11	291	1'-5"	1/2"
~~16.000 x .375~~	~~2'-10"~~	~~2 3/4~~	~~2 7/8~~	~~688~~	~~24~~	~~712~~	~~2'-2"~~	~~2 1/2 x 46~~	~~9 1/2~~	~~11~~	~~291~~	~~1'-6 3/8"~~	~~3/8"~~
16.000 x .500	2'-10"	2 3/4	2 7/8	684	24	708	2'-2"	2 1/2 x 46	9 1/2	11	291	1'-6 3/8"	1/2"
18.000 x .375	3'-1"	2 3/4	3 1/8	815	25	840	2'-5"	2 3/4 x 51	10	12	388	1'-8 1/2"	3/8"
18.000 x .500	3'-1"	2 3/4	3 1/8	815	25	840	2'-5"	2 3/4 x 51	10	12	388	1'-8 1/2"	1/2"
~~20.000 x .375~~	~~3'-5"~~	~~3 1/4~~	~~3 3/8~~	~~1183~~	~~27~~	~~1210~~	~~2'-9"~~	~~3 x 53~~	~~10 1/2~~	~~13~~	~~486~~	~~1'-11 3/8"~~	~~3/8"~~
20.000 x .500	3'-5"	3 1/4	3 3/8	1183	27	1210	2'-9"	3 x 53	10 1/2	13	486	1'-11 3/8"	1/2"

* ONE SHAFT PLATE ONLY

TOWER CONNECTION

SHAFT O.D. IN.	5/8" GUSSET SIZE a IN.	5/8" GUSSET SIZE b IN	5/8" GUSSET WT. OF 1 LBS.	5/8" GUSSET SIZE e IN.	5/8" GUSSET SIZE f IN	5/8" GUSSET WT. OF 2 LBS.	3/8" PLATE SIZE c IN.	3/8" PLATE SIZE d IN.	3/8" PLATE WT. OF 4 LBS.	3/8" PLATE SIZE g IN.	3/8" PLATE SIZE h IN.	3/8" PLATE WT. OF 8 LBS.	3/8" PLATE SIZE k IN.	3/8" PLATE SIZE m IN.	3/8" PLATE WT. OF 2 LBS.	BOLT SIZE d x m IN.	BOLT WT. OF 4 LBS.
10.750	18 3/4	7 1/2	21.7	13 1/2	7 1/2	29.4	9 1/2	4 1/2	17.1	10 1/2	4 1/2	20.2	10 1/2	6 1/2	14.5	3/4 x 3 1/4	3.34
12.750	19 3/4	7 1/2	23.0	14	7 1/2	30.6	9 1/2	4 1/2	17.1	10 1/2	4 1/2	20.2	10 1/2	6 1/2	14.5	3/4 x 3 1/4	3.34
14.000	23 1/2	9	31.8	17 1/2	9	44.4	10 3/4	6 3/4	28.1	12	6 1/2	33.2	12	8 5/8	22.0	7/8 x 3 1/4	4.84
~~16.000~~	~~25 1/2~~	~~9 3/4~~	~~38.4~~	~~18 1/2~~	~~9 3/4~~	~~52.4~~	~~11 1/2~~	~~6 3/4~~	~~30.3~~	~~12 3/4~~	~~6 1/2~~	~~34.6~~	~~12 3/4~~	~~8 5/8~~	~~23.4~~	~~7/8 x 3 1/4~~	~~4.84~~
~~18.000~~	~~27 1/2~~	~~10~~	~~41.6~~	~~19 3/4~~	~~10~~	~~56.0~~	~~11 1/2~~	~~7 3/4~~	~~34.4~~	~~13~~	~~7 1/2~~	~~41.4~~	~~13~~	~~9 5/8~~	~~26.6~~	~~1 x 3 1/2~~	~~6.60~~
~~20.000~~	~~28 1/2~~	~~10~~	~~43.4~~	~~20 1/4~~	~~10~~	~~57.8~~	~~11 1/2~~	~~7 3/4~~	~~34.4~~	~~13~~	~~7 1/2~~	~~41.4~~	~~13~~	~~9 5/8~~	~~26.6~~	~~1 x 3 1/2~~	~~6.60~~

NOTES:

1. FOR GENERAL INFORMATION SEE SHEET NO. TR-9
2. FOR SCHEDULE OF STRUCTURES SEE SHEET NO. TR-10
3. FOR SCHEDULE OF FOUNDATIONS SEE SHEET NO. TR-11
4. FOR TRUSS DETAILS SEE SHEET NO. TR-12
5. FOR TOWER TRUSS SEAT DETAILS SEE NO. TR-14
6. ~~FOR MAINTENANCE WALKWAY DETAILS SEE NO. TR-15~~
7. FOR TYPICAL ELECTRICAL DETAILS SEE NO. TR-16
8. ANCHOR BOLTS ARE HEAVY HEX. BOLTS WITH HEAVY HEX. NUTS.
9. BOLTS SHALL BE GALVANIZED AFTER THREADING.
10. FOR SIGN HANGER AND LUMINAIRE SUPPORT DETAILS SEE SHEET TR15

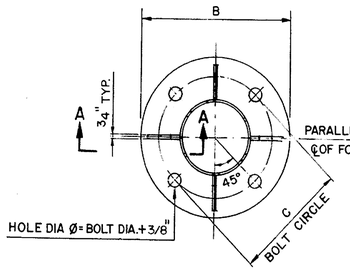

PLAN

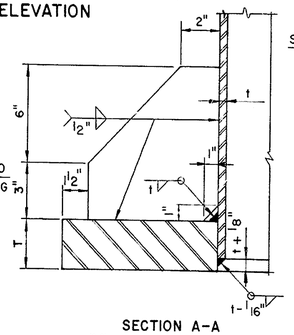

SECTION A-A

SHAFT BASE DETAIL TYPE "A"

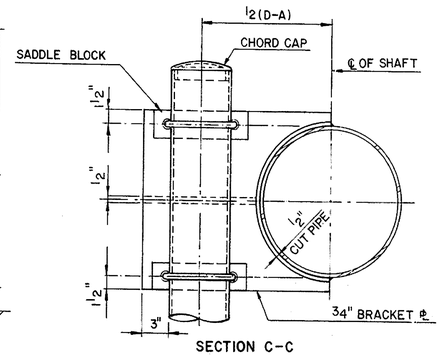

SECTION C-C

BOTTOM CHORD MOUNTING ASSEMBLY DETAIL

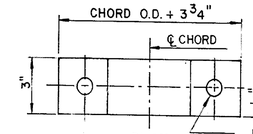

PLAN

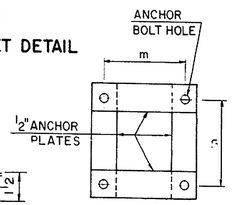

PLAN

ANCHOR PLATES

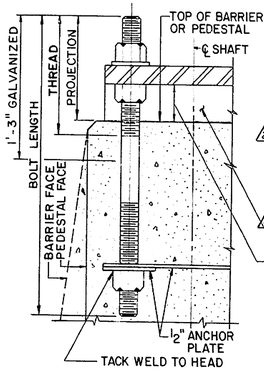

ANCHOR ASSEMBLY DETAIL

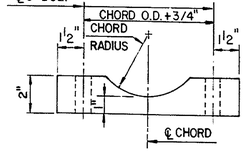

ELEVATION

SADDLE BLOCK DETAIL

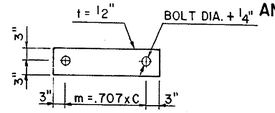

ANCHOR PLATE

DELAWARE DEPARTMENT OF TRANSPORTATION
DIVISION OF HIGHWAYS

OVERHEAD SIGN SUPPORT STRUCTURE

STEEL TOWER DETAILS

D T C	SCALE	APPROVED BY BRIDGE ENGINEER

REVISIONS

1 12.75 x .375 SHAFT DELETED - MARCH 1989

DESIGN CHKD. PREL. TRACING

CONTRACT	COUNTY	FEDERAL AID PROJECT Nº	SHEET Nº	TOTAL SHEETS
83-101-04	NEW CASTLE	F-1045 (20)	TR-14	

TRAFFIC 174

STEEL SEAT FOR ALUMINUM TRUSS AND STEEL TOWER

CHORD O.D.	SHAFT O.D.	VERTICAL PL. T = ½" SIZE a	VERTICAL PL. SIZE b	VERTICAL PL. WGHT.	HORIZONTAL PL. T = ¾" SIZE c	HORIZONTAL PL. SIZE d	HORIZONTAL PL. WGHT.	HALF SLEEVE T = ½" SIZE e	HALF SLEEVE SIZE f	HALF SLEEVE WGHT.	TOTAL PLATE WGHT. *	SHIM PLATE WGHT. 4 SH'FT.	SADDLE BLOCK WGHT OF 4	¾" Ø U BOLT L	¾" Ø U BOLT WGHT. OF 8	¾" Ø U BOLT L	¾" Ø U BOLT WGHT. OF 4
IN.	IN.	IN.	IN.	LBS.	IN.	IN.	LBS.	IN.	IN.	LBS.	LBS.	LBS.	LBS.	IN.	LBS.	IN.	LBS.
4.500	12.750	10	11½	10.3	17	16	44.3	20½	14½	42.2	99	30	12	20	23	49	26
4.500	14.000	10	11½	10.3	18	17	48.7	23	14½	47.3	108	30	12	20	23	51	27
4.500	16.000	10	11½	10.3	18½	19	53.4	26	15½	57.1	123	30	12	20	23	55	29
6.000	12.750	11½	13	13.1	18½	16	49.4	21	16	47.6	112	35	14	24	27	53	28
6.000	16.000	11½	13	13.1	20	19	59.4	26	16	59.0	134	35	14	24	27	59	31
9.000	12.750	14½	16	19.5	21½	16	59.6	21	19	56.6	138	45	20	31	34	60	32
9.000	14.000	14½	16	19.5	22	17	63.2	23	19	62.0	147	45	20	31	34	63	33
9.000	16.000	14½	16	19.5	23	19	71.6	26	19	70.0	164	45	20	31	34	67	35
9.000	18.000	14½	16	19.5	24	21	80.1	29	19	78.1	180	45	20	31	34	71	37
10.000	12.750	15½	17	22.0	22½	16	63.0	21	20	59.6	148	48	22	34	37	63	33
10.000	14.000	15½	17	22.0	23	17	66.8	23	20	65.2	157	48	22	34	37	65	34
10.000	16.000	15½	17	22.0	24	19	75.6	26	20	73.7	174	48	22	34	37	67	35
10.000	18.000	15½	17	22.0	25	21	84.6	29	20	82.2	192	48	22	34	37	73	38
10.000	20.000	15½	17	22.0	26	23	93.8	32½	20	92.2	211	48	22	34	37	77	40
11.000	14.000	16½	18	24.6	24	17	70.4	23	21	68.5	167	52	24	36	39	64	34
11.000	16.000	16½	18	24.6	25	19	79.6	26	21	77.4	185	52	24	36	39	72	38
11.000	18.000	16½	18	24.6	26	21	89.1	29	21	86.4	203	52	24	36	39	76	39
11.000	20.000	16½	18	24.6	27	23	98.7	32½	21	96.8	223	52	24	36	39	80	42
12.000	14.000	17½	19	27.3	25	17	74.0	23	22	71.8	176	55	25	39	42	70	37
12.000	16.000	17½	19	27.3	26	19	83.7	26	22	81.1	195	55	25	39	42	74	38
12.000	18.000	17½	19	27.3	27	21	93.5	29	22	90.5	215	55	25	39	42	78	41
12.000	20.000	17½	19	27.3	28	23	103.6	32½	22	101.4	236	55	25	39	42	82	43

* INCLUDES WEIGHT OF ¼" STAINLESS STEEL PL SEPARATING ALUMINUM SADDLE FROM STEEL SEAT.

ALUMINUM SEAT FOR ALUMINUM TRUSS AND ALUMINUM TOWER

CHORD O.D.	SHAFT O.D.	VERTICAL PL. T = ½" SIZE a	VERTICAL PL. SIZE b	VERTICAL PL. WGHT.	HORIZONTAL PL. T = ¾" SIZE c	HORIZONTAL PL. SIZE d	HORIZONTAL PL. WGHT.	HALF SLEEVE T = ½" SIZE e	HALF SLEEVE SIZE f	HALF SLEEVE WGHT.	TOTAL PLATE WGHT.	SHIM PLATE WGHT. 4 SH'FT	SADDLE BLOCK WGHT. OF 4	¾" Ø U BOLT L	¾" Ø U BOLT WGHT. OF 8	¾" Ø U BOLT L	¾" Ø U BOLT WGHT. OF 4
IN.	IN.	IN.	IN.	LBS.	IN.	IN.	LBS.	IN.	IN.	LBS.	LBS.	LBS.	LBS.	IN.	LBS.	IN.	LBS.
4.500	11.000	10	11½	3.5	16	14	12.6	18	13½	11.6	27.7	30	12	20	23	45	24
4.500	12.000	10	11½	3.5	16½	15	12.5	20	13½	12.9	28.9	30	12	20	23	47	25
4.500	13.000	10	11½	3.5	17	16	14.7	22	13½	14.2	31.2	30	12	20	23	49	26
4.500	14.000	10	11½	3.5	17½	17	15.8	23	13½	14.8	32.8	30	12	20	23	51	27
6.000	13.000	11½	13	4.4	18½	16	16.4	22	15	15.7	36.5	35	14	24	27	52	28
6.000	14.000	11½	13	4.4	19	17	17.6	23	15	16.5	38.5	35	14	24	27	54	29
9.000	14.000	14½	16	6.6	22	17	21.3	23	19	20.8	48.7	45	20	31	33	62	32

¾" Ø STAINLESS STEEL U-BOLTS W/STAINLESS STEEL FLAT WASHERS, LOCK WASHERS AND HEX NUTS (2 U-BOLTS PER BRACKET).

BOLTS SHALL HAVE THE THREADS EXCLUDED FROM THE SHEAR PLANE, BETWEEN THE SADDLE BLOCK AND THE BRACKET.

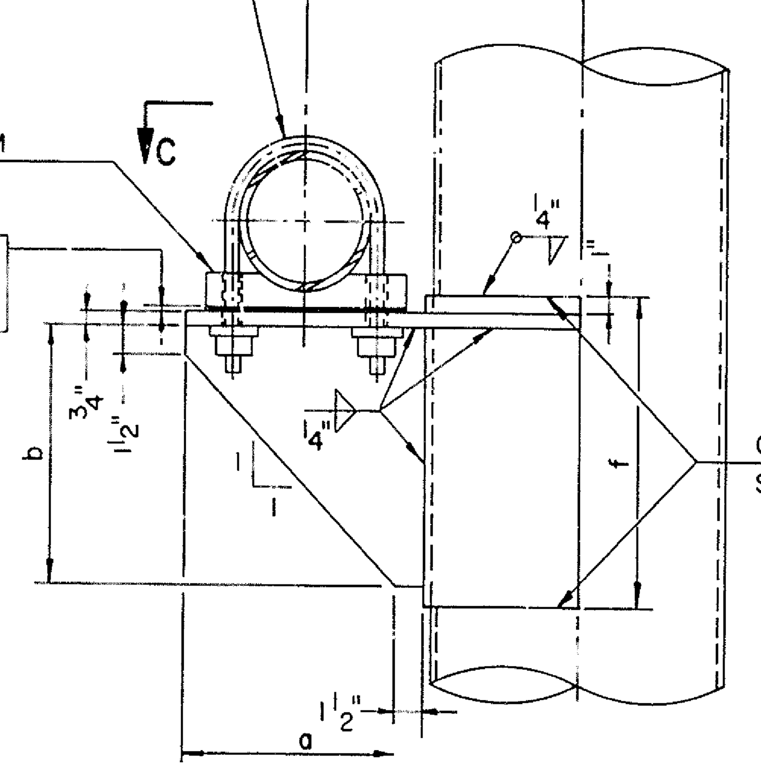

ELEVATION

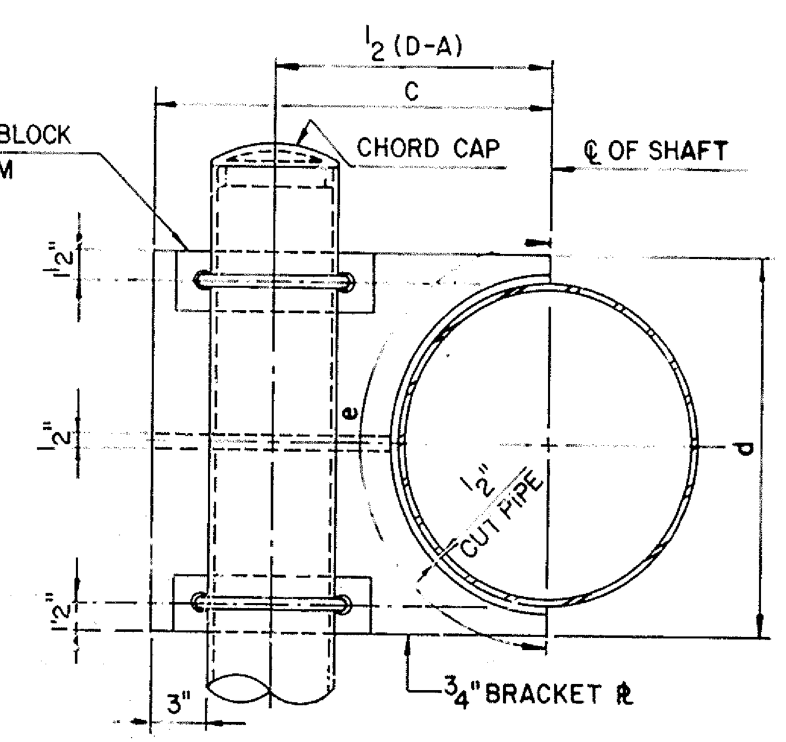

SECTION C-C
BOTTOM CHORD MOUNTING ASSEMBLY DETAIL

Addendum No. 2 Delete Note 6, Add Note 8 11/16/87 RFK

STEEL SEAT FOR STEEL TRUSS AND STEEL TOWER

CHORD O.D.	SHAFT O.D.	VERTICAL PL. T = ½" SIZE a	VERTICAL PL. SIZE b	VERTICAL PL. WGHT.	HORIZONTAL PL. T = ¾" SIZE c	HORIZONTAL PL. SIZE d	HORIZONTAL PL. WGHT.	HALF SLEEVE T = ½" SIZE e	HALF SLEEVE SIZE f	HALF SLEEVE WGHT.	TOTAL PLATE WGHT.	SHIM PLATE WGHT 4 SH'FT.	SADDLE BLOCK WGHT OF 4	¾" Ø U BOLT L	¾" Ø U BOLT WGHT. OF 8	¾" Ø U BOLT L	¾" Ø U BOLT WGHT. OF 4
IN.	IN.	IN.	IN.	LBS.	IN.	IN.	LBS.	IN.	IN.	LBS.	LBS.	LBS.	LBS	IN.	LBS	IN.	LBS.
~~3.500~~	~~10.750~~	~~9~~	~~10½~~	~~8.6~~	~~14⅞~~	~~13¾~~	~~33.9~~	~~18~~	~~12½~~	~~32.0~~	~~74.5~~	~~80~~	~~25~~	~~17~~	~~20~~	~~41~~	~~22~~
3.500	12.750	9	10½	8.6	15⅞	15¾	39.6	21	12½	37.2	85.4	80	25	17	20	45	24
3.500	14.000	9	10½	8.6	16½	17	43.3	22	12½	39.0	90.9	80	25	17	20	48	26
~~4.000~~	~~10.750~~	~~9½~~	~~11~~	~~9.4~~	~~15⅜~~	~~13¾~~	~~35.3~~	~~18~~	~~13~~	~~33.2~~	~~77.9~~	~~84~~	~~26~~	~~18~~	~~21~~	~~43~~	~~23~~
4.000	12.750	9½	11	9.4	16⅜	15¾	41.3	21	13	38.7	89.4	84	26	18	21	47	25
~~4.000~~	~~14.000~~	~~9½~~	~~11~~	~~9.4~~	~~17~~	~~17~~	~~45.1~~	~~23~~	~~13~~	~~42.4~~	~~96.9~~	~~84~~	~~26~~	~~18~~	~~21~~	~~49~~	~~26~~
~~4.000~~	~~16.000~~	~~9½~~	~~11~~	~~9.4~~	~~18~~	~~19~~	~~51.4~~	~~26~~	~~13~~	~~47.9~~	~~108.7~~	~~84~~	~~26~~	~~18~~	~~21~~	~~53~~	~~28~~
5.563	12.750	11	12½	12.1	17⅞	15¾	46.3	21	14½	42.9	101.3	100	33	22	25	51	27
~~5.563~~	~~14.000~~	~~11~~	~~12½~~	~~12.1~~	~~18½~~	~~17~~	~~50.5~~	~~23~~	~~14½~~	~~47.3~~	~~109.9~~	~~100~~	~~33~~	~~22~~	~~25~~	~~53~~	~~28~~
5.563	16.000	11	12½	12.1	19½	19	57.4	26	14½	53.5	123.0	100	33	22	25	57	30
6.625	12.750	12¼	13¾	14.5	18⅝	15¾	48.8	21	16½	46.2	109.5	110	39	25	28	54	29
6.625	14.000	12¼	13¾	14.5	19¾	17	55.0	23	16½	50.5	120.0	110	39	25	28	56	30
6.625	16.000	12¼	13¾	14.5	20¾	19	62.5	26	16½	57.1	134.1	110	39	25	28	60	32
6.625	18.000	12¼	13¾	14.5	21¾	21	70.1	29	16½	64.0	148.6	110	39	25	28	64	33
10.750	14.000	16¼	17¾	23.9	23¾	17	69.5	23	19¾	64.4	157.8	151	56	36	39	66	34
10.750	16.000	16¼	17¾	23.9	24¾	19	78.6	26	19¾	72.8	175.3	151	56	36	39	70	36
10.750	18.000	16¼	17¾	23.9	25¾	21	88.0	29	19¾	81.6	193.5	151	56	36	39	74	38
12.750	14.000	18¼	19¾	29.4	25¾	17	76.7	23	21¾	70.9	177.0	171	66	41	44	72	37
12.750	16.000	18¼	19¾	29.4	26¾	19	86.7	26	21¾	80.2	196.3	171	66	41	44	76	39
12.750	18.000	18¼	19¾	29.4	27¾	21	96.9	29	21¾	89.4	215.7	171	66	41	44	80	41
~~12.750~~	~~20.000~~	~~18¼~~	~~19¾~~	~~29.4~~	~~28¾~~	~~23~~	~~107.2~~	~~33~~	~~21¾~~	~~101.8~~	~~238.4~~	~~171~~	~~66~~	~~41~~	~~44~~	~~84~~	~~43~~

Revision No. 1 Voids this sheet and replaces it with sheet No. TR-14A / 174A 2-24-88

NOTES:

1. FOR GENERAL INFORMATION SEE SHEET NO. TR-9
2. FOR SCHEDULE OF STRUCTURES SEE SHEET NO. TR-10
3. FOR SCHEDULE OF FOUNDATIONS SEE SHEET NO. TR-11
4. FOR TRUSS DETAILS SEE SHEET NO. TR-12
5. FOR TOWER DETAILS SEE SHEET NO. TR-13
6. ~~FOR MAINTENANCE WALKWAY DETAILS SEE SHEET NO. TR-15~~ (2)
7. FOR TYPICAL ELECTRICAL DETAILS SEE SHEET NO. TR-16
8. (2) FOR SIGN HANGER AND LUMINAIRE SUPPORT DETAILS SEE SHEET NO. TR 15

DELAWARE
DEPARTMENT OF TRANSPORTATION
DIVISION OF HIGHWAYS

OVERHEAD SIGN SUPPORT STRUCTURE

TOWER TRUSS SEAT TABLES

D T C	SCALE	APPROVED BY BRIDGE ENGINEER

EI 84-83

NEW SHEET ADDED 2-24-88

CONTRACT	COUNTY	FEDERAL AID PROJECT Nº	SHEET Nº	TOTAL SHEETS
83-101-04	NEW CASTLE	F-1045 (20)	TR-14A	174A

TRAFFIC

Addendum No. 2 Delete Note 6, add Note 8 11/18/87 PER

STEEL SEAT FOR ALUMINUM TRUSS AND STEEL TOWER

CHORD O. D.	SHAFT O. D.	VERTICAL PL. T = 1/2" SIZE a	VERTICAL PL. T = 1/2" SIZE b	VERTICAL PL. T = 1/2" WGHT.	HORIZONTAL PL. T = 3/4" SIZE c	HORIZONTAL PL. T = 3/4" SIZE d	HORIZONTAL PL. T = 3/4" WGHT.	HALF SLEEVE T = 1/2" SIZE e	HALF SLEEVE T = 1/2" SIZE f	HALF SLEEVE T = 1/2" WGHT.	TOTAL PLATE WGHT. *	SHIM PLATE WGHT. 4 SH'FT.	SADDLE BLOCK WGHT. OF 4	3/4" Ø U BOLT L	3/4" Ø U BOLT WGHT. OF 8	3/4" Ø U BOLT L	3/4" Ø U BOLT WGHT. OF 4
IN.	IN.	IN.	IN.	LBS.	IN.	IN.	LBS.	IN.	IN.	LBS.	LBS.	LBS.	LBS.	IN.	LBS.	IN.	LBS.
4.500	12.750	10	11 1/2	10.3	17	16	44.3	20 1/2	14 1/2	42.2	99	30	12	20	23	49	26
4.500	14.000	10	11 1/2	10.3	18	17	48.7	23	14 1/2	47.3	108	30	12	20	23	51	27
4.500	16.000	10	11 1/2	10.3	18 1/2	19	53.4	26	15 1/2	57.1	123	30	12	20	23	55	29
6.000	12.750	11 1/2	13	13.1	18 1/2	16	49.4	21	16	47.6	112	35	14	24	27	53	28
6.000	16.000	11 1/2	13	13.1	20	19	59.4	26	16	59.0	134	35	14	24	27	59	31
9.000	12.750	14 1/2	16	19.5	21 1/2	16	59.6	21	19	56.6	138	45	20	31	34	60	32
9.000	14.000	14 1/2	16	19.5	22	17	63.2	23	19	62.0	147	45	20	31	34	63	33
9.000	16.000	14 1/2	16	19.5	23	19	71.6	26	19	70.0	164	45	20	31	34	67	35
9.000	18.000	14 1/2	16	19.5	24	21	80.1	29	19	78.1	180	45	20	31	34	71	37
10.000	12.750	15 1/2	17	22.0	22 1/2	16	63.0	21	20	59.6	148	48	22	34	37	63	33
10.000	14.000	15 1/2	17	22.0	23	17	66.8	23	20	65.2	157	48	22	34	37	65	34
10.000	16.000	15 1/2	17	22.0	24	19	75.6	26	20	73.7	174	48	22	34	37	67	35
10.000	18.000	15 1/2	17	22.0	25	21	84.6	29	20	82.2	192	48	22	34	37	73	38
10.000	20.000	15 1/2	17	22.0	26	23	93.8	32 1/2	20	92.2	211	48	22	34	37	77	40
11.000	14.000	16 1/2	18	24.6	24	17	70.4	23	21	68.5	167	52	24	36	39	64	34
11.000	16.000	16 1/2	18	24.6	25	19	79.6	26	21	77.4	185	52	24	36	39	72	38
11.000	18.000	16 1/2	18	24.6	26	21	89.1	29	21	86.4	203	52	24	36	39	76	39
11.000	20.000	16 1/2	18	24.6	27	23	98.7	32 1/2	21	96.8	223	52	24	36	39	80	42
12.000	14.000	17 1/2	19	27.3	25	17	74.0	23	22	71.8	176	55	25	39	42	70	37
12.000	16.000	17 1/2	19	27.3	26	19	83.7	26	22	81.1	195	55	25	39	42	74	38
12.000	18.000	17 1/2	19	27.3	27	21	93.5	29	22	90.5	215	55	25	39	42	78	41
12.000	20.000	17 1/2	19	27.3	28	23	103.6	32 1/2	22	101.4	236	55	25	39	42	82	43

* INCLUDES WEIGHT OF 1/4" STAINLESS STEEL PL SEPARATING ALUMINUM SADDLE FROM STEEL SEAT.

ALUMINUM SEAT FOR ALUMINUM TRUSS AND ALUMINUM TOWER

CHORD O. D.	SHAFT O. D.	VERTICAL PL. T = 1/2" SIZE a	VERTICAL PL. T = 1/2" SIZE b	VERTICAL PL. T = 1/2" WGHT.	HORIZONTAL PL. T = 3/4" SIZE c	HORIZONTAL PL. T = 3/4" SIZE d	HORIZONTAL PL. T = 3/4" WGHT.	HALF SLEEVE T = 1/2" SIZE e	HALF SLEEVE T = 1/2" SIZE f	HALF SLEEVE T = 1/2" WGHT.	TOTAL PLATE WGHT.	SHIM PLATE WGHT. 4 SH'FT	SADDLE BLOCK WGHT. OF 4	3/4" Ø U BOLT L	3/4" Ø U BOLT WGHT. OF 8	3/4" Ø U BOLT L	3/4" Ø U BOLT WGHT. OF 4
IN.	IN.	IN.	IN.	LBS.	IN.	IN.	LBS.	IN.	IN	LBS.	LBS.	LBS.	LBS.	IN.	LBS.	IN.	LBS
4.500	11.000	10	11 1/2	3.5	16	14	12.6	18	13 1/2	11.6	27.7	30	12	20	23	45	24
4.500	12.000	10	11 1/2	3.5	16 1/2	15	12.5	20	13 1/2	12.9	28.9	30	12	20	23	47	25
4.500	13.000	10	11 1/2	3.5	17	16	14.7	22	13 1/2	14.2	31.2	30	12	20	23	49	26
4.500	14.000	10	11 1/2	3.5	17 1/2	17	15.8	23	13 1/2	14.8	32.8	30	12	20	23	51	27
6.000	13.000	11 1/2	13	4.4	18 1/2	16	16.4	22	15	15.7	36.5	35	14	24	27	52	28
6.000	14.000	11 1/2	13	4.4	19	17	17.6	23	15	16.5	38.5	35	14	24	27	54	29
9.000	14.000	14 1/2	16	6.6	22	17	21.3	23	19	20.8	48.7	45	20	31	33	62	32

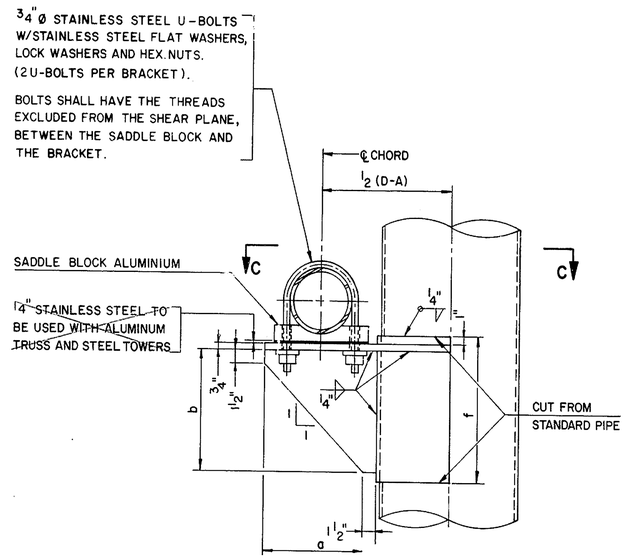

ELEVATION

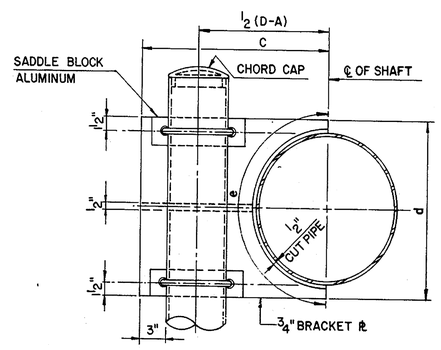

SECTION C-C

BOTTOM CHORD MOUNTING ASSEMBLY DETAIL

STEEL SEAT FOR STEEL TRUSS AND STEEL TOWER

CHORD O. D.	SHAFT O.D.	VERTICAL PL. T = 1/2" SIZE a	VERTICAL PL. T = 1/2" SIZE b	VERTICAL PL. T = 1/2" WGHT.	HORIZONTAL PL. T = 3/4" SIZE c	HORIZONTAL PL. T = 3/4" SIZE d	HORIZONTAL PL. T = 3/4" WGHT.	HALF SLEEVE T = 1/2" SIZE e	HALF SLEEVE T = 1/2" SIZE f	HALF SLEEVE T = 1/2" WGHT.	TOTAL PLATE WGHT.	SHIM PLATE WGHT 4 SH'FT.	SADDLE BLOCK WGHT OF 4	3/4" Ø U BOLT L	3/4" Ø U BOLT WGHT. OF 8	3/4" Ø U BOLT L	3/4" Ø U BOLT WGHT. OF 4
IN.	IN.	IN.	IN.	LBS.	IN.	IN.	LBS.	IN.	IN.	LBS.	LBS.	LBS.	LBS	IN.	LBS	IN.	LBS.
~~3.500~~	~~10.750~~	~~9~~	~~10 1/2~~	~~8.6~~	~~14 7/8~~	~~13 3/4~~	~~33.9~~	~~18~~	~~12 1/2~~	~~32.0~~	~~74.5~~	~~80~~	~~25~~	~~17~~	~~20~~	~~41~~	~~22~~
3.500	12.750	9	10 1/2	8.6	15 7/8	15 3/4	39.6	21	12 1/2	37.2	85.4	80	25	17	20	45	24
3.500	14.000	9	10 1/2	8.6	16 1/2	17	43.3	22	12 1/2	39.0	90.9	80	25	17	20	48	26
~~4.000~~	~~10.750~~	~~9 1/2~~	~~11~~	~~9.4~~	~~15 3/8~~	~~13 3/4~~	~~35.3~~	~~18~~	~~13~~	~~33.2~~	~~77.9~~	~~84~~	~~26~~	~~18~~	~~21~~	~~43~~	~~23~~
4.000	12.750	9 1/2	11	9.4	16 3/8	15 3/4	41.3	21	13	38.7	89.4	84	26	18	21	47	25
~~4.000~~	~~14.000~~	~~9 1/2~~	~~11~~	~~9.4~~	~~17~~	~~17~~	~~45.1~~	~~23~~	~~13~~	~~42.4~~	~~96.9~~	~~84~~	~~26~~	~~18~~	~~21~~	~~49~~	~~26~~
~~4.000~~	~~16.000~~	~~9 1/2~~	~~11~~	~~9.4~~	~~18~~	~~19~~	~~51.4~~	~~26~~	~~13~~	~~47.9~~	~~108.7~~	~~84~~	~~26~~	~~18~~	~~21~~	~~53~~	~~28~~
~~5.563~~	~~12.750~~	~~11~~	~~12 1/2~~	~~12.1~~	~~17 7/8~~	~~15 3/4~~	~~46.3~~	~~21~~	~~14 1/2~~	~~42.9~~	~~101.3~~	~~100~~	~~33~~	~~22~~	~~25~~	~~51~~	~~27~~
~~5.563~~	~~14.000~~	~~11~~	~~12 1/2~~	~~12.1~~	~~18 1/2~~	~~17~~	~~50.5~~	~~23~~	~~14 1/2~~	~~47.3~~	~~109.9~~	~~100~~	~~33~~	~~22~~	~~25~~	~~53~~	~~28~~
~~5.563~~	~~16.000~~	~~11~~	~~12 1/2~~	~~12.1~~	~~19 1/2~~	~~19~~	~~57.4~~	~~26~~	~~14 1/2~~	~~53.5~~	~~123.0~~	~~100~~	~~33~~	~~22~~	~~25~~	~~57~~	~~30~~
~~6.625~~	~~12.750~~	~~12 1/4~~	~~13 3/4~~	~~14.5~~	~~18 5/8~~	~~15 3/4~~	~~48.8~~	~~21~~	~~16 1/2~~	~~46.2~~	~~109.5~~	~~110~~	~~39~~	~~25~~	~~28~~	~~54~~	~~29~~
6.625	14.000	12 1/4	13 3/4	14.5	19 3/4	17	55.0	23	16 1/2	50.5	120.0	110	39	25	28	56	30
~~6.625~~	~~16.000~~	~~12 1/4~~	~~13 3/4~~	~~14.5~~	~~20 3/4~~	~~19~~	~~62.5~~	~~26~~	~~16 1/2~~	~~57.1~~	~~134.1~~	~~110~~	~~39~~	~~25~~	~~28~~	~~60~~	~~32~~
6.625	18.000	12 1/4	13 3/4	14.5	21 3/4	21	70.1	29	16 1/2	64.0	148.6	110	39	25	~~28~~	64	33
10.750	14.000	16 1/4	17 3/4	~~23.9~~	23 3/4	17	69.5	23	19 3/4	64.4	157.8	151	~~56~~	36	39	66	34
10.750	16.000	16 1/4	17 3/4	23.9	24 3/4	~~19~~	78.6	26	19 3/4	72.8	~~175.3~~	151	56	36	39	70	36
10.750	18.000	16 1/4	17 3/4	23.9	25 3/4	21	88.0	~~29~~	~~19 3/4~~	81.6	193.5	151	56	36	39	74	38
12.750	14.000	18 1/4	19 3/4	29.4	25 3/4	~~17~~	76.7	23	21 3/4	~~70.9~~	~~177.0~~	171	66	41	44	72	37
12.750	16.000	18 1/4	19 3/4	~~29.4~~	26 3/4	19	86.7	26	21 3/4	80.2	196.3	~~171~~	~~66~~	41	44	76	39
12.750	~~18.000~~	~~18 1/4~~	~~19 3/4~~	29.4	27 3/4	21	96.9	29	21 3/4	89.4	215.7	171	66	~~41~~	~~44~~	80	41
~~12.750~~	~~20.000~~	~~18 1/4~~	~~19 3/4~~	~~29.4~~	~~28 3/4~~	~~23~~	~~107.2~~	~~33~~	~~21 3/4~~	~~101.8~~	~~238.4~~	~~171~~	~~66~~	~~41~~	~~44~~	~~84~~	~~43~~

NOTES :

1. FOR GENERAL INFORMATION SEE SHEET NO. TR-9
2. FOR SCHEDULE OF STRUCTURES SEE SHEET NO. TR-10
3. FOR SCHEDULE OF FOUNDATIONS SEE SHEET NO. TR-11
4. FOR TRUSS DETAILS SEE SHEET NO. TR-12
5. FOR TOWER DETAILS SEE SHEET NO. TR-13
6. ~~FOR MAINTENANCE WALKWAY DETAILS SEE SHEET NO. TR-15~~
7. FOR TYPICAL ELECTRICAL DETAILS SEE SHEET NO. TR-16
8. FOR SIGN HANGER AND LUMINAIRE SUPPORT DETAILS SEE SHEET NO. TR 15

DELAWARE
DEPARTMENT OF TRANSPORTATION
DIVISION OF HIGHWAYS

OVERHEAD SIGN SUPPORT STRUCTURE

TOWER TRUSS SEAT TABLES

D
T
C

SCALE

APPROVED BY

BRIDGE ENGINEER

EI 84-83

CHK. BY
CHK. BY
CHK. BY
CHK. BY

PAGE OF

CONTRACT	COUNTY	FEDERAL AID PROJECT No.	SHEET No.	TOTAL SHEETS
83-101-04	NEW CASTLE	F-1045 (20)	TR-15	175

TRAFFIC

Addendum No. 2 Deleted Maint. Walkway, added luminaire support data back, revised sheet 11/16/07 RFK

NOTES

1. LENGTH OF SIGN HANGERS SHALL BE EQUAL TO THE SIGN HEIGHT USED.
2. SIGN HANGERS SHALL BE USED TO SUPPORT SIGN ONLY.
3. LUMINAIRE ~~HANGERS~~ SUPPORTS SHALL PROJECT 3" ABOVE THE TOP OF THE CHORD AND SHALL NOT SUPPORT SIGNS.

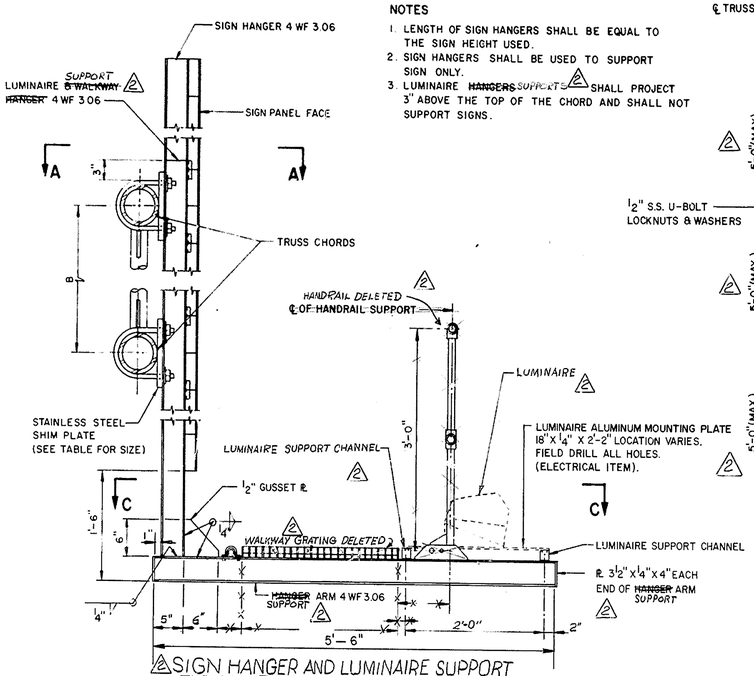

SIGN HANGER AND LUMINAIRE SUPPORT
TYPICAL ~~MAINTENANCE WALKWAY~~ DETAIL

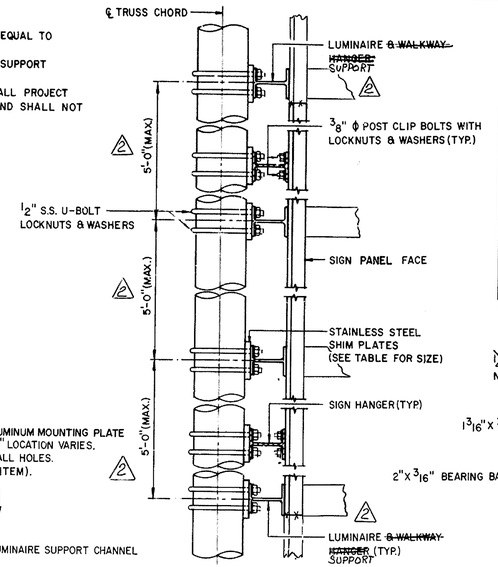

SECTION A-A

NOTE
MAX HANDRAIL SECTION SHALL BE 10'-0" LONG AND INCLUDE TWO POSTS.

SHIM PLATES *		
CHORD O.D. IN.	THICK. IN.	SIZE IN.
3.500	1/4	4 x 7
4.000	1/4	4 x 7
5.563	1/4	4 x 9
6.625	3/4	4 x 10
10.750	1 1/4	4 x 14
12.750	2	4 x 16

*SHIM PLATES NOT REQUIRED FOR ALUMINUM TRUSSES

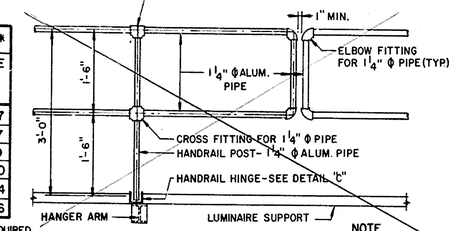

ELEVATION OF HANDRAIL

NOTE
ALL PIPE FOR HANDRAIL SHALL BE 1 1/4" DIA., SCHEDULE 40

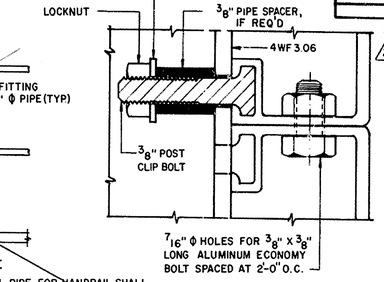

DETAIL "X"

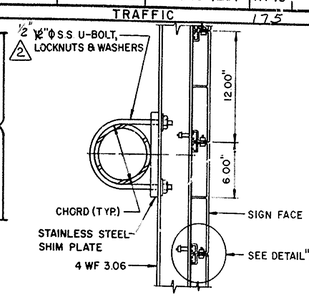

CONNECTION DETAIL FOR SIGN PANEL TO OVERHEAD STRUCTURE

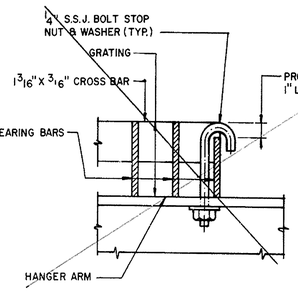

DETAIL "A"

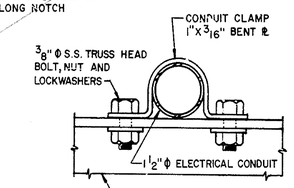

DETAIL "E"

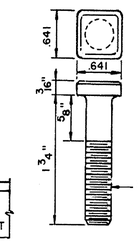

POST CLIP BOLT

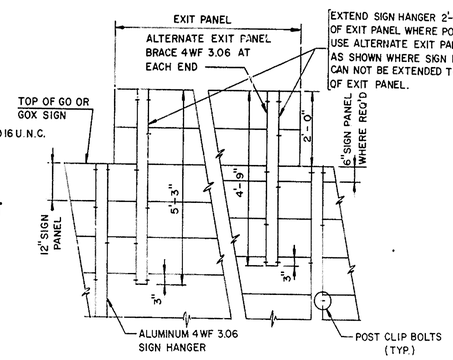

EXIT PANEL CONNECTION DETAIL

~~USE SAME DETAIL FOR THE ATTACHMENT OF NEW EXIT PANEL TO THE EXISTING GO & GOX SIGN PANEL~~

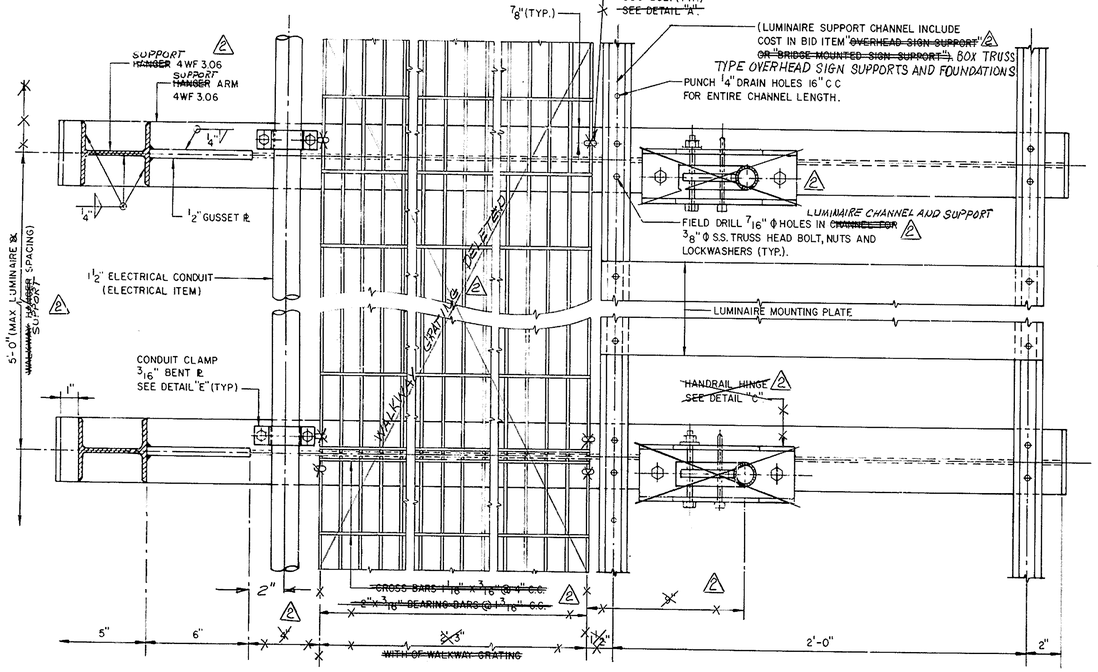

SECTION C-C

~~NOTE~~
THE ~~MINIMUM SECTION~~ MODULUS SHALL BE 1.35 in^3 PER FOOT ~~WIDTH~~ OF WALKWAY GRATING. ~~THE INTERMEDIATE JOINTS IN THE GRATING SHALL~~ BE AS SHOWN IN SECTION C-C. ~~GRATING SHALL~~ NOT CANTILEVER MORE THAN 1'-0" BEYOND ~~HANGER ARMS AT EACH END OF THE MAINTENANCE~~ WALKWAY ~~GRATING SHALL BE CONTINUOUS OVER A MINIMUM OF TWO SPANS.~~

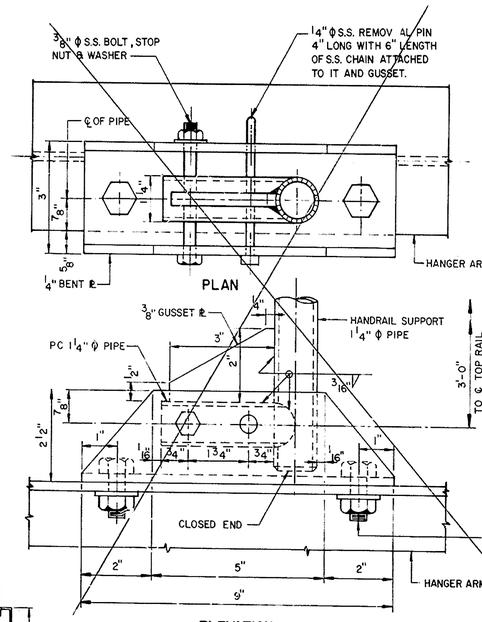

ELEVATION
HANDRAIL HINGE DETAIL "C"

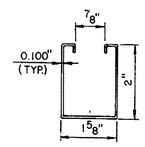

LUMINAIRE-SUPPORT CHANNEL

GENERAL NOTES

1. ~~MAINTENANCE WALKWAY, RAILING AND LUMINAIRE SUPPORTS SHALL BE~~ PROVIDED CONTINUOUSLY FOR THE ENTIRE LENGTH OF THE OVERHEAD ~~SIGN SUPPORT SIGN DESIGN WIDTH, UNLESS OTHERWISE SHOWN.~~
2. ALL MATERIAL SHALL BE ALUMINUM ALLOY 6061-T6 UNLESS OTHERWISE NOTED.
3. ALL BOLTS, U-BOLTS, WASHERS AND NUTS SHALL BE A.S.T.M. A-320 TYPE 304, GRADE B, CLASS 2, STRAIN HARDENED.
4. ~~PIPE FITTINGS SHALL BE EITHER MECHANICALLY FASTENED OR WELDED TO~~ HANDRAIL SECTION AND SHALL BE COMPATIBLE WITH THE MATERIAL USED FOR HANDRAILS. DETAILS OF FITTINGS SHALL BE SUBMITTED TO ~~THE ENGINEER FOR APPROVAL.~~
5. FILLER ALLOY FOR WELDING SHALL CONFORM TO THE REQUIREMENTS OF A.S.T.M. DESIGNATION B285, A.W.A.- A.S.T.M. CLASSIFICATION ER5556 OR ER5356.
6. FOR DIAGRAM AND TABLE OF SIGN HANGER ASSEMBLIES AND LUMINAIRE LOCATIONS SEE SHEET NO. TR 8

DELAWARE
DEPARTMENT OF TRANSPORTATION
DIVISION OF HIGHWAYS

OVERHEAD SIGN SUPPORT STRUCTURE
SIGN HANGER AND LUMINAIRE SUPPORT
~~MAINTENANCE WALKWAY~~
DETAILS

D T C	SCALE	APPROVED BY BRIDGE ENGINEER

E1 84-B3

CHK. BY
CHK. BY
CHK. BY
CHK. BY

CONTRACT	COUNTY	FEDERAL AID PROJECT Nº	SHEET Nº	TOTAL SHEETS
83-101-04	NEW CASTLE	F-1045 (20)	TR-16	
TRAFFIC			176	

~~Void No Sign Illumination This Project~~ △2

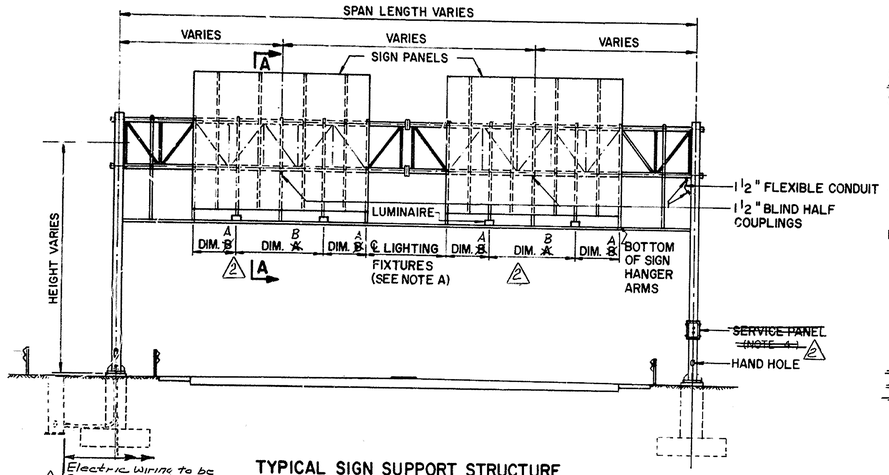

TYPICAL SIGN SUPPORT STRUCTURE

NOTE "A"

FOR LIGHTING FIXTURE SPACING DIMENSIONS "A" & "B" SEE SHEET NO. TR 8

~~REFER TO SIGN LIGHTING ASSEMBLY DETAIL~~ △2

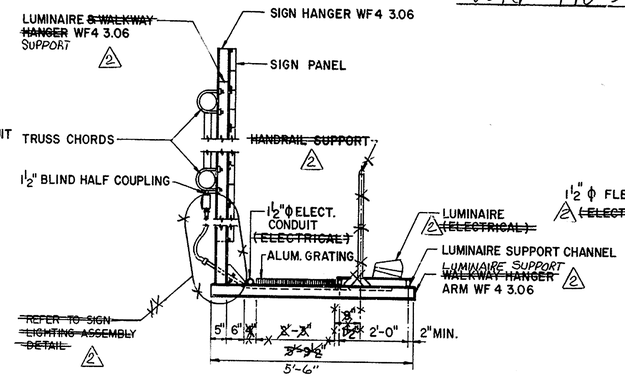

SECTION A-A

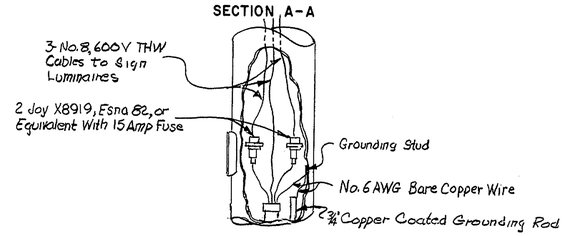

TYPICAL ELECTRICAL DETAIL △2

POLE BASE

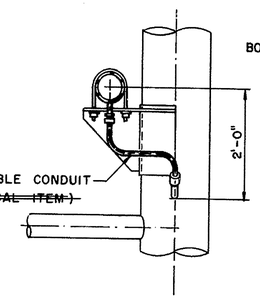

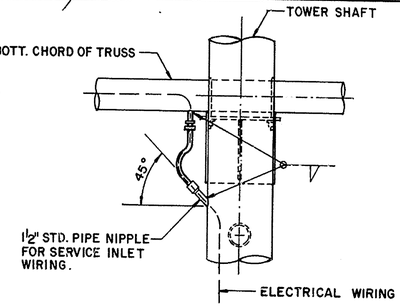

DETAILS OF WIRE OUTLETS

(NOTE 4)

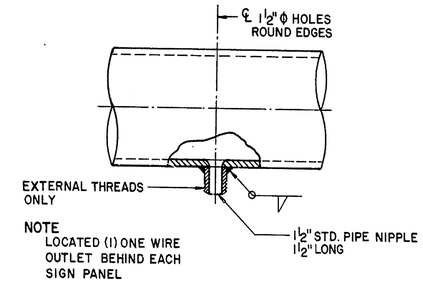

NOTE

LOCATED (1) ONE WIRE OUTLET BEHIND EACH SIGN PANEL

DETAIL OF WIRE OUTLET ON TUBE

NOTES:

1. △2 ALL BOLTS TO BE INSTALLED WITH WASHERS LOCKWASHERS AND NUTS. ALL HARDWARE TO BE TYPE 304, GRADE B, CLASS 2, STRAIN HARDENED (ASTM A-320)
2. 1½" STANDARD PIPE NIPPLES SHALL BE OF APPROVED MATERIAL AND BE COMPATIBLE WITH THE MATERIAL TO WHICH THEY ARE WELDED.
3. △2 ~~WALKWAY &~~ LUMINAIRE SUPPORT CHANNEL SHALL BE CONTINUOUS FROM ~~HANGER~~ TO ~~HANGER~~. LUMINAIRE SUPPORT.
4. △2 ~~SEE ELECTRICAL PLANS FOR LOCATION AND DIRECTION OF SERVICE PANEL AND FLEXIBLE AND RIGID CONDUITS.~~

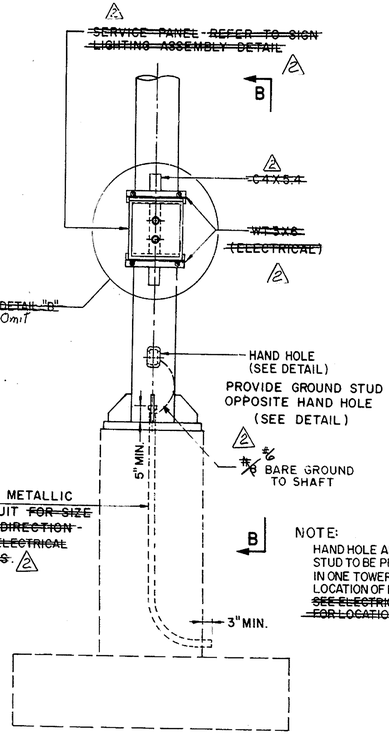

ELEVATION

NOTE:

HAND HOLE AND GROUND STUD TO BE PROVIDED ONLY IN ONE TOWER SHAFT AT LOCATION OF R.M. CONDUIT. ~~SEE ELECTRICAL PLANS FOR LOCATION~~ △2

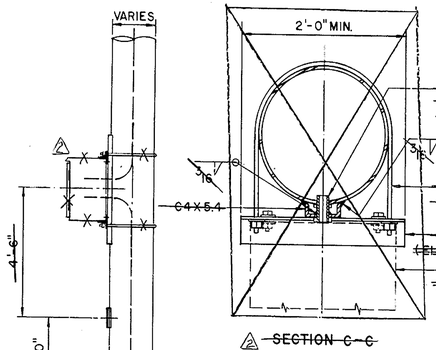

SECTION B-B

△2 ~~SECTION C-C~~

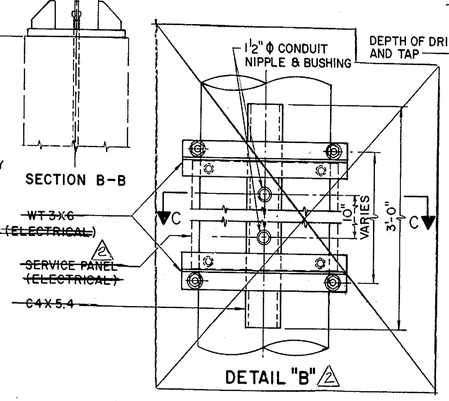

DETAIL "B" △2

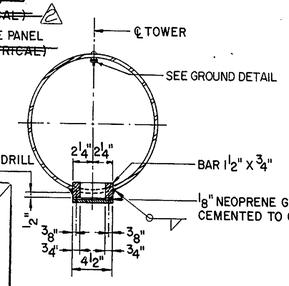

SECTION E-E

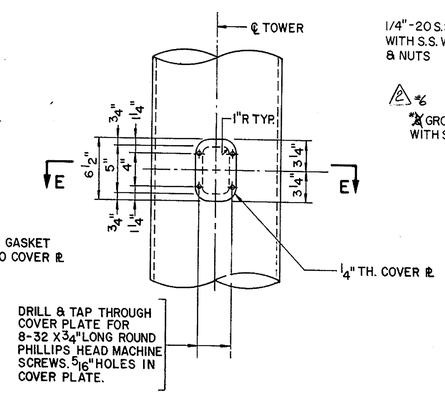

HAND HOLE & COVER DETAIL

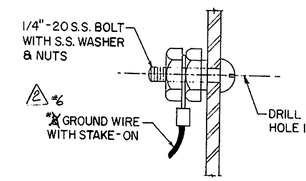

GROUND STUD

TYPICAL ~~SERVICE PANEL~~ DETAIL AT SIGN STRUCTURE

E1 84-83 Revisions Addendum △1 Removed Electrical Item; Revised notes; Removed Service Panel/Revisions Added Typ Elect. Detail 11-16-87 RMR

CHK. BY	
CHK. BY	
CHK. BY	
CHK. BY	

PAGE OF

DELAWARE
DEPARTMENT OF TRANSPORTATION
DIVISION OF HIGHWAYS

OVERHEAD SIGN SUPPORT STRUCTURE

TYPICAL ELECTRICAL DETAILS

D	SCALE	APPROVED BY
T		
C		BRIDGE ENGINEER

CONTRACT	COUNTY	FEDERAL AID PROJECT NO.	SHEET NO.	TOTAL
83-101-04	NEW CASTLE	F-1045 (20)	TR-17	

TRAFFIC

[1] NEW SHEET - MARCH 1989

CANTILEVER SIGN SUPPORT STRUCTURES

SIGN SUPPORT			ELEVATION		SPAN	PANEL WIDTH PW	ALUM. TRUSS ALTERNATE "A"				STEEL TRUSS ALTERNATE "B"				STEEL POST		
STRUCTURE No.	GO Nos.	STATION	℄ TRUSS	BOT. OF BASE PL.	FT.-IN.	FT.-IN.	CHORDS O.D. x THICK.	STRUTS O.D. x THICK.	STEEL STUBS O.D. x THICK.	CAMBER IN.	CHORDS O.D. x THICK.	STRUTS O.D. x THICK.	STEEL STUBS O.D. x THICK.	CAMBER IN.	H = 25 FT O.D. x THICK.	H = 30 FT O.D. x THICK.	H = 35 FT O.D. x THICK.
5	8	225 + 00	124.00	95.37	39'-3"	5'-9⅞"	–	–	–	–	16 x 0.500	5.563 x 0.375	16 x 0.500	7	–	26 x 0.625	–

NOTES:

ALL ELEVATIONS SHALL BE VERIFIED IN THE FIELD BEFORE FABRICATION AND INSTALLATION.

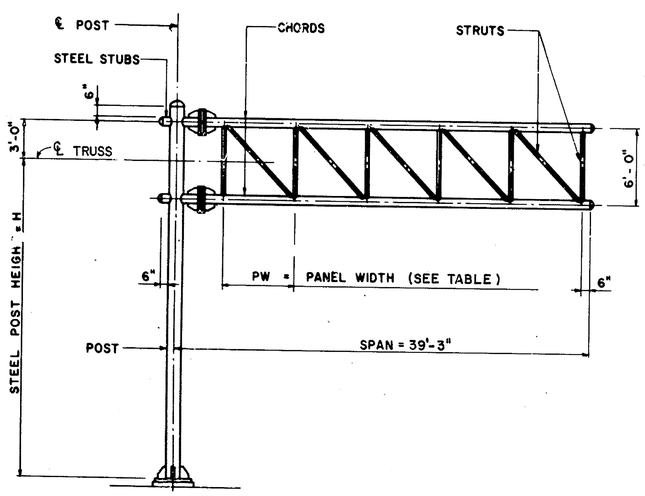

ELEVATION TYPICAL CANTILEVER SIGN SUPPORT

N. T. S.

FOR INFORMATION ONLY

CANTILEVER SIGN SUPPORT QUANTITIES

UNIT	ITEM / STRUCTURE NO.	5			TOTAL
C.Y.	EXCAVATION AND BACKFILL FOR STRUCTURES	74			74
SQ. FT.	TEMPORARY SHEETING	-			-
C.Y.	P.C.C. MASONRY, S.S. FOOTING, CLASS B	19			19
LBS	REINFORCEMENT STEEL	2,636			2,636
LBS	STEEL STRUCTURES	17,400			17,400
~~C.Y.~~	~~BORROW, TYPE F~~	~~60~~			~~60~~
L.F.	CAST-IN-PLACE CONCRETE PILES, 12"	-			-
L.F.	STEEL SHELL TEST PILES, 12"	-			-

NOTES:

1. FOR GENERAL INFORMATION SEE SHEET NO. TR-9A.
2. FOR SCHEDULE OF FOUNDATIONS SEE SHEET NO. TR-18.
3. FOR TRUSS AND POST DETAIL SEE SHEET NOS. TR-19 & 20.
4. FOR SIGN HANGER & LUMINAIRE DETAILS SEE SHEET NO. TR-15.
5. FOR TYPICAL ELECTRICAL DETAILS SEE SHEET NO. TR-16.

REVISIONS

[1] NEW SHEET - MARCH 1989

PREL. TRACING ____ DESIGN ____ CHKD. ____

DELAWARE
DEPARTMENT OF TRANSPORTATION
DIVISION OF HIGHWAYS

CANTILEVER SIGN SUPPORT STRUCTURE
SIGN SUPPORT STRUCTURE NO.5
SCHEDULE OF STRUCTURES

D T C	SCALE	APPROVED BY BRIDGE ENGINEER

CONTRACT	COUNTY	FEDERAL AID PROJECT NO.	SHEET NO.	TOTAL
83-101-04	NEW CASTLE	F-1045 (20)	TR-18	

[1] NEW SHEET - MARCH 1989

SCHEDULE OF FOUNDATIONS

CANTI-LEVER SIGN SUPPORT STRUCT. No.	FOOTING SIZE FL×FW FT.	ELV. BTM. OF FTG.	VOLUME CONCRETE WITH PILES CU.YD	VOLUME CONCRETE W/O PILES CU.YD	VOLUME EXCAVATION WITH PILES CU.YD	VOLUME EXCAVATION W/O PILES CU.YD	No. OF PILES IN ROW "M"	No. OF PILES IN ROW "N"	PILE LGTH. FT.	REINFORCING BARS No. & SIZE FLB	FWB	FLT	FWT	FCB	FCT	TOTAL WGHT. LBS.	PEDESTAL SIZE PD IN.	PED. HGHT. FT.IN.	ELV. TOP OF PED.	VOL. CU.YD.	VERT. REBARS TYPE "P-1" No. & SIZE	A IN.	LGTH. FT. IN.	SPIRAL REBARS TYPE "P-2" SIZE	SD IN.	LGTH. FT. IN.	TOTAL WGHT. LBS.	BARRIER TYPE PEDESTAL SIZE B IN.	BARRIER HGHT. FT.IN.	ELV. TOP OF BARR.	VOL. CU.YD.	VERT. REBARS TYPE "P-1" No. & SIZE	A IN.	LGTH. FT. IN.	SPIRAL REBARS TYPE "P-2" SIZE	SD IN.	LGTH. FT. IN.	STANDARD BARRIER REBARS TYPE "B-1" No. & SIZE	LGTH. FT. IN.	TYPE "B-2" No. & SIZE	B IN.	C IN.	LGTH. FT. IN.	TYPE "B-3" No. & SIZE	E IN.	F IN.	LGTH. FT. IN.	TOTAL WGHT. LBS.	TOTAL WEIGHT OF REBARS LBS.
5	17x12	87.04	-	15.1	-	74	-	-	-	18-#7	17-#6	11-#7	17-#6	15-#6	15-#6	1,584	52	6'-0"	95.04	3.2	34-#8	28	9'-6½"	#4	46	277'-0"	1,052	-	-	-	-	-	-	-	-	-	-	-	-	-	-	-	-	-	-	-	-	-	2,636

TRAFFIC

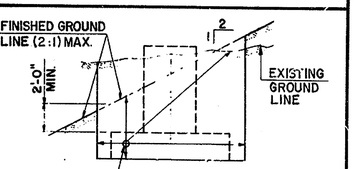

SECTION J-J

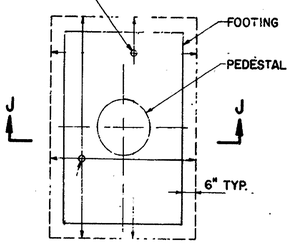

PLAN

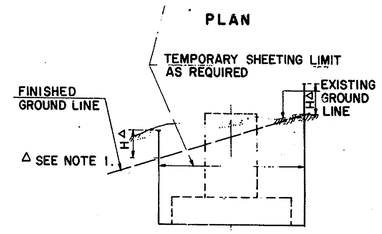

TEMPORARY SHEETING ELEVATION

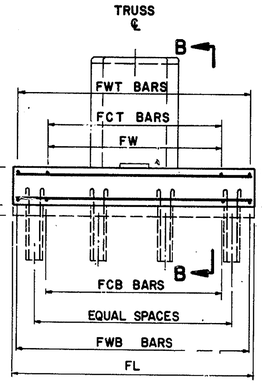

SECTION A-A

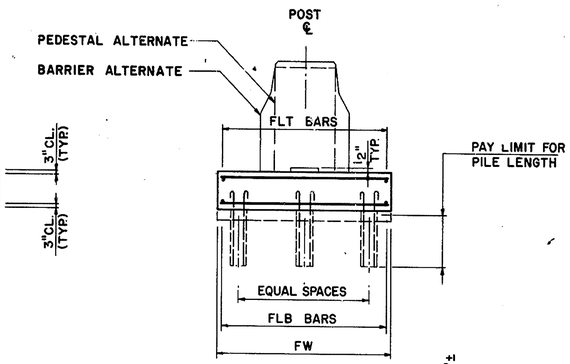

SECTION B-B

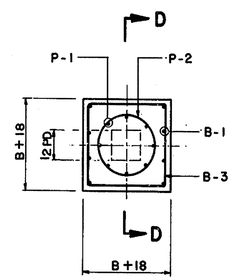

SECTION E-E

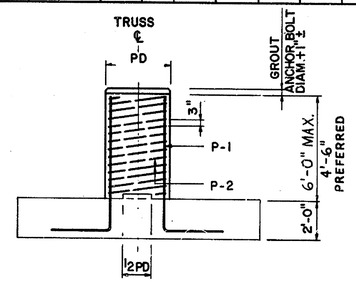

SECTION F-F

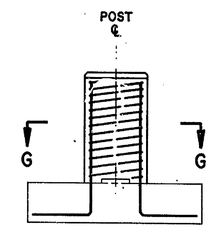

SECTION H-H

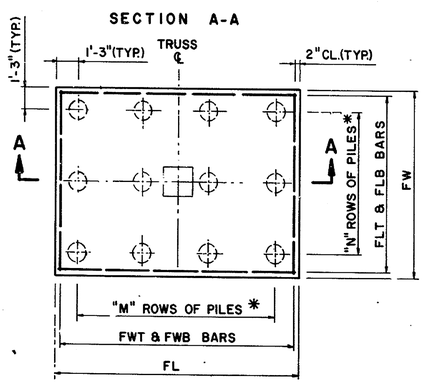

PLAN

* PILES REQUIRED IF SCHEDULED AS CONTRACT ITEM.

FOOTING

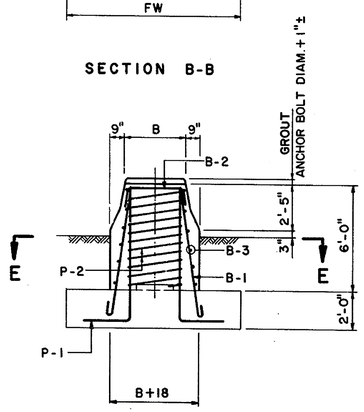

SECTION C-C

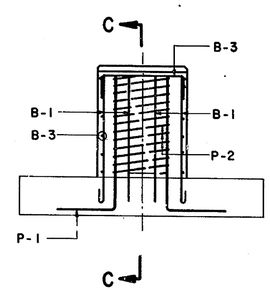

SECTION D-D

BARRIER

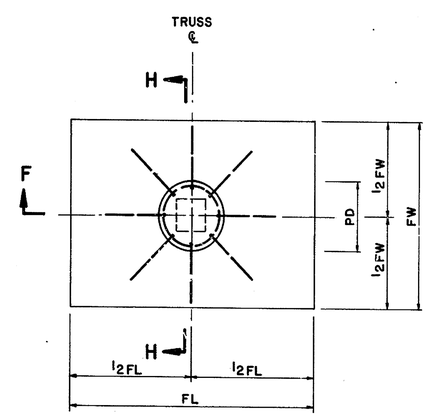

PLAN

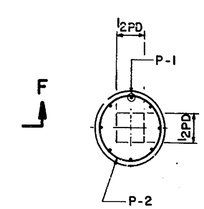

SECTION G-G

PEDESTAL

NOTES :

1. WHEN TEMPORARY SHEETING IS REQUIRED, H IS 3'-0" WHEN ADJACENT TO PEDESTRIAN OR VEHICULAR TRAFFIC AND 1'-0" MINIMUM FOR ALL OTHERS.
2. FOR GENERAL NOTES SEE SHEET NO. TR-9A.
3. EXPOSED CONCRETE EDGES SHALL BE CHAMFERED 1"x 1" EXCEPT AS NOTED.
4. REINFORCEMENT BARS SHALL CONFORM TO THE DIMENSIONS SHOWN ON THE DRAWINGS.
5. BARS SHALL NOT BE SPLICED EXCEPT AS PROVIDED ON THIS DRAWING OR AUTHORIZED BY THE ENGINEER. WHEN SPLICING IS APPROVED, THE REINFORCEMENT BARS SHALL BE LAPPED FOR A LENGTH OF AT LEAST 36 DIAMETERS (48 DIAMETERS FOR SPIRAL BARS) AND SHALL BE SECURELY WIRED TOGETHER.
6. AUGERED CONCRETE CAISSONS ARE USED FOR PILES WITH MINIMUM CAPACITY OF PILES EQUAL TO 24 TONS. (N.I.C.)
7. LENGTH OF BARS SHOWN IN TABLE ALREADY CONSIDER BENDS. DIMENSIONS DESCRIBED IN BARS SHAPE SCHEME ARE OUT-TO-OUT OF BAR.

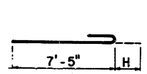

TYPE "B-1"

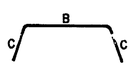

TYPE "B-2"

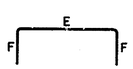

TYPE "B-3"

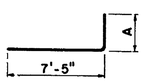

TYPE "P-1"

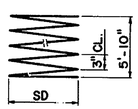

TYPE "P-2"

REBAR SHAPES

DELAWARE
DEPARTMENT OF TRANSPORTATION
DIVISION OF HIGHWAYS

CANTILEVER SIGN SUPPORT STRUCTURE
SIGN SUPPORT STRUCTURE No. 5
SCHEDULE OF FOUNDATION

D	SCALE	APPROVED BY
T		
C		BRIDGE ENGINEER

REVISIONS
[1] NEW SHEET - MARCH 1989

CHKD. DESIGN PREL. TRACING

CONTRACT	COUNTY	FEDERAL AID PROJECT NO.	SHEET NO.	TOTAL
83-101-04	NEW CASTLE	F-1045 (20)	TR-19	

TRAFFIC

[1] NEW SHEET - MARCH 1989

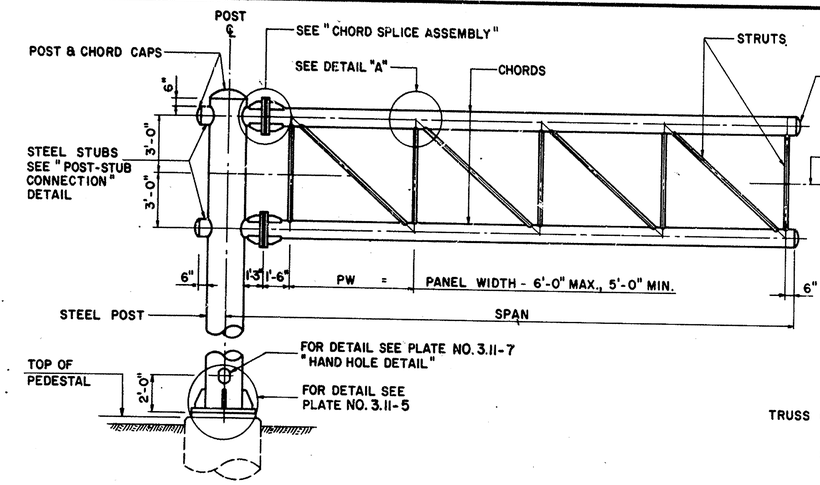

TYPICAL ELEVATION - SIGN SUPPORT

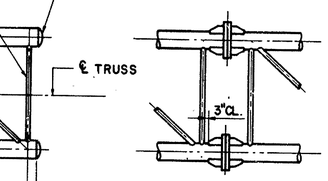

INTERMEDIATE SPLICING

AS REQUIRED (SEE NOTE No. 4 THIS PLATE)

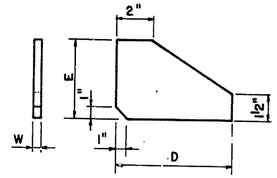

BRACKET PLATE DETAIL

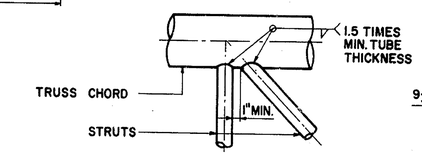

DETAIL "A"

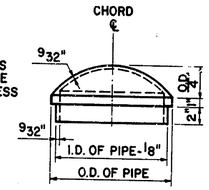

CHORD CAP DETAIL

NOTE:
ALTERNATE CAP DESIGNS MAY BE SUBMITTED TO THE ENGINEER FOR APPROVAL.

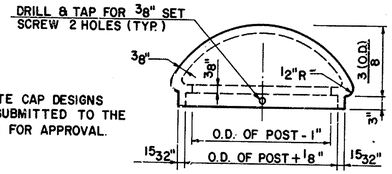

POST CAP DETAIL

NOTES:

CAMBER SHALL BE OBTAINED BY SHORTENING TOP CHORD STUB LENGTH AND LENGTHENING BOTTOM CHORD STUB LENGTH. CHORD SPLICE FLANGES SHALL BE SKEWED TO THE ANGLE SO OBTAINED BEFORE WELDING TO CHORDS. NO FORCE SHALL BE APPLIED IN PROVIDING CAMBER. FOR REQUIRED CAMBER SEE SHEET NO. TR-17.

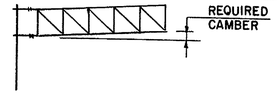

CAMBER DIAGRAM

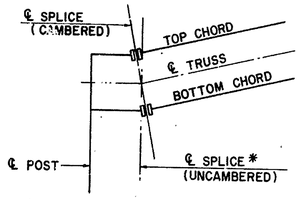

CAMBER DETAIL

* SEE NOTE ON CAMBER.

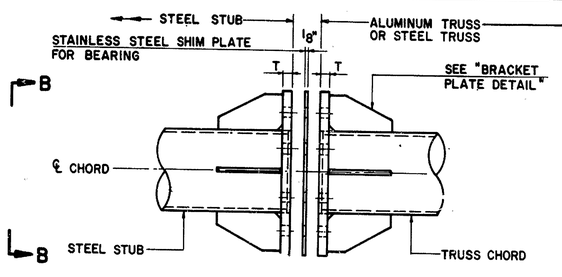

VIEW X-X

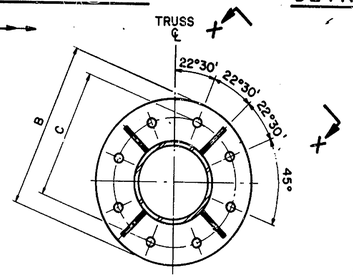

SECTION B-B

CHORD SPLICE ASSEMBLY — EIGHT-BOLT

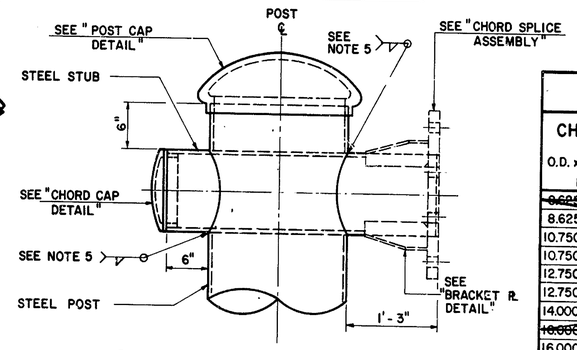

POST - STUB CONNECTION

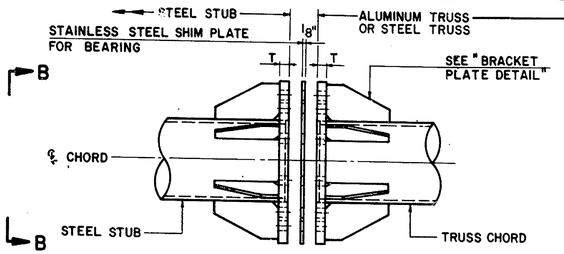

VIEW X-X

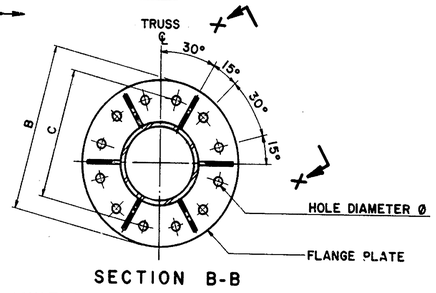

SECTION B-B

CHORD SPLICE ASSEMBLY — TWELVE-BOLT

STEEL TRUSS CHORDS SPLICE ASSEMBLY

CHORD	FLANGE PLATE					BRACKET PLATES					SPLICE BOLTS					
O.D. x THICK. IN.	B IN.	T IN.	Ø IN.	WGHT. LBS.	FILLET WELD	D IN.	E IN.	W IN.	WGHT. LBS.	FILLET WELD	No. OF BOLTS	BOLTS CIRCLE C	SIZE DIA. x LGTH. IN.	THRD. IN.	WGHT. LBS.
~~0.625 x 0.312~~	~~17.25~~	~~1.25~~	~~13/16~~	~~60.6~~	~~0.375~~	~~9.00~~	~~3.50~~	~~1.000~~	~~27.2~~	~~0.375~~	~~8~~	~~14.625~~	~~0.750 x 4.375~~	~~1.75~~	~~6.54~~
8.625 x 0.500	17.75	1.25	15/16	65.0	0.375	9.00	3.75	1.000	28.8	0.500	8	14.625	0.875 x 4.000	2.00	9.60
10.750 x 0.365	20.00	1.25	15/16	76.2	0.375	9.00	3.75	1.125	48.6	0.375	12	16.750	0.875 x 4.000	2.00	14.40
10.750 x 0.500	20.00	1.25	15/16	76.2	0.375	9.00	3.75	1.125	48.6	0.375	12	16.750	0.875 x 4.000	2.00	14.40
12.750 x 0.375	25.00	1.25	15/16	125.8	0.375	9.00	5.25	1.000	57.2	0.375	12	21.750	0.875 x 4.000	2.00	14.40
12.750 x 0.500	25.25	1.50	1 1/16	134.1	0.375	9.00	5.25	1.250	71.5	0.375	12	21.750	1.000 x 4.500	2.25	20.80
14.000 x 0.500	27.50	1.50	1 5/16	180.2	0.375	9.00	5.75	1.125	69.6	0.375	12	23.000	1.250 x 4.875	2.75	37.30
~~16.000 x 0.375~~	~~30.00~~	~~1.50~~	~~1 5/16~~	~~208.2~~	~~0.375~~	~~9.00~~	~~6.00~~	~~1.000~~	~~64.2~~	~~0.375~~	~~12~~	~~25.500~~	~~1.250 x 4.875~~	~~2.75~~	~~37.30~~
16.000 x 0.500	30.00	1.50	1 5/16	208.2	0.375	9.00	6.00	1.000	64.2	0.375	12	25.500	1.250 x 4.875	2.75	37.30
~~16.000 x 0.562~~	~~30.00~~	~~1.50~~	~~1 5/16~~	~~208.2~~	~~0.375~~	~~9.00~~	~~6.00~~	~~1.000~~	~~64.2~~	~~0.375~~	~~12~~	~~25.500~~	~~1.250 x 4.875~~	~~2.75~~	~~37.30~~

ALUMINUM TRUSS CHORDS SPLICE ASSEMBLY

CHORD	FLANGE PLATE					BRACKET PLATES					STUB FLANGE PLATE			STUB BRACKET PLATES			SPLICE BOLTS				
O.D. x THICK. IN.	B IN.	T IN.	Ø IN.	WGHT. LBS.	FILLET WELD	D IN.	E IN.	W IN.	WGHT. LBS.	FILLET WELD	T IN	WGHT. LBS	FILLET WELD	W IN.	WGHT. LBS.	FILLET WELD	No. OF BOLTS	BOLTS CIRCLE C	SIZE DIA. x LGTH. IN.	THRD. IN.	WGHT. LBS.
~~10.000 x 0.375~~	18.00	1.75	13/16	30.4	0.500	9.00	3.00	1.125	9.1	0.625	1.25	68.0	0.375	0.50	12.0	0.375	8	15.25	0.750 x 4.25	~~1.75~~	6.9
10.000 x 0.500	18.00	~~1.75~~	13/16	30.4	0.500	9.00	3.00	1.125	9.1	0.750	1.25	68.0	0.375	0.50	12.0	0.375	8	~~15.25~~	~~0.750~~ x 4.25	1.75	6.9
11.000 x 0.500	20.50	1.75	15/16	~~40.7~~	~~0.500~~	9.00	3.75	1.125	10.9	0.750	1.25	82.8	0.375	0.75	21.6	~~0.375~~	8	17.25	0.875 x 4.50	2.00	10.2
12.000 x 0.500	21.50	1.75	15/16	43.3	0.500	9.00	~~3.75~~	1.125	10.9	0.750	1.25	94.6	~~0.375~~	0.75	21.6	0.375	8	18.25	0.875 x 4.50	2.00	10.2
14.000 x 0.375	23.75	1.50	13/16	43.0	0.375	9.00	4.00	1.500	23.0	~~0.500~~	1.25	122.6	0.375	1.00	45.5	0.375	12	21.00	0.750 x 4.00	1.75	10.0
14.000 x 0.500	23.75	1.50	13/16	43.0	0.375	9.00	4.00	1.500	23.0	0.500	1.25	~~122.6~~	~~0.375~~	1.00	45.5	0.375	12	21.00	0.750 x 4.00	1.75	10.0
16.000 x 0.500	26.25	1.50	15/16	50.4	~~0.375~~	9.00	4.25	1.125	18.1	0.500	1.25	143.6	0.375	1.00	~~47.3~~	~~0.375~~	12	23.00	0.875 x 4.25	2.00	14.9
18.000 x 0.500	29.00	~~1.75~~	1 1/16	70.1	0.500	9.00	4.50	1.375	23.2	0.625	1.50	190.9	0.375	1.00	50.2	0.375	12	~~25.50~~	~~1.000~~ x 4.75	2.25	21.5
~~18.000 x 0.750~~	30.00	1.75	1 5/16	77.3	0.625	9.00	5.00	1.250	23.1	0.500	1.50	208.2	0.375	1.00	54.9	0.375	12	25.50	1.250 x 5.00	~~2.75~~	37.8

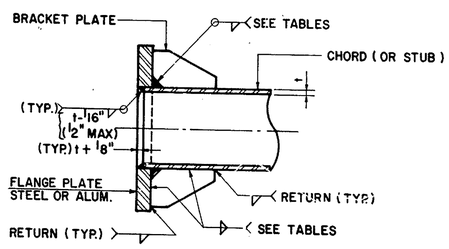

SPLICE ASSEMBLY WELDMENT DETAIL (TYP.)

* SEE NOTE ON CAMBER

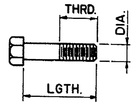

BOLT DETAIL

NOTES:

1. HOLE SIZE Ø INDICATED IN TABLES IS DRILLED FULL, AS PER AASHTO 2.10.7.
2. BOLTS 3/4", 7/8" AND 1" Ø, SHALL BE THREADED AS PER ANSI B1.1, UNC-2A. BOLTS 1 1/4" Ø SHALL BE THREADED AS PER THE 8 PITCH THREAD SERIES.
3. BOLTS SHALL BE HEAVY HEXAGON TYPE AS PER ANSI B18.2.1 AND SHALL BE FURNISHED WITH HEAVY HEXAGON NUT AS PER ANSI B18.2.2 AND LOCK WASHERS.
4. CHORD INTERMEDIATE SPLICING WILL NOT BE PERMITTED UNLESS AUTHORIZED BY THE ENGINEER. WHEN INTERMEDIATE SPLICE IS AUTHORIZED, THE SPLICING SHALL BE AS SHOWN IN INTERMEDIATE SPLICING DETAIL AND AS PER CHORD SPLICE ASSEMBLY TABLES THIS SHEET.
5. MINIMUM SIZE OF FILLET WELDS IS AS SHOWN IN TABLES. IF FILLET WELD SIZE IS NOT SHOWN IN TABLES OR IN DETAILS, SIZE SHALL BE THE SAME AS THE THICKNESS OF THE THINNER PART JOINED.
6. IN ALUMINUM TRUSSES, THE DIAMETER OF STEEL FLANGE PLATE AND HOLES OF SPLICE ASSEMBLY AT STEEL STUB ARE IDENTICAL TO THOSE OF THE CORRESPONDING ALUMINUM CHORDS. THICKNESSES OF STEEL STUB FLANGE PLATES ARE SHOWN IN TABLES. FOR O.D. OF THE STUB PIPE SEE SCHEDULE OF STRUCTURES
7. IN ALUMINUM TRUSS, 1/4" DIA. (MAX.) WELDING GAS VENT HOLES TO BE DRILLED IN CHORDS. HOLES TO BE LOCATED AT ONE END OF STRUTS. ALTERNATE HOLES BETWEEN TOP AND BOTTOM CHORDS FOR ADJACENT STRUTS.

DELAWARE
DEPARTMENT OF TRANSPORTATION
DIVISION OF HIGHWAYS

CANTILEVER SIGN SUPPORT STRUCTURE
SIGN SUPPORT STRUCTURE NO. 5
STEEL TRUSS & POST DETAILS

D	SCALE	APPROVED BY
T		
C		BRIDGE ENGINEER

REVISIONS
[1] NEW SHEET - MARCH 1989

PREL. TRACING ____ DESIGN ____ CHKD. ____

CONTRACT	COUNTY	FEDERAL AID PROJECT NO.	SHEET NO.	TOTAL
83-101-04	NEW CASTLE	F-1045 (20)	TR-20	

TRAFFIC

[1] NEW SHEET - MARCH 1989

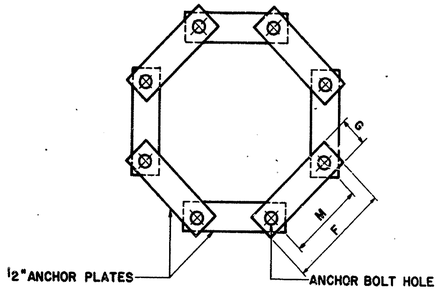

SECTION A-A

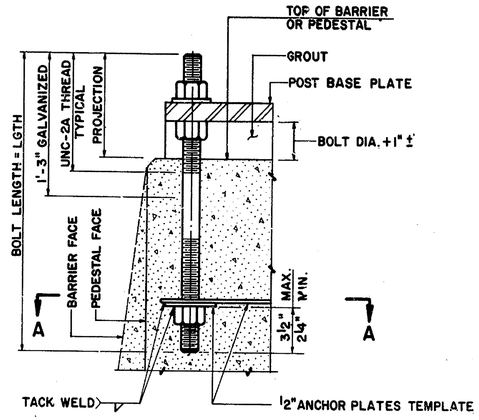

ANCHOR BOLT DETAIL
(TYP.)

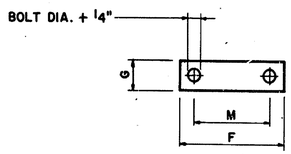

ANCHOR PLATE DETAIL
(TYP.)

SHAFT O.D.x THICK. IN.	BASE PLATE B IN.	T IN.	Ø IN.	WGHT. LBS.	FILLET WELD	BRACKET PLATES E IN.	D IN.	W IN.	WGHT. LBS.	FILLET WELD	ANCHOR BOLTS BOLTS CIRCLE C	SIZE DIA.x LGTH. IN.	PROJ. IN.	THRD. IN.	WGHT. LBS	ANCHOR PLATES F IN.	G IN.	M IN.	WGHT. LBS.
~~14 x 0.500~~	~~28.25~~	~~1.750~~	~~2.00~~	~~222.2~~	~~0.375~~	~~5.75~~	~~12.00~~	~~0.75~~	~~43.5~~	~~0.375~~	~~22.00~~	~~1.75x37.00~~	~~7.125~~	~~8.00~~	~~236.0~~	~~16.25~~	~~7.75~~	~~8.44~~	~~135.7~~
16 x 0.500	31.00	2.000	2.25	296.0	0.375	6.00	12.00	0.75	45.1	0.500	24.00	2.00x37.00	7.875	9.00	316.0	17.00	7.75	9.19	140.4
18 x 0.500	34.00	2.250	2.50	391.8	0.375	6.50	12.00	0.75	48.3	0.500	26.00	2.25x38.00	8.625	10.00	419.2	17.75	7.75	10.00	144.9
20 x 0.500	36.00	2.250	2.50	423.9	0.375	6.50	12.00	0.75	48.3	0.500	28.00	2.25x38.00	8.625	10.00	459.2	18.50	7.75	10.75	151.5
22 x 0.500	38.75	2.500	2.75	532.8	0.375	7.00	12.00	0.75	51.5	0.500	30.00	2.50x39.00	9.375	11.00	536.0	19.25	7.75	11.50	155.8
24 x 0.500	41.75	2.625	3.00	640.2	0.375	7.50	12.00	0.75	54.7	0.625	32.00	2.75x40.00	10.000	12.00	674.4	20.00	7.75	12.25	159.8
~~26 x 0.500~~	~~45.75~~	~~2.750~~	~~3.00~~	~~823.7~~	~~0.375~~	~~8.50~~	~~12.00~~	~~0.75~~	~~61.1~~	~~0.500~~	~~36.00~~	~~2.75x40.00~~	~~10.125~~	~~12.00~~	~~674.4~~	~~20.25~~	~~6.25~~	~~13.75~~	~~127.5~~
26 x 0.625	46.50	3.000	3.25	936.5	0.500	8.75	12.00	0.75	62.7	0.625	36.00	3.00x43.00	10.875	13.00	870.4	20.25	6.25	13.75	124.7
~~26 x 0.750~~	~~46.50~~	~~3.000~~	~~3.25~~	~~936.5~~	~~0.500~~	~~8.75~~	~~12.00~~	~~0.75~~	~~62.7~~	~~0.750~~	~~36.00~~	~~3.00x43.00~~	~~10.875~~	~~13.00~~	~~870.4~~	~~20.25~~	~~6.25~~	~~13.75~~	~~124.7~~
~~26 x 0.875~~	~~47.50~~	~~3.125~~	~~3.50~~	~~1031.6~~	~~0.500~~	~~9.25~~	~~12.00~~	~~0.75~~	~~67.8~~	~~0.750~~	~~36.00~~	~~3.25x55.00~~	~~11.500~~	~~14.00~~	~~1264.0~~	~~20.25~~	~~6.25~~	~~13.75~~	~~121.7~~

POST SHAFT BASE ASSEMBLY

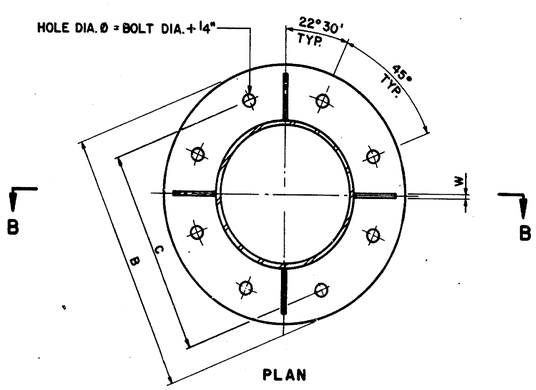

PLAN

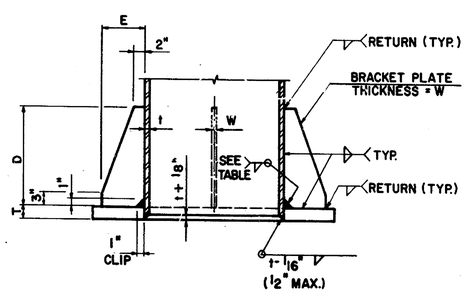

SECTION B-B

POST BASE PLATE DETAIL
(TYP.)

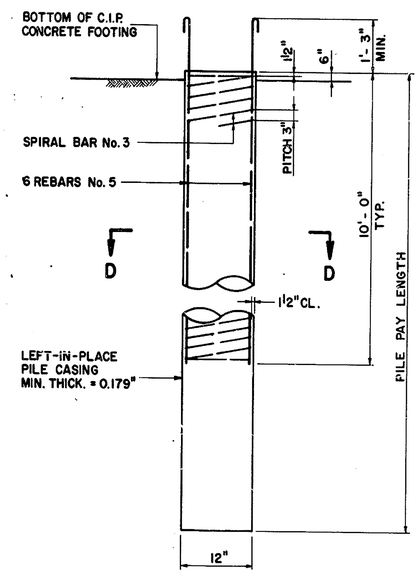

ELEVATION

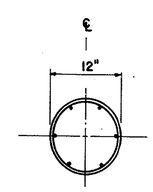

SECTION D-D

C.I.P. CONCRETE PILE (N.I.C.)
(TYP.)

NOTES:

1. FOUNDATION CONCRETE PILES MAY BE PRECAST OR CAST-IN-PLACE. IN EITHER CASE PILES SHALL BE 12" IN DIAMETER OR EQUIVALENT AND SHALL HAVE A MINIMUM BEARING CAPACITY OF 24 TONS. THE NUMBER AND SPACING OF PILES SHALL BE AS INDICATED (N.I.C.).
   NO CONCRETE SHALL BE PLACED IN CAST-IN-PLACE PILE UNTIL AFTER ALL PILE CASINGS REQUIRED BY THE GIVEN FOOTING HAVE BEEN DRIVEN.
2. STEEL POST PIPE O.D.x THICK. = 22.000 x 0.500 MAY NOT BE AVAILABLE. IF IT IS NOT AVAILABLE, USE STEEL POST PIPE O.D. x THICK. = 20.000 x 0.625 INSTEAD. FOUNDATION PEDESTAL OR FOUNDATION BARRIER CORRESPONDING TO THE DESIGN STEEL POST AS PER THE DESIGN TABLES SHALL REMAIN UNCHANGED.
3. ANCHOR BOLTS SHALL BE PROVIDED WITH THREE HEAVY HEXAGON NUTS DIMENSIONED AS PER ANSI B18.2.2 AND WASHERS DIMENSIONED AS PER AASHTO TABLE 2.10.3B.
   THE THREADED LENGTH OF ANCHOR BOLT SHOWN IN TABLE IS FOR ONE END ONLY AND IS TYPICAL. BOLT SHALL BE THREADED AT BOTH ENDS AS SHOWN IN ANCHOR BOLT DETAIL ON THIS PLATE.
4. BRACKET PLATES WEIGHT SHOWN IN TABLE IS FOR FOUR BRACKET PLATES. ANCHOR BOLTS WEIGHT SHOWN IN TABLE IS FOR EIGHT BOLTS INCLUDING NUTS. ANCHOR PLATES WEIGHT SHOWN IN TABLE IS FOR EIGHT ANCHOR PLATES.

DELAWARE
DEPARTMENT OF TRANSPORTATION
DIVISION OF HIGHWAYS

CANTILEVER SIGN SUPPORT STRUCTURE
SIGN SUPPORT STRUCTURE NO.5
BASE ASSEMBLY DETAILS

D T C	SCALE	APPROVED BY BRIDGE ENGINEER

REVISIONS
[1] NEW SHEET - MARCH 1989

DESIGN
CHKD.
PREL. TRACING