THE STATE OF DELAWARE
DEPARTMENT OF TRANSPORTATION

U.S. CUSTOMARY UNITS

AB Heather Jester December 9, 2008

SPECIFICATION AND CONSTRUCTION PLANS FOR:
AS-BUILT DRAWINGS

REHABILITATION AND PAINTING OF BRIDGE 1-813 ON I-495 OVER CHRISTINA RIVER

CONTRACT NUMBER 94-074-11
FEDERAL AID PROJECT NUMBER IM-N-060(2)

FROM MILE POST 3.17 NB (7.79 SB) TO MILE POST 4.01 NB (8.63 SB)

ROADWAY LENGTH 0 FEET= 0 MILES
STRUCTURE LENGTH 4,395 FEET= 0.832 MILES
TOTAL LENGTH 4,395 FEET= 0.832 MILES

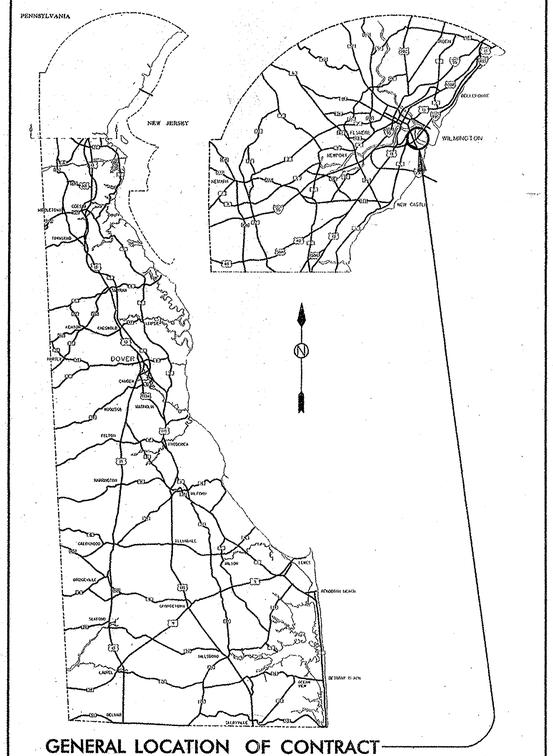

GENERAL LOCATION OF CONTRACT

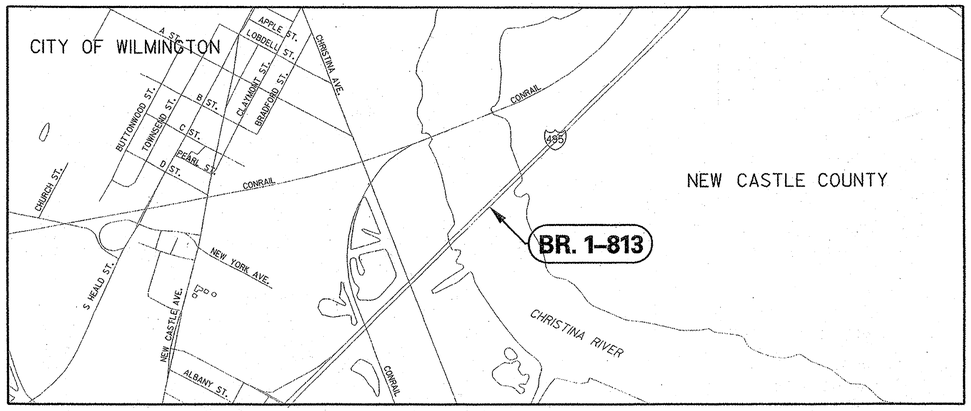

PROJECT LOCATION
(N.T.S.)

COUNTY	M.R. NO.		SHEET NUMBER	TOTAL SHEETS
NEW CASTLE	60		1	45

DESIGN DESIGNATION

FUNCTIONAL CLASS: INTERSTATE
TYPE OF CONSTRUCTION: 3R
A.D.T. CURRENT: 103,608 YEAR: 2000
A.D.T. PROJECTED: 136,000 YEAR: 2025
D.H.V. PROJECTED: 13,600 YEAR: 2025
DESIGN SPEED: 60 M.P.H.
TRUCKS: 7 % / DIRECTION OF DISTRIBUTION: 55 %

DISTURBED AREA 0 ACRES

INDEX OF SHEETS

Sheet No.	Table of Contents
1	TITLE SHEET
2	GENERAL NOTES AND SYMBOLS LEGEND
3	PROJECT NOTES
4	PROJECT NOTES AND REPAIR SCHEDULE
5-7	REPAIR KEY PLAN AND ELEVATION
8A	SLIDING BEARING DETAILS - TYPE E-1
8B	SLIDING BEARING DETAILS - TYPE E-2
9	SLIDING BEARING DETAILS - TYPE E-3
10A	BEARING PEDESTAL DETAILS - TYPE E-1
10B	BEARING PEDESTAL DETAILS - TYPES E-2 & E-3
11	MAIN SPAN BEARINGS EXPANSION - TYPE E-4
12	MAIN SPAN BEARINGS EXPANSION - TYPE E-5
13A-13B	APPROACH SPAN JACKING DETAILS
14-16	MAIN SPAN JACKING DETAILS
17	REACTION TABLE
18A-18B	FIXED BEARING SEISMIC RETROFIT
19	STRUCTURAL STEEL REPAIR DETAILS
20	PARAPET REPAIR DETAILS
21	TRANSVERSE JOINT SEALS
22	DRAINAGE TROUGH DETAILS & LONG. JOINT SEAL
23	COLLECTION BOX DETAILS
24-25	CONCRETE REPAIR DETAILS
26-29	SUBSTRUCTURE REPAIR SCHEDULE
30	PIER 37 REPAIR DETAILS
31	FENDER REPAIR DETAILS
32	REBAR SCHEDULE
33	PIER 20 EMBANKMENT PROTECTION
34-36	ENVIRONMENTAL COMPLIANCE PLAN
37	PAINT KEY PLAN
38	SUGGESTED CONSTRUCTION SEQUENCE
39-43	MAINTENANCE OF TRAFFIC
44	LOUVERED SIGN PANELS
45	QUANTITIES

APPROVED DESIGN EXCEPTIONS

Design Parameter	Required	Provided

PROJECT ADDENDA & REVISIONS

Description	Name & Date

PREPARED BY

GREENHORNE & O'MARA, INC.

SIMON SIMON REGISTERED No. 10691 DELAWARE PROFESSIONAL ENGINEER — SEAL

Simon Simon — RECOMMENDED — DATE 2/19/2003

REVIEWED AND RECOMMENDED

SQUAD MANAGER, CONSTRUCTION — DATE 3/14/03

N/A — GROUP ENGINEER, CONSTRUCTION — DATE

ASSISTANT DIRECTOR, TRANSPORTATION SOLUTIONS (CONSTRUCTION) — DATE 3-14-03

DEPARTMENT OF TRANSPORTATION

RECOMMENDED
Salvador F. Palalay — STORMWATER ENGINEER
DATE Feb 24, 2003
SALVADOR F. PALALAY REGISTERED No. 13101 DELAWARE PROFESSIONAL ENGINEER — SEAL

RECOMMENDED
Gerard Mulderrig — SQUAD MANAGER, PROJECT DEVELOPMENT
DATE FEB 24, 2003
GERARD MULDERRIG REGISTERED NO. 9246 DELAWARE PROFESSIONAL ENGINEER — SEAL

RECOMMENDED
Jiten K. Soneji — GROUP ENGINEER, BRIDGE DESIGN
DATE Feb 24, 2003
JITEN K. SONEJI REGISTERED NO. 9207 DELAWARE PROFESSIONAL ENGINEER — SEAL

RECOMMENDED
GROUP ENGINEER, PROJECT DEVELOPMENT
DATE
SEAL

RECOMMENDED
Dennis M. O'Shea — ASSISTANT DIRECTOR, TRANSPORTATION SOLUTIONS
DATE 2/24/03
DENNIS M. O'SHEA REGISTERED NO. 8419 DELAWARE PROFESSIONAL ENGINEER — SEAL

APPROVED
Carolann Wicks — CHIEF ENGINEER
DATE 3/17/03
CAROLANN D. WICKS REGISTERED NO. 7233 DELAWARE PROFESSIONAL ENGINEER — SEAL

JAN. 24, 2003

94-074-11 Thursday, September 23, 2003

GENERAL NOTES AND SYMBOLS LEGEND

BR. 1-813

CONTRACT	COUNTY	FEDERAL AID PROJECT NO.	SHEET NO.	TOTAL SHTS.
94-074-11	NEW CASTLE	IM-N060(2)	2	45

REHABILITATION AND PAINTING OF BRIDGE 1-813 ON I-495 OVER CHRISTINA RIVER

REVISIONS

GENERAL NOTES

1. THIS PROJECT IS TO BE CONSTRUCTED IN ACCORDANCE WITH DELAWARE DEPARTMENT OF TRANSPORTATION STANDARD SPECIFICATIONS FOR ROAD AND BRIDGE CONSTRUCTION, DATED AUGUST 2001 AND THE DELAWARE DEPARTMENT OF TRANSPORTATION "STANDARD CONSTRUCTION DETAILS", DATED 2001, INCLUDING ALL REVISIONS UP TO THE DATE OF ADVERTISEMENT.
2. THE CONTRACTOR SHALL GIVE TWO (2) WEEKS NOTICE TO THE PROPERTY OWNER WHEN ANY FIXTURE, SHRUB OR OTHER OBJECT MUST BE REMOVED FROM THE RIGHT OF WAY OR EASEMENT AREA. IF THE OWNER HAS NOT ATTEMPTED TO SALVAGE THIS PROPERTY, THE CONTRACTOR SHALL REMOVE IT WITHOUT OBLIGATION. COMPENSATION SHALL BE INCIDENTAL TO THE CONTRACT.
3. THE ENDS OF ALL CURBS SHALL BE DEPRESSED AT A RATIO OF TWELVE TO ONE (12:1) UNLESS OTHERWISE DIRECTED BY THE ENGINEER.
4. THE CONTRACTOR SHALL PROVIDE AND INSTALL PVC SLEEVES (4 INCH INSIDE DIAMETER MINIMUM, 6 INCH INSIDE DIAMETER MAXIMUM) IN PROPOSED CONCRETE SIDEWALKS, ISLANDS, AND MEDIANS FOR FUTURE TRAFFIC SIGN POSTS AS DIRECTED BY THE ENGINEER. THE LOWER END OF THE SLEEVE SHALL SIT ON THE TOP OF THE SUBBASE. THE COST SHALL BE INCIDENTAL TO THE CONTRACT.
5. SITE REVIEWER. AN EROSION CONTROL SITE REVIEWER SHALL BE A PERSON FROM THE CONTRACTOR'S STAFF ASSIGNED TO EROSION AND SEDIMENT CONTROL IMPLEMENTATION AND MAINTENANCE AND SHALL BE REQUIRED ON SPECIFIC PROJECTS. THE NAME AND DNREC CERTIFICATION NUMBER OF EACH SITE REVIEWER SO REQUIRED SHALL BE SUBMITTED TO THE DEPARTMENT AT THE TIME OF BID. THE SITE REVIEWER REQUIREMENTS IN EFFECT ON THIS PROJECT SHALL BE AS MARKED WITH AN (X) BELOW:

EROSION POTENTIAL FOR THIS PROJECT	SITE REVIEWER REQUIREMENT
( ) INSIGNIFICANT	NONE
(x) MINOR	CONTRACTOR CERTIFICATION COURSE TRAINING ONLY. SEE 1. BELOW
( ) MEDIUM	AT THE TIME OF AWARD OF THE CONTRACT, EITHER THE SUPERINTENDENT OR A SEPERATE INDIVIDUAL FROM THE CONTRACTOR'S STAFF SHALL BE A CERTIFIED CONSTRUCTION REVIEWER (CCR), SEE 2 BELOW.
( ) MAJOR	SUPERINTENDENT AND INDIVIDUAL FROM CONTRACTOR'S STAFF SHALL BE CCR. SEE 3 BELOW.

1. AS DEFINED IN SECTION 13 OF THE DELAWARE SEDIMENT AND STORMWATER REGULATIONS.
2. AS DEFINED IN SECTION 12 OF THE DELAWARE SEDIMENT AND STORMWATER REGULATIONS.
3. ONE INDIVIDUAL FROM THE CONTRACTOR'S STAFF MUST BE A CCR AT THE TIME OF AWARD OF THE CONTRACT. THE SUPERINTENDENT MUST BECOME A CCR WITHIN ONE YEAR AFTER THE AWARD OF CONTRACT.

6. STAGING AREAS:
   PROPER EROSION AND SEDIMENT CONTROL MEASURES AS DETERMINED BY THE ENGINEER SHALL BE INSTALLED IN ALL STAGING AREAS.
   ALL AREAS USED BY THE CONTRACTOR FOR STAGING OPERATIONS SHALL BE FULLY RESTORED BY THE CONTRACTOR UPON COMPLETION OF THE PROJECT.
   IF THE STAGING AREA IS PAVED, IT SHALL BE RESTORED TO ITS ORIGINAL CONDITION.
   IF THE STAGING AREA IS UNPAVED, IT SHALL BE RE-GRADED, TOPSOILED, SEEDED AND MULCHED IN ACCORDANCE WITH DELAWARE STANDARD SPECIFICATIONS 732, 734 AND 735, FOR TOPSOIL, SEED AND MULCH RESPECTIVELY, TO THE SATISFACTION OF THE ENGINEER. THE SEED SHALL ADHERE TO THE SPECIFICATIONS OF SECTION 734 FOR PERMANENT GRASS SEEDING - DRY GROUND.
   ALL COSTS ASSOCIATED WITH RESTORATION OF THE STAGING AREA SHALL BE AT THE CONTRACTOR'S EXPENSE.
   IF THE ENGINEER DETERMINES THAT A SATISFACTORY STAND OF GRASS DOES NOT EXIST AT THE TIME OF FINAL INSPECTION, ALL COSTS ASSOCIATED WITH RE-ESTABLISHING A SATISFACTORY STAND OF GRASS SHALL BE AT THE CONTRACTORS'S EXPENSE.

CONSTRUCTION

- PAVING
- PAVING
- PAVING
- P.C.C. SIDEWALK AT 4"
- P.C.C. SIDEWALK AT 6"
- BUTT JOINT
- PAVEMENT PATCH
- RIPRAP
- DRAINAGE INLET
- DI — DRAINAGE INLET IDENTIFIER
- MANHOLE
- MH — MANHOLE IDENTIFIER
- DRAINAGE PIPE & FLOW ARROW
- P — PIPE IDENTIFIER
- FLARED END SECTION
- FE — FLARED END SECTION IDENTIFIER
- JUNCTION BOX
- JB — JUNCTION BOX IDENTIFIER
- C.JB — CONVERT TO JB IDENTIFIER
- UNDERDRAIN
- UD — UNDERDRAIN IDENTIFIER
- UNDERDRAIN OUTLET STRUCTURE
- DITCH
- BFS — BIOFILTRATION SWALE
- INTEGRAL P.C.C. CURB AND GUTTER TYPE 1
- P.C.C. CURB TYPE 1 &/OR 3
- P.C.C. CURB TYPE 2
- INTEGRAL P.C.C. CURB AND GUTTER TYPE 2
- INTEGRAL P.C.C. CURB AND GUTTER TYPE 3
- CURB (BY OTHERS)
- C — CURB IDENTIFIER
- C O — CURB OPENING
- CR — CURB ACCESS RAMP IDENTIFIER WITH TYPE NUMBER
- CONCRETE SAFETY BARRIER
- B — BARRIER IDENTIFIER
- STEEL BEAM GUARDRAIL
- GUARDRAIL END SECTION
- GR — GUARDRAIL IDENTIFIER
- METAL FENCE
- WOOD FENCE
- R/W MONUMENT
- M — R/W MONUMENT IDENTIFIER
- RL C — RELOCATE BY CONTRACTOR
- A C — ADJUST BY CONTRACTOR
- RM C — REMOVE BY CONTRACTOR
- RL O — RELOCATE BY OTHERS
- A O — ADJUST BY OTHERS
- RM O — REMOVE BY OTHERS

CONSTRUCTION PHASING

- STONE CHECK DAM
- INLET SEDIMENT CONTROL
- PERIMETER DIKE SWALE
- TEMPORARY SWALE
- ED — EARTH DIKE
- SAND BAG DIVERSION
- EROSION CONTROL FABRIC
- ST / ST — SEDIMENT TRAP / IDENTIFIER
- TRAFFIC CONTROL PLASTIC DRUMS
- ROAD WORK 1000 FT — CONSTRUCTION WARNING SIGNS
- EXISTING CONTOURS
- 5 — PROPOSED CONTOURS
- CRASH CUSHION (SAND BARRELS)
- T — TURBIDITY CURTAIN
- PST — PORTABLE SEDIMENT TANK
- SF — SILT FENCE
- RSF — REINFORCED SILT FENCE
- SF — SILT FENCE IDENTIFIER
- SW — STILLING WELL
- SP — SUMP PIT
- DWB — DEWATERING BASIN
- ST — SEDIMENT TRAP PIPE OUTLET
- TSD — TEMPORARY SLOPE DRAIN
- SBD — SAND BAG DIKE
- TYPE 3 BARRICADE
- TRAFFIC FLOW ARROW
- PORTABLE CONCRETE SAFETY BARRIER
- STABILIZED CONSTRUCTION ENTRANCE

SIGNING, STRIPING AND CONDUITS

- PVE — CONDUITS UNDER PAVEMENT
- SOD — CONDUITS IN TRENCH
- CONDUIT JUNCTION WELL
- PAVEMENT MARKINGS
- LANE STRIPING
- NO TURN ON RED — TRAFFIC SIGN AND POST (BY STATE FORCES)

RIGHT OF WAY

- RW — PROPOSED RIGHT-OF-WAY
- RW&DA — PROPOSED RIGHT OF WAY AND DENIAL OF ACCESS
- DA — PROPOSED DENIAL OF ACCESS
- PE — PROPOSED PERMANENT EASEMENT
- UE — PROPOSED UTILITY EASEMENT
- TCE — PROPOSED TEMPORARY CONSTRUCTION EASEMENT
- 1+00 — HISTORIC R/W CENTERLINE OR BASELINE
- 1+00 — PROPOSED RIGHT OF WAY BASELINE
- EXISTING RIGHT-OF-WAY LINE
- EXISTING PROPERTY LINE

PROPOSED LANDSCAPING

- CONIFEROUS TREE
- SHRUB
- DECIDUOUS TREE

MISCELLANEOUS SYMBOLS

- LOC — LIMIT OF CONSTRUCTION
- CZ — CLEAR ZONE
- 0+00 — CONSTRUCTION BASELINE
- PROPOSED LUMINAIRE

NOTE: ALL SYMBOLS SHOWN ON THIS LEGEND SHEET MAY NOT NECESSARILY APPEAR IN THESE CONTRACT PLANS.

EXISTING DETAIL

- SURVEY TRAVERSE POINT
- POINT OF INTERSECTION - TANGENTS
- POINT OF TANGENCY & CURVATURE
- T.P. — SURVEY TIE POINT LOCATION
- B.M. — BENCH MARK LOCATION
- A-1(4) A-2(4) — SOIL BORING LOG - PROFILE VIEW
- SOIL BORING LOCATION - PLAN VIEW
- GnB2 GnB3 — SOIL TYPE AND BOUNDARY LINE
- MARSH OR WET AREAS
- SMALL BUSH OR ORNAMENTAL SHRUB
- CONIFEROUS TREE - 6" AND LARGER
- DECIDUOUS TREE - 6" AND LARGER
- HEDGEROW OR THICKET
- WOODS LINE
- TREE STUMP
- UTILITY TEST HOLE LOCATION
- GAS MANHOLE
- SANITARY SEWER MANHOLE
- TELEPHONE MANHOLE
- ELECTRIC MANHOLE
- F.H. — FIRE HYDRANT
- TELEPHONE BOOTH
- UTILITY POLE GUY WIRE ANCHOR
- G.V. — GAS VALVE
- W.V. — WATER VALVE
- WOOD POLE
- W.M. — WATER METER
- VENT — SANITARY SEWER VENT
- S.V. — SANITARY SEWER SURFACE FIXTURE
- TELEPHONE TEST POINT
- G.M. — GAS METER
- POLE MOUNTED LUMINAIRE
- LAMP — RESIDENTIAL STREET LAMP AND POST
- F.P. — FLAG POLE
- (TYPE LABEL) — CURB
- (TYPE LABEL) — INTEGRAL CURB & GUTTER
- FLEXIBLE PAVEMENT EDGE
- RIGID PAVEMENT EDGE
- STEEL BEAM GUARD RAIL
- WOOD POST AND CABLE GUARD RAIL
- C.B. — STORM DRAINAGE SURFACE INLET
- STORM DRAINAGE MANHOLE
- J.B. — STORM DRAINAGE JUNCTION BOX
- (SIZE/TYPE LABEL) — EXISTING DRAINAGE PIPE AND FLOW ARROW
- DRAINAGE PIPE HEADWALL
- EROSION CONTROL STONE
- STREAM, DITCH OR POND BOUNDARY
- FLOW -OR- TIDAL — STREAM FLOW DIRECTION ARROW
- TRAFFIC CONTROL SIGN POST
- TRAFFIC SIGNAL SUPPORT BASE
- TRAFFIC SIGNAL CONTROL BOX AND/OR BASE
- J.W. — TRAFFIC SIGNAL CONDUIT JUNCTION WELL
- E — ELECTRIC TRANSFORMER
- TV — CABLE TELEVISION DISTRIBUTION BOX
- C.M. — CONCRETE MONUMENT OR PROPERTY MARKER
- I.P. — PROPERTY LINE MARKER
- STONE PILLAR - CONC. BLOCK OR POURED
- STRAND OR WOVEN WIRE FENCE
- WOODEN FENCE
- LUMINAIRE SUPPORT POLE AND/OR BASE
- G.P. — SERVICE STATION FUEL PUMP
- WELL — WELL HEAD
- S.D.F. — SEPTIC DRAIN FIELD
- STONE WALL
- BLOCK WALL
- RAILROAD TRACKS
- WL — WETLANDS

CADD DESIGN DELDOT DESIGN DELDOT CHKD. DELDOT

J:\Trans\06031\700cadd\709STR\PS&E SUBMISSION\GN01.dgn

PROJECT NOTES

BR. 1-813

CONTRACT	COUNTY	FEDERAL AID PROJECT NO.	SHEET NO.	TOTAL SHTS.
94-074-11	NEW CASTLE	IM-N0601(2)	3	45

REHABILITATION AND PAINTING OF BRIDGE 1-813 ON I-495 OVER CHRISTINA RIVER

REVISIONS

2 REVISE WATERWAY NOTE;	
10/15/03: BEC	

LOCATION

REHABILITATION OF EXISTING BRIDGE NO. I-813 CARRYING I-495 OVER CHRISTINA RIVER, CHRISTINA AVENUE AND NORFOLK SOUTHERN RAILROAD IN WILMINGTON DELAWARE. THE BRIDGE WAS CONSTRUCTED IN 1974.

THE WORK ON BRIDGE NO. I-813 INVOLVES THE REPLACEMENT OF ALL APPROACH SPAN ROCKER BEARINGS WITH BRONZE SLIDING PLATE BEARINGS, THE REPLACEMENT OF MAIN SPAN ROCKER BEARINGS WITH POT BEARINGS, SEISMIC RETROFIT OF MAIN SPAN AND APPROACH SPAN FIXED BEARINGS, REPLACEMENT OF EXISTING TRANSVERSE ROADWAY JOINTS WITH XJS AND COMPRESSION JOINT SYSTEM, REPAIRING VARIOUS STRUCTURAL CONCRETE SPALLS, TIMBER FENDER SYSTEM REPAIRS, OTHER MISCELLANEOUS REPAIRS AND CLEAN AND PAINT ENTIRE SUPERSTRUCTURE.

DIMENSIONS AND ELEVATIONS

THE CONTRACTOR SHALL REFER TO THE REFERENCE DRAWINGS FOR EXISTING CONSTRUCTION AND INSTALLATIONS.

IT SHALL BE THE CONTRACTOR'S RESPONSIBILITY TO VERIFY DIMENSIONS AND ELEVATIONS AFFECTING ALL WORK IN THE FIELD. NO SEPARATE OR ADDITIONAL COMPENSATION WILL BE ALLOWED FOR THIS WORK.

GOVERNING SPECIFICATIONS

THE DELAWARE DEPARTMENT OF TRANSPORTATION STANDARD SPECIFICATIONS, DATED AUGUST 2001.

THE STANDARD SPECIFICATIONS FOR HIGHWAY BRIDGES, ADOPTED BY THE AMERICAN ASSOCIATION OF THE STATE HIGHWAY AND TRANSPORTATION OFFICALS (AASHTO) SIXTEENTH EDITION, 1996 AND INTERIM SPECIFICATIONS THROUGH 2001.

WATERWAYS

THE CONTRACTOR SHALL SUBMIT A CONTAINMENT SCHEME TO THE ENGINEER FOR REVIEW AND APPROVAL. THIS CONTAINMENT SCHEME SHALL SHOW PROPOSED METHODS TO PREVENT DEBRIS MATERIAL, ETC. FROM ENTERING THE WATERWAY. THE CONTRACTOR WILL NOT BE PERMITTED TO BEGIN WORK UNTIL APPROVAL HAS BEEN OBTAINED FROM THE ENGINEER. PAYMENT FOR THIS CONTAINMENT SCHEME WILL BE INCIDENTAL WITH THE CONTRACT.

NO PROVISIONS HAVE BEEN MADE FOR THE CONTRACTOR TO WORK IN THE
2 WATERWAY EXCEPT FOR ACCESS TO PERFORM FENDER SYSTEM REPAIRS, BEARING
2 REPLACEMENT AND CONCRETE REPAIRS ~~SEISMIC RETROFIT OF BEARINGS~~ IN SPANS
2 ~~16, 17 AND 18~~ 15 THROUGH 20. IF THE CONTRACTOR DESIRES TO PERFORM ANY OTHER WORK IN WATERWAY, THE CONTRACTOR SHALL BE RESPONSIBLE FOR OBTAINING ALL NECESSARY APPROVALS AND PERMITS AT HIS OWN EXPENSE. NO CONTRACT TIME EXTENSION WILL BE ALLOWED FOR CONTRACTOR TO OBTAIN APPROVALS AND PERMITS TO WORK IN WATERWAY.

THE CONTRACTOR IS TO PROVIDE SAFE RIVER PASSAGE THROUGH THE WORK AREA AND HAVE IT CLEARLY MARKED. PAYMENT FOR THIS WORK WILL BE INCLUDED UNDER ITEM NO. 763522 - "COAST GUARD SPECIFIC CONDITIONS." ANY CONTRACTOR ACTIVITIES WHICH WILL RESULT IN THE SHORT TERM CLOSING OF THE RIVER TRAFFIC, DUE TO CONTRACTOR PURSUING AN ALTERNATE WORK SEQUENCE, IS TO BE COORDINATED WITH THE ENGINEER TWO WEEKS IN ADVANCE. NO CLOSURE WILL BE APPROVED FOR WEEKENDS (FRIDAY - SUNDAY INCLUSIVE) OR HOLIDAYS.

DESIGN CRITERIA

DESIGN SPECIFICATIONS: AASHTO STANDARD SPECIFICATION, SIXTEENTH EDITION, 1996 AND INTERIM SPECIFICATIONS THROUGH 2001.

LOADING: HS-20 LIVE LOAD

SEISMIC DESIGN: SEISMIC DESIGN IS BASED ON SEISMIC PERFORMANCE CATEGORY B USING AN ACCELERATION COEFFICIENT, "A", OF 0.10. THE DESIGN OF THE SEISMIC RETROFITS IS BASED ON DIVISION IA OF AASHTO STANDARD SPECIFICATIONS AND FEDERAL HIGHWAY ADMINISTRATION (FHWA) PUBLICATION NUMBER FHWA-RD-94-052, "SEISMIC RETROFITTING MANUAL FOR HIGHWAY BRIDGES" DATED MAY, 1995.

DESIGN METHOD: ALL REHABILITATION DESIGN IS BASED ON SERVICE LOAD DESIGN (ASD) THEORY.

DESIGN UNIT STRESSES

NEW MATERIALS: (SEE ALSO CATEGORY FOR SPECIFIC MATERIAL)

STRUCTURAL STEEL - ASTM A709 OR AASHTO M270 GRADE 50 STEEL, Fy = 50KSI, Fs = 27KSI

FATIGUE DESIGN - AASHTO CASE I, OVER 2,000,000 CYCLES

BAR REINFORCEMENT - AASHTO GRADE 60, Fy = 60KSI, Fs = 24KSI

SUPERSTRUCTURE CONCRETE - CLASS A, Fc' = 4500PSI, Fc = 1800PSI

SUBSTRUCTURE CONCRETE - CLASS B, Fc' = 3000PSI, Fc = 1200PSI

EXISTING MATERIALS:
(INFORMATION FROM EXISTING PLANS AND WORKING DRAWINGS EXCLUDING BEARINGS):

STRUCTURAL STEEL - GRADE 36 STEEL; Fy = 36KSI

BAR REINFORCEMENT - AASHTO GRADE 40, Fy = 40KSI

SUBSTRUCTURE CONCRETE - CLASS B, Fc' = 3000 PSI

NORMAL TEMPRATURE

NORMAL TEMPERATURE IS ASSUMED AS 68 DEGREES FAHRENHEIT.

LOAD RATING

THIS PROJECT DOES NOT CHANGE THE LOAD RATING OF THE BRIDGE. THE INVENTORY LOAD RATING PUBLISHED IN "STRUCTURES INVENTORY AND APPRAISAL" SHEET FOR YEAR 2000 IS HS-20.

STRUCTURAL STEEL

UNLESS OTHERWISE NOTED, ALL STRUCTURAL STEEL SHALL CONFORM TO AASHTO DESIGNATION M270 (ASTM A709) GRADE 50 INCLUDING THE ADDITIONAL REQUIREMENTS FOR CHARPY V-NOTCH TESTING OF AASHTO M270 FOR PRIMARY LOAD CARRYING MEMBERS.

SHOP INSPECTION OF THE STRUCTURAL STEEL WILL BE PERFORMED BY THE DEPARTMENT OR ITS AUTHORIZED INSPECTION AGENCY AND THE CONTRACTOR SHALL SO STIPULATE IN HIS ORDER TO THE FABRICATOR. ALSO, THE CONTRACTOR SHALL NOTIFY THE DEPARTMENT WITHIN 4 WEEKS OF THE NAME AND ADDRESS OF THE FABRICATOR OF THE STRUCTURAL STEEL AS SOON AS THE FABRICATOR HAS BEEN GIVEN THE CONTRACT TO FABRICATE SO THAT AN INSPECTION PROCEDURE CAN BE SET UP.

WELDING

ALL WELDING SHALL BE IN ACCORDANCE WITH THE AMERICAN WELDING SOCIETY "BRIDGE WELDING CODE" AWS D 1. 5 - LATEST EDITION AND THE AASHTO STANDARD SPECIFICATIONS FOR HIGHWAY BRIDGES, 1996 WITH INTERIMS THROUGH 2001. ALL GROOVE AND BUTT WELDS SHALL BE COMPLETE PENETRATION UNLESS NOTED OTHERWISE. NO FIELD WELDING WILL BE ALLOWED UNLESS CALLED FOR ON THE PLANS OR SPECIFICALLY PERMITTED BY THE ENGINEER. ELECTROSLAG AND ELECTROGAS WELDING WILL NOT BE PERMITTED. ALL WELDS SHALL BE SUBJECT TO NON-DESTRUCTIVE TESTING AS SPECIFIED IN THE BRIDGE WELDING CODE, AWS D 1.5.

BOLT REPLACEMENT

WHERE INDICATED ON THE CONTRACT PLANS, BOLTS SHALL BE REMOVED IN A MANNER APPROVED BY THE ENGINEER THAT WILL NOT DAMAGE THE UNDERLYING, CONNECTED MATERIAL. THE CONTRACTOR SHALL BE RESPONSIBLE FOR ANY DAMAGE INFLICTED AS A RESULT OF HIS OPERATIONS AND SHALL RECTIFY SAID DAMAGES TO THE SATISFACTION OF THE ENGINEER PRIOR TO THE INSTALLATION OF THE REPLACEMENT BOLT. UPON REMOVAL OF EACH FASTENER, THE BASE METAL AROUND THE HOLE SHALL BE EXAMINED FOR SURFACE IRREGULARITIES AND DETERIORATION. ALL OXIDIZED MATERIAL SHALL BE REMOVED BY REAMING AND GRINDING.

BOLT HOLES THROUGH A SINGLE PLY OF EXISTING MATERIAL NOT BEING USED FOR A NEW CONNECTION BUT EXPOSED IN THE COMPLETED STRUCTURE, SHALL BE FILLED WITH A H.S. BOLT (WASHERS MAY BE OMITTED FOR THESE BOLTS).

HOLES MAY BE REAMED OR DRILLED OVERSIZE AS REQUIRED TO PROVIDE CLEARANCE FOR INSERTING OR TIGHTENING NEW FASTENERS ONLY WITH THE PERMISSION OF THE ENGINEER. OTHERWISE, DIAMETER OF HOLES SHALL BE 1/16" LARGER THAN NOMINAL DIAMETER OF FASTENER.

CONTACT SURFACES OF ALL LAYERS OF STEEL THROUGH WHICH FASTENERS WILL PASS, EXCEPT THOSE WHICH WILL NOT BE EXPOSED IN THE SEQUENCE OF THE WORK, SHALL BE PREPARED BY REMOVING ALL OIL AND ALL OTHER FOREIGN SUBSTANCES AS WELL AS RUST AND LOOSE SCALE.

FASTENERS AND CONNECTIONS

ALL BOLTED CONNECTIONS ARE DESIGNED AS SLIP-CRITICAL AND SHALL BE MADE WITH HIGH-STRENGTH BOLTS CONFORMING TO ASTM A325 OR ASTM A490 TYPE 3 INSTALLED IN ACCORDANCE WITH STANDARD SPECIFICATIONS AND THE CURRENT EDITION OF "SPECIFICATIONS FOR STRUCTURAL JOINTS USING ASTM A325 OR A490 BOLTS" OF THE REASEARCH COUNCIL ON RIVETED AND BOLTED STRUCTURAL JOINTS, UNLESS OTHERWISE NOTED. ALL FASTENERS SHALL BE 7/8" DIAMETER UNLESS OTHERWISE NOTED. ALL CONTACT SURFACES OF BOLTED PARTS SHALL BE CLASS "A".

UNLESS NOTED, ALL NEW A325 BOLTS SHALL BE NEW GALVANIZED BOLTS, INCLUDING FASTENERS AT LOCATIONS WHERE EXISTING FASTENERS ARE TO BE REMOVED AND REPLACED.

FAYING SURFACES SHALL BE PREPARED AS CLASS A WITH A 3-MIL COAT OF ZINC RICH PAINT IN ACCORDANCE WITH THE STANDARD SPECIFICATIONS.

TEMPORARY BOLTS MAY BE UNCOATED ASTM A325 H.S. BOLTS UNLESS OTHERWISE NOTED. BOLTS NOT DAMAGED MAY BE REUSED FOR OTHER TEMPORARY APPLICATIONS.

PAINTING OF NEW AND EXISTING STRUCTURAL STEEL

ALL PAINTING OF NEW AND EXISTING STEEL SHALL BE IN ACCORDANCE WITH THE SPECIAL PROVISIONS AND AS SHOWN ON THE PAINTING KEY PLAN, SHEET 37. PAINTING OPERATIONS SHALL BE PERFORMED USING A SUSPENDED PLATFORM. THE SUSPENDED PLATFORM SHALL HAVE SOLID, RIGID FLOORING AND SHALL BE DESIGNED TO ACCOMODATE ALL WORKING LOADS.

THE CONTRACTOR SHALL SUBMIT SHOP DRAWINGS AND CALCULATIONS FOR ALL SUSPENDED PLATFORMS OR CONTAINMENT SYSTEMS THAT ARE SIGNED AND SEALED BY A REGISTERED PROFESSIONAL ENGINEER LICENSED IN THE STATE OF DELAWARE. REFER TO THE SPECIFICATIONS AND SPECIAL PROVISIONS FOR ADDITIONAL INFORMATION.

THE CONTRACTOR IS ALERTED THAT THE EXISTING COATING SYSTEM CONSISTS OF ZINC/VINYL COATS AVERAGING APPROXIMATELY 7 TO 12 MILS IN TOTAL THICKNESS. LABORATORY ANALYSIS INDICATES LOW CONCENTRATIONS OF CADMIUM, CHROMIUM AND LEAD. BASED ON METHODS OF PAINT REMOVAL SPECIFIED IN THE SPECIAL PROVISIONS, WASTE WOULD NOT EXCEED REGULATORY LIMITS, AND IS CONSIDERED TO BE NON-HAZARDOUS WASTE.

VERTICAL CLEARANCES

A MINIMUM VERTICAL CLEARANCE OF 16.5 FT MUST BE PROVIDED OVER ALL LOCAL STREETS. THE CONTRACTOR SHALL NOTIFY THE ENGINEER IF THERE IS ANY CHANGE IN VERTICAL CLEARANCE FROM THE EXISTING CONDITION EVEN IF THE PROPOSED CLEARANCE IS WITHIN LEGAL LIMITS.

MINIMUM VERTICAL CLEARANCE OVER RAILROAD SHALL BE IN ACCORDANCE WITH THE REQUIREMENTS OF EACH PARTICULAR RAILROAD. FOR THIS PROJECT THE MINIMUM VERTICAL CLEARANCE OVER NORFOLK SOUTHERN RAILROAD IS 23.0 FT. THE CONTRACTOR SHALL COORDINATE WITH THE RAILROAD AUTHORITY, TO VERIFY AND MAINTAIN THEIR REQUIREMENTS.

REPAIR OF CRACKS AND SPALLS

ALL CRACKS AND SPALLS ON THE SUBSTRUCTURE AND SUPERSTRUCTURE CONCRETE COMPONENTS SHALL BE REPAIRED AS SHOWN AND DESCRIBED ON THE CONTRACT PLANS. THE DESIGNATED REPAIR MATERIALS SHALL BE USED IN STRICT ACCORDANCE WITH THE MANUFACTURER'S RECOMMENDATIONS.

TEMPORARY PROTECTIVE SHIELDS

ALL DISCARDED MATERIAL BECOMES THE PROPERTY OF THE CONTRACTOR AND SHALL BE DISPOSED OF IN ACCORDANCE WITH CONTRACT SPECIFICATIONS. DURING THE REMOVAL PROCESS, THE CONTRACTOR SHALL NOT ALLOW WASTE CONCRETE, STEELWORK, OR OTHER MATERIAL TO FALL FROM THE BRIDGE. PROTECTION SHIELD PLATFORMS, NETS, SCREENS, OR OTHER PROTECTIVE DEVICES SHALL BE USED TO PROTECT PUBLIC AND CATCH ANY FALLING MATERIAL WHICH SHALL THEN BE DISPOSED OF PROPERLY. SHOULD ANY DEBRIS FALL TO THE GROUND, OR IN THE WATER, IT SHALL BE REMOVED IMMEDIATELY AT THE CONTRACTORS EXPENSE. THE COST OF DAMAGES CAUSED BY FALLING DEBRIS TO LANDBASED OPERATIONS SHALL BE BORNE BY THE CONTRACTOR. THE CONTRACTOR SHALL DESIGN, FURNISH, INSTALL AND REMOVE PROTECTIVE SHIELDS IN ACCORDANCE WITH SPECIAL PROVISIONS. ALL COSTS ASSOCIATED WITH FURNISHING, INSTALLING AND REMOVING THESE SHIELDS SHALL BE PAID FOR AT THE UNIT BID PRICE ITEM NO. 601522 - "TEMPORARY PROTECTIVE SHIELD."

MAINTENANCE AND PROTECTION OF RAILROAD FACILITIES

RAILROADS UNDER THE BRIDGE HAVE SAFETY REQUIREMENTS WHICH MUST BE COMPLIED WITH. IN ADDITION, THE CONTRACTOR MUST COMPLY WITH ALL OSHA REGULATIONS. REFER TO THE SPECIAL PROVISIONS FOR ADDITIONAL INFORMATION. THE CONTRACTOR SHALL DESIGN, FURNISH, INSTALL AND REMOVE PROTECTION SHIELDS FOR RAILROADS IN ACCORDANCE WITH SPECIAL PROVISIONS. ALL COSTS ASSOCIATED WITH TEMPORARY SHIELD OVER RAILROADS SHALL BE INCIDENTAL TO THE SPEICAL PROVISIONS FOR MAINTENANCE OF RAILROAD TRAFFIC.

CONSTRUCTION

THE CONTRACTOR IS RESPONSIBLE TO ENSURE THAT THE SAFETY OF THE PUBLIC AND ALL WORKERS IS MAINTAINED AT ALL TIMES, THROUGHOUT THE TERM OF THE CONTRACT. MOTORISTS SHALL BE GUIDED IN A CLEAR AND POSITIVE MANNER WHILE APPROACHING AND PASSING THROUGH CONSTRUCTION WORK/EQUIPMENT AREAS.

ALL ROADS, STRUCTURES, PIPES, CURBS, INLETS, ETC. BENEATH THE BRIDGE SHALL BE PROTECTED FROM DAMAGE THROUGHOUT THE DURATION OF THE CONTRACT. ANY DAMAGE TO EXISTING STRUCTURES AND/OR FEATURES SHALL BE REPAIRED AT THE CONTRACTOR'S EXPENSE IN A MANNER APPROVED BY THE ENGINEER.

THE CONTRACTOR SHALL DEVELOP THE SEQUENCING AND METHODS OF ALL WORK AS REQUIRED BY THE CONTRACT DRAWINGS AND PREPARE SHOP DRAWINGS OF SUFFICIENT DETAIL TO FABRICATE ALL BEARINGS AND STRUCTURAL STEEL COMPONENTS AND OTHER ITEMS AS NECESSARY FOR THE COMPLETION OF THE CONTRACT. THESE METHODS AND DRAWINGS SHALL BE SUBMITTED TO THE ENGINEER FOR REVIEW AND APPROVAL PRIOR TO ORDERING ANY MATERIALS AND FABRICATION.

AS THESE CONTRACT DRAWINGS HAVE BEEN PREPARED BASED ON ORIGINAL CONTRACT PLANS AND FIELD INSPECTION NOTES, ACTUAL CONDITIONS MAY REQUIRE MODIFICATION IN CONSTRUCTION DETAILS AND WORK QUANTITIES. (SEE CONTINGENT QUANTITIES).

ALL DIMENSIONS AND STATIONS SHOWN ARE APPROXIMATE. ALL DIMENSIONS AFFECTED BY GEOMETRICS, AND/OR LOCATION OF THE EXISTING STRUCTURE SHALL BE CHECKED IN THE FIELD BY THE CONTRACTOR, BEFORE ANY CONSTRUCTION IS DONE AND BEFORE ANY MATERIAL IS ORDERED OR FABRICATED. FIELD VERIFICATION, FIELD ENGINEERING AND NECESSARY MODIFICATIONS ARE INCIDENTAL TO ASSOCIATED COSTS. IF THE GEOMETRICS DIFFER FROM THAT SHOWN ON THE PLANS, THE ENGINEER SHALL BE CONTACTED FOR EVALUATION. IT SHALL BE THE RESPONSIBILITY OF THE CONTRACTOR TO SUPPLY THE ENGINEER WITH ALL FIELD DIMENSIONS REQUIRED TO CHECK DETAIL DRAWINGS. THE CONTRACTOR SHALL CONSIDER THE LENGTH OF TIME FOR REVIEW OF SHOP DRAWINGS AND FABRICATION IN HIS SCHEDULE OF WORK.

DURING REMOVAL OF SUPERSTRUCTURE STEEL AND CONCRETE, AND SUBSTRUCTURE CONCRETE AS DESIGNATED ON THE CONTRACT DRAWINGS, THE CONTRACTOR SHALL TAKE CARE NOT TO DAMAGE THE EXISTING (REMAINING) STRUCTURE. ANY DAMAGE CAUSED TO THE EXISTING (REMAINING) STRUCTURE SHALL BE REPAIRED AT THE CONTRACTOR'S EXPENSE IN A MANNER APPROVED BY THE ENGINEER.

THE CONTRACTOR SHOULD ASSIST THE INSPECTION TEAM WITH EQUIPMENT AND OPERATORS TO ACCESS AREAS FOR INSPECTION AND ESTABLISHMENT OF SUPERSTRUCTURE AND SUBSTRUCTURE CONCRETE REPAIR LIMITS.

ONLY WHEN SUCH CUTTING WILL NOT IN ANY WAY DAMAGE THE EXISTING MATERIALS TO REMAIN. REMOVAL OF EXISTING FASTENERS BY FLAME CUTTING OR BURNING WILL NOT BE PERMITTED (SEE BOLT REPLACEMENT).

ANY CONDITION ENCOUNTERED BY THE CONTRACTOR WHICH HE FEELS IMPAIRS THE STRUCTURAL INTEGRITY OF THE BRIDGE SHALL BE REPORTED IMMEDIATELY TO THE ENGINEER FOR REMEDIAL ACTION.

ACCESS

ACCESS TO THE BRIDGE STRUCTURE FOR CONSTRUCTION SHALL BE ACCOMPLISHED AS SUGGESTED BELOW:

SPANS 1-14: THROUGH CHRISTINA AVENUE (DE ROUTE 9A).
SPANS 15-20: CHRISTINA RIVER VIA A BARGE.
SPANS 21-38: NB I-495 VIA THE GRAVEL ACCESS ROAD LOCATED AT THE NORTH ABUTMENT.

IF THE CONTRACTOR DESIRES TO OBTAIN ACCESS TO THE SITE VIA OTHER METHODS, THE CONTRACTOR SHALL BE RESPONSIBLE FOR OBTAINING ALL NECESSARY APPROVALS AND PERMITS AT HIS OWN EXPENSE. EROSION AND SEDIMENT CONTROL AND RESTORATION OF THE STAGING AREA SHALL BE AT CONTRACTOR'S EXPENSE. CONTRACTOR SHALL RESTORE ALL ACCESS ROADS USED TO ITS ORIGINAL CONDITION UPON COMPLETION OF THE PROJECT.

UTILITIES

EXISTING UTILITIES ARE SHOWN ON THE PLANS IN ACCORDANCE WITH THE BEST AVAILABLE INFORMATION. IT SHALL BE THE CONTRACTOR'S RESPONSIBILITY TO VERIFY THE PRESENCE, SIZE, AND LOCATIONS OF ALL UTILITIES PRIOR TO COMMENCEMENT OF WORK. THE CONTRACTOR SHALL COORDINATE ANY UTILITY RELOCATIONS AND ADJUSTMENTS WITH THE RESPECTIVE UTILITY COMPANIES. UTILITY COMPANIES HAVING FACILITIES ON THE BRIDGE IN AREAS WHERE JACKING OPERATIONS ARE TO BE PERFORMED SHALL BE NOTIFIED PRIOR TO PERFORMING WORK IN THE VICINITY OF JACKING. THE CONTRACTOR'S ATTENTION IS DIRECTED TO SECTION 105.09 UTILITIES, DELAWARE STANDARD SPECIFICATIONS, AUGUST 2001. THE CONTRACTOR SHALL CONTACT MISS UTILITY (1-800-282-8555) TWO WORKING DAYS PRIOR TO ANY EXCAVATION. THE CONTRACTOR IS RESPONSIBLE FOR THE SUPPORT AND PROTECTION OF ALL UTILITIES WHEN EXCAVATING. THE CONTRACTOR IS RESPONSIBLE FOR ENSURING PROPER CLEARANCES, INCLUDING SAFETY CLEARANCES, FROM OVERHEAD UTILITIES FOR CONSTRUCTION EQUIPMENT. THE CONTRACTOR IS ADVISED TO CHECK THE SITE FOR ACCESS PURPOSES FOR HIS EQUIPMENT AND, IF NECESSARY MAKE ARRANGEMENTS DIRECTLY WITH UTILITY COMPANIES FOR FIELD ADJUSTMENTS FOR ADEQUATE CLEARANCES. THE COST FOR THIS WORK SHALL BE CONSIDERED INCIDENTAL TO APPLICABLE WOK ITEMS. IF ANY EXISTING UTILITY IS DAMAGED AS A RESULT OF WORK DONE BY THE CONTRACTOR, THE EXISTING UTILITY SHALL BE REPAIRED AT THE CONTRACTOR'S EXPENSE.

EROSION AND SEDIMENT CONTROL

THE CONTRACTOR SHALL INSTALL AND MAINTAIN SILT FENCE AROUND ALL STREAMS, OPEN CHANNELS AND DITCHES BENEATH THE BRIDGE. ALL SILT FENCES SHALL BE IN PLACE AND MAINTAINED FOR THE DURATION OF THE CONTRACT, UNLESS OTHERWISE DIRECTED BY THE ENGINEER. REFER TO THE STANDARD SPECIFICATIONS FOR ADDITIONAL INFORMATION.

THE CONTRACTOR SHALL INSTALL STABILIZED CONSTRUCTION ENTRANCES FOR AREAS INDICATED UNDER "ACCESS" SHOWN ON THIS SHEET. THE CONTRACTOR SHALL INSTALL EROSION AND SEDIMENT CONTROL MEASURES IN ALL STAGING AREAS AND CONSTRUCTION ENTRANCES.

AT THE COMPLETION OF THE PROJECT, THE CONTRACTOR SHALL REMOVE THE EROSION AND SEDIMENT CONTROL MEASURES, INSTALL TOP SOIL, 6" DEPTH (ITEM 732002), SEED (ITEM 734013) AND MULCH (ITEM 735006) AT ALL STAGING AREAS AND CONSTRUCTION ENTRANCES.

CONSTRUCTION SAFETY FENCE

CONSTRUCTION SAFETY FENCE IS REQUIRED AROUND THE PERIMETER OF ALL BELOW-DECK WORK AREAS, ALONG CHRISTINA AVENUE AND AT LOCATIONS DIRECTED BY THE ENGINEER.

CONSTRUCTION SEQUENCE

THE CONTRACTOR SHALL COORDINATE ALL WORK SCHEDULES WITH THE ENGINEER. CERTAIN TASKS ARE CONSIDERED KEY ITEMS AND ARE RECOMMENDED TO BE PERFORMED WITH RESPECT TO OTHER TASKS IN THE FOLLOWING ORDER:

CLEAN AND PRIME STEEL, BEARING REPLACEMENTS, THEN STRUCTURAL STEEL REHABILITATION FOLLOWED BY COMPLETION OF COATING.

FOR SPECIFIC CONSTRUCTION SEQUENCES FOR INDIVIDUAL REPAIR ITEMS, SUCH AS BEARING REPLACEMENT, CONCRETE REPAIRS, ETC., REFER TO THE APPROPRIATE SEQUENCES SHOWN ON THESE PLANS.

MAINTENANCE OF TRAFFIC

FOR RESTRICTIONS ON CLOSURE OF TRAFFIC LANES, REFER TO CONSTRUCTION SEQUENCING, TRAFFIC CONTROL PLANS, AND SPECIAL PROVISIONS. ADDITIONAL RESTRICTIONS ARE SHOWN ON THIS SHEET UNDER THE HEADING "CONTRACT RESTRICTIONS."

JACKING RESTRICTIONS

VARIOUS TASKS SHOWN ON THESE PLANS REQUIRE JACKING OF STRUCTURAL COMPONENTS TO PERFORM THE NECESSARY REPAIRS. IT IS THE INTENT OF THESE RESTRICTIONS THAT THE VARIOUS JACKING OPERATIONS SHALL LIMIT THE DIFFERENTIAL MOVEMENT OF THE COMPONENT AT THE JACKS TO NO MORE THAN 1/4" VERTICALLY, UNLESS OTHERWISE NOTED ON THE PLANS.

SHIMS SHALL BE INSTALLED ABOVE BLOCKING IMMEDIATELY FOLLOWING JACKING OPERATIONS. ROADWAY JOINT DETAILS AND HORIZONTAL AND VERTICAL MOVEMENTS/REACTIONS SHALL BE CONSIDERED IN DEVELOPING JACKING AND BLOCKING DETAILS. REFER TO JACKING NOTES ON SHEETS 13A, 13B AND 14 FOR ADDITIONAL RESTRICTIONS.

CONTRACTOR SUBMISSIONS

IT IS EMPHASIZED HEREIN THAT DUE TO THE COMPLEXITIES AND STRUCTURAL SIGNIFICANCE OF MANY OF THE WORK TASKS CONTAINED IN THIS CONTRACT, THAT ALL SHOP DRAWINGS, WORKING DRAWINGS, AND CALCULATION REQUIRED OF THE CONTRACTOR BE PREPARED UNDER THE SUPERVISION OF A REGISTERED PROFESSIONAL ENGINEER LICENSED IN THE STATE OF DELAWARE.

ALL SHOP DRAWINGS FOR ITEMS OF WORK THAT ARE TO BE REVIEWED BY A RAILROAD SHOULD BE SUBMITTED AS SOON AS POSSIBLE. THE CONTRACTOR SHALL CONSIDER THE LENGTH OF TIME REQUIRED FOR THE RAILROAD TO REVIEW SHOP DRAWINGS IN HIS SCHEDULE OF WORK.

PRIOR TO OR WITH THE SHOP DRAWINGS, THE CONTRACTOR SHALL SUBMIT THE FIELD VERIFICATION NOTES ON MEMBER SIZES AND DIMENSIONS NECESSARY TO REVIEW THE SHOP DRAWINGS.

TO EXPEDITE REVIEW OF SHOP DRAWINGS THE CONTRACTOR HAS THE OPTION OF SUBMITTING THE INITIAL REVIEW SET ELECTRONICALLY. IF SO SELECTED, THE ELECTRONIC SUBMISSION SHALL BE IN A FORMAT ACCEPTABLE TO THE ENGINEER AND THE REVIEW AGENCY. THE PROJECT SHOP DRAWINGS SHALL STILL BE DISTRIBUTED AS PER DELDOT'S STANDARD SPECIFICATION, SECTION 105.

CLEARING AND GRUBBING

THIS WORK SHALL BE IN ACCORDANCE WITH STANDARD SPECIFICATION ITEM NO. 201000. AT THE DIRECTION OF THE ENGINEER, THE CONTRACTOR SHALL REMOVE AND DISPOSE OF ALL EXISTING TRASH AND DEBRIS FROM BENEATH THE BRIDGE AND ALONG THE CHRISTINA RIVER SHORELINES WHITHIN THE CONTROLLED ACCESS LINES SHOWN ON THE PLANS. THE DEBRIS MAY INCLUDE, BUT NOT LIMITED TO, VEHICULAR TIRES, DISCARDED FURNITURE, GLASS, TRASH AND OTHER MATERIAL.

CONTRACT RESTRICTIONS

THIS STRUCTURE CARRIES I-495 OVER CITY STREETS AND RAILROADS IN AN URBAN ENVIRONMENT. TO INSURE THAT CONSTRUCTION PROCEEDS IN A TIMELY FASHION WITH MINIMUM DISRUPTION TO THESE FACILITIES, THE CONTRACTOR SHALL ADHERE TO THE FOLLOWING RESTRICTIONS WHEN SCHEDULING WORK:

1. LANE CLOSURES ON I-495 ARE ONLY PERMITTED BETWEEN THE HOURS OF 9:30 AM TO 3:00 PM AND 7:00 PM TO 6:00 AM. ALL WORK REQUIRING LANE CLOSURES SHALL BE PERFORMED BETWEEN THESE HOURS.
2. SIMULTANEOUS CLOSURE OF NORTH BOUND AND SOUTH BOUND LANES OF I-495 IS PROHIBITED, EXCEPT FOR WORK ON THE MEDIAN PARAPETS.
3. JACKING OF THE SUPERSTRUCTURE FOR APPROACH SPAN BEARING REPLACEMENT SHALL BE PERFORMED UNDER LIVE LOAD AND SHALL ONLY BE PERFORMED BETWEEN THE HOURS OF 2 AM AND 4 AM.
4. JACKING OF THE SUPERSTRUCTURE FOR MAIN SPAN BEARING REPLACEMENT SHALL BE PERFORMED WITH NO LIVE LOAD AND SHALL ONLY BE PERFORMED BETWEEN THE HOURS OF 2 AM AND 4 AM.
5. NO LANE CLOSURES OR OTHER RESTRICTIONS ARE PERMITTED ON LOCAL CROSS STREETS DURING PEAK HOURS BETWEEN THE HOURS OF 7 AM TO 9 AM AND BETWEEN THE HOURS OF 4 PM TO 6 PM.
6. THE CONTRACTOR SHALL PROVIDE AN MOT PLAN TO MAINTAIN TRAFFIC ON CHRISTINA AVENUE IF CLOSING A TRAFFIC LANE IS NECESSARY. AN ATSSA CERTIFIED WORK SITE SUPERVISOR WILL BE PRESENT ON THE SITE. SEE SHEET 39 MAINTENANCE OF TRAFFIC GENERAL NOTES.
7. ALL WORK ON AREAS OF THE BRIDGE ABOVE NORFOLK SOUTHERN PROPERTY MUST BE COORDINATED WITH NORFOLK SOUTHERN.
8. WORK WHICH REQUIRES ACCESS TO NORFOLK SOUTHERN PROPERTY MUST BE PERFORMED BETWEEN THE HOURS OF 6:00 AM AND 10:00 PM AND WILL BE SUBJECT TO THE DIRECTION OF NORFOLK SOUTHERN FLAGMEN.

RIGHT-OF-WAY

ALL WORK SHALL TAKE PLACE WITHIN THE EXISTING RIGHT-OF-WAY. EXISTING RIGHT-OF-WAY WIDTHS ARE SHOWN ON REPAIR KEY PLAN AND ELEVATION. FOR MORE DETAILED INFORMATION, THE CONTRACTOR SHOULD REFER TO THE REFERENCE DRAWINGS.

CONTINGENT QUANTITIES

THE ESTIMATED QUANTITIES FOR FOLLOWING PAY ITEMS INCLUDE CONTINGENCY FACTORS TO ACCOUNT FOR THE ANTICIPATED VARIATIONS IN THE ACTUAL QUANTITY. PAYMENT FOR THESE ITEMS WILL BE MADE ON THE BASIS OF THE ACTUAL QUANTITY APPROVED AND ACCEPTED BY THE ENGINEER.

ITEM NO.	DESCRIPTION	CONTINGENCY FACTOR
602514	REPAIR OF CONCRETE STRUCTURES BY EPOXY INJECTION	50%
602586	REHABILITATION OF CONCRETE STRUCTURE	100%
602630	MODIFICATION OF BRIDGE CONCRETE PEDESTAL	15%
603000	BAR REINFORCEMENT	25%
605578	REPLACING STEEL BOLTS	20%
605584	STEEL STRUCTURE REPAIR	25%

REFERENCE DRAWINGS AND CONTRACTS

THE FOLLOWING DESIGN AND DETAIL DRAWINGS FOR THE SUBJECT STRUCTURE ARE AVAILABLE FOR PURCHASE UPON REQUEST FROM THE DELAWARE DEPARTMENT OF TRANSPORTATION:

DATE	CONTRACT NO.	DESCRIPTION	NO.
1990	88-098-08	PERMANENT REPAIRS TO I-495 BRIDGE OVER CHRISTINA RIVER	47
1972	71-05-007	INTERSTATE HIGHWAY ROUTE I-495 STA. 348+21.46 TO STA.392+16.57	44
1970	70-04-016	INTERSTATE HIGHWAY ROUTE I-495 STA. 348+21.46 TO STA.392+16.57	46

THE CONTRACTOR WILL BE SUPPLIED WITH ONE SET OF REFERENCE DRAWINGS AT THE BEGINNING OF THE CONTRACT.

CADD DESIGN A. RIGATO DESIGN T. CUPPLES CHKD. S. SIMON

J:\Trans\0603\700cadd\709STR\Addendum1\GN02.dgn

PROJECT NOTES, CONTINUED

NOISE ORDINANCE WAIVER

THE DEPARTMENT OF TRANSPORTATION HAS OBTAINED A NOISE ORDINANCE WAIVER FROM THE CITY OF WILMINGTON FOR THE PURPOSE OF PERFORMING NIGHT WORK BETWEEN THE HOURS OF 10:00 P.M. TO 7:00 A.M.

DRAWING LINEWORK LEGEND

WITH THE EXCEPTION OF THE KEY PLAN AND ELEVATION DRAWINGS, TRAFFIC CONTROL PLANS, EXISTING RIGHT OF WAY DRAWINGS OR UNLESS NOTED OTHERWISE, MATERIALS ARE SYMBOLIZED WITH LINE WORK SHOWN THUS:

EXISTING ----------

NEW ————————

LIST OF ABBREVIATIONS

ABUT.	ABUTMENT
AHD.	AHEAD
ALT.	ALTERNATE
ALUM.	ALUMINUM
AVG.	AVERAGE
BCK.	BACK
BEG.	BEGIN/BEGINNING
BOTT.	BOTTOM
BTWN.	BETWEEN
CLR.	CLEAR
CONC.	CONCRETE
COND.	CONDITION
CONSTR.	CONSTRUCTION
CONT.	CONTINUOUS
DEFL.	DEFLECTION
DIA.	DIAMETER
DIM.	DIMENSION
DWG.	DRAWING
E.F.	EACH FACE
EL.	ELEVATION
EMBED.	EMBEDDED
EQ.	EQUAL
EST.	ESTIMATE
EXIST.	EXISTING
EXP.	EXPANSION
EXT.	EXTERIOR
F.F.	FAR FACE
F.G.	FINISHED GRADE
GALV.	GALVANIZED
HT.	HEIGHT
INT.	INTERIOR
JT.	JOINT
MIN.	MINIMUM
NB	NORTHBOUND
N.F.	NEAR FACE
NO(S).	NUMBER(S)
N.T.S.	NOT TO SCALE
R	RADIUS
RAD.	RADIAL
REINF.	REINFORCEMENT
RELOC.	RELOCATED
REQ'D	REQUIRED
ROW	RIGHT-OF-WAY
SB	SOUTHBOUND
SECT.	SECTION
SHLD.	SHOULDER
SPA.	SPACES
SQ.	SQUARE
STA.	STATION
STD.	STANDARD
STIFF.	STIFFENER
STRN.	STRENGTH
STRUCT.	STRUCTURE
SYMM.	SYMMETRIC
TYP.	TYPICAL
ULT.	ULTIMATE
U.N.O.	UNLESS NOTED OTHERWISE
W.P.	WORK POINT

REPAIR SCHEDULE

CODE *	REQUIRED REPAIRS	PAY ITEM	DETAIL SHEET
1	APPROACH SPAN ROCKER BEARING REPLACEMENT	605651, 605677, 605696	8-10
2	MAIN SPAN BEARING REPLACEMENT	605649, 605650	11-12
3	LONGITUDINAL JOINT SEALS	605692	22
4	FIXED BEARING PEDESTAL MODIFICATION	602630	18A-18B
5	PARAPET REPAIR	602586, 603000	20
6	PARAPET PROTECTIVE COATING	602646	20
7	DECK SOFFIT SPALL AND DELAMINATION REPAIR	602586	25
8	EPOXY INJECTION CRACK REPAIR	602514	24
9	EPOXY NON-SAG MORTAR CRACK REPAIR	602586	24
10	SPALL AND DELAMINATION REPAIRS	602586	24
11	CONCRETE PEDESTAL REPAIR	602631	25
12	CONCRETE PEDESTAL RECONSTRUCTION AT PIER 37	602630	30
13	ADDITION OF WEB STIFFENERS TO GIRDERS	605584	19
14	FASTENER REPLACEMENT	605578	19
15	TRANSVERSE JOINT SEAL	605692, 605572	21
16	FENDER SYSTEM REPAIR KEY	601002	31
17	COATINGS REHABILITATION	605522, 605532, 605622	37
18	DRAINAGE TROUGH	605670, 605681, 605682	22-23
19	PIER 20 EMBANKMENT PROTECTION	712022	33
20	LOUVERED SIGN PANELS	749500	44
[illegible] 21	Reattachment of Diagonal "T" Brace	999998-03	13A

* REPAIR SCHEDULE CODE NUMBERS ARE REFERRED TO THROUGHOUT THE PLANS AND ARE INDICATED AS SUCH:

EXAMPLE:

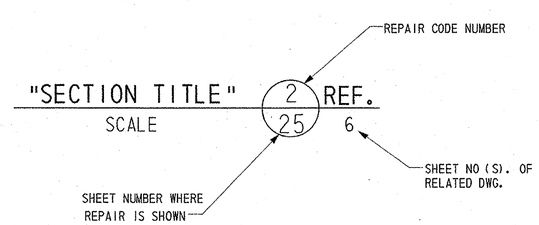

REPAIR KEY PLAN AND ELEVATION - 1

BR. 1-813

CONTRACT	COUNTY	FEDERAL AID PROJECT NO.	SHEET NO.	TOTAL SHTS.
94-074-11	NEW CASTLE	IM-N060(2)	5	45

REHABILITATION AND PAINTING OF BRIDGE 1-813 ON I-495 OVER CHRISTINA RIVER

REVISIONS

NOTES

20' LIMITS OF TEMPORARY PROTECTIVE SHIELDING OVER N/S RAILROAD OR AS REQ'D (TYP.). SEE SHEET 18 FOR SUGGESTED DETAIL FOR ACCESS ACROSS RAILROAD SEE SPECIAL PROVISION 763502

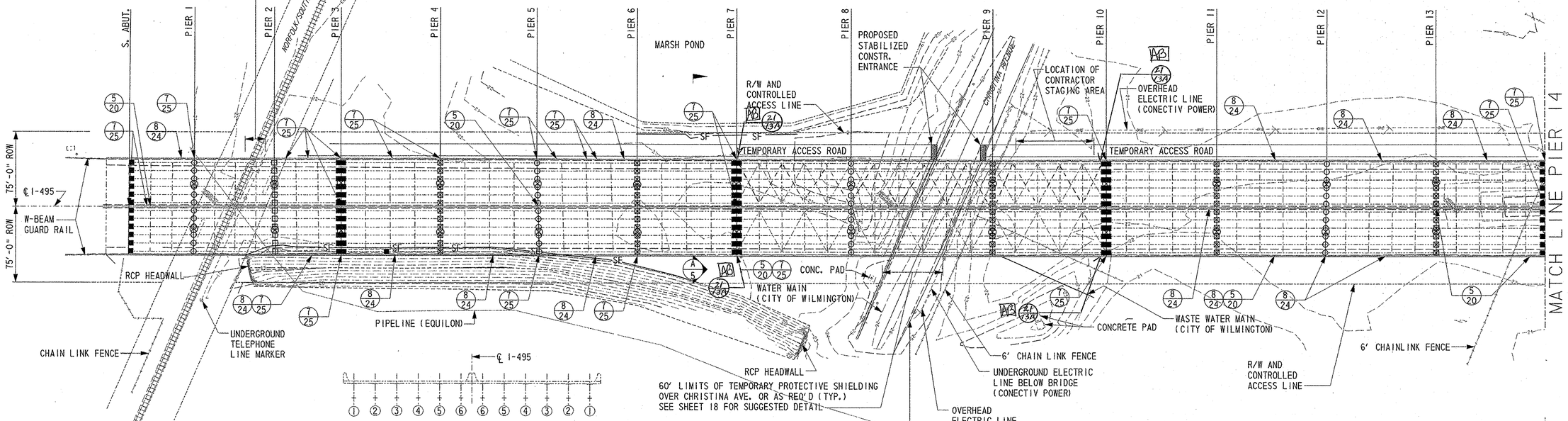

TYPICAL SECTION SHOWING GIRDER NUMBERING FOR SPANS 1 - 15 AND 19 - 38.

PLAN
1" = 50'

SECTION A/5
N.T.S.

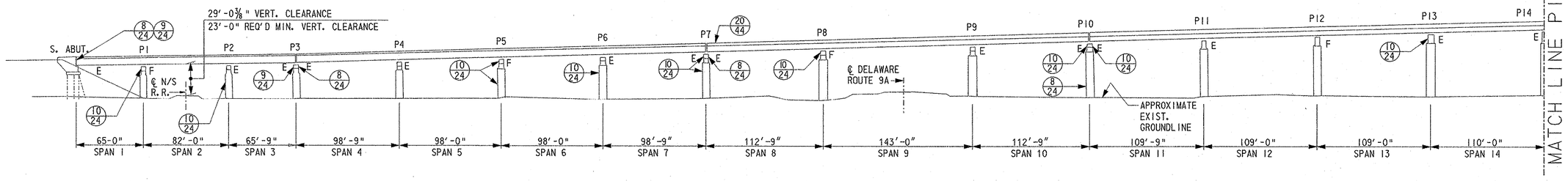

ELEVATION
1" = 50'

REPAIR CODES NOT SHOWN

- 3/22 LONGITUDINAL JOINT SEAL
- 6/20 PARAPET PROTECTIVE COATING
- 14/19 FASTENER REPLACEMENT
- 15/21 TRANSVERSE JOINT SEAL
- 17/37 SEE SPECIAL PROVISION AND PAINTING KEY PLANS FOR DESCRIPTION AND LIMITS OF WORK

BEARING REPLACEMENT LEGEND

SYMBOL	REPAIR CODE
☒	1/8A
□	1/8B
■	1/9

SEISMIC RETROFIT LEGEND

SYMBOL	REPAIR CODE
○	4/18B

NOTES

1. DIMENSIONS ARE SHOWN TO THE CENTERLINE OF PIERS.
2. FOR EXPLANATION OF REPAIR CODES SEE SHEET 4.
3. FOR APPROXIMATE LOCATION OF SUBSTRUCTURE CONCRETE REPAIR CODE, 8/24 9/24 10/24 AND 11/25 SEE SHEETS 26-29.
4. FOR APPROXIMATE LOCATION OF SUPERSTRUCTURE CONCRETE REPAIR CODE, 5/20 7/25 AND 8/24 SEE SHEETS 20, 25 AND 29.
5. UNLESS NOTED OTHERWISE AND WITH THE EXCEPTION OF REPAIR CODES AND SYMBOLS, ALL FEATURES ON THIS SHEET ARE EXISTING FEATURES.

CADD DESIGN A. RIGATO DESIGN B. COPLEY CHKD. B. COPLEY

J:\Trans\0603\700cadd\709STR\PS&E SUBMISSION\rp01new.dgn

94-074-11 Tuesday, September 23, 2003

REPAIR KEY PLAN AND ELEVATION - 2

BR. 1-813

CONTRACT	COUNTY	FEDERAL AID PROJECT NO.	SHEET NO.	TOTAL SHTS.
94-074-11	NEW CASTLE	IM-N060(2)	6	45

REHABILITATION AND PAINTING OF BRIDGE 1-813 ON I-495 OVER CHRISTINA RIVER

REVISIONS

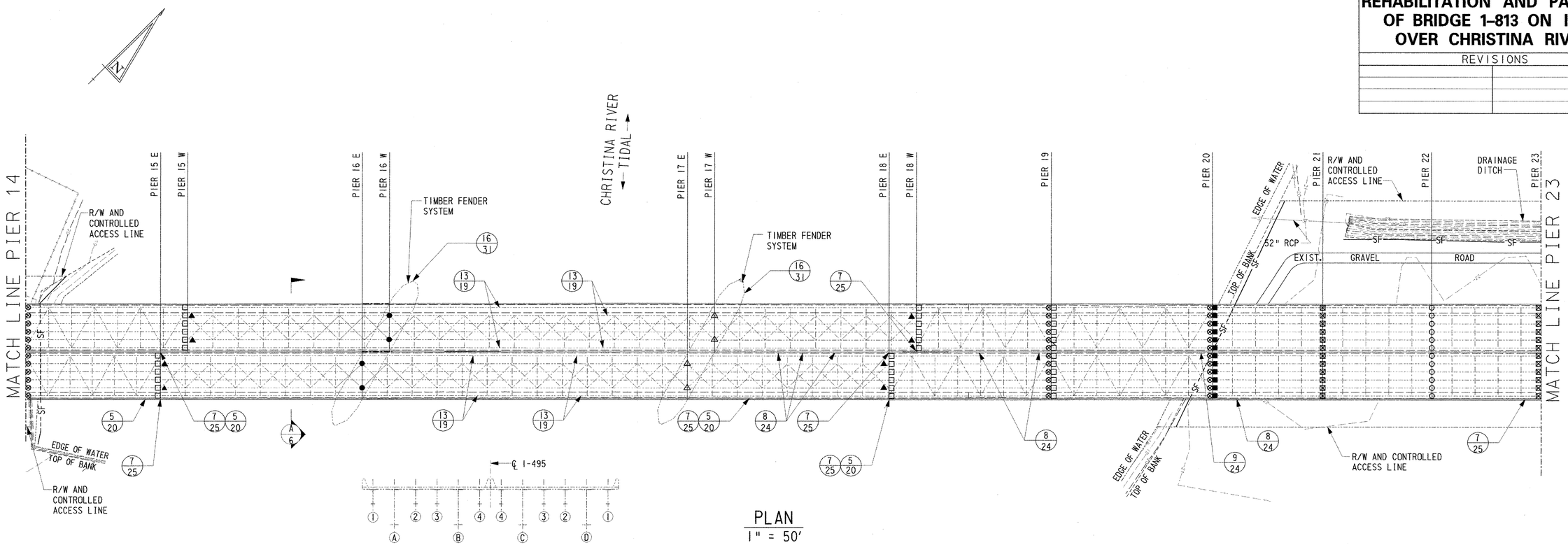

PLAN
1" = 50'

TYPICAL SECTION SHOWING GIRDER NUMBERING FOR SPANS 16 - 18.

SECTION A/6
N. T. S.

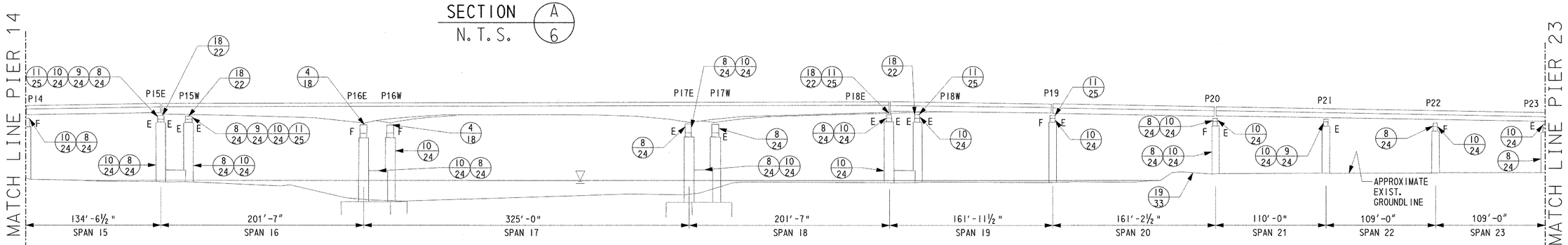

ELEVATION
1" = 50'

REPAIR CODES NOT SHOWN

- 3/22 LONGITUDINAL JOINT SEAL
- 6/20 PARAPET PROTECTIVE COATING
- 14/19 FASTENER REPLACEMENT
- 15/21 TRANSVERSE JOINT SEAL
- 17/37 SEE SPECIAL PROVISION AND PAINTING KEY PLANS FOR DESCRIPTION AND LIMITS OF WORK

BEARING REPLACEMENT LEGEND

SYMBOL	REPAIR CODE
☒	1/8A
□	1/8B
■	1/9
▲	2/12
△	2/11

SEISMIC RETROFIT LEGEND

SYMBOL	REPAIR CODE
●	4/18A
○	4/18B
⊗	4/18B

NOTES

1. DIMENSIONS ARE SHOWN TO THE CENTERLINE OF PIERS.
2. FOR EXPLANATION OF REPAIR CODES SEE SHEET 4.
3. FOR APPROXIMATE LOCATION OF SUBSTRUCTURE CONCRETE REPAIR CODE, 8/24 9/24 10/24 AND 11/25 SEE SHEETS 26-29.
4. FOR APPROXIMATE LOCATION OF SUPERSTRUCTURE CONCRETE REPAIR CODE, 5/20 7/25 AND 8/24 SEE SHEETS 20, 25 AND 29.
5. UNLESS NOTED OTHERWISE AND WITH THE EXCEPTION OF REPAIR CODES AND SYMBOLS, ALL FEATURES ON THIS SHEET ARE EXISTING FEATURES.

CADD DESIGN A. RIGATO DESIGN B. COPLEY CHKD. B. COPLEY

J:\Trans\0603\700cadd\709STR\PS&E SUBMISSION\rp02new.dgn

REPAIR KEY PLAN AND ELEVATION – 3

BR. 1–813

CONTRACT	COUNTY	FEDERAL AID PROJECT NO.	SHEET NO.	TOTAL SHTS.
94-074-11	NEW CASTLE	IM-N060(2)	7	45

REHABILITATION AND PAINTING OF BRIDGE 1–813 ON I–495 OVER CHRISTINA RIVER

REVISIONS

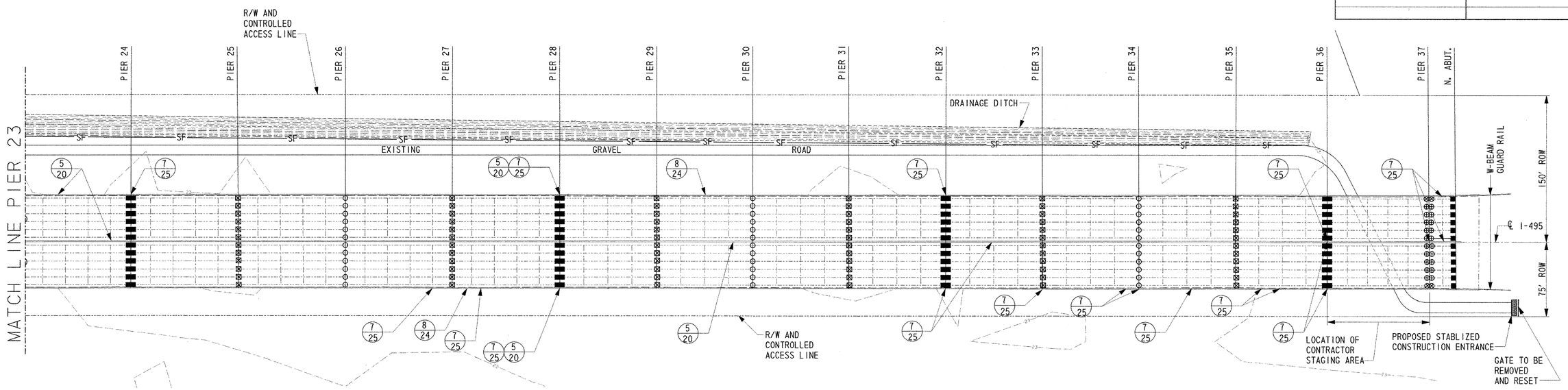

PLAN
1" = 50'

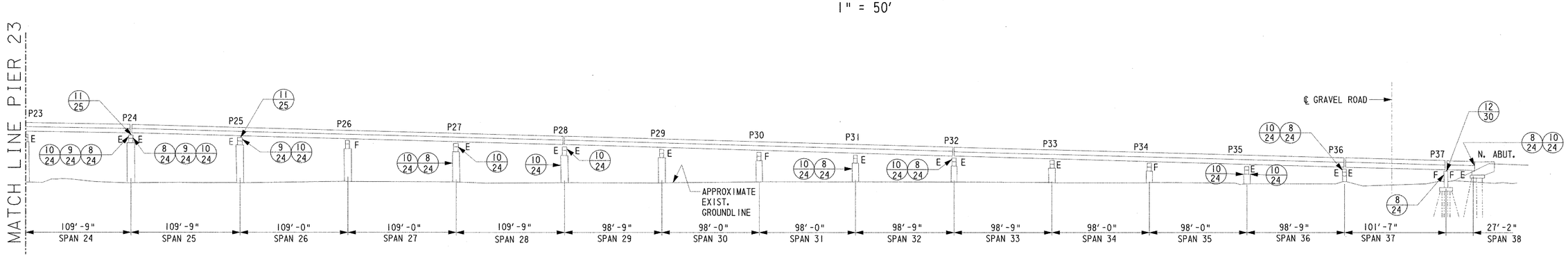

ELEVATION
1" = 50'

REPAIR CODES NOT SHOWN

- (3/22) LONGITUDINAL JOINT SEAL
- (6/20) PARAPET PROTECTIVE COATING
- (14/19) FASTENER REPLACEMENT
- (15/21) TRANSVERSE JOINT SEAL
- (17/37) SEE SPECIAL PROVISION AND PAINTING KEY PLANS FOR DESCRIPTION AND LIMITS OF WORK

BEARING REPLACEMENT LEGEND

SYMBOL	REPAIR CODE
⊠	(1/8A)
■	(1/9)

SEISMIC RETROFIT LEGEND

SYMBOL	REPAIR CODE
○	(4/18B)
⊗	(4/18B)
⊕	(12/30)

NOTES

1. DIMENSIONS ARE SHOWN TO THE CENTERLINE OF PIERS.
2. FOR EXPLANATION OF REPAIR CODES SEE SHEET 4.
3. FOR APPROXIMATE LOCATION OF SUBSTRUCTURE CONCRETE REPAIR CODE, (8/24) (9/24) (10/24) AND (11/25) SEE SHEETS 26-29.
4. FOR APPROXIMATE LOCATION OF SUPERSTRUCTURE CONCRETE REPAIR CODE, (5/20) (7/25) AND (8/24) SEE SHEETS 20, 25 AND 29.
5. UNLESS NOTED OTHERWISE AND WITH THE EXCEPTION OF REPAIR CODES AND SYMBOLS, ALL FEATURES ON THIS SHEET ARE EXISTING FEATURES.

CADD DESIGN A. RIGATO DESIGN B. COPLEY CHKD. B. COPLEY

J:\Trans\060J\1700cadd\7093TR\PS&E SUBMISSION\rp07new.dgn

SLIDING BEARING DETAILS – TYPE E-1

BR. 1-813

CONTRACT	COUNTY	FEDERAL AID PROJECT NO.	SHEET NO.	TOTAL SHTS.
94-074-11	NEW CASTLE	IM-N060(2)	8A	45

REHABILITATION AND PAINTING OF BRIDGE 1-813 ON I-495 OVER CHRISTINA RIVER

REVISIONS

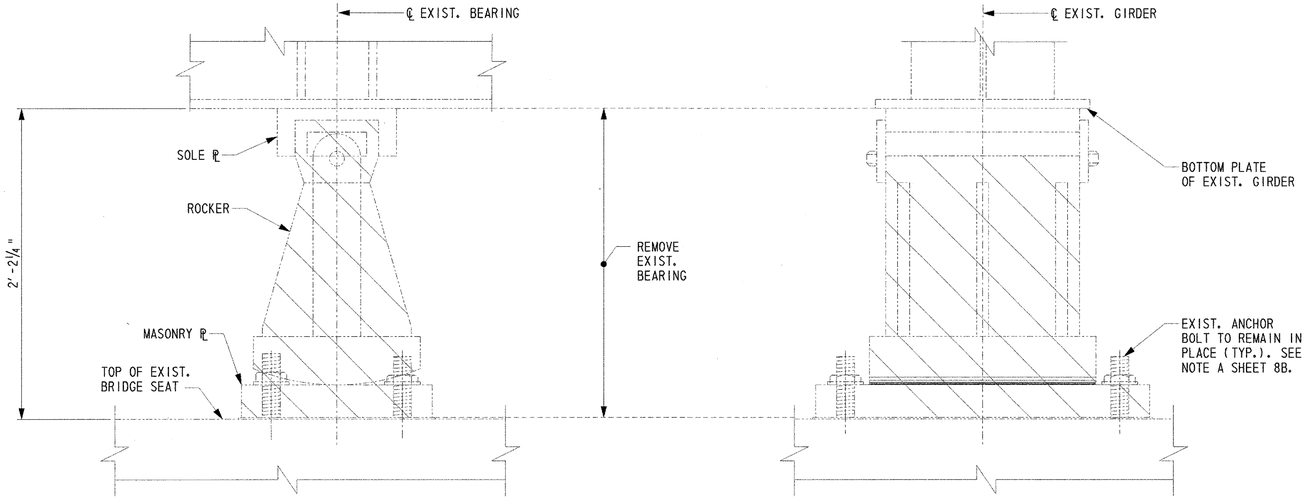

SIDE VIEW

FRONT VIEW

EXISTING BEARING - TYPE E-1
SCALE: 2" = 1'-0"

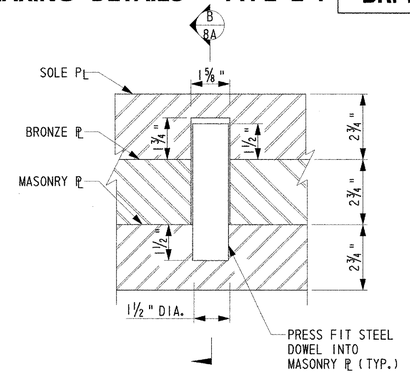

DOWEL DETAIL
SCALE: 4" = 1'-0"

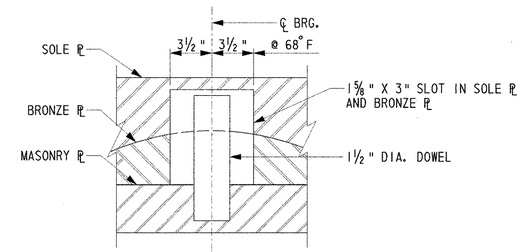

SECTION B/8A
SCALE: 4" = 1'-0"

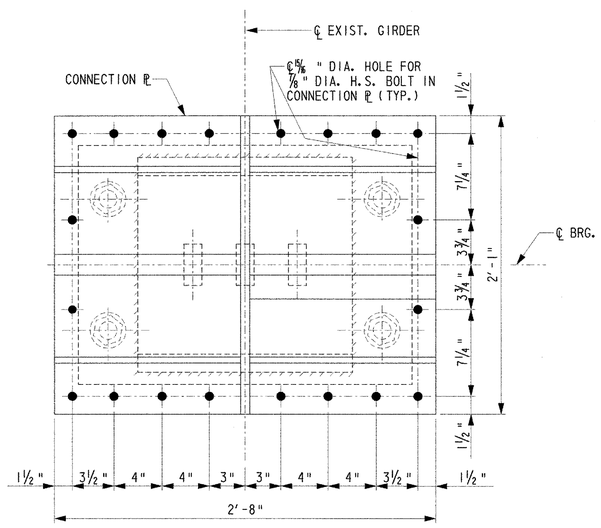

SECTION A/8A
SCALE: 2" = 1'-0"

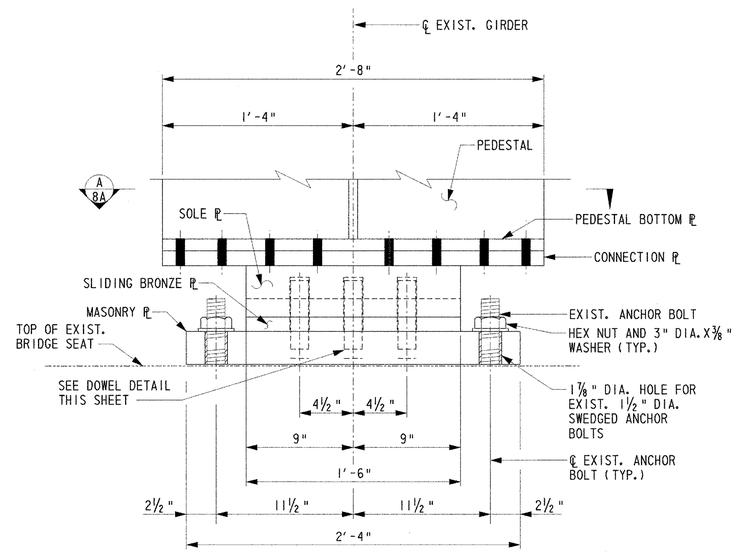

FRONT VIEW

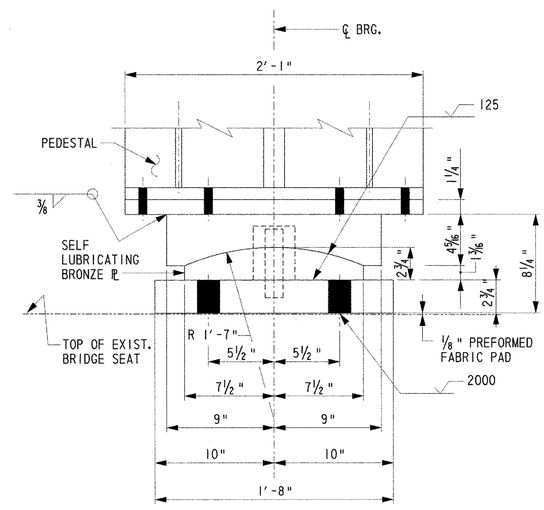

SIDE VIEW

SLIDING BEARING DETAILS - TYPE E-1 1/8A REF. 5, 6, 7
SCALE: 2" = 1'-0"

NOTES

1. FOR BEARING AND PEDESTAL NOTES SEE SHEET 8B.
2. FOR BEARING PEDESTAL DETAILS SEE SHEET 10B.
3. FOR BEARING REPLACEMENT SCHEDULE SEE SHEET 10B.

CADD DESIGN ____ Y. JIN ____ DESIGN ____ Y. JIN ____ CHKD. ____ B. COPLEY ____

J:\Trans\0603\Y10Cadd\Y109STR\PS&E SUBMISSION\BRG_E1.dgn

SLIDING BEARING DETAILS - TYPE E-2

BR. 1-813

CONTRACT	COUNTY	FEDERAL AID PROJECT NO.	SHEET NO.	TOTAL SHTS.
94-074-11	NEW CASTLE	IM-N060(2)	8B	45

REHABILITATION AND PAINTING OF BRIDGE 1-813 ON I-495 OVER CHRISTINA RIVER

REVISIONS

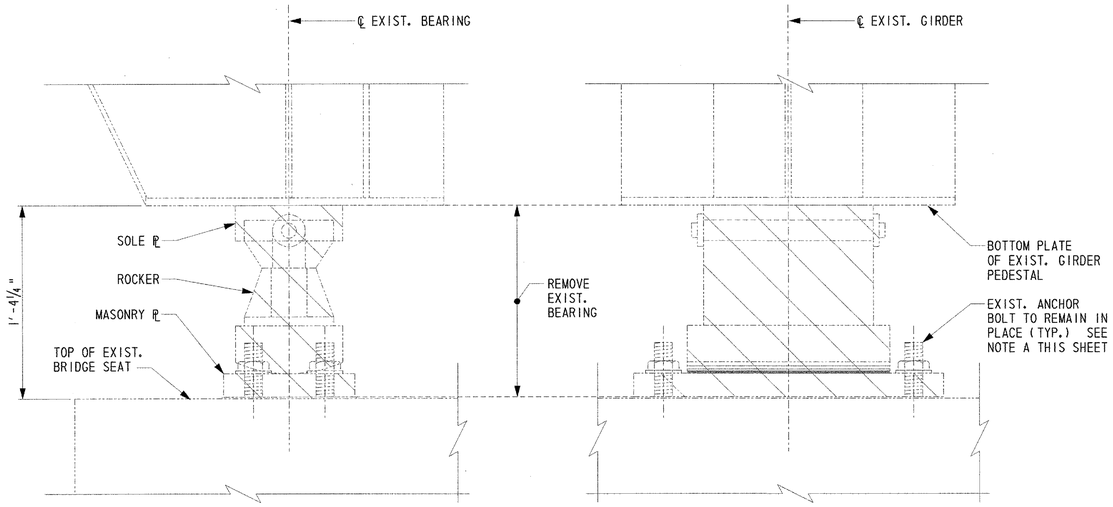

SIDE VIEW

FRONT VIEW

EXISTING BEARING - TYPE E-2
SCALE: 2" = 1'-0"

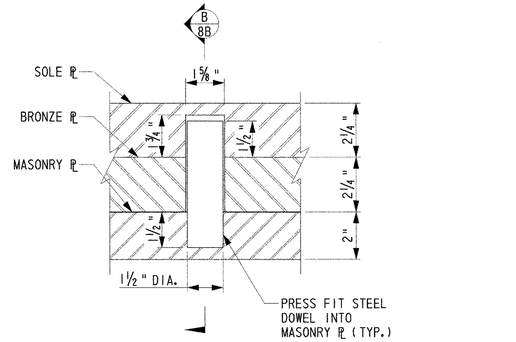

DOWEL DETAIL
SCALE: 4" = 1'-0"

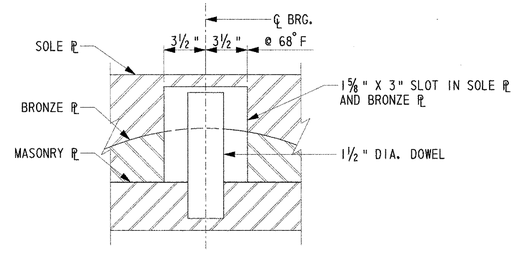

SECTION B/8B
SCALE: 4" = 1'-0"

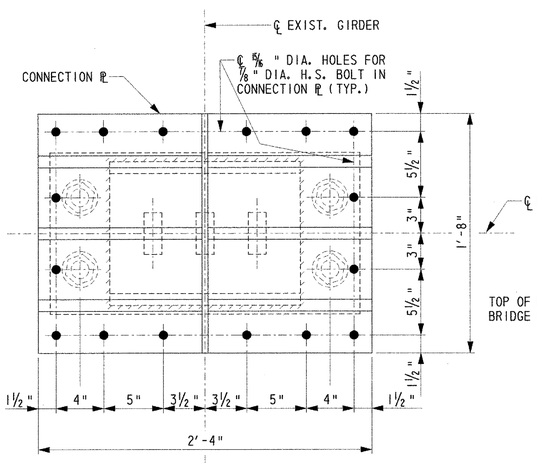

SECTION A/8B
SCALE: 2" = 1'-0"

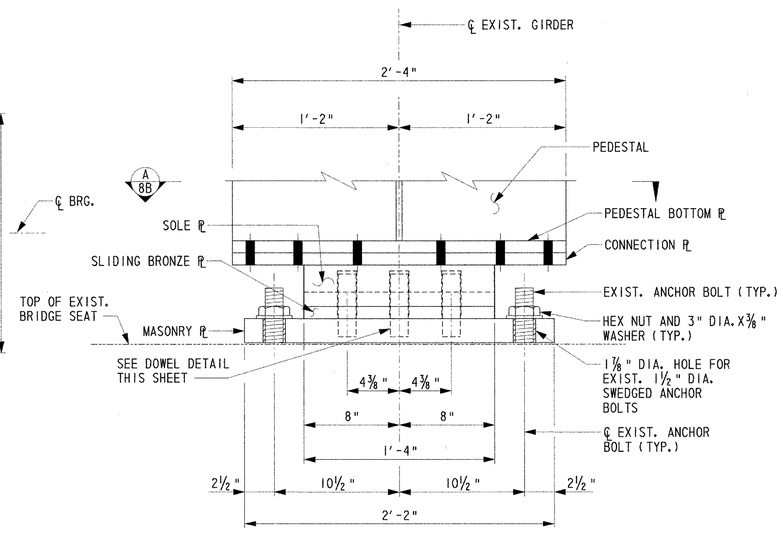

FRONT VIEW

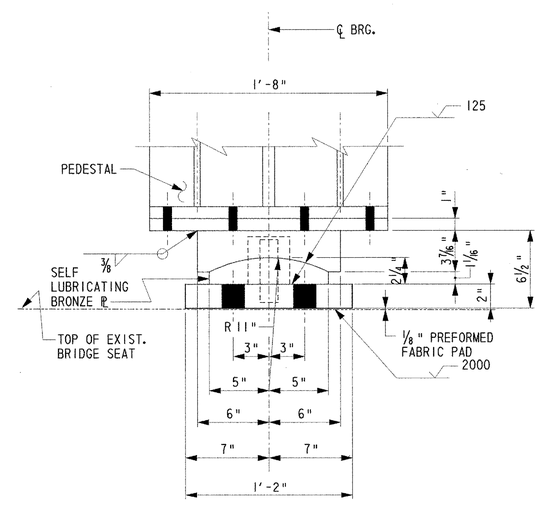

SIDE VIEW

SLIDING BEARING DETAILS - TYPE E-2 1/8B REF. 5, 6
SCALE: 2" = 1'-0"

NOTE A

AFTER REMOVAL OF THE EXISTING BEARINGS AND PRIOR TO INSTALLATION OF THE NEW BEARINGS, THE EXISTING ANCHOR BOLTS SHALL BE INSPECTED. IF ANY ANCHOR BOLT IS FOUND TO BE RUSTED, BENT OR DAMAGED, IT SHALL BE REPAIRED AS SHOWN IN DETAIL C/24.

ADDITIONALLY, IF THE EXISTING ANCHOR BOLT DOES NOT HAVE ADEQUATE EXTENSION ABOVE THE TOP OF THE EXISTING BRIDGE SEAT, IT SHALL BE EXTENDED TO THE PROPER LENGTH TO ADEQUATELY SECURE THE NEW MASONRY PLATE IN PLACE USING THE ANCHOR BOLT REPAIR PROCEDURE. THE DETERMINATION OF WHICH ANCHOR BOLT(S) TO REPAIR WILL BE MADE BY THE ENGINEER. ALL COSTS ASSOCIATED WITH REPAIR OF EXISTING ANCHOR BOLTS SHALL BE PAID UNDER ITEM NO. 605655 - "BEARING ANCHOR BOLT REPLACEMENT."

TYPE E-1, E-2 AND E-3 BEARING NOTES

1. FOR JACKING DETAILS, LOADS AND SEQUENCE OF CONSTRUCTION FOR BEARING REPLACEMENT SEE SHEETS 9, 13A, 13B AND 17.
2. SEE SHEET 10A & 10B FOR STEEL PEDESTAL DETAILS.
3. FOR APPROACH SPAN BEARING REPLACEMENT SCHEDULE SEE SHEET 9 & 10B.
4. ALL MATERIAL FOR STEEL COMPONENTS, INCLUDING THE SOLE PLATE, CONNECTION PLATE, DOWELS, AND MASONRY PLATE, SHALL CONFORM TO AASHTO M270 (ASTM A709) GRADE 50.
5. THE SELF LUBRICATING BRONZE PLATE SHALL CONFORM TO AASHTO M107 (ASTM B22) ALLOY C91100.
6. THE NEW HEX NUT SHALL CONFORM TO AN A307 GALVANIZED STEEL AND THE NEW WASHER SHALL BE ASTM A709 GALVANIZED STEEL.
7. THE CONTRACTOR SHALL PROVIDE SHOP DRAWINGS THAT DETAIL THE PROPOSED BEARINGS, TAKING INTO ACCOUNT THE HORIZONTAL AND VERTICAL GEOMETRY OF THE EXISTING GIRDER, PRIOR TO FABRICATION OF ANY PART OF THE PROPOSED BEARING ASSEMBLIES.
8. ALL PLATE THICKNESSES ARE MEASURED AT CENTERLINE OF BEARING AT 68°F.
9. ALL NEW STRUCTURAL STEEL SHALL BE PAINTED IN ACCORDANCE WITH SECTION 605 OF THE STANDARD SPECIFICATIONS USING THE PAINT SYSTEM SPECIFIED IN SPECIAL PROVISION NO. 605522. REFER TO SHEET 37 FOR PAINT COLOR.
10. WORK PERFORMED FOR THIS ITEM SHALL BE IN ACCORDANCE WITH AND PAID FOR UNDER ITEM NO. 605651-"REPLACING BRIDGE BEARING, TYPE C" FOR TYPE E-2 BEARING, ITEM NO. 605677-"REPLACING BRIDGE BEARING, TYPE D" FOR TYPE E-3 BEARING AND ITEM NO. 605696-"REPLACING BRIDGE BEARING, TYPE E" FOR TYPE E-1 BEARING.

TYPE E-1, E-2 AND E-3 BEARING PEDESTAL NOTES

1. FOR PEDESTAL DETAILS SEE SHEETS 10A & 10B.
2. FOR PROPOSED PEDESTAL HEIGHTS, SEE SHEET 9 & 10B.
3. FOR JACKING NOTES AND SEQUENCE OF CONSTRUCTION SEE SHEETS 9, 13A, 13B AND 14.
4. ALL MATERIAL FOR STEEL COMPONENTS SHALL CONFORM TO AASHTO M270 (ASTM A709), GRADE 50.
5. ALL FASTENER HARDWARE (BOLTS, NUTS, AND WASHERS) SHALL CONFORM TO HIGH-STRENGTH ASTM A325.
6. EXISTING DIMENSIONS ARE OBTAINED FROM AS-BUILT DRAWINGS. THE CONTRACTOR SHALL VERIFY ALL DIMENSIONS IN FIELD PRIOR TO ORDERING AND FABRICATING THE STEEL PEDESTALS AND BEARING ASSEMBLES. FIELD VERIFICATION SHALL INCLUDE, BUT NOT LIMITED TO, THE HEIGHT OF THE EXISTING BEARING AND PEDESTALS, THE EXISTING BEARING SEAT ELEVATIONS, AND ANCHOR BOLT SPACING.
7. THE TOP PLATE OF THE PEDESTAL SHALL BE BEVELED TO MATCH THE SLOPE OF THE BOTTOM PLATE OF THE EXISTING GIRDER PEDESTAL OR BOTTOM FLANGE. REFER TO THE REFERENCE DRAWING FOR INFORMATION REGARDING THE VERTICAL GEOMETRY OF THE EXISTING STRUCTURES.
8. THE CONTRACTOR SHALL ADJUST THE HEIGHT OF THE BEARING PEDESTAL AS REQUIRED TO ENSURE THE PROPER BEARING ELEVATION IS OBTAINED. ANY ADJUSTMENTS MUST BE APPROVED BY THE ENGINEER PRIOR TO IMPLEMENTATION. CONTRACTOR MAY BE REQUIRED TO ADD SHIMS, AT THE DIRECTION OF THE ENGINEER, TO IMPROVE DECK JOINT ALIGNMENT.
9. THE CONTRACTOR SHALL SUBMIT SHOP DRAWINGS FOR THE BEARING PEDESTAL TO THE ENGINEER FOR REVIEW, PRIOR TO FABRICATION.
10. ALL NEW STRUCTURAL STEEL SHALL BE PAINTED IN ACCORDANCE WITH SECTION 605 OF THE STANDARD SPECIFICATIONS USING THE PAINT SYSTEM SPECIFIED IN SPECIAL PROVISION NO. 605522. REFER TO SHEET 37 FOR PAINT COLOR.
11. THIS WORK SHALL BE IN ACCORDANCE WITH ITEM NO. 605584, BUT IS PAID FOR UNDER ITEM NO. 605651-"REPLACING BRIDGE BEARING, TYPE C" FOR TYPE E-2 PEDESTAL, ITEM NO. 605677-"REPLACING BRIDGE BEARING, TYPE D" FOR TYPE E-3 PEDESTAL AND ITEM NO. 605696-"REPLACING BRIDGE BEARING, TYPE E" FOR TYPE E-1 PEDESTAL.

CADD DESIGN A. BROWN DESIGN B. COPLEY CHKD. B. COPLEY

J:\Trans\0603\700cadd\709STR\PSAE SUBMISSION\BR04.dgn

SLIDING BEARING DETAILS - TYPE E-3

BR. 1-813

CONTRACT	COUNTY	FEDERAL AID PROJECT NO.	SHEET NO.	TOTAL SHTS.
94-074-11	NEW CASTLE	IM-N060(2)	9	45

REHABILITATION AND PAINTING OF BRIDGE 1-813 ON I-495 OVER CHRISTINA RIVER

REVISIONS

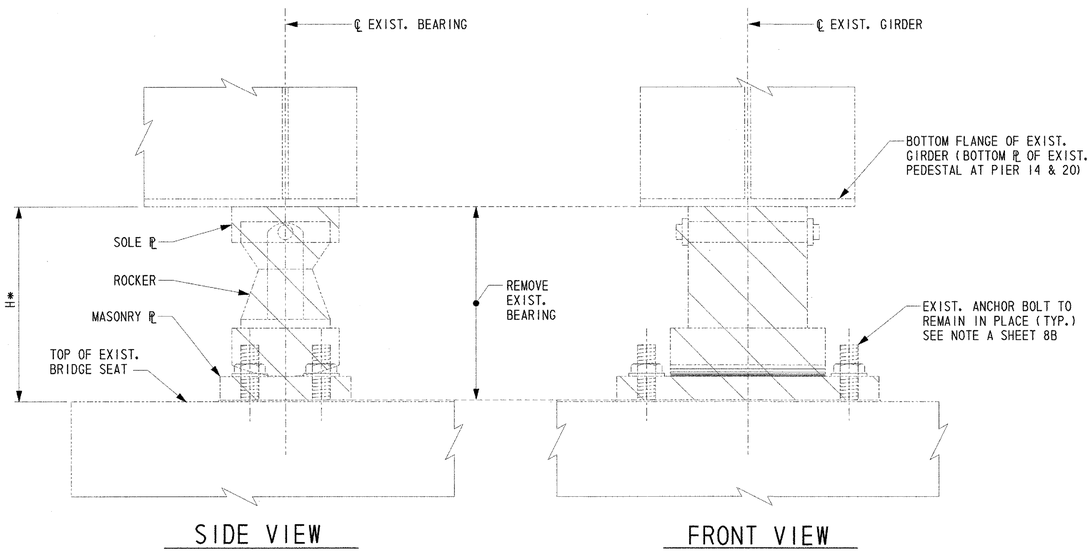

*DIMENSION H VARIES AS LISTED BELOW:

1. PIER 3, SPAN 4 = 1'-4 9/16"
2. PIER 7, SPAN 8 = 1'-4 9/16"
3. PIER 10, SPAN 11 = 1'-4 15/16"
4. PIER 24, SPAN 24 = 1'-4 3/4"
5. PIER 28, SPAN 28 = 1'-4 5/8"
6. PIER 32, SPAN 32 = 1'-4 3/4"
7. PIER 36, SPAN 36 = 1'-4 7/8"
8. ALL OTHER TYPE E-3 = 1'-4 1/4"

EXISTING BEARING - TYPE E-3

SCALE: 2" = 1'-0"

APPROACH SPAN BEARING REPLACEMENT SCHEDULE
BEARING TYPES E-2 AND E-3

BRIDGE DIRECTION	SPAN NUMBER	SUPPORT LOCATION	BEARING TYPE		PEDESTAL HEIGHTS A (IN)	EXISTING FLANGE WIDTH (IN)	QUANTITY
			EXISTING	PROPOSED			
N.B. & S.B.	2	PIER 2	E-2	E-2	8 5/8	12	12
N.B.	15	PIER 15	E-2	E-2	8 5/8	18	6
S.B.	15	PIER 15	E-2	E-2	8 5/8	24	6
N.B.	19	PIER 18	E-2	E-2	8 5/8	24	6
S.B.	19	PIER 18	E-2	E-2	8 5/8	18	6
N.B. & S.B.	20	PIER 19	E-2	E-2	N.A.	24	12
					SUBTOTAL E-2		48
N.B. & S.B.	1	S. ABUT.	E-3	E-3	8 5/8	12	12
N.B. & S.B.	3	PIER 3	E-3	E-3	8 5/8	12	12
N.B. & S.B.	4	PIER 3	E-3	E-3	9 1/16	12	12
N.B. & S.B.	7	PIER 7	E-3	E-3	8 5/8	12	12
N.B. & S.B.	8	PIER 7	E-3	E-3	8 15/16	18	12
N.B. & S.B.	10	PIER 10	E-3	E-3	8 5/8	18	12
N.B. & S.B.	11	PIER 10	E-3	E-3	9 5/16	15	12
N.B. & S.B.	14	PIER 14	E-3	E-3	N.A.	15	12
N.B. & S.B.	21	PIER 20	E-3	E-3	N.A.	15	12
N.B. & S.B.	24	PIER 24	E-3	E-3	9 1/8	15	12
N.B. & S.B.	25	PIER 24	E-3	E-3	8 5/8	15	12
N.B. & S.B.	28	PIER 28	E-3	E-3	9	15	12
N.B. & S.B.	29	PIER 28	E-3	E-3	8 5/8	12	12
N.B. & S.B.	32	PIER 32	E-3	E-3	9 1/8	12	12
N.B. & S.B.	33	PIER 32	E-3	E-3	8 5/8	12	12
N.B. & S.B.	36	PIER 36	E-3	E-3	9 1/4	12	12
N.B. & S.B.	37	PIER 36	E-3	E-3	8 5/8	15	12
N.B. & S.B.	38	N. ABUT.	E-3	E-3	8 5/8	12	12
					SUBTOTAL E-3		216

BEARING REPLACEMENT CONSTRUCTION SEQUENCE FOR BEARING TYPES E-1, E-2 AND E-3

1. INSTALL ALL NECESSARY TEMPORARY WORK PLATFORMS AND/OR RIGGING. CARE SHALL BE TAKEN NOT TO INTERFERE WITH PROPOSED LOCATION OF TEMPORARY SUPPORTS, JACKS AND BLOCKS.
2. INSTALL ALL TEMPORARY JACKING BEAMS AND SUPPORTS AS NECESSARY.
3. INSTALL ALL NECESSARY JACKING AND BLOCKING DEVICES.
4. REMOVE EXISTING ANCHOR BOLT NUTS AND WASHERS.
5. JACK GIRDER LOADS OFF THEIR RESPECTIVE BEARINGS.
6. BLOCK JACKING DIAPHRAGM IN PLACE WITH BLOCKING BEAMS AND SHIM PLATES AT LOCATIONS SHOWN ON SHEET 13A & 13B. PROVIDE FOR SUPERSTRUCTURE EXPANSION WHERE NECESSARY. RELEASE LOAD IN JACK TO TRANSFER ALL LOAD TO THE BLOCKING.
7. REMOVE EXISTING WELDS BETWEEN SOLE PLATE AND BOTTOM FLANGE OF GIRDER OR PEDESTAL. CARE SHALL BE TAKEN NOT TO DAMAGE THE EXISTING GIRDER OR PEDESTAL. ANY DAMAGE TO THE EXISTING STRUCTURE SHALL BE REPAIRED AT THE ENGINEER'S DIRECTION. NO ADDITIONAL PAYMENT SHALL BE MADE FOR SUCH REPAIRS.
8. REMOVE EXISTING BEARING ASSEMBLY. CARE SHALL BE TAKEN NOT TO DAMAGE EXISTING ANCHOR BOLTS. THE EXISTING ANCHOR BOLTS SHALL BE USED FOR INSTALLATION OF BEARING TYPES E-1, E-2 AND E-3.
9. INSPECT AND CLEAN EXISTING ANCHOR BOLTS THOROUGHLY.
10. PREPARE ALL SURFACES FOR INSTALLATION OF PROPOSED BEARING.
11. INSTALL PROPOSED BEARING AND PEDESTAL FOR EACH GIRDER AS DETAILED ON SHEETS 8A, 8B, 9, 10A AND 10B USING THE FOLLOWING SUGGESTED INSTALLATION PROCEDURE:
    - A. LOCATE AND DRILL HOLES IN BOTTOM FLANGE OF EXISTING GIRDER OR PEDESTAL FOR BOLTS CONNECTING THE NEW PEDESTAL TO THEM.
    - B. POSITION NEW MASONRY PLATE AT THE PROPER LOCATION, UTILIZING THE EXISTING ANCHOR BOLTS. PLACE NEW PREFORMED FABRIC PAD AND INSTALL NEW HEX. NUT AND WASHER
    - C. PRESS FIT NEW STEEL DOWELS INTO MASONRY PLATES.
    - D. POSITION NEW BRONZE SLIDING PLATE AT THE PROPER LOCATION.
    - E. POSITION NEW SOLE PLATE ASSEMBLY (INCLUDING THE CONNECTION PLATE) AT THE PROPER LOCATION.
    - F. POSITION NEW STEEL PEDESTAL & BOLT IT TO THE NEW SOLE PLATE CONNECTION PLATE AND BOTTOM FLANGE OF EXISTING GIRDER OR PEDESTAL.
12. TRANSFER GIRDER REACTIONS TO JACKING SYSTEM. REMOVE SHIMS AND BLOCKING AND TRANSFER ALL GIRDER LOADS TO NEW BEARINGS.
13. REMOVE ALL JACKING AND BLOCKING DEVICES AND ALL TEMPORARY SUPPORTS. FILL HOLES DRILLED IN EXISTING STRUCTURE WITH NEW HIGH-STRENGTH BOLTS.
14. APPLY LUBRICANT TO SURFACES OF ALL NEW BEARINGS INCLUDING ANCHOR BOLTS. THE COST OF THIS ITEM IS INCIDENTAL TO ITEM NO. 605651 - "REPLACING BRIDGE BEARING, TYPE C" FOR TYPE E-2 BEARING, ITEM NO. 605677 - "REPLACING BRIDGE BEARING, TYPE D" FOR TYPE E-3 BEARING AND ITEM NO. 605696 - "REPLACING BRIDGE BEARING, TYPE E" FOR TYPE E-1 BEARING.

NOTES

1. FOR BEARING AND PEDESTAL NOTES SEE SHEET 8B.
2. FOR BEARING PEDESTAL DETAILS SEE SHEET 10A.

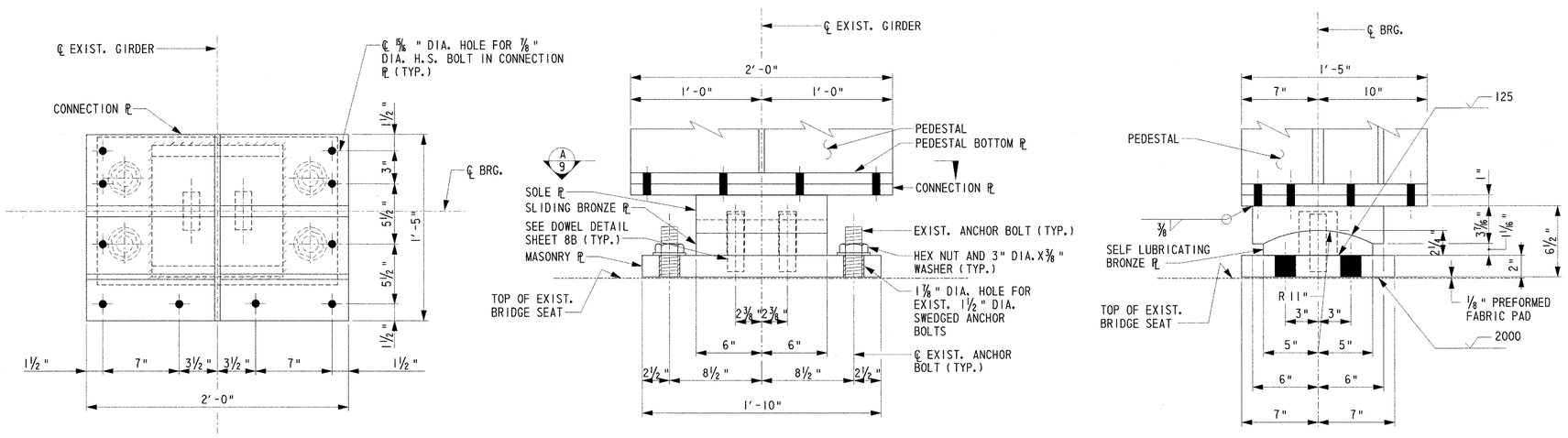

SLIDING BEARING DETAILS - TYPE E-3 (1/9) REF. 5, 6, 7

SCALE: 2" = 1'-0"

CADD DESIGN A. BROWN DESIGN B. COPLEY CHKD. B. COPLEY

J:\Trans\0603\70bcadd\70STRVPS&E SUBMISSION\BR05.dgn

BEARING PEDESTAL DETAILS – TYPES E-2 & E-3

BR. 1-813

CONTRACT	COUNTY	FEDERAL AID PROJECT NO.	SHEET NO.	TOTAL SHTS.
94-074-11	NEW CASTLE	IM-N060(2)	10A	45

REHABILITATION AND PAINTING OF BRIDGE 1-813 ON I-495 OVER CHRISTINA RIVER

REVISIONS

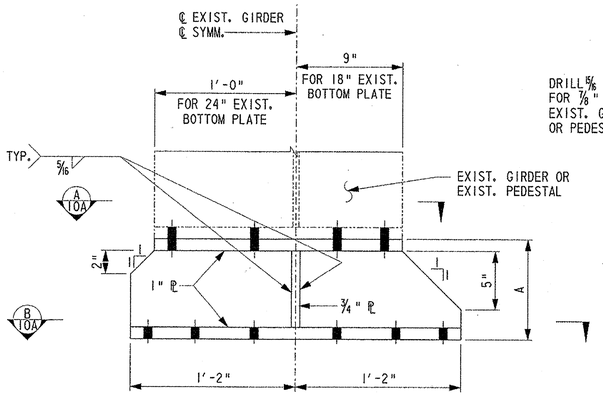

FRONT VIEW

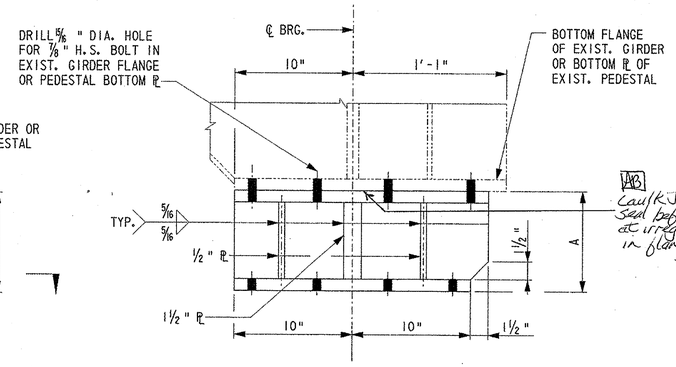

SIDE VIEW

AB Caulk joint to seal before painting at irregular spots in flanges.

C 10A

TYPE E-2 PEDESTAL

SCALE: 2" = 1'-0"

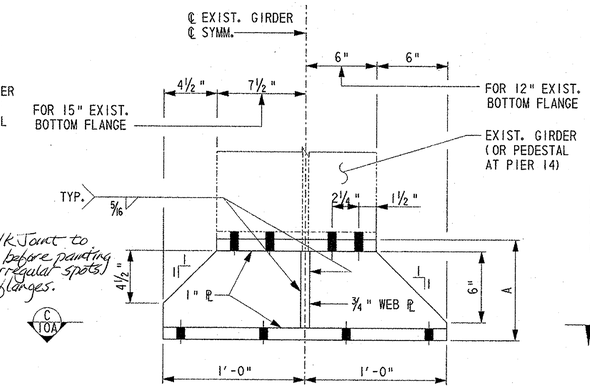

FRONT VIEW

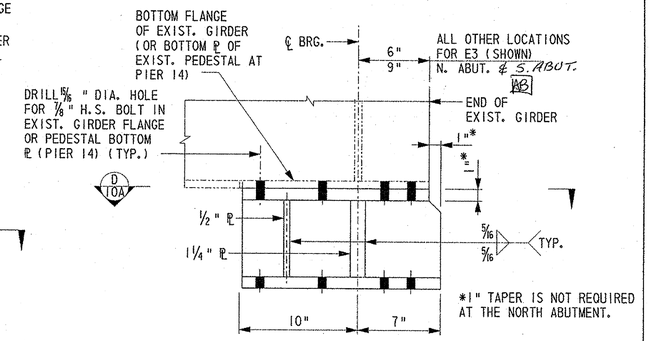

SIDE VIEW

TYPE E-3 PEDESTAL

SCALE: 2" = 1'-0"

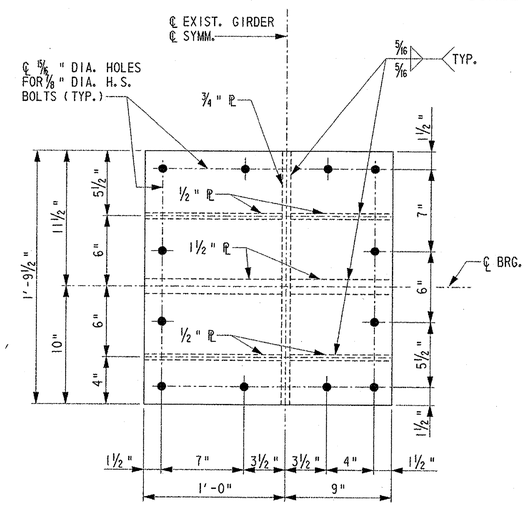

SECTION A 10A

SCALE: 2" = 1'-0"

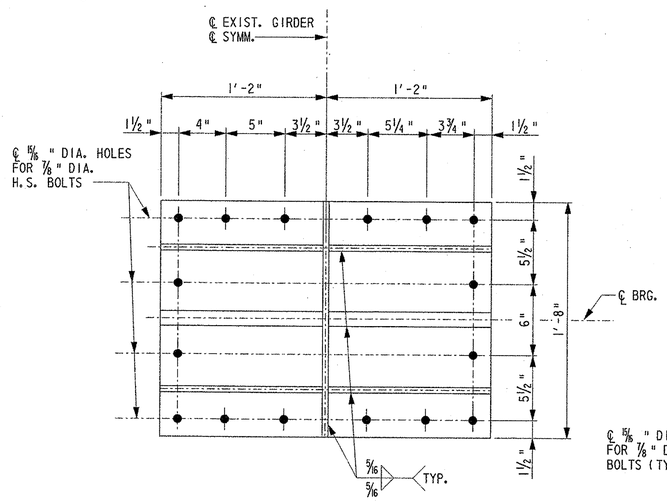

SECTION B 10A

SCALE: 2" = 1'-0"

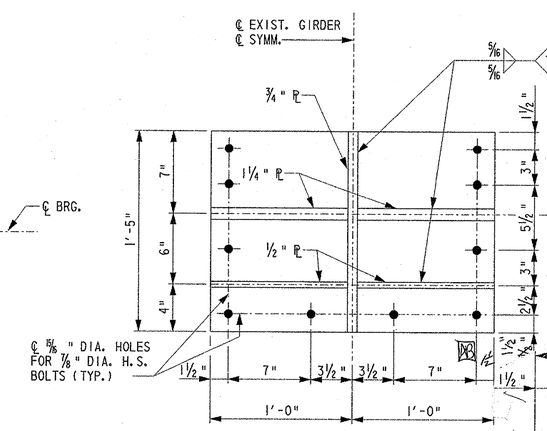

SECTION C 10A

SCALE: 2" = 1'-0"

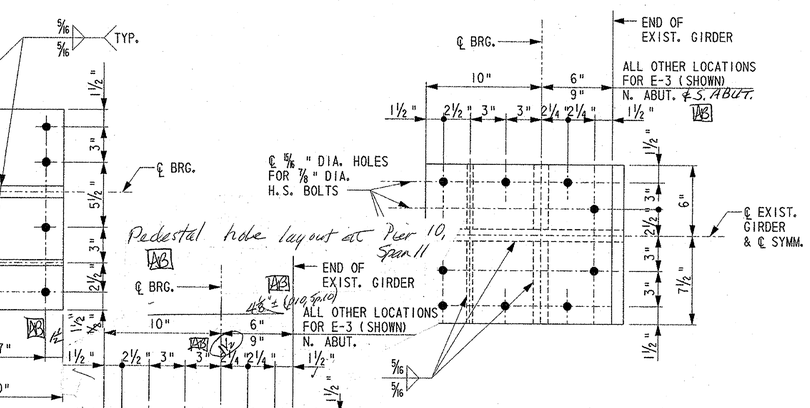

Pedestal hole layout at Pier 10, Span 11

AB

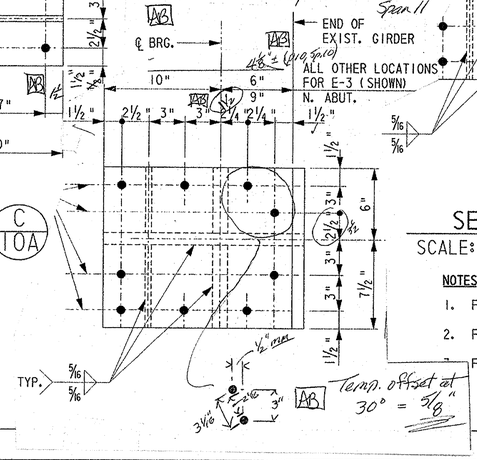

AB Temp. offset at 30° = 5/8"

SECTION D 10A

SCALE: 2" = 1'-0"

NOTES

1. FOR BEARING PEDESTAL NOTES SEE SHEET 8B.
2. FOR BEARING PEDESTAL HEIGHTS A, SEE SHEET 9.
3. FOR CONSTRUCTION SEQUENCE SEE SHEET 9.

CADD DESIGN A. BROWN DESIGN B. COPLEY CHKD. B. COPLEY

J:\Trans\0603\700cadd\709STR\PS&E SUBMISSION\BP01.dgn

94-074-11 Tuesday, September 23, 2003

BEARING PEDESTAL DETAILS – TYPES E-1

BR. 1-813

CONTRACT	COUNTY	FEDERAL AID PROJECT NO.	SHEET NO.	TOTAL SHTS.
94-074-11	NEW CASTLE	IM-N060(2)	10B	45

REHABILITATION AND PAINTING OF BRIDGE 1-813 ON I-495 OVER CHRISTINA RIVER

REVISIONS

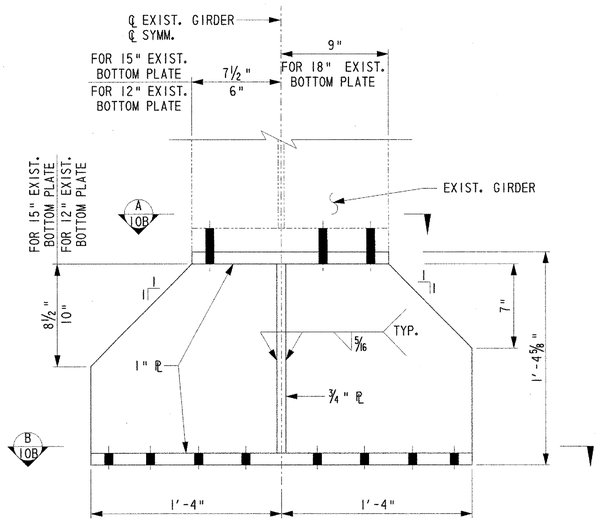

FRONT VIEW

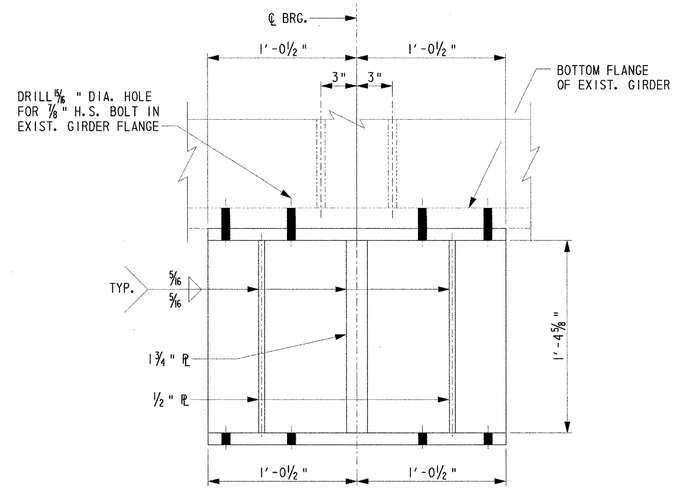

SIDE VIEW

TYPE E-1 PEDESTAL

SCALE: 2" = 1'-0"

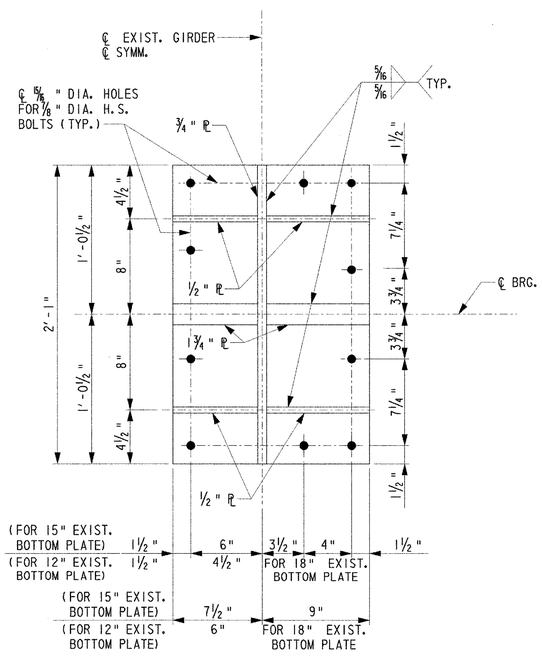

SECTION A 10B

SCALE: 2"=1'-0"

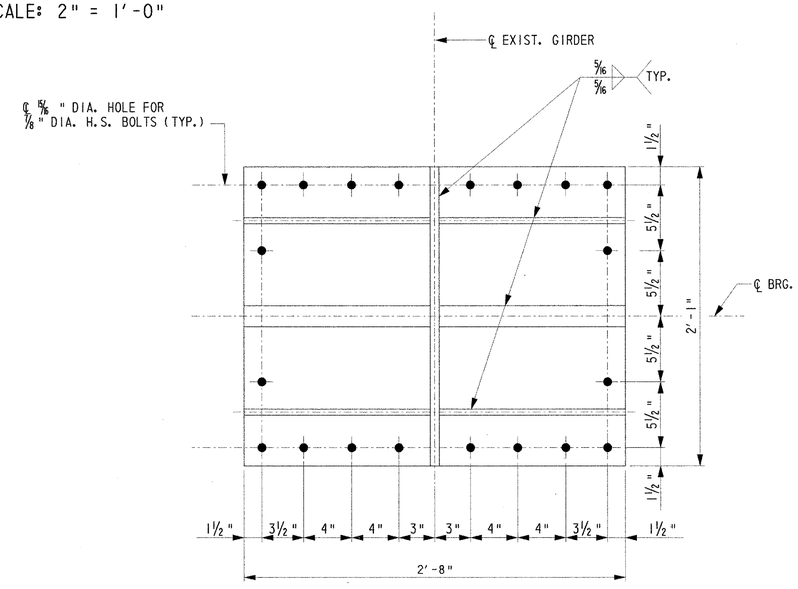

SECTION B 10B

SCALE: 2"=1'-0"

APPROACH SPAN BEARING REPLACEMENT SCHEDULE BEARING TYPE E-1

SUPPORT LOCATION	BEARING TYPE		EXISTING FLANGE WIDTH (IN)	QUANTITY
	EXISTING	PROPOSED		
PIER 4	E-1	E-1	12	12
PIER 6	E-1	E-1	12	12
PIER 9	E-1	E-1	18	12
PIER 11	E-1	E-1	15	12
PIER 13	E-1	E-1	15	12
PIER 21	E-1	E-1	15	12
PIER 23	E-1	E-1	15	12
PIER 25	E-1	E-1	15	12
PIER 27	E-1	E-1	15	12
PIER 29	E-1	E-1	12	12
PIER 31	E-1	E-1	12	12
PIER 33	E-1	E-1	12	12
PIER 35	E-1	E-1	12	12
			SUBTOTAL	156

NOTES

1. FOR BEARING AND PEDESTAL NOTES SEE SHEET 8B.
2. FOR CONSTRUCTION SEQUENCE SEE SHEET 9.

CADD DESIGN Y. JIN DESIGN Y. JIN CHKD. B. COPLEY

J:\Trans\0603\700cadd\709STR\PS&E SUBMISSION\BP02.dgn

MAIN SPAN BEARINGS - EXPANSION TYPE E-4

BR. 1-813

CONTRACT	COUNTY	FEDERAL AID PROJECT NO.	SHEET NO.	TOTAL SHTS.
94-074-11	NEW CASTLE	IM-N060(2)	11	45

REHABILITATION AND PAINTING OF BRIDGE 1-813 ON I-495 OVER CHRISTINA RIVER

REVISIONS

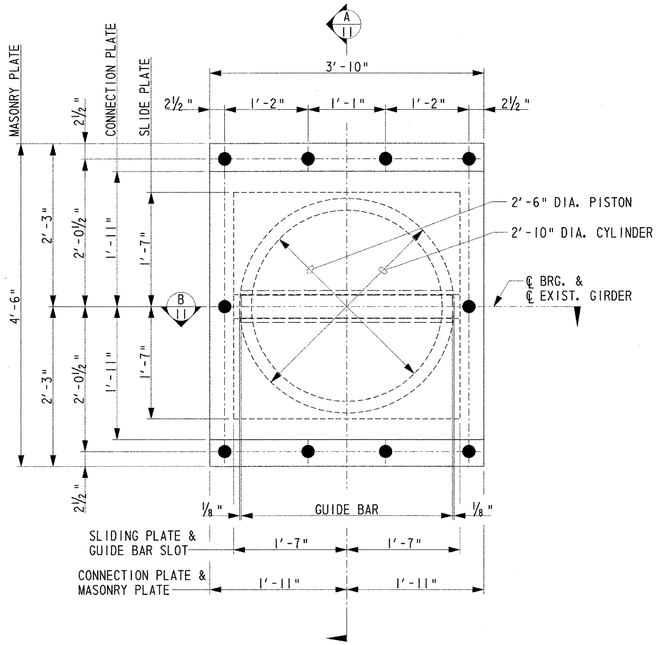

PLAN - POT BEARING DETAILS (2/11) REF. 6

SCALE: 1"=1'-0"

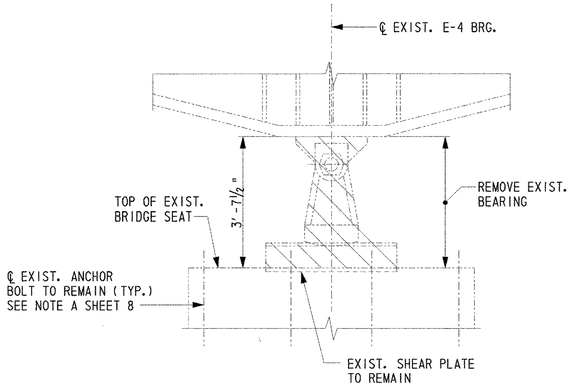

EXISTING TYPE E-4 EXPANSION BEARINGS

SCALE: N.T.S

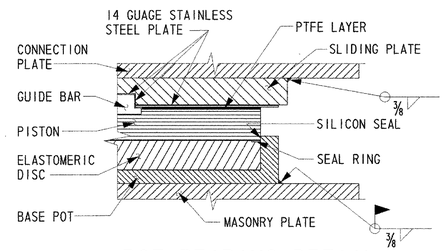

POT BEARING DETAIL

SCALE: N.T.S

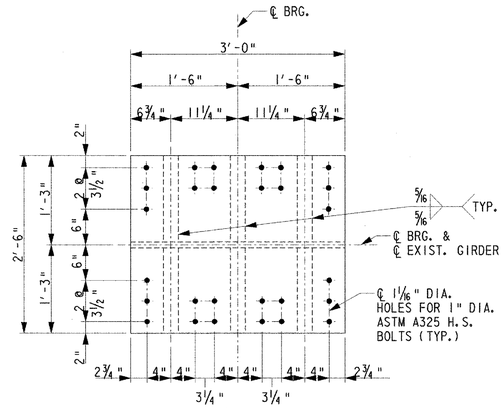

PLAN

PEDESTAL TOP PLATE

SCALE: 1" = 1'-0"

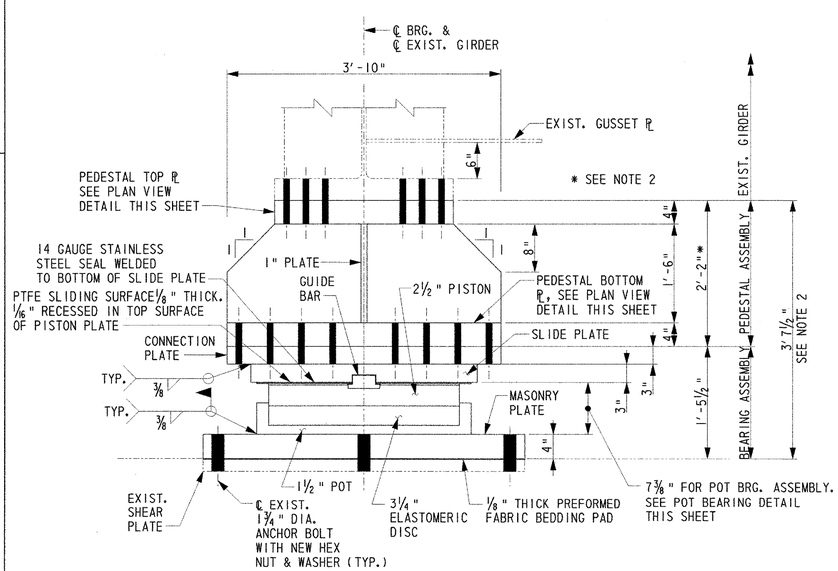

SECTION (A/11)

SCALE: 1"=1'-0"

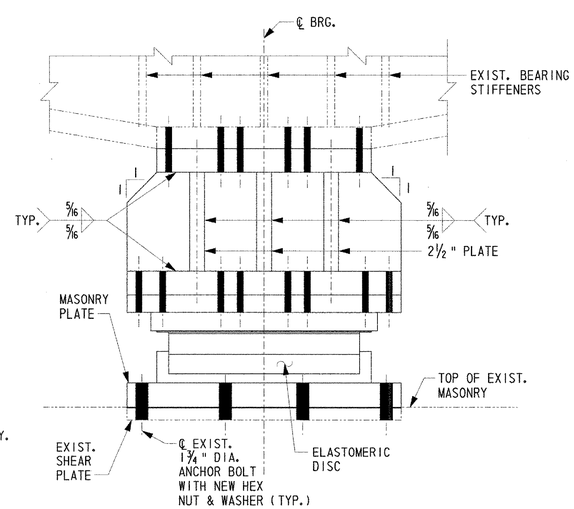

SECTION (B/11)

SCALE: 1"=1'-0"

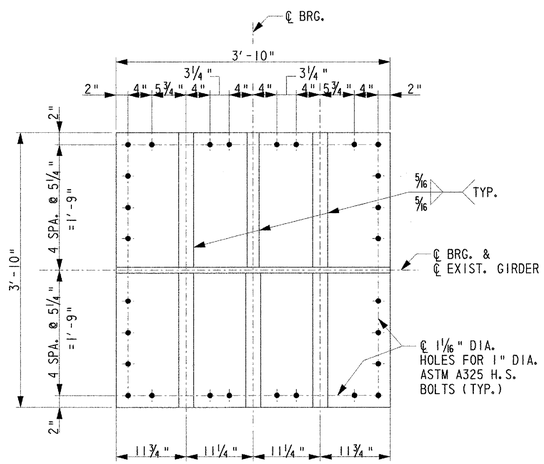

PLAN

PEDESTAL BOTTOM PLATE

SCALE: 1" = 1'-0"

TYPE E-4 AND E-5 BEARING NOTES

1. FOR CONSTRUCTION SEQUENCE, SEE SHEET 12.
2. FIELD VERIFY EXISTING HEIGHT BETWEEN TOP OF PIER AND BOTTOM OF GIRDER FLANGE. ADJUST PROPOSED PEDESTAL HEIGHT TO ACCOMMODATE FIELD VERIFIED MEASUREMENTS AND THE ACTUAL HEIGHT OF THE FABRICATED POT BEARING ASSEMBLY.
3. THE TOP OF THE PEDESTAL PLATE SHALL BE BEVELED TO MATCH THE SLOPE OF THE EXISTING GIRDER BOTTOM FLANGE. REFER TO THE EXISTING REFERENCE DRAWINGS FOR INFORMATION REGARDING THE VERTICAL GEOMETRY OF THE EXISTING STRUCTURES.
4. MATERIAL SPECIFICATIONS SHALL BE AS FOLLOWS:

STEEL:	AASHTO M270 ASTM A709, GRADE 50, GALVANIZE IN ACCORDANCE WITH ASTM A123.
STAINLESS STEEL:	14 GAUGE, ASTM A240, TYPE 304, NO. 8 MIRROR FINISH.
BRASS RING:	HALF HARD BRASS ROD PER FEDERAL SPECIFICATION QQB626 COMPOSITION 22.
PTFE DISC:	PTFE SHEET SHALL BE A MINIMUM OF 1/8" THICK, EPOXY-BONDED INTO A SQUARE-EDGED RECESS OF A DEPTH EQUAL TO 1/16", CONFORMING TO ASTM D1457 SPECIFICATIONS.
ELASTOMER:	AASHTO GRADE NEOPRENE, HARDNESS 50 DUROMETER (+5), CONFORMING TO AASHTO M251. MAXIMUM ALLOWABLE BEARING PRESSURE ON ELASTOMERIC DISC = 3500 PSI.
KEY:	ASTM A108, GRADE C1018 COLD FINISH BAR, COATED WITH XYLAN TFE 1014 BLACK 1 MIL.

5. TYPE E-5 BEARING ASSEMBLY SHALL PROVIDE A MAXIMUM ROTATION OF +0.0155 RADIANS. TYPE E-4 BEARING ASSEMBLY SHALL PROVIDE A MAXIMUM ROTATION OF +0.0298 RADIANS.
6. BEARING ASSEMBLIES SHALL BE DESIGNED FOR THE FOLLOWING LOADS:

   TYPE E-4 EXPANSION BEARING
   MAXIMUM VERTICAL DESIGN LOAD = 2438 KIPS
   MAXIMUM LATERAL LOAD ON GUIDE BAR = 294 KIPS
   TOTAL MAXIMUM MOVEMENT AT PIER 17 = 5"

   TYPE E-5 EXPANSION BEARING
   MAXIMUM VERTICAL DESIGN LOAD = 585 KIPS
   MAXIMUM LATERAL LOAD ON GUIDE BAR = 220 KIPS
   TOTAL MAXIMUM MOVEMENT AT PIER 15 = 3¼"
   TOTAL MAXIMUM MOVEMENT AT PIER 18 = 8"
7. THE CONTRACTOR SHALL PROVIDE SHOP DRAWINGS AND DESIGN CALCULATIONS THAT DETAIL THE PROPOSED BEARINGS, TAKING INTO ACCOUNT THE VERTICAL GEOMETRY OF THE EXISTING GIRDERS, PRIOR TO FABRICATION OF ANY PART OF THE PROPOSED BEARING ASSEMBLIES. THE CONTRACTOR SHALL SUBMIT FIELD VERIFIED DIMENSIONS WITH SHOP DRAWINGS.
8. WORK FOR TYPE E-4 EXPANSION BEARINGS SHALL BE IN ACCORDANCE WITH SPECIAL PROVISION FOR "POT BEARINGS" BUT PAID FOR UNDER ITEM NO. 605649 - "REPLACING BRIDGE BEARING, TYPE A" AND WORK FOR TYPE E-5 EXPANSION BEARINGS SHALL BE IN ACCORDANCE WITH SPECIAL PROVISION FOR "POT BEARINGS" BUT PAID FOR UNDER ITEM NO. 605650 - "REPLACING BRIDGE BEARING, TYPE B". STEEL PEDESTAL MODIFICATIONS SHALL BE IN ACCORDANCE WITH ITEM NO. 605584, BUT THE COST IS INCIDENTAL TO ITEM NOS. 605649 AND 605650, RESPECTIVELY.
9. ALL NEW STRUCTURAL STEEL SHALL BE PAINTED IN ACCORDANCE WITH SECTION 605 OF THE STANDARD SPECIFICATIONS USING PAINT SYSTEM SPECIFIED IN SPECIAL PROVISIONS NO. 605522, REFER TO SHEET 37 FOR PAINT COLOR.

CADD DESIGN K. HUFF DESIGN K. HUFF CHKD. B. COPLEY
J:\Trans\0603\1700cadd\709STR\PS&E SUBMISSION\BR02.dgn

MAIN SPAN BEARINGS - EXPANSION TYPE E-5

BR. 1-813

CONTRACT	COUNTY	FEDERAL AID PROJECT NO.	SHEET NO.	TOTAL SHTS.
94-074-11	NEW CASTLE	IM-N060(2)	12	45

REHABILITATION AND PAINTING OF BRIDGE 1-813 ON I-495 OVER CHRISTINA RIVER

REVISIONS

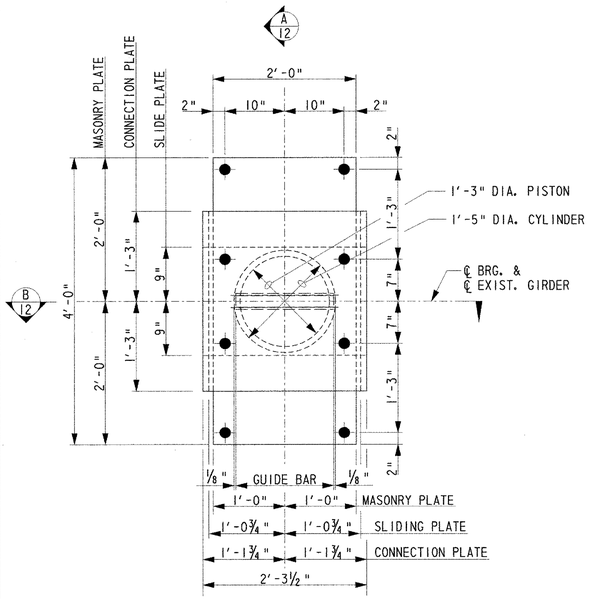

PLAN - POT BEARING DETAIL (2/12) REF. 6

SCALE: 1"=1'-0"

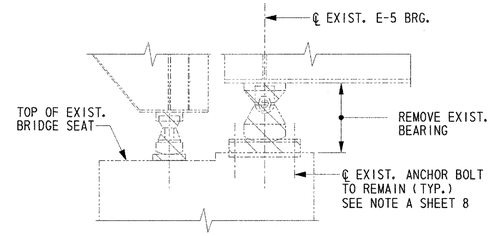

EXISTING TYPE E-5 EXPANSION BEARINGS

SCALE: N.T.S

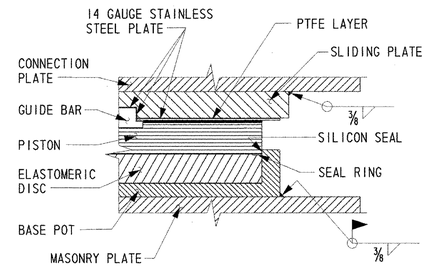

POT BEARING DETAIL

SCALE: N.T.S.

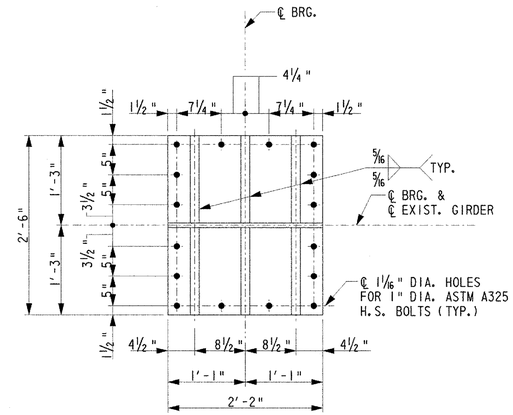

PLAN

PEDESTAL TOP PLATE

SCALE: 1" = 1'-0"

BEARING REPLACEMENT CONSTRUCTION SEQUENCE FOR BEARING TYPES E-4 AND E-5

1. INSTALL ALL NECESSARY TEMPORARY WORK PLATFORMS AND/OR RIGGING. CARE SHALL BE TAKEN NOT TO INTERFERE WITH PROPOSED LOCATION OF TEMPORARY SUPPORTS, JACKS AND BLOCKS.
2. INSTALL ALL PERMANENT JACKING BEAMS AND TEMPORARY SUPPORTS AS NECESSARY.
3. INSTALL ALL NECESSARY JACKING AND BLOCKING DEVICES.
4. REMOVE AND STORE EXISTING ANCHOR BOLT NUTS AND WASHERS.
5. JACK GIRDER LOADS OFF THEIR RESPECTIVE BEARINGS.
6. BLOCK JACKING DIAPHRAGM, IN PLACE WITH BLOCKING BEAMS AND SHIM PLATES AT LOCATIONS SHOWN ON SHEETS 14 AND 15. PROVIDE FOR SUPERSTRUCTURE EXPANSION WHERE NECESSARY. RELEASE LOAD IN JACK TO TRANSFER ALL LOAD TO THE BLOCKING.
7. REMOVE EXISTING WELDS BETWEEN SOLE PLATE AND BOTTOM FLANGE OF GIRDER. CARE SHALL BE TAKEN NOT TO DAMAGE THE EXISTING GIRDER. ANY DAMAGE TO THE EXISTING STRUCTURE SHALL BE REPAIRED AT THE ENGINEER'S DIRECTION. NO ADDITIONAL PAYMENT SHALL BE MADE FOR SUCH REPAIR.
8. REMOVE EXISTING BEARING ASSEMBLY. CARE SHALL BE TAKEN NOT TO DAMAGE EXISTING ANCHOR BOLTS. THE EXISTING ANCHOR BOLTS SHALL BE REUSED.
9. INSPECT AND CLEAN EXISTING ANCHOR BOLTS THOROUGHLY.
10. PREPARE ALL SURFACES FOR INSTALLATION OF PROPOSED BEARING.
11. INSTALL PROPOSED BEARING AND PEDESTAL FOR EACH STRINGER AS DETAILED ON SHEETS 11 AND 12 USING THE FOLLOWING SUGGESTED INSTALLATION PROCEDURE:
    - A. LOCATE AND DRILL HOLES FOR BOLTS CONNECTING THE NEW STEEL PEDESTAL TO EXISTING BOTTOM FLANGE.
    - B. POSITION NEW MASONRY PLATE AT THE PROPER LOCATION, UTILIZING THE EXISTING ANCHOR BOLTS.
    - C. TIGHTEN NEW ANCHOR BOLT NUTS AND WASHERS ON EXISTING ANCHOR BOLTS.
    - D. POSITION POT BEARING PROPERLY AND WELD TO MASONRY PLATE.
    - E. POSITION NEW STEEL PEDESTAL & BOLT IT TO THE NEW CONNECTION PLATE AND EXISTING BOTTOM FLANGE.
12. TRANSFER GIRDER REACTIONS TO JACKING SYSTEM. REMOVE SHIMS AND BLOCKING AND TRANSFER ALL GIRDER LOADS TO NEW BEARINGS.
13. REMOVE ALL JACKING AND BLOCKING DEVICES AND ALL TEMPORARY SUPPORTS. FILL HOLES DRILLED IN EXISTING STRUCTURE WITH NEW HIGH-STRENGTH BOLTS.

NOTE

FOR TYPE E-4 AND E-5 BEARING NOTES, SEE SHEET 11.

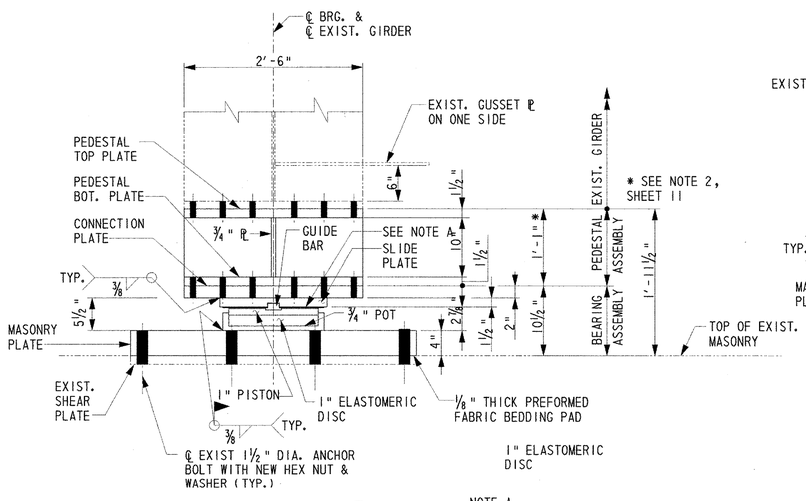

SECTION (A/12)

SCALE: 1"=1'-0"

NOTE A

14 GUAGE STAINLESS STEEL SEAL WELDED TO BOTTOM OF SLIDE PLATE. PTFE SLIDING SURFACE ⅛" THICK. 1/16" RECESSED IN TOP SURFACE OF PISTON PLATE.

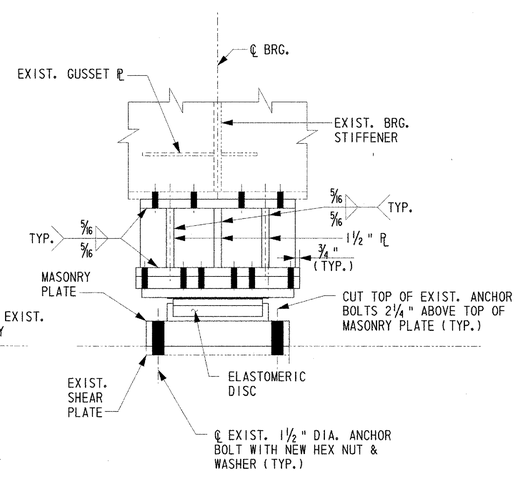

SECTION (B/12)

SCALE: 1"=1'-0"

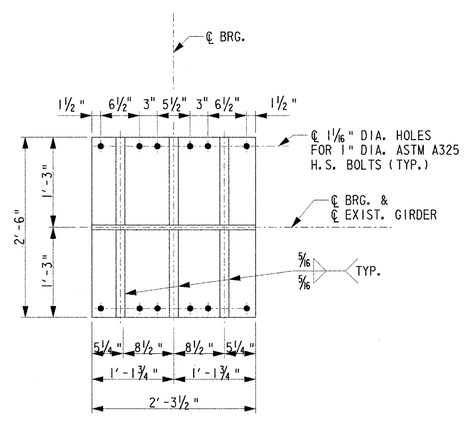

PLAN

PEDESTAL BOTTOM PLATE

SCALE: 1" = 1'-0"

CADD DESIGN K. HUFF DESIGN K. HUFF CHKD. B. COPLEY

J:\Trans\0603\700cadd\709STR\PS&E SUBMISSION\BR01.dgn

APPROACH SPAN JACKING DETAILS - 1

BR. 1-813

CONTRACT	COUNTY	FEDERAL AID PROJECT NO.	SHEET NO.	TOTAL SHTS.
94-074-11	NEW CASTLE	IM-N060(2)	13A	45

REHABILITATION AND PAINTING OF BRIDGE 1-813 ON I-495 OVER CHRISTINA RIVER

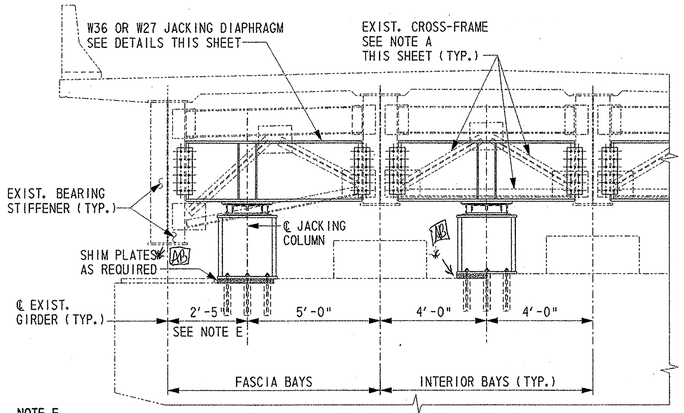

TYPICAL PIER ELEVATION

SCALE: 3/8" = 1'-0"

NOTE: PIER 37 SHOWN. OTHER LOCATIONS SIMILAR. EXISTING BEARING NOT SHOWN FOR CLARITY

NOTE E

2'-11" AT PIER 37 AND N. ABUT.
3'-0" AT PIER 19, SPAN 20.

NOTE A

THE EXISTING CROSS-FRAME MEMBERS WITH THE EXCEPTION OF EXISTING CHANNEL SHALL BE REMOVED FOR INSTALLATION OF JACKING DIAPHRAGM. THE WELDS ON EXISTING GUSSET PLATES CONNECTING TO THE EXISTING CHANNEL AND BEARING STIFFENERS SHALL BE REMOVED USING AIR ARCING. REMOVAL BY THE USE OF TORCHING SHALL NOT BE PERMITTED. AFTER COMPLETION OF BEARING REPLACEMENT OR PEDESTAL RECONSTRUCTION OPERATIONS, LEAVE JACKING DIAPHRAGM IN PLACE AND PAINT IN ACCORDANCE WITH SPECIAL PROVISIONS.

*High strength / quick setting grout approved as an alternative.

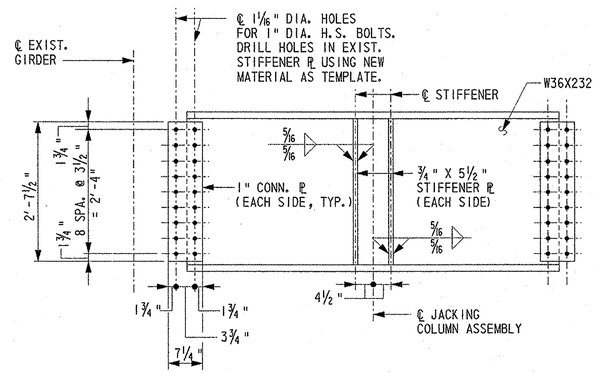

SOUTH ABUTMENT AND PIERS 3, 7, 10, 14, 20, 24, 28, 32 AND 36S

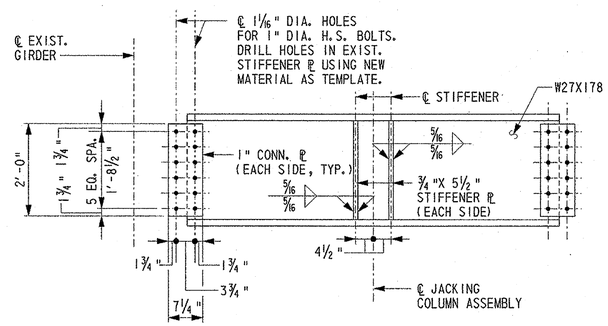

NORTH ABUTMENT AND PIER 37

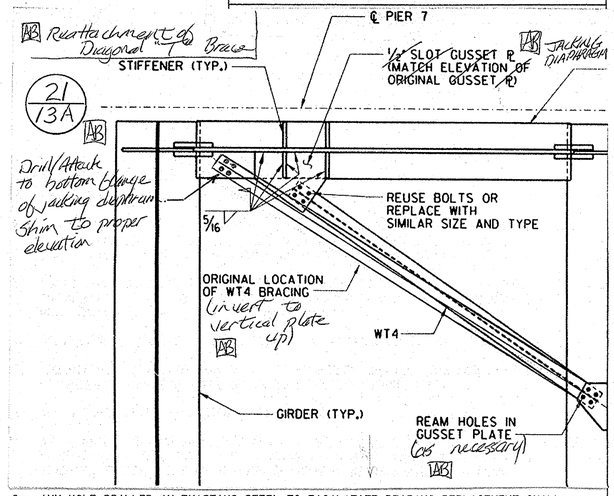

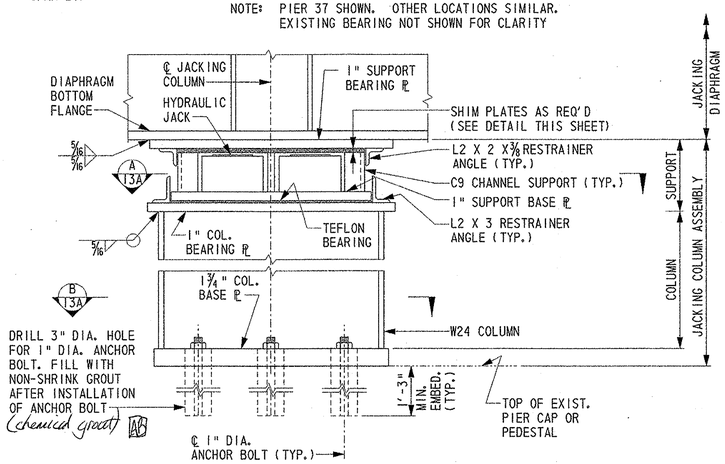

JACKING COLUMN ASSEMBLY ELEVATION

SCALE: N.T.S.

Self-locking jacks used in lieu of shims.

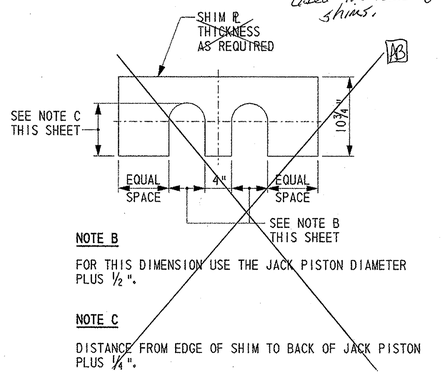

NOTE B

FOR THIS DIMENSION USE THE JACK PISTON DIAMETER PLUS 1/2".

NOTE C

DISTANCE FROM EDGE OF SHIM TO BACK OF JACK PISTON PLUS 1/4".

SHIM PLATE DETAIL

SCALE: N.T.S.

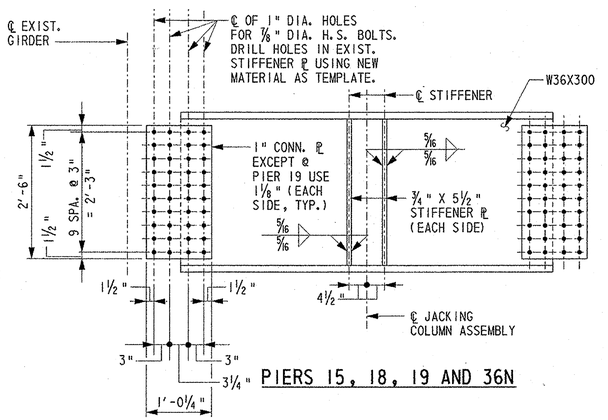

PIERS 15, 18, 19 AND 36N

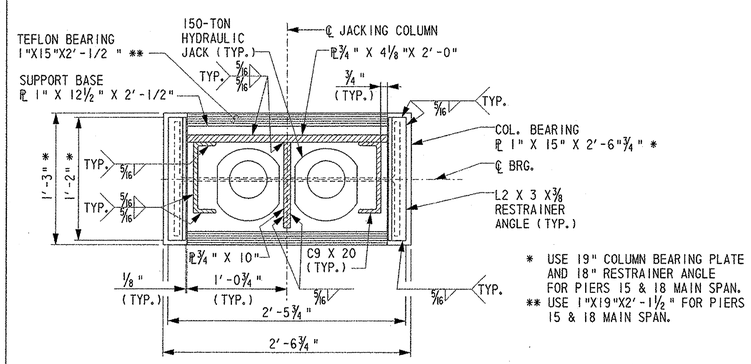

* USE 19" COLUMN BEARING PLATE AND 18" RESTRAINER ANGLE FOR PIERS 15 & 18 MAIN SPAN.
** USE 1"X19"X2'-1 1/2" FOR PIERS 15 & 18 MAIN SPAN.

SUPPORT JACK HOUSING (A / 13A)

SCALE: N.T.S.

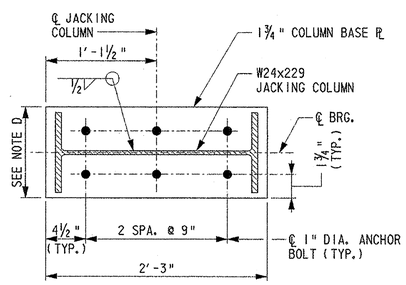

NOTE D

PLATE WIDTH IS 18" WIDE EXCEPT AT THE FOLLOWING LOCATIONS:
SPAN 15 & 19: 24".
SPAN 38: 13 3/4".

COLUMN BASE PLATE (B / 13A)

SCALE: N.T.S.

JACKING DIAPHRAGM DETAILS

SCALE: 3/4" = 1'-0"

8. ANY HOLE DRILLED IN EXISTING STEEL TO FACILITATE BEARING REPLACEMENT SHALL BE FILLED WITH A HIGH-STRENGTH BOLT UPON COMPLETION OF WORK IN THAT AREA.

9. THE GIRDERS SHALL BE JACKED AND BLOCKED NO MORE THAN 1/4" OFF THEIR RESPECTIVE BEARINGS.

10. THE METHOD OF JACKING SHOWN IS THE RECOMMENDED SCHEME. THE CONTRACTOR MAY PROVIDE AN ALTERNATE SCHEME DESIGNED BY A PROFESSIONAL ENGINEER REGISTERED IN THE STATE OF DELAWARE AFTER FIRST SUBMITTING SUCH A SCHEME TO THE ENGINEER FOR REVIEW AND ACCEPTANCE.

11. ANY EXISTING FEATURE DAMAGED BY THE CONTRACTOR'S OPERATION SHALL BE REPAIRED AND RESTORED TO ITS ORIGINAL CONDITION, AT THE CONTRACTOR'S EXPENSE.

12. THE SPEED LIMIT ON I-495 SHALL BE REDUCED TO 55MPH DURING JACKING OPERATIONS. TRAFFIC OFFICERS SHALL BE PRESENT TO ENFORCE THE SPEED LIMIT. ADDITIONALLY, ALL THROUGH TRAFFIC, ESPECIALLY TRUCKS, SHALL BE ENCOURAGED TO USE I-95 AS AN ALTERNATE ROUTE. REFER TO THE SPECIAL PROVISIONS FOR ADDITIONAL INFORMATION.

13. ONLY ONE JACKING CROSS-FRAME SHALL BE REMOVED AT A TIME. INSTALL A JACKING DIAPHRAGM IMMEDIATELY AFTER THE REMOVAL OF A CROSS-FRAME BEFORE PROCEEDING WITH THE REMOVAL OF THE NEXT CROSS-FRAME.

14. JACKING DIAPHRAGMS WILL BE LEFT IN PLACE AND PAINTED IN ACCORDANCE WITH SPECIAL PROVISIONS AFTER COMPLETION OF ALL BEARING REPLACEMENTS. THE JACKING ANCHOR BOLTS AND NUTS SHALL ALSO REMAIN IN PLACE. EXISTING CROSS-FRAMES REMOVED WILL BE DISPOSED OF BY THE CONTRACTOR.

15. VERTICAL DISPLACEMENTS SHALL BE MONITORED DURING JACKING AND PROVISIONS SHALL BE MADE TO MINIMIZE DIFFERENTIAL DISPLACEMENT OF THE GIRDERS.

16. THE FOLLOWING JACKING RESTRICTIONS APPLY:

    A) TWO PIERS IN A CONTINUOUS LINE OF GIRDERS SHALL NOT BE JACKED SIMULTANEOUSLY.

    B) PIER 37 AND THE NORTH ABUTMENT SHALL NOT BE JACKED AND/OR BLOCKED SIMULTANEOUSLY.

17. WORK PERFORMED FOR THIS ITEM SHALL BE IN ACCORDANCE WITH AND PAID FOR UNDER ITEM NO. 605651 - "REPLACING BRIDGE BEARING, TYPE C", ITEM NO. 605677 - "REPLACING BRIDGE BEARING, TYPE D" AND ITEM NO. 605696 - "REPLACING BRIDGE BEARING, TYPE E-1."

CADD DESIGN A. BROWN DESIGN A. RIGATO CHKD. B. COPLEY

J:\Trans\0603\700cadd\709STR\PS&E SUBMISSION\MD19.dgn

94-074-11 Tuesday, September 23, 2003

APPROACH SPAN JACKING DETAILS - 2

BR. 1-813

CONTRACT	COUNTY	FEDERAL AID PROJECT NO.	SHEET NO.	TOTAL SHTS.
94-074-11	NEW CASTLE	IM-N060(2)	13B	45

REHABILITATION AND PAINTING OF BRIDGE 1-813 ON I-495 OVER CHRISTINA RIVER

REVISIONS

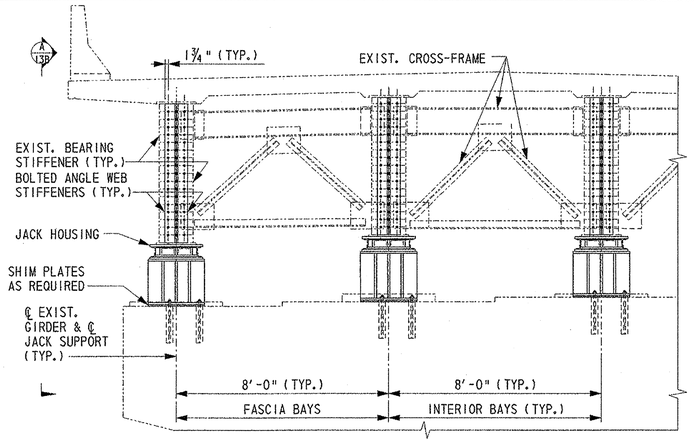

TYPICAL PIER ELEVATION
PIERS 2, 4, 6, 9, 11, 13, 21, 23, 25, 27, 29, 31, 33, AND 35
SCALE: 3/8" = 1'-0"

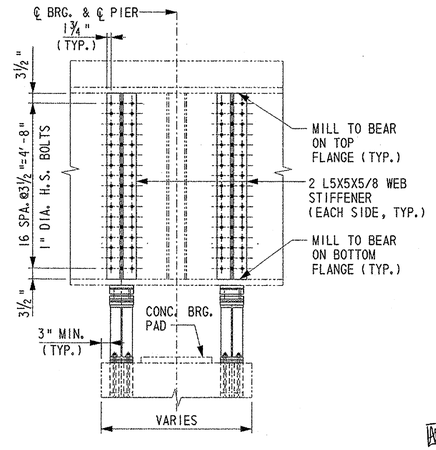

SECTION A 13B
SCALE: 1/2" = 1'-0"

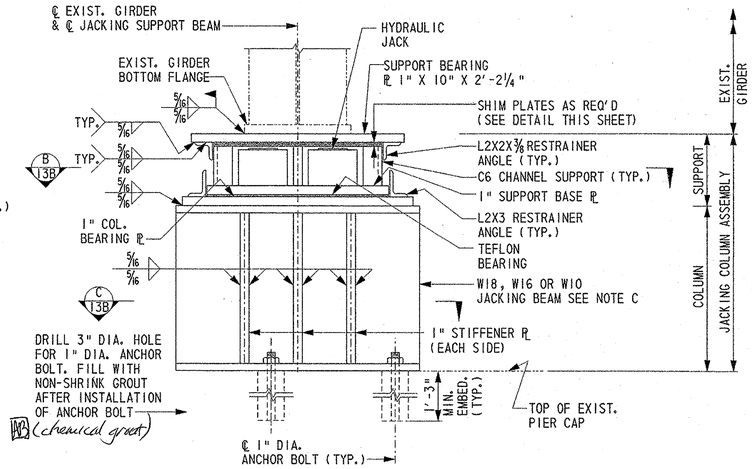

JACKING SUPPORT ASSEMBLY ELEVATION
SCALE: N.T.S.

NOTES

1. FOR JACKING PROCEDURE NOTES SEE SHEET 13A.
2. SEE BEARING REPLACEMENT SEQUENCE SHEET 12.
3. CONTRACTOR SHALL VERIFY CLEARENCE FOR NEW BEARING PEDESTALS BEFORE PLACING JACKING COLUMNS.
4. INSTALL WEB STIFFENER ANGLES IN ACCORDANCE WITH DETAILS SHOWN ON THIS SHEET.
5. INSTALL THE JACKING COLUMN AND JACK ASSEMBLY AS SHOWN ON THIS SHEET.
6. REMOVE THE JACKING COLUMN AND JACK ASSEMBLY AFTER BEARING REPLACEMENT IS COMPLETE.
7. SEE GENERAL JACKING NOTES SHEET 14 FOR ADDITIONAL INFORMATION.

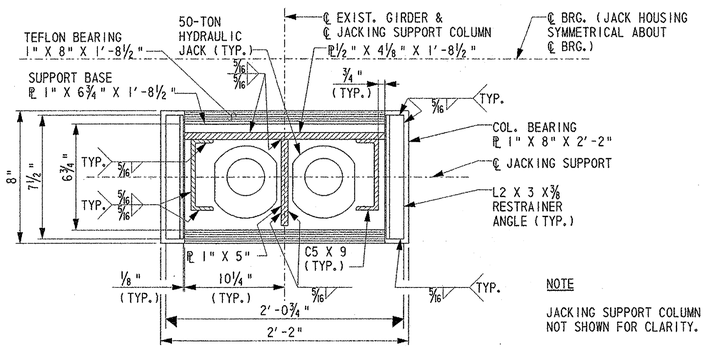

PIERS 2, 4, 6, 25, 27, 29, 31, 33, AND 35

NOTE

JACKING SUPPORT COLUMN NOT SHOWN FOR CLARITY.

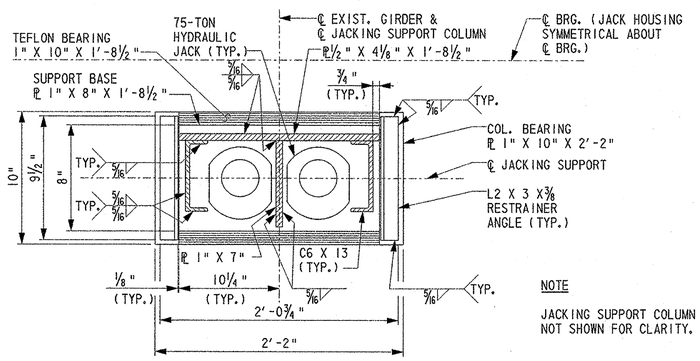

PIERS 9, 11, 13, 21, AND 23

NOTE

JACKING SUPPORT COLUMN NOT SHOWN FOR CLARITY.

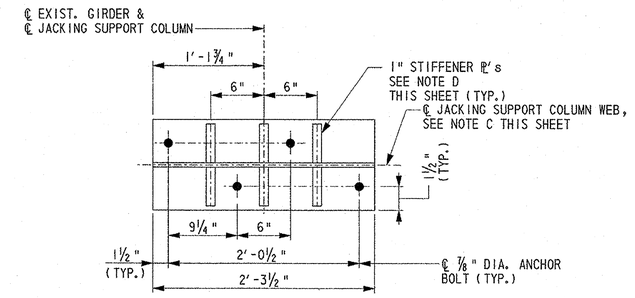

NOTE C

W10 X 45 JACKING SUPPORT BEAM AT PIER 2.
W 16 X 100 JACKING SUPPORT BEAM AT PIERS 9, 11, 13, 21 & 23.
W18 X 71 JACKING SUPPORT BEAM ALL OTHER LOCATIONS.

NOTE D

1" X 3½" STIFFENER ℙ FOR W10 X 45 & W18 X 71 JACKING SUPPORT BEAM.
1" X 5" STIFFENER ℙ FOR W16 X 100 JACKING SUPPORT BEAM.

JACKING SUPPORT COLUMN PLAN C 13B
SCALE: N.T.S.

SUPPORT JACK HOUSING B 13B
SCALE: N.T.S.

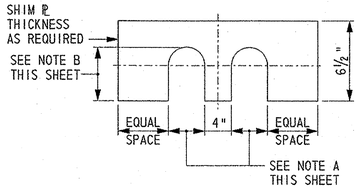

SHIM PLATE DETAIL
SCALE: N.T.S.

NOTE A

FOR THIS DIMENSION USE THE JACK PISTON DIAMETER PLUS ½".

NOTE B

DISTANCE FROM EDGE OF SHIM TO BACK OF JACK PISTON PLUS ¼".

CADD DESIGN A. BROWN DESIGN A. RIGATO CHKD. B. COPLEY

J:\Trans\0603\700cadd\T09STR\PS&E SUBMISSION\N023.dgn

94-074-11 Tuesday, September 23, 2003

MAIN SPAN JACKING DETAILS - 1

BR. 1-813

CONTRACT	COUNTY	FEDERAL AID PROJECT NO.	SHEET NO.	TOTAL SHTS.
94-074-11	NEW CASTLE	IM-N060(2)	14	45

REHABILITATION AND PAINTING OF BRIDGE 1-813 ON I-495 OVER CHRISTINA RIVER

REVISIONS

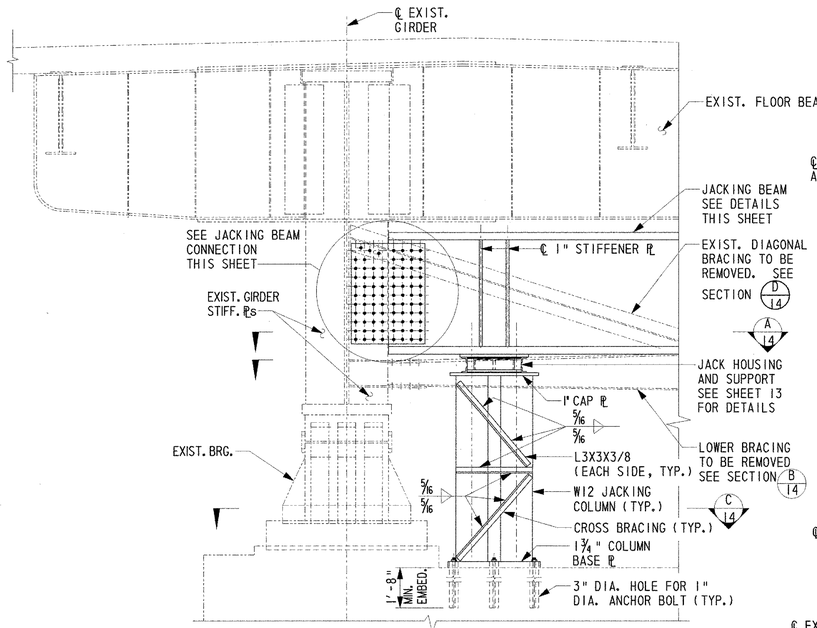

ELEVATION AT PIERS 15 & 18

SCALE: N.T.S.

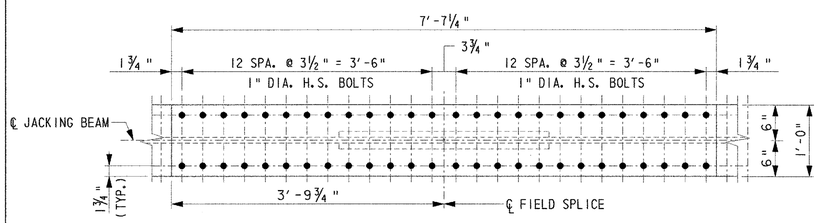

PLAN TOP AND BOTTOM FLANGE

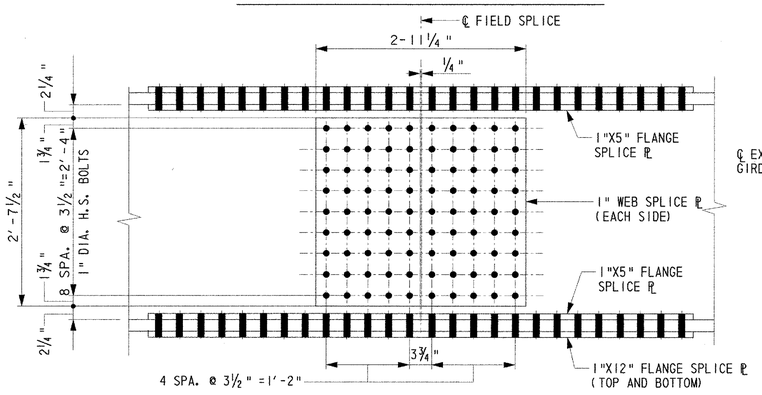

ELEVATION

JACKING BEAM FIELD SPLICE DETAIL

SCALE: 1" = 1'-0"

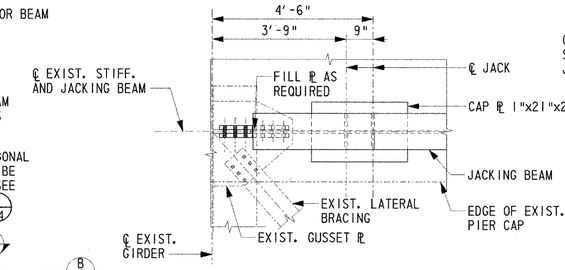

SECTION A/14

SCALE: ½" = 1'-0"

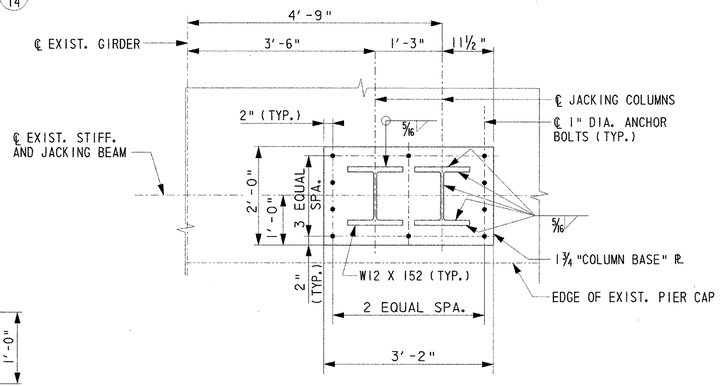

SECTION C/14

SCALE: ¾" = 1'-0"

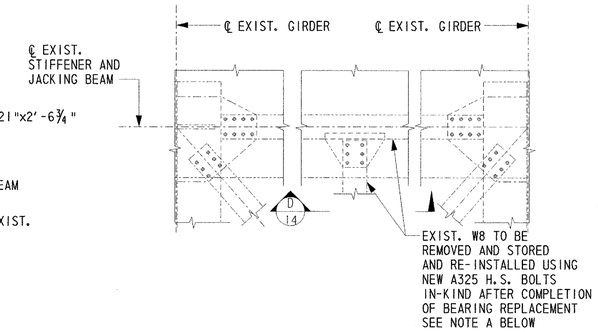

NOTE: JACKING ASSEMBLY NOT SHOWN FOR CLARITY

SECTION B/14

N.T.S.

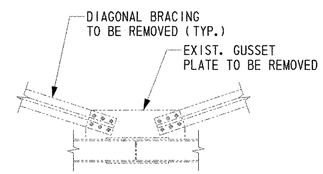

SECTION D/14

N.T.S.

NOTE A

CLEAN ALL SURFACES AND REAM HOLES IF NECESSARY. RE-INSTALL BRACING USING NEW A325 H.S. BOLTS AND REPLACE BRACING IN-KIND IF DAMAGED. PAINT STEEL IN ACCORDANCE WITH SECTION 605 OF THE STANDARD SPECIFICATIONS USING PAINT SYSTEM SPECIFIED IN SPECIAL PROVISIONS NO. 605522, REFER TO SHEET 37 FOR PAINT COLOR.

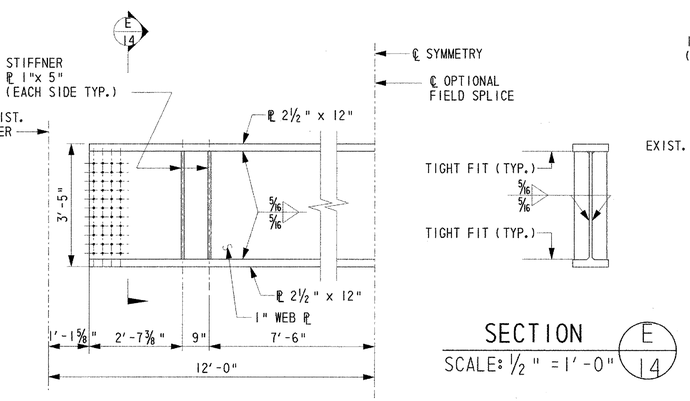

SECTION E/14

SCALE: ½" = 1'-0"

JACKING BEAM ELEVATION AT PIERS 15 & 18

SCALE: ½" = 1'-0"

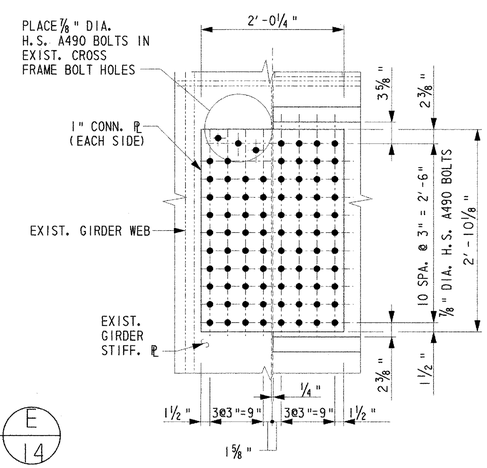

JACKING BEAM CONNECTION DETAIL

SCALE: 1"=1'-0"

GENERAL JACKING NOTES

1. ALL JACKS SHALL HAVE THE MINIMUM RATED CAPACITY SHOWN ON SHEET 17.
2. ALL JACKING SHALL BE PERFORMED BETWEEN THE HOURS OF 2:00 AM AND 4:00 AM. TRAFFIC SHALL NOT BE PERMITTED ON THE MAIN SPANS UNIT DURING JACKING.
3. CONTRACTOR TO VERIFY ALL DIMENSIONS AND SIZES OF THE JACK SUPPORT DETAILS, COLUMN JACK ASSEMBLY DETAILS, AND SHIM PLATES FOR COMPATIBILITY WITH SELECTED HYDRAULIC JACK PRIOR TO FABRICATION.
4. CONTRACTOR TO PROVIDE A LEVEL SURFACE AREA UNDER COLUMN BASE PLATE.
5. IMMEDIATELY AFTER THE JACKING LOADS HAVE BEEN APPLIED, THE JACKS SHALL BE CRIBBED AND THE LOAD SHALL BE TOTALLY RELIEVED FROM JACKS.
6. ALL GIRDERS SHALL BE JACKED SIMULTANEOUSLY.
7. THE GIRDERS SHALL BE JACKED AND BLOCKED NO MORE THAN ¼" OFF THEIR RESPECTIVE BEARINGS.
8. THE METHOD OF JACKING SHOWN IS THE RECOMMENDED SCHEME. THE CONTRACTOR MAY PROVIDE AN ALTERNATE SCHEME DESIGNED BY A PROFESSIONAL ENGINEER REGISTERED IN THE STATE OF DELAWARE AFTER FIRST SUBMITTING SUCH SCHEME TO THE ENGINEER FOR ACCEPTANCE.
9. ANY EXISTING FEATURE DAMAGED BY THE CONTRACTOR'S OPERATION SHALL BE REPAIRED AND RESTORED TO ITS ORIGINAL CONDITION, AT THE CONTRACTOR'S EXPENSE.
10. THE SPEED LIMIT ON I-495 SHALL BE REDUCED TO 55 MPH DURING JACKING OPERATIONS. TRAFFIC OFFICERS SHALL BE PRESENT TO ENFORCE THE SPEED LIMIT. ADDITIONALLY, ALL THROUGH TRAFFIC, ESPECIALLY TRUCKS, SHALL BE DETOURED TO I-95 REFER TO THE SPECIAL PROVISIONS FOR ADDITIONAL INFORMATION.
11. WORK PERFORMED FOR THIS ITEM SHALL BE IN ACCORDANCE WITH AND PAID FOR UNDER ITEM NO. 605649 - "REPLACING BRIDGE BEARING, TYPE A", ITEM NO. 605650 - "REPLACING BRIDGE BEARING, TYPE B", ITEM NO. 605651 - "REPLACING BRIDGE BEARING, TYPE C", AND ITEM NO. 605677 - "REPLACING BRIDGE BEARING, TYPE D".

NOTES FOR JACKING AT PIERS 15 AND 18

1. REMOVE DIAGONAL BRACING AT THE END CROSS FRAME.
2. REMOVE RUST AND PAINT AND REAM HOLES IN THE STIFFENER AT THE UPPER DIAGONAL BRACING CONNECTION.
3. REMOVE AND STORE THE LOWER W8 BRACING SHOWN IN SECTION B THIS SHEET. CARE SHALL BE TAKEN NOT TO DAMAGE THE EXISTING STRUCTURE. ANY DAMAGED MEMBER SHALL BE REPLACED IN-KIND AT THE CONTRACTOR'S EXPENSE.
4. INSTALL THE JACKING BEAM IN ACCORDANCE WITH DETAILS SHOWN ON THIS SHEET.
5. INSTALL THE JACKING COLUMN AND JACK ASSEMBLY AS SHOWN ON THIS SHEET. USE SUPPORT JACK HOUSING ASSEMBLY AS SHOWN ON SHEET 13A.
6. RE-CONNECT THE LOWER LATERAL BRACING AFTER COMPLETION OF BEARING REPLACEMENT. JACKING BEAM SHALL REMAIN IN PLACE AND PAINTED AFTER COMPLETION OF WORK.
7. SEE GENERAL JACKING NOTES THIS SHEET AND BEARING REPLACEMENT SEQUENCE SHEET 12 FOR ADDITIONAL INFORMATION.

CADD DESIGN A. RIGATO DESIGN A. RIGATO CHKD. B. COPLEY

I:\Trans\0603\700cadd\709STR\PS&E SUBMISSION\M021.dgn

MAIN SPAN JACKING DETAILS – 2

BR. 1-813

CONTRACT	COUNTY	FEDERAL AID PROJECT NO.	SHEET NO.	TOTAL SHTS.
94-074-11	NEW CASTLE	IM-N0601(2)	15	45

REHABILITATION AND PAINTING OF BRIDGE 1-813 ON I-495 OVER CHRISTINA RIVER

REVISIONS

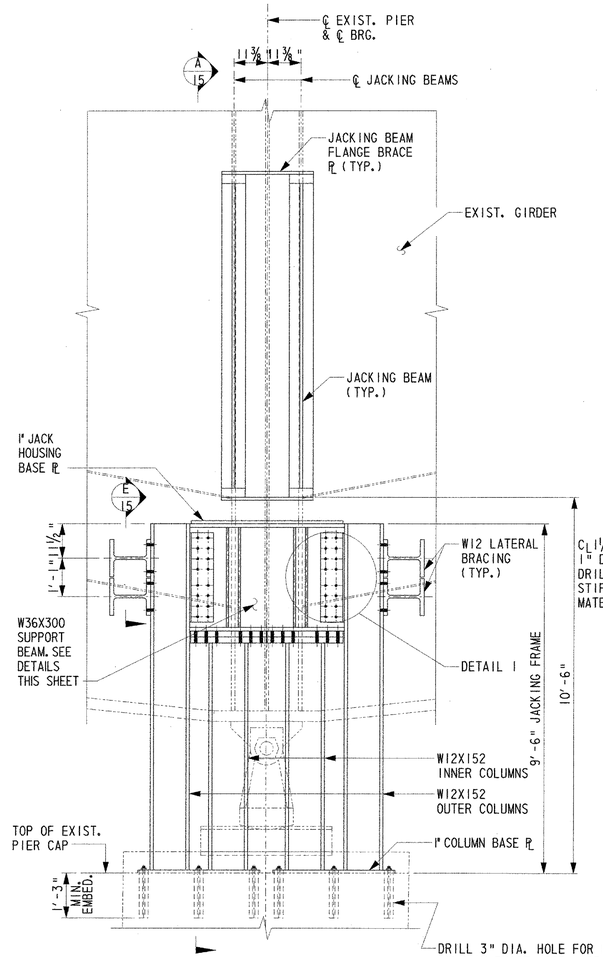

NOTE: EXISTING DIAGONAL BRACING NOT SHOWN FOR CLARITY

ELEVATION AT PIER 17

SCALE: ½"=1'-0"

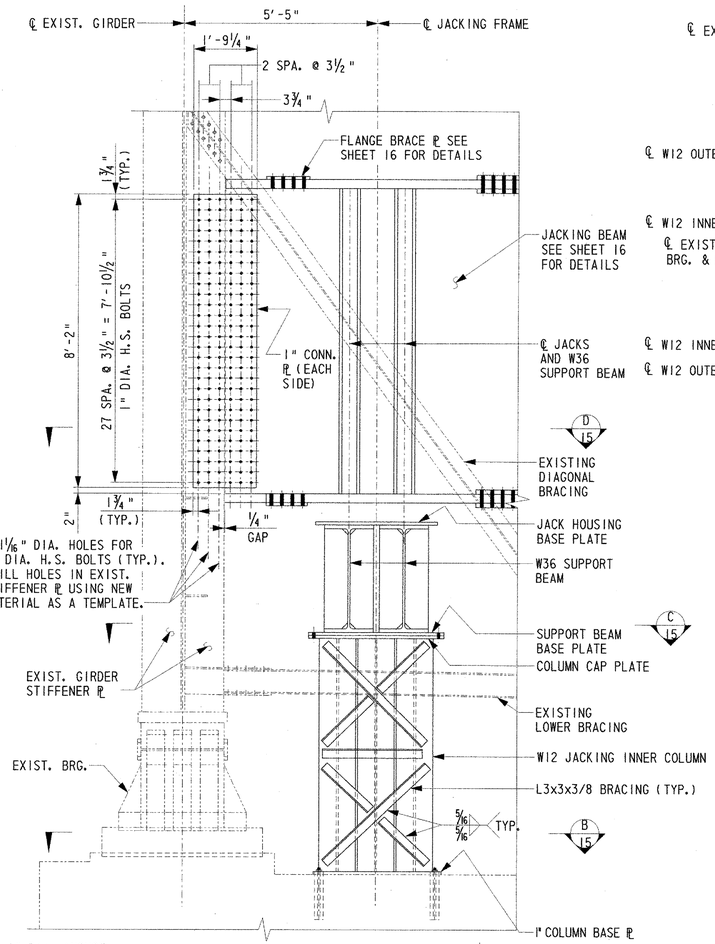

SECTION A 15

SCALE: ½"=1'-0"

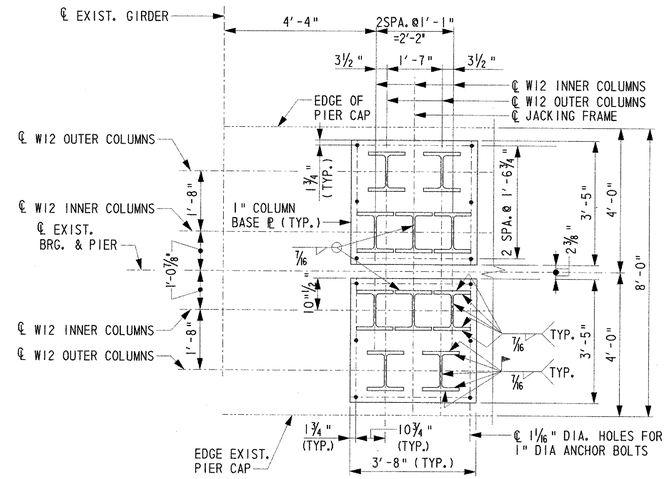

SECTION B 15

SCALE: ½"=1'-0"

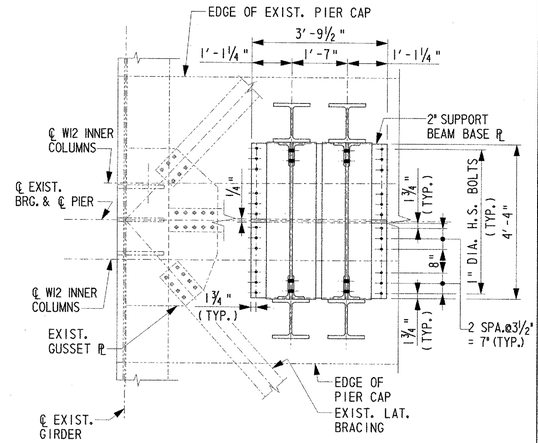

SECTION C 15

SCALE: ½"=1'-0"

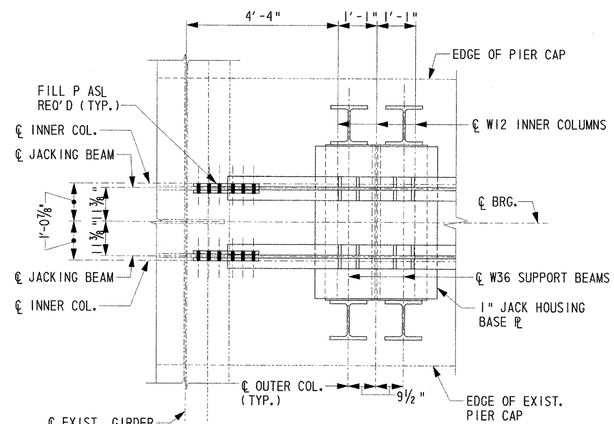

NOTE: EXISTING DIAGONAL BRACING NOT SHOWN FOR CLARITY

SECTION D 15

SCALE: ½"=1'-0"

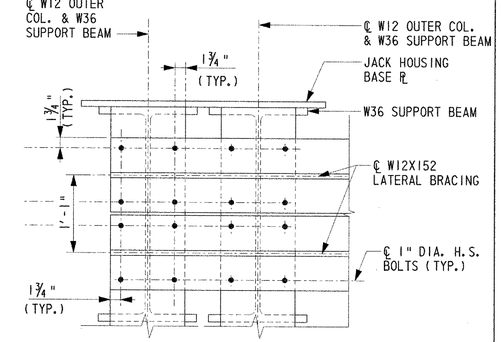

SECTION E 15

SCALE: 1"=1'-0"

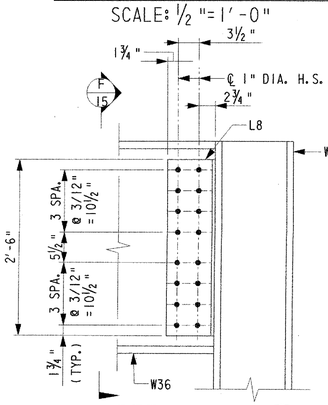

DETAIL 1 15

SCALE: 1"=1'-0"

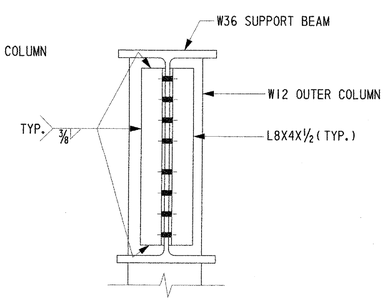

SECTION F 15

SCALE: ½"=1'-0"

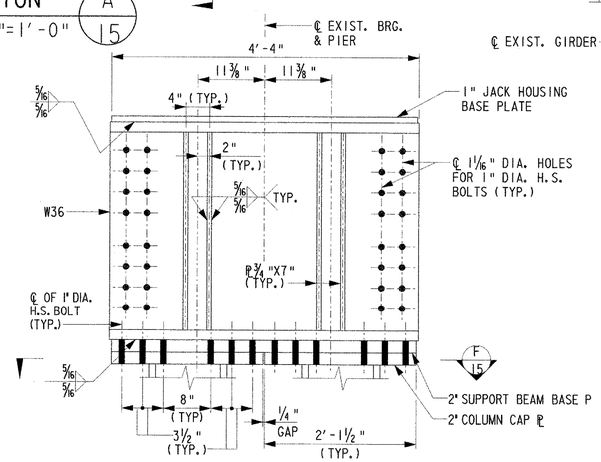

SUPPORT BEAM ELEVATION

SCALE: 1"=1'-0"

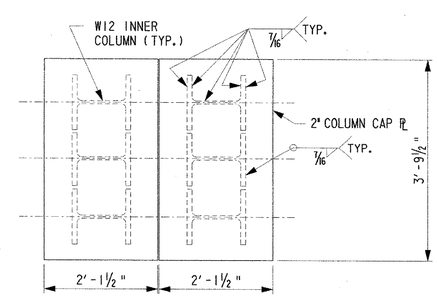

SECTION F 15

SCALE: ¾"=1'-0"

NOTES

1. FOR ADDITIONAL JACK HOUSING DETAILS SEE SHEET 16.
2. PROVIDE FILL PLATES AT THE JACKING BEAM CONNECTION AS NECESSARY.
3. DETAILS ARE TYPICAL FOR BOTH EXPANSION BEARINGS AT PIER 17.

CADD DESIGN A. RIGATO DESIGN A. RIGATO CHKD. B. COPLEY

I:\Trans\0603\700cadd\709STR\FSAE SUBMISSION\MD22.dgn

MAIN SPAN JACKING DETAILS - 3

BR. 1-813

CONTRACT	COUNTY	FEDERAL AID PROJECT NO.	SHEET NO.	TOTAL SHTS.
94-074-11	NEW CASTLE	IM-N060(2)	16	45

REHABILITATION AND PAINTING OF BRIDGE 1-813 ON I-495 OVER CHRISTINA RIVER

REVISIONS

2 ADDED JACKING SUPPORT SYSTEM TO NOTE 4; 10/28/03 BEC	

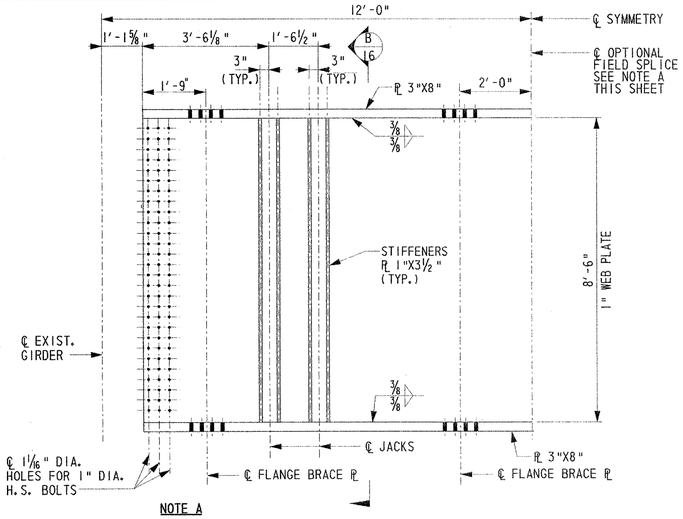

NOTE A

THE FIELD SPLICE IS DESIGNED TO FACILITATE THE ERECTION OF THE JACKING BEAM. THE CONTRACTOR MAY USE ONE OR TWO SPLICES IF NECESSARY. THE CONTRACTOR SHALL LOCATE THE SPLICES SUCH THAT IT DOES NOT INTERFERE WITH THE JACKING COLUMNS, BEAM STIFFENERS AND JACKING OPERATIONS.

JACKING BEAM ELEVATION AT PIER 17

SCALE: ½" = 1'-0"

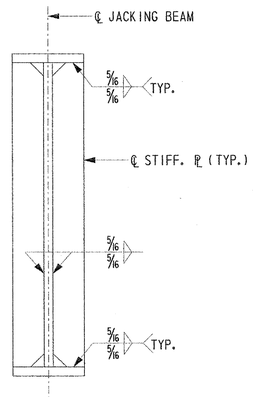

SECTION B/16

SCALE: 1½"=1'-0"

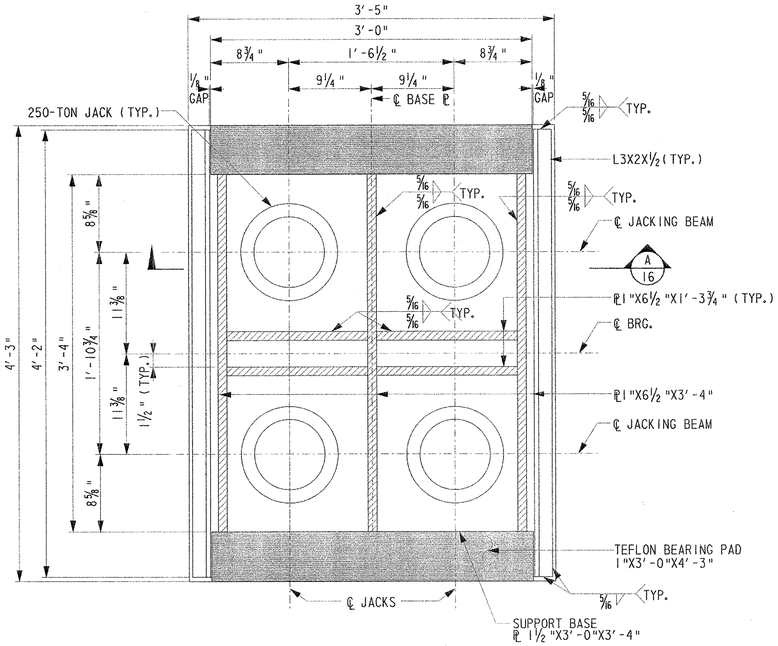

JACK HOUSING PLAN

SCALE: 1½" = 1'-0"

NOTES FOR JACKING AT PIERS 17

1. INSTALL THE JACKING BEAMS AND CONNECT IT TO THE EXISTING STIFFENER PLATES AS SHOWN IN SECTION D OF SHEET 15.
2. INSTALL INNER JACKING COLUMNS WITH COLUMN CAP PLATE AND COLUMN BASE PLATE. INSTALL SUPPORT BEAMS WITH JACK HOUSING BASE PLATE AND RESTRAINER ANGLES AND CONNECT TO COLUMN CAP PLATES. FIELD WELD OUTER COLUMN TO COLUMN BASE PLATE WITH SUPPORT BEAM ANGLE CONNECTION SHOP WELDED TO COLUMN. CONNECT SUPPORT BEAMS TO OUTER COLUMN CONNECTION AS SHOWN ON SHEET 15.
3. INSTALL JACK HOUSING AND JACKS AS SHOWN.
4. JACKING BEAMS AND JACKING SUPPORT SYSTEM SHALL BE LEFT 2 IN PLACE AND PAINTED IN ACCORDANCE WITH SPECIAL PROVISIONS AFTER COMPLETION OF BEARING REPLACEMENT WORK.
5. SEE GENERAL JACKING NOTES ON SHEET 14 FOR ADDITIONAL DETAILS.
6. SEE BEARING REPLACEMENT SEQUENCE SHEET 12 FOR ADDITIONAL INFORMATION.

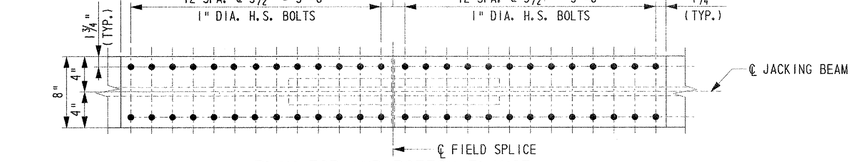

PLAN-TOP AND BOTTOM FLANGE

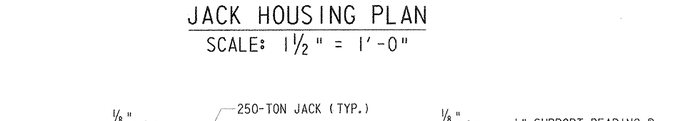

SECTION A/16

SCALE: 1½" = 1'-0"

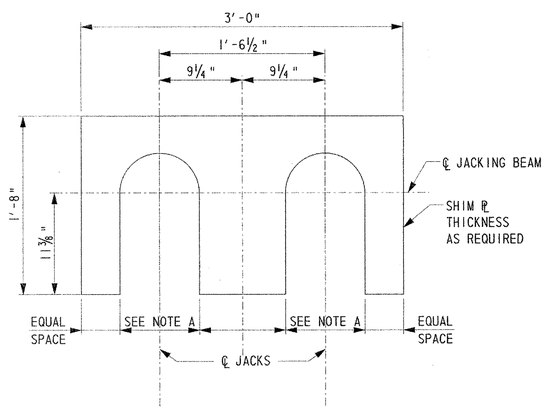

NOTE A

FOR THIS DIMENSION USE THE JACK PISTON DIA. PLUS ½"

SHIM PATE DETAIL

SCALE: 1½" = 1'-0"

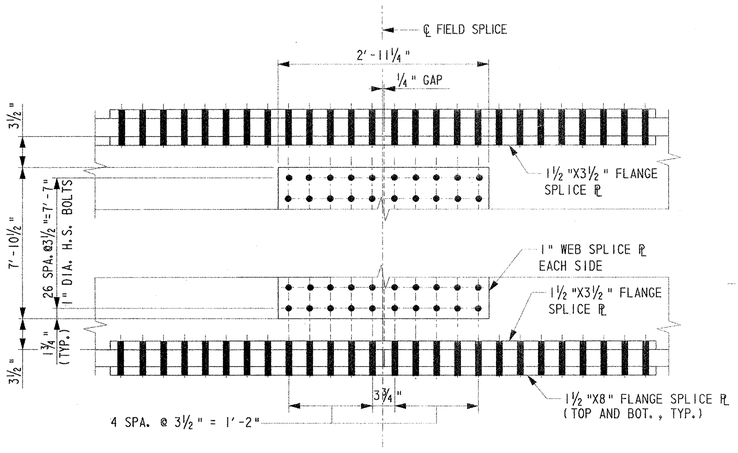

ELEVATION

JACKING BEAM FIELD SPLICE DETAIL

SCALE: 1" = 1'-0"

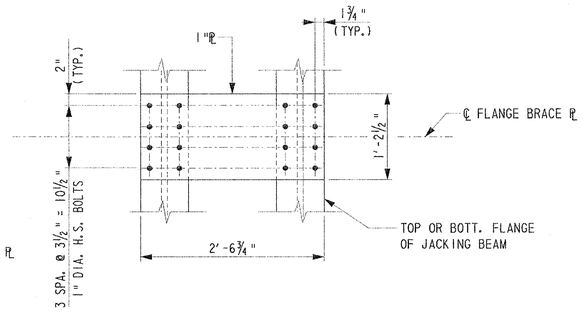

FLANGE BRACE PLATE DETAIL

SCALE: 1" = 1'-0"

CADD DESIGN Y. JIN DESIGN A. RIGATO CHKD. S. COPLEY

REACTION TABLE

BR. 1-813

CONTRACT	COUNTY	FEDERAL AID PROJECT NO.	SHEET NO.	TOTAL SHTS.
94-074-11	NEW CASTLE	IM-N060(2)	17	45

REHABILITATION AND PAINTING OF BRIDGE 1-813 ON I-495 OVER CHRISTINA RIVER

REVISIONS

LOCATION		DEAD LOAD REACTIONS (KIPS)										MAXIMUM LIVE LOAD REACTIONS (KIPS)										MINIMUM LIVE LOAD REACTIONS (KIPS)									
ABUT. / PIER	GIRDER / SPAN	1	2	3	4	5	6	A	B	C	D	1	2	3	4	5	6	A	B	C	D	1	2	3	4	5	6	A	B	C	D
S. ABUT.	1	41	39	39	39	39	41	-	-	-	-	88	106	106	106	106	88	-	-	-	-	-11	-9	-9	-9	-9	-11	-	-	-	-
2	-	142	135	135	135	135	142	-	-	-	-	120	131	131	131	131	120	-	-	-	-	-13	-14	-14	-14	-14	-13	-	-	-	-
3	3	41	39	39	39	39	41	-	-	-	-	88	106	106	106	106	88	-	-	-	-	-11	-9	-9	-9	-9	-11	-	-	-	-
3	4	68	65	65	65	65	68	-	-	-	-	91	109	109	109	109	91	-	-	-	-	-11	-12	-12	-12	-12	-11	-	-	-	-
4	-	205	196	196	196	196	205	-	-	-	-	150	164	164	164	164	150	-	-	-	-	-15	-17	-17	-17	-17	-15	-	-	-	-
6	-	205	196	196	196	196	205	-	-	-	-	150	164	164	164	164	150	-	-	-	-	-15	-17	-17	-17	-17	-15	-	-	-	-
7	7	68	65	65	65	65	68	-	-	-	-	91	109	109	109	109	91	-	-	-	-	-11	-12	-12	-12	-12	-11	-	-	-	-
7	8	74	71	71	71	71	74	-	-	-	-	91	109	109	109	109	91	-	-	-	-	-15	-17	-17	-17	-17	-15	-	-	-	-
9	-	269	257	257	257	257	269	-	-	-	-	174	190	190	190	190	174	-	-	-	-	-15	-17	-17	-17	-17	-15	-	-	-	-
10	10	74	71	71	71	71	74	-	-	-	-	91	109	109	109	109	91	-	-	-	-	-15	-17	-17	-17	-17	-15	-	-	-	-
10	11	77	73	73	73	73	77	-	-	-	-	91	109	109	109	109	91	-	-	-	-	-12	-13	-13	-13	-13	-12	-	-	-	-
11	-	231	221	221	221	221	231	-	-	-	-	161	176	176	176	176	161	-	-	-	-	-16	-18	-18	-18	-18	-16	-	-	-	-
13	-	231	221	221	221	221	231	-	-	-	-	161	176	176	176	176	161	-	-	-	-	-16	-18	-18	-18	-18	-16	-	-	-	-
14	14	77	73	73	73	73	77	-	-	-	-	91	109	109	109	109	91	-	-	-	-	-12	-13	-13	-13	-13	-12	-	-	-	-
15 N.B.	15	129	123	123	123	123	129	-	-	-	-	96	112	112	112	112	96	-	-	-	-	0	0	0	0	0	0	-	-	-	-
15 S.B.	15	165	158	158	158	158	165	-	-	-	-	106	116	116	116	116	106	-	-	-	-	0	0	0	0	0	0	-	-	-	-
15	16	-	-	-	-	-	-	350	350	350	350	-	-	-	-	-	-	320	320	320	320	-	-	-	-	-	-	-97	-97	-97	-97
17	-	-	-	-	-	-	-	2000	2000	2000	2000	-	-	-	-	-	-	900	900	900	900	-	-	-	-	-	-	-70	-70	-70	-70
18	18	-	-	-	-	-	-	350	350	350	350	-	-	-	-	-	-	320	320	320	320	-	-	-	-	-	-	-97	-97	-97	-97
18 N.B.	19	165	158	158	158	158	165	-	-	-	-	106	116	116	116	116	106	-	-	-	-	0	0	0	0	0	0	-	-	-	-
18 S.B.	19	129	123	123	123	123	129	-	-	-	-	96	112	112	112	112	96	-	-	-	-	0	0	0	0	0	0	-	-	-	-
19	20	165	158	158	158	158	165	-	-	-	-	106	116	116	116	116	106	-	-	-	-	0	0	0	0	0	0	-	-	-	-
20	21	77	73	73	73	73	77	-	-	-	-	91	109	109	109	109	91	-	-	-	-	-12	-13	-13	-13	-13	-12	-	-	-	-
21	-	231	221	221	221	221	231	-	-	-	-	161	176	176	176	176	161	-	-	-	-	-16	-18	-18	-18	-18	-16	-	-	-	-
23	-	231	221	221	221	221	231	-	-	-	-	161	176	176	176	176	161	-	-	-	-	-16	-18	-18	-18	-18	-16	-	-	-	-
24	24	77	73	73	73	73	77	-	-	-	-	91	109	109	109	109	91	-	-	-	-	-12	-13	-13	-13	-13	-12	-	-	-	-
24	25	77	73	73	73	73	77	-	-	-	-	91	109	109	109	109	91	-	-	-	-	-12	-13	-13	-13	-13	-12	-	-	-	-
25	-	231	221	221	221	221	231	-	-	-	-	161	176	176	176	176	161	-	-	-	-	-16	-18	-18	-18	-18	-16	-	-	-	-
27	-	231	221	221	221	221	231	-	-	-	-	161	176	176	176	176	161	-	-	-	-	-16	-18	-18	-18	-18	-16	-	-	-	-
28	28	77	73	73	73	73	77	-	-	-	-	91	109	109	109	109	91	-	-	-	-	-12	-13	-13	-13	-13	-12	-	-	-	-
28	29	68	65	65	65	65	68	-	-	-	-	91	109	109	109	109	91	-	-	-	-	-11	-12	-12	-12	-12	-11	-	-	-	-
29	-	205	196	196	196	196	205	-	-	-	-	150	164	164	164	164	150	-	-	-	-	-15	-17	-17	-17	-17	-15	-	-	-	-
31	-	205	196	196	196	196	205	-	-	-	-	150	164	164	164	164	150	-	-	-	-	-15	-17	-17	-17	-17	-15	-	-	-	-
32	32	68	65	65	65	65	68	-	-	-	-	91	109	109	109	109	91	-	-	-	-	-11	-12	-12	-12	-12	-11	-	-	-	-
32	33	68	65	65	65	65	68	-	-	-	-	91	109	109	109	109	91	-	-	-	-	-11	-12	-12	-12	-12	-11	-	-	-	-
33	-	205	196	196	196	196	205	-	-	-	-	150	164	164	164	164	150	-	-	-	-	-15	-17	-17	-17	-17	-15	-	-	-	-
35	-	205	196	196	196	196	205	-	-	-	-	150	164	164	164	164	150	-	-	-	-	-15	-17	-17	-17	-17	-15	-	-	-	-
36	36	68	65	65	65	65	68	-	-	-	-	91	109	109	109	109	91	-	-	-	-	-11	-12	-12	-12	-12	-11	-	-	-	-
36	37	91	87	87	87	87	91	-	-	-	-	94	112	112	112	112	94	-	-	-	-	0	0	0	0	0	0	-	-	-	-
37	38	35	23	23	23	23	35	-	-	-	-	72	89	89	89	89	72	-	-	-	-	0	0	0	0	0	0	-	-	-	-
N. ABUT.	38	35	23	23	23	23	35	-	-	-	-	72	89	89	89	89	72	-	-	-	-	0	0	0	0	0	0	-	-	-	-

NOTES

1. FOR JACKING NOTES, SEE SHEET 13A AND 14.
2. REACTIONS ARE GIVEN FOR EXISTING BEARINGS AND ARE THEORETICAL. REACTIONS INCLUDE A FACTOR OF 1.3 FOR DEAD LOAD AND 1.75 FOR LIVE LOAD. MAIN SPAN LIVE LOADS ARE UNFACTORED, NO LIVE LOAD SHALL BE PERMITTED ON THE BRIDGE DURING JACKING OPERATIONS.
3. FOR APPROACH SPAN JACKING DIAPHRAGM DETAILS, SEE SHEET 13A. FOR MAIN SPAN PIER 17 JACKING DIAPHRAGM DETAILS, SEE SHEET 15 & 16.
4. JACKING LOADS PROVIDED EQUAL THE MINIMUM RATED CAPACITY OF THE JACK.

CADD DESIGN A. RIGATO DESIGN K. HUFF CHK'D. B. COPLEY

J:\Trans\0603\700cadd\709STR\PS&E SUBMISSION\JL02.dgn

REHABILITATION AND PAINTING OF BRIDGE 1–813 ON I–495 OVER CHRISTINA RIVER

REVISIONS

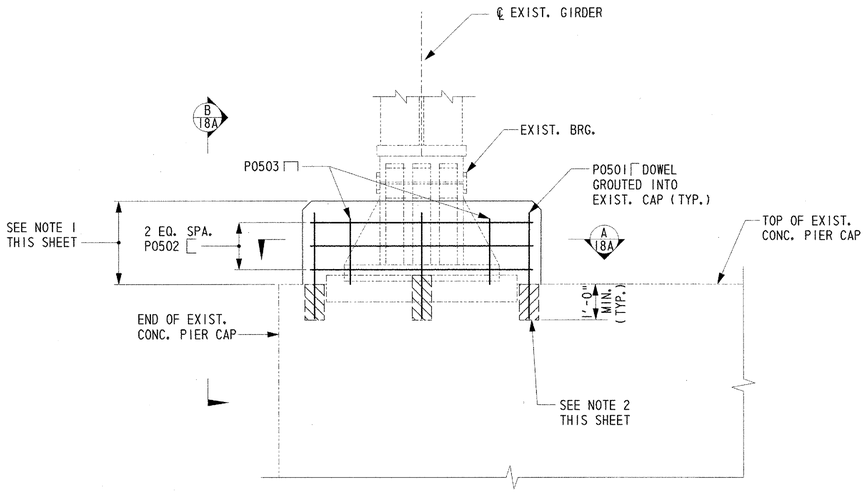

FIXED BEARING PEDESTAL MODIFICATION, PIER 16 (4/18A) REF. 6

SCALE: 1/2"=1'-0"

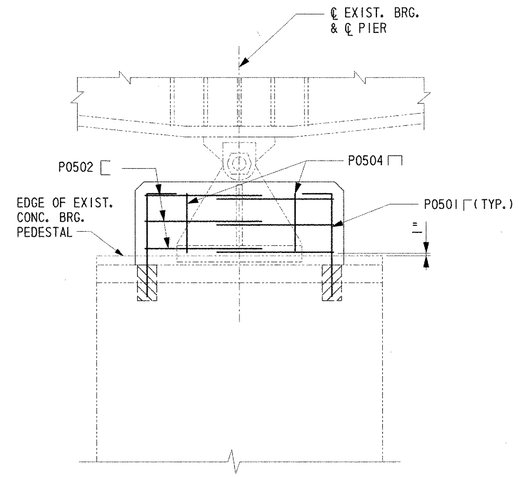

SECTION (B/18A)

SCALE: 1/2"=1'-0"

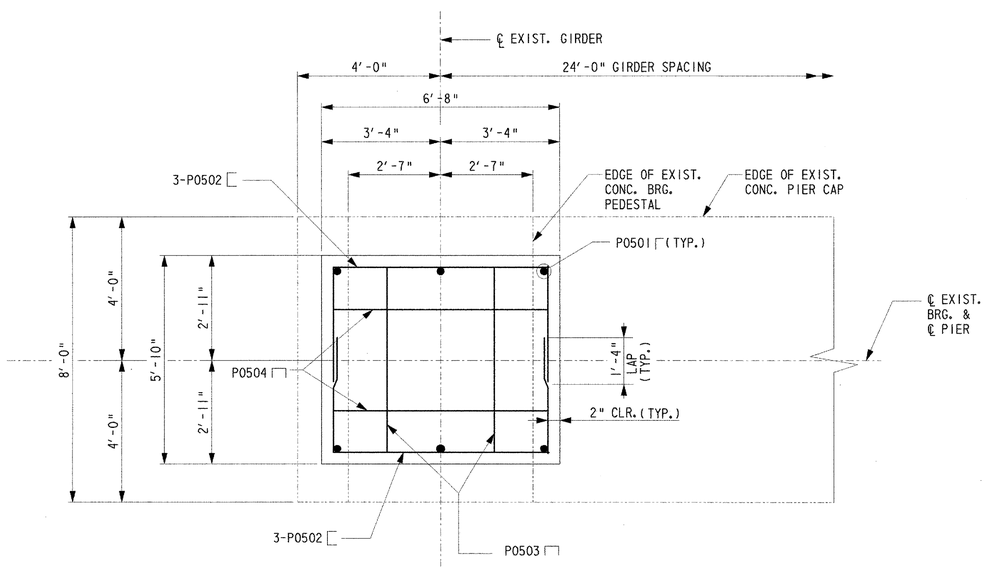

SECTION (A/18A)

SCALE: 1/2"=1'-0"

FIXED BEARING ENCASEMENT NOTES

1. FOR FIXED BEARING ENCASEMENT, POUR CONCRETE TO WITHIN 1/2" OF THE BOTTOM OF THE BEARING PIN. THE CONTRACTOR SHALL TAKE CARE NOT TO INHIBIT THE ROTATIONAL CAPACITY OF THE BEARING.
2. PROVIDE 3" DIA. HOLES FOR PROPOSED DOWELS AND FILL WITH NON-SHRINK GROUT.
3. CONTRACTOR SHALL WAIT 7 DAYS AFTER PLACEMENT OF CONCRETE BEFORE REMOVING FORMS.
4. ALL PEDESTAL MODIFICATION SHALL BE IN ACCORDANCE WITH AND PAID FOR AT THE UNIT BID PRICE ITEM NO. 602630 - "MODIFICATION OF BRIDGE CONCRETE PEDESTAL."

TYPICAL TEMPORARY PROTECTIVE SHIELD NOTES

1. EXTEND TEMPORARY PROTECTIVE SHIELD A MINIMUM 5' BEYOND AREA OF WORK, MEASURED PARALLEL TO SUPPORT.
2. CONNECTING TEMPORARY SHIELD TO EXISTING STRINGERS, GIRDERS, COLUMNS, ETC. BY WELDING AND/OR DRILLING HOLES FOR BOLTS IS NOT ALLOWED.
3. SCHEMATIC LAYOUT OF TEMPORARY PROTECTIVE SHIELD IS PROVIDED TO SHOW CLEARANCE, WIDTH AND HEIGHT REQUIREMENTS. CONTRACTOR SHALL BE RESPONSIBLE FOR THE DESIGN OF THE PROTECTIVE SHIELD AND SUPPORT SYSTEM AND SHALL PROVIDE A COMPLETE SET OF DRAWINGS AND DESIGN CALCULATIONS TO THE ENGINEER FOR REVIEW AND APPROVAL, WHICH ARE SIGNED AND SEALED BY A PROFESSIONAL ENGINEER LICENSED IN THE STATE OF DELAWARE. REFER TO SPECIAL PROVISIONS FOR DESIGN CRITERIA.
4. SEE SPECIAL PROVISIONS FOR MATERIAL AND CONSTRUCTION METHODS. WORK PERFORMED FOR THIS ITEM SHALL BE IN ACCORDANCE WITH AND PAID FOR UNDER ITEM NO. 601522 - "TEMPORARY PROTECTIVE SHIELDS" WHEN USED FOR REPAIR WORK OVER CHRISTINA AVENUE AND NORFOLK/SOUTHERN RAILROAD.
5. TEMPORARY SHIELDS FOR ALL OTHER OPERATIONS NOT LISTED ABOVE THAT ARE REQUIRED TO COMPLY WITH THE PROJECT NOTES ON SHEET 3 SHALL BE INCIDENTAL TO THE CONSTRUCTION CONTRACT.

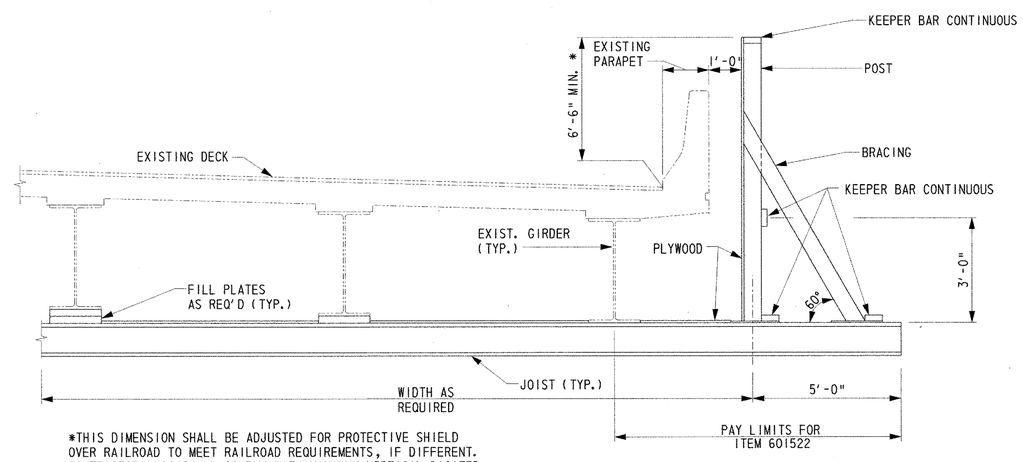

*THIS DIMENSION SHALL BE ADJUSTED FOR PROTECTIVE SHIELD OVER RAILROAD TO MEET RAILROAD REQUIREMENTS, IF DIFFERENT. CONTRACTOR ALSO SHALL COMPLY WITH MINIMUM VERTICAL DICATED BY RAILROADS.

SUGGESTED TYPICAL TEMPORARY PROTECTIVE SHIELD

SCALE: N.T.S.

CONTRACT	COUNTY	FEDERAL AID PROJECT NO.	SHEET NO.	TOTAL SHTS.
94-074-11	NEW CASTLE	IM-N060(2)	18B	45

REHABILITATION AND PAINTING OF BRIDGE 1–813 ON I–495 OVER CHRISTINA RIVER

REVISIONS

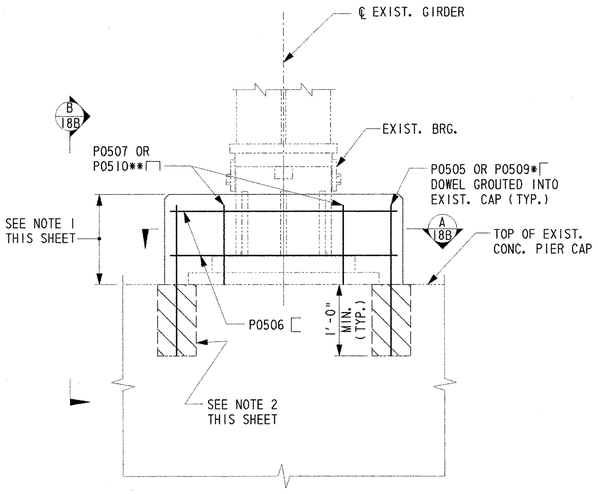

FIXED BEARING PEDESTAL MODIFICATION
PIERS 1, 5, 8, 12, 22, 26, 30 & 34 — 4/18B — REF. 5, 6, 7

SCALE: 1"=1'-0"

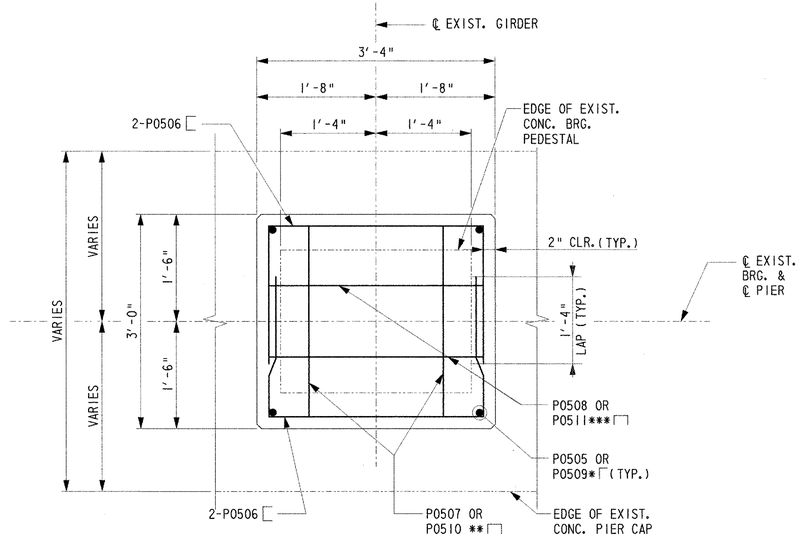

SECTION A 18B

SCALE: 1"=1'-0"

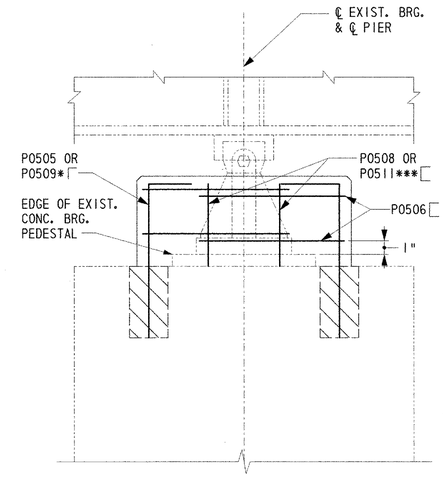

SECTION B 18B

SCALE: 1"=1'-0"

FIXED BEARING ENCASEMENT NOTES

1. FOR FIXED BEARING ENCASEMENT, POUR CONCRETE TO WITHIN ½" OF THE BOTTOM OF THE BEARING PIN. THE CONTRACTOR SHALL TAKE CARE NOT TO INHIBIT THE ROTATIONAL CAPACITY OF THE BEARING.
2. PROVIDE 3" DIA. HOLES FOR PROPOSED DOWELS AND FILL WITH NON-SHRINK GROUT.
3. AT PIERS 1, 5, 8, 12, 22, 26, 30 & 34 CONTRACTOR SHALL WAIT 7 DAYS AFTER PLACEMENT OF CONCRETE BEFORE REMOVING FORMS. AT PIERS 14, 19 & 20 AFTER CONCRETE HAS REACHED ITS FINAL DESIGN STRENGTH, INSTALL NEW BEARINGS AND TRANSFER LOADS BACK TO BEARINGS
4. ALL PEDESTAL MODIFICATION SHALL BE IN ACCORDANCE WITH AND PAID FOR AT THE UNIT BID PRICE ITEM NO. 602630 - "MODIFICATION OF BRIDGE CONCRETE PEDESTAL."

* P0505 FOR EXIST. TYPE F-1 BRG. AND P0509 FOR EXIST. TYPE F-2 BRG.

** P0507 FOR EXIST. TYPE F-1 BRG. AND P0510 FOR EXIST. TYPE F-2 BRG.

*** P0508 FOR EXIST. TYPE F-1 BRG. AND P0511 FOR EXIST. TYPE F-2 BRG.

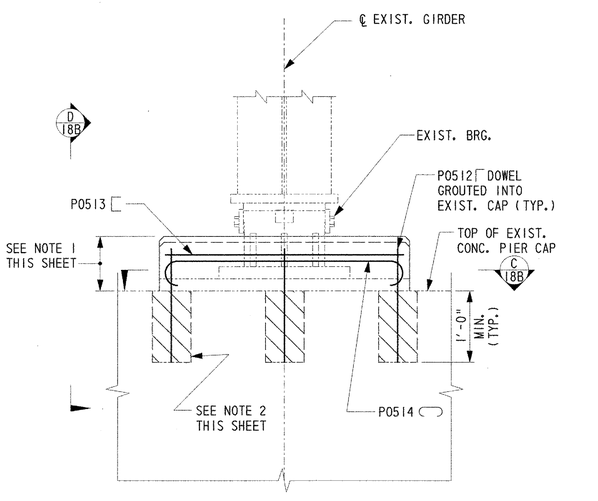

FIXED BEARING PEDESTAL MODIFICATION
PIERS 14, 19 & 20 — 4/18B — REF. 6

SCALE: 1"=1'-0"

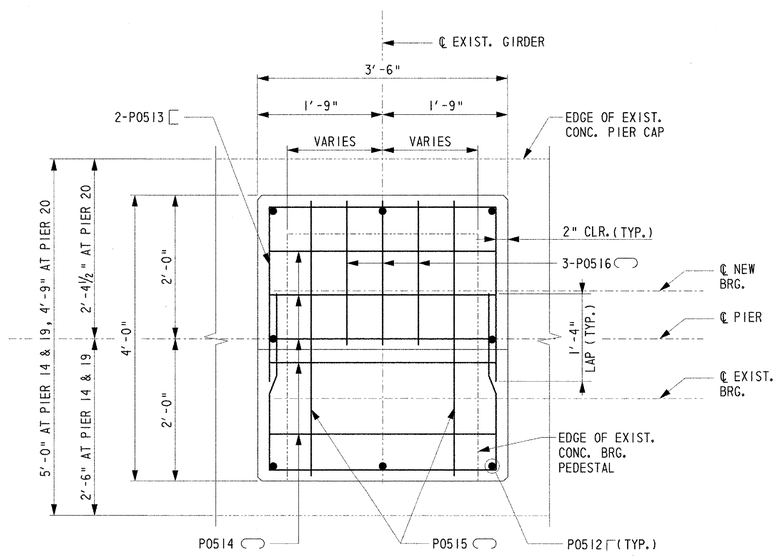

SECTION C 18B

SCALE: 1"=1'-0"

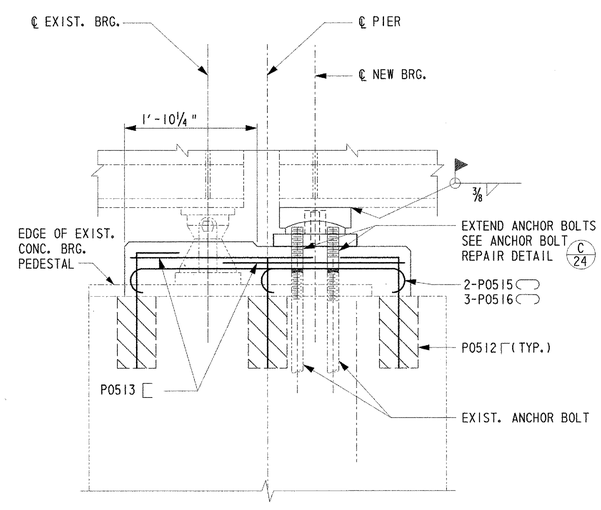

SECTION D 18B

SCALE: 1"=1'-0"

CADD DESIGN A. RIGATO DESIGN B. COPLEY CHKD. B. COPLEY

I:\Trans\0603\700coadg\709STR\PS&E SUBMISSION\MD04.dgn

STRUCTURAL STEEL REPAIR DETAILS

BR. 1-813

CONTRACT	COUNTY	FEDERAL AID PROJECT NO.	SHEET NO.	TOTAL SHTS.
94-074-11	NEW CASTLE	IM-N060(2)	19	45

REHABILITATION AND PAINTING OF BRIDGE 1-813 ON I-495 OVER CHRISTINA RIVER

REVISIONS

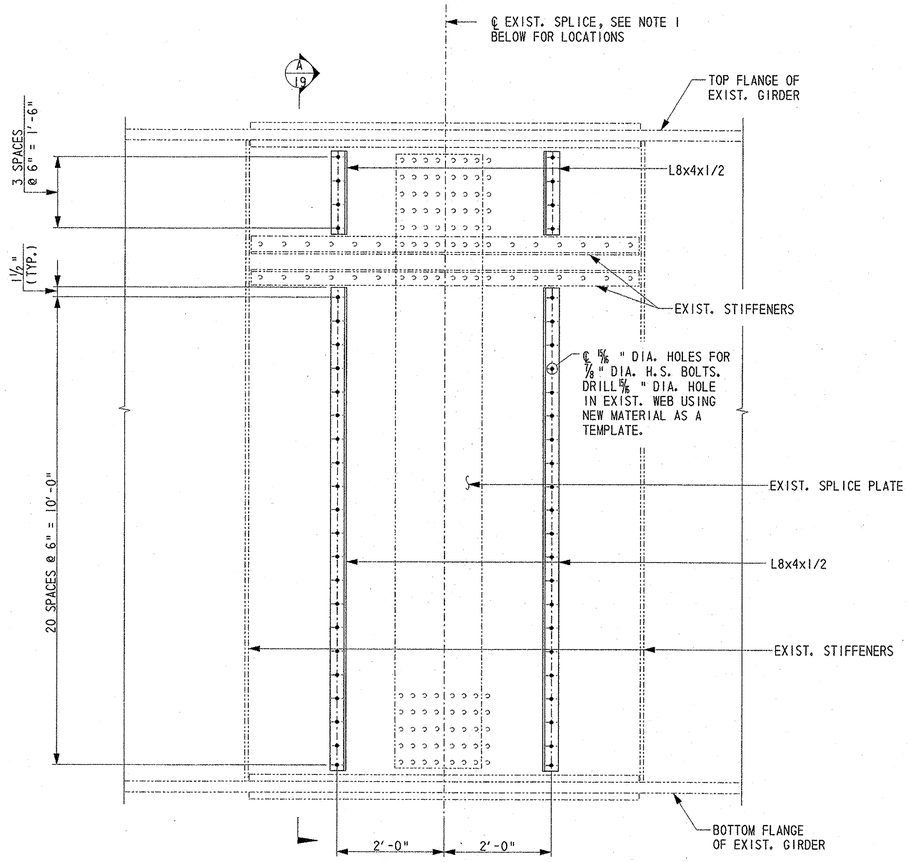

GIRDER PART ELEVATION

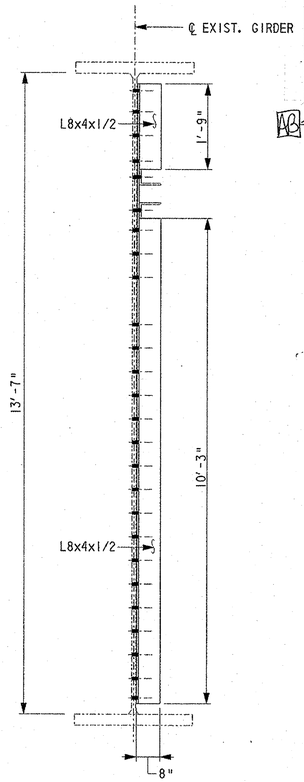

SECTION A/19

ADDITION OF WEB STIFFENERS TO GIRDERS 13/19 REF 6

SCALE: N.T.S.

AB

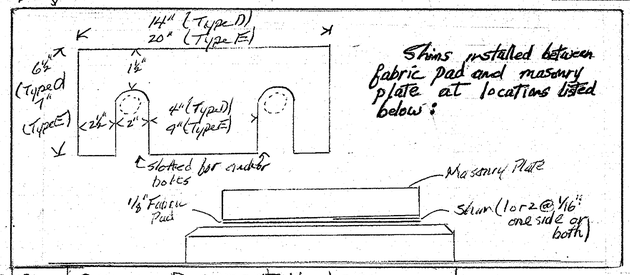

Shims installed between fabric pad and masonry plate at locations listed below:

AB

Pier	Source Document Number
South Abutment	605584-06
North Abutment	605584-53 & 54 & 55
3	605584-04, 605584-05, 605584-07 & 08
4	605584-02
6	605584-09 & 10
7	605584-03
9	605584-11 & 12
10	605584-13 & 14 & 15 & 16
11	605584-17 & 18
13	605584-19
14	605584-20
15	605584-44 & 46
35	605584-49 & 50
36	605584-51 & 52
19	no shim used
20	No Shim used
21	605584-
23	605584-21 & 22
24	605584-36 & 37 & 38 & 39
25	605584-30
27	605584-23 & 31
28	605584-32 & 33 & 34 & 35
29	605584-40 & 41
31	605584-42
32	605584-42A & 43 & 45
33	605584-47 & 48

NOTES

1. THE DETAIL SHOWN ON THIS SHEET SHALL BE CONSTRUCTED FOR NORTHBOUND AND SOUTHBOUND GIRDERS OF SPAN 17 AT THE FOLLOWING LOCATIONS:
   1. BETWEEN FLOORBEAMS 12 AND 13
   2. BETWEEN FLOORBEAMS 16 AND 17

   FLOORBEAMS ARE NUMBERED FROM SOUTH TO NORTH WITH (0) AT PIER 15.
2. ALL NEW STRUCTURAL STEEL SHALL BE PAINTED IN ACCORDANCE WITH SECTION 605 STANDARD SPECIFICATIONS USING THE PAINT SYSTEM SPECIFIED IN SPECIAL PROVISIONS NO. 605522.
3. ADDITION OF WEB STIFFENERS SHALL BE IN ACCORDANCE WITH AND PAID FOR AT THE UNIT PRICE BID FOR ITEM NO. 605584 - "STEEL STRUCTURE REPAIR" IT IS POSSIBLE THAT ADDITIONAL AREAS REQUIRING STRUCTURAL STEEL REHABILITATION MAY BE DISCOVERED ONCE THE EXISTING STEEL IS CLEANED ANY ADDITIONAL STRUCTURAL STEEL REPAIRS WILL ALSO BE PAID FOR AT THE UNIT PRICE BID FOR ITEM NO. 605584. TO REFLECT THIS POSSIBILITY, A CONTINGENCY QUANTITY HAS BEEN ADDED TO THE ESTIMATED QUANTITY FOR THIS ITEM. REFER TO PROJECT NOTES, SHEET 3, FOR QUANTITY CONTINGENCY FACTORS.
4. FASTENER REPLACEMENT SHALL BE IN ACCORDANCE WITH AND PAID FOR AT THE UNIT PRICE BID FOR ITEM NO. 605578 - "REPLACING STEEL BOLTS."

FASTENER REPLACEMENT 14/19

AB FASTENER REPLACEMENT 14/19

CENTURY ENGR., INC.

SUBJECT: 605578
REPLACING STEEL RIVETS / BOLTS

SHEET NO. 1 OF 1
JOB NO. 94-074-11
BY ABDOL DATE
CHK'D DATE
REV DATE

DATE	LOCATION	QUA. (EA)	ACCUM. (EA)
11/19/2004	SPAN 2, GIRDER N4, BOTTOM FLANGE SPLICE	4	4
2/17/2005	SPAN 6, GIRDER S5, BOTTOM FLANGE SPLICE	1	5
2/23/2005	SPAN 8, GIRDER N2, BAY 2, CROSS FRAME 2, TOP CONNECTIONS	4	9
2/23/2005	SPAN 10, GIRDER N1, BAY 1, CROSS FRAME 1, TOP FLANGE SPLICE	1	10
2/23/2005	SPAN 10, GIRDER N1, OUTSIDE FACE, BOTTOM FLANGE SPLICE	1	11
2/23/2005	SPAN 13, GIRDER N2, BAY 2, CROSS FRAME 1, TOP CONNECTIONS	4	15
2/23/2005	SPAN 13, GIRDER N4, BOTTOM FLANGE SPLICE	1	16
2/23/2005	SPAN 11, GIRDER S5, BAY 5, CROSS FRAME 1, TOP/BOTT. CONNECT.	8	24
3/3/2005	PIER 9, GIRDER N4, BAY 3, CROSS FRAME 0, BOTT.CONNECTIONS	2	26
3/3/2005	PIER 9, GIRDER S4, BAY 4, CROSS FRAME 0, BOTT.CONNECTIONS	2	28
9/2/2005	PIER 19, SPAN 20, NB & SB, EXIST. HOLES AT BEARING STIFFENERS	12	40
5/15/2006	PIER 15, SPAN 15, NB & SB, EXIST. HOLES AT BEARING STIFFENERS	12	52
12/1/2006	PIER 37, SPAN 38, NB & SB, EXIST. HOLES AT BEARING STIFFENERS	8	60
	TOTAL		60

DIAMETER	NUMBER
7/8"	1
7/8"	1
7/8"	1
7/8"	3
7/8"	3
7/8"	1
7/8"	1
7/8"	1
7/8"	3
7/8"	4
7/8"	1
7/8"	2
7/8"	1
7/8"	3
	26

SPAN.

CADD DESIGN Y. JIN DESIGN Y. JIN CHKD. B. COPLEY

I:\Trans\0603\700cadd\095TR\PS&E SUBMISSION\ss01.dgn

94-074-11 Tuesday September 23, 2003

PARAPET REPAIR DETAILS

BR. 1-813

CONTRACT	COUNTY	FEDERAL AID PROJECT NO.	SHEET NO.	TOTAL SHTS.
94-074-11	NEW CASTLE	IM-N060(2)	20	45

REHABILITATION AND PAINTING OF BRIDGE 1-813 ON I-495 OVER CHRISTINA RIVER

REVISIONS	

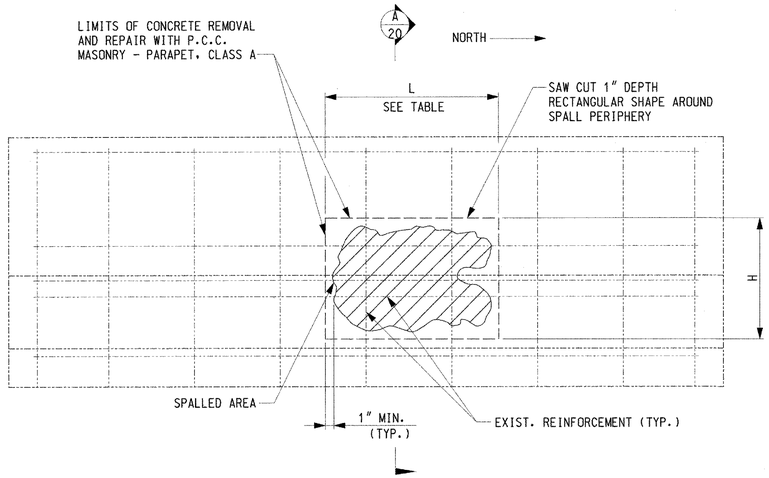

PARAPET REPAIR (5/20) REF. 5,6,7
N.T.S.

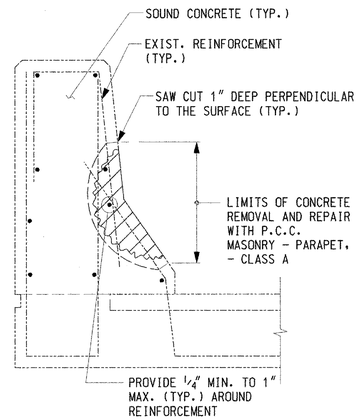

SECTION (A/20)
N.T.S.

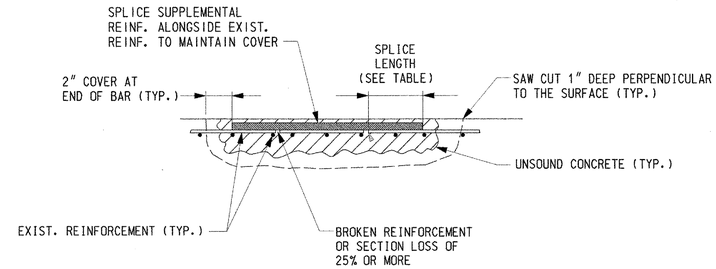

REINFORCEMENT REPAIR DETAIL
N.T.S.

MINIMUM LAP SPLICE	
BAR SIZE	MINIMUM LAP LENGTH
#5	1'-9"
#6	2'-1"

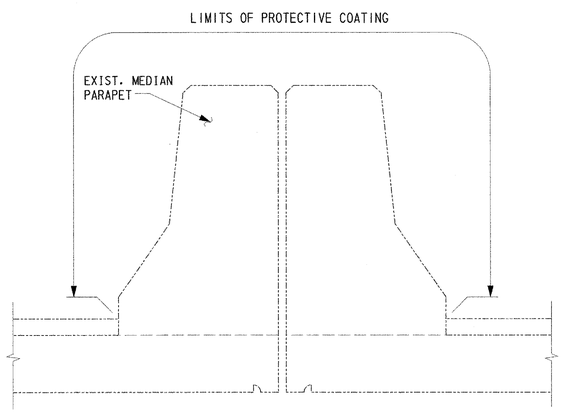

MEDIAN PARAPET

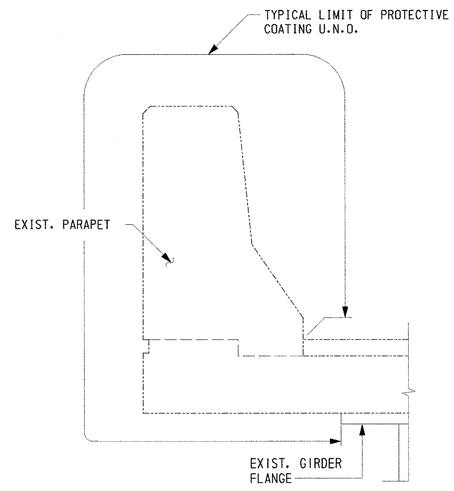

FASCIA PARAPET

PARAPET PROTECTIVE COATING (6/20)
N.T.S.

PARAPET REPAIR LOCATIONS					
SPAN	DIRECTION	PARAPET SIDE	L* (IN)	H** (IN)	NO. OF SPALLS ***
1	SB	EAST PARAPET	48	12	1
3	SB	EAST PARAPET	3	12	26
4	SB	EAST PARAPET	3	12	20
5	SB	EAST PARAPET	7	7	1
5	SB	EAST PARAPET	3	12	20
5	NB	WEST PARAPET	3	12	26
6	SB	WEST PARAPET	3	12	12
8	NB	EAST PARAPET	48	34	1
8	SB	EAST PARAPET	3	12	50
10	SB	EAST PARAPET	3	12	60
11	SB	EAST PARAPET	3	12	50
12	NB	WEST PARAPET	6	12	1
12	NB	EAST PARAPET	36	12	1
13	NB	EAST PARAPET	5	5	1
14	NB	WEST PARAPET	16	8	1
14	NB	EAST PARAPET	14	3	5
15	NB	EAST PARAPET	13	13	2
15	NB	WEST PARAPET	12	12	1
16	NB	WEST PARAPET	12	12	1
16	NB	WEST PARAPET	3	12	50
17	SB	EAST PARAPET	3	12	100
17	NB	WEST PARAPET	3	12	50
18	NB	EAST PARAPET	12	24	1
18	NB	EAST PARAPET	81	34	1
18	SB	EAST PARAPET	3	12	90
18	NB	WEST PARAPET	3	12	50
19	SB	EAST PARAPET	3	12	20
19	NB	WEST PARAPET	3	12	14
20	SB	EAST PARAPET	3	12	10
20	NB	WEST PARAPET	3	12	6
21	SB	EAST PARAPET	3	12	10
22	NB	WEST PARAPET	3	12	11
23	NB	WEST PARAPET	3	12	20
24	SB	EAST PARAPET	14	6	1
24	SB	EAST PARAPET	3	12	4
24	NB	WEST PARAPET	3	12	20
27	SB	EAST PARAPET	36	6	1
27	SB	EAST PARAPET	3	12	9
28	NB	EAST PARAPET	20	5	1
28	SB	WEST PARAPET	72	34	1
29	SB	WEST PARAPET	24	34	1
36	SB	WEST PARAPET	4	4	2
N. APP. SLAB	NB	EAST PARAPET	6	14	1

* - "L" IS THE LENGTH OF THE SPALL TO BE REPAIRED.
** - "H" IS THE HEIGHT OF THE SPALL TO BE REPAIRED.
*** - NO. OF SPALLS IS THE ESTIMATED NUMBER OF REPAIRS WITH APPROXIMATE DIMENSIONS OF L x H THAT WILL BE REQUIRED ALONG THE LENGTH OF THE GIVEN SPAN AND PARAPET.

SEQUENCE OF CONSTRUCTION FOR PARAPET REPAIR

1. SAW CUT TO 1" DEPTH PERPENDICULAR TO THE SURFACE AROUND THE REPAIR AREA.
2. CHIP AND REMOVE ALL UNSOUND CONCRETE THAT IS LOCATED IN AREAS WITH SPALLS, CRACKS, OR DELAMINATION.
3. CLEAN AND INSPECT ALL REBAR. REPAIR ANY BAR WITH GREATER THAN 25% SECTION LOSS AS SHOWN IN THE REINFORCEMENT REPAIR DETAIL.
4. FORM CONCRETE IN REPAIR AREA.
5. ALLOW CONCRETE IN REPAIR AREA TO SET FOR 7 DAYS.
6. SEAL AND APPLY PROTECTIVE COATING TO PARAPET.
7. SEE TABLE FOR PARAPET REPAIR LOCATIONS.

PARAPET REPAIR NOTES

1. LOCATIONS, DIMENSIONS AND NUMBER OF SPALLS SHOWN IN 'PARAPET REPAIR LOCATION' TABLE ARE BASED ON FIELD INSPECTION NOTES AND SHOULD BE CONSIDERED APPROXIMATE. THE CONTRACTOR WILL SOUND THE ENTIRE LENGTH OF ALL PARAPETS TO IDENTIFY AND MARK AREAS FOR REPAIR, THE CONTRACTOR SHALL ALLOW TIME IN HIS SCHEDULE FOR THIS WORK AND SHALL PROVIDE MAINTENANCE OF TRAFFIC FOR THE SOUNDING OPERATION.
2. ALL WORK FOR PARAPET REPAIR INCLUDING SAW CUTTING SHALL BE IN ACCORDANCE WITH AND PAID FOR AT THE UNIT PRICE BID FOR THE ACTUAL QUANTITY APPROVED BY THE ENGINEER FOR THE FOLLOWING ITEMS:

   602586 - "REHABILITATION OF CONCRETE STRUCTURES"
   603000 - "BAR REINFORCEMENT"

PARAPET PROTECTIVE COATING NOTES

1. ALL PARAPETS ARE TO RECEIVE PROTECTIVE COATING FOR THE ENTIRE LENGTH OF THE BRIDGE.
2. COLOR OF PARAPET PROTECTIVE COATING SHALL BE FEDERAL STANDARD 595B COLOR NO. 37722.
3. ALL WORK FOR PARAPET PROTECTIVE COATING SHALL BE IN ACCORDANCE WITH AND PAID FOR UNDER ITEM NO. 602646 - "SILICONE ACRYLIC CONCRETE SEALER."

CADD DESIGN K. HUFF DESIGN B. COPLEY CHKD. B. COPLEY

I:\Trans\0603\T60ccdd\T09STR\PS&E SUBMISSION\M010.dgn

TRANSVERSE JOINT SEALS

BR. 1-813

CONTRACT	COUNTY	FEDERAL AID PROJECT NO.	SHEET NO.	TOTAL SHTS.
94-074-11	NEW CASTLE	IM-N060(2)	21	45

REHABILITATION AND PAINTING OF BRIDGE 1-813 ON I-495 OVER CHRISTINA RIVER

REVISIONS

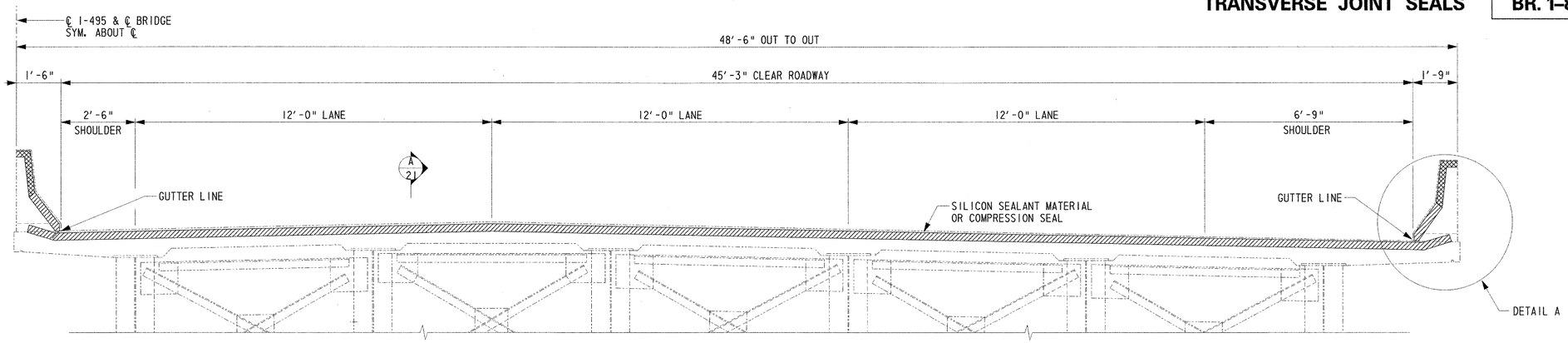

TRANSVERSE JOINT SEALS (15/21)
SCALE: 1/2" = 1'-0"

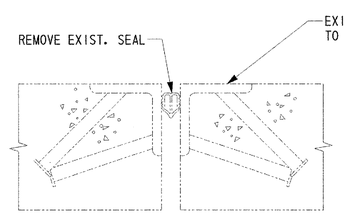

EXISTING MODULE SEAL (B)
AT S. ABUT, PIER 37 AND N. ABUT.

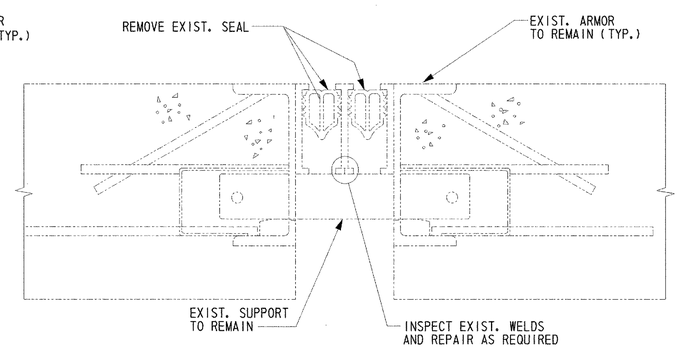

EXISTING MODULAR SEAL (2M)
AT PIERS 3, 7, 10, 24, 28, 32 AND 36

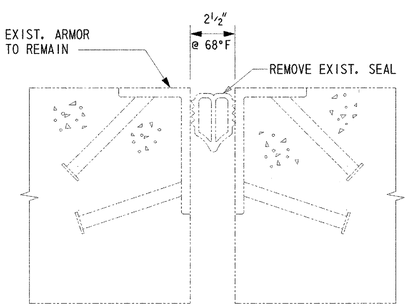

EXISTING MODULE SEAL (H)
AT PIERS 14, 19, AND 20

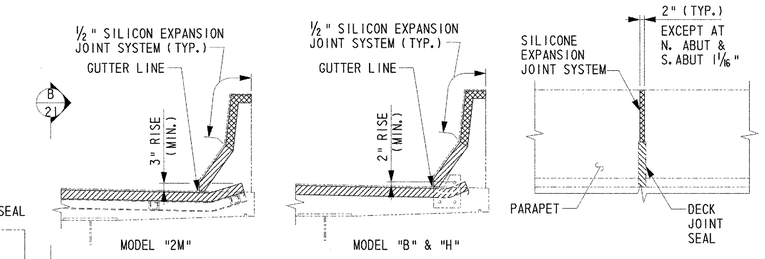

DETAIL A

SECTION (B/21)

TYPICAL JOINT DEVELOPMENT
AT BARRIER RAIL
SCALE: 3/8" = 1'-0"

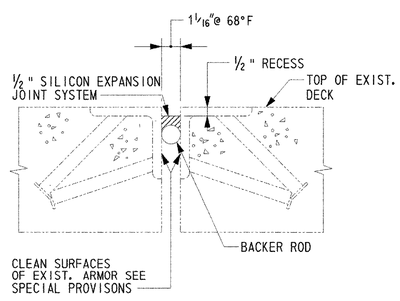

SEAL AT S. ABUT,
PIER 37 AND N. ABUT.

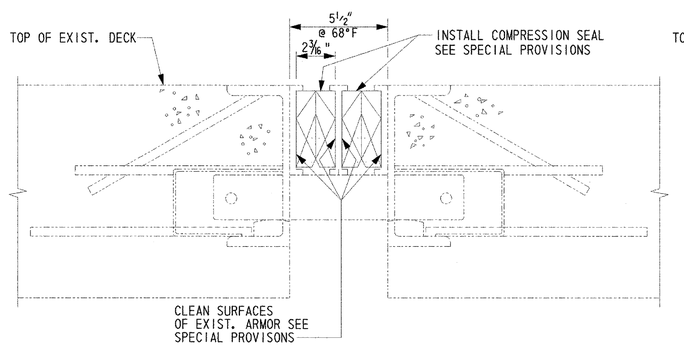

SEAL - AT PIERS
3, 7, 10, 24, 28, 32 AND 36

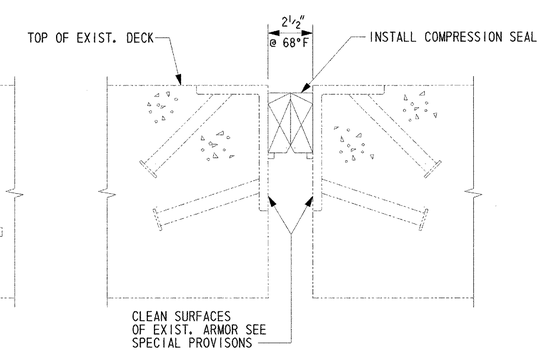

SEAL - AT PIERS
14, 19, AND 20

SECTION (A/21)
SCALE: 3" = 1'-0"

JOINT REPLACEMENT NOTES

1. FOR MAINTENANCE OF TRAFFIC ON I-495 DURING JOINT REPLACEMENT, SEE SHEETS 39 TO 43 AND THE SPECIAL PROVISIONS.
2. THE SILICON CAULKING MATERIAL SHALL BE A LOW MODULUS, ONE COMPONENT COMPOUND UTILIZING A BONDING AGENT (AS RECOMMENDED BY THE MANUFACTURER) AND SHALL CONFORM TO THE FOLLOWING WHEN TESTED AT 73+/- 3°F AND 45-55 PERCENT HUMIDITY:

SHORE A HARDNESS, AT 7 DAYS (ASTM D 2240)	10-25
TENSILE STRENGTH AT 150% ELONGATION (ASTM D 412 DIE C)	45psi
MIN. ELONGATION (ASTM D 412 DIE C)	700%
MIN. ADHESION IN PEEL (FED. SPEC. TT-S-00230)	20 lb/in.
MAX. FLOW	0.3
TACK-FREE TIME	20-75 MINUTES

3. THE JOINT BACKER ROD SHALL BE CLOSED CELL POLYSTYRENE.
4. THE COMPRESSION SEAL SHALL BE AS PER MANUFACTURER'S RECOMMENDATION.
5. SUGGESTED METHOD TO REMOVE EXISTING COMPRESSION SEAL. CUT SEAL IN HALF ALONG THE CENTERLINE OF THE EXPANSION JOINT. REMOVE THE EXISTING SEAL IN ITS ENTIRETY.
6. CARE SHALL BE TAKEN NOT TO DAMAGE THE EXISTING JOINT ARMOR DURING THE REMOVAL OPERATIONS. ANY DAMAGE SHALL BE REPAIRED AT THE CONTRACTOR'S EXPENSE PRIOR TO INSTALLATION OF THE NEW JOINT MATERIAL.
7. PRIOR TO INSTALLING THE SILICON SEALANT MATERIAL AND COMPRESSION SEAL CLEAN STEEL TO SP10. PREPARE THE ARMOR ANGLES BY THOROUGHLY CLEANING ANY DIRT, OIL OR DEBRIS AND PRIMING STEEL IN ACCORDANCE WITH THE MANUFACTURER'S RECOMMENDATIONS AND SPECIAL PROVISIONS.
8. INSTALL THE JOINT SEAL USING THE METHOD AND TOOLS RECOMMENDED BY THE MANUFACTURER. A MANUFACTURER REPRESENTATIVE SHALL BE PRESENT AT THE START OF WORK.
9. WORK FOR X.J.S. SYSTEM SHALL BE IN ACCORDANCE WITH AND PAID FOR UNDER ITEM NO. 605692 - "SILICONE JOINT SEAL". WORK FOR COMPRESSION SEAL SHALL BE IN ACCORDANCE WITH AND PAID FOR UNDER ITEM No. 605572 - "JOINT REPAIR (COMPRESSION SEAL), 4"".

CADD DESIGN A. RIGATO DESIGN B. COPLEY CHKD. B. COPLEY

I:\Trans\0603\700cadd\709STRP\S&E SUBMISSION\MD11jeene.dgn

DRAINAGE TROUGH DETAILS AND LONGITUDINAL JOINT SEAL

BR. 1-813

CONTRACT	COUNTY	FEDERAL AID PROJECT NO.	SHEET NO.	TOTAL SHTS.
94-074-11	NEW CASTLE	IM-N060(2)	22	45

REHABILITATION AND PAINTING OF BRIDGE 1-813 ON I-495 OVER CHRISTINA RIVER

REVISIONS

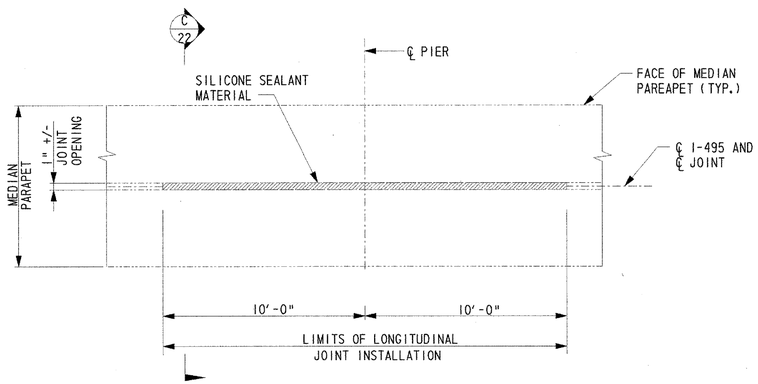

PARTIAL PLAN AT CONTINUOUS DECK
N. T. S.

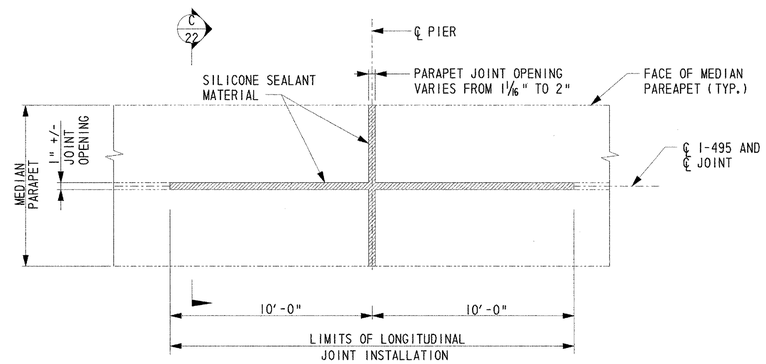

PARTIAL PLAN AT DECK JOINT
N. T. S.

LONGITUDINAL JOINT SEALS (3/22)
N. T. S.

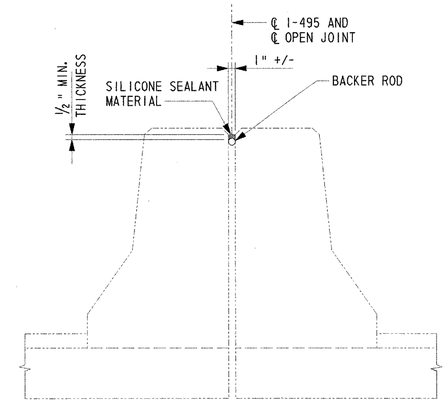

MEDIAN PARAPET - SECTION (C/22)
N. T. S.

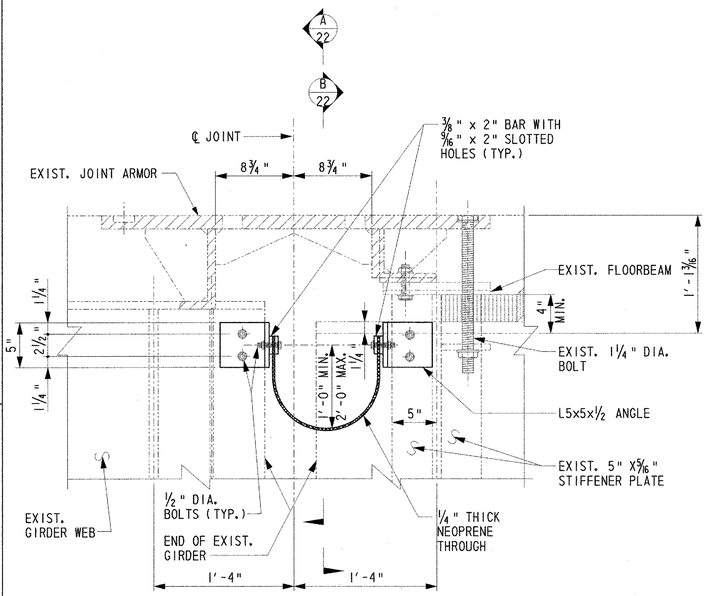

DRAINAGE TROUGH (18/22) REF. 6
SCALE: 1 1/2"=1'-0"

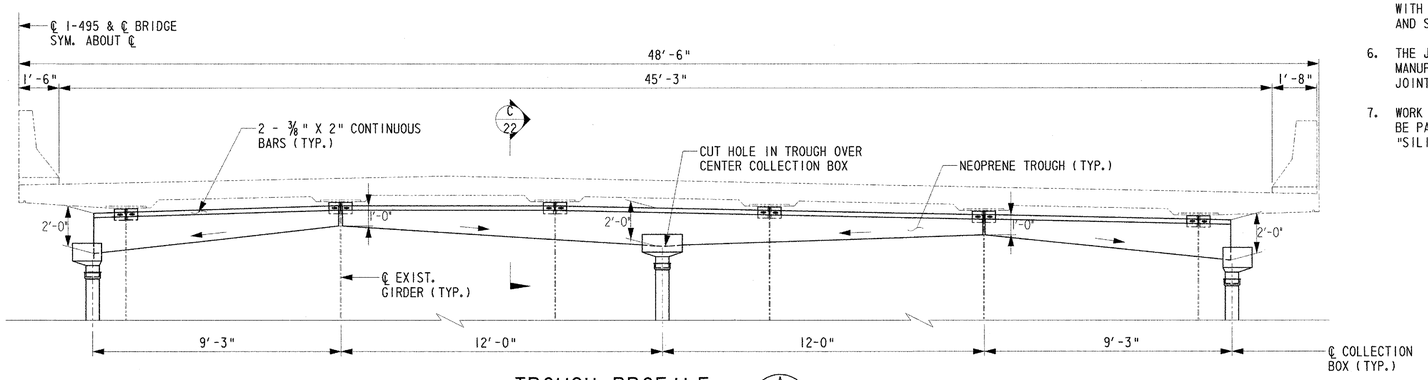

TROUGH PROFILE (A/22)
SCALE: 3/8"=1'-0"

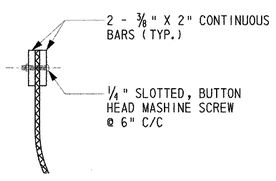

CONNECTION TO TROUGH (C/22)
SCALE: 3"=1'-0"

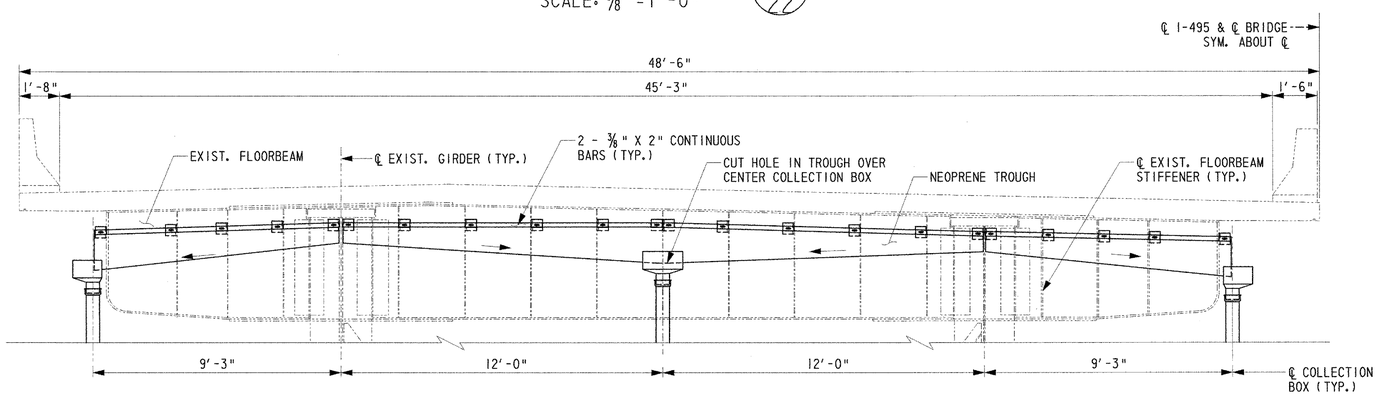

TROUGH PROFILE (B/22)
SCALE: 3/8"=1'-0"

LONGITUDINAL JOINT SEAL NOTES

1. THIS WORK WILL BE DONE OVER ALL PIERS AND ABUTMENT SUPPORTS.
2. FOR MAINTENANCE OF TRAFFIC ON I-495 DURING JOINT INSTALLATION, SEE SHEETS 42 TO 46 AND THE SPECIAL PROVISIONS.
3. INSTALL THE JOINT SEAL USING THE METHOD AND TOOLS RECOMMENDED BY THE MANUFACTURER.
4. THE SILICONE CAULKING MATERIAL SHALL BE AS SPECIFIED IN JOINT REPLACEMENT NOTES ON SHEET 21.
5. PRIOR TO INSTALLING SILICONE SEALANT MATERIAL, PREPARE THE OPENING BY THOROUGHLY CLEANING ANY DIRT, OIL OR DEBRIS AND PRIMING CONCRETE IN ACCORDANCE WITH THE MANUFACTURERS RECOMMENDATIONS AND SPECIAL PROVISIONS
6. THE JOINT BACKER ROD SHALL BE AS PER MANUFACTURER'S RECOMMENDATION FOR JOINT OPENINGS.
7. WORK PERFORMED UNDER THIS ITEM SHALL BE PAID FOR UNDER ITEM NO. 605692 - "SILICONE JOINT SEAL."

NOTES

1. FOR DRAINAGE TROUGH NOTES, SEE SHEET 23.
2. FOR COLLECTION BOX AND PIPE DETAILS, SEE SHEET 23.

CADD DESIGN A. BROWN DESIGN Y. JIN CHKD. B. COPLEY

J:\Trans\0603\700cadd\709STR\PS&E SUBMISSION\FJ01.dgn

COLLECTION BOX DETAILS

BR. 1-813

CONTRACT	COUNTY	FEDERAL AID PROJECT NO.	SHEET NO.	TOTAL SHTS.
94-074-11	NEW CASTLE	IM-N060(2)	23	45

REHABILITATION AND PAINTING OF BRIDGE 1-813 ON I-495 OVER CHRISTINA RIVER

REVISIONS	

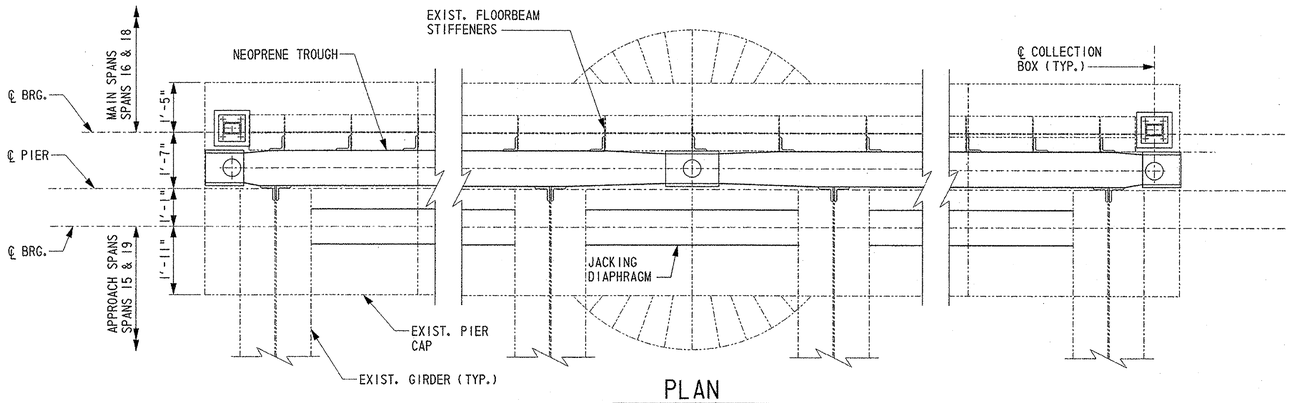

PLAN
SCALE: 1/2"=1'-0"

DRAINAGE TROUGH NOTES

1. DRAINAGE TROUGH INSTALLATION IS REQUIRED BELOW FINGER JOINTS AT PIERS 15 AND 18.
2. PIPES SHALL BE NEOPRENE PIPES AND FITTINGS SHALL BE ALLOY STEEL ASTM A53.
3. PIPE HANGERS, CLAMPS, U-BOLTS, AND BOLTS SHALL BE GALVANIZED TO MEET THE REQUIREMENTS OF ASTM A153.
4. DRAINAGE TROUGH SHALL BE NEOPRENE AND ALL DRAINAGE TROUGH FASTENER HARDWARE (PLATES, ANGLES, BOLTS, NUTS, AND WASHERS) SHALL BE STAINLESS STEEL.
5. ALL COLLECTION BOX SUPPORT STEEL AND FASTENER HARDWARE SHALL BE GALVANIZED TO MEET THE REQUIREMENTS OF ASTM A153.
6. ALL DIMENSIONS AND DETAILS SHOWN ARE BASED ON EXISTING AS BUILT DRAWINGS AND SHALL BE VERIFIED IN THE FIELD BY THE CONTRACTOR PRIOR TO FABRICATION. THE CONTRACTOR SHALL SUBMIT FIELD VERIFICATION NOTES AND SKETCHES WITH THE DRAINAGE SHOP DRAWINGS.
7. HOLES IN NEOPRENE TROUGH SHALL BE DRILLED IN THE FIELD.
8. PROPOSED NEOPRENE PIPES SHALL BE PAID FOR UNDER ITEM NO. 605682 - "BRIDGE DRAINAGE SYSTEM-FLEXIBLE PIPING." ALL PIPE FITTINGS AND SUPPORT SYSTEM SHALL BE PAID FOR UNDER ITEM NO. 605681 - "BRIDGE DRAINAGE SYSTEM-FITTINGS." BRIDGE JOINT DRAINAGE TROUGH AND FITTINGS WILL BE PAID FOR UNDER ITEM NO. 605670 - "BRIDGE JOINT DRAIN TROUGH."

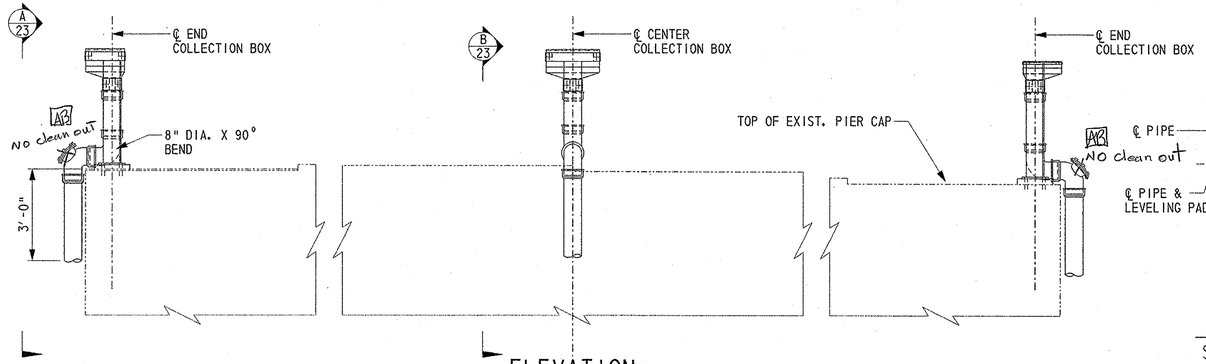

ELEVATION
SCALE: 1/2"=1'-0"

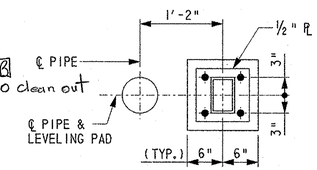

SECTION C/23
SCALE: 1"=1'-0"

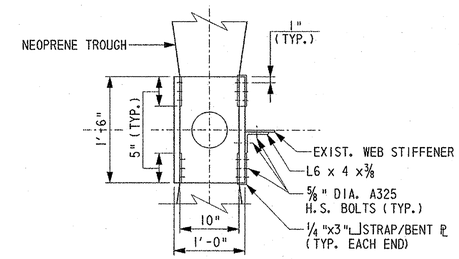

CENTER COLLECTION BOX PLAN
SCALE: 1"=1'-0"

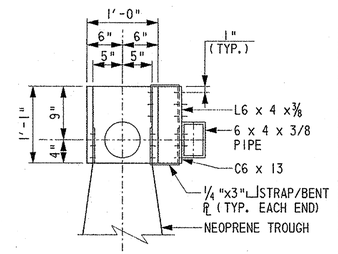

END COLLECTION BOX PLAN
SCALE: 1"=1'-0"

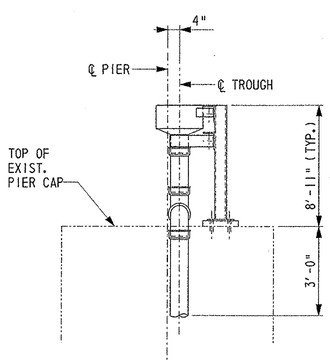

SECTION A/23
N.T.S.

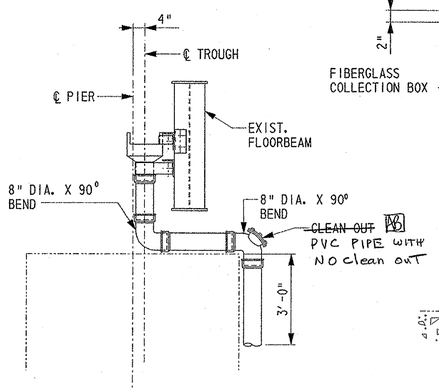

SECTION B/23
N.T.S.

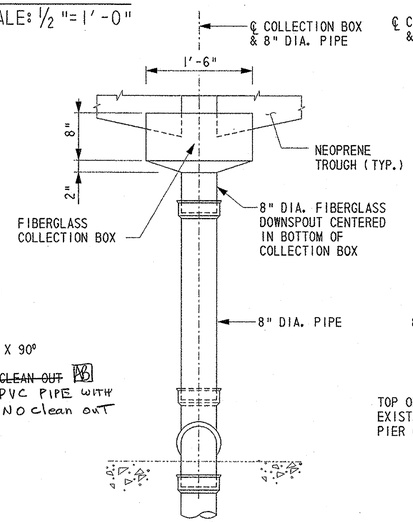

ELEVATION

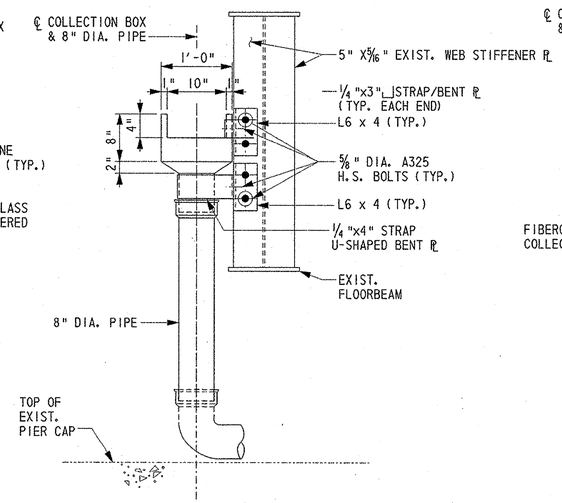

SIDE VIEW

CENTER COLLECTION BOX DETAILS
SCALE: 1"=1'-0"

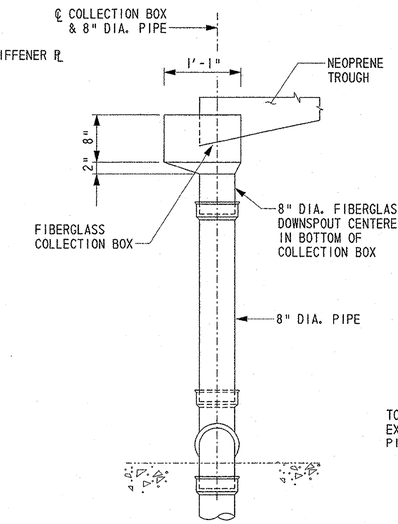

ELEVATION

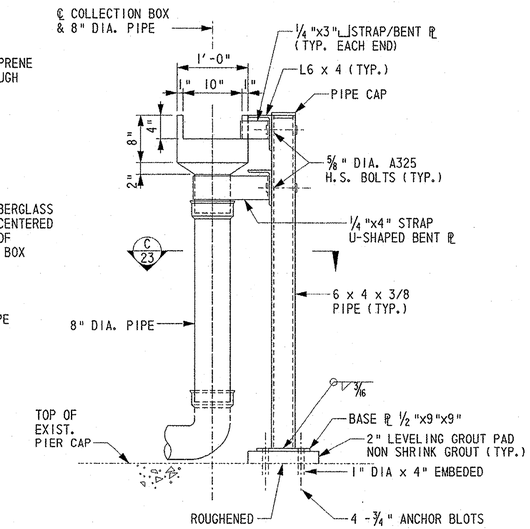

SIDE VIEW

END COLLECTION BOX DETAILS
SCALE: 1"=1'-0"

CADD DESIGN A. BROWN DESIGN Y. JIN CHKD. B. COPLEY

J:\Trans\0603\700cadd\709STR\PS&E SUBMISSION\FJ02.dgn

94-074-11 Tuesday, September 23, 2003

REHABILITATION AND PAINTING OF BRIDGE 1-813 ON I-495 OVER CHRISTINA RIVER

REVISIONS	

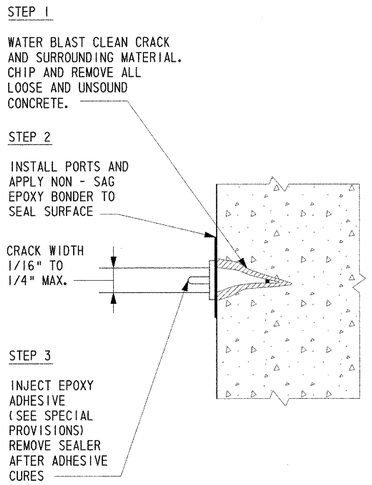

EPOXY INJECTION CRACK REPAIR (8/24) REF. 5, 6, 7
N.T.S.

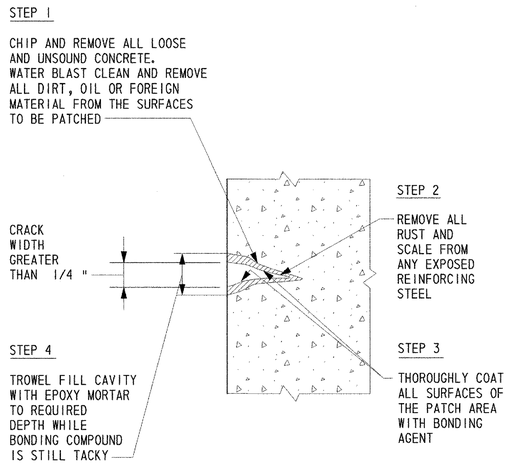

EPOXY NON-SAG MORTAR PATCH CRACK REPAIR DETAIL (9/24) REF. 5, 6, 7
N.T.S.

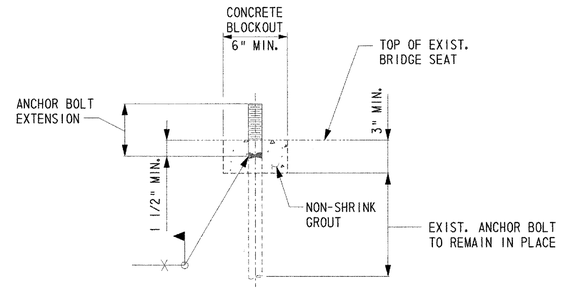

ANCHOR BOLT REPAIR DETAIL (C/24)
N.T.S.

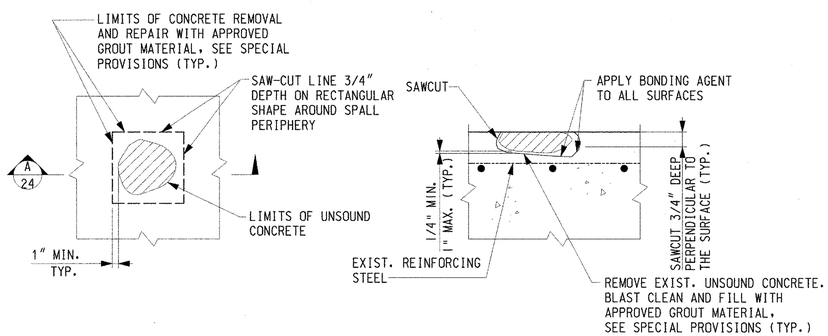

PLAN
N.T.S.

SECTION (A/24)
N.T.S.

SHALLOW SPALL REPAIR

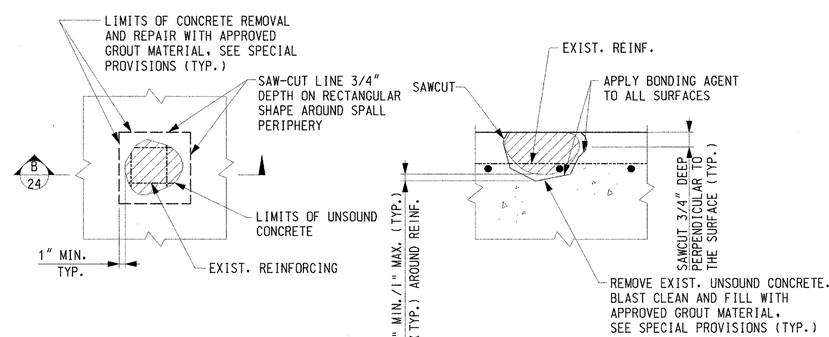

PLAN
N.T.S.

SECTION (B/24)
N.T.S.

DEEP SPALL REPAIR

SPALL AND DELAMINATION REPAIR (10/24) REF. 5, 6, 7
N.T.S.

ANCHOR BOLT REPAIR PROCEDURES

1. PROVIDE A 6" SQUARE CONCRETE BLOCKOUT AROUND THE PERIMETER OF EXISTING ANCHOR BOLT.
2. REMOVE EXISTING ANCHOR BOLT TO THE LIMIT SHOWN. WELD PROPOSED ANCHOR BOLT EXTENSION TO EXISTING ANCHOR BOLT. INSPECT THE WELDS PRIOR TO PAINTING.
3. FILL CONCRETE BLOCKOUT WITH NON-SHRINK GROUT.
4. ALL WORK FOR ANCHOR BOLT REPAIRS SHALL BE IN ACCORDANCE WITH AND PAID FOR AT THE UNIT PRICE BID FOR ITEM NO. 605655 - "BEARING ANCHOR BOLT REPLACEMENT."

CRACK REPAIR NOTES

1. FOR LOCATION OF CRACK REPAIRS SEE SHEETS 26-29. CRACK DIMENSIONS GIVEN IN TABLES ARE ONLY APPROXIMATE.
2. CRACKS LESS THAN 1/16 " WIDE SHALL NOT BE FILLED.
3. CRACKS LESS THAN 1/4 " WIDE SHALL BE REPAIRED BY THE EPOXY INJECTION METHOD. CRACKS WIDER THAN 1/4 " SHALL BE REPAIRED BY THE EPOXY NON-SAG MORTAR PATCH METHOD.
4. ADDITIONAL AREAS MAY NEED REPAIRS AS DIRECTED BY THE ENGINEER AND SHALL BE DONE AT THE CONTRACTOR'S UNIT BID PRICE FOR TYPE OF REPAIR REQUIRED. SEE PROJECT NOTES FOR CONTINGENCY.
5. THE CONTRACTOR SHOULD ASSIST THE INSPECTION TEAM WITH EQUIPMENT AND OPERATORS TO ACCESS AREAS FOR INSPECTION AND ESTABLISHMENT OF LIMITS PRIOR TO REPAIR.
6. ALL WORK FOR REPAIR CODE 8 SHALL BE IN ACCORDANCE WITH AND PAID FOR AT THE UNIT PRICE BID FOR ITEM NO. 602514 - "REPAIR OF CONCRETE SUBSTRUCTURE BY EPOXY INJECTION." ALL WORK FOR REPAIR CODE 9 SHALL BE IN ACCORDANCE WITH AND PAID FOR AT THE UNIT PRICE BID FOR ITEM NO. 602586 - "REHABILITATION OF CONCRETE STRUCTURE".

SPALL REPAIR PROCEDURE

1. SAW CUT TO DEPTH OF 2" AROUND PERIMETER OF AREA TO BE REPAIRED.
2. CHIP AND REMOVE ALL UNSOUND AND DETERIORATED CONCRETE WITHIN SAW CUT LIMITS.
3. WHERE HALF THE REINFORCING STEEL IS EXPOSED, 1" OF CONCRETE SHALL BE REMOVED AROUND THE BAR. EXTREME CARE SHALL BE TAKEN SO THAT REINFORCEMENT STEEL IS NOT CUT OR DAMAGED.
4. REMOVE ALL DIRT, OIL OR OTHER FOREIGN MATERIAL FROM SURFACE TO BE PATCHED.
5. REMOVE ALL RUST AND SCALE FROM ANY EXPOSED REINFORCING STEEL. REPAIR ANY BAR WITH GREATER THAN 50% SECTION LOSS AS SHOWN IN THE REINFORCEMENT REPAIR DETAIL ON SHEET 20.
6. THOROUGHLY COAT ALL SURFACES OF THE PATCH AREA WITH BONDING AGENT BEFORE PLACING MORTAR.
7. FILL CAVITY WITH EPOXY MORTAR TO REQUIRED DEPTH WHILE BONDING COMPOUND IS STILL TACKY.

SPALL REPAIR NOTES

1. FOR LOCATION OF SPALL REPAIRS SEE SHEETS 26-29. SPALL DIMENSIONS GIVEN IN TABLE ARE ONLY APPROXIMATE.
2. ADDITIONAL AREAS MAY NEED REPAIRS AS DIRECTED BY THE ENGINEER AND SHALL BE DONE AT THE CONTRACTOR'S UNIT BID PRICE FOR TYPE OF REPAIR REQUIRED. SEE PROJECT NOTES FOR CONTINGENCY.
3. THE CONTRACTOR SHOULD ASSIST THE INSPECTION TEAM WITH EQUIPMENT AND OPERATORS TO ACCESS AREAS FOR INSPECTION AND ESTABLISHMENT OF LIMITS PRIOR TO REPAIR.
4. ALL WORK FOR REPAIR CODE 10 INCLUDING SAW CUTTING SHALL BE IN ACCORDANCE WITH AND PAID FOR AT THE UNIT PRICE BID FOR ITEM NO. 602586 - "REHABILITATION OF CONCRETE STRUCTURE."

CONCRETE REPAIR DETAILS-2

BR. 1-813

CONTRACT	COUNTY	FEDERAL AID PROJECT NO.	SHEET NO.	TOTAL SHTS.
94-074-11	NEW CASTLE	IM-N060(2)	25	45

100% REVIEW SUBMISSION JUNE 20, 2003
NOT FOR CONSTRUCTION

REHABILITATION AND PAINTING OF BRIDGE 1-813 ON I-495 OVER CHRISTINA RIVER

REVISIONS

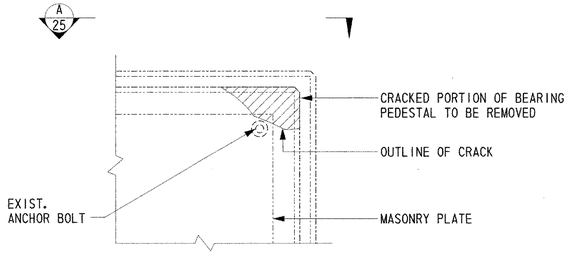

PARTIAL PLAN - TYPICAL CRACKED BEARING PEDESTAL

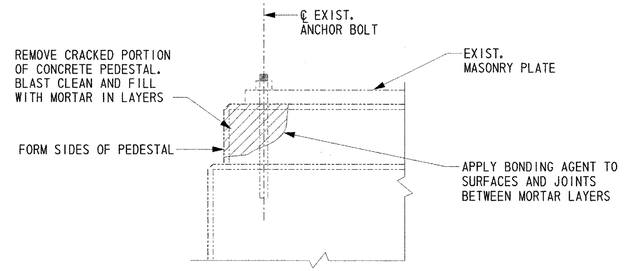

SECTION A/25
N.T.S.

CONCRETE PEDESTAL REPAIR 11/25 REF. 5, 6, 7
N.T.S.

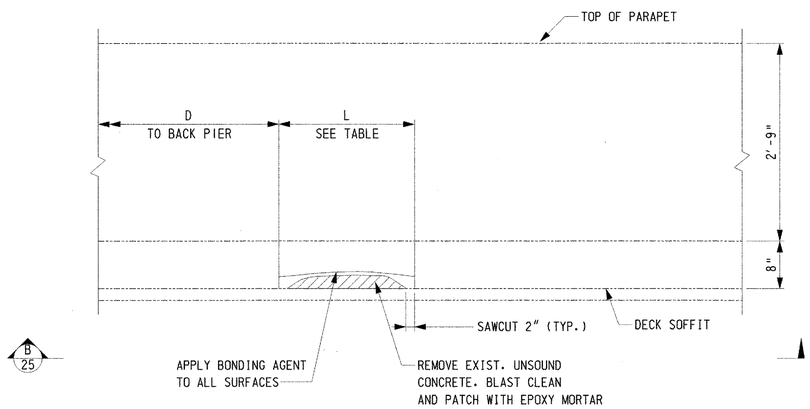

ELEVATION
N.T.S.

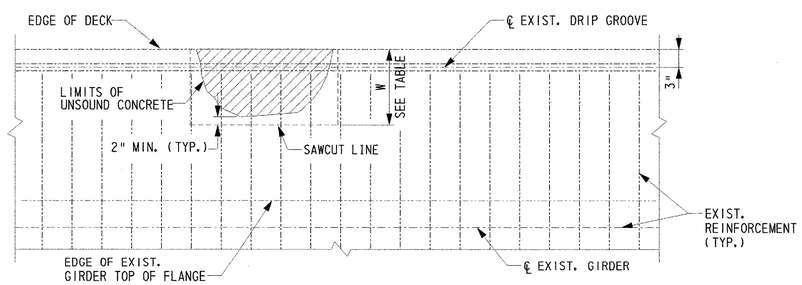

PLAN B/25
N.T.S.

DECK SOFFIT SPALL AND DELAMINATION REPAIR 7/25 REF. 5, 6, 7
N.T.S.

DECK OVERHANG SOFFIT REPAIR LOCATIONS

SPAN NUMBER	DIRECTION	SOFFIT SIDE	D* (FT)	L** (IN)	W*** (IN)	SPAN NUMBER	DIRECTION	SOFFIT SIDE	D* (FT)	L** (IN)	W*** (IN)
1	SB	EAST SOFFIT	16	240	18	16	NB	WEST SOFFIT	23	36	36
1	SB	EAST SOFFIT	32	120	6	18	SB	EAST SOFFIT	177	36	36
1	NB	EAST SOFFIT	32	120	12	18	NB	WEST SOFFIT	177	36	36
2	SB	WEST SOFFIT	0	24	6	18	NB	EAST SOFFIT	200	72	48
3	SB	WEST SOFFIT	32	60	4	23	NB	EAST SOFFIT	89	18	36
3	SB	WEST SOFFIT	55	60	4	23	SB	WEST SOFFIT	109	12	12
3	SB	WEST SOFFIT	0	240	12	24	SB	WEST SOFFIT	0	12	12
3	SB	EAST SOFFIT	65	6	12	27	NB	WEST SOFFIT	89	48	12
3	SB	WEST SOFFIT	65	6	12	28	NB	EAST SOFFIT	35	18	18
3	NB	EAST SOFFIT	65	6	18	28	SB	WEST SOFFIT	109	12	12
4	NB	EAST SOFFIT	0	6	18	28	NB	EAST SOFFIT	109	12	12
4	SB	EAST SOFFIT	0	6	12	29	SB	WEST SOFFIT	0	12	12
4	SB	WEST SOFFIT	0	6	12	29	NB	EAST SOFFIT	0	12	12
4	SB	WEST SOFFIT	0	888	12	32	NB	WEST SOFFIT	49	48	12
5	SB	WEST SOFFIT	0	24	6	32	SB	WEST SOFFIT	98	12	12
5	NB	EAST SOFFIT	90	120	42	32	NB	EAST SOFFIT	98	6	12
6	SB	WEST SOFFIT	0	24	12	33	SB	WEST SOFFIT	0	12	12
6	SB	WEST SOFFIT	20	36	6	33	NB	EAST SOFFIT	0	12	12
6	SB	WEST SOFFIT	55	96	10	33	NB	WEST SOFFIT	49	48	18
6	SB	WEST SOFFIT	69	14	6	33	NB	EAST SOFFIT	98	6	12
7	NB	EAST SOFFIT	22	12	48	34	NB	EAST SOFFIT	0	6	12
7	SB	WEST SOFFIT	98	8	18	34	NB	EAST SOFFIT	85	18	9
7	SB	EAST SOFFIT	98	24	24	34	NB	EAST SOFFIT	98	48	18
7	NB	EAST SOFFIT	98	12	12	35	NB	EAST SOFFIT	49	24	24
8	SB	WEST SOFFIT	0	8	18	36	SB	WEST SOFFIT	10	12	12
8	SB	EAST SOFFIT	0	24	24	36	NB	EAST SOFFIT	27	12	12
8	NB	EAST SOFFIT	0	12	12	36	NB	EAST SOFFIT	49	72	18
9	SB	WEST SOFFIT	112	12	12	36	NB	EAST SOFFIT	98	12	12
9	NB	EAST SOFFIT	112	9	18	36	NB	WEST SOFFIT	98	12	12
10	SB	WEST SOFFIT	0	12	12	36	SB	EAST SOFFIT	98	6	12
10	NB	EAST SOFFIT	0	9	18	37	NB	EAST SOFFIT	0	12	12
13	SB	WEST SOFFIT	109	12	36	37	NB	WEST SOFFIT	0	12	12
13	SB	EAST SOFFIT	109	18	36	37	SB	EAST SOFFIT	0	6	12
14	SB	WEST SOFFIT	0	12	36	37	SB	EAST SOFFIT	100.5	18	36
14	SB	EAST SOFFIT	0	18	36	38	SB	WEST SOFFIT	14	60	18
15	NB	EAST SOFFIT	132	72	18	38	SB	WEST SOFFIT	14	120	4
15	NB	WEST SOFFIT	132	72	18	38	SB	EAST SOFFIT	15	24	18

* - "D" IS THE DISTANCE IN THE SPAN FROM THE BACK PIER TO THE REPAIR AREA.
** - "L" IS THE LENGTH OF THE DECK AREA TO BE REPAIRED.
*** - "W" IS THE WIDTH OF THE DECK AREA TO BE REPAIRED.

CONCRETE PEDESTAL REPAIR NOTES

1. REMOVE CRACKED PORTION OF BEARING PEDESTAL USING MANUAL TOOLS OR ELECTRIC CHIPPING HAMMER. PNEUMATIC POWERED HAMMER SHALL NOT BE USED FOR THIS OPERATION. CARE SHALL BE TAKEN SO THAT THE MASONRY PLATE, ANCHOR BOLT OR ANY EXPOSED REBAR IS NOT DAMAGED, OR THE BOND BETWEEN SOUND CONCRETE AND THE ANCHOR BOLT OR REBAR IS NOT DISTURBED IN THE PROCESS.
2. REMOVE ANY ADDITIONAL UNSOUND CONCRETE AS DIRECTED BY THE ENGINEER.
3. THE CONCRETE SURFACE AND EXPOSED REBAR OR ANCHOR BOLT SHALL BE CLEANED OF ANY DIRT, OIL, RUST OR ANY OTHER FOREIGN MATERIALS.
4. SIDES OF THE AREA TO BE REPAIRED SHALL BE FORMED TO RETAIN MORTAR AND RETURN PEDESTAL TO IT'S ORIGINAL LINES AND DIMENSIONS, INCLUDING CHAMFERED EDGES.
5. THOROUGHLY COAT ALL SURFACES OF THE AREA TO BE REPAIRED WITH BONDING AGENT.
6. FORM SHALL BE FILLED WITH EPOXY MORTAR UP TO 1" BELOW THE MASONRY PLATE. THE TOP 1" OF MORTAR SHALL BE PLACED ONLY AFTER THE LOWER PORTION OF THE MORTAR PATCH HAS REACHED A FINAL CURE. APPLY BONDING AGENT PRIOR TO PLACING FINAL PORTION OF MORTAR PATCH.
7. MORTAR EXTENDING UP THE SIDES OF THE MASONRY PLATE SHALL BE CUT BACK LEVEL WITH THE BOTTOM OF THE PLATE BEFORE IT ATTAINS A FINAL SET.
8. ALL WORK FOR REPAIR CODE 11 SHALL BE IN ACCORDANCE WITH AND PAID FOR AT THE UNIT PRICE BID FOR ITEM NO. 602631 - "PEDESTAL SPALL REPAIR."

DECK SOFFIT SPALL AND DELAMINATION REPAIR NOTES

1. LOCATIONS AND DIMENSIONS SHOWN IN TABLE ARE BASED ON FIELD INSPECTION NOTES AND SHOULD BE CONSIDERED APPROXIMATE. THE CONTRACTOR SHALL PERFORM REPAIRS TO THE ACTUAL LIMITS NECESSARY AS DIRECTED BY THE ENGINEER. THE CONTRACTOR SHOULD ASSIST THE INSPECTION TEAM WITH EQUIPMENT AND OPERATORS TO ACCESS AREAS FOR INSPECTION AND ESTABLISHMENT OF LIMITS PRIOR TO REPAIR.
2. SAW CUT TO A DEPTH OF 2" AROUND PERIMETER OF AREA TO BE REPAIRED.
3. CHIP AND REMOVE ALL UNSOUND AND DETERIORATED CONCRETE WITHIN SAW CUT LIMITS.
4. WHERE HALF THE REINFORCING STEEL IS EXPOSED, 1" OF CONCRETE SHALL BE REMOVED AROUND THE BAR. EXTREME CARE SHALL BE TAKEN SO THAT REINFORCEMENT STEEL IS NOT CUT OR DAMAGED.
5. REMOVE ALL DIRT, OIL OR OTHER FOREIGN MATERIAL FROM SURFACE TO BE PATCHED.
6. REMOVE ALL RUST AND SCALE FROM ANY EXPOSED REINFORCING STEEL.
7. THOROUGHLY COAT ALL SURFACES OF THE PATCH AREA TO BE REPAIRED WITH BONDING AGENT BEFORE REPLACING MORTAR.
8. FILL CAVITY WITH EPOXY MORTAR TO REQUIRED DEPTH WHILE BONDING COMPOUND IS STILL TACKY.
9. ALL WORK FOR REPAIR CODE 7 SHALL BE IN ACCORDANCE WITH AND PAID FOR AT THE UNIT PRICE BID FOR ITEM NO. 602586 - "REHABILITATION OF CONCRETE STRUCTURE."

CADD DESIGN A. BROWN DESIGN B. COPLEY CHK'D. B. COPLEY

J:\Trans\0603\700code\709STR\PS&E SUBMISSION\M016.dgn

SUBSTRUCTURE REPAIR SCHEDULE – 1

BR. 1–813

CONTRACT	COUNTY	FEDERAL AID PROJECT NO.	SHEET NO.	TOTAL SHTS.
94-074-11	NEW CASTLE	IM-N060(2)	26	45

REHABILITATION AND PAINTING OF BRIDGE 1–813 ON I–495 OVER CHRISTINA RIVER

REVISIONS

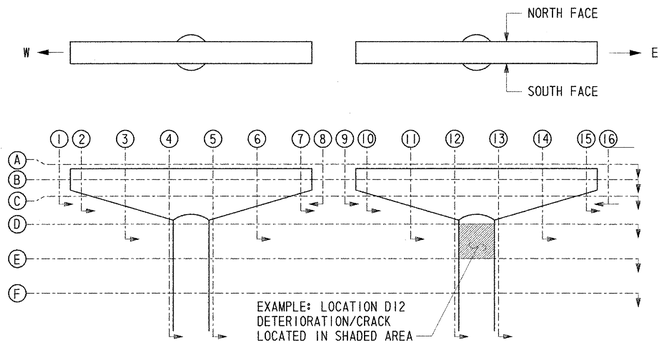

PIERS 1 - 14
N.T.S.

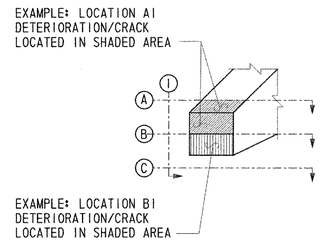

EXAMPLE LOCATIONS

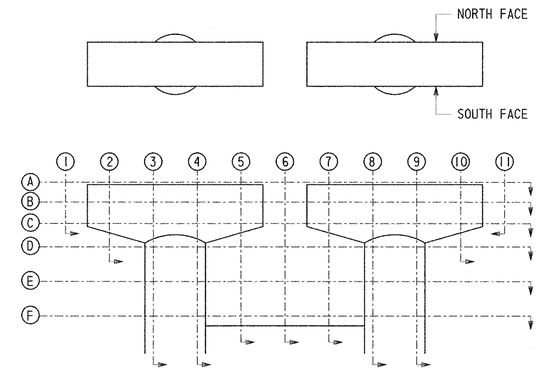

PIERS 16 & 17
N.T.S.

NOTES

1. QUANTITIES INDICATED ARE BASED ON INSPECTION NOTES AND ARE CONSIDERED TO BE APPROXIMATE ONLY.
2. ALL DIMENSIONS ARE IN INCHES UNLESS NOTED OTHERWISE.

PIER	FACE	LOCATION	REPAIR CODE	LENGTH	AREA	WIDTH/DEPTH
1	W	A1	10	-	220	3-D
1	S	B7	10	-	64	2-D
1	SW	D12	10	-	64	3-D
1	S	B12	10	-	25	3-D
1	W	D13	10	-	280	2-D
2	SE	F4	(2) 10	-	2538	2-D
2	E	B8	10	-	364	2-D
2	SE	B15	10	-	100	3-D
3	N	A4	8	24	-	0.0625-W
3	S	A13	8	48	-	0.2500-W
3	S	A11	8	36	-	0.0625-W
3	N	A11	8	48	-	0.1250-W
3	N	A13	8	36	-	0.1250-W
3	N	A13	10	-	2400	3-D
3	N	B10	10	-	64	2-D
5	S	B5	10	-	56	3-D
5	SW	E12	10	-	80	3-D
6	W	D4	10	-	364	5-D
6	S	D4	10	-	208	2-D
7	W	E4	10	-	196	2-D
7	S	A12	8	84	-	0.1250-W
7	S	C12	8	-	2800	2-D
7	S	C13	8	48	-	0.1250-W
7	S	C13	10	-	225	2-D
7	B	C11	10	-	196	3-D
7	B	C13	10	-	676	3-D
7	S	C12	10	-	5476	2-D
7	N	A12	8	48	-	0.1250-W
7	N	C12	10	-	676	2-D
7	S	E12	10	-	364	3-D
7	S	E12	(2) 10	-	364	2-D
8	S	B7	10	-	130	3-D

PIER	FACE	LOCATION	REPAIR CODE	LENGTH	AREA	WIDTH/DEPTH
8	E	B8	(3) 10	-	336	3-D
8	S	A3	8	84	-	0.0323-W
10	N	B4	10	-	208	3-D
10	S	B7	10	-	532	3-D
10	S	D12	10	-	3268	2-D
10	S	D12	10	-	700	3-D
10	W	D12	8	36	-	0.1250-W
10	W	D12	10	-	532	2-D
13	E	B8	10	-	112	3-D
14	S	A12	10	-	2860	2-D
14	S	A10	10	-	63	2-D
14	SE	B16	10	-	63	2-D
14	N	B12	10	-	2160	2-D
14	N	C12	8	12	-	0.1250-W
14	N	C12	10	-	121	2-D
14	N	B10	10	-	36	3-D
14	N	B10	10	-	63	3-D
14	W	D10	10	-	976	2-D

PIER	FACE	LOCATION	REPAIR CODE	LENGTH	AREA	WIDTH/DEPTH
16	S	B4	(2) 10	-	128	3-D
16	E	E4	10	-	112	3-D
16	N	B9	10	-	36	3-D
16	S	F10	10	-	988	2-D
16	S	F10	10	-	190	2-D
16	T	F10	8	600	-	0.0625-W
17	W	B1	8	240	-	0.0625-W
17	B	D10	10	-	55	3-D
17	B	D10	(2) 10	-	55	2-D
17	N	A10	11	-	300	2-D
17	S	E8	10	-	190	2-D
17	T	F6	10	-	1440	2-D
17	E	E9	10	-	64	2-D
17	T	A8	8	240	-	0.0625-W
17	W	A6	8	240	-	0.0625-W
17	N	B10	8	120	-	0.0625-W
17	N,S	C8	8	144	-	0.0625-W
17	N,S	D8	8	72	-	0.0625-W
17	T	F6	8	600	-	0.0625-W

CADD DESIGN A. BROWN DESIGN A. BROWN CHKD. B. COPLEY

J:\Trans\0603\700cadd\709STR\PS&E SUBMISSION\PR01G.dgn

SUBSTRUCTURE REPAIR SCHEDULE-2

BR. 1-813

CONTRACT	COUNTY	FEDERAL AID PROJECT NO.	SHEET NO.	TOTAL SHTS.
94-074-11	NEW CASTLE	IM-N060(2)	27	45

REHABILITATION AND PAINTING OF BRIDGE 1-813 ON I-495 OVER CHRISTINA RIVER

REVISIONS

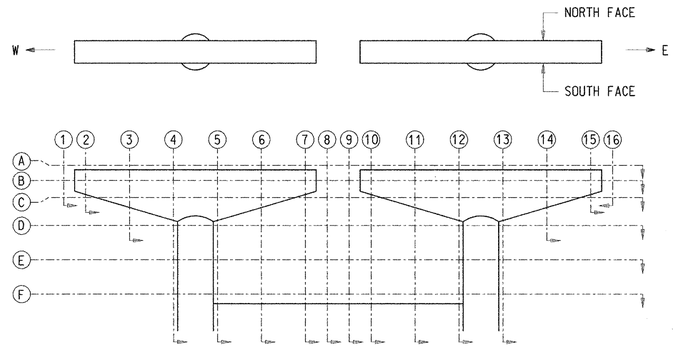

PIERS 15 & 18-20
N.T.S.

NOTES

1. QUANTITIES INDICATED ARE BASED ON INSPECTION NOTES AND ARE CONSIDERED TO BE APPROXIMATE ONLY.
2. ALL DIMENSIONS ARE IN INCHES UNLESS NOTED OTHERWISE.

PIER	FACE	LOCATION	REPAIR CODE	LENGTH	AREA	WIDTH/DEPTH
15	T	A4	8	180	-	0.1250-W
15	N	A6	10	-	686	4-D
15	N	CAP	10	-	1120	2-D
15	N	A2	10	-	784	2-D
15	N	A7	10	-	532	2-D
15	W	A1	8	300	-	0.1250-W
15	N	CAP	8	360	-	0.0625-W
15	S	A3	11	-	1376	2-D
15	N	A6	11	-	532	2-D
15	S	B3	10	-	676	2-D
15	S	B3	10	-	700	2-D
15	S	A3	10	-	70	2-D
15	B	C3	10	-	1444	2-D
15	B	C5	10	-	2812	2-D
15	S	CAP	8	240	-	0.1250-W
15	-	COL.	8	588	-	0.0625-W
15	SE	A16	10	-	48	2-D
15	S	B12	10	-	532	2-D
15	S	A11	10	-	220	2-D
15	S	A10	10	-	280	2-D
15	S	C10	10	-	280	2-D
15	S	C11	10	-	400	2-D
15	S	A11	10	-	112	3-D
15	B	C13	10	-	196	2-D
15	NE	A16	10	-	88	2-D
15	N	A2	10	-	616	2-D
15	NE	D12	10	-	1728	2-D
15	T	A12	8	96	-	0.0625-W
15	E	COL.	8	588	-	0.0625-W
15	-	COL.	8	720	-	0.1250-W
15	S	CAP	8	840	-	0.0625-W
15	NE	B15	8	60	-	0.1250-W

PIER	FACE	LOCATION	REPAIR CODE	LENGTH	AREA	WIDTH/DEPTH
15	SE	D12	8	588	-	0.1250-W
15	NE	D12	8	588	-	0.1250-W
15	NE	D12	(2) 8	192	-	0.0625-W
18	S	B2	10	-	3300	2-D
18	S	A6	11	-	924	2-D
18	S	B10	10	-	1900	2-D
18	S	B10	10	-	121	2-D
18	S	A14	11	-	924	2-D
18	B	C13	10	-	364	3-D
18	B	C13	10	-	2500	2-D
18	S	E12	10	-	2016	2-D
19	N	B6	10	-	25	3-D
19	E	B7	10	-	160	3-D
19	E	B7	10	-	160	2-D
19	S	A14	10	-	280	2-D
19	S	A15	11	-	112	4-D
19	S	A13	10	-	36	3-D
20	S	B4	10	-	532	2-D
20	N	B4	10	-	988	2-D
20	E	E4	10	-	2440	2-D
20	S	F5	10	-	64	2-D
20	S	B4	8	180	-	0.0625-W
20	W	B1	8	180	-	0.0625-W
20	S	C4	8	120	-	0.0625-W
20	S	D4	8	636	-	0.0625-W
20	E	E4	8	360	-	0.0625-W
20	S	A13	10	-	760	2-D
20	S	B12	10	-	1924	2-D
20	E	B16	10	-	4560	2-D
20	E	E12	10	-	3600	2-D
20	E	E12	10	-	532	2-D
20	S	(3) F12	10	-	64	2-D

PIER	FACE	LOCATION	REPAIR CODE	LENGTH	AREA	WIDTH/DEPTH
20	S	B14	8	180	-	0.0313-W
20	S	B11	8	24	-	0.1250-W
20	E	B16	8	120	-	0.1250-W
20	-	(2) E12	8	370	-	0.0625-W
20	-	E12	8	636	-	0.0625-W
20	S	F12	8	120	-	0.0625-W

NOTE: ALL DIMENSIONS ARE IN INCHES UNLESS NOTED OTHERWISE.

CADD DESIGN A. BROWN DESIGN A. BROWN CHKD. B. COPLEY

J:\Trans\0603\700cadd\709STRVPS&E SUBMISSION\PR026.dgn

SUBSTRUCTURE REPAIR SCHEDULE-3

BR. 1-813

CONTRACT	COUNTY	FEDERAL AID PROJECT NO.	SHEET NO.	TOTAL SHTS.
94-074-11	NEW CASTLE	IM-N060(2)	28	45

REHABILITATION AND PAINTING OF BRIDGE 1-813 ON I-495 OVER CHRISTINA RIVER

REVISIONS

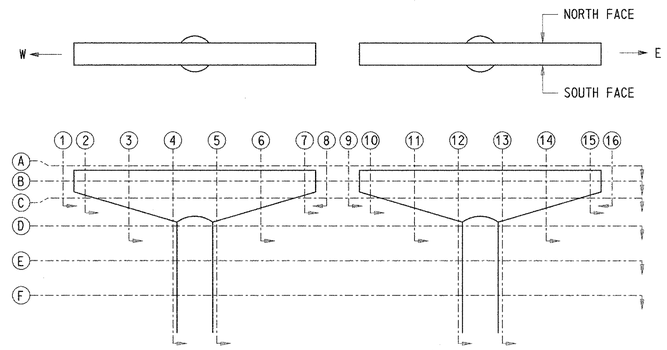

PIERS 21- 35
N.T.S.

NOTES

1. QUANTITIES INDICATED ARE BASED ON INSPECTION NOTES AND ARE CONSIDERED TO BE APPROXIMATE ONLY.
2. ALL DIMENSIONS ARE IN INCHES UNLESS NOTED OTHERWISE.

PIER	FACE	LOCATION	REPAIR CODE	LENGTH	AREA	WIDTH/DEPTH
21	B	C5	(3) 10	-	64	2-D
21	S	B6	8	24	-	0.2500-W
21	N	B12	10	-	121	2-D
21	B	(4) C11	10	-	532	3-D
21	SW	E12	10	-	868	2-D
22	S	C12	10	-	280	2-D
22	S	B15	10	-	25	3-D
22	B	C11	10	-	64	2-D
23	E	B8	8	36	-	0.0625-W
23	S	B6	8	24	-	0.1250-W
23	W	E12	10	-	304	2-D
23	B	B11	10	-	1300	1-D
24	W	B1	10	-	280	3-D
24	N	B7	10	-	648	2-D
24	S	A4	11	-	84	2-D
24	S	A4	11	-	36	2-D
24	S	D5	10	-	760	2-D
24	S	A6	11	-	84	2-D
24	N	A5	11	-	64	4-D
24	S	A6	10	-	2400	2-D
24	S	C4	10	-	112	2-D
24	E	D5	10	-	5476	3-D
24	N	D4	10	-	1036	2-D
24	S	E4	10	-	12480	2-D
24	W	B1	8	120	-	0.1250-W
24	N	B4	8	120	-	0.2500-W
24	N	B4	8	120	-	0.0313-W
24	N	B7	8	360	-	0.2500-W
24	S	B4	8	120	-	0.2500-W
24	E	B8	8	360	-	0.2500-W
24	S	C4	8	36	-	0.1250-W
24	S	B12	8	516	-	0.1000-W
24	B	D6	8	240	-	0.0625-W
24	B	C3	8	240	-	0.0625-W
24	N	A12	10	-	1372	2-D
24	N	A11	10	-	420	2-D
24	E	D12	10	-	3600	2-D
24	N	C12	10	-	1036	2-D

PIER	FACE	LOCATION	REPAIR CODE	LENGTH	AREA	WIDTH/DEPTH
24	E	D12	10	-	1008	2-D
24	N	C12	10	-	2548	2-D
24	W	C12	10	-	12480	2-D
24	E	E12	10	-	6840	2-D
24	E	F12	10	-	1444	2-D
24	N	A12	8	36	-	0.1250-W
24	N	A15	8	120	-	0.1250-W
24	W	B9	8	240	-	0.1250-W
24	E	B16	8	240	-	0.0625-W
24	E	A15	8	180	-	0.0625-W
24	W	D12	8	516	-	0.1000-W
24	E	D12	8	180	-	0.1250-W
25	E	A5	11	-	182	4-D
25	NW	A5	11	-	36	4-D
25	N	A5	10	-	260	2-D
25	T	A6	10	-	180	1-D
25	SE	A4	11	-	54	2-D
25	N	B7	10	-	64	2-D
25	T	A6	8	48	-	0.0625-W
25	W	B1	8	240	-	0.0625-W
25	N	D4	8	60	-	0.0625-W
25	N	B2	10	-	180	2-D
25	S	B15	10	-	372	4-D
27	W	E12	10	-	1960	2-D
27	B	C11	(2) 10	-	304	3-D
28	N,S	B4	10	-	1444	2-D
28	N	A12	10	-	520	2-D
28	N	A12	10	-	364	2-D
28	N	A12	10	-	112	2-D
28	N	A12	10	-	121	2-D
28	S	D12	10	-	532	3-D
28	E	C12	10	-	364	2-D
28	E	C12	10	-	2440	2-D
31	S	D4	10	-	64	3-D
31	E	D12	10	-	100	2-D
31	S	D12	8	72	-	0.0625-W
32	W	B1	10	-	112	2-D
32	S	B6	10	-	64	3-D

PIER	FACE	LOCATION	REPAIR CODE	LENGTH	AREA	WIDTH/DEPTH
32	S	B6	10	-	3444	3-D
32	N	B4	8	60	-	0.1250-W
32	W	B1	8	144	-	0.1250-W
32	T	A3	8	48	-	0.0625-W
36	S	B12	8	36	-	0.0625-W
32	-	D12	10	-	3444	3-D
32	-	D12	10	-	700	2-D
32	S	D12	(2) 10	-	2500	2-D
32	NW	D12	10	-	532	2-D
32	S	B12	8	72	-	0.0625-W
32	N	B12	8	48	-	0.0625-W
32	S	D12	8	120	-	0.1250-W
33	-	E4	10	-	25	2-D
34	N	D4	(2) 10	-	25	2-D
34	N	D12	10	-	676	2-D
35	NW	B1	10	-	160	4-D
35	W	D4	10	-	676	3-D
35	S	D4	10	-	700	3-D
35	E	B12	10	-	121	3-D
35	NW	A9	10	-	280	2-D
35	W	D12	10	-	130	3-D
35	W	D12	10	-	40	3-D

NOTE: ALL DIMENSIONS ARE IN INCHES UNLESS NOTED OTHERWISE.

CADD DESIGN A. BROWN DESIGN A. BROWN CHKD. B. COPLEY

I:\Trans\0603\700cadd\709STR\PS&E SUBMISSION\PR03c.dgn

SUBSTRUCTURE REPAIR SCHEDULE - 4

BR. 1-813

CONTRACT	COUNTY	FEDERAL AID PROJECT NO.	SHEET NO.	TOTAL SHTS.
94-074-11	NEW CASTLE	IM-N060(2)	29	45

REHABILITATION AND PAINTING OF BRIDGE 1-813 ON I-495 OVER CHRISTINA RIVER

REVISIONS	

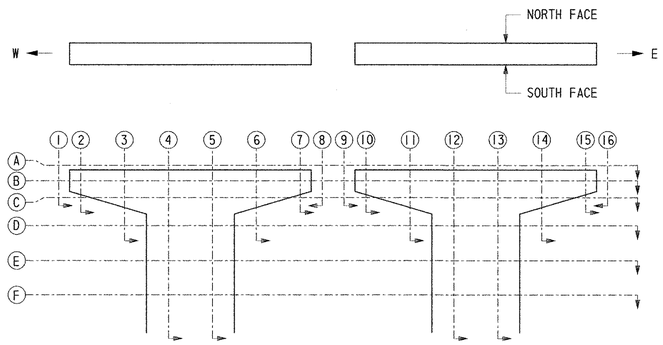

PIERS 36 & 37

N.T.S.

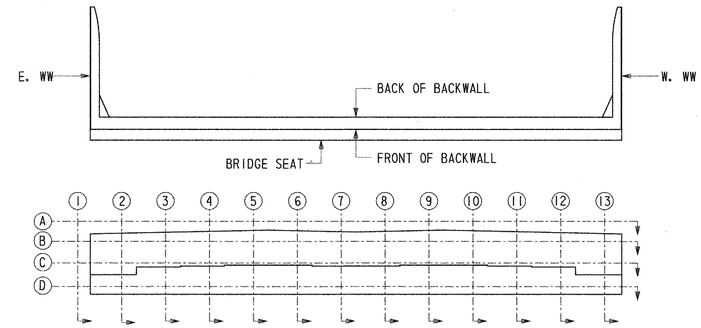

N. ABUT & S. ABUT

N.T.S.

NOTES

1. QUANTITIES INDICATED ARE BASED ON INSPECTION NOTES AND ARE CONSIDERED TO BE APPROXIMATE ONLY.
2. ALL DIMENSIONS ARE IN INCHES UNLESS NOTED OTHERWISE.

PIER	FACE	LOCATION	REPAIR CODE	LENGTH	AREA	WIDTH/DEPTH
36	E	B8	10	-	544	2-D
36	W	B1	10	-	544	2-D
37	S	B4	10	-	128	2-D
37	W	B1	8	360	-	0.0625-W
37	N	B3	8	96	-	0.1250-W
37	E	B8	8	180	-	0.0625-W
37	S	B3	8	840	-	0.0625-W
37	S	B2	8	36	-	0.2500-W
37	N	A1-A8	8	144	-	0.1250-W
37	S	A15	10	-	280	2-D
37	N,S	B9-B16	8	3600	-	0.0625-W
37	E	B16	8	240	-	0.1250-W

ABUTMENT	FACE	LOCATION	REPAIR CODE	LENGTH	AREA	WIDTH/DEPTH
N. ABUT	BW	B1	10	-	364	3-D
N. ABUT	W. WW	B13	8	480	-	0.1000-W
N. ABUT	BW	B1-B12	8	3528	-	0.0625-W
N. ABUT	E. WW	B1	8	480	-	0.0625-W
S. ABUT	BS	C8	8	12	-	0.0625-W
S. ABUT	BS	C13	8	12	-	0.0625-W
S. ABUT	BW	B1	9	72	-	0.2500-W
S. ABUT	E. WW	B1	8	120	-	0.0625-W
S. ABUT	W. WW	B13	8	120	-	0.0625-W
N. ABUT	BW	B12-B13	10	-	1224	2-D

NOTE: ALL DIMENSIONS ARE IN INCHES UNLESS NOTED OTHERWISE.

CADD DESIGN A. BROWN DESIGN A. BROWN CHKD. B. COPLEY

J:\Trans\0603\700cadd\709STRVPS&E SUBMISSION\PR04C.dgn

PIER 37 REPAIR DETAILS

BR. 1-813

CONTRACT	COUNTY	FEDERAL AID PROJECT NO.	SHEET NO.	TOTAL SHTS.
94-074-11	NEW CASTLE	IM-N060(2)	30	45

REHABILITATION AND PAINTING OF BRIDGE 1-813 ON I-495 OVER CHRISTINA RIVER

REVISIONS	

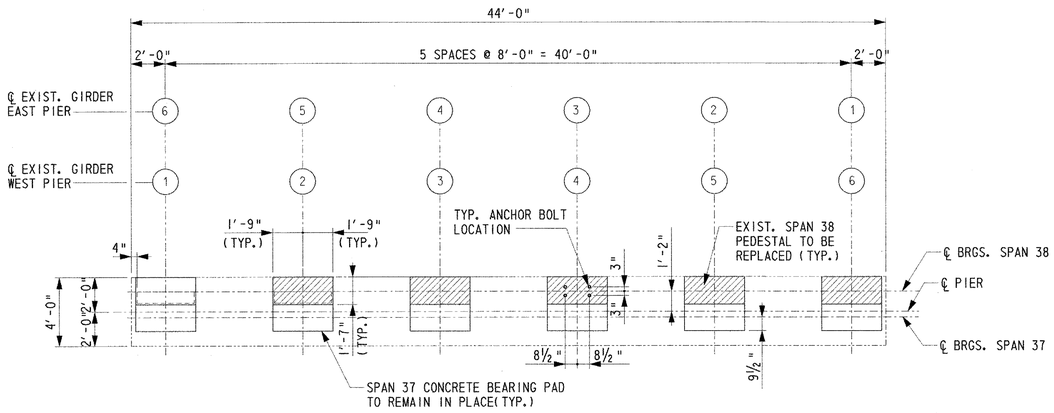

CONCRETE PEDESTAL RECONSTRUCTION AT PIER 37 (12/30) REF. 7

N.T.S.

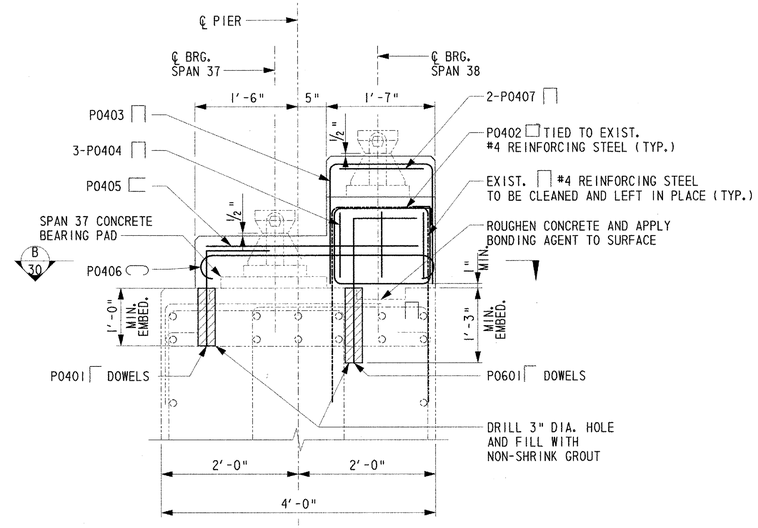

PIER 37 SECTION (A/30)

SCALE: 1"=1'-0"

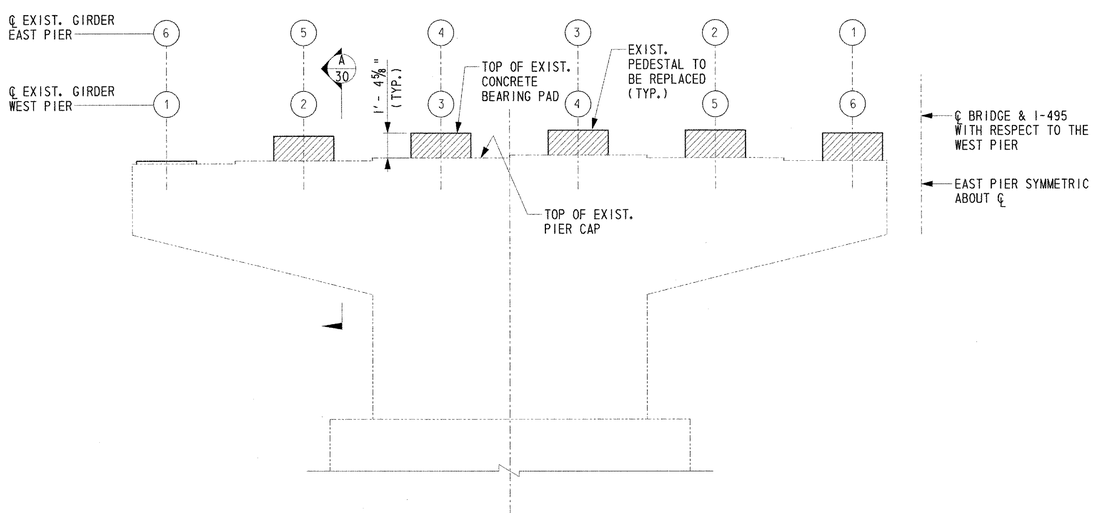

PIER 37 ELEVATION

N.T.S.

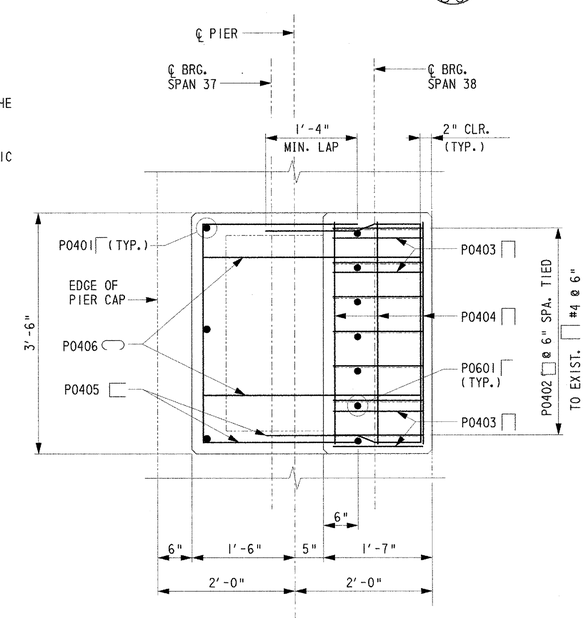

SECTION (B/30)

SCALE: 1"=1'-0"

CONCRETE PEDESTAL RECONSTRUCTION NOTES

1. CONCRETE PEDESTAL RECONSTRUCTION IS REQUIRED AT EACH OF THE TEN (10) PEDESTALS AT PIER 37, AND FIXED BEARING CONCRETE ENCASEMENT IS REQUIRED FOR ALL PIER 37 BEARINGS.
2. INSTALL JACKING DIAPHRAGMS AND JACK STRUCTURE TO TRANSFER LOAD FROM THE BEARINGS IN ACCORDANCE WITH THE PROCEDURES OUTLINED ON SHEET 13A. FOR DETAILS OF JACKING DIAPHRAGM AND BLOCKING SEE SHEET 13A.
3. ONCE THE SUPERSTRUCTURE HAS BEEN JACKED AND BLOCKED, REMOVE THE EXISTING BEARING ASSEMBLY AND STORE, THEN REMOVE THE EXISTING CONCRETE BEARING PEDESTAL DOWN TO THE LEVEL OF THE PIER CAP USING MANUAL TOOLS OR ELECTRIC HAMMER, PNEUMATIC POWER HAMMER SHALL NOT BE USED FOR THIS OPERATION. CARE SHALL BE TAKEN SO THAT THE EXISTING REINFORCING STEEL IS NOT DAMAGED.
4. EXISTING REINFORCING STEEL EMBEDDED IN PIER CAP IS TO BE CLEANED THOROUGHLY AND LEFT IN PLACE. ALL OTHER EXISTING REINFORCING STEEL IS TO BE REMOVED.
5. DRILL 3" DIA. HOLES FOR NEW P0601 BARS. PLACE P0601 BARS AND GROUT IN PLACE WITH NON-SHRINK GROUT. AFTER GROUT HAS CURED, PLACE REMAINING BARS.
6. THE CONCRETE SURFACE AND REBAR SHALL BE THOROUGHLY CLEANED OF ANY DIRT, OIL, RUST, OR ANY OTHER FOREIGN MATERIALS.
7. THE NEW PEDESTAL SHALL BE FORMED TO RETURN PEDESTAL TO ITS ORIGINAL LINES AND DIMENSIONS, INCLUDING CHAMFERED EDGES. THE NEW PEDESTAL WILL INCLUDE THE ENCASEMENT OF SPAN 37 BEARINGS.
8. THOROUGHLY COAT THE INTERFACE BETWEEN THE NEW CONCRETE PEDESTAL AND EXISTING PIER CAP WITH BONDING AGENT.
9. PLACE NEW 1½" DIA. SWEDGED ANCHOR BOLTS WITH HEX NUT AND WASHER. ANCHOR BOLTS SHALL BE EMBEDDED 1'-6" INTO THE NEW CONCRETE BEARING PEDESTAL AND EXISTING PIER CAP. DRILL INTO EXISTING PIER CAP IF NECESSARY TO ACHIEVE 1'-6" EMBEDMENT.
10. FORM SHALL BE FILLED WITH EPOXY MORTAR UP TO 1" BELOW THE MASONRY PLATE. THE TOP 1" OF MORTAR SHALL BE PLACED ONLY AFTER THE LOWER PORTION HAS REACHED ITS FINAL CURE. APPLY BONDING AGENT PRIOR TO PLACING FINAL 1" PORTION.
11. MORTAR EXTENDING UP THE SIDES OF THE MASONRY PLATE SHALL BE CUT BACK LEVEL WITH THE BOTTOM OF THE PLATE BEFORE IT ATTAINS A FINAL SET.
12. ONCE THE CONCRETE HAS REACHED ITS FINAL DESIGN STRENGTH, INSTALL BEARINGS, TRANSFER LOAD BACK TO THE BEARINGS AND REMOVE THE DIAPHRAGMS IN ACCORDANCE WITH THE PROCEDURES OUTLINED ON SHEET 13A.
13. ONCE THE BEARINGS ARE SET IN PLACE AND THE JACKING COLUMN HAS BEEN REMOVED, CONCRETE ENCASE SPAN 38 FIXED BEARINGS.
14. ALL WORK FOR REPAIR CODE 12, INCLUDING JACKING AND TEMPORARY SUPPORT SYSTEM, SHALL BE IN ACCORDANCE WITH AND PAID FOR AT THE UNIT PRICE BID FOR ITEM NO. 602630- "MODIFICATION OF BRIDGE CONCRETE PEDESTAL."

CADD DESIGN A. BROWN DESIGN Y. JIN CHKD. B. COPLEY

J:\Trans\0603\700cadd\709STR\PSAE SUBMISSION\MD06.dgn

FENDER REPAIR DETAILS

BR. 1-813

CONTRACT	COUNTY	FEDERAL AID PROJECT NO.	SHEET NO.	TOTAL SHTS.
94-074-11	NEW CASTLE	IM-N060(2)	31	45

REHABILITATION AND PAINTING OF BRIDGE 1-813 ON I-495 OVER CHRISTINA RIVER

REVISIONS

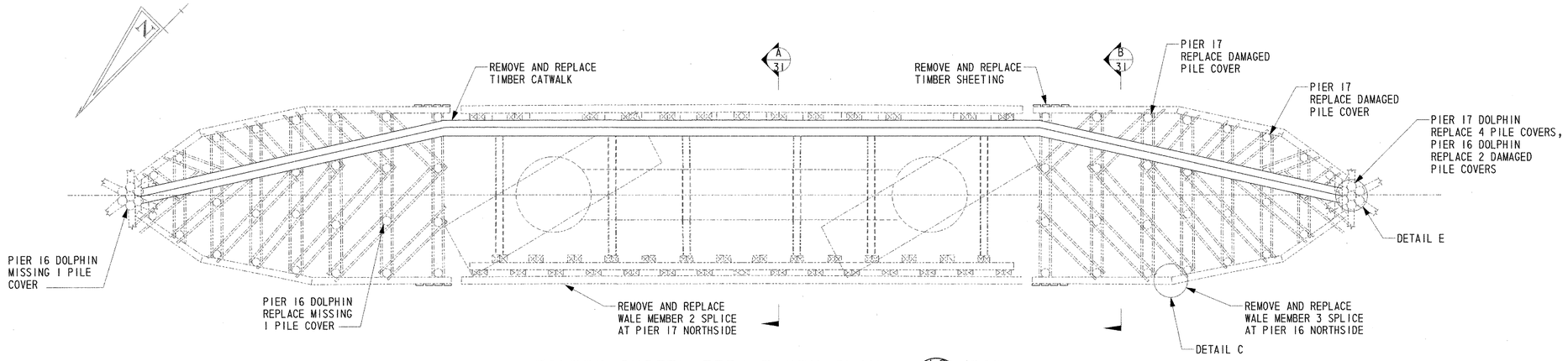

FENDER SYSTEM REPAIR KEY PLAN (16/31) REF. 6

SCALE: 1/8" = 1'-0"

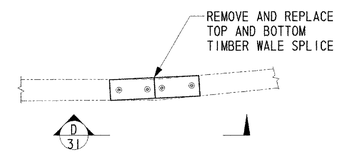

WALE SPLICE DETAIL (C/31)

N.T.S.

FENDER SYSTEM REPAIR NOTES

1. ALL STRUCTURAL TIMBER SHALL BE SOUTHERN PINE SELECT STRUCTURAL AND SHALL CONFORM TO THE FOLLOWING MINIMUM ALLOWABLE DRY UNIT STRESSES:

   BENDING (Fb) = 1900 PSI
   TENSION (Ft) = 1050 PSI
   HORIZONTAL SHEAR (Fv) = 90 PSI
   COMPRESSION (Fc) = 1800 PSI
   MODULUS OF ELASTICITY (E) = 1,800,000 PSI

2. ALL TIMBER SHALL BE TREATED WITH A PRESERVATIVE TREATMENT CONSISTING OF A MINIMUM OF 2.5 POUNDS OF CCA RETAINED PER CUBIC FOOT OF TIMBER, AND SHALL BE DONE ACCORDING TO THE REQUIREMENTS OF THE STANDARD SPECIFICATIONS.

3. ALL FASTENER HARDWARE (BOLTS, SPIKES, NUTS AND WASHERS) SHALL CONFORM TO ASTM A307, GALVANIZED TO MEET THE REQUIREMENTS OF ASTM A153.

4. END OF TIMBER SHEETING SHALL BE COATED WITH CUT-BACK ASPHALT OR ASPHALT CEMENT, ALL FIELD CUTS AND BORE HOLES SHALL BE FIELD TREATED WITH THE PROPER PRESERVATIVE TREATMENT, SEE SPECIAL PROVISIONS.

5. WORK PERFORMED FOR THIS ITEM SHALL BE IN ACCORDANCE WITH AND PAID FOR UNDER ITEM NO. 601002 - "TIMBER STRUCTURES (TREATED)".

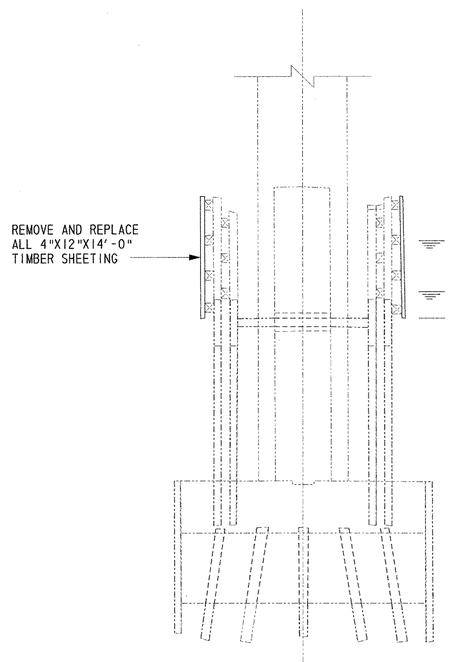

NOTE: ALL ELEVATIONS ARE SHOWN IN FEET.

SECTION (A/31)

SCALE: 1/8" = 1'-0"

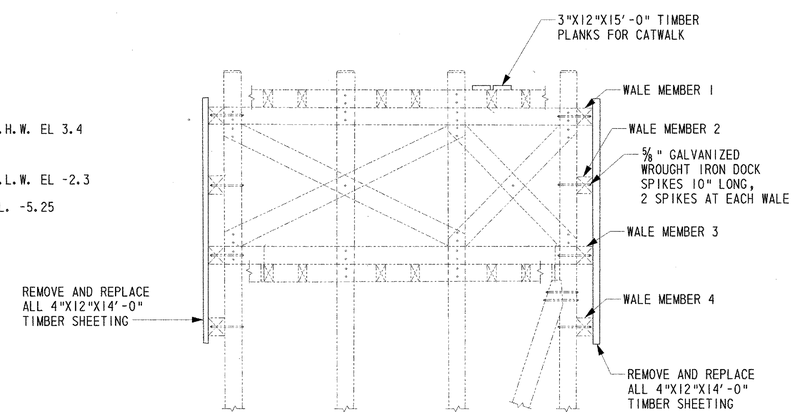

SECTION (B/31)

SCALE: 1/4" = 1'-0"

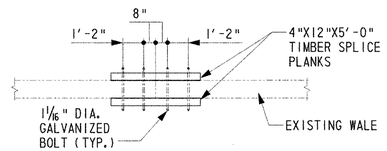

SECTION (D/31)

N.T.S.

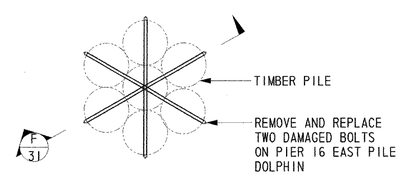

DOLPHIN DETAIL (E/31)

N.T.S.

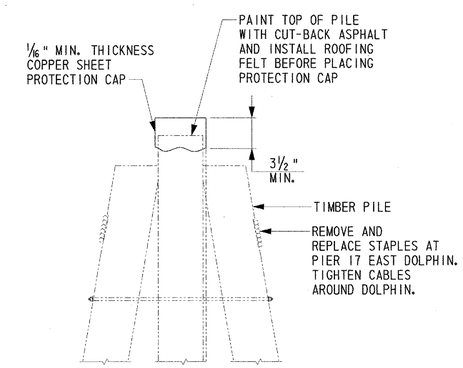

SECTION (F/31)

N.T.S.

CADD DESIGN A. RIGATO DESIGN B. COPLEY CHKD. B. COPLEY

j:\Trans\0603\700cadd\709STRUPSSE SUBMISSION\FS01.dgn

(1) MARK NUMBER WITH SUFFIX 'E' DENOTES EPOXYCOATED REINFORCING STEEL.

(2) MARK 'LOCATION PREFIXES' ARE AS FOLLOWS: (X)A=ABUTMENT, (X)AS=APPROACH SLAB, (X)D=DOWEL, (X)F=FOOTING, (X)H=HEADWALL, (X)M=MISC. BARS, (X)PA=PARAPET, (X)P=PIER, (X)S=SLAB, (X)T=TOEWALL, (X)W=WINGWALL, C=BOX CULVERT - WHERE (X) DENOTES SPECIFIC LOCATION (IF APPLICABLE).

SPECIFICATIONS					BENDING DIMENSIONS (ft-in)										
QTY.	SIZE	LENGTH (ft-in)	MARK	TYPE	A	B	C	D	E	F/R	G	H	J	K	O
PIER 16															
24	5	95-0	P0501	2	0-10	3-3									
24	5	310-0	P0502	2	3-5	6-4					3-5				
8	5	71-4	P0503	2	1-10	5-6					1-10				
8	5	83-4	P0504	2	2-2	6-4					2-2				
PIER 37															
70	6	227-6	P0601	2	0-11	2-6									
~~144~~ 134	4	95-4	P0401	2	0-8	1-7									
70	4	350-0	P0402	T2	0-4½	1-3	1-1	1-3	1-1	0-4½					
40	4	175-0	P0403	2	1-8	1-3					1-8				
30	4	153-9	P0404	2	1-1	3-2					1-1				
24	4	179-0	P0405	2	2-3	3-2					2-3				
~~126~~ 122	4	108-4	P0406	1	0-4½	2-2					0-4½		0-4		
20	4	110-10	P0407	2	2-3	1-3					2-3				
PIERS 5, 8, 12, 22, 26, 30 & 34															
336	5	938-0	P0505	2	0-10	2-1									
336	5	2268-0	P0506	2	2-0	3-0					2-0				
168	5	686-0	P0507	2	0-10	2-8					0-10				
168	5	742-0	P0508	2	0-10	3-0					0-10				
PIER 1															
48	5	110-0	P0509	2	0-10	1-7									
48	5	324-0	P0506	2	2-0	3-0					2-0				
24	5	74-0	P0510	2	0-4	2-8					0-4				
24	5	82-0	P0511	2	0-4	3-0					0-4				
PIERS 14, 19 & 20															
288	5	648	P0512	2	0-10	1-6½									
72	5	618	P0513	2	2-6	3-2					2-6				
180	5	780	P0514	1	0-5	3-2					0-5		0-5		
72	5	348	P0515	1	0-5	3-8					0-5		0-5		
108	5	342	P0516	1	0-5	2-0					0-5		0-5		

SPECIFICATIONS					BENDING DIMENSIONS (ft-in)										
QTY.	SIZE	LENGTH (ft-in)	MARK	TYPE	A	B	C	D	E	F/R	G	H	J	K	O

REBAR SCHEDULE

BR. 1-813

CONTRACT	COUNTY	FEDERAL AID PROJECT NO.	SHEET NO.	TOTAL SHTS.
94-074-11	NEW CASTLE	IM-N060(2)	32	45

REHABILITATION AND PAINTING OF BRIDGE 1-813 ON I-495 OVER CHRISTINA RIVER

REVISIONS

NOTES:

1. STANDARD BAR BENDS INCLUDE ONLY TYPES 1-32, S1-S12, AND T1-T16.
2. ALL DIMENSIONS ARE OUT-TO-OUT OF BAR EXCEPT "A" AND "G" ON STANDARD 180° AND 135° HOOKS.
3. "J" DIMENSIONS ON 180° HOOKS TO BE SHOWN ONLY WHERE NECESSARY TO RESTRICT HOOK SIZE, OTHERWISE STANDARD HOOKS ARE TO BE USED.
4. WHERE "J" IS NOT SHOWN, "J" WILL BE KEPT EQUAL TO OR LESS THAN "H" ON TRUSS BARS. WHERE "J" CAN EXCEED "H", IT SHOULD BE SHOWN.
5. "H" DIMENSIONS STIRRUPS TO BE SHOWN WHERE NECESSARY TO FIT WITHIN CONCRETE.
6. UNLESS OTHERWISE NOTED, DIAMETER "D" IS THE SAME FOR ALL BENDS AND HOOKS ON A BAR.
7. WHERE SLOPE DIFFERS FROM 45 DIMENSIONS, "H" AND "K" MUST BE SHOWN.
8. WHERE BARS ARE TO BE BENT MORE ACCURATELY THAN STANDARD BENDING TOLERANCES, BENDING DIMENSIONS WHICH REQUIRE CLOSER FABRICATION SHOULD HAVE LIMITS INDICATED.
9. FIGURES INCIRCLES SHOW TYPES.
10. FOR RECOMMENDED DIAMETER "D", OF BENDS, HOOKS, ETC., SEE 'CRSI' OR 'ACI' TABLES.
11. TYPE S1-S12, T1-T16 APPLY TO BAR SIZES 10M THROUGH 19M.

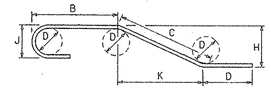

STANDARD BAR BENDS

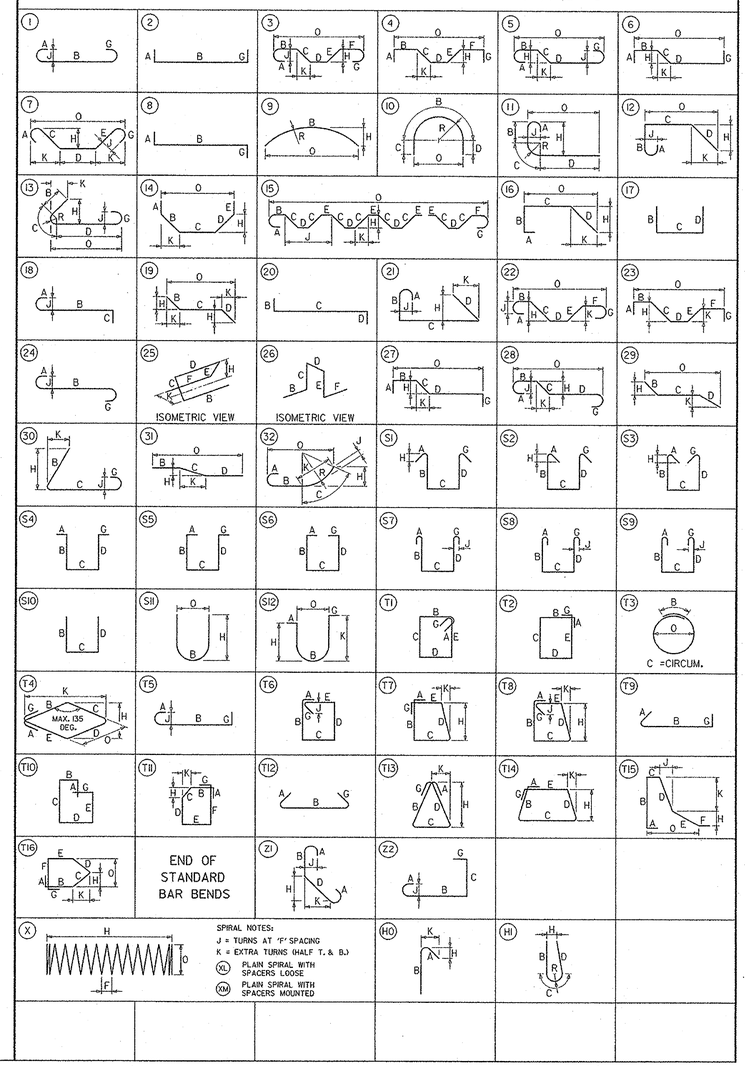

CADD DESIGN A. BROWN DESIGN Y. JIN CHKD. G. FAHRENDORF

J:\Trans\0603\T00cadd\709STR\PS&E SUBMISSION\Rebar.dgn

94-074-11 Tuesday, September 23, 2003

CONTRACT	COUNTY	FEDERAL AID PROJECT NO.	SHEET NO.	TOTAL SHTS.
94-074-11	NEW CASTLE	IM-N060(2)	33	45

REHABILITATION AND PAINTING OF BRIDGE 1-813 ON I-495 OVER CHRISTINA RIVER

REVISIONS	

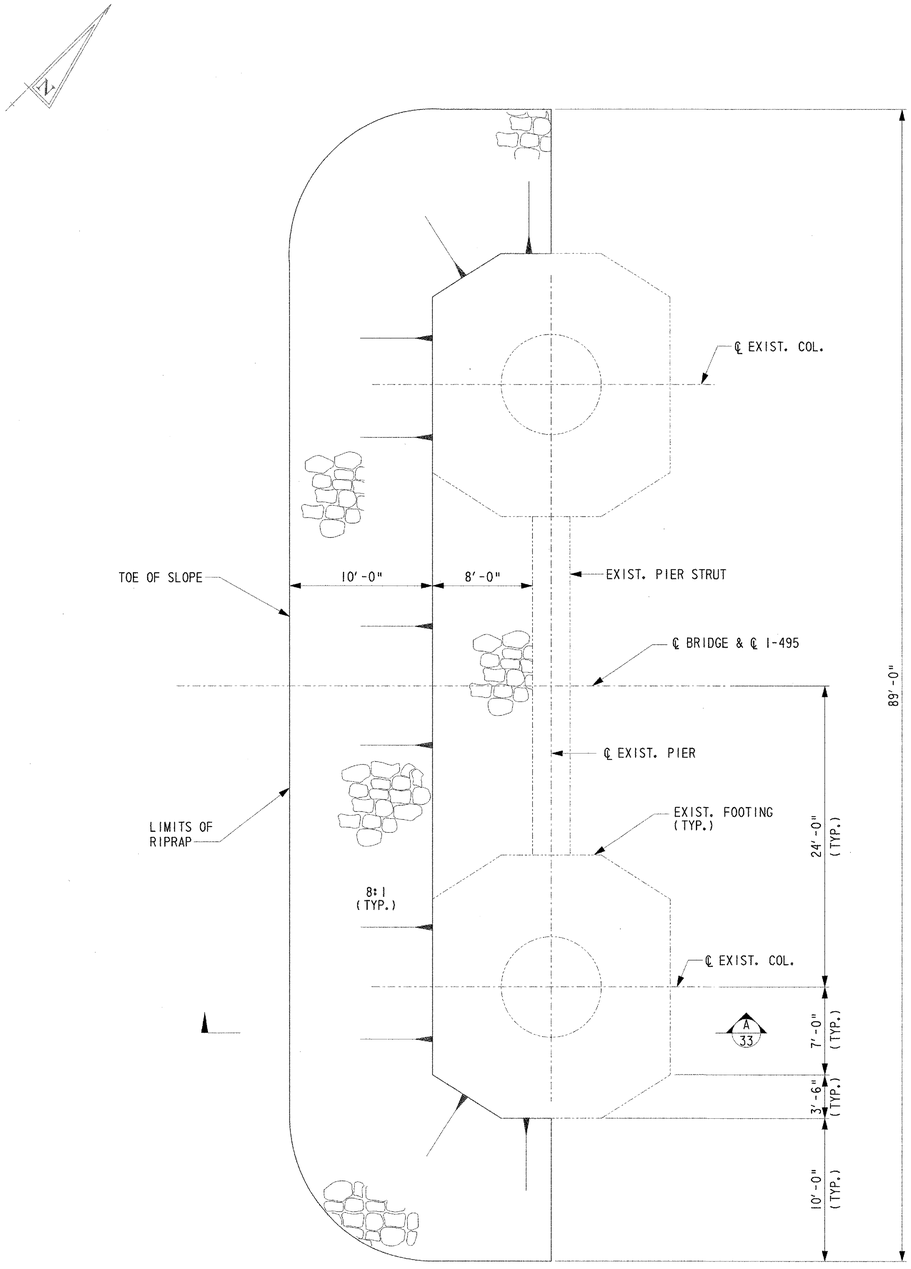

EMBANKMENT PROTECTION - PIER 20 (19/33) REF. 6

SCALE: N.T.S.

NOTES

1. THE STONE RIPRAP MATERIAL SHALL MEET THE REQUIREMENTS OF RIPRAP R-6.
2. CONTRACTOR SHALL ANTICIPATE ADJUSTING THE RIPRAP AS NECESSARY TO MATCH EXISTING CONTOUR.
3. RIPRAP SHALL BE PAID FOR UNDER ITEM NO. 712022 - "RIPRAP, R-6".

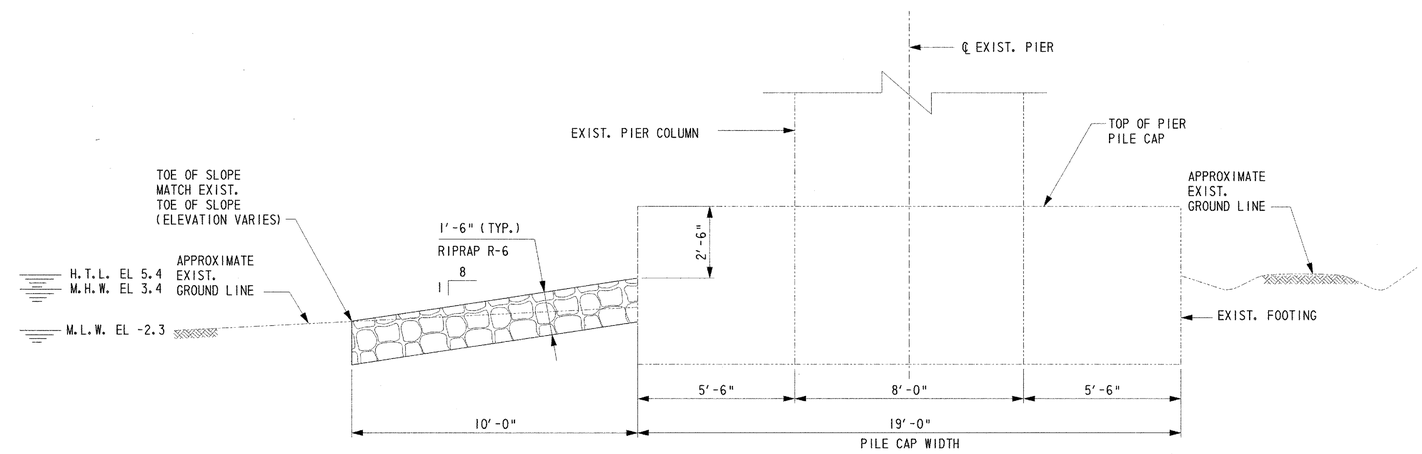

SECTION (A/33)

SCALE: N.T.S.

CADD DESIGN Y. JIN DESIGN Y. JIN CHKD. B. COPLEY

J:\Trans\0603\700cadd\T09STR\PS&E SUBMISSION\MB08rev02262003.dgn

ENVIRONMENTAL COMPLIANCE PLAN – 1

BR. 1–813

CONTRACT	COUNTY	FEDERAL AID PROJECT NO.	SHEET NO.	TOTAL SHTS.
94-074-11	NEW CASTLE	IM-N060(2)	34	45

REHABILITATION AND PAINTING OF BRIDGE 1–813 ON I–495 OVER CHRISTINA RIVER

REVISIONS

ENVIRONMENTAL COMPLIANCE NOTES

1. GENERAL NOTES:
   A. THE PURPOSE OF THIS SHEET IS TO IDENTIFY THOSE ITEMS ASSOCIATED WITH ENVIRONMENTAL COMPLIANCE.
   B. IF A DEPARTURE FROM THE APPROVED PLANS (WHICH WOULD AFFECT ANY OF THE NATURAL AND/OR CULTURAL RESOURCE ISSUES) IS NECESSARY, THE ENVIRONMENTAL STUDIES SECTION SHALL BE CONTACTED AT (302) 760-2280 TO ALLOW THE DEPARTMENT TO COORDINATE WITH THE APPROPRIATE RESOURCE AGENCIES FOR APPROVAL.
   C. USE OF THIS SHEET DOES NOT ALLEVIATE THE CONTRACTOR'S RESPONSIBILITY TO COMPLY WITH ALL CONDITIONS SET FORTH IN THE ENVIRONMENTAL STATEMENT AND PERMITS.

2. NATURAL RESOURCE ISSUES:
   A. PERMIT REQUIREMENTS/APPROVALS*:
      CORPS OF ENGINEERS - NWP #13 (FOR RIPRAP REPLACEMENT AT PIER 20 ONLY; SEE ACCESS RESTRICTION, ITEM 2C.)
      DNREC - SUBAQUEOUS LANDS PERMIT**
      NEW CASTLE COUNTY - NONE (MAINTENANCE ACTIVITY)**
      U.S. COAST GUARD - 30-DAY ADVANCED NOTIFICATION*

      *THE CONTRACTOR IS RESPONSIBLE FOR OBTAINING APPROVAL FROM THE U.S. COAST GUARD (SEE ITEM 4 FOR FURTHER DETAILS). THE ENVIRONMENTAL STUDIES SECTION IS RESPONSIBLE FOR COORDINATING/OBTAINING THE OTHER PERMITS/APPROVALS.
      **THE CONTRACTOR MUST INSURE THAT THESE PERMITS/APPROVALS ARE IN THEIR POSSESSION PRIOR TO THE BEGINNING OF CONSTRUCTION IN THE PERMITTED AREA(S). THESE PERMITS/APPROVALS SHALL BE DISPLAYED ON-SITE DURING THE ENTIRE CONSTRUCTION PERIOD.
      NOTE: COORDINATION HAS TO BE DONE WITH THE CORPS OF ENGINEERS, BUT NO WRITTEN AUTHORIZATION WAS REQUIRED. AS SUCH, NO PAPERWORK FROM THAT AGENCY SHOULD BE ANTICIPATED.

   B. CONSTRUCTION RESTRICTIONS:
      FISHERIES - NONE (BASED ON CURRENT SCOPE OF WORK)
      ENDANGERED SPECIES (BARN OWL NEST AT PIER 31) -- NO WORK CAN BE DONE TO THE UNDERSIDE OF THE STRUCTURE BETWEEN PIERS 29 AND 33 FROM 15 MARCH TO 30 JULY, INCLUSIVE OF THOSE DATES (WORK CAN BE DONE ON PIERS 29 AND 33 THEMSELVES). HOWEVER, IF BY MAY 15 THERE IS NO INDICATION OF NESTING AT PIER 31, THEN WORK CAN PROCEED UNDER THE STRUCTURE BETWEEN PIERS 29 AND 33.
      MIGRATORY BIRDS - NONE
   C. ACCESS RESTRICTION DUE TO WETLANDS UNDER THE BRIDGE: NO FILL SHALL BE PLACED TO PROVIDE EQUIPMENT ACCESS UNDER THE BRIDGE. ACCESS NEEDED IN ANY WET AREAS WILL BE DONE ON MATS, PERPENDICULARLY FROM THE EXISTING GRAVEL ACCESS ROAD AND IN CONFORMANCE WITH ITEM NO. 202508 - "WETLAND ACCESS TYPE II, TEMPORARY ROAD".

3. CULTURAL RESOURCES ISSUES:
   NONE; PROJECT CONSISTENT WITH STIPULATION II.B(1) OF DELDOT'S PROGRAMMATIC AGREEMENT WITH FHWA, DE SHPO, AND ACHP.

4. U.S. COAST GUARD 30-DAY ADVANCED NOTIFICATION:
   THE CHRISTINA RIVER IS A NAVIGABLE WATERWAY. ALL WORK PERFORMED WITHIN THE WATERWAY SHALL BE COORDINATED WITH THE U.S. COAST GUARD PRIOR TO BEGINNING WORK AND SHALL BE IN CONFORMANCE WITH ITEM NO. 763522 - "COAST GUARD SPECIFIC CONDITIONS". VERTICAL CLEARANCE MUST BE MAINTAINED IN ACCORDANCE WITH COAST GUARD REQUIREMENTS. FURTHERMORE, ADVANCED NOTIFICATION, WHICH REQUIRES THE CONTRACTOR TO FORMALLY NOTIFY THE COAST GUARD 30 DAYS IN ADVANCE OF ANY PLANNED TEMPORARY OBSTRUCTION TO WATERWAY NAVIGATION. CONTACT BILL BRAZIER AT (757) 398-6422, AS WELL AS SUBMIT A WRITTEN NOTICE (WHICH INCLUDES A SKETCH DEPICTING THE LOCATIONS AND DURATION OF ALL RESTRICTIONS) TO THE COMMANDING OFFICER (AOWB), 5TH COAST GUARD DISTRICT, FEDERAL BUILDING, 431 CRAWFORD ST., PORTSMOUTH, VA 23704 FOR APPROVAL.

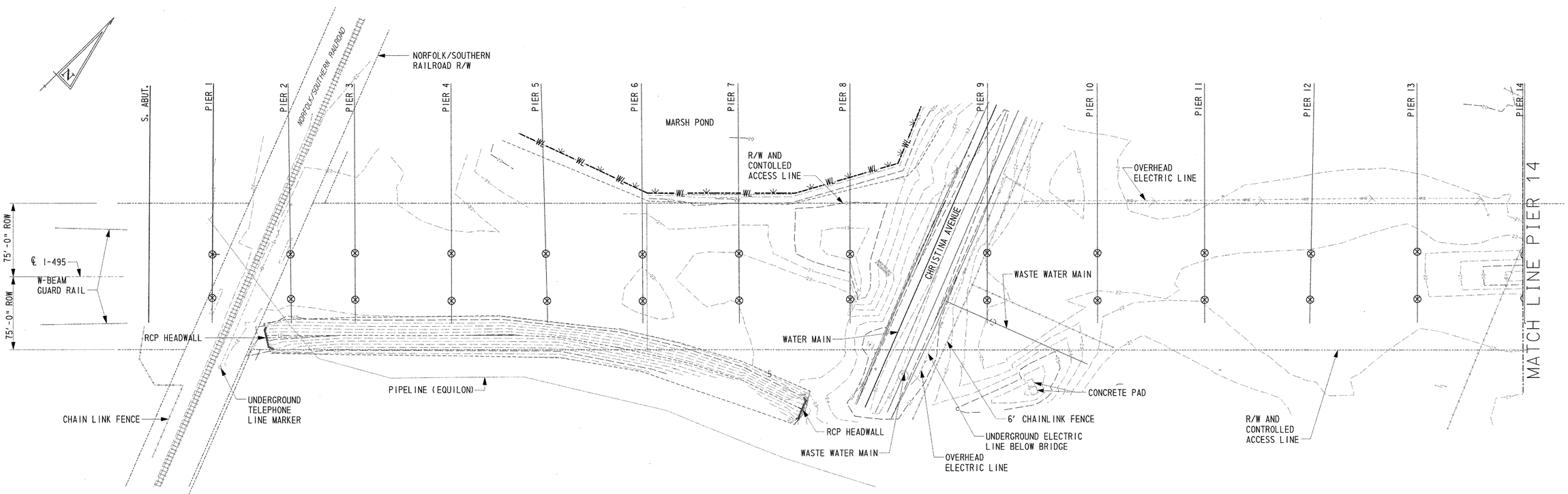

LEGEND
WL WETLAND BOUNDARY

PLAN
SCALE: 1" = 50'

CADD DESIGN A. RIGATO DESIGN B. COPLEY CHK'D. B. COPLEY

J:\Trone\0603\700cadd\703STR\PS&E SUBMISSION\GP01.dgn

ENVIRONMENTAL COMPLIANCE PLAN – 2

BR. 1–813

CONTRACT	COUNTY	FEDERAL AID PROJECT NO.	SHEET NO.	TOTAL SHTS.
94-074-11	NEW CASTLE	IM-N060(2)	35	45

REHABILITATION AND PAINTING OF BRIDGE 1–813 ON I–495 OVER CHRISTINA RIVER

REVISIONS

ENVIRONMENTAL COMPLIANCE NOTES

1. FOR NOTES SEE SHEET 34.

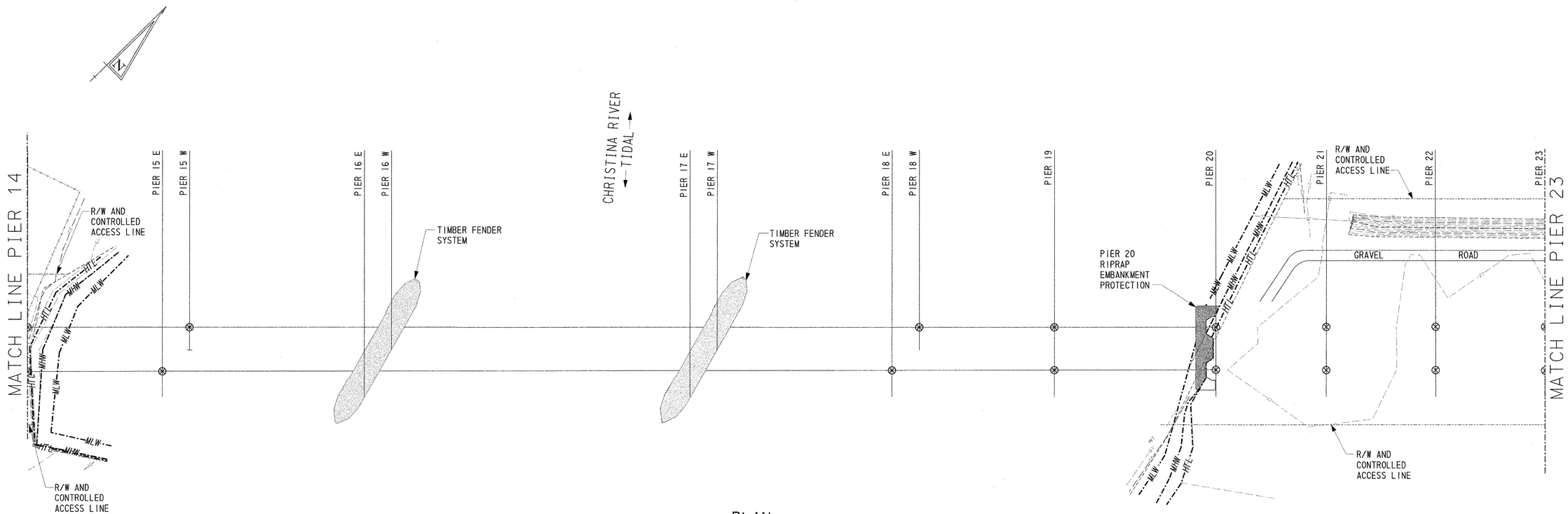

PLAN
1" = 50'

LEGEND

- TEMPORARY IMPACT AREA
- PERMANENT IMPACT AREA
- HTL — HIGH TIDE LINE
- MHW — MEAN HIGH WATER
- MLW — MEAN LOW WATER

CADD DESIGN G. FAHRENDORF DESIGN G. FAHRENDORF CHKD. B. COPLEY

I:\Trans\0603\700cadd\709STR\PS&E SUBMISSION\CP02_rev.dgn

ENVIRONMENTAL COMPLIANCE PLAN – 3

BR. 1–813

CONTRACT	COUNTY	FEDERAL AID PROJECT NO.	SHEET NO.	TOTAL SHTS.
94-074-11	NEW CASTLE	IM-N060(2)	36	45

REHABILITATION AND PAINTING OF BRIDGE 1–813 ON I–495 OVER CHRISTINA RIVER

REVISIONS

ENVIRONMENTAL COMPLIANCE NOTES

1. FOR NOTES SEE SHEET 34.
2. ACCESS RESTRICTION BELOW BRIDGE, SEE NOTE 2C SHEET 34.

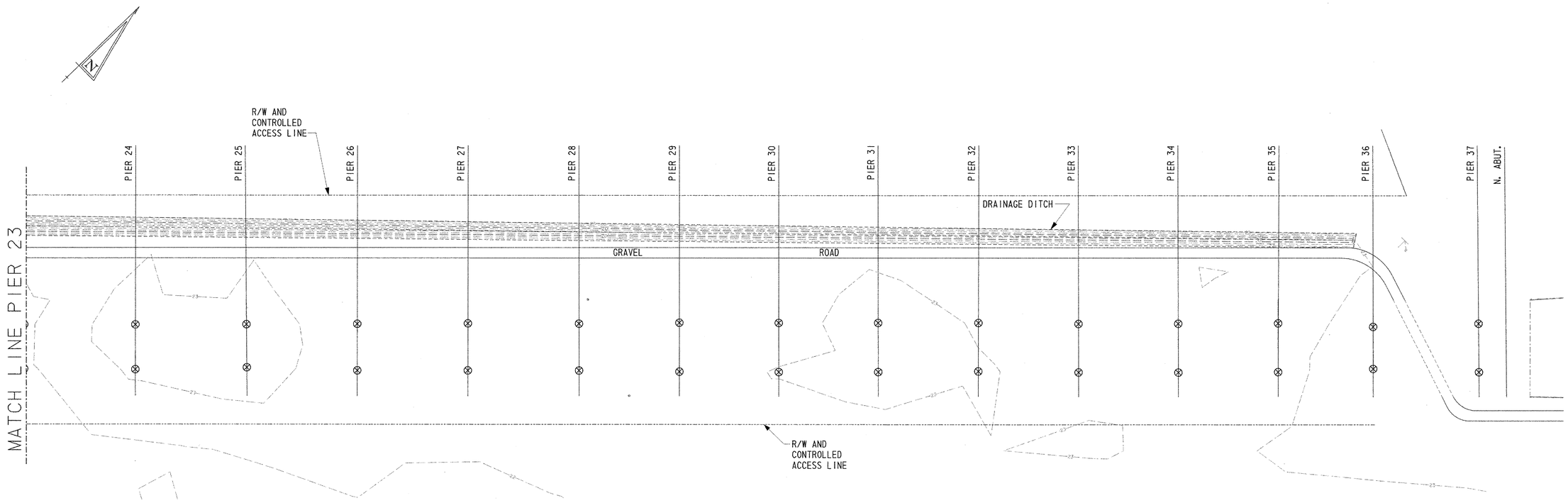

PLAN
1" = 50'

CADD DESIGN G. FAHRENDORF DESIGN G. FAHRENDORF CHKD. B. COPLEY

J:\Trans\0603\700cadd\709STR\PS&E SUBMISSION\CP03.dgn

PAINTING KEY PLAN

BR. 1-813

CONTRACT	COUNTY	FEDERAL AID PROJECT NO.	SHEET NO.	TOTAL SHTS.
94-074-11	NEW CASTLE	IM-N060(2)	37	45

REHABILITATION AND PAINTING OF BRIDGE 1-813 ON I-495 OVER CHRISTINA RIVER

REVISIONS	
2 DELETED NOT INCLUDED IN (B); 10/15/03: BEC	

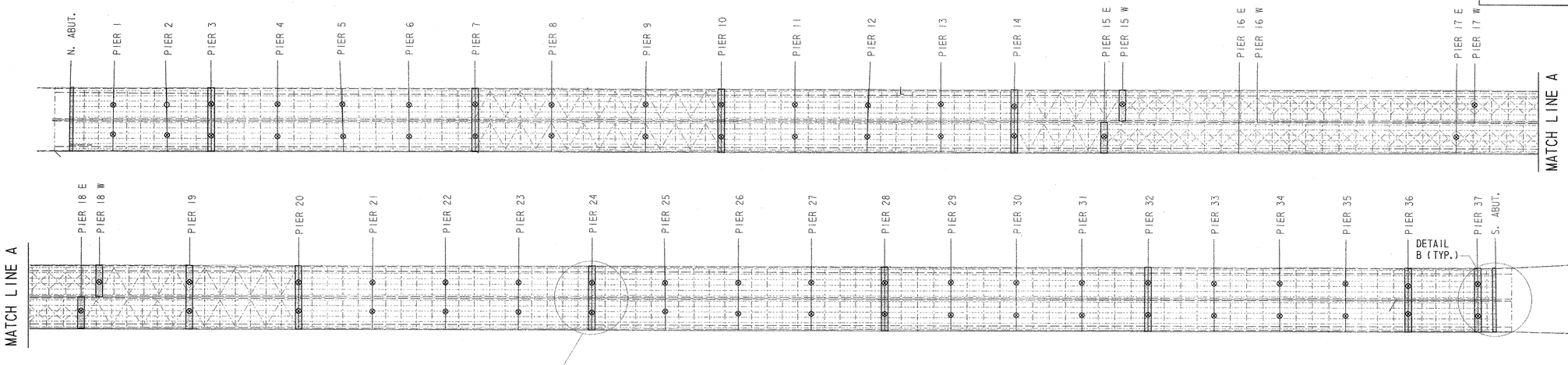

PAINTING KEY PLAN (17/37)
N.T.S.

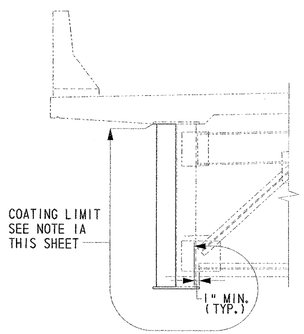

FASCIA GIRDER - SPANS 1 THROUGH 15 AND SPANS 19 THROUGH 38
N.T.S.

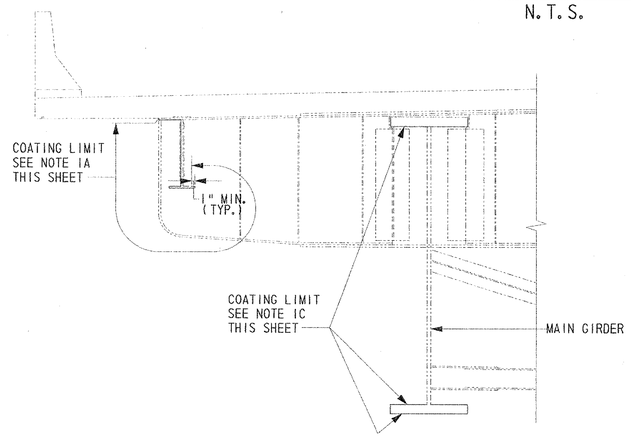

FASCIA STRINGER - SPANS 16, 17 AND 18
N.T.S.

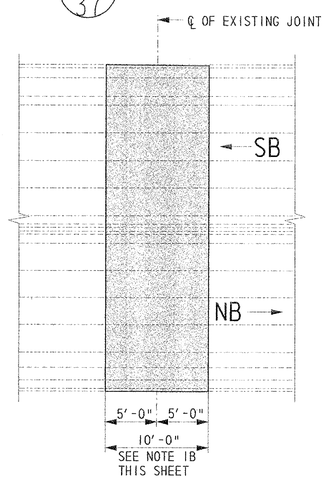

AT EXPANSION JOINTS - DETAIL (A/37)
SCALE: N.T.S.

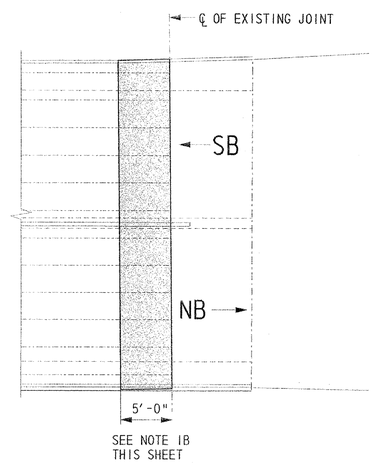

AT ABUTMENTS - DETAIL (B/37)
SCALE: N.T.S.

NOTES

1. THE PAINTING OF EXISTING STRUCTURAL STEEL SHALL BE AS INDICATED BELOW:
   - A. FULL REMOVAL OF THE VINYL TOPCOAT AND RECOATING OF FASCIA GIRDERS AND STRINGERS AND FASCIA STIFFENERS AT LIMITS SHOWN ON THIS SHEET AND IN ACCORDANCE WITH SPECIAL PROVISIONS ITEM NO. 605522 - "URETHANE PAINT SYSTEM, EXISTING STEEL".
   - B. FULL REMOVAL OF RUSTED AREAS (SP-11) AND RECOATING OF ALL SUPERSTRUCTURE STEEL AT PIER LOCATIONS SHOWN ON THIS SHEET AND AT THE ABUTMENTS WITHIN THE LIMITS SHOWN ON DETAILS A AND B THIS SHEET RESPECTIVELY. WORK SHALL BE IN ACCORDANCE WITH SPECIAL PROVISIONS.
   - C. FULL REMOVAL OF RUSTED AREAS AND RECOATING OF ALL FLANGE AREAS OF THE MAIN GIRDERS OF SPANS 16,17,18.
   - D. FULL REMOVAL OF ALL OTHER RUSTED AREAS OF SUPERSTRUCTURE STEEL AND THE SHOPCOAT OF NEW REPLACEMENT STEEL NOT OTHERWISE INDICATED IN "A", "B" AND "C" ABOVE. REFER TO TABLE FOR ESTIMATED AMOUNTS.
   - E. ALL CLEANING SHALL BE IN ACCORDANCE WITH SPECIAL PROVISION ITEMS NOS. 605532, 605622. ALL PAINTING SHALL BE IN ACCORDANCE WITH ITEM NO. 605522.
2. PAINT ALL EXISTING AND NEW STRUCTURAL STEEL WITH THE FEDERAL STANDARD COLOR NUMBER 595B-24172.
3. SECONDARY MEMBERS, DIAPHRAGMS, AND OTHER MISCELLANEOUS DETAILS SHALL BE COATED AT THE CONNECTIONS IN THE SAME MANNER AS THE STRINGERS OR GIRDERS THEY ARE ATTACHED TO.

ESTIMATED PAINT QUANTITIES* EXISTING STEEL											ESTIMATED PAINT QUANTITIES* NEW STEEL
TOTAL PAINT SURFACE (A)	FASCIA BEAM AREAS REMOVE VINYL (B)	ESTIMATED AREAS OF FASCIA REQUIRING SP-11 ASSUME 4% (C)	JOINT AREAS 5' EACH SIDE (D)	ESTIMATED AMOUNT OF JOINT AREA REQUIRING SP-11 ASSUME 35% (E)	FLANGE AREAS MAIN GIRDERS ~~NOT INCLUDED~~ 2 ~~IN (B)~~ (F)	TOTAL AREAS (B)+(D)+(F) (G)	REMAINING AREAS (A)-(G) (H)	ESTIMATED AREA OF (H) TO BE SP-11 ASSUME 1% (I)	TOTAL SP-11 AREAS (C)+(E)+(F)+(I) (J)	TOTAL AREAS TO RECEIVE COATS 1&2 (B)+(E)+(F)+(I) (K)	ESTIMATED AREAS TO BE CLEANED TO SP-11 AND TO RECEIVE COATS 1&2 BEFORE TOPCOAT (L)
1,075,000	140,200	5,600	60,000	21,000	24,000	224,200	850,800	8,500	59,100	193,700	21,000

* ALL QUANTITIES ARE SF

NOTE: THESE QUANTITIES ARE APPROXIMATE AND FOR CONTRACTOR BIDDING PURPOSES ONLY.

A. ALL STEEL SHALL BE WATER BLASTED WITH 10,000PSI MAXIMUM TO CLEAN STEEL AND ALL STEEL RECEIVES TOP COAT (COAT III).
B. APPROACH SPAN FASCIA GIRDERS (4) AND MAIN SPAN EXTERIOR STRINGERS (4) WILL HAVE ALL VINYL REMOVED ON EXTERIOR FACE.
C. ASSUME 4% OF FASCIA GIRDERS WILL REQUIRE SP-11 (CLEANED TO BARE METAL).
D. JOINT AREA STEEL 5' EACH SIDE PIER AND ABUTMENT.
E. ASSUME 35% OF JOINT AREA WILL REQUIRE SP-11 (CLEANED TO BARE METAL).
F. ASSUME MAIN SPAN GIRDER FLANGES WILL REQUIRE SP-11 (CLEANED TO BARE METAL).
G. TOTAL AREA B+D+F.
H. REMAINING AREAS A-G.
I. ESTIMATED AREA OF H THAT WILL REQUIRE SP-11.
J. TOTAL ESTIMATED SP-11 AREA C+E+F+I.
K. TOTAL ESTIMATED AREAS TO RECEIVE COATS 1&2 B+E+F+I.
L. NEW STEEL SURFACES REQUIRING SP-11; THESE AREAS ARE CONSIDERED TO BE INCLUDED UNDER E.

CADD DESIGN G. FAHRENDORF DESIGN B. COPLEY CHKD. P. PERKINS

J:\Trans\0603\700cadd\709STR\addendum\pdin101.dgn

REHABILITATION AND PAINTING OF BRIDGE 1-813 ON I-495 OVER CHRISTINA RIVER

REVISIONS

SUGGESTED CONSTRUCTION SEQUENCE FOR ABOVE DECK REPAIRS

PHASE 1

PHASE 1CONSTRUCTION WILL ENCOMPASS PARAPET SPALL REPAIR, LONGITUDINAL JOINT INSTALLATION, TRANSVERSE JOINT REHABILITATION AND PROTECTIVE COATING DETAILS ASSOCIATED WITH THE MEDIAN PARAPETS (WEST PARAPET ON I-495 NB AND EAST PARAPET ON I-495 SB), AS SHOWN ON THE TRAFFIC CONTROL PLANS AND DETAILS. PRIOR TO THE START OF ANY WORK, THE CONTRACTOR AND ENGINEER WILL PERFORM FIELD INVESTIGATIONS TO VERIFY LOCATIONS AND LIMITS OF ALL ABOVE DECK REPAIRS. WORK WILL BE PERFORMED AS PER PLANS AND SPECIFICATIONS, AND AS DIRECTED BY THE ENGINEER.

1. INSTALL TRAFFIC CONTROL DEVICES IN ACCORDANCE WITH PLANS AND DETAILS FOR PHASE 1CONSTRUCTION.
2. INSTALL TEMPORARY PROTECTIVE SHIELDING PRIOR TO THE START OF ANY ABOVE DECK REPAIRS.
3. PERFORM PARAPET SPALL REPAIRS FOR SPANS 1THROUGH 38 ON EAST PARAPET OF I-495 SB AND SPANS 1THROUGH 38 ON WEST PARAPET OF I-495 NB.
4. PERFORM LONGITUDINAL JOINT SEAL INSTALLATION AT PIERS 1THROUGH 37 AND AT NORTH AND SOUTH ABUTMENTS.
5. PERFORM TRANSVERSE JOINT REHABILITATION AT ALL TRANSVERSE JOINTS IN THE WEST LANE OF I-495 NB AND EAST LANE OF I-495 SB.
6. APPLY PROTECTIVE COATING TO THE WEST PARAPET OF I-495 NB AND EAST PARAPET OF I-495 SB FROM THE SOUTH APPROACH PARAPETS TO THE NORTH APPROACH PARAPETS.
7. FOR ADDITIONAL INFORMATION SEE THE SPECIAL PROVISIONS.

PHASE 2

PHASE 2 CONSTRUCTION WILL ENCOMPASS PARAPET SPALL REPAIR, JOINT INSTALLATION, TRANSVERSE JOINT REHABILITATION AND PROTECTIVE COATING DETAILS ASSOCIATED WITH THE EAST PARAPET ON I-495 NB AND WEST PARAPET ON I-495 SB, AS SHOWN ON THE TRAFFIC CONTROL PLANS AND DETAILS. PRIOR TO THE START OF ANY WORK, THE CONTRACTOR AND ENGINEER WILL PERFORM FIELD INVESTIGATIONS TO VERIFY LOCATIONS AND LIMITS OF ALL ABOVE DECK REPAIRS. WORK WILL BE PERFORMED AS PER PLANS AND SPECIFICATIONS, AND AS DIRECTED BY THE ENGINEER.

1. INSTALL TRAFFIC CONTROL DEVICES IN ACCORDANCE WITH PLANS AND DETAILS FOR PHASE 2 CONSTRUCTION.
2. INSTALL TEMPORARY PROTECTIVE SHIELDING PRIOR TO THE START OF ANY ABOVE DECK REPAIRS.
3. PERFORM PARAPET SPALL REPAIRS FOR SPANS 1THROUGH 38 ON WEST PARAPET OF I-495 SB AND SPANS 1THROUGH 38 ON EAST PARAPET OF I-495 NB.
4. PERFORM TRANSVERSE JOINT REHABILITATION AT ALL TRANSVERSE JOINTS IN THE EAST LANE AND SHOULDER OF I-495 NB AND WEST LANE AND SHOULDER OF I-495 SB.
5. APPLY PROTECTIVE COATING TO THE EAST PARAPET OF I-495 NB AND WEST PARAPET OF I-495 SB FROM THE SOUTH APPROACH PARAPETS TO THE NORTH APPROACH PARAPETS.
6. FOR ADDITIONAL INFORMATION SEE THE SPECIAL PROVISIONS.

PHASE 3

PHASE 3 CONSTRUCTION WILL ENCOMPASS TRANSVERSE JOINT REHABILITATION ASSOCIATED WITH THE CENTER LANES ON I-495 NB AND I-495 SB, AS SHOWN ON THE TRAFFIC CONTROL PLANS AND DETAILS. PRIOR TO THE START OF ANY WORK, THE CONTRACTOR AND ENGINEER WILL PERFORM FIELD INVESTIGATIONS TO VERIFY LOCATIONS AND LIMITS OF ALL ABOVE DECK REPAIRS. WORK WILL BE PERFORMED AS PER PLANS AND SPECIFICATIONS, AND AS DIRECTED BY THE ENGINEER.

1. INSTALL TRAFFIC CONTROL DEVICES IN ACCORDANCE WITH PLANS AND DETAILS FOR PHASE 3A AND 3B CONSTRUCTION.
2. INSTALL TEMPORARY PROTECTIVE SHIELDING PRIOR TO THE START OF ANY ABOVE DECK REPAIRS.
3. PERFORM TRANSVERSE JOINT REHABILITATION AT ALL TRANSVERSE JOINTS IN THE CENTER LANE OF I-495 NB AND THE CENTER LANE OF I-495 SB.
4. FOR ADDITIONAL INFORMATION SEE THE SPECIAL PROVISIONS.

SUGGESTED CONSTRUCTION SEQUENCE FOR BELOW DECK REPAIRS

PHASE 4

PHASE 4 CONSTRUCTION WILL INCLUDE APPROACH SPAN BEARING REPLACEMENTS, MAIN SPAN BEARING REPLACEMENTS, FIX BEARING CONCRETE ENCASEMENT DETAILS, DECK SOFFIT SPALL REPAIR DETAILS, CONCRETE REPAIRS FOR SUBSTRUCTURE UNITS, FENDER SYSTEM REPAIR DETAILS AND DRAINAGE TROUGH INSTALLATION DETAILS FOR I-495 NB AND SB STRUCTURES. PRIOR TO THE START OF ANY WORK THE CONTRACTOR AND ENGINEER WILL PERFORM FIELD INVESTIGATIONS TO VERIFY LOCATIONS AND LIMITS OF ALL BELOW DECK REPAIRS. WORK WILL BE PERFORMED AS PER PLANS AND SPECIFICATIONS, AND AS DIRECTED BY THE ENGINEER.

PHASE 4A - SPANS 1THROUGH 15

1. PERFORM APPROACH SPAN BEARING REPLACEMENT:
   A. INSTALL JACKING ASSEMBLIES AT CONCRETE PIER CAPS.
   B. REMOVE EXISTING ROCKER BEARINGS.
   C. INSTALL NEW BRONZE SLIDING PLATE BEARINGS AND STEEL PEDESTALS.
2. PERFORM STRUCTURAL STEEL REPAIRS.
3. PERFORM DECK SOFFIT SPALL REPAIRS.
4. PERFORM CONCRETE REPAIRS FOR SUBSTRUCTURE UNITS:
   A. SPALL REPAIRS.
   B. EPOXY INJECTION CRACK REPAIR.
   C. EPOXY NON-SAG MORTAR CRACK REPAIR.
5. FOR ADDITIONAL INFORMATION SEE THE SPECIAL PROVISIONS.

PHASE 4B - SPANS 16 THROUGH 18

1. PERFORM MAIN SPAN BEARING REPLACEMENT:
   A. INSTALL JACKING ASSEMBLIES AT CONCRETE PIER CAPS.
   B. REMOVE EXISTING ROCKER BEARINGS.
   C. INSTALL NEW BRONZE SLIDING PLATE BEARINGS AND STEEL PEDESTALS.
2. PERFORM FIX BEARING CONCRETE ENCASEMENT.
3. PERFORM STRUCTURAL STEEL REPAIRS.
4. PERFORM DECK SOFFIT SPALL REPAIRS.
5. PERFORM DRAINAGE TROUGH INSTALLATION.
6. PERFORM CONCRETE REPAIRS FOR SUBSTRUCTURE UNITS:
   A. SPALL REPAIRS.
   B. EPOXY INJECTION CRACK REPAIR.
   C. EPOXY NON-SAG MORTAR CRACK REPAIR.
7. PERFORM FENDER SYSTEM REPAIRS.
8. FOR ADDITIONAL INFORMATION SEE THE SPECIAL PROVISIONS.

PHASE 4C - SPANS 16 THROUGH 38

1. PERFORM APPROACH SPAN BEARING REPLACEMENT:
   A. INSTALL JACKING ASSEMBLIES AT CONCRETE PIER CAPS.
   B. REMOVE EXISTING ROCKER BEARINGS.
   C. INSTALL NEW BRONZE SLIDING PLATE BEARINGS AND STEEL PEDESTALS.
2. PERFORM STRUCTURAL STEEL REPAIRS.
3. PERFORM DECK SOFFIT SPALL REPAIRS.
4. PERFORM CONCRETE REPAIRS FOR SUBSTRUCTURE UNITS:
   A. SPALL REPAIRS.
   B. EPOXY INJECTION CRACK REPAIR.
   C. EPOXY NON-SAG MORTAR CRACK REPAIR.
5. FOR ADDITIONAL INFORMATION SEE THE SPECIAL PROVISIONS.

PHASE 5

PHASE 5 CONSTRUCTION WILL INCLUDE PAINTING OF EXISTING AND NEW REPLACEMENT STRUCTURAL STEEL FOR I-495 NB AND SB STRUCTURES. WORK WILL BEGIN AT THE SOUTH ABUTMENT AND PROCEED TO THE NORTH ABUTMENT. PAINTING OF STRUCTURAL STEEL WILL NOT COMMENCE UNTIL ALL ABOVE AND BELOW DECK REPAIRS HAVE BEEN COMPLETED. STRUCTURAL STEEL REPAIRS SHOULD BE DONE AFTER THE STEEL HAS BEEN CLEANED AND BEFORE THE PAINT IS APPLIED. PRIOR TO THE START OF ANY WORK THE CONTRACTOR AND ENGINEER WILL PERFORM FIELD INVESTIGATIONS TO VERIFY LOCATIONS AND LIMITS OF ALL AREAS TO BE PAINTED. WORK WILL BE PERFORMED AS DIRECTED BY THE ENGINEER. SEE THE SPECIAL PROVISIONS FOR ADDITIONAL INFORMATION.

REFERENCES

1. SEE SHEETS 5-7 FOR REPAIR KEY PLAN AND ELEVATION.
2. SEE SHEETS 8-10 FOR APPROACH SPAN SLIDING PLATE DETAILS AND BEARING PEDESTAL DETAILS.
3. SEE SHEETS 11-12 FOR MAIN SPAN POT BEARING DETAILS AND BEARING PEDESTAL DETAILS.
4. SEE SHEETS 13A & 13B FOR APPROACH SPAN JACKING DETAILS, LOCATIONS AND PROCEDURES.
5. SEE SHEETS 14-16 FOR MAIN SPAN JACKING DETAILS, LOCATIONS AND PROCEDURES.
6. SEE SHEET 18A & 18B FOR FIXED BEARING CONCRETE ENCASEMENT DETAILS.
7. SEE SHEET 19 FOR STRUCTURAL STEEL REPAIR DETAILS, LOCATIONS AND PROCEDURES.
8. SEE SHEET 20 FOR PARAPET SPALL REPAIR DETAILS, LOCATIONS AND PROCEDURES AND PARAPET PROTECTIVE COATING DETAILS.
9. SEE SHEET 21TRANSVERSE JOINT SEAL REHABILITATION DETAILS AND PROCEDURES.
10. SEE SHEETS 22-23 FOR DRAINAGE TROUGH DETAILS, LOCATIONS AND PROCEDURES AND LONGITUDINAL JOINT SEAL DETAILS.
11. SEE SHEETS 24-25 FOR CONCRETE REPAIR DETAILS.
12. SEE SHEETS 26-29 FOR SUBSTRUCTURE CONCRETE REPAIR SCHEDULE.
13. SEE SHEET 30 FOR PIER 37 REPAIR DETAILS.
14. SEE SHEET 31FOR FENDER REPAIR DETAILS.
15. SEE SHEET 37 FOR THE STEEL PAINTING KEY PLAN.
16. SEE SHEET 39-43 FOR TRAFFIC CONTROL PLAN AND GENERAL NOTES.

MAINTENANCE OF TRAFFIC GENERAL NOTES

GENERAL

ALL WORK SHALL BE PERFORMED IN A MANNER THAT WILL INSURE THE LEAST PRACTICABLE OBSTRUCTION TO TRAFFIC CONSISTENT WITH SAFETY AND SHALL COMPLY WITH THE DEPARTMENT MANUAL ENTITLED "TRAFFIC CONTROLS FOR STREETS AND HIGHWAY CONSTRUCTION, MAINTENANCE, UTILITY AND EMERGENCY OPERATIONS" (JULY 2001). THE MOST CURRENT VERSION OF THIS MANUAL IN EFFECT AT THE TIME OF ADVERTISEMENT FOR BIDS SHALL BE USED. HEREINAFTER, THIS MANUAL SHALL BE REFERRED TO AS THE "TRAFFIC CONTROL MANUAL". THE CONTRACTOR SHALL SUBMIT A TRAFFIC CONTROL PLAN FOR APPROVAL BY THE ENGINEER BEFORE THE START OF THE PROJECT.

AMERICAN TRAFFIC SAFETY SERVICES ASSOCIATION- CERTIFIED WORK SITE SUPERVISOR

AN ATSSA CERTIFIED TRAFFIC CONTROL SUPERVISOR SHALL BE PRESENT AND WILL HAVE RESPONSIBILITY FOR THE FOLLOWING: INSTALLATION, RELOCATION, INSPECTION, REPAIR, REPLACEMENT AND REMOVAL OF TRAFFIC CONTROL DEVICES, FOR PREPARING ANY MODIFICATIONS, REVISIONS, OR CHANGES TO THE PROJECT TRAFFIC CONTROL OR MAINTENANCE OF TRAFFIC PLANS, AND FOR THE POSITIONING OF PERSONNEL NEEDED OR REQUIRED TO DIRECT TRAFFIC THROUGH THE PROJECT WORK ZONE. THE ATSSA CERTIFIED WORK SITE SUPERVISOR IS A FULL TIME RESPONSIBILITY AND SHOULD BE STAFFED FULL TIME AND ALL THE TIME WHILE CONSTRUCTION ACTIVITY IS OCCURRING. THE ATSSA CERTIFIED WORK SITE SUPERVISOR SHALL NOT BE THE PROJECT SUPERINTENDENT, FOREMAN, EQUIPMENT OPERATOR, WORKER OR OTHER PERSON THAT WILL BE PERFORMING OTHER WORK OR RESPONSIBILITIES ON THE PROJECT. A POLICE OFFICER IS NOT CONSIDERED AN ATSSA CERTIFIED WORK SITE SUPRVISOR FOR THE PURPOSES OF THIS REQUIREMENT. THE ATSSA CERTIFIED WORK SITE SUPERVISOR SHALL EXCLUSIVELY BE RESPONSIBLE FOR THE MAINTENANCE OF TRAFFIC. PAYMENT FOR THE ATSSA CERTIFIED WORK SITE SUPERVISOR IS INCIDENTAL TO ITEM 763500, MAINTENANCE OF TRAFFIC.

PEDESTRIAN TRAFFIC

PEDESTRIANS SHOULD NOT BE LED INTO DIRECT CONFLICT WITH WORK SITE VEHICLES, EQUIPMENT, MATERIALS, STORAGE AREAS, OR WORK OPERATIONS/ACTIVITIES. PEDESTRIANS SHOULD NOT BE LED INTO DIRECT CONFLICTS WITH MAINLINE TRAFFIC MOVING THROUGH OR AROUND THE WORK SITE. PEDESTRIANS SHOULD BE PROVIDED WITH A SAFE, CONVENIENT PATH THAT REPLICATES AS NEARLY AS POSSIBLE THE MOST DESIRABLE CHARACTERISTICS OF THE SIDEWALK AND TRAVEL PATHS. EXAMPLES OF CLEARLY DELINEATED WORK SITE PEDESTRIAN PATHS AND DETOURS CAN BE FOUND IN PART VI ON THE M.U.T.C.D. FIGURES TA-28 AND/OR TA-29. SIDEWALK CLOSURES OR PEDESTRIAN DETOURS SHALL BE IN ACCORDANCE WITH CASE 17 OF THE DELDOT MANUAL FOR TRAFFIC CONTROLS.

RAILROAD SAFETY AND MAINTENANCE OF RAIL ROAD TRAFFIC

THE CONTRACTOR WILL OBTAIN SPECIFIC LIABILITY INSURANCE THAT COVERS ALL WORK WITHIN RAILROAD RIGHT OF WAY. ALL CONTRACTOR AND SUB-CONTRACTOR WORKERS AND OTHER PERSONS VISITING THE PROJECT OR ENTERING THE AMTRAK RIGHT OF WAY, ARE REQUIRED TO HAVE RECEIVED SPECIFIC RAIL ROAD SAFETY TRAINING. THIS INCLUDES ANY EMPLOYEE, REPRESENTATIVE, OR AGENTS OF THE DEPARTMENT OF TRANSPORTATION. PROJECT PERSONNEL, INSPECTORS, ENGINEERS, SURVEYORS, LAB TECHNICIANS, AND OTHERS WILL NOT BE PERMITTED ON SITE UNTIL THEY HAVE BEEN TRAINED. A PHOTO IDENTIFICATION CARD MUST BE ON DISPLAY WHEN EVER A PERSON IS ON SITE. THE CONTRACTOR IS RESPONSIBLE FOR CONDUCTING, ARRANGING, OR SCHEDULING THIS TRAINING FOR ALL PERSONNEL. THE COST ASSOCIATED WITH THIS TRAINING SHOULD BE MADE INCIDENTAL TO ITEM 763502, MAINTENANCE OF RAIL ROAD TRAFFIC, OR SOME OTHER CONTRACT BID/PAY ITEM. FURTHERMORE ITEM 763502, MAINTENANCE OF RAIL ROAD TRAFFIC, IS NECESSARY TO PAY FOR THE REQUIRED LIABILITY INSURANCE.

TEMPORARY/PERMANENT PAVEMENT STRIPING

TRAFFIC CONTROL CASE 8B AND 8C, MOVING OPERATIONS DAYTIME ONLY, SHALL BE UTILIZED WHEN PLACING ALL TEMPORARY OR PERMANENT PAVEMENT STRIPING. A TRUCK MOUNTED ATTENUATOR IS REQUIRED WHEN CASE 8B OR 8C IS UTILIZED. ALL WORK ACTIVITES SHOULD BE RESTRICTED TO NON-RUSH HOUR TRAFFIC TIMES. LANE CLOSURES WILL BE PERMITTED AS INDICATED UNDER THE RESTRICTIONS SECTION.

LANE CLOSURES

APPROPRIATE LANE CLOSURES SHALL BE UTILIZED FOR ALL STATIONARY OPERATIONS INVOLVING THE PLACEMENT AND/OR REMOVAL OF PAVEMENT STRIPING OR MARKING, THE PLACEMENT OF REGULATORY AND/OR WARNING SIGNS, AND THE PLACEMENT OF BARRIER WALLS. ALL LANE CLOSURES ON I-495 SHOULD BE RESTRICTED TO OFF PEAK HOURS. NO LANE CLOSURES WILL BE PERMITTED BETWEEN THE HOURS OF 6:00 AM - 9:30 AM AND 3:00 PM - 7:00 PM. THE USE OF A TRUCK MOUNTED ATTENUATOR, TYPE II, IS REQUIRED DURING THESE OPERATIONS. THE CONTRACTOR WILL BE PERMITTED TO WORK ON THE NORTHBOUND AND SOUTHBOUND LANES AT THE SAME TIME DURING PHASE I ONLY. FOR LANE CLOSURES ON I-495, TRAFFIC CONTROL DEVICES SHALL BE INSTALLED IN ACCORDANCE WITH THE DELDOT MANUAL FOR TRAFFIC CONTROL CASE 25, 27 AND 28 OR OTHER STANDARD AS APPROPRIATE. FOR ROADWAYS UNDER THE BRIDGE, TRAFFIC CONTROL DEVICES SHALL BE INSTALLED IN ACCORDANCE WITH THE DELDOT MANUAL FOR TRAFFIC CONTROL, CASE 28A OR OTHER STANDARD AS APPROPRIATE.

RESTRICTIONS

I-495

1. LANE CLOSURES ARE ONLY PERMITTED BETWEEN THE HOURS OF 9:30 AM AND 3:00 PM AND 7:00 PM - 6:00 AM. ALL TRAVEL LANES WILL BE OPERATIONAL FROM 6:00 AM TO 9:30 AM AND 3:00 PM - 7:00 PM.
2. NORTHBOUND AND SOUTHBOUND LANE RESTRICTIONS WILL BE PERMITTED CONCURRENTLY FOR MEDIAN PARAPET WORK ONLY.
3. JACKING WILL ONLY BE PERMITTED BETWEEN THE HOURS OF 2:00 AM AND 4:00 AM.

CHRISTINA AVENUE

1. NO LANE CLOSURES OR DETOURS WILL BE PERMITTED ON CHRISTINA AVENUE BETWEEN THE HOURS OF 7:00 AM TO 9:00 AM AND 4:00 PM TO 6:00 PM.
2. WORK EXCEEDING THE CITY OF WILMINGTON NOISE ORDINANCE LIMITS MUST BE APPROVED BY THE CITY.

RAILROADS

1. NORFOLK SOUTHERN MAY BE CLOSED UP TO 16 HOURS PER DAY.

DEVICES IN URBAN SETTINGS

ALL TYPE "C" ARROW PANEL AND ALL CHANGEABLE MESSAGE CENTERS USED ON THE URBAN STREETS WILL BE SOLAR POWERED.

CHANGEABLE MESSAGE CENTERS

CHANGEABLE MESSAGE BOARDS ARE TO BE PLACED ¾ MILE FROM THE PROJECT SITE IN EACH DIRECTION. THE USE OF THESE BOARDS SHOULD FOLLOW THE DELDOT TRAFFIC PROTECTION STANDARDS. CHANGEABLE MESSAGE SIGNS WILL BE PLACED 5 DAYS PRIOR TO CONSTRUCTION NOTIFYING TRAFFIC OF UPCOMING WORK. CHANGEABLE MESSAGE SIGNS WILL BE LOCATED AT THE I-95/I-495 INTERCHANGE NOTIFYING TRAFFIC OF POSSIBLE DELAYS AND IDENTIFYING I-95 AS AN ALTERNATE ROUTE. SIGNS WILL BE LOCATED APPROXIMATELY ½ MILE PRIOR TO THE EXITS FROM I-95 TO I-495, SUGGESTED MESSAGE "POSSIBLE DELAYS I-495, USE I-95". THIS MESSAGE SHOULD BE COORDIANTED WITH THE TRAFFIC MANAGEMENT CENTER TO ENSURE COORDINATION WITH OVERHEAD SIGNS AND POSSIBLE CONSTRUCTION ON I-95. IT IS ESTIMATED THAT UP TO FIVE (5) CHANGEABLE MESSAGE BOARDS WILL BE REQUIRED AT ANY GIVEN TIME.

LANE WIDTHS

THE CONTRACTOR WILL MAINTAIN MINIMUM 11' LANE WIDTHS WITHIN ALL CONSTRUCTION WORK ZONES.

FLASHING LIGHTS ON VEHICLES

ALL VEHICLES AND EQUIPMENT THAT WILL BE USED ON I-495 ARE REQUIRED TO BE EQUIPED WITH A LIGHT BAR OR OTHER HIGH POWERED STROBE SYSTEM.

TRAFFIC CONTROL PLAN GENERAL NOTES

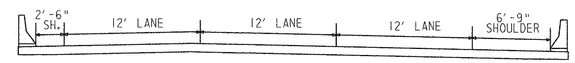

TYPICAL SECTION

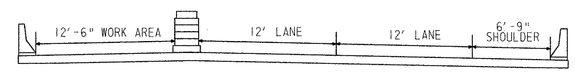

PHASE I - MEDIAN PARAPET WORK (NB & SB)

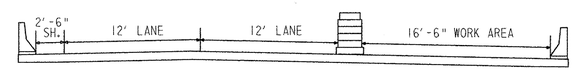

PHASE 2 - FASCIA PARAPET WORK (NB & SB)

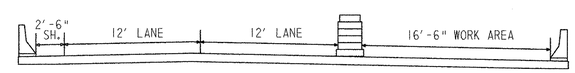

PHASE 3A - TRANSVERSE JOINT REHAB

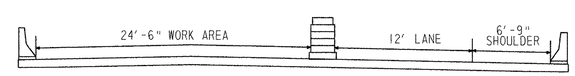

PHASE 3B - TRANSVERSE JOINT REHAB

BR. 1-813	CONTRACT	COUNTY	FEDERAL AID PROJECT NO.	SHEET NO.	TOTAL SHTS.
	94-074-11	NEW CASTLE	IM-N060(2)	39	45

REHABILITATION AND PAINTING OF BRIDGE 1-813 ON I-495 OVER CHRISTINA RIVER

REVISIONS

CADD DESIGN CPP DESIGN CPP CHKD. JMC

$FILE$

BR. 1-813	CONTRACT	COUNTY	FEDERAL AID PROJECT NO.	SHEET NO.	TOTAL SHTS.
	94-074-11	NEW CASTLE	IM-N060(2)	40	45

REHABILITATION AND PAINTING OF BRIDGE 1-813 ON I-495 OVER CHRISTINA RIVER

REVISIONS

TRAFFIC CONTROL PLAN FOR ABOVE DECK REPAIRS

NOT TO SCALE

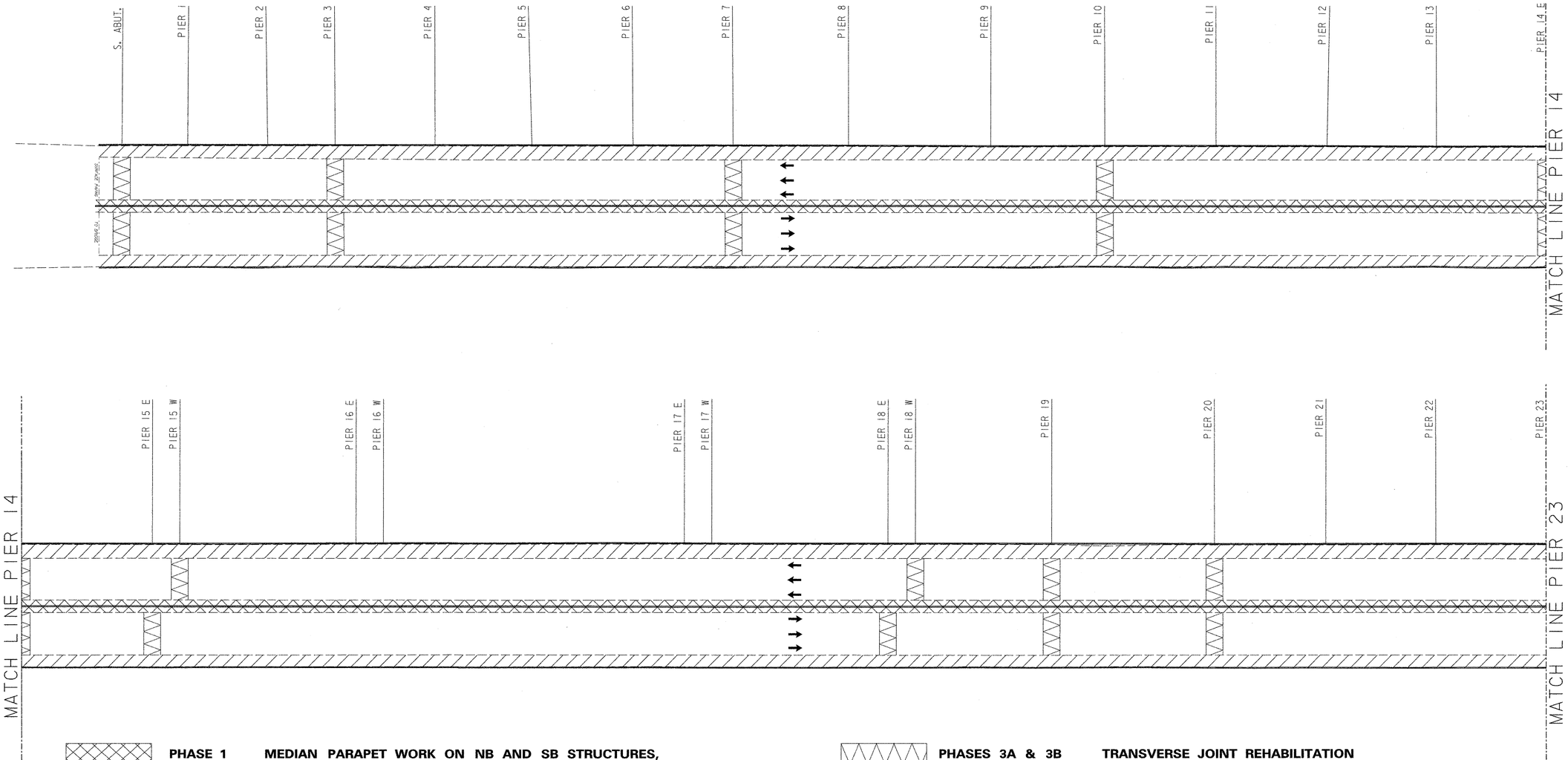

PHASE 1 — **MEDIAN PARAPET WORK ON NB AND SB STRUCTURES, PIER 1 THROUGH PIER 38. SEE DETAIL A, SHEET 42.**

PHASE 2 — **FASCIA PARAPET WORK ON NB AND SB STRUCTURES, PIER 1 THROUGH PIER 38. SEE DETAIL B, SHEET 42.**

PHASES 3A & 3B — **TRANSVERSE JOINT REHABILITATION OF I-495 NB AND SB. SEE DETAIL D, SHEET 43.**

CADD DESIGN CEP DESIGN CEP CHKD. JMC

$FILE$

TRAFFIC CONTROL PLAN
FOR ABOVE DECK REPAIRS

BR. 1-813

CONTRACT	COUNTY	FEDERAL AID PROJECT NO.	SHEET NO.	TOTAL SHTS.
94-074-11	NEW CASTLE	IM-N060(2)	41	45

REHABILITATION AND PAINTING OF BRIDGE 1-813 ON I-495 OVER CHRISTINA RIVER

REVISIONS

NOT TO SCALE

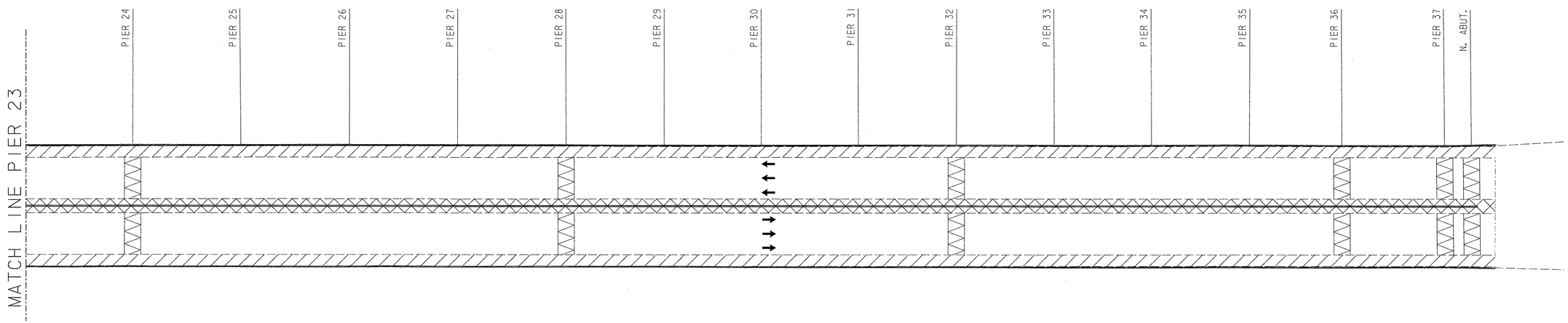

CADD DESIGN CEP DESIGN CEP CHKD. JMC

$FILE$

TRAFFIC CONTROL PLAN DETAILS

BR. 1-813	CONTRACT	COUNTY	FEDERAL AID PROJECT NO.	SHEET NO.	TOTAL SHTS.
	94-074-11	NEW CASTLE	IM-N060(2)	42	45

REHABILITATION AND PAINTING OF BRIDGE 1-813 ON I-495 OVER CHRISTINA RIVER

REVISIONS

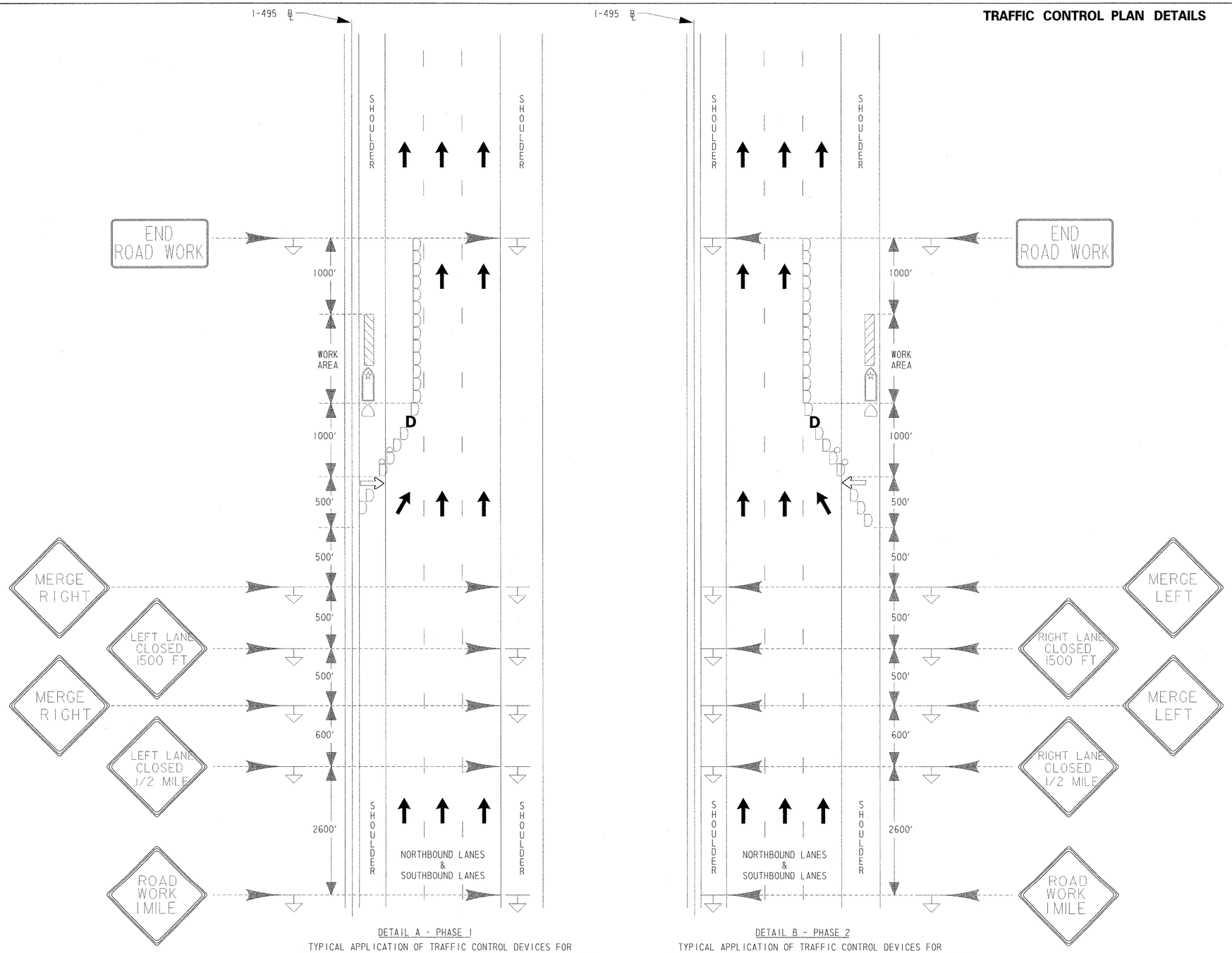

DETAIL A - PHASE 1

TYPICAL APPLICATION OF TRAFFIC CONTROL DEVICES FOR HIGHWAY CONSTRUCTION, MAINTENANCE AND UTILITY OPERATIONS FOR MULTI LANE LIMITED CONTROL FOR INTERSTATES AND HIGHWAYS SHOULDER WORK - HEAVY TRAFFIC (CASE 33a)
SOUTH ABUTMENT TO PIER 38 OF I-495 SOUTHBOUND
SOUTH ABUTMENT TO PIER 38 OF I-495 NORTHBOUND

DETAIL B - PHASE 2

TYPICAL APPLICATION OF TRAFFIC CONTROL DEVICES FOR HIGHWAY CONSTRUCTION, MAINTENANCE AND UTILITY OPERATIONS FOR MULTI LANE LIMITED CONTROL FOR INTERSTATES AND HIGHWAYS SHOULDER WORK - HEAVY TRAFFIC (CASE 33a)
SOUTH ABUTMENT TO PIER 38 OF I-495 SOUTHBOUND
SOUTH ABUTMENT TO PIER 38 OF I-495 NORTHBOUND

LEGEND

TYPE III

SYMBOLS

- D DRUMS
- WORK AREA
- SIGN (BOTTOM OF ALL SIGNS MUST BE AT LEAST (5) FIVE FEET ABOVE ROADWAY SURFACE)
- ARROW PANEL
- VEHICLE WITH ROTATING AMBER BEACON OR STROBE
- TRUCK MOUNTED ATTENUATOR
- TRAFFIC FLOW

LIGHT SYMBOLS

- TYPE "A" AMBER FLASHING LIGHT
- TYPE "B" AMBER FLASHING LIGHT
- TYPE "B" RED HIGH-INTENSITY LIGHT

CADD DESIGN ____ CPP ____ DESIGN ____ CPP ____ CHKD. ____ JMC ____

$FILE$

TRAFFIC CONTROL PLAN DETAILS

BR. 1-813	CONTRACT	COUNTY	FEDERAL AID PROJECT NO.	SHEET NO.	TOTAL SHTS.
	94-074-11	NEW CASTLE	IM-N060(2)	43	45

REHABILITATION AND PAINTING OF BRIDGE 1-813 ON I-495 OVER CHRISTINA RIVER

REVISIONS

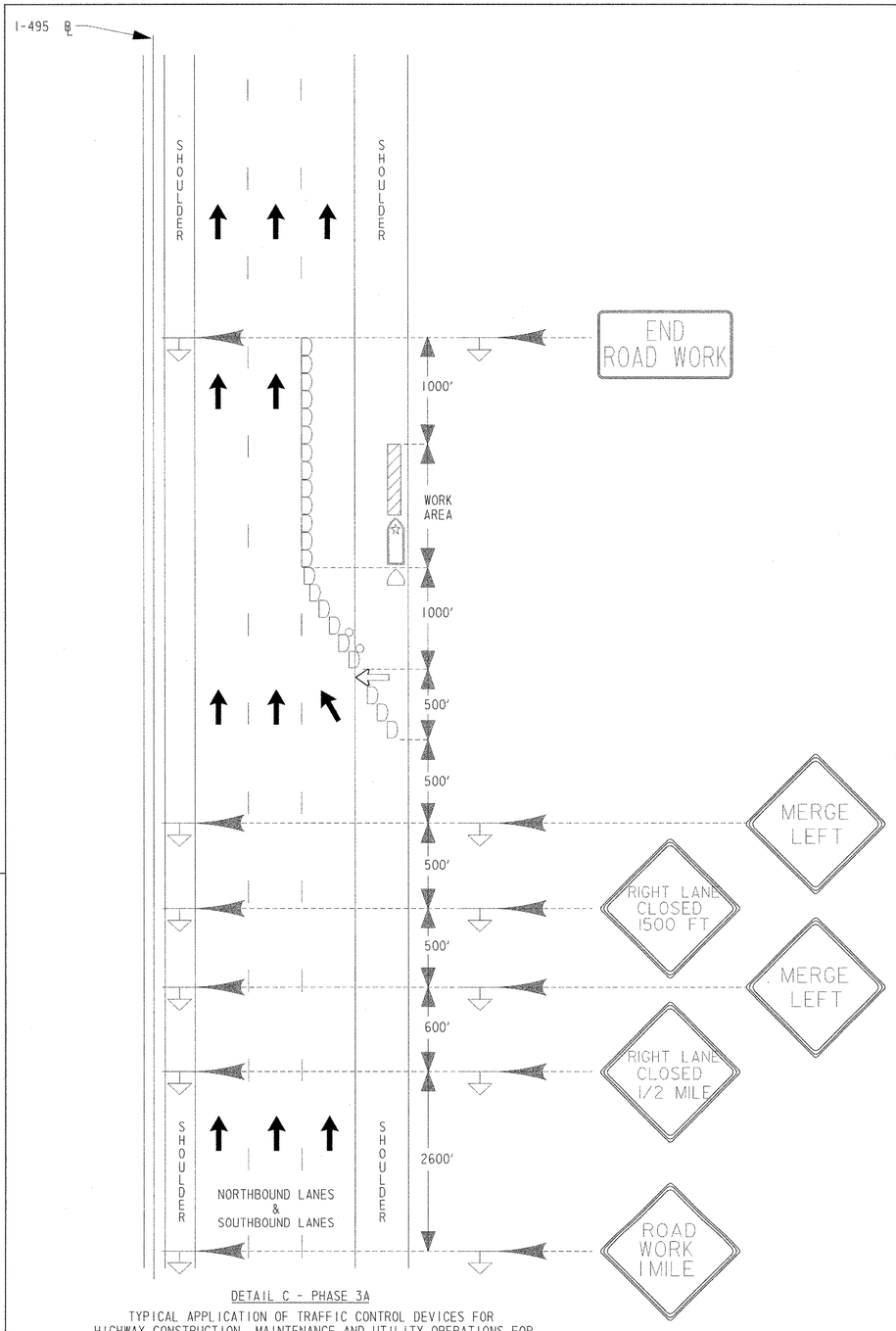

DETAIL C - PHASE 3A

TYPICAL APPLICATION OF TRAFFIC CONTROL DEVICES FOR HIGHWAY CONSTRUCTION, MAINTENANCE AND UTILITY OPERATIONS FOR MULTI LANE LIMITED CONTROL FOR INTERSTATES AND HIGHWAYS SHOULDER WORK - HEAVY TRAFFIC (CASE 33a)
SOUTH ABUTMENT TO PIER 38 OF I-495 SOUTHBOUND
SOUTH ABUTMENT TO PIER 38 OF I-495 NORTHBOUND

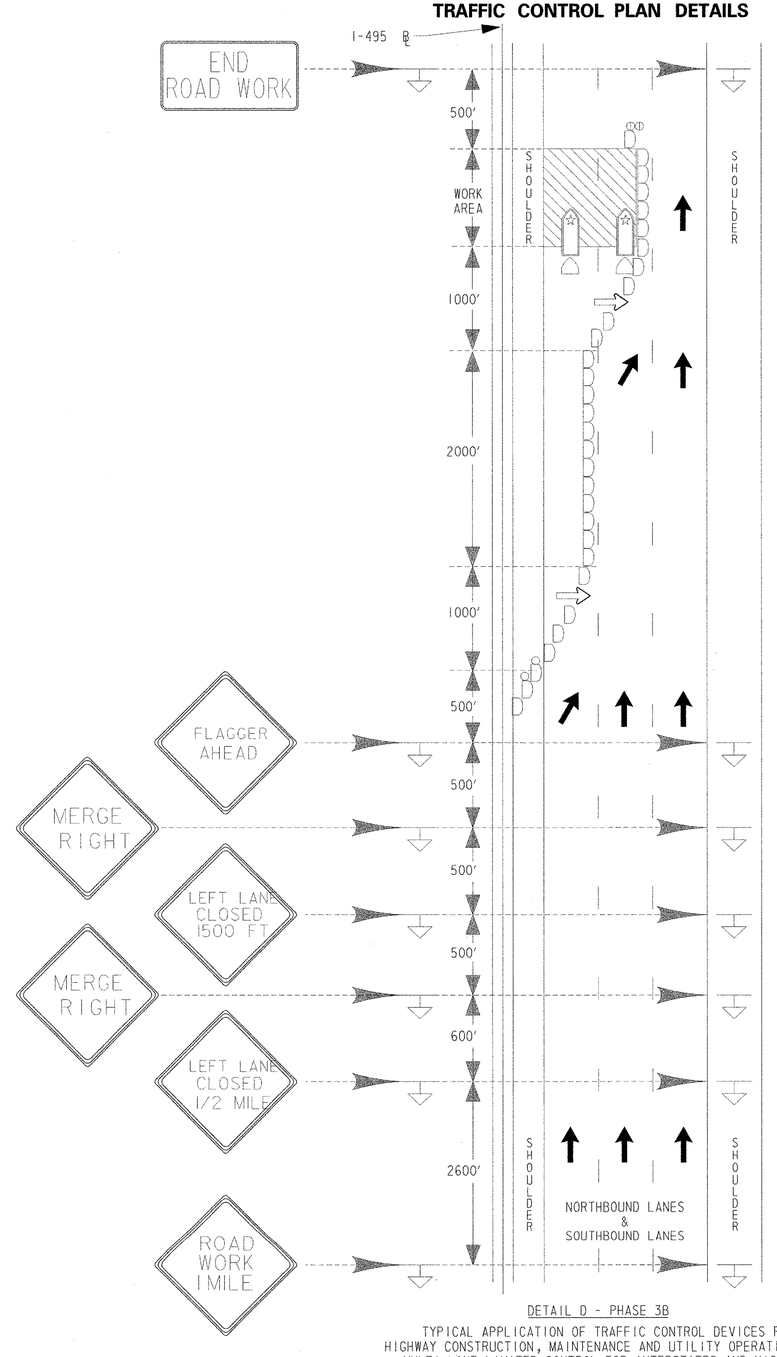

DETAIL D - PHASE 3B

TYPICAL APPLICATION OF TRAFFIC CONTROL DEVICES FOR HIGHWAY CONSTRUCTION, MAINTENANCE AND UTILITY OPERATIONS FOR MULTI LANE LIMITED CONTROL FOR INTERSTATES AND HIGHWAYS - LIGHT TRAFFIC (CASE 26)
SOUTH ABUTMENT TO PIER 38 OF I-495 SOUTHBOUND
SOUTH ABUTMENT TO PIER 38 OF I-495 NORTHBOUND

LEGEND

TYPE III

SYMBOLS

D DRUMS

WORK AREA

SIGN (BOTTOM OF ALL SIGNS MUST BE AT LEAST (5) FIVE FEET ABOVE ROADWAY SURFACE)

ARROW PANEL

VEHICLE WITH ROTATING AMBER BEACON OR STROBE

TRUCK MOUNTED ATTENUATOR

TRAFFIC FLOW

LIGHT SYMBOLS

TYPE "A" AMBER FLASHING LIGHT

TYPE "B" AMBER FLASHING LIGHT

TYPE "B" RED HIGH-INTENSITY LIGHT

CADD DESIGN ____ CPP ____ DESIGN ____ CPP ____ CHKD. ____ JMC ____

$FILE$

BR. 1-813	CONTRACT	COUNTY	FEDERAL AID PROJECT NO.	SHEET NO.	TOTAL SHTS.
	94-074-11	NEW CASTLE	IM-N060(2)	44	45

REHABILITATION AND PAINTING OF BRIDGE 1-813 ON I-495 OVER CHRISTINA RIVER

REVISIONS

LOUVERED SIGN PANELS

CONSTRUCTION NOTES:

1. CONTRACTOR TO REMOVE EXISTING SIGNS AND REPLACE WITH LOUVERED SIGNS IN ACCORDANCE WITH DELDOT SPECIFICATIONS.
2. SIGN SIZES SHALL BE VERIFIED IN FIELD AND APPROVED BY DELDOT PRIOR TO SIGNS BEING ORDERED BY CONTRACTOR.

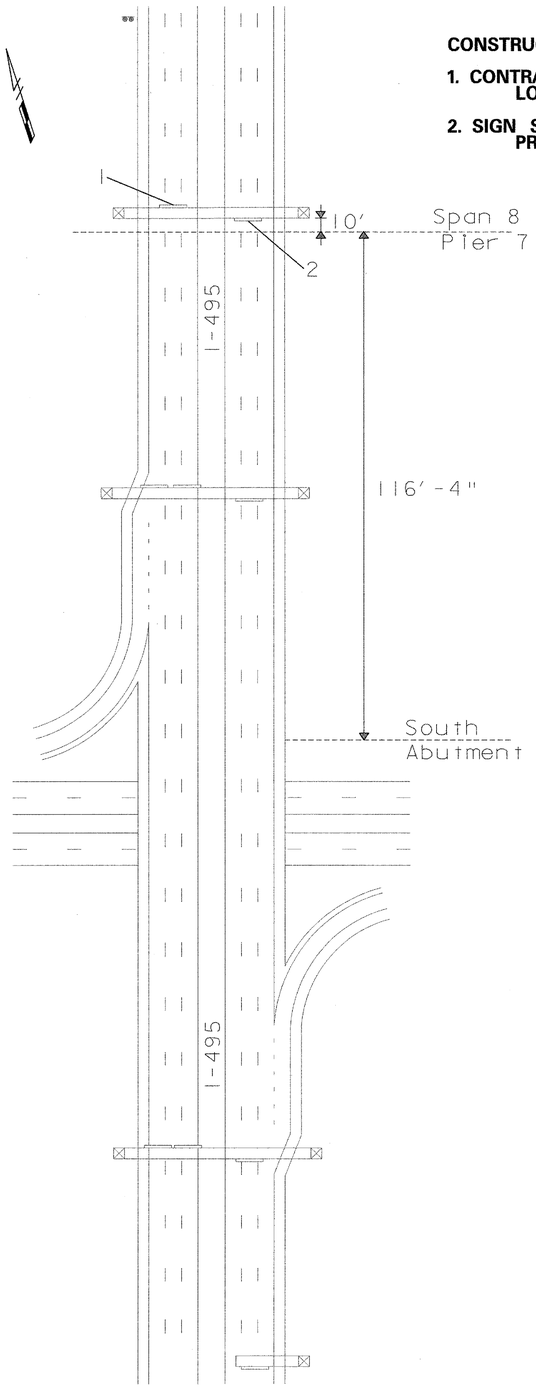

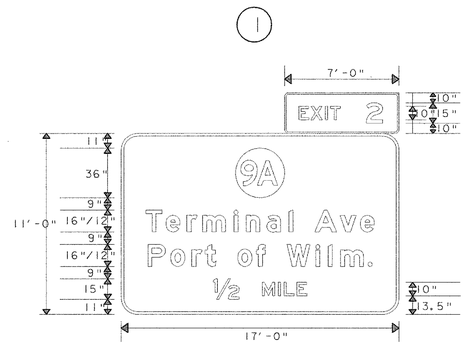

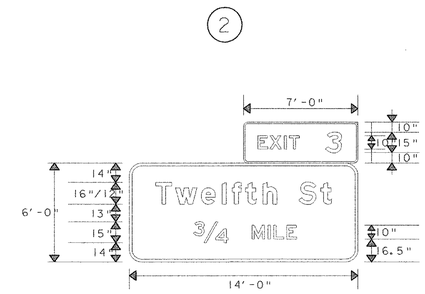

LOUVERED SIGN PANEL	20	REF.
SCALE: N.T.S.	44	5

CADD DESIGN CPP DESIGN CPP CHK'D. JMC

$FILE$

QUANTITIES

BR. 1-813

CONTRACT	COUNTY	FEDERAL AID PROJECT NO.	SHEET NO.	TOTAL SHTS.
94-074-11	NEW CASTLE	IM-N060(2)	45	45

REHABILITATION AND PAINTING OF BRIDGE 1-813 ON I-495 OVER CHRISTINA RIVER

REVISIONS

2 REVISE QUANTITIES:
10/15/03: BEC

SECT 01: NON-SPECIALTY ITEM

ITEM	201000 C	202508 C	202511 C	251000 C	268000 C	601002 C	601522 C	602514 C	602586 C	602630 C	602631 C	602646 C	603000 C	605572 C	605578 C	605584 C	605636 C	605649 C	605650 C
ITEM TITLE	CLEARING AND GRUBBING	WETLAND ACCESS ROAD, TYPE II	TEMPORARY ACCESS ROAD	SILT FENCE	STABILIZED CONSTRUCTION ENTRANCE	TIMBER STRUCTURES (TREATED)	TEMPORARY PROTECTIVE SHIELD	REPAIR OF CONCRETE STRUCTURES BY EPOXY INJECTION	REHABILITATION OF CONCRETE STRUCTURE	MODIFICATION OF BRIDGE CONCRETE PEDESTAL	PEDESTAL SPALL REPAIR	SILICONE ACRYLIC CONCRETE SEALER	BAR REINFORCEMENT	JOINT REPAIR (COMPRESSION SEAL), 4"	REPLACING STEEL BOLTS	STEEL STRUCTURE REPAIR	CLEAN AND LUBRICATE BRIDGE BEARINGS	REPLACING BRIDGE BEARING, TYPE A	REPLACING BRIDGE BEARING, TYPE B
UNIT	L.S.	L.S.	L.S.	L.F.	TON	MFBM	S.F.	GAL	C.F.	C.Y.	EACH	S.F.	LBS.	L.F.	EACH	LBS.	EACH	EACH	EACH
NORTHBOUND AND SOUTHBOUND	1	1	1	3060	2000	41 ~~41000~~	1600	80	920	91	11	100000	12600	1712	32	5300	160	4	8
TOTAL	1	1	1	3060	2000	41 ~~41000~~	1600	80	920	91	11	100000	12600	1712	32	5300	160	4	8
PROPOSAL	1	1	1	3060	2000	41 ~~41000~~	1600	80	920	91	11	100000	12600	1712	32	5300	160	4	8

2

SECT 01: NON-SPECIALTY ITEM

ITEM	605651 C	605655 C	605670 C	605677 C	605681 C	605682 C	605692 C	605696 C	712022 C	720527 C	727520 C	732002 C	734013 C	735006 C	743003 C	743501 C	743514 C	743525 C	743537 C
ITEM TITLE	REPLACING BRIDGE BEARING, TYPE C	BEARING ANCHOR BOLT REPLACEMENT	BRIDGE JOINT DRAIN TROUGH	REPLACING BRIDGE BEARING, TYPE D	BRIDGE DRAINAGE SYSTEM - FITTINGS	BRIDGE DRAINAGE SYSTEM, FLEXIBLE PIPE	SILICONE JOINT SEAL	REPLACING BRIDGE BEARING, TYPE E	RIPRAP, R-6	PLASTIC DRUMS	CONSTRUCTION SAFETY FENCE	TOPSOIL, 6" DEPTH	PERMANENT GRASS SEEDING, DRY GROUND	MULCHING, STRAW	ARROW PANELS, TYPE C	WARNING LIGHTS, TYPE B	FURNISH AND MAINTAIN MESSAGE BOARD	TEMPORARY WARNING SIGNS	FURNISH AND MAINTAIN TRUCK-MOUNTED ATTENUATOR, TYPE II
UNIT	EACH	EACH	L.S.	EACH	EACH	L.F.	L.F.	EACH	TON	EA-DY	L.F.	S.Y.	S.Y.	S.Y.	EA-DY	EA-DY	EA-DY	EA-DY	EA-DY
NORTHBOUND AND SOUTHBOUND	48	1160	1	216	12	160	1312	156	130	44556 ~~70536~~	15000	450	450	450	308	616	4310 ~~9005~~	3496	308
TOTAL	48	1160	1	216	12	160	1312	156	130	44556 ~~70536~~	15000	450	450	450	308	616	4310 ~~9005~~	3496	308
PROPOSAL	48	1160	1	216	12	160	1312	156	130	44556 ~~70536~~	15000	450	450	450	308	616	4310 ~~9005~~	3496	308

2 2

SECT 01: NON-SPECIALTY ITEM

ITEM	746591 C	749500 C	759502 C	763000 C	763500 C	763501 C	763502 C	** 763503 C	763505 C	763508 C	763509 C	763522 C
ITEM TITLE	FURNISH AND MAINTAIN PORTABLE LIGHT ASSEMBLY	SIGN PANEL	FIELD OFFICE, SPECIAL 1	INITIAL EXPENSE	MAINTENANCE OF TRAFFIC	CONSTRUCTION ENGINEERING	MAINTENANCE OF RAILROAD TRAFFIC	TRAINEE	TRAFFIC OFFICERS	PROJECT CONTROL SYSTEM DEVELOPMENT PLAN	CPM SCHEDULE UPDATES AND/OR REVISIONS	COAST GUARD SPECIFIC CONDITIONS
UNIT	EA-DY	S.F.	EA-MO	L.S.	L.S.	L.S.	L.S.	HOUR	HOUR	L.S.	EA-MO	L.S.
NORTHBOUND AND SOUTHBOUND	308	312	~~36~~ 30	1	1	1	1	1040	1800	1	~~36~~ 30	1
TOTAL	308	312	~~36~~ 30	1	1	1	1	1040	1800	1	~~36~~ 30	1
PROPOSAL	308	312	~~36~~ 30	1	1	1	1	1040	1800	1	~~36~~ 30	1

2 2

SECT 02: SPECIALTY ITEM

ITEM	605522 C	605532 C	605622 C	605690 C
ITEM TITLE	URETHANE PAINT SYSTEM, EXISTING STEEL	CLEANING EXISTING STEEL STRUCTURES (NON-HAZARDOUS BASE)	CLEANING OF STEEL STRUCTURE BY PRESSURE WASHING	COATING WARRANTY (NOT A BID ITEM)
UNIT	L.S.	L.S.	L.S.	N/A
NORTHBOUND AND SOUTHBOUND	1	1	1	N/A
TOTAL	1	1	1	N/A
PROPOSAL	1	1	1	N/A

LEGEND

C - FEDERAL AID FUNDED BRIDGE CONSTRUCTION
** - FIXED PRICE ITEM

J:\Trans\0603\700cadd\709STR\Addendum\quan01.dgn

CADD DESIGN G. FAHRENDORF DESIGN DELDOT CHKD. A. RIGATO

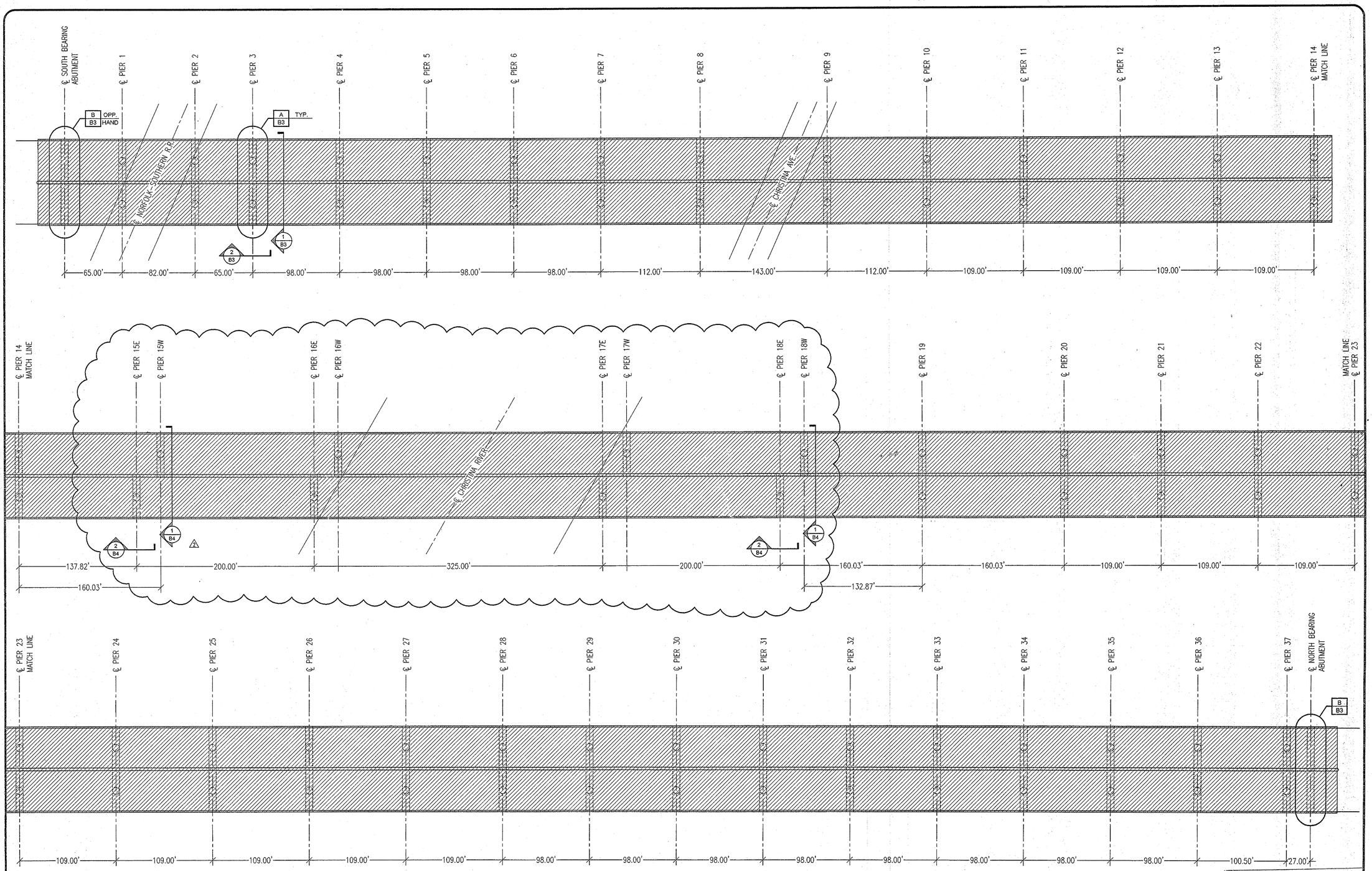

1 PLAN

SCALE: 1"=50'-0"

REVISION	DATE	BY
1 REVISED CONTAINMENT	06/17/04	RRD
2 ADD RIVER SPAN	10/22/04	RRD

PROVIDENCE ENGINEERING CORP.
117 South West End Avenue - Lancaster, PA 17603
Phone: 717-509-7000 - Fax: 717-509-7310

DANIEL J. FICHTNER REGISTERED No. 10110 DELAWARE PROFESSIONAL ENGINEER

MARINIS BROS., INC.
SSPC & QP2 Certified Painting Contractor
755 Grantham Lane
New Castle, Delaware 19720

I-495 BRIDGE
OVER CHRISTINA RIVER
DELAWARE
STA. 348+21.46 TO
STA. 392+16.57

DRAWN BY:	KDL
CHECKED BY:	RRD
DATE:	06/02/04
SCALE:	NONE
JOB NO.:	4193
SHEET:	B2

☒ No Exception Taken ☐ Make Corrections Noted
☐ Rejected ☐ Revise and Resubmit
☐ Submit Specified Item

Checking is only for general conformance with the design concept of the project and general compliance with the information given in the contract documents. Any action shown is subject to the requirements of the plans and specifications. Contractor is responsible for: quantities and dimensions which shall be confirmed and correlated; fabrication processes and techniques of construction; coordination of his work with that and all other trades and the satisfactory performance of his work.

GREENHORNE & O'MARA, INC.
ENGINEERS – ARCHITECTS
DATE 3/28/05 BY Gregory Jordan

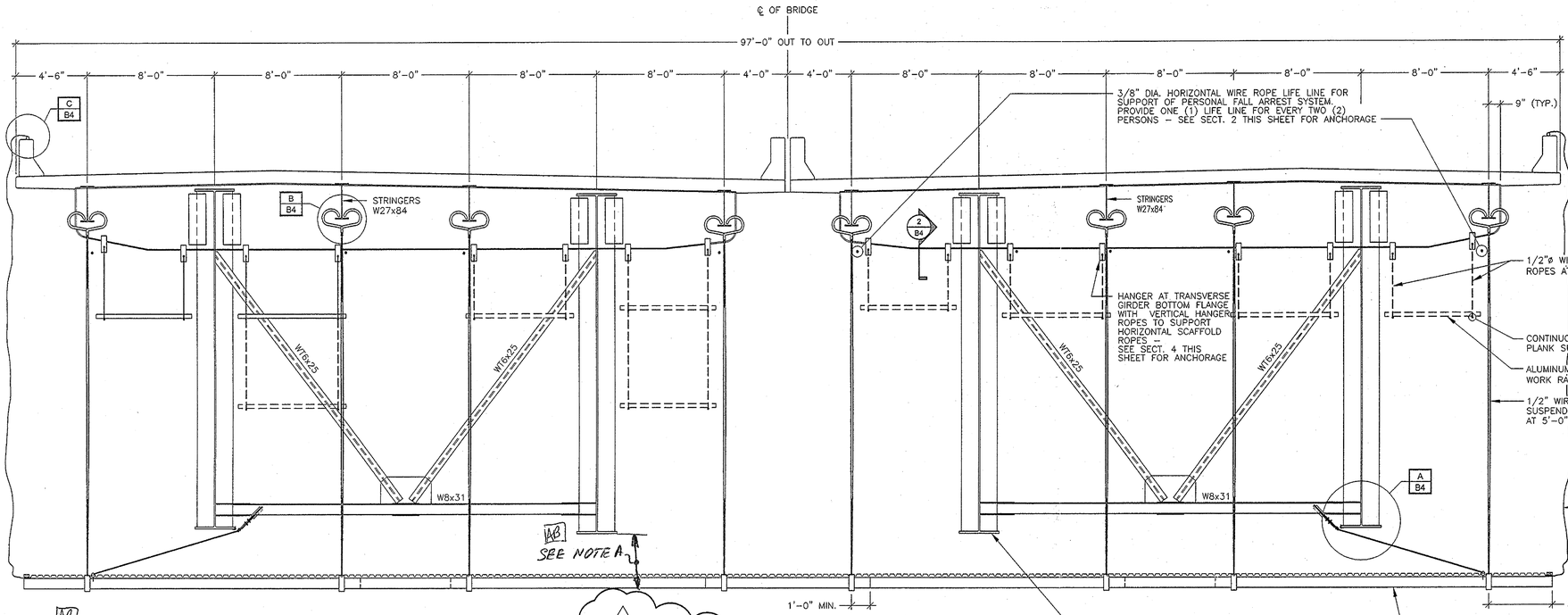

SECTION 1/B4

SCALE: 1/4"=1'-0"

NOTE:

1. TARPS MUST BE RAISED (OR LOWERED) FOR WIND SPEEDS PREDICTED TO EXCEED ~~35~~ 25 MPH. (SEE NOTE B)
2. NO WORK WILL OCCUR DURING RAIN EVENTS AND PROVISION WILL BE MADE TO DRAIN WATER FROM THE PLATFORM.
3. NOTE: SCAFFOLD PLANKS ARE SHOWN FOR ILLUSTRATION- THE PLANKS ARE TO BE MOVED ALONG THE LENGTH OF THE SPAN AS NEEDED. THE PLANK ELEVATION IS VARIABLE AS REQUIRED TO ACCESS THE MAIN GIRDER WEBS.
4. NOTE: THIS DRAWING SHALL BE WORKED WITH DRAWING 4193-B1 (LATEST REVISION). INTERIOR PARTITIONS (TARPS) MAY BE REQUIRED FOR THE DUST COLLECTION SYSTEM TO FUNCTION WITHIN THE REQUIREMENTS OF THE PROJECT. THE CONTRACTOR SHALL FIELD VERIFY THE NEED FOR TARP SUB-AREAS.

☐ No Exception Taken ☒ Make Corrections Noted
☐ Rejected ☐ Revise and Resubmit
☐ Submit Specified Item

Checking is only for general conformance with the design concept of the project and general compliance with the information given in the contract documents. Any action shown is subject to the requirements of the plans and specifications. Contractor is responsible for: quantities and dimensions which shall be confirmed and correlated; fabrication processes and techniques of construction; coordination of his work with that and all other trades and the satisfactory performance of his work.

GREENHORNE & O'MARA, INC.
ENGINEERS – ARCHITECTS
DATE 3/28/05 BY

NOTE A

THE CONTRACTOR SHALL COORDINATE WITH ALL VESSEL TRAFFIC AND MAINTAIN MINIMUM VERTICAL CLEARANCE FOR ALL VESSELS PASSING UNDER THE BRIDGE.

NOTE B

THE CONTRACTOR SHALL PROVIDE APPROPRIATE MEASURES TO HOLD THE TARP IN PLACE DURING WIND SPEEDS UP TO 25 MPH.

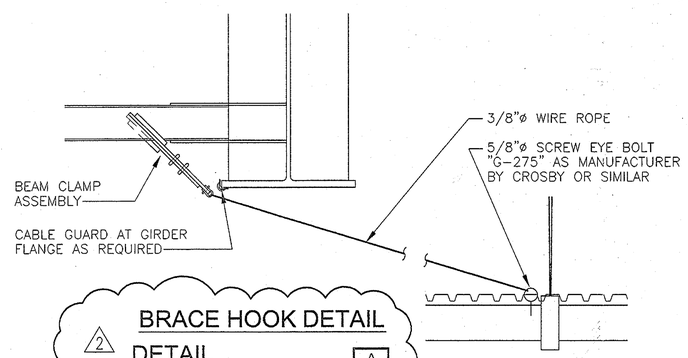

BRACE HOOK DETAIL

DETAIL A/B4

SCALE: 3/4"=1'-0"

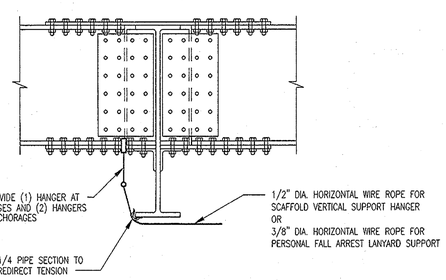

TYPICAL HORIZONTAL WIRE ROPE ANCHORAGE

SECTION 2/B4

SCALE: 3/4"=1'-0"

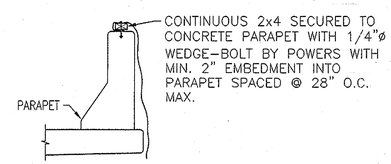

DETAIL C/B4

SCALE: 1/2"=1'-0"

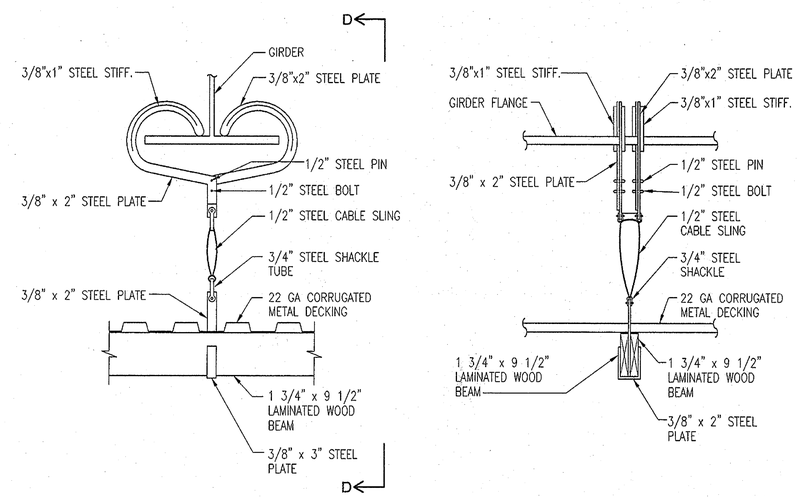

BEAM CLAMP ASSEMBLY - TYPE 2

SECTION D-D

BEAM CLAMP ASSEMBLIES

DETAIL B/B4

SCALE: 3/4"=1'-0"

REVISION	DATE	BY
FALL ARREST SYSTEM	12/15/04	RRD
GENERAL REVISIONS	03/01/05	RRD

PROVIDENCE ENGINEERING CORP.
117 South West End Avenue · Lancaster · PA 17603
Phone: 717-509-7000 · Fax: 717-509-7810

DANIEL J. FICHTER REGISTERED PROFESSIONAL ENGINEER DELAWARE No. 10118

MARINIS BROS., INC.
SSPC & QP2 Certified Painting Contractor
755 Grantham Lane
New Castle, Delaware 19720

I-495 BRIDGE
OVER CHRISTINA RIVER
DELAWARE
STA. 348+21.46 TO STA. 392+16.57

DRAWN BY:	GLB
CHECKED BY:	RRD
DATE:	10/22/04
SCALE:	AS NOTED
JOB NO.:	4193
SHEET:	B4