EXISTING SYMBOLS

DRAINAGE	
	DITCH OR STREAM CENTERLINE
	DIRECTIONAL STREAM FLOW ARROW
C.B.	DRAINAGE CATCH BASIN
J.B.	DRAINAGE JUNCTION BOX
D	DRAINAGE MANHOLE
SIZE/TYPE LABEL	DRAINAGE PIPE AND FLOW ARROW
	DRAINAGE PIPE HEADWALL
	RIPRAP - AREA FEATURE
	RIPRAP - LINEAR FEATURE

MANMADE ROADSIDE FEATURES	
(TYPE LABEL)	CURB
(TYPE LABEL)	CURB AND GUTTER
	FENCE - CHAINLINK OR STRANDED
	FENCE - STOCKADE OR SPLIT RAIL
FP	FLAG POLE
	GUARDRAIL - STEEL BEAM
	GUARDRAIL - WIRE ROPE
LAMP	LAMP AND POST - RESIDENTIAL
MB	MAILBOX
PM	PARKING METER AND POST
	PAVEMENT - FLEXIBLE
	PAVEMENT - RIGID
	PILE - BRIDGE
	PILLAR OR MISCELLANEOUS POST
	TRAFFIC SIGN AND POST
	WALL - BRICK OR BLOCK
	WALL - STONE

NATURAL ROADSIDE FEATURES	
	GRASS LAWN
	HEDGEROW OR THICKET
	MARSH BOUNDARY LINE
	TREE - CONIFEROUS
	TREE - DECIDUOUS
	TREE STUMP
	SHRUBBERY
WL	DELINEATED WETLAND BOUNDARY LINE
	WOODS LINE BOUNDARY

SURVEY CONTROL & MONUMENTATION	
B.M.	SURVEY BENCHMARK LOCATION
T.P.	SURVEY TIE POINT LOCATION
△	SURVEY TRAVERSE POINT
	POINT OF CURVATURE OR TANGENCY
	POINT OF INTERSECTING TANGENTS
C.M.	PROPERTY MARKER - CONCRETE MON.
I.P.	PROPERTY MARKER - IRON PIPE

UTILITY	
	SOIL BORING LOCATION
	UTILITY TEST HOLE LOCATION
TV	CABLE TV DISTRIBUTION BOX
E	ELECTRIC MANHOLE
EM	ELECTRIC METER
E	ELECTRIC TRANSFORMER
	POLE MOUNTED LUMINAIRE
G	GAS MANHOLE
G.M.	GAS METER
G.V.	GAS VALVE
G.P.	GAS PUMP - SERVICE STATION
	RAILROAD TRACKS
S	SANITARY SEWER MANHOLE
S.V.	SANITARY SEWER VALVE
VENT	SANITARY SEWER VENT OR CLEANOUT
S.D.F.	SEPTIC DRAIN FIELD
B	TELEPHONE BOOTH
T	TELEPHONE MANHOLE
T	TELEPHONE TEST POINT
J.W.	TRAFFIC - CONDUIT JUNCTION WELL
	TRAFFIC - LIGHT POLE AND BASE
	TRAFFIC - PEDESTRIAN POLE & BASE
	TRAFFIC - SIGNAL CABINET & BASE
	TRAFFIC - SIGNAL POLE AND BASE
U	UTILITY BOX
	UTILITY POLE GUY WIRE ANCHOR
	UTILITY POLE
F.H.	WATER - FIRE HYDRANT
W.M.	WATER METER
W.V.	WATER VALVE
WELL	WELL HEAD

UTILITY COMPANY FACILITIES	
TN-W	TOWN OF NEWPORT-WATER
DP-E	DELMARVA POWER-ELECTRIC UNDERGROUND
DP-E-OH	DELMARVA POWER-ELECTRIC OVERHEAD
DP-G	DELMARVA POWER-GAS
NCC-S	NEW CASTLE COUNTY-SANITARY SEWER
⚠1 ATT-C	AT&T TRANSMISSION-CABLE UNDERGROUND
⚠1 UW-W	UNITED WATER - WATER
⚠1 MCI-C	MCI COMMUNICATIONS-CABLE UNDERGROUND
⚠1 AW-W	ARTESIAN WATER COMPANY - WATER
⚠1 COM-C-OH	COMCAST CABLEVISION - CABLE OVERHEAD
⚠1 FIB-C-OH	FIBERTECH - CABLE OVERHEAD

PROPOSED SYMBOLS

CONSTRUCTION	
	CONCRETE SAFETY BARRIER - PERMANENT
BFS	BIOFILTRATION SWALE
	BUTT JOINT
100+00	CONSTRUCTION BASELINE
	CURB, TYPE 1 & TYPE 3
	CURB, TYPE 2
	CURB & GUTTER, TYPE 1
	CURB & GUTTER, TYPE 2
	CURB & GUTTER, TYPE 3
	CURB & GUTTER, TYPE 4
CZ	CLEAR ZONE
	DRAINAGE INLET
	DITCH
	FENCE - METAL
	FENCE - WOOD
	FLARED END SECTION
	GUARDRAIL, TYPES 1 & 3
	GUARDRAIL, TYPE 2
	GUARDRAIL END TREATMENT - PARALLEL
	GUARDRAIL END TREATMENT - PARABOLIC
HC	HORIZONTAL CLEARANCE
	JUNCTION BOX - DRAINAGE
LOC	LIMIT OF CONSTRUCTION
	MANHOLE
	PAVEMENT PATCH
	PIPE & DIRECTIONAL FLOW ARROW
	RIPRAP
	P.C.C. SIDEWALK @ 4"
	P.C.C. SIDEWALK @ 6"
	UNDERDRAIN
	UNDERDRAIN OUTLET

CONSTRUCTION PHASING SYMBOLS	
	BARRICADE, TYPE 3
	CONCRETE SAFETY BARRIER - PORTABLE
	CONSTRUCTION WARNING SIGN LOCATION
END ROAD WORK	CONSTRUCTION WARNING SIGN
	CRASH CUSHION ARRAY
	DRUM - TRAFFIC CONTROL
	PHASING TRAFFIC FLOW ARROW
	PORTABLE P.C.C. SAFETY BARRIER
	PORTABLE P.C.C. SAFETY BARRIER WITH GLARE SCREEN
	SPEED DISPLAY SIGN
	ARROW PANEL

EROSION & SEDIMENT CONTROL	
DWB	DEWATERING BASIN
	EROSION CONTROL BLANKET
ED	EARTH DIKE
	INLET SEDIMENT CONTROL
	PERIMETER DIKE/SWALE
PST	PORTABLE SEDIMENT TANK
RSF	REINFORCED SILT FENCE
SBD	SANDBAG DIVERSION
SB	SANDBAG DIKE
	STONE CHECK DAM
SCE	STABILIZED CONSTRUCTION ENTRANCE
SF	SILT FENCE
SP-1	SUMP PIT, TYPE 1
SP-2	SUMP PIT, TYPE 2
ST	SEDIMENT TRAP
ST	SEDIMENT TRAP WITH INLET AS OUTLET
ST	SEDIMENT TRAP PIPE OUTLET
SW	STILLING WELL
	TEMPORARY SWALE
TSD	TEMPORARY SLOPE DRAIN

IDENTIFIERS	
A/C	ADJUST BY CONTRACTOR
A/O	ADJUST BY OTHERS
B	CONCRETE SAFETY BARRIER
C	CURB OR CURB & GUTTER
CJB	CONVERT TO JUNCTION BOX
CMH	CONVERT TO DRAINAGE MANHOLE
C/O	CURB OPENING
CR	CURB RAMP / TYPE
CR-W	CURB RAMP / TYPE - WITHOUT SIDEWALK SURFACE DETECTABLE WARNING SYSTEM
DI	DRAINAGE INLET
DND	DO NOT DISTURB
FES	FLARED END SECTION
FS	FILTRATION STRUCTURE
GR	GUARDRAIL
JB	JUNCTION BOX
LS	LANDSCAPE PLANTINGS
MH	MANHOLE
M	MONUMENT - RIGHT-OF-WAY
P	PIPE
RL/C	RELOCATE BY CONTRACTOR
RL/O	RELOCATE BY OTHERS
RM/C	REMOVE BY CONTRACTOR
RM/O	REMOVE BY OTHERS
SI	SEDIMENT TRAP
SF	SILT FENCE
UD	UNDERDRAIN

PAVEMENT SECTION(S)	
	OVERLAY PAVEMENT - SEE TYPICAL SECTIONS FOR MATERIALS AND DEPTHS
	RECONSTRUCTED PAVEMENT - SEE TYPICAL SECTIONS FOR MATERIALS AND DEPTHS
	DRIVEWAY AND ENTRANCE PAVEMENT - SEE TYPICAL SECTIONS FOR MATERIALS AND DEPTHS

RIGHT-OF-WAY SYMBOLS	
	PROPOSED RIGHT-OF-WAY MONUMENT
PP	EXISTING PROPERTY LINE
EASEMENT TYPE	EXISTING EASEMENT
	EXISTING RIGHT-OF-WAY
DA	PROPOSED DENIAL OF ACCESS
PE	PROPOSED PERMANENT EASEMENT
R/W	PROPOSED RIGHT-OF-WAY
R/W-DA	PROPOSED R/W & DENIAL OF ACCESS
TCE	TEMPORARY CONSTRUCTION EASEMENT
100+00	PROPOSED RIGHT-OF-WAY BASELINE
100+00	HISTORIC RIGHT-OF-WAY BASELINE

TRAFFIC	
ITMS-CON	ITMS CONDUIT
SIG-CON	SIGNAL CONDUIT
	CONDUIT JUNCTION WELL
	LUMINAIRE
	PAVEMENT MARKINGS
	PAVEMENT STRIPING
	TRAFFIC SIGN

LANDSCAPING	
	SHRUBBERY
	CONIFEROUS TREE
	DECIDUOUS TREE

UNOFFICIAL WEBSITE COPY

LAST REVISED: 3/12/2008
G:\ENGINEER\CIVIL\PLANS\Revised\1-501.DGN

DELAWARE
DEPARTMENT OF TRANSPORTATION

ADDENDUMS / REVISIONS	
ADDENDUM NO. ⚠1	
ADD UTILITY COMPANIES	
1/18/11 NAS	

NOT TO SCALE

REHABILITATION OF BRIDGE 1-501
ROUTE 141 OVER SR 4, LOCAL ROADS,
AMTRAK AND THE CHRISTINA RIVER

CONTRACT	T200907403
COUNTY	NEW CASTLE
BRIDGE NO.	1-501
DESIGNED BY:	SEL
CHECKED BY:	KJO

LEGEND

SHEET NO.	3
TOTAL SHTS.	253

GENERAL NOTES

1. THIS PROJECT IS TO BE CONSTRUCTED IN ACCORDANCE WITH THE DELAWARE DEPARTMENT OF TRANSPORTATION "STANDARD SPECIFICATIONS", DATED AUGUST 2001 AND THE DELAWARE DEPARTMENT OF TRANSPORTATION "STANDARD CONSTRUCTION DETAILS", DATED 2001, INCLUDING ALL REVISIONS UP TO THE DATE OF ADVERTISEMENT.

2. THE CONTRACTOR SHALL GIVE TWO (2) WEEKS NOTICE TO THE PROPERTY OWNER WHEN ANY FIXTURE, SHRUB OR OTHER OBJECT MUST BE REMOVED FROM THE RIGHT OF WAY OR EASEMENT AREA. IF THE OWNER HAS NOT ATTEMPTED TO SALVAGE THIS PROPERTY, THE CONTRACTOR SHALL REMOVE IT WITHOUT OBLIGATION. COMPENSATION SHALL BE INCIDENTAL TO THE CONTRACT.

3. THE ENDS OF ALL CURBS SHALL BE DEPRESSED FLUSH WITH THE PAVEMENT AT A RATIO OF TWELVE TO ONE (12:1) UNLESS OTHERWISE DIRECTED BY THE ENGINEER.

4. THE CONTRACTOR SHALL PROVIDE AND INSTALL PVC SLEEVES (4" INSIDE MINIMUM DIAMETER, 6" INSIDE MAXIMUM DIAMETER) IN PROPOSED CONCRETE SIDEWALKS, ISLANDS, AND MEDIANS FOR FUTURE TRAFFIC SIGN POSTS AS DIRECTED BY THE ENGINEER. THE LOWER END OF THE SLEEVE SHALL SIT ON THE TOP OF THE SUBBASE MATERIAL. THE COST SHALL BE INCIDENTAL TO THE CONTRACT.

5. STAGING AREAS - PROPER EROSION AND SEDIMENT CONTROL MEASURES AS DETERMINED BY THE ENGINEER SHALL BE INSTALLED IN ALL STAGING AREAS. ALL AREAS USED BY THE CONTRACTOR FOR STAGING OPERATIONS SHALL BE FULLY RESTORED BY THE CONTRACTOR UPON COMPLETION OF THE CONTRACT. IF THE STAGING AREA IS PAVED, IT SHALL BE RESTORED TO ITS ORIGINAL CONDITION. IF THE AREA IS UNPAVED, IT SHALL BE RE-GRADED, TOPSOILED, SEEDED AND MULCHED IN ACCORDANCE WITH DELAWARE STANDARD SPECIFICATIONS 732, 734 AND 735, FOR TOPSOIL, SEED AND MULCH RESPECTIVELY, TO THE SATISFACTION OF THE ENGINEER. THE SEED SHALL ADHERE TO THE SPECIFICATIONS OF SECTION 734 FOR PERMANENT GRASS SEEDING - DRY GROUND. ALL COSTS ASSOCIATED WITH RESTORATION OF THE STAGING AREA SHALL BE AT THE CONTRACTOR'S EXPENSE. IF THE ENGINEER DETERMINES THAT A SATISFACTORY STAND OF GRASS DOES NOT EXIST AT THE TIME OF FINAL INSPECTION, ALL COSTS ASSOCIATED WITH REESTABLISHING A SATISFACTORY STAND OF GRASS SHALL BE AT THE CONTRACTOR'S EXPENSE.

6. SITE REVIEWER - AN EROSION CONTROL SITE REVIEWER SHALL BE A PERSON FROM THE CONTRACTOR'S STAFF ASSIGNED TO EROSION AND SEDIMENT CONTROL IMPLEMENTATION AND MAINTENANCE AND SHALL BE REQUIRED ON SPECIFIC PROJECTS. THE NAME AND DNREC CERTIFICATION NUMBER OF EACH SITE REVIEWER SO REQUIRED SHALL BE SUBMITTED TO THE DEPARTMENT AT THE TIME OF BID. THE NAME OF THE DELAWARE REGISTERED PROFESSIONAL ENGINEER PROVIDING DIRECTION AND SUPERVISION OF THE SITE REVIEWER, AS REQUIRED IN SECTION 12.3 OF THE DELAWARE SEDIMENT AND STORMWATER REGULATIONS, SHALL ALSO BE SUBMITTED TO THE DEPARTMENT AT THE TIME OF BID. THE SITE REVIEWER REQUIREMENTS IN EFFECT ON THIS PROJECT SHALL BE MARKED WITH AN "X" BELOW:

EROSION POTENTIAL FOR THIS PROJECT	SITE REVIEWER REQUIREMENT
( ) INSIGNIFICANT	NONE
(X) MINOR	CONTRACTOR CERTIFICATION COURSE TRAINING ONLY, AS DEFINED IN SECTION 13 OF THE DELAWARE SEDIMENT AND STORMWATER REGULATIONS.
( ) MEDIUM	AT THE TIME OF BID OF THE CONTRACT, EITHER THE SUPERINTENDENT OR A SEPARATE INDIVIDUAL FROM THE CONTRACTOR'S STAFF SHALL BE A CERTIFIED CONSTRUCTION REVIEWER (CCR), AS DEFINED IN SECTION 12 OF THE DELAWARE SEDIMENT AND STORMWATER REGULATIONS.
( ) MAJOR	SUPERINTENDENT AND AN INDIVIDUAL FROM CONTRACTOR'S STAFF SHALL BE CCR. ONE INDIVIDUAL FROM THE CONTRACTOR'S STAFF MUST BE A CCR AT THE TIME OF BID OF THE CONTRACT. THE SUPERINTENDENT MUST BECOME A CCR WITHIN ONE YEAR AFTER THE AWARD OF CONTRACT.

7. ELECTRONIC PROJECT FILES THAT WILL BE MADE AVAILABLE TO THE CONTRACTOR INCLUDE:

(X)	NONE
( )	ASCII DATA FILES WITH COORDINATES AND ELEVATIONS FOR PROPOSED POINTS AS SELECTED BY THE ENGINEER.
( )	RASTER FILES, IN .CAL FILE FORMAT, FOR ALL PLAN SHEETS.
( )	EXISTING DIGITAL TERRAIN MODEL, IN .DTM FILE FORMAT, COMPATIBLE WITH SOFTWARE CURRENTLY USED BY DELDOT.
( )	PROPOSED DIGITAL TERRAIN MODEL, IN .DTM FILE FORMAT, COMPATIBLE WITH SOFTWARE CURRENTLY USED BY DELDOT.
( )	DESIGN FILE, IN .DGN FILE FORMAT, CONTAINING ONLY THE PROPOSED 3D TRIANGLES OF THE PROPOSED DIGITAL TERRAIN MODEL (DTM).

8. AMERICAN TRAFFIC SAFETY SERVICES ASSOCIATION (ATSSA) CERTIFIED TRAFFIC CONTROL SUPERVISOR REQUIREMENT FOR THIS PROJECT.

( )	THE CONTRACTOR SHALL NOT BE REQUIRED TO HAVE AN ATSSA SUPERVISOR ASSIGNED TO THIS PROJECT.
(X)	THE CONTRACTOR SHALL HAVE AN ATSSA SUPERVISOR ASSIGNED TO THIS PROJECT. THE CONTRACTOR'S GENERAL SUPERINTENDENT FOR THIS PROJECT OR ANOTHER ATSSA CERTIFIED MEMBER OF THE CONTRACTOR'S PROJECT STAFF MAY BE THE ATSSA SUPERVISOR.
( )	THE CONTRACTOR SHALL HAVE AN ATSSA SUPERVISOR ASSIGNED TO THIS PROJECT. THE ATSSA SUPERVISOR'S SOLE JOB SHALL BE SUPERVISION OF THE INSTALLATION, OPERATION AND MAINTENANCE OF TRAFFIC CONTROL DEVICES FOR THIS PROJECT. THE CONTRACTOR'S GENERAL SUPERINTENDENT FOR THIS PROJECT SHALL NOT BE THE ATSSA SUPERVISOR.

9. THE DISTURBED AREA FOR THIS PROJECT IS 41.050 SF.

10. SEE ENVIRONMENTAL COMPLIANCE SHEETS FOR RESTRICTIONS/GUIDANCE ASSOCIATED WITH THIS PROJECT.

11. THE CONTRACTOR IS RESPONSIBLE FOR LOCATING EXISTING DELDOT ITMS FACILITIES FIBER, ELECTRICAL, AND OTHER COMMUNICATIONS LINES BOTH UNDERGROUND AND ATTACHED TO BRIDGE STRUCTURE PRIOR TO INSTALLING TEMPORARY SIGNPOSTS, GUIDE RAIL POSTS OR PRIOR TO ANY BRIDGE REPAIR ACTIVITY THAT COULD DAMAGE ITS FACILITIES. COORDINATE WITH DELDOT FIELD INSPECTION TO REPAIR AND/OR REPLACE, WITHIN TWELVE HOURS, ITMS FACILITIES THAT ARE DAMAGED BY CONSTRUCTION ACTIVITIES, AT NO ADDITIONAL COST TO DELDOT.

12. REFER TO CONTRACT SPECIFICATIONS FOR TIME RESTRICTIONS ASSOCIATED WITH MAINTENANCE OF TRAFFIC DURING ALL STAGES OF CONSTRUCTION.

PROJECT NOTES

SECTION 100

1. ANY DAMAGE TO ITEMS NOTED TO BE RELOCATED OR RESET BY THE CONTRACTOR, AT THE DISCRETION OF THE ENGINEER, SHALL BE REPAIRED AND/OR REPLACED IN KIND AT THE CONTRACTOR'S EXPENSE.

2. UNLESS OTHERWISE NOTED ON THE PLANS, THE CONTRACTOR SHALL, AS PART OF HIS PROJECT SCHEDULE, SUBMIT TO THE ENGINEER AN ESTIMATE OF THE MONTHLY PAYMENTS EXPECTED TO BE RECEIVED ON THE CONTRACT. THIS WILL BE REFERENCED AS THE "MONTHLY PAYMENT CHART".

   A CHART IN MICROSOFT EXCEL, MICROSOFT WORD, OR HAND WRITTEN FORMAT WILL BE ACCEPTABLE FOR THIS PURPOSE. THE CHART SHOULD INCLUDE, AS A MINIMUM, COLUMNS FOR THE MONTH, YEAR AND ESTIMATED MONTHLY PAYMENTS. THE TOTAL OF ALL ESTIMATED MONTHLY PAYMENTS SHOULD EQUAL THE AWARDED CONTRACT TOTAL BID PRICE.

   THE ENGINEER MAY REQUEST AN UPDATED "MONTHLY PAYMENT CHART" AT HIS DISCRETION, DEPENDING ON THE ACCURACY OF THE INITIAL ESTIMATES AND ACCORDING TO THE OVERALL NEEDS OF THE DEPARTMENT.

   THE "MONTHLY PAYMENT CHART" WILL NOT BE CONSIDERED A BINDING DOCUMENT BY EITHER THE CONTRACTOR OR THE DEPARTMENT AND IS CONSIDERED SOLELY INFORMATIONAL.

   ON PROJECTS REQUIRING CPM SCHEDULES, THE CONTRACTOR MAY, BUT IS NOT REQUIRED TO, "COST LOAD" THE CPM SCHEDULE IN ORDER TO GENERATE THE MONTHLY SPEND PAYMENT CHART.

   COSTS TO PREPARE AND/OR UPDATE THE "MONTHLY PAYMENT CHART" ARE ADDRESSED AS FOLLOWS:

   A. ON CONTRACTS REQUIRING CPM SCHEDULES AND UPDATES, PREPARATION OF THE INITIAL CHART SHALL BE INCIDENTAL TO ITEM 763508. UPDATES SHALL BE INCIDENTAL TO ITEM 763509.

   B. ON CONTRACTS NOT REQUIRING CPM SCHEDULES, THE COST TO PREPARE AND UPDATE THE "MONTHLY PAYMENT CHART" SHALL BE INCLUDED IN ITEM 763000 - INITIAL EXPENSE.

SECTION 200

1. ITEMS TO BE REMOVED UNDER ITEM 211000 - REMOVAL OF STRUCTURES AND OBSTRUCTIONS SHALL INCLUDE, BUT NOT BE LIMITED TO THE FOLLOWING:

   - APPROACH SLAB AT ABUTMENT RAMP M1
   - APPROACH SLAB AT ABUTMENT 2 SR 141
   - APPROACH SLAB AT ABUTMENT RAMP M2
   - IMPACT ATTENUATOR AT RAMP M2 GORE AREA

2. THE DESIGN OF THE TURBIDITY CURTAINS SHALL BE IN ACCORDANCE WITH THE MANUFACTURERS RECOMMENDATIONS AND WILL BE PAID AS ITEM 269000 - TURBIDITY CURTAIN, FLOATING.

3. ALL EARTH STOCKPILES LOCATED UNDER THE STRUCTURE DURING PIER JACKING OPERATIONS SHALL BE COVERED BY IMPERVIOUS TARPS SECURED IN PLACE BY CONCRETE BLOCKS. INSTALLATION AND REMOVAL OF TARPS AND BLOCKS IS INCIDENTAL TO ITEM 202000 - EXCAVATION AND EMBANKMENT.

4. THE ENGINEER MAY REQUIRE THE CONTRACTOR TO EXCAVATE TEST PITS ALONG PROPOSED DRAINAGE RUNS, AT POINTS OF POSSIBLE UTILITY CONFLICTS, TO DETERMINE IF A CONFLICT EXISTS. ANY CONFLICTS SHALL BE COORDINATED BY THE CONTRACTOR, WITH THE ENGINEER AND THE UTILITY COMPANY INVOLVED. THE ENGINEER SHALL ULTIMATELY DETERMINE THE THE SOLUTION TO THE UTILITY CONFLICT. TEST HOLES SHALL BE MEASURED AND PAID FOR IN ACCORDANCE WITH ITEM ~~202000~~ 202000 BUT ONLY TO THE ACTUAL DEPTH EXCAVATED. ⚠1

EARTHWORK SUMMARY ⚠1

EXCAVATION *		9,579
EXCAVATION FROM CROSS SECTIONS		~~7,770~~ C.Y.
ROCK EXCAVATION FOR ROADWAY AND TRENCHES		0 C.Y.
TOPSOIL STRIPPING		370 C.Y.
TOTAL EXCAVATION	9,949	~~8,140~~ C.Y.
EXCAVATION AVAILABLE FOR EMBANKMENT **		
EXCAVATION MEETING BORROW TYPE 'A'	0	~~1,101~~ C.Y.
EXCAVATION MEETING BORROW TYPE 'F'	1,101	~~0~~ C.Y.
EXCAVATION MEETING TOPSOIL		370 C.Y.
EMBANKMENT REQUIREMENTS ***		
BORROW TYPE 'A' REQUIRED (INCLUDING UNDERCUT)		42 ~~1,101~~ C.Y.
BORROW TYPE 'F' REQUIRED	1,813	~~0~~ C.Y.
TOPSOIL REQUIRED		370 C.Y.
MATERIAL BALANCE ("+"= EXCESS, "-"= NEED)		
BORROW TYPE 'A'	-42	~~0~~ C.Y.
BORROW TYPE 'F'	-192	~~0~~ C.Y.
TOPSOIL		0 C.Y.
UNSUITABLE MATERIAL	7,007	~~6,420~~ C.Y.

NOTES:
1) THE VALUES LISTED IN THE EARTHWORK SUMMARY ARE APPROXIMATE AND ARE NOT TO BE USED AS A BASIS OF PAYMENT. THE EARTHWORK SUMMARY IS CONSIDERED FOR INFORMATIONAL PURPOSES ONLY.
2) OTHER SOURCES OF EXCAVATION MAY INCLUDE PIPE TRENCH EXCAVATION, STRUCTURE EXCAVATION, UNDERCUT EXCAVATION, STORMWATER MANAGEMENT POND EXCAVATION, ENVIRONMENTAL SITE EXCAVATION, MAINTENANCE OF TRAFFIC EXCAVATION, ETC.
3) UNSUITABLE MATERIALS INCLUDE UNDERCUT SOILS, BITUMINOUS PAVEMENT, ETC.

SECTION 300

1. A. PAYMENT CLARIFICATION:
   a. SHOULD THE CONTRACTOR ELECT TO MILL PORTIONS OF HOT-MIX SHOWN ON THE PLANS TO BE REMOVED UNDER ITEM 202000 - EXCAVATION AND EMBANKMENT THE COST OF MILLING THIS HOT-MIX WILL BE PAID AS ITEM 202000 - EXCAVATION AND EMBANKMENT. THE MILLINGS GENERATED MAY BE RECYCLED INTO HOT-MIX, UTILIZED FOR BASE COURSE, OR DISPOSED OF TO AN APPROVED SITE. HAULING COSTS FOR DISPOSAL AND/OR RECYCLING ARE INCIDENTAL TO ITEM 202000 - EXCAVATION AND EMBANKMENT.

   b. SHOULD THE CONTRACTOR ELECT TO TEMPORARILY STOCKPILE MILLINGS ON THE JOB SITE FOR LATER USE, ALL COSTS FOR STOCKPILING AND SUBSEQUENT REHANDLING SHALL BE INCIDENTAL TO ITEM 202000 - EXCAVATION AND EMBANKMENT.

SECTION 400

1. ANY PAVING OPERATIONS AT PERMANENT OR EXISTING CONCRETE BARRIER TO REMAIN SHALL NOT REDUCE THE VERTICAL REVEAL HEIGHT ON THE BARRIER FROM THE EXISTING CONDITION.

SECTION 600

1. THE DEPARTMENT AND THE CONTRACTOR SHALL INSPECT ALL EXISTING PIPES AND DRAINAGE STRUCTURES TO BE USED IN THE FINAL DRAINAGE SYSTEM AND AGREE ON THE CONDITION PRIOR TO THE START OF CONSTRUCTION. EXISTING PIPES AND DRAINAGE STRUCTURES DAMAGED DUE TO CONTRACTOR OPERATIONS SHALL BE REPAIRED OR REPLACED IN-KIND AT THE CONTRACTOR'S EXPENSE.

SECTION 700

1. STATION AND ELEVATION DATA GIVEN FOR DRAINAGE STRUCTURES ARE TO BE APPLIED TO THE CENTER OF THE GRATE FOR INLETS, AND TO THE CENTER OF THE STRUCTURE FOR JUNCTION BOXES AND MANHOLES.

2. ALL PAVED AREAS TO BE RECONSTRUCTED OR WIDENED SHALL BE SAWCUT AT THE POINT WHERE THE NEW PAVEMENT IS TO TIE INTO THE EXISTING PAVEMENT.

3. ALL HOT-MIX SAW CUTTING SHALL BE FULL DEPTH, UNLESS OTHERWISE NOTED ON THE PLANS, OR AS DIRECTED BY THE ENGINEER.

4. ALL INLET GRATES AND SCUPPER GRATES THAT ARE TO RECEIVE TRAFFIC LOADING SHALL BE TACK WELDED TO THE FRAMES PRIOR TO THE IMPLEMENTATION OF THE NECESSARY MOT PHASE. REMOVAL OF THE TACK WELD IS REQUIRED AT THE END OF CONSTRUCTION. THIS WORK IS INCIDENTAL TO ITEM 763500 - MAINTENANCE OF TRAFFIC.

5. TAPERED END SECTIONS FOR THE PORTABLE PCC SAFETY BARRIER SHALL BE PAID PER LF UNDER ITEM 720567.

6. INSTALLATION OF BARBED WIRE ON TOP OF CHAIN LINK FENCE IN AREAS WHERE IT WAS REMOVED DURING CONSTRUCTION ACTIVITIES SHALL BE INCLUDED IN THE COST OF THE ITEM 727004.

7. INSTALL 3/8" DEEP RUMBLE STRIPS ON CONCRETE DECK AND PAVEMENT AND 1/2" DEEP RUMBLE STRIPS ON BITUMINOUS PAVEMENT.

⚠1 * INCLUDES DOUBLE HANDELING OF PIER EXCAVATION MATERIAL AND OTHER MISCELLANEOUS MATERIAL.

⚠1 ** PIER JACKING AND MEDIAN EXCAVATION MATERIAL.

⚠1 *** TYPE 'F' INCLUDES TEMPORARY AND PERMANENT REQUIREMENTS: SCE CONSTRUCTION, PIER JACKING BACKFILL AND GRASSED MEDIAN RESTORATION.

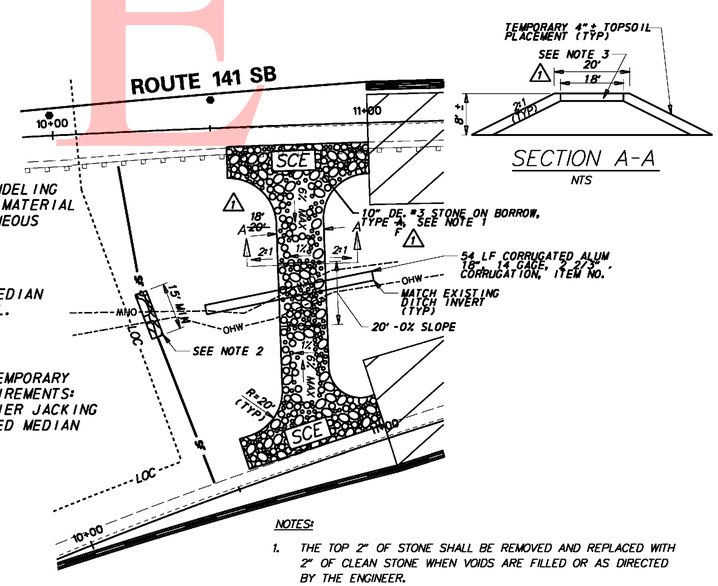

SECTION A-A
NTS

NOTES:
1. THE TOP 2" OF STONE SHALL BE REMOVED AND REPLACED WITH 2" OF CLEAN STONE WHEN VOIDS ARE FILLED OR AS DIRECTED BY THE ENGINEER.
2. CONSTRUCT STONE CHECK DAM IN ACCORDANCE WITH DELDOT STANDARD NO. E-5 (2006). WIER LENGTH EQUALS 5'.
3. SCE IS 10" DEPTH OF STONE ON EARTH EMBANKMENT.

STABILIZED CONSTRUCTION ENTRANCE DETAIL
NTS

UNOFFICIAL WEBSITE COPY

G:\60098167\CIVIL\PLANS\CP\004-PN01.DGN

DELAWARE
DEPARTMENT OF TRANSPORTATION

ADDENDUMS / REVISIONS	
ADDENDUM NO. ⚠1	
MODIFY SECTION 200 - NOTE 4, EARTHWORK	
SUMMARY AND SCE DETAIL	
2/1/11 NAS	

NOT TO SCALE

REHABILITATION OF BRIDGE 1-501
ROUTE 141 OVER SR 4, LOCAL ROADS, AMTRAK AND THE CHRISTINA RIVER

CONTRACT	T200907403	BRIDGE NO.	1-501
COUNTY	NEW CASTLE	DESIGNED BY:	-
		CHECKED BY:	-

NOTES

SHEET NO.	4
TOTAL SHTS.	253

PROJECT NOTES

MISCELLANEOUS

1. THE CONTRACTOR SHALL CONTACT MICHAEL ELLER, THE CHIEF OF SCHEDULING FOR DART FIRST STATE, 14 DAYS PRIOR TO THE START OF CONSTRUCTION AT 302-576-6061.

2. CROSS SECTIONS USED IN THE PREPARATION OF THIS CONTRACT ARE AVAILABLE FROM THE DEPARTMENT.

3. RIGHT-OF-WAY PLANS FOR RIGHT-OF-WAY OR EASEMENT STAKEOUT PURPOSES ARE AVAILABLE FROM THE DEPARTMENT.

4. LOCATION AND DESCRIPTION: BRIDGE NO.1-501 IS LOCATED AT THE INTERSECTION OF SR 141 AND SR 4 IN THE CITY OF NEWPORT, NEWCASTLE COUNTY, DELAWARE AND CARRIES SR 141 OVER SR 4, LOCAL ROADS, AMTRAK AND THE CHRISTINA RIVER. THE WORK INVOLVES REPAIR OF DETERIORATED SUBSTRUCTURE UNITS; REMOVAL AND RECONSTRUCTION OF THE ABUTMENT BACKWALLS; REMOVAL AND REPLACEMENT OF SELECT BRIDGE BEARINGS; CLEANING AND PAINTING OF THE STRUCTURAL STEEL; STRUCTURAL STEEL REPAIRS; MILLING OF THE CONCRETE BRIDGE DECK AND PLACEMENT OF A LOW-PERMEABILITY CONCRETE OVERLAY; STRENGTHEN OF THE BRIDGE BARRIER; REPLACEMENT OF THE BRIDGE EXPANSION JOINTS; REMOVAL AND REPLACEMENT OF APPROACH SLABS; AND INSTALLATION OF SURFACE ROAD GUIDE SIGNS.

5. AS BUILT PLANS OF THE EXISTING STRUCTURE ARE AVAILABLE AND SHALL BE OBTAINED THROUGH THE DEPARTMENT AND USED IN CONJUNCTION WITH THESE DRAWINGS WHEN DETERMINING EXISTING DIMENSIONS. ALL DIMENSIONS SHOWN ON THESE DRAWING WERE TAKEN FROM THE EXISTING PLANS AND SHOULD BE VERIFIED IN THE FIELD. THE EXISTING PLANS ARE AS FOLLOWS:

   CONTRACT NO. DESCRIPTION
   67-01-006 SR 141 RIGHT-OF-WAY PLANS
   71-02-007 BRIDGE 501 SUBSTRUCTURE CONSTRUCTION
   71-02-008 BRIDGE 501 SUPERSTRUCTURE AND SR 141 ROADWAY CONSTRUCTION STA 2+70.00 TO STA 38+13.50
   71-02-009 SR 141 ROADWAY AND OVERHEAD BRIDGE CONSTRUCTION STA 38+13.50 TO STA 71+20
   86-074-01 BRIDGE 501 DECK JOINT REPLACEMENT

6. ANY DAMAGE DONE BY THE CONTRACTOR'S OPERATIONS TO THE EXISTING FACILITIES NOT DESIGNATED FOR REPAIRS UNDER THE CONTRACT SHALL BE REPAIRED OR REPLACED AT THE CONTRACTOR'S EXPENSE.

7. DELDOT OBTAINED A WAIVER OF THE NOISE ORDINANCE FROM NEWCASTLE COUNTY AND THE TOWN OF NEWPORT. THE CONTRACTOR MAY USE THIS WAIVER TO COMPLETE THE WORK ASSOCIATED WITH THIS CONTRACT. THE CONTRACTOR IS REQUIRED TO NOTIFY THE COUNTY AND THE TOWN A MINIMUM OF 2 WEEKS IN ADVANCE OF DOING ANY WORK BETWEEN 10PM AND 7AM.

8. THE CONTRACTOR SHALL NOT BE ALLOWED TO WORK IN THE CHRISTINA RIVER FROM MARCH 15 TO JUNE 1 OF ANY CALENDAR YEAR DUE TO FISHERY RESTRICTIONS. WORK ON THE STRUCTURE OVER THE RIVER MAY CONTINUE DURING THE FISHERY RESTRICTION.

CONSTRUCTION STAGING AND ACCESS:

1. THE CONTRACTOR SHALL BE RESPONSIBLE FOR PREPARING ALL EROSION AND SEDIMENTATION CONTROL MEASURES NECESSARY FOR ACCOMMODATING ACCESS TO THE BRIDGE SITE. ALL EROSION AND SEDIMENTATION CONTROL MEASURES SHALL CONFORM TO SECTION 110 OF THE STANDARD SPECIFICATIONS. A PLAN INDICATING THE EROSION AND SEDIMENTATION CONTROL MEASURES SHALL BE SUBMITTED TO THE DEPARTMENT FOR REVIEW AND APPROVAL PRIOR TO FIELD IMPLEMENTATION.

2. ANY MATERIAL PLACED UNDER THE BRIDGE SHALL BE COMPLETELY COVERED BY TARPS TO PREVENT THE CHANCE OF SEDIMENT TRANSPORT FROM THE SITE. TARPS SHALL BE PROPERLY SECURED IN PLACE TO ENSURE EFFECTIVENESS DURING STORM EVENTS.

3. ANY AREAS DISTURBED OUTSIDE THE LIMITS OF CONSTRUCTION SHALL BE THE RESPONSIBILITY OF THE CONTRACTOR TO SEED AND MULCH AS APPROPRIATE AT ITS OWN EXPENSE.

⚠1 4. SHORT-TERM STOCKPILING AND STAGING (LESS THAN 30 DAYS) IS LIMITED TO THE FOLLOWING AREAS UNDER THE BRIDGE WITHIN THE LIMITS OF THE EXISTING RIGHT-OF-WAY: 22+67.00 TO 23+25.00, 23+67.00 TO 25+67.00, ~~26+70.58 TO 28+68.58,~~ 29+68.58 TO 32+05.50, 33+23.50 TO 35+60.42, AND 36+44.25 TO 38+11.00. LONG-TERM STOCKPILING AND STAGING (810 DAYS) IS LIMITED TO THE FOLLOWING AREAS UNDER THE BRIDGE WITHIN THE LIMITS OF THE EXISTING RIGHT-OF-WAY, 26+70.58 TO 28+68.58.

5. UNOBSTRUCTED EMERGENCY ACCESS BETWEEN THE NORTHBOUND AND SOUTHBOUND LANES MUST BE PROVIDED FOR STAGES 2 THROUGH 5 NEAR STATIONS 11+00 AS SHOWN ON THE MOT PLANS. UPON COMPLETION OF PHASE 5 WORK, REMOVE EMERGENCY ACCESS AND RESTORE AREA TO ORIGINAL CONDITIONS.

UTILITIES:

1. THE CONTRACTOR SHALL GIVE NOTIFICATION BY TELEPHONE BY CALLING "MISS UTILITY" AT 1-800 282 8555 A MINIMUM OF TWO FULL WORKING DAYS PRIOR TO STARTING WORK TO LOCATE ALL UTILITIES.

2. COORDINATE THE REQUIREMENTS FOR PROTECTION OF ANY UTILITY WITH THE UTILITY OWNER PRIOR TO STARTING WORK.

3. THE CONTRACTOR SHALL CONDUCT OPERATIONS IN A MANNER WHICH ENSURES THAT THE UTILITIES WILL NOT BE DISTURBED OR ENDANGERED, AND ASSUME FULL RESPONSIBILITY FOR ANY DAMAGE TO UTILITIES DURING CONSTRUCTION. THE DEPARTMENT DOES NOT ASSUME RESPONSIBILITY FOR REIMBURSEMENT, PARTICIPATION IN DESIGN AND/OR REVISIONS, OR LIABILITY FOR ACCURACY OF TYPE, SIZE AND LOCATION OF ANY UTILITY.

RIGHT OF WAY CONTACT:

1. THE CONTRACTOR SHALL NOTE THAT THE RIGHT-OF-WAY BENEATH BRIDGE 1-501 FROM THE CHRISTINA RIVER NORTH TO THE ABUTMENT WALL AT CHRISTINA STREET IS CONTROLLED BY OTHERS UNDER AIR SPACE AGREEMENTS WITH THE DEPARTMENT. DURING CONSTRUCTION OPERATIONS, IT WILL BE NECESSARY TO VACATE AFFECTED AIR SPACE UNDER THE BRIDGE. THE CONTRACTOR SHALL NOTIFY THE LESSEE FOUR (4) WEEKS PRIOR TO TRESPASSING ON THE LEASED AIR SPACE. THE LIMITS OF SPACE VACATED SHALL BE DETERMINED BY THE ENGINEER AND SHALL BE KEPT TO THE ABSOLUTE MINIMUM NEEDED FOR CONSTRUCTION.

FIRST	LAST	ADDRESS 1	ADDRESS 2	STATE	ZIP	PHONE
DIANE	FRANCHETTI	WILMINGTON TRUST BANK	100 NORTH JAMES STREET	DE	19808	302.472.3102
RUDY	MERSTETTER (SITE MGR)	BASF	205 SOUTH JAMES STREET	DE	19804	302.992.5653
WENDY	KING (TOWN MGR)	TOWN OF NEWPORT	226 NORTH JAMES STREET	DE	19804	302.994.6403
KEVIN	MARVEL (PASTOR)	FAMILY LIFE CHURCH	430 CENTURY BOULEVARD	DE	19808	302.998.8274
RICH	VON STETTEN	DELAWARE SOLID WASTE AUTHORITY	1128 SOUTH BRADFORD STREET	DE	19903	302.739.5361

TEMPORARY LIGHTING

1. TAP INTO EXISTING HIGHWAY LIGHTING CABINET ADJACENT TO THE CONNECTOR ROAD TO SOUTH JAMES STREET (ROUTE 141 SB STA. 8+90, LEFT). SIZE THE CABLE TO OPERATE THE LUMINAIRES WITH A MAXIMUM 5 PERCENT VOLTAGE DROP. PROVIDE EQUIPMENT FOR THE SERVICE AS REQUIRED BY THE POWER COMPANY AND AS REQUIRED TO PROVIDE AN OPERABLE LIGHTING SYSTEM.

2. CONSTRUCT IN ACCORDANCE WITH THE APPLICABLE STANDARD CONSTRUCTION DETAILS, STANDARD SPECIFICATIONS AND SPECIAL PROVISIONS. PROVIDE 250 WATT HPS, M-C-II CONVENTIONAL (COBRAHEAD) LUMINAIRES ON WOOD POLES AT A 40 FOOT MOUNTING HEIGHT AS SHOWN ON THE PLAN. PROVIDE ARM LENGTHS THAT PROVIDE THE INDICATED OVERHANGS TO THE EDGE OF ROADWAY. LIMIT OVERHEAD SPANS TO 250 FEET. GUY THE POLES AS NECESSARY. LOCATE THE POLES IN AREAS PROTECTED FROM TRAFFIC, OR PROVIDE ADDITIONAL PROTECTION BY USE OF GUARDRAIL, CRASH BARRIER OR OTHER APPROVED DEVICES. PROVIDE LUMINAIRES WITH INDIVIDUAL PHOTOELECTRIC CONTROL, OR PROVIDE A MAIN CONTRACTOR AND PHOTOCONTROL AT THE MAIN POWER SUPPLY LOCATION. GROUND THE LIGHTING SYSTEM.

3. PROVIDE LIGHTING TESTS TO ASSURE THAT THE LIGHTING LEVEL IS BETWEEN 1.0 FC AND 1.5 FC WITH A 4:1 UR. TEST THE GROUND RODS.

NOTES:

1. ADJUST LENGTH AND WIDTH OF BAG TO FIT INLET OPENING AS NECESSARY.

   PAYMENT FOR FURNISHING, INSTALLATION, AND MAINTENANCE OF INLET SEDIMENT CONTROL IS INCIDENTAL TO ITEM NO. 252002 - INLET SEDIMENT CONTROL, AT GRADE INLET.

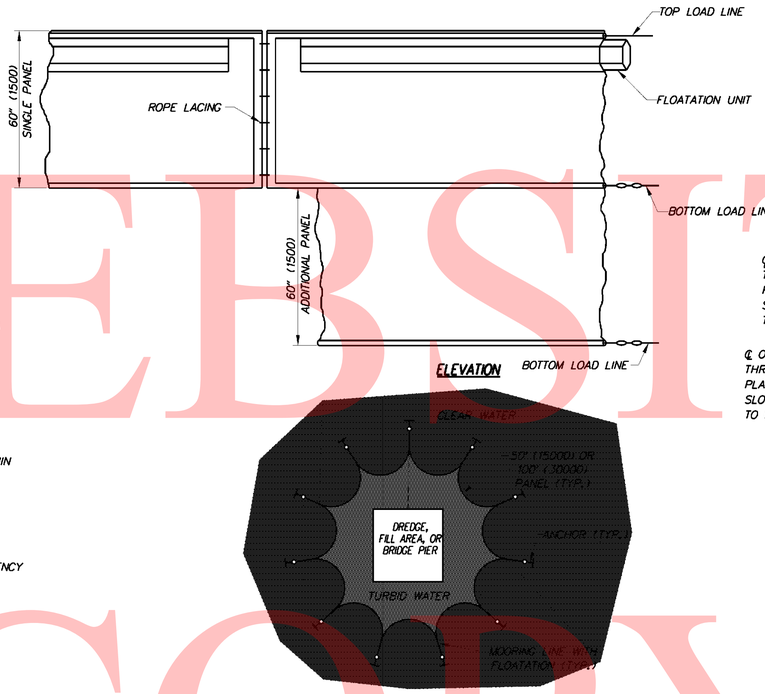

PLAN VIEW
OPEN WATER APPLICATION

FLOATING TURBIDITY CURTAIN

NOTE: 1.) ADDITIONAL PANEL REQUIRED FOR DEPTHS GREATER THAN 5' (1500).
2.) FLOATING TURBIDITY CURTAIN SHALL REACH BOTTOM UP TO DEPTHS OF 10' (3000) BY USING TWO PANELS. DEPTHS GREATER THAN 10' (3000) SHALL REQUIRE SPECIAL DEPTH CURTAINS SPECIFICALLY CALLED FOR IN THE PLANS OR AS DIRECTED BY THE ENGINEER.

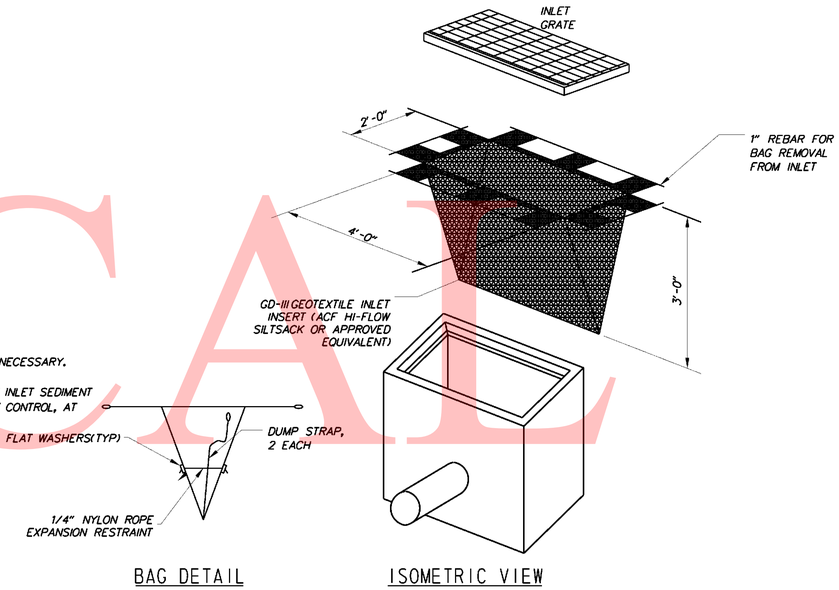

BAG DETAIL ISOMETRIC VIEW

INLET SEDIMENT CONTROL DETAIL

NTS

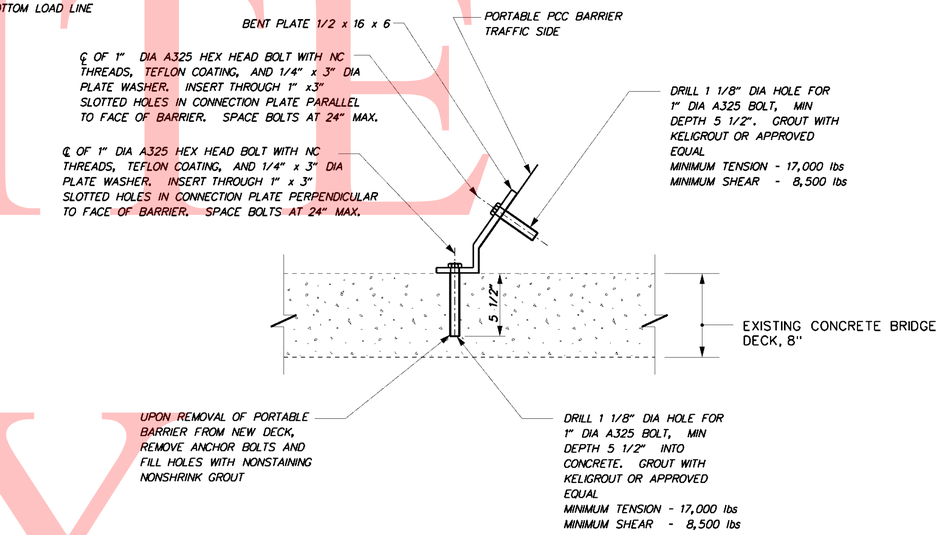

PORTABLE P.C.C. STRUCTURE MOUNTED BARRIER CONNECTION DETAIL

NTS

NOTES:

1. INSTALL PORTABLE P.C.C. STRUCTURE MOUNTED SAFETY BARRIER AT EXPANSION JOINT REPAIR LOCATIONS WHERE THE LATERAL DISTANCE BETWEEN THE BARRIER AND THE OPEN DECK IS 2 FT OR LESS. PROVIDE 36 FT (MIN) LENGTH OF STRUCTURE MOUNTED SAFETY BARRIER ADJACENT TO EACH EXPANSION JOINT REPAIR TO PROVIDE ONE FULL SECTION OF SECURED BARRIER ON BOTH SIDES OF THE JOINT REPAIR AREA. ENSURE ADJACENT NON-STRUCTURE MOUNTED BARRIER IS PROPERLY CONNECTED TO THE LIMITS OF STRUCTURE MOUNTED BARRIER.

2. PAYMENT FOR INSTALLATION OF BARRIER CONNECTION SHALL BE INCIDENTAL TO ITEM NO. 720526 FURNISHING PORTABLE P.C.C. STRUCTURE MOUNTED SAFETY BARRIER.

3. PLATES SHALL BE SPACED AT 4' INTERVALS (MAX.).

UNOFFICIAL WEBSITE COPY

G:\60098167\CIVIL\PLANS\CPY005-PN01.DGN

DELAWARE DEPARTMENT OF TRANSPORTATION

ADDENDUMS / REVISIONS	
ADDENDUM NO. ⚠1	
MODIFIED NOTE 4	
1/18/11 NAS	

NOT TO SCALE

REHABILITATION OF BRIDGE 1-501
ROUTE 141 OVER SR 4, LOCAL ROADS, AMTRAK AND THE CHRISTINA RIVER

CONTRACT	T200907403
COUNTY	NEW CASTLE
BRIDGE NO.	1-501
DESIGNED BY:	SEL
CHECKED BY:	KJO

NOTES

SHEET NO.	5
TOTAL SHTS.	253

UNOFFICIAL WEBSITE COPY

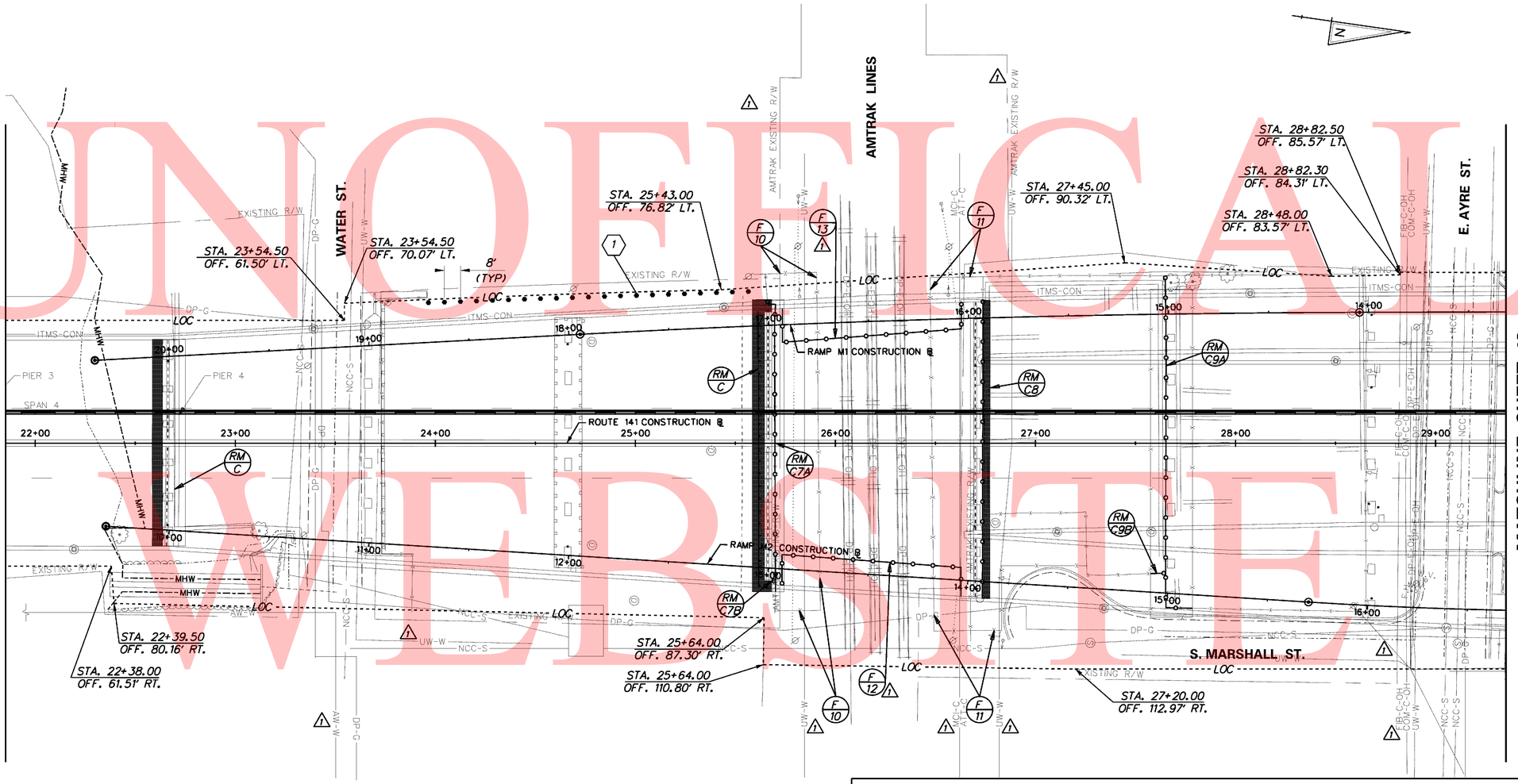

FENCE SCHEDULE			
NO.	QTY.	DESCRIPTION	NOTES
7A	173 LF	REMOVE 6' CHAIN LINK FENCE	STA. 25+66, 83' LT. TO STA. 25+70, 86' RT. (+/-)
7B	2 LF	REMOVE 6' CHAIN LINK FENCE	STA. 25+69, 70' RT. TO STA. 25+71, 70' RT. (+/-)
8	120 LF	REMOVE 6' CHAIN LINK FENCE	STA. 25+75, 83' LT. TO STA. 26+75, 37' RT. (+/-)
9A	173 LF	REMOVE 6' CHAIN LINK FENCE	STA. 27+66, 83' LT. TO STA. 27+79, 82' RT. (+/-)
9B	8 LF	REMOVE 6' CHAIN LINK FENCE	STA. 27+58, 65' RT. TO STA. 27+66, 65' RT. (+/-)
10	175 LF	INSTALL TEMPORARY 6' CHAIN LINK FENCE	STA. 25+90 - OFFSET 15' (MIN') FROM ℄ NEAREST AMTRAK TRACK
11	180 LF	INSTALL TEMPORARY 6' CHAIN LINK FENCE	STA. 26+50 - OFFSET 15' (MIN') FROM ℄ NEAREST AMTRAK TRACK
12	120 LF	INSTALL TEMPORARY 6' CHAIN LINK FENCE	STA. 25+73, RT. TO STA. 26+63, RT. (STAGE 2A, ON BRIDGE DECK)
13	120 LF	INSTALL TEMPORARY 6' CHAIN LINK FENCE	STA. 25+73, LT. TO STA. 26+63, LT. (STAGE 4B, ON BRIDGE DECK)

NOTE: REMOVAL OF EXISTING FENCE AND PLACEMENT OF TEMPORARY FENCE TO BE COMPLETE PRIOR TO ANY BRIDGE WORK.

GUARDRAIL REMOVAL SCHEDULE				
NO.	ITEM DESCRIPTION / TYPE	BEGIN STA.	OFFSET	LENGTH
7	GALVANIZED STEEL GUARDRAIL, TYPE 1	25+62.00	PERP.	133'

BARRIER REMOVAL SCHEDULE				
NO.	ITEM DESCRIPTION / TYPE	BEGIN STA.	OFFSET	LENGTH
6	REMOVE CONCRETE BARRIER	22+69.00	PERP.	150'

NOTE: BARRIER TO BE REMOVED AND STORED PRIOR TO START OF PIER JACKING OPERATION.

(1) PLACE DRUMS ACROSS PARKING LOT AS SHOWN TO RESTRICT PUBLIC ACCESS TO WORK ZONE UNDER BRIDGE.

NOTES:
1. PROPERTIES UNDER THE BRIDGE SHALL BE NOTIFIED 4 WEEKS IN ADVANCE OF ANY WORK UNDER THE BRIDGE WHICH WILL IMPACT THE CONCRETE BARRIER, SKATE RAMPS AND OTHER NON DELDOT PROPERTY.
2. REPLACE ALL REMOVED FEATURES IN SAME LOCATIONS AND ELEVATIONS AS EXISTING CONDITION, UNLESS DIRECTED OTHERWISE.

DELAWARE DEPARTMENT OF TRANSPORTATION

ADDENDUMS / REVISIONS	
ADDENDUM NO. 1	
MODIFY RIGHT OF WAY AND UTILITIES	
ADD TEMPORARY CHAIN LINK FENCE	
1/18/11 NAS	

SCALE 0 30 60 90 FEET

REHABILITATION OF BRIDGE 1-501 ROUTE 141 OVER SR 4, LOCAL ROADS, AMTRAK AND THE CHRISTINA RIVER

CONTRACT	T200907403
COUNTY	NEW CASTLE
BRIDGE NO.	1-501
DESIGNED BY:	SEL
CHECKED BY:	KJO

CONSTRUCTION PLAN NB CROSSOVER

SHEET NO.	17
TOTAL SHTS.	253

C:\60098167\CIVIL\PLANS\CP\017-NBCP06.DGN

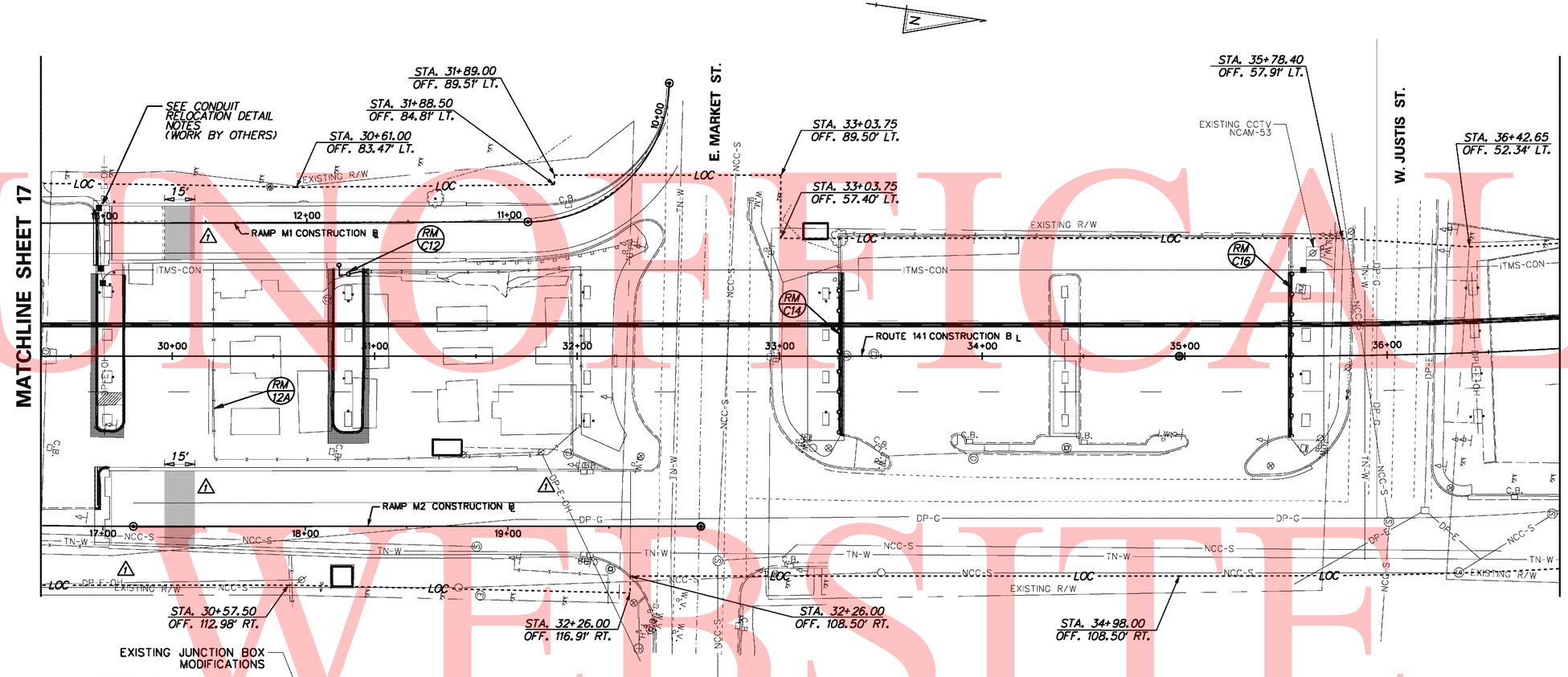

NOTES:

1. COORDINATE WITH DELDOT FOR RELOCATION OF EXISTING FIBER CABLE AND INFRASTRUCTURE.
2. ALL INFRASTRUCTURE RELOCATION FOR MULTIDUCT CONDUIT TO BE COMPLETED PRIOR TO PHASE 4 OF CONSTRUCTION (SOUTHBOUND CROSSOVER) AND RAMP M-1 CONSTRUCTION.
3. COORDINATE WITH DELDOT FOR INSTALLATION AND RESPLICE OF FIBER CABLE.

RAMP M-1 WINGWALL MULTIDUCT CONDUIT RELOCATION DETAIL (BY OTHERS)

NTS

NOTES:

1. PROPERTIES UNDER THE BRIDGE SHALL BE NOTIFIED 4 WEEKS IN ADVANCE OF ANY WORK UNDER THE BRIDGE WHICH WILL IMPACT THE CONCRETE BARRIER, SKATE RAMPS AND OTHER NON DELDOT PROPERTY.
2. REPLACE ALL REMOVED FEATURES IN SAME LOCATIONS AND ELEVATIONS AS EXISTING CONDITION, UNLESS DIRECTED OTHERWISE.

FENCE REMOVAL SCHEDULE

NO.	QTY.	DESCRIPTION	NOTES
12	22 LF	REMOVE 6' CHAIN LINK FENCE	STA. 30+82, 44' LT. TO STA. 30+97, 40' LT. (+/-)
12A	90 LF	REMOVE 6' CHAIN LINK FENCE	STA. 30+20, 45' LT. TO STA. 30+20, 45' RT. (+/-)
14	79 LF	REMOVE 6' CHAIN LINK FENCE	STA. 33+30, 38' RT. TO STA. 33+30, 40' LT. (+/-)
16	81 LF	REMOVE 6' CHAIN LINK FENCE	STA. 35+53, 41' LT. TO STA. 35+53, 40' RT. (+/-)

NOTE: REMOVAL OF EXISTING FENCE AND PLACEMENT OF TEMPORARY FENCE TO BE COMPLETE PRIOR TO ANY BRIDGE WORK.

UNOFFICIAL WEBSITE COPY

G:\60098167\CIVIL\PLANS\CP\018-NBCP05.DGN

DELAWARE DEPARTMENT OF TRANSPORTATION

ADDENDUMS / REVISIONS	
ADDENDUM NO. 1	
MODIFY UTILITIES AND ADDED PAVEMENT	
REMOVAL AND REPLACEMENT LIMITS	
2/1/11 NAS	

SCALE 0 30 60 90 FEET

REHABILITATION OF BRIDGE 1-501
ROUTE 141 OVER SR 4, LOCAL ROADS, AMTRAK AND THE CHRISTINA RIVER

CONTRACT	T200907403
COUNTY	NEW CASTLE

BRIDGE NO.	1-501
DESIGNED BY:	SEL
CHECKED BY:	KJO

CONSTRUCTION PLAN
NB CROSSOVER

SHEET NO.	18
TOTAL SHTS.	253

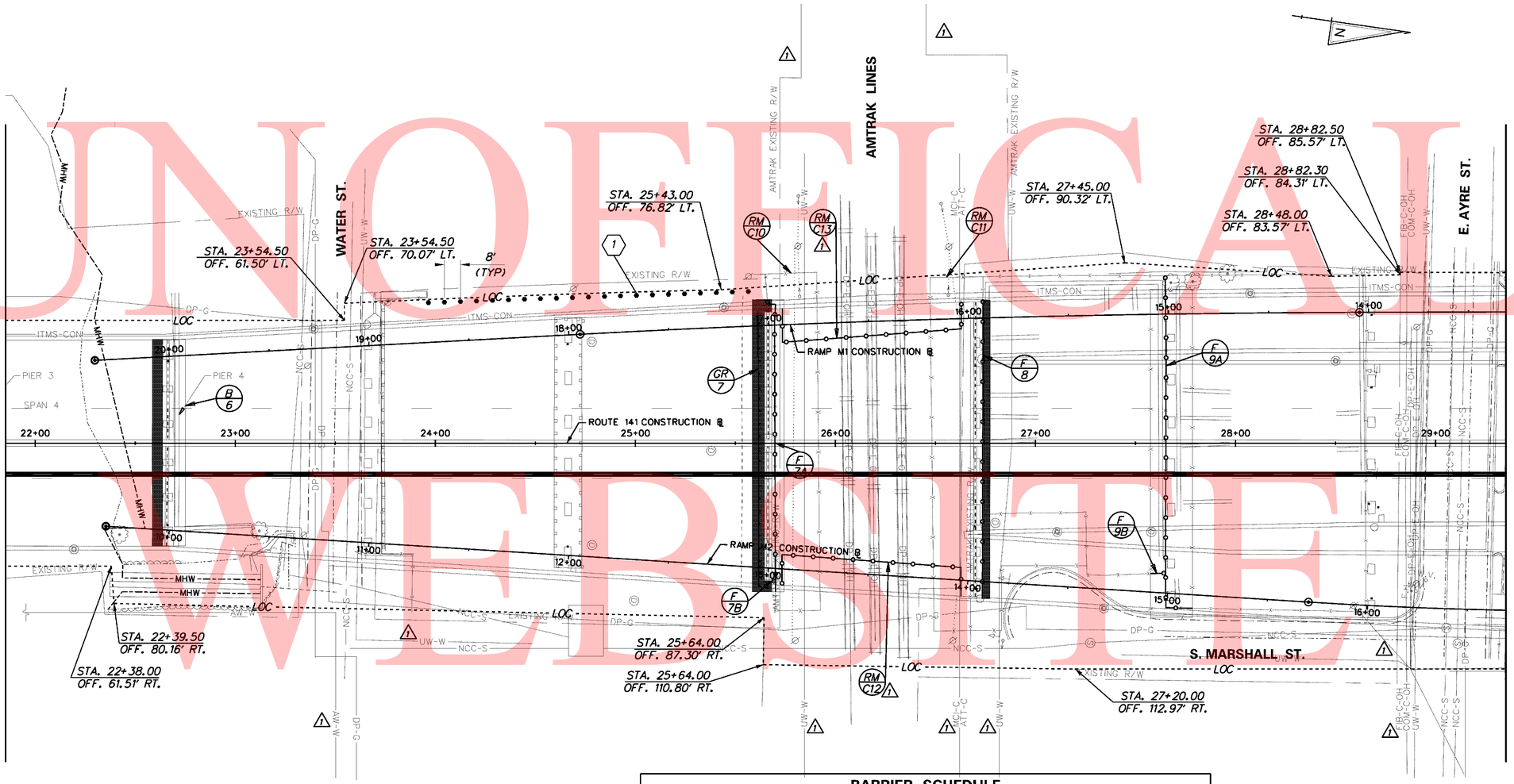

BARRIER SCHEDULE

NO.	ITEM DESCRIPTION / TYPE	BEGIN STA.	OFFSET	LENGTH
6	RESET CONCRETE BARRIER	22+69.00	PERP.	150'

NOTE: BARRIER REMOVED AND STORED DURING CONSTRUCTION TO BE RESET AFTER CONSTRUCTION.

FENCE SCHEDULE

NO.	QTY.	DESCRIPTION	NOTES
7A	148 LF	INSTALL 6' CHAIN LINK FENCE	STA. 25+67, 70' LT. TO STA. 25+71, 76' RT. (+/-)
7B	2 LF	INSTALL 6' CHAIN LINK FENCE	STA. 25+69, 70' RT. TO STA. 25+71, 70' RT. (+/-)
8	120 LF	INSTALL 6' CHAIN LINK FENCE	STA. 25+75, 83' LT. TO STA. 26+75, 37' RT. (+/-)
9A	173 LF	INSTALL 6' CHAIN LINK FENCE	STA. 27+66, 83' LT. TO STA. 27+79, 82' RT. (+/-)
9B	8 LF	INSTALL 6' CHAIN LINK FENCE	STA. 27+58, 65' RT. TO STA. 27+66, 65' RT. (+/-)
10	175 LF	REMOVE TEMPORARY 6' CHAIN LINK FENCE	STA. 25+90 - OFFSET 15' (MIN') FROM ℄ NEAREST AMTRAK TRACK
11	180 LF	REMOVE TEMPORARY 6' CHAIN LINK FENCE	STA. 26+50 - OFFSET 15' (MIN') FROM ℄ NEAREST AMTRAK TRACK
12	120 LF	REMOVE TEMPORARY 6' CHAIN LINK FENCE	STA. 25+73, RT. TO STA. 26+63, RT. (STAGE 2A, ON BRIDGE DECK)
13	120 LF	REMOVE TEMPORARY 6' CHAIN LINK FENCE	STA. 25+73, LT. TO STA. 26+63, LT. (STAGE 4B, ON BRIDGE DECK)

GUARDRAIL SCHEDULE

NO.	ITEM DESCRIPTION / TYPE	BEGIN STA.	OFFSET	LENGTH
7	GALVANIZED STEEL GUARDRAIL, TYPE 1	25+62.00	67	133'

NOTE: GUARDRAIL TO BE REPLACED TO MATCH EXISTING GUARDRAIL.

(1) PLACE DRUMS ACROSS PARKING LOT AS SHOWN TO RESTRICT PUBLIC ACCESS TO WORK ZONE UNDER BRIDGE.

NOTES:
1. PROPERTIES UNDER THE BRIDGE SHALL BE NOTIFIED 4 WEEKS IN ADVANCE OF ANY WORK UNDER THE BRIDGE WHICH WILL IMPACT THE CONCRETE BARRIER, SKATE RAMPS AND OTHER NON DELDOT PROPERTY.
2. REPLACE ALL REMOVED FEATURES IN SAME LOCATIONS AND ELEVATIONS AS EXISTING CONDITION, UNLESS DIRECTED OTHERWISE.

DELAWARE
DEPARTMENT OF TRANSPORTATION

ADDENDUMS / REVISIONS	
ADDENDUM NO. 1	
MODIFY RIGHT OF WAY AND UTILITIES	
ADD TEMPORARY CHAIN LINK FENCE	
1/18/11 NAS	

SCALE 0 30 60 90 FEET

REHABILITATION OF BRIDGE 1-501
ROUTE 141 OVER SR 4, LOCAL ROADS, AMTRAK AND THE CHRISTINA RIVER

CONTRACT	T200907403
COUNTY	NEW CASTLE
BRIDGE NO.	1-501
DESIGNED BY:	SEL
CHECKED BY:	KJO

CONSTRUCTION PLAN
SB CROSSOVER

SHEET NO.	25
TOTAL SHTS.	253

C:\60098167\CIVIL\PLANS\CPN025-SBCP06.DGN

UNOFFICIAL WEBSITE COPY

UNOFFICIAL WEBSITE COPY

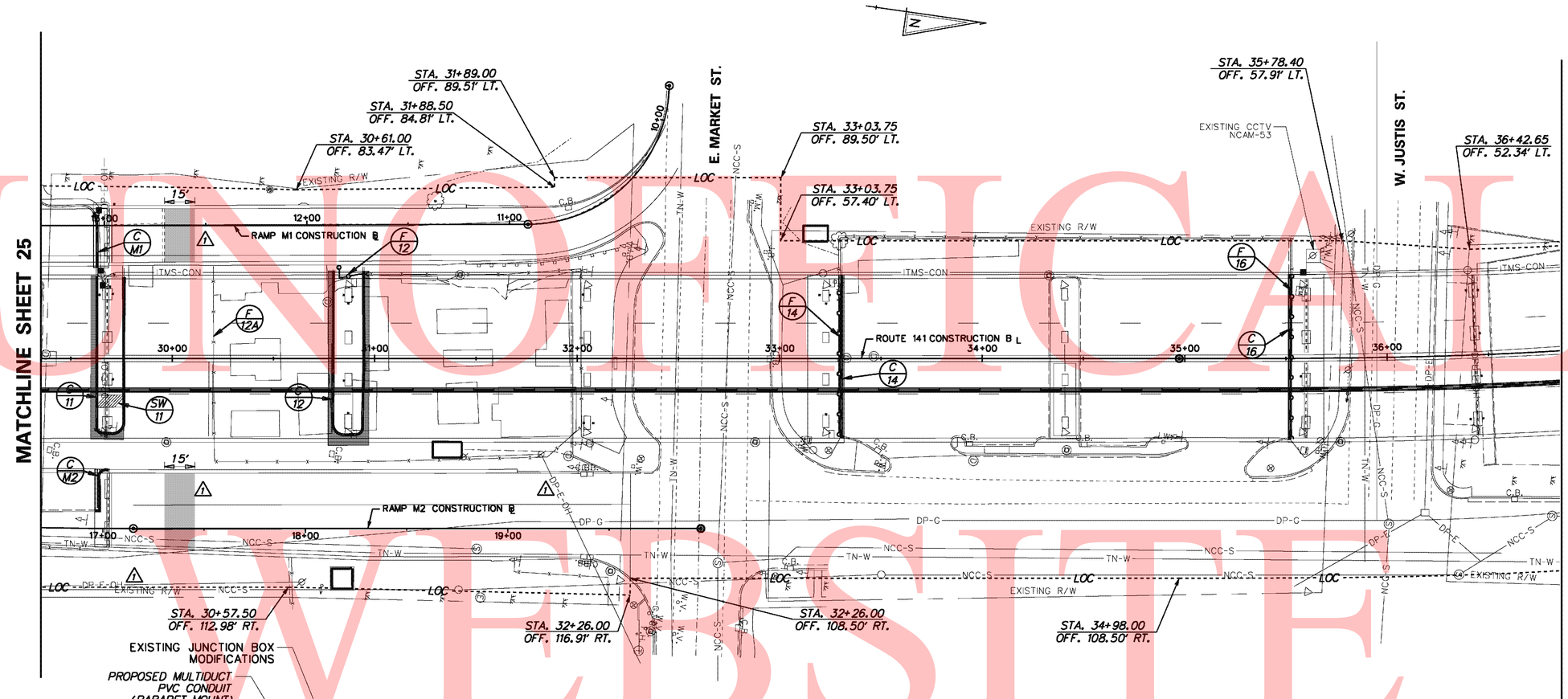

NOTES:

1. COORDINATE WITH DELDOT FOR RELOCATION OF EXISTING FIBER CABLE AND INFRASTRUCTURE.
2. ALL INFRASTRUCTURE RELOCATION FOR MULTIDUCT CONDUIT TO BE COMPLETED PRIOR TO PHASE 4 OF CONSTRUCTION (SOUTHBOUND CROSSOVER) AND RAMP M-1 CONSTRUCTION.
3. COORDINATE WITH DELDOT FOR INSTALLATION AND RESPLICE OF FIBER CABLE.

RAMP M-1 WINGWALL MULTIDUCT CONDUIT RELOCATION DETAIL (BY OTHERS)

NTS

CURB RAMP SCHEDULE

NO.	TYPE	STATION	OFFSET
M1	CURB RAMP, TYPE 1	STA 29+75	27' RT.
M2	CURB RAMP, TYPE 1	STA 29+63	27' RT.

NOTE: TO BE PAID FOR UNDER P.C.C. SIDEWALK 4" ITEM.

FENCE SCHEDULE

NO.	QTY.	DESCRIPTION	NOTES
12	22 LF	INSTALL 6' CHAIN LINK FENCE	STA. 30+82, 44' LT. TO STA. 30+97, 40' LT. (+/-)
12A	90 LF	INSTALL 6' CHAIN LINK FENCE	STA. 30+20, 45' LT. TO STA. 30+20, 45' RT. (+/-)
14	79 LF	INSTALL 6' CHAIN LINK FENCE	STA. 33+30, 38' RT. TO STA. 33+30, 40' LT. (+/-)
16	81 LF	INSTALL 6' CHAIN LINK FENCE	STA. 35+53, 41' LT. TO STA. 35+53, 40' RT. (+/-)

CURB SCHEDULE

NO.	ITEM DESCRIPTION / TYPE	LENGTH
M1	P.C.C. CURB TYPE 1	28'
M2	P.C.C. CURB TYPE 1	26'
11	P.C.C. CURB TYPE 1	166'
12	P.C.C. CURB TYPE 1	174'
14	P.C.C. CURB TYPE 3	81'
16	P.C.C. CURB TYPE 3	83'

NOTE: CURB REMOVAL LIMITS TO MATCH LIMITS IN SCHEDULE.

NOTES:

1. PROPERTIES UNDER THE BRIDGE SHALL BE NOTIFIED 4 WEEKS IN ADVANCE OF ANY WORK UNDER THE BRIDGE WHICH WILL IMPACT THE CONCRETE BARRIER, SKATE RAMPS AND OTHER NON DELDOT PROPERTY.
2. REPLACE ALL REMOVED FEATURES IN SAME LOCATIONS AND ELEVATIONS AS EXISTING CONDITION, UNLESS DIRECTED OTHERWISE.

SIDEWALK SCHEDULE

NO.	ITEM DESCRIPTION / TYPE	BEGIN STA.	OFFSET	BEGIN STA.	OFFSET	AREA
11	P.C.C. SIDEWALK, 4"	29+63	18 RT.	29+76	24 RT.	74 SF

DELAWARE DEPARTMENT OF TRANSPORTATION

ADDENDUMS / REVISIONS
ADDENDUM NO. 1
MODIFY UTILITIES AND ADDED PAVEMENT
REMOVAL AND REPLACEMENT LIMITS
2/1/11 NAS

SCALE 0 30 60 90 FEET

REHABILITATION OF BRIDGE 1-501 ROUTE 141 OVER SR 4, LOCAL ROADS, AMTRAK AND THE CHRISTINA RIVER

CONTRACT	T200907403
COUNTY	NEW CASTLE
BRIDGE NO.	1-501
DESIGNED BY:	SEL
CHECKED BY:	KJO

CONSTRUCTION PLAN SB CROSSOVER

SHEET NO.	26
TOTAL SHTS.	253

G:\60098167\CIVIL PLANS\CPY\026-SBCP07.DGN

PROJECT NOTES

DESIGN:

1. THE REHABILITATED BRIDGE DESIGN IS IN ACCORDANCE WITH THE LRFD BRIDGE DESIGN SPECIFICATIONS, FOURTH EDITION, 2007, ADOPTED BY AASHTO (INCLUDING INTERIM SPECIFICATIONS THRU 2009), AS SUPPLEMENTED BY THE DELAWARE DEPARTMENT OF TRANSPORTATION'S BRIDGE DESIGN MANUAL DATED MAY 2005.

2. AASHTO STANDARD SPECIFICATIONS FOR STRUCTURAL SUPPORTS FOR HIGHWAY SIGNS LUMINARIES, AND TRAFFIC SIGNALS.

3. DESIGN OF SIGN SUPPORTS OF SPAN 17 IS IN ACCORDANCE WITH ALLOWABLE STRESS DESIGN.

SPAN 17 SIGN SUPPORT DESIGN LOADS:

1. DEAD LOAD IS BASED ON 490 LB/FT^3 STEEL MEMBERS.

2. WIND LOADS ARE BASED ON 100 MPH WIND.

3. FATIGUE LOADS CONSIDERED :

   A. TRUCK GUSTS BASED ON 30 MPH

   B. NATURAL WIND LOAD BASED ON 11.2 MPH

MISCELLANEOUS:

1. CONTRACTOR MUST ACCESS ABUTMENT 1 FROM THE SR141 ROADWAY, PASSING AROUND THE WINGWALLS.

2. CONTRACTOR MUST ACCESS PIER 1 FROM THE DECK LEVEL USING UNDERBRIDGE EQUIPMENT.

3. STORAGE OR STOCKPILING OF MATERIALS OR EQUIPMENT ON THE BRIDGE DECK IS PROHIBITED WITHOUT PRIOR WRITTEN CONSENT OF THE ENGINEER. TO REQUEST STORAGE OR STOCKPILING AREAS ON THE BRIDGE , THE CONTRACTOR SHALL SUBMIT WRITTEN ANALYSIS PREPARED BY A PROFESSIONAL ENGINEER INDICATING THE RESULTANT STRESSES IN THE BRIDGE ALONG WITH SPECIFIC LOCATIONS, DIMENSIONS, AND WEIGHTS OF EQUIPMENT OR MATERIALS TO BE STORED. REFER TO DELDOT STANDARD SPECIFICATION 104.14 AS REVISED MAY 11, 2010.

4. WHERE CONSTRUCTION IMPACTS THE DRY FIREWATER STANDPIPES, THE CONTRACTOR SHALL MAINTAIN THE PIPES OPERABLE AND PROVIDE TEMPORARY SUPPORTS AS REQUIRED. WORK ASSOCIATED WITH MAINTAINING THE STANDPIPES IS INCIDENTAL TO THE CONTRACTOR'S CONSTRUCTION ACTIVITIES.

5. WHERE CONSTRUCTION IMPACTS THE ITS CONDUIT, THE CONTRACTOR SHALL MAINTAIN THE ITS FACILITIES OPERABLE AND PROVIDE TEMPORARY SUPPORTS AS REQUIRED. WORK ASSOCIATED WITH MAINTAINING THE ITS FACILITIES IS INCIDENTAL TO THE CONTRACTOR'S CONSTRUCTION ACTIVITIES.

REINFORCING STEEL:

1. ALL REINFORCING STEEL SHALL MEET THE REQUIREMENTS FOR AASHTO M31, GRADE 60.

2. EPOXY COATED REINFORCEMENT SHALL BE PROVIDED AS DIRECTED ON THE PLAN. ALL EPOXY COATED REINFORCING SHALL BE PROTECTED WITH FUSION-BONDED EPOXY CONFORMING TO AASHTO M284.

3. FOR THE REHABILITATION EFFORT, EPOXY COATED REINFORCEMENT SHALL NOT COME INTO CONTACT WITH NON-COATED REINFORCEMENT. EXISTING DAMAGED OR DETERIORATED REINFORCEMENT SHALL BE REPLACED IN-KIND, AS DIRECTED BY THE ENGINEER.

4. ALL WELDED WIRE FABRIC SHALL MEET THE REQUIREMENTS FOR AASHTO M55.

5. REINFORCING STEEL DAMAGED DURING REPAIR OPERATIONS SHALL BE REPAIRED TO THE SATISFACTION OF THE ENGINEER AT CONTRACTOR'S SOLE EXPENSE.

6. FIELD WELDING SHALL BE PERFORMED BY WELDERS QUALIFIED IN ACCORDANCE WITH AWS D1.1/D1.5 AS MODIFIED BY AASHTO "STANDARD SPECIFICATIONS FOR WELDING STRUCTURAL STEEL HIGHWAY BRIDGES".

STRUCTURAL STEEL:

1. ALL STRUCTURAL STEEL FOR PERMANENT STRUCTURES SHALL BE IN ACCORDANCE WITH ASTM SPECIFICATIONS FOR A709M, GRADE 345 UNLESS OTHERWISE NOTED.

2. ALL STRUCTURAL STEEL FOR TEMPORARY STRUCTURES SHALL BE IN ACCORDANCE WITH ASTM SPECIFICATIONS FOR A709M, GRADE 345 UNLESS OTHERWISE NOTED.

3. ALL BOLTED CONNECTIONS SHALL BE MADE WITH HIGH STRENGTH BOLTS ASTM SPECIFICATION A325 UNLESS OTHERWISE NOTED.

4. WELDED CONNECTIONS SHALL COMPLY WITH THE REQUIREMENTS OF THE AMERICAN WELDING SOCIETY D1.1 AND D1.5 LATEST EDITION. FOR FIELD WELDING LOW HYDROGEN E70XX ELECTRODES SHALL BE USED.

5. STRUCTURAL STEEL DAMAGED DURING CONSTRUCTION SHALL BE REPAIRED AT CONTRACTOR'S SOLE EXPENSE.

6. FIELD WELDING SHALL BE PERFORMED BY WELDERS QUALIFIED IN ACCORDANCE WITH AWS D1.1 AS MODIFIED BY AASHTO "STANDARD SPECIFICATIONS FOR WELDING STRUCTURAL STEEL HIGHWAY BRIDGES".

7. ALL BOLTED CONNECTIONS TO BE SLIP CRITICAL. BOLTED CONNECTION DESIGN BASED ON CLASS A SURFACE CONDITIONS OF BOLTED PARTS (CLEAN MILL SCALE), AS GIVEN IN AASHTO TABLE 10.32.3C, AND ON STANDARD HOLE SIZE, I.E., OVERSIZED AND SLOTTED HOLES NOT PERMITTED.

DEMOLITION:

1. THE CONTRACTOR SHALL PREVENT DEBRIS FROM FALLING INTO THE AREAS BELOW THE BRIDGE SUCH AS THE CHRISTINA RIVER, AMTRAK, SURFACE STREETS AND PARKING LOTS. THE CONTRACTOR SHALL CONSTRUCT ADEQUATE PROTECTIVE SHIELDS TO PREVENT DEBRIS FROM FALLING FROM THE BRIDGE. THE CONTRACTOR SHALL PROMPTLY REMOVE FALLEN DEBRIS TO THE SATISFACTION OF THE ENGINEER.

2. DURING WORK THE CONTRACTOR SHALL USE CARE TO COLLECT ALL DEBRIS AND WATER USED FOR CONSTRUCTION PROMPTLY AND PREVENT ANY POLLUTION OF THE CHRISTINA RIVER. THE CONTRACTOR SHALL BE HELD LIABLE FOR WATERWAY CONTAMINATION DUE TO NEGLIGENCE. THE COLLECTION AND DISPOSAL OF CONSTRUCTION WATER AND DEBRIS WILL NOT BE MEASURED, BUT WILL BE CONSIDERED INCIDENTAL TO THE WORK ITEM WHICH GENERATED THE WATER AND DEBRIS.

3. CONTRACTOR SHALL USE WET DIAMOND BLADE SAW CUTTING (NO VERMEER SAW) DURING CONCRETE REMOVAL OPERATIONS.

4. BLASTING OR USE OF EXPLOSIVES IS NOT PERMITTED FOR ANY PART OF THE CONCRETE REMOVAL OPERATIONS.

PAINT:

1. THE FOLLOWING ITEMS ARE ASSOCIATED WITH CLEANING AND REPAINTING THE EXISTING STEEL SUPERSTRUCTURE AS INDICATED:

   605522-URETHANE PAINT SYSTEM, EXISTING STEEL
   605618-CLEANING EXISTING STEEL STRUCTURE BY VACUUM POWER TOOLS, HAZARDOUS BASE
   605629-CLEANING EXISTING STEEL STRUCTURES, HAZARDOUS BASE

⚠1 2. BRIDGE NO. 1-501 HAS A LEAD BASED PAINT SYSTEM ON ALL SURFACES OF THE EXISTING STRUCTURAL STEEL. IN GENERAL, THE CONTRACTOR IS TO USE THE REQUIREMENTS OF ITEM NO. ~~605529~~ 605629 - CLEANING EXISTING STEEL STRUCTURES HAZARDOUS BASE FOR REMOVAL OF THE EXISTING PAINT SYSTEM TO THE LIMITS INDICATED ON THE PLANS. IT IS ANTICIPATED THAT ITEM NO. 605618 - CLEANING EXISTING STEEL STRUCTURES BY VACUUM POWER TOOLS, HAZARDOUS BASE WILL BE USED FOR PAINT REMOVAL IN THE VICINITY OF THE TYPE E DIAPHRAGM REPAIRS.

⚠1 3. CONTAINMENT SYSTEMS SHALL BE REQUIRED DURING BLASTING. THE CONTAINMENT SYSTEM DESIGN SHALL BE SUBMITTED TO THE ENGINEER FOR APPROVAL PRIOR TO COMMENCEMENT OF FIELD OPERATIONS. PAYMENT FOR THE CONTAINMENT SYSTEM IS MADE UNDER THE APPROPRIATE CLEANING PROCEDURE, ITEM NO. ~~605529~~ 605629 - CLEANING EXISTING STEEL STRUCTURES HAZARDOUS BASE OR ITEM NO. 605618 - CLEANING EXISTING STEEL STRUCTURE BY VACUUM POWER TOOLS, HAZARDOUS BASE.

4. THE PAINT SYSTEM USED ON BRIDGE NO. 1-501 SHALL BE APPLIED IN A 3 COAT SYSTEM APPLICATION IN THE STRIPPED AND CLEANED AREAS. THE COLOR OF THE FINISH PAINT SHALL BE SUBMITTED FOR APPROVAL. UNLESS NOTED OTHERWISE, PAINT SYSTEM SHALL BE IN ACCORDANCE WITH ITEM 605522 URETHANE PAINT SYSTEM, EXISTING STEEL.

5. AT ALL LOCATIONS WHERE THE CONTRACTOR'S WORK DAMAGES THE EXISTING PAINT SYSTEM, THE CONTRACTOR SHALL CLEAN THE DAMAGED LOCATION AND REPAINT THE AREA.

6. EXTERIOR PAINT SYSTEM SHALL BE BROWN, MATCHING STANDARD COLOR NO. 20045, FEDERAL STANDARD NO. 595.

7. A 3-FT X 3-FT TEST PATCH OF PAINT SHALL BE APPLIED TO THE EXTERIOR SURFACE OF AN INTERIOR STEEL GIRDER FOR APPROVAL OF THE COLOR BY THE DEPARTMENT.

8. INTERIOR PAINT SYSTEM SHALL BE WHITE, MATCHING STANDARD COLOR NO. 27886, FEDERAL STANDARD NO. 595. APPLICATION IS LIMITED TO STEEL ELEMENTS WITHIN 5' OF THE CENTERLINE OF BEARING AT ALL DECK JOINTS.

9. CONFINED SPACE-ACCESS REQUIREMENTS SHALL BE ADDRESSED IN CONTRACTOR'S HEALTH AND SAFETY PLANS.

10. ACCESS HOLES SHALL BE COVERED AT ALL TIMES UNLESS PHYSICAL WORK IS OCCURING WITHIN THE SPAN.

PORTLAND CEMENT CONCRETE:

1. STRUCTURAL ELEMENTS OF PORTLAND CEMENT CONCRETE SHALL BE NOTED: (f'c=28 DAY COMPRESSIVE STRENGTH) CLASS "A" PCC MASONRY, ABUTMENT ABOVE FOOTING (f'c=4.5 KSI)-ABUTMENT, BACKWALL
   CLASS "A" PCC MASONRY, PARAPET (f'c=4.5 KSI)-CONCRETE BARRIERS
   CLASS "D" PCC MASONRY, SUPERSTRUCTURE (f'c=4.5 KSI)-DECK SLAB
   CLASS "D" PCC MASONRY, APPROACH SLAB (f'c-4.5 KSI)-APPROACH SLAB
   LOW PERMEABILITY CONCRETE OVERLAY (f'c=4.0 KSI)-DECK OVERLAY

2. MIX REQUIREMENTS SHALL CONFORM TO SECTION 812 OF THE STANDARD SPECIFICATIONS. THE MIX REQUIREMENTS FOR LOW PERMEABILITY CONCRETE SHALL ALSO COMPLY WITH THE CRITERIA OF ITEM NO. 602697 - FURNISHING LOW PERMEABILITY CONCRETE OVERLAY.

3. ALL EXPOSED EDGES SHALL BE CHAMFERED 3/4" UNLESS OTHERWISE NOTED.

4. USE AN APPROVED EPOXY BONDING COMPOUND BETWEEN THE OLD AND THE NEW CONCRETE SURFACES. THE BONDING COMPOUND SHALL CONFORM TO THE REQUIREMENTS OF SECTION 602 OF THE STANDARD SPECIFICATIONS. PAYMENT IS INCIDENTAL TO THE PCC MASONRY CLASS BEING PLACED.

5. PROVIDE 2" CONCRETE COVER ON REINFORCEMENT EXCEPT AS NOTED.

6. ALL CONCRETE SURFACES TO BE REPAIRED SHALL BE CLEANED BY GRIT BLASTING PRIOR TO PLACEMENT OF REPAIR MATERIAL.

7. REPAIR QUANTITIES FOR ITEM NO. 602709 - REPAIRING EXISTING P.C.C. STRUCTURES: 602586 - REHABILITATION OF CONCRETE STRUCTURES AND ITEM NO. 602611 - REPAIR OF CONCRETE STRUCTURES BY EPOXY INJECTION HAVE BEEN INCREASED BY 30% OVER THE QUANTITIES MEASURED DURING THE SEPTEMBER 2009 BRIDGE INSPECTION. PAYMENT WILL BE BASED UPON THE ACTUAL QUANTITIES REQUIRED TO COMPLETE THE REPAIRS.

8. ALL APPROACH SLAB CONCRETE SHALL BE CURED BY THE WATER METHOD FOR A MINIMUM PERIOD OF 7 DAYS IN ACCORDANCE WITH SUBSECTION 602.18(a) OF THE STANDARD SPECIFICATIONS.

9. THE BRIDGE DECK OVERLAY AND EACH APPROACH SLAB SHALL BE TEXTURED BY MECHANICAL GROOVING IN ACCORDANCE WITH SECTION 602.20(c) OF THE STANDARD SPECIFICATIONS.

10. BARRIER AND EDGE OF DECK SHALL BE COATED WITH ACRYLIC SEALER. SEALER SHALL BE GRAY, MATCHING STANDARD COLOR NO. 26424, FEDERAL STANDARD NO. 595.

INDEX OF STRUCTURES DRAWINGS

33. PROJECT NOTES
34. GENERAL PLAN AND ELEVATION - 1
35. GENERAL PLAN AND ELEVATION - 2
36. GENERAL PLAN AND ELEVATION - 3
37. GENERAL PLAN AND ELEVATION - 4
38. GENERAL PLAN AND ELEVATION - 5
39. TYPICAL SECTIONS - 1
40. TYPICAL SECTIONS - 2
41. SEQUENCE OF CONSTRUCTION - 1
42. SEQUENCE OF CONSTRUCTION - 2
43. ABUTMENT 1 CONCRETE REPAIRS - 1
44. ABUTMENT 1 CONCRETE REPAIRS - 2
45. PIER 2 - SOUTHBOUND CONCRETE REPAIRS
46. PIER 2 - NORTHBOUND CONCRETE REPAIRS
47. PIER 3 - SOUTHBOUND CONCRETE REPAIRS
48. PIER 3 - NORTHBOUND CONCRETE REPAIRS
49. PIER 4 - SOUTHBOUND CONCRETE REPAIRS
50. PIER 4 - NORTHBOUND CONCRETE REPAIRS
51. PIER 5 - SOUTHBOUND CONCRETE REPAIRS
52. PIER 5 - NORTHBOUND CONCRETE REPAIRS
53. PIER 6 - SOUTHBOUND CONCRETE REPAIRS
54. PIER 6 - NORTHBOUND CONCRETE REPAIRS
55. PIER 7 - SOUTHBOUND CONCRETE REPAIRS
56. PIER 7 - NORTHBOUND CONCRETE REPAIRS
57. PIER 8 - SOUTHBOUND CONCRETE REPAIRS
58. PIER 8 - NORTHBOUND CONCRETE REPAIRS
59. PIER 9 - SOUTHBOUND CONCRETE REPAIRS
60. PIER 9 - NORTHBOUND CONCRETE REPAIRS
61. PIER 9 - M2 CONCRETE REPAIRS
62. PIER 10 - M2 CONCRETE REPAIRS
63. PIER 11 - SOUTHBOUND CONCRETE REPAIRS
64. PIER 11 - NORTHBOUND CONCRETE REPAIRS
65. PIER 12 - SOUTHBOUND CONCRETE REPAIRS
66. PIER 12 - NORTHBOUND CONCRETE REPAIRS
67. PIER 13 - SOUTHBOUND CONCRETE REPAIRS
68. PIER 13 - NORTHBOUND CONCRETE REPAIRS
69. PIER 14 - SOUTHBOUND CONCRETE REPAIRS
70. PIER 14 - NORTHBOUND CONCRETE REPAIRS
71. PIER 15 - SOUTHBOUND CONCRETE REPAIRS
72. PIER 15 - NORTHBOUND CONCRETE REPAIRS
73. PIER 16 - SOUTHBOUND CONCRETE REPAIRS
74. PIER 16 - NORTHBOUND CONCRETE REPAIRS
75. PIER 17 - SOUTHBOUND CONCRETE REPAIRS
76. PIER 17 - NORTHBOUND CONCRETE REPAIRS
77. PIER 18 - SOUTHBOUND CONCRETE REPAIRS
78. PIER 18 - NORTHBOUND CONCRETE REPAIRS
79. ABUTMENT M1 CONCRETE REPAIRS - 1
80. ABUTMENT M1 CONCRETE REPAIRS - 2
81. ABUTMENT M1 CONCRETE REPAIRS - 3
82. ABUTMENT M2 CONCRETE REPAIRS - 1
83. ABUTMENT M2 CONCRETE REPAIRS - 2
84. ABUTMENT M2 CONCRETE REPAIRS - 3
85. ABUTMENT 2 CONCRETE REPAIRS - 1
86. ABUTMENT 2 CONCRETE REPAIRS - 2
87. ABUTMENT 2 CONCRETE REPAIRS - 3
88. ABUTMENT 2 CONCRETE REPAIRS - 4
89. ABUTMENT 2 CONCRETE REPAIRS - 5
90. ABUTMENT 2 CONCRETE REPAIRS - 6
91. TYPICAL CONCRETE REPAIR DETAILS
92. SUBSTRUCTURE REINFORCEMENT SCHEDULE - 1
93. SUBSTRUCTURE REINFORCEMENT SCHEDULE - 2
94. FRAMING PLAN - SPAN 1 THRU SPAN 4
95. FRAMING PLAN - SPAN 5 THRU SPAN 8
96. FRAMING PLAN - SPAN 9 THRU SPAN 11
97. FRAMING PLAN - SPAN 12 THRU SPAN 14
98. FRAMING PLAN - SPAN 14 THRU SPAN 16
99. FRAMING PLAN - SPAN 17 THRU SPAN 19
100. EXISTING STEEL DETAILS
101. TYPE E DIAPHRAGM RETROFIT DETAILS
102. PIER 3 SIGN STRUCTURE REPAIR
103. PIER 13 SIGN STRUCTURE REPAIR
104. SPAN 17 SIGN STRUCTURE DETAILS - 1
105. SPAN 17 SIGN STRUCTURE DETAILS - 2
106. EXISTING BEARING DETAILS
107. BEARING REPLACEMENT DETAILS
108. ABUTMENT 1 - TEMPORARY JACKING FRAME
109. PIER 1 - TEMPORARY JACKING FRAME
110. PIER 4 - TEMPORARY JACKING FRAME
111. PIER 7 - TEMPORARY JACKING FRAME - 1
112. PIER 7 - TEMPORARY JACKING FRAME - 2
113. PIER 8 - TEMPORARY JACKING FRAME - 1
114. PIER 8 - TEMPORARY JACKING FRAME - 2
115. PIER 9 - TEMPORARY JACKING FRAME - 1
116. PIER 9 - TEMPORARY JACKING FRAME - 2
117. PIER 11 - TEMPORARY JACKING FRAME - 1
118. PIER 11 - TEMPORARY JACKING FRAME - 2
119. PIER 12 - TEMPORARY JACKING FRAME
120. PIER 14 - TEMPORARY JACKING FRAME
121. PIER 16 - TEMPORARY JACKING FRAME
122. PIER 18 - TEMPORARY JACKING FRAME
123. ABUTMENT 2 - TEMPORARY JACKING FRAME
124. TEMPORARY JACKING FRAME DETAILS - 1
125. TEMPORARY JACKING FRAME DETAILS - 2
126. TEMPORARY JACKING FRAME DETAILS - 3
127. TEMPORARY JACKING FRAME DETAILS - 4
128. DECK PLAN - SPAN 1 THRU SPAN 4
129. DECK PLAN - SPAN 5 THRU SPAN 8
130. DECK PLAN - SPAN 9 THRU SPAN 11
131. DECK PLAN - SPAN 12 THRU SPAN 15
132. DECK PLAN - SPAN 16 THRU SPAN 19
133. TYPICAL DECK REPAIR DETAILS - 1
134. TYPICAL DECK REPAIR DETAILS - 2
135. TYPICAL DECK REPAIR DETAILS - 3
136. TYPICAL DECK REPAIR DETAILS - 4
137. ABUTMENT 1 - EXPANSION JOINT REPAIR
138. PIER 4 - EXPANSION JOINT REPAIR
139. PIER 7 SOUTHBOUND - EXPANSION JOINT REPAIR
140. PIER 7 NORTHBOUND - EXPANSION JOINT REPAIR
141. PIER 8 SOUTHBOUND - EXPANSION JOINT REPAIR
142. PIER 8 NORTHBOUND - EXPANSION JOINT REPAIR
143. PIER 11 - EXPANSION JOINT REPAIR
144. PIER 16 - EXPANSION JOINT REPAIR
145. PIER 17 - EXPANSION JOINT REPAIR
146. PIER 18 - EXPANSION JOINT REPAIR
147. ABUTMENT M1/M2 - EXPANSION JOINT REPAIR
148. ABUTMENT 2 - EXPANSION JOINT REPAIR
149. EXPANSION JOINT REPAIR DETAILS - 1
150. EXPANSION JOINT REPAIR DETAILS - 2
151. EXPANSION JOINT REPAIR DETAILS - 3
152. EXPANSION JOINT REPAIR DETAILS - 4
153. TEMPORARY DEMOLITION SHIELDING - 1
154. TEMPORARY DEMOLITION SHIELDING - 2
155. SUPERSTRUCTURE REINFORCEMENT SCHEDULE - 1
156. SUPERSTRUCTURE REINFORCEMENT SCHEDULE - 2
157. EXISTING APPROACH SLABS
158. ABUTMENT M1 - APPROACH SLAB DETAILS
159. ABUTMENT M2 - APPROACH SLAB DETAILS
160. ABUTMENT 2 - APPROACH SLAB DETAILS
161. APPROACH SLAB REINFORCEMENT SCHEDULE

LOAD RATING

THIS PROJECT DOES NOT CHANGE THE LOAD RATING OF THE BRIDGE.

A CURRENT LOAD RATING OF THE BRIDGE IS ON FILE AND MAY BE OBTAINED FROM THE BRIDGE MANAGEMENT SECTION.

UNOFFICIAL WEBSITE COPY

DELAWARE
DEPARTMENT OF TRANSPORTATION

ADDENDUMS / REVISIONS	
ADDENDUM NO ⚠1	
MODIFIED PAINT NOTES 2 & 3	
01/18/11 NAS	

REHABILITATION OF BRIDGE 1-501
ROUTE 141 OVER SR 4, LOCAL ROADS, AMTRAK AND THE CHRISTINA RIVER

CONTRACT	T200907403	BRIDGE NO.	1-501
COUNTY	NEW CASTLE	DESIGNED BY:	NAS
		CHECKED BY:	HJF/DPR

PROJECT NOTES

SHEET NO.	33
TOTAL SHTS.	253

G:\60098167\STRUCTURE\PLANS\033-PN01.DGN

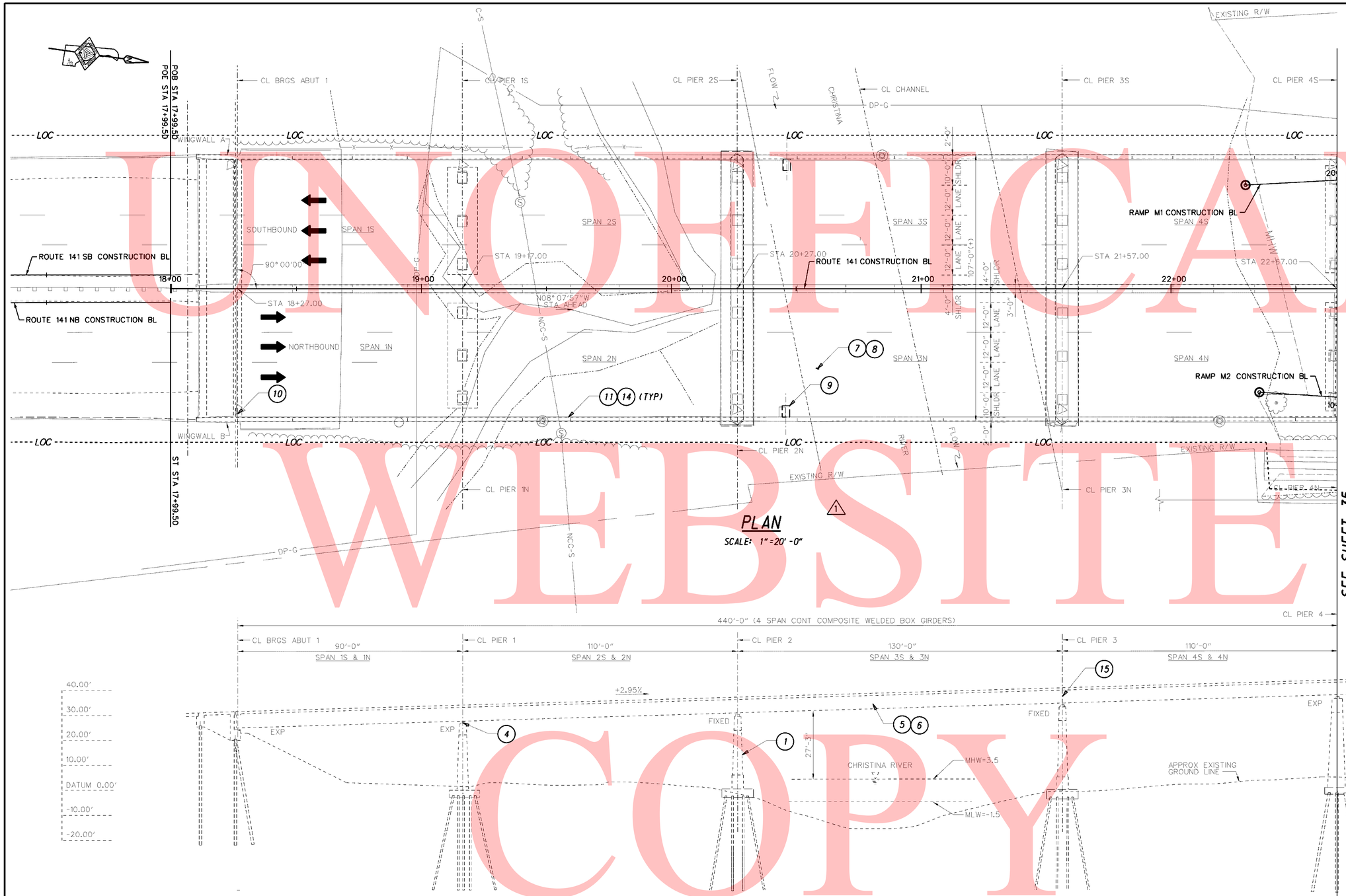

PLAN

SCALE: 1"=20'-0"

ELEVATION

SCALE: 1"=20'-0"

NOTE:

1. CONTRACTOR SHALL ADHERE TO THE PROVISIONS OF OSHA 29 CFR 1926.106. IN PARTICULAR, A RESCUE SKIFF SHALL BE PROVIDED AT ALL TIMES WHILE WORK IS PERFORMED OVER, IN, OR ADJACENT TO THE CHRISTINA RIVER. PAYMENT FOR COMLIANCE WITH THIS REQUIREMENT IS INCIDENTAL TO THE REPAIR WORK BEING PERFORMED.

REPAIR:

1. REPAIR CRACKS, SPALLS AND DELAMINATED CONCRETE OF SUBSTRUCTURE UNITS. APPLY WATERPROOFING TO CONCRETE WHERE INDICATED (ITEMS 602546, 602586, 602611, 602709, 602783, 602784 AND 603000)
2. REMOVE AND RECONSTRUCT PORTION OF WINGWALL AT ABUTMENTS M1, M2 AND 2. (ITEMS 207000 602015, 602579, 602580, AND 603000)
3. REMOVE AND RECONSTRUCT ABUTMENT BACKWALL AT ABUTMENTS M1, M2 AND 2. (ITEMS 207000, 207501, 602015, 602579, 602580, AND 603000)
4. CONSTRUCT TEMPORARY JACKING TOWERS, JACK BRIDGE, REMOVE AND REPLACE DETERIORATED BRIDGE BEARINGS AS INDICATED. REPAIR DAMAGED ANCHOR BOLTS AS INDICATED. (ITEMS 207000 605601, 605651 AND 605689)
5. CLEAN AND PAINT EXTERIOR SURFACES OF ALL STRUCTURAL STEEL MEMBERS. CLEAN AND PAINT INTERIOR SURFACES OF STRUCTURAL MEMBERS AS INDICATED. (ITEMS 605522 AND 605629)
6. INSTALL RETROFIT PLATES AT ALL TYPE E DIAPHRAGMS. (ITEMS 605522, 605584 AND 605618)
7. MILL BRIDGE DECK 2 INCHES. CONSTRUCT LOW-PERMEABILITY CONCRETE OVERLAY, 2-INCH DEPTH. CONSTRUCT RUMBLE STRIPS IN SHOULDERS. (ITEMS 602697, 602698, 760506 AND 760508)
8. REPAIR SPALLS AND DELAMINATED CONCRETE WITHIN BRIDGE DECK AND PARAPET. (ITEMS 602574, 602575, 602576, 602577, 602586, 602709, 603000, AND 604000)
9. CLEAN EXISTING BRIDGE DRAINS. ITEM (605656)
10. REMOVE AND REPLACE BRIDGE EXPANSION JOINTS INCLUDING INSTALLATION OF BARRIER SLIDING PLATES. (ITEMS 601502, 602013, 602017, 602580, 603000, 604000, 605512, AND 605589)
11. REMOVE AND REPLACE PORTION OF EXISTING BRIDGE BARRIER AT ALL DEFLECTION JOINTS AND DECK JOINTS AS INDICATED. INSTALL ADDITIONAL REINFORCEMENT FOR STRENGTHENING. (ITEMS 601502, 602017, 602580, 603000, AND 604000)
12. REMOVE AND REPLACE CONCRETE APPROACH SLABS AT ABUTMENTS M1, M2 AND 2. (ITEMS 207000, 211000, 602014, 602017 AND 604000)
13. REMOVE GUIDE SIGNS FROM SPAN 17 FASCIA GIRDER OVER JUSTIS STREET. CONSTRUCT SIGN SUPPORT AND INSTALL NEW SIGNAGE. (ITEMS 605724 AND 749500)
14. APPLY ACRYLIC CONCRETE SEALER TO THE FASCIA AND MEDIAN BRIDGE BARRIER AS INDICATED (ITEM 602518)
15. REMOVE AND REPLACE SIGN STRUCTURE ANCHOR BOLTS AND ANCHOR BOLT SLEEVES. (ITEMS 605522, 605585, AND 605629)
16. REMOVE AND REPLACE IMPACT ATTENUATOR AT GORE AREAS BETWEEN SR141 NB AND RAMP M-2 (ITEMS 211000 AND 720554)

SEE SHEET 35

UNOFFICIAL WEBSITE COPY

DELAWARE DEPARTMENT OF TRANSPORTATION	ADDENDUMS / REVISIONS	SCALE	REHABILITATION OF BRIDGE 1-501 ROUTE 141 OVER SR 4, LOCAL ROADS, AMTRAK AND THE CHRISTINA RIVER	CONTRACT T200907403	BRIDGE NO. 1-501	GENERAL PLAN AND ELEVATION – 1	SHEET NO. 34
	ADDENDUM NO 1	0 20 40 60 FEET		COUNTY NEW CASTLE	DESIGNED BY: DPR		TOTAL SHTS. 253
	ADDED NOTE 1				CHECKED BY: NAS		
	ADDED UTILITIES						
	01/18/11 NAS						

G:\60098167\STRUCTURE\PLANS\034-PE01.DGN

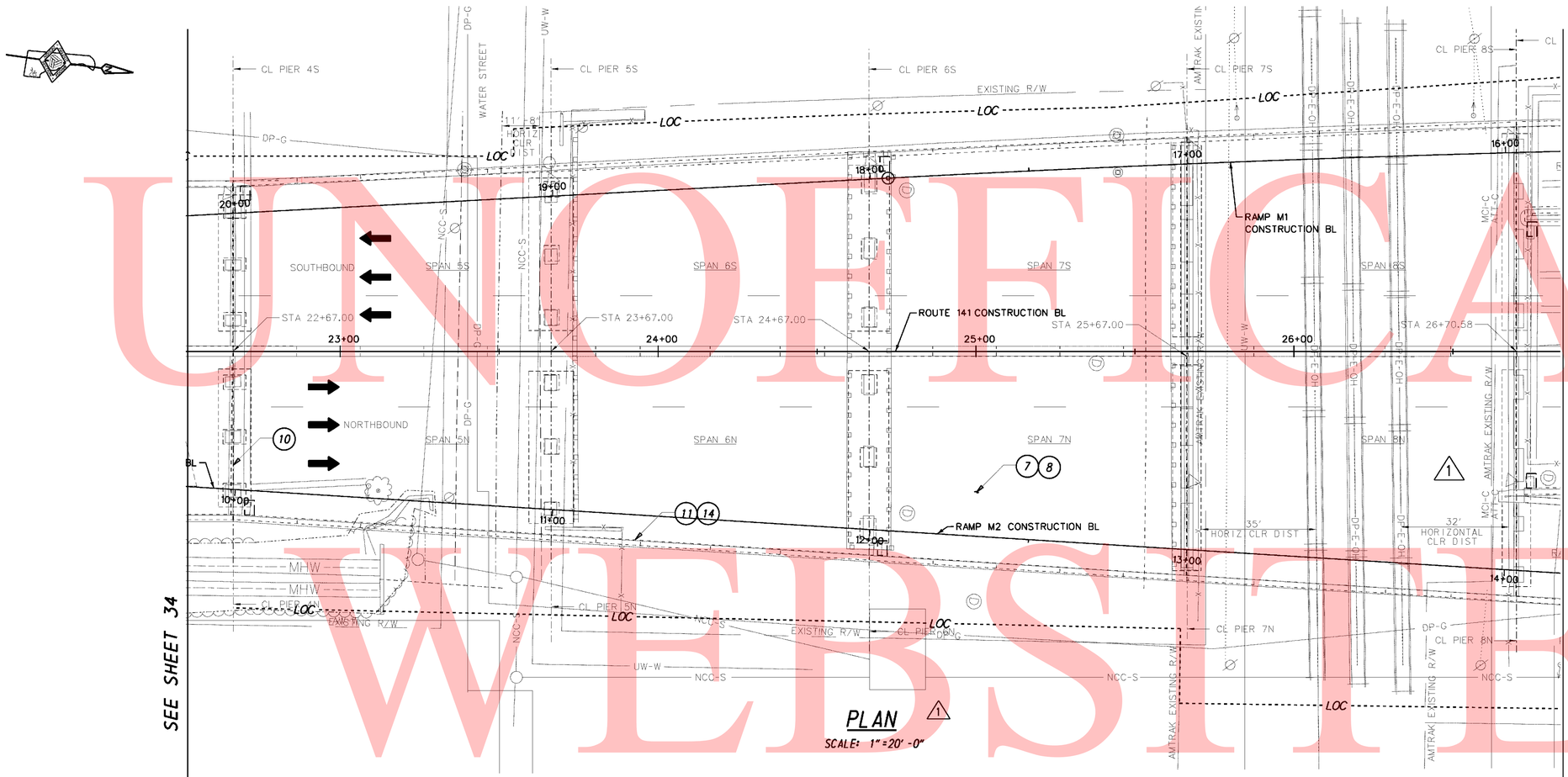

PLAN

SCALE: 1"=20'-0"

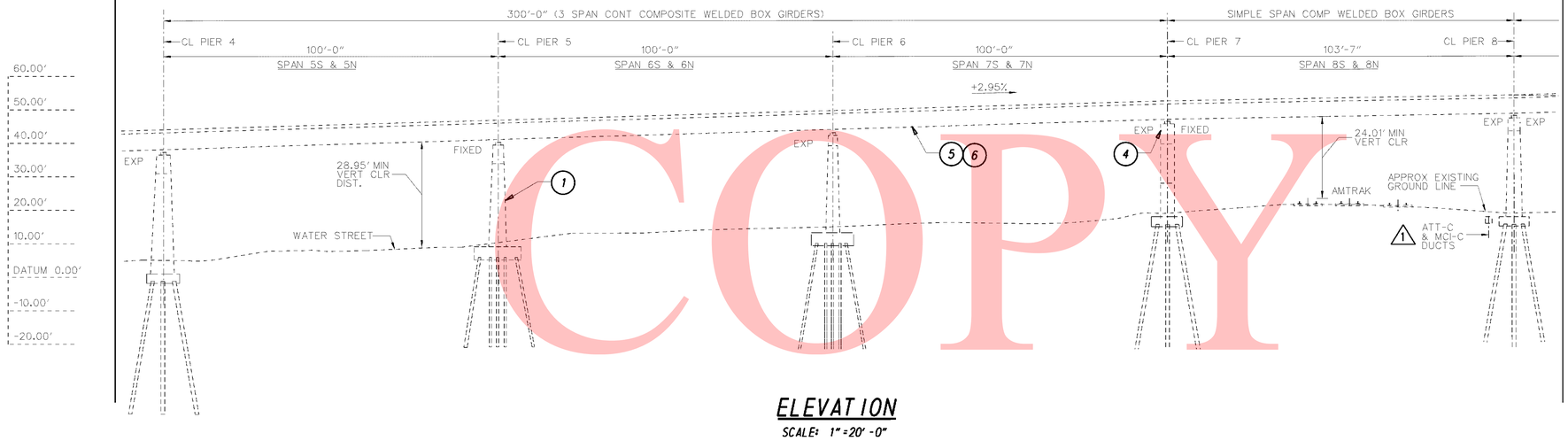

ELEVATION

SCALE: 1"=20'-0"

REPAIR:

1. REPAIR CRACKS, SPALLS AND DELAMINATED CONCRETE OF SUBSTRUCTURE UNITS. APPLY WATERPROOFING TO CONCRETE WHERE INDICATED (ITEMS 602546, 602586, 602611, 602709, 602783, 602784 AND 603000)
2. REMOVE AND RECONSTRUCT PORTION OF WINGWALL AT ABUTMENTS M1, M2 AND 2. (ITEMS 207000 602015, 602579, 602580, AND 603000)
3. REMOVE AND RECONSTRUCT ABUTMENT BACKWALL AT ABUTMENTS M1, M2 AND 2. (ITEMS 207000, 207501, 602015, 602579, 602580, AND 603000)
4. CONSTRUCT TEMPORARY JACKING TOWERS, JACK BRIDGE, REMOVE AND REPLACE DETERIORATED BRIDGE BEARINGS AS INDICATED. REPAIR DAMAGED ANCHOR BOLTS AS INDICATED. (ITEMS 207000 605601, 605651 AND 605689)
5. CLEAN AND PAINT EXTERIOR SURFACES OF ALL STRUCTURAL STEEL MEMBERS. CLEAN AND PAINT INTERIOR SURFACES OF STRUCTURAL MEMBERS AS INDICATED. (ITEMS 605522 AND 605629)
6. INSTALL RETROFIT PLATES AT ALL TYPE E DIAPHRAGMS. (ITEMS 605522, 605584 AND 605618)
7. MILL BRIDGE DECK 2 INCHES. CONSTRUCT LOW-PERMEABILITY CONCRETE OVERLAY, 2-INCH DEPTH. CONSTRUCT RUMBLE STRIPS IN SHOULDERS. (ITEMS 602697, 602698, 760506 AND 760508)
8. REPAIR SPALLS AND DELAMINATED CONCRETE WITHIN BRIDGE DECK AND PARAPET. (ITEMS 602574, 602575, 602576, 602577, 602586, 602709, 603000, AND 604000)
9. CLEAN EXISTING BRIDGE DRAINS. ITEM (605656)
10. REMOVE AND REPLACE BRIDGE EXPANSION JOINTS INCLUDING INSTALLATION OF BARRIER SLIDING PLATES. (ITEMS 601502, 602013, 602017, 602580, 603000, 604000, 605512, AND 605589)
11. REMOVE AND REPLACE PORTION OF EXISTING BRIDGE BARRIER AT ALL DEFLECTION JOINTS AND DECK JOINTS AS INDICATED. INSTALL ADDITIONAL REINFORCEMENT FOR STRENGTHENING. (ITEMS 601502, 602017, 602580, 603000, AND 604000)
12. REMOVE AND REPLACE CONCRETE APPROACH SLABS AT ABUTMENTS M1, M2 AND 2. (ITEMS 207000, 211000, 602014, 602017 AND 604000)
13. REMOVE GUIDE SIGNS FROM SPAN 17 FASCIA GIRDER OVER JUSTIS STREET. CONSTRUCT SIGN SUPPORT AND INSTALL NEW SIGNAGE. (ITEMS 605724 AND 749500)
14. APPLY ACRYLIC CONCRETE SEALER TO THE FASCIA AND MEDIAN BRIDGE BARRIER AS INDICATED (ITEM 602518)
15. REMOVE AND REPLACE SIGN STRUCTURE ANCHOR BOLTS AND ANCHOR BOLT SLEEVES. (ITEMS 605522, 605585, AND 605629)
16. REMOVE AND REPLACE IMPACT ATTENUATOR AT GORE AREAS BETWEEN SR141 NB AND RAMP M-2 (ITEMS 211000 AND 720554)

UNOFFICIAL WEBSITE COPY

DELAWARE
DEPARTMENT OF TRANSPORTATION

ADDENDUMS / REVISIONS	
ADDENDUM NO 1	ADDED UTILITIES
ADDED DUCT BANK @ PIER 8	01/18/11 NAS
ADDED AMTRAK ROW	
ADDED UTILITIES BELOW SPAN 8	

SCALE
0 20 40 60
FEET

REHABILITATION OF BRIDGE 1-501 ROUTE 141 OVER SR 4, LOCAL ROADS, AMTRAK AND THE CHRISTINA RIVER

CONTRACT	T200907403
COUNTY	NEW CASTLE

BRIDGE NO.	1-501
DESIGNED BY:	DPR
CHECKED BY:	NAS

GENERAL PLAN AND ELEVATION – 2

SHEET NO.	35
TOTAL SHTS.	253

G:\60098167\STRUCTURE\PLANS\035-PE02.DGN

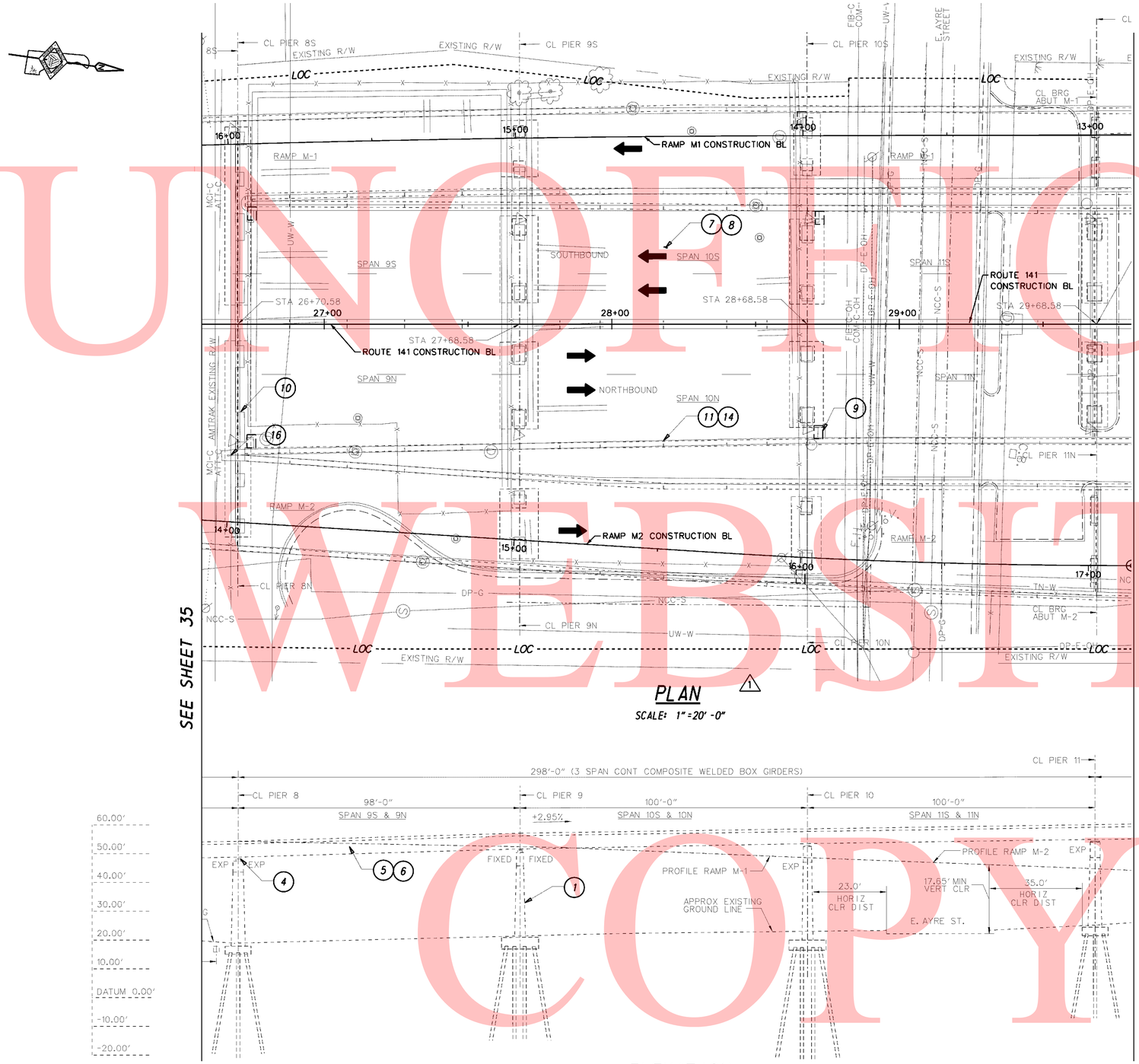

REPAIR:

1. REPAIR CRACKS, SPALLS AND DELAMINATED CONCRETE OF SUBSTRUCTURE UNITS. APPLY WATERPROOFING TO CONCRETE WHERE INDICATED (ITEMS 602546, 602586, 602611, 602709, 602783, 602784 AND 603000)
2. REMOVE AND RECONSTRUCT PORTION OF WINGWALL AT ABUTMENTS M1, M2 AND 2. (ITEMS 207000 602015, 602579, 602580, AND 603000)
3. REMOVE AND RECONSTRUCT ABUTMENT BACKWALL AT ABUTMENTS M1, M2 AND 2. (ITEMS 207000, 207501, 602015, 602579, 602580, AND 603000)
4. CONSTRUCT TEMPORARY JACKING TOWERS, JACK BRIDGE, REMOVE AND REPLACE DETERIORATED BRIDGE BEARINGS AS INDICATED. REPAIR DAMAGED ANCHOR BOLTS AS INDICATED. (ITEMS 207000 605601, 605651 AND 605689)
5. CLEAN AND PAINT EXTERIOR SURFACES OF ALL STRUCTURAL STEEL MEMBERS. CLEAN AND PAINT INTERIOR SURFACES OF STRUCTURAL MEMBERS AS INDICATED. (ITEMS 605522 AND 605629)
6. INSTALL RETROFIT PLATES AT ALL TYPE E DIAPHRAGMS. (ITEMS 605522, 605584 AND 605618)
7. MILL BRIDGE DECK 2 INCHES. CONSTRUCT LOW-PERMEABILITY CONCRETE OVERLAY, 2-INCH DEPTH. CONSTRUCT RUMBLE STRIPS IN SHOULDERS. (ITEMS 602697, 602698, 760506 AND 760508)
8. REPAIR SPALLS AND DELAMINATED CONCRETE WITHIN BRIDGE DECK AND PARAPET. (ITEMS 602574, 602575, 602576, 602577, 602586, 602709, 603000, AND 604000)
9. CLEAN EXISTING BRIDGE DRAINS. ITEM (605656)
10. REMOVE AND REPLACE BRIDGE EXPANSION JOINTS INCLUDING INSTALLATION OF BARRIER SLIDING PLATES. (ITEMS 601502, 602013, 602017, 602580, 603000, 604000, 605512, AND 605589)
11. REMOVE AND REPLACE PORTION OF EXISTING BRIDGE BARRIER AT ALL DEFLECTION JOINTS AND DECK JOINTS AS INDICATED. INSTALL ADDITIONAL REINFORCEMENT FOR STRENGTHENING. (ITEMS 601502, 602017, 602580, 603000, AND 604000)
12. REMOVE AND REPLACE CONCRETE APPROACH SLABS AT ABUTMENTS M1, M2 AND 2. (ITEMS 207000, 211000, 602014, 602017 AND 604000)
13. REMOVE GUIDE SIGNS FROM SPAN 17 FASCIA GIRDER OVER JUSTIS STREET. CONSTRUCT SIGN SUPPORT AND INSTALL NEW SIGNAGE. (ITEMS 605724 AND 749500)
14. APPLY ACRYLIC CONCRETE SEALER TO THE FASCIA AND MEDIAN BRIDGE BARRIER AS INDICATED (ITEM 602518)
15. REMOVE AND REPLACE SIGN STRUCTURE ANCHOR BOLTS AND ANCHOR BOLT SLEEVES. (ITEMS 605522, 605585, AND 605629)
16. REMOVE AND REPLACE IMPACT ATTENUATOR AT GORE AREAS BETWEEN SR141 NB AND RAMP M-2 (ITEMS 211000 AND 720554)

UNOFFICIAL WEBSITE COPY

DELAWARE
DEPARTMENT OF TRANSPORTATION

ADDENDUMS / REVISIONS	
ADDENDUM NO 1	
ADDED UTILITIES	
01/18/11 NAS	

SCALE
0 20 40 60
FEET

REHABILITATION OF BRIDGE 1-501 ROUTE 141 OVER SR 4, LOCAL ROADS, AMTRAK AND THE CHRISTINA RIVER

CONTRACT	T200907403
COUNTY	NEW CASTLE

BRIDGE NO.	1-501
DESIGNED BY:	DPR
CHECKED BY:	NAS

GENERAL PLAN AND ELEVATION – 3

SHEET NO.	36
TOTAL SHTS.	253

G:\60098167\STRUCTURE\PLANS\036-PE03.DGN

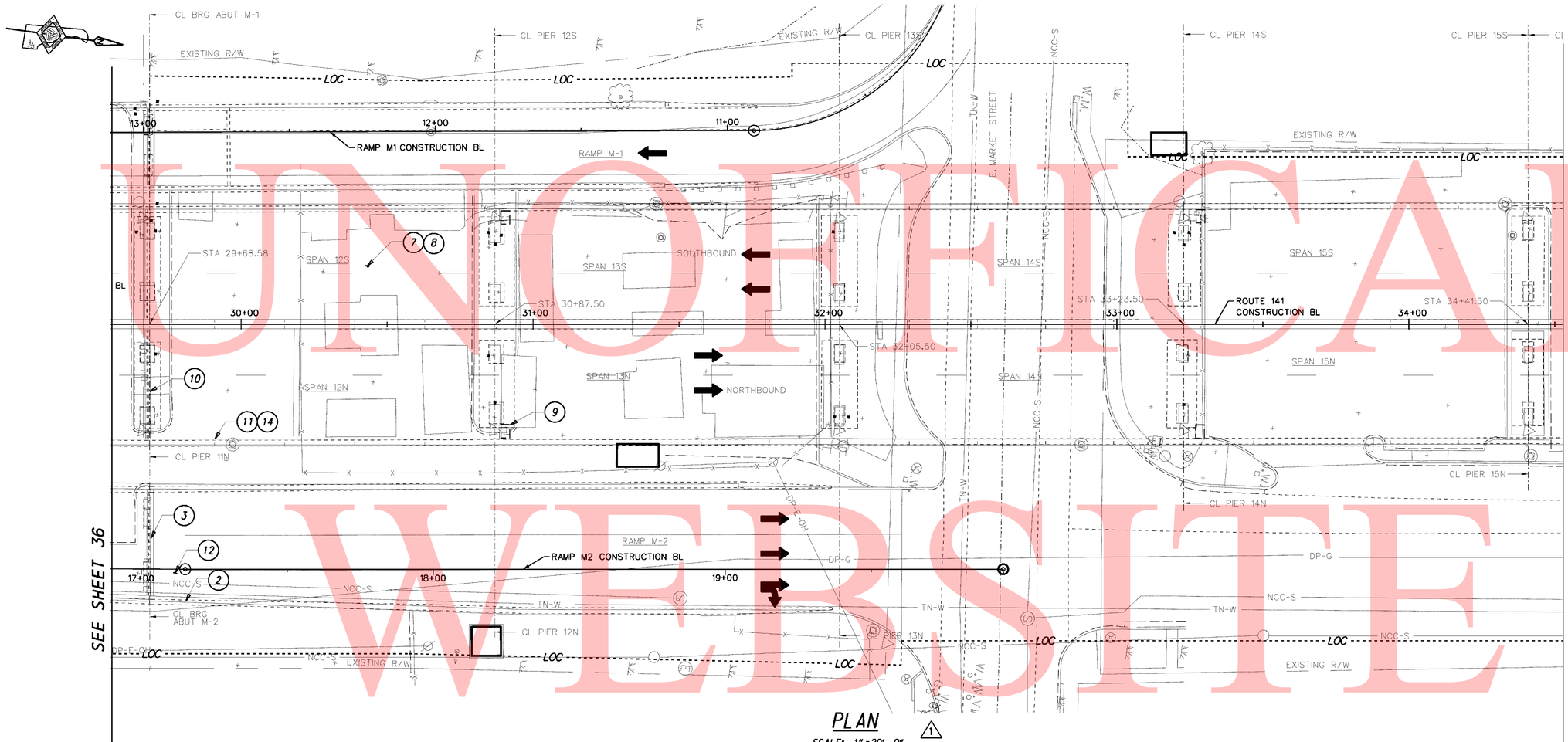

PLAN

SCALE: 1" = 20' -0"

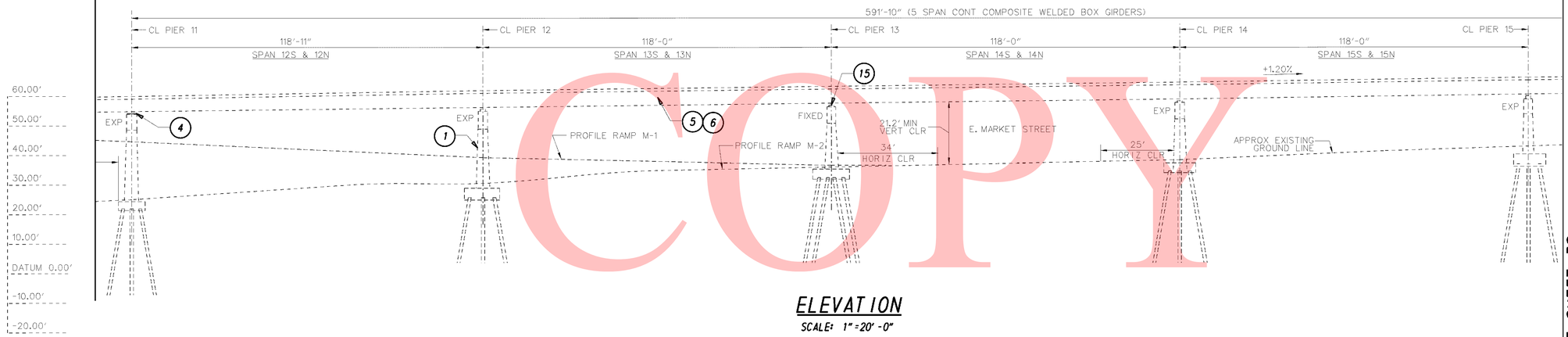

ELEVATION

SCALE: 1" = 20' -0"

REPAIR:

1. REPAIR CRACKS, SPALLS AND DELAMINATED CONCRETE OF SUBSTRUCTURE UNITS. APPLY WATERPROOFING TO CONCRETE WHERE INDICATED (ITEMS 602546, 602586, 602611, 602709, 602783, 602784 AND 603000)
2. REMOVE AND RECONSTRUCT PORTION OF WINGWALL AT ABUTMENTS M1, M2 AND 2. (ITEMS 207000 602015, 602579, 602580, AND 603000)
3. REMOVE AND RECONSTRUCT ABUTMENT BACKWALL AT ABUTMENTS M1, M2 AND 2. (ITEMS 207000, 207501, 602015, 602579, 602580, AND 603000)
4. CONSTRUCT TEMPORARY JACKING TOWERS, JACK BRIDGE, REMOVE AND REPLACE DETERIORATED BRIDGE BEARINGS AS INDICATED. REPAIR DAMAGED ANCHOR BOLTS AS INDICATED. (ITEMS 207000 605601, 605651 AND 605689)
5. CLEAN AND PAINT EXTERIOR SURFACES OF ALL STRUCTURAL STEEL MEMBERS. CLEAN AND PAINT INTERIOR SURFACES OF STRUCTURAL MEMBERS AS INDICATED. (ITEMS 605522 AND 605629)
6. INSTALL RETROFIT PLATES AT ALL TYPE E DIAPHRAGMS. (ITEMS 605522, 605584 AND 605618)
7. MILL BRIDGE DECK 2 INCHES. CONSTRUCT LOW-PERMEABILITY CONCRETE OVERLAY, 2-INCH DEPTH. CONSTRUCT RUMBLE STRIPS IN SHOULDERS. (ITEMS 602697, 602698, 760506 AND 760508)
8. REPAIR SPALLS AND DELAMINATED CONCRETE WITHIN BRIDGE DECK AND PARAPET. (ITEMS 602574, 602575, 602576, 602577, 602586, 602709, 603000, AND 604000)
9. CLEAN EXISTING BRIDGE DRAINS. ITEM (605656)
10. REMOVE AND REPLACE BRIDGE EXPANSION JOINTS INCLUDING INSTALLATION OF BARRIER SLIDING PLATES. (ITEMS 601502, 602013, 602017, 602580, 603000, 604000, 605512, AND 605589)
11. REMOVE AND REPLACE PORTION OF EXISTING BRIDGE BARRIER AT ALL DEFLECTION JOINTS AND DECK JOINTS AS INDICATED. INSTALL ADDITIONAL REINFORCEMENT FOR STRENGTHENING. (ITEMS 601502, 602017, 602580, 603000, AND 604000)
12. REMOVE AND REPLACE CONCRETE APPROACH SLABS AT ABUTMENTS M1, M2 AND 2. (ITEMS 207000, 211000, 602014, 602017 AND 604000)
13. REMOVE GUIDE SIGNS FROM SPAN 17 FASCIA GIRDER OVER JUSTIS STREET. CONSTRUCT SIGN SUPPORT AND INSTALL NEW SIGNAGE. (ITEMS 605724 AND 749500)
14. APPLY ACRYLIC CONCRETE SEALER TO THE FASCIA AND MEDIAN BRIDGE BARRIER AS INDICATED (ITEM 602518)
15. REMOVE AND REPLACE SIGN STRUCTURE ANCHOR BOLTS AND ANCHOR BOLT SLEEVES. (ITEMS 605522, 605585, AND 605629)
16. REMOVE AND REPLACE IMPACT ATTENUATOR AT GORE AREAS BETWEEN SR141 NB AND RAMP M-2 (ITEMS 211000 AND 720554)

UNOFFICIAL WEBSITE COPY

DELAWARE DEPARTMENT OF TRANSPORTATION	ADDENDUMS / REVISIONS	SCALE	REHABILITATION OF BRIDGE 1-501 ROUTE 141 OVER SR 4, LOCAL ROADS, AMTRAK AND THE CHRISTINA RIVER	CONTRACT T200907403	BRIDGE NO. 1-501	GENERAL PLAN AND ELEVATION – 4	SHEET NO. 37
	ADDENDUM NO 1 ADDED UTILITIES 01/18/11 NAS	0 20 40 60 FEET		COUNTY NEW CASTLE	DESIGNED BY: DPR		TOTAL SHTS. 253
					CHECKED BY: NAS		

G:\60098167\STRUCTURE\PLANS\037-PE04.DGN

UNOFFICIAL WEBSITE COPY

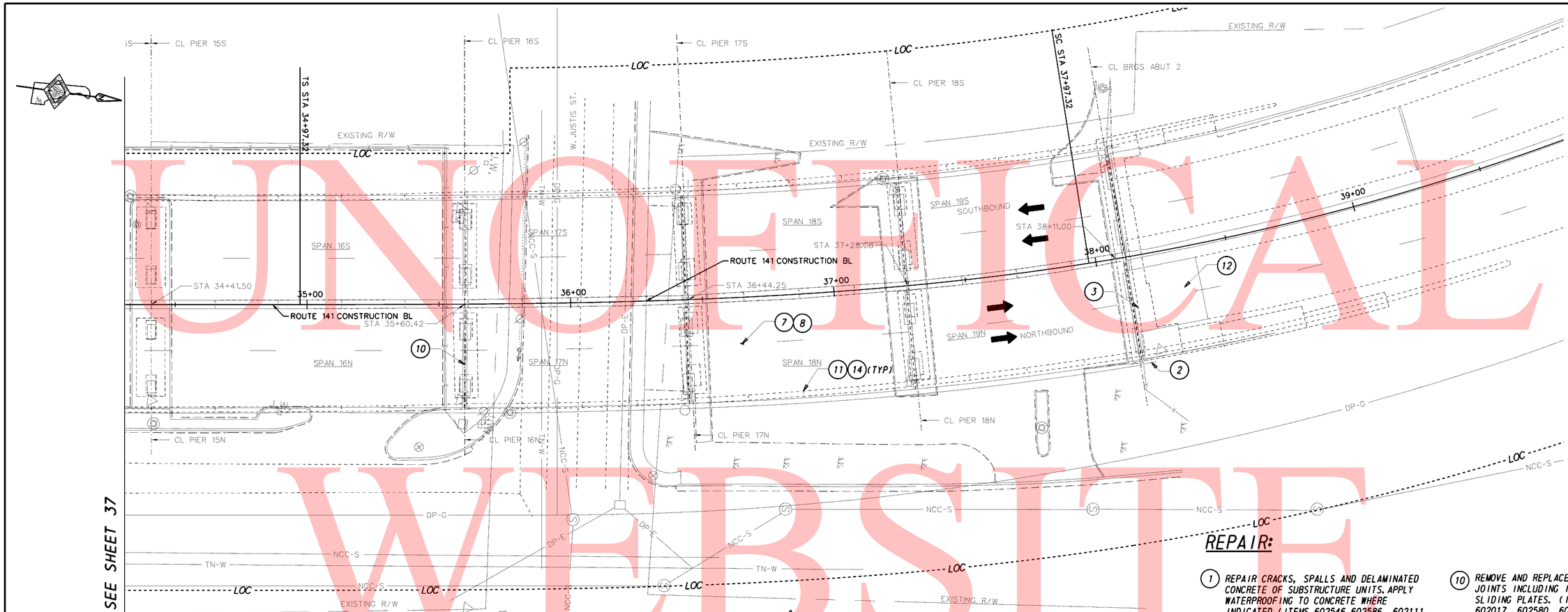

PLAN ⚠1

SCALE: 1"=20'-0"

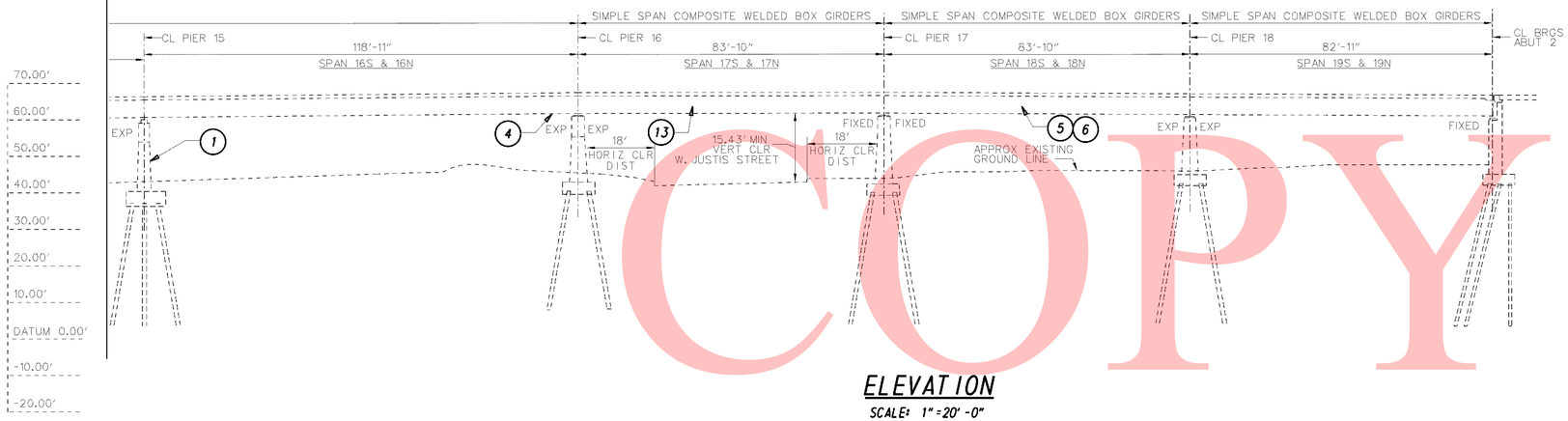

ELEVATION

SCALE: 1"=20'-0"

REPAIR:

1. REPAIR CRACKS, SPALLS AND DELAMINATED CONCRETE OF SUBSTRUCTURE UNITS. APPLY WATERPROOFING TO CONCRETE WHERE INDICATED (ITEMS 602546, 602586, 602111, 602709, 602783, 602784 AND 603000)
2. REMOVE AND RECONSTRUCT PORTION OF WINGWALL AT ABUTMENTS M1, M2 AND 2. (ITEMS 207000 602015, 602579, 602580 AND 603000)
3. REMOVE AND RECONSTRUCT ABUTMENT BACKWALL AT ABUTMENTS M1, M2 AND 2. (ITEMS 207000, 207501, 602015, 602579, 602580 AND 603000)
4. CONSTRUCT TEMPORARY JACKING TOWERS, JACK BRIDGE, REMOVE AND REPLACE DETERIORATED BRIDGE BEARINGS AS INDICATED. REPAIR DAMAGED ANCHOR BOLTS AS INDICATED. (ITEMS 207000 605601, 605651 AND 605689)
5. CLEAN AND PAINT EXTERIOR SURFACES OF ALL STRUCTURAL STEEL MEMBERS. CLEAN AND PAINT INTERIOR SURFACES OF STRUCTURAL MEMBERS AS INDICATED. (ITEMS 605522 AND 605629)
6. INSTALL RETROFIT PLATES AT ALL TYPE E DIAPHRAGMS. (ITEMS 605522, 605584 AND 605618)
7. MILL BRIDGE DECK 2 INCHES. CONSTRUCT LOW-PERMEABILITY CONCRETE OVERLAY, 2-INCH DEPTH. CONSTRUCT RUMBLE STRIPS IN SHOULDERS (ITEMS 602697, 602698, 760506 AND 760508)
8. REPAIR SPALLS AND DELAMINATED CONCRETE WITHIN BRIDGE DECK AND PARAPET. (ITEMS 602574, 602575, 602576, 602577, 602586, 602709, 603000 AND 604000)
9. CLEAN EXISTING BRIDGE DRAINS. ITEM (605656)
10. REMOVE AND REPLACE BRIDGE EXPANSION JOINTS INCLUDING INSTALLATION OF BARRIER SLIDING PLATES. (ITEMS 601502, 602013, 602017, 602580, 603000, 604000, 605512 AND 605589)
11. REMOVE AND REPLACE PORTION OF EXISTING BRIDGE BARRIER AT ALL DEFLECTION JOINTS AND DECK JOINTS AS INDICATED. INSTALL ADDITIONAL REINFORCEMENT FOR STRENGTHENING. (ITEMS 601502, 602017, 602580, 603000 AND 604000)
12. REMOVE AND REPLACE CONCRETE APPROACH SLABS AT ABUTMENTS M1, M2 AND 2. (ITEMS 207000, 211000, 602014, 602017 AND 604000)
13. REMOVE GUIDE SIGNS FROM SPAN 17 FASCIA GIRDER OVER JUSTIS STREET. CONSTRUCT SIGN SUPPORT AND INSTALL NEW SIGNAGE. (ITEMS 605724 AND 749500)
14. APPLY ACRYLIC CONCRETE SEALER TO THE FASCIA AND MEDIAN BRIDGE BARRIER AS INDICATED (ITEM 602518)
15. REMOVE AND REPLACE SIGN STRUCTURE ANCHOR BOLTS AND ANCHOR BOLT SLEEVES. (ITEMS 605522, 605585 AND 605629)
16. REMOVE AND REPLACE IMPACT ATTENUATOR AT GORE AREAS BETWEEN SR141 NB AND RAMP M-2 (ITEMS 211000 AND 720554)

DELAWARE
DEPARTMENT OF TRANSPORTATION

ADDENDUMS / REVISIONS	
ADDENDUM NO ⚠1	
ADDED UTILITIES	
01/18/11 NAS	

SCALE
0 20 40 60
FEET

REHABILITATION OF BRIDGE 1-501 ROUTE 141 OVER SR 4, LOCAL ROADS, AMTRAK AND THE CHRISTINA RIVER

CONTRACT	T200907403
COUNTY	NEW CASTLE

BRIDGE NO.	1-501
DESIGNED BY:	DPR
CHECKED BY:	NAS

GENERAL PLAN AND ELEVATION – 5

SHEET NO.	38
TOTAL SHTS.	253

G:\60098167\STRUCTURE\PLANS\038-PE05.DGN

UNOFFICIAL WEBSITE COPY

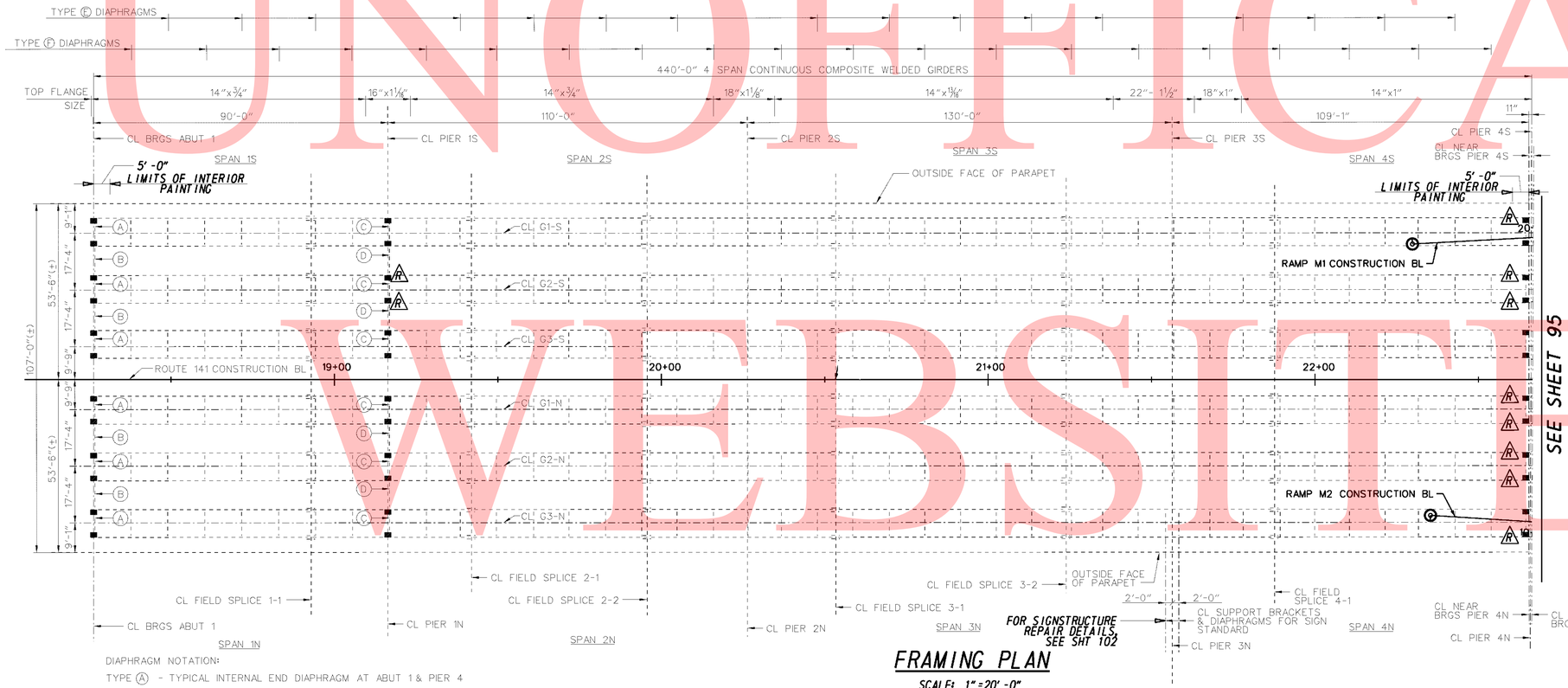

FRAMING PLAN

SCALE: 1" = 20'-0"

DIAPHRAGM NOTATION:

TYPE Ⓐ - TYPICAL INTERNAL END DIAPHRAGM AT ABUT 1 & PIER 4

TYPE Ⓑ - TYPICAL EXTERNAL END DIAPHRAGM AT ABUT 1 & PIER 4

TYPE Ⓒ - TYPICAL INTERNAL DIAPHRAGM AT PIERS 1, 2, & 3

TYPE Ⓓ - TYPICAL EXTERNAL DIAPHRAGM AT PIERS 1, 2, & 3

TYPE Ⓔ - TYPICAL INTERNAL INTERMEDIATE DIAPHRAGM

TYPE Ⓕ - TYPICAL INTERNAL INTERMEDIATE DIAPHRAGM, ALTERNATE WITH TYPE Ⓔ

INTERNAL DENOTES WITHIN BOX GIRDERS, EXTERNAL DENOTES BETWEEN ADJACENT BOX GIRDERS

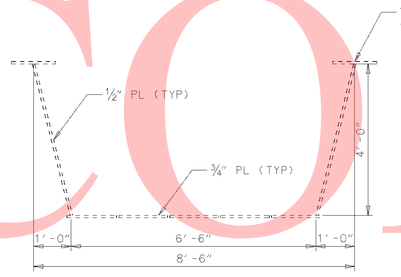

TYPICAL SECTION - SPAN 1-4

SCALE: ½" = 1'-0"

REPAIR:

(4) CONSTRUCT TEMPORARY JACKING TOWERS, JACK BRIDGE, REMOVE AND REPLACE DETERIORATED BRIDGE BEARINGS AS INDICATED. REPAIR DAMAGED ANCHOR BOLTS AS INDICATED. (ITEMS 207000, 605601, 605651 AND 605689)

(5) CLEAN AND PAINT EXTERIOR SURFACES OF ALL STRUCTURAL STEEL MEMBERS. CLEAN AND PAINT INTERIOR SURFACES OF STRUCTURAL MEMBERS AS INDICATED. (ITEMS 605522 AND 605629)

(6) INSTALL RETROFIT PLATES AT ALL TYPE E DIAPHRAGMS. (ITEMS 605522, 605584 AND 605618)

(15) REMOVE AND REPLACE SIGN STRUCTURE ANCHOR BOLTS AND ANCHOR BOLT SLEEVES. (ITEMS 605522, 605585, AND 605629)

STEEL REPAIR QUANTITIES SPAN 1 THRU SPAN 4	
BRIDGE BEARINGS	36 EA
ANCHOR BOLTS	10 EA
RETROFIT PLATES	10176 LB
STEEL PAINTING	45786 SF

LEGEND:

■ BEARING REPLACEMENT

△ ANCHOR BOLT REPAIR, BOTH SIDES

⚠1 ANCHOR BOLT REPAIR, LEFT

⚠R ANCHOR BOLT REPAIR, RIGHT

NOTES:

1. CONTRACTOR TO FIELD VERIFY ALL DIMENSIONS.
2. BRIDGE BEARING REPLACEMENT PAID FOR UNDER ITEM NO. 605601.
3. ANCHOR BOLT REPAIR PAID FOR UNDER ITEM NO. 605689
4. STRUCTURAL STEEL PAINTING PAID FOR UNDER ITEM NO. 605522 AND 605629.
5. RETROFIT PLATE REPAIRS PAID FOR UNDER ITEM NO. 605522, 605584, AND 605618.
6. LEFT AND RIGHT DESIGNATION ARE TAKEN LOOKING AHEAD STATION.
7. INTERIOR PAINTING LIMITS ARE 5 FEET FROM CENTERLINE OF BEARING AT THE END OF EACH GIRDER, INCLUDING THE INSIDE FACE OF TYPE A DIAPHRAGM.
8. FOR JACKING TOWER DETAILS, SEE SHEETS 108 THRU 127.
9. FOR BEARING REPLACMENT AND ANCHOR BOLT REPAIR DETAILS, SEE SHEETS 106 AND 107.
10. FOR RETROFIT PLATE REPAIR DETAILS, SEE SHEET 101.
11. FOR SIGN STRUCTURE REPAIR DETAILS, SEE SHEET 102 THRU 105.

⚠1 12. FOR THE SOLE PURPOSE OF SECURING THE CONTAINMENT SYSTEM, THE CONTRACTOR WILL BE ALLOWED TO CONNECT TO THE STRUCTURAL STEEL TUB GIRDERS USING A BOLTED CONNECTION. THE CONNECTION SHALL BE MADE TO THE WEB OF THE TUB GIRDER USING 2 FULLY TENSIONED 7/8-INCH DIAMETER A325 HIGH STRENGTH BOLTS. A 4-INCH X 4-INCH X 1/2-INCH PLATE WASHER SHALL BE SUPPLIED AT EACH BOLT ON THE INSIDE OF THE WEB. THE CONNECTION TO THE WEB SHALL BE CENTERED ON THE LOCATION OF THE EXISTING TYPE E DIAPHRAGMS (ONE CONNECTION PER WEB PLATE PER DIAPHRAGM). THE CONNECTION MUST USE STANDARD SIZE DRILLED HOLES IN THE WEB OF THE TUB GIRDER. EACH CONNECTION SHALL BE DESIGNED TO SUPPORT NO MORE THAN 20 KIPS. THE CONNECTION DESIGN AND DETAILING MUST BE FINALIZED BY AN ENGINEER LICENSED IN THE STATE OF DELAWARE AND SUBMITTED FOR REVIEW AND APPROVAL. THE STRUCTURAL CALCULATIONS MUST ALSO DETERMINE THE STRESSES IMPARTED TO THE TUB GIRDERS DURING THE APPLICATION OF THE CONTAINMENT SYSTEM LOADING AND ENSURE THAT AN OVERLOAD CONDITION DOES NOT OCCUR. UPON REMOVAL OF THE CONTAINMENT SYSTEM, ANY DRILLED HOLES MUST BE FILLED WITH A NEW (PREVIOUSLY UNUSED) 7/8-INCH DIAMETER A325 GALVANIZED HIGH STRENGTH BOLT. CONNECTIONS TO THE TUB GIRDERS UTILIZING WELDS OR POWDER ACTUATED FASTENERS WILL NOT BE PERMITTED. ATTACHMENT TO THE BRIDGE BARRIERS WILL NOT BE PERMITTED. THE CONTRACTOR MAY PROPOSE ALTERNATE METHODS OF CONTAINMENT FOR REVIEW AND APPROVAL BY DELDOT. ATTACHMENT TO THE TUB GIRDERS FOR PURPOSES OTHER THAN SECURING THE CONTAINMENT SYSTEM WILL NOT BE PERMITTED.

DELAWARE DEPARTMENT OF TRANSPORTATION

ADDENDUMS / REVISIONS	
ADDENDUM NO ⚠1	
ADDED NOTE 12	
01/18/11 NAS	

SCALE 0 20 40 60 FEET

REHABILITATION OF BRIDGE 1-501 ROUTE 141 OVER SR 4, LOCAL ROADS, AMTRAK AND THE CHRISTINA RIVER

CONTRACT	T200907403
COUNTY	NEW CASTLE
BRIDGE NO.	1-501
DESIGNED BY:	DPR
CHECKED BY:	NAS

FRAMING PLAN SPAN 1 THRU SPAN 4

SHEET NO.	94
TOTAL SHTS.	253

G:\60098167\STRUCTURE\PLANS\094-FR01.DGN

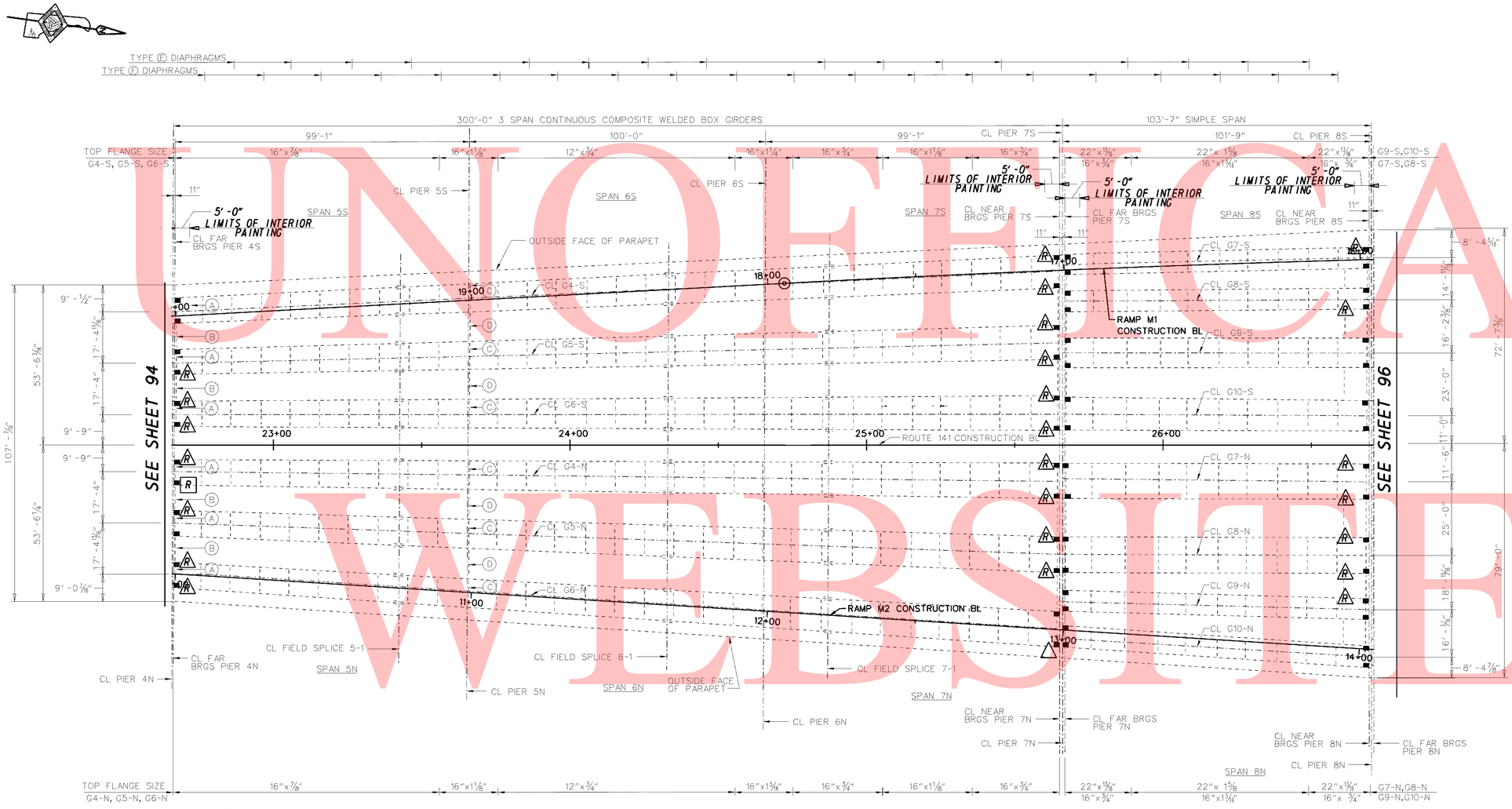

DIAPHRAGM NOTATION:

TYPE (A) - TYPICAL INTERNAL END DIAPHRAGM AT PIERS 4, 7 & 8
TYPE (B) - TYPICAL EXTERNAL END DIAPHRAGM AT PIERS 4, 7 & 8
TYPE (C) - TYPICAL INTERNAL DIAPHRAGM AT PIERS 5 & 6
TYPE (D) - TYPICAL EXTERNAL DIAPHRAGM AT PIERS 5 & 6
TYPE (E) - TYPICAL INTERNAL INTERMEDIATE DIAPHRAGM
TYPE (F) - TYPICAL INTERNAL INTERMEDIATE DIAPHRAGM, ALTERNATE WITH TYPE (E)
INTERNAL DENOTES WITHIN BOX GIRDERS, EXTERNAL DENOTES BETWEEN ADJACENT BOX GIRDERS

FRAMING PLAN

SCALE: 1" = 20'-0"

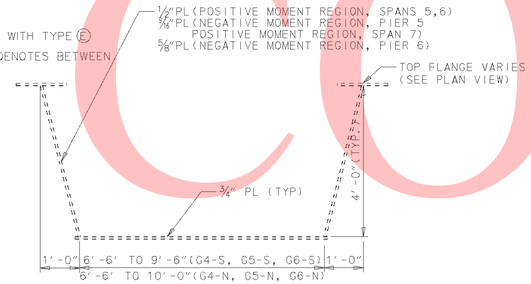

TYPICAL SECTION - SPAN 5-7

SCALE: 1/2" = 1'-0"

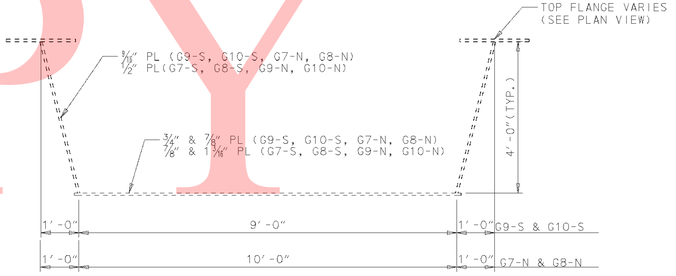

TYPICAL SECTION - SPAN 8

SCALE: 1/2" = 1'-0"

REPAIR:

(4) CONSTRUCT TEMPORARY JACKING TOWERS, JACK BRIDGE, REMOVE AND REPLACE DETERIORATED BRIDGE BEARINGS AS INDICATED. REPAIR DAMAGED ANCHOR BOLTS AS INDICATED. (ITEMS 207000, 605601, 605651 AND 605689)

(5) CLEAN AND PAINT EXTERIOR SURFACES OF ALL STRUCTURAL STEEL MEMBERS. CLEAN AND PAINT INTERIOR SURFACES OF STRUCTURAL MEMBERS AS INDICATED. (ITEMS 605522 AND 605629)

(6) INSTALL RETROFIT PLATES AT ALL TYPE E DIAPHRAGMS. (ITEMS 605522, 605584 AND 605618)

STEEL REPAIR QUANTITIES SPAN 5 THRU SPAN 8	
BRIDGE BEARINGS	56 EA
ANCHOR BOLTS	26 EA
RETROFIT PLATE	8272 LB
STEEL PAINTING	52154 SF

LEGEND:

- ■ BEARING REPLACEMENT
- △ ANCHOR BOLT REPAIR, BOTH SIDES
- (L) ANCHOR BOLT REPAIR, LEFT
- (R) ANCHOR BOLT REPAIR, RIGHT
- [R] ANCHOR BOLT NUT REPLACEMENT, RIGHT

NOTES:

1. CONTRACTOR TO FIELD VERIFY ALL DIMENSIONS.
2. BRIDGE BEARING REPLACEMENT PAID FOR UNDER ITEM NO. 605601.
3. ANCHOR BOLT REPAIR PAID FOR UNDER ITEM NO. 605689
4. STRUCTURAL STEEL PAINTING PAID FOR UNDER ITEM NO. 605522 AND 605629.
5. RETROFIT PLATE REPAIRS PAID FOR UNDER ITEM NO. 605522, 605584, AND 605618.
6. LEFT AND RIGHT DESIGNATION ARE TAKEN LOOKING AHEAD STATION.
7. INTERIOR PAINTING LIMITS ARE 5 FEET FROM CENTERLINE OF BEARING AT THE END OF EACH GIRDER, INCLUDING THE INSIDE FACE OF TYPE A DIAPHRAGM.
8. FOR JACKING TOWER DETAILS, SEE SHEETS 103-106 AND 108 THRU 127.
9. FOR BEARING REPLACMENT AND ANCHOR BOLT REPAIR DETAILS, SEE SHEETS 106 AND 107.
10. FOR RETROFIT PLATE REPAIR DETAILS, SEE SHEET 101.
11. (1) SEE NOTE 12 ON SHEET 94 OF 253.

UNOFFICIAL WEBSITE COPY

DELAWARE DEPARTMENT OF TRANSPORTATION

ADDENDUMS / REVISIONS	
ADDENDUM NO (1)	
ADDED NOTE 11	
01/18/11 NAS	

SCALE 0 20 40 60 FEET

REHABILITATION OF BRIDGE 1-501 ROUTE 141 OVER SR 4, LOCAL ROADS, AMTRAK AND THE CHRISTINA RIVER

CONTRACT	T200907403
COUNTY	NEW CASTLE
BRIDGE NO.	1-501
DESIGNED BY:	DPR
CHECKED BY:	NAS

FRAMING PLAN SPAN 5 THRU SPAN 8

SHEET NO. 95
TOTAL SHTS. 253

G:\60098167\STRUCTURE\PLANS\095-FR02.DGN

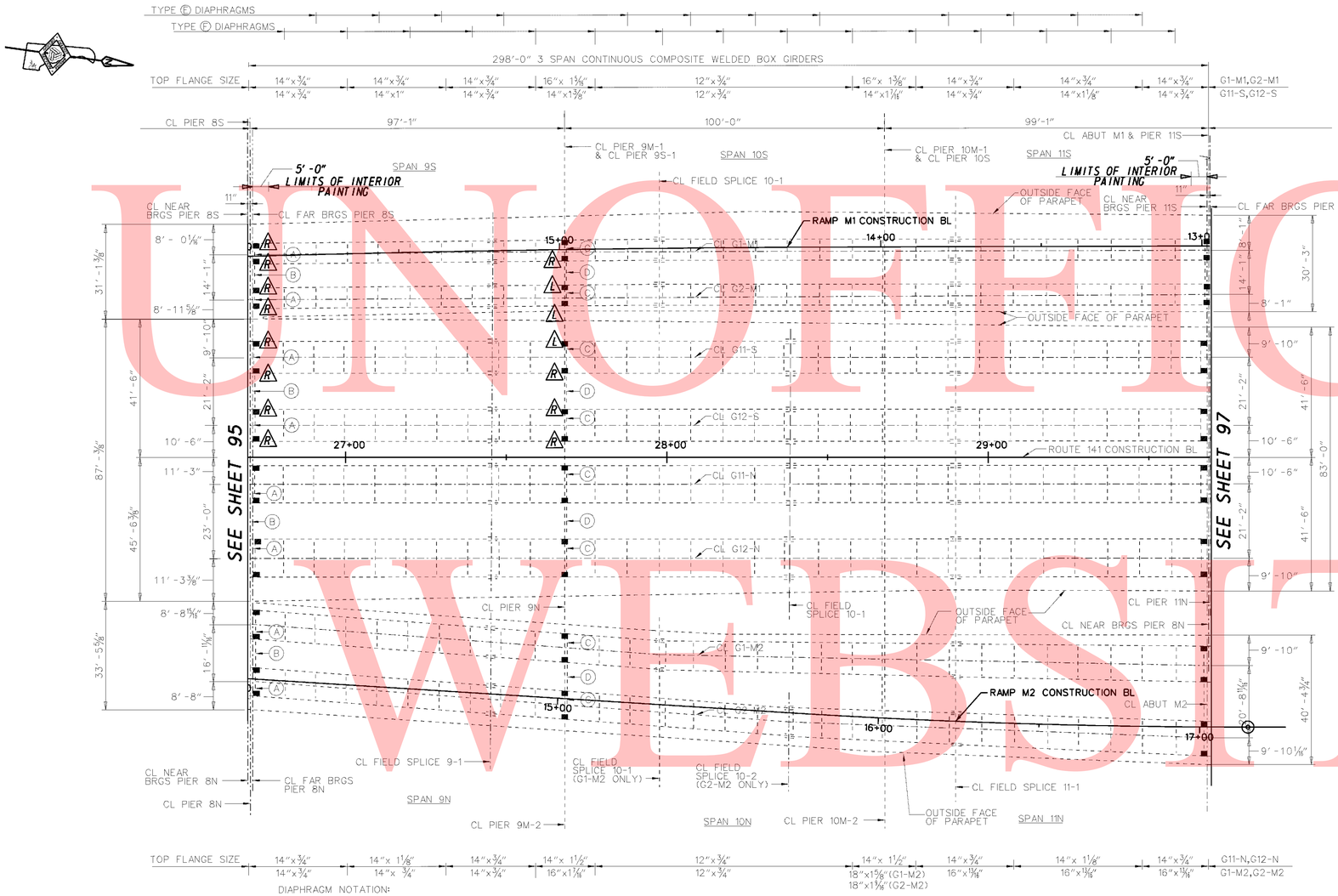

DIAPHRAGM NOTATION:

TYPE (A) - TYPICAL INTERNAL END DIAPHRAGM AT PIERS 8 & 11 AND ABUT M1 & M2

TYPE (B) - TYPICAL EXTERNAL END DIAPHRAGM AT PIERS 8 & 11 AND ABUT M1 & M2

TYPE (C) - TYPICAL INTERNAL DIAPHRAGM AT PIERS 9 & 10

TYPE (D) - TYPICAL EXTERNAL DIAPHRAGM AT PIERS 9 & 10

TYPE (E) - TYPICAL INTERNAL INTERMEDIATE DIAPHRAGM

TYPE (F) - TYPICAL INTERNAL INTERMEDIATE DIAPHRAGM, ALTERNATE WITH TYPE (E)

INTERNAL DENOTES WITHIN BOX GIRDERS, EXTERNAL DENOTES BETWEEN ADJACENT BOX GIRDERS

FRAMING PLAN

SCALE: 1"=20'-0"

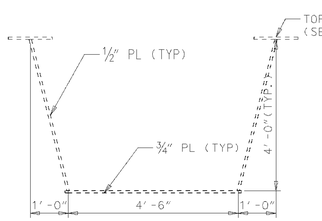

TYPICAL SECTION - SPAN 9M-1-11M-1

SCALE: ½"=1'-0"

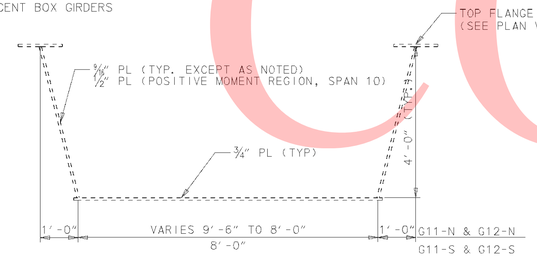

TYPICAL SECTION - SPAN 9-11

SCALE: ½"=1'-0"

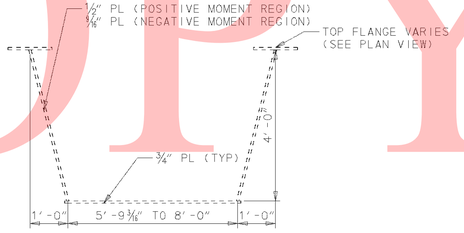

TYPICAL SECTION - SPAN 9M-2-11M-2

SCALE: ½"=1'-0"

REPAIR:

(4) CONSTRUCT TEMPORARY JACKING TOWERS, JACK BRIDGE, REMOVE AND REPLACE DETERIORATED BRIDGE BEARINGS AS INDICATED. REPAIR DAMAGED ANCHOR BOLTS AS INDICATED. (ITEMS 207000, 605601, 605651 AND 605689)

(5) CLEAN AND PAINT EXTERIOR SURFACES OF ALL STRUCTURAL STEEL MEMBERS. CLEAN AND PAINT INTERIOR SURFACES OF STRUCTURAL MEMBERS AS INDICATED. (ITEMS 605522 AND 605629)

(6) INSTALL RETROFIT PLATES AT ALL TYPE E DIAPHRAGMS. (ITEMS 605522, 605584 AND 605618)

STEEL REPAIR QUANTITIES SPAN 9 THRU SPAN 11	
BRIDGE BEARINGS	48 EA
ANCHOR BOLTS	15 EA
RETROFIT PLATE	10039 LB
STEEL PAINTING	43038 SF

LEGEND:

- ■ BEARING REPLACEMENT
- △ ANCHOR BOLT REPAIR, BOTH SIDES
- △L ANCHOR BOLT REPAIR, LEFT
- △R ANCHOR BOLT REPAIR, RIGHT

⚠1 11. FOR THE SOLE PURPOSE OF SECURING THE CONTAINMENT SYSTEM, THE CONTRACTOR WILL BE ALLOWED TO CONNECT TO THE STRUCTURAL STEEL TUB GIRDERS USING A BOLTED CONNECTION. THE CONNECTION SHALL BE MADE TO THE WEB OF THE TUB GIRDER USING 2 FULLY TENSIONED 7/8-INCH DIAMETER A325 HIGH STRENGTH BOLTS. A 4-INCH X 4-INCH X 1/2-INCH PLATE WASHER SHALL BE SUPPLIED AT EACH BOLT ON THE INSIDE OF THE WEB. THE CONNECTION TO THE WEB SHALL BE CENTERED ON THE LOCATION OF THE EXISTING TYPE E DIAPHRAGMS (ONE CONNECTION PER WEB PLATE PER DIAPHRAGM). THE CONNECTION MUST USE STANDARD SIZE DRILLED HOLES IN THE WEB OF THE TUB GIRDER. EACH CONNECTION SHALL BE DESIGNED TO SUPPORT NO MORE THAN 20 KIPS. THE CONNECTION DESIGN AND DETAILING MUST BE FINALIZED BY AN ENGINEER LICENSED IN THE STATE OF DELAWARE AND SUBMITTED FOR REVIEW AND APPROVAL. THE STRUCTURAL CALCULATIONS MUST ALSO DETERMINE THE STRESSES IMPARTED TO THE TUB GIRDERS DURING THE APPLICATION OF THE CONTAINMENT SYSTEM LOADING AND ENSURE THAT AN OVERLOAD CONDITION DOES NOT OCCUR. UPON REMOVAL OF THE CONTAINMENT SYSTEM, ANY DRILLED HOLES MUST BE FILLED WITH A NEW (PREVIOUSLY UNUSED) 7/8-INCH DIAMETER A325 GALVANIZED HIGH STRENGTH BOLT. CONNECTIONS TO THE TUB GIRDERS UTILIZING WELDS OR POWDER ACTUATED FASTENERS WILL NOT BE PERMITTED. ATTACHMENT TO THE BRIDGE BARRIERS WILL NOT BE PERMITTED. THE CONTRACTOR MAY PROPOSE ALTERNATE METHODS OF CONTAINMENT FOR REVIEW AND APPROVAL BY DELDOT. ATTACHMENT TO THE TUB GIRDERS FOR PURPOSES OTHER THAN SECURING THE CONTAINMENT SYSTEM WILL NOT BE PERMITTED.

NOTES:

1. CONTRACTOR TO FIELD VERIFY ALL DIMENSIONS.
2. BRIDGE BEARING REPLACEMENT PAID FOR UNDER ITEM NO. 605601.
3. ANCHOR BOLT REPAIR PAID FOR UNDER ITEM NO. 605689
4. STRUCTURAL STEEL PAINTING PAID FOR UNDER ITEM NO. 605522 AND 605629.
5. RETROFIT PLATE REPAIRS PAID FOR UNDER ITEM NO. 605522, 605584, AND 605618.
6. LEFT AND RIGHT DESIGNATION ARE TAKEN LOOKING AHEAD STATION.
7. INTERIOR PAINTING LIMITS ARE 5 FEET FROM CENTERLINE OF BEARING AT THE END OF EACH GIRDER, INCLUDING THE INSIDE FACE OF TYPE A DIAPHRAGM.
8. FOR JACKING TOWER DETAILS, SEE SHEETS 108 THRU 127.
9. FOR BEARING REPLACMENT AND ANCHOR BOLT REPAIR DETAILS, SEE SHEETS 106 & 107.
10. FOR RETROFIT PLATE REPAIR DETAILS, SEE SHEET 101.

UNOFFICIAL WEBSITE COPY

DELAWARE DEPARTMENT OF TRANSPORTATION

ADDENDUMS / REVISIONS	
ADDENDUM NO ⚠1	
ADDED NOTE 11	
01/18/11 NAS	

SCALE 0 20 40 60 FEET

REHABILITATION OF BRIDGE 1-501 ROUTE 141 OVER SR 4, LOCAL ROADS, AMTRAK AND THE CHRISTINA RIVER

CONTRACT	T200907403
COUNTY	NEW CASTLE
BRIDGE NO.	1-501
DESIGNED BY:	DPR
CHECKED BY:	NAS

FRAMING PLAN SPAN 9 THRU SPAN 11

SHEET NO.	96
TOTAL SHTS.	253

G:\60098167\STRUCTURE\PLANS\096-FR03.DGN

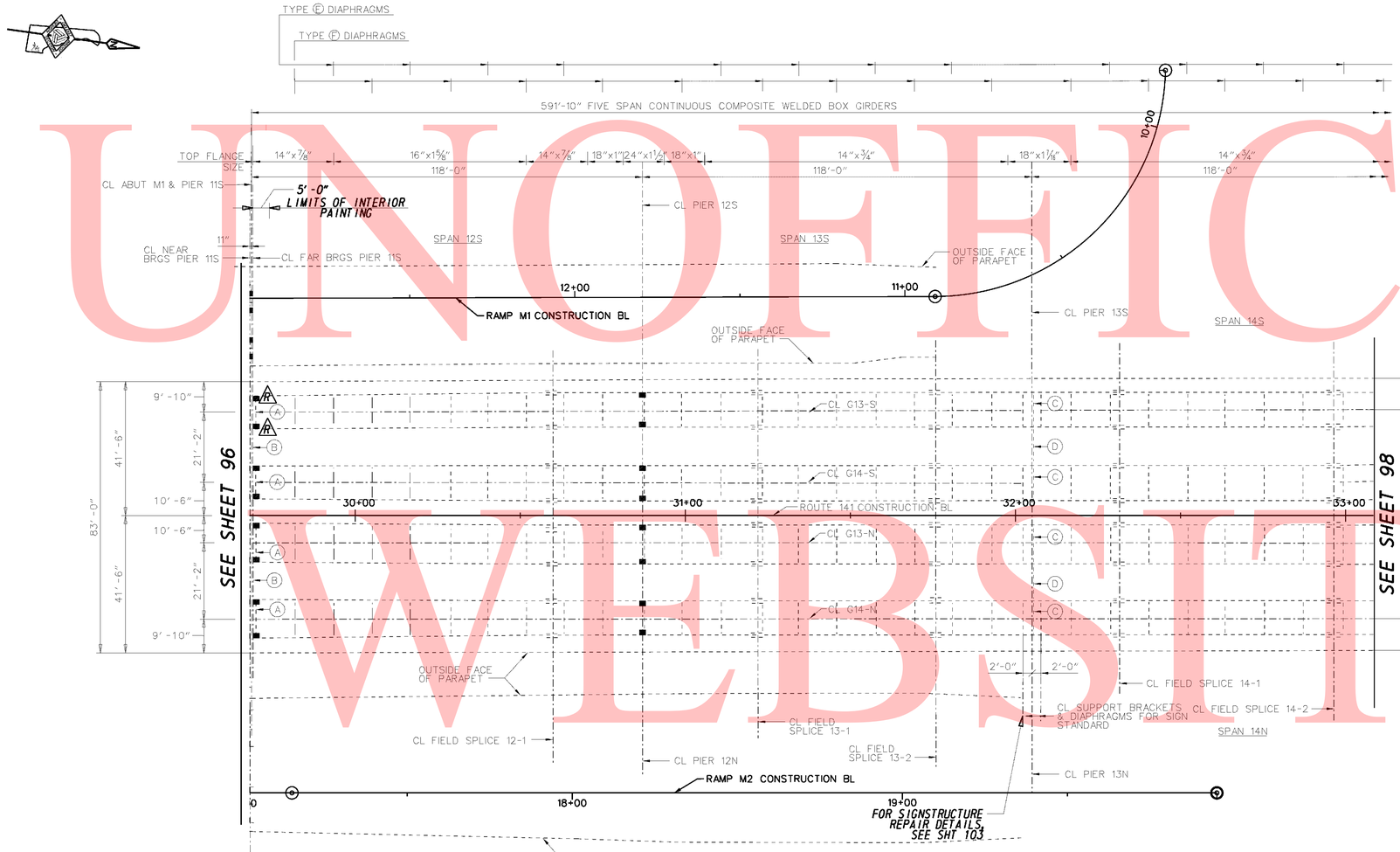

DIAPHRAGM NOTATION:

TYPE (A) - TYPICAL INTERNAL END DIAPHRAGM AT PIER 11 & 16
TYPE (B) - TYPICAL EXTERNAL END DIAPHRAGM AT PIER 11 & 16
TYPE (C) - TYPICAL INTERNAL DIAPHRAGM AT PIERS 12 THRU 15
TYPE (D) - TYPICAL EXTERNAL DIAPHRAGM AT PIERS 12 THRU 15
TYPE (E) - TYPICAL INTERNAL INTERMEDIATE DIAPHRAGM
TYPE (F) - TYPICAL INTERNAL INTERMEDIATE DIAPHRAGM, ALTERNATE WITH TYPE (E)
INTERNAL DENOTES WITHIN BOX GIRDERS, EXTERNAL DENOTES BETWEEN ADJACENT BOX GIRDERS

FRAMING PLAN

SCALE: 1"=20'-0"

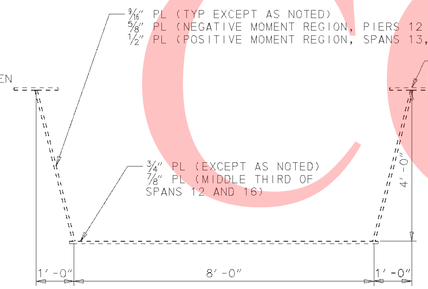

TYPICAL SECTION - SPAN 12 -16

SCALE: 1/2"=1'-0"

REPAIR:

(4) CONSTRUCT TEMPORARY JACKING TOWERS, JACK BRIDGE, REMOVE AND REPLACE DETERIORATED BRIDGE BEARINGS AS INDICATED. REPAIR DAMAGED ANCHOR BOLTS AS INDICATED. (ITEMS 207000, 605601, 605651 AND 605689)

(5) CLEAN AND PAINT EXTERIOR SURFACES OF ALL STRUCTURAL STEEL MEMBERS. CLEAN AND PAINT INTERIOR SURFACES OF STRUCTURAL MEMBERS AS INDICATED. (ITEMS 605522 AND 605629)

(6) INSTALL RETROFIT PLATES AT ALL TYPE E DIAPHRAGMS. (ITEMS 605522, 605584 AND 605618)

(15) REMOVE AND REPLACE SIGN STRUCTURE ANCHOR BOLTS AND ANCHOR BOLT SLEEVES. (ITEMS 605522, 605585, AND 605629)

STEEL REPAIR QUANTITIES SPAN 12 THRU SPAN 14	
BRIDGE BEARINGS	16 EA
ANCHOR BOLTS	2 EA
RETROFIT PLATE	4676 LB
STEEL PAINTING	26455 SF

LEGEND:

- ■ BEARING REPLACEMENT
- △ ANCHOR BOLT REPAIR, BOTH SIDES
- △L ANCHOR BOLT REPAIR, LEFT
- △R ANCHOR BOLT REPAIR, RIGHT

NOTES:

1. CONTRACTOR TO FIELD VERIFY ALL DIMENSIONS.
2. BRIDGE BEARING REPLACEMENT PAID FOR UNDER ITEM NO. 605601.
3. ANCHOR BOLT REPAIR PAID FOR UNDER ITEM NO. 605689
4. STRUCTURAL STEEL PAINTING PAID FOR UNDER ITEM NO. 605522 AND 605629.
5. RETROFIT PLATE REPAIRS PAID FOR UNDER ITEM NO. 605522, 605584, AND 605618.
6. LEFT AND RIGHT DESIGNATION ARE TAKEN LOOKING AHEAD STATION.
7. INTERIOR PAINTING LIMITS ARE 5 FEET FROM CENTERLINE OF BEARING AT THE END OF EACH GIRDER, INCLUDING THE INSIDE FACE OF TYPE A DIAPHRAGM.
8. FOR JACKING TOWER DETAILS, SEE SHEETS 108 THRU 127.
9. FOR BEARING REPLACMENT AND ANCHOR BOLT REPAIR DETAILS, SEE SHEETS 106 AND 107.
10. FOR RETROFIT PLATE REPAIR DETAILS, SEE SHEET 101.
11. FOR SIGN STRUCTURE REPAIR DETAILS SEE SHEET 102 THRU 105.

(1) 12. FOR THE SOLE PURPOSE OF SECURING THE CONTAINMENT SYSTEM, THE CONTRACTOR WILL BE ALLOWED TO CONNECT TO THE STRUCTURAL STEEL TUB GIRDERS USING A BOLTED CONNECTION. THE CONNECTION SHALL BE MADE TO THE WEB OF THE TUB GIRDER USING 2 FULLY TENSIONED 7/8-INCH DIAMETER A325 HIGH STRENGTH BOLTS. A 4-INCH X 4-INCH X 1/2-INCH PLATE WASHER SHALL BE SUPPLIED AT EACH BOLT ON THE INSIDE OF THE WEB. THE CONNECTION TO THE WEB SHALL BE CENTERED ON THE LOCATION OF THE EXISTING TYPE E DIAPHRAGMS (ONE CONNECTION PER WEB PLATE PER DIAPHRAGM). THE CONNECTION MUST USE STANDARD SIZE DRILLED HOLES IN THE WEB OF THE TUB GIRDER. EACH CONNECTION SHALL BE DESIGNED TO SUPPORT NO MORE THAN 20 KIPS. THE CONNECTION DESIGN AND DETAILING MUST BE FINALIZED BY AN ENGINEER LICENSED IN THE STATE OF DELAWARE AND SUBMITTED FOR REVIEW AND APPROVAL. THE STRUCTURAL CALCULATIONS MUST ALSO DETERMINE THE STRESSES IMPARTED TO THE TUB GIRDERS DURING THE APPLICATION OF THE CONTAINMENT SYSTEM LOADING AND ENSURE THAT AN OVERLOAD CONDITION DOES NOT OCCUR. UPON REMOVAL OF THE CONTAINMENT SYSTEM, ANY DRILLED HOLES MUST BE FILLED WITH A NEW (PREVIOUSLY UNUSED) 7/8-INCH DIAMETER A325 GALVANIZED HIGH STRENGTH BOLT. CONNECTIONS TO THE TUB GIRDERS UTILIZING WELDS OR POWDER ACTUATED FASTENERS WILL NOT BE PERMITTED. ATTACHMENT TO THE BRIDGE BARRIERS WILL NOT BE PERMITTED. THE CONTRACTOR MAY PROPOSE ALTERNATE METHODS OF CONTAINMENT FOR REVIEW AND APPROVAL BY DELDOT. ATTACHMENT TO THE TUB GIRDERS FOR PURPOSES OTHER THAN SECURING THE CONTAINMENT SYSTEM WILL NOT BE PERMITTED.

UNOFFICIAL WEBSITE COPY

DELAWARE DEPARTMENT OF TRANSPORTATION

ADDENDUMS / REVISIONS	
ADDENDUM NO (1)	
ADDED NOTE 12	
01/18/11 NAS	

SCALE 0 20 40 60 FEET

REHABILITATION OF BRIDGE 1-501 ROUTE 141 OVER SR 4, LOCAL ROADS, AMTRAK AND THE CHRISTINA RIVER

CONTRACT	T200907403
COUNTY	NEW CASTLE
BRIDGE NO.	1-501
DESIGNED BY:	DPR
CHECKED BY:	NAS

FRAMING PLAN SPAN 12 THRU SPAN 14

SHEET NO.	97
TOTAL SHTS.	253

G:\60098167\STRUCTURE\PLANS\097-FR04.DGN

UNOFFICIAL WEBSITE COPY

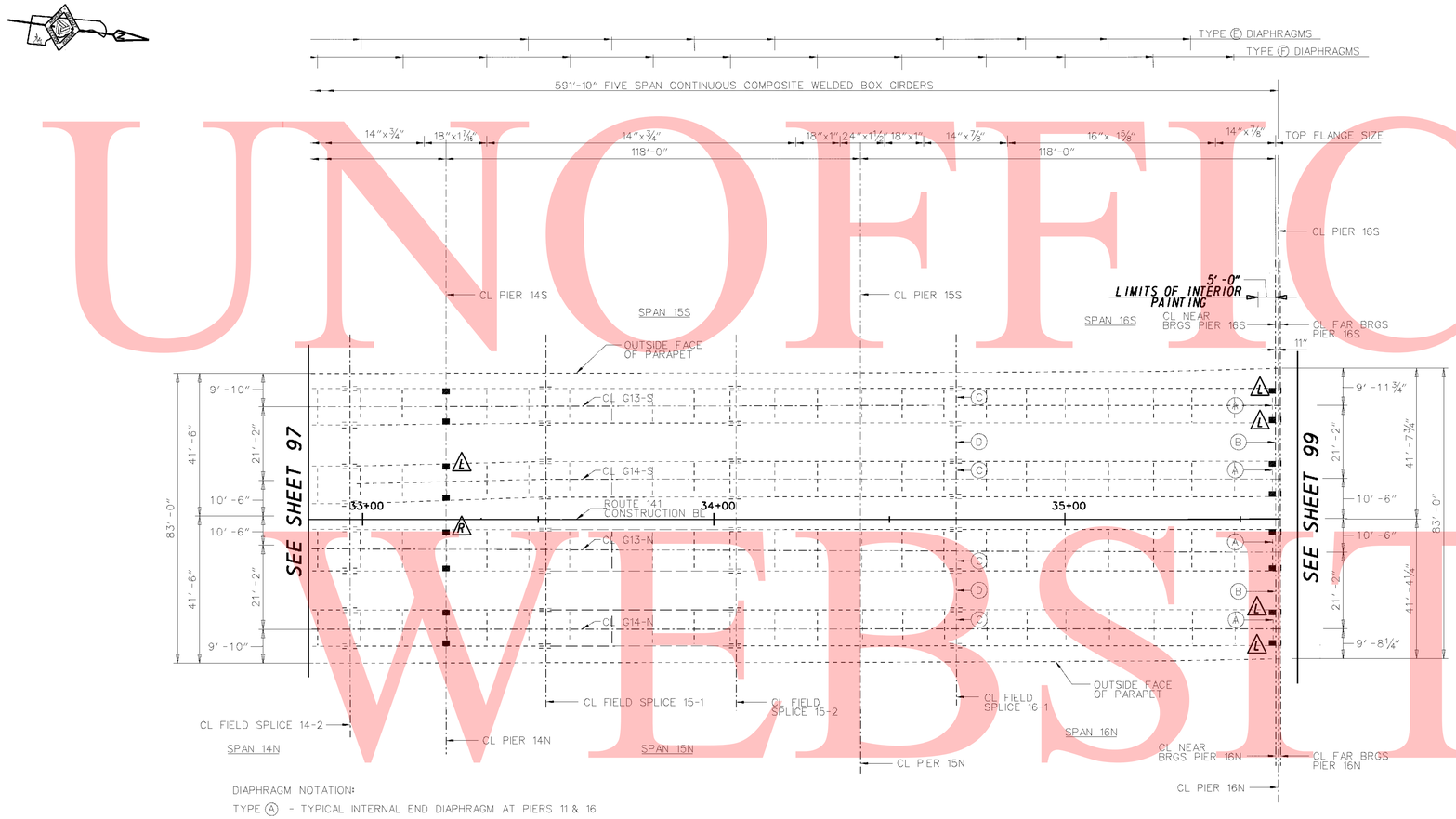

DIAPHRAGM NOTATION:

TYPE (A) - TYPICAL INTERNAL END DIAPHRAGM AT PIERS 11 & 16
TYPE (B) - TYPICAL EXTERNAL END DIAPHRAGM AT PIERS 11 & 16
TYPE (C) - TYPICAL INTERNAL DIAPHRAGM AT PIERS 12 THRU 15
TYPE (D) - TYPICAL EXTERNAL DIAPHRAGM AT PIERS 12 THRU 15
TYPE (E) - TYPICAL INTERNAL INTERMEDIATE DIAPHRAGM
TYPE (F) - TYPICAL INTERNAL INTERMEDIATE DIAPHRAGM, ALTERNATE WITH TYPE (E)
INTERNAL DENOTES WITHIN BOX GIRDERS, EXTERNAL DENOTES BETWEEN ADJACENT BOX GIRDERS

FRAMING PLAN

SCALE: 1"=20'-0"

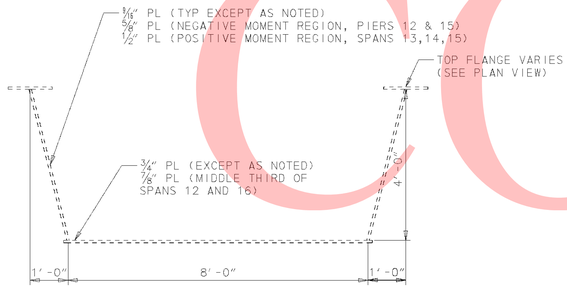

TYPICAL SECTION - SPAN 12 -16

SCALE: 1/2"=1'-0"

REPAIR:

(4) CONSTRUCT TEMPORARY JACKING TOWERS, JACK BRIDGE, REMOVE AND REPLACE DETERIORATED BRIDGE BEARINGS AS INDICATED. REPAIR DAMAGED ANCHOR BOLTS AS INDICATED. (ITEMS 207000, 605601, 605651 AND 605689)

(5) CLEAN AND PAINT EXTERIOR SURFACES OF ALL STRUCTURAL STEEL MEMBERS. CLEAN AND PAINT INTERIOR SURFACES OF STRUCTURAL MEMBERS AS INDICATED. (ITEMS 605522 AND 605629)

(6) INSTALL RETROFIT PLATES AT ALL TYPE E DIAPHRAGMS. (ITEMS 605522, 605584 AND 605618)

STEEL REPAIR QUANTITIES SPAN 14 THRU SPAN 16	
BRIDGE BEARINGS	16 EA
ANCHOR BOLTS	6 EA
RETROFIT PLATE	2980 LB
STEEL PAINTING	17863 SF

LEGEND:

- ■ BEARING REPLACEMENT
- △ ANCHOR BOLT REPAIR, BOTH SIDES
- △L ANCHOR BOLT REPAIR, LEFT
- △R ANCHOR BOLT REPAIR, RIGHT

NOTES:

1. CONTRACTOR TO FIELD VERIFY ALL DIMENSIONS.
2. BRIDGE BEARING REPLACEMENT PAID FOR UNDER ITEM NO. 605601.
3. ANCHOR BOLT REPAIR PAID FOR UNDER ITEM NO. 605689
4. STRUCTURAL STEEL PAINTING PAID FOR UNDER ITEM NO. 605522 AND 605629.
5. RETROFIT PLATE REPAIRS PAID FOR UNDER ITEM NO. 605522, 605584, AND 605618.
6. LEFT AND RIGHT DESIGNATION ARE TAKEN LOOKING AHEAD STATION.
7. INTERIOR PAINTING LIMITS ARE 5 FEET FROM CENTERLINE OF BEARING AT THE END OF EACH GIRDER, INCLUDING THE INSIDE FACE OF TYPE A DIAPHRAGM.
8. FOR JACKING TOWER DETAILS, SEE SHEETS 108 THRU 127.
9. FOR BEARING REPLACMENT AND ANCHOR BOLT REPAIR DETAILS, SEE SHEETS 100 AND 107.
10. FOR RETROFIT PLATE REPAIR DETAILS, SEE SHEET 101.
11. FOR THE SOLE PURPOSE OF SECURING THE CONTAINMENT SYSTEM, THE CONTRACTOR WILL BE ALLOWED TO CONNECT TO THE STRUCTURAL STEEL TUB GIRDERS USING A BOLTED CONNECTION. THE CONNECTION SHALL BE MADE TO THE WEB OF THE TUB GIRDER USING 2 FULLY TENSIONED 7/8-INCH DIAMETER A325 HIGH STRENGTH BOLTS. A 4-INCH X 4-INCH X 1/2-INCH PLATE WASHER SHALL BE SUPPLIED AT EACH BOLT ON THE INSIDE OF THE WEB. THE CONNECTION TO THE WEB SHALL BE CENTERED ON THE LOCATION OF THE EXISTING TYPE E DIAPHRAGMS (ONE CONNECTION PER WEB PLATE PER DIAPHRAGM). THE CONNECTION MUST USE STANDARD SIZE DRILLED HOLES IN THE WEB OF THE TUB GIRDER. EACH CONNECTION SHALL BE DESIGNED TO SUPPORT NO MORE THAN 20 KIPS. THE CONNECTION DESIGN AND DETAILING MUST BE FINALIZED BY AN ENGINEER LICENSED IN THE STATE OF DELAWARE AND SUBMITTED FOR REVIEW AND APPROVAL. THE STRUCTURAL CALCULATIONS MUST ALSO DETERMINE THE STRESSES IMPARTED TO THE TUB GIRDERS DURING THE APPLICATION OF THE CONTAINMENT SYSTEM LOADING AND ENSURE THAT AN OVERLOAD CONDITION DOES NOT OCCUR. UPON REMOVAL OF THE CONTAINMENT SYSTEM, ANY DRILLED HOLES MUST BE FILLED WITH A NEW (PREVIOUSLY UNUSED) 7/8-INCH DIAMETER A325 GALVANIZED HIGH STRENGTH BOLT. CONNECTIONS TO THE TUB GIRDERS UTILIZING WELDS OR POWDER ACTUATED FASTENERS WILL NOT BE PERMITTED. ATTACHMENT TO THE BRIDGE BARRIERS WILL NOT BE PERMITTED. THE CONTRACTOR MAY PROPOSE ALTERNATE METHODS OF CONTAINMENT FOR REVIEW AND APPROVAL BY DELDOT. ATTACHMENT TO THE TUB GIRDERS FOR PURPOSES OTHER THAN SECURING THE CONTAINMENT SYSTEM WILL NOT BE PERMITTED.

DELAWARE DEPARTMENT OF TRANSPORTATION

ADDENDUMS / REVISIONS	
ADDENDUM NO 1	
ADDED NOTE 11	
01/18/11 NAS	

SCALE 0 20 40 60 FEET

REHABILITATION OF BRIDGE 1-501 ROUTE 141 OVER SR 4, LOCAL ROADS, AMTRAK AND THE CHRISTINA RIVER

CONTRACT	T200907403
COUNTY	NEW CASTLE
BRIDGE NO.	1-501
DESIGNED BY:	DPR
CHECKED BY:	NAS

FRAMING PLAN SPAN 14 THRU SPAN 16

SHEET NO.	98
TOTAL SHTS.	253

G:\60098167\STRUCTURE\PLANS\098-FR05.DGN

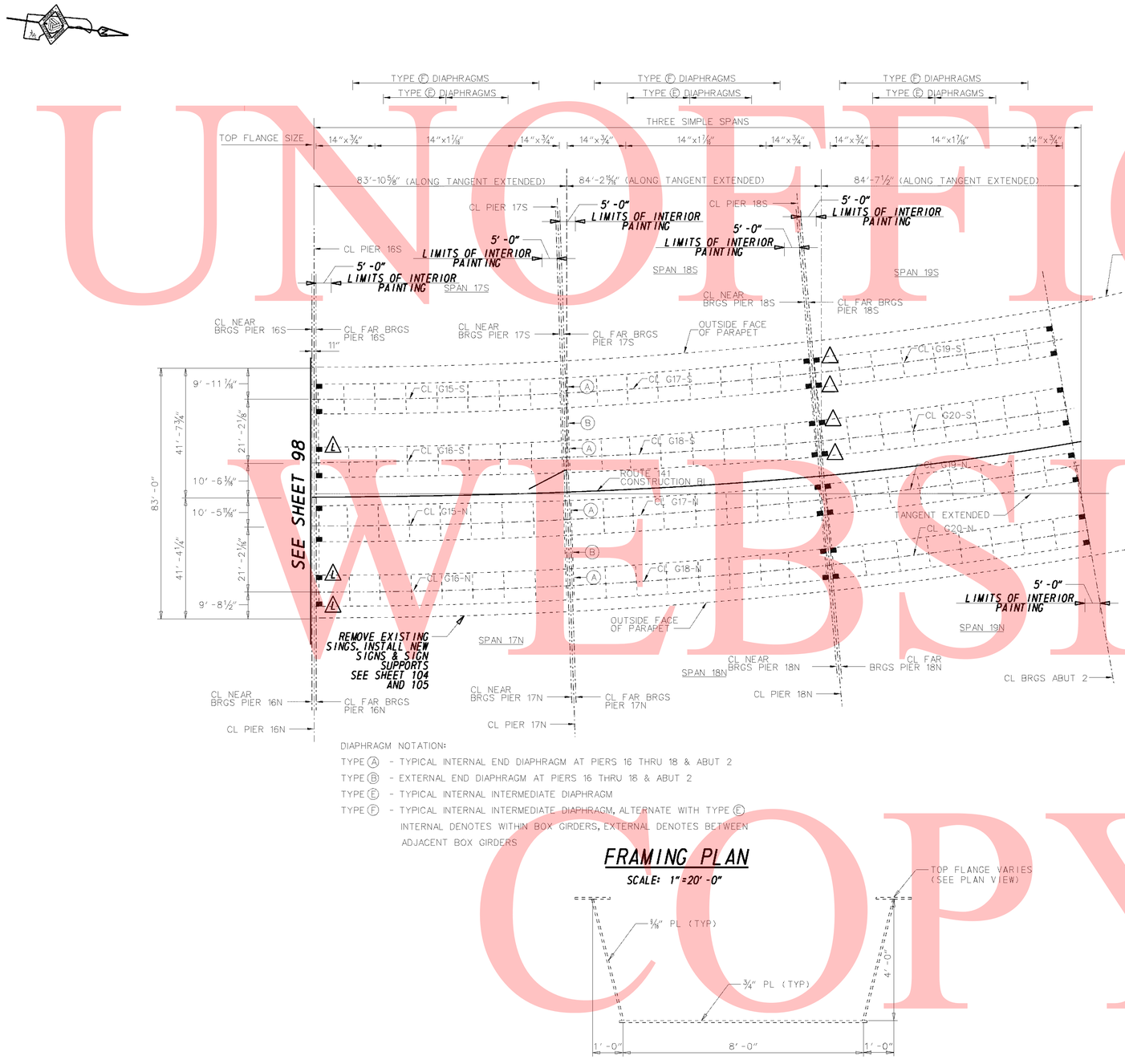

DIAPHRAGM NOTATION:

TYPE (A) - TYPICAL INTERNAL END DIAPHRAGM AT PIERS 16 THRU 18 & ABUT 2

TYPE (B) - EXTERNAL END DIAPHRAGM AT PIERS 16 THRU 18 & ABUT 2

TYPE (E) - TYPICAL INTERNAL INTERMEDIATE DIAPHRAGM

TYPE (F) - TYPICAL INTERNAL INTERMEDIATE DIAPHRAGM, ALTERNATE WITH TYPE (E)

INTERNAL DENOTES WITHIN BOX GIRDERS, EXTERNAL DENOTES BETWEEN ADJACENT BOX GIRDERS

FRAMING PLAN

SCALE: 1"=20'-0"

TYPICAL SECTION - SPAN 17, 18, 19

SCALE: ½"=1'-0"

REPAIR:

(4) CONSTRUCT TEMPORARY JACKING TOWERS, JACK BRIDGE, REMOVE AND REPLACE DETERIORATED BRIDGE BEARINGS AS INDICATED. REPAIR DAMAGED ANCHOR BOLTS AS INDICATED. (ITEMS 207000, 605601, 605651 AND 605689)

(5) CLEAN AND PAINT EXTERIOR SURFACES OF ALL STRUCTURAL STEEL MEMBERS. CLEAN AND PAINT INTERIOR SURFACES OF STRUCTURAL MEMBERS AS INDICATED. (ITEMS 605522 AND 605629)

(6) INSTALL RETROFIT PLATES AT ALL TYPE E DIAPHRAGMS. (ITEMS 605522, 605584 AND 605618)

(13) REMOVE GUIDE SIGNS FROM SPAN 17 FASCIA GIRDER OVER JUSTIS STREET. CONSTRUCT SIGN SUPPORT AND INSTALL NEW SIGNAGE. (ITEMS 605724 AND 749500)

STEEL REPAIR QUANTITIES SPAN 17 THRU SPAN 19	
BRIDGE BEARINGS	32 EA
ANCHOR BOLTS	11 EA
RETROFIT PLATES	3816 LB
STEEL PAINTING	20907 SF

LEGEND:

■ BEARING REPLACEMENT

△ ANCHOR BOLT REPAIR, BOTH SIDES

△L ANCHOR BOLT REPAIR, LEFT

△R ANCHOR BOLT REPAIR, RIGHT

NOTES:

1. CONTRACTOR TO FIELD VERIFY ALL DIMENSIONS.
2. BRIDGE BEARING REPLACEMENT PAID FOR UNDER ITEM NO. 605601.
3. ANCHOR BOLT REPAIR PAID FOR UNDER ITEM NO. 605689
4. STRUCTURAL STEEL PAINTING PAID FOR UNDER ITEM NO. 605522 AND 605629.
5. RETROFIT PLATE REPAIRS PAID FOR UNDER ITEM NO. 605522, 605584, AND 605618.
6. LEFT AND RIGHT DESIGNATION ARE TAKEN LOOKING AHEAD STATION.
7. INTERIOR PAINTING LIMITS ARE 5 FEET FROM CENTERLINE OF BEARING AT THE END OF EACH GIRDER, INCLUDING THE INSIDE FACE OF TYPE A DIAPHRAGM.
8. FOR JACKING TOWER DETAILS, SEE SHEETS 108 THRU 127.
9. FOR BEARING REPLACMENT AND ANCHOR BOLT REPAIR DETAILS, SEE SHEETS 106 AND 107.
10. FOR RETROFIT PLATE REPAIR DETAILS, SEE SHEET 101.
11. FOR SIGN STRUCTURE INSTALLATION DETAILS, SEE SHEET 104 AND 105.

△1 12. FOR THE SOLE PURPOSE OF SECURING THE CONTAINMENT SYSTEM, THE CONTRACTOR WILL BE ALLOWED TO CONNECT TO THE STRUCTURAL STEEL TUB GIRDERS USING A BOLTED CONNECTION. THE CONNECTION SHALL BE MADE TO THE WEB OF THE TUB GIRDER USING 2 FULLY TENSIONED 7/8-INCH DIAMETER A325 HIGH STRENGTH BOLTS. A 4-INCH X 4-INCH X 1/2-INCH PLATE WASHER SHALL BE SUPPLIED AT EACH BOLT ON THE INSIDE OF THE WEB. THE CONNECTION TO THE WEB SHALL BE CENTERED ON THE LOCATION OF THE EXISTING TYPE E DIAPHRAGMS (ONE CONNECTION PER WEB PLATE PER DIAPHRAGM). THE CONNECTION MUST USE STANDARD SIZE DRILLED HOLES IN THE WEB OF THE TUB GIRDER. EACH CONNECTION SHALL BE DESIGNED TO SUPPORT NO MORE THAN 20 KIPS. THE CONNECTION DESIGN AND DETAILING MUST BE FINALIZED BY AN ENGINEER LICENSED IN THE STATE OF DELAWARE AND SUBMITTED FOR REVIEW AND APPROVAL. THE STRUCTURAL CALCULATIONS MUST ALSO DETERMINE THE STRESSES IMPARTED TO THE TUB GIRDERS DURING THE APPLICATION OF THE CONTAINMENT SYSTEM LOADING AND ENSURE THAT AN OVERLOAD CONDITION DOES NOT OCCUR. UPON REMOVAL OF THE CONTAINMENT SYSTEM, ANY DRILLED HOLES MUST BE FILLED WITH A NEW (PREVIOUSLY UNUSED) 7/8-INCH DIAMETER A325 GALVANIZED HIGH STRENGTH BOLT. CONNECTIONS TO THE TUB GIRDERS UTILIZING WELDS OR POWDER ACTUATED FASTENERS WILL NOT BE PERMITTED. ATTACHMENT TO THE BRIDGE BARRIERS WILL NOT BE PERMITTED. THE CONTRACTOR MAY PROPOSE ALTERNATE METHODS OF CONTAINMENT FOR REVIEW AND APPROVAL BY DELDOT. ATTACHMENT TO THE TUB GIRDERS FOR PURPOSES OTHER THAN SECURING THE CONTAINMENT SYSTEM WILL NOT BE PERMITTED.

UNOFFICIAL WEBSITE COPY

DELAWARE DEPARTMENT OF TRANSPORTATION

ADDENDUMS / REVISIONS	
ADDENDUM NO △1	
ADDED NOTE 12	
01/18/11 NAS	

SCALE 0 20 40 60 FEET

REHABILITATION OF BRIDGE 1-501 ROUTE 141 OVER SR 4, LOCAL ROADS, AMTRAK AND THE CHRISTINA RIVER

CONTRACT	T200907403
COUNTY	NEW CASTLE
BRIDGE NO.	1-501
DESIGNED BY:	DPR
CHECKED BY:	NAS

FRAMING PLAN SPAN 17 THRU SPAN 19

SHEET NO. 99

TOTAL SHTS. 253

G:\60098167\STRUCTURE\PLANS\099-FR06.DGN

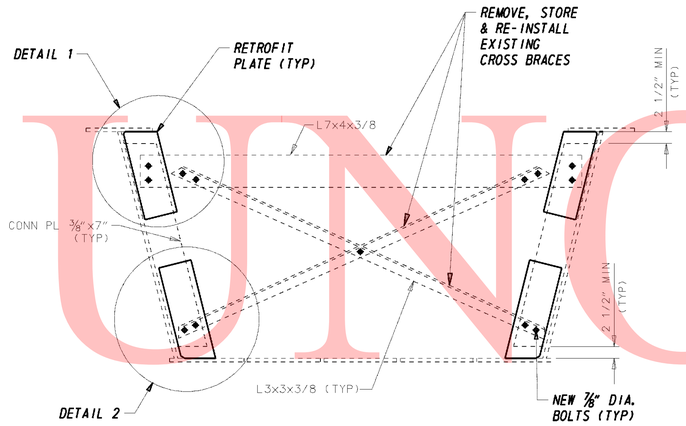

TYPE E DIAPHRAGM - RETROFIT

SCALE: 3/4" = 1'-0"

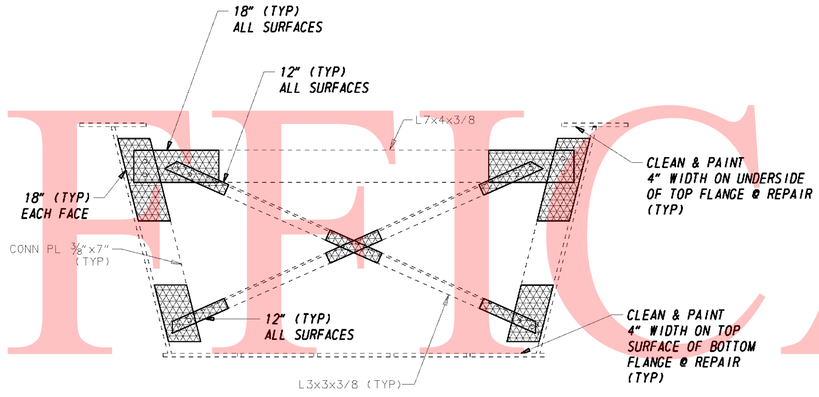

TYPE E DIAPHRAGM CLEANING & PAINTING LIMITS

SCALE: 3/4" = 1'-0"

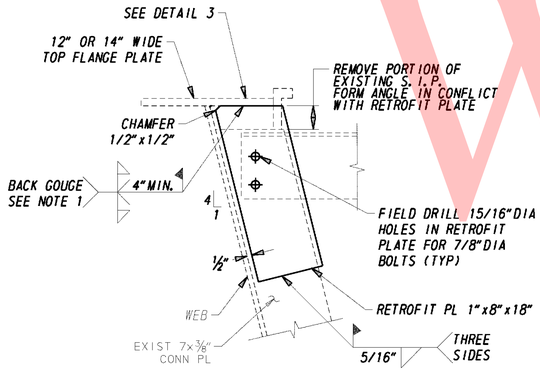

DETAIL 1 - 12" AND 14" TOP FLANGE

SCALE: 1 1/2" = 1'-0"

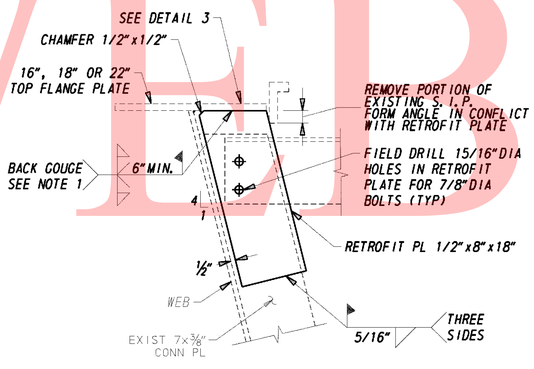

DETAIL 1 - >14" TOP FLANGE

SCALE: 1 1/2" = 1'-0"

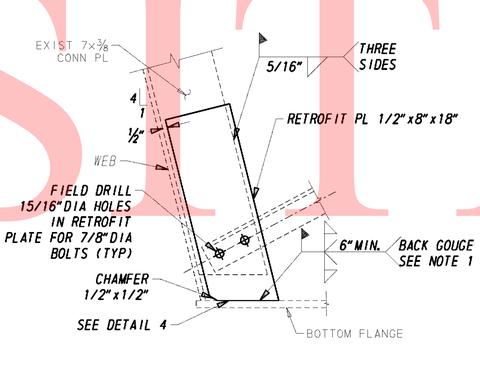

DETAIL 2 - BOTTOM FLANGE

SCALE: 1 1/2" = 1'-0"

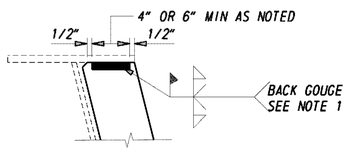

DETAIL 3

SCALE: 1 1/2" = 1'-0"

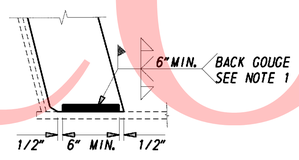

DETAIL 4

SCALE: 1 1/2" = 1'-0"

REPAIRS:

(6) INSTALL RETROFIT PLATES AT ALL TYPE E DIAPHRAGMS. (ITEMS 605522, 605584 AND 605618)

LEGEND:

LIMITS OF CLEANING & PAINTING

REPAIR PROCEDURE NOTES:

1. THE CONTRACTOR SHALL PREPARE THE REPAIR AREA BY REMOVING THE EXISTING HAZARDOUS BASED PAINT SYSTEM FROM AREAS OF EXISTING BOLTED CONNECTIONS DESIGNATED FOR REMOVAL AND FROM AREAS TO BE WELDED. REMOVAL OF THE EXISTING HAZARDOUS BASED PAINT SYSTEM SHALL BE PERFORMED USING VACUUM POWER TOOLS IN ACCORDANCE WITH ITEM NO. 605618.
2. REMOVE THE EXISTING CROSS FRAME ANGLES FROM THE TYPE E DIAPHRAGM AND STORE. DIAPHRAGM REMOVAL IS LIMITED TO ONE DIAPHRAGM PER SPAN FOR ANY TUB GIRDER. CONTRACTOR IS RESPONSIBLE FOR REPLACING DIAPHRAGMS THAT ARE DAMAGED BY REMOVAL AT NO ADDITIONAL COST TO THE DEPARTMENT.
3. THE REPAIR SHALL PROCEED BY POSITIONING THE RETROFIT PLATE AND FIRST WELDING THE RETROFIT PLATE TO THE FLANGE OF THE TUB GIRDER. WELDING OF THE RETROFIT PLATE TO THE FLANGE IS PERMITTED ONLY WHEN TRAFFIC IS NOT DIRECTLY OVER THE GIRDER BEING REPAIRED. THE COMPLETE JOINT PENETRATION WELD OF THE RETROFIT PLATE TO THE FLANGE IS TO BE ACCEPTED BASED ON ULTRASONIC TESTING IN ACCORDANCE WITH AWS D1.5.
4. THE RETROFIT PLATE SHALL BE TEMPORARILY BOLTED TO THE EXISTING DIAPHRAGM CONNECTION PLATE USING STANDARD HOLES. THE EXISTING HOLES IN THE CONNECTION PLATE CAN BE USED AS A TEMPLATE FOR FIELD DRILLING HOLES IN THE RETROFIT PLATE.
5. ONCE BOLTED TO THE CONNECTION PLATE, THE RETROFIT PLATE SHALL BE PERMANENTLY WELDED TO THE CONNECTION PLATE. FOLLOWING COMPLETION OF THE WELD, THE TEMPORARY BOLTS SHALL BE REMOVED.
6. THE EXISTING CROSS FRAME ANGLES SHALL BE REINSTALLED. RE-USE OF EXISTING BOLTS IS PERMITED. REUSE OF COATED BOLTS THAT WERE PREVIOUSLY FULLY TENSIONED IS NOT PERMITTED.
7. PAINT EXPOSED STEEL SURFACES IN ACCORDANCE WITH ITEM NO. 605522 URETHANE PAINT SYSTEM, EXISTING STEEL.

NOTES:

1. FOR LOCATIONS WITH LIMITED ACCESS TO BOTH SIDES OF THE PLATE, WELD TC-U4C CAN BE SUBSTITUTED WITH THE APPROVAL OF THE ENGINEER FOR TC-U5B.
2. THE 8" RETROFIT PLATE CAN BE INSTALLED ON EITHER THE NEAR SIDE OR FAR SIDE OF THE EXISTING TYPE E DIAPHRAGM CONNECTION PLATE.
3. FOR LOCATIONS OF TYPE E DIAPHRAGMS AND DIMENSIONS OF TOP FLANGE PLATES, REFER TO THE FRAMING PLANS ON SHEETS 94 THRU 99.
4. PAINTING OF EXISTING STEEL SURFACE WILL BE PAID FOR UNDER ITEM NO. 605522, URETHANE PAINT SYSTEM, EXISTING STEEL.
5. INSTALLATION OF DIAPHRAGM RETROFIT PLATES WILL BE PAID UNDER ITEM NO. 605584, STEEL STRUCTURE REPAIR.
6. CLEANING OF PAINT FROM EXISTING STEEL SURFACES WILL BE PAID FOR UNDER ITEM NO. 605618, CLEANING EXISTING STEEL STRUCTURE BY VACUUM POWER TOOLS, HAZARDOUS BASE.
7. ALL NEW BOLTS SHALL BE PROVIDED WITH NUTS AND WASHERS IN ACCORDANCE WITH SECTION 605 AND 826 OF THE STANDARD SPECIFICATIONS.
8. (1) RETROFIT PLATE REPAIRS SHALL BE COMPLETED IN GIRDERS LOCATED DIRECTLY BELOW THE WORK ZONE LIMITS. NO REPAIRS SHALL BE MADE BELOW LANES CARRYING LIVE TRAFFIC.

UNOFFICIAL WEBSITE COPY

DELAWARE DEPARTMENT OF TRANSPORTATION

ADDENDUMS / REVISIONS	
ADDENDUM NO (1)	
ADDED NOTE 8	
01/18/11 NAS	

SCALE 1 0 1 FEET

REHABILITATION OF BRIDGE 1-501 ROUTE 141 OVER SR 4, LOCAL ROADS, AMTRAK AND THE CHRISTINA RIVER

CONTRACT	T200907403
COUNTY	NEW CASTLE
BRIDGE NO.	1-501
DESIGNED BY:	DAK
CHECKED BY:	JRB

TYPE E DIAPHRAGM RETROFIT DETAILS

SHEET NO.	101
TOTAL SHTS.	253

G:\60098167\STRUCTURE\PLANS\101-SD02.DGN

UNOFFICIAL WEBSITE COPY

REPAIR:

4. CONSTRUCT TEMPORARY JACKING TOWERS, JACK BRIDGE, REMOVE AND REPLACE DETERIORATED BRIDGE BEARINGS AS INDICATED. REPAIR DAMAGED ANCHOR BOLTS AS INDICATED. (ITEMS 207000, 605601, 605651 AND 605689)

BEAM LOADS (UNFACTORED)	
DL + 15%	300 KIPS
DL + LL + I	440 KIPS

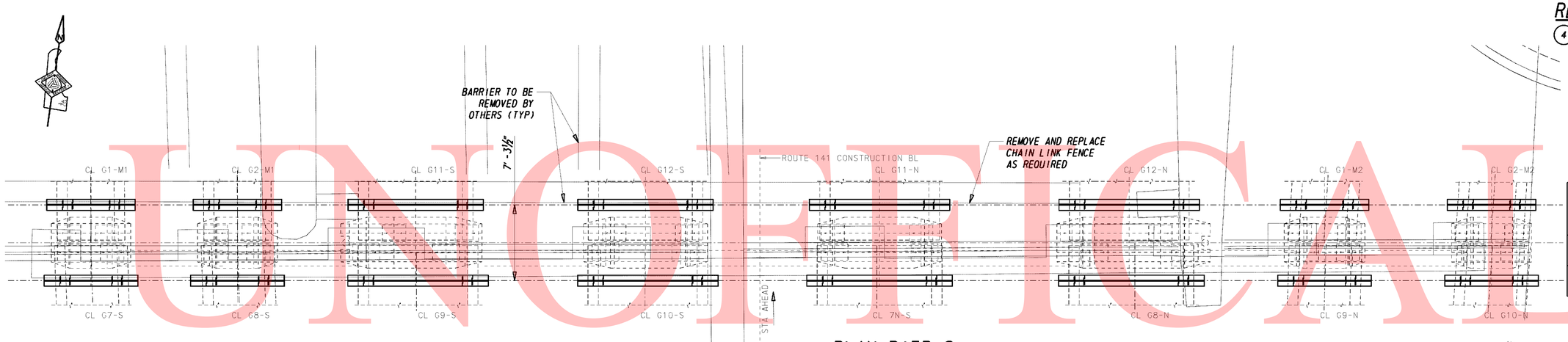

PLAN PIER 8

SCALE: 1/16" = 1'-0"

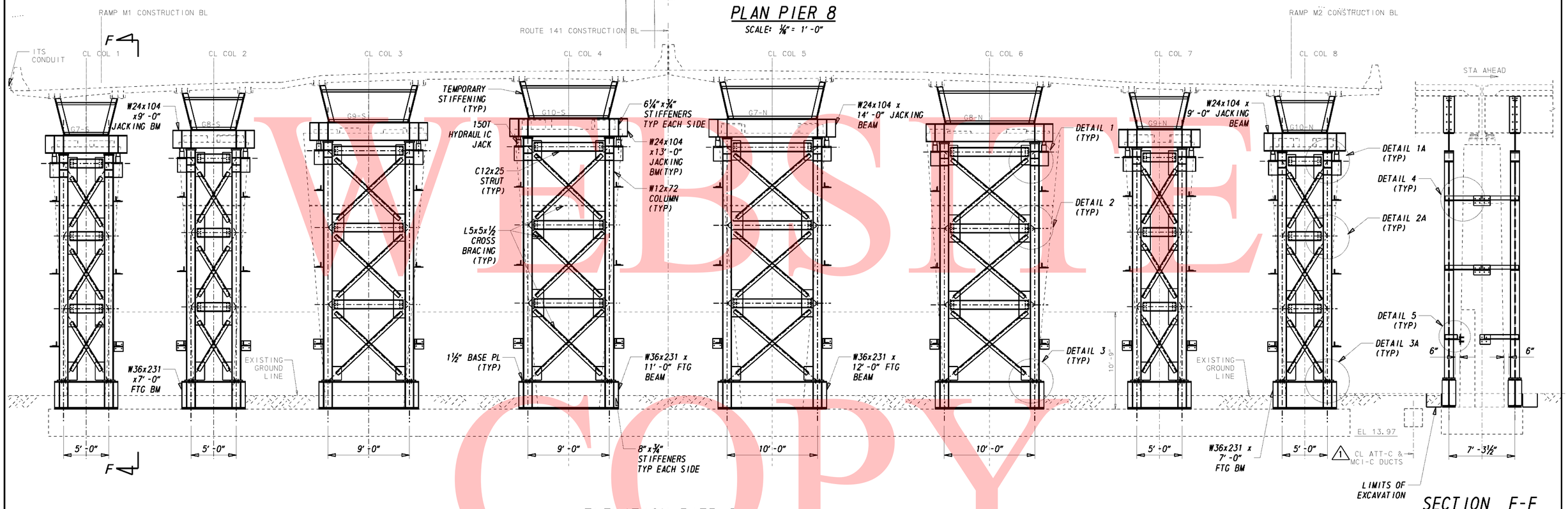

ELEVATION PIER 8

(NEAR SIDE - LOOKING AHEAD STATION)
SCALE: 1/16" = 1'-0"

SECTION F-F AT PIER 8, G7-S

SCALE: 1/16" = 1'-0"

NOTES:

1. INSTALL TEMPORARY TUB GIRDER STIFFENING.
2. CONSTRUCT JACKING FRAME NORTH AND SOUTH OF PIER 8.
3. SEE JACKING NOTES ON SHEET 124.

DELAWARE DEPARTMENT OF TRANSPORTATION	ADDENDUMS / REVISIONS		SCALE 2 0 2 4 6 FEET	REHABILITATION OF BRIDGE 1-501 ROUTE 141 OVER SR 4, LOCAL ROADS, AMTRAK AND THE CHRISTINA RIVER	CONTRACT T200907403	BRIDGE NO. 1-501	PIER 8 – TEMPORARY JACKING FRAME – 1	SHEET NO. 113
	ADDENDUM NO 1				COUNTY NEW CASTLE	DESIGNED BY: DPR		TOTAL SHTS. 253
	MODIFIED SECTION F-F					CHECKED BY: NAS		
	01/18/11 NAS							

G:\60098167-STRUCTURE\PLANS\113-JPE-P08A.DGN

UNOFFICIAL WEBSITE COPY

REPAIR:

(4) CONSTRUCT TEMPORARY JACKING TOWERS, JACK BRIDGE, REMOVE AND REPLACE DETERIORATED BRIDGE BEARINGS AS INDICATED. REPAIR DAMAGED ANCHOR BOLTS AS INDICATED. (ITEMS 207000, 605601, 605651 AND 605689)

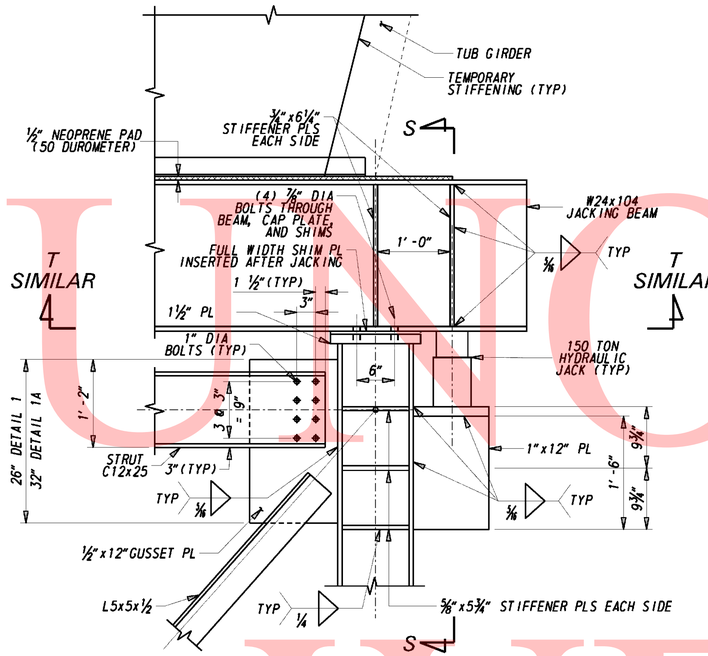

DETAIL 1 / 1A - UPPER GUSSET PLATE

SCALE: 1" = 1'-0"

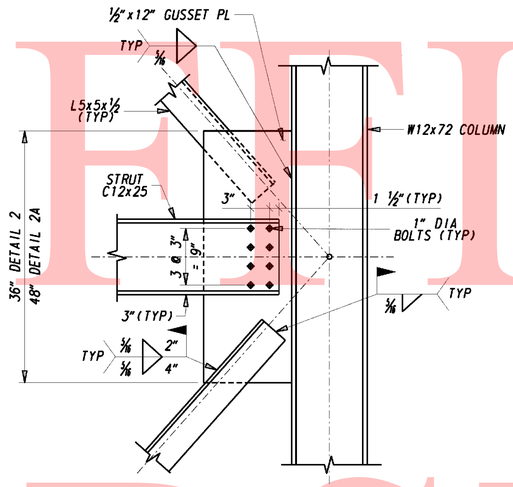

DETAIL 2 / 2A - MIDDLE GUSSET PLATE

SCALE: 1" = 1'-0"

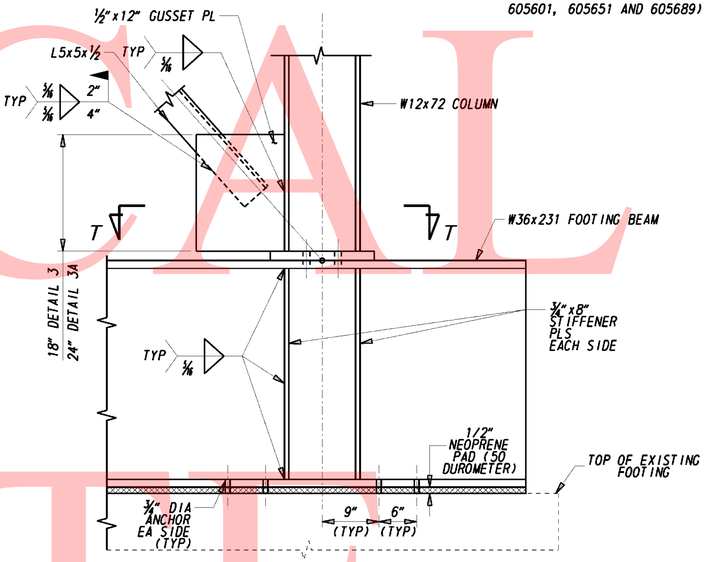

DETAIL 3 / 3A - LOWER GUSSET PLATE

SCALE: 1" = 1'-0"

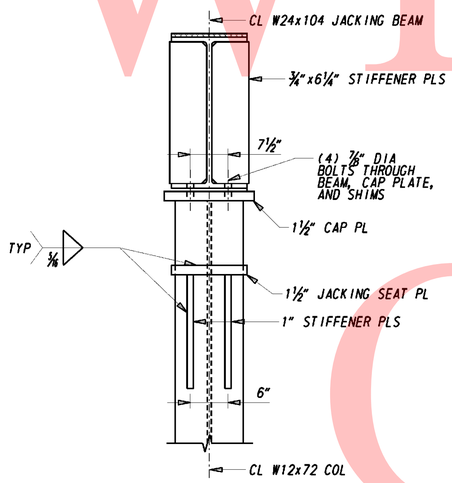

SECTION S-S

SCALE: 1" = 1'-0"

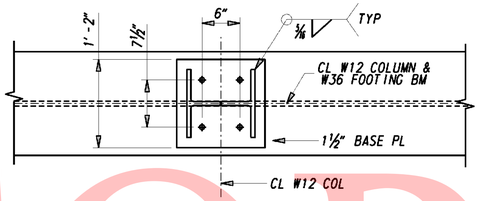

SECTION T-T

SCALE: 1" = 1'-0"

TOWER NOTES:

1. EXCAVATE TO EXPOSE EXISTING PIER FOOTING FOR SUPPORT OF THE JACKING TOWER FOOTING BEAM. ALL ADJACENT UTILITIES SHALL BE PROTECTED AS DIRECTED BY THE OWNER/OPERATOR OF THE RESPECTIVE FACILITIES.
2. CONSTRUCT JACKING FRAME ON BOTH SIDES OF PIER OR ON TOE OF ABUTMENT FOOTING AT EACH REPLACEMENT LOCATION.
3. JACK BEAM WITH A MAXIMUM OF 1/16" TO ALLOW FOR SEPARATION TO REPLACE BEARING PAD. DESIGN JACKS AND JACKING FRAME FOR DEAD LOAD, LIVE LOAD, IMPACT, AND WIND LOADS.
4. THE DEAD LOAD HAS BEEN INCREASED BY 15% TO CONSIDER THE ADDITIONAL FORCE THAT MAY BE REQUIRED TO FREE THE SUPERSTRUCTURE FROM THE SUBSTRUCTURE.
5. THE CAPACITY OF THE JACK IS TO BE 150% OF THE TOTAL ANTICIPATED JACKING LOAD.
6. SUGGESTED DETAILS DO NOT ALLOW FOR ANY ECCENTRIC LOADING TO THE COLUMNS, EXCEPT DURING JACKING.
7. REMOVE ANCHOR BOLT NUTS.
8. REMOVE BEARING ASSEMBLY.
9. REPAIR ANCHOR BOLTS AND INSTALL NEW BEARING PLATES.
10. REMOVE SHIMS AND RELEASE JACKS
11. THE CONTRACTOR MAY SUBMIT AN ALTERNATE JACKING DESIGN, OR A VARIATION OF THE AS-DESIGNED JACKING ARRANGEMENT. SUBMIT DRAWINGS AND CALCULATIONS OF THE ALTERNATIVE DESIGN TO THE ENGINEER FOR APPROVAL. ALL DRAWINGS AND CALCULATIONS ARE TO BE SEALED BY A PROFESSIONAL ENGINEER REGISTERED IN THE STATE OF DELAWARE.
12. REPEAT STEPS FOR REMAINING PIER LOCATIONS.
13. JACKING PAID FOR UNDER ITEM NO. 605601.
14. THE CONTRACTOR WILL NOT BE PERMITTED TO ALLOW THE JACKS TO SUPPORT THE LIVE LOADS.
15. BASE PLATE SHOWN IN SECTION T-T ALSO TO BE USED AS CAP PLATE.
16. USE DETAILS 1A, 2A AND 3A FOR JACKING TOWER CONSTRUCTION WHEN COLUMN SPACING <8'-0", OTHERWISE USE DETAILS 1, 2, AND 3.

DELAWARE
DEPARTMENT OF TRANSPORTATION

ADDENDUMS / REVISIONS	
ADDENDUM NO 1	
MODIFIED NOTE 1	
01/18/11 NAS	

SCALE 1 0 1 FEET

REHABILITATION OF BRIDGE 1-501 ROUTE 141 OVER SR 4, LOCAL ROADS, AMTRAK AND THE CHRISTINA RIVER

CONTRACT	T200907403
COUNTY	NEW CASTLE
BRIDGE NO.	1-501
DESIGNED BY:	DPR
CHECKED BY:	NAS

TEMPORARY JACKING FRAME DETAILS – 1

SHEET NO.	124
TOTAL SHTS.	253

G:\60098167\STRUCTURE\PLANS\124-JT01.DGN

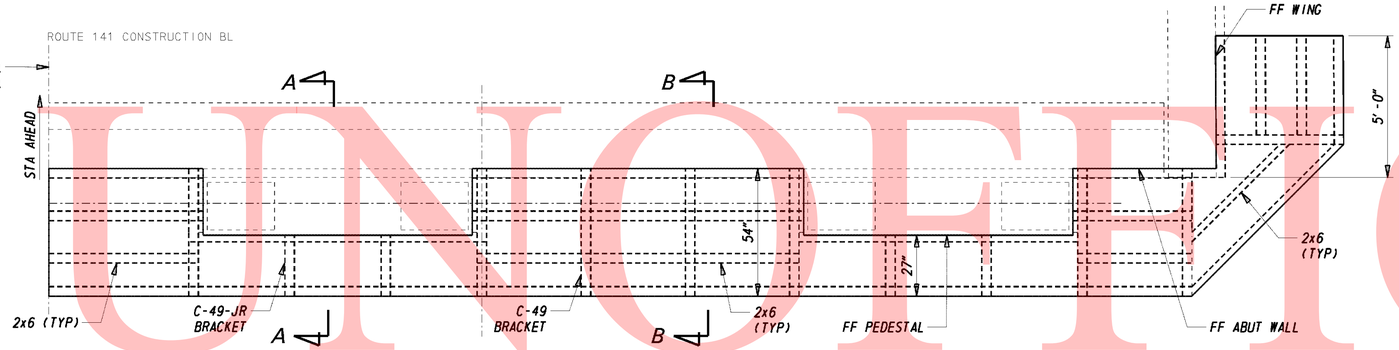

ABUTMENT 2 DEMO SHIELDING

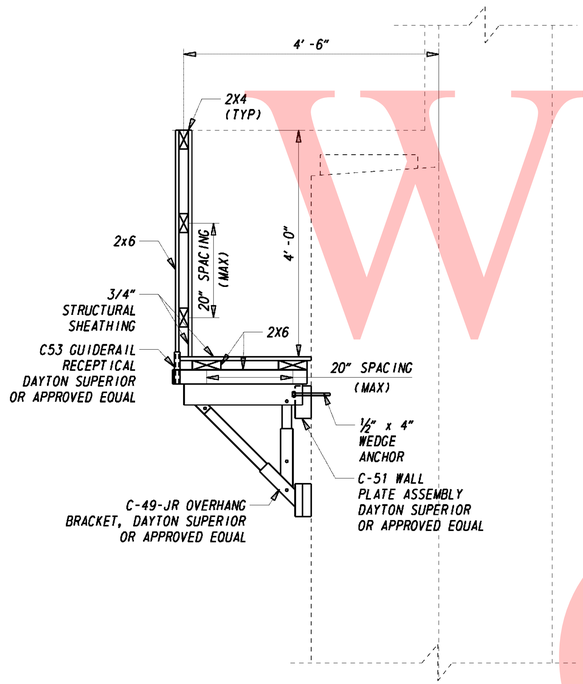

SECTION A-A

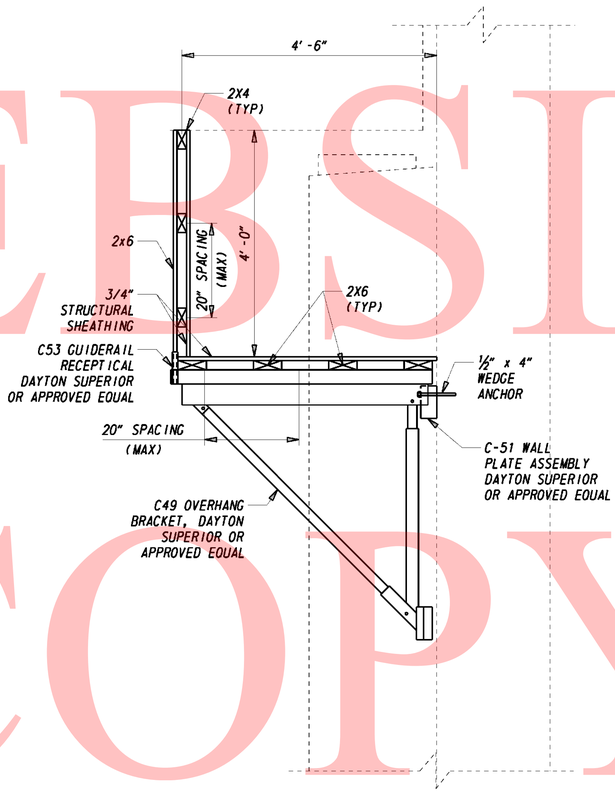

SECTION B-B

REPAIR:

(10) REMOVE AND REPLACE BRIDGE EXPANSION JOINTS INCLUDING INSTALLATION OF BARRIER SLIDING PLATES. (ITEMS 601502, 602013, 602017, 602580, 603000, 604000, 605512, AND 605589)

(11) REMOVE AND REPLACE PORTION OF EXISTING BRIDGE BARRIER AT ALL DEFLECTION JOINTS AND DECK JOINTS AS INDICATED. INSTALL ADDITIONAL REINFORCEMENT FOR STRENGTHENING. (ITEMS 601502, 602017, 602580, 603000, AND 604000)

NOTES:

1. THESE ARE ONLY SUGGESTED DETAILS FOR DEMOLITION SHIELDING. IN ACCORDANCE WITH ITEM 601502, THE CONTRACTOR MAY OPT TO SELECT, DESIGN, AND SUBMIT FOR REVIEW AN ALTERNATIVE SHIELDING PROCEDURE IF DESIRED.
2. DEMOLITION SHIELDING IS REQUIRED AT ALL DECK JOINT LOCATIONS (ABUT 1, M1, M2, 2 AND PIERS 4, 7, 8, 11, 16, 17, 18) AND ALL DEFLECTION JOINT REPAIR LOCATIONS. INSTALLATION MUST BE COMPLETE PRIOR TO COMMENCEMENT OF REPAIRS.
3. ABUTMENT 2 DEMO SHIELDING IS SHOWN. ABUTMENT M1 & M2 SHIELDING IS SIMILAR.
4. FOR PIER SHIELDING DETAILS, SEE SHEET 154.
5. DEMO SHIELDING SHALL BE PROMPTLY REMOVED WHEN NO LONGER REQUIRED.
6. DEMO SHIELDING SHALL BE PAID FOR UNDER ITEM 601502. PAYMENT FOR DEMO SHIELDING INCLUDES INSTALLATION AND REMOVAL AT NOTED LOCATIONS.
7. (1) WELDING, CUTTING OR DRILLING OF EXISTING STRUCTURAL STEEL IS PROHIBITED.

UNOFFICIAL WEBSITE COPY

DELAWARE DEPARTMENT OF TRANSPORTATION

ADDENDUMS / REVISIONS	
ADDENDUM NO (1)	
ADDED NOTE 7	
01/18/11 NAS	

SCALE 1 0 1 2 3 FEET

REHABILITATION OF BRIDGE 1-501 ROUTE 141 OVER SR 4, LOCAL ROADS, AMTRAK AND THE CHRISTINA RIVER

CONTRACT	T200907403
COUNTY	NEW CASTLE
BRIDGE NO.	1-501
DESIGNED BY:	JAZ
CHECKED BY:	DPR

TEMPORARY DEMOLITION SHIELDING – 1

SHEET NO.	153
TOTAL SHTS.	253

G:\60098167\STRUCTURE\PLANS\153-TD01.DGN

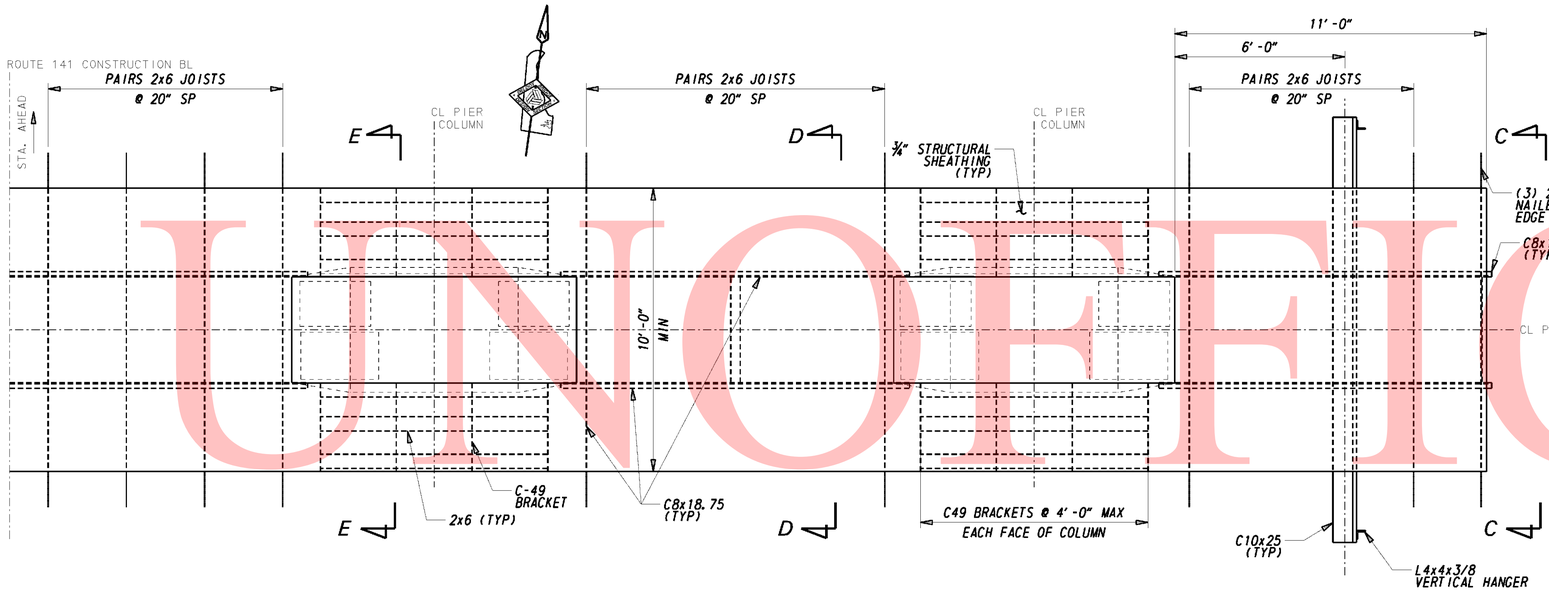

PLAN VIEW @ PIERS

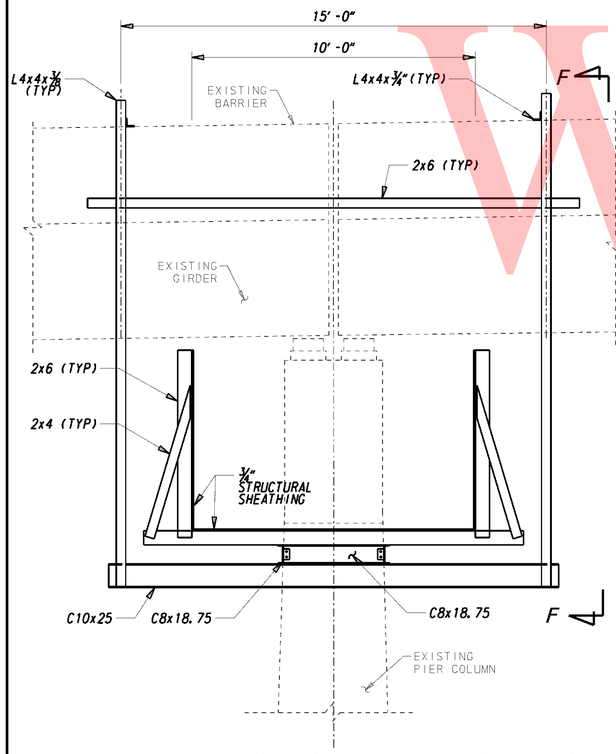

TYPICAL SECTION @ PIER - OVERHANGS (SECTION C-C)

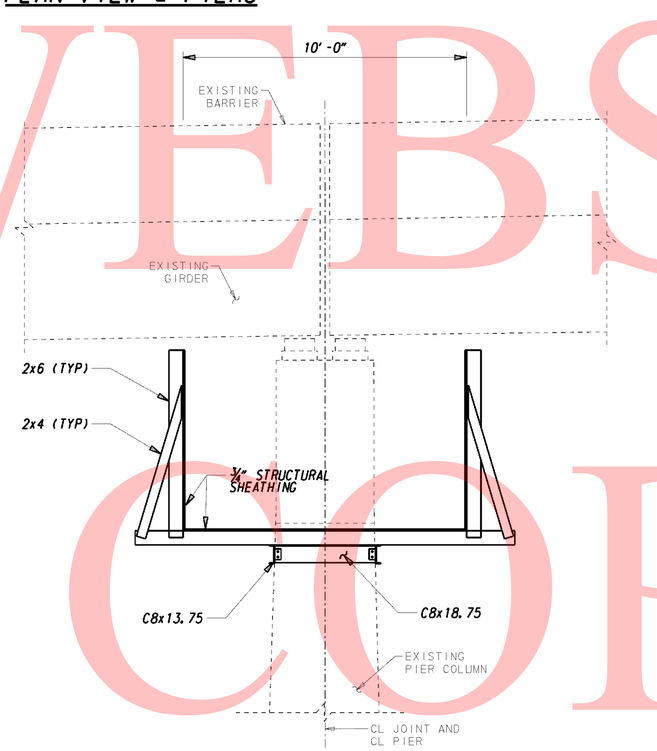

TYPICAL SECTION @ PIER - BETWEEN COLUMNS (SECTION D-D)

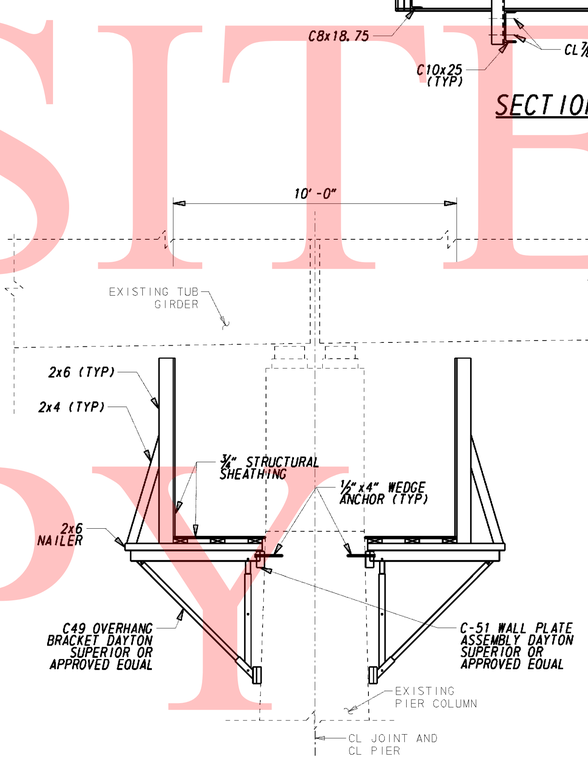

TYPICAL SECTION @ PIER COLUMNS (SECTION E-E)

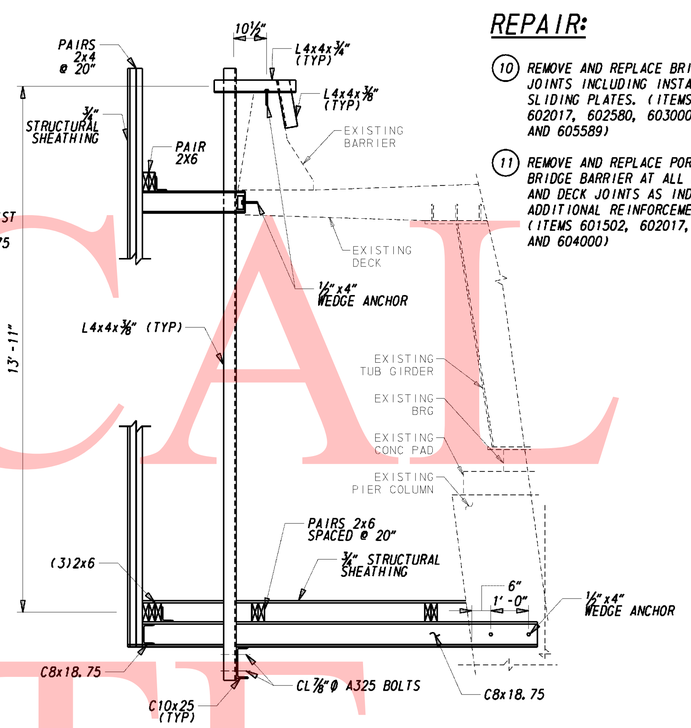

SECTION F-F

REPAIR:

(10) REMOVE AND REPLACE BRIDGE EXPANSION JOINTS INCLUDING INSTALLATION OF BARRIER SLIDING PLATES. (ITEMS 601502, 602013, 602017, 602580, 603000, 604000, 605512, AND 605589)

(11) REMOVE AND REPLACE PORTION OF EXISTING BRIDGE BARRIER AT ALL DEFLECTION JOINTS AND DECK JOINTS AS INDICATED. INSTALL ADDITIONAL REINFORCEMENT FOR STRENGTHENING. (ITEMS 601502, 602017, 602580, 603000, AND 604000)

NOTES:

1. THESE ARE ONLY SUGGESTED DETAILS FOR DEMOLITION SHIELDING, THE CONTRACTOR MAY OPT TO SELECT, DESIGN AND SUBMIT FOR REVIEW AN ALTERNATIVE SHIELDING PROCEDURE IF DESIRED.
2. DEMOLITION SHIELDING IS REQUIRED AT ALL DECK JOINT LOCATIONS (ABUT 1, M1, M2, 2 AND PIERS 4, 7, 8, 11, 16, 17, 18) AND ALL DEFLECTION JOINTS. INSTALLATION MUST BE COMPLETE PRIOR TO COMMENCEMENT OF REPAIRS.
3. FOR ABUTMENT SHIELDING. SEE SHEET 153.
4. DEMO SHIELDING SHALL BE PROMPTLY REMOVED WHEN NO LONGER REQUIRED.
5. DEMO SHIELDING SHALL BE PAID FOR UNDER ITEM 601502. PAYMENT FOR DEMO SHIELDING INCLUDES INSTALLATION AND REMOVAL AT NOTED LOCATIONS.
6. ⚠1 WELDING, CUTTING OR DRILLING OF EXISTING STRUCTURAL STEEL IS PROHIBITED.

UNOFFICIAL WEBSITE COPY

DELAWARE DEPARTMENT OF TRANSPORTATION

ADDENDUMS / REVISIONS	
ADDENDUM NO ⚠1	
ADDED NOTE 6	
01/18/11 NAS	

SCALE 1 0 1 2 3 FEET

REHABILITATION OF BRIDGE 1-501 ROUTE 141 OVER SR 4, LOCAL ROADS, AMTRAK AND THE CHRISTINA RIVER

CONTRACT	T200907403
COUNTY	NEW CASTLE

BRIDGE NO.	1-501
DESIGNED BY:	JAZ
CHECKED BY:	DPR

TEMPORARY DEMOLITION SHIELDING – 2

SHEET NO.	154
TOTAL SHTS.	253

G:\60098167\STRUCTURE\PLANS\154-T002.DGN

ENVIRONMENTAL COMPLIANCE NOTES:

1. GENERAL NOTES:

A. THE PURPOSE OF THESE SHEETS IS TO IDENTIFY THOSE ITEMS ASSOCIATED WITH ENVIRONMENTAL COMPLIANCE. IMPACT CALCULATIONS ARE FOR AGENCY REPORTING PURPOSES ONLY AND ARE NOT TO BE USED FOR BIDDING PURPOSES.

B. IF A DEPARTURE FROM THE APPROVED PLANS (WHICH WOULD AFFECT ANY NATURAL AND/OR CULTURAL RESOURCES) IS NECESSARY, THE ENVIRONMENTAL STUDIES SECTION SHALL BE CONTACTED AT (302)760-2264 TO ALLOW THEM TO COORDINATE WITH THE APPROPRIATE RESOURCE AGENCIES FOR APPROVAL.

C. USE OF THIS SHEET DOES NOT ALLEVIATE THE CONTRACTOR'S RESPONSIBILITY TO COMPLY WITH ALL CONDITIONS SET FORTH IN THE ENVIRONMENTAL STATEMENT AND PERMITS.

2. NATURAL RESOURCE ISSUES:

A. PERMIT /APPROVALS REQUIREMENTS•:
CORPS OF ENGINEERS NWP #3 w/no PCN (NOT A CRITICAL RESOURCE WATER)
DNREC WETLANDS AND SUBAQUEOUS LANDS (WLSL) - REPAIR & REPLACE AUTHORIZATION••
DNREC - WATER QUALITY (WQC) AND COASTAL ZONE CONSISTENCY (CZM) WAIVED (PROJECT IS NOT LOCATED IN CRW)
U.S. COAST GUARD - 30 DAY ADVANCE NOTIFICATION•
NEW CASTLE COUNTY DEPT OF LAND USE - NONE (MAINTENANCE ACTIVITY)

• -- THE PERMIT(S)/APPROVAL(S) LISTED ARE THOSE REQUIRED FOR THIS PROJECT. THE CONTRACTOR IS RESPONSIBLE FOR NOTIFYING THE U.S.COAST GUARD (SEE ITEM 4 FOR FURTHER DETAILS). THE ENVIRONMENTAL STUDIES SECTION IS RESPONSIBLE FOR COORDINATING/ OBTAINING THE OTHER PERMITS/APPROVALS.
•• -- THE CONTRACTOR MUST ENSURE THAT THESE PERMITS/APPROVALS (DNREC REPAIR & REPLACE AUTHORIZATION) ARE IN THEIR POSSESSION PRIOR TO THE BEGINNING OF CONSTRUCTION IN THE PERMITTED AREA(S). THESE PERMITS/APPROVALS SHALL BE DISPLAYED ON-SITE DURING THE ENTIRE CONSTRUCTION PERIOD.

B. CONSTRUCTION RESTRICTIONS:
FISHERIES: NO IN-WATER WORK FROM MARCH 15 - JUNE 1(INCLUSIVE), ANY CALENDAR YEAR
ENDANGERED SPECIES: NONE
MIGRATORY BIRDS: NONE

C. PROTECTION OF RESOURCES:
THERE ARE WETLANDS DELINEATED IN THE MEDIAN SOUTH OF STATION 10+00 AND ON THE SOUTH END OF BRIDGE BETWEEN STATIONS 14+00 AND 20+40. IN ORDER TO PROTECT THESE WETLANDS, CONSTRUCTION FENCING SHALL BE PLACED ALONG THE LIMITS OF THE WETLANDS AS SHOWN ON THE EC SHEETS. CONTRACTOR ACCESS FROM LAND OR WATER BEYOND THE CONSTRUCTION FENCING, INTO THE WETLANDS, IS STRICTLY PROHIBITED.

D. THE TEMPORARY IMPACT AREA ASSOCIATED WITH THE WATERWAY LOCATED AT STATION 11+00 SHALL BE RESTORED TO ORIGINAL GRADES AND SEEDED USING THE FOLLOWING SEED MIX: WETLAND MITIGATION SEED MIX-ITEM 734521.

3. CULTURAL RESOURCE ISSUES:

1 SHORT-TERM STOCKPILING AND STAGING (LESS THAN 30 DAYS) IS LIMITED TO THE FOLLOWING AREAS UNDER THE BRIDGE WITHIN THE LIMITS OF THE EXISTING RIGHT-OF-WAY: 22+67.00 TO 23+25.00, 23+67.00 TO 25+67.00, 26+70.58 TO 28+68.58, 29+68.58 TO 32+05.50, 33+23.50 TO 35+60.42, AND 36+44.25 TO 38+11.00. LONG-TERM STOCKPILING AND STAGING (810 DAYS) IS LIMITED TO THE FOLLOWING AREAS UNDER THE BRIDGE WITHIN THE LIMITS OF THE EXISTING RIGHT-OF-WAY, 26+70.58 TO 28+68.58.

4. U.S. COAST GUARD 30-DAY ADVANCED COORDINATION/APPROVAL:

THE WATERWAYS ARE USED FOR RECREATIONAL PURPOSES. THE CONTRACTOR SHALL PROVIDE SAFE PASSAGE THROUGH THE WORK AREAS FOR THE WATERWAY USERS AND SHALL HAVE THE PASSAGEWAY CLEARLY MARKED. PAYMENT IS INCLUDED UNDER PAY ITEM 763522, "COAST GUARD SPECIFIC CONDITIONS". ANY CONTRACTOR ACTIVITY, WHICH WILL RESULT IN THE SHORT-TERM RESTRICTION OF THE WATERWAYS TO THOSE INDIVIDUALS, IS TO BE COORDINATED WITH THE ENGINEER AND THE U.S. COAST GUARD ONE MONTH IN ADVANCE. THE WORK WITHIN THE WATER SHALL BE LIMITED TO WHAT APPEARS ON THESE PLANS AND BARGE PLACEMENT. IF ANY ADDITIONAL IN-WATER/WETLANDS WORK IS NEEDED, IT MUST BE COORDINATED WITH U.S. COAST GUARD PRIOR TO BEGINNING WORK AND BE IN CONFORMANCE WITH ITEM 763522, "COAST GUARD SPECIFIC CONDITIONS".
CONTACT BILL BRAZIER AT (757) 398-6422, AS WELL AS SUBMIT A WRITTEN NOTICE (WHICH INCLUDES A SKETCH DEPICTING THE LOCATION AND DURATION OF ALL RESTRICTIONS) TO THE COMMMANDING OFFICER (AOWB), 5TH COAST GUARD DISTRICT, FEDERAL BUILDING 431 CRAWFORD ST., PORTSMOUTH, VA 23704 FOR APPROVAL.

NOTES:
1. WETLANDS DELINEATED BY MCCORMICK TAYLOR, INC. IN APRIL 2010 IN ACCORDANCE WITH THE 1987 CORPS OF ENGINEERS WETLAND DELINEATION MANUAL.

2. SHEETS PREPARED BY: AECOM USA, INC.
DATE: AUGUST 9, 2010

UNOFFICAL WEBSITE COPY

DELAWARE
DEPARTMENT OF TRANSPORTATION

ADDENDUMS / REVISIONS	
ADDENDUM NO. 1	
MODIFIED NOTE 3	
1/18/11 NAS	

REHABILITATION OF BRIDGE 1-501
ROUTE 141 OVER SR 4, LOCAL ROADS,
AMTRAK AND THE CHRISTINA RIVER

CONTRACT	T200907403
COUNTY	NEW CASTLE
BRIDGE NO.	1-501
DESIGNED BY:	KJO
CHECKED BY:	NAS

ENVIRONMENTAL
COMPLIANCE PLAN

	EC01
SHEET NO.	162
TOTAL SHTS.	253

C:\60098167\CIVIL\PLANS\CP\162-EC01.DGN

UNOFFICAL WEBSITE COPY

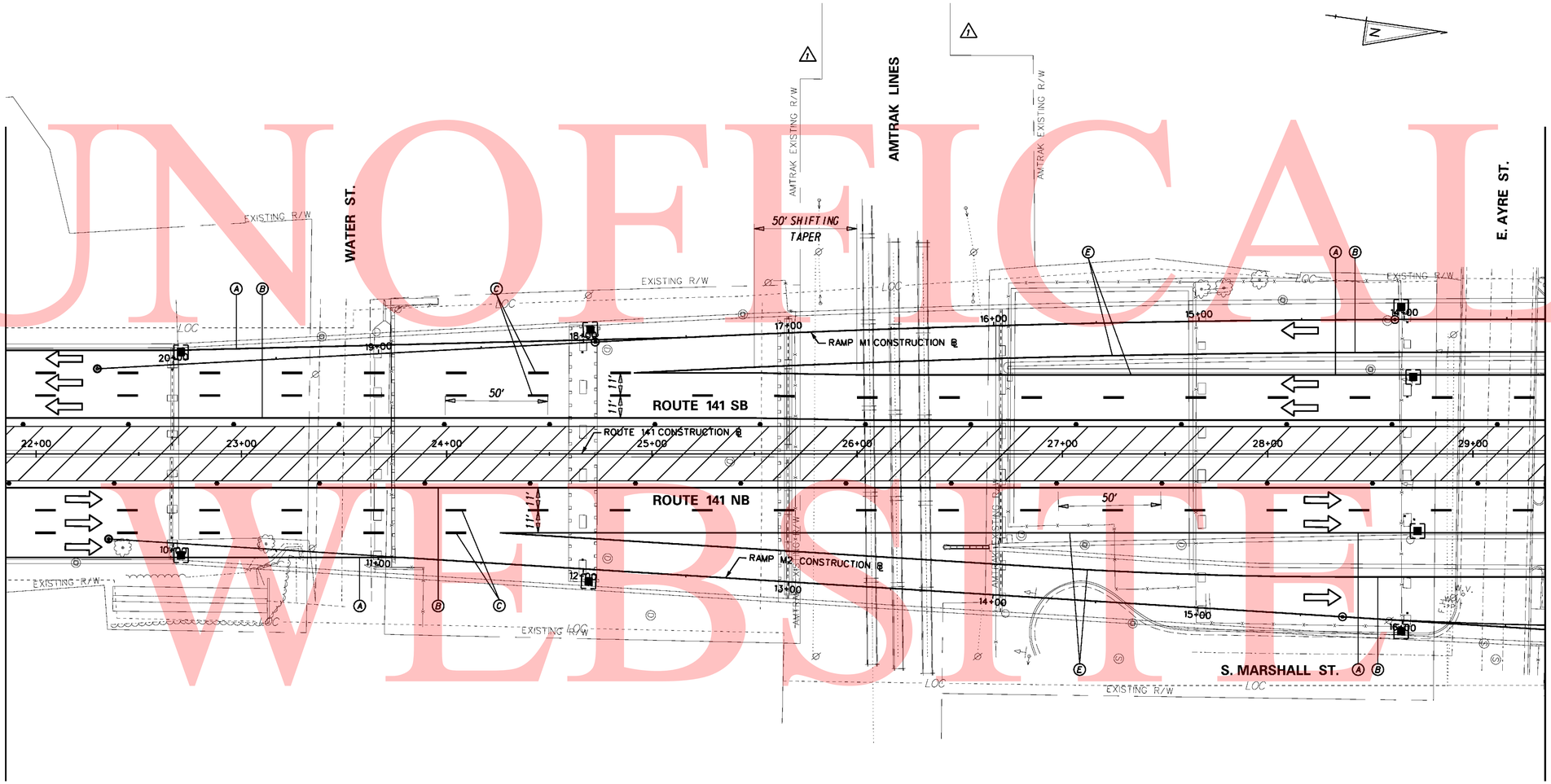

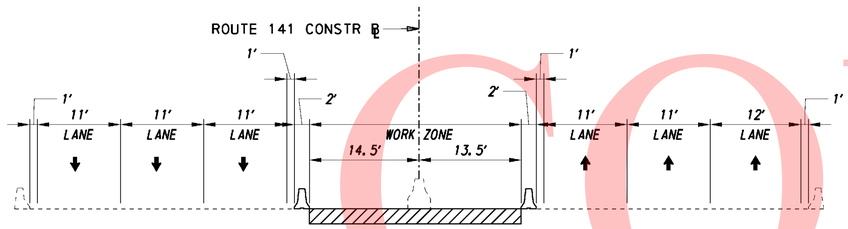

TYPICAL SECTION ROUTE 141
STA. 18+00 TO STA. 22+70

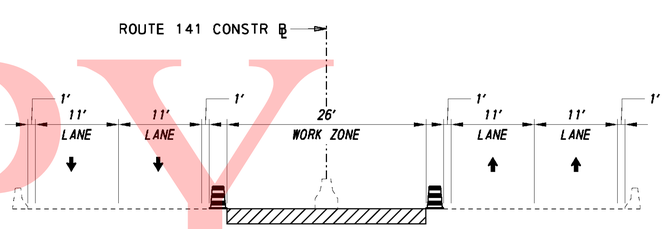

TYPICAL SECTION ROUTE 141
STA. 26+70 TO STA. 38+00

PHASE 1B

DELAWARE DEPARTMENT OF TRANSPORTATION	ADDENDUMS / REVISIONS ADDENDUM NO. 1 MODIFY RIGHT OF WAY 1/18/11 NAS	SCALE 0 30 60 90 FEET	REHABILITATION OF BRIDGE 1-501 ROUTE 141 OVER SR 4, LOCAL ROADS, AMTRAK AND THE CHRISTINA RIVER	CONTRACT T200907403 COUNTY NEW CASTLE	BRIDGE NO. 1-501 DESIGNED BY: EVS CHECKED BY: KJO	CONSTRUCTION PHASING MOT AND EROSION CONTROL PLAN	SHEET NO. 174 TOTAL SHTS. 253

G:\60098167\CIVIL\PLANS\CPY174-CS16.DGN

UNOFFICAL WEBSITE COPY

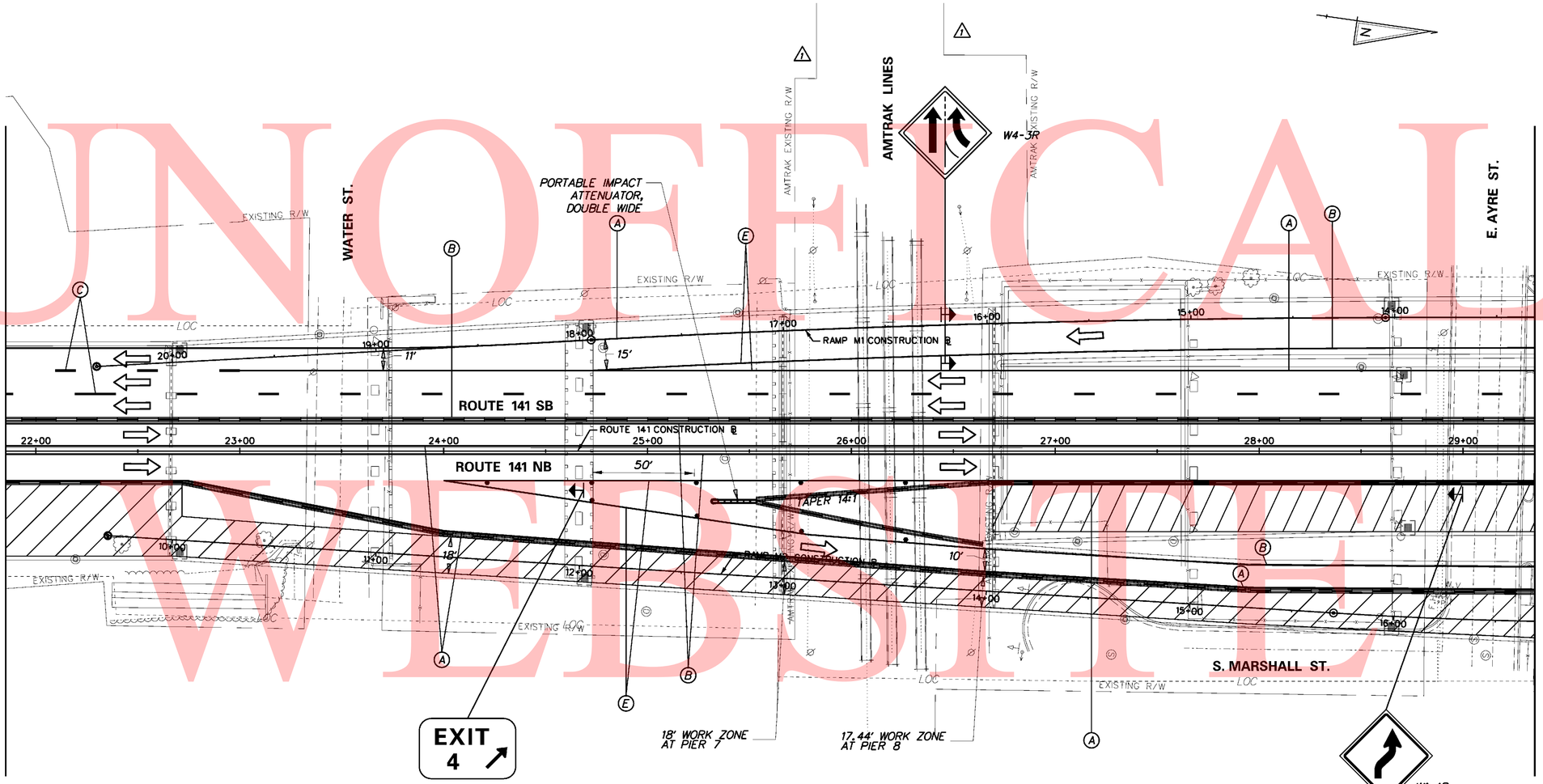

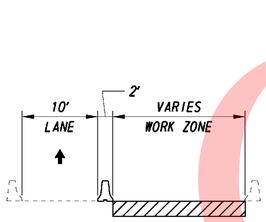

TYPICAL SECTION RAMP M-2
STA. 14+00.00 TO STA. 18+34.00

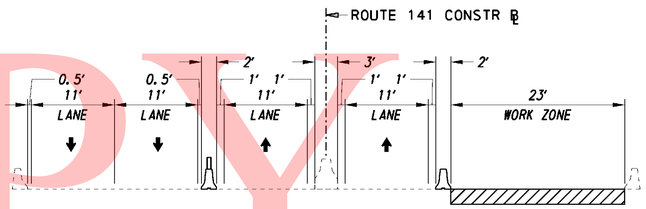

TYPICAL SECTION ROUTE 141
STA. 26+70.00 TO STA. 38+67.00

PHASE 2A

DELAWARE DEPARTMENT OF TRANSPORTATION	ADDENDUMS / REVISIONS	SCALE	REHABILITATION OF BRIDGE 1-501 ROUTE 141 OVER SR 4, LOCAL ROADS, AMTRAK AND THE CHRISTINA RIVER	CONTRACT T200907403	BRIDGE NO. 1-501	CONSTRUCTION PHASING MOT AND EROSION CONTROL PLAN	SHEET NO. 183
	ADDENDUM NO. 1	0 30 60 90 FEET		COUNTY NEW CASTLE	DESIGNED BY: EVS		TOTAL SHTS. 253
	MODIFY RIGHT OF WAY 1/18/11 NAS				CHECKED BY: KJO		

G:\60098167\CIVIL\PLANS\CPY183-CS67.DGN

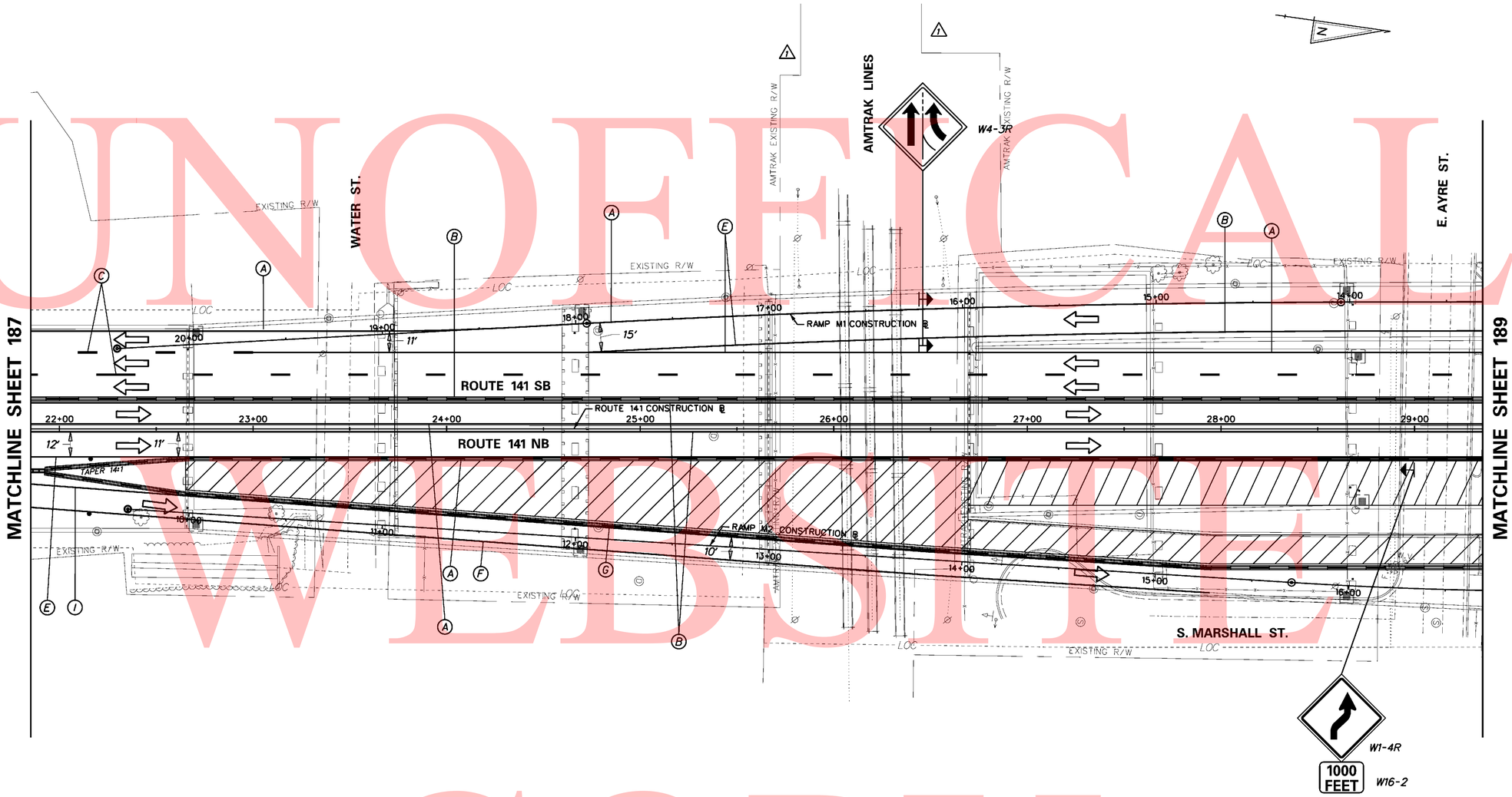

TYPICAL SECTION RAMP M2

STA. 14+00.00 TO STA. 18+34.00

PHASE 2B

UNOFFICIAL WEBSITE COPY

G:\60098167\CIVIL\PLANS\CP\188-CS77.DGN

DELAWARE DEPARTMENT OF TRANSPORTATION	ADDENDUMS / REVISIONS ADDENDUM NO. 1 MODIFY RIGHT OF WAY 1/18/11 NAS	SCALE 0 30 60 90 FEET	REHABILITATION OF BRIDGE 1-501 ROUTE 141 OVER SR 4, LOCAL ROADS, AMTRAK AND THE CHRISTINA RIVER	CONTRACT T200907403 COUNTY NEW CASTLE	BRIDGE NO. 1-501 DESIGNED BY: EVS CHECKED BY: KJO	CONSTRUCTION PHASING MOT AND EROSION CONTROL PLAN	SHEET NO. 188 TOTAL SHTS. 253

UNOFFICAL WEBSITE COPY

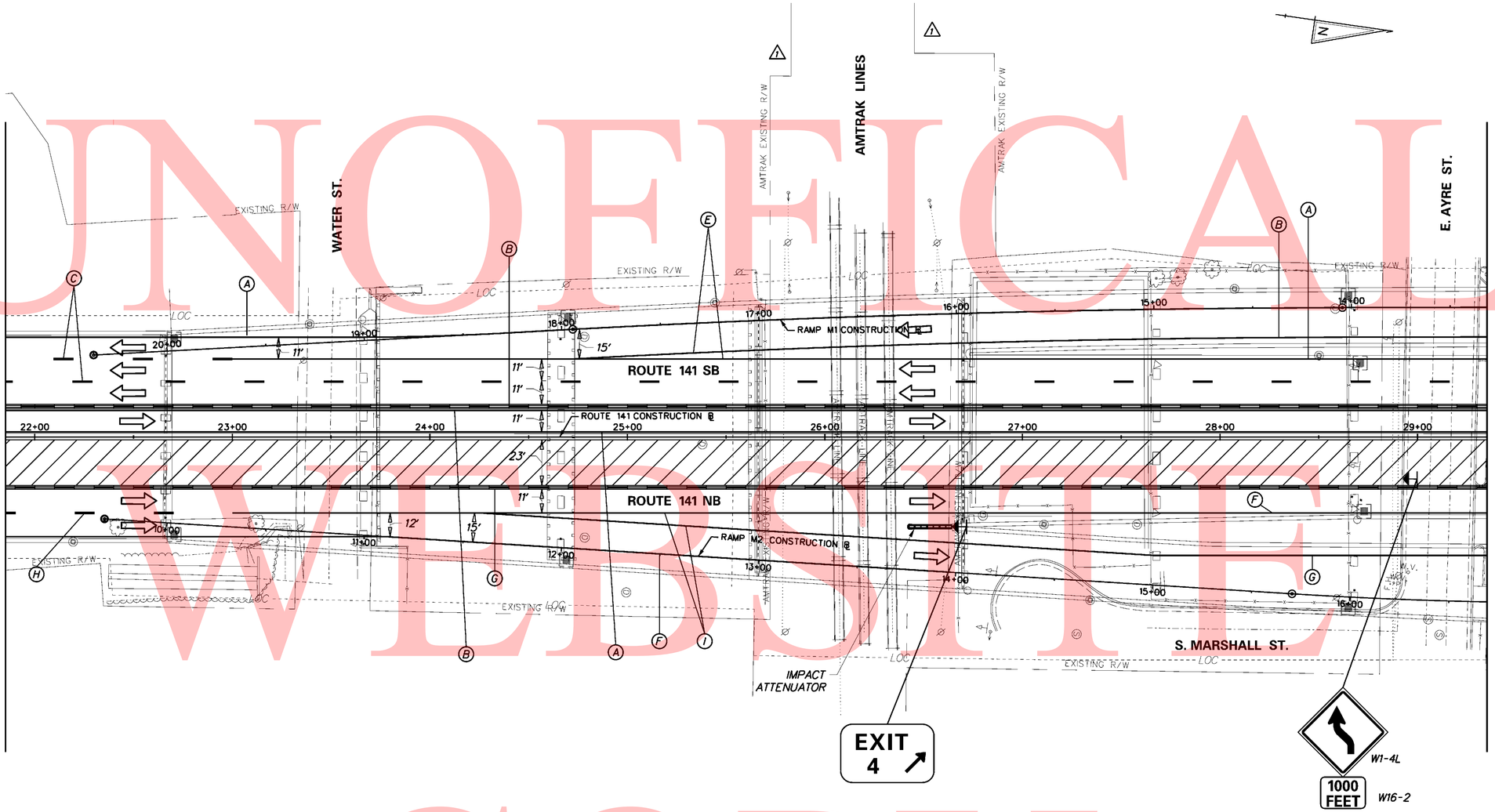

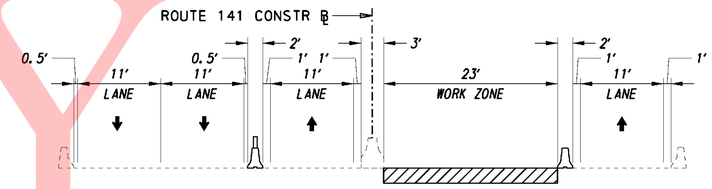

TYPICAL SECTION ROUTE 141
STA. 26+70.00 TO STA. 38+67.00

PHASE 3

DELAWARE
DEPARTMENT OF TRANSPORTATION

ADDENDUMS / REVISIONS	
ADDENDUM NO. 1	
MODIFY RIGHT OF WAY	
1/18/11 NAS	

SCALE 0 30 60 90 FEET

REHABILITATION OF BRIDGE 1-501
ROUTE 141 OVER SR 4, LOCAL ROADS, AMTRAK AND THE CHRISTINA RIVER

CONTRACT	T200907403
COUNTY	NEW CASTLE

BRIDGE NO.	1-501
DESIGNED BY:	EVS
CHECKED BY:	KJO

CONSTRUCTION PHASING MOT AND EROSION CONTROL PLAN

SHEET NO.	197
TOTAL SHTS.	253

G:\60098167\CIVIL\PLANS\CPY197-CS36.DGN

UNOFFICAL WEBSITE COPY

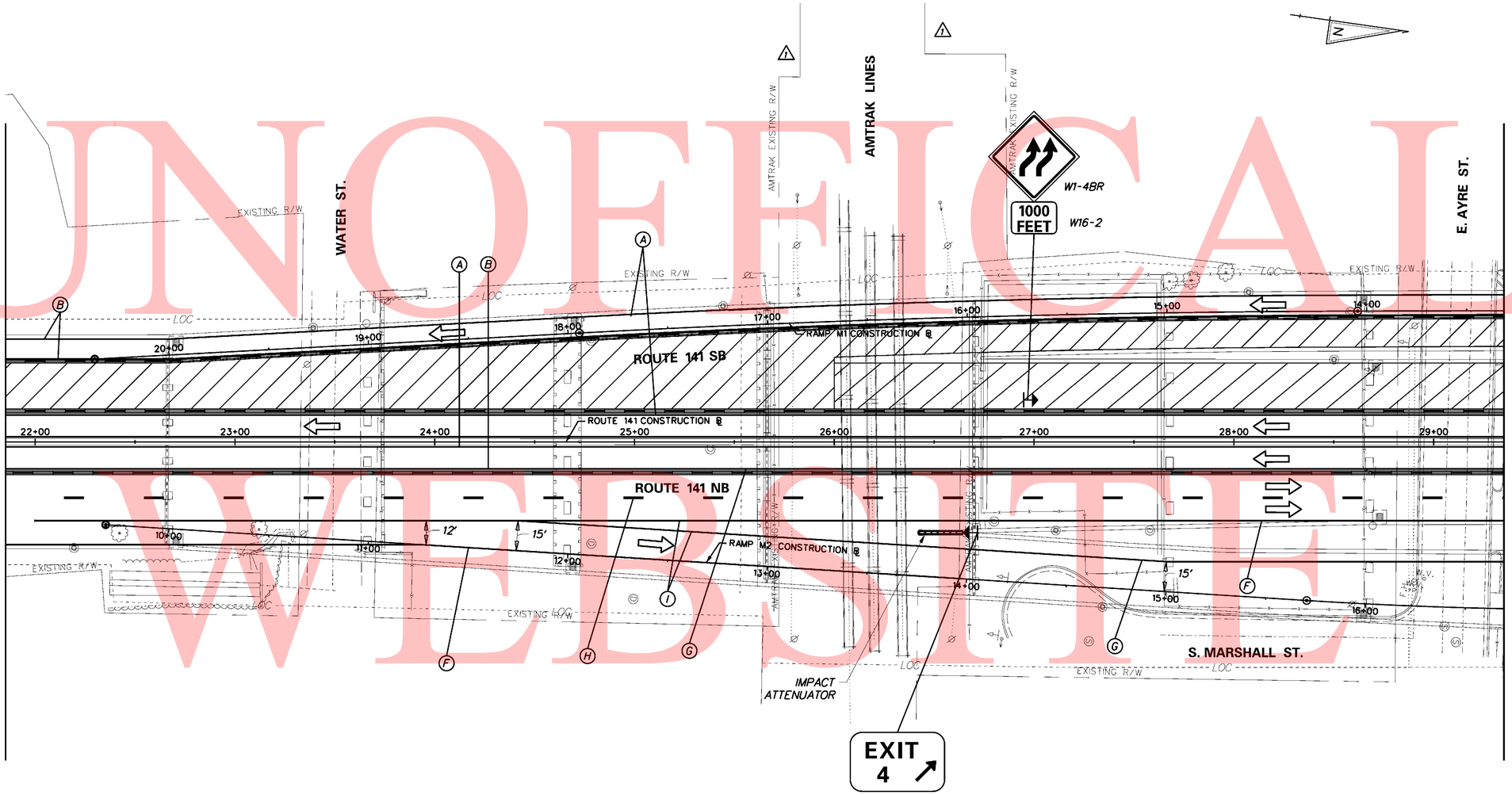

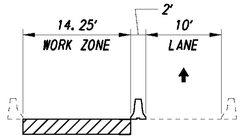

TYPICAL SECTION RAMP M-1
STA. 11+60 TO STA. 16+00

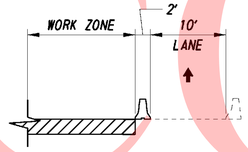

TYPICAL SECTION RAMP M-1
STA. 16+00 TO STA. 20+00

PHASE 4A

DELAWARE DEPARTMENT OF TRANSPORTATION	ADDENDUMS / REVISIONS	SCALE 0 30 60 90 FEET	REHABILITATION OF BRIDGE 1-501 ROUTE 141 OVER SR 4, LOCAL ROADS, AMTRAK AND THE CHRISTINA RIVER	CONTRACT T200907403	BRIDGE NO. 1-501	CONSTRUCTION PHASING MOT AND EROSION CONTROL PLAN	SHEET NO. 206
	ADDENDUM NO. 1 MODIFY RIGHT OF WAY 1/18/11 NAS			COUNTY NEW CASTLE	DESIGNED BY: EVS CHECKED BY: KJO		TOTAL SHTS. 253

G:\60098167\CIVIL\PLANS\CPY\206-CS97.DGN

UNOFFICAL WEBSITE COPY

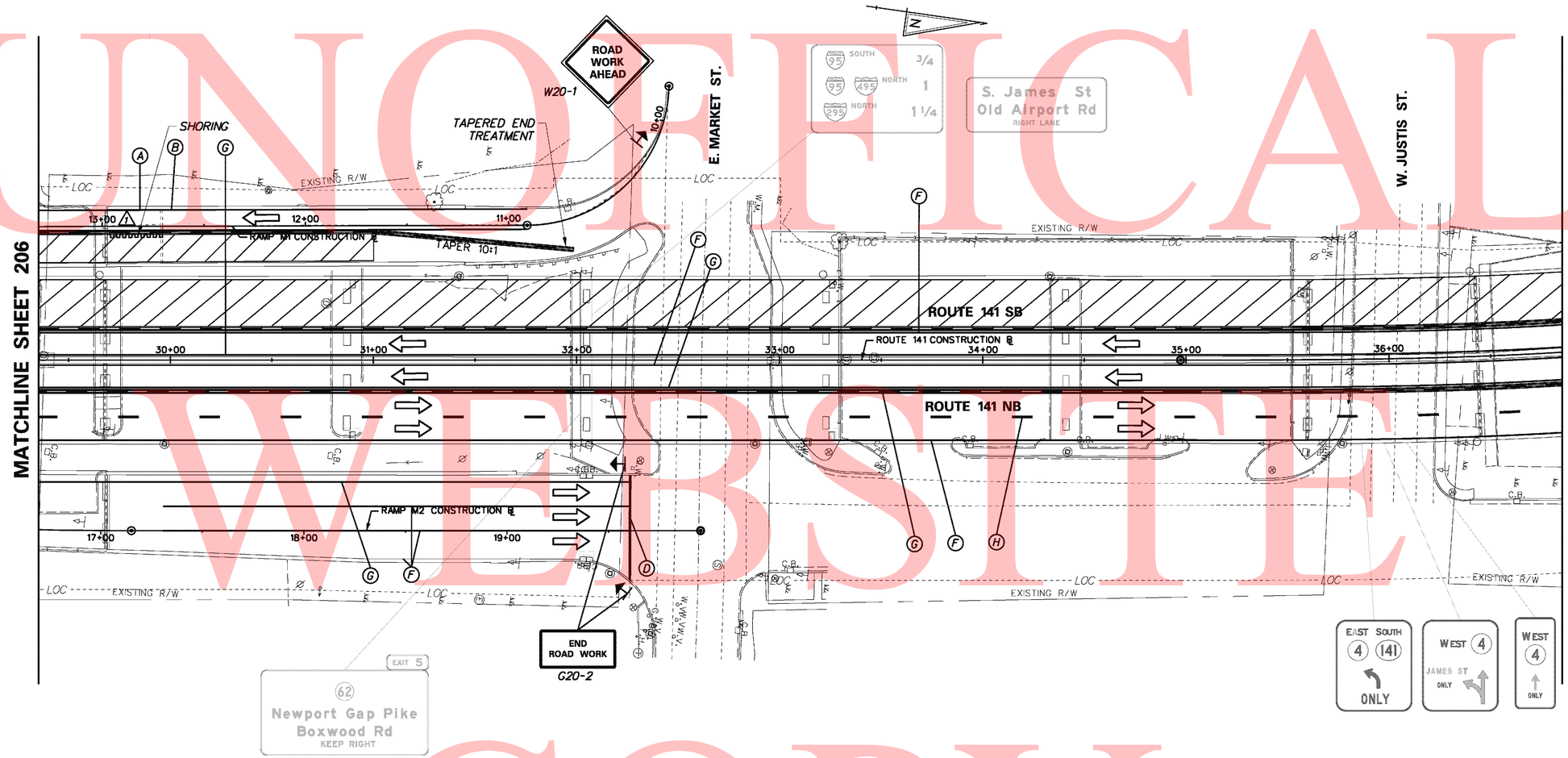

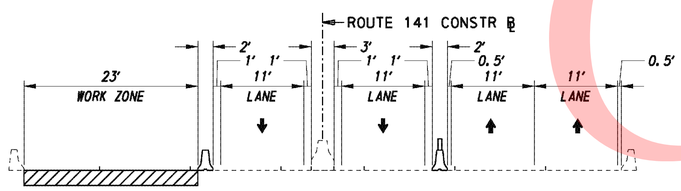

TYPICAL SECTION ROUTE 141
STA. 26+70 TO STA. 38+67

PHASE 4A

G:\60098167\CIVIL\PLANS\CP\207-CS98.DGN

DELAWARE DEPARTMENT OF TRANSPORTATION	ADDENDUMS / REVISIONS ADDENDUM NO. 1 INDICATED EXCAVATION SUPPORT 2/1/11 NAS	SCALE 0 30 60 90 FEET	**REHABILITATION OF BRIDGE 1-501 ROUTE 141 OVER SR 4, LOCAL ROADS, AMTRAK AND THE CHRISTINA RIVER**	CONTRACT T200907403 COUNTY NEW CASTLE	BRIDGE NO. 1-501 DESIGNED BY: EVS CHECKED BY: KJO	**CONSTRUCTION PHASING MOT AND EROSION CONTROL PLAN**	SHEET NO. 207 TOTAL SHTS. 253

UNOFFICIAL WEBSITE COPY

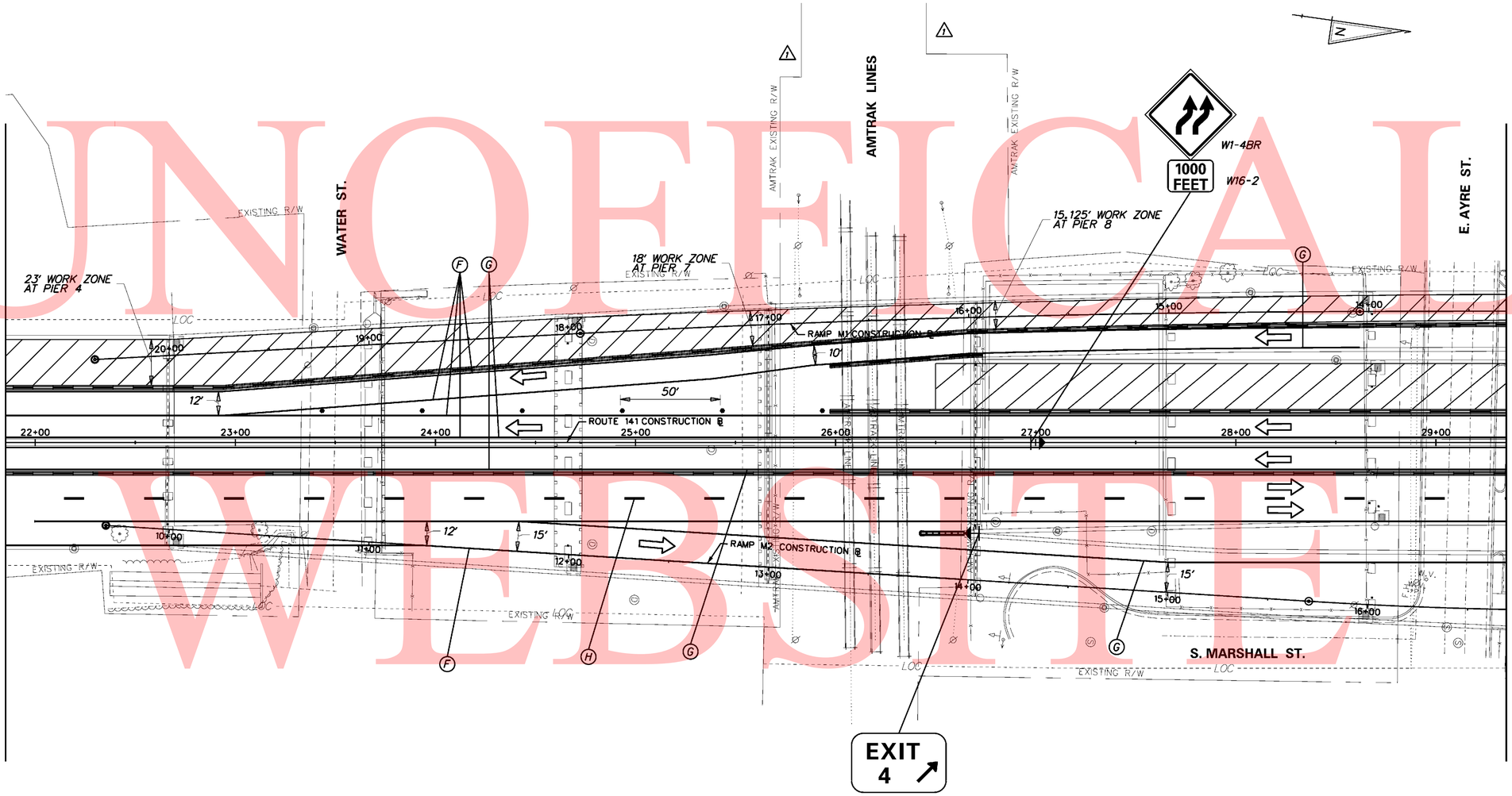

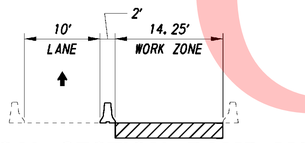

TYPICAL SECTION RAMP M1
STA. 11+60 TO STA. 16+00

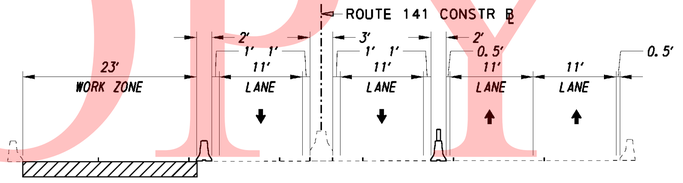

TYPICAL SECTION ROUTE 141
STA. 26+70 TO STA. 38+50

PHASE 4B

DELAWARE DEPARTMENT OF TRANSPORTATION	ADDENDUMS / REVISIONS ADDENDUM NO. 1 MODIFY RIGHT OF WAY AND UTILITIES 1/18/11 NAS	SCALE 0 30 60 90 FEET	REHABILITATION OF BRIDGE 1-501 ROUTE 141 OVER SR 4, LOCAL ROADS, AMTRAK AND THE CHRISTINA RIVER	CONTRACT T200907403 COUNTY NEW CASTLE	BRIDGE NO. 1-501 DESIGNED BY: EVS CHECKED BY: KJO	CONSTRUCTION PHASING MOT AND EROSION CONTROL PLAN	SHEET NO. 210 TOTAL SHTS. 253

G:\60098167\CIVIL\PLANS\CPX\210-CS87.DGN

UNOFFICAL WEBSITE COPY

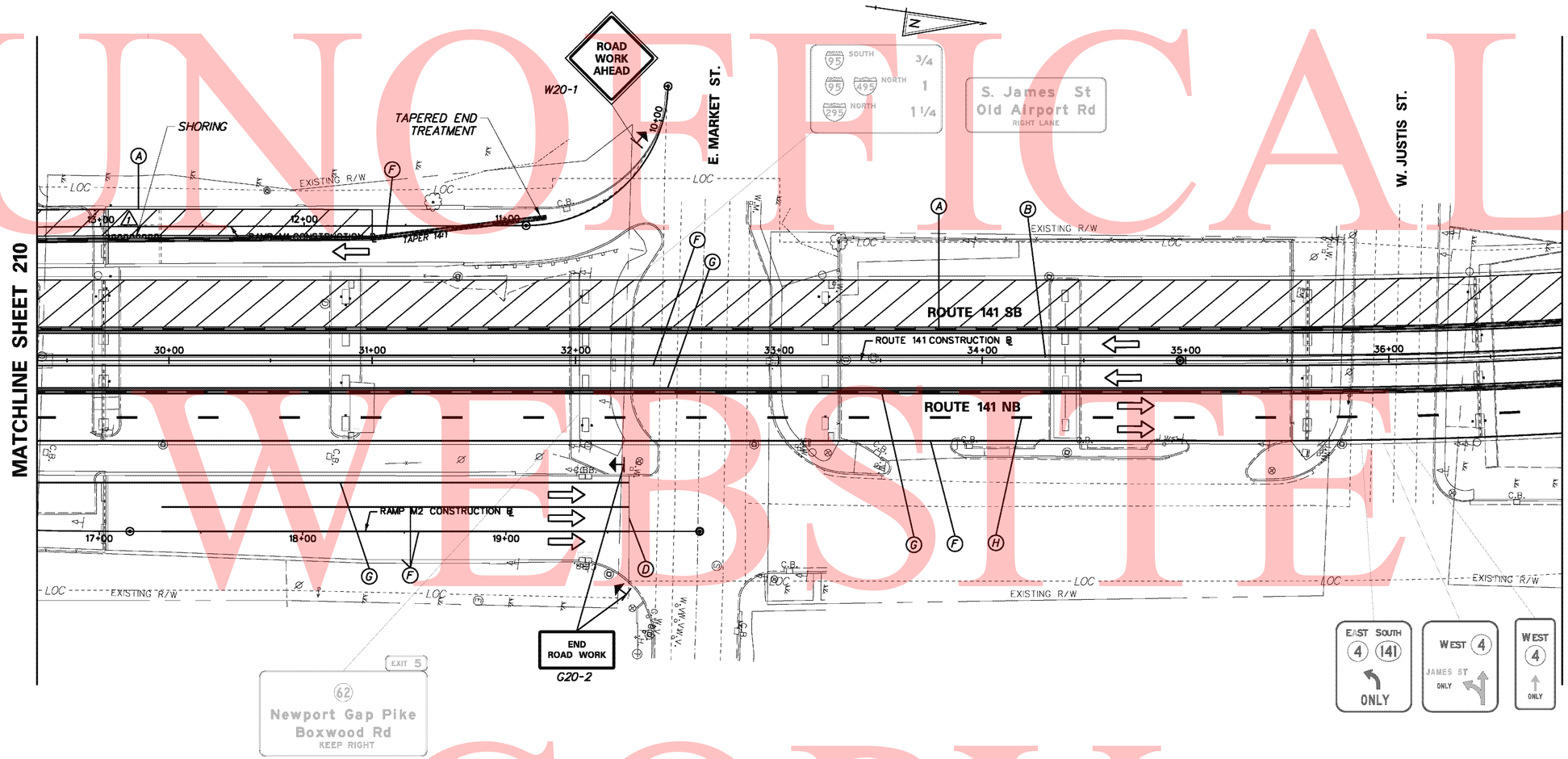

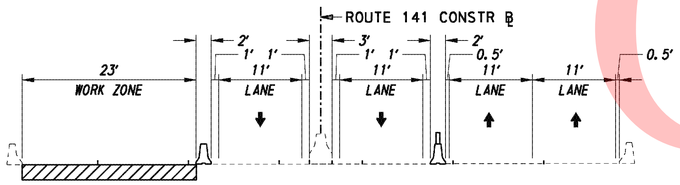

TYPICAL SECTION ROUTE 141
STA. 26+70 TO STA. 38+50

PHASE 4B

DELAWARE
DEPARTMENT OF TRANSPORTATION

ADDENDUMS / REVISIONS	
ADDENDUM NO. 1	
INDICATED EXCAVATION SUPPORT	
2/1/11 NAS	

SCALE
0 30 60 90
FEET

REHABILITATION OF BRIDGE 1-501
ROUTE 141 OVER SR 4, LOCAL ROADS, AMTRAK AND THE CHRISTINA RIVER

CONTRACT	T200907403
COUNTY	NEW CASTLE

BRIDGE NO.	1-501
DESIGNED BY:	EVS
CHECKED BY:	KJO

CONSTRUCTION PHASING MOT AND EROSION CONTROL PLAN

SHEET NO.	211
TOTAL SHTS.	253

G:\60098167\CIVIL\PLANS\CP-211-CS88.DGN

UNOFFICIAL WEBSITE COPY

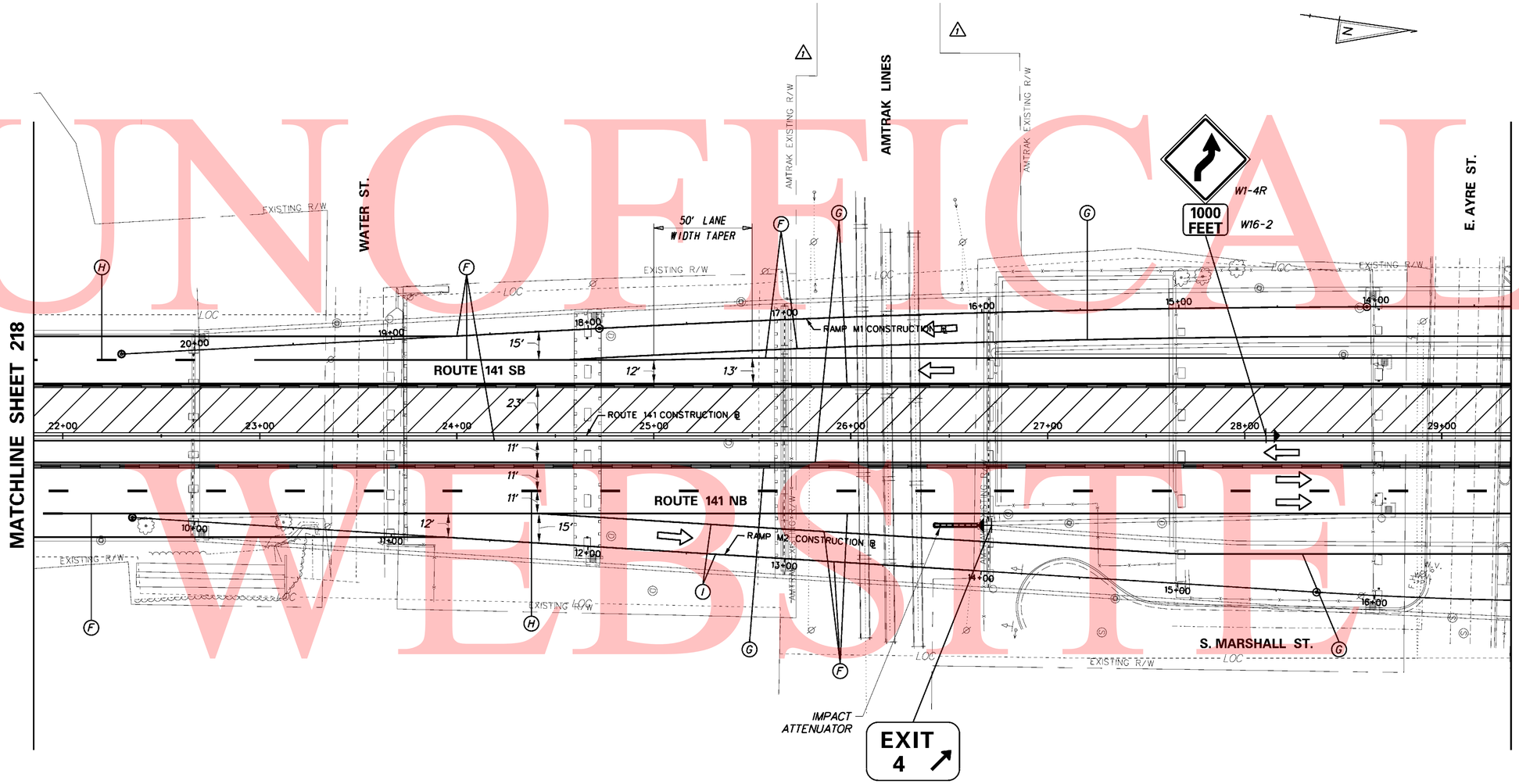

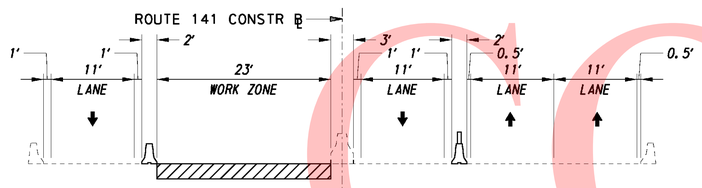

TYPICAL SECTION ROUTE 141
STA. 26+70 TO STA. 38+50

PHASE 5

DELAWARE DEPARTMENT OF TRANSPORTATION	ADDENDUMS / REVISIONS ADDENDUM NO. 1 MODIFY RIGHT OF WAY 1/18/11 NAS	SCALE 0 30 60 90 FEET	**REHABILITATION OF BRIDGE 1-501 ROUTE 141 OVER SR 4, LOCAL ROADS, AMTRAK AND THE CHRISTINA RIVER**	CONTRACT T200907403 COUNTY NEW CASTLE	BRIDGE NO. 1-501 DESIGNED BY: EVS CHECKED BY: KJO	**CONSTRUCTION PHASING MOT AND EROSION CONTROL PLAN**	SHEET NO. 219 TOTAL SHTS. 253

G:\60098167\CIVIL\PLANS\CPX219-CS146.DGN

UNOFFICAL WEBSITE COPY

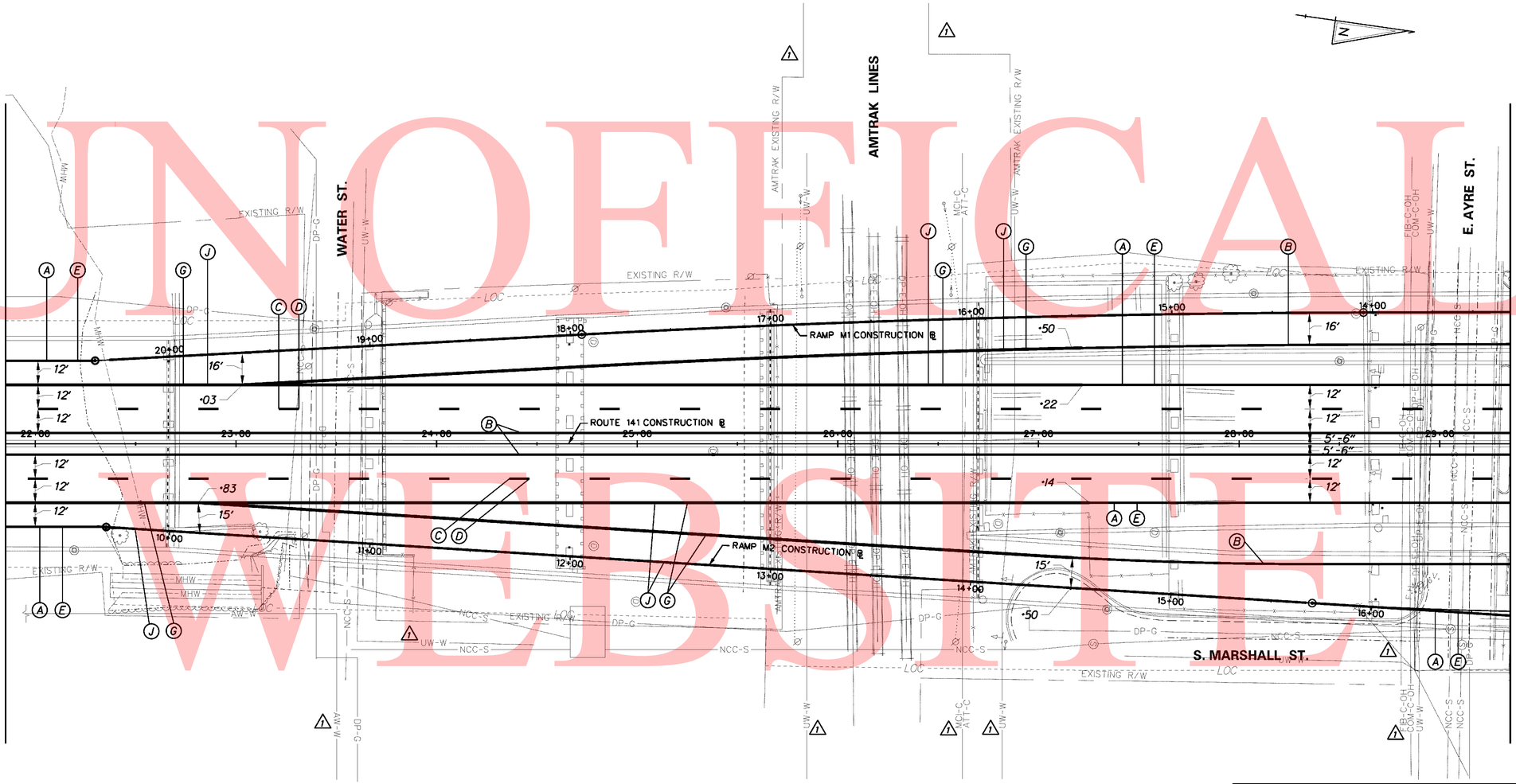

PAVEMENT MARKINGS LEGEND

SYMBOL	ITEM	QUANTITY
(A)	6" SOLID WHITE EPOXY RESIN PAVEMENT STRIPING (ITEM 748507)	1,925 LF
(B)	6" SOLID YELLOW EPOXY RESIN PAVEMENT STRIPING (ITEM 748507)	1,923 LF
(C)	6" DASHED WHITE EPOXY RESIN PAVEMENT STRIPING, 10' LINE & 30' GAP (ITEM 748507)	375 LF
(D)	10" DASHED BLACK EPOXY RESIN PAVEMENT STRIPING, 10' LINE & 30' GAP (ITEM 748538)	375 LF
(E)	10" SOLID BLACK EPOXY RESIN PAVEMENT STRIPING (ITEM 748538)	1,925 LF
(F)	16" DASHED BLACK EPOXY RESIN PAVEMENT STRIPING, 3' LINE & 9' GAP (ITEM 748540)	0 LF
(G)	12" SOLID WHITE EPOXY RESIN PAVEMENT STRIPING (ITEM 748509)	1,930 LF
(H)	12" DASHED WHITE EPOXY RESIN PAVEMENT STRIPING, 3' LINE & 9' GAP (ITEM 748509)	0 LF
(I)	16" SOLID WHITE EPOXY RESIN PAVEMENT STRIPING (ITEM 748510)	0 LF
(J)	16" SOLID BLACK EPOXY RESIN PAVEMENT STRIPING (ITEM 748540)	1930 LF

DELAWARE
DEPARTMENT OF TRANSPORTATION

ADDENDUMS / REVISIONS	
ADDENDUM NO. 1	
MODIFY RIGHT OF WAY AND UTILITIES	
1/18/11 NAS	

SCALE
0 30 60 90
FEET

REHABILITATION OF BRIDGE 1-501
ROUTE 141 OVER SR 4, LOCAL ROADS, AMTRAK AND THE CHRISTINA RIVER

CONTRACT	BRIDGE NO.	1-501
T200907403	DESIGNED BY:	DS
COUNTY	CHECKED BY:	EVS
NEW CASTLE		

SIGNING, STRIPING & CONDUIT PLAN

SHEET NO.
236
TOTAL SHTS.
253

G:\60098167\CIVIL\PLANS\CPY\236-SS05.DGN

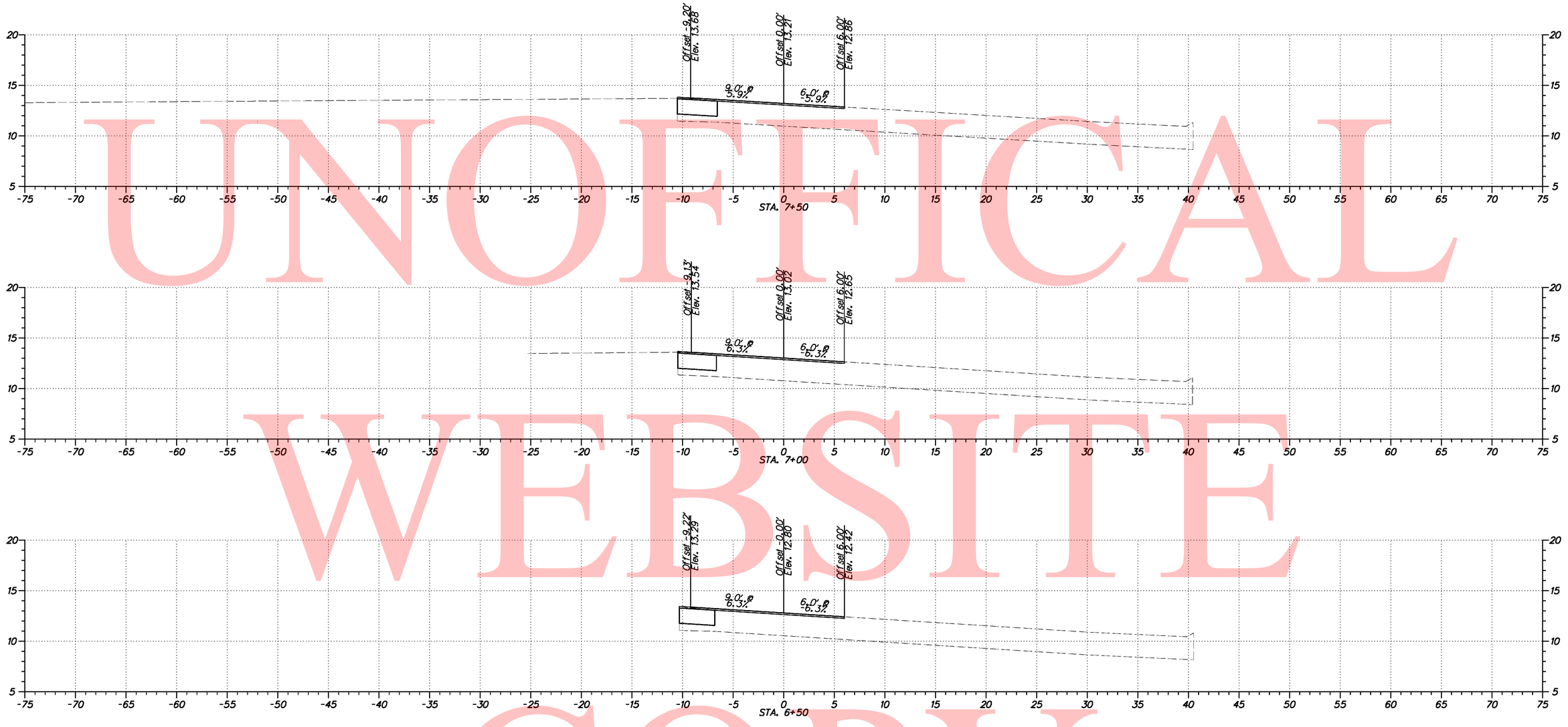

UNOFFICAL WEBSITE COPY

DELAWARE
DEPARTMENT OF TRANSPORTATION

ADDENDUMS / REVISIONS	
ADDENDUM NO. 1	
DELETED CROSS SECTION	
2/1/11 NAS	

REHABILITATION OF BRIDGE 1-501
SR 141 OVER SR 4, LOCAL ROADS, AMTRAK AND THE CHRISTINA RIVER

CONTRACT	BRIDGE NO.	1-501
T200907403	DESIGNED BY: SEL	
COUNTY	CHECKED BY: KJO	
NEW CASTLE		

CROSS SECTIONS
STA. 6+00 TO STA. 7+50
NB CROSSOVER

SHEET NO.
242
TOTAL SHTS.
253

station range sheet number total sheets

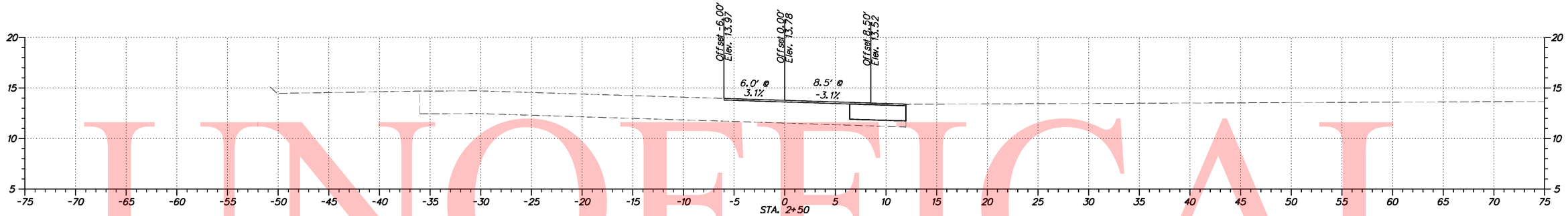

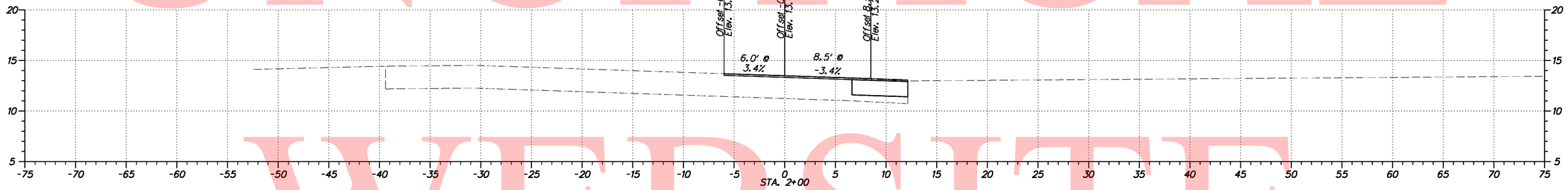

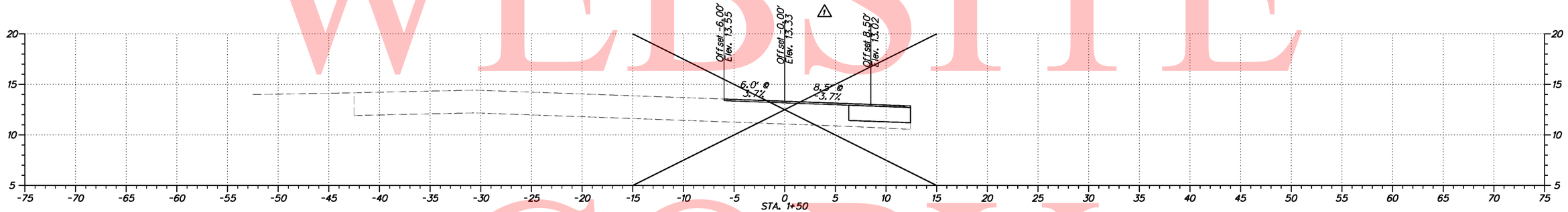

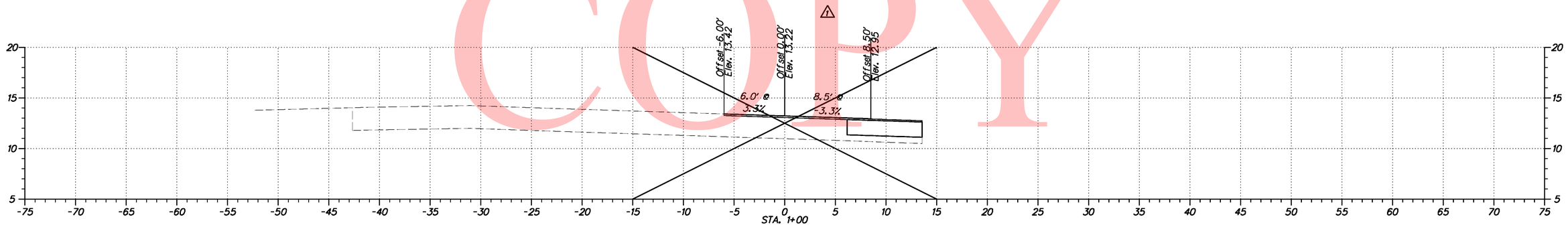

UNOFFICAL WEBSITE COPY

DELAWARE
DEPARTMENT OF TRANSPORTATION

ADDENDUMS / REVISIONS	
ADDENDUM NO. 1	
DELETED CROSS SECTION	
2/1/11 NAS	

SCALE
0 5 10 15
FEET

REHABILITATION OF BRIDGE 1-501 SR 141 OVER SR 4, LOCAL ROADS, AMTRAK AND THE CHRISTINA RIVER

CONTRACT	BRIDGE NO.	1-501
T200907403	DESIGNED BY: SEL	
COUNTY	CHECKED BY: KJO	
NEW CASTLE		

CROSS SECTIONS
STA. 1+00 TO STA. 2+50
SB CROSSOVER

SHEET NO.
247
TOTAL SHTS.
253

station range sheet number total sheets

ITEM	201000	202000	202536	207000	207501	209003	209008	211000	211002	251000	252002	254000	268000	269000	302005	401502	401654	401663	401699	401708	501012	601502	602013	602014
ITEM TITLE	CLEARING AND GRUBBING	EXCAVATION AND EMBANKMENT	SITE SAFETY PLAN	EXCAVATION AND BACKFILL FOR STRUCTURES	SHEETING AND SHORING	BORROW, TYPE C	BORROW, TYPE A	REMOVAL OF STRUCTURES AND OBSTRUCTIONS	REMOVAL OF STRUCTURES AND OBSTRUCTIONS (GUARDRAIL)	SILT FENCE	INLET SEDIMENT CONTROL, AT GRADE INLET	STONE CHECK DAM	STABILIZED CONSTRUCTION ENTRANCE	TURBIDITY CURTAIN, FLOATING	GRADED AGGREGATE BASE COURSE, TYPE B	ASPHALT CEMENT COST ADJUSTMENT	SUPERPAVE, TYPE B HOT-MIX, 160 GYRATIONS, PG 70-22	SUPERPAVE, BITUMINOUS CONCRETE BASE COURSE, 160 GYRATIONS, PG 64-22	QUALITY CONTROL/QUALITY ASSURANCE OF BITUMINOUS CONCRETE	SUPERPAVE, TYPE C HOT-MIX, 160 GYRATIONS, PG 70-22 (NON-CARBONATE STONE)	PORTLAND CEMENT CONCRETE PAVEMENT, 14"	TEMPORARY PROTECTIVE SHIELD	PORTLAND CEMENT CONCRETE MASONRY, SUPERSTRUCTURE, CLASS D	PORTLAND CEMENT CONCRETE MASONRY, APPROACH SLAB, CLASS D
UNIT	LS	CY	LS	CY	LS	CY	TON	LS	LF	LF	EACH	TON	TON	LF	TON	NONE	TON	TON	N/A	TON	SY	LS	CY	CY
QUANTITY	1	~~7770~~ 9949 Δ1	1	407	1	855	~~35~~ 80 Δ1	1	2140	95	8	3	113	720	~~5070~~ 5115 Δ1	0	2075	4680	1	1545	~~85~~ 195 Δ1	1	192	329

ITEM	602015	602017	602518	602546	602574	602575	602576	602577	602579	602580	602586	602611	602697	602698	602709	602783	602784	603000	604000	605512	605522	605584	605585	605589
ITEM TITLE	PORTLAND CEMENT CONCRETE MASONRY, ABUTMENT ABOVE FOOTING, CLASS A	PORTLAND CEMENT CONCRETE MASONRY, PARAPET, CLASS A	WATER BASED ACRYLIC CONCRETE SEALER	WATERPROOFING PCC MASONRY	DECK REPAIR, ¼" TO 1" DEPTH	DECK REPAIR, 1" TO 3" DEPTH	DECK REPAIR, 3" TO (FULL DEPTH	DECK REPAIR, FULL DEPTH	DRILLING HOLES AND INSTALLING DOWELS	PARTIAL REMOVAL OF PCC MASONRY	REHABILITATION OF CONCRETE STRUCTURES	REPAIR OF CONCRETE STRUCTURES BY EPOXY INJECTION	FURNISHING LOW PERMEABILITY CONCRETE OVERLAY	CONSTRUCTING LOW PERMEABILITY CONCRETE OVERLAY	REPAIRING EXISTING P.C.C. STRUCTURES	REPAIRING EXISTING P.C.C. STRUCTURES, IN SPLASH ZONE OR UNDERWATER	REHABILITATION OF CONCRETE STRUCTURES, IN SPLASH ZONE OR UNDERWATER	BAR REINFORCEMENT	BAR REINFORCEMENT, EPOXY COATED	PREFABRICATED EXPANSION JOINT SYSTEM, 4"	URETHANE PAINT SYSTEM, EXISTING STEEL	STEEL STRUCTURE REPAIR	STEEL STRUCTURE REPAIR	EXPANSION JOINT SYSTEM
UNIT	CY	CY	SF	SF	SF	SF	SF	SF	EACH	CY	CF	LF	CY	SY	CF	CF	CF	LB	LB	LF	LS	LB	LS	LS
QUANTITY	83	235	50840	28592	15	36	127	23	545	499	245	4478	1225	22038	401	489	571	59646	77918	827	1	45650	1	1

ITEM	605601	605618	605629	605651	605656	605689	605690	605724	614202	701010	701012	705001	710502	713002	715001	720005	720033	720050	720052	720506	720526	720527	720531	720532
ITEM TITLE	REPLACING BRIDGE BEARINGS	CLEANING EXISTING STEEL STRUCTURES BY VACUUM POWER TOOLS, (HAZARDOUS)	CLEANING EXISTING STEEL STRUCTURES, HAZARDOUS BASE	REPLACING BRIDGE BEARINGS, SPECIAL	CLEANING BRIDGE DRAINS	ANCHOR BOLT REPAIR	COATING WARRANTY	INSTALL STRUCTURE MOUNTED SIGNS	CORRUGATED ALUMINUM PIPE, 18", 14 GAGE, 2 2/3" X 1/2" CORRUGATION	PORTLAND CEMENT CONCRETE CURB, TYPE 1	PORTLAND CEMENT CONCRETE CURB, TYPE 3	P.C.C. SIDEWALK, 4"	ADJUSTING CATCH BASINS	GEOTEXTILES, SEPARATION	PERFORATED PIPE UNDERDRAIN, 6"	STEEL RAIL ELEMENT, STRAIGHT	GALVANIZED W-BEAM OFFSET BLOCK	GALVANIZED STEEL BEAM GUARDRAIL, TYPE 1	GALVANIZED STEEL BEAM GUARDRAIL, TYPE 3	RELOCATING PORTABLE P.C.C. SAFETY BARRIER	FURNISHING PORTABLE P.C.C. STRUCTURE MOUNTED SAFETY BARRIER	PLASTIC DRUMS	GLARE SCREEN	INSTALL PORTABLE IMPACT ATTENUATOR
UNIT	EACH	SF	SF	EA	LS	EACH	N/A	LS	LF	LF	LF	SF	EACH	SY	LF	LF	EACH	LF	LF	LF	LF	EA-DY	LF	EACH
QUANTITY	192	6120	208300	12	1	80	1	1	54	415	1245	615	4	300	4820	100	24	500	1575	15587	1116	111670	4656	12

LEGEND:

C FEDERAL AID FUNDED BRIDGE CONSTRUCTION
• FIXED QUANTITY ITEM# REFER TO SECTION 109.06 OF THE STANDARD SPECIFICATIONS
•• FIXED PRICE ITEM

UNOFFICIAL WEBSITE COPY

DELAWARE DEPARTMENT OF TRANSPORTATION	ADDENDUMS / REVISIONS		REHABILITATION OF BRIDGE 1-501 ROUTE 141 OVER SR 4, LOCAL ROADS, AMTRAK AND THE CHRISTINA RIVER	CONTRACT T200907403	BRIDGE NO. 1-501	QUANTITIES-1	SHEET NO. 252
	ADDENDUM NO. Δ1				DESIGNED BY: DPR/JRM		TOTAL SHTS. 253
	MODIFY ITEMS 202000, 209008, 302005			COUNTY NEW CASTLE	CHECKED BY: NAS		
	AND 501012						
	2/1/11 NAS						

G:\60098167\CIVIL\PLANS\CP\252-QT01.DGN

ITEM	720534	720539	720552	720554	720567	720620	720621	720624	720636	720660	720661	725001	725002	727004	727006	727520	727547	733001	734013	734017	734018	734521	742500	742514
ITEM TITLE	FURNISH PORTABLE IMPACT ATTENUATOR	RELOCATE PORTABLE IMPACT ATTENUATOR	REFLECTOR PANELS	IMPACT ATTENUATOR, TYPE III	FURNISH AND MAINTAIN PORTABLE P.C.C. SAFETY BARRIER	FURNISH AND MAINTAIN PINNED PORTABLE P.C.C. SAFETY BARRIER, SINGLE FACE	RELOCATING PINNED PORTABLE P.C.C. SAFETY BARRIER	REMOVE AND REINSTALL W-BEAM FOR GUARDRAIL	FURNISH AND MAINTAIN PINNED PORTABLE P.C.C. SAFETY BARRIER, DOUBLE FACE	INSTALL PORTABLE IMPACT ATTENUATOR, DOUBLE WIDE	FURNISH PORTABLE IMPACT ATTENUATOR, DOUBLE WIDE	GUARDRAIL TO BARRIER CONNECTION (EXIT TYPE)	GUARDRAIL TO BARRIER CONNECTION, APPROACH TYPE 1	CHAIN-LINK FENCE, 6' HIGH	TERMINAL POSTS FOR 6' CHAIN-LINK FENCE	CONSTRUCTION SAFETY FENCE	REMOVAL OF FENCE	TOPSOILING, 4" DEPTH	PERMANENT GRASS SEEDING, DRY GROUND	TEMPORARY GRASS SEEDING, DRY GROUND	TEMPORARY GRASS SEEDING, WET GROUND	WETLAND MITIGATION SEED MIX	FLAGGER, NEW CASTLE COUNTY, STATE	FLAGGER, NEW CASTLE COUNTY, STATE, OVERTIME
UNIT	EACH	EACH	EACH	EACH	LF	LF	LF	EACH	LF	LF	LF	EACH	EACH	LF	EA	LF	LF	SY	SY	SY	SY	SY	HOUR	HOUR
QUANTITY	7	10	80	1	8676	250	450	8	250	4	2	2	2	~~1090~~ 1330 (1)	~~18~~ (1)	2090	~~1090~~ 1330 (1)	3730	3610	3460	110	300	160	20

ITEM	743003	743004	743005	743501	743504	743507	743525	743537	744505	745523	745544	745546	746536	746596	748015	748020	748026	748507	748509	748526	748527	748530	748538	748540
ITEM TITLE	ARROWPANELS, TYPE C	FURNISH AND MAINTAIN PORTABLE CHANGEABLE MESSAGE SIGN	FURNISH AND MAINTAIN PORTABLE LIGHT ASSEMBLY	WARNING LIGHTS, TYPE B	WARNING SIGNS	TEMPORARY BARRICADE, TYPE III	TEMPORARY WARNING SIGNS	FURNISH AND MAINTAIN TRUCK MOUNTED ATTENUATOR, TYPE II	ADJUST OR REPAIR EXISTING CONDUIT JUNCTION WELL	SUPPLY OF 4" SCHEDULE 40 PVC CONDUIT	INSTALLATION OF CONDUIT IN UNPAVED TRENCH	INSTALLATION OF CONDUIT ON STRUCTURE	TEMPORARY LIGHTING	JUNCTION BOX ON STRUCTURE	PERMANENT PAVEMENT STRIPING SYMBOL/LEGEND ALKYD-THERMOPLASTIC	TEMPORARY MARKINGS, PAINT PAINT 6"	TEMPORARY MARKINGS, PAINT SYMBOL/LEGEND	PERMANENT PAVEMENT STRIPING, EPOXY RESIN PAINT, WHITE/YELLOW, 6"	PERMANENT PAVEMENT STRIPING, EPOXY RESIN PAINT, WHITE/YELLOW, 6"	TEMPORARY MARKINGS TAPE, 6"	TEMPORARY MARKINGS, TAPE, WORDS/SYMBOLS	REMOVAL OF PAVEMENT STRIPING	PERMANENT PAVEMENT STRIPING, EPOXY RESIN PAINT, BLACK, 10"	PERMANENT PAVEMENT STRIPING, EPOXY RESIN PAINT, BLACK, 16"
UNIT	EA-DY	EA-DY	EA-DY	EA-DY	EACH	LFDY	EA-DY	EA-DY	EA	LF	LF	LF	EACH	EA	SF	LF	SF	LF	LF	LF	SF	SF	LF	LF
QUANTITY	280	2022	200	60	393	12080	4280	140	2	45	15	30	1	1	60	95762	64	28500	6650	34836	64	75049	6450	2405

ITEM	749500	749502	758000	759501	760003	760504	760506	760508	762001	762002	763000	763500	763501	763502	763505	763508	763509	763522	763626	763652	763653		209013	
ITEM TITLE	SIGN PANEL	SIGN PANEL OVERLAYS ON EXISTING SIGN	REMOVAL OF EXISTING PORTLAND CEMENT CONCRETE PAVEMENT, CURBS, SIDEWALK, ETC.	FIELD OFFICE, SPECIAL, 1	PAVEMENT - MILLING, HOT MIX, VARIABLE DEPTH	RUMBLE STRIPS, HOT MIX	RUMBLE STRIPS, CONCRETE	PROFILE MILLING CONCRETE	SAW CUTTING, HOT MIX	SAW CUTTING, CONCRETE, FUL DEPTH	INITIAL EXPENSE	MAINTENANCE OF TRAFFIC	CONSTRUCTION ENGINEERING	MAINTENANCE OF RAILROAD TRAFFIC (AMTRAK)	TRAFFIC OFFICERS	PROJECT CONTROL SYSTEM DEVELOPMENT PLAN	CPM SCHEDULE UPDATES AND/OR REVISED UPDATES	COAST GUARD SPECIFIC CONDITIONS	DIESEL FUEL COST PRICE ADJUSTMENT	CLASS 1 TON TRUCK	CLASS 2 TON TRUCK	BORROW, TYPE F		
UNIT	SF	SF	SY	EA-MO	SY	LF	LF	SY/IN	LF	LF	LS	LS	LS	LS	HOUR	LS	EA-MO	LS	NONE	HR	EA		TON	
QUANTITY	140	320	115	31	1200	13052	8744	44076	12300	~~50~~ 115 (1)	1	1	1	1	1500	1	31	1	0	3373	62		360	

(1)

LEGEND:

C FEDERAL AID FUNDED BRIDGE CONSTRUCTION
* FIXED QUANTITY ITEM- REFER TO SECTION 109.06 OF THE STANDARD SPECIFICATIONS
** FIXED PRICE ITEM

UNOFFICIAL WEBSITE COPY

DELAWARE DEPARTMENT OF TRANSPORTATION

ADDENDUMS / REVISIONS	
ADDENDUM NO. (1)	
MODIFY ITEMS 727004, 727006, 727547	
AND 762002. ADDED ITEM 209013.	
1/18/11 NAS	

REHABILITATION OF BRIDGE 1-501 ROUTE 141 OVER SR 4, LOCAL ROADS, AMTRAK AND THE CHRISTINA RIVER

CONTRACT	T200907403	BRIDGE NO.	1-501
COUNTY	NEW CASTLE	DESIGNED BY:	DPR/JRM
		CHECKED BY:	NAS

QUANTITIES - 2

SHEET NO. 253
TOTAL SHTS. 253

G:\60098167\CIVIL\PLANS\CP\253-QT02.DGN