GENERAL NOTES

1. THIS PROJECT IS TO BE CONSTRUCTED IN ACCORDANCE WITH THE DELAWARE DEPARTMENT OF TRANSPORTATION "STANDARD SPECIFICATIONS", DATED AUGUST 2001 AND THE DELAWARE DEPARTMENT OF TRANSPORTATION "STANDARD CONSTRUCTION DETAILS", DATED 2001, INCLUDING ALL REVISIONS UP TO THE DATE OF ADVERTISEMENT.

2. THE CONTRACTOR SHALL GIVE TWO (2) WEEKS NOTICE TO THE PROPERTY OWNER WHEN ANY FIXTURE, SHRUB OR OTHER OBJECT MUST BE REMOVED FROM THE RIGHT OF WAY OR EASEMENT AREA. IF THE OWNER HAS NOT ATTEMPTED TO SALVAGE THIS PROPERTY, THE CONTRACTOR SHALL REMOVE IT WITHOUT OBLIGATION. COMPENSATION SHALL BE INCIDENTAL TO THE CONTRACT.

3. THE ENDS OF ALL CURBS SHALL BE DEPRESSED FLUSH WITH THE PAVEMENT AT A RATIO OF TWELVE TO ONE (12:1) UNLESS OTHERWISE DIRECTED BY THE ENGINEER.

4. THE CONTRACTOR SHALL PROVIDE AND INSTALL PVC SLEEVES (4" INSIDE MINIMUM DIAMETER, 6" INSIDE MAXIMUM DIAMETER) IN PROPOSED CONCRETE SIDEWALKS, ISLANDS, AND MEDIANS FOR FUTURE TRAFFIC SIGN POSTS AS DIRECTED BY THE ENGINEER. THE LOWER END OF THE SLEEVE SHALL SIT ON THE TOP OF THE SUBBASE MATERIAL. THE COST SHALL BE INCIDENTAL TO THE CONTRACT.

5. STAGING AREAS - PROPER EROSION AND SEDIMENT CONTROL MEASURES AS DETERMINED BY THE ENGINEER SHALL BE INSTALLED IN ALL STAGING AREAS. ALL AREAS USED BY THE CONTRACTOR FOR STAGING OPERATIONS SHALL BE FULLY RESTORED BY THE CONTRACTOR UPON COMPLETION OF THE CONTRACT. IF THE STAGING AREA IS PAVED, IT SHALL BE RESTORED TO ITS ORIGINAL CONDITION. IF THE AREA IS UNPAVED, IT SHALL BE RE-GRADED, TOPSOILED, SEEDED AND MULCHED IN ACCORDANCE WITH DELAWARE STANDARD SPECIFICATIONS 732, 734 AND 735, FOR TOPSOIL, SEED AND MULCH RESPECTIVELY, TO THE SATISFACTION OF THE ENGINEER. THE SEED SHALL ADHERE TO THE SPECIFICATIONS OF SECTION 734 FOR PERMANENT GRASS SEEDING - DRY GROUND. ALL COSTS ASSOCIATED WITH RESTORATION OF THE STAGING AREA SHALL BE AT THE CONTRACTOR'S EXPENSE. IF THE ENGINEER DETERMINES THAT A SATISFACTORY STAND OF GRASS DOES NOT EXIST AT THE TIME OF FINAL INSPECTION, ALL COSTS ASSOCIATED WITH REESTABLISHING A SATISFACTORY STAND OF GRASS SHALL BE AT THE CONTRACTOR'S EXPENSE.

6. SITE REVIEWER - AN EROSION CONTROL SITE REVIEWER SHALL BE A PERSON FROM THE CONTRACTOR'S STAFF ASSIGNED TO EROSION AND SEDIMENT CONTROL IMPLEMENTATION AND MAINTENANCE AND SHALL BE REQUIRED ON SPECIFIC PROJECTS. THE NAME AND DNREC CERTIFICATION NUMBER OF EACH SITE REVIEWER SO REQUIRED SHALL BE SUBMITTED TO THE DEPARTMENT.
4 ~~AT THE TIME OF BID.~~ THE NAME OF THE DELAWARE REGISTERED PROFESSIONAL ENGINEER PROVIDING DIRECTION AND SUPERVISION OF THE SITE REVIEWER, AS REQUIRED IN SECTION 12.3 OF THE DELAWARE SEDIMENT AND STORMWATER REGULATIONS, SHALL ALSO BE SUBMITTED TO THE DEPARTMENT. ~~AT THE TIME OF BID.~~ THE SITE REVIEWER REQUIREMENTS IN EFFECT ON THIS PROJECT SHALL BE MARKED WITH AN "X" BELOW:
4

EROSION POTENTIAL FOR THIS PROJECT	SITE REVIEWER REQUIREMENT
( ) INSIGNIFICANT	NONE
( ) MINOR	CONTRACTOR CERTIFICATION COURSE TRAINING ONLY, AS DEFINED IN SECTION 1.3 OF THE DELAWARE SEDIMENT AND STORMWATER REGULATIONS.
( ) MEDIUM	AT THE TIME OF BID OF THE CONTRACT, EITHER THE SUPERINTENDENT OR A SEPARATE INDIVIDUAL FROM THE CONTRACTOR'S STAFF SHALL BE A CERTIFIED CONSTRUCTION REVIEWER (CCR), AS DEFINED IN SECTION 12 OF THE DELAWARE SEDIMENT AND STORMWATER REGULATIONS.
(X) MAJOR	SUPERINTENDENT AND AN INDIVIDUAL FROM CONTRACTOR'S STAFF SHALL BE CCR. ONE INDIVIDUAL FROM THE CONTRACTOR'S STAFF MUST BE A CCR AT THE TIME OF BID OF THE CONTRACT. THE SUPERINTENDENT MUST BECOME A CCR WITHIN ONE YEAR AFTER THE AWARD OF CONTRACT.

7. ELECTRONIC PROJECT FILES THAT WILL BE MADE AVAILABLE TO THE CONTRACTOR INCLUDE:

( )	NONE
(X)	ASCII DATA FILES WITH COORDINATES AND ELEVATIONS FOR PROPOSED POINTS AS SELECTED BY THE ENGINEER.
(X)	RASTER FILES, IN .CAL FILE FORMAT, FOR ALL PLAN SHEETS.
( )	EXISTING DIGITAL TERRAIN MODEL, IN .DTM FILE FORMAT, COMPATIBLE WITH SOFTWARE CURRENTLY USED BY DELDOT.
( )	PROPOSED DIGITAL TERRAIN MODEL, IN .DTM FILE FORMAT, COMPATIBLE WITH SOFTWARE CURRENTLY USED BY DELDOT.
( )	DESIGN FILE, IN .DGN FILE FORMAT, CONTAINING ONLY THE PROPOSED 3D TRIANGLES OF THE PROPOSED DIGITAL TERRAIN MODEL (DTM).

8. AMERICAN TRAFFIC SAFETY SERVICES ASSOCIATION (ATSSA) CERTIFIED TRAFFIC CONTROL SUPERVISOR REQUIREMENT FOR THIS PROJECT.

( )	THE CONTRACTOR SHALL NOT BE REQUIRED TO HAVE AN ATSSA SUPERVISOR ASSIGNED TO THIS PROJECT.
( )	THE CONTRACTOR SHALL HAVE AN ATSSA SUPERVISOR ASSIGNED TO THIS PROJECT. THE CONTRACTOR'S GENERAL SUPERINTENDENT FOR THIS PROJECT OR ANOTHER ATSSA CERTIFIED MEMBER OF THE CONTRACTOR'S PROJECT STAFF MAY BE THE ATSSA SUPERVISOR.
(X)	THE CONTRACTOR SHALL HAVE AN ATSSA SUPERVISOR ASSIGNED TO THIS PROJECT. THE ATSSA SUPERVISOR'S SOLE JOB SHALL BE SUPERVISION OF THE INSTALLATION, OPERATION AND MAINTENANCE OF TRAFFIC CONTROL DEVICES FOR THIS PROJECT. THE CONTRACTOR'S GENERAL SUPERINTENDENT FOR THIS PROJECT SHALL NOT BE THE ATSSA SUPERVISOR.

9. THE DISTURBED AREA FOR THIS PROJECT IS 105.94 ACRES.

4 7B. SUPPORT OF EXCAVATION REQUIRED TO STAGE CONSTRUCTION TO ACCOMMODATE NEW CONSTRUCTION AND/OR TRAFFIC SEQUENCEING SHALL BE INCIDENTAL TO ITEM 202000.

PROJECT NOTES

SECTION 100

1. ANY DAMAGE TO ITEMS NOTED TO BE RELOCATED OR RESET BY THE CONTRACTOR, AT THE DISCRETION OF THE ENGINEER, SHALL BE REPAIRED AND/OR REPLACED IN KIND AT THE CONTRACTOR'S EXPENSE.

2. UNLESS OTHERWISE NOTED ON THE PLANS, THE CONTRACTOR SHALL, AS PART OF HIS PROJECT SCHEDULE, SUBMIT TO THE ENGINEER AN ESTIMATE OF THE MONTHLY PAYMENTS EXPECTED TO BE RECEIVED ON THE CONTRACT. THIS WILL BE REFERENCED AS THE "MONTHLY SPEND PAYMENT CHART".

   A CHART IN MICROSOFT EXCEL, MICROSOFT WORD, OR HAND WRITTEN FORMAT WILL BE ACCEPTABLE FOR THIS PURPOSE. THE CHART SHOULD INCLUDE, AS A MINIMUM, COLUMNS FOR THE MONTH, YEAR AND ESTIMATED MONTHLY PAYMENTS. THE TOTAL OF ALL ESTIMATED MONTHLY PAYMENTS SHOULD EQUAL THE AWARDED CONTRACT TOTAL BID PRICE.

   THE ENGINEER MAY REQUEST AN UPDATED "MONTHLY SPEND PAYMENT CHART" AT HIS DISCRETION, DEPENDING ON THE ACCURACY OF THE INITIAL ESTIMATES AND ACCORDING TO THE OVERALL NEEDS OF THE DEPARTMENT.

   THE "MONTHLY SPEND PAYMENT CHART" WILL NOT BE CONSIDERED A BINDING DOCUMENT BY EITHER THE CONTRACTOR OR THE DEPARTMENT AND IS CONSIDERED SOLELY INFORMATIONAL.

   ON PROJECTS REQUIRING CPM SCHEDULES, THE CONTRACTOR MAY, BUT IS NOT REQUIRED TO, "COST LOAD" THE CPM SCHEDULE IN ORDER TO GENERATE THE MONTHLY PAYMENT ESTIMATES.

   COSTS TO PREPARE AND/OR UPDATE THE "MONTHLY SPEND PAYMENT CHART" ARE ADDRESSED AS FOLLOWS:

   A. ON CONTRACTS REQUIRING CPM SCHEDULES AND UPDATES, PREPARATION OF THE INITIAL CHART SHALL BE INCIDENTAL TO ITEM 763508. UPDATES SHALL BE INCIDENTAL TO ITEM 763509.

   B. ON CONTRACTS NOT REQUIRING CPM SCHEDULES, THE COST TO PREPARE AND UPDATE THE "MONTHLY SPEND PAYMENT CHART" SHALL BE INCLUDED IN ITEM 763000 - INITIAL EXPENSE.

SECTION 200

3. THE ENGINEER MAY REQUIRE THE CONTRACTOR TO EXCAVATE TEST PITS ALONG PROPOSED DRAINAGE RUNS, AT POINTS OF POSSIBLE UTILITY CONFLICTS, TO DETERMINE IF A CONFLICT EXISTS. ANY CONFLICTS SHALL BE COORDINATED BY THE CONTRACTOR, WITH THE ENGINEER AND THE UTILITY COMPANY INVOLVED. THE ENGINEER SHALL ULTIMATELY DETERMINE THE SOLUTION TO THE UTILITY CONFLICT. TEST HOLES SHALL BE MEASURED AND PAID FOR IN ACCORDANCE WITH ITEM 208000 - EXCAVATION AND BACKFILL FOR PIPE TRENCHES, BUT ONLY TO THE ACTUAL DEPTH EXCAVATED.

4. ITEMS TO BE REMOVED UNDER ITEM 211000 - REMOVAL OF STRUCTURES AND OBSTRUCTIONS SHALL INCLUDE, BUT NOT BE LIMITED TO THE FOLLOWING:
   - POLE BASE EXCAVATION BEYOND THE LIMITS OF THE ROADWAY TEMPLATE EXCAVATION
   - BRIDGES
   - OVERHEAD SIGN STRUCTURES
   - CANTILEVER SIGN STRUCTURES
   - BRIDGE MOUNTED SIGN STRUCTURES
   - CONCRETE HEADWALLS
   - DRAINAGE MANHOLES
   - HIGH MAST LIGHTS

3 ITEMS REMOVED UNDER 211000 SHALL BE REMOVED TO THE LIMITS DESCRIBED IN STANDARD SPECIFICATION 211000 OR TO A DEPTH OF 3' BELOW PROPOSED GRADE, WHICHEVER IS GREATER.

5. LIMITS OF REMOVAL SHALL INCLUDE ALL ABOVE GROUND FEATURES AND FOUNDATIONS TO A POINT 3' BELOW FINISHED GRADE, UNLESS OTHERWISE NOTED IN THE PLANS. EXISTING DRAINAGE PIPES SHALL BE REMOVED WHERE SHOWN ON PLANS AND PAYMENT SHALL BE INCIDENTAL TO ITEM 202000, EXCAVATION AND EMBANKMENT. ALL EXISTING OVERHEAD, CANTILEVER, AND BRIDGE MOUNTED SIGN PANELS AND SIGN STRUCTURES SHALL BECOME THE PROPERTY OF THE CONTRACTOR FOLLOWING REMOVAL.

6. THIS PROJECT IS COVERED UNDER AN NPDES GENERAL PERMIT FOR CONSTRUCTION. UNDER THE GENERAL PERMIT, COMPLIANCE WITH DELDOT'S APPROVED SEDIMENT AND STORMWATER MANAGEMENT PLANS WILL CONSTITUTE COMPLIANCE WITH THE NPDES INDUSTRIAL PERMITTING REQUIREMENTS FOR THIS CONSTRUCTION PROJECT. A COPY OF THE NPDES GENERAL PERMIT AND NOI IS KEPT ON FILE IN EACH OF THE CONSTRUCTION OFFICES AND THE DEPARTMENT'S TEAM SUPPORT SECTION. A COPY OF THE GENERAL PERMIT OR THE NOI CAN BE OBTAINED UPON REQUEST FROM EITHER THE DEPARTMENT'S STORMWATER ENGINEER OR THE APPROPRIATE CONSTRUCTION ENGINEER.

4 7. ALL EXISTING DRAINAGE SYSTEMS SHOWN WITHIN THE RIGHT-OF-WAY ARE TO REMAIN OPERATIONAL UNLESS DENOTED FOR ABANDONMENT AT THE END OF THIS PROJECT'S CONSTRUCTION. ALL EXISTING DRAINAGE STRUCTURES AND PIPES WITHIN THE PROJECT LIMITS SHALL BE CLEANED OF ALL SEDIMENT AND DEBRIS IN COMPLIANCE WITH DNREC GUIDELINES AS DIRECTED BY THE ENGINEER. COST TO BE INCLUDED IN ~~ITEM 250000, SEDIMENT REMOVAL.~~ ITEMS 612535, 612536 AND 612537.

3 7A. "SUPPORT OF EXCAVATION IS ANTICIPATED. THE CONTRACTOR SHALL SUBMIT DETAILED LAYOUT, WORKING DRAWINGS AND CALCULATIONS FOR APPROVAL IN ACCORDANCE WITH THE REQUIREMENTS OF SECTION 207.04"

SECTION 300

8. A. THE CONTRACTOR MAY ELECT TO USE ANY OF THE FOLLOWING MATERIALS TO MEET THE REQUIREMENTS OF ITEM 302007 - GRADED AGGREGATE BASE COURSE, TYPE 'B':
      a. CRUSHED STONE (PER STANDARD SPECIFICATION 821)
      b. CRUSHED CONCRETE (PER STANDARD SPECIFICATION 821)
      c. HOT-MIX MILLINGS (PER SPECIAL PROVISION 302514 MILLED HOT-MIX BASE COURSE)

      THE CONTRACTOR WILL NOT BE ALLOWED TO MIX DIFFERENT MATERIALS (OR SIMILAR MATERIALS FROM DIFFERENT SOURCES) TO MEET THE REQUIREMENTS OF ITEM 302007 - GRADED AGGREGATE BASE COURSE, TYPE 'B'.

      ALL OF THE ABOVE LISTED MATERIALS ARE PERMITTED FOR USE ON THE JOB, PROVIDED THEY ARE SEPARATED INTO APPROVED AREAS. EACH AREA OF BASE COURSE MUST BE CONSTRUCTED USING MATERIALS FROM A SINGULAR SOURCE, FULL DEPTH, IN ORDER THAT PROPER TESTING MAY BE ACCOMPLISHED. THE CONTRACTOR AND DELDOT'S PROJECT ENGINEER SHALL AGREE ON THE LIMITS OF EACH SOURCE OF MATERIAL PRIOR TO PLACEMENT.

   B. THE QUANTITY USED FOR BASE OF EACH OF THE ABOVE LISTED MATERIALS WILL BE THE CONTRACTOR'S CHOICE, WITH THE TOTAL MEETING THE ADVERTISED QUANTITY OF ITEM 302007 - GRADED AGGREGATE BASE COURSE, TYPE 'B'.

   C. THE CONTRACTOR MAY ALSO ELECT TO RECYCLE MILLINGS FOR USE IN HOT-MIX AS PERMITTED BY THE STANDARD SPECIFICATIONS. THE CHOICE OF THE QUANTITY OF MILLINGS USED FOR THIS PURPOSE, OR FOR BASE COURSE, LIES WITH THE CONTRACTOR. ALL MILLING MATERIAL SHALL BECOME PROPERTY OF THE CONTRACTOR.

   D. HOT-MIX MILLINGS MAY BE GENERATED FROM THE FOLLOWING SOURCES:
      a. MATERIAL MADE AVAILABLE WHEN MILLED ON THIS CONTRACT UNDER ITEM 760507.
      b. MATERIAL MILLED ON THIS CONTRACT AT THE CONTRACTOR'S CHOICE UNDER ITEM 202000.
      c. MILLED MATERIAL FURNISHED ON THE JOB FROM THE CONTRACTOR'S YARD OR OTHER OUTSIDE SOURCE.
   ALL MILLED MATERIALS SHALL MEET THE MATERIAL REQUIREMENTS OF ITEM 302514 - MILLED HOT-MIX BASE COURSE.

   E. PAYMENT CLARIFICATION:
      a. SHOULD THE CONTRACTOR ELECT TO MILL PORTIONS OF HOT-MIX SHOWN ON THE PLANS TO BE REMOVED UNDER ITEM 202000 - EXCAVATION AND EMBANKMENT THE COST OF MILLING THIS HOT-MIX WILL BE PAID AS ITEM 202000 - EXCAVATION AND EMBANKMENT. THE MILLINGS GENERATED MAY BE RECYCLED INTO HOT-MIX, UTILIZED FOR BASE COURSE, OR DISPOSED OF TO AN APPROVED SITE. HAULING COSTS FOR DISPOSAL AND/OR RECYCLING ARE INCIDENTAL TO ITEM 202000 - EXCAVATION AND EMBANKMENT.
      b. MILLINGS GENERATED UNDER ITEM 760507 - PROFILE MILLING, HOT-MIX MAY BE RECYCLED INTO HOT-MIX, UTILIZED FOR BASE COURSE OR DISPOSED OF BY THE CONTRACTOR TO AN APPROVED SITE. NO SEPARATE PAYMENT WILL BE MADE FOR TRANSPORTING MILLINGS ON SITE OR TO AN APPROVED DISPOSAL SITE.
      c. SHOULD THE CONTRACTOR ELECT TO TEMPORARILY STOCKPILE MILLINGS ON THE JOB SITE FOR LATER USE, ALL COSTS FOR STOCKPILING AND SUBSEQUENT REHANDLING SHALL BE INCIDENTAL TO ITEM 202000 - EXCAVATION AND EMBANKMENT.
      d. MILLINGS USED FOR BASE COURSE SHALL BE PLACED IN ACCORDANCE WITH THE REQUIREMENTS OF SPECIAL PROVISION 302514 - MILLED HOT-MIX BASE COURSE. NO SEPARATE PAYMENT WILL BE MADE TO FURNISH MILLINGS FROM AN OUTSIDE SOURCE OR TRANSPORT MILLINGS WITHIN THE PROJECT LIMITS. MILLINGS USED FOR BASE COURSE WILL BE PAID IN PLACE AT THE UNIT BID PRICE FOR ITEM 302007 - GRADED AGGREGATE BASE COUSRE, TYPE 'B'.
      e. ALL COSTS TO UTILIZE MILLINGS IN RECYCLED HOT-MIX WILL BE INCIDENTAL TO THE UNIT PRICE BID FOR THE HOT-MIX ITEM USING THE RECYCLED MATERIAL.
      f. SPECIAL PROVISION 302514 - MILLED HOT-MIX BASE COURSE IS PROVIDED TO SPECIFY THE MEANS OF LAY DOWN AND COMPACTION AS WELL AS THE MATERIAL REQUIREMENTS FOR MILLINGS USED AS BASE COURSE. ALL COSTS TO BRING THE MILLINGS INTO COMPLIANCE WITH THE REQUIREMENTS OF ITEM - 302514 MILLED HOT-MIX BASE COURSE ARE INCIDENTAL TO ITEM 302007 - GRADED AGGREGATE BASE COURSE, TYPE 'B'. NO PAYMENT WILL BE MADE FOR ITEM 302514 - MILLED HOT-MIX BASE COURSE. THE QUANTITY OF MILLINGS USED FOR BASE COURSE WILL BE PAID FOR UNDER ITEM 302007 - GRADED AGGREGATE BASE COURSE.

SECTION 500

4 9. ALL JOINTS IN THE PCC PAVEMENT SHALL BE INSTALLED PER THE STANDARD CONSTRUCTION DETAILS EXCEPT AS NOTED. THE LONGITUNIDAL JOINT FOR PCC PAVEMENT SLABS SUPPORTING A PCC BARRIER SHALL BE THE GREATER OF 4'-0" FROM THE FLOW LINE OF THE BARRIER OR THE FIRST LANE LINE. THE SPACING OF TRANSVERSE JOINTS FOR PCC PAVEMENT SLABS SUPPORTING A PCC BARRIER SHALL BE NO LESS THEN 20'-0". THE COST OF DOWEL BARS AND TIE BARS SHALL BE INCLUDED IN ITEM 501006, PCC PAVEMENT 12".

4 9A. WHERE PROPOSED P.C.C. PAVEMENT IS TO BE POURED ADJACENT TO EXISTING P.C.C. PAVEMENT, THE PROPOSED PAVEMENT SHALL BE DOWELED TO THE EXISTING PAVEMENT. CONSTRUCTION AND PLACEMENT OF THE DOWELS SHALL BE IN ACCORDANCE WITH THE STANDARD DETAILS FOR P.C.C. PAVEMENT AND PATCHING. ALL COSTS ASSOCIATED WITH THE CONSTRUCTION OF THE DOWELS SHALL BE INCLUDED IN THE COST OF ITEM 501006, P.C.C. PAVEMENT, 12".

SECTION 600

10. THE DEPARTMENT AND THE CONTRACTOR SHALL INSPECT ALL EXISTING PIPES AND DRAINAGE STRUCTURES TO BE USED IN THE FINAL DRAINAGE SYSTEM AND AGREE ON THE CONDITION PRIOR TO THE START OF CONSTRUCTION. EXISTING PIPES AND DRAINAGE STRUCTURES DAMAGED DUE TO CONTRACTOR OPERATIONS SHALL BE REPAIRED OR REPLACED IN-KIND AT THE CONTRACTOR'S EXPENSE. THE CONTRACTOR IS REQUIRED TO VIDEO INSPECT NEW PIPE RUNS TO CONFIRM CONDITION PRIOR TO ACCEPTANCE. PAYMENT FOR VIDEO INSPECTION OF NEW PIPES WILL BE MADE UNDER ITEM 612529 - VIDEO INSPECTION.

10A. ALL STRUCTURES SHALL BE CONSTRUCTED IN ACCORDANCE WITH "AASHTO LRFD BRIDGE CONSTRUCTION SPECIFICATION 2ND EDITION, DATED 2004 WITH INTERIM REVISIONS TO 2009."

SECTION 700

11. IN AREAS WHERE PROPOSED CURB MEETS EXISTING CURB AND THE TWO CURB TYPES ARE NOT SIMILAR, THE PROPOSED CURB SHALL BE TRANSITIONED IN 10 LINEAR FEET, UNLESS OTHERWISE DIRECTED BY THE ENGINEER. PAYMENT FOR THIS WORK, INCLUDING SAW CUTTING EXISTING CURB SHALL BE INCIDENTAL TO THE PROPOSED CURB ITEM.

12. WHERE PROPOSED CONCRETE SIDEWALK IS CONSTRUCTED TO MEET EXISTING SIDEWALK, THE EXISTING SIDEWALK SHALL BE SAWCUT AT THE TIE-IN POINT OR MEET THE NEAREST EXISTING SIDEWALK JOINT. ALL SAW CUTTING SHALL BE FULL DEPTH, UNLESS OTHERWISE NOTED ON THE PLANS OR DIRECTED BY THE ENGINEER AND SHALL BE PAID FOR UNDER ITEM 762002 - SAWCUTTING, CONCRETE, FULL DEPTH.

13. PORTLAND CEMENT CONCRETE CHANNELIZING ISLANDS THAT ARE LESS THAN 75 SQ FT MAY BE POURED MONOLITHICALLY, OR AS DIRECTED BY THE ENGINEER.

14. STATION AND ELEVATION DATA GIVEN FOR DRAINAGE STRUCTURES ARE TO BE APPLIED TO THE CENTER OF THE GRATE FOR INLETS, AND TO THE CENTER OF THE STRUCTURE FOR JUNCTION BOXES AND MANHOLES.

15. DRAINAGE INLET GRATES ADJACENT TO THE ROAD, WITHIN THE PROJECT LIMITS, WHICH ARE NOT TYPE 1 SHALL BE REPLACED. THE ACTUAL LOCATIONS, THE NEED FOR ANY GRATE MODIFICATIONS OR FOR NEW FRAMES SHALL BE DETERMINED BY THE ENGINEER. ALL REPLACED GRATES/FRAMES SHALL BE DELIVERED TO THE NEAREST DISTRICT MAINTENANCE YARD WITH THE COST OF DELIVERY INCIDENTAL TO ITEM 708500 - REPLACING CATCH BASIN GRATES. FINAL PAYMENT FOR REPLACED GRATES/FRAMES SHALL NOT BE MADE UNTIL RECEIPT OF DELIVERED MATERIALS IS PRODUCED, SIGNED BY A DELDOT MAINTENANCE YARD SUPERVISOR.

16. THE NEW CASTLE COUNTY DEPARTMENT OF PUBLIC WORKS SHALL SUPPLY AND THE STATE'S CONTRACTOR SHALL INSTALL NEW SELF SEALING MANHOLE FRAMES AND COVERS ON ALL COUNTY SEWER MANHOLES, THAT ARE NOT BEING RELOCATED, WITHIN THE PROJECT LIMITS IN ACCORDANCE WITH THE COUNTY'S STANDARD SPECIFICATIONS. THE EXISTING MANHOLE FRAMES AND COVERS THAT ARE REMOVED SHALL BECOME THE PROPERTY OF THE STATE'S CONTRACTOR. PAYMENT SHALL BE INCIDENTAL TO ITEM 710506 - ADJUST AND REPAIR EXISTING SANITARY SEWER MANHOLE.

17. ALL PAVED AREAS TO BE RECONSTRUCTED OR WIDENED SHALL BE SAWCUT AT THE POINT WHERE THE NEW PAVEMENT IS TO TIE INTO THE EXISTING PAVEMENT.

18. ALL HOT-MIX SAW CUTTING SHALL BE FULL DEPTH, UNLESS OTHERWISE NOTED ON THE PLANS, OR AS DIRECTED BY THE ENGINEER.

19. WHERE ADJUSTMENTS ARE REQUIRED TO NEW DRAINAGE STRUCTURES I.E. DRAINAGE INLETS, MANHOLES, JUNCTION BOXES, ETC., FOR STAGED CONSTRUCTION, THE ADJUSTED TOPS SHALL BE CAST-IN-PLACE CONCRETE. ELEVATION ADJUSTMENTS SHALL NOT EXCEED 1'. THIS NOTE SHALL SUPERSEDE ANY REFERENCE TO STANDARD CONSTRUCTION METHODS AS REFERRED TO ON THE STANDARD CONSTRUCTION DETAIL SHEETS. CONTRACTOR SHALL SUBMIT DETAILED PLANS SHOWING SECTIONS, JOINTS, REINFORCEMENT AND OTHER PERTINENT INFORMATION FOR APPROVAL. COST SHALL BE INCIDENTAL TO THE RESPECTIVE DRAINAGE STRUCTURE.

20. ALL COSTS ASSOCIATED WITH CONNECTING PROPOSED CONDUIT TO EXISTING JUNCTION WELLS SHALL BE CONSIDERED INCIDENTAL TO THE COST OF THE CONDUIT BEING INSTALLED.

21. ALL GUARDRAIL POST STAKEOUT SHALL BE COORDINATED WITH EXISTING AND PROPOSED STORM DRAIN SYSTEMS, UNDERDRAIN OUTLET PIPES, AND UTILITIES TO AVOID DISTURBANCE OF THE UNDERGROUND FACILITY. COST SHALL BE INCIDENTAL TO THE GUARDRAIL ITEM BEING INSTALLED. ANY DAMAGE TO THESE SYSTEMS SHALL BE REPAIRED AT CONTRACTOR'S EXPENSE.

22. THE CONTRACTOR SHALL BE RESPONSIBLE FOR STAKING ALL RIGHT OF WAY AND EASEMENT LINES ACQUIRED FOR THE PROJECT'S CONSTRUCTION. COST SHALL BE INCLUDED IN ITEM 763501, CONSTRUCTION ENGINEERING.

UNOFFICIAL WEBSITE COPY

PROJECT NOTES

SECTION 700 CONTINUED

23. THE COST FOR ANY SHEETING USED FOR POLE BASE INSTALLATION SHALL BE INCIDENTAL TO THE RESPECTIVE POLE BASE ITEM.

24. THE CONTRACTOR SHALL MAINTAIN ALL MOWER ACCESSIBLE GRASS WITHIN THE LIMIT OF CONSTRUCTION BEHIND PORTABLE P.C.C. SAFETY BARRIER TO A MAXIMUM HEIGHT OF 6 INCHES UNLESS OTHERWISE DIRECTED BY THE ENGINEER. THE CONTRACTOR SHALL ANTICIPATE, BUT IS NOT LIMITED TO A MINIMUM OF 4 CUTTINGS PER YEAR. ALL COSTS ASSOCIATED WITH MAINTAINING A 6 INCH MAXIMUM GRASS HEIGHT SHALL BE PAID UNDER ITEM 736502, MOWING. MOWING OF THE REFORESTATION AREA SHALL ALSO BE PAID UNDER ITEM 736502, MOWING.

25. WHEN REMOVAL OF AN EXISTING DRAINAGE SYSTEM (PIPE OR STRUCTURE) IS REQUIRED TO INSTALL A PROPOSED DRAINAGE SYSTEM, THE COST OF THE EXISTING DRAINAGE SYSTEM REMOVAL SHALL BE INCLUDED IN THE UNIT COST BID FOR THE RESPECTIVE PROPOSED DRAINAGE PIPE OR STRUCTURE.

MISCELLANEOUS

26. THE CONTRACTOR SHALL CONTACT MICHAEL ELLER, THE CHIEF OF SCHEDULING FOR DART FIRST STATE, 14 DAYS PRIOR TO THE START OF CONSTRUCTION AT 302-576-6061.

27. CROSS SECTIONS USED IN THE PREPARATION OF THIS CONTRACT ARE AVAILABLE FROM THE DEPARTMENT.

28. RIGHT-OF-WAY PLANS FOR RIGHT-OF-WAY OR EASEMENT STAKEOUT PURPOSES ARE AVAILABLE FROM THE DEPARTMENT.

29. DELDOT WILL BE RESPONSIBLE FOR OBTAINING AND MODIFYING THE FOLLOWING PERMITS:
    - ACOE INDIVIDUAL PERMIT
    - DNREC SUBAQUEOUS LANDS PERMIT
    - DNREC WETLANDS PERMIT
    - DNREC WATER QUALITY CERTIFICATION
    - DNREC COASTAL ZONE CONSISTENCY CERTIFICATION
    - NEW CASTLE COUNTY FLOODPLAIN DEVELOPMENT APPROVAL
    - NEW CASTLE COUNTY NOISE ORDINANCE

    THE CONTRACTOR SHALL BE RESPONSIBLE FOR OBTAINING ALL OTHER PERMITS REQUIRED, FOR PURPOSES OF CONSTRUCTION FOR THE PROJECT. DIFFICULTIES IN OBTAINING THE PERMITS OR CHANGES TO PERMITS, EITHER BY DELDOT OR THE CONTRACTOR, WILL NOT JUSTIFY A DELAY IN THE CONSTRUCTION SCHEDULE OR INCREASE IN COST.

30. IT SHALL BE REQUIRED THAT, AT A MINIMUM, A CREW CONSISTING OF THREE PERSONS WITH A BACKHOE BE DEVOTED TO ADDRESSING EROSION AND SEDIMENT CONTROL ITEMS ON THE CONTRACT ON A DAILY BASIS. ADDITIONAL PERSONNEL AND OTHER TOOLS AND/OR MECHANIZED EQUIPMENT MAY BE DEEMED NECESSARY TO ADDRESS THESE ITEMS AND SHALL BE MADE AVAILABLE AS REQUIRED. THE CREW, TOOLS, AND EQUIPMENT MAY BE RELEASED OR REDUCED BY THE ENGINEER ON A DAILY BASIS ONCE IT HAS BEEN DETERMINED THAT ALL EROSION AND SEDIMENT CONTROL ITEMS HAVE BEEN ADEQUATELY ADDRESSED. IF THE NECESSARY CREW, TOOLS AND EQUIPMENT ARE NOT DEVOTED AND ACTIVELY WORKING TO ADDRESS THE NECESSARY EROSION AND SEDIMENT CONTROL ITEMS AND HAVE NOT BEEN RELEASED BY THE ENGINEER, PAYMENT MAY BE DENIED FOR ALL WORK PERFORMED DURING THE TIME PERIOD THAT THE EROSION AND SEDIMENT CONTROL ITEMS HAVE NOT BEEN ADDRESSED TO THE SATISFACTION OF THE ENGINEER. ALL COSTS ASSOCIATED WITH PROVIDING A CREW, TOOLS AND EQUIPMENT SHALL BE INCIDENTAL TO THE APPLICABLE EROSION AND SEDIMENT CONTROL ITEMS.

31. THE BASE TOPOGRAPHY IS FROM AERIAL MAPPING, WHICH HAS BEEN SUPPLEMENTED AND ADJUSTED WITH GROUND SURVEY.

32. SEE ENVIRONMENTAL COMPLIANCE PLAN FOR FURTHER RESTRICTIONS/GUIDANCE ASSOCIATED WITH THIS PROJECT.

33. PRECAST NOTE:

    THE USE OF PRECAST STRUCTURAL ELEMENTS WILL NOT BE ALLOWED BY THE DEPARTMENT FOR THE FOLLOWING STRUCTURAL ELEMENTS: INTEGRAL PIER CAPS, BRIDGE BARRIER, BARRIER ON MOMENT SLABS, BARRIER ON APPROACH SLABS AND BARRIER ON PCC PAVEMENT. FOR OTHER ELEMENTS, AN ALTERNATE PRECAST DESIGN MUST BE EQUIVALENT TO THE DESIGN SHOWN ON THE PLANS AND MEET THE DESIGN CRITERIA SET FORTH BY AASHTO LRFD BRIDGE DESIGN SPECIFICATIONS AND DELDOT BRIDGE DESIGN MANUAL. THE DEPARTMENT WILL REQUIRE THE SUBMISSION OF DESIGN CALCULATIONS AND DRAWINGS PREPARED BY A PROFESSIONAL ENGINEER LICENSED IN THE STATE OF DELAWARE.

    THE DEPARTMENT HAS THE RIGHT TO REJECT THE USE OF A PRECAST ELEMENT IF IT DOES NOT MEET THE REQUIREMENTS OF THE CONTRACT PLANS AND SPECIFICATIONS. THERE WILL BE NO ADDITIONAL COMPENSATION OR EXTENSION OF TIME AND COST FOR THE DEVELOPMENT, APPROVAL, FABRICATION, DELIVERY, INSTALLATION, AND OR REJECTION OF ANY PRECAST ALTERNATIVE. THE CONTRACTOR WILL ASSUME THE RISK ASSOCIATED WITH THE ALTERNATE PRECAST STRUCTURAL ELEMENT.

34. THE CONTRACTOR IS ADVISED THAT OTHER ROADWAY CONTRACTS WILL BE UNDER CONSTRUCTION ADJACENT TO AND AT THE SAME TIME AS THIS PROJECT. THEREFORE, THE CONTRACTOR MUST COORDINATE CONSTRUCTION ACTIVITIES WITH DELDOT AND THESE OTHER CONTRACTORS AS APPLICABLE.

35. THE CONTRACTOR SHALL UTILIZE THE SOIL IN STOCKPILE AREAS A, B, AND C IN THE EMBANKMENTS ON THIS PROJECT, AND REGRADE AND STABILIZE THESE STOCKPILE AREAS IN ACCORDANCE WITH THE CONSTRUCTION PHASING SHEETS. FOLLOWING STABILIZATION, ALL EROSION/SEDIMENT CONTROL AND MAINTENANCE OF TRAFFIC DEVICES SHALL BE REMOVED FROM THE SOIL STOCKPILE AREAS.

△4 36. AREAS DISTURBED BY THE INSTALLATION OF TEMPORARY ROADWAYS SHALL BE RESTORED TO THEIR ORIGINAL CONDITION OR AS DIRECTED BY THE ENGINEER.

EARTHWORK SUMMARY

EXCAVATION	
EXCAVATION FROM CROSS SECTIONS	269,548 C.Y.
EXCAVATION FOR PAVEMENT REMOVAL	1,500 C.Y.
EXCAVATION FROM STOCKPILE	78,769 C.Y.
EXCAVATION FOR STRUCTURES	3,415 C.Y.
MISC. EXCAVATION (DRAINAGE, POLE BASES, MSE WALL LEVELING PADS, ETC.)	20,795 C.Y.
ROCK EXCAVATION FOR ROADWAY AND TRENCHES	0 C.Y.
TOPSOIL STRIPPING	140 C.Y.
TOTAL EXCAVATION	374,167 C.Y.
EXCAVATION AVAILABLE FOR EMBANKMENT	
EXCAVATION MEETING BORROW TYPE 'A'	0 C.Y.
EXCAVATION MEETING BORROW TYPE 'B'	0 C.Y.
EXCAVATION MEETING BORROW TYPE 'F' (COMPACTED)	233,202 C.Y.
EXCAVATION MEETING TOPSOIL	1,821 C.Y.
EMBANKMENT REQUIREMENTS	
BORROW TYPE 'A' REQUIRED (INCLUDING UNDERCUT)	1,475 C.Y.
BORROW TYPE 'B' REQUIRED (INCLUDING UNDERCUT)	1,500 C.Y.
BORROW TYPE 'F' REQUIRED	316,315 C.Y.
TOPSOIL REQUIRED	16,172 C.Y.
MATERIAL BALANCE ("+"= EXCESS, "-"= NEED)	
BORROW TYPE 'A'	-1,475 C.Y.
BORROW TYPE 'B'	-1,500 C.Y.
BORROW TYPE 'F' (INCLUDES COMPACTION)	-103,892 C.Y.
TOPSOIL	-14,351 C.Y.
UNSUITABLE MATERIAL	-48,234 C.Y.

NOTES:
1) THE VALUES LISTED IN THE EARTHWORK SUMMARY ARE APPROXIMATE AND ARE NOT TO BE USED AS A BASIS OF PAYMENT. THE EARTHWORK SUMMARY IS CONSIDERED FOR INFORMATIONAL PURPOSES ONLY.

2) OTHER SOURCES OF EXCAVATION MAY INCLUDE PIPE TRENCH EXCAVATION, STRUCTURE EXCAVATION, UNDERCUT EXCAVATION, ENVIRONMENTAL SITE EXCAVATION, MAINTENANCE OF TRAFFIC EXCAVATION, ETC.

3) UNSUITABLE MATERIALS INCLUDE UNDERCUT SOILS, BITUMINOUS PAVEMENT, ETC.

△4

EARTHWORK SUMMARY

EXCAVATION	
EXCAVATION FROM CROSS SECTIONS	235,058 C.Y.
EXCAVATION FOR PAVEMENT REMOVAL	1,500 C.Y.
EXCAVATION FROM STOCKPILE	78,769 C.Y.
EXCAVATION FOR STRUCTURES	3,415 C.Y.
MISC. EXCAVATION (DRAINAGE, POLE BASES, MSE WALL LEVELING PADS, ETC.)	20,795 C.Y.
ROCK EXCAVATION FOR ROADWAY AND TRENCHES	0 C.Y.
TOPSOIL STRIPPING	140 C.Y.
TOTAL EXCAVATION	339,677 C.Y.
EXCAVATION AVAILABLE FOR EMBANKMENT	
EXCAVATION MEETING BORROW TYPE 'A'	0 C.Y.
EXCAVATION MEETING BORROW TYPE 'B'	0 C.Y.
EXCAVATION MEETING BORROW TYPE 'F' (COMPACTED)	234,664 C.Y.
EXCAVATION MEETING TOPSOIL	1,821 C.Y.
EMBANKMENT REQUIREMENTS	
BORROW TYPE 'A' REQUIRED (INCLUDING UNDERCUT)	1,475 C.Y.
BORROW TYPE 'B' REQUIRED (INCLUDING UNDERCUT)	1,500 C.Y.
BORROW TYPE 'F' REQUIRED	300,547 C.Y.
TOPSOIL REQUIRED	16,172 C.Y.
MATERIAL BALANCE ("+"= EXCESS, "-"= NEED)	
BORROW TYPE 'A'	-3,325 C.Y.
BORROW TYPE 'B'	-1,500 C.Y.
BORROW TYPE 'F' (INCLUDES COMPACTION)	-86,300 C.Y.
TOPSOIL	-14,351 C.Y.
UNSUITABLE MATERIAL	-38,547 C.Y.
EXCESS SUITABLE MATERIAL TO BE WASTED	+3,155 C.Y.

NOTES:
1) THE VALUES LISTED IN THE EARTHWORK SUMMARY ARE APPROXIMATE AND ARE NOT TO BE USED AS A BASIS OF PAYMENT. THE EARTHWORK SUMMARY IS CONSIDERED FOR INFORMATIONAL PURPOSES ONLY.

2) OTHER SOURCES OF EXCAVATION MAY INCLUDE PIPE TRENCH EXCAVATION, STRUCTURE EXCAVATION, UNDERCUT EXCAVATION, ENVIRONMENTAL SITE EXCAVATION, MAINTENANCE OF TRAFFIC EXCAVATION, ETC.

3) UNSUITABLE MATERIALS INCLUDE UNDERCUT SOILS, BITUMINOUS PAVEMENT, ETC.

DESIGN SPEED TABLE

ROADWAY	DESIGN SPEED
SR7/SR1	60 MPH
I-95	60 MPH
RAMP A	55 MPH
RAMP B	55 MPH
RAMP B1	60 MPH
RAMP C	35 MPH
RAMP C1	30 MPH
RAMP E	50 MPH
RAMP E1	20 MPH
RAMP G1	50 MPH
RAMP G2	30 MPH
RAMP R	25 MPH
RAMP R1	30 MPH
RAMP S	25 MPH
RAMP U	50 MPH
RAMP U1	25 MPH
SW LOOP RAMP	30 MPH

UNOFFICIAL WEBSITE COPY

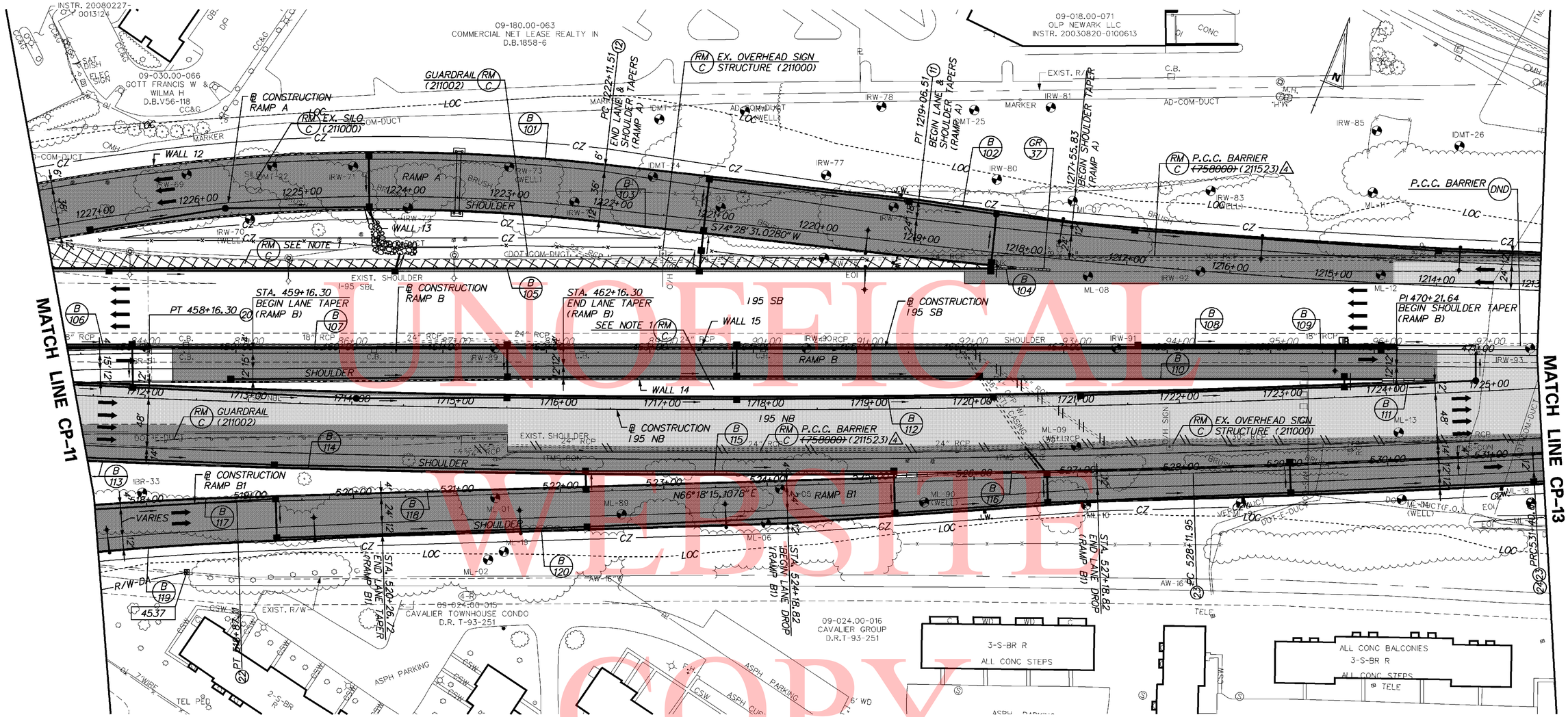

UNOFFICAL WEBSITE COPY

BARRIER SCHEDULE

	NO.	ITEM DESCRIPTION / TYPE	LENGTH
3	101	SINGLE FACE ~~(720512)~~ (720529)	194'
	102	SINGLE FACE, MODIFIED TYPE 2 (720655)	907'
3	103	SINGLE FACE ~~(720512)~~ (720529)	565'
	104	DOUBLE FACE, BIFURCATED TYPE 1(720651)	28'
3	105	SINGLE FACE ~~(720512)~~ (720529)	903'
	106	SINGLE FACE, MODIFIED TYPE 2 (720655)	101'
	107	SINGLE FACE, MODIFIED TYPE 1 (720654)	912'
	108	DOUBLE FACE, BIFURCATED TYPE 2(720652)	192'
	109	DOUBLE FACE, BIFURCATED TYPE 1(720651)	80'
3	110	SINGLE FACE ~~(720512)~~ (720529)	428'
	111	DOUBLE FACE, BIFURCATED TYPE 1(720651)	51'
	112	SINGLE FACE, MODIFIED TYPE 2 (720655)	1,265'
3	113	SINGLE FACE ~~(720512)~~ (720529)	28'
	114	SINGLE FACE, MODIFIED TYPE 2 (720655)	427'
3	115	SINGLE FACE ~~(720512)~~ (720529)	327'
	116	DOUBLE FACE, BIFURCATED TYPE 1(720651)	625'
3	117	SINGLE FACE ~~(720512)~~ (720529)	225'
	118	SINGLE FACE, MODIFIED TYPE 2 (720655)	550'
3	119	SINGLE FACE ~~(720512)~~ (720529)	199'
	120	SINGLE FACE, MODIFIED TYPE 2 (720655)	1,201'

RIGHT-OF-WAY MONUMENT SCHEDULE

NO.	STATION	OFFSET	NORTHING	EASTING
4537	518+35.57	65.56	613661.0002	433805.0814

GUARDRAIL SCHEDULE

NO.	ITEM DESCRIPTION / TYPE	BEGIN STA.	OFFSET	LENGTH
37	IMPACT ATTENUATOR, SPECIAL	B	-12.00'	1 EACH

NOTES: ALL BEGINNING STATIONS ARE APPROXIMATE. EXACT LOCATIONS ARE TO BE DETERMINED BY THE ENGINEER IN THE FIELD.
A = OFFSET ATTENUATORS AS PER STANDARD DETAILS.
B = ATTACH TO P.C.C. BARRIER.

NOTES:

1. REMOVE EXISTING PAVEMENT, BACKFILL, TOPSOIL, SEED & MULCH.
2. SEE LIGHTING PLANS FOR EXISTING LIGHTS AND JUNCTION WELLS TO BE REMOVED.
3. SEE DRAINAGE PLANS FOR PIPE AND DRAINAGE STRUCTURE SCHEDULES AND DITCH GRADING.

DELAWARE
DEPARTMENT OF TRANSPORTATION

ADDENDUMS / REVISIONS	
ADDENDUM NO. 3 CHANGED ITEM NO.,	
02/18/2011, RLS	
ADDENDUM NO. 4 CHANGED ITEM NO.,	
04/01/2011, RLS	

SCALE
0 50 100 150
FEET

SR1 / I-95 INTERCHANGE

CONTRACT	28-090-03
COUNTY	NEW CASTLE
BRIDGE NO.	
DESIGNED BY:	
CHECKED BY:	

CONSTRUCTION PLAN

	CP-12
SHEET NO.	76
TOTAL SHTS.	803

5/12/2011 11:13:25 AM
M:\PROJECTS\2003\03059_DELTRNPK\SRIMALL\CADD\2809003\PLANS\CP12_SR1.DGN

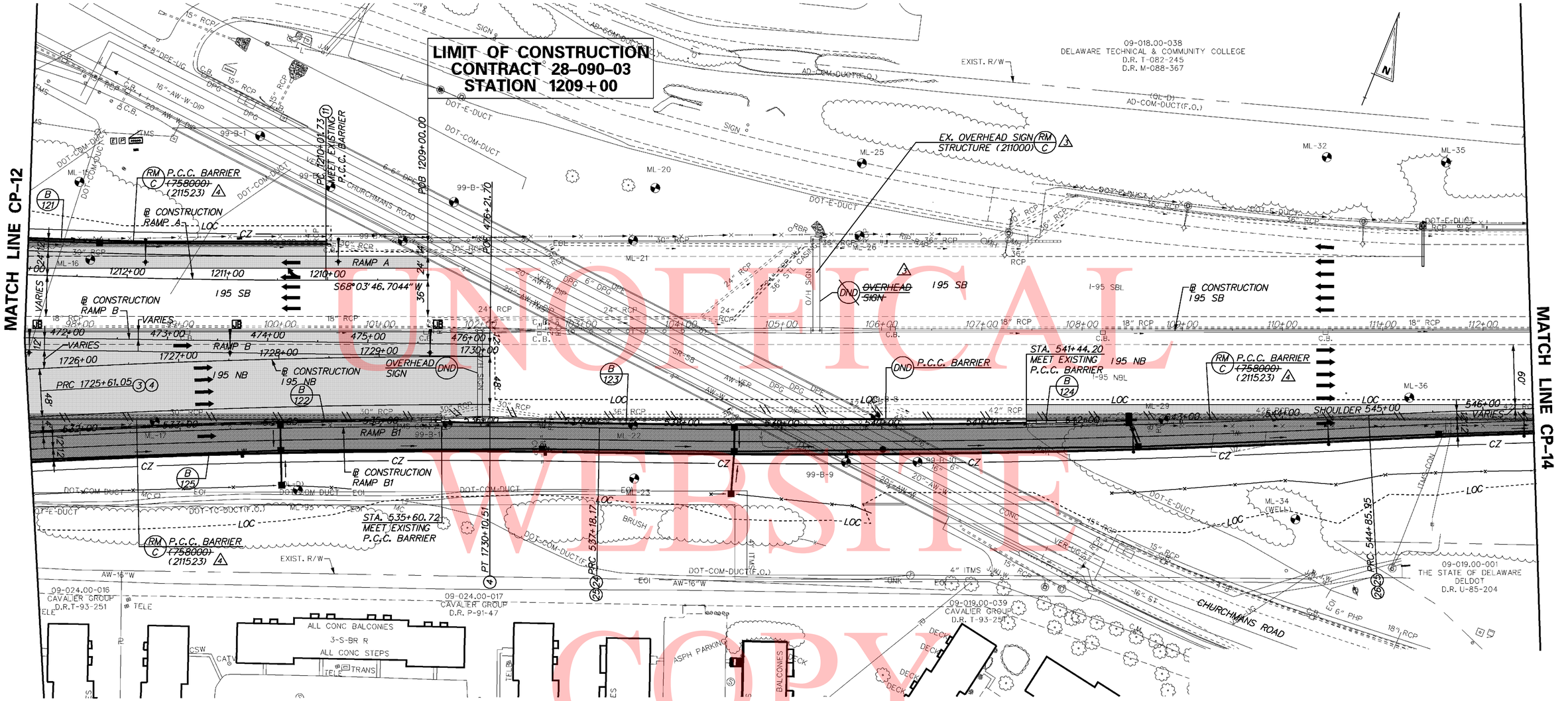

UNOFFICAL WEBSITE COPY

BARRIER SCHEDULE

NO.	ITEM DESCRIPTION / TYPE	LENGTH
121	SINGLE FACE, MODIFIED TYPE 2 (720655)	297'
122	DOUBLE FACE, BIFURCATED TYPE 1(720651)	411'
123	SINGLE FACE, MODIFIED TYPE 2 (720655)	584'
124	DOUBLE FACE, BIFURCATED TYPE 1(720651)	110'
125	SINGLE FACE, MODIFIED TYPE 2 (720655)	1,500'

NOTES:

1. SEE LIGHTING PLANS FOR EXISTING LIGHTS AND JUNCTION WELLS TO BE REMOVED.
2. SEE DRAINAGE PLANS FOR PIPE AND DRAINAGE STRUCTURE SCHEDULES AND DITCH GRADING.

DELAWARE DEPARTMENT OF TRANSPORTATION

ADDENDUMS / REVISIONS	
ADDENDUM NO. 3 CHANGED ITEM NO., ADDED O.H. SIGN REMOVAL, 02/18/2011 RLS	ADDENDUM NO. 4 CHANGED ITEM NO., 04/01/2011, RLS

SR1 / I-95 INTERCHANGE

CONTRACT	BRIDGE NO.
28-090-03	DESIGNED BY:
COUNTY	CHECKED BY:
NEW CASTLE	

CONSTRUCTION PLAN

CP-13	
SHEET NO.	77
TOTAL SHTS.	803

5/12/2011 11:03:58 AM
M:\PROJECTS\2003\03059_DELTRNPK\SRIMALL\CADD\2809003\PLANS\CP13_SR1.DGN

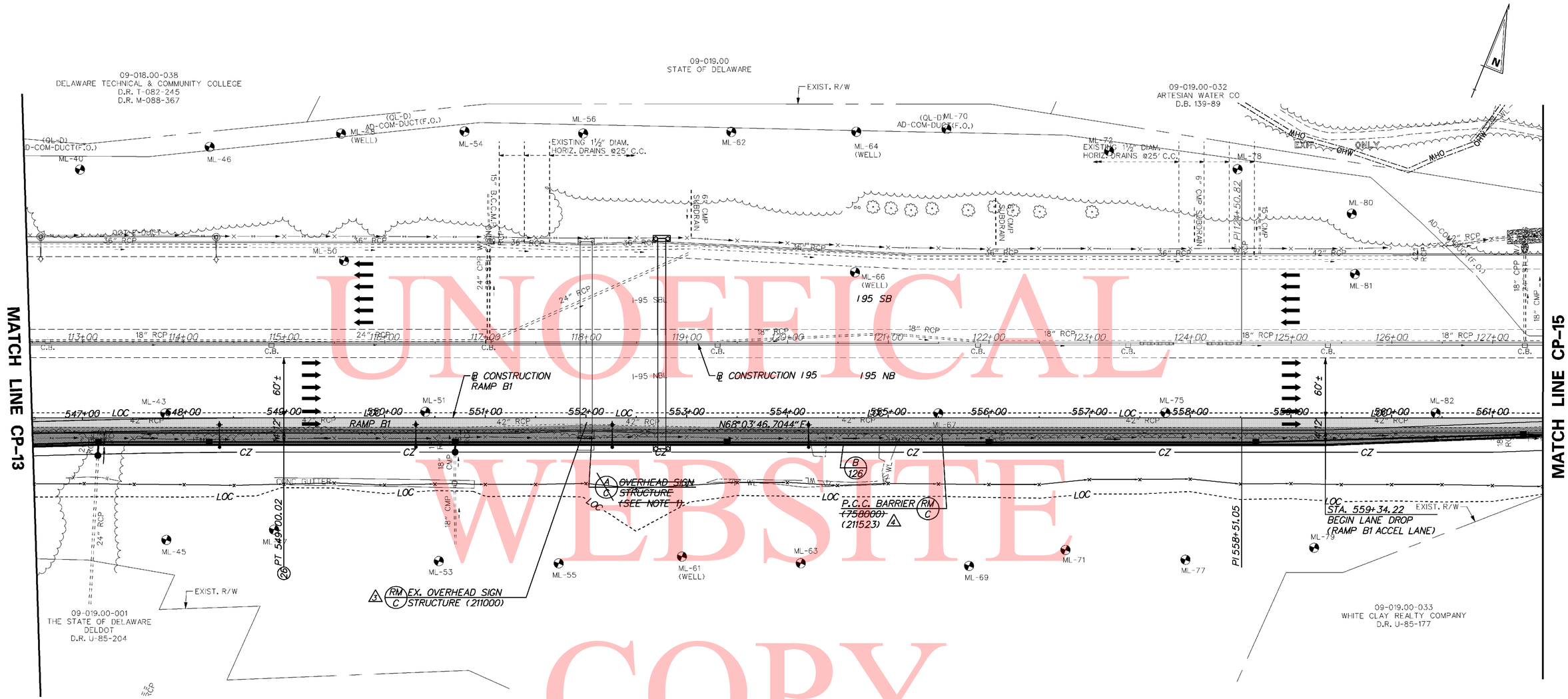

UNOFICAL WEBSITE COPY

BARRIER SCHEDULE		
NO.	ITEM DESCRIPTION / TYPE	LENGTH
126	SINGLE FACE, MODIFIED TYPE 2 (720655)	1,500'

NOTES

~~1. MODIFY EXISTING OVERHEAD SIGN STRUCTURE. SEE DETAIL SHEET XX.~~

2. SEE LIGHTING PLANS FOR EXISTING LIGHTS AND JUNCTION WELLS TO BE REMOVED.

3. SEE DRAINAGE PLANS FOR PIPE AND DRAINAGE STRUCTURE SCHEDULES AND DITCH GRADING.

DELAWARE DEPARTMENT OF TRANSPORTATION	ADDENDUMS / REVISIONS		SCALE 0 50 100 150 FEET	SR1 / I-95 INTERCHANGE	CONTRACT 28-090-03	BRIDGE NO.	CONSTRUCTION PLAN	CP-14
	ADDENDUM NO. 3 CHANGED ITEM NO., ADDED O.H. SIGN REMOVAL, 02/18/2011 RLS	ADDENDUM NO. 4 CHANGED ITEM NO., 04/01/2011, RLS			COUNTY NEW CASTLE	DESIGNED BY:		SHEET NO. 78
						CHECKED BY:		TOTAL SHTS. 803

5/12/2011 10:16:34 AM
M:\projects\2003\03059_deltrnpk\SR1Mail\Cadd\2809003\Plans\cp14_sr1.dgn

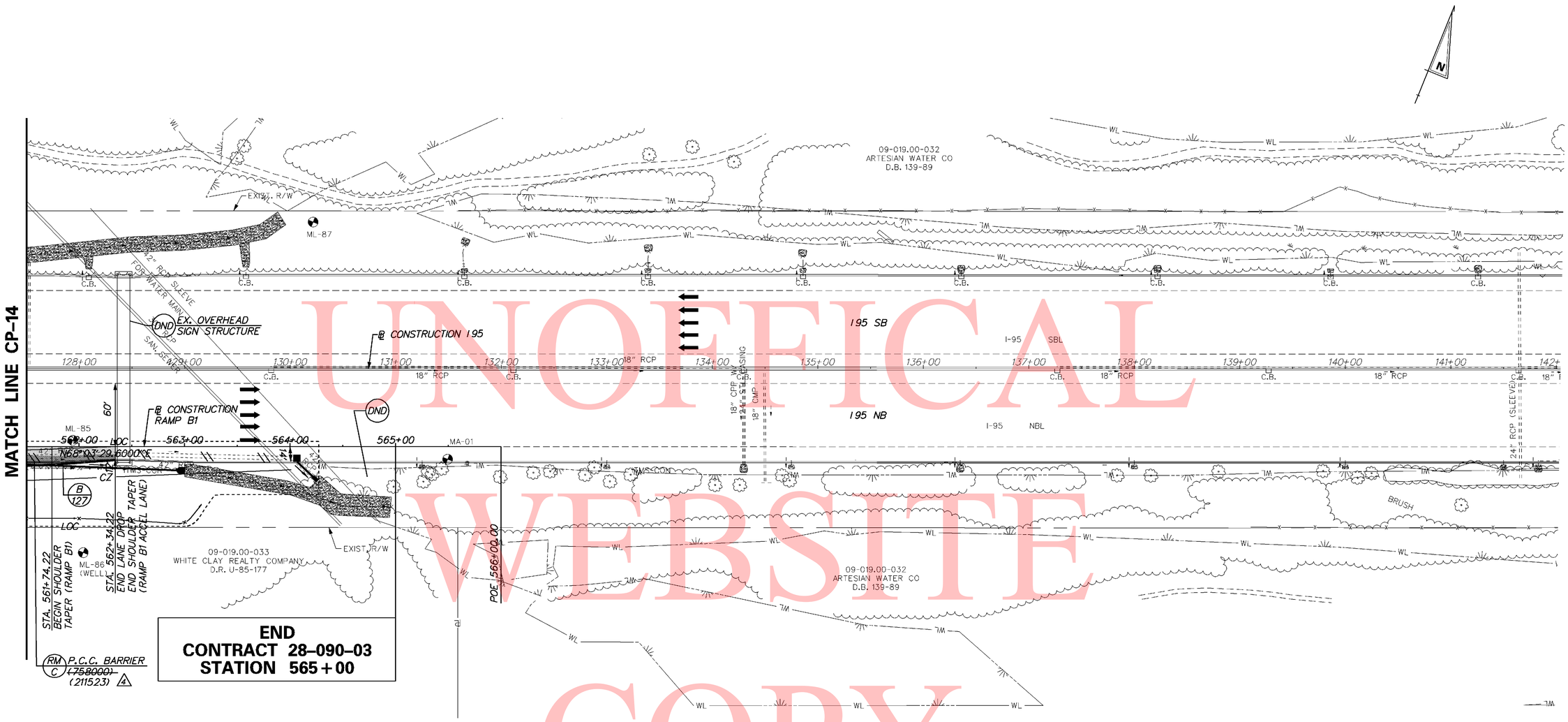

UNOFICAL WEBSITE COPY

BARRIER SCHEDULE

NO.	ITEM DESCRIPTION / TYPE	LENGTH
127	SINGLE FACE, MODIFIED TYPE 2 (720655)	85

NOTE:

1. *SEE DRAINAGE PLANS FOR PIPE AND DRAINAGE STRUCTURE SCHEDULES AND DITCH GRADING.*

DELAWARE DEPARTMENT OF TRANSPORTATION

ADDENDUMS / REVISIONS	
ADDENDUM NO. 4 CHANGED ITEM NO.,	
04/01/2011, RLS	

SCALE 0 50 100 150 FEET

SR1 / I-95 INTERCHANGE

CONTRACT	BRIDGE NO.	
28-090-03	DESIGNED BY:	
COUNTY	CHECKED BY:	
NEW CASTLE		

CONSTRUCTION PLAN

CP-15
SHEET NO. 79
TOTAL SHTS. 803

5/12/2011 10:21:31 AM
M:\PROJECTS\2003\03059_DELTRNPK\SRIMALL\CADD\2809003\PLANS\CP15_SR1.DGN

GENERAL NOTES

1. DESIGN SPECIFICATIONS
AASHTO LRFD BRIDGE DESIGN SPECIFICATIONS, 4th EDITION WITH 2009 INTERIM REVISIONS.
DELAWARE DEPARTMENT OF TRANSPORTATION BRIDGE DESIGN MANUAL, MAY 2005 INCLUDING LATEST REVISIONS. ANSI/AASHTO/AWS D1.5 BRIDGE WELDING CODE.

2. LOADING
UNIT WEIGHTS OF MATERIALS SHALL BE IN ACCORDANCE WITH THE DELAWARE DESIGN MANUAL.
FUTURE OVERLAY ALLOWANCE SHALL BE 25 LBS/SQ FT.
STEEL BRIDGE DECK FORMS WHICH STAY IN PLACE (INCLUDING CONCRETE IN FORM CORRUGATIONS) SHALL BE 15 LBS/SQ FT.
VEHICLE LIVE LOAD SHALL BE HL-93, WHICH CONSISTS OF A DESIGN TRUCK OR TANDEM WITH DYNAMIC LOAD ALLOWANCE AND A LANE LOAD. RATING SHALL USE ALL DELAWARE LEGAL LOADS SPECIFIED IN THE BRIDGE DESIGN MANUAL.
BARRIER HAS BEEN DESIGNED FOR TEST LEVEL FIVE (TL-5).
FATIGUE DESIGN SHALL BE BASED ON THE FOLLOWING ONE DIRECTIONAL TRAFFIC VOLUMES:

RAMP A OVER I-95: DESIGN ADT = 27,550, DESIGN ADTT = 3,300
FOR THERMAL LOADS, CONSIDER THE MODERATE TEMPERATURE RANGE AS STIPULATED IN THE AASHTO LRFD DESIGN SPECIFICATIONS. THE NORMAL TEMPERATURE SHALL BE CONSIDERED TO BE 60F.
FOR SEISMIC LOADS, CONSIDER SEISMIC PERFORMANCE ZONE 1, WITH A SITE CLASS = E AND IMPORTANCE CATEGORY - CRITICAL.

△3 3. PORTLAND CEMENT CONCRETE
PORTLAND CEMENT CONCRETE FOR CAST-IN-PLACE ELEMENTS SHALL BE AS FOLLOWS:
(28 DAY COMPRESSIVE STRENGTH)
~~ITEM NO. 602007 (CLASS A, F'c=4500 PSI) - PIER ABOVE FOOTING~~
~~ITEM NO. 602011 (CLASS A, F'c=4500 PSI) - PIER FOOTING, TOP OF PIER PILES~~
~~ITEM NO. 602786 (CLASS A, F'c=8000 PSI) - POST TENSIONED PIER CAP~~
~~ITEM NO. 602013 (CLASS D, F'c=4500 PSI) - DECK~~
~~ITEM NO. 602014 (CLASS D, F'c=4500 PSI) - APPROACH SLAB~~
~~ITEM NO. 602015 (CLASS A, F'c=4500 PSI) - ABUTMENT, TOP OF ABUTMENT PILES~~
~~ITEM NO. 602017 (CLASS A, F'c=4500 PSI) - BARRIER~~

602007 - PORTLAND CEMENT CONCRETE MASONRY, PIER ABOVE FOOTING, CLASS A (fc' = 4,500 PSI, PIER ABOVE FOOTING)
602011 - PORTLAND CEMENT CONCRETE MASONRY, PIER FOOTING, CLASS A (fc' = 4,500 PSI, PIER FOOTING, TOP OF PIER PILES)
602013 - PORTLAND CEMENT CONCRETE MASONRY, SUPERSTRUCTURE, CLASS D (fc' = 4,500 PSI, DECK)
602014 - PORTLAND CEMENT CONCRETE MASONRY, APPROACH SLAB, CLASS D (fc' = 4,500 PSI, APPROACH SLAB)
602015 - PORTLAND CEMENT CONCRETE MASONRY, ABUTMENT ABOVE FOOTING, CLASS A (fc' = 4,500 PSI, ABUTMENT, TOP OF ABUTMENT PILES)
602017 - PORTLAND CEMENT CONCRETE MASONRY, PARAPET, CLASS A (fc' = 4,500 PSI, BARRIER)
602786 - PORTLAND CEMENT CONCRETE MASONRY, SUBSTRUCTURE, 8000PSI (fc' = 8,000 PSI, PIER CAP 1, 2 & 3)
602787 - POST TENSIONING PIER CAPS, BONDED SYSTEM, (PIER CAPS 1, 2 & 3)

MIX REQUIREMENTS SHALL CONFORM TO SECTION 812 OF THE DELAWARE DEPARTMENT OF TRANSPORTATION STANDARD SPECIFICATIONS. ALL EXPOSED CORNERS OF CONCRETE SHALL BE CHAMFERED WITH ¾" X ¾" MILLED CHAMFER STRIPS UNLESS NOTED OTHERWISE, EXCEPT ON UNEXPOSED FOOTINGS OR WHERE INDICATED BY THE NOTATION ON THE PLANS, "DO NOT CHAMFER".
△4 ~~NO SLIP FORMING OF BARRIERS IS PERMITTED, UNLESS NOTED OTHERWISE.~~

4. BAR REINFORCEMENT
REINFORCING STEEL SHALL CONFORM TO AASHTO M31 (ASTM A615), GRADE 60. ALL REINFORCING STEEL SHALL HAVE A CLEAR COVER OF 2" UNLESS OTHERWISE SPECIFIED ON THE PLANS. FUSION-BONDED EPOXY COATED REINFORCING STEEL SHALL CONFORM TO AASHTO M284 (ASTM D3963), AND SHALL BE DENOTED WITH A SUFFIX "E" IN THE BAR MARKS.

DO NOT WELD GRADE 60 REINFORCING STEEL.

5. POST-TENSIONING STEEL
ALL POST-TENSIONING STRAND TENDONS SHALL CONSIST OF 0.6 INCH DIAMETER SEVEN WIRE UNCOATED LOW RELAXATION STRANDS CONFORMING TO AASHTO M203 (ASTM A416), GRADE 270.
DUCTS SHALL BE 4½ INCH DIA. POLYETHYLENE/POLYPROPYLENE (PE/PP) PLASTIC DUCTS.
GROUT FOR DUCTS SHALL BE IN ACCORDANCE WITH ITEM NO. 602779 "POST TENSIONING GROUT"

6. STRUCTURAL STEEL
STRUCTURAL STEEL SHALL CONFORM TO ASTM A 709, GRADE 50W, AND ASTM A 709, GRADE HPS 70W (AS NOTED), INCLUDING THE ADDITIONAL REQUIREMENTS FOR CHARPY V-NOTCH TESTING OF AASHTO M270 FOR PRIMARY LOAD CARRYING MEMBERS UNDER TENSILE STRESS. THE PRIMARY LOAD CARRYING MEMBER COMPONENTS ARE THE FLANGES, WEBS, AND SPLICE PLATES OF THE STEEL GIRDERS. THE USE OF FRACTURE CRITICAL MEMBERS IS PROHIBITED. FATIGUE CATEGORIES D, E AND F SHALL NOT BE USED IN STRESS REVERSAL OR TENSION AREAS, EXCEPT FOR TEMPORARY CONDITIONS.

△2 THE AREA IN CONTACT WITH THE INTEGRAL PIER CAP CONCRETE SHALL BE PAINTED WITH ONE COAT OF PRIMER AFTER THE SHEAR STUDS ARE INSTALLED.

TEN (10) FEET AT THE ENDS OF EACH GIRDER AND THE END CROSS FRAMES SHALL BE PAINTED WITH A URETHANE PAINT SYSTEM IN ACCORDANCE WITH SPECIAL PROVISION #605537-URETHANE PAINT SYSTEM. THE FINAL COLOR SHALL BE FEDERAL #10076 (BROWN) OF FED-STD-595B.
COST OF PAINTING SHALL BE INCIDENTAL TO ITEM 605002, STEEL STRUCTURES.
ALL BOLTS FOR SPLICE PLATES AND CROSS FRAMES SHALL BE ⅞" DIA. IN 1⅛" DIA. HOLES AND CONFORM TO ASTM A325, TYPE 3, WITH THREADS EXCLUDED FROM SHEAR PLANES. BOLTED CONNECTIONS SHALL BE CLASS B SLIP CRITICAL CONNECTIONS, UNLESS NOTED ON THE PLANS.

7. SERVICEABILITY
LIVE LOAD DEFLECTION SHALL BE LIMITED TO L/800.
FOR REINFORCEMENT DISTRIBUTION REQUIREMENTS, CONSIDER CLASS 2 EXPOSURE CRITERIA FOR DECKS. ACCOMMODATION TO JACK GIRDERS FOR FUTURE BEARING REPLACEMENT HAS BEEN CONSIDERED IN THE DESIGN.

8. CONSTRUCTION JOINTS
KEYED CONSTRUCTION JOINTS SHALL BE 2" X 4" OR AS NOTED. ALL EXPOSED CONSTRUCTION JOINT EDGES SHALL HAVE A ¾" V-NOTCH, UNLESS NOTED OTHERWISE.

△3 ~~9. STABILIZING STRUCTURAL EXCAVATIONS~~
~~SHEETING AND SHORING SHALL BE REQUIRED FOR ANY EXCAVATION EXCEEDING FIVE (5) FEET IN HEIGHT, THE COST SHALL BE PAID UNDER ITEM NO. 207501. IN LIEU OF SHORING, THE CONTRACTOR MAY USE A 2:1 CUT SLOPE. NO PAYMENT SHALL BE MADE FOR ADDITIONAL EXCAVATION OR FILL OUTSIDE THE LIMITS AS DEFINED IN SECTION 207 OF THE STANDARD SPECIFICATIONS.~~

10. EXCAVATION REQUIRED TO ATTAIN THE GRADE FOR INSTALLATION OF MSE WALLS SHALL BE INCIDENTAL TO ITEM NO. 602772 - MECHANICALLY STABILIZED EARTH WALLS.

11. STRUCTURAL BACKFILL SHALL CONFORM TO THE REQUIREMENTS OF BORROW TYPE C. MSE WALL BACKFILL SHALL BE AS SPECIFIED ON THE PLANS.

12. ROADWAY CLEARANCES
A MINIMUM OF 16'-6" VERTICAL CLEARANCE SHALL BE MAINTAINED ABOVE ALL ROADWAYS.
A MINIMUM OF 2'-0" HORIZONTAL CLEARANCE SHALL BE MAINTAINED FROM THE OUTSIDE EDGE OF SHOULDER OFFSET (FACE OF CURB) TO THE FACE OF ANY OBSTRUCTION. THESE CLEARANCES APPLY AT ALL TIMES INCLUDING DURING CONSTRUCTION.

13. DECK REPLACEMENT
FUTURE DECK REPLACEMENT FOR THIS BRIDGE MUST TAKE INTO ACCOUNT THE UNBALANCED MOMENT FROM THE SUPERSTRUCTURE ON THE BEARINGS AT PIERS 1 AND 3. IT IS RECOMMENDED THAT THE DECK BE REPLACED IN A SYMMETRICAL FASHION, WORKING IN THE REGIONS AT BOTH FASCIA GIRDERS AT THE SAME TIME, AND PROGRESSING IN STAGES TOWARD THE CENTER OF THE TYPICAL SECTION. THIS APPROACH WILL ELIMINATE THE POSSIBILITY OF UPLIFT AT THE BEARINGS FOR PIERS 1 AND 3.

△4 14. TEST PILES
~~PILE LENGTHS FOR ORDERING PURPOSES SHALL BE DETERMINED BY TEST PILES. A MINIMUM OF ONE (1) PILE PER SUBSTRUCTURE, AS SHOWN ON THE PLANS, SHALL BE DYNAMICALLY TESTED BY THE CONTRACTOR IN ACCORDANCE WITH SPECIAL PROVISION 619519. TEST AND PRODUCTION PILE RE-STRIKES WILL BE PAID AS FOLLOWS:~~

~~A). ALL TEST PILE(S) WILL BE RESTRUCK AND DYNAMICALLY TESTED BY THE CONTRACTOR. THE TEST PILE RESTRIKES SHALL BE INCIDENTAL TO ITEM NO. 619519 DYNAMIC PILE TESTING BY CONTRACTOR PROVIDED THAT THEY ARE PERFORMED WITHIN FIVE (5) CALENDAR DAYS FROM INITIAL DRIVE.~~

~~B). AN ADDITIONAL PAYMENT WILL BE MADE TO THE CONTRACTOR IF HE IS DIRECTED BY THE ENGINEER TO WAIT AND RESTRIKE THE TEST PILE MORE THAN FIVE (5) CALENDAR DAYS AFTER INITIAL DRIVE. THE CONTRACTOR SHALL BE COMPENSATED AT THE FIXED PRICE OF $1,000.00 PER CALENDAR DAY FOR EVERY DAY, AFTER THE FIFTH CALENDAR DAY, UNDER ITEM NO. 619502 TEST PILE RESTRIKE. MULTIPLE TEST PILE RESTRIKES OCCURRING ON THE SAME DAY WILL ONLY BE PAID FOR AS ONE CALENDAR DAY. NO ADDITIONAL COMPENSATION WILL BE MADE REGARDLESS OF THE NUMBER OF TEST PILE RESTRIKES PERFORMED THAT DAY.~~

~~C). RESTRIKES ON PRODUCTION PILES WHICH ARE DESIGNATED TO BE DYNAMICALLY TESTED WILL NOT BE PAID UNDER ITEM NO. 619501 PRODUCTION PILE RESTRIKE. THESE PRODUCTION PILE RESTRIKES ARE INCIDENTAL TO ITEM NO. 619519 DYNAMIC PILE TESTING BY CONTRACTOR.~~

~~THE DEPARTMENT RESERVES THE RIGHT TO PERFORM DYNAMIC TESTING OF RESTRIKES.~~

PILE LENGTHS FOR ORDERING PURPOSES SHALL BE DETERMINED BY TEST PILE RESTRIKE RESULTS. A MINIMUM OF ONE PILE PER SUBSTRUCTURE, AS SHOWN ON THE PLANS, SHALL BE DYNAMICALLY TESTED WITH SIGNAL MATCHING ANALYSIS BY THE CONTRACTOR IN ACCORDANCE WITH SPECIAL PROVISION 619519 AND 619539. TEST AND PRODUCTION PILE RESTRIKES WILL BE PAID AS FOLLOWS:

A). ALL TEST PILE(S) WILL BE RESTRUCK AFTER A WAITING PERIOD OF AT LEAST 48 HOURS. TEST PILE RESTRIKES SHALL BE INCIDENTAL TO THE INITIAL INSTALLATION OF THE PILE PROVIDED THEY ARE REQUESTED WITHIN FIVE WORKING DAYS FROM THE COMPLETION OF THE INITIAL DRIVE. IF TEST PILE RESTRIKES ARE REQUESTED AFTER THE FIVE WORKING DAYS FROM THE COMPLETION OF THE INITIAL DRIVE THEN THE TEST PILE RESTRIKE SHALL BE PAID AS NOTED IN SPECIAL PROVISION 619502.

B). IF DIRECTED BY THE ENGINEER TO RESTRIKE A PRODUCTION PILE, THE RESTRIKE OF THE PRODUCTION PILE SHALL BE PAID SEPARATELY UNDER ITEM NO. 619501.

15. THE CONCRETE PIER CAPS SHOWN ON THE PLANS SHALL BE USED. NO OTHER ALTERNATES WILL BE CONSIDERED.

△3 16. MASS CONCRETE
CONCRETE ELEMENTS LISTED BELOW ARE DESIGNED AS MASS CONCRETE. SEE SPECIAL PROVISIONS.

PIER 1, PIER 2 AND PIER 3 POST-TENSIONED CAP

BRIDGE LEGAL LOAD RATING (TONS)
RAMP A OVER I-95

TRUCK TYPE	RATING FACTOR	SAFE LOAD CAPACITY
HS-20	2.13	76.6
S220	3.91	78.2
S327	3.08	83.1
S335	2.36	82.6
S437	2.28	83.2
T330	2.95	88.5
T435	2.60	91.0
T540	2.27	90.8

BRIDGE DESIGN LOAD RATING:
INVENTORY = 1.35
OPERATING = 1.75

NOTE:

LOAD RATING IS IN ACCORDANCE WITH THE LOAD AND RESISTANCE FACTOR RATING (LRFR) METHOD.

CROSS REFERENCE NOTE:

FOR MSE WALL NOTES, SEE DWG. S1-13 & S1-14.

UNOFICAL WEBSITE COPY

O:\20832687-XMR\CAD\Bridge\BR-S1\gen01_BR-S1_srf.dgn
4/28/2011
Steve_Lambert

DELAWARE DEPARTMENT OF TRANSPORTATION

ADDENDUMS / REVISIONS	
ADDENDUM NO. △2 REV. NOTE 6, 01/26/11, SAM	
ADDENDUM NO. △3 REV. NOTE 3, DELETED NOTE 9, ADDED NOTE 16, 02/18/11, SAM	
ADDENDUM NO. △4 REV. NOTE 3 & 14, 04/01/11, RFK	

SR1 / I-95 INTERCHANGE

CONTRACT	28-090-03
COUNTY	NEW CASTLE
BRIDGE NO.	1-716B
DESIGNED BY:	R.F. KIRCHNER
CHECKED BY:	J.S. LI

RAMP A OVER I-95
GENERAL NOTES

SHEET NO.	S1-2
TOTAL SHTS.	196
	803

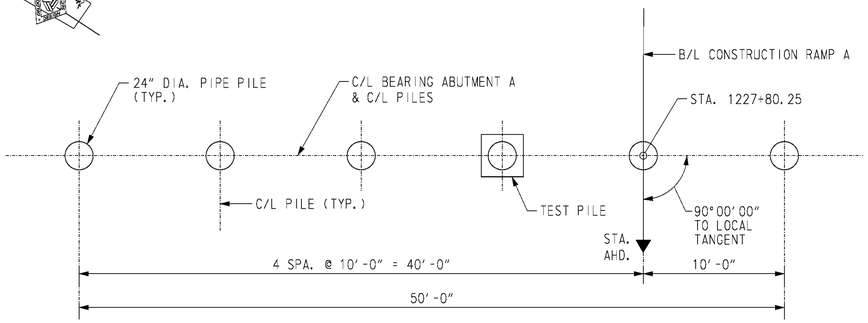

ABUTMENT A PILE PLAN

SCALE: 1/16" = 1'-0"

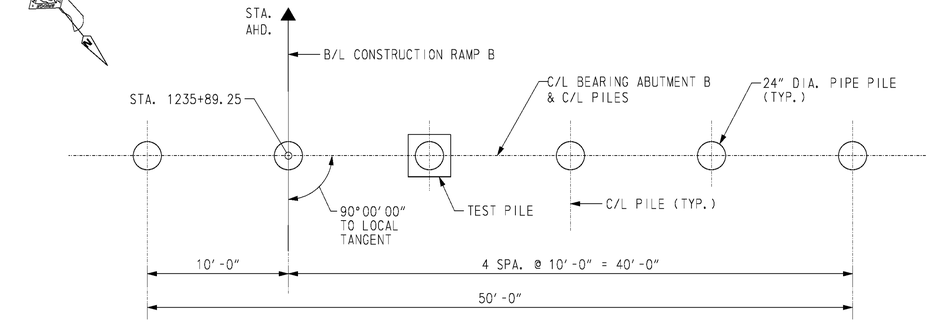

ABUTMENT B PILE PLAN

SCALE: 1/16" = 1'-0"

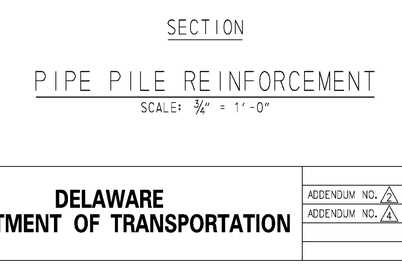

ELEVATION

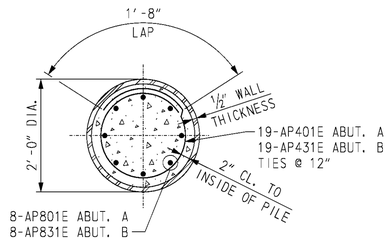

SECTION

PIPE PILE REINFORCEMENT

SCALE: 3/4" = 1'-0"

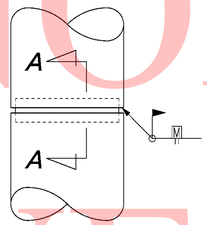

PIPE PILE SPLICE DETAIL

NOT TO SCALE

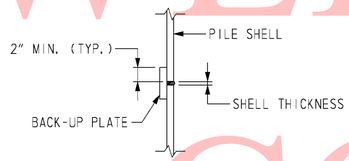

SECTION A-A

NOT TO SCALE

PILE SPLICE NOTES:

1. BACK-UP PLATE TO BE CUT FROM SAME PILE SIZE AS IS BEING SPLICED. CUT AND BEND TO FIT INSIDE DIAMETER OF PILE.
2. NO PILE SPLICING TO BE ALLOWED ON ANY PORTION OF PILE THAT IS TO REMAIN EXPOSED IN COMPLETED STRUCTURE.
3. SPLICER SLEEVE MATERIAL SHALL BE STEEL CONFORMING TO ASTM DESIGNATION A709, GRADE 36 (250).

PILE INSTALLATION DATA

SUBSTRUCTURE UNIT	DESIGN DATA: NOMINAL PILE DRIVING RESISTANCE (KIPS)	DESIGN DATA: ESTIMATED PILE TIP ELEVATION	ACTUAL FIELD DATA: AVERAGE MINIMUM TIP ELEVATION	ACTUAL FIELD DATA: AVERAGE MAXIMUM TIP ELEVATION
ABUTMENT A	580	10.0		
ABUTMENT B	600	20.0		

ABUTMENT A PILE DRIVING INFORMATION

PILE SIZE AND TYPE:	
ACTUAL BEARING OBTAINED:	
HAMMER TYPE:	
PILE HAMMER ENERGY:	
SPECIAL DRIVING CONDITIONS AND COMMENTS:	

ABUTMENT B PILE DRIVING INFORMATION

PILE SIZE AND TYPE:	
ACTUAL BEARING OBTAINED:	
HAMMER TYPE:	
PILE HAMMER ENERGY:	
SPECIAL DRIVING CONDITIONS AND COMMENTS:	

NOTES:

1. PILES SHALL BE 24" DIA. WITH 1/2" WALL THICKNESS OPEN-ENDED STEEL PIPE PILES, ASTM A252 GRADE 3.
2. REINFORCING STRAPS SHALL BE PROVIDED FOR THE ABUTMENT STEM AND BACKWALL TO RESIST THE LONGITUDINAL FORCES ON THE SUPERSTRUCTURE.
3. PILE CASINGS SHALL BE INSTALLED AT THE PROPOSED PILE LOCATIONS DURING THE ABUTMENT MSE WALL CONSTRUCTON.
4. (2) UPON COMPLETION OF THE MSE WALL THERE SHALL BE A ~~30 TO~~ 60 DAY QUARANTINE PERIOD PRIOR TO DRIVING THE ABUTMENT PILES TO ALLOW FOR SETTLEMENT AND TO MINIMIZE THE DOWNDRAG FORCES THAT MIGHT DEVELOP ON THE PILES.
5. THE ENGINEER SHALL MONITOR THE SETTLEMENT DURING THE QUARANTINE PERIOD TO DETERMINE WHEN THE PILES MAY BE DRIVEN.
6. UPON COMPLETION OF THE QUARANTINE PERIOD, AS JUDGED BY THE ENGINEER, DRIVE PILES TO THE NOMINAL PILE DRIVING RESISTANCE INDICATED ON THE PLANS.
7. 'TEST PILES' SHALL BE TESTED IN ACCORDANCE WITH THE SPECIFICATIONS.
8. (4) ALL TEST PILES SHALL BE 10 FEET LONGER THAN INDICATED ON PILE INSTALLATION DATA TABLE.

CROSS REFERENCE NOTES:

1. FOR ABUTMENT PLAN AND ELEVATION, SEE DWG. S1-5 & S1-6.
2. FOR ABUTMENT REINFORCEMENT SCHEDULE, SEE DWG. S1-15.
3. FOR PILE CASING DETAILS, SEE DWG. S1-5.
4. FOR SOIL PROFILE, SOIL PROPERTIES AND TOTAL ESTIMATED SETTLEMENT, SEE DWG. S1-14.
5. FOR TEST PILE PAYMENT NOTES, SEE DWG. S1-2.

UNOFICAL WEBSITE COPY

O:\20832687-XML\CAD\Bridge\BR-S1\ab01_BR-S1_sr1.dgn
4/2/2011
untitled

DELAWARE DEPARTMENT OF TRANSPORTATION

ADDENDUMS / REVISIONS	
ADDENDUM NO. (2) REV. QUARANTINE PERIOD, 01/26/11, RFK	
ADDENDUM NO. (4) ADDED NOTE, 04/01/11, RFK	

SR1 / I-95 INTERCHANGE

CONTRACT	BRIDGE NO.	1-716B
28-090-03	DESIGNED BY: K.D. BEAVER	
COUNTY	CHECKED BY: R.F. KIRCHNER	
NEW CASTLE		

RAMP A OVER I-95

ABUTMENT FOUNDATION PLAN

SHEET NO.	S1-4
TOTAL SHTS.	198
	803

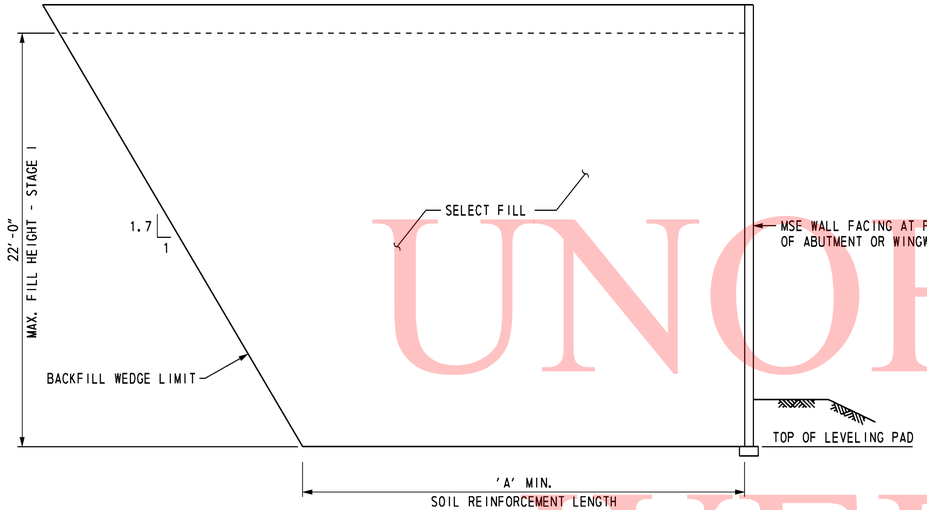

SOIL PROFILE SECTION
ABUTMENT A AND WINGWALLS I AND II

NOT TO SCALE

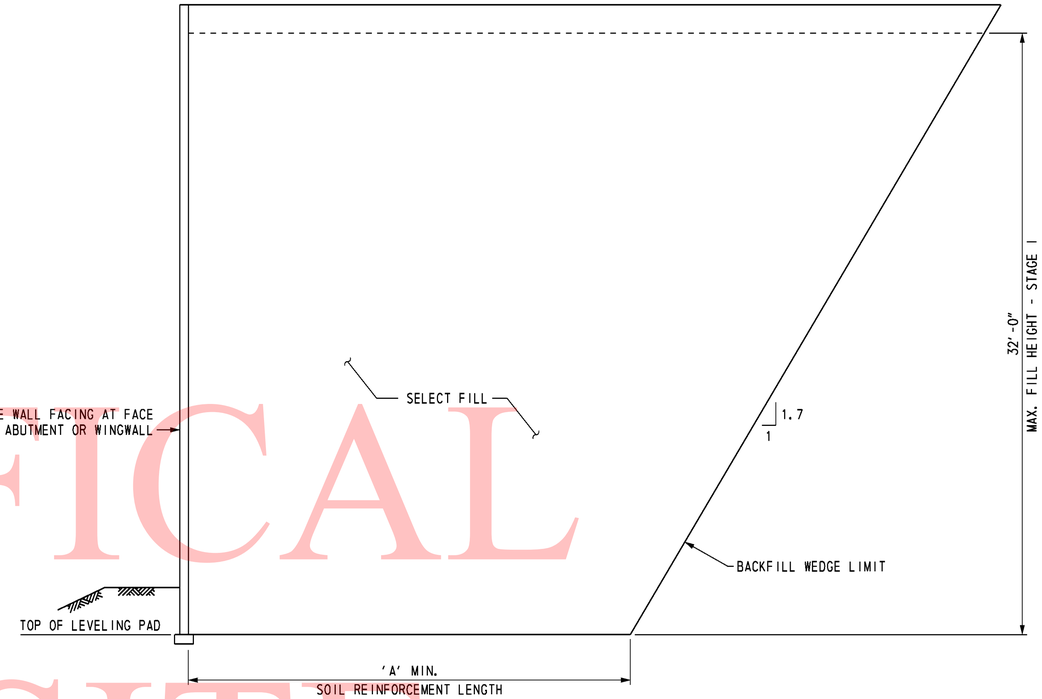

SOIL PROFILE SECTION
ABUTMENT B AND WINGWALLS III AND IV

NOT TO SCALE

MINIMUM REINFORCED ZONE WIDTH (A) FEET	
ABUTMENT A	
FACE OF ABUTMENT	33.0
3 WINGWALLS I AND ~~III~~ II	23.5
ABUTMENT B	
FACE OF ABUTMENT	38.0
3 ~~WINGWALLS III AND IV~~	~~38.0~~

SOIL PROPERTIES				
SOIL TYPE	UNIT WEIGHT (PCF)	DRAINED ANGLE OF FRICTION (DEGREES)	UNDRAINED SHEAR (PSF)	FACTORED BEARING RESISTANCE (KSF)
SELECT FILL	125	34	-	-
FOUNDATION SOIL:				
ABUTMENT A	70	27	1000	4.0
ABUTMENT B	70	28	1000	6.0

FOUNDATION NOTES

THE FACTORED BEARING RESISTANCE SHALL BE VERIFIED PRIOR TO CONSTRUCTION OF THE MSE WALL.

THE INTERNAL STABILITY OF THE MSE WALL SHALL BE DESIGNED BY THE CONTRACTOR USING THE SOIL PARAMETERS PROVIDED FOR EACH STRUCTURE LOCATION. THE INTERNAL STABILITY CALCULATIONS SHALL BE SIGNED AND SEALED BY A PROFESSIONAL ENGINEER LICENSED IN THE STATE OF DELAWARE AS INDICATED IN THE PROJECT SPECIFICATIONS.

ISOLATED AREAS OF EXISTING FILL MAY BE ENCOUNTERED DURING CONSTRUCTION OF THIS MSE WALL. EXISTING FILL SHALL BE UNDERCUT TO EXPOSE UNDISTURBED NATURAL SOIL. UNDERCUTTING AND BACKFILLING WILL BE MEASURED AND PAID IN ACCORDANCE WITH THE SPECIFICATIONS.

A MINIMUM 7-DAY QUARANTINE PERIOD SHALL BE REQUIRED AFTER CONSTRUCTION OF THE WALL TO THE "MAX. FILL HEIGHT - STAGE 1" INDICATED ON THE SOIL PROFILE SECTION. NO FURTHER FILL SHALL BE PLACED UNTIL AUTHORIZED BY THE ENGINEER. ONCE AUTHORIZATION IS GIVEN, FILL SHALL BE PLACED IN ADDITIONAL INCREMENTS OF 5 FEET IN HEIGHT, WITH THE SAME QUARANTINE PERIOD AND AUTHORIZATION REQUIRED AT EACH
2 INCREMENT. AN ADDITIONAL QUARANTINE PERIOD OF ~~30 TO~~ 60 DAYS IS REQUIRED AFTER CONSTRUCTION OF THE MSE WALL TO ITS FULL HEIGHT. NO FURTHER CONSTRUCTION SHALL BE PERMITTED UNTIL AUTHORIZED BY THE ENGINEER. A TOTAL ESTIMATED SETTLEMENT OF APPROXIMATELY FOUR (4) TO FIVE (5) INCHES IS ANTICIPATED.

3 FOR WINGWALLS III AND IV, SOIL REINFORCEMENT LENGTH RATIO SHALL BE L/H=1.2, AND LESS THAN (A)=38.0 FEET.

4 THE CONTRACTOR IS RESPONSIBLE FOR DEVELOPING MEANS AND METHODS, IN CONSULTATION WITH THE MSE WALL MANUFACTURER, FOR CONSTRUCTING THE MSE WALLS TO THE LINES, GRADES, AND DIMENSIONS SHOWN ON THE PLANS. SOIL BORINGS, LABORATORY TEST DATA, AND THE ENGINEER'S SETTLEMENT ESTIMATE(S) ARE CONTAINED IN ONE OF THE FOLLOWING GEOTECHNICAL ENGINEERING REPORTS WHICH HAVE BEEN MADE AVAILABLE BY THE DEPARTMENT: FINAL FOUNDATIONS REPORT - RETAINING WALLS AND FINAL FOUNDATIONS REPORT - BRIDGES AND WINGWALLS DATED APRIL 2009, PREPARED BY RUMMEL, KLEPPER & KAHL, LLP AND URS CORPORATION. THESE SUPPLEMENTAL GEOTECHNICAL REPORTS ARE NOT PART OF THE CONTRACT DOCUMENTS, AND ARE AVAILABLE AT WWW.BIDS.DELAWARE.GOV WEBSITE. CONTRACTORS MAY USE THIS INFORMATION AT THEIR OWN RISK.

UNOFFICAL WEBSITE COPY

S1-14

DELAWARE
DEPARTMENT OF TRANSPORTATION

ADDENDUMS / REVISIONS	
ADDENDUM NO. 2 REV. QUARANTINE PERIOD, 01/26/11, RFK	
ADDENDUM NO. 3 REV. WINGWALL DESIGNATION AND BACKFILL	
PROFILE, 02/18/11, RFK	
ADDENDUM NO. 4 ADDED NOTE, 04/01/11, RFK	

SR1 / I-95 INTERCHANGE

CONTRACT	28-090-03	BRIDGE NO.	1-716B
COUNTY	NEW CASTLE	DESIGNED BY: R. F. KIRCHNER	
		CHECKED BY: G.P. MISTRY	

RAMP A OVER I-95

WINGWALL DETAILS 2

SHEET NO.	208
TOTAL SHTS.	803

O:\20832887-XM\CAD\Bridge\BR-S1\rd04_BR-S1_sr1.dgn
4/1/2011
Steve_Lambert

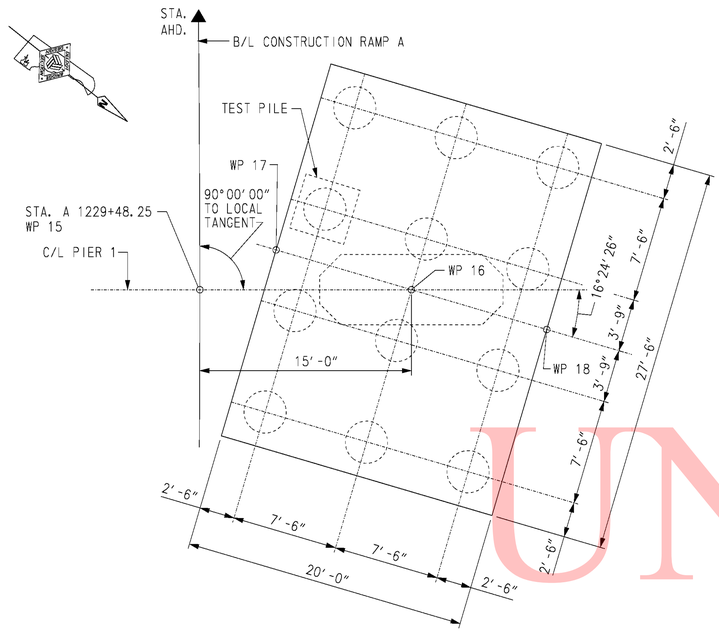

PIER 1 PILE PLAN

SCALE: 3/16" = 1'-0"

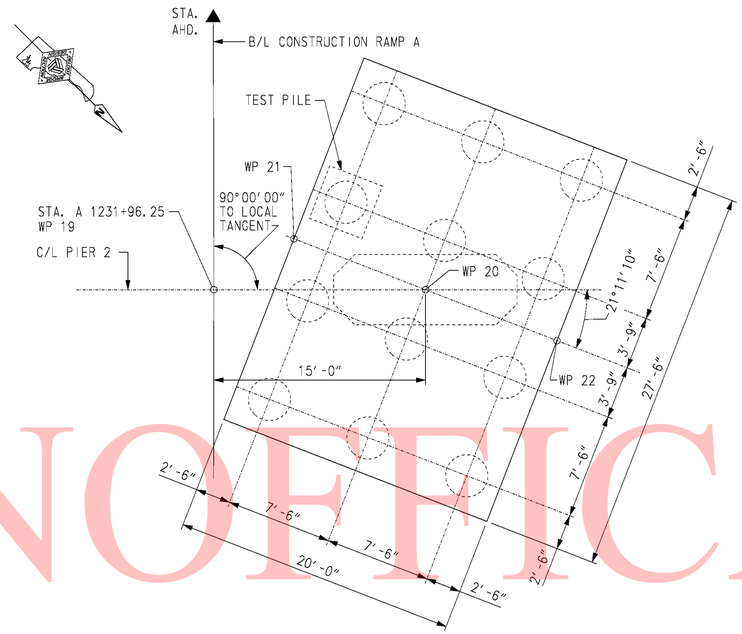

PIER 2 PILE PLAN

SCALE: 3/16" = 1'-0"

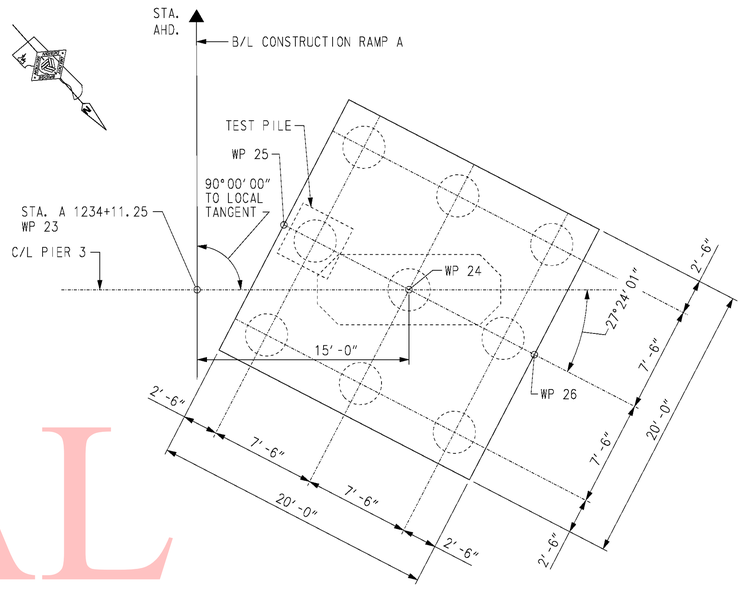

PIER 3 PILE PLAN

SCALE: 3/16" = 1'-0"

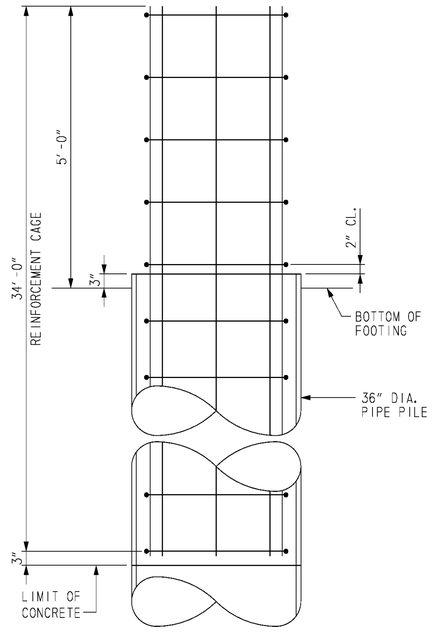

ELEVATION

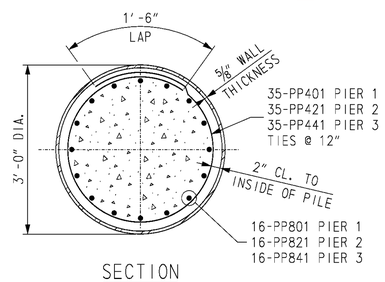

SECTION

PIPE PILE REINFORCEMENT

SCALE: 3/4" = 1'-0"

PILE INSTALLATION DATA				
	DESIGN DATA		ACTUAL FIELD DATA	
SUBSTRUCTURE UNIT	NOMINAL PILE DRIVING RESISTANCE (KIPS)	ESTIMATED PILE TIP ELEVATION	AVERAGE MINIMUM TIP ELEVATION	AVERAGE MAXIMUM TIP ELEVATION
PIER 1	1710	2.0		
PIER 2	1760	-7.0		
PIER 3	1500	23.0		

PIER 1 PILE DRIVING INFORMATION
PILE SIZE AND TYPE:
ACTUAL BEARING OBTAINED:
HAMMER TYPE:
PILE HAMMER ENERGY:
SPECIAL DRIVING CONDITIONS AND COMMENTS:

PIER 2 PILE DRIVING INFORMATION
PILE SIZE AND TYPE:
ACTUAL BEARING OBTAINED:
HAMMER TYPE:
PILE HAMMER ENERGY:
SPECIAL DRIVING CONDITIONS AND COMMENTS:

PIER 3 PILE DRIVING INFORMATION
PILE SIZE AND TYPE:
ACTUAL BEARING OBTAINED:
HAMMER TYPE:
PILE HAMMER ENERGY:
SPECIAL DRIVING CONDITIONS AND COMMENTS:

WORKING POINTS				
WP NO.	STATION	OFFSET	COORDINATES	
			NORTHING	EASTING
15	1229+48.25	0.00'	613,805.0658	433,391.8380
16	1229+48.25	15.00' RT.	613,816.8306	433,382.5327
17	1229+51.07	5.41' RT.	613,807.5546	433,386.2682
18	1229+45.46	24.59' RT.	613,826.1067	433,378.7972
19	1231+96.25	0.00'	613,639.4252	433,207.4495
20	1231+96.25	15.00' RT.	613,650.0979	433,196.9094
21	1231+99.86	5.68' RT.	613,640.9242	433,200.8898
22	1231+92.66	24.33' RT.	613,659.2716	433,192.9291
23	1234+11.25	0.00'	613,483.9931	433,058.9473
24	1234+11.25	15.00' RT.	613,494.0358	433,047.8053
25	1234+15.84	6.12' RT.	613,484.6734	433,051.3189
26	1234+06.68	23.88' RT.	613,503.3982	433,044.2917

NOTES:

1. PILES SHALL BE 36" DIA. WITH 5/8" WALL THICKNESS OPEN-ENDED STEEL PIPE PILES, ASTM A252 GRADE 3.
2. TEST PILE SHALL BE TESTED IN ACCORDANCE WITH THE SPECIFICATIONS.
4. 3. ALL TEST PILES SHALL BE 10 FEET LONGER THAN INDICATED ON PILE INSTALLATION DATA TABLE.

CROSS REFERENCE NOTES:

1. FOR PIER 1 THRU PIER 3 PLAN AND ELEVATION, SEE DWGS. S1-17 THRU S1-19.
2. FOR REINFORCING BAR LIST, SEE DWG. S1-32 & S1-33.
3. FOR PILE SPLICE DETAIL, SEE DWG. S1-4.
4. FOR TEST PILE PAYMENT NOTES, SEE DWG. S1-2.

UNOFFICAL WEBSITE COPY

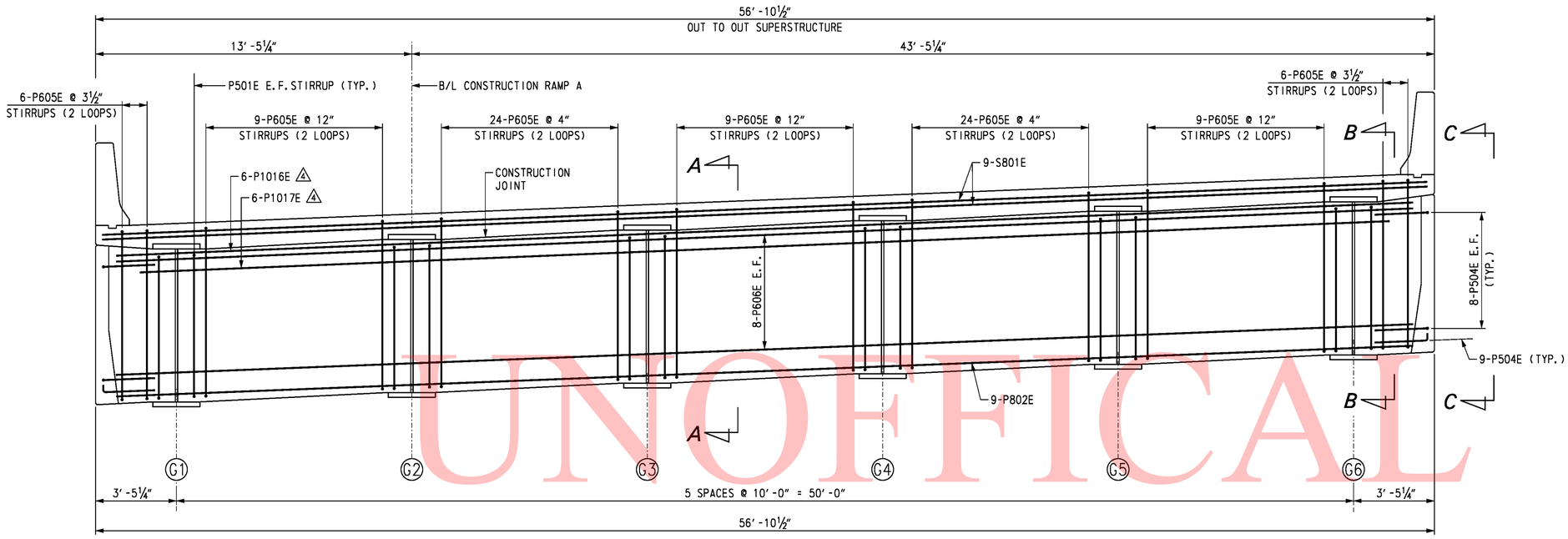

ELEVATION

SCALE: ⅜" = 1'-0"

CROSS REFERENCE NOTES:

1. FOR BRIDGE PLAN AND ELEVATION, SEE DWG. S1-1.
2. FOR PIER PLAN AND ELEVATION, SEE DWG. S1-17.
3. FOR LOCATION OF SHEAR STUDS ON GIRDER WEB, SEE DWG. S1-20.
4. FOR REINFORCING BAR LIST, SEE DWG. S1-32.

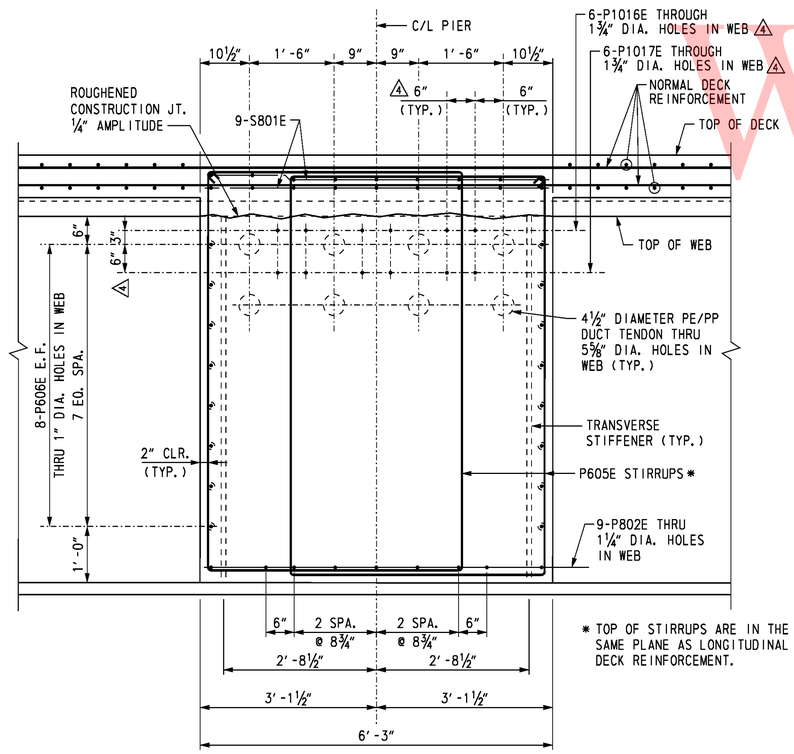

* TOP OF STIRRUPS ARE IN THE SAME PLANE AS LONGITUDINAL DECK REINFORCEMENT.

SECTION A-A

SCALE: ¾" = 1'-0"

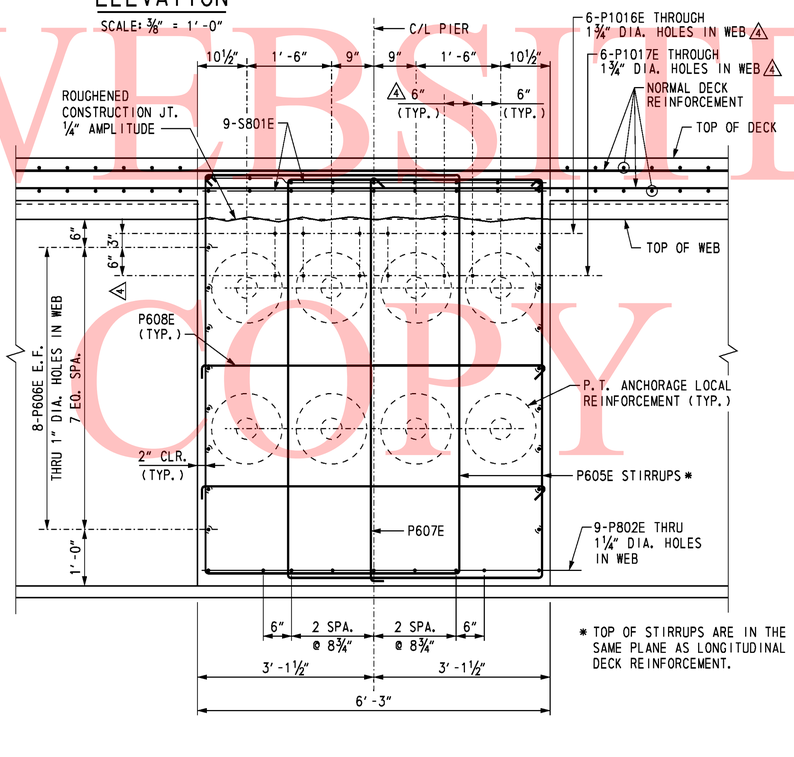

* TOP OF STIRRUPS ARE IN THE SAME PLANE AS LONGITUDINAL DECK REINFORCEMENT.

SECTION B-B

SCALE: ¾" = 1'-0"

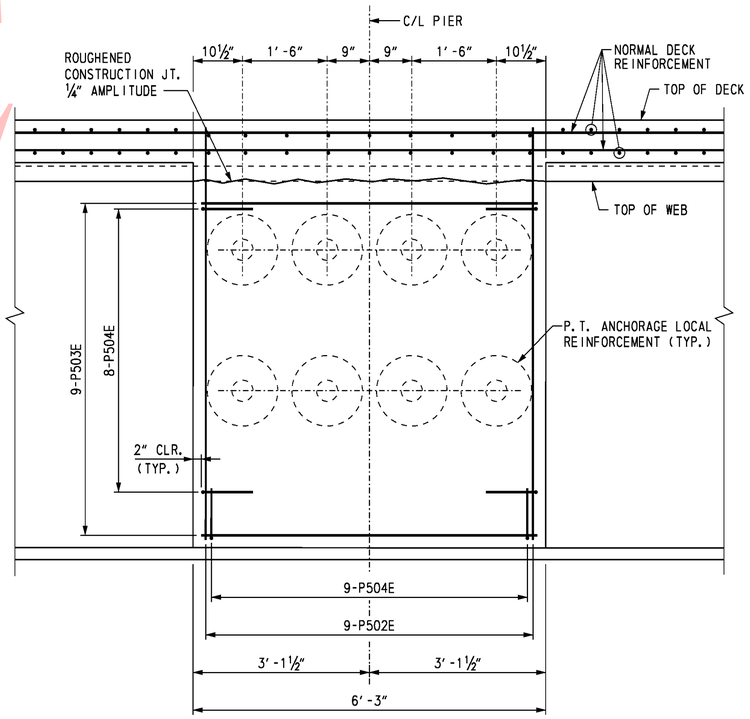

SECTION C-C

SCALE: ¾" = 1'-0"

UNOFFICIAL WEBSITE COPY

O:\20832687-XM\CAD\Bridge\BR-S1\pr06_BR-S1_sr1.dgn

3/21/2011

Steve_Lambert

DELAWARE DEPARTMENT OF TRANSPORTATION	ADDENDUMS / REVISIONS ADDENDUM NO. 4 ADDED REINFORCEMENT, 04/01/11, SAM	SR1 / I-95 INTERCHANGE	CONTRACT 28-090-03 COUNTY NEW CASTLE	BRIDGE NO. 1-716B DESIGNED BY: K. D. BEAVER CHECKED BY: R. F. KIRCHNER	RAMP A OVER I-95 PIER 1 REINFORCEMENT 2	S1-21 SHEET NO. 215 TOTAL SHTS. 803

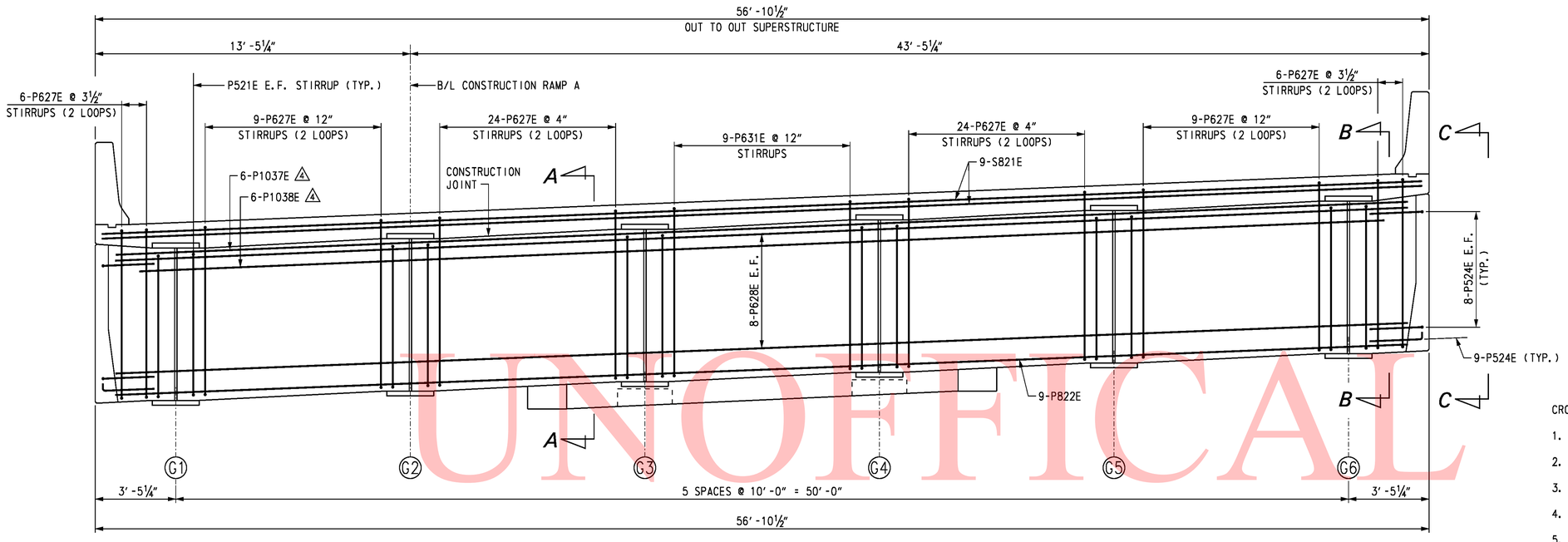

ELEVATION

SCALE: ⅜″ = 1′-0″

CROSS REFERENCE NOTES:

1. FOR BRIDGE PLAN AND ELEVATION, SEE DWG. S1-1.
2. FOR PIER PLAN AND ELEVATION, SEE DWG. S1-18.
3. FOR PIER COLUMN REINFORCEMENT DETAILS, SEE DWG. S1-26.
4. FOR LOCATION OF SHEAR STUDS ON GIRDER WEB, SEE DWG. S1-24.
5. FOR REINFORCING BAR LIST, SEE DWG. S1-32.

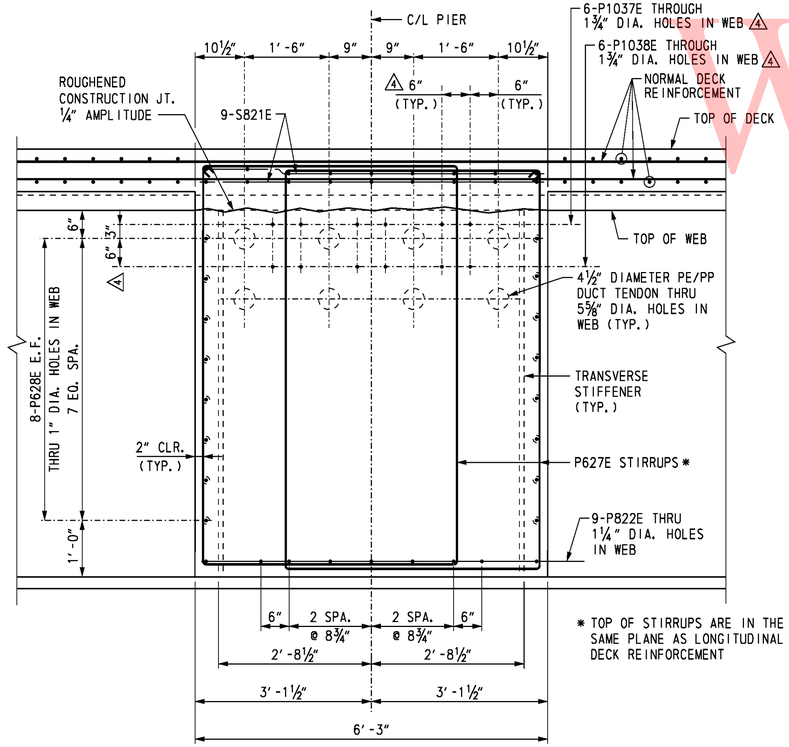

SECTION A-A

SCALE: ¾″ = 1′-0″

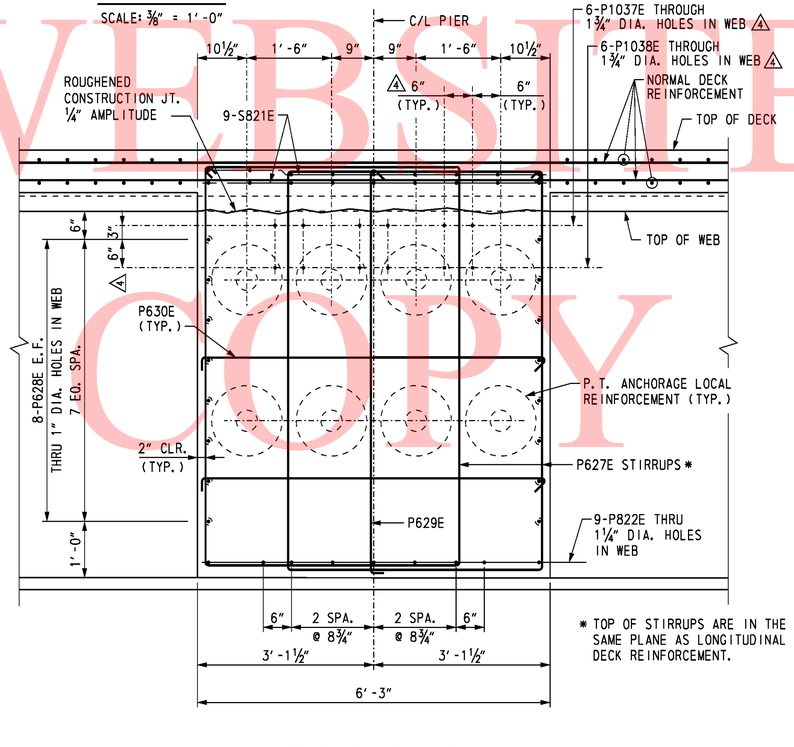

SECTION B-B

SCALE: ¾″ = 1′-0″

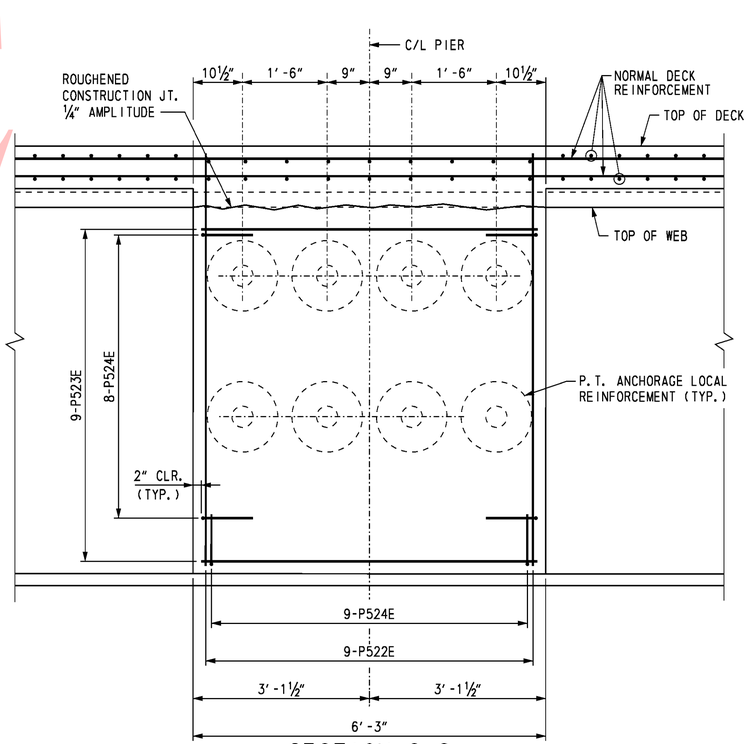

SECTION C-C

SCALE: ¾″ = 1′-0″

UNOFFICAL
WEBSITE
COPY

DELAWARE DEPARTMENT OF TRANSPORTATION	ADDENDUMS / REVISIONS: ADDENDUM NO. 4 ADDED REINFORCEMENT, 04/01/11, SAM		SR1 / I-95 INTERCHANGE	CONTRACT 28-090-03	BRIDGE NO. 1-716B	RAMP A OVER I-95 PIER 2 REINFORCEMENT 2
				COUNTY NEW CASTLE	DESIGNED BY: K. D. BEAVER	
					CHECKED BY: R. F. KIRCHNER	

S1-25 | SHEET NO. 219 | TOTAL SHTS. 803

O:\20832687-XM\CAD\Bridge\BR-ST\prf10_BR-ST_srf.dgn
3/21/2011
Steve_Lambert

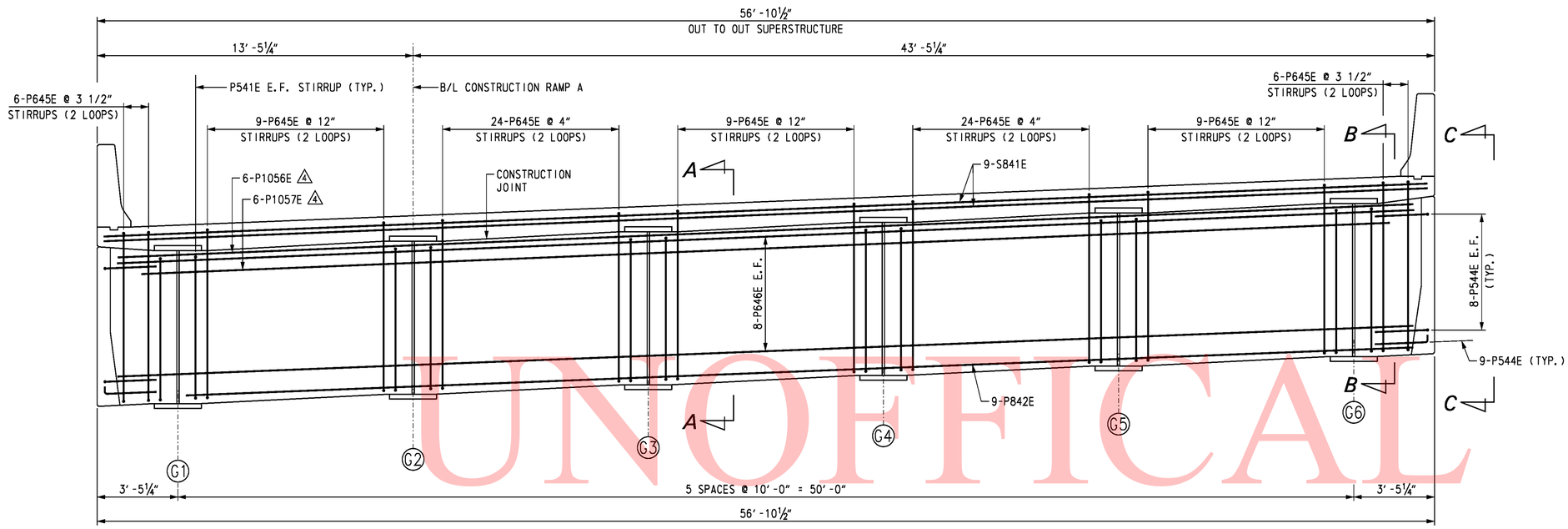

ELEVATION

SCALE: ⅜″ = 1′-0″

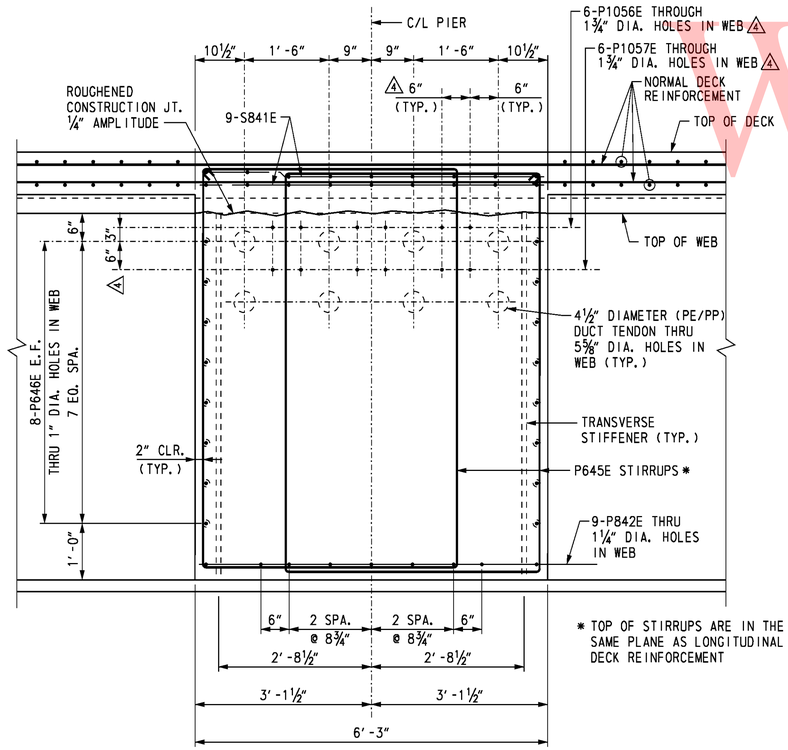

* TOP OF STIRRUPS ARE IN THE SAME PLANE AS LONGITUDINAL DECK REINFORCEMENT

SECTION A-A

SCALE: ¾″ = 1′-0″

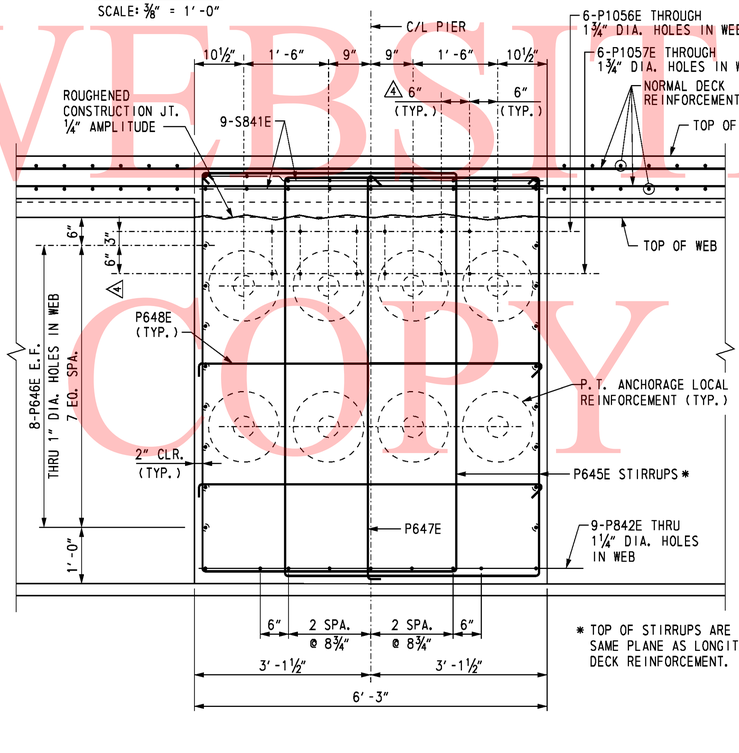

* TOP OF STIRRUPS ARE IN THE SAME PLANE AS LONGITUDINAL DECK REINFORCEMENT.

SECTION B-B

SCALE: ¾″ = 1′-0″

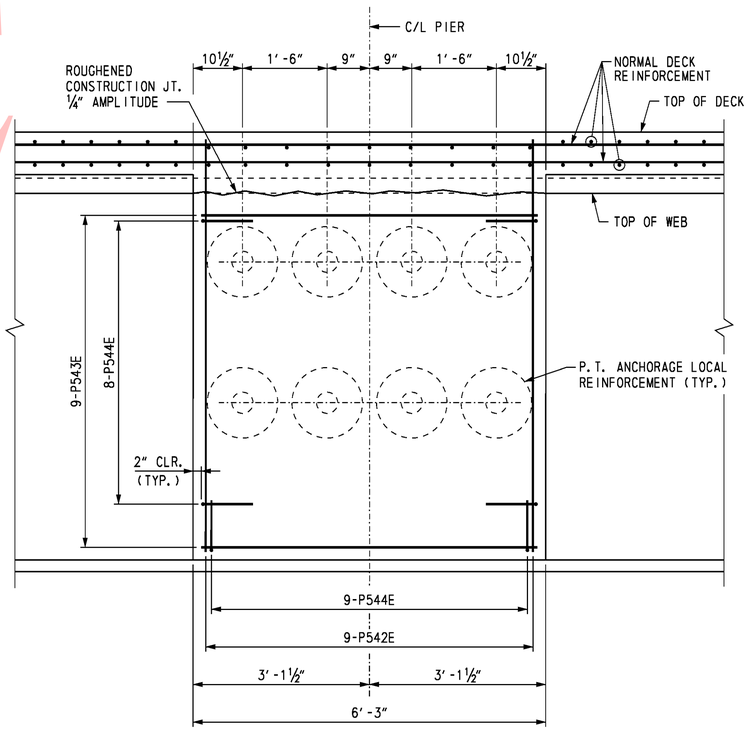

SECTION C-C

SCALE: ¾″ = 1′-0″

CROSS REFERENCE NOTES:

1. FOR BRIDGE PLAN AND ELEVATION, SEE DWG. S1-1.
2. FOR PIER PLAN AND ELEVATION, SEE DWG. S1-19.
3. FOR LOCATION OF SHEAR STUDS ON GIRDER WEB, SEE DWG. S1-28.
4. FOR REINFORCING BAR LIST, SEE DWG. S1-33.

UNOFFICAL
WEBSITE
COPY

O:\20823687-XKM\CAD\Bridge\BR-S1\prf4_BR-S1_srf.dgn
3/21/2011
Steve_Lambert

DELAWARE DEPARTMENT OF TRANSPORTATION

ADDENDUMS / REVISIONS	
ADDENDUM NO. 4 ADDED REINFORCEMENT, 04/01/11, SAM	

SR1 / I-95 INTERCHANGE

CONTRACT	BRIDGE NO.	1-716B	RAMP A OVER I-95
28-090-03	DESIGNED BY: K. D. BEAVER		PIER 3 REINFORCEMENT 2
COUNTY	CHECKED BY: R. F. KIRCHNER		
NEW CASTLE			

S1-29	
SHEET NO.	223
TOTAL SHTS.	803

REINFORCING BAR LIST

PIER 1

MARK	LENGTH	NO. BARS	TYPE	A	B	C	D	E	G	H	J	K	O	R	REMARKS
PP401	9′-7″	420	T3									1′-6″	2′-6¾″		
PP801	34′-0″	192	STR.												
PF601	27′-0″	6	STR.												
PF602	19′-6″	6	STR.												
PF603	7′-1″	66	2	1′-0″	5′-1″				1′-0″						
PF604	18′-7″	36	T3S	0′-8″					0′-8″	0′-4½″		2′-7″	4′-8″		
PF605	10′-8″	18	T9	0′-8″	9′-0″				1′-0″	0′-4½″					
PF701	27′-0″	21	STR.												
PF702	19′-6″	28	STR.												
PF801	21′-4″	33	1	0′-11″	19′-6″				0′-11″		0′-8″				
PF1001E	23′-4″	96	STR.												
PF1101	30′-2″	42	1	1′-7″	27′-0″				1′-7″		1′-2¾″				
P501E	6′-10″	20	41	0′-5½″	5′-11″				0′-5½″	0′-3¾″					
P502E	7′-2″	18	STR.												
P503E	5′-11″	18	STR.												
P504E	3′-11″	50	36	0′-10″	3′-1″										
P601E	19′-11″	144	T3S	0′-8″					0′-8″	0′-4½″		3′-10″	4′-8″		
P602E	10′-8″	42	T9	0′-8″	9′-0″				1′-0″	0′-4½″					
P603E	18′-8″ to 25-8″	30	10	5′-8″ to 9′-2″	7′-4″	5′-8″ to 9′-2″							4′-8″	2′-4″	$\Delta_A=\Delta_C=3''$
P604E	25′-6″	2	10	9′-1″	7′-4″	9′-1″							4′-8″	2′-4″	
P605E	24′-9¾″	174	T1	0′-8″	4′-7″	7′-1⅞″	4′-7″	7′-1⅞″	0′-8″						
P606E	54′-8″	16	STR.												
P607E	8′-10″	12	T9	0′-8″	7′-2″				1′-0″	0′-4½″					
P608E	7′-7″	24	T9	0′-8″	5′-11″				1′-0″	0′-4½″					
P802E	54′-8″	9	STR.												
P1001E	13′-9½″	96	STR.												
P1002E	14′-4″	11	9S		13′-6″		0′-10″	0′-2¾″		0′-10⅝″			13′-5″	25′-8½″	
P1003E	15′-4″	11	9S		14′-6″		0′-10″	0′-2½″		0′-10⅝″			14′-5¾″	29′-11½″	
P1004E	2′-3″	2	STR.												
P1005E	3′-5″	2	STR.												
P1006E	4′-7½″	2	STR.												
P1007E	6′-1″	2	STR.												
P1008E	7′-10″	2	STR.												
P1009E	10′-5″	2	STR.												
P1010E	2′-2″	2	STR.												
P1011E	3′-3½″	2	STR.												
P1012E	4′-5½″	2	STR.												
P1013E	6′-0½″	2	STR.												
P1014E	7′-11″	2	STR.												
P1015E	10′-7½″	2	STR.												
△P1016E	55′-0″	6	STR.												
△P1017E	52′-6″	6	STR.												
S801E	56′-6″	18	STR.												

PIER 2

MARK	LENGTH	NO. BARS	TYPE	A	B	C	D	E	G	H	J	K	O	R	REMARKS
PP421	9′-7″	420	T3									1′-6″	2′-6¾″		
PP821	34′-0″	192	STR.												
PF621	27′-0″	6	STR.												
PF622	19′-6″	6	STR.												
PF623	7′-1″	66	2	1′-0″	5′-1″				1′-0″						
PF624	18′-7″	36	T3S	0′-8″					0′-8″	0′-4½″		2′-7″	4′-8″		
PF625	10′-8″	18	T9	0′-8″	9′-0″				1′-0″	0′-4½″					
PF721	27′-0″	21	STR.												
PF722	19′-6″	28	STR.												
PF821	21′-4″	33	1	0′-11″	19′-6″				0′-11″		0′-8″				
PF1021E	27′-3″	96	STR.												
PF1121	30′-2″	42	1	1′-7″	27′-0″				1′-7″		1′-2¾″				
P521E	6′-10″	20	41	0′-5½″	5′-11″				0′-5½″	0′-3¾″					
P522E	7′-2″	18	STR.												
P523E	5′-11″	18	STR.												
P524E	3′-11″	50	36	0′-10″	3′-1″										
P621E	19′-11″	214	T3S	0′-8″					0′-8″	0′-4½″		3′-10″	4′-8″		
P622E	10′-8″	48	T9	0′-8″	9′-0″				1′-0″	0′-4½″					
P623E	19′-4″ to 21′-4″	16	10	6′-0″ to 7′-0″	7′-4″	6′-0″ to 7′-0″							4′-8″	2′-4″	$\Delta_A=\Delta_C=1\frac{3}{4}''(-)$
P624E	18′-2″	17	10	5′-5″	7′-4″	5′-5″							4′-8″	2′-4″	
P625E	25′-10″ to 34′-2″	17	10	9′-3″ to 13′-5″	7′-4″	9′-3″ to 13′-5″							4′-8″	2′-4″	$\Delta_A=\Delta_C=3\frac{1}{8}''$
P626E	25′-6″	2	10	9′-1″	7′-4″	9′-1″							4′-8″	2′-4″	
P627E	24′-9¾″	156	T1	0′-8″	4′-7″	7′-1⅞″	4′-7″	7′-1⅞″	0′-8″						
P628E	54′-8″	16	STR.												
P629E	8′-10″	12	T9	0′-8″	7′-2″				1′-0″	0′-4½″					
P630E	7′-7″	24	T9	0′-8″	5′-11″				1′-0″	0′-4½″					
P631E	27′-5¾″	9	T1	0′-8″	5′-11″	7′-1⅞″	5′-11″	7′-1⅞″	0′-8″						
P822E	54′-8″	9	STR.												
P1021E	13′-11″	50	STR.												
P1022E	19′-0″	46	STR.												
P1023E	19′-6″	11	9S		13′-9″		5′-9″	1′-6″		0′-10⅝″			13′-7½″	26′-6″	
P1024E	20′-2″	11	9S		14′-5″		5′-9″	1′-5″		0′-10⅝″			14′-4″	29′-3″	
P1025E	2′-4″	2	STR.												
P1026E	3′-5″	2	STR.												
P1027E	4′-8″	2	STR.												
P1028E	6′-1″	2	STR.												
P1029E	7′-10½″	2	STR.												
P1030E	10′-6½″	2	STR.												
P1031E	2′-2½″	2	STR.												
P1032E	3′-3½″	2	STR.												
P1033E	4′-7″	2	STR.												
P1034E	6′-0½″	2	STR.												
P1035E	7′-11″	2	STR.												
P1036E	10′-7½″	2	STR.												
△P1037E	55′-0″	6	STR.												
△P1038E	52′-6″	6	STR.												
S821E	56′-6″	18	STR.												

BENDING DIAGRAMS

ALL DIMENSIONS ARE FROM OUT TO OUT.

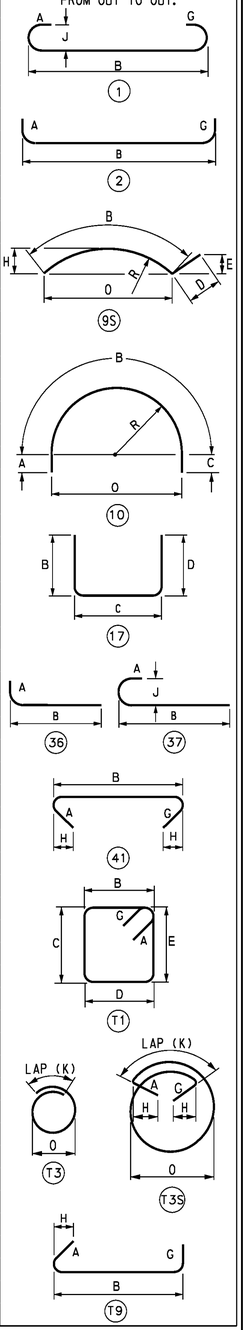

UNOFFICIAL WEBSITE COPY

O:\20832687-XMI\CAD\Bridge\BR-S1\pr17_BR-S1_sr1.dgn
3/2/2011
Steve_Lambert

S1-32

DELAWARE DEPARTMENT OF TRANSPORTATION

ADDENDUMS / REVISIONS	
ADDENDUM NO. △ ADDED REINFORCEMENT, 04/01/11, SAM	

SR1 / I-95 INTERCHANGE

CONTRACT	BRIDGE NO.	1-716B
28-090-03	DESIGNED BY: K.D. BEAVER	
COUNTY	CHECKED BY: J.S. LI	
NEW CASTLE		

RAMP A OVER I-95

PIERS 1 AND 2 REINFORCING BAR LIST

SHEET NO.	226
TOTAL SHTS.	803

REINFORCING BAR LIST

PIER 3

MARK	LENGTH	NO. BARS	TYPE	A	B	C	D	E	G	H	J	K	O	R	REMARKS
PP441	9′-7″	315	T3									1′-6″	2′-6¾″		
PP841	34′-0″	144	STR.												
PF641	19′-6″	12	STR.												
PF642	6′-7″	28	2	1′-0″	4′-7″				1′-0″						
PF643	18′-7″	36	T3S	0′-8″					0′-8″	0′-4½″		2′-7″	4′-8″		
PF644	10′-8″	18	T9	0′-8″	9′-0″				1′-0″	0′-4½″					
PF741	19′-6″	42	STR.												
PF841	21′-4″	32	1	0′-11″	19′-6″				0′-11″		0′-8″				
PF1041E	25′-2″	96	STR.												
PF1141	22′-8″	40	1	1′-7″	19′-6″				1′-7″		1′-2¾″				
P541E	6′-10″	20	41	0′-5½″	5′-11″				0′-5½″	0′-3¾″					
P542E	7′-2″	18	STR.												
P543E	5′-11″	18	STR.												
P544E	3′-11″	50	36	0′-10″	3′-1″										
P641E	19′-11″	156	T3S	0′-8″					0′-8″	0′-4½″		3′-10″	4′-8″		
P642E	10′-8″	48	T9	0′-8″	9′-0″				1′-0″	0′-4½″					
P643E	18′-8″ to 25′-8″	30	10	5′-8″ to 9′-2″	7′-4″	5′-8″ to 9′-2″							4′-8″	2′-4″	$\Delta_A = \Delta_C = 3''$
P644E	25′-6″	2	10	9′-1″	7′-4″	9′-1″							4′-8″	2′-4″	
P645E	24′-9¾″	174	T1	0′-8″	4′-7″	7′-1⅞″	4′-7″	7′-1⅞″	0′-8″						
P646E	54′-8″	16	STR.												
P647E	8′-10″	12	T9	0′-8″	7′-2″				1′-0″	0′-4½″					
P648E	7′-7″	24	T9	0′-8″	5′-11″				1′-0″	0′-4½″					
P842E	54′-8″	9	STR.												
P1041E	13′-11″	96	STR.												
P1042E	14′-7″	11	9S		13′-8″		0′-10″	0′-2 11/16″		0′-10 11/16″			13′-7″	26′-3″	
P1043E	15′-2″	11	9S		14′-4″		0′-10″	0′-2½″		0′-10⅝″			14′-3½″	29′-2″	
P1044E	2′-3″	2	STR.												
P1045E	3′-5″	2	STR.												
P1046E	4′-7½″	2	STR.												
P1047E	6′-1″	2	STR.												
P1048E	7′-10½″	2	STR.												
P1049E	10′-6″	2	STR.												
P1050E	2′-2″	2	STR.												
P1051E	3′-3½″	2	STR.												
P1052E	4′-6½″	2	STR.												
P1053E	6′-0½″	2	STR.												
P1054E	7′-10½″	2	STR.												
P1055E	10′-7″	2	STR.												
⚠4 P1056E	55′-0″	6	STR.												
⚠4 P1057E	52′-6″	6	STR.												
S841E	56′-6″	18	STR.												

BENDING DIAGRAMS

ALL DIMENSIONS ARE FROM OUT TO OUT.

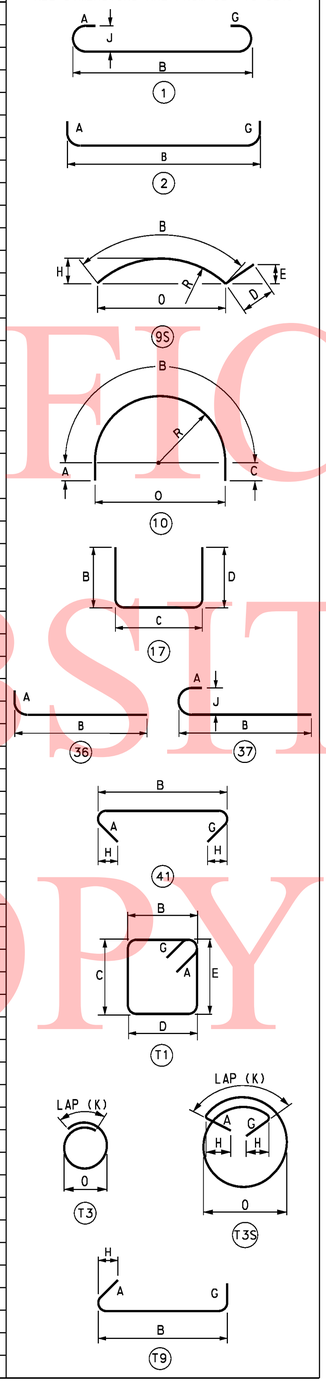

UNOFICAL WEBSITE COPY

O:\20832687-XMK\CAD\Bridge\BR-S1\prf8_BR-S1_sr1.dgn
9/2/2011
Steve_Lambert

S1-33

DELAWARE DEPARTMENT OF TRANSPORTATION

ADDENDUMS / REVISIONS

ADDENDUM NO.	
⚠4	ADDED REINFORCEMENT, 04/01/11, SAM

SR1 / I-95 INTERCHANGE

CONTRACT	28-090-03
COUNTY	NEW CASTLE
BRIDGE NO.	1-716B
DESIGNED BY:	K.D. BEAVER
CHECKED BY:	J.S. LI

RAMP A OVER I-95

PIER 3
REINFORCING BAR LIST

SHEET NO.	227
TOTAL SHTS.	803

GENERAL NOTES

1. DESIGN SPECIFICATIONS
AASHTO LRFD BRIDGE DESIGN SPECIFICATIONS, 4th EDITION WITH 2009 INTERIM REVISIONS.
DELAWARE DEPARTMENT OF TRANSPORTATION BRIDGE DESIGN MANUAL, MAY 2005 INCLUDING LATEST REVISIONS. ANSI/AASHTO/AWS D1.5 BRIDGE WELDING CODE.

2. LOADING
UNIT WEIGHTS OF MATERIALS SHALL BE IN ACCORDANCE WITH THE DELAWARE DESIGN MANUAL.
FUTURE OVERLAY ALLOWANCE SHALL BE 25 LBS/SQ FT.
STEEL BRIDGE DECK FORMS WHICH STAY IN PLACE (INCLUDING CONCRETE IN FORM CORRUGATIONS) SHALL BE 15 LBS/SQ FT.
VEHICLE LIVE LOAD SHALL BE HL-93, WHICH CONSISTS OF A DESIGN TRUCK OR TANDEM WITH DYNAMIC LOAD ALLOWANCE AND A LANE LOAD. RATING SHALL USE ALL DELAWARE LEGAL LOADS SPECIFIED IN THE BRIDGE DESIGN MANUAL.
BARRIER HAS BEEN DESIGNED FOR TEST LEVEL FIVE (TL-5).
FATIGUE DESIGN SHALL BE BASED ON THE FOLLOWING ONE DIRECTIONAL TRAFFIC VOLUMES:

RAMP A OVER SR 7: DESIGN ADT = 21,700, DESIGN ADTT = 3,125

FOR THERMAL LOADS, CONSIDER THE MODERATE TEMPERATURE RANGE AS STIPULATED IN THE AASHTO LRFD DESIGN SPECIFICATIONS. THE NORMAL TEMPERATURE SHALL BE CONSIDERED TO BE 60F.
FOR SEISMIC LOADS, CONSIDER SEISMIC PERFORMANCE ZONE 1, WITH A SITE CLASS = E AND IMPORTANCE CATEGORY - CRITICAL.

△3 3. PORTLAND CEMENT CONCRETE
PORTLAND CEMENT CONCRETE FOR CAST-IN-PLACE ELEMENTS SHALL BE AS FOLLOWS:
(28 DAY COMPRESSIVE STRENGTH)
~~ITEM NO. 602007 (CLASS A, F'c=4500 PSI) - PIER ABOVE FOOTING~~
~~ITEM NO. 602011 (CLASS A, F'c=4500 PSI) - PIER FOOTING, TOP OF PIER PILES~~
~~ITEM NO. 602786 (CLASS A, F'c=8000 PSI) - POST-TENSIONED PIER CAP~~
~~ITEM NO. 602013 (CLASS D, F'c=4500 PSI) - DECK~~
~~ITEM NO. 602014 (CLASS D, F'c=4500 PSI) - APPROACH SLAB~~
~~ITEM NO. 602015 (CLASS A, F'c=4500 PSI) - ABUTMENT, TOP OF ABUTMENT PILES~~
~~ITEM NO. 602017 (CLASS A, F'c=4500 PSI) - BARRIER~~

602007 - PORTLAND CEMENT CONCRETE MASONRY, PIER ABOVE FOOTING, CLASS A (fc' = 4,500 PSI, PIER ABOVE FOOTING)
602011 - PORTLAND CEMENT CONCRETE MASONRY, PIER FOOTING, CLASS A (fc' = 4,500 PSI, PIER FOOTING, TOP OF PIER PILES)
602013 - PORTLAND CEMENT CONCRETE MASONRY, SUPERSTRUCTURE, CLASS D (fc' = 4,500 PSI, DECK)
602014 - PORTLAND CEMENT CONCRETE MASONRY, APPROACH SLAB, CLASS D (fc' = 4,500 PSI, APPROACH SLAB)
602015 - PORTLAND CEMENT CONCRETE MASONRY, ABUTMENT ABOVE FOOTING, CLASS A (fc' = 4,500 PSI, ABUTMENT, TOP OF ABUTMENT PILES)
602017 - PORTLAND CEMENT CONCRETE MASONRY, PARAPET, CLASS A (fc' = 4,500 PSI, BARRIER)
602786 - PORTLAND CEMENT CONCRETE MASONRY, SUBSTRUCTURE, 8000PSI (fc' = 8,000 PSI, PIER CAP 2)
602787 - POST TENSIONING PIER CAPS, BONDED SYSTEM, (PIER CAP 2)

MIX REQUIREMENTS SHALL CONFORM TO SECTION 812 OF THE DELAWARE DEPARTMENT OF TRANSPORTATION STANDARD SPECIFICATIONS. ALL EXPOSED CORNERS OF CONCRETE SHALL BE CHAMFERED WITH ¾" X ¾" MILLED CHAMFER STRIPS UNLESS NOTED OTHERWISE, EXCEPT ON UNEXPOSED FOOTINGS OR WHERE INDICATED BY THE NOTATION ON THE PLANS, "DO NOT CHAMFER".
△4 ~~NO SLIP-FORMING OF BARRIERS IS PERMITTED, UNLESS OTHERWISE APPROVED.~~

4. BAR REINFORCEMENT
REINFORCING STEEL SHALL CONFORM TO AASHTO M31 (ASTM A615), GRADE 60. ALL REINFORCING STEEL SHALL HAVE A CLEAR COVER OF 2" UNLESS OTHERWISE SPECIFIED ON THE PLANS. FUSION-BONDED EPOXY COATED REINFORCING STEEL SHALL CONFORM TO AASHTO M284 (ASTM D3963), AND SHALL BE DENOTED WITH A SUFFIX "E" IN THE BAR MARKS.

DO NOT WELD GRADE 60 REINFORCING STEEL.

5. POST-TENSIONING STEEL
ALL POST-TENSIONING STRAND TENDONS SHALL CONSIST OF 0.6 INCH DIAMETER SEVEN WIRE UNCOATED LOW RELAXATION STRANDS CONFORMING TO AASHTO M203 (ASTM A416), GRADE 270.
DUCTS SHALL BE 4½ INCH DIA. POLYETHYLENE/POLYPROPYLENE (PE/PP) PLASTIC DUCTS.
GROUT FOR DUCTS SHALL BE IN ACCORDANCE WITH ITEM NO. 602779 "POST TENSIONING GROUT"

6. STRUCTURAL STEEL
STRUCTURAL STEEL SHALL CONFORM TO ASTM A 709, GRADE 50W, INCLUDING THE ADDITIONAL REQUIREMENTS FOR CHARPY V-NOTCH TESTING OF AASHTO M270 FOR PRIMARY LOAD CARRYING MEMBERS UNDER TENSILE STRESS. THE PRIMARY LOAD CARRYING MEMBER COMPONENTS ARE THE FLANGES, WEBS, AND SPLICE PLATES OF THE STEEL GIRDERS. THE USE OF FRACTURE CRITICAL MEMBERS IS PROHIBITED. FATIGUE CATEGORIES D, E AND F SHALL NOT BE USED IN STRESS REVERSAL OR TENSION AREAS, EXCEPT FOR TEMPORARY CONDITIONS.

SEVEN (7) FEET AT THE ENDS OF EACH GIRDER AND THE END CROSS FRAMES SHALL BE PAINTED WITH A URETHANE PAINT SYSTEM IN ACCORDANCE WITH SPECIAL PROVISION #605537-URETHANE PAINT SYSTEM. THE FINAL COLOR SHALL BE FEDERAL #10076 (BROWN) OF FED-STD-595B. COST OF PAINTING SHALL BE INCIDENTAL TO ITEM 605002, STEEL STRUCTURES.

ALL BOLTS FOR SPLICE PLATES AND CROSS FRAMES SHALL BE ⅞" DIA. IN 15/16" DIA. HOLES AND CONFORM TO ASTM A325, TYPE 3, WITH THREADS EXCLUDED FROM SHEAR PLANES. BOLTED CONNECTIONS SHALL BE CLASS B SLIP CRITICAL CONNECTIONS, UNLESS NOTED ON THE PLANS.

7. SERVICEABILITY
LIVE LOAD DEFLECTION SHALL BE LIMITED TO L/800.
FOR REINFORCEMENT DISTRIBUTION REQUIREMENTS, CONSIDER CLASS 2 EXPOSURE CRITERIA FOR DECKS. ACCOMMODATION TO JACK GIRDERS FOR FUTURE BEARING REPLACEMENT HAS BEEN CONSIDERED IN THE DESIGN.

8. CONSTRUCTION JOINTS
KEYED CONSTRUCTION JOINTS SHALL BE 2" X 4" OR AS NOTED. ALL EXPOSED CONSTRUCTION JOINT EDGES SHALL HAVE A ¾" V-NOTCH, UNLESS OTHERWISE NOTED.

△3 ~~9. STABILIZING STRUCTURAL EXCAVATIONS~~
~~SHEETING AND SHORING SHALL BE REQUIRED FOR ANY EXCAVATION EXCEEDING FIVE (5) FEET IN HEIGHT, THE COST SHALL BE PAID UNDER ITEM NO. 207501 - IN LIEU OF SHORING, THE CONTRACTOR MAY USE A 2:1 CUT SLOPE. NO PAYMENT SHALL BE MADE FOR ADDITIONAL EXCAVATION OR FILL OUTSIDE THE LIMITS AS DEFINED IN SECTION 207 OF THE STANDARD SPECIFICATIONS.~~

10. EXCAVATION REQUIRED TO ATTAIN THE GRADE FOR INSTALLATION OF MSE WALLS SHALL BE INCIDENTAL TO ITEM NO. 602772 - MECHANICALLY STABILIZED EARTH WALLS.

11. STRUCTURAL BACKFILL SHALL CONFORM TO THE REQUIREMENTS OF BORROW TYPE C. MSE WALL BACKFILL SHALL BE AS SPECIFIED ON THE PLANS.

12. ROADWAY CLEARANCES
A MINIMUM OF 16'-6" VERTICAL CLEARANCE SHALL BE MAINTAINED ABOVE ALL ROADWAYS.
A MINIMUM OF 2'-0" HORIZONTAL CLEARANCE SHALL BE MAINTAINED FROM THE OUTSIDE EDGE OF SHOULDER OFFSET (FACE OF CURB) TO THE FACE OF ANY OBSTRUCTION. THESE CLEARANCES APPLY AT ALL TIMES INCLUDING DURING CONSTRUCTION.

BRIDGE LEGAL LOAD RATING (TONS)
RAMP A OVER SR 7

TRUCK TYPE	RATING FACTOR	SAFE LOAD CAPACITY
HS-20	1.54	55.4
S220	2.45	49.0
S327	2.28	61.5
S335	1.72	60.2
S437	1.70	62.0
T330	2.24	67.2
T435	1.89	66.1
T540	1.73	69.2

BRIDGE DESIGN LOAD RATING:
INVENTORY = 1.14
OPERATING = 1.48

△3 13. TEST PILES
~~PILE LENGTHS FOR ORDERING PURPOSES SHALL BE DETERMINED BY TEST PILES. A MINIMUM OF ONE (1) PILE PER SUBSTRUCTURE, AS SHOWN ON THE PLANS, SHALL BE DYNAMICALLY TESTED BY THE CONTRACTOR IN ACCORDANCE WITH SPECIAL PROVISION 619519. TEST AND PRODUCTION PILE RE-STRIKES WILL BE PAID AS FOLLOWS:~~

~~A). ALL TEST PILE(S) WILL BE RESTRUCK AND DYNAMICALLY TESTED BY THE CONTRACTOR. THE TEST PILE RESTRIKES SHALL BE INCIDENTAL TO ITEM NO. 619519 DYNAMIC PILE TESTING BY CONTRACTOR PROVIDED THAT THEY ARE PERFORMED WITHIN FIVE (5) CALENDAR DAYS FROM INITIAL DRIVE.~~

~~B). AN ADDITIONAL PAYMENT WILL BE MADE TO THE CONTRACTOR IF HE IS DIRECTED BY THE ENGINEER TO WAIT AND RESTRIKE THE TEST PILE MORE THAN FIVE (5) CALENDAR DAYS AFTER INITIAL DRIVE. THE CONTRACTOR SHALL BE COMPENSATED AT THE FIXED PRICE OF $1,000.00 PER CALENDAR DAY FOR EVERY DAY, AFTER THE FIFTH CALENDAR DAY, UNDER ITEM NO. 619502 TEST PILE RESTRIKE. MULTIPLE TEST PILE RESTRIKES OCCURRING ON THE SAME DAY WILL ONLY BE PAID FOR AS ONE CALENDAR DAY. NO ADDITIONAL COMPENSATION WILL BE MADE REGARDLESS OF THE NUMBER OF TEST PILE RESTRIKES PERFORMED THAT DAY.~~

~~C). RESTRIKES ON PRODUCTION PILES WHICH ARE DESIGNATED TO BE DYNAMICALLY TESTED WILL NOT BE PAID UNDER ITEM NO. 619501 PRODUCTION PILE RESTRIKE. THESE PRODUCTION PILE RESTRIKES ARE INCIDENTAL TO ITEM NO. 619519 DYNAMIC PILE TESTING BY CONTRACTOR.~~

~~THE DEPARTMENT RESERVES THE RIGHT TO PERFORM DYNAMIC TESTING OF RESTRIKES.~~

PILE LENGTHS FOR ORDERING PURPOSES SHALL BE DETERMINED BY TEST PILE RESTRIKE RESULTS. A MINIMUM OF ONE PILE PER SUBSTRUCTURE, AS SHOWN ON THE PLANS, SHALL BE DYNAMICALLY TESTED WITH SIGNAL MATCHING ANALYSIS BY THE CONTRACTOR IN ACCORDANCE WITH SPECIAL PROVISION 619519 AND 619539. TEST AND PRODUCTION PILE RESTRIKES WILL BE PAID AS FOLLOWS:

A). ALL TEST PILE(S) WILL BE RESTRUCK AFTER A WAITING PERIOD OF AT LEAST 48 HOURS. TEST PILE RESTRIKES SHALL BE INCIDENTAL TO THE INITIAL INSTALLATION OF THE PILE PROVIDED THEY ARE REQUESTED WITHIN FIVE WORKING DAYS FROM THE COMPLETION OF THE INITIAL DRIVE. IF TEST PILE RESTRIKES ARE REQUESTED AFTER THE FIVE WORKING DAYS FROM THE COMPLETION OF THE INITIAL DRIVE THEN THE TEST PILE RESTRIKE SHALL BE PAID AS NOTED IN SPECIAL PROVISION 619502.

B). IF DIRECTED BY THE ENGINEER TO RESTRIKE A PRODUCTION PILE, THE RESTRIKE OF THE PRODUCTION PILE SHALL BE PAID SEPARATELY UNDER ITEM NO. 619501.

14. THE CONCRETE PIER CAPS SHOWN ON THE PLANS SHALL BE USED.
NO OTHER ALTERNATES WILL BE CONSIDERED.

△3 15. MASS CONCRETE
PIER 2 POST-TENSIONED CAP IS DESIGNED AS MASS CONCRETE. SEE SPECIAL PROVISIONS.

NOTE:

LOAD RATING IS IN ACCORDANCE WITH THE LOAD AND RESISTANCE FACTOR RATING (LRFR) METHOD.

CROSS REFERENCE NOTE:

FOR MSE WALL NOTES, SEE DWG S2-13.

UNOFFICAL WEBSITE COPY

O:\20832687-XMI\CAD\Bridge\BR-S2\gen01_BR-S2_srf.dgn
4/28/2011
Steve_Lambert

DELAWARE DEPARTMENT OF TRANSPORTATION

ADDENDUMS / REVISIONS	
ADDENDUM NO. △3 REV. NOTE 3, DELETED NOTE 9, ADDED	
NOTE 15, 02/18/11, SAM	
ADDENDUM NO. △4 REV. NOTE 3 & 13, 04/01/11, RFK	

SR1 / I-95 INTERCHANGE

CONTRACT	28-090-03
COUNTY	NEW CASTLE
BRIDGE NO.	1-716C
DESIGNED BY: R. F. KIRCHNER	
CHECKED BY: J. S. LI	

RAMP A OVER SR 7
GENERAL NOTES

SHEET NO.	S2-2
	255
TOTAL SHTS.	803

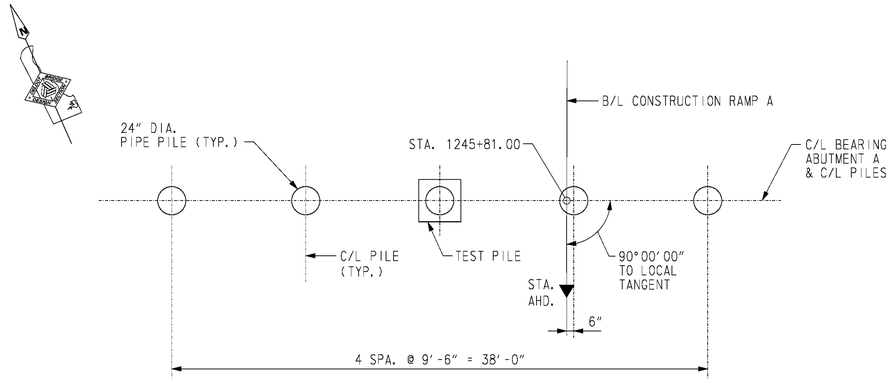

ABUTMENT A PILE PLAN

SCALE: 3/16" = 1'-0"

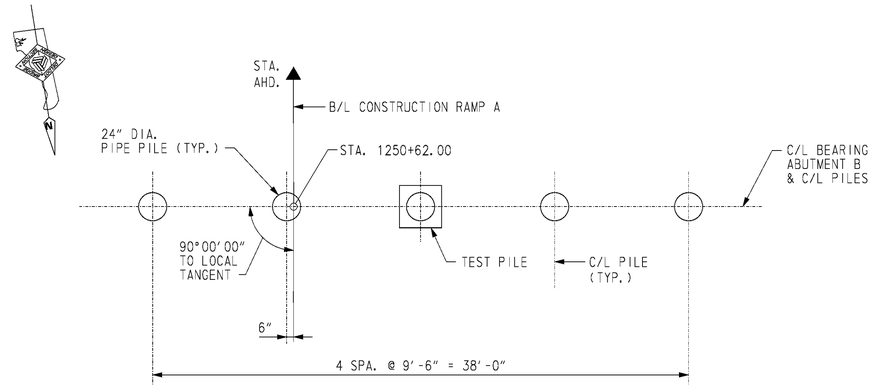

ABUTMENT B PILE PLAN

SCALE: 3/16" = 1'-0"

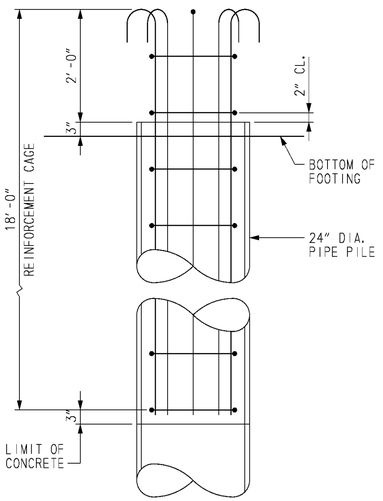

ELEVATION

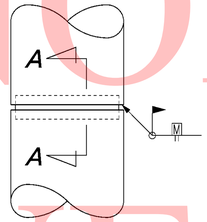

PIPE PILE SPLICE DETAIL

NOT TO SCALE

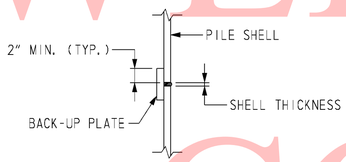

SECTION A-A

NOT TO SCALE

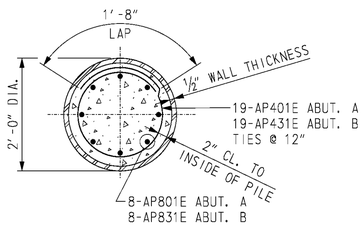

SECTION

PIPE PILE REINFORCEMENT

SCALE: 3/4" = 1'-0"

PILE SPLICE NOTES:

1. BACK-UP PLATE TO BE CUT FROM SAME PILE SIZE AS IS BEING SPLICED. CUT AND BEND TO FIT INSIDE DIAMETER OF PILE.
2. NO PILE SPLICING TO BE ALLOWED ON ANY PORTION OF PILE THAT IS TO REMAIN EXPOSED IN COMPLETED STRUCTURE.
3. SPLICER SLEEVE MATERIAL SHALL BE STEEL CONFORMING TO ASTM DESIGNATION A709, GRADE 36 (250).

PILE INSTALLATION DATA

SUBSTRUCTURE UNIT	DESIGN DATA: NOMINAL PILE DRIVING RESISTANCE (KIPS)	DESIGN DATA: ESTIMATED PILE TIP ELEVATION	ACTUAL FIELD DATA: AVERAGE MINIMUM TIP ELEVATION	ACTUAL FIELD DATA: AVERAGE MAXIMUM TIP ELEVATION
ABUTMENT A	430	21.0		
ABUTMENT B	430	13.0		

ABUTMENT A PILE DRIVING INFORMATION

PILE SIZE AND TYPE:
ACTUAL BEARING OBTAINED:
HAMMER TYPE:
PILE HAMMER ENERGY:
SPECIAL DRIVING CONDITIONS AND COMMENTS:

ABUTMENT B PILE DRIVING INFORMATION

PILE SIZE AND TYPE:
ACTUAL BEARING OBTAINED:
HAMMER TYPE:
PILE HAMMER ENERGY:
SPECIAL DRIVING CONDITIONS AND COMMENTS:

NOTES:

1. PILES SHALL BE 24" DIA. WITH ½" WALL THICKNESS OPEN-ENDED STEEL PIPE PILES, ASTM A252 GRADE 3.
2. REINFORCING STRAPS SHALL BE PROVIDED FOR THE ABUTMENT STEM AND BACKWALL TO RESIST THE LONGITUDINAL FORCES ON THE SUPERSTRUCTURE.
3. PILE CASINGS SHALL BE INSTALLED AT THE PROPOSED PILE LOCATIONS DURING THE ABUTMENT MSE WALL CONSTRUCTON.
4. (2) UPON COMPLETION OF THE MSE WALL THERE SHALL BE A ~~30 TO~~ 60 DAY QUARANTINE PERIOD PRIOR TO DRIVING THE ABUTMENT PILES TO ALLOW FOR SETTLEMENT AND TO MINIMIZE THE DOWNDRAG FORCES THAT MIGHT DEVELOP ON THE PILES.
5. THE ENGINEER SHALL MONITOR THE SETTLEMENT DURING THE QUARANTINE PERIOD TO DETERMINE WHEN THE PILES MAY BE DRIVEN.
6. UPON COMPLETION OF THE QUARANTINE PERIOD, AS JUDGED BY THE ENGINEER, DRIVE PILES TO THE NOMINAL PILE DRIVING RESISTANCE INDICATED ON THE PLANS.
7. 'TEST PILES' SHALL BE TESTED IN ACCORDANCE WITH THE SPECIFICATIONS.
8. (2) ALL TEST PILES SHALL BE 10 FEET LONGER THAN INDICATED ON PILE INSTALLATION DATA TABLE.

CROSS REFERENCE NOTES:

1. FOR ABUTMENT PLAN AND ELEVATION, SEE DWGS. S2-5 & S2-6.
2. FOR REINFORCING BAR LIST, SEE DWG. S2-15.
3. FOR PILE CASING DETAILS, SEE DWG. S2-5.
4. FOR SOIL PROFILE, SOIL PROPERTIES AND TOTAL ESTIMATED SETTLEMENT, SEE DWG. S2.14
5. FOR TEST PILE PAYMENT NOTES, SEE DWG. S2-2..

UNOFICAL WEBSITE COPY

O:\20832687-XM\CAD\Bridge\(BR-S2)\sb01_BR-S2_sr1.dgn
4/7/2011
untitled

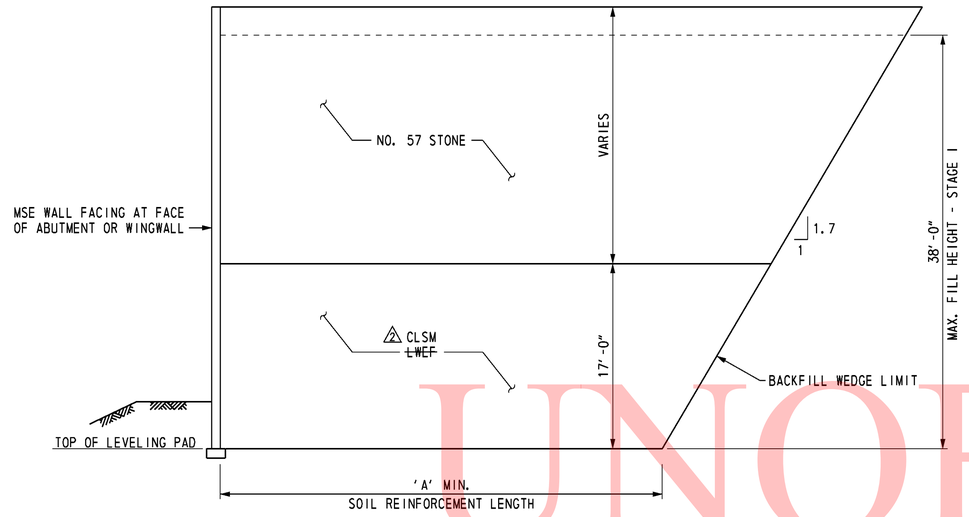

SOIL PROFILE SECTION
ABUTMENT A AND WINGWALLS I AND II

NOT TO SCALE

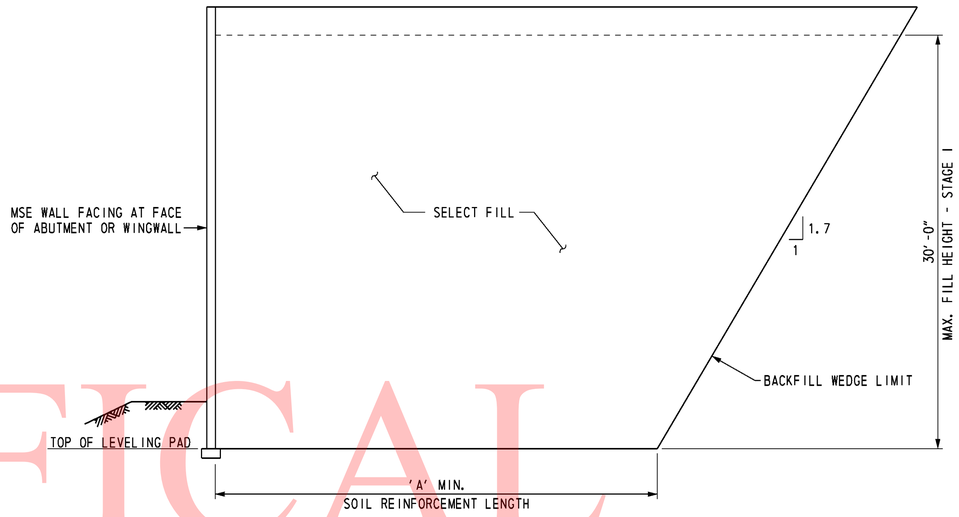

SOIL PROFILE SECTION
ABUTMENT B AND WINGWALLS III AND IV

NOT TO SCALE

MINIMUM REINFORCED ZONE WIDTH (A) FEET	
ABUTMENT A	
FACE OF ABUTMENT	31.0
3 WINGWALLS ~~I AND~~ II	31.0
ABUTMENT B	
FACE OF ABUTMENT	33.0
WINGWALLS III AND IV	26.0

SOIL PROPERTIES				
SOIL TYPE	UNIT WEIGHT (PCF)	DRAINED ANGLE OF FRICTION (DEGREES)	UNDRAINED SHEAR (PSF)	FACTORED BEARING RESISTANCE (KSF)
SELECT FILL	125	34	-	-
2 ~~LWEF~~	~~40~~	~~38~~	-	-
NO. 57 STONE	105	38	-	-
FOUNDATION SOIL:				
ABUTMENT A	120	24	1250	5.0
ABUTMENT B	120	24	1400	5.1
2 CONTROLLED LOW STRENGTH MATERIAL (CLFM)	40	38	-	-

FOUNDATION NOTES

THE FACTORED BEARING RESISTANCE SHALL BE VERIFIED PRIOR TO CONSTRUCTION OF THE MSE WALL.

THE INTERNAL STABILITY OF THE MSE WALL SHALL BE DESIGNED BY THE CONTRACTOR USING THE SOIL PARAMETERS PROVIDED FOR EACH STRUCTURE LOCATION. THE INTERNAL STABILITY CALCULATIONS SHALL BE SIGNED AND SEALED BY A PROFESSIONAL ENGINEER LICENSED IN THE STATE OF DELAWARE AS INDICATED IN THE PROJECT SPECIFICATIONS.

ISOLATED AREAS OF EXISTING FILL MAY BE ENCOUNTERED DURING CONSTRUCTION OF THIS MSE WALL. EXISTING FILL SHALL BE UNDERCUT TO EXPOSE UNDISTURBED NATURAL SOIL. UNDERCUTTING AND BACKFILLING WILL BE MEASURED AND PAID IN ACCORDANCE WITH THE SPECIFICATIONS.

A MINIMUM 7-DAY QUARANTINE PERIOD SHALL BE REQUIRED AFTER CONSTRUCTION OF THE WALL TO THE "MAX. FILL HEIGHT - STAGE 1" INDICATED ON THE SOIL PROFILE SECTION. NO FURTHER FILL SHALL BE PLACED UNTIL AUTHORIZED BY THE ENGINEER. ONCE AUTHORIZATION IS GIVEN, FILL SHALL BE PLACED IN ADDITIONAL INCREMENTS OF 5 FEET IN HEIGHT, WITH THE SAME QUARANTINE PERIOD AND AUTHORIZATION REQUIRED AT EACH 2 INCREMENT. AN ADDITIONAL QUARANTINE PERIOD OF ~~30 TO~~ 60 DAYS IS REQUIRED AFTER CONSTRUCTION OF THE MSE WALL TO ITS FULL HEIGHT. NO FURTHER CONSTRUCTION SHALL BE PERMITTED UNTIL AUTHORIZED BY THE ENGINEER. A TOTAL ESTIMATED SETTLEMENT OF APPROXIMATELY FOUR TO FIVE INCHES IS ANTICIPATED.

3 FOR WINGWALL I AND WINGWALL II (STA. 1245+50.29 TO STA. 1245+58.30), SOIL REINFORCEMENT LENGTH RATIO SHALL BE L/H=1.2. NO. 57 STONE BACKFILL APPLIES ABOVE ELEVATION 83.00.

4 THE CONTRACTOR IS RESPONSIBLE FOR DEVELOPING MEANS AND METHODS, IN CONSULTATION WITH THE MSE WALL MANUFACTURER, FOR CONSTRUCTING THE MSE WALLS TO THE LINES, GRADES, AND DIMENSIONS SHOWN ON THE PLANS. SOIL BORINGS, LABORATORY TEST DATA, AND THE ENGINEER'S SETTLEMENT ESTIMATE(S) ARE CONTAINED IN ONE OF THE FOLLOWING GEOTECHNICAL ENGINEERING REPORTS WHICH HAVE BEEN MADE AVAILABLE BY THE DEPARTMENT: FINAL FOUNDATIONS REPORT - RETAINING WALLS AND FINAL FOUNDATIONS REPORT - BRIDGES AND WINGWALLS DATED APRIL 2009, PREPARED BY RUMMEL, KLEPPER & KAHL, LLP AND URS CORPORATION. THESE SUPPLEMENTAL GEOTECHNICAL REPORTS ARE NOT PART OF THE CONTRACT DOCUMENTS, AND ARE AVAILABLE AT WWW.BIDS.DELAWARE.GOV WEBSITE. CONTRACTORS MAY USE THIS INFORMATION AT THEIR OWN RISK.

UNOFFICAL WEBSITE COPY

DELAWARE
DEPARTMENT OF TRANSPORTATION

ADDENDUMS / REVISIONS	
ADDENDUM NO. 2 REVISED QUARANTINE PERIOD AND SOIL PROPERTIES, 01/26/11, RFK	
ADDENDUM NO. 3 REV. BACKFILL PROFILE, 02/18/11, RFK	
ADDENDUM NO. 4 ADDED NOTE, 04/01/11, RFK	

SR1 / I-95 INTERCHANGE

CONTRACT	BRIDGE NO.	1-716C
28-090-03	DESIGNED BY: R. F. KIRCHNER	
COUNTY	CHECKED BY: G.P. MISTRY	
NEW CASTLE		

RAMP A OVER SR 7

WINGWALL DETAILS 2

SHEET NO.	TOTAL SHTS.
267	803

O:\20832687-XM\CAD\Bridge\BR-S2\rd04_BR-S2_srf.dgn
4/1/2011
Steve_Lambert

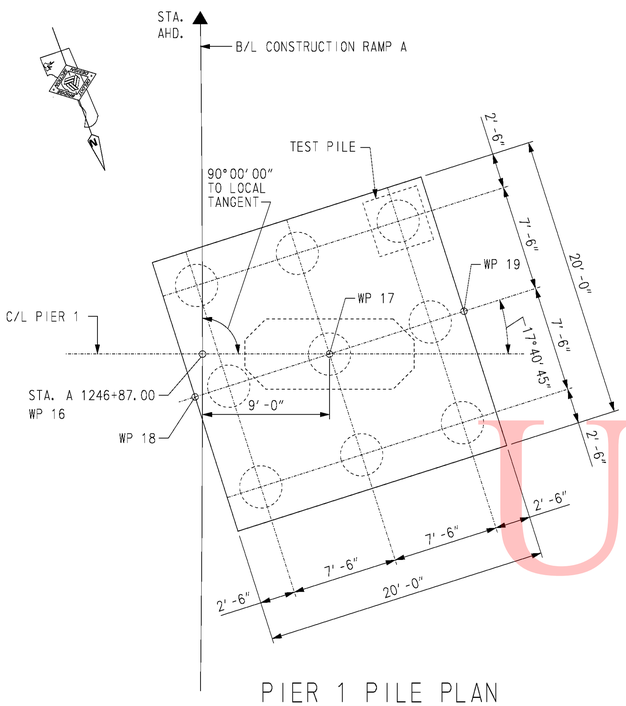

PIER 1 PILE PLAN

SCALE: 1/8" = 1'-0"

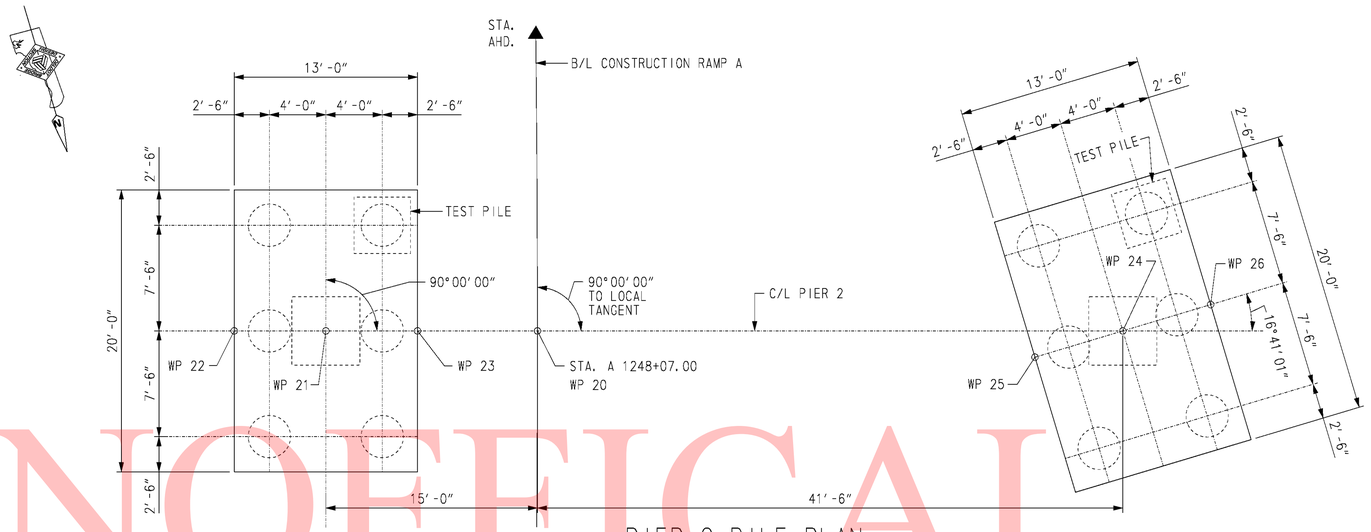

PIER 2 PILE PLAN

SCALE: 1/8" = 1'-0"

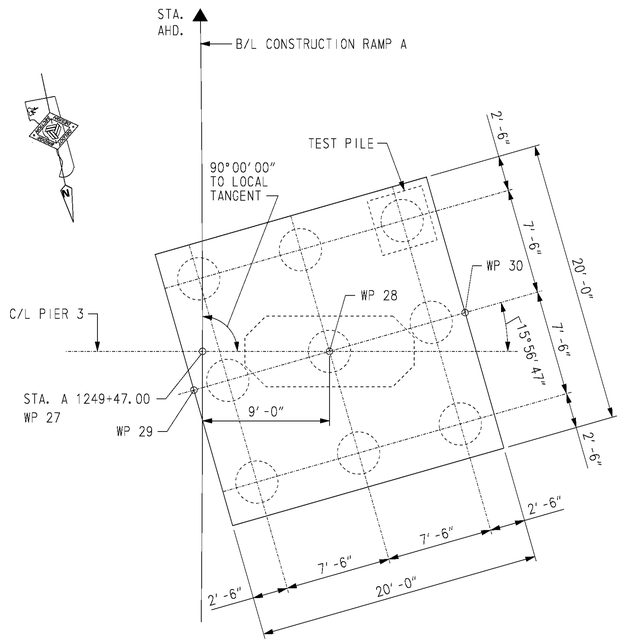

PIER 3 PILE PLAN

SCALE: 1/8" = 1'-0"

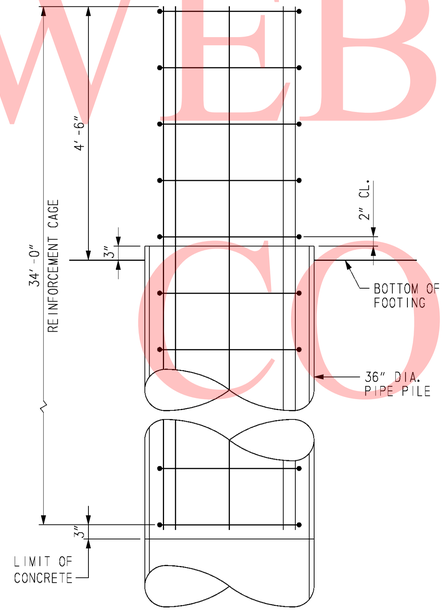

ELEVATION

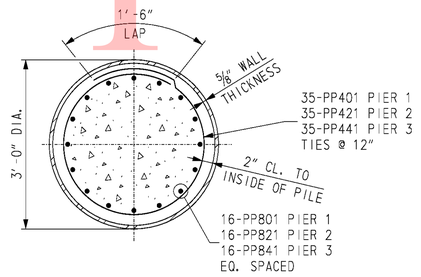

SECTION

PIPE PILE REINFORCEMENT

SCALE: 3/4" = 1'-0"

WORKING POINTS

WP NO.	STATION	OFFSET	COORDINATES	
			NORTHING	EASTING
16	1246+87.00	0.00'	612,408.6318	432,384.8649
17	1246+87.00	9.00' RT.	612,411.7983	432,376.4404
18	1246+83.96	0.53' LT.	612,411.2888	432,386.4274
19	1246+90.01	18.53' RT.	612,412.3078	432,366.4533
20	1248+07.00	0.00'	612,295.0144	432,346.3156
21	1248+07.00	15.00' LT.	612,290.6581	432,360.6691
22	1248+07.00	21.50' LT.	612,288.7703	432,366.8889
23	1248+07.00	8.50' LT.	612,292.5458	432,354.4492
24	1248+07.00	41.50' RT.	612,307.0670	432,306.6043
25	1248+05.17	35.27' RT.	612,307.0444	432,313.1043
26	1248+08.82	47.73' RT.	612,307.0897	432,300.1044
27	1249+47.00	0.00'	612,159.6388	432,310.7616
28	1249+47.00	9.00' RT.	612,161.5940	432,301.9765
29	1249+44.25	0.61' LT.	612,162.1869	432,311.9589
30	1249+49.72	18.62' RT.	612,161.0011	432,291.9941

PILE INSTALLATION DATA

SUBSTRUCTURE UNIT	DESIGN DATA		ACTUAL FIELD DATA	
	NOMINAL PILE DRIVING RESISTANCE (KIPS)	ESTIMATED PILE TIP ELEVATION	AVERAGE MINIMUM TIP ELEVATION	AVERAGE MAXIMUM TIP ELEVATION
PIER 1	1900	-12.0		
PIER 2	1025	-1.0		
PIER 3	1150	-29.0		

PIER 1 PILE DRIVING INFORMATION

PILE SIZE AND TYPE:
ACTUAL BEARING OBTAINED:
HAMMER TYPE:
PILE HAMMER ENERGY:
SPECIAL DRIVING CONDITIONS AND COMMENTS:

PIER 2 PILE DRIVING INFORMATION

PILE SIZE AND TYPE:
ACTUAL BEARING OBTAINED:
HAMMER TYPE:
PILE HAMMER ENERGY:
SPECIAL DRIVING CONDITIONS AND COMMENTS:

PIER 3 PILE DRIVING INFORMATION

PILE SIZE AND TYPE:
ACTUAL BEARING OBTAINED:
HAMMER TYPE:
PILE HAMMER ENERGY:
SPECIAL DRIVING CONDITIONS AND COMMENTS:

NOTES:

1. PILES SHALL BE 36" DIA. WITH 5/8 WALL THICKNESS OPEN-ENDED STEEL PIPE PILES, ASTM A252 GRADE 3.
2. TEST PILES SHALL BE TESTED IN ACCORDANCE WITH THE SPECIFICATIONS.
3. ⚠4 ALL TEST PILES SHALL BE 10 FEET LONGER THAN INDICATED ON PILE INSTALLATION DATA TABLE.

CROSS REFERENCE NOTES:

1. FOR PIER 1 THRU PIER 3 PLAN AND ELEVATION, SEE DWGS. S2-17 TO S2-19.
2. FOR REINFORCING BAR LIST, SEE DWG. S2-28 & S2-29.
3. FOR PILE SPLICE DETAIL, SEE DWG. S2-4.
4. FOR TEST PILE PAYMENT NOTES, SEE DWG. S2-2.

UNOFFICAL WEBSITE COPY

O:\20832687-XM\CAD\Bridge\BR-S2\prf1_BR-S2_srf.dgn

4/7/2011

untitled

DELAWARE DEPARTMENT OF TRANSPORTATION

ADDENDUMS / REVISIONS	
ADDENDUM NO. ⚠4 ADDED NOTE, 04/01/11, RFK	

SR1 / I-95 INTERCHANGE

CONTRACT	28-090-03
COUNTY	NEW CASTLE
BRIDGE NO.	1-716C
DESIGNED BY: K.D. BEAVER	
CHECKED BY: R.F. KIRCHNER	

RAMP A OVER SR 7

PIER 1, 2 AND 3 FOUNDATION PLANS

S2-16	
SHEET NO.	269
TOTAL SHTS.	803

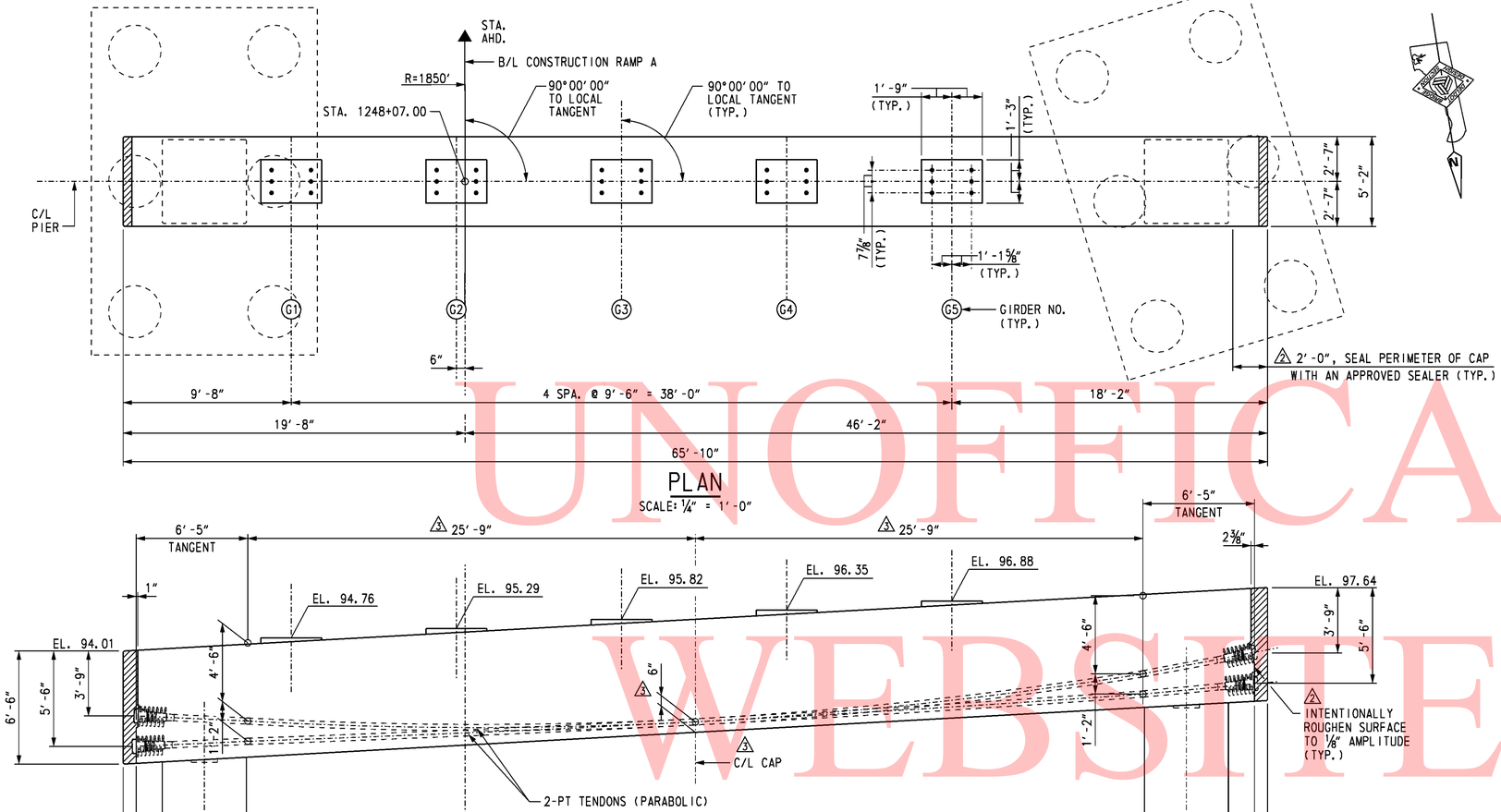

PLAN

SCALE: ¼" = 1'-0"

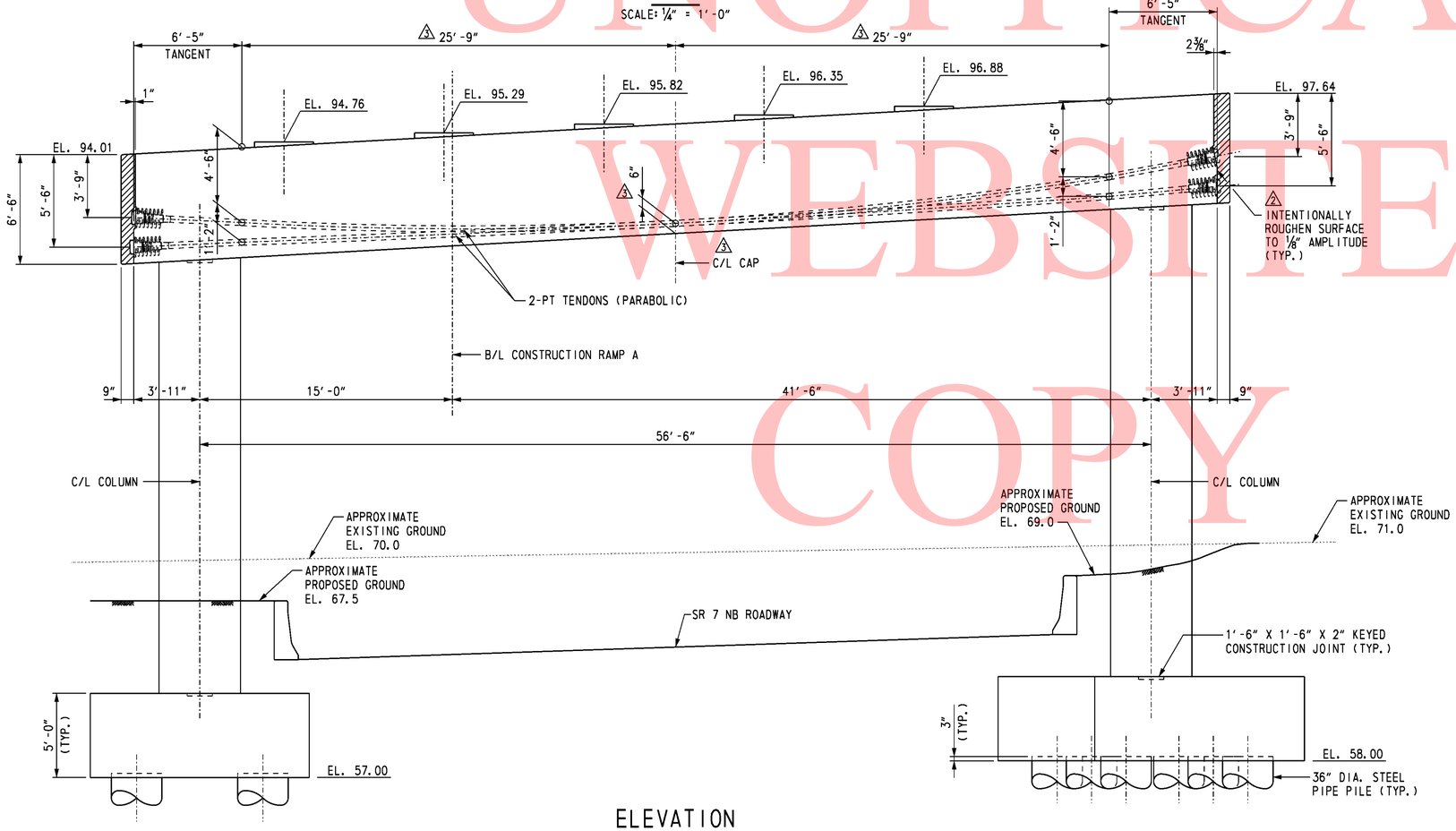

ELEVATION

SCALE: ¼" = 1'-0"

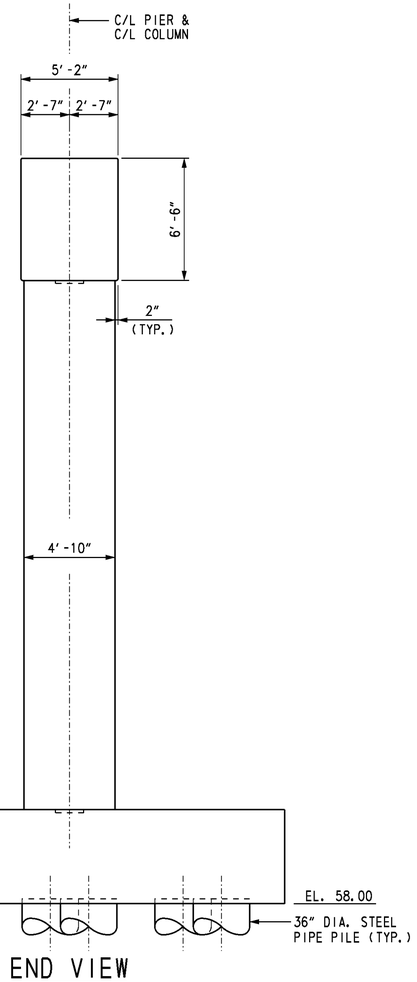

END VIEW

SCALE: ¼" = 1'-0"

NOTES:

1. COST OF PIER CAP SEALER SHALL BE PAID UNDER ITEM NO. 602616 "WATERPROOFING PCC MASONRY SURFACES".

CROSS REFERENCE NOTES:

1. FOR BRIDGE PLAN AND ELEVATION, SEE DWG. S2-1.
2. FOR PIER FOUNDATION PLAN, SEE DWG. S2-16.
3. FOR PIER REINFORCING DETAILS, SEE DWGS. S2-22 THRU S2-25.

UNOFFICAL WEBSITE COPY

O:\20832687-XXM\CAD\Bridge\BR-S2\pr03_BR-S2_srf.dgn
3/2/2011
Steve_Lambert

DELAWARE DEPARTMENT OF TRANSPORTATION

ADDENDUMS / REVISIONS	
ADDENDUM NO. 2 ADDED ROUGHENED SURFACE AND CONCRETE SEALER NOTES, 01/26/11, SAM	
ADDENDUM NO. 3 ADDED PT LAYOUT DIMS., 02/18/11, TBC	
ADDENDUM NO. 4 ADDED NOTE, 04/01/11, SAM	

SR1 / I-95 INTERCHANGE

CONTRACT	28-090-03
COUNTY	NEW CASTLE
BRIDGE NO.	1-716C
DESIGNED BY: T. B. CUSTER	
CHECKED BY: J. S. LI	

RAMP A OVER SR 7

PIER 2 PLAN AND ELEVATION

S2-18

SHEET NO.	271
TOTAL SHTS.	803

GENERAL NOTES

1. DESIGN SPECIFICATIONS
AASHTO LRFD BRIDGE DESIGN SPECIFICATIONS, 4th EDITION WITH 2009 INTERIM REVISIONS.
DELAWARE DEPARTMENT OF TRANSPORTATION BRIDGE DESIGN MANUAL, MAY 2005 INCLUDING LATEST REVISIONS. ANSI/AASHTO/AWS D1.5 BRIDGE WELDING CODE

2. LOADING
UNIT WEIGHTS OF MATERIALS SHALL BE IN ACCORDANCE WITH THE DELAWARE DESIGN MANUAL.
FUTURE OVERLAY ALLOWANCE SHALL BE 25 LBS/SQ FT.
STEEL BRIDGE DECK FORMS WHICH STAY IN PLACE (INCLUDING CONCRETE IN FORM CORRUGATIONS) SHALL BE 15 LBS/SQ FT.
VEHICLE LIVE LOAD SHALL BE HL-93, WHICH CONSISTS OF A DESIGN TRUCK OR TANDEM WITH DYNAMIC LOAD ALLOWANCE AND A LANE LOAD. RATING SHALL USE ALL DELAWARE LEGAL LOADS SPECIFIED IN THE BRIDGE DESIGN MANUAL.
BARRIER HAS BEEN DESIGNED FOR TEST LEVEL FIVE (TL-5).
FATIGUE DESIGN SHALL BE BASED ON THE FOLLOWING ONE DIRECTIONAL TRAFFIC VOLUMES:

RAMP B OVER SR 7: DESIGN ADT = 18,650, DESIGN ADTT = 2,240

FOR THERMAL LOADS, CONSIDER THE MODERATE TEMPERATURE RANGE AS STIPULATED IN THE AASHTO LRFD DESIGN SPECIFICATIONS. THE NORMAL TEMPERATURE SHALL BE CONSIDERED TO BE 60F.
FOR SEISMIC LOADS, CONSIDER SEISMIC PERFORMANCE ZONE 1, WITH A SITE CLASS = E AND IMPORTANCE CATEGORY - CRITICAL.

△3 3. PORTLAND CEMENT CONCRETE
PORTLAND CEMENT CONCRETE FOR CAST-IN-PLACE ELEMENTS SHALL BE AS FOLLOWS:
(28 DAY COMPRESSIVE STRENGTH)
~~ITEM NO. 602007 (CLASS A, F'c=4500 PSI) - PIER ABOVE FOOTING~~
~~ITEM NO. 602011 (CLASS A, F'c=4500 PSI) - PIER FOOTING, TOP OF PIER PILES~~
~~ITEM NO. 602786 (CLASS A, F'c=8000 PSI) - POST TENSIONED PIER CAP~~
~~ITEM NO. 602013 (CLASS D, F'c=4500 PSI) - DECK~~
~~ITEM NO. 602014 (CLASS D, F'c=4500 PSI) - APPROACH SLAB~~
~~ITEM NO. 602015 (CLASS A, F'c=4500 PSI) - ABUTMENT, TOP OF ABUTMENT PILES~~
~~ITEM NO. 602017 (CLASS A, F'c=4500 PSI) - BARRIER~~

602007 - PORTLAND CEMENT CONCRETE MASONRY, PIER ABOVE FOOTING, CLASS A (fc' = 4,500 PSI, PIER ABOVE FOOTING)
602011 - PORTLAND CEMENT CONCRETE MASONRY, PIER FOOTING, CLASS A (fc' = 4,500 PSI, PIER FOOTING, TOP OF PIER PILES)
602013 - PORTLAND CEMENT CONCRETE MASONRY, SUPERSTRUCTURE, CLASS D (fc' = 4,500 PSI, DECK)
602014 - PORTLAND CEMENT CONCRETE MASONRY, APPROACH SLAB, CLASS D (fc' = 4,500 PSI, APPROACH SLAB)
602015 - PORTLAND CEMENT CONCRETE MASONRY, ABUTMENT ABOVE FOOTING, CLASS A (fc' = 4,500 PSI, ABUTMENT, TOP OF ABUTMENT PILES)
602017 - PORTLAND CEMENT CONCRETE MASONRY, PARAPET, CLASS A (fc' = 4,500 PSI, BARRIER)
602786 - PORTLAND CEMENT CONCRETE MASONRY, SUBSTRUCTURE, 8000PSI (fc' = 8,000 PSI, PIER CAP)
602787 - POST TENSIONING PIER CAPS, BONDED SYSTEM, (PIER CAP)

MIX REQUIREMENTS SHALL CONFORM TO SECTION 812 OF THE DELAWARE DEPARTMENT OF TRANSPORTATION STANDARD SPECIFICATIONS. ALL EXPOSED CORNERS OF CONCRETE SHALL BE CHAMFERED WITH ¾" X ¾" MILLED CHAMFER STRIPS UNLESS NOTED OTHERWISE, EXCEPT ON UNEXPOSED FOOTINGS OR WHERE INDICATED BY THE NOTATION ON THE PLANS, "DO NOT CHAMFER".
△4 ~~NO SLIP-FORMING OF BARRIERS IS PERMITTED, UNLESS OTHERWISE APPROVED.~~

4. BAR REINFORCEMENT
REINFORCING STEEL SHALL CONFORM TO AASHTO M31 (ASTM A615), GRADE 60. ALL REINFORCING STEEL SHALL HAVE A CLEAR COVER OF 2" UNLESS OTHERWISE SPECIFIED ON THE PLANS.
FUSION-BONDED EPOXY COATED REINFORCING STEEL SHALL CONFORM TO AASHTO M284 (ASTM D3963), AND SHALL BE DENOTED WITH A SUFFIX "E" IN THE BAR MARKS.

DO NOT WELD GRADE 60 REINFORCING STEEL.

5. POST-TENSIONING STEEL
ALL POST-TENSIONING STRAND TENDONS SHALL CONSIST OF 0.6 INCH DIAMETER SEVEN WIRE UNCOATED LOW RELAXATION STRANDS CONFORMING TO AASHTO M203 (ASTM A416), GRADE 270.
DUCTS SHALL BE 4½ INCH DIAMETER POLYETHYLENE/POLYPROPYLENE (PE/PP) PLASTIC DUCTS.
GROUT FOR DUCTS SHALL BE IN ACCORDANCE WITH ITEM NO. 602779 "POST TENSIONING GROUT"

6. STRUCTURAL STEEL
STRUCTURAL STEEL SHALL CONFORM TO ASTM A 709, GRADE 50W, INCLUDING THE ADDITIONAL REQUIREMENTS FOR CHARPY V-NOTCH TESTING OF AASHTO M270 FOR PRIMARY LOAD CARRYING MEMBERS UNDER TENSILE STRESS. THE PRIMARY LOAD CARRYING MEMBER COMPONENTS ARE THE FLANGES, WEBS, AND SPLICE PLATES OF THE STEEL GIRDERS. THE USE OF FRACTURE CRITICAL MEMBERS IS PROHIBITED. FATIGUE CATEGORIES D, E AND F SHALL NOT BE USED IN STRESS REVERSAL OR TENSION AREAS, EXCEPT FOR TEMPORARY CONDITIONS.

NINE (9) FEET AT THE ENDS OF EACH GIRDER AND THE END CROSS FRAMES SHALL BE PAINTED WITH A URETHANE PAINT SYSTEM IN ACCORDANCE WITH SPECIAL PROVISION #605537-URETHANE PAINT SYSTEM. THE FINAL COLOR SHALL BE FEDERAL #10076 (BROWN) OF FED-STD-595B.
COST OF PAINTING SHALL BE INCIDENTAL TO ITEM 605002, STEEL STRUCTURES.

ALL BOLTS FOR SPLICE PLATES AND CROSS FRAMES SHALL BE ⅞" DIA. IN 1⅛" DIA. HOLES AND CONFORM TO ASTM A325, TYPE 3, WITH THREADS EXCLUDED FROM SHEAR PLANES. BOLTED CONNECTIONS SHALL BE CLASS B SLIP CRITICAL CONNECTIONS, UNLESS NOTED ON THE PLANS.

7. SERVICEABILITY
LIVE LOAD DEFLECTION SHALL BE LIMITED TO L/800.
FOR REINFORCEMENT DISTRIBUTION REQUIREMENTS, CONSIDER CLASS 2 EXPOSURE CRITERIA FOR DECKS. ACCOMMODATION TO JACK GIRDERS FOR FUTURE BEARING REPLACEMENT HAS BEEN CONSIDERED IN THE DESIGN.

8. CONSTRUCTION JOINTS
KEYED CONSTRUCTION JOINTS SHALL BE 2" X 4" OR AS NOTED. ALL EXPOSED CONSTRUCTION JOINT EDGES SHALL HAVE A ¾" V-NOTCH, UNLESS OTHERWISE NOTED.

△3 ~~9. STABILIZING STRUCTURAL EXCAVATIONS~~
~~SHEETING AND SHORING SHALL BE REQUIRED FOR ANY EXCAVATION EXCEEDING FIVE (5) FEET IN HEIGHT, THE COST SHALL BE PAID UNDER ITEM NO. 207501 - IN LIEU OF SHORING, THE CONTRACTOR MAY USE A 2:1 CUT SLOPE. NO PAYMENT SHALL BE MADE FOR ADDITIONAL EXCAVATION OR FILL OUTSIDE THE LIMITS AS DEFINED IN SECTION 207 OF THE STANDARD SPECIFICATIONS.~~

10. EXCAVATION REQUIRED TO ATTAIN THE GRADE FOR INSTALLATION OF MSE WALLS SHALL BE INCIDENTAL TO ITEM NO. 602772 - MECHANICALLY STABILIZED EARTH WALLS.

11. STRUCTURAL BACKFILL SHALL CONFORM TO THE REQUIREMENTS OF BORROW TYPE C. MSE WALL BACKFILL SHALL BE AS SPECIFIED ON THE PLANS.

12. ROADWAY CLEARANCES
A MINIMUM OF 16'-6" VERTICAL CLEARANCE SHALL BE MAINTAINED ABOVE ALL ROADWAYS.
A MINIMUM OF 2'-0" HORIZONTAL CLEARANCE SHALL BE MAINTAINED FROM THE OUTSIDE EDGE OF SHOULDER OFFSET (FACE OF CURB) TO THE FACE OF ANY OBSTRUCTION. THESE CLEARANCES APPLY AT ALL TIMES INCLUDING DURING CONSTRUCTION.

BRIDGE LEGAL LOAD RATING (TONS)
RAMP B OVER SR 7

TRUCK TYPE	RATING FACTOR	SAFE LOAD CAPACITY
HS-20	1.81	65.2
S220	2.83	56.6
S327	2.69	72.6
S335	1.98	69.3
S437	2.00	73.0
T330	2.56	76.8
T435	2.16	75.6
T540	1.89	75.6

BRIDGE DESIGN LOAD RATING:
INVENTORY = 1.13
OPERATING = 1.46

△3 13. TEST PILES
~~PILE LENGTHS FOR ORDERING PURPOSES SHALL BE DETERMINED BY TEST PILES. A MINIMUM OF ONE (1) PILE PER SUBSTRUCTURE, AS SHOWN ON THE PLANS, SHALL BE DYNAMICALLY TESTED BY THE CONTRACTOR IN ACCORDANCE WITH SPECIAL PROVISION 619519. TEST AND PRODUCTION PILE RE-STRIKES WILL BE PAID AS FOLLOWS:~~

~~A). ALL TEST PILE(S) WILL BE RESTRUCK AND DYNAMICALLY TESTED BY THE CONTRACTOR. THE TEST PILE RESTRIKES SHALL BE INCIDENTAL TO ITEM NO. 619519 DYNAMIC PILE TESTING BY CONTRACTOR PROVIDED THAT THEY ARE PERFORMED WITHIN FIVE (5) CALENDAR DAYS FROM INITIAL DRIVE.~~

~~B). AN ADDITIONAL PAYMENT WILL BE MADE TO THE CONTRACTOR IF HE IS DIRECTED BY THE ENGINEER TO WAIT AND RESTRIKE THE TEST PILE MORE THAN FIVE (5) CALENDAR DAYS AFTER INITIAL DRIVE. THE CONTRACTOR SHALL BE COMPENSATED AT THE FIXED PRICE OF $1,000.00 PER CALENDAR DAY FOR EVERY DAY, AFTER THE FIFTH CALENDAR DAY, UNDER ITEM NO. 619502 TEST PILE RESTRIKE. MULTIPLE TEST PILE RESTRIKES OCCURRING ON THE SAME DAY WILL ONLY BE PAID FOR AS ONE CALENDAR DAY. NO ADDITIONAL COMPENSATION WILL BE MADE REGARDLESS OF THE NUMBER OF TEST PILE RESTRIKES PERFORMED THAT DAY.~~

~~C). RESTRIKES ON PRODUCTION PILES WHICH ARE DESIGNATED TO BE DYNAMICALLY TESTED WILL NOT BE PAID UNDER ITEM NO. 619501 PRODUCTION PILE RESTRIKE. THESE PRODUCTION PILE RESTRIKES ARE INCIDENTAL TO ITEM NO. 619519 DYNAMIC PILE TESTING BY CONTRACTOR.~~

~~THE DEPARTMENT RESERVES THE RIGHT TO PERFORM DYNAMIC TESTING OF RESTRIKES.~~

PILE LENGTHS FOR ORDERING PURPOSES SHALL BE DETERMINED BY TEST PILE RESTRIKE RESULTS. A MINIMUM OF ONE PILE PER SUBSTRUCTURE, AS SHOWN ON THE PLANS, SHALL BE DYNAMICALLY TESTED WITH SIGNAL MATCHING ANALYSIS BY THE CONTRACTOR IN ACCORDANCE WITH SPECIAL PROVISION 619519 AND 619539. TEST AND PRODUCTION PILE RESTRIKES WILL BE PAID AS FOLLOWS:

A). ALL TEST PILE(S) WILL BE RESTRUCK AFTER A WAITING PERIOD OF AT LEAST 48 HOURS. TEST PILE RESTRIKES SHALL BE INCIDENTAL TO THE INITIAL INSTALLATION OF THE PILE PROVIDED THEY ARE REQUESTED WITHIN FIVE WORKING DAYS FROM THE COMPLETION OF THE INITIAL DRIVE. IF TEST PILE RESTRIKES ARE REQUESTED AFTER THE FIVE WORKING DAYS FROM THE COMPLETION OF THE INITIAL DRIVE THEN THE TEST PILE RESTRIKE SHALL BE PAID AS NOTED IN SPECIAL PROVISION 619502.

B). IF DIRECTED BY THE ENGINEER TO RESTRIKE A PRODUCTION PILE, THE RESTRIKE OF THE PRODUCTION PILE SHALL BE PAID SEPARATELY UNDER ITEM NO. 619501.

14. THE CONCRETE PIER CAPS SHOWN ON THE PLANS SHALL BE USED.
NO OTHER ALTERNATES WILL BE CONSIDERED.

△3 15. MASS CONCRETE
PIER POST-TENSIONED CAP IS DESIGNED AS MASS CONCRETE. SEE SPECIAL PROVISIONS.

NOTE:

LOAD RATING IS IN ACCORDANCE WITH THE LOAD AND RESISTANCE FACTOR RATING (LRFR) METHOD.

CROSS REFERENCE NOTE:

FOR MSE WALL NOTES, SEE DWG S3-13.

UNOFFICIAL WEBSITE COPY

O:\20832687-XMR\CAD\Bridge\BR-S3\gen01_BR-S3_srf.dgn
4/28/2011
Steve_Lambert

DELAWARE DEPARTMENT OF TRANSPORTATION

ADDENDUMS / REVISIONS	
ADDENDUM NO. △3 REV. NOTE 3, DELETED NOTE 9, ADDED	
NOTE 15, 02/18/11, SAM	
ADDENDUM NO. △4 REV. NOTE 3 & 13, 04/01/11, RFK	

SR1 / I-95 INTERCHANGE

CONTRACT	28-090-03
COUNTY	NEW CASTLE
BRIDGE NO.	1-268A
DESIGNED BY:	R. F. KIRCHNER
CHECKED BY:	J. S. LI

RAMP B OVER SR 7
GENERAL NOTES

SHEET NO.	S3-2
TOTAL SHTS.	308
	803

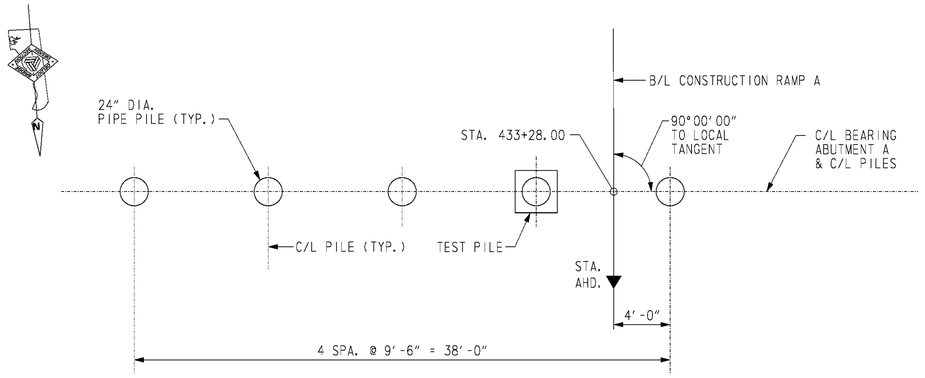

ABUTMENT A PILE PLAN

SCALE: 3/16" = 1'-0"

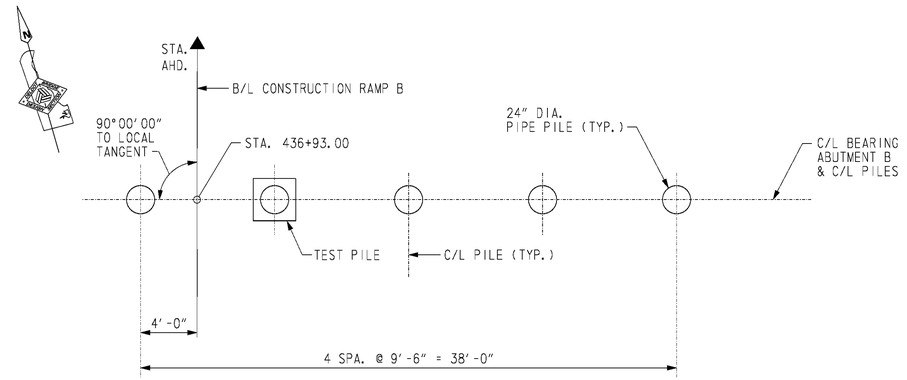

ABUTMENT B PILE PLAN

SCALE: 3/16" = 1'-0"

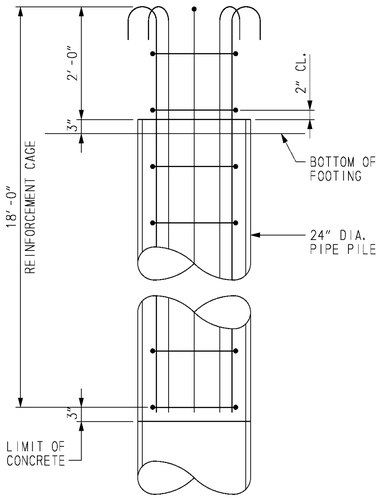

ELEVATION

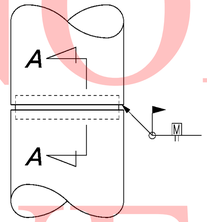

PIPE PILE SPLICE DETAIL

NOT TO SCALE

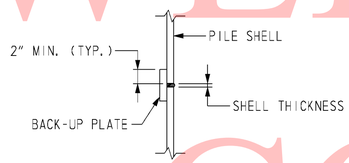

SECTION A-A

NOT TO SCALE

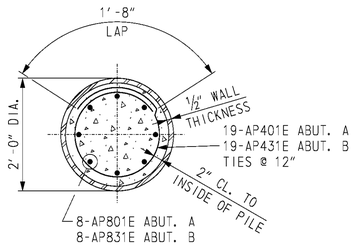

SECTION

PIPE PILE REINFORCEMENT

SCALE: 3/4" = 1'-0"

PILE SPLICE NOTES:

1. BACK-UP PLATE TO BE CUT FROM SAME PILE SIZE AS IS BEING SPLICED. CUT AND BEND TO FIT INSIDE DIAMETER OF PILE.
2. NO PILE SPLICING TO BE ALLOWED ON ANY PORTION OF PILE THAT IS TO REMAIN EXPOSED IN COMPLETED STRUCTURE.
3. SPLICER SLEEVE MATERIAL SHALL BE STEEL CONFORMING TO ASTM DESIGNATION A709, GRADE 36 (250).

PILE INSTALLATION DATA

SUBSTRUCTURE UNIT	DESIGN DATA: NOMINAL PILE DRIVING RESISTANCE (KIPS)	DESIGN DATA: ESTIMATED PILE TIP ELEVATION	ACTUAL FIELD DATA: AVERAGE MINIMUM TIP ELEVATION	ACTUAL FIELD DATA: AVERAGE MAXIMUM TIP ELEVATION
ABUTMENT A	660	-7.0		
ABUTMENT B	660	11.0		

ABUTMENT A PILE DRIVING INFORMATION

PILE SIZE AND TYPE:
ACTUAL BEARING OBTAINED:
HAMMER TYPE:
PILE HAMMER ENERGY:
SPECIAL DRIVING CONDITIONS AND COMMENTS:

ABUTMENT B PILE DRIVING INFORMATION

PILE SIZE AND TYPE:
ACTUAL BEARING OBTAINED:
HAMMER TYPE:
PILE HAMMER ENERGY:
SPECIAL DRIVING CONDITIONS AND COMMENTS:

NOTES:

1. PILES SHALL BE 24" DIA. WITH 1/2" WALL THICKNESS OPEN-ENDED STEEL PIPE PILES, ASTM A252 GRADE 3.
2. REINFORCING STRAPS SHALL BE PROVIDED FOR THE ABUTMENT STEM AND BACKWALL TO RESIST THE LONGITUDINAL FORCES ON THE SUPERSTRUCTURE.
3. PILE CASINGS SHALL BE INSTALLED AT THE PROPOSED PILE LOCATIONS DURING THE ABUTMENT MSE WALL CONSTRUCTON.
4. UPON COMPLETION OF THE MSE WALL THERE SHALL BE A ~~30 TO~~ 60 DAY QUARANTINE PERIOD PRIOR TO DRIVING THE ABUTMENT PILES TO ALLOW FOR SETTLEMENT AND TO MINIMIZE THE DOWNDRAG FORCES THAT MIGHT DEVELOP ON THE PILES.
5. THE ENGINEER SHALL MONITOR THE SETTLEMENT DURING THE QUARANTINE PERIOD TO DETERMINE WHEN THE PILES MAY BE DRIVEN.
6. UPON COMPLETION OF THE QUARANTINE PERIOD, AS JUDGED BY THE ENGINEER, DRIVE PILES TO THE NOMINAL PILE DRIVING RESISTANCE INDICATED ON THE PLANS.
7. 'TEST PILES' SHALL BE TESTED IN ACCORDANCE WITH THE SPECIFICATIONS.
8. ALL TEST PILES SHALL BE 10 FEET LONGER THAN INDICATED ON PILE INSTALLATION DATA TABLE.

CROSS REFERENCE NOTES:

1. FOR ABUTMENT PLAN AND ELEVATION, SEE DWGS. S3-5 & S3-6.
2. FOR REINFORCING BAR LIST, SEE DWG. S3-15.
3. FOR PILE CASING DETAILS, SEE DWG. S3-5.
4. FOR SOIL PROFILE, SOIL PROPERTIES AND TOTAL ESTIMATED SETTLEMENT, SEE DWG. S3-14.
5. FOR TEST PILE PAYMENT NOTES, SEE DWG. S3-2.

UNOFICAL WEBSITE COPY

O:\20832687-XM\CAD\Bridge\BR-S3\sb07_BR-S3_sr1.dgn

4/7/2011

untitled

DELAWARE DEPARTMENT OF TRANSPORTATION

ADDENDUMS / REVISIONS	
ADDENDUM NO. 2	REV. QUARANTINE PERIOD, 01/26/11, RFK
ADDENDUM NO. 4	ADDED NOTE, 04/01/11, RFK

SR1 / I-95 INTERCHANGE

CONTRACT	BRIDGE NO.	1-268A
28-090-03	DESIGNED BY: K. D. BEAVER	
COUNTY	CHECKED BY: R. F. KIRCHNER	
NEW CASTLE		

RAMP B OVER SR 7

ABUTMENT FOUNDATION PLAN

S3-4
SHEET NO.
310
TOTAL SHTS.
803

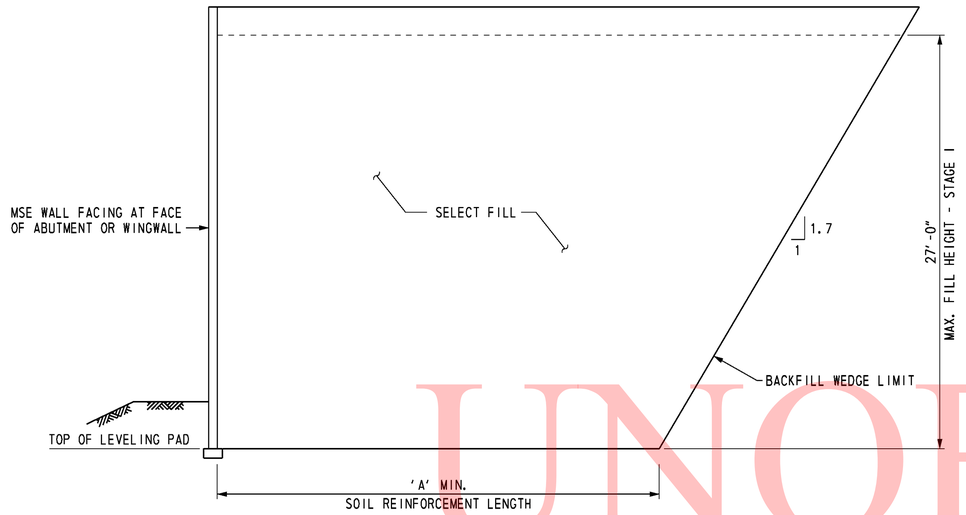

SOIL PROFILE SECTION
ABUTMENT A AND WINGWALLS I AND II

NOT TO SCALE

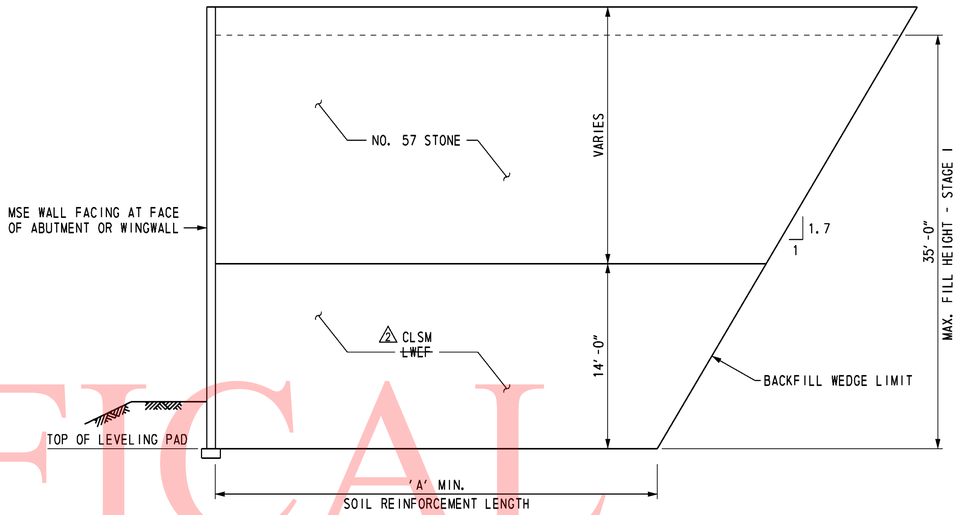

SOIL PROFILE SECTION
ABUTMENT B AND WINGWALLS III AND IV

NOT TO SCALE

UNOFFICAL WEBSITE COPY

MINIMUM REINFORCED ZONE WIDTH (A) FEET	
ABUTMENT A	
FACE OF ABUTMENT	26.0
3 ~~WINGWALLS I AND II~~	~~26.0~~
1 ABUTMENT B	
FACE OF ABUTMENT	27.0
3 WINGWALLS III ~~AND IV~~	27.0

SOIL PROPERTIES				
SOIL TYPE	UNIT WEIGHT (PCF)	DRAINED ANGLE OF FRICTION (DEGREES)	UNDRAINED SHEAR (PSF)	FACTORED BEARING RESISTANCE (KSF)
SELECT FILL	125	34	-	-
2 ~~LWEF~~	~~40~~	~~38~~	-	-
NO. 57 STONE	105	38	-	-
FOUNDATION SOIL:				
ABUTMENT A	120	24	1400	5.5
ABUTMENT B	120	24	1250	5.5
2 CONTROLLED LOW STRENGTH MATERIAL (CLFM)	40	38	-	-

FOUNDATION NOTES

THE FACTORED BEARING RESISTANCE SHALL BE VERIFIED PRIOR TO CONSTRUCTION OF THE MSE WALL.

THE INTERNAL STABILITY OF THE MSE WALL SHALL BE DESIGNED BY THE CONTRACTOR USING THE SOIL PARAMETERS PROVIDED FOR EACH STRUCTURE LOCATION. THE INTERNAL STABILITY CALCULATIONS SHALL BE SIGNED AND SEALED BY A PROFESSIONAL ENGINEER LICENSED IN THE STATE OF DELAWARE AS INDICATED IN THE PROJECT SPECIFICATIONS.

ISOLATED AREAS OF EXISTING FILL MAY BE ENCOUNTERED DURING CONSTRUCTION OF THIS MSE WALL. EXISTING FILL SHALL BE UNDERCUT TO EXPOSE UNDISTURBED NATURAL SOIL. UNDERCUTTING AND BACKFILLING WILL BE MEASURED AND PAID IN ACCORDANCE WITH THE SPECIFICATIONS.

A MINIMUM 7-DAY QUARANTINE PERIOD SHALL BE REQUIRED AFTER CONSTRUCTION OF THE WALL TO THE "MAX. FILL HEIGHT - STAGE 1" INDICATED ON THE SOIL PROFILE SECTION. NO FURTHER FILL SHALL BE PLACED UNTIL AUTHORIZED BY THE ENGINEER. ONCE AUTHORIZATION IS GIVEN, FILL SHALL BE PLACED IN ADDITIONAL INCREMENTS OF 5 FEET IN HEIGHT, WITH THE SAME QUARANTINE PERIOD AND AUTHORIZATION REQUIRED AT EACH INCREMENT. AN ADDITIONAL QUARANTINE PERIOD OF 2 ~~30 TO~~ 60 DAYS IS REQUIRED AFTER CONSTRUCTION OF THE MSE WALL TO ITS FULL HEIGHT. NO FURTHER CONSTRUCTION SHALL BE PERMITTED UNTIL AUTHORIZED BY THE ENGINEER. A TOTAL ESTIMATED SETTLEMENT OF APPROXIMATELY FOUR TO FIVE INCHES IS ANTICIPATED.

3 FOR WINGWALLS I AND II, SOIL REINFORCEMENT LENGTH RATIO SHALL BE L/H=1.2. FOR WINGWALL IV, SOIL REINFORCEMENT LENGTH RATIO SHALL BE L/H=1.2, AND LESS THAN (A)=27.0 FEET. NO. 57 STONE BACKFILL APPLIES ABOVE ELEVATION 78.00.

4 THE CONTRACTOR IS RESPONSIBLE FOR DEVELOPING MEANS AND METHODS, IN CONSULTATION WITH THE MSE WALL MANUFACTURER, FOR CONSTRUCTING THE MSE WALLS TO THE LINES, GRADES, AND DIMENSIONS SHOWN ON THE PLANS. SOIL BORINGS, LABORATORY TEST DATA, AND THE ENGINEER'S SETTLEMENT ESTIMATE(S) ARE CONTAINED IN ONE OF THE FOLLOWING GEOTECHNICAL ENGINEERING REPORTS WHICH HAVE BEEN MADE AVAILABLE BY THE DEPARTMENT: FINAL FOUNDATIONS REPORT - RETAINING WALLS AND FINAL FOUNDATIONS REPORT - BRIDGES AND WINGWALLS DATED APRIL 2009, PREPARED BY RUMMEL, KLEPPER & KAHL, LLP AND URS CORPORATION. THESE SUPPLEMENTAL GEOTECHNICAL REPORTS ARE NOT PART OF THE CONTRACT DOCUMENTS, AND ARE AVAILABLE AT WWW.BIDS.DELAWARE.GOV WEBSITE. CONTRACTORS MAY USE THIS INFORMATION AT THEIR OWN RISK.

DELAWARE DEPARTMENT OF TRANSPORTATION

ADDENDUMS / REVISIONS	
ADDENDUM NO. 2 REVISED QUARANTINE PERIOD AND SOIL PROPERTIES, 01/26/11, RFK	
ADDENDUM NO. 3 REV. BACKFILL PROFILE, 02/18/11, RFK	
ADDENDUM NO. 4 ADDED NOTE, 04/01/11, RFK	

SR1 / I-95 INTERCHANGE

CONTRACT 28-090-03	BRIDGE NO. 1-268A	RAMP B OVER SR 7	SHEET NO. 320
COUNTY NEW CASTLE	DESIGNED BY: R. F. KIRCHNER	WINGWALL DETAILS 2	TOTAL SHTS. 803
	CHECKED BY: G.P. MISTRY		

O:\20832687-XM\CAD\Bridge\BR-S3\rd04_BR-S3_srf.dgn
4/1/2011
Steve_Lambert

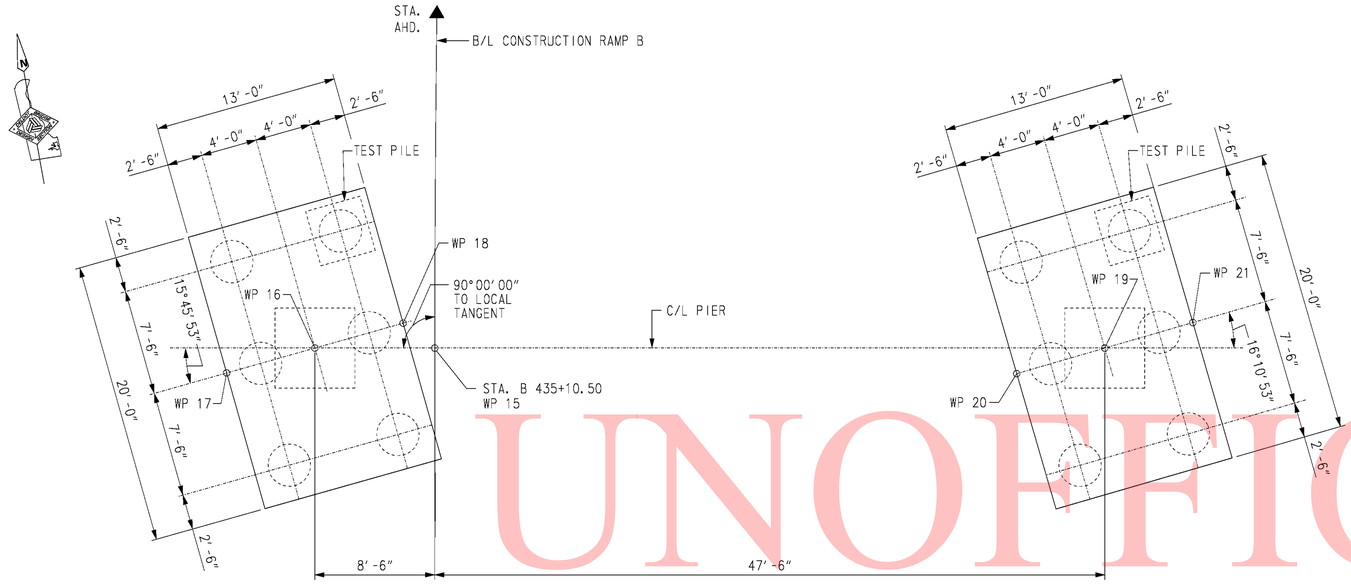

PIER PILE PLAN

SCALE: 3/16" = 1'-0"

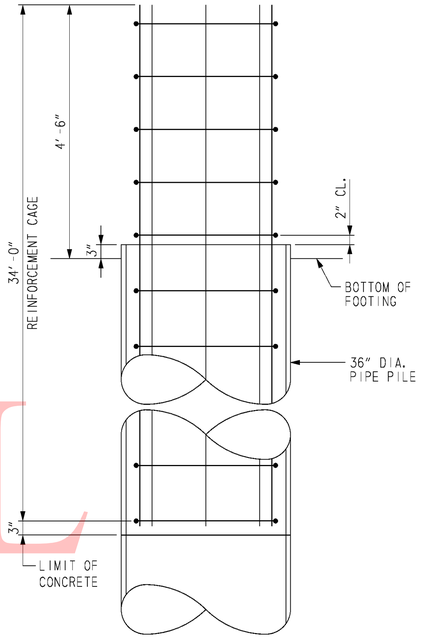

ELEVATION

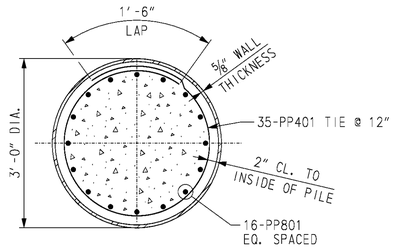

SECTION

PIPE PILE REINFORCEMENT

SCALE: 3/4" = 1'-0"

NOTES:

1. PILES SHALL BE 36" DIA. WITH 5/8" WALL THICKNESS OPEN-ENDED STEEL PIPE PILES, ASTM A252 GRADE 3.
2. TEST PILES SHALL BE TESTED IN ACCORDANCE WITH THE SPECIFICATIONS.
3. (2) ALL TEST PILES SHALL BE 10 FEET LONGER THAN INDICATED ON PILE INSTALLATION DATA TABLE.

CROSS REFERENCE NOTES:

1. FOR PIER PLAN AND ELEVATION, SEE DWG. S3-17.
2. FOR REINFORCING BAR LIST, SEE DWG. S3-22.
3. FOR PILE SPLICE DETAIL, SEE DWG. S3-4.
4. FOR TEST PILE PAYMENT NOTES, SEE DWG. S3-2.

WORKING POINTS

WP NO.	STATION	OFFSET	COORDINATES NORTHING	COORDINATES EASTING
15	435+10.50	0.00'	612,090.7838	432,324.4524
16	435+10.50	8.50' LT.	612,092.3521	432,316.0984
17	435+08.75	14.76' LT.	612,091.7705	432,309.6244
18	435+12.26	2.25' LT.	612,092.9336	432,322.5723
19	435+10.50	47.50' RT.	612,082.0200	432,371.1370
20	435+08.65	41.26' RT.	612,081.3915	432,364.6674
21	435+12.37	53.74' RT.	612,082.6486	432,377.6065

PILE INSTALLATION DATA

SUBSTRUCTURE UNIT	DESIGN DATA: NOMINAL PILE DRIVING RESISTANCE (KIPS)	DESIGN DATA: ESTIMATED PILE TIP ELEVATION	ACTUAL FIELD DATA: AVERAGE MINIMUM TIP ELEVATION	ACTUAL FIELD DATA: AVERAGE MAXIMUM TIP ELEVATION
PIER	1500	-27.0		

PIER PILE DRIVING INFORMATION

PILE SIZE AND TYPE:
ACTUAL BEARING OBTAINED:
HAMMER TYPE:
PILE HAMMER ENERGY:
SPECIAL DRIVING CONDITIONS AND COMMENTS:

UNOFFICAL WEBSITE COPY

O:\20832687-XMI\CAD\Bridge\BR-S3\pr01_BR-S3_sr1.dgn
4/7/2011
untitled

DELAWARE DEPARTMENT OF TRANSPORTATION

ADDENDUMS / REVISIONS

ADDENDUM NO.	
(1) ADDED NOTE, 04/01/11, RFK	

SR1 / I-95 INTERCHANGE

CONTRACT	BRIDGE NO.	1-268A
28-090-03	DESIGNED BY: K.D. BEAVER	
COUNTY	CHECKED BY: R.F. KIRCHNER	
NEW CASTLE		

RAMP B OVER SR 7

PIER FOUNDATION PLAN

SHEET NO.	S3-16
TOTAL SHTS.	322
	803

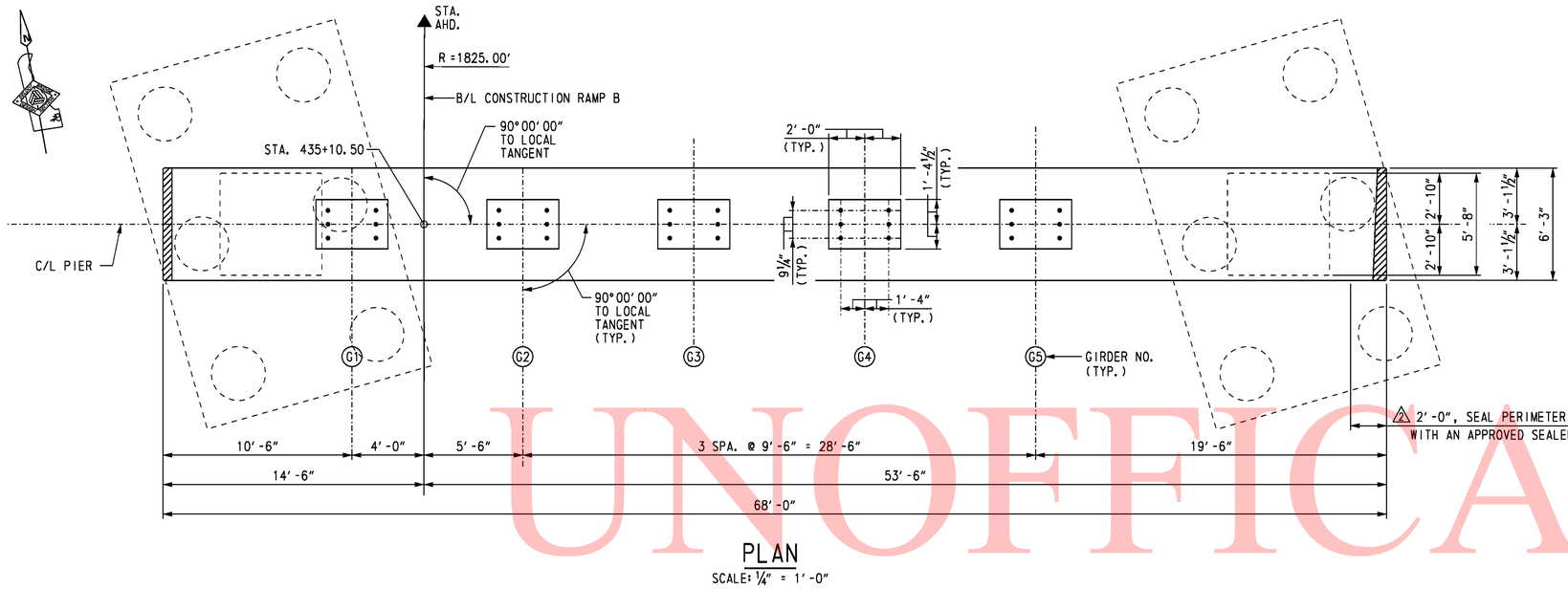

PLAN

SCALE: ¼" = 1'-0"

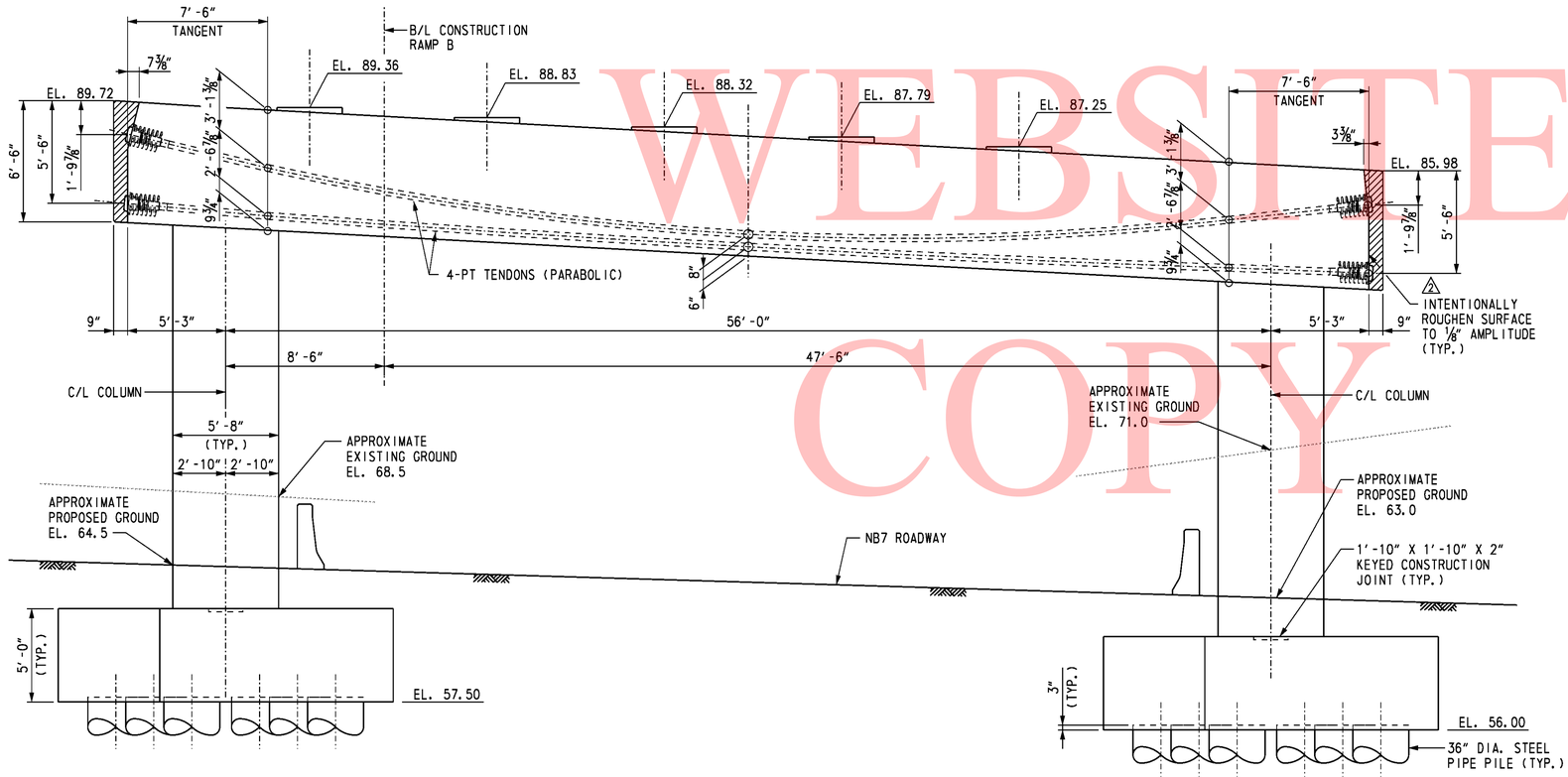

ELEVATION

SCALE: ¼" = 1'-0"

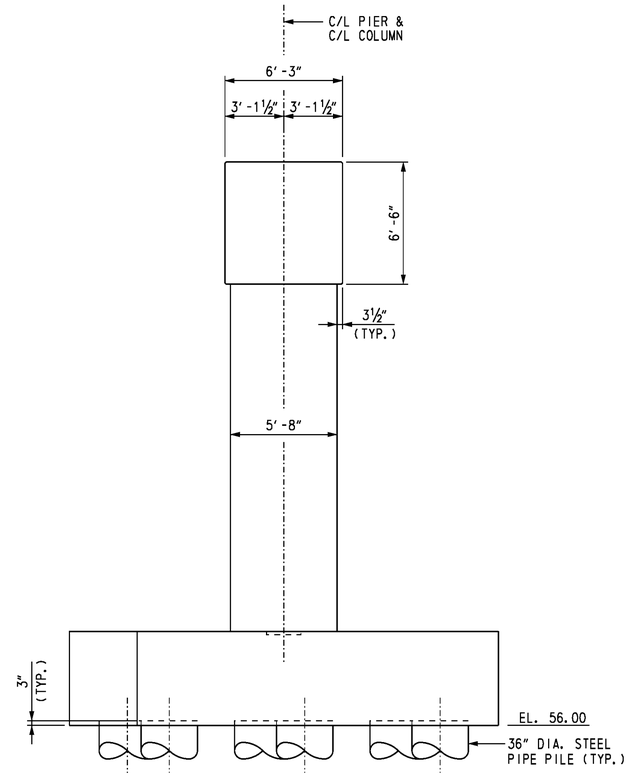

END VIEW

SCALE: ¼" = 1'-0"

⚠4 NOTES:

1. COST OF PIER CAP SEALER SHALL BE PAID UNDER ITEM NO. 602616 "WATERPROOFING PCC MASONRY SURFACES".

CROSS REFERENCE NOTES:

1. FOR BRIDGE PLAN AND ELEVATION, SEE DWG. S3-1.
2. FOR PIER FOUNDATION PLAN, SEE DWG. S3-16.
3. FOR PIER REINFORCING DETAILS, SEE DWG. S3-22.

UNOFICAL WEBSITE COPY

O:\20832687-XM\CAD\Bridge\BR-S3\prt2_BR-S3_srf.dgn
3/21/2011
Steve_Lambert

DELAWARE DEPARTMENT OF TRANSPORTATION

ADDENDUMS / REVISIONS	
ADDENDUM NO. ⚠2 ADDED ROUGHENED SURFACE AND CONCRETE SEALER NOTES, 01/26/11, SAM	
ADDENDUM NO. ⚠4 ADDED NOTE, 04/01/11, SAM	

SR1 / I-95 INTERCHANGE

CONTRACT	BRIDGE NO.	1-268A
28-090-03	DESIGNED BY: T. B. CUSTER	
COUNTY	CHECKED BY: J. S. LI	
NEW CASTLE		

RAMP B OVER SR 7

PIER PLAN AND ELEVATION

S3-17

SHEET NO.	TOTAL SHTS.
323	803

GENERAL NOTES

1. DESIGN SPECIFICATIONS
AASHTO LRFD BRIDGE DESIGN SPECIFICATIONS, 4th EDITION WITH 2009 INTERIM REVISIONS.
DELAWARE DEPARTMENT OF TRANSPORTATION BRIDGE DESIGN MANUAL, MAY 2005 INCLUDING LATEST REVISIONS. ANSI/AASHTO/AWS D1.5 BRIDGE WELDING CODE.

2. LOADING
UNIT WEIGHTS OF MATERIALS SHALL BE IN ACCORDANCE WITH THE DELAWARE DESIGN MANUAL.
FUTURE OVERLAY ALLOWANCE SHALL BE 25 LBS/SQ FT.
STEEL BRIDGE DECK FORMS WHICH STAY IN PLACE (INCLUDING CONCRETE IN FORM CORRUGATIONS) SHALL BE 15 LBS/SQ FT.
VEHICLE LIVE LOAD SHALL BE HL-93, WHICH CONSISTS OF A DESIGN TRUCK OR TANDEM WITH DYNAMIC LOAD ALLOWANCE AND A LANE LOAD. RATING SHALL USE ALL DELAWARE LEGAL LOADS SPECIFIED IN THE BRIDGE DESIGN MANUAL.
BARRIER HAS BEEN DESIGNED FOR TEST LEVEL FIVE (TL-5).
FATIGUE DESIGN SHALL BE BASED ON THE FOLLOWING ONE DIRECTIONAL TRAFFIC VOLUMES:

RAMP C OVER SR 7: DESIGN ADT = 7,175, DESIGN ADTT = 215

FOR THERMAL LOADS, CONSIDER THE MODERATE TEMPERATURE RANGE AS STIPULATED IN THE AASHTO LRFD DESIGN SPECIFICATIONS. THE NORMAL TEMPERATURE SHALL BE CONSIDERED TO BE 60F.
FOR SEISMIC LOADS, CONSIDER SEISMIC PERFORMANCE ZONE 1, WITH A SITE CLASS = E AND IMPORTANCE CATEGORY - CRITICAL.

△3 3. PORTLAND CEMENT CONCRETE
PORTLAND CEMENT CONCRETE FOR CAST-IN-PLACE ELEMENTS SHALL BE AS FOLLOWS:
(28 DAY COMPRESSIVE STRENGTH)
~~ITEM NO. 602007 (CLASS A, F'c=4500 PSI) - PIER ABOVE FOOTING~~
~~ITEM NO. 602011 (CLASS A, F'c=4500 PSI) - PIER FOOTING, TOP OF PIER PILES~~
~~ITEM NO. 602785 (CLASS A, F'c=6000 PSI) - POST-TENSIONED PIER CAP~~
~~ITEM NO. 602013 (CLASS D, F'c=4500 PSI) - DECK~~
~~ITEM NO. 602014 (CLASS D, F'c=4500 PSI) - APPROACH SLAB~~
~~ITEM NO. 602015 (CLASS A, F'c=4500 PSI) - ABUTMENT, TOP OF ABUTMENT PILES~~
~~ITEM NO. 602017 (CLASS A, F'c=4500 PSI) - BARRIER~~

602007 - PORTLAND CEMENT CONCRETE MASONRY, PIER ABOVE FOOTING, CLASS A (fc' = 4,500 PSI, PIER ABOVE FOOTING)
602011 - PORTLAND CEMENT CONCRETE MASONRY, PIER FOOTING, CLASS A (fc' = 4,500 PSI, PIER FOOTING, TOP OF PIER PILES)
602013 - PORTLAND CEMENT CONCRETE MASONRY, SUPERSTRUCTURE, CLASS D (fc' = 4,500 PSI, DECK)
602014 - PORTLAND CEMENT CONCRETE MASONRY, APPROACH SLAB, CLASS D (fc' = 4,500 PSI, APPROACH SLAB)
602015 - PORTLAND CEMENT CONCRETE MASONRY, ABUTMENT ABOVE FOOTING, CLASS A (fc' = 4,500 PSI, ABUTMENT, TOP OF ABUTMENT PILES)
602017 - PORTLAND CEMENT CONCRETE MASONRY, PARAPET, CLASS A (fc' = 4,500 PSI, BARRIER)
602785 - PORTLAND CEMENT CONCRETE MASONRY, SUBSTRUCTURE, 6000PSI (fc' = 6,000 PSI, PIER CAP)
602787 - POST TENSIONING PIER CAPS, BONDED SYSTEM, (PIER CAP)

MIX REQUIREMENTS SHALL CONFORM TO SECTION 812 OF THE DELAWARE DEPARTMENT OF TRANSPORTATION STANDARD SPECIFICATIONS. ALL EXPOSED CORNERS OF CONCRETE SHALL BE CHAMFERED WITH ¾" X ¾" MILLED CHAMFER STRIPS UNLESS NOTED OTHERWISE, EXCEPT ON UNEXPOSED FOOTINGS OR WHERE INDICATED BY THE NOTATION ON THE PLANS, "DO NOT CHAMFER".
△4 ~~NO SLIP-FORMING OF BARRIERS IS PERMITTED, UNLESS OTHERWISE APPROVED.~~

4. BAR REINFORCEMENT
REINFORCING STEEL SHALL CONFORM TO AASHTO M31 (ASTM A615), GRADE 60. ALL REINFORCING STEEL SHALL HAVE A CLEAR COVER OF 2" UNLESS OTHERWISE SPECIFIED ON THE PLANS.
FUSION-BONDED EPOXY COATED REINFORCING STEEL SHALL CONFORM TO AASHTO M284 (ASTM D3963), AND SHALL BE DENOTED WITH A SUFFIX "E" IN THE BAR MARKS.

DO NOT WELD GRADE 60 REINFORCING STEEL.

5. POST-TENSIONING STEEL
ALL POST-TENSIONING BAR TENDONS SHALL CONFORM TO ASTM A722, GRADE 150 KSI (TYPE II), AND SHALL BE EPOXY COATED. ACCESSORIES INCLUDING ANCHOR PLATE AND NUT SHALL ALSO BE EPOXY COATED. DUCTS SHALL BE SEMI-RIGID METAL. GROUT FOR DUCTS SHALL BE IN ACCORDANCE WITH ITEM NO. 602779 "POST TENSIONING GROUT"

6. STRUCTURAL STEEL
STRUCTURAL STEEL SHALL CONFORM TO ASTM A 709, GRADE 50W, NCLUDING THE ADDITIONAL REQUIREMENTS FOR CHARPY V-NOTCH TESTING OF AASHTO M270 FOR PRIMARY LOAD CARRYING MEMBERS UNDER TENSILE STRESS. THE PRIMARY LOAD CARRYING MEMBER COMPONENTS ARE THE FLANGES, WEBS, AND SPLICE PLATES OF THE STEEL GIRDERS. THE USE OF FRACTURE CRITICAL MEMBERS IS PROHIBITED. FATIGUE CATEGORIES D, E AND F SHALL NOT BE USED IN STRESS REVERSAL OR TENSION AREAS, EXCEPT FOR TEMPORARY CONDITIONS.

EIGHT (8) FEET AT THE ENDS OF EACH GIRDER AND THE END CROSS FRAMES SHALL BE PAINTED WITH A URETHANE PAINT SYSTEM IN ACCORDANCE WITH SPECIAL PROVISION #605537-URETHANE PAINT SYSTEM. THE FINAL COLOR SHALL BE FEDERAL #10076 (BROWN) OF FED-STD-595B. COST OF PAINTING SHALL BE INCIDENTAL TO ITEM 605002, STEEL STRUCTURES.

△2 THE AREA IN CONTACT WITH THE INTEGRAL PIER CAP CONCRETE SHALL BE PAINTED WITH ONE COAT OF PRIMER AFTER THE SHEAR STUDS ARE INSTALLED.

ALL BOLTS FOR SPLICE PLATES AND CROSS FRAMES SHALL BE ⅞" DIA. IN 15/16" DIA. HOLES AND CONFORM TO ASTM A325, TYPE 3, WITH THREADS EXCLUDED FROM SHEAR PLANES. BOLTED CONNECTIONS SHALL BE CLASS B SLIP CRITICAL CONNECTIONS, UNLESS NOTED ON THE PLANS.

△3 ANCHORAGE PLATES SHOWN FOR THE HIGH STRENGTH POST-TENSIONING BARS SHALL BE ASTM A36.

7. SERVICEABILITY
LIVE LOAD DEFLECTION SHALL BE LIMITED TO L/800.
FOR REINFORCEMENT DISTRIBUTION REQUIREMENTS, CONSIDER CLASS 2 EXPOSURE CRITERIA FOR DECKS. ACCOMMODATION TO JACK GIRDERS FOR FUTURE BEARING REPLACEMENT HAS BEEN CONSIDERED IN THE DESIGN.

8. CONSTRUCTION JOINTS
KEYED CONSTRUCTION JOINTS SHALL BE 2" X 4" OR AS NOTED. ALL EXPOSED CONSTRUCTION JOINT EDGES SHALL HAVE A ¾" V-NOTCH, UNLESS OTHERWISE NOTED.

△3 ~~9. STABILIZING STRUCTURAL EXCAVATIONS~~
~~SHEETING AND SHORING SHALL BE REQUIRED FOR ANY EXCAVATION EXCEEDING FIVE (5) FEET IN HEIGHT, THE COST SHALL BE PAID UNDER ITEM NO. 207501 - IN LIEU OF SHORING, THE CONTRACTOR MAY USE A 2:1 CUT SLOPE. NO PAYMENT SHALL BE MADE FOR ADDITIONAL EXCAVATION OR FILL OUTSIDE THE LIMITS AS DEFINED IN SECTION 207 OF THE STANDARD SPECIFICATIONS.~~

10. EXCAVATION REQUIRED TO ATTAIN THE GRADE FOR INSTALLATION OF MSE WALLS SHALL BE INCIDENTAL TO ITEM NO. 602772 - MECHANICALLY STABILIZED EARTH WALLS.

11. STRUCTURAL BACKFILL SHALL CONFORM TO THE REQUIREMENTS OF BORROW TYPE C. MSE WALL BACKFILL SHALL BE AS SPECIFIED ON THE PLANS.

12. ROADWAY CLEARANCES
A MINIMUM OF 16'-6" VERTICAL CLEARANCE SHALL BE MAINTAINED ABOVE ALL ROADWAYS.
A MINIMUM OF 2'-0" HORIZONTAL CLEARANCE SHALL BE MAINTAINED FROM THE OUTSIDE EDGE OF SHOULDER OFFSET (FACE OF CURB) TO THE FACE OF ANY OBSTRUCTION. THESE CLEARANCES APPLY AT ALL TIMES INCLUDING DURING CONSTRUCTION.

BRIDGE LEGAL LOAD RATING (TONS)
RAMP C OVER SR 7

TRUCK TYPE	RATING FACTOR	SAFE LOAD CAPACITY
HS-20	1.77	63.7
S220	2.84	56.8
S327	2.49	67.2
S335	1.89	66.1
S437	1.84	67.1
T330	2.46	73.8
T435	2.14	74.9
T540	1.90	76.0

BRIDGE DESIGN LOAD RATING:
INVENTORY = 1.27
OPERATING = 1.65

△1 13. TEST PILES
~~PILE LENGTHS FOR ORDERING PURPOSES SHALL BE DETERMINED BY TEST PILES. A MINIMUM OF ONE (1) PILE PER SUBSTRUCTURE, AS SHOWN ON THE PLANS, SHALL BE DYNAMICALLY TESTED BY THE CONTRACTOR IN ACCORDANCE WITH SPECIAL PROVISION 619519. TEST AND PRODUCTION PILE RE-STRIKES WILL BE PAID AS FOLLOWS:~~

~~A). ALL TEST PILE(S) WILL BE RESTRUCK AND DYNAMICALLY TESTED BY THE CONTRACTOR. THE TEST PILE RESTRIKES SHALL BE INCIDENTAL TO ITEM NO. 619519 DYNAMIC PILE TESTING BY CONTRACTOR PROVIDED THAT THEY ARE PERFORMED WITHIN FIVE (5) CALENDAR DAYS FROM INITIAL DRIVE.~~

~~B). AN ADDITIONAL PAYMENT WILL BE MADE TO THE CONTRACTOR IF HE IS DIRECTED BY THE ENGINEER TO WAIT AND RESTRIKE THE TEST PILE MORE THAN FIVE (5) CALENDAR DAYS AFTER INITIAL DRIVE. THE CONTRACTOR SHALL BE COMPENSATED AT THE FIXED PRICE OF $1,000.00 PER CALENDAR DAY FOR EVERY DAY, AFTER THE FIFTH CALENDAR DAY, UNDER ITEM NO. 619502 TEST PILE RESTRIKE. MULTIPLE TEST PILE RESTRIKES OCCURRING ON THE SAME DAY WILL ONLY BE PAID FOR AS ONE CALENDAR DAY. NO ADDITIONAL COMPENSATION WILL BE MADE REGARDLESS OF THE NUMBER OF TEST PILE RESTRIKES PERFORMED THAT DAY.~~

~~C). RESTRIKES ON PRODUCTION PILES WHICH ARE DESIGNATED TO BE DYNAMICALLY TESTED WILL NOT BE PAID UNDER ITEM NO. 619501 PRODUCTION PILE RESTRIKE. THESE PRODUCTION PILE RESTRIKES ARE INCIDENTAL TO ITEM NO. 619519 DYNAMIC PILE TESTING BY CONTRACTOR.~~

~~THE DEPARTMENT RESERVES THE RIGHT TO PERFORM DYNAMIC TESTING OF RESTRIKES.~~

PILE LENGTHS FOR ORDERING PURPOSES SHALL BE DETERMINED BY TEST PILE RESTRIKE RESULTS. A MINIMUM OF ONE PILE PER SUBSTRUCTURE, AS SHOWN ON THE PLANS, SHALL BE DYNAMICALLY TESTED WITH SIGNAL MATCHING ANALYSIS BY THE CONTRACTOR IN ACCORDANCE WITH SPECIAL PROVISION 619519 AND 619539. TEST AND PRODUCTION PILE RESTRIKES WILL BE PAID AS FOLLOWS:

A). ALL TEST PILE(S) WILL BE RESTRUCK AFTER A WAITING PERIOD OF AT LEAST 48 HOURS. TEST PILE RESTRIKES SHALL BE INCIDENTAL TO THE INITIAL INSTALLATION OF THE PILE PROVIDED THEY ARE REQUESTED WITHIN FIVE WORKING DAYS FROM THE COMPLETION OF THE INITIAL DRIVE. IF TEST PILE RESTRIKES ARE REQUESTED AFTER THE FIVE WORKING DAYS FROM THE COMPLETION OF THE INITIAL DRIVE THEN THE TEST PILE RESTRIKE SHALL BE PAID AS NOTED IN SPECIAL PROVISION 619502.

B). IF DIRECTED BY THE ENGINEER TO RESTRIKE A PRODUCTION PILE, THE RESTRIKE OF THE PRODUCTION PILE SHALL BE PAID SEPARATELY UNDER ITEM NO. 619501.

14. THE CONCRETE PIER CAPS SHOWN ON THE PLANS SHALL BE USED.
NO OTHER ALTERNATES WILL BE CONSIDERED.

△3 15. MASS CONCRETE
PIER POST-TENSIONED CAP IS DESIGNED AS MASS CONCRETE.
SEE SPECIAL PROVISIONS.

NOTE:

LOAD RATING IS IN ACCORDANCE WITH THE LOAD AND RESISTANCE FACTOR RATING (LRFR) METHOD.

CROSS REFERENCE NOTE:

FOR MSE WALL NOTES, SEE DWG S4-14.

UNOFFICIAL WEBSITE COPY

O:\20832687-XM\(CAD)\bridge\(BR-S4)\gen01_BR-S4_srf.dgn
4/28/2011
Steve_Lambert

S4-2

DELAWARE DEPARTMENT OF TRANSPORTATION

ADDENDUMS / REVISIONS	
ADDENDUM NO. △2 REV. NOTE 6, 01/26/11, SAM	
ADDENDUM NO. △3 REV. NOTES 3 & 6, DELETED NOTE 9,	
ADDED NOTE 15, 02/18/11, SAM	
ADDENDUM NO. △1 REV. NOTE 3 & 13, 04/01/11, RFK	

SR1 / I-95 INTERCHANGE

CONTRACT	BRIDGE NO.	1-717A	RAMP C OVER SR 7
28-090-03	DESIGNED BY: R. F. KIRCHNER		GENERAL NOTES
COUNTY	CHECKED BY: J. S. LI		
NEW CASTLE			

SHEET NO.	TOTAL SHTS.
350	803

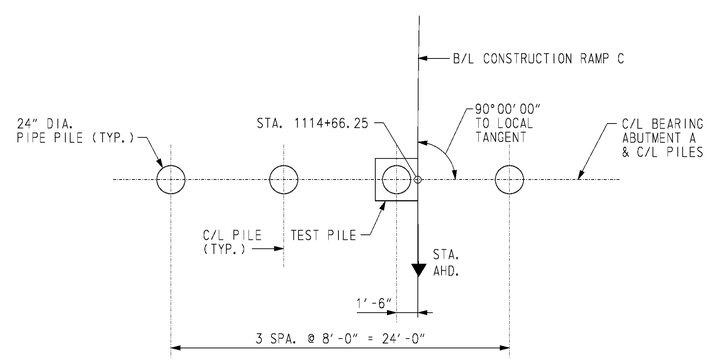

ABUTMENT A PILE PLAN

SCALE: 3/16" = 1'-0"

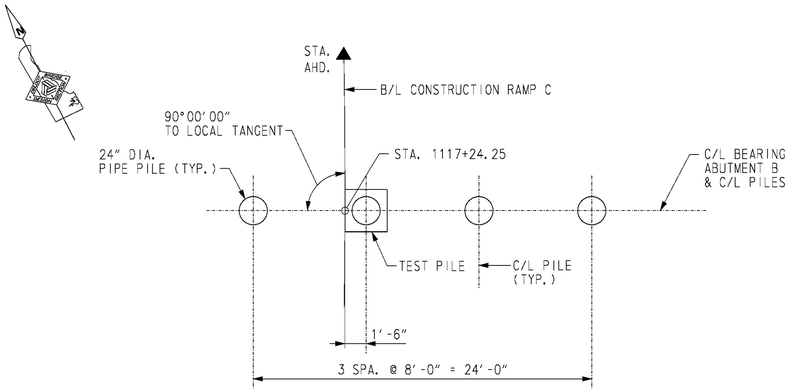

ABUTMENT B PILE PLAN

SCALE: 3/16" = 1'-0"

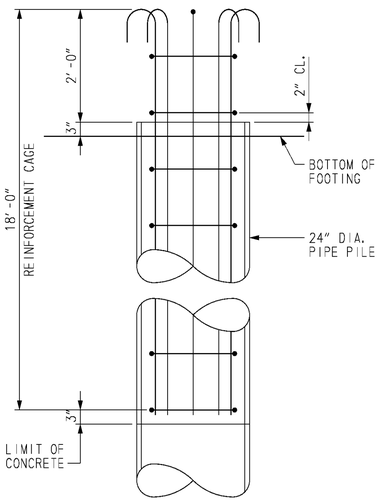

ELEVATION

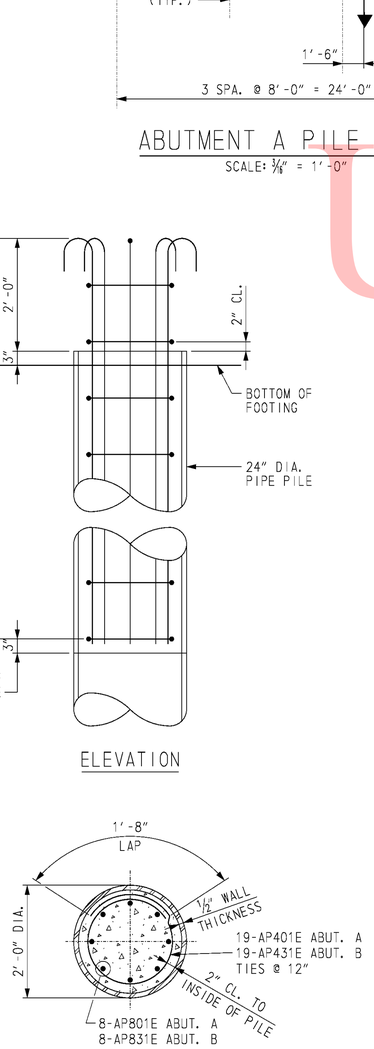

SECTION

PIPE PILE REINFORCEMENT

SCALE: 3/4" = 1'-0"

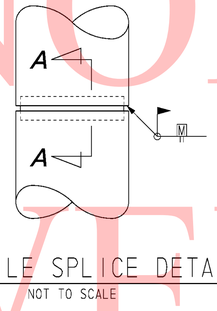

PIPE PILE SPLICE DETAIL

NOT TO SCALE

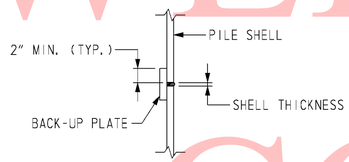

SECTION A-A

NOT TO SCALE

PILE SPLICE NOTES:

1. BACK-UP PLATE TO BE CUT FROM SAME PILE SIZE AS IS BEING SPLICED. CUT AND BEND TO FIT INSIDE DIAMETER OF PILE.
2. NO PILE SPLICING TO BE ALLOWED ON ANY PORTION OF PILE THAT IS TO REMAIN EXPOSED IN COMPLETED STRUCTURE.
3. SPLICER SLEEVE MATERIAL SHALL BE STEEL CONFORMING TO ASTM DESIGNATION A709, GRADE 36 (250).

PILE INSTALLATION DATA

SUBSTRUCTURE UNIT	DESIGN DATA: NOMINAL PILE DRIVING RESISTANCE (KIPS)	DESIGN DATA: ESTIMATED PILE TIP ELEVATION	ACTUAL FIELD DATA: AVERAGE MINIMUM TIP ELEVATION	ACTUAL FIELD DATA: AVERAGE MAXIMUM TIP ELEVATION
ABUTMENT A	477	24.0		
ABUTMENT B	477	15.0		

ABUTMENT A PILE DRIVING INFORMATION

PILE SIZE AND TYPE:
ACTUAL BEARING OBTAINED:
HAMMER TYPE:
PILE HAMMER ENERGY:
SPECIAL DRIVING CONDITIONS AND COMMENTS:

ABUTMENT B PILE DRIVING INFORMATION

PILE SIZE AND TYPE:
ACTUAL BEARING OBTAINED:
HAMMER TYPE:
PILE HAMMER ENERGY:
SPECIAL DRIVING CONDITIONS AND COMMENTS:

NOTES:

1. PILES SHALL BE 24" DIA. WITH 1/2" WALL THICKNESS OPEN-ENDED STEEL PIPE PILES, ASTM A252 GRADE 3.
2. REINFORCING STRAPS SHALL BE PROVIDED FOR THE ABUTMENT STEM AND BACKWALL TO RESIST THE LONGITUDINAL FORCES ON THE SUPERSTRUCTURE.
3. PILE CASINGS SHALL BE INSTALLED AT THE PROPOSED PILE LOCATIONS DURING THE ABUTMENT MSE WALL CONSTRUCTON.
4. UPON COMPLETION OF THE MSE WALL THERE SHALL BE A ~~30 TO~~ 60 DAY QUARANTINE PERIOD PRIOR TO DRIVING THE ABUTMENT PILES TO ALLOW FOR SETTLEMENT AND TO MINIMIZE THE DOWNDRAG FORCES THAT MIGHT DEVELOP ON THE PILES. (2)
5. THE ENGINEER SHALL MONITOR THE SETTLEMENT DURING THE QUARANTINE PERIOD TO DETERMINE WHEN THE PILES MAY BE DRIVEN.
6. UPON COMPLETION OF THE QUARANTINE PERIOD, AS JUDGED BY THE ENGINEER, DRIVE PILES TO THE NOMINAL PILE DRIVING RESISTANCE INDICATED ON THE PLANS.
7. 'TEST PILES' SHALL BE TESTED IN ACCORDANCE WITH THE SPECIFICATIONS.
8. (2) ALL TEST PILES SHALL BE 10 FEET LONGER THAN INDICATED ON PILE INSTALLATION DATA TABLE.

CROSS REFERENCE NOTES:

1. FOR ABUTMENT PLAN AND ELEVATION, SEE DWGS. S4-5 & S4-6.
2. FOR REINFORCING BAR LIST, SEE DWG. S4-18.
3. FOR PILE CASING DETAILS, SEE DWG. S4-5.
4. FOR SOIL PROFILE, SOIL PROPERTIES AND TOTAL ESTIMATED SETTLEMENT, SEE DWG. S4-15.
5. FOR TEST PILE PAYMENT NOTES, SEE DWG. S4-2.

UNOFICAL WEBSITE COPY

O:\20832887-XMK(CAD\Bridge\(BR-S4\sb01_BR-S4_sr1.dgn
4/7/2011
untitled

DELAWARE DEPARTMENT OF TRANSPORTATION

ADDENDUMS / REVISIONS

ADDENDUM NO. (2) REV. QUARANTINE PERIOD, 01/26/11, RFK	
ADDENDUM NO. (1) ADDED NOTE, 04/01/11, RFK	

SR1 / I-95 INTERCHANGE

CONTRACT	28-090-03
COUNTY	NEW CASTLE
BRIDGE NO.	1-717A
DESIGNED BY:	K. D. BEAVER
CHECKED BY:	R. F. KIRCHNER

RAMP C OVER SR 7

ABUTMENT FOUNDATION PLAN

SHEET NO.	S4-4
	352
TOTAL SHTS.	803

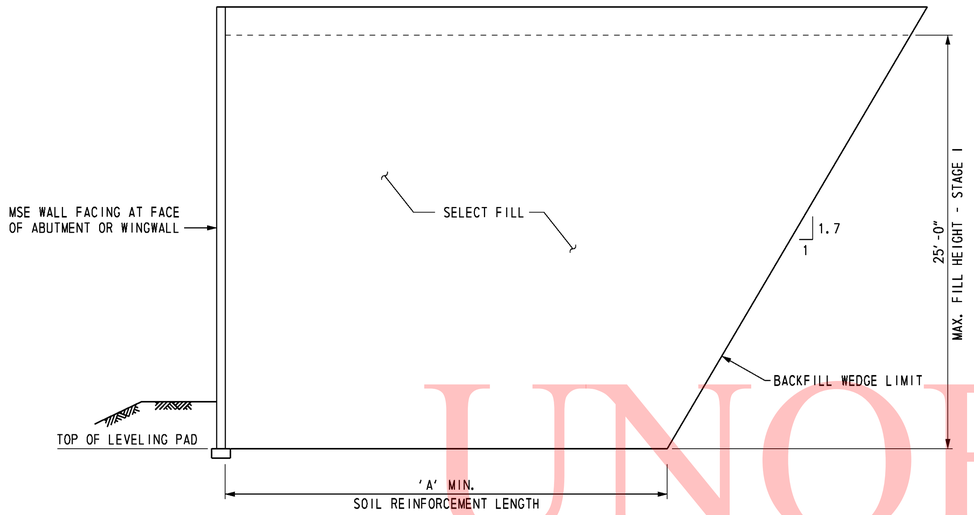

SOIL PROFILE SECTION
ABUTMENT A AND WINGWALLS I AND II

NOT TO SCALE

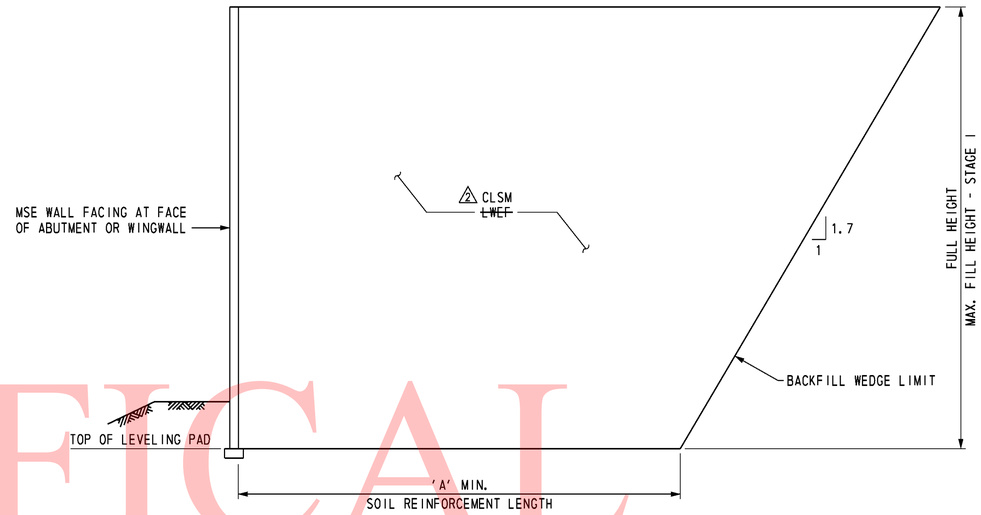

SOIL PROFILE SECTION
ABUTMENT B AND WINGWALLS III AND IV

NOT TO SCALE

UNOFFICAL WEBSITE COPY

MINIMUM REINFORCED ZONE WIDTH (A) FEET	
ABUTMENT A	
FACE OF ABUTMENT	24.0
3 WINGWALLS I ~~AND II~~	21.0
ABUTMENT B	
FACE OF ABUTMENT	24.5
3 ~~WINGWALLS III AND IV~~	~~24.5~~

SOIL PROPERTIES				
SOIL TYPE	UNIT WEIGHT (PCF)	DRAINED ANGLE OF FRICTION (DEGREES)	UNDRAINED SHEAR (PSF)	FACTORED BEARING RESISTANCE (KSF)
SELECT FILL	125	34	-	-
2 ~~LWEF~~	~~40~~	~~38~~	-	-
NO. 57 STONE	105	38	-	-
FOUNDATION SOIL:				
ABUTMENT A	120	24	1250	5.0
ABUTMENT B	120	24	1250	5.0
2 CONTROLLED LOW STRENGTH MATERIAL (CLSM)	40	38	-	-

FOUNDATION NOTES

THE FACTORED BEARING RESISTANCE SHALL BE VERIFIED PRIOR TO CONSTRUCTION OF THE MSE WALL.

THE INTERNAL STABILITY OF THE MSE WALL SHALL BE DESIGNED BY THE CONTRACTOR USING THE SOIL PARAMETERS PROVIDED FOR EACH STRUCTURE LOCATION. THE INTERNAL STABILITY CALCULATIONS SHALL BE SIGNED AND SEALED BY A PROFESSIONAL ENGINEER LICENSED IN THE STATE OF DELAWARE AS INDICATED IN THE PROJECT SPECIFICATIONS.

ISOLATED AREAS OF EXISTING FILL MAY BE ENCOUNTERED DURING CONSTRUCTION OF THIS MSE WALL. EXISTING FILL SHALL BE UNDERCUT TO EXPOSE UNDISTURBED NATURAL SOIL. UNDERCUTTING AND BACKFILLING WILL BE MEASURED AND PAID IN ACCORDANCE WITH THE SPECIFICATIONS.

A MINIMUM 7-DAY QUARANTINE PERIOD SHALL BE REQUIRED AFTER CONSTRUCTION OF THE WALL TO THE "MAX. FILL HEIGHT - STAGE 1" INDICATED ON THE SOIL PROFILE SECTION. NO FURTHER FILL SHALL BE PLACED UNTIL AUTHORIZED BY THE ENGINEER. ONCE AUTHORIZATION IS GIVEN, FILL SHALL BE PLACED IN ADDITIONAL INCREMENTS OF 5 FEET IN HEIGHT, WITH THE SAME QUARANTINE PERIOD AND AUTHORIZATION REQUIRED AT EACH INCREMENT. AN ADDITIONAL QUARANTINE PERIOD OF 2 ~~30 TO~~ 60 DAYS IS REQUIRED AFTER CONSTRUCTION OF THE MSE WALL TO ITS FULL HEIGHT. NO FURTHER CONSTRUCTION SHALL BE PERMITTED UNTIL AUTHORIZED BY THE ENGINEER. A TOTAL ESTIMATED SETTLEMENT OF APPROXIMATELY FOUR TO FIVE INCHES IS ANTICIPATED.

3 FOR WINGWALL II, SOIL REINFORCEMENT LENGTH RATIO SHALL BE L/H=1.2, AND LESS THAN (A)=21.0 FEET. FOR WINGWALLS III AND IV, SOIL REINFORCEMENT LENGTH RATIO SHALL BE L/H=1.2.

4 THE CONTRACTOR IS RESPONSIBLE FOR DEVELOPING MEANS AND METHODS, IN CONSULTATION WITH THE MSE WALL MANUFACTURER, FOR CONSTRUCTING THE MSE WALLS TO THE LINES, GRADES, AND DIMENSIONS SHOWN ON THE PLANS. SOIL BORINGS, LABORATORY TEST DATA, AND THE ENGINEER'S SETTLEMENT ESTIMATE(S) ARE CONTAINED IN ONE OF THE FOLLOWING GEOTECHNICAL ENGINEERING REPORTS WHICH HAVE BEEN MADE AVAILABLE BY THE DEPARTMENT: FINAL FOUNDATIONS REPORT - RETAINING WALLS AND FINAL FOUNDATIONS REPORT - BRIDGES AND WINGWALLS DATED APRIL 2009, PREPARED BY RUMMEL, KLEPPER & KAHL, LLP AND URS CORPORATION. THESE SUPPLEMENTAL GEOTECHNICAL REPORTS ARE NOT PART OF THE CONTRACT DOCUMENTS, AND ARE AVAILABLE AT WWW.BIDS.DELAWARE.GOV WEBSITE. CONTRACTORS MAY USE THIS INFORMATION AT THEIR OWN RISK.

DELAWARE
DEPARTMENT OF TRANSPORTATION

ADDENDUMS / REVISIONS	
ADDENDUM NO. 2 REVISED QUARANTINE PERIOD AND SOIL PROPERTIES, 01/26/11, RFK	
ADDENDUM NO. 3 REV. BACKFILL PROFILE, 02/18/11, RFK	
ADDENDUM NO. 4 ADDED NOTE, 04/01/11, RFK	

SR1 / I-95 INTERCHANGE

CONTRACT	BRIDGE NO.	1-717A
28-090-03	DESIGNED BY: R. F. KIRCHNER	
COUNTY	CHECKED BY: G.P. MISTRY	
NEW CASTLE		

RAMP C OVER SR 7

WINGWALL DETAILS 2

SHEET NO.	TOTAL SHTS.
363	803

Steve_Lambert 4/11/2011 O:\20832687-XM\CAD\Bridge\BR-S4\rd04_BR-S4_srf.dgn

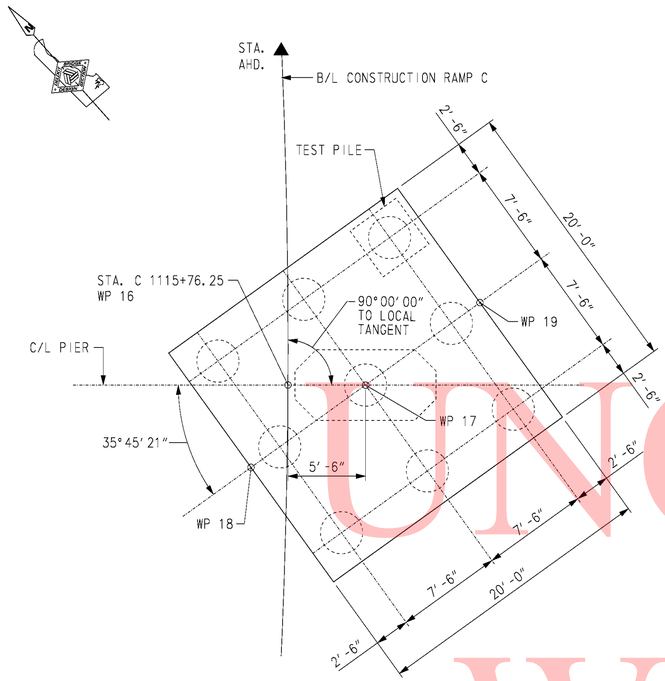

PIER PILE PLAN

SCALE: 1/8" = 1'-0"

WORKING POINTS				
WP NO.	STATION	OFFSET	COORDINATES	
			NORTHING	EASTING
16	1115+76.25	0.00'	612,516.8689	432,310.7286
17	1115+76.25	5.50' RT.	612,513.1645	432,314.7940
18	1115+70.38	2.58' LT.	612,514.3112	432,304.8600
19	1115+81.93	13.65' RT.	612,512.0179	432,324.7280

PILE INSTALLATION DATA				
	DESIGN DATA		ACTUAL FIELD DATA	
SUBSTRUCTURE UNIT	NOMINAL PILE DRIVING RESISTANCE (KIPS)	ESTIMATED PILE TIP ELEVATION	AVERAGE MINIMUM TIP ELEVATION	AVERAGE MAXIMUM TIP ELEVATION
PIER	1100	-12.0		

PIER PILE DRIVING INFORMATION
PILE SIZE AND TYPE:
ACTUAL BEARING OBTAINED:
HAMMER TYPE:
PILE HAMMER ENERGY:
SPECIAL DRIVING CONDITIONS AND COMMENTS:

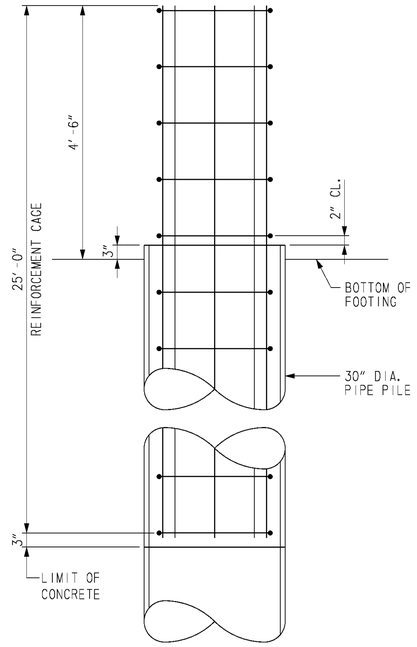

ELEVATION

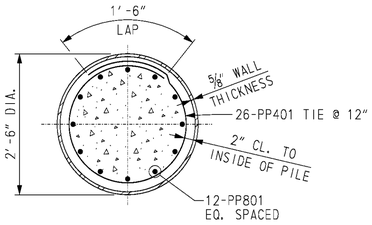

SECTION

PIPE PILE REINFORCEMENT

SCALE: 3/4" = 1'-0"

NOTES:

1. PILES SHALL BE 30" DIA. WITH 5/8" WALL THICKNESS OPEN-ENDED STEEL PIPE PILES, ASTM A252 GRADE 3.
2. TEST PILES SHALL BE TESTED IN ACCORDANCE WITH THE SPECIFICATIONS.
3. ⚠4 ALL TEST PILES SHALL BE 10 FEET LONGER THAN INDICATED ON PILE INSTALLATION DATA TABLE.

CROSS REFERENCE NOTES:

1. FOR PIER PLAN AND ELEVATION, SEE DWG. S4-20.
2. FOR REINFORCING BAR LIST, SEE DWG. S4-25.
3. FOR PILE SPLICE DETAILS, SEE DWG. S4-4.
4. FOR TEST PILE PAYMENT NOTES, SEE DWG. S4-2.

UNOFFICAL WEBSITE COPY

O:\20832687-XMI\CAD\Bridge\BR-S4\pr01_BR-S4_sr1.dgn
4/7/2011
untitled

DELAWARE
DEPARTMENT OF TRANSPORTATION

ADDENDUMS / REVISIONS	
ADDENDUM NO. ⚠4 ADDED NOTE, 04/01/11, RFK	

SR1 / I-95 INTERCHANGE

CONTRACT	BRIDGE NO.	1-717A
28-090-03	DESIGNED BY: K.D. BEAVER	
COUNTY	CHECKED BY: R.F. KIRCHNER	
NEW CASTLE		

RAMP C OVER SR 7

PIER FOUNDATION PLAN

S4-19
SHEET NO.
367
TOTAL SHTS.
803

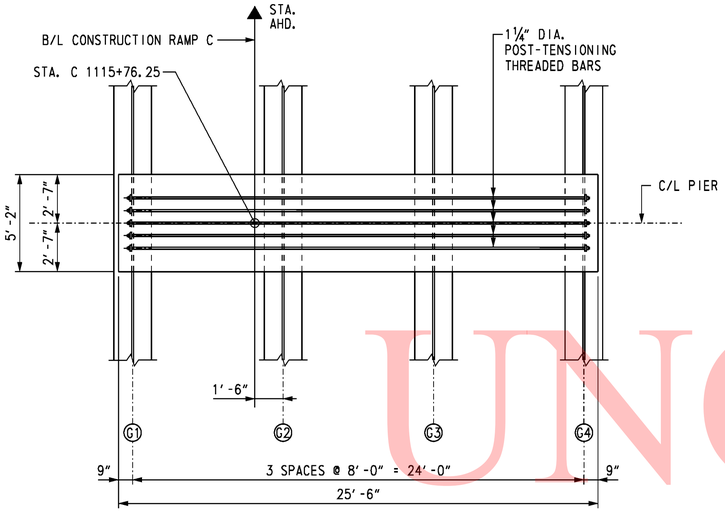

POST TENSIONING PLAN

SCALE: ¼" = 1'-0"

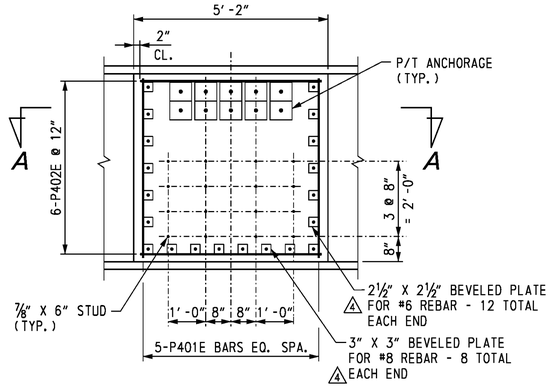

INTEGRAL PIER CAP ANCHORAGE COVER

SCALE: ½" = 1'-0"

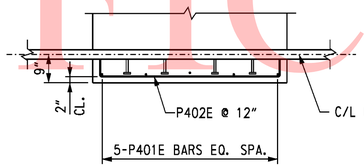

SECTION A-A

SCALE: ½" = 1'-0"

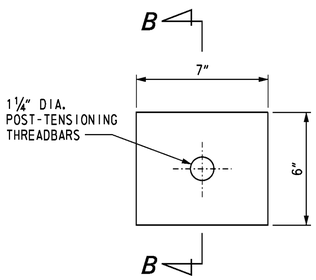

ANCHOR PLATE DETAIL

SCALE: 3" = 1'-0"

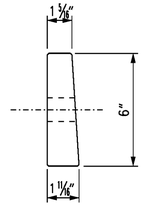

SECTION B-B

SCALE: 3" = 1'-0"

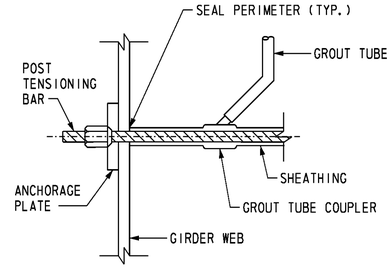

POST-TENSIONING ASSEMBLY DETAIL

NOT TO SCALE

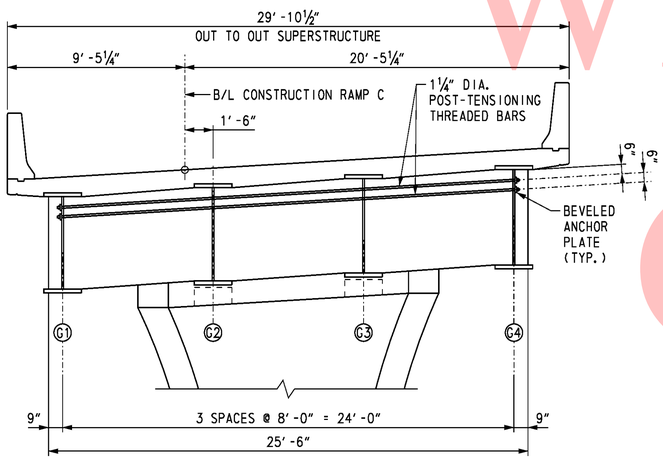

POST TENSIONING SECTION

SCALE: ¼" = 1'-0"

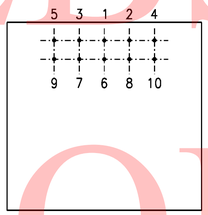

POST-TENSION STRESSING SEQUENCE

SCALE: ½" = 1'-0"

SEQUENCE OF CONSTRUCTION:

1. CONSTRUCT PIER FOUNDATION AND COLUMN.
2. AFTER THE FOUNDATION AND COLUMNS HAVE ATTAINED AT LEAST 80% OF THEIR DESIGN COMPRESSIVE STRENGTH, CONSTRUCT TEMPORARY SHORING TO SUPPORT SUPERSTRUCTURE GIRDERS. PIER CAP AND GIRDERS SHALL BE SUPPORTED ON TEMPORARY SHORING FRAMES UNTIL DECK SLAB HAS BEEN CONSTRUCTED AND POST-TENSIONING OPERATIONS HAVE BEEN COMPLETED.
3. ERECT SUPERSTRUCTURE GIRDERS ON TEMPORARY SHORING.
4. POUR DECK CONCRETE IN ACCORDANCE WITH THE SEQUENCE SHOWN ON POURING SEQUENCE PLANS, EXCLUDING NEGATIVE MOMENT SEGMENT OVER PIER CAP. THIS WILL ALLOW THE GIRDERS TO DEFLECT DUE TO THE DECK WEIGHT WITHOUT ANY RESTRAINT AT THE INTEGRAL PIER LOCATIONS.
5. POUR CONCRETE FOR THE INTEGRAL PIER CAP.
6. POUR REMAINING DECK CONCRETE IN REGION OVER PIER CAP AFTER PIER CAP HAS REACHED A MINIMUM COMPRESSIVE STRENGTH OF 3,000 PSI.
7. CONSTRUCT CONCRETE BARRIERS. AS AN ALTERNATE, BARRIERS MAY BE CONSTRUCTED AFTER POST TENSIONING OPERATIONS.
8. AFTER DECK CONCRETE HAS ATTAINED ITS 28 DAY COMPRESSIVE STRENGTH, POST-TENSIONING OPERATIONS MAY COMMENCE. BARS SHALL BE STRESSED FROM ONE END OF THE PIER CAP IN THE ORDER SHOWN. CONTRACTOR MAY PROPOSE AN ALTERNATE STRESSING SEQUENCE AND SUBMIT TO THE ENGINEER FOR APPROVAL.
9. DURING THE POST TENSIONING OPERATION, THE GIRDERS SHALL BE SHIMMED AS NECESSARY TO MAINTAIN FULL SUPPORT FROM THE TEMPORARY SHORING.
10. WHEN POST TENSIONING IS COMPLETE, DUCTS SHALL BE GROUTED.
11. CONSTRUCT CONCRETE ANCHORAGE COVER AT ENDS OF PIER CAP.
12. REMOVE TEMPORARY SHORING.

NOTES:

MATERIAL PROPERTIES:

CONCRETE CAP: f'c = 6000 psi
f'ci = 4500 psi
Ec = 4270 ksi

PRESTRESSING STEEL:

THREADBARS-ASTM A722, GRADE 150, TYPE II, 1¼" DIAMETER EPOXY COATED

MODULUS OF ELASTICITY:	29,700 ksi
JACKING STRESS:	111,000 psi
ANCHORING STRESS:	104,000 psi
WOBBLE COEFFICIENT:	0.0002
ANCHOR SET:	1/16"

CROSS REFERENCE NOTES:

1. FOR PIER PLAN AND ELEVATION, SEE DWG. S4-20
2. FOR PIER CAP REINFORCEMENT DETAILS, SEE DWG. S4-22.
3. FOR PIER COLUMN REINFORCEMENT DETAILS, SEE DWG. S4-23.
4. FOR PIER FOOTING REINFORCEMENT DETAILS, SEE DWG. S4-24.
5. FOR BRIDGE DECK POURING SEQUENCE, SEE DWG. S4-35.

UNOFFICAL WEBSITE COPY

O:\20832687-XM\CAD\Bridge\BR-S4\pr02_BR-S4_srf.dgn
3/21/2011
Steve_Lambert

DELAWARE DEPARTMENT OF TRANSPORTATION

ADDENDUMS / REVISIONS	
ADDENDUM NO. 2 ADDED REINFORCEMENT, 04/01/11, SAM	

SR1 / I-95 INTERCHANGE

CONTRACT	BRIDGE NO.	1-717A	RAMP C OVER SR 7
28-090-03	DESIGNED BY: K. D. BEAVER		PIER REINFORCEMENT 1
COUNTY	CHECKED BY: R. F. KIRCHNER		
NEW CASTLE			

S4-21	
SHEET NO.	369
TOTAL SHTS.	803

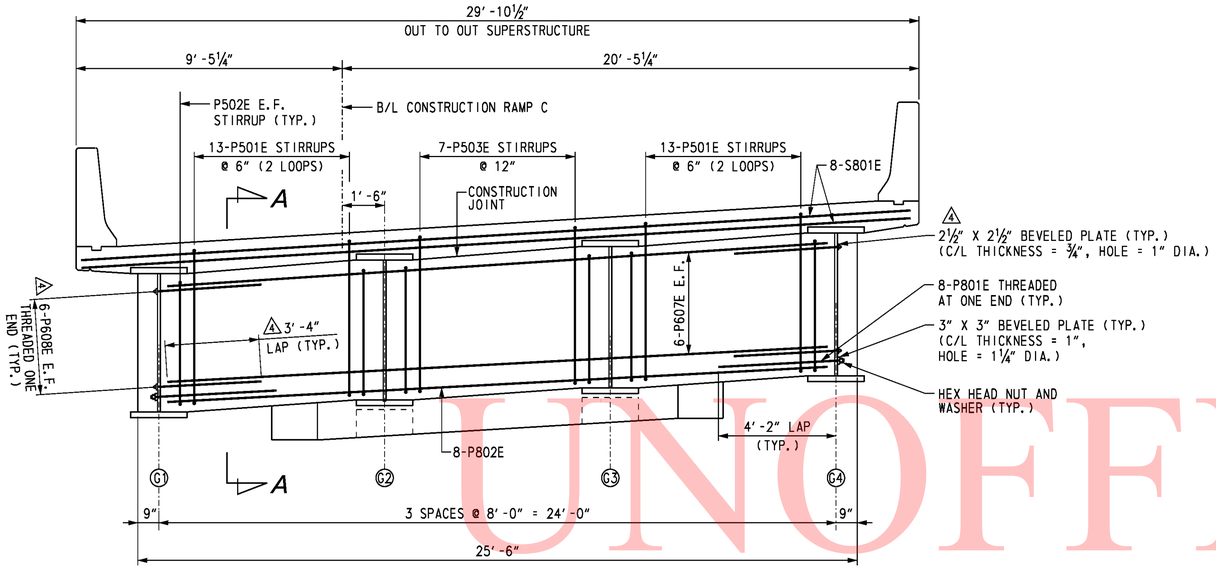

ELEVATION

SCALE: ⅜″ = 1′-0″

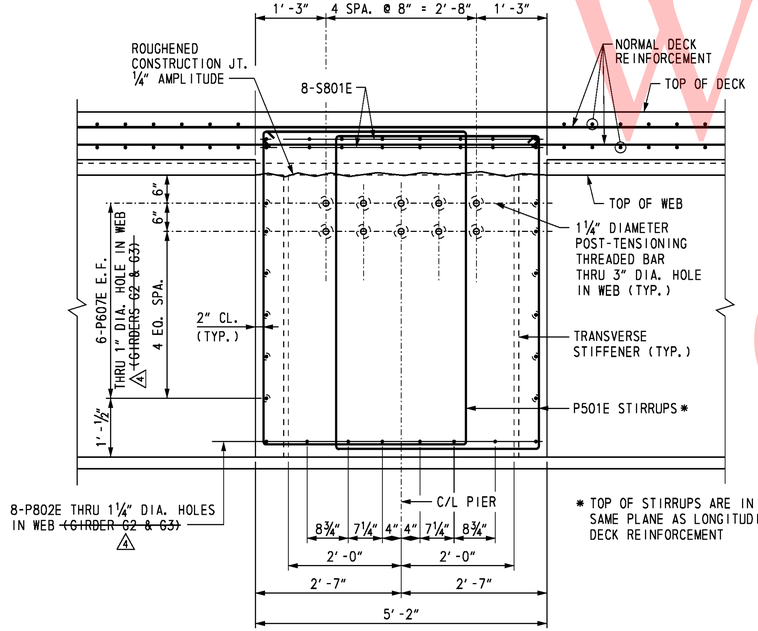

SECTION A-A

SCALE: ¾″ = 1′-0″

* TOP OF STIRRUPS ARE IN THE SAME PLANE AS LONGITUDINAL DECK REINFORCEMENT

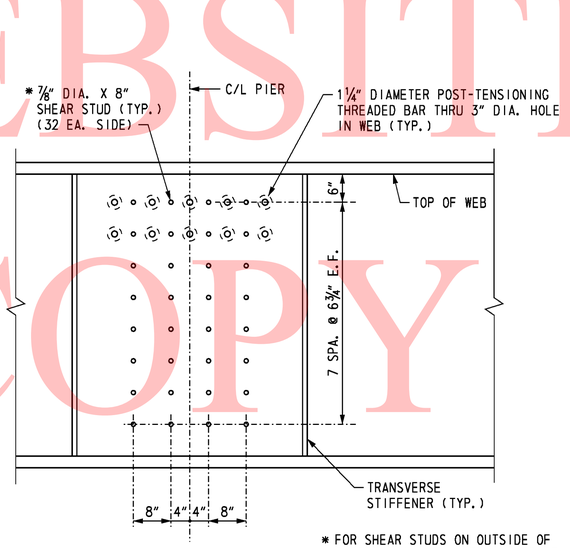

* FOR SHEAR STUDS ON OUTSIDE OF GIRDERS G1 & G4, SEE ANCHORAGE COVER DETAIL ON POST-TENSIONING REINFORCEMENT SHEET.

SHEAR STUDS

SCALE: ¾″ = 1′-0″

CROSS REFERENCE NOTES:

1. FOR PIER PLAN AND ELEVATION, SEE DWG. S4-20.
2. FOR PIER CAP POST-TENSIONING REINFORCEMENT, SEE DWG. S4-21.
3. FOR PIER COLUMN REINFORCEMENT DETAILS, SEE DWG. S4-23.
4. FOR PIER FOOTING REINFORCEMENT DETAILS, SEE DWG. S4-24.
5. FOR REINFORCING BAR LIST, SEE DWG. S4-25.

UNOFFICAL WEBSITE COPY

O:\20852887-XM\CAD\Bridge\BR-S4\prt04_BR-S4_sr1.dgn
3/21/2011
Steve_Lambert

S4-22

DELAWARE DEPARTMENT OF TRANSPORTATION

ADDENDUMS / REVISIONS	
ADDENDUM NO. 4 ADDED REINFORCEMENT, 04/01/11, SAM	

SR1 / I-95 INTERCHANGE

CONTRACT	BRIDGE NO.	1-717A
28-090-03	DESIGNED BY: K. D. BEAVER	
COUNTY	CHECKED BY: R. F. KIRCHNER	
NEW CASTLE		

RAMP C OVER SR 7

PIER REINFORCEMENT 2

SHEET NO.	370
TOTAL SHTS.	803

REINFORCING BAR LIST

PIER

MARK	LENGTH	NO. BARS	TYPE	A	B	C	D	E	F	G	H	J	K	O	R	REMARKS
PP401	8′-0″	234	T3										1′-6″	2′-0¾″		
PP801	25′-0″	108	STR.													
P401E	4′-8″	5	STR.													
P402E	5′-7″	6	2	0′-4½″	4′-10″					0′-4½″						
PF601	19′-6″	12	STR.													
PF602	6′-1″	53	2	1′-0″	4′-1″					1′-0″						
PF603	18′-7″	30	T3S	0′-8″						0′-8″	0′-4½″		2′-7″	4′-8″		
PF604	7′-8″	20	T9	0′-8″	6′-0″					1′-0″	0′-4½″					
PF701	19′-6″	43	STR.													
PF801	21′-4″	32	1	0′-11″	19′-6″					0′-11″		0′-8″				
PF901E	24′-9½″	78	STR.													
PF1001	22′-4″	35	1	1′-5″	19′-6″					1′-5″		1′-1¼″				
P501E	19′-5¾″	52	T1	0′-5½″	3′-8″	5′-7⅜″	3′-8″	5′-7⅜″		0′-5½″						
P502E	5′-5″	12	41	0′-5½″	4′-6″					0′-5½″	0′-3¾″					
P503E	21′-9¾″	7	T1	0′-5½″	4′-10″	5′-7⅜″	4′-10″	5′-7⅜″		0′-5½″						
P601E	19′-10″	171	T3S	0′-8″						0′-8″	0′-4½″		3′-10″	4′-8″		
P602E	7′-8″	54	T9	0′-8″	6′-0″					1′-0″	0′-4½″					
P603E	15′-4″	27	10	4′-0″	7′-4″	4′-0″								4′-8″	2′-4″	
P604E	16′-0″ to 19′-6″	8	10	4′-4″ to 6′-1″	7′-4″	4′-4″ to 6′-1″								4′-8″	2′-4″	$\triangle_A = \triangle_C = 3''$
P605E	22′-0″ to 29′-0″	19	10	7′-4″ to 10′-10″	7′-4″	7′-4″ to 10′-10″								4′-8″	2′-4″	$\triangle_A = \triangle_C = 3''$
P606E	21′-6″	2	10	7′-1″	7′-4″	7′-1″								4′-8″	2′-4″	
P607E	23′-8″	12	STR.													
⚠2 P608E	3′-9″	24	STR.													ONE THREADED END.
P801E	4′-8″	16	STR.													ONE THREADED END.
P802E	23′-8″	8	STR.													
P901E	14′-1″	52	STR.													
P902E	17′-11″	26	STR.													
P903E	18′-1½″	12	9S		13′-6½″		4′-7″	1′-0¼″			0′-9″			13′-5″	30′-0½″	
P904E	18′-11″	12	9S		14′-4″		4′-7″	0′-11½″			0′-9″			14′-2¾″	33′-9″	
P905E	2′-8″	2	STR.													
P906E	3′-11¾″	2	STR.													
P907E	5′-6″	2	STR.													
P908E	7′-5″	2	STR.													
P909E	10′-2½″	2	STR.													
P910E	2′-6″	2	STR.													
P911E	3′-10½″	2	STR.													
P912E	5′-5½″	2	STR.													
P913E	7′-5½″	2	STR.													
P914E	10′-5″	2	STR.													
S801E	29′-6½″	16	STR.													

BENDING DIAGRAMS

ALL DIMENSIONS ARE FROM OUT TO OUT.

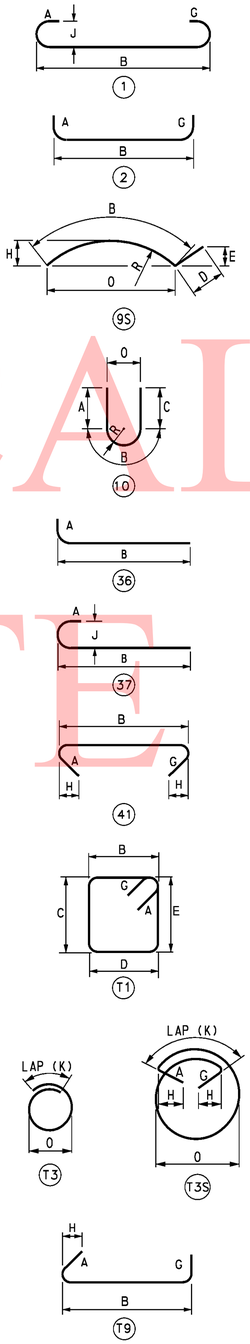

UNOFFICAL WEBSITE COPY

O:\20832687-XM\(CAD)\Bridge\[BR-S4\pr07_BR-S4_srf.dgn
3/2/2011
Steve_Lambert

DELAWARE
DEPARTMENT OF TRANSPORTATION

ADDENDUMS / REVISIONS	
ADDENDUM NO. ⚠2 ADDED REINFORCEMENT, 04/01/11, SAM	

SR1 / I-95 INTERCHANGE

CONTRACT	BRIDGE NO.	1-717A
28-090-03	DESIGNED BY: P. M. DALONI	
COUNTY	CHECKED BY: J. S. LI	
NEW CASTLE		

RAMP C OVER SR 7
PIER
REINFORCING BAR LIST

S4-25	
SHEET NO.	373
TOTAL SHTS.	803

GENERAL NOTES

1. DESIGN SPECIFICATIONS
AASHTO LRFD BRIDGE DESIGN SPECIFICATIONS, 4th EDITION WITH 2009 INTERIM REVISIONS.
DELAWARE DEPARTMENT OF TRANSPORTATION BRIDGE DESIGN MANUAL, MAY 2005 INCLUDING LATEST REVISIONS. ANSI/AASHTO/AWS D1.5 BRIDGE WELDING CODE.

2. LOADING
UNIT WEIGHTS OF MATERIALS SHALL BE IN ACCORDANCE WITH THE DELAWARE DESIGN MANUAL.
FUTURE OVERLAY ALLOWANCE SHALL BE 25 LBS/SQ FT.
STEEL BRIDGE DECK FORMS WHICH STAY IN PLACE (INCLUDING CONCRETE IN FORM CORRUGATIONS) SHALL BE 15 LBS/SQ FT.
VEHICLE LIVE LOAD SHALL BE HL-93, WHICH CONSISTS OF A DESIGN TRUCK OR TANDEM WITH DYNAMIC LOAD ALLOWANCE AND A LANE LOAD. RATING SHALL USE ALL DELAWARE LEGAL LOADS SPECIFIED IN THE BRIDGE DESIGN MANUAL.
BARRIER HAS BEEN DESIGNED FOR TEST LEVEL FIVE (TL-5).
FATIGUE DESIGN SHALL BE BASED ON THE FOLLOWING ONE DIRECTIONAL TRAFFIC VOLUMES:

RAMP G1 OVER SR7: DESIGN ADT = 5,850, DESIGN ADTT = 175

FOR THERMAL LOADS, CONSIDER THE MODERATE TEMPERATURE RANGE AS STIPULATED IN THE AASHTO LRFD DESIGN SPECIFICATIONS. THE NORMAL TEMPERATURE SHALL BE CONSIDERED TO BE 60F.
FOR SEISMIC LOADS, CONSIDER SEISMIC PERFORMANCE ZONE 1, WITH A SITE CLASS = E AND IMPORTANCE CATEGORY - CRITICAL.

△3 3. PORTLAND CEMENT CONCRETE
PORTLAND CEMENT CONCRETE FOR CAST-IN-PLACE ELEMENTS SHALL BE AS FOLLOWS:
(28 DAY COMPRESSIVE STRENGTH)
~~ITEM NO. 602007 (CLASS A, F'c=4500 PSI) - PIER ABOVE FOOTING~~
~~ITEM NO. 602011 (CLASS A, F'c=4500 PSI) - PIER FOOTING, TOP OF PIER PILES~~
~~ITEM NO. 602013 (CLASS D, F'c=4500 PSI) - DECK~~
~~ITEM NO. 602014 (CLASS D, F'c=4500 PSI) - APPROACH SLAB~~
~~ITEM NO. 602015 (CLASS A, F'c=4500 PSI) - ABUTMENT, TOP OF ABUTMENT PILES~~
~~ITEM NO. 602017 (CLASS A, F'c=4500 PSI) - BARRIER~~

602007 - PORTLAND CEMENT CONCRETE MASONRY, PIER ABOVE FOOTING, CLASS A (fc' = 4,500 PSI, PIER ABOVE FOOTING)
602011 - PORTLAND CEMENT CONCRETE MASONRY, PIER FOOTING, CLASS A (fc' = 4,500 PSI, PIER FOOTING, TOP OF PIER PILES)
602013 - PORTLAND CEMENT CONCRETE MASONRY, SUPERSTRUCTURE, CLASS D (fc' = 4,500 PSI, DECK)
602014 - PORTLAND CEMENT CONCRETE MASONRY, APPROACH SLAB, CLASS D (fc' = 4,500 PSI, APPROACH SLAB)
602015 - PORTLAND CEMENT CONCRETE MASONRY, ABUTMENT ABOVE FOOTING, CLASS A (fc' = 4,500 PSI, ABUTMENT, TOP OF ABUTMENT PILES)
602017 - PORTLAND CEMENT CONCRETE MASONRY, PARAPET, CLASS A (fc' = 4,500 PSI, BARRIER)

MIX REQUIREMENTS SHALL CONFORM TO SECTION 812 OF THE DELAWARE DEPARTMENT OF TRANSPORTATION STANDARD SPECIFICATIONS. ALL EXPOSED CORNERS OF CONCRETE SHALL BE CHAMFERED WITH ¾" X ¾" MILLED CHAMFER STRIPS UNLESS NOTED OTHERWISE, EXCEPT ON UNEXPOSED FOOTINGS OR WHERE INDICATED BY THE NOTATION ON THE PLANS, "DO NOT CHAMFER".
△4 ~~NO SLIP-FORMING OF BARRIERS IS PERMITTED, UNLESS OTHERWISE APPROVED.~~

4. BAR REINFORCEMENT
REINFORCING STEEL SHALL CONFORM TO AASHTO M31 (ASTM A615), GRADE 60. ALL REINFORCING STEEL SHALL HAVE A CLEAR COVER OF 2" UNLESS OTHERWISE SPECIFIED ON THE PLANS. FUSION-BONDED EPOXY COATED REINFORCING STEEL SHALL CONFORM TO AASHTO M284 (ASTM D3963), AND SHALL BE DENOTED WITH A SUFFIX "E" IN THE BAR MARKS.

DO NOT WELD GRADE 60 REINFORCING STEEL.

5. STRUCTURAL STEEL
STRUCTURAL STEEL SHALL CONFORM TO ASTM A 709, GRADE 50W, INCLUDING THE ADDITIONAL REQUIREMENTS FOR CHARPY V-NOTCH TESTING OF AASHTO M270 FOR PRIMARY LOAD CARRYING MEMBERS UNDER TENSILE STRESS. THE PRIMARY LOAD CARRYING MEMBER COMPONENTS ARE THE FLANGES, WEBS, AND SPLICE PLATES OF THE STEEL GIRDERS. THE USE OF FRACTURE CRITICAL MEMBERS IS PROHIBITED. FATIGUE CATEGORIES D, E AND F SHALL NOT BE USED IN STRESS REVERSAL OR TENSION AREAS, EXCEPT FOR TEMPORARY CONDITIONS.

EIGHT (8) FEET AT THE ENDS OF EACH GIRDER AND THE END CROSS FRAMES SHALL BE PAINTED WITH A URETHANE PAINT SYSTEM IN ACCORDANCE WITH SPECIAL PROVISION #605537-URETHANE PAINT SYSTEM. THE FINAL COLOR SHALL BE FEDERAL #10076 (BROWN) OF FED-STD-595B. COST OF PAINTING SHALL BE INCIDENTAL TO ITEM 605002, STEEL STRUCTURES.

ALL BOLTS FOR SPLICE PLATES AND CROSS FRAMES SHALL BE ⅞" DIA. IN 1⅛" DIA. HOLES AND CONFORM TO ASTM A325, TYPE 3, WITH THREADS EXCLUDED FROM SHEAR PLANES. BOLTED CONNECTIONS SHALL BE CLASS B SLIP CRITICAL CONNECTIONS, UNLESS NOTED ON THE PLANS.

7. SERVICEABILITY
LIVE LOAD DEFLECTION SHALL BE LIMITED TO L/800.
FOR REINFORCEMENT DISTRIBUTION REQUIREMENTS, CONSIDER CLASS 2 EXPOSURE CRITERIA FOR DECKS. ACCOMMODATION TO JACK GIRDERS FOR FUTURE BEARING REPLACEMENT HAS BEEN CONSIDERED IN THE DESIGN.

8. CONSTRUCTION JOINTS
KEYED CONSTRUCTION JOINTS SHALL BE 2" X 4" OR AS NOTED. ALL EXPOSED CONSTRUCTION JOINT EDGES SHALL HAVE A ¾" V-NOTCH, UNLESS OTHERWISE NOTED.

△3 ~~9. STABILIZING STRUCTURAL EXCAVATIONS~~
~~SHEETING AND SHORING SHALL BE REQUIRED FOR ANY EXCAVATION EXCEEDING FIVE (5) FEET IN HEIGHT, THE COST SHALL BE PAID UNDER ITEM NO. 207501 - IN LIEU OF SHORING, THE CONTRACTOR MAY USE A 2:1 CUT SLOPE. NO PAYMENT SHALL BE MADE FOR ADDITIONAL EXCAVATION OR FILL OUTSIDE THE LIMITS AS DEFINED IN SECTION 207 OF THE STANDARD SPECIFICATIONS.~~

10. EXCAVATION REQUIRED TO ATTAIN THE GRADE FOR INSTALLATION OF MSE WALLS SHALL BE INCIDENTAL TO ITEM NO. 602772 - MECHANICALLY STABILIZED EARTH WALLS.

11. STRUCTURAL BACKFILL SHALL CONFORM TO THE REQUIREMENTS OF BORROW TYPE C. MSE WALL BACKFILL SHALL BE AS SPECIFIED ON THE PLANS.

12. ROADWAY CLEARANCES
A MINIMUM OF 16'-6" VERTICAL CLEARANCE SHALL BE MAINTAINED ABOVE ALL ROADWAYS.
A MINIMUM OF 2'-0" HORIZONTAL CLEARANCE SHALL BE MAINTAINED FROM THE OUTSIDE EDGE OF SHOULDER OFFSET (FACE OF CURB) TO THE FACE OF ANY OBSTRUCTION. THESE CLEARANCES APPLY AT ALL TIMES INCLUDING DURING CONSTRUCTION.

BRIDGE LEGAL LOAD RATING (TONS)
RAMP G1 OVER SR 7

TRUCK TYPE	RATING FACTOR	SAFE LOAD CAPACITY
HS-20	1.84	66.2
S220	2.93	58.6
S327	2.61	70.4
S335	2.00	70.0
S437	2.12	77.3
T330	2.51	75.3
T435	2.12	74.2
T540	2.09	83.6

BRIDGE DESIGN LOAD RATING:
INVENTORY = 1.21
OPERATING = 1.57

△4 13. TEST PILES
~~PILE LENGTHS FOR ORDERING PURPOSES SHALL BE DETERMINED BY TEST PILES. A MINIMUM OF ONE (1) PILE PER SUBSTRUCTURE, AS SHOWN ON THE PLANS, SHALL BE DYNAMICALLY TESTED BY THE CONTRACTOR IN ACCORDANCE WITH SPECIAL PROVISION 619519. TEST AND PRODUCTION PILE RE-STRIKES WILL BE PAID AS FOLLOWS:~~

~~A). ALL TEST PILE(S) WILL BE RESTRUCK AND DYNAMICALLY TESTED BY THE CONTRACTOR. THE TEST PILE RESTRIKES SHALL BE INCIDENTAL TO ITEM NO. 619519 DYNAMIC PILE TESTING BY CONTRACTOR PROVIDED THAT THEY ARE PERFORMED WITHIN FIVE (5) CALENDAR DAYS FROM INITIAL DRIVE.~~

~~B). AN ADDITIONAL PAYMENT WILL BE MADE TO THE CONTRACTOR IF HE IS DIRECTED BY THE ENGINEER TO WAIT AND RESTRIKE THE TEST PILE MORE THAN FIVE (5) CALENDAR DAYS AFTER INITIAL DRIVE. THE CONTRACTOR SHALL BE COMPENSATED AT THE FIXED PRICE OF $1,000.00 PER CALENDAR DAY FOR EVERY DAY, AFTER THE FIFTH CALENDAR DAY, UNDER ITEM NO. 619502 TEST PILE RESTRIKE. MULTIPLE TEST PILE RESTRIKES OCCURRING ON THE SAME DAY WILL ONLY BE PAID FOR AS ONE CALENDAR DAY. NO ADDITIONAL COMPENSATION WILL BE MADE REGARDLESS OF THE NUMBER OF TEST PILE RESTRIKES PERFORMED THAT DAY.~~

~~C). RESTRIKES ON PRODUCTION PILES WHICH ARE DESIGNATED TO BE DYNAMICALLY TESTED WILL NOT BE PAID UNDER ITEM NO. 619501 PRODUCTION PILE RESTRIKE. THESE PRODUCTION PILE RESTRIKES ARE INCIDENTAL TO ITEM NO. 619519 DYNAMIC PILE TESTING BY CONTRACTOR.~~

~~THE DEPARTMENT RESERVES THE RIGHT TO PERFORM DYNAMIC TESTING OF RESTRIKES.~~

PILE LENGTHS FOR ORDERING PURPOSES SHALL BE DETERMINED BY TEST PILE RESTRIKE RESULTS. A MINIMUM OF ONE PILE PER SUBSTRUCTURE, AS SHOWN ON THE PLANS, SHALL BE DYNAMICALLY TESTED WITH SIGNAL MATCHING ANALYSIS BY THE CONTRACTOR IN ACCORDANCE WITH SPECIAL PROVISION 619519 AND 619539. TEST AND PRODUCTION PILE RESTRIKES WILL BE PAID AS FOLLOWS:

A). ALL TEST PILE(S) WILL BE RESTRUCK AFTER A WAITING PERIOD OF AT LEAST 48 HOURS. TEST PILE RESTRIKES SHALL BE INCIDENTAL TO THE INITIAL INSTALLATION OF THE PILE PROVIDED THEY ARE REQUESTED WITHIN FIVE WORKING DAYS FROM THE COMPLETION OF THE INITIAL DRIVE. IF TEST PILE RESTRIKES ARE REQUESTED AFTER THE FIVE WORKING DAYS FROM THE COMPLETION OF THE INITIAL DRIVE THEN THE TEST PILE RESTRIKE SHALL BE PAID AS NOTED IN SPECIAL PROVISION 619502.

B). IF DIRECTED BY THE ENGINEER TO RESTRIKE A PRODUCTION PILE, THE RESTRIKE OF THE PRODUCTION PILE SHALL BE PAID SEPARATELY UNDER ITEM NO. 619501.

NOTE:

LOAD RATING IS IN ACCORDANCE WITH THE LOAD AND RESISTANCE FACTOR RATING (LRFR) METHOD.

CROSS REFERENCE NOTE:

FOR MSE WALL NOTES, SEE DWG S5-14.

UNOFFICAL WEBSITE COPY

O:\20832687-XM\CAD\Bridge\BR-S5\gen01_BR-S5_srt.dgn
4/29/2011
Steve_Lambert

DELAWARE DEPARTMENT OF TRANSPORTATION

ADDENDUMS / REVISIONS
ADDENDUM NO. 3 REV. NOTE 3, DELETED 9, 02/18/11, SAM
ADDENDUM NO. 4 REV. NOTE 3 & 13, 04/01/11, RFK

SR1 / I-95 INTERCHANGE

CONTRACT 28-090-03
COUNTY NEW CASTLE
BRIDGE NO. 1-716D
DESIGNED BY: R. F. KIRCHNER
CHECKED BY: J. S. LI

RAMP G1 OVER SR 7
GENERAL NOTES

SHEET NO. 395
TOTAL SHTS. 803

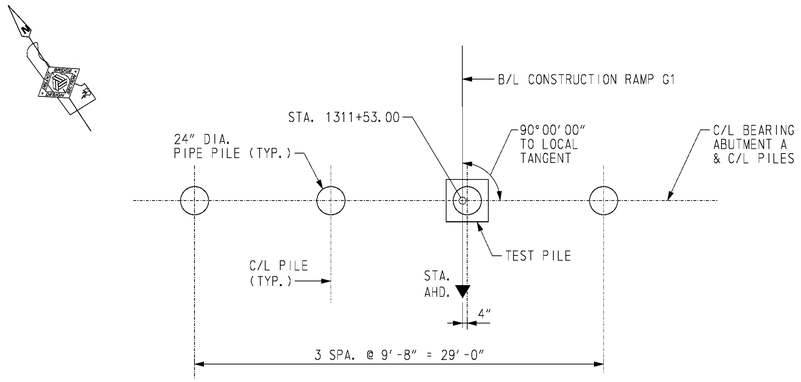

ABUTMENT A PILE PLAN

SCALE: 3/16" = 1'-0"

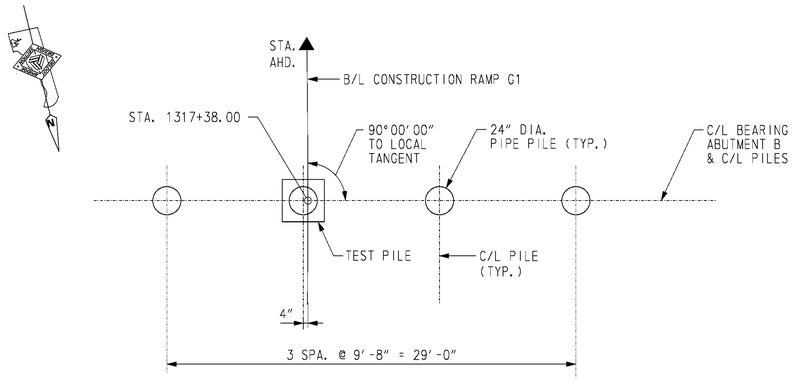

ABUTMENT B PILE PLAN

SCALE: 3/16" = 1'-0"

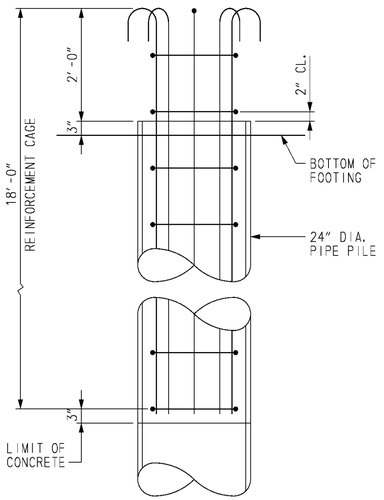

ELEVATION

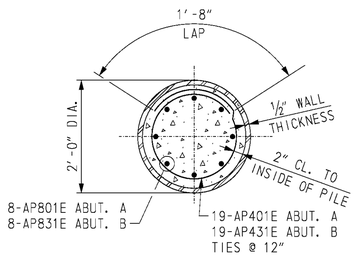

SECTION

PIPE PILE REINFORCEMENT

SCALE: 3/4" = 1'-0"

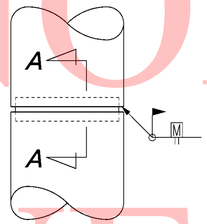

PIPE PILE SPLICE DETAIL

NOT TO SCALE

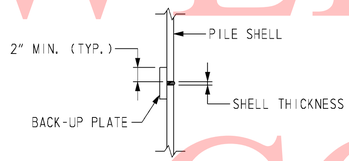

SECTION A-A

NOT TO SCALE

PILE SPLICE NOTES:

1. BACK-UP PLATE TO BE CUT FROM SAME PILE SIZE AS IS BEING SPLICED. CUT AND BEND TO FIT INSIDE DIAMETER OF PILE.
2. NO PILE SPLICING TO BE ALLOWED ON ANY PORTION OF PILE THAT IS TO REMAIN EXPOSED IN COMPLETED STRUCTURE.
3. SPLICER SLEEVE MATERIAL SHALL BE STEEL CONFORMING TO ASTM DESIGNATION A709, GRADE 36 (250).

PILE INSTALLATION DATA

SUBSTRUCTURE UNIT	DESIGN DATA: NOMINAL PILE DRIVING RESISTANCE (KIPS)	DESIGN DATA: ESTIMATED PILE TIP ELEVATION	ACTUAL FIELD DATA: AVERAGE MINIMUM TIP ELEVATION	ACTUAL FIELD DATA: AVERAGE MAXIMUM TIP ELEVATION
ABUTMENT A	540	8.0		
ABUTMENT B	540	10.0		

ABUTMENT A PILE DRIVING INFORMATION

PILE SIZE AND TYPE:
ACTUAL BEARING OBTAINED:
HAMMER TYPE:
PILE HAMMER ENERGY:
SPECIAL DRIVING CONDITIONS AND COMMENTS:

ABUTMENT B PILE DRIVING INFORMATION

PILE SIZE AND TYPE:
ACTUAL BEARING OBTAINED:
HAMMER TYPE:
PILE HAMMER ENERGY:
SPECIAL DRIVING CONDITIONS AND COMMENTS:

NOTES:

1. PILES SHALL BE 24" DIA. WITH ½" WALL THICKNESS OPEN-ENDED STEEL PIPE PILES, ASTM A252 GRADE 3.
2. REINFORCING STRAPS SHALL BE PROVIDED FOR THE ABUTMENT STEM AND BACKWALL TO RESIST THE LONGITUDINAL FORCES ON THE SUPERSTRUCTURE.
3. PILE CASINGS SHALL BE INSTALLED AT THE PROPOSED PILE LOCATIONS DURING THE ABUTMENT MSE WALL CONSTRUCTON.
4. UPON COMPLETION OF THE MSE WALL THERE SHALL BE A ~~30 TO~~ 60 DAY QUARANTINE PERIOD PRIOR TO DRIVING THE ABUTMENT PILES TO ALLOW FOR SETTLEMENT AND TO MINIMIZE THE DOWNDRAG FORCES THAT MIGHT DEVELOP ON THE PILES. (2)
5. THE ENGINEER SHALL MONITOR THE SETTLEMENT DURING THE QUARANTINE PERIOD TO DETERMINE WHEN THE PILES MAY BE DRIVEN.
6. UPON COMPLETION OF THE QUARANTINE PERIOD, AS JUDGED BY THE ENGINEER, DRIVE PILES TO THE NOMINAL PILE DRIVING RESISTANCE INDICATED ON THE PLANS.
7. 'TEST PILES' SHALL BE TESTED IN ACCORDANCE WITH THE SPECIFICATION2.
8. (4) ALL TEST PILES SHALL BE 10 FEET LONGER THAN INDICATED ON PILE INSTALLATION DATA TABLE.

CROSS REFERENCE NOTES:

1. FOR ABUTMENT PLAN AND ELEVATION, SEE DWGS. S5-5 & S5-6.
2. FOR REINFORCING BAR LIST, SEE DWG. S5-16.
3. FOR PILE CASING DETAILS, SEE DWG. S5-5.
4. FOR SOIL PROFILE, SOIL PROPERTIES AND TOTAL ESTIMATED SETTLEMENT, SEE DWG. S5-15.
5. FOR TEST PILE PAYMENT NOTES, SEE DWG. S5-2.

UNOFICAL WEBSITE COPY

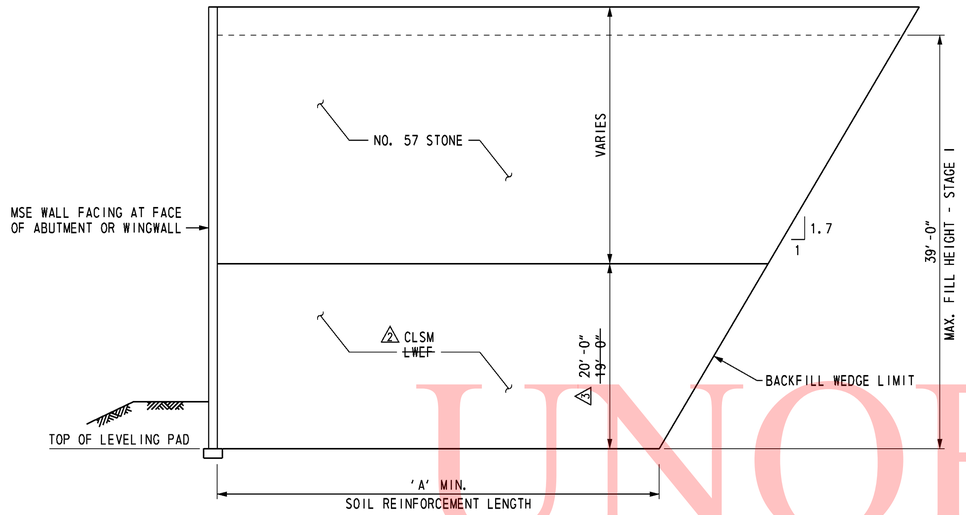

SOIL PROFILE SECTION
ABUTMENT A AND WINGWALLS I AND II

NOT TO SCALE

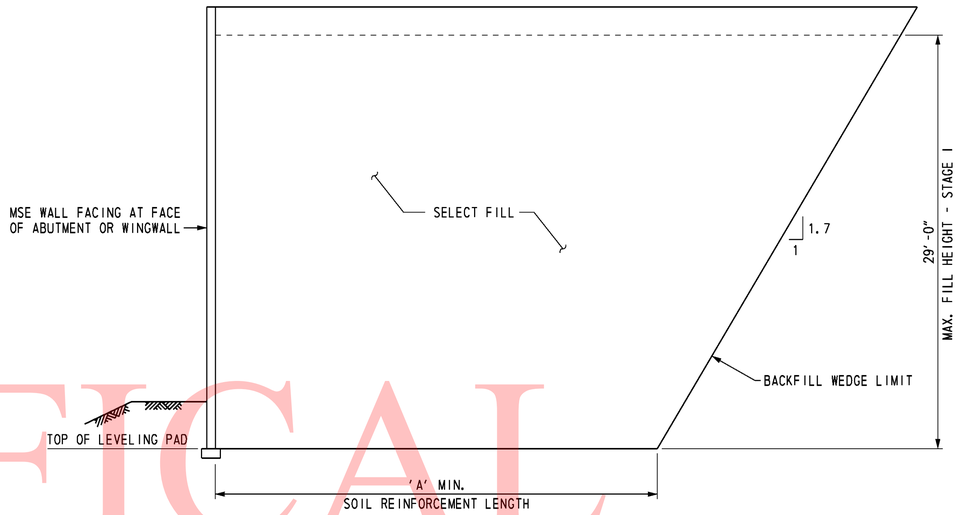

SOIL PROFILE SECTION
ABUTMENT B AND WINGWALLS III AND IV

NOT TO SCALE

UNOFFICAL WEBSITE COPY

MINIMUM REINFORCED ZONE WIDTH (A) FEET	
ABUTMENT A	
FACE OF ABUTMENT	33.0
3 WINGWALLS ~~I AND~~ II	33.0
ABUTMENT B	
FACE OF ABUTMENT	27.0
3 WINGWALLS ~~III AND~~ IV	32.0

SOIL PROPERTIES				
SOIL TYPE	UNIT WEIGHT (PCF)	DRAINED ANGLE OF FRICTION (DEGREES)	UNDRAINED SHEAR (PSF)	FACTORED BEARING RESISTANCE (KSF)
SELECT FILL	125	34	-	-
2 ~~LWEF~~	~~40~~	~~38~~	-	-
NO. 57 STONE	105	38	-	-
FOUNDATION SOIL:				
ABUTMENT A	120	24	1250	5.3
ABUTMENT B	120	24	1400	6.0
2 CONTROLLED LOW STRENGTH MATERIAL (CLFM)	40	38	-	-

FOUNDATION NOTES

THE FACTORED BEARING RESISTANCE SHALL BE VERIFIED PRIOR TO CONSTRUCTION OF THE MSE WALL.

THE INTERNAL STABILITY OF THE MSE WALL SHALL BE DESIGNED BY THE CONTRACTOR USING THE SOIL PARAMETERS PROVIDED FOR EACH STRUCTURE LOCATION. THE INTERNAL STABILITY CALCULATIONS SHALL BE SIGNED AND SEALED BY A PROFESSIONAL ENGINEER LICENSED IN THE STATE OF DELAWARE AS INDICATED IN THE PROJECT SPECIFICATIONS.

ISOLATED AREAS OF EXISTING FILL MAY BE ENCOUNTERED DURING CONSTRUCTION OF THIS MSE WALL. EXISTING FILL SHALL BE UNDERCUT TO EXPOSE UNDISTURBED NATURAL SOIL. UNDERCUTTING AND BACKFILLING WILL BE MEASURED AND PAID IN ACCORDANCE WITH THE SPECIFICATIONS.

A MINIMUM 7-DAY QUARANTINE PERIOD SHALL BE REQUIRED AFTER CONSTRUCTION OF THE WALL TO THE "MAX. FILL HEIGHT - STAGE 1" INDICATED ON THE SOIL PROFILE SECTION. NO FURTHER FILL SHALL BE PLACED UNTIL AUTHORIZED BY THE ENGINEER. ONCE AUTHORIZATION IS GIVEN, FILL SHALL BE PLACED IN ADDITIONAL INCREMENTS OF 5 FEET IN HEIGHT, WITH THE SAME QUARANTINE PERIOD AND AUTHORIZATION REQUIRED AT EACH INCREMENT. AN ADDITIONAL QUARANTINE PERIOD OF 2 ~~30 TO~~ 60 DAYS IS REQUIRED AFTER CONSTRUCTION OF THE MSE WALL TO ITS FULL HEIGHT. NO FURTHER CONSTRUCTION SHALL BE PERMITTED UNTIL AUTHORIZED BY THE ENGINEER. A TOTAL ESTIMATED SETTLEMENT OF APPROXIMATELY FOUR TO FIVE INCHES IS ANTICIPATED.

3 FOR WINGWALLS I AND III, SOIL REINFORCEMENT LENGTH RATIO SHALL BE L/H=1.2. NO. 57 STONE BACKFILL APPLIES ABOVE ELEVATION 86.0.

4 THE CONTRACTOR IS RESPONSIBLE FOR DEVELOPING MEANS AND METHODS, IN CONSULTATION WITH THE MSE WALL MANUFACTURER, FOR CONSTRUCTING THE MSE WALLS TO THE LINES, GRADES, AND DIMENSIONS SHOWN ON THE PLANS. SOIL BORINGS, LABORATORY TEST DATA, AND THE ENGINEER'S SETTLEMENT ESTIMATE(S) ARE CONTAINED IN ONE OF THE FOLLOWING GEOTECHNICAL ENGINEERING REPORTS WHICH HAVE BEEN MADE AVAILABLE BY THE DEPARTMENT: FINAL FOUNDATIONS REPORT - RETAINING WALLS AND FINAL FOUNDATIONS REPORT - BRIDGES AND WINGWALLS DATED APRIL 2009, PREPARED BY RUMMEL, KLEPPER & KAHL, LLP AND URS CORPORATION. THESE SUPPLEMENTAL GEOTECHNICAL REPORTS ARE NOT PART OF THE CONTRACT DOCUMENTS, AND ARE AVAILABLE AT WWW.BIDS.DELAWARE.GOV WEBSITE. CONTRACTORS MAY USE THIS INFORMATION AT THEIR OWN RISK.

S5-15

DELAWARE DEPARTMENT OF TRANSPORTATION

ADDENDUMS / REVISIONS	
ADDENDUM NO. 2 REVISED QUARANTINE PERIOD AND SOIL PROPERTIES, 01/26/11, RFK	
ADDENDUM NO. 3 REV. BACKFILL PROFILE, 02/18/11, RFK	
ADDENDUM NO. 4 ADDED NOTE, 04/01/11, RFK	

SR1 / I-95 INTERCHANGE

CONTRACT	BRIDGE NO.	1-716D
28-090-03	DESIGNED BY: R. F. KIRCHNER	
COUNTY	CHECKED BY: G.P. MISTRY	
NEW CASTLE		

RAMP G1 OVER SR 7

WINGWALL DETAILS 2

SHEET NO.	TOTAL SHTS.
408	803

Steve_Lambert 4/1/2011 O:\20832687-XM\CAD\Bridge\BR-S5\rd04_BR-S5_srf.dgn

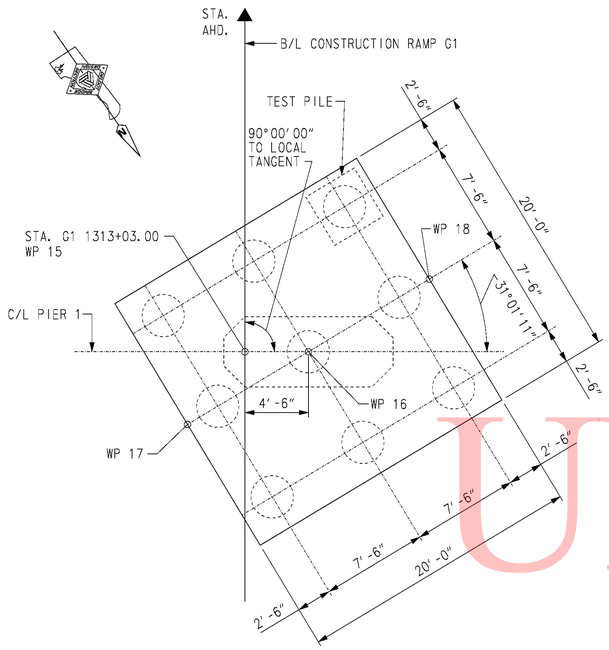

PIER 1 PILE PLAN

SCALE: 3/16" = 1'-0"

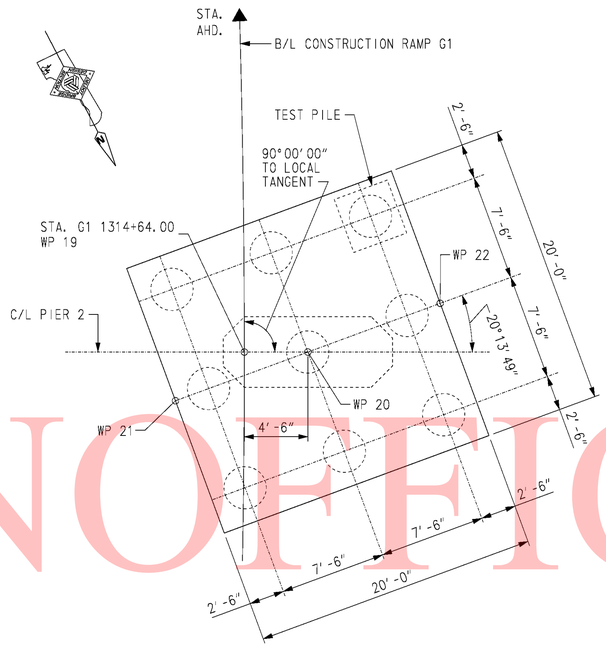

PIER 2 PILE PLAN

SCALE: 3/16" = 1'-0"

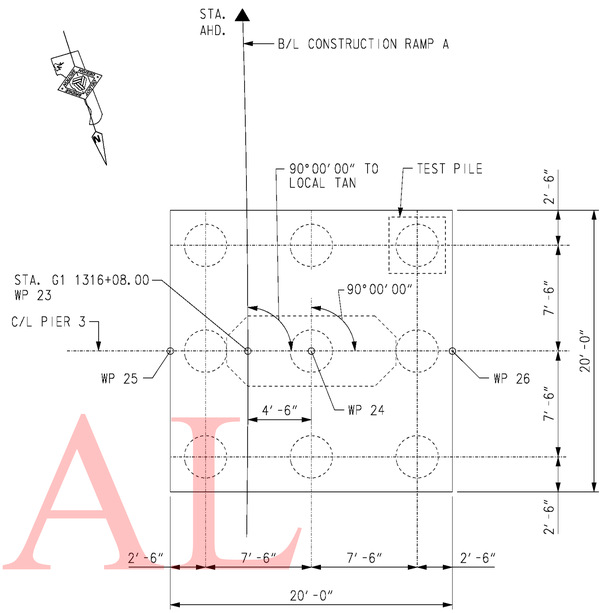

PIER 3 PILE PLAN

SCALE: 3/16" = 1'-0"

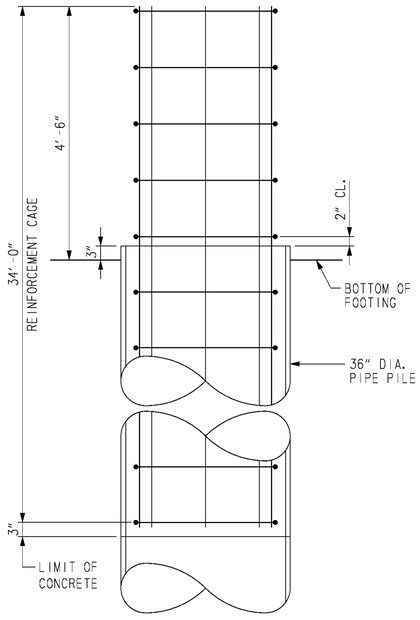

ELEVATION

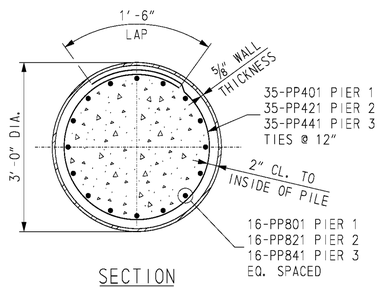

SECTION

PIPE PILE REINFORCEMENT

SCALE: 3/4" = 1'-0"

PILE INSTALLATION DATA				
	DESIGN DATA		ACTUAL FIELD DATA	
SUBSTRUCTURE UNIT	NOMINAL PILE DRIVING RESISTANCE (KIPS)	ESTIMATED PILE TIP ELEVATION	AVERAGE MINIMUM TIP ELEVATION	AVERAGE MAXIMUM TIP ELEVATION
PIER 1	1130	11.0		
PIER 2	1130	24.0		
PIER 3	1130	-4.0		

PIER 1 PILE DRIVING INFORMATION
PILE SIZE AND TYPE:
ACTUAL BEARING OBTAINED:
HAMMER TYPE:
PILE HAMMER ENERGY:
SPECIAL DRIVING CONDITIONS AND COMMENTS:

PIER 2 PILE DRIVING INFORMATION
PILE SIZE AND TYPE:
ACTUAL BEARING OBTAINED:
HAMMER TYPE:
PILE HAMMER ENERGY:
SPECIAL DRIVING CONDITIONS AND COMMENTS:

PIER 3 PILE DRIVING INFORMATION
PILE SIZE AND TYPE:
ACTUAL BEARING OBTAINED:
HAMMER TYPE:
PILE HAMMER ENERGY:
SPECIAL DRIVING CONDITIONS AND COMMENTS:

WORKING POINTS				
WP NO.	STATION	OFFSET	COORDINATES	
			NORTHING	EASTING
15	1313+03.00	0.00'	612,427.9920	432,310.2543
16	1313+03.00	4.50' RT.	612,430.5289	432,306.5375
17	1312+97.85	4.07' LT.	612,429.9539	432,316.5210
18	1313+08.15	13.07' RT.	612,431.1040	432,296.5541
19	1314+64.00	0.00'	612,292.3439	432,223.7280
20	1314+64.00	4.50' RT.	612,294.4592	432,219.7562
21	1314+60.52	4.88' LT.	612,293.1007	432,229.6635
22	1314+67.40	13.89' RT.	612,295.8177	432,209.8489
23	1316+08.00	0.00'	612,160.0514	432,167.3068
24	1316+08.00	4.50' RT.	612,161.4537	432,163.0309
25	1316+08.00	5.50' LT.	612,158.3375	432,172.5330
26	1316+08.00	14.50' RT.	612,164.5700	432,153.5289

NOTES:

1. PILES SHALL BE 36" DIA. WITH 5/8" WALL THICKNESS OPEN-ENDED STEEL PIPE PILES, ASTM A252 GRADE 3.
2. TEST PILES SHALL BE TESTED IN ACCORDANCE WITH THE SPECIFICATIONS.
3. ALL TEST PILES SHALL BE 10 FEET LONGER THAN INDICATED ON PILE INSTALLATION DATA TABLE. (4)

CROSS REFERENCE NOTES:

1. FOR PIER 1 THRU PIER 3 PLAN AND ELEVATION, SEE DWGS. S5-18 THRU S5-20.
2. FOR REINFORCING BAR LIST, SEE DWG. S5-27 & S5-28.
3. FOR PILE SPLICE DETAIL, SEE DWG. S5-4.
4. FOR TEST PILE PAYMENT NOTES, SEE DWG. S5-2.

UNOFFICAL WEBSITE COPY

S5-17

DELAWARE DEPARTMENT OF TRANSPORTATION

ADDENDUMS / REVISIONS	
ADDENDUM NO. (4) ADDED NOTE, 04/01/11, RFK	

SR1 / I-95 INTERCHANGE

CONTRACT	BRIDGE NO.	1-716D	RAMP G1 OVER SR 7
28-090-03	DESIGNED BY: K.D. BEAVER		PIER 1, 2 AND 3 FOUNDATION PLANS
COUNTY	CHECKED BY: R.F. KIRCHNER		
NEW CASTLE			

SHEET NO.	410
TOTAL SHTS.	803

4/7/2011

O:\20832687-XM\CAD\Bridge\BR-S5\prf1_BR-S5_sr1.dgn

untitled

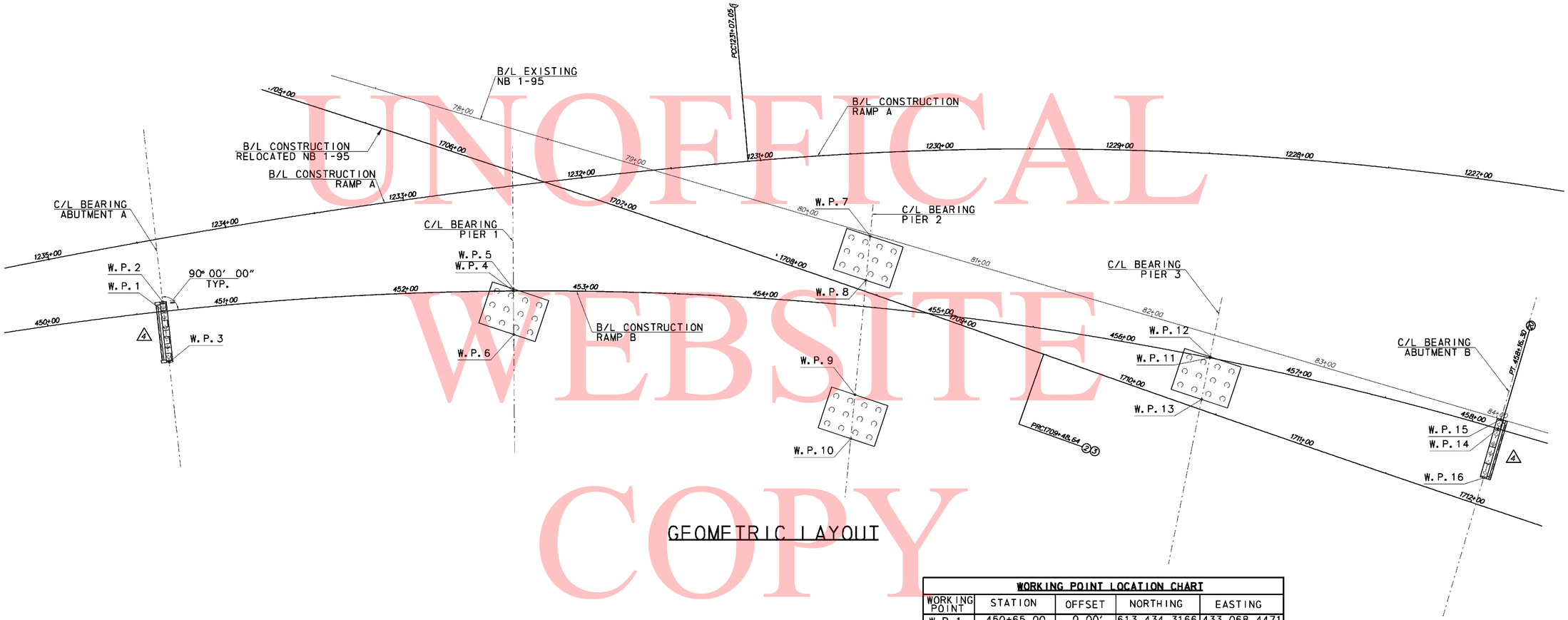

UNOFICAL WEBSITE COPY

GEOMETRIC LAYOUT

WORKING POINT LOCATION CHART

WORKING POINT	STATION	OFFSET	NORTHING	EASTING
W.P. 1	450+65.00	0.00'	613,434.3166	433,068.4471
W.P. 2	450+65.00	5.44' LT	613,438.1187	433,064.6296
W.P. 3	450+65.00	28.44' RT	613,414.0658	433,088.4122
W.P. 4	452+60.00	0.00'	613,563.8598	433,214.0846
W.P. 5	452+60.00	1.17' LT	613,564.7796	433,213.3474
W.P. 6	452+60.00	24.17' RT	613,545.0008	433,229.2022
W.P. 7	454+55.00	39.37' LT	613,710.8871	433,350.8782
W.P. 8	454+55.00	14.75' LT	613,690.1993	433,364.2270
W.P. 9	454+55.00	49.26' RT	613,636.4129	433,398.9329
W.P. 10	454+55.00	73.88' RT	613,615.7251	433,412.2818
W.P. 11	456+50.00	0.00'	613,774.9397	433,541.2115
W.P. 12	456+50.00	0.59' LT	613,775.4688	433,540.9424
W.P. 13	456+50.00	23.59' RT	613,753.9143	433,551.9022
W.P. 14	458+15.00	0.00'	613,843.2484	433,691.3508
W.P. 15	458+15.00	5.44' LT	613,848.2908	433,689.5160
W.P. 16	458+15.00	33.16' RT	613,816.8772	433,701.9927

0 15 30 45

SCALE: 1" = 30'

4/5/2011 3:32:47 PM
M:\PROJECTS\2003\03059_DELTRNPK\SR1_MALL\CADD\2809003\PLANS.DGN\FTG1_BR-S6_SR1.DGN

DELAWARE
DEPARTMENT OF TRANSPORTATION

ADDENDUMS / REVISIONS	
ADDENDUM NO. 4, ABUTMENT PILES ADJUSTED	
FROM 8 TO 6, 04/01/11, DWD	

SR1 / I-95 INTERCHANGE

CONTRACT	BRIDGE NO.	1-268B
28-090-03	DESIGNED BY:	RMB
COUNTY	CHECKED BY:	DWD
NEW CASTLE		

RAMP B OVER I-95NB
GEOMETRIC AND FOOTING LAYOUT

S6-4
SHEET NO. 451
TOTAL SHTS. 803

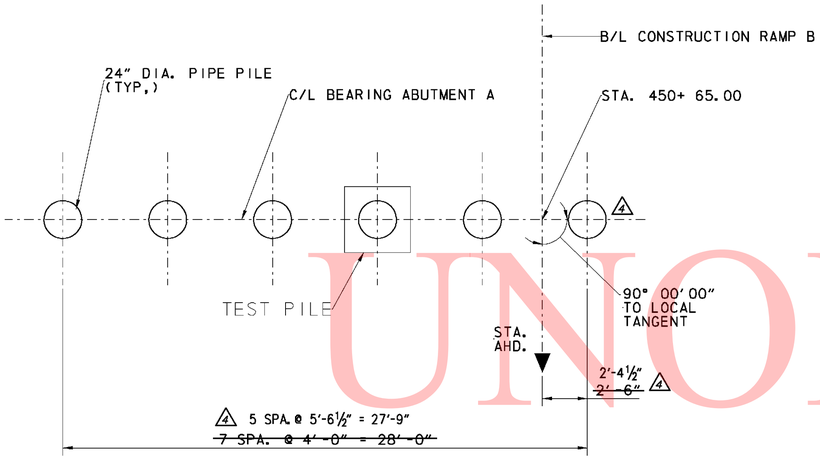

ABUTMENT A PILE PLAN
SCALE: 1/4" = 1'-0"

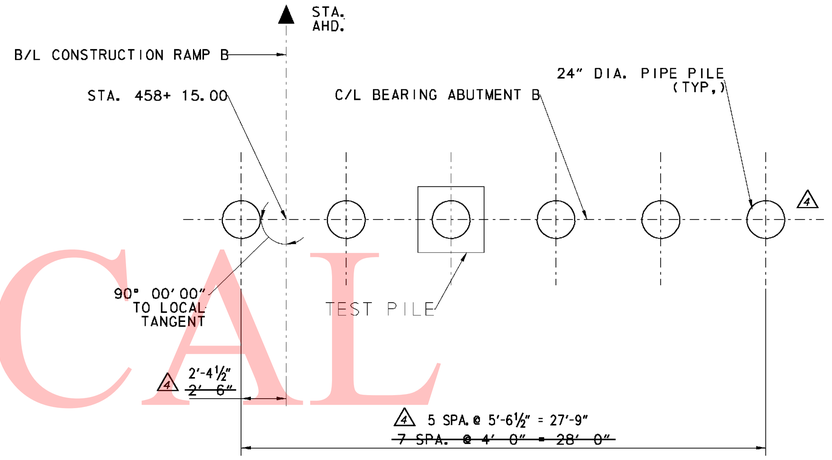

ABUTMENT B PILE PLAN
SCALE: 1/4" = 1'-0"

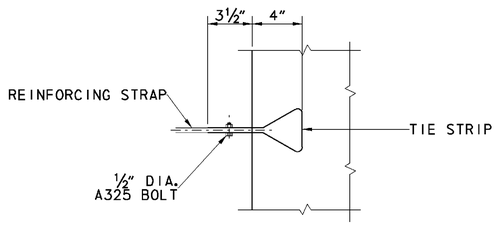

ABUTMENT STRAP ANCHOR DETAIL
NOT TO SCALE

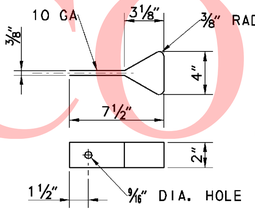

TIE STRIP DETAIL
NOT TO SCALE

NOTES:

1. PILE ARE 24" DIA. WITH 0.5" THICKNESS OPEN-ENDED STEEL PIPE PILE, ASTM A252 GRADE 3.
2. REINFORCING STRAPS SHALL BE PROVIDED FOR THE ABUTMENT STEM AND BACKWALL TO RESIST THE LONGITUDINAL FORCES ON THE SUPERSTRUCTURE.
3. PILE CASINGS SHALL BE INSTALLED AT THE PROPOSED PILE LOCATIONS DURING THE ABUTMENT MSE WALL CONSTRUCTION.
4. UPON COMPLETION OF THE MSE WALL THERE SHALL BE A 60 DAY QUARANTINE PERIOD PRIOR TO DRIVING THE ABUTMENT PILES TO ALLOW FOR SETTLEMENT AND TO MINIMIZE THE DOWNDRAG FORCES THAT MIGHT DEVELOPE ON THE PILES.
5. UPON COMPLETION OF THE QUARANTINE PERIOD, AS JUDGED BY THE ENGINEER, DRIVE PILES TO THE NOMINAL PILE DRIVING RESISTANCE INDICATED ON THE PLANS.
6. TEST PILES SHALL BE TESTED IN ACCORDANCE WITH THE SPECIFICATIONS.

CROSS REFERECE NOTES.

1. FOR ABUTMENT PLAN AND ELEVATION, SEE DWG. S6-6 & S6-9.
2. FOR ABUTMENT REINFORCEMENT SCHEDULE, SEE DWG. S6-15.

UNOFFICAL WEBSITE COPY

9/6/2010 2:45:11 PM
M:\PROJECTS\2003\03059_DELTRNPK\SR1_MALL\CADD\2809003\PLANS.DGV\FT02_BR-S6_SR1.DGN

DELAWARE
DEPARTMENT OF TRANSPORTATION

ADDENDUMS / REVISIONS	
ADDENDUM NO. 4, ABUTMENT PILES ADJUSTED FROM 8 TO 6, SPACING ADJUSTED, 04/01/11, DWD	

SR1 / I-95 INTERCHANGE

CONTRACT	BRIDGE NO.	1-268B
28-090-03	DESIGNED BY:	RMB
COUNTY	CHECKED BY:	
NEW CASTLE		

RAMP B OVER I-95NB
ABUTMENT FOUNDATION PLAN

S6-5
SHEET NO. 452
TOTAL SHTS. 803

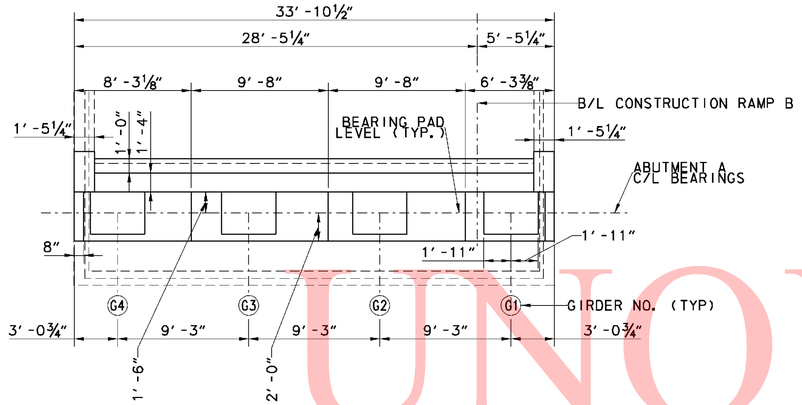

ABUTMENT A PLAN

SCALE: 3/16″ = 1′-0″

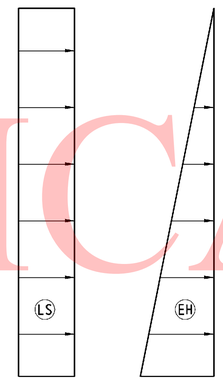

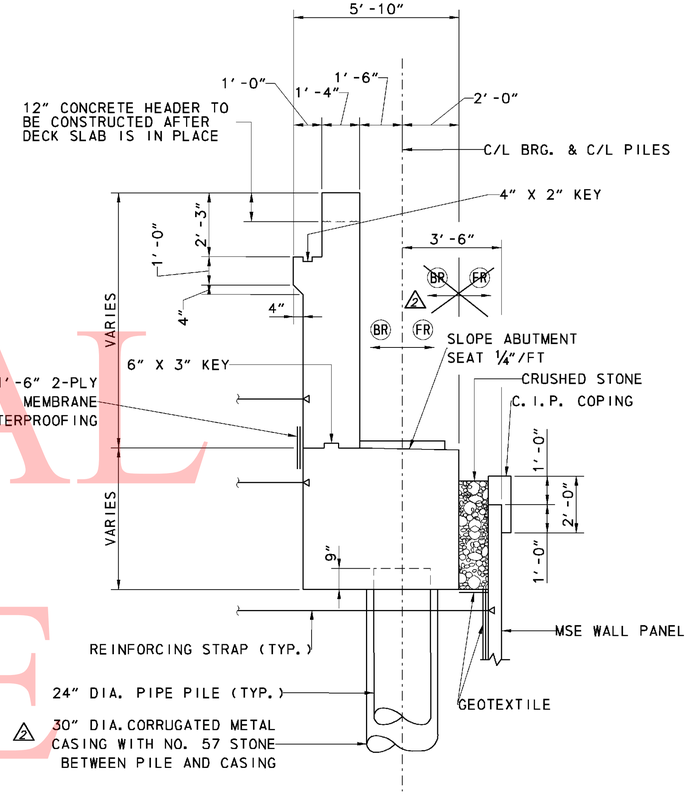

TYPICAL ABUTMENT SECTION

SCALE: ⅜″ = 1′-0″

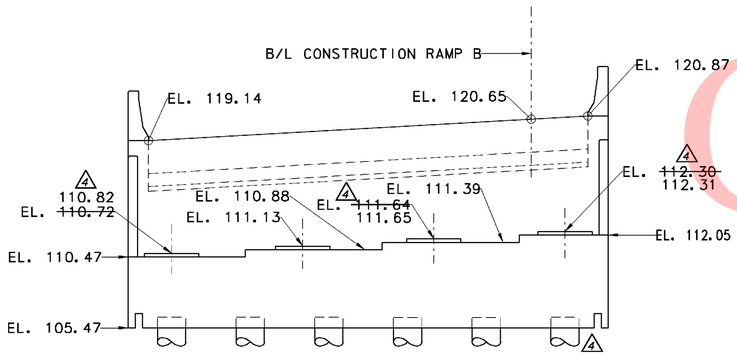

ABUTMENT A ELEVATION

SCALE: 3/16″ = 1′-0″

ABUTMENT NOTES:

1. CONTRACTOR SHALL DESIGN THE SOIL REINFORCING STRAPS IN THE ABUTMENT STEM AND BACKWALL TO RESIST LATERAL LOADS "EH", "LS", "BR" AND "FR".
2. LOAD "EH" IS THE HORIZONTAL EARTH PRESSURE EXERTED ON THE ABUTMENT.
3. LOAD "LS" IS THE ADDITIONAL HORIZONTAL SOIL PRESSURE DUE TO 3 FEET OF SOIL SURCHARGE. CONTRACTOR IS RESPONSIBLE FOR PROVIDING MSE WALL DESIGNER WITH OTHER CONSTRUCTION LOADS WHICH WILL BE IN EXCESS OF 3 FEET OF SOIL SURCHARGE.
4. LOAD "BR" IS THE HORIZONTAL LOAD DUE TO BRAKING FORCE ON THE SUPERSTRUCTURE.
5. LOAD "FR" IS THE HORIZONTAL LOAD DUE TO FRICTION ON THE BEARINGS AS A RESULT OF BRIDGE EXPANSION AND CONTRACTION.
6. ~~THE POINT OF APPLICATION OF LOADS.~~

ABUTMENT LATERAL LOADS	
TYPE	SERVICE LOAD (KIPS/FT.)
EH	3.00
LS	1.31
BR	0.19
FR	1.11

2 6. THE POINT OF APPLICATION OF THE LOADS "EH" AND "LS" ARE AT THE CENTROID OF THE PRESSURE DIAGRAM. THE LOADS "BR" AND "FR" ARE APPLIED AT THE CENTER OF THE BEARINGS. THE LOADS "BR" AND "FR" MAY ACT TOGETHER IN EITHER DIRECTION.

NOTES:

1. CRUSHED STONE AND GEOTEXTILE BETWEEN MSE WALL COPING AND ABUTMENT FOOTING SHALL BE INCIDENTAL TO ITEM NO. 602772 - MECHANICALLY STABILIZED EARTH WALLS.
2. MSE WALL AND COPING NOT SHOWN IN ELEVATION VIEW.

CROSS REFERENCE NOTES:

1. FOR BRIDGE PLAN AND ELEVATION, SEE DWG. S6-1.
2. FOR TYPICAL SIDE ELEVATION, SEE DWG. S6-9.
3. FOR MSE WINGWALLS PLAN AND ELEVATION, SEE DWG. S6-12.
4. FOR ABUTMENT REINFORCEMENT, SEE DWG. S6-7 & S6-8.

3 5. FOR MSE WALL CIP COPING DETAILS, SEE DWG. S6-9.

2 3. METAL CASINGS FOR PILES SHALL EXTEND FROM BOTTOM OF ABUTMENT TO BOTTOM OF MSE WALL LEVELING PAD. COST OF METAL IS CASING AND NO. 57 STONE SHALL BE INCIDENTAL TO FURNISHING 24" STEEL PIPE PILE ITEM.

UNOFFICIAL WEBSITE COPY

3/28/2011 9:39:05 PM
M:\PROJECTS\2003\03959_DELTRNPK\SR1_MAL\CADD\2809003\PLANS\DGN\ABD1_BR-S6_SR1.DGN

DELAWARE DEPARTMENT OF TRANSPORTATION

ADDENDUMS / REVISIONS	
ADDENDUM NO. 2, UPDATED TYPICAL ABUTMENT	ADJUSTED FROM 8 TO 6, 04/01/11, DWD
SECTION, MODIFIED NOTES, 01/26/11, DWD	
ADDENDUM NO. 3, ADDED NOTE, 02/18/11, DWD	
ADDENDUM NO. 4, ELEVATIONS, ABUTMENT PILES	

SR1 / I-95 INTERCHANGE

CONTRACT	BRIDGE NO.	1-268B
28-090-03	DESIGNED BY:	RMB
COUNTY	CHECKED BY:	DWD
NEW CASTLE		

RAMP B OVER I-95NB
ABUTMENT A
PLAN AND ELEVATION

S6-6	
SHEET NO.	453
TOTAL SHTS.	803

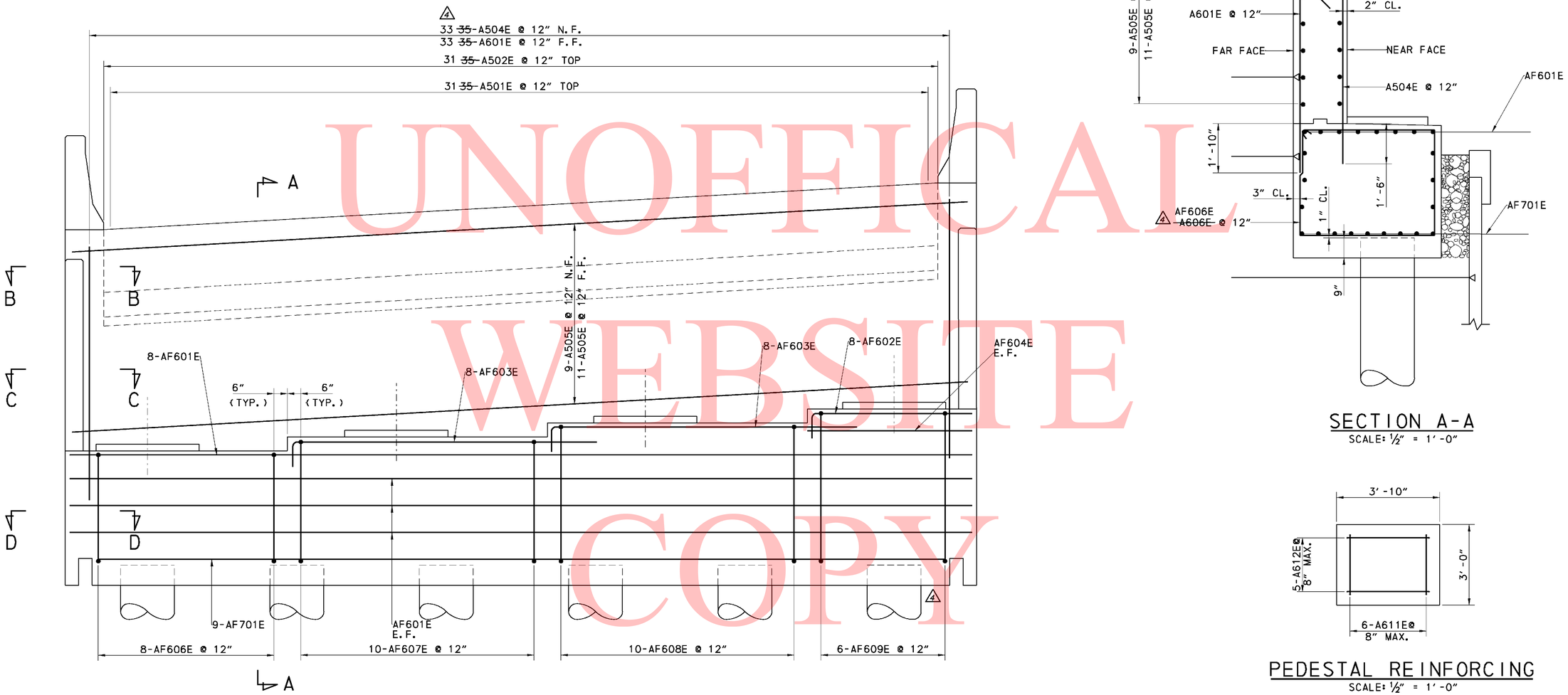

ELEVATION - ABUTMENT A

SCALE: ½" = 1'-0"

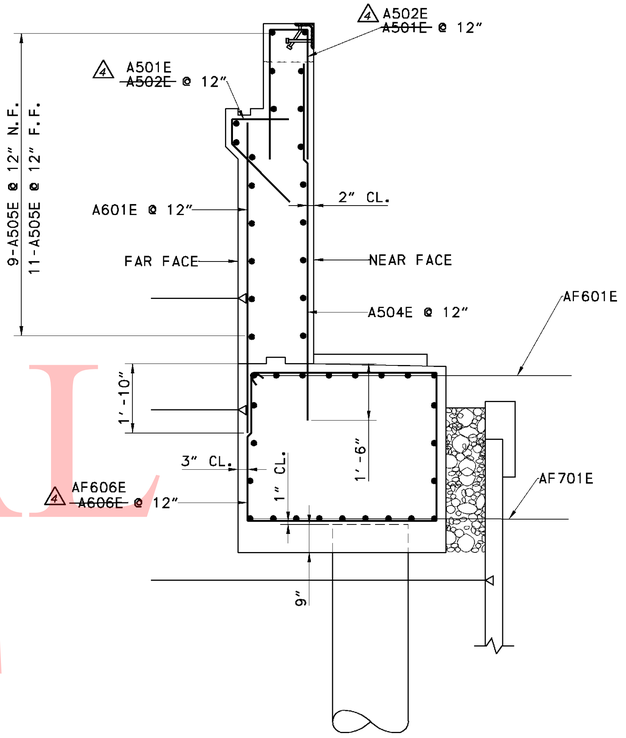

SECTION A-A

SCALE: ½" = 1'-0"

PEDESTAL REINFORCING

SCALE: ½" = 1'-0"

CROSS REFERENCE NOTES:

1. FOR BRIDGE PLAN AND ELEVATION, SEE DWG. S6-1.
2. FOR ABUTMENT A PLAN AND ELEVATION, SEE DWG. S6-6.
3. FOR WINGWALL 11 SIDE ELEVATION, SEE DWG. S6-12.
4. FOR SECTIONS B-B, C-C AND D-D, SEE DWG. S6-8.
5. FOR ABUTMENT REINFORCEMENT BAR SCHEDULE, SEE DWG. S6-15.

UNOFFICAL WEBSITE COPY

3/28/2011 9:39:31 PM
M:\PROJECTS\2003\030359_DELTRNPK\SR1_MALL\CADD\280900.3\PLANS.DGN\AB02_BR-S6_SR1.DGN

DELAWARE
DEPARTMENT OF TRANSPORTATION

ADDENDUMS / REVISIONS	
ADDENDUM NO. 4, REBAR CALLOUTS, ABUTMENT	
PILES ADJUSTED FROM 8 TO 6, 04/01/11, DWD	

SR1 / I-95 INTERCHANGE

CONTRACT	BRIDGE NO.	1-268B	RAMP B OVER I-95NB ABUTMENT A REINFORCING DETAILS 1
28-090-03	DESIGNED BY:	RMB	
COUNTY	CHECKED BY:	DWD	
NEW CASTLE			

S6-7	
SHEET NO.	454
TOTAL SHTS.	803

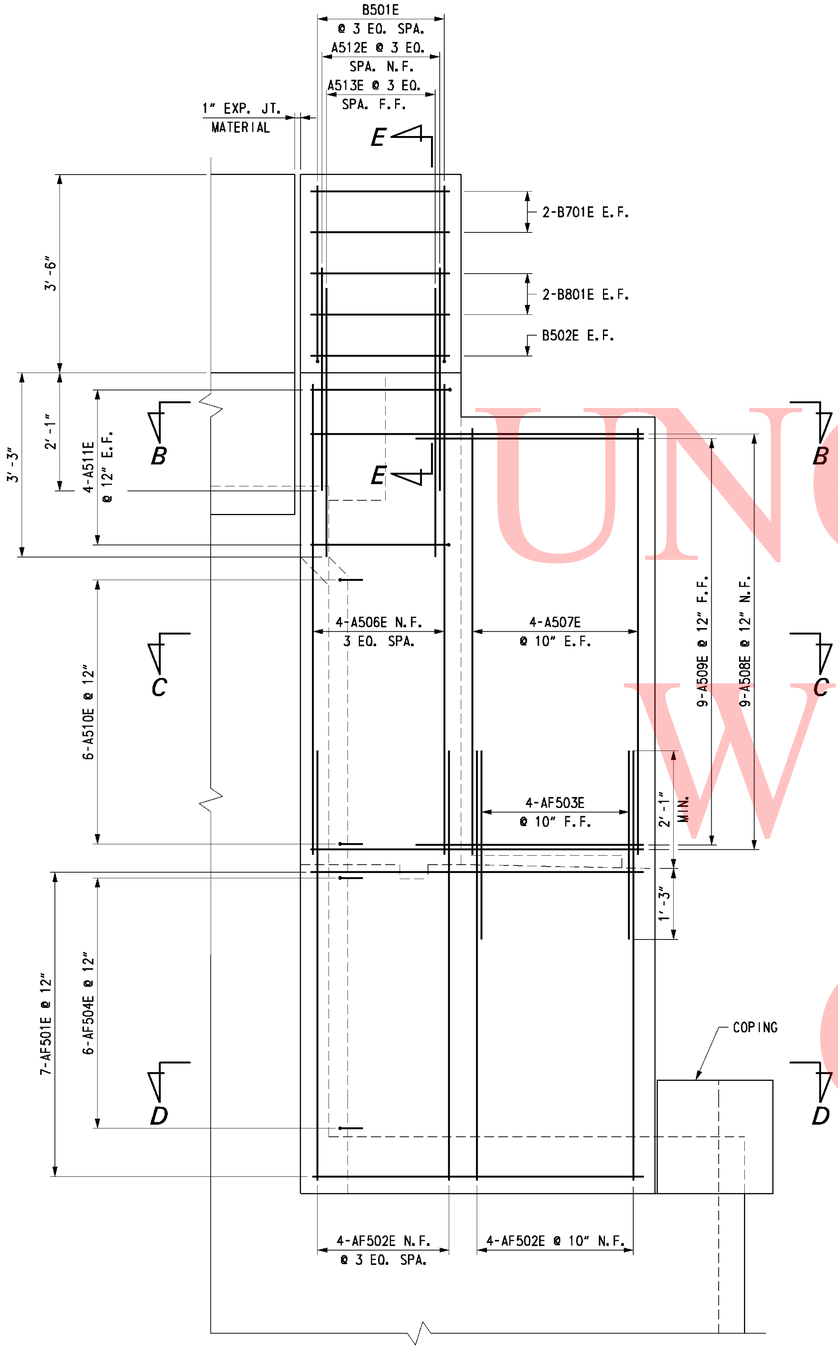

WING WALL 1 SIDE ELEVATION

SCALE: ¾" = 1'-0"

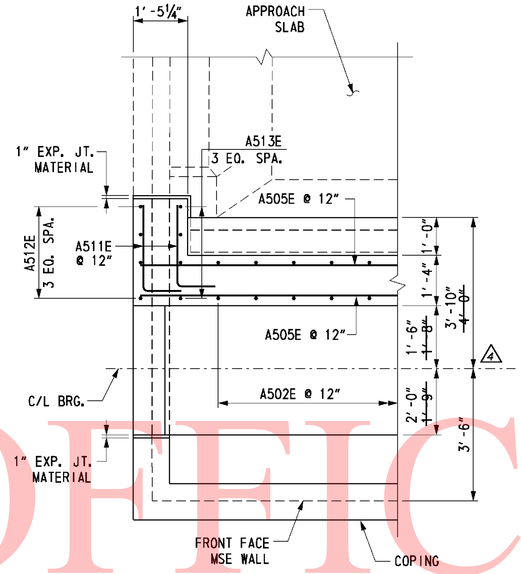

SECTION B-B

SCALE: ½" = 1'-0"

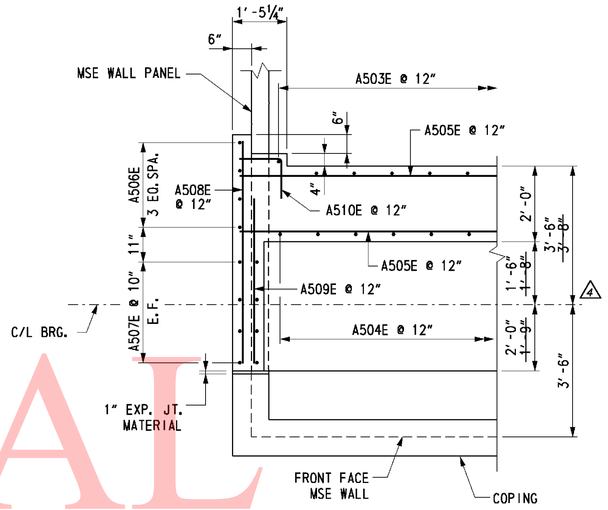

SECTION C-C

SCALE: ½" = 1'-0"

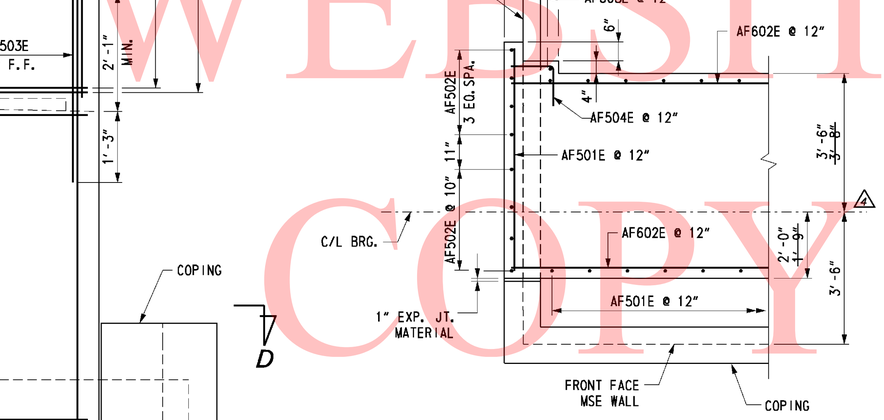

SECTION D-D

SCALE: ½" = 1'-0"

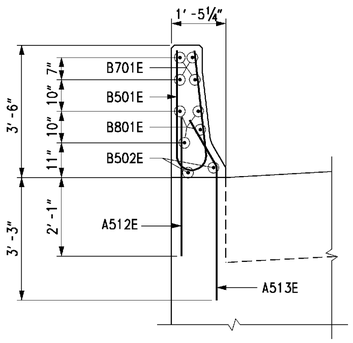

SECTION E-E

SCALE: ½" = 1'-0"

CROSS REFERENCE NOTES:

1. FOR ABUTMENT A PLAN AND ELEVATION, SEE DWG. S6-6.
2. FOR ABUTMENT A ELEVATION REINFORCEMENT DETAILS, SEE DWG. S6-7.
3. FOR REINFORCING BAR LIST, SEE DWG. S6-15.

UNOFFICAL
WEBSITE
COPY

3/22/2011 4:58:40 PM
M:\PROJECTS\2003\03059_DELTRNPK\SR1_MALL\CADD\2809003\PLANS.DGV\AB03_BR-S6_SR1.DGN

DELAWARE
DEPARTMENT OF TRANSPORTATION

ADDENDUMS / REVISIONS
ADDENDUM NO. 4, MODIFIED DIMENSIONS, 04/01/11, DWD

SR1 / I-95 INTERCHANGE

CONTRACT	28-090-03	BRIDGE NO.	1-268B
COUNTY	NEW CASTLE	DESIGNED BY:	RMB
		CHECKED BY:	DWD

RAMP B OVER I-95NB
ABUTMENT A
REINFORCEMENT DETAILS 2

S6-8	
SHEET NO.	455
TOTAL SHTS.	803

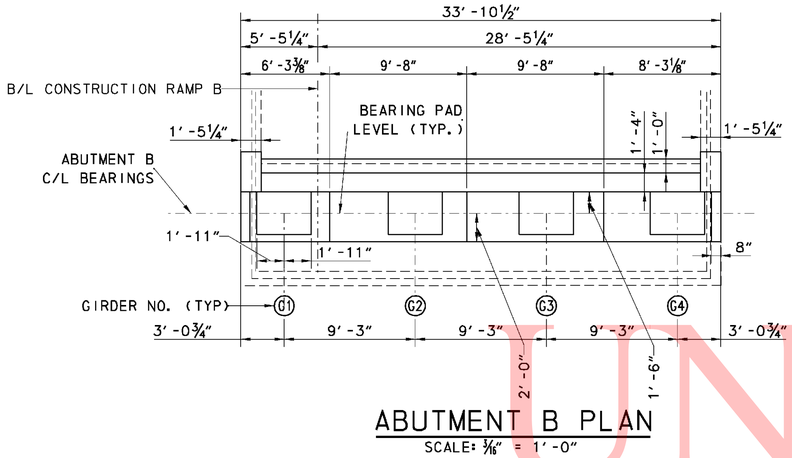

ABUTMENT B PLAN
SCALE: 1/16" = 1'-0"

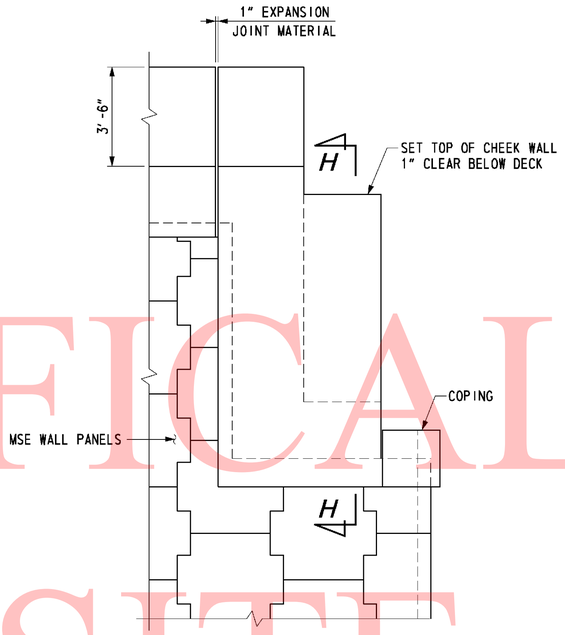

TYPICAL SIDE ELEVATION
SCALE: 3/8" = 1'-0"

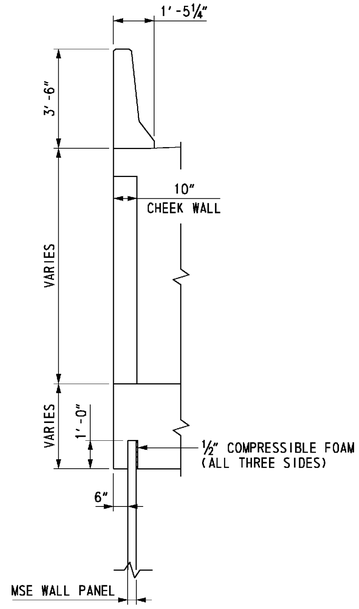

SECTION H-H
SCALE: 3/8" = 1'-0"

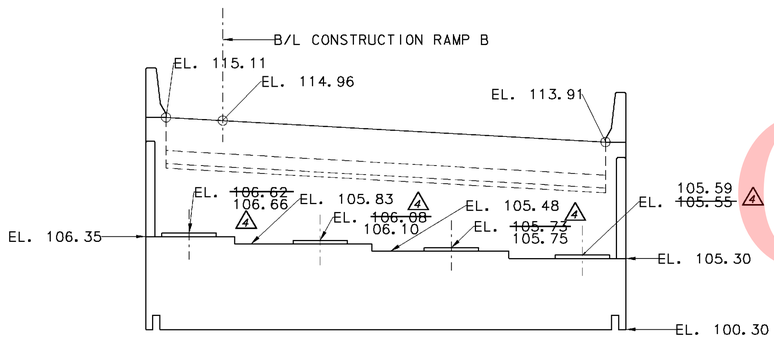

ABUTMENT B ELEVATION
SCALE: 1/16" = 1'-0"

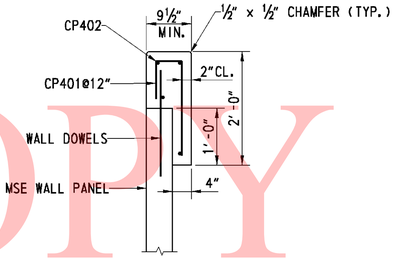

3 COPING DETAIL
SCALE: 3/4" = 1'-0"

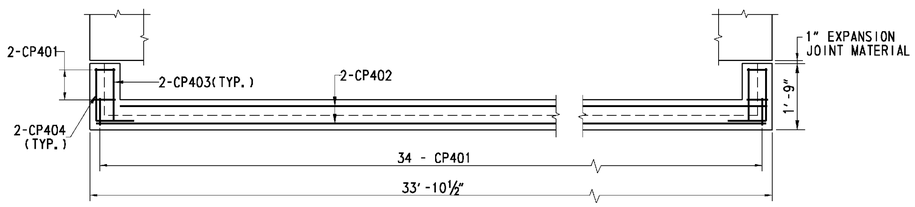

3 COPING REINFORCING PLAN
SCALE: ½" = 1'-0"

NOTE:

1. MSE WALL AND COPING NOT SHOWN IN ELEVATION VIEW.

CROSS REFERENCE NOTES:

1. FOR BRIDGE PLAN AND ELEVATION, SEE DWG. S6-1.
2. FOR TYPICAL ABUTMENT SECTION, SEE DWG. S6-6.
3. FOR MSE WINGWALLS PLAN AND ELEVATION, SEE DWG. S6-12.
4. FOR ABUTMENT REINFORCEMENT, SEE DWG. S6-7 & S6-8.

UNOFFICAL WEBSITE COPY

2/23/2011 4:55:10 PM
M:\PROJECTS\2003\03059_DELTRNPK\SR1_MALL\CADD\2809003\PLANS.DGN\AB04_BR-S6_SR1.DGN

DELAWARE DEPARTMENT OF TRANSPORTATION

ADDENDUMS / REVISIONS	
ADDENDUM NO. 3, COPING DETAIL, COPING REINFORCEMENT, 02/18/11, DWD	
ADDENDUM NO. 4, ELEVATIONS, 04/01/11, DWD	

SR1 / I-95 INTERCHANGE

CONTRACT	28-090-03	BRIDGE NO.	1-268B
COUNTY	NEW CASTLE	DESIGNED BY:	RMB
		CHECKED BY:	DWD

RAMP B OVER I-95NB
ABUTMENT B PLAN AND ELEVATION

S6-9
SHEET NO. 456
TOTAL SHTS. 803

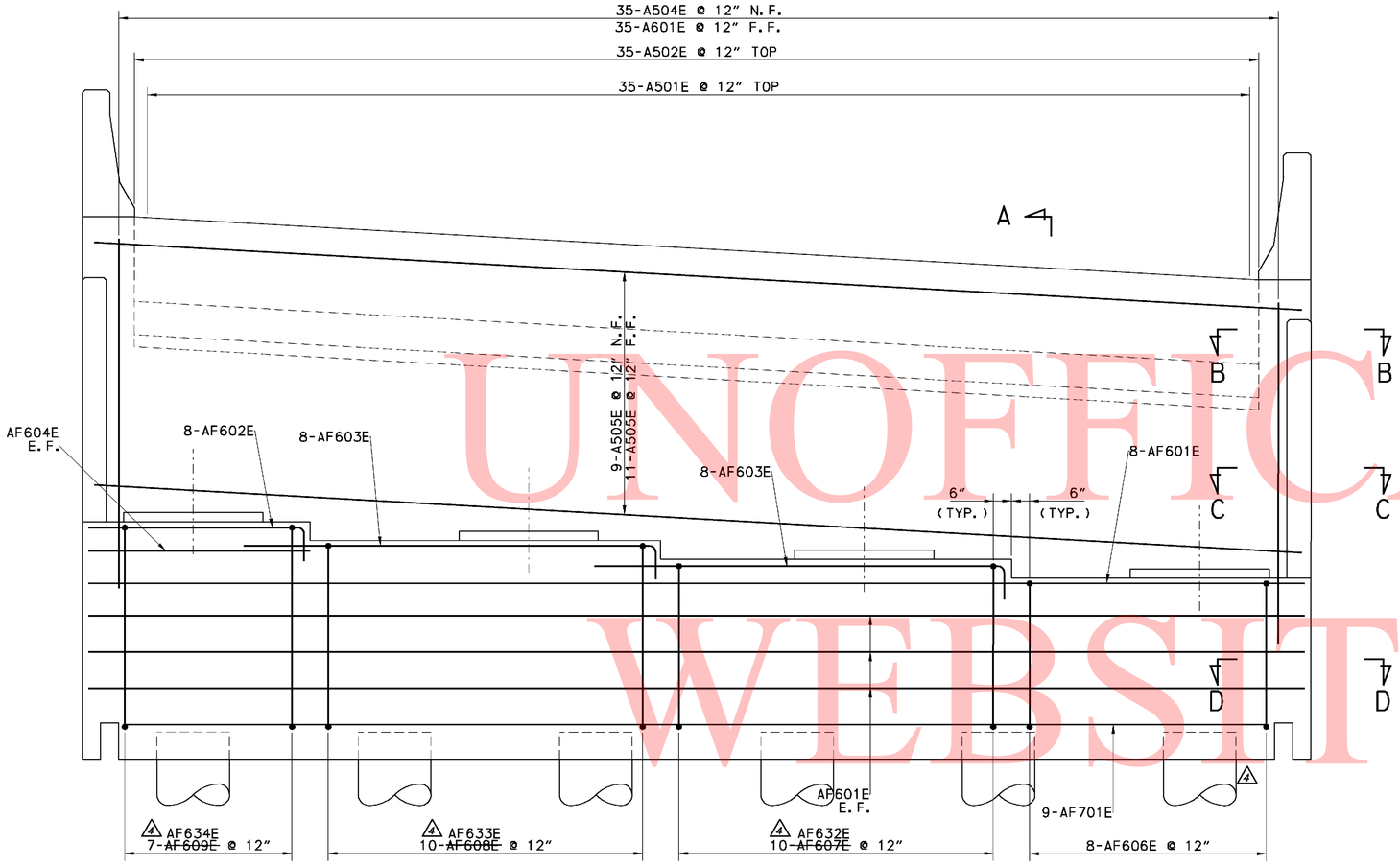

ELEVATION - ABUTMENT B

SCALE: ½" = 1'-0"

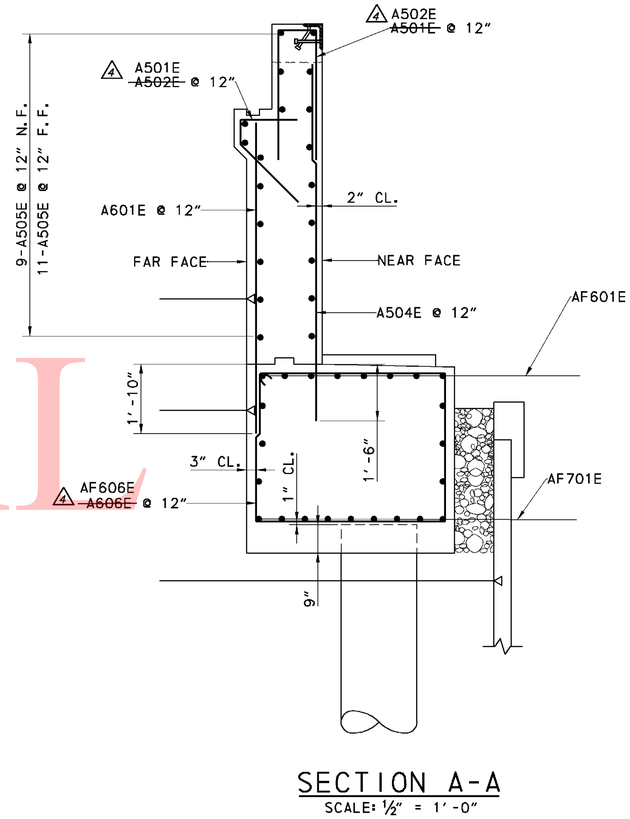

SECTION A-A

SCALE: ½" = 1'-0"

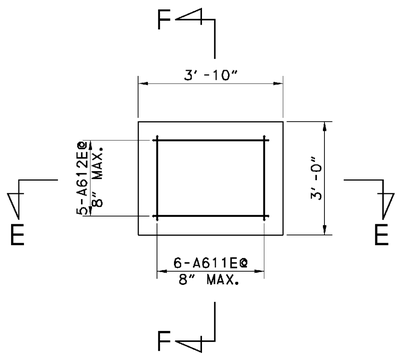

ABUTMENT BEARING PEDESTAL PAD

SCALE: ½" = 1'-0"

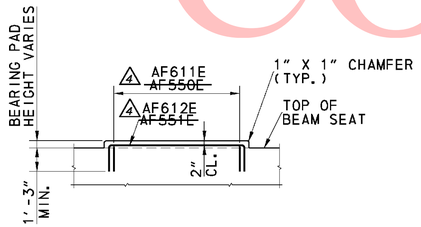

SECTION E-E

SCALE: ½" = 1'-0"

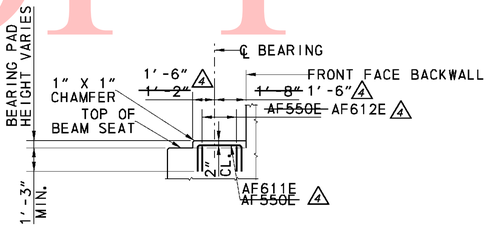

SECTION F-F

SCALE: ½" = 1'-0"

CROSS REFERENCE NOTES:

1. FOR BRIDGE PLAN AND ELEVATION, SEE DWG. S6-1.
2. FOR ABUTMENT B PLAN AND ELEVATION, SEE DWG. S6-9.
3. FOR WINGWALL IV SIDE ELEVATION, SEE DWG. S6-11.
4. FOR SECTIONS B-B, C-C AND D-D, SEE DWG. S6-11.
5. FOR ABUTMENT REINFORCEMENT BAR SCHEDULE, SEE DWG. S6-15.

UNOFFICAL WEBSITE COPY

3/28/2011 8:56:10 PM
M:\PROJECTS\2003\03059_DELTRNPK\SR1_MALL\CADD\280903\PLANS.DGV\AB05_BR-S6_SR1.DGN

DELAWARE
DEPARTMENT OF TRANSPORTATION

ADDENDUMS / REVISIONS
ADDENDUM NO. 4, REBAR CALLOUTS, ABUTMENT
PILES ADJUSTED FROM 8 TO 6, 04/01/11, DWD

SR1/I-95 INTERCHANGE

CONTRACT	BRIDGE NO.	1-268B
28-090-03	DESIGNED BY:	RMB
COUNTY	CHECKED BY:	DWD
NEW CASTLE		

RAMP B OVER I-95NB

ABUTMENT B
REINFORCING DETAILS 1

S6-10	
SHEET NO.	457
TOTAL SHTS.	803

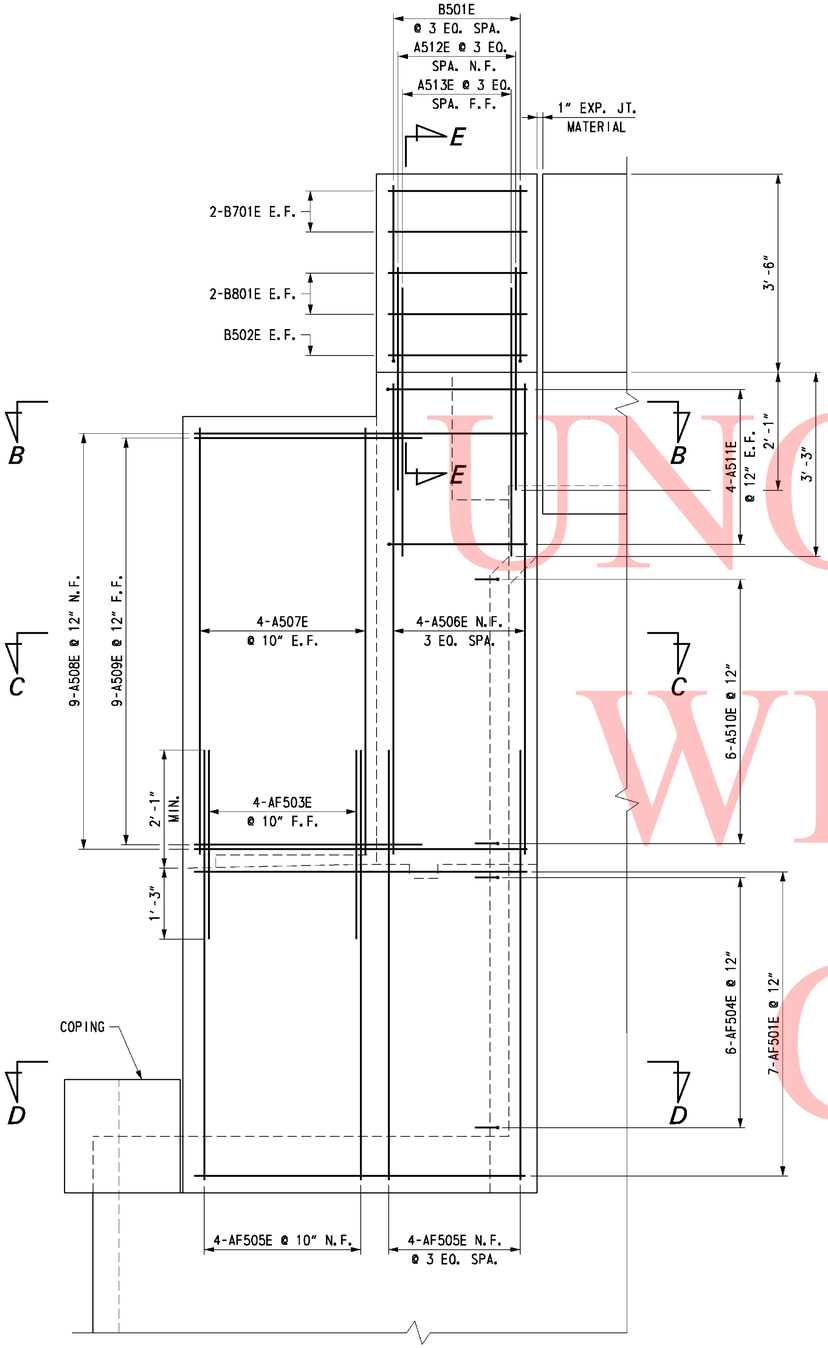

WING WALL II & IV SIDE ELEVATION

SCALE: ¾" = 1'-0"

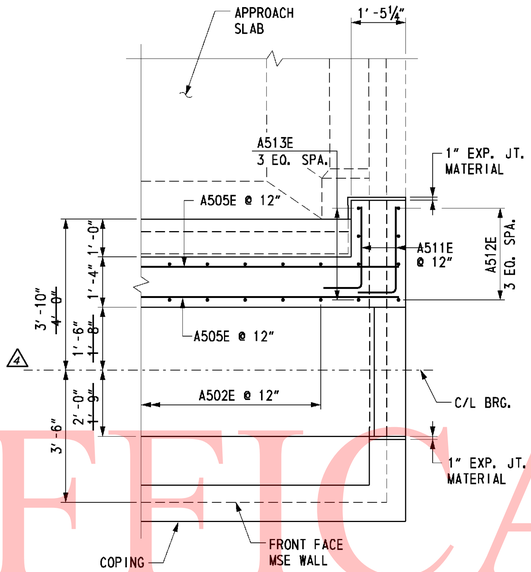

SECTION B-B

SCALE: ½" = 1'-0"

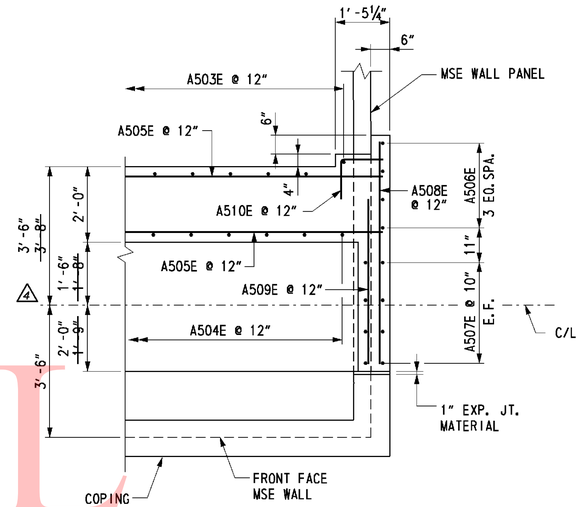

SECTION C-C

SCALE: ½" = 1'-0"

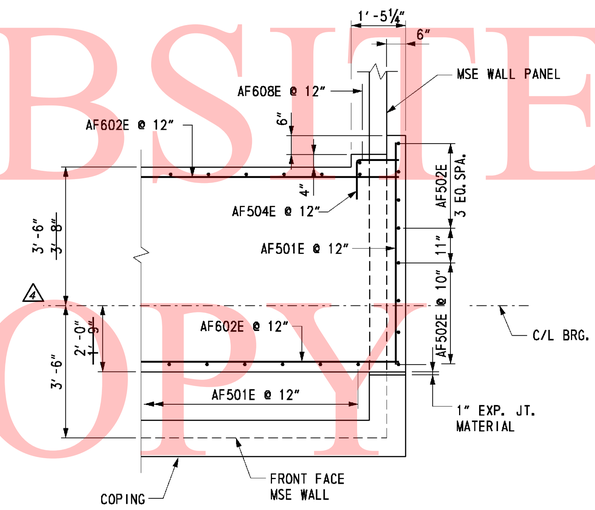

SECTION D-D

SCALE: ½" = 1'-0"

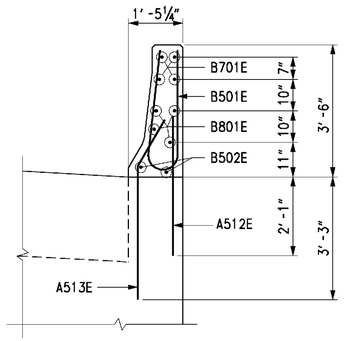

SECTION E-E

SCALE: ½" = 1'-0"

CROSS REFERENCE NOTES:

1. FOR ABUTMENT A PLAN AND ELEVATION, SEE DWG S6-6.
2. FOR ABUTMENT B PLAN AND ELEVATION, SEE DWG. S6-9.
3. FOR ABUTMENT A ELEVATION REINFORCEMENT DETAILS, SEE DWG. S6-7.
4. FOR ABUTMENT B ELEVATION REINFORCEMENT DETAILS, SEE DWG. S6-10.
5. FOR REINFORCING BAR LIST, SEE DWG. S1-13.

UNOFFICAL WEBSITE COPY

8/10/2010 5:44:11 PM
M:\PROJECTS\2003\03059_DELTRNPK\SR1_MALL\CADD\2809003\PLANS.DGV\AB06_BR_S6_SR1.DGN

DELAWARE
DEPARTMENT OF TRANSPORTATION

ADDENDUMS / REVISIONS	
ADDENDUM NO. 4, MODIFIED DIMENSIONS, 04/01/11, DWD	

SR1 / I-95 INTERCHANGE

CONTRACT	BRIDGE NO.	1-268B
28-090-03	DESIGNED BY:	RMB
COUNTY	CHECKED BY:	DWD
NEW CASTLE		

RAMP B OVER I-95NB

ABUTMENT B REINFORCING DETAILS 2

S6-11	
SHEET NO.	458
TOTAL SHTS.	803

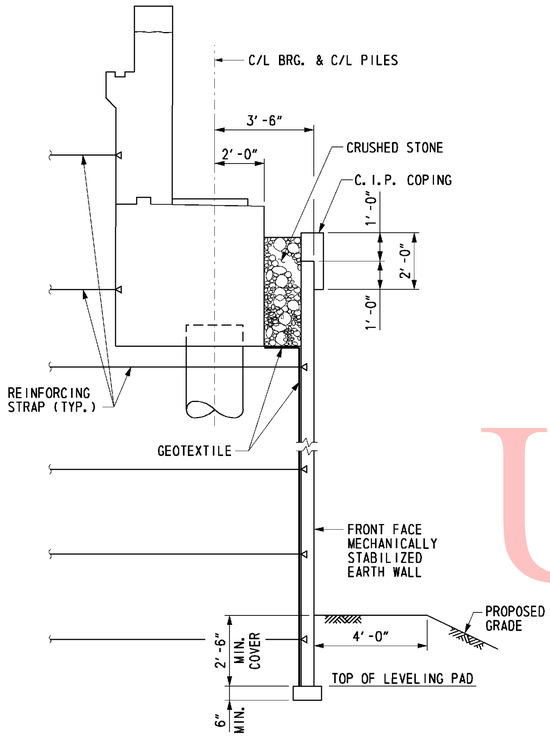

TYPICAL MSE WALL SECTION
AT ABUTMENT
SCALE: 3/8" = 1'-0"

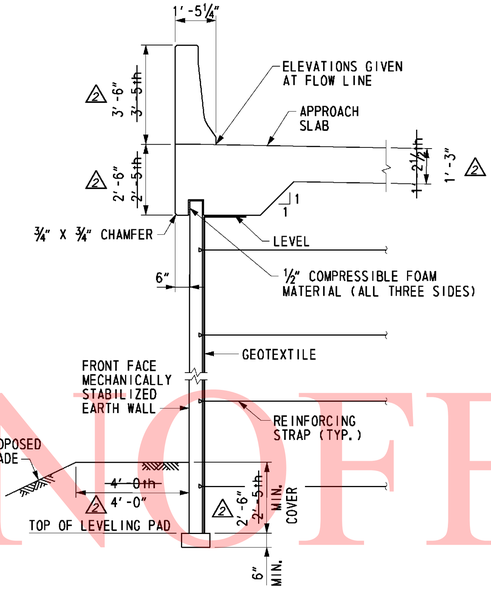

TYPICAL WINGWALL SECTION
WITH APPROACH SLAB
SCALE: 3/8" = 1'-0"

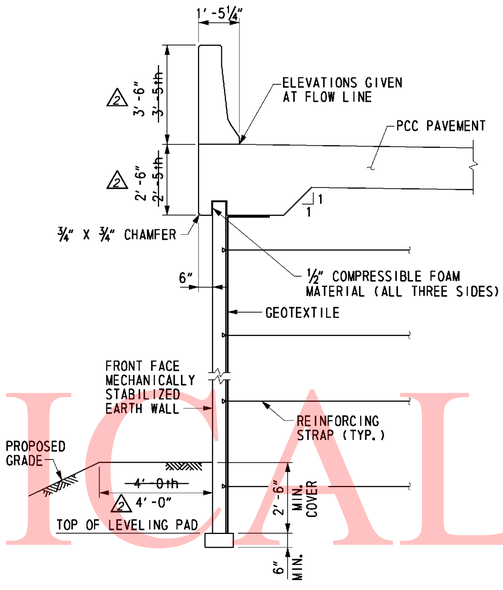

TYPICAL WINGWALL SECTION
WITH PCC PAVEMENT
SCALE: 3/8" = 1'-0"

MSE WALL NOTES

SPECIFICATIONS: PROPRIETARY MSE WALLS SHALL BE DESIGNED IN ACCORDANCE WITH THE FOLLOWING:
- AASHTO LRFD BRIDGE DESIGN SPECIFICATIONS, 4TH EDITION WITH ALL CURRENT REVISIONS.
- FEDERAL HIGHWAY ADMINISTRATION PUBLICATION NO. FHWA-NHI-10-024 AND FHWA-NHI-025, "DESIGN AND CONSTRUCTION OF MECHANICALLY STABILIZED EARTH WALLS AND REINFORCED SOIL SLOPES", VOLUME I AND VOLUME II. "MECHANICALLY STABILIZED EARTH WALLS AND REINFORCED SOIL SLOPES DESIGN AND CONSTRUCTION GUIDELINES"

CONCRETE: CONCRETE DESIGN SHALL BE PERFORMED USING THE LOAD AND RESISTANCE FACTOR DESIGN METHOD.

CHAMFERS: ALL CONCRETE FOR ROADWAY BARRIERS SHALL BE 4,500 PSI. LEVELING PAD CONCRETE SHALL BE 3,500 PSI. MIX REQUIREMENTS SHALL CONFORM TO SECTION 812 OF THE DELAWARE DEPARTMENT OF TRANSPORTATION STANDARD SPECIFICATIONS.

REINFORCING STEEL: ALL EXPOSED CORNERS OF CONCRETE SHALL BE CHAMFERED WITH ¾" x ¾" MILLED CHAMFER STRIPS, UNLESS OTHERWISE NOTED, EXCEPT ON UNEXPOSED FOOTINGS OR WHERE INDICATED BY THE FOLLOWING NOTATION ON THE PLANS: "DO NOT CHAMFER".

REINFORCING STEEL SHALL CONFORM TO ASTM A 615, GRADE 60. ALL SPLICES, NOT SHOWN, SHALL BE LAPPED AS PER THE LRFD BRIDGE DESIGN SPECIFICATIONS. MINIMUM COVER FOR ANY BAR SHALL BE 2" UNLESS OTHERWISE NOTED.

FOR TIES AND STIRRUPS, STANDARD ACI BENDING TOLERANCES ARE MODIFIED TO PLUS (+) ZERO INCHES, MINUS (-) NORMAL ACI BENDING TOLERANCE.

ONLY GRADE 60 CAN BE USED ON THIS PROJECT.

ALL REINFORCING STEEL IN THE BARRIER SHALL BE EPOXY COATED, AND SHALL CONFORM TO ASTM D3936.

ALL KEYS ARE NOMINAL SIZE.

THE MSE WALL MANUFACTURER MAY SUBSTITUTE ALTERNATE REINFORCING CONFIGURATIONS AND SUBMIT FOR APPROVAL.

EXPANSION AND CONTRACTION JOINTS: THE LOCATION OF THE EXPANSION AND CONTRACTION JOINTS IN THE BARRIER SHOWN ON THE PLANS MAY BE ADJUSTED TO ACCOMMODATE THE PANEL TYPE USED IN THE PROJECT. ANY CHANGE TO THESE JOINT LOCATIONS SHALL BE SUBMITTED TO THE ENGINEER FOR APPROVAL.

LEVELING PAD: THE PROPRIETARY WALL MANUFACTURER MAY RELOCATE THE LEVELING PAD STEPS AT THEIR DISCRETION PROVIDED THAT THE MINIMUM EMBEDMENT IS MAINTAINED. ANY CHANGE TO THE STEP LOCATIONS SHALL BE SUBMITTED TO THE ENGINEER FOR APPROVAL.

ROADWAY LIMITS: THE PROPRIETARY WALL MANUFACTURER SHALL ASSURE THAT PROPOSED PROPRIETARY WALL COMPONENTS ARE POSITIONED SUCH THAT THE DESIGNATED ROADWAY LIMITS ARE NOT ENCROACHED UPON.

TRAFFIC BARRIER JOINTS: TRAFFIC BARRIER FOOTING SHALL HAVE CONSTRUCTION JOINTS TO COINCIDE WITH THE BARRIER JOINTS.

COORDINATION: CONTRACTOR AND PROPRIETARY WALL MANUFACTURER SHALL COORDINATE LOCATIONS OF INLETS AND PIPES WITH LOCATIONS OF PROPRIETARY WALL TIE BACK SYSTEM AND MOMENT SLAB.

ARCHITECTURAL FINISH: THE MSE WALL PANELS SHALL RECEIVE AN ARCHITECTURAL FINISH.

SERVICE LIFE: ALL RETAINING WALL COMPONENTS SHALL BE DESIGNED FOR A MINIMUM SERVICE LIFE OF 100 YEARS.

WALL SYSTEM: ONLY ONE MSE WALL SYSTEM MAY BE USED ON THIS PROJECT.

ROADWAY SUPERELEVATION: FOR ROADWAY SUPERELEVATION, SEE SUPERELEVATION TABLES.

MSE WALL BACKFILL: MSE WALL BACKFILL SHALL CONSIST OF SPECIFIED BACKFILL AS SHOWN ON SOIL PROFILE SECTION.

REINFORCING STRAPS: SET REINFORCING STRAPS TO CLEAR PILE CASING, 2" MIN. CLEARANCE. MAXIMUM IN-FIELD SKEW OF 15 DEGREES. IF GREATER SKEW ANGLE IS REQUIRED, CONTACT MSE WALL FIELD REPRESENTATIVE PRIOR TO INSTALLATION.

△2

SOIL PROPERTIES		
SOIL TYPE	UNIT WEIGHT (PCF)	DRAINED ANGLE OF FRICTION (DEGREES)
SELECT FILL	125	34
COMMON BORROW	130	38
FOUNDATION SOIL		

FOUNDATION NOTES:

THE FACTORED BEARING RESISTANCE SHALL BE VERIFIED PRIOR TO CONSTRUCTION OF THE MSE WALL.

THE INTERNAL STABILITY OF THE MSE WALL SHALL BE DESIGNED BY THE CONTRACTOR USING THE SOIL PARAMETERS PROVIDED FOR EACH STRUCTURE LOCATION. THE INTERNAL STABILITY CALCULATIONS SHOULD BE SIGNED AND SEALED BY A PROFESSIONAL ENGINEER LICENSED IN THE STATE OF DELAWARE AS INDICATED IN THE PROJECT SPECIFICATIONS.

ISOLATED AREAS OF UNDERCUTTING OF EXISTING FILL MAY BE ENCOUNTERED DURING CONSTRUCTION OF THIS RETAINING WALL.

△2

A QUARANTINE PERIOD OF ~~APPROXIMATELY~~ 60-DAYS IS REQUIRED AFTER CONSTUCTION OF THE FULL HEIGHT OF THE MSE WALL IS ACHIEVED. THE ENGINEER SHALL APPROVE THE COMPLETION OF THE QUARANTINE PERIOD PRIOR TO CONSTUCTION OF ANY MOMENT SLABS OR PARAPETS. THE LENGTH OF QUARANTINE PERIOD MAY BE ADJUSTED BY THE ENGINEER BASED ON THE RESULTS OF INSTRUMENTATION MONITORING PROGRAM ITEMS 202505, 202514 AND 202518.

CROSS REFERENCE NOTES:

1. FOR BRIDGE PLAN AND ELEVATION, SEE DWG. S6-1.

2. FOR WINGWALLS PLAN AND ELEVATION, SEE DWGS. S6-12 & 13.

△2 3. FOR SOIL PROPERTIES AND PROFILE INFORMATION, SEE DWG. S6-14A.

△4 THE CONTRACTOR IS RESPONSIBLE FOR DEVELOPING MEANS AND METHODS, IN CONSULTATION WITH THE MSE WALL MANUFACTURER, FOR CONSTRUCTING THE MSE WALLS TO THE LINES, GRADES, AND DIMENSIONS SHOWN ON THE PLANS. SOIL BORINGS, LABORATORY TEST DATA, AND THE ENGINEER'S SETTLEMENT ESTIMATE(S) ARE CONTAINED IN ONE OF THE FOLLOWING GEOTECHNICAL ENGINEERING REPORTS WHICH HAVE BEEN MADE AVAILABLE BY THE DEPARTMENT: FINAL FOUNDATIONS REPORT - RETAINING WALLS AND FINAL FOUNDATIONS REPORT - BRIDGES AND WING WALLS DATED APRIL 2009, PREPARED BY RUMMEL, KLEPPER & KAHL, LLP AND URS CORPORATION. THESE SUPPLEMENTAL GEOTECHNICAL REPORTS ARE NOT PART OF THE CONTRACT DOCUMENTS, AND ARE AVAILABLE AT WWW.BIDS.DELAWARE.GOV WEBSITE. CONTRACTORS MAY USE THIS INFORMATION AT THEIR OWN RISK.

UNOFFICAL WEBSITE COPY

DELAWARE DEPARTMENT OF TRANSPORTATION

ADDENDUMS / REVISIONS	
ADDENDUM NO. △2, UPDATED DIMENSION	
FORMATTING, MODIFIED NOTES, DELETED TABLE, 01/26/11, DWD	
ADDENDUM NO. △4, ADDED NOTE, 04/01/11, DWD	

SR1 / I-95 INTERCHANGE

CONTRACT	BRIDGE NO.	1-268B
28-090-03	DESIGNED BY:	RMB
COUNTY	CHECKED BY:	DWD
NEW CASTLE		

RAMP B OVER I-95NB

WINGWALL DETAILS

S6-14

SHEET NO.	TOTAL SHTS.
461	803

3/30/2011 3:03:23 PM
M:\PROJECTS\2003\03059_DELTRNPK\SR1_MALL\CADD\2809003\PLANS_DOV\AB09_BR-S6_SR1.DGN

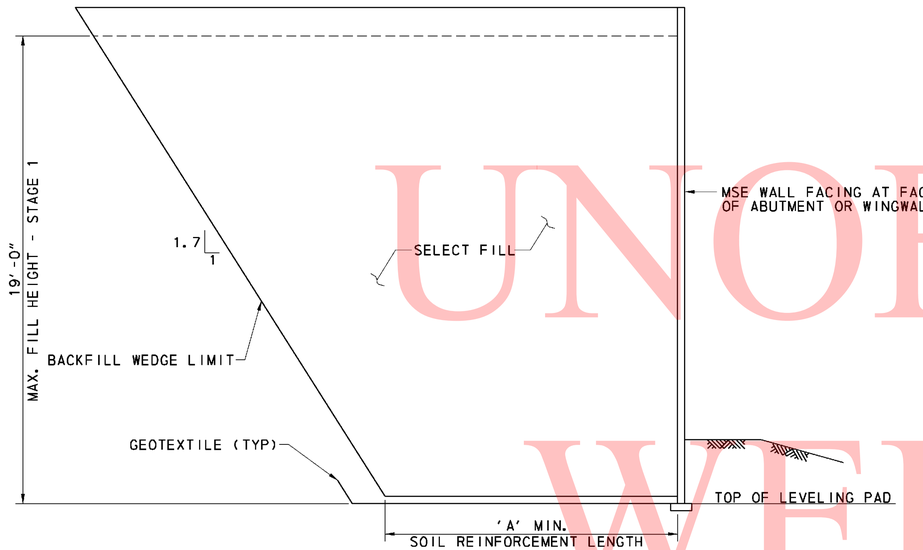

SOIL PROFILE SECTION
ABUTMENT A AND WINGWALL I AND II

NOT TO SCALE

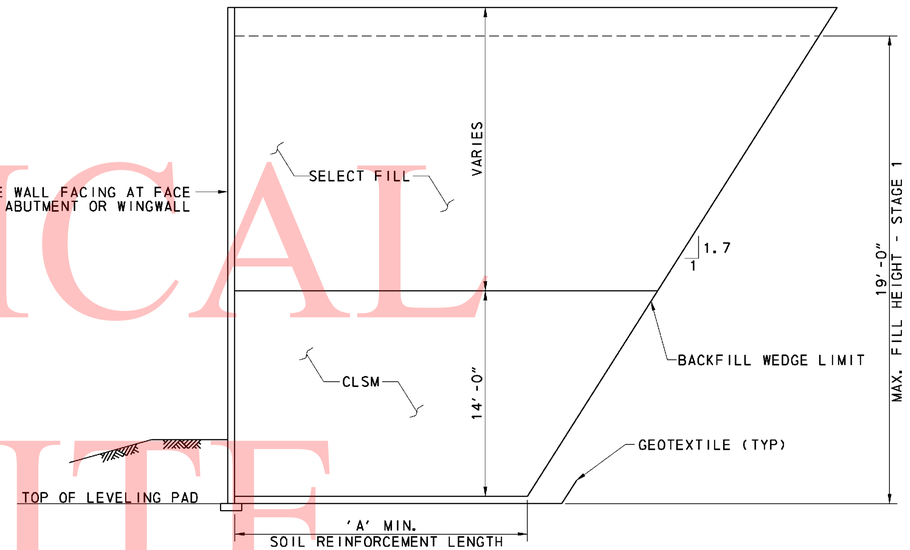

SOIL PROFILE SECTION
ABUTMENT B AND WINGWALL III AND IV

NOT TO SCALE

MINIMUM REINFORCED ZONE WIDTH (A) FEET	
ABUTMENT A	
FACE OF ABUTMENT	25
WINGWALLS I AND II	25
ABUTMENT B	
FACE OF ABUTMENT	35
WINGWALLS III AND IV	~~35~~ 25

4

SOIL PROPERTIES			
SOIL TYPE	UNIT WEIGHT (PCF)	DRAINED ANGLE OF FRICTION (DEGREES)	UNDRAINED SHEAR (PSF)
SELECT FILL	125	34	-
CLSM	40	38	-
FOUNDATION SOIL:			
ABUTMENT A	68	29	1700
ABUTMENT B	68	28	-

UNOFFICAL WEBSITE COPY

4/28/2011 11:20:10 AM
M:\PROJECTS\2003\03059_DELTRNPK\SR1_MALL\CADD\2809003\PLANS.DGN\AB10_BR-S6_SR1.DGN

2 S6-14A

DELAWARE
DEPARTMENT OF TRANSPORTATION

ADDENDUMS / REVISIONS	
ADDENDUM NO. 2, SHEET S6-14A WINGWALL	
DETAILS 2 CREATED, 01/26/11, DWD	
ADDENDUM NO. 1, REVISED WINGWALL III AND IV	
REINFORCEMENT LENGTH, 04/01/11, DWD	

SR1 / I-95 INTERCHANGE

CONTRACT	BRIDGE NO.	1-268B
28-090-03	DESIGNED BY:	RMB
COUNTY	CHECKED BY:	DWD
NEW CASTLE		

RAMP B OVER I-95NB

WINGWALL DETAILS 2

SHEET NO.	461A
TOTAL SHTS.	803

REINFORCING BAR LIST

ABUTMENT A

MARK	LENGTH	NO. BARS	TYPE	A	B	C	D	E	G	H	J	K	O	R	REMARKS
A501E	3'-9"	35	16		1'-6"	0'-10"	1'-5"								
A502E	7'-2"	35	17		3'-1"	1'-0"	3'-1"								
A504E	9'-3"	35	STR.												
A505E	33'-7"	20	STR.												
A601E	7'-0"	35	STR.												
AF601E	33'-6"	14	STR.												
AF602E	6'-10"	16	36	11"	5'-11"										
AF603E	12'-3"	8	36	11"	11'-4"										
AF604E	6'-2"	2	STR.												
AF606E	19'-8"	8	T2	1'-0"	5'-0"	3'-10"	5'-0"	3'-11"	1'-0"						
AF607E	20'-8"	10	T2	1'-0"	5'-0"	4'-4"	5'-0"	4'-5"	1'-0"						
AF608E	21'-10"	10	T2	1'-0"	5'-0"	4'-11"	5'-0"	5'-0"	1'-0"						
AF609E	22'-10"	6	T2	1'-0"	5'-0"	5'-5"	5'-0"	5'-6"	1'-0"						
AF701E	31'-6"	9	STR.												
AF501E	5'-4"	13	STR.												
AF502E	6'-10"	8	STR.												
AF503E	3'-4"	8	STR.												
AF504E	2'-2"	13	36	1'-1"	1'-1"										
AF505E	8'-5"	8	STR.												
A506E	9'-2"	8	STR.												
A507E	8'-4"	16	STR.												
A508E	6'-0"	18	STR.												
A509E	4'-7"	18	STR.												
A510E	2'-2"	12	36	1'-1"	1'-1"										
A511E	3'-3"	16	36	1'-0"	2'-3"										
A512E	3'-10"	8	STR.												
A513E	4'-8"	8	16			3'-5	1'-3"			1'-0¼"		0'-8¾"			
B501E	6'-9"	8	H1		2'-9 1/2"	1'-2"	2'-9½"			0'-5"			0'-4½"		
B502E	2'-0"	4	STR.												
B701E	2'-0"	8	STR.												
B801E	2'-0"	8	STR.												
AP401	6'-5"	64	T3									1'-6"	1'-7"		
AP801	8'-5"	64	37	0'-11"	7'-6"						0'-8"				
A611E	4'-8"	24	2	1'-0"	2'-8"				1'-0"						
A612E	5'-6"	20	2	1'-0"	3'-6"				1'-0"						

ABUTMENT B

MARK	LENGTH	NO. BARS	TYPE	A	B	C	D	E	G	H	J	K	O	R	REMARKS
A501E	3'-9"	35	16		1'-6"	0'-10"	1'-5"								
A502E	7'-2"	35	17		3'-1"	1'-0"	3'-1"								
A504E	9'-3"	35	STR.												
A505E	33'-7"	20	STR.												
A601E	7'-0"	35	STR.												
AF601E	33'-6"	14	STR.												
AF602E	6'-10"	16	36	11"	5'-11"										
AF603E	12'-3"	8	36	11"	11'-4"										
AF604E	6'-2"	2	STR.												
AF606E	19'-8"	8	T2	1'-0"	5'-0"	3'-10"	5'-0"	3'-11"	1'-0"						
AF607E	20'-8"	10	T2	1'-0"	5'-0"	4'-4"	5'-0"	4'-5"	1'-0"						
AF608E	21'-10"	10	T2	1'-0"	5'-0"	4'-11"	5'-0"	5'-0"	1'-0"						
AF609E	22'-10"	6	T2	1'-0"	5'-0"	5'-5"	5'-0"	5'-6"	1'-0"						
AF701E	31'-6"	9	STR.												
AF501E	5'-4"	13	STR.												
AF502E	6'-10"	8	STR.												
AF503E	3'-4"	8	STR.												
AF504E	2'-2"	13	36	1'-1"	1'-1"										
AF505E	8'-5"	8	STR.												
A506E	9'-2"	8	STR.												
A507E	8'-4"	16	STR.												
A508E	6'-0"	18	STR.												
A509E	4'-7"	18	STR.												
A510E	2'-2"	12	36	1'-1"	1'-1"										
A511E	3'-3"	16	36	1'-0"	2'-3"										
A512E	3'-10"	8	STR.												
A513E	4'-8"	8	16			3'-5	1'-3"			1'-0¼"		0'-8¾"			
B501E	6'-9"	8	H1		2'-9 1/2"	1'-2"	2'-9½"			0'-5"			0'-4½"		
B502E	2'-0"	4	STR.												
B701E	2'-0"	8	STR.												
B801E	2'-0"	8	STR.												
AP401	6'-5"	64	T3									1'-6"	1'-7"		
AP801	8'-5"	64	37	0'-11"	7'-6"						0'-8"				
A611E	4'-8"	24	2	1'-0"	2'-8"				1'-0"						
A612E	5'-6"	20	2	1'-0"	3'-6"				1'-0"						

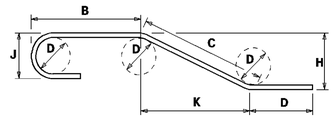

NOTES:

1. FIGURES SHOWN IN CIRCLES REPRESENT BAR BEND TYPES.
2. STANDARD BAR BENDS INCLUDE ONLY TYPES 1-32, S1-S12, AND T1-T16.
3. ALL DIMENSIONS ARE OUT-TO-OUT OF BAR EXCEPT "A" AND "G" ON STANDARD 180^ AND 135^ HOOKS.
4. "J" DIMENSIONS ON 180^ HOOKS TO BE SHOWN ONLY WHERE NECESSARY TO RESTRICT HOOK SIZE, OTHERWISE STANDARD HOOKS ARE TO BE USED.
5. WHERE "J" IS NOT SHOWN, "J" WILL BE KEPT EQUAL TO OR LESS THAN "H" ON TRUSS BARS. WHERE "J" CAN EXCEED "H", IT SHALL BE SHOWN.
6. "H" DIMENSIONS OF STIRRUPS TO BE SHOWN WHERE NECESSARY TO FIT WITHIN THE CONCRETE.
7. UNLESS OTHERWISE NOTED, DIAMETER "D" IS THE SAME FOR ALL BENDS AND HOOKS ON A BAR.
8. WHERE SLOPE DIFFERS FROM 45^ OFFSET, "H" AND "K" MUST BE SHOWN.
9. WHERE BARS ARE TO BE BENT MORE ACCURATELY THAN STANDARD BENDING TOLERANCES, BENDING DIMENSIONS WHICH REQUIRE CLOSER FABRICATION SHOULD HAVE LIMITS INDICATED.
10. FOR RECOMMENDED DIAMETER "D", OF BENDS, HOOKS, ETC., REFER TO TABLE AT RIGHT, 'CRSI' OR 'ACI' TABLES.
11. TYPE S1-S12, T1-T16 APPLY TO BAR SIZES 3 THROUGH 6.

ASTM STANDARD ENGLISH REINFORCING BARS				RECOMMENDED END HOOKS, APPLICABLE TO ALL GRADES			
	NOMINAL DIMENSIONS				180° HOOKS		90° HOOKS
BAR SIZE	DIAMETER (inches)	AREA (inches²)	WEIGHT (lbs./ft.)	D	A OR G	J	A OR G
3	0.375	0.110	0.376	2"	5"	3"	6"
4	0.500	0.200	0.668	3"	6"	4"	8"
5	0.625	0.310	1.043	3½"	7"	5"	10"
6	0.750	0.440	1.502	4½"	8"	6"	1'-0"
7	0.875	0.600	2.044	5½"	10"	7"	1'-2"
8	1.000	0.790	2.670	6"	11"	8"	1'-4"
9	1.128	1.000	3.400	9½"	1'-3"	11½"	1'-7"
10	1.270	1.270	4.303	10½"	1'-5"	1'-1½"	1'-10"
11	1.410	1.560	5.313	1'-0"	1'-7"	1'-2½"	2'-0"
14	1.693	2.250	7.650	1'-6½"	2'-3"	1'-9½"	2'-7"
18	2.257	4.000	13.600	2'-0"	3'-0"	2'-4½"	3'-5"

STANDARD BAR BENDS

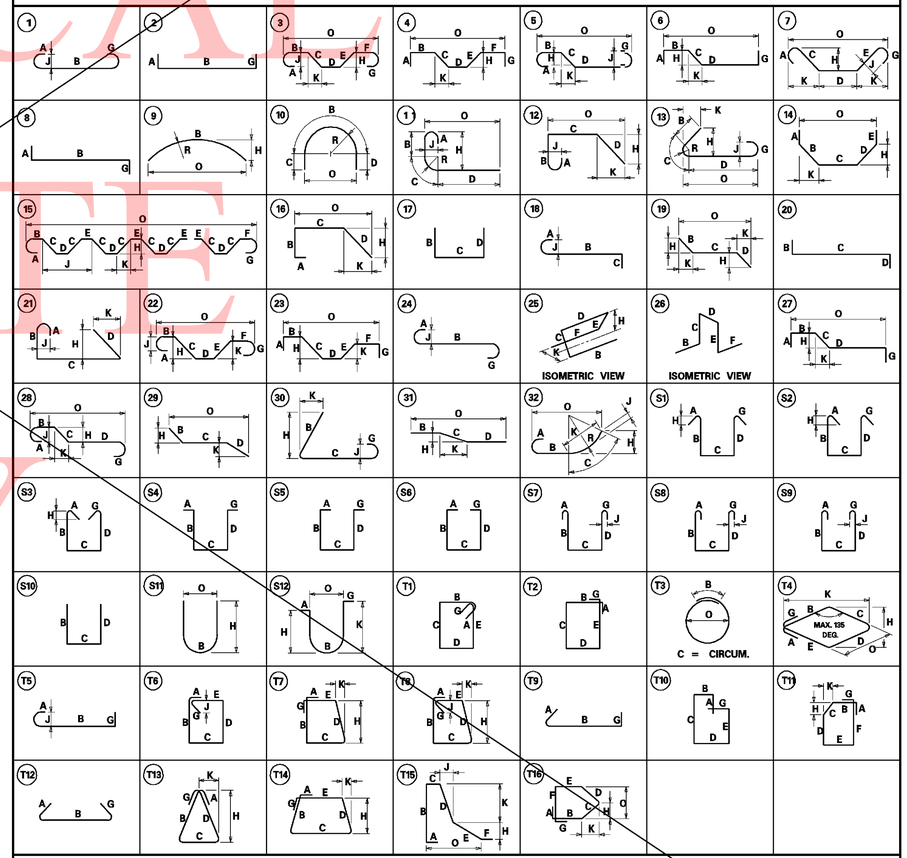

SPECIAL BAR BENDS

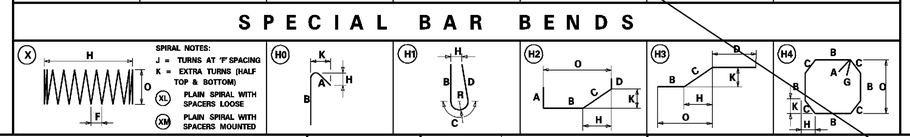

UNOFFICIAL WEBSITE COPY

DELAWARE DEPARTMENT OF TRANSPORTATION

ADDENDUMS / REVISIONS	
ADDENDUM NO. 4, SHEET VOIDED, 04/01/11, DWD	

SR1 / I-95 INTERCHANGE

CONTRACT	BRIDGE NO.	1-268B
28-090-03	DESIGNED BY:	
COUNTY	CHECKED BY:	
NEW CASTLE		

RAMP B OVER I-95NB

ABUTMENT REINFORCEMENT BAR SCHEDULE

S6-15	
SHEET NO.	462
TOTAL SHTS.	803

3/28/2011 6:46:32 PM
M:\PROJECTS\2003\03059_DELTRNPK\SR1_MALL\CADD\2809003\PLANS.DGV\BR01_BR-S6_SR1.DGN

REINFORCING BAR LIST

ABUTMENT A

MARK	LENGTH	NO. BARS	TYPE	A	B	C	D	E	G	H	J	K	O	R	REMARKS
A501E	4'-5½"	31	16		1'-6"	0'-10"	2'-1½"					1'-6"	1'-6"		
A502E	7'-2"	31	17		3'-1"	1'-0"	3'-1"								
A504E	9'-3"	33	STR.												
A505E	33'-7"	20	STR.												
A601E	7'-0"	33	STR.												
AF601E	33'-6"	14	STR.												
AF602E	6'-10"	8	36	11"	5'-11"										
AF603E	12'-3"	16	36	11"	11'-4"										
AF604E	6'-2"	2	STR.												
AF606E	20'-0"	8	T2	1'-0"	5'-0"	4'-0"	5'-0"	4'-0"	1'-0"						
AF607E	20'-10"	10	T2	1'-0"	5'-0"	4'-5"	5'-0"	4'-5"	1'-0"						
AF608E	21'-10"	10	T2	1'-0"	5'-0"	4'-11"	5'-0"	4'-11"	1'-0"						
AF609E	23'-2"	6	T2	1'-0"	5'-0"	5'-7"	5'-0"	5'-7"	1'-0"						
AF701E	31'-6"	9	STR.												
AF501E	5'-4"	14	STR.												
AF502E	6'-10"	8	STR.												
AF503E	3'-4"	8	STR.												
AF504E	2'-2"	12	36	1'-1"	1'-1"										
AF505E	8'-5"	8	STR.												
A506E	9'-2"	8	STR.												
A507E	8'-4"	16	STR.												
A508E	6'-0"	18	STR.												
A509E	4'-7"	18	STR.												
A510E	2'-2"	12	36	1'-1"	1'-1"										
A511E	3'-3"	16	36	1'-0"	2'-3"										
A512E	3'-10"	8	STR.												
A513E	4'-8"	8	16			3'-5	1'-3"			1'-¼"		0'-8¾"			
B501E	6'-9"	8	H1		2'-9½"	1'-2"	2'-9½"			0'-5"				0'-4½"	
B502E	2'-0"	4	STR.												
B701E	2'-0"	8	STR.												
B801E	2'-0"	8	STR.												
AP401	6'-6"	64	T3		1'-6"	5'-0"							1'-7"		
AP801	8'-5"	64	37	0'-11"	7'-6"						0'-8"				
A611E	5'-10"	24	17		1'-7"	2'-8"	1'-7"								
A612E	6'-8"	20	17		1'-7"	3'-6"	1'-7"								
CP401	2'-9½"	38	17		1'-8"	0'-5½"	1'-8"								
CP402	33'-6"	4	STR.												
CP403	1'-5"	4	STR.												
CP404	2'-5"	4	17		1'-0"	1'-5"									

ABUTMENT B

MARK	LENGTH	NO. BARS	TYPE	A	B	C	D	E	G	H	J	K	O	R	REMARKS
A501E	4'-5½"	31	16		1'-6"	0'-10"	2'-1½"					1'-6"	1'-6"		
A502E	7'-2"	31	17		3'-1"	1'-0"	3'-1"								
A504E	9'-3"	33	STR.												
A505E	33'-7"	20	STR.												
A601E	7'-0"	33	STR.												
AF601E	33'-6"	14	STR.												
AF602E	6'-10"	8	36	11"	5'-11"										
AF603E	12'-3"	16	36	11"	11'-4"								1'-0"		
AF604E	6'-2"	2	STR.												
AF606E	20'-0"	8	T2	1'-0"	5'-0"	4'-0"	5'-0"	4'-0"	1'-0"						
AF631E	20'-2"	10	T2	1'-0"	5'-0"	4'-1"	5'-0"	4'-1"	1'-0"						
AF632E	21'-0"	10	T2	1'-0"	5'-0"	4'-6"	5'-0"	4'-6"	1'-0"						
AF633E	22'-0"	6	T2	1'-0"	5'-0"	5'-0"	5'-0"	5'-0"	1'-0"						
AF701E	31'-6"	9	STR.												
AF501E	5'-4"	14	STR.												
AF502E	6'-10"	8	STR.												
AF503E	3'-4"	8	STR.												
AF504E	2'-2"	12	36	1'-1"	1'-1"										
AF505E	8'-5"	8	STR.												
A506E	9'-2"	8	STR.												
A507E	8'-4"	16	STR.												
A508E	6'-0"	18	STR.												
A509E	4'-7"	18	STR.												
A510E	2'-2"	12	36	1'-1"	1'-1"										
A511E	3'-3"	16	36	1'-0"	2'-3"										
A512E	3'-10"	8	STR.												
A513E	4'-8"	8	16			3'-5"	1'-3"			1'-¼"		0'-8¾"			
B501E	6'-9"	8	H1		2'-9½"	1'-2"	2'-9½"			0'-5"				0'-4½"	
B502E	2'-0"	4	STR.												
B701E	2'-0"	8	STR.												
B801E	2'-0"	8	STR.												
AP401	6'-6"	64	T3		1'-6"	5'-0"							1'-7"		
AP801	8'-5"	64	37	0'-11"	7'-6"						0'-8"				
A611E	5'-10"	24	17		1'-7"	2'-8"	1'-7"								
A612E	6'-8"	20	17		1'-7"	3'-6"	1'-7"								
CP401	2'-9½"	38	17		1'-8"	0'-5½"	1'-8"								
CP402	33'-6"	4	STR.												
CP403	1'-5"	4	STR.												
CP404	2'-5"	4	17		1'-0"	1'-5"									

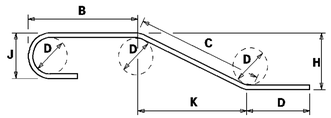

NOTES:

1. FIGURES SHOWN IN CIRCLES REPRESENT BAR BEND TYPES.
2. STANDARD BAR BENDS INCLUDE ONLY TYPES 1-32, S1-S12, AND T1-T16.
3. ALL DIMENSIONS ARE OUT-TO-OUT OF BAR EXCEPT "A" AND "G" ON STANDARD 180° AND 135° HOOKS.
4. "J" DIMENSIONS ON 180° HOOKS TO BE SHOWN ONLY WHERE NECESSARY TO RESTRICT HOOK SIZE, OTHERWISE STANDARD HOOKS ARE TO BE USED.
5. WHERE "J" IS NOT SHOWN, "J" WILL BE KEPT EQUAL TO OR LESS THAN "H" ON TRUSS BARS. WHERE "J" CAN EXCEED "H", IT SHALL BE SHOWN.
6. "H" DIMENSIONS OF STIRRUPS TO BE SHOWN WHERE NECESSARY TO FIT WITHIN THE CONCRETE.
7. UNLESS OTHERWISE NOTED, DIAMETER "D" IS THE SAME FOR ALL BENDS AND HOOKS ON A BAR.
8. WHERE SLOPE DIFFERS FROM 45° OFFSET, "H" AND "K" MUST BE SHOWN.
9. WHERE BARS ARE TO BE BENT WORE ACCURATELY THAN STANDARD BENDING TOLERANCES, BENDING DIMENSIONS WHICH REQUIRE CLOSER FABRICATION SHOULD HAVE LIMITS INDICATED.
10. FOR RECOMMENDED DIAMETER "D", OF BENDS, HOOKS, ETC., REFER TO TABLE AT RIGHT, 'CRSI' OR 'ACI' TABLES.
11. TYPE S1-S12, T1-T16 APPLY TO BAR SIZES 3 THROUGH 6.

ASTM STANDARD ENGLISH REINFORCING BARS				RECOMMENDED END HOOKS, APPLICABLE TO ALL GRADES			
	NOMINAL DIMENSIONS				180° HOOKS		90° HOOKS
BAR SIZE	DIAMETER (inches)	AREA (inches²)	WEIGHT (lbs./ft.)	D	A OR G	J	A OR G
3	0.375	0.110	0.376	2"	5"	3"	6"
4	0.500	0.200	0.668	3"	6"	4"	8"
5	0.625	0.310	1.043	3½"	7"	5"	10"
6	0.750	0.440	1.502	4½"	8"	6"	1'-0"
7	0.875	0.600	2.044	5½"	10"	7"	1'-2"
8	1.000	0.790	2.670	6"	11"	8"	1'-4"
9	1.128	1.000	3.400	9½"	1'-3"	11½"	1'-7"
10	1.270	1.270	4.303	10½"	1'-5"	1'-1½"	1'-10"
11	1.410	1.560	5.313	1'-0"	1'-7"	1'-2½"	2'-0"
14	1.693	2.250	7.650	1'-6½"	2'-3"	1'-9½"	2'-7"
18	2.257	4.000	13.600	2'-0"	3'-0"	2'-4½"	3'-5"

STANDARD BAR BENDS

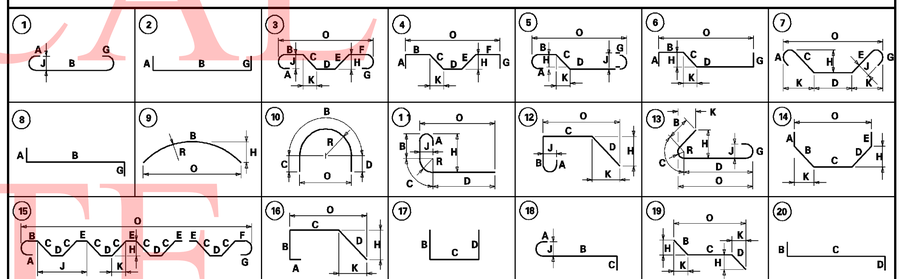

SPECIAL BAR BENDS

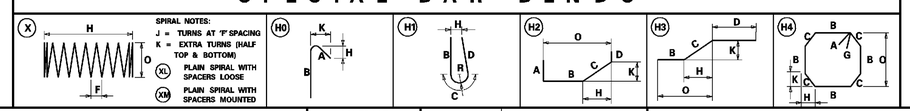

UNOFFICIAL WEBSITE COPY

DELAWARE DEPARTMENT OF TRANSPORTATION

ADDENDUMS / REVISIONS	
ADDENDUM NO. 4, NEW SHEET CREATED,	
04/01/11, DWD	

SR1 / I-95 INTERCHANGE

CONTRACT	BRIDGE NO.	1-268B
28-090-03	DESIGNED BY:	
COUNTY	CHECKED BY:	
NEW CASTLE		

RAMP B OVER I-95NB

ABUTMENT REINFORCEMENT BAR SCHEDULE

S6-15A	
SHEET NO.	462A
TOTAL SHTS.	803

3/29/2011 9:05:45 AM
M:\PROJECTS\2003\03059_DELTRNPK\SR1_MALL\CADD\2809003\PLANS.DGN\BR01_BR-S6_SR1_AD4.DGN

PILE INSTALLATION DATA

SUBSTRUCTURE UNIT	DESIGN DATA: PILE SIZE (INCHES)	PILE THICKNESS (Inches)	NOMINAL DRIVING RESISTANCE (KIPS) 4	ESTIMATED PILE TIP ELEVATION 4	MINIMUM PILE TIP ELEVATION 4	ACTUAL FIELD DATA: AVERAGE ACTUAL MINIMUM TIP ELEVATION	AVERAGE ACTUAL MAXIMUM TIP ELEVATION
ABUTMENT A	24	0.50	373 ~~382~~	+15 ~~+10~~	+20 ~~+15~~		
PIER 1	36	0.625	700 ~~758~~	+9 ~~+12~~	+14 ~~+13~~		
PIER 2 N	36	0.625	~~468 435~~	+21 ~~+34~~	+26 ~~+36~~		
PIER 2 S	36	0.625	~~468 435~~	+21 ~~+34~~	+26 ~~+35~~		
PIER 3	36	0.625	711 ~~758~~	+5 ~~+9~~	+10 ~~+12~~		
ABUTMENT B	24	0.50	328 ~~382~~	+26 ~~+10~~	+31 ~~+15~~		

4 ~~1. THE ABUTMENT PILES INCLUDE AN ESTIMATED 35 FT STICKUP FOR THE MSE WALL.~~

ABUTMENT A PILE DRIVING INFORMATION
PILE SIZE AND TYPE:
ACTUAL BEARING OBTAINED:
HAMMER TYPE:
PILE HAMMER ENERGY:
SPECIAL DRIVING CONDITIONS AND COMMENTS:

PIER 1 PILE DRIVING INFORMATION
PILE SIZE AND TYPE:
ACTUAL BEARING OBTAINED:
HAMMER TYPE:
PILE HAMMER ENERGY:
SPECIAL DRIVING CONDITIONS AND COMMENTS:

PIER 2 N PILE DRIVING INFORMATION
PILE SIZE AND TYPE:
ACTUAL BEARING OBTAINED:
HAMMER TYPE:
PILE HAMMER ENERGY:
SPECIAL DRIVING CONDITIONS AND COMMENTS:

PIER 2 S PILE DRIVING INFORMATION
PILE SIZE AND TYPE:
ACTUAL BEARING OBTAINED:
HAMMER TYPE:
PILE HAMMER ENERGY:
SPECIAL DRIVING CONDITIONS AND COMMENTS:

PIER 3 PILE DRIVING INFORMATION
PILE SIZE AND TYPE:
ACTUAL BEARING OBTAINED:
HAMMER TYPE:
PILE HAMMER ENERGY:
SPECIAL DRIVING CONDITIONS AND COMMENTS:

ABUTMENT B PILE DRIVING INFORMATION
PILE SIZE AND TYPE:
ACTUAL BEARING OBTAINED:
HAMMER TYPE:
PILE HAMMER ENERGY:
SPECIAL DRIVING CONDITIONS AND COMMENTS:

CROSS REFERENCE NOTES:

1. FOR PIER REINFORCEMENT SCHEDULE, SEE DWG. S6-30.
2. FOR ABUTMENT REINFORCMENT SCHEDULE, SEE DWG. S6-15.

PILE INSTALLATION NOTES:

1. ALL PILES SHALL BE PIPE PILES (ASTM A 252), GRADE ~~50~~ 3 3. PILES SHALL NOT BE COATED ~~OR CASED.~~ 2 ABUTMENT PILES SHALL BE CASED. ALL TEST PILES SHALL BE 10-FT LONGER THAN INDICATED ON PILE INSTALLATION DATA TABLE. 4
2. ALL PILES SHALL BE DRIVEN TO THE NOMINAL PILE DRIVING RESISTANCE (Rndr) LISTED IN THE PILE INSTALLATION DATA TABLE.
3. THE CONTRACTOR SHALL BE RESPONSIBLE FOR SUBMITTING A WAVE EQUATION ANALYSIS AND ALL OTHER INCIDENTALS IN ACCORDANCE WITH THE PROJECT SPECIFICATIONS. THE WAVE EQUATION AND HIGH-STRAIN DYNAMIC PILE TESTING MUST BE SIGNED AND STAMPED BY A PROFESSIONAL ENGINEER LISENCED IN THE STATE OF DELAWARE IN ACCORDANCE WITH THE PROJECT SPECIFICATIONS.
4. UPON COMPLETION OF THE HIGH-STRAIN DYNAMIC PILE TESTING THE CONTRACTOR SHALL SUBMIT A ~~CAPWAP ANALYSIS OR OTHER SIMILAR APPROVED~~ ANALYSIS 4 SIGNAL MATCHING ~~TECHNIQUE~~ TO THE ENGINEER FOR REVIEW AND APPROVAL IN ACCORDANCE WITH THE PROJECT SPECIFICATIONS.
5. A QUARANTINE PERIOD OF ~~APPROXIMATELY~~ 60 DAYS IS REQUIRED AFTER THE CONSTRUCTION OF THE FULL HEIGHT OF THE FILL AT THE ABUTMENTS IS ACHIEVED. THE ENGINEER SHALL APPROVE THE COMPLETION OF THE WAITING PERIOD, BASED ON RESULTS OF INSTRUMENTATION. 2
6. PILES MAY NOT BE DRIVEN UNTIL AFTER THE COMPLETION OF THE 60 DAY QUARANTINE PERIOD.
7. SEE THE SPECIAL PROVISIONS FOR SETTLEMENT MONITORING LOCATIONS AND REQUIREMENTS.
8. PILE LENGTHS FOR ORDERING PURPOSES SHALL BE DETERMINED BY TEST PILES. A MINIMUM OF ONE PILE PER SUBSTRUCTURE, AS SHOWN ON THE PLANS, SHALL BE DYNAMICALLY TESTED WITH SIGNAL MATCHING ANALYSIS 4 BY THE CONTRACTOR IN ACCORDANCE WITH SPECIAL PROVISIONS 619519, TEST AND PRODUCTION RESTRIKE RESULTS 4 PILE RE-STRIKES WILL BE PAID AS FOLLOWS: AND 619539 4

4 ~~A). ALL TEST PILE(S) WILL BE RESTRUCK AND DYNAMICALLY TESTED BY THE CONTRACTOR. THE TEST PILE RESTRIKES SHALL BE INCIDENTAL TO ITEM NO. 619519 DYNAMIC PILE TESTING BY CONTRACTOR PROVIDEDTHAT THEY ARE PERFORMED WITHIN FIVE CALANDAR DAYS FROM INITIAL DRIVE.~~

4 ~~B). AN ADDITIONAL PAYMENT WILL BE MADE TO THE CONTRACTOR IF HE IS DIRECTED BY THE ENGINEER TO WAIT AND RESTRIKE THE TEST PILE MORE THAT FIVE CALENDAR DAYS AFTER INITIAL DRIVE. THE CONTRACTOR SHALL BE COMPENSATED AT THE FIXED PRICE OF $1,000.00 PER CALENDAR DAY FOR EVERY DAY, AFTER THE FIFTH CALENDAR DAY, UNDER ITEM NO. 619502 TEST PILE RESTRIKE. MULTIPLE TEST PILE RESTRIKES OCCURRING ON THE SAME DAY WILL ONLY BE PAID FOR AS ONE CALENDAR DAY. NO ADDITIONAL COMPENSATION WILL BE MADE REGARDLESS OF THE NUMBER OF TEST PILE RESTRIKES PERFORMED THAT DAY.~~

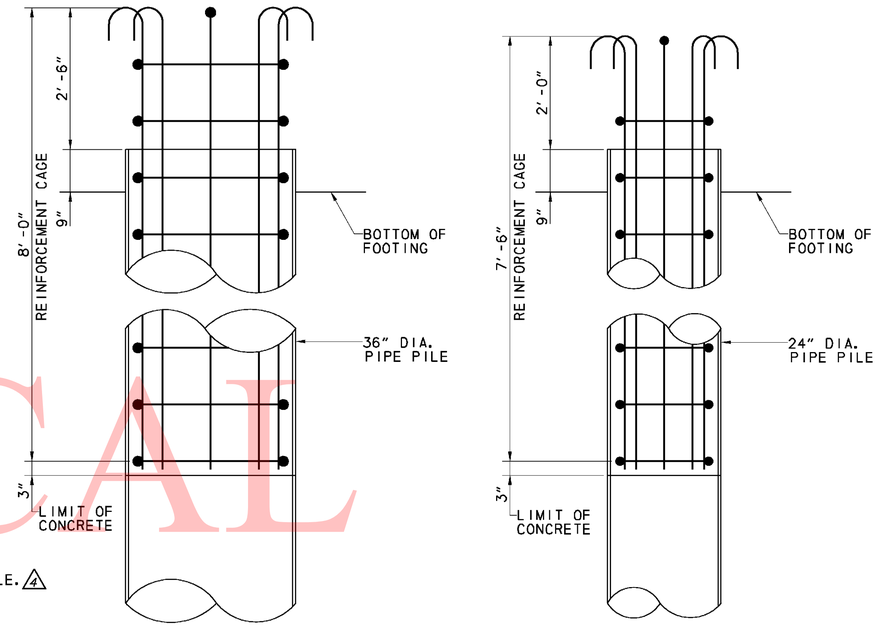

ELEVATION A & B
SCALE: 3/4"=1'-0"

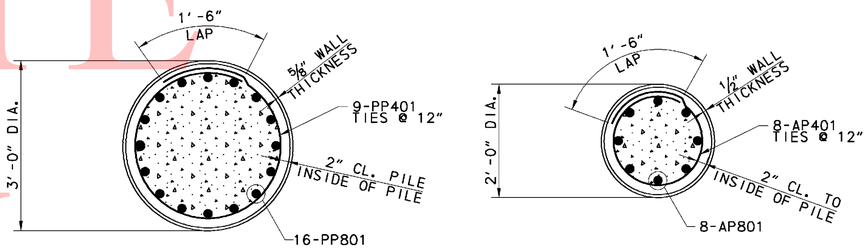

SECTION A & B
SCALE: 3/4"=1'-0"

4 A). ALL TEST PILE(S) WILL BE RESTRUCK AFTER A WAITING PERIOD OF AT LEAST 48 HOURS. TEST PILE RESTRIKES SHALL BE INCIDENTAL TO THE INITIAL INSTALLATION OF THE PILE PROVIDED THEY ARE REQUESTED WITHIN FIVE WORKING DAYS FROM THE COMPLETION OF THE INITIAL DRIVE. IF TEST PILE RESTRIKES ARE REQUESTED AFTER THE FIVE WORKING DAYS FROM THE COMPLETION OF THE INITIAL DRIVE THEN THE TEST PILE RESTRIKE SHALL BE PAID AS NOTED IN SPECIAL PROVISION 619502.

4 B). IF DIRECTED BY THE ENGINEER TO RESTRIKE A PRODUCTION PILE, THE RESTRIKE OF THE PRODUCTION PILE SHALL BE PAID SEPARATELY UNDER ITEM NO. 619501.

4 ~~C). RESTRIKES ON PRODUCTION PILES WHICH ARE DESIGNATED TO BE DYNAMICALLY TESTED WILL NO BE PAID UNDER ITEM NO. 619501 PRODUCTION PILE RESTRIKE. THESE PRODUCTION PILE RESTRIKES ARE INCIDENTAL TO ITEM NO. 61519 DYNAMIC PILE TESTING BY CONTRACTOR.~~

2 ~~D). THE FIRST 12 PRODUCTION PILE RESTRIKES FOR THE WALL BRIDGE SHALL BE PERFORMED AT NO COST TO THE DEPARTMENT SUBSEQUENT RESTRIKES SHALL BE UNDER ITEM NO. 619501 PRODUCTION PILE RESTRIKES AT THE FIXED PRICE OF $500.00 EACH.~~

THE DEPARTMENT RESERVE THE RIGHT TO PERFORM DYNAMIC TESTING OF RESTRIKES.

UNOFFICAL WEBSITE COPY

M:\PROJECTS\2003\03059_DELTRNPK\SR1_MALL\CADD\2809003\PLANS_DOV\PL01_BR-S6_SR1.DGN
4/27/2011 12:50:58 PM

DELAWARE DEPARTMENT OF TRANSPORTATION

ADDENDUMS / REVISIONS
ADDENDUM NO. 2, MODIFIED NOTES, 01/26/11, DWD
ADDENDUM NO. 3, MODIFIED NOTES, 02/18/11, DWD
ADDENDUM NO. 4, ADJUSTED PILE TIPS, MODIFIED NOTES, 04/01/11, DWD

SR1/I-95 INTERCHANGE

CONTRACT	BRIDGE NO.	1-268B
28-090-03	DESIGNED BY:	DWD
COUNTY	CHECKED BY:	
NEW CASTLE		

RAMP B OVER I-95NB
PILE DETAILS

S6-18
SHEET NO. 465
TOTAL SHTS. 803

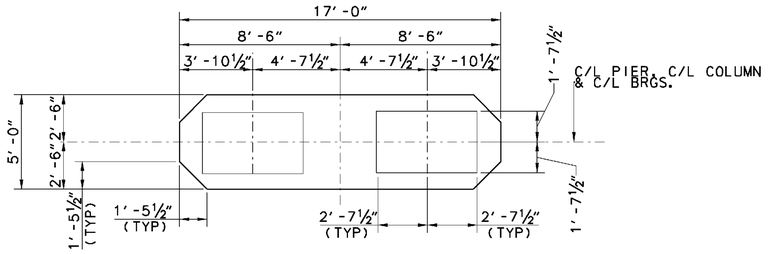

PLAN

SCALE: ¼″=1′ -0″

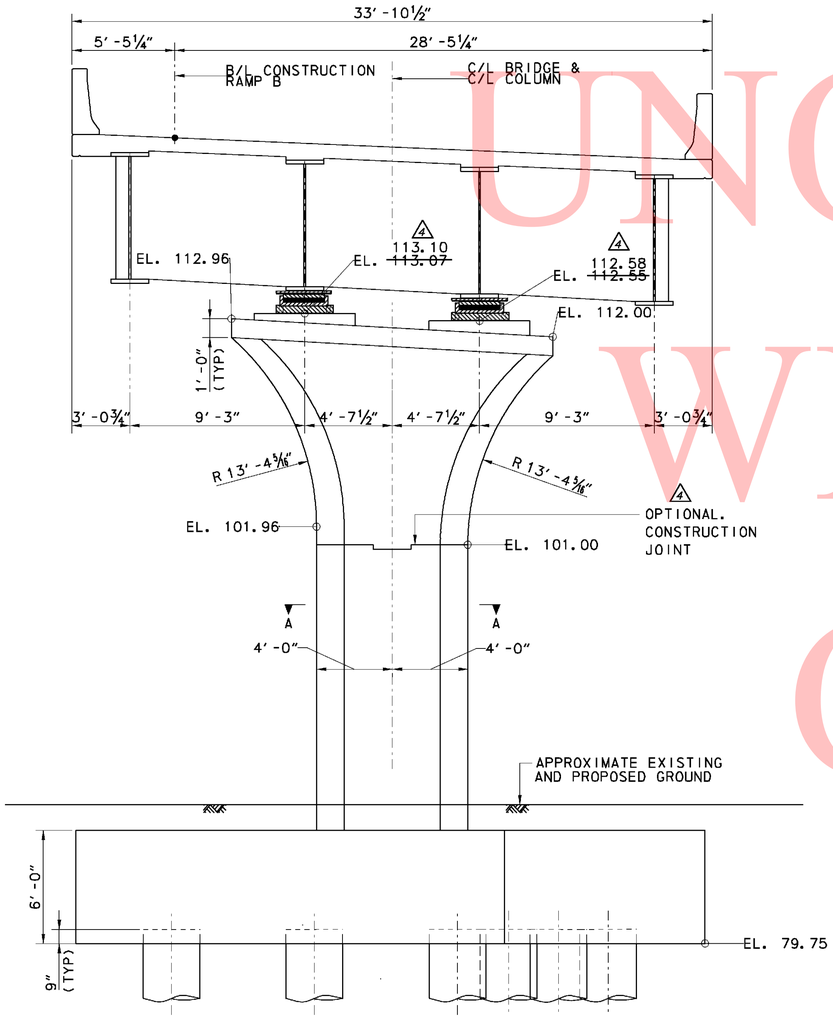

ELEVATION-PIER 1

SCALE: ¼″=1′ -0″

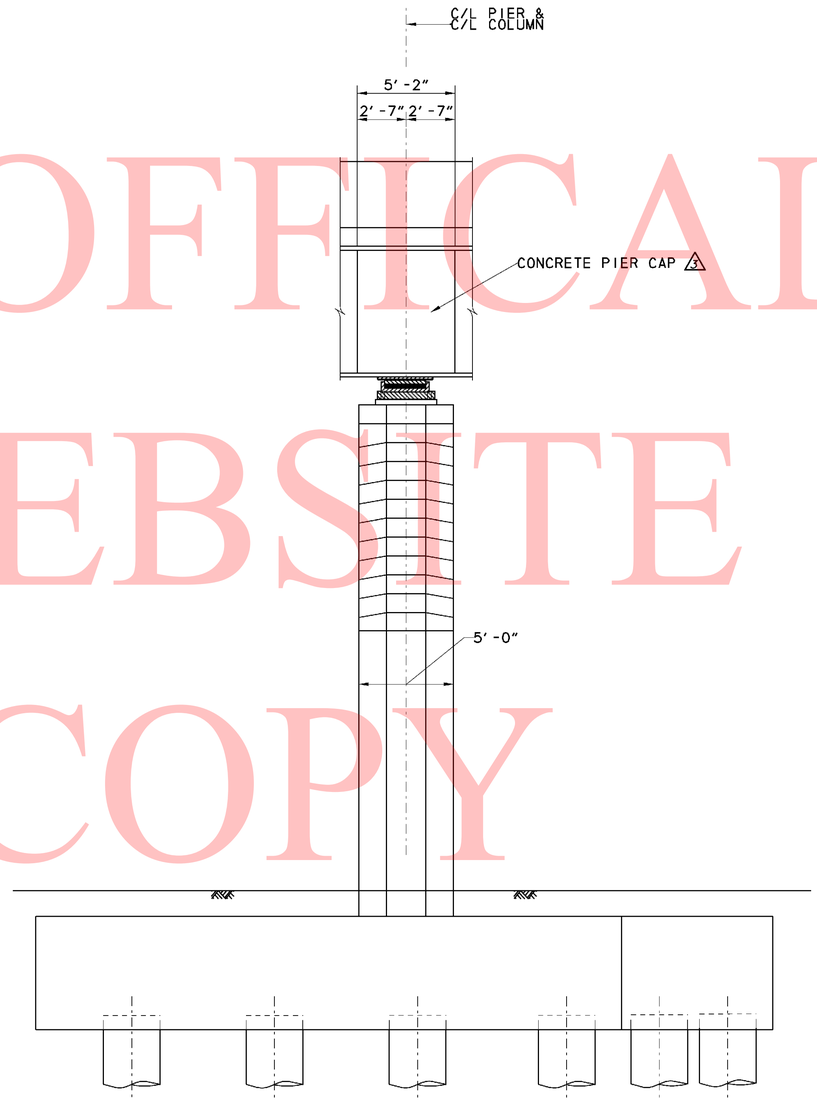

END VIEW

SCALE: ¼″=1′ -0″

CROSS REFERENCE NOTES:

1. FOR BRIDGE PLAN AND ELEVATION, SEE DWG. S6-1.
2. FOR PIER FOUNDATION PLAN, SEE DWG. S6-16.
3. FOR INTEGRAL PIER CAP, REINFORCEMENT DETAILS, SEE DWG. S6-28 & S6-29.
4. FOR PIER FOOTING AND COLUMN REINFORCEMENT DETAILS, SEE DWG. S6-17 & S6-20.

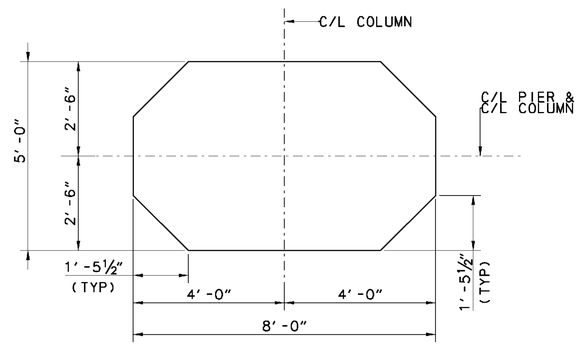

SECTION A-A

SCALE: ¼″=1′ -0″

UNOFFICAL WEBSITE COPY

3/28/2011 9:15:35 PM
M:\PROJECTS\2003\03059_DELTRNPK\SR1-MALL\CADD\2809003\PLANS.DGV\PR01_BR-S6_SR1.DGN

DELAWARE DEPARTMENT OF TRANSPORTATION	ADDENDUMS / REVISIONS		SR1 / I-95 INTERCHANGE	CONTRACT 28-090-03	BRIDGE NO. 1-268B	RAMP B OVER I-95NB PIER 1 PLAN AND ELEVATION	S6-19 SHEET NO.
	ADDENDUM NO. 3, ADDED CALLOUT, 02/18/11, DWD						466 TOTAL SHTS.
	ADDENDUM NO. 2, OPTIONAL CONSTRUCTION JOINT, ELEVATIONS, 04/01/11, DWD			COUNTY NEW CASTLE	DESIGNED BY: RMB		803
					CHECKED BY: DWD		

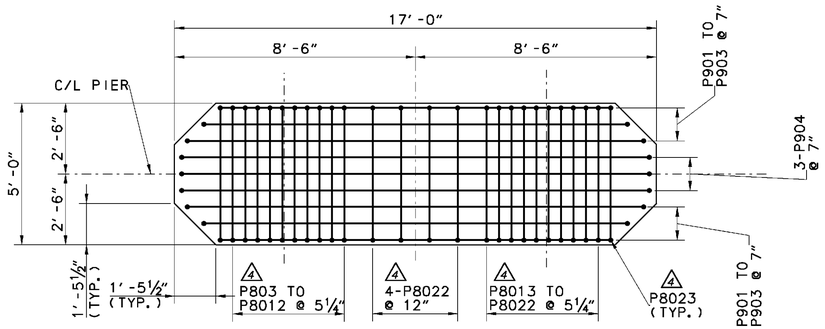

PLAN

SCALE: ⅜″=1′-0″

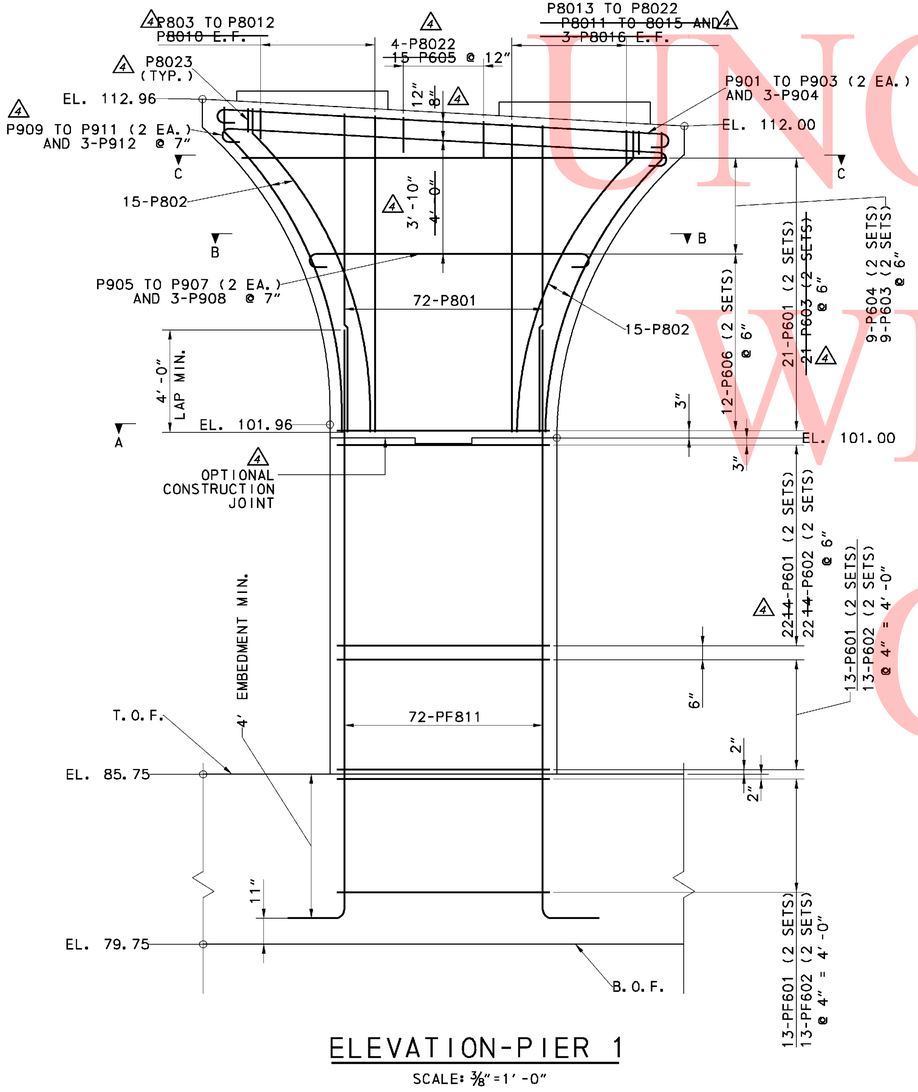

ELEVATION-PIER 1

SCALE: ⅜″=1′-0″

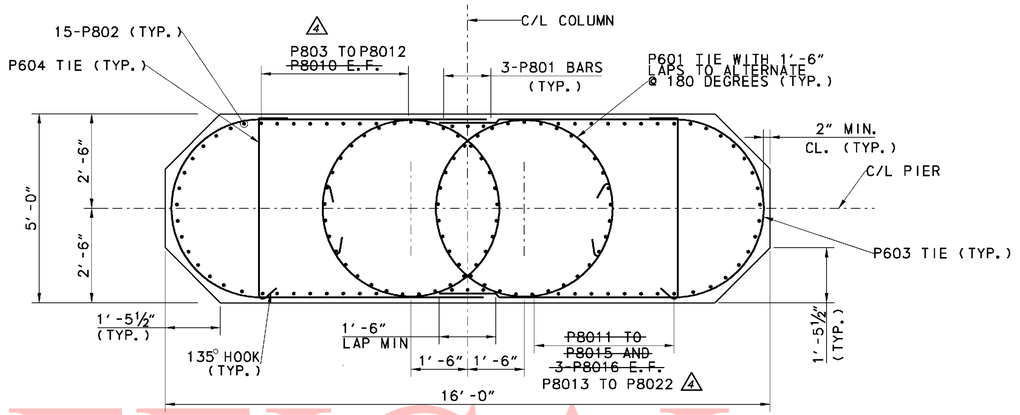

SECTION C-C

SCALE: ½″=1′-0″

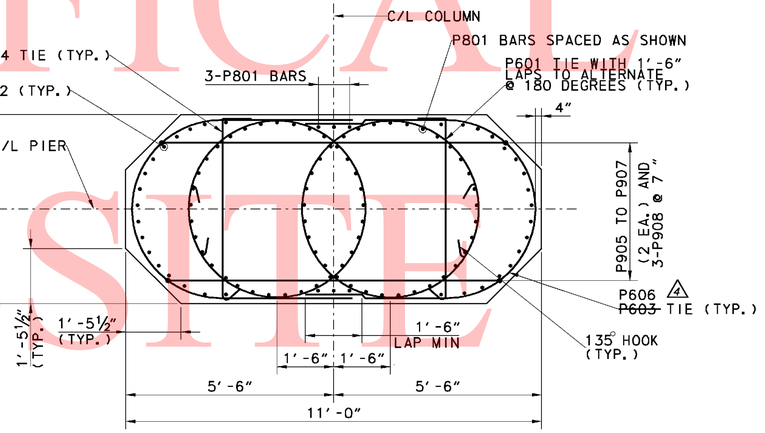

SECTION B-B

SCALE: ½″=1′-0″

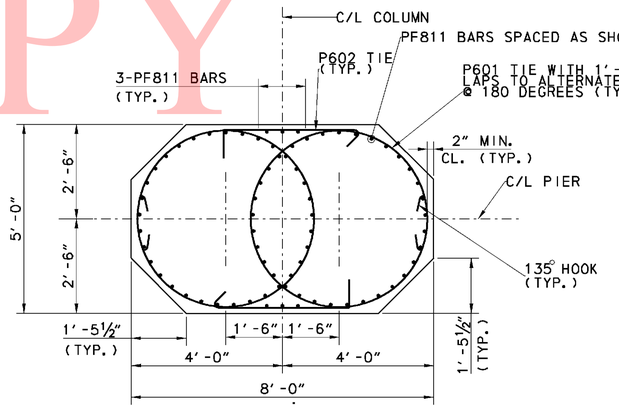

SECTION A-A

SCALE: ½″=1′-0″

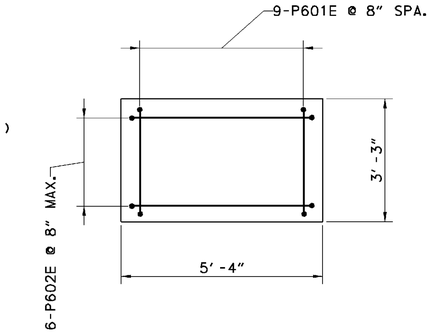

PEDESTAL REINFORCING PLAN

SCALE: ½″=1′-0″

CROSS REFERENCE NOTES:

1. FOR BRIDGE PLAN AND ELEVATION, SEE DWG. S6-1.
2. FOR PIER PLAN AND ELEVATION, SEE DWG. S6-19.
3. FOR PIER FOUNDATION PLAN, SEE DWG. S6-16.
4. FOR PIER FOUNDATION DETAILS, SEE DWG. S6-17.

UNOFFICIAL WEBSITE COPY

3/28/2011 7:53:35 PM
M:\PROJECTS\2003\03059_DELTRNPK\SR1_MALL\CADD\2809003\PLANS.DGN\PR02_BR-S6_SR1.DGN

DELAWARE DEPARTMENT OF TRANSPORTATION

ADDENDUMS / REVISIONS	
ADDENDUM NO. 4, OPTIONAL CONSTRUCTION JOINT, REBAR CALLOUTS, 04/01/11, DWD	

SR1 / I-95 INTERCHANGE

CONTRACT	28-090-03	BRIDGE NO.	1-268B
COUNTY	NEW CASTLE	DESIGNED BY:	RMB
		CHECKED BY:	DWD

RAMP B OVER I-95NB
PIER 1 REINFORCING DETAILS

	S6-20
SHEET NO.	467
TOTAL SHTS.	803

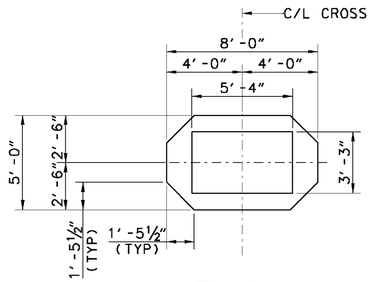

PLAN

SCALE: ¼"=1'-0"

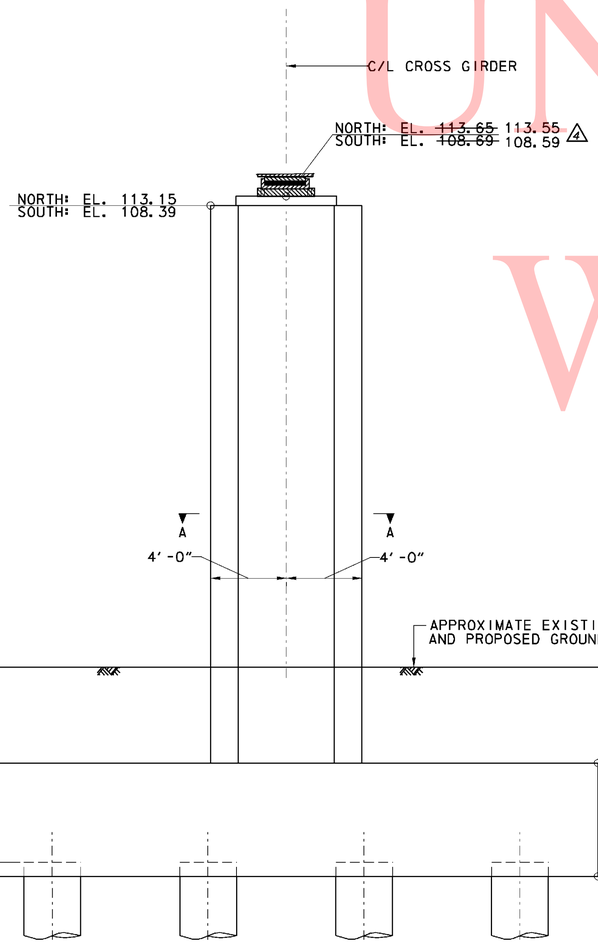

ELEVATION-PIER 2

SCALE: ¼"=1'-0"

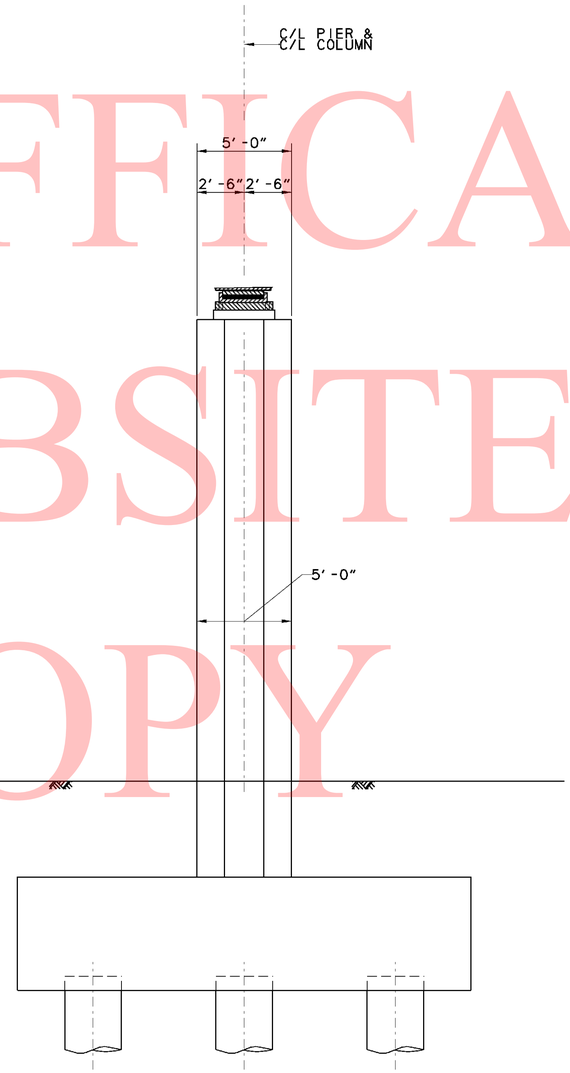

END VIEW

SCALE: ¼"=1'-0"

CROSS REFERENCE NOTES:

1. FOR BRIDGE PLAN AND ELEVATION, SEE DWG. S6-1.
2. FOR PIER FOUNDATION PLAN, SEE DWG. S6-16.
3. FOR CROSSGIRDER DETAILS, SEE DWG. S6-23, S6-24 & S6-25.
4. FOR PIER COLUMN AND FOOTING REINFORCEMENT DETAILS, SEE DWG. S6-22 & S6-17.

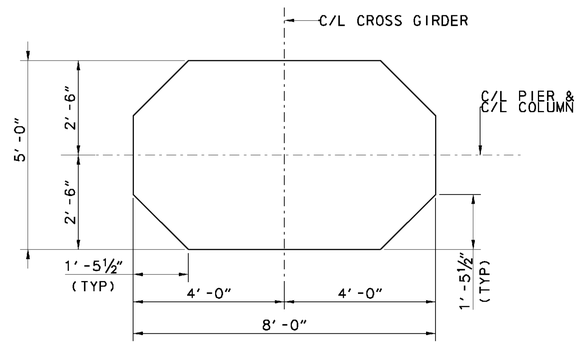

SECTION A-A

SCALE: ¼"=1'-0"

UNOFFICAL WEBSITE COPY

2/28/2011 9:25:58 AM
M:\PROJECTS\2003\03059_DELTRNPK\SR1_MALL\CADD\2809003\PLANS.DGV\PR03_BR-S6_SR1.DGN

DELAWARE
DEPARTMENT OF TRANSPORTATION

ADDENDUMS / REVISIONS
ADDENDUM NO. 2, CORRECTED BOTTOM OF FOOTING ELEVATION, 01/26/11, DWD
ADDENDUM NO. 4, ELEVATIONS, 04/01/11, DWD

SR1 / I-95 INTERCHANGE

CONTRACT	
28-090-03	
COUNTY	
NEW CASTLE	

BRIDGE NO.	1-268B
DESIGNED BY:	RMB
CHECKED BY:	DWD

RAMP B OVER I-95NB
PIER 2 PLAN AND ELEVATION

S6-21	
SHEET NO.	468
TOTAL SHTS.	803

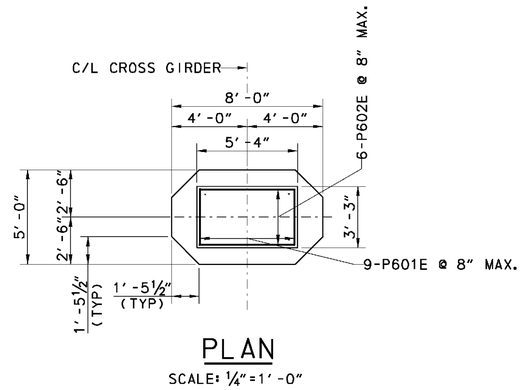

PLAN

SCALE: ¼″=1′-0″

CROSS REFERENCE NOTES:

1. FOR BRIDGE PLAN AND ELEVATION, SEE DWG. S6-1.
2. FOR PIER PLAN AND ELEVATION, SEE DWG. S6-21.
3. FOR PIER FOUNDATION PLAN, SEE DWG. S6-16.
4. FOR PIER FOUNDATION DETAILS, SEE DWG. S6-17.
5. FOR CROSSGIRDER DETAILS, SEE DWG. S6-23, S6-24 & S6-25.

UNOFFICAL WEBSITE COPY

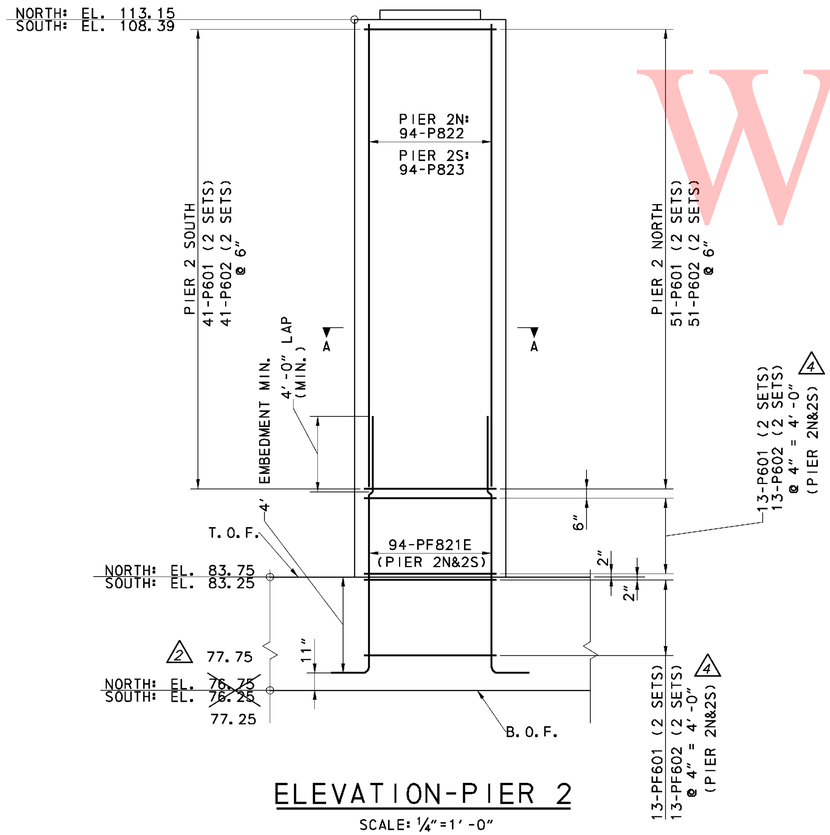

ELEVATION-PIER 2

SCALE: ¼″=1′-0″

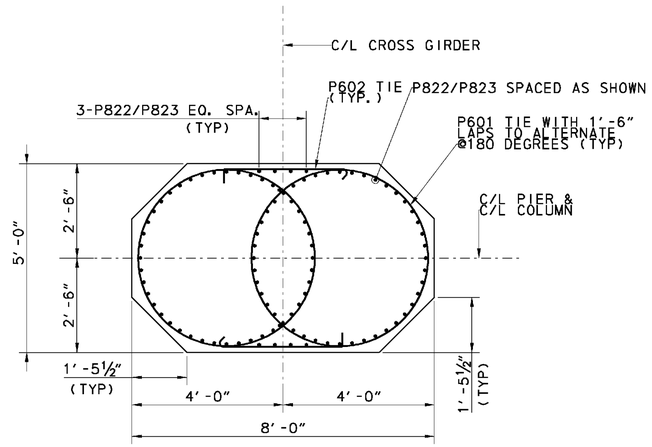

SECTION A-A

SCALE: ¼″=1′-0″

3/28/2011 9:15:59 PM
M:\PROJECTS\2003\03059_DELTRNPK\SR1_MALL\CADD\2809003\PLANS.DGN\PRO4_BR-S6_SR1.DGN

DELAWARE DEPARTMENT OF TRANSPORTATION

ADDENDUMS / REVISIONS

ADDENDUM NO. 2, CORRECTED BOTTOM OF FOOTING ELEVATIONS, 01/26/11, DWD	
ADDENDUM NO. 4, REBAR CALLOUT, 04/01/11, DWD	

SR1 / I-95 INTERCHANGE

CONTRACT	28-090-03	BRIDGE NO.	1-268B
COUNTY	NEW CASTLE	DESIGNED BY:	RMB
		CHECKED BY:	DWD

RAMP B OVER I-95NB PIER 2 REINFORCING DETAILS

SHEET NO.	S6-22
	469
TOTAL SHTS.	803

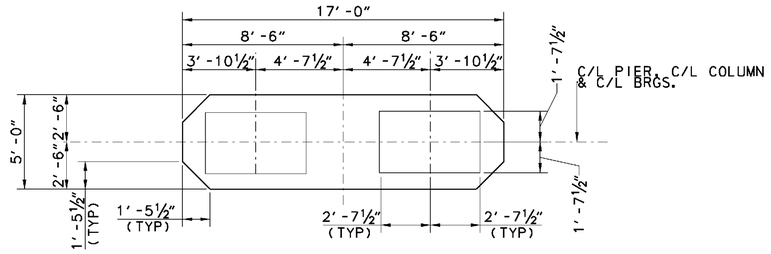

PLAN

SCALE: ¼″=1′ -0″

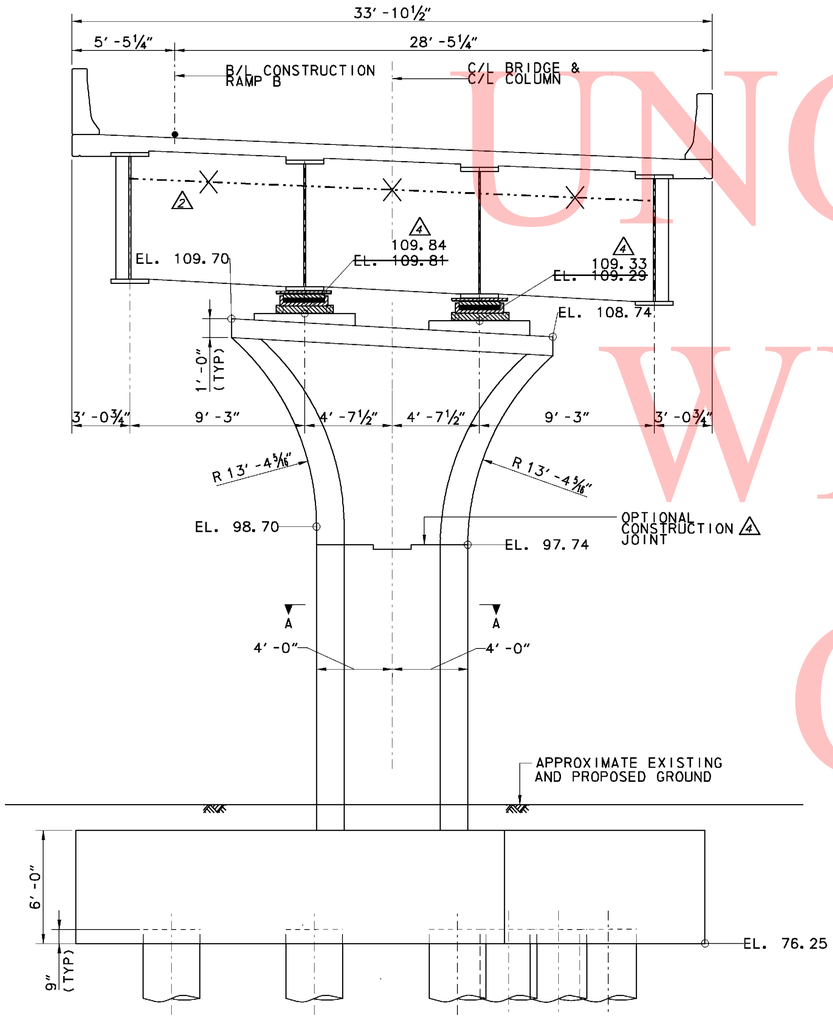

ELEVATION-PIER ~~3~~ 2

SCALE: ¼″=1′ -0″

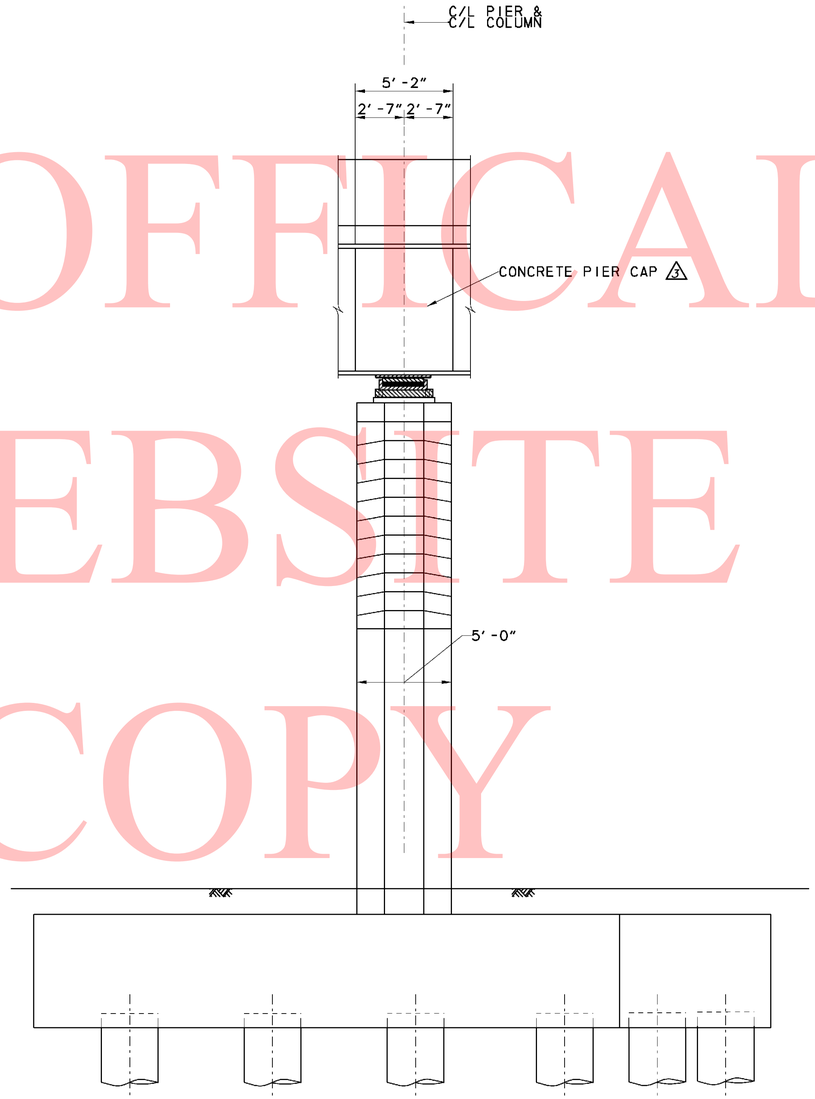

END VIEW

SCALE: ¼″=1′ -0″

CROSS REFERENCE NOTES:

1. FOR BRIDGE PLAN AND ELEVATION, SEE DWG. S6-1.
2. FOR PIER FOUNDATION PLAN, SEE DWG. S6-16.
3. FOR INTEGRAL PIER CAP, REINFORCEMENT DETAILS, SEE DWG. S6-28 & S6-29.
4. FOR PIER COLUMN AND FOOTING REINFORCEMENT DETAILS, SEE DWG. S6-27 & S6-17.

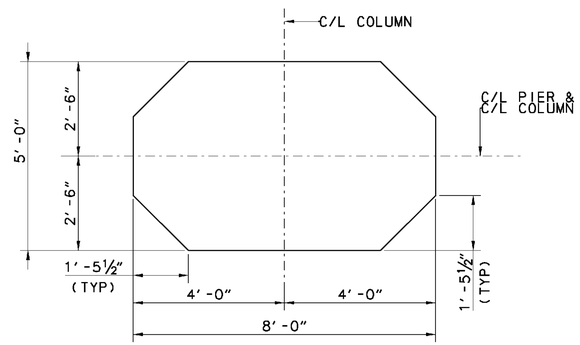

SECTION A-A

SCALE: ¼″=1′ -0″

UNOFFICAL WEBSITE COPY

3/28/2011 9:22:42 PM
M:\PROJECTS\2003\03059_DELTRNPK\SR1-MALL\CADD\2809003\PLANS.DGV\PR08_BR-S6_SR1.DGN

DELAWARE DEPARTMENT OF TRANSPORTATION

ADDENDUMS / REVISIONS	
ADDENDUM NO. 2 ,MODIFIED ELEVATION VIEW AND CORRECTED TITLE, 1/26/11, DWD	JOINT, ELEVATIONS, 04/01/11, DWD
ADDENDUM NO. 3 , ADDED CALLOUT, 02/18/11, DWD	
ADDENDUM NO. 4 , OPTIONAL CONSTRUCTION	

SR1 / I-95 INTERCHANGE

CONTRACT	28-090-03	BRIDGE NO.	1-268B
COUNTY	NEW CASTLE	DESIGNED BY:	RMB
		CHECKED BY:	DWD

RAMP B OVER I-95NB PIER 3 PLAN AND ELEVATION

S6-26	
SHEET NO.	473
TOTAL SHTS.	803

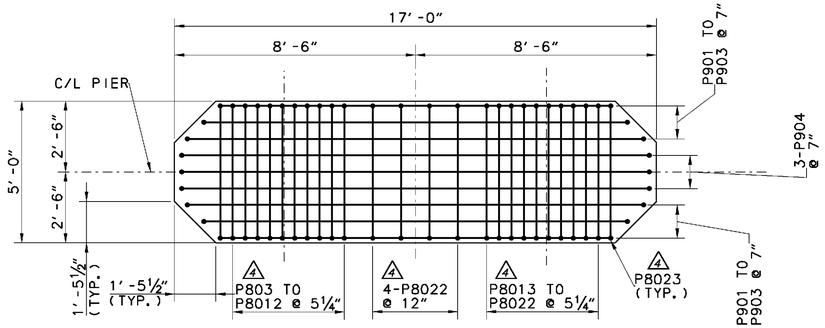

PLAN

SCALE: ⅜″=1′-0″

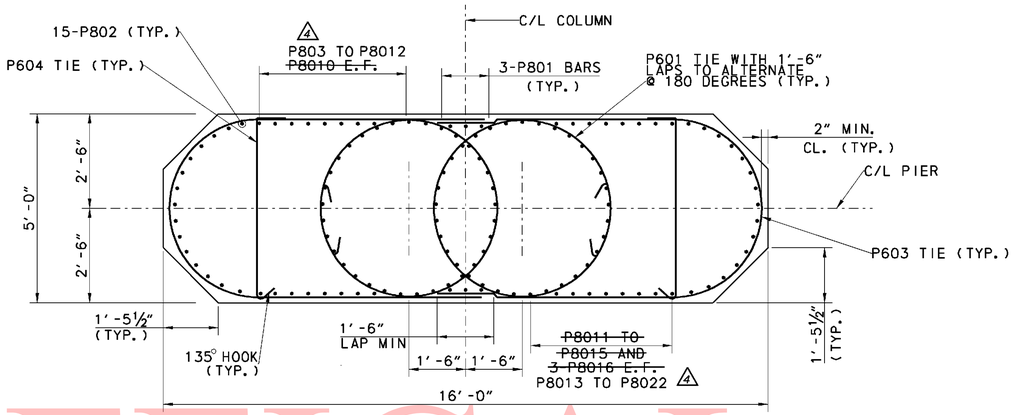

SECTION C-C

SCALE: ½″=1′-0″

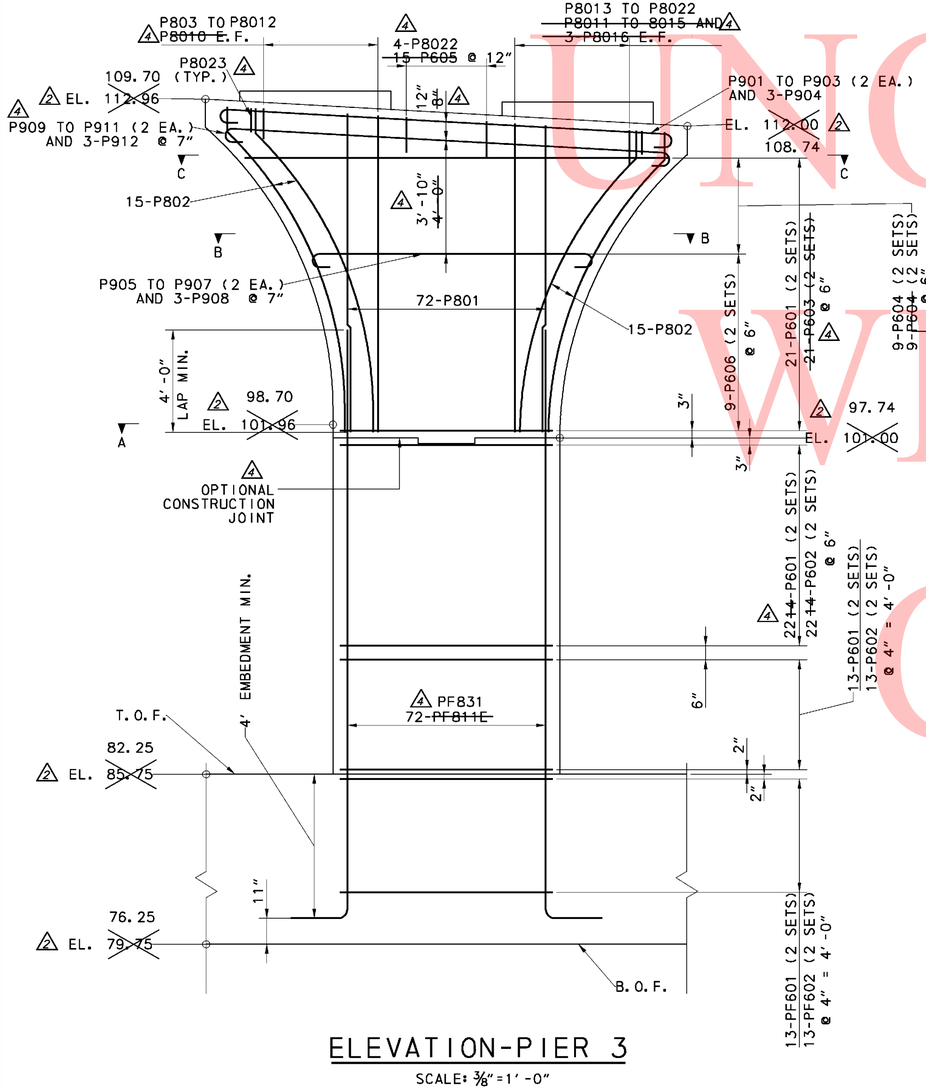

ELEVATION-PIER 3

SCALE: ⅜″=1′-0″

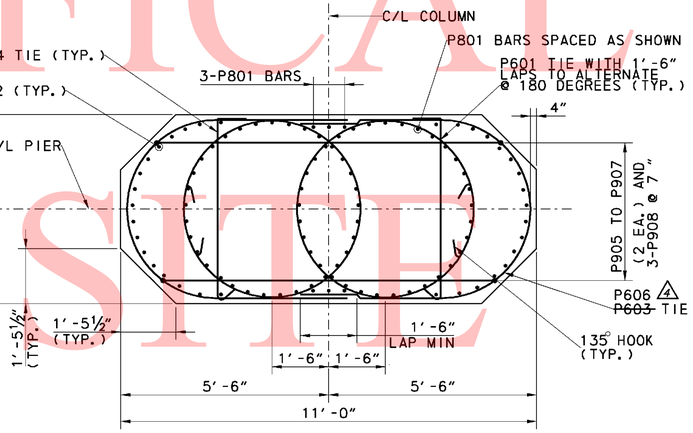

SECTION B-B

SCALE: ½″=1′-0″

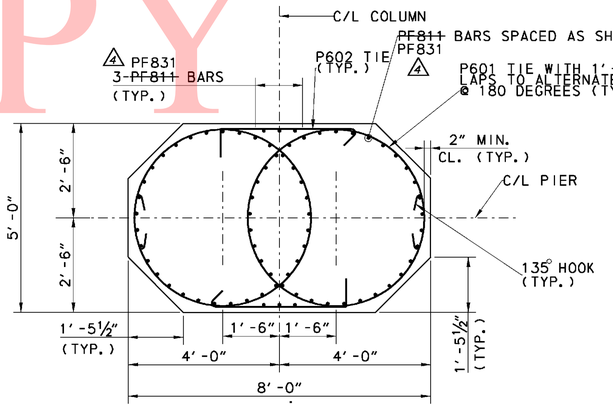

SECTION A-A

SCALE: ½″=1′-0″

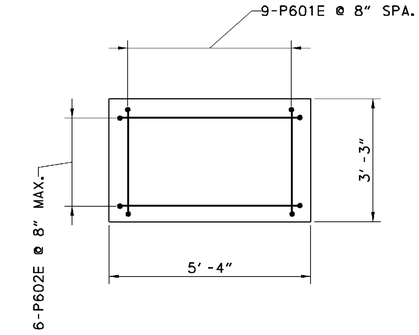

PEDESTAL REINFORCING PLAN

SCALE: ½″=1′-0″

CROSS REFERENCE NOTES:

1. FOR BRIDGE PLAN AND ELEVATION, SEE DWG. S6-1.
2. FOR PIER PLAN AND ELEVATION, SEE DWG. S6-26.
3. FOR PIER FOUNDATION PLAN, SEE DWG. S6-16.
4. FOR PIER FOUNDATION DETAILS, SEE DWG. S6-17.

UNOFFICIAL WEBSITE COPY

4/8/2011 3:06:20 PM
M:\PROJECTS\2003\03059_DELTRNPK\SR1_MALL\CADD\2809003\PLANS.DGV\PR09_BR-S6_SR1.DGN

DELAWARE DEPARTMENT OF TRANSPORTATION

ADDENDUMS / REVISIONS	
ADDENDUM NO. 2, CORRECTED ELEVATIONS, 01/26/11, DWD	
ADDENDUM NO. 4, OPTIONAL CONSTRUCTION JOINT, REBAR CALLOUTS, 04/01/11, DWD	

SR1 / I-95 INTERCHANGE

CONTRACT	28-090-03	BRIDGE NO.	1-268B
COUNTY	NEW CASTLE	DESIGNED BY:	RMB
		CHECKED BY:	DWD

RAMP B OVER I-95NB
PIER 3 REINFORCING DETAILS

S6-27
SHEET NO. 474
TOTAL SHTS. 803

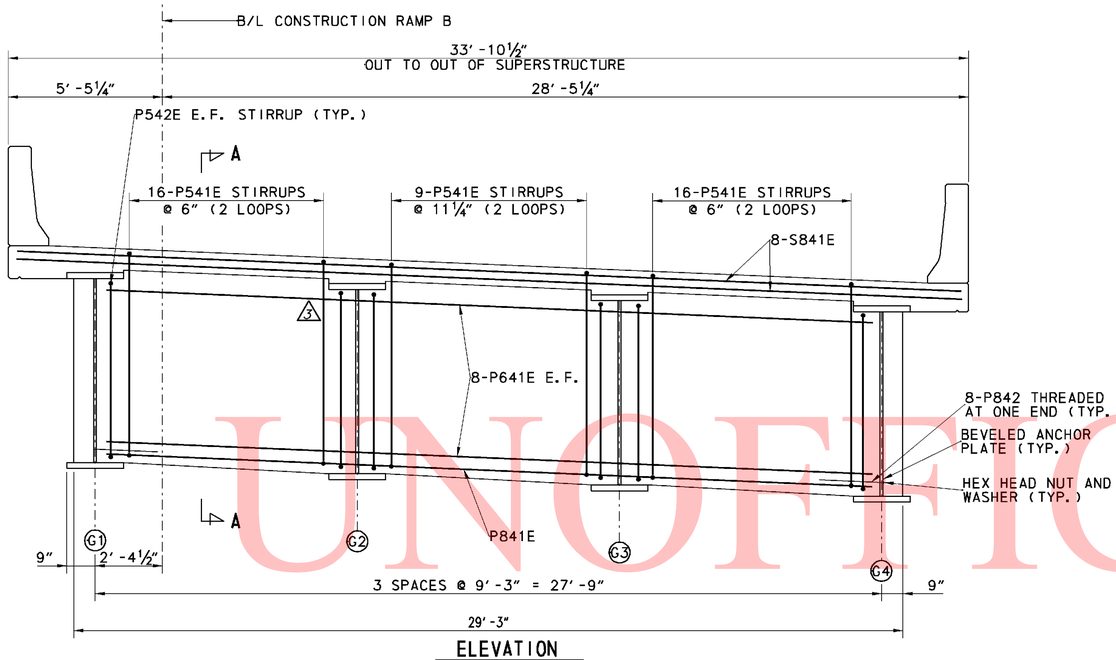

ELEVATION
SCALE: ⅜" = 1'-0"

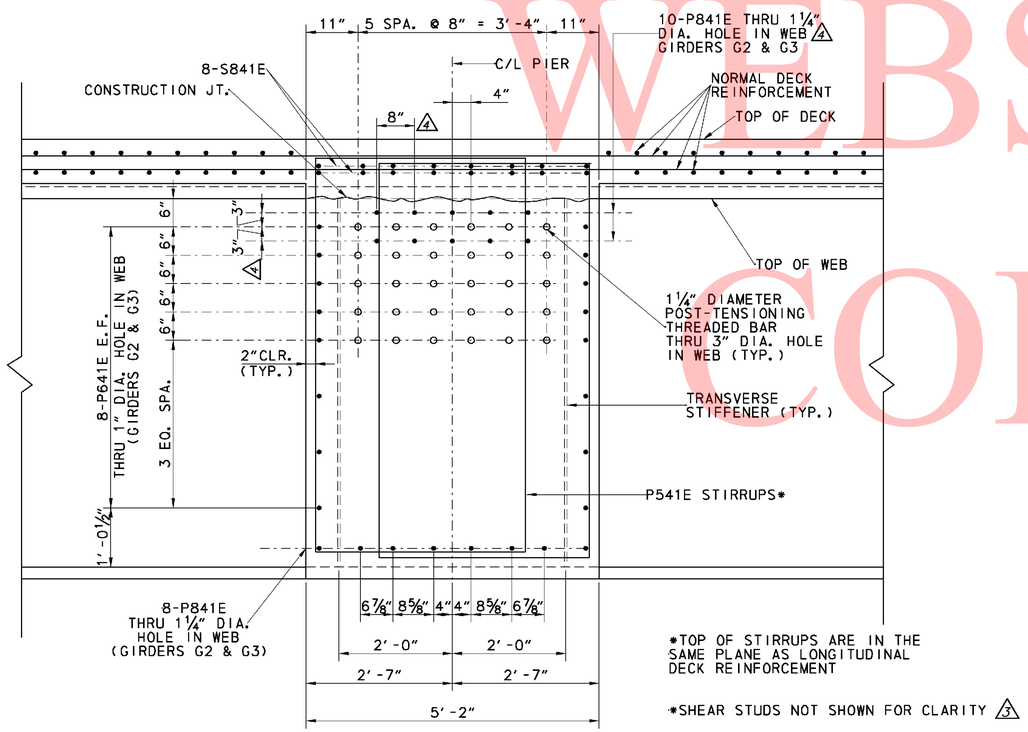

SECTION A-A
SCALE: ¾" = 1'-0"

*TOP OF STIRRUPS ARE IN THE SAME PLANE AS LONGITUDINAL DECK REINFORCEMENT

*SHEAR STUDS NOT SHOWN FOR CLARITY 3

CROSS REFERENCE NOTES:

1. FOR PIER 1 PLAN AND ELEVATION, SEE DWG S6-16
2. FOR PIER 3 PLAN AND ELEVATION, SEE DWG S6-26
3. FOR PIER CAP POST-TENSIONING REINFORCEMENT, SEE DWG S6-28.
4. FOR PIER 1 COLUMN REINFORCEMENT DETAILS, SEE DWG S6-20.
5. FOR PIER 3 COLUMN REINFORCEMENT DETAILS, SEE DWG S6-27.
4. FOR PIER FOOTING REINFORCEMENT DETAILS, SEE DWG S6-17.

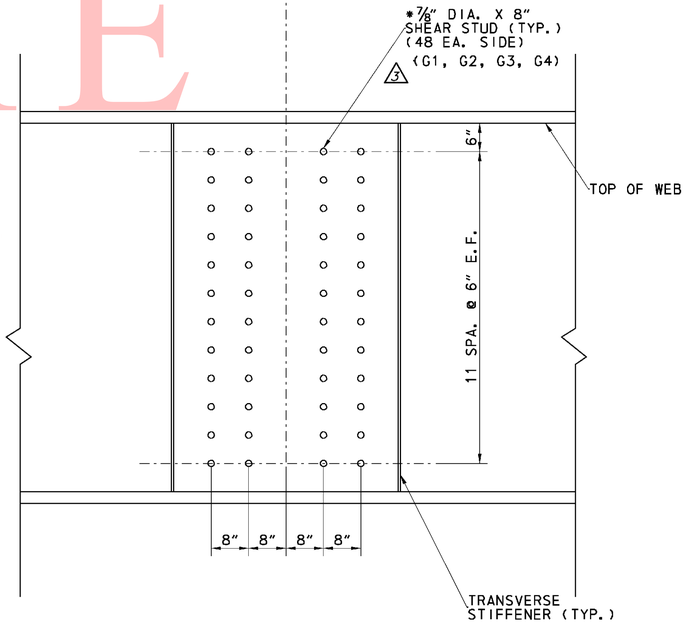

SHEAR STUDS
SCALE: ¾" = 1'-0"

*FOR SHEAR STUDS ON OUTSIDE OF GIRDERS G1 & G4, SEE ANCHORAGE COVER DETAIL ON POST-TENSIONING REINFORCEMENT SHEET.

UNOFFICAL WEBSITE COPY

3/28/2011 5:47:46 PM
M:\PROJECTS\2003\03059_DELTRNPK\SR1_MALL\CADD\2809003\PLANS.DGV\PR11_BR-S6_SR1.DGN

DELAWARE
DEPARTMENT OF TRANSPORTATION

ADDENDUMS / REVISIONS
ADDENDUM NO. 3, REBAR, SHEET TITLE, NOTES 02/18/11, DWD
ADDENDUM NO. 4, REBAR, 04/01/11, DWD

SR1 / I-95 INTERCHANGE

CONTRACT 28-090-03
COUNTY NEW CASTLE
BRIDGE NO. 1-268B
DESIGNED BY:
CHECKED BY:

RAMP B OVER I-95NB
3 PIER CAP REINFORCEMENT

S6-29
SHEET NO. 476
TOTAL SHTS. 803

REINFORCING BAR LIST

PIER 1

MARK	LENGTH	NO. BARS	TYPE	A	B	C	D	E	G	H	J	K	O	R	REMARKS
PF601	18'-3"	26	T3									2'-7"	4'-6½"		
PF602	5'-8"	26	T9	0'-8"	4'-0"				1'-0"	0'-4½"					
PF603	4'-11"	118	STR.												
PF604	32'-6"	8	STR.												
PF605	23'-6"	8	STR.												
PF701	32'-6"	26	STR.												
PF702	23'-6"	34	STR.												
PF811	26'-5"	72	36	1'-0"	25'-5"										
PF1101	32'-6"	50	STR.												
PF1102	23'-6"	36	STR.												
PP401	9'-7"	108	T3									1'-6"	2'-6¾"		
PP801	8'-11"	192	39	0'-11"	8'-0"						0'-11"				
P601	17'-2"	96	T3									1'-6"	4'-6½"		
P602	5'-8"	96	T9	0'-8"	4'-0"				1'-0"	0'-4½"					
P603	19'-8"	18	10	6'-3"	7'-2"	6'-3"								2'-3¼"	
P604	6'-2"	18	T9	0'-8"	4'-8"				1'-0"	0'-4½"					
P605	4'-8"	15	STR.												
P606	14'-8"	24	10	3'-9"	7'-2"	3'-9"								2'-3¼"	
P801	11'-4"	72	STR.												
P802	12'-1"	30	9S		11'-4"		0'-9"	0'-3¾"					11'-0"	13'-4¼"	
P803	2'-11"	4	STR.												
P804	3'-7"	4	STR.												
P805	4'-4"	4	STR.												
P806	5'-3"	4	STR.												
P807	6'-5"	4	STR.												
P808	8'-3"	4	STR.												
P809	6'-11"	4	STR.												
P8010	11'-3"	4	STR.												
P8011	3'-5"	4	STR.												
P8012	4'-3"	4	STR.												
P8013	5'-4"	4	STR.												
P8014	6'-4"	4	STR.												
P8015	7'-10"	4	STR.												
P8016	10'-10"	6	STR.												
P901	15'-5"	4	1	1'-0"	13'-5"				1'-0"		0'-6"				
P902	16'-7"	4	1	1'-0"	14'-7"				1'-0"		0'-6"				
P903	17'-9"	4	1	1'-0"	15'-9"				1'-0"		0'-6"				
P904	18'-2"	6	1	1'-0"	16'-2"				1'-0"		0'-6"				
P905	9'-5"	2	1	1'-0"	7'-5"				1'-0"		0'-6"				
P906	10'-7"	2	1	1'-0"	8'-7"				1'-0"		0'-6"				
P907	11'-9"	2	1	1'-0"	9'-9"				1'-0"		0'-6"				
P908	12'-2"	3	1	1'-0"	10'-2"				1'-0"		0'-6"				
P441E	6'-2"	10	STR.												
P442E	5'-7"	16	2	0'-4½"	4'-10"				0'-4½"						
P541E	22'-9"	82	11	0'-5½"	3'-8"	7'-3"	3'-8"	7'-3"	0'-5½"						
P542E	6'-10"	16	41	0'-5½"	5'-11"				0'-5½"	0'-3¾"					
P641E	27'-5"	8	STR.												
P841E	27'-5"	8	STR.												
P842	4'-6"	8	STR.												ALL THREAD BAR
S841E	33'-6½"	16	STR.												
P601E	4'-9"	18	2	1'-0"	2'-9"				1'-0"						
P602E	7'-0"	12	2	1'-0"	5'-0"				1'-0"						

PIER 2 (NORTH AND SOUTH)

MARK	LENGTH	NO. BARS	TYPE	A	B	C	D	E	G	H	J	K	O	R	REMARKS
PF601	18'-3"	26	T3									2'-7"	4'-8½"		
PF602	5'-8"	26	T9	0'-8"	4'-0"				1'-0"	0'-4½"					
PF603	4'-11"	118	STR.												
PF604	32'-6"	8	STR.												
PF605	23'-6"	8	STR.												
PF701	32'-6"	26	STR.												
PF702	23'-6"	34	STR.												
PF821	14'-4"	188	36	1'-0"	13'-4"										
PF1101	32'-6"	50	STR.												
PF1102	23'-6"	36	STR.												
PP401	9'-7"	108	T3									1'-6"	2'-6¾"		
PP801	8'-11"	192	39	0'-11"	8'-0"						0'-11"				
P601	17'-2"	128	T3									1'-6"	4'-6½"		
P602	5'-8"	128	T9	0'-8"	4'-0"				1'-0"	0'-4½"					
P822	25'-4"	188	STR.												
P823	20'-10"	188	STR.												
P521	11'-9"		17		4'-6"	2'-9"	4'-6"								
P522	13'-11"		17		6'-7"	2'-9"	6'-7"								
P523	13'-4"		T2	0'-7"	4'-6"	1'-7"			0'-7"						
P524	60'-0"	21	STR.												
P525	34'-5"	21	STR.												
P526	19'-10"		17		5'-7"	1'-8"	5'-7"								
P527	4'-0"		16	1'-10"	5'-2"										
P1421	60'-0"	65	STR.												GRADE 75, ALL THREAD BAR
P1422	32'-7"	65	STR.												GRADE 75, ALL THREAD BAR
P601E	4'-9"	18	2	1'-0"	2'-9"				1'-0"						
P602E	7'-0"	12	2	1'-0"	5'-0"				1'-0"						
P521	13'-3"	480	17		5'-3"	2'-9"	5'-3"								
P523	13'-6"	97	T2	0'-7"	4'-6"	1'-8"	4'-6"	1'-8"	0'-7"						
P526	19'-2"	84	17		5'-3"	1'-8"	5'-3"								
P527	7'-7"	168	2	1'-10"	5'-9"				0'-0"						
P530	6'-0"	42	STR.												
P531	23'-1¾"	21	STR.												
P532	8'-9"	63	STR.												
P533	29-2½"	21	STR.												
P1422	31'-8"	65	STR.												GRADE 75, ALL THREAD BAR

3 ADDENDUM NO. 3

4 ADDENDUM NO. 4

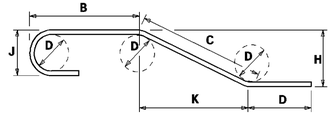

NOTES:

1. FIGURES SHOWN IN CIRCLES REPRESENT BAR BEND TYPES.
2. STANDARD BAR BENDS INCLUDE ONLY TYPES 1-32, S1-S12, AND T1-T16.
3. ALL DIMENSIONS ARE OUT-TO-OUT OF BAR EXCEPT "A" AND "G" ON STANDARD 180^ AND 135^ HOOKS.
4. "J" DIMENSIONS ON 180^ HOOKS TO BE SHOWN ONLY WHERE NECESSARY TO RESTRICT HOOK SIZE, OTHERWISE STANDARD HOOKS ARE TO BE USED.
5. WHERE "J" IS NOT SHOWN, "J" WILL BE KEPT EQUAL TO OR LESS THAN "H" ON TRUSS BARS. WHERE "J" CAN EXCEED "H", IT SHALL BE SHOWN.
6. "H" DIMENSIONS OF STIRRUPS TO BE SHOWN WHERE NECESSARY TO FIT WITHIN THE CONCRETE.
7. UNLESS OTHERWISE NOTED, DIAMETER "D" IS THE SAME FOR ALL BENDS AND HOOKS ON A BAR.
8. WHERE SLOPE DIFFERS FROM 45^ OFFSET, "H" AND "K" MUST BE SHOWN.
9. WHERE BARS ARE TO BE BENT MORE ACCURATELY THAN STANDARD BENDING TOLERANCES, BENDING DIMENSIONS WHICH REQUIRE CLOSER FABRICATION SHOULD HAVE LIMITS INDICATED.
10. FOR RECOMMENDED DIAMETER "D", OF BENDS, HOOKS, ETC., REFER TO TABLE AT RIGHT, 'CRSI' OR 'ACI' TABLES.
11. TYPE S1-S12, T1-T16 APPLY TO BAR SIZES 3 THROUGH 6.

ASTM STANDARD ENGLISH REINFORCING BARS				RECOMMENDED END HOOKS, APPLICABLE TO ALL GRADES				
	NOMINAL DIMENSIONS				180° HOOKS		90° HOOKS	
BAR SIZE	DIAMETER (inches)	AREA (inches²)	WEIGHT (lbs./ft.)	D	A OR G	J	A OR G	
3	0.375	0.110	0.376	2½"	5"	3"	6"	
4	0.500	0.200	0.668	3"	6"	4"	8"	
5	0.625	0.310	1.043	3½"	7"	5"	10"	
6	0.750	0.440	1.502	4½"	8"	6"	1'-0"	
7	0.875	0.600	2.044	5½"	10"	7"	1'-2"	
8	1.000	0.790	2.670	6"	11"	8"	1'-4"	
9	1.128	1.000	3.400	9½"	1'-3"	11½"	1'-7"	
10	1.270	1.270	4.303	10½"	1'-5"	1'-1½"	1'-10"	
11	1.410	1.560	5.313	1'-0"	1'-7"	1'-2½"	2'-0"	
14	1.693	2.250	7.650	1'-6½"	2'-3"	1'-9½"	2'-7"	
18	2.257	4.000	13.600	2'-0"	3'-0"	2'-4½"	3'-5"	

STANDARD BAR BENDS

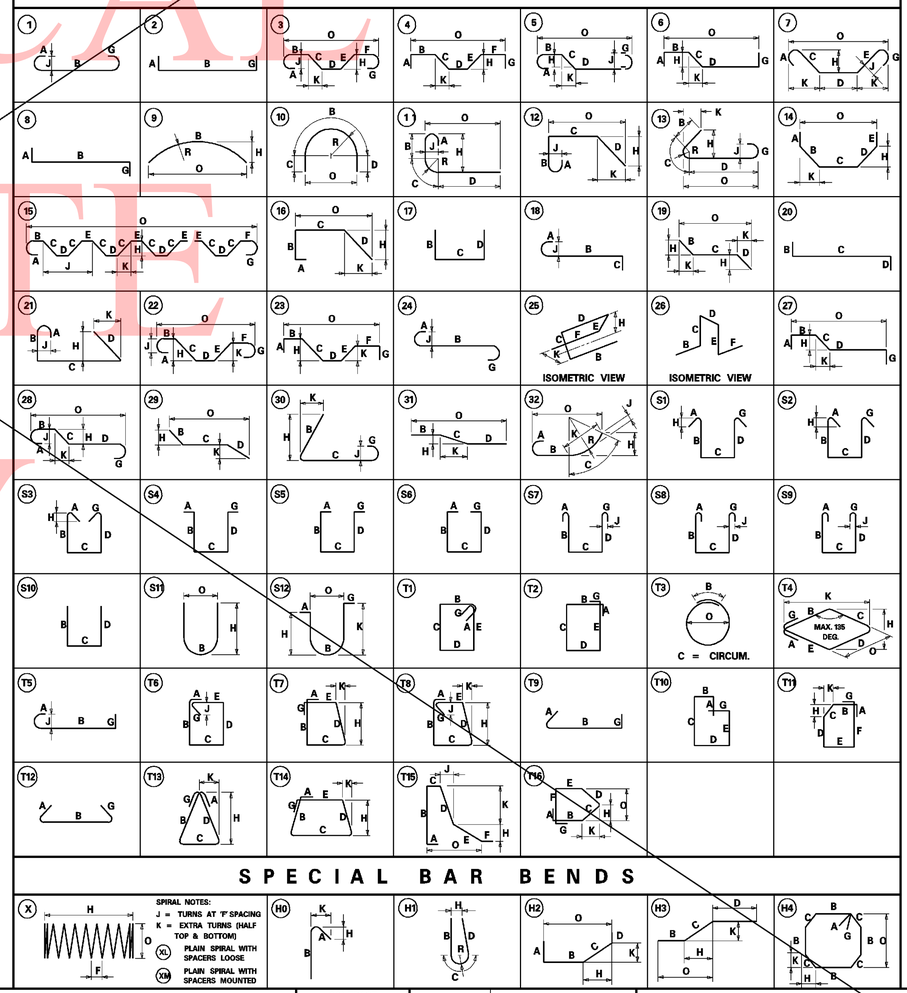

SPECIAL BAR BENDS

UNOFFICIAL WEBSITE COPY

3/29/2011 9:08:17 AM
M:\PROJECTS\2003\03059_DELTRPK\SR1_MALL\CADD\2809003\PLANS.DGV\BR02_BR-S6_SR1.DGN

DELAWARE DEPARTMENT OF TRANSPORTATION

ADDENDUMS / REVISIONS

ADDENDUM NO. 3, UPDATED BAR SCHEDULE, 02/18/11, DWD

ADDENDUM NO. 4, SHEET VOIDED, 04/01/11, DWD

SR1 / I-95 INTERCHANGE

CONTRACT 28-090-03

COUNTY NEW CASTLE

BRIDGE NO. 1-268B

DESIGNED BY:

CHECKED BY:

RAMP B OVER I-95NB

PIER REINFORCEMENT BAR SCHEDULE-1

S6-30

SHEET NO. 477

TOTAL SHTS. 803

PIER 3

MARK	LENGTH	NO. BARS	TYPE	A	B	C	D	E	G	H	J	K	O	R	REMARKS
PF601	18'-3"	26	T3									2'-7"	4'-6½"		
PF602	5'-8"	26	T9	0'-8"	4'-0"				1'-0"	0'-4½"					
PF603	4'-11"	118	STR.												
PF604	32'-6"	8	STR.												
PF605	23'-6"	8	STR.												
PF701	32'-6"	26	STR.												
PF702	23'-6"	34	STR.												
PF831	26'-8"	66	36	1'-0"	25'-8"										
PF1101	32'-6"	50	STR.												
PF1102	23'-6"	36	STR.												
PP401	9'-7"	108	T3									1'-6"	2'-6¾"		
PP801	8'-11"	192	39	0'-11"	8'-0"						0'-11"				
P601	17'-2"	96	T3									1'-6"	4'-6½"		
P602	5'-8"	96	T9	0'-8"	4'-0"				1'-0"	0'-4½"					
P603	19'-8"	18	10	6'-3"	7'-2"	6'-3"								2'-3¼"	
P604	6'-2"	18	T9	0'-8"	4'-8"				1'-0"	0'-4½"					
P605	4'-8"	15	STR.												
P606	14'-8"	24	10	3'-9"	7'-2"	3'-9"								2'-3¼"	
P801	11'-4"	72	STR.												
P802	12'-1"	30	9S		11'-4"		0'-9"	0'-3¾"					11'-0"	13'-4½"	
P803	2'-11"	4	STR.												
P804	3'-7"	4	STR.												
P805	4'-4"	4	STR.												
P806	5'-3"	4	STR.												
P807	6'-8"	4	STR.												
P808	8'-3"	4	STR.												
P809	6'-11"	4	STR.												
P8010	11'-3"	4	STR.												
P8011	3'-5"	4	STR.												
P8012	4'-3"	4	STR.												
P8013	5'-4"	4	STR.												
P8014	6'-4"	4	STR.												
P8015	7'-10"	4	STR.												
P8016	10'-10"	6	STR.												
P901	15'-5"	4	1	1'-0"	13'-5"				1'-0"		0'-6"				
P902	16'-7"	4	1	1'-0"	14'-7"				1'-0"		0'-6"				
P903	17'-9"	4	1	1'-0"	15'-9"				1'-0"		0'-6"				
P904	18'-2"	6	1	1'-0"	16'-2"				1'-0"		0'-6"				
P905	9'-5"	2	1	1'-0"	7'-5"				1'-0"		0'-6"				
P906	10'-7"	2	1	1'-0"	8'-7"				1'-0"		0'-6"				
P907	11'-9"	2	1	1'-0"	9'-9"				1'-0"		0'-6"				
P908	12'-2"	3	1	1'-0"	10'-2"				1'-0"		0'-6"				
P441E	6'-2"	10	STR.												
P442E	5'-7"	16	2	0'-4½"	4'-10"				0'-4½"						
P541E	22'-9"	82	11	0'-5½"	3'-8"	7'-3"	3'-8"	7'-3"	0'-5½"						
P542E	6'-10"	12	41	0'-5½"	5'-11"				0'-5½"	0'-3¾"					
P641E	27'-5"	16	STR.												
P841E	27'-5"	8	STR.												
P842	4'-6"	8	STR.												ALL THREAD BAR
S841E	33'-6½"	16	STR.												
P601E	4'-9"	18	2	1'-0"	2'-9"				1'-0"						
P602E	7'-0"	12	2	1'-0"	5'-0"				1'-0"						

PIER 3

MARK	LENGTH	NO. BARS	TYPE	A	B	C	D	E	G	H	J	K	O	R	REMARKS
PF601	17'-6"	26	T3S	0'-8"					0'-8"	0'-4½"		1'-6"	4'-8"		
PF602	5'-8"	26	T9	0'-8"	4'-0"				1'-0"						
PF603	4'-11"	118	STR.												
PF604	32'-6"	8	STR.												
PF605	23'-6"	8	STR.												
PF701	32'-6"	26	STR.												
PF702	23'-6"	36	STR.												
PF831	26'-11"	72	36	1'-4"	25'-7"										
PF1101	32'-6"	50	STR.												
PF1102	23'-6"	36	STR.												
PP401	9'-7"	108	T3		1'-6"	8'-1"							2'-6¾"		
PP801	8'-11"	192	37	0'-11"	8'-0"						0'-8"				
P601	17'-6"	112	T3S	0'-8"					0'-8"	0'-4½"		1'-6"	4'-8"		
P602	5'-8"	70	T9	0'-8"	4'-0"				1'-0"						
P603	20'-10"	18	10		7'-4"	5'-9"	6'-9"						4'-8"	2'-4"	
P604	6'-4"	18	T9	0'-8"	4'-8"				1'-0"						
P605	4'-8"	15	STR.												
P606	14'-10"	24	10		7'-4"	3'-9"	3'-9"						4'-8"	2'-4"	
P801	11'-4"	72	STR.												
P802	12'-11½"	30	9S		11'-3½"		0'-10"	0'-4"		1'-2"			11'-0"	13'-4¾"	
P803	6'-8½"	1	17		1'-1"	4'-6½"	1'-1"								
P804	7'-6½"	1	17		1'-5"	4'-6½"	1'-6"								
P805	8'-5½"	1	17		2'-0"	4'-6½"	2'-0"								
P806	9'-6½"	1	17		2'-6"	4'-6½"	2'-6"								
P807	10'-8½"	1	17		3'-1"	4'-6½"	3'-1"								
P808	12'-½"	1	17		3'-9"	4'-6½"	3'-9"								
P809	13'-6½"	1	17		4'-5"	4'-6½"	4'-6"								
P8010	15'-6½"	1	17		5'-5"	4'-6½"	5'-6"								
P8011	17'-10½"	1	17		6'-8"	4'-6½"	6'-8"								
P8012	22'-½"	1	17		8'-9"	4'-6½"	8'-9"								
P8013	23'-4½"	1	17		9'-5"	4'-6½"	9'-5"								
P8014	19'-2½"	1	17		7'-4"	4'-6½"	7'-4"								
P8015	16'-6½"	1	17		6'-0"	4'-6½"	6'-0"								
P8016	14'-8½"	1	17		5'-1"	4'-6½"	5'-1"								
P8017	13'-½"	1	17		4'-3"	4'-6½"	4'-3"								
P8018	11'-6½"	1	17		3'-6"	4'-6½"	3'-6"								
P8019	10'-2½"	1	17		2'-10"	4'-6½"	2'-10"								
P8020	9'-½"	1	17		2'-3"	4'-6½"	2'-3"								
P8021	8'-½"	1	17		1'-9"	4'-6½"	1'-9"								
P8022	7'-½"	5	17		1'-3"	4'-6½"	1'-3"								
P8023	6'-2½"	2	17		10"	4'-6½"	10"								
P901	16'-5"	2	1	1'-3"	13'-11"				1'-3"		0-11"				
P902	17'-7"	2	1	1'-3"	15'-1"				1'-3"		0-11"				
P903	18'-9"	2	1	1'-3"	16'-3"				1'-3"		0-11"				
P904	19'-2"	4	1	1'-3"	16'-8"				1'-3"		0-11"				
P905	9'-9"	2	1	1'-3"	7'-3"				1'-3"		0-11"				
P906	10'-11"	2	1	1'-3"	8'-5"				1'-3"		0-11"				
P907	12'-1"	2	1	1'-3"	9'-7"				1'-3"		0-11"				
P908	12'-6"	3	1	1'-3"	10'-0"				1'-3"		0-11"				
P909	14'-6"	2	1	1'-3"	12'-0"				1'-3"		0-11"				
P910	15'-8"	2	1	1'-3"	13'-2"				1'-3"		0-11"				
P911	16'-11"	2	1	1'-3"	14'-5"				1'-3"		0-11"				
P912	17'-4"	3	1	1'-3"	14'-10"				1'-3"		0-11"				
P441E	6'-2"	10	STR.												
P442E	5'-7"	16	2	0'-4½"	4'-10"				0'-4½"						
P541E	22'-9"	82	T1	0'-5½"	3'-8"	7'-3"	3'-8"	7'-3"	0'-5½"						
P542E	6'-10"	12	T1	0'-5½"	3'-8"	5'-11"	3'-8"	5'-11"	0'-5½"						
P641E	27'-5"	16	STR.												
P841E	27'-5"	18	STR.												
P842	4'-6"	16	STR.												ALL THREAD BAR
S841E	33'-6½"	16	STR.												
P601E	5'-11"	18	2	1'-7"	2'-9"				1'-7"						
P602E	8'-2"	12	2	1'-7"	5'-0"				1'-7"						

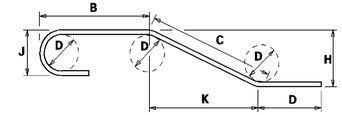

NOTES:

1. FIGURES SHOWN IN CIRCLES REPRESENT BAR BEND TYPES.
2. STANDARD BAR BENDS INCLUDE ONLY TYPES 1-32, S1-S12, AND T1-T16.
3. ALL DIMENSIONS ARE OUT-TO-OUT OF BAR EXCEPT "A" AND "G" ON STANDARD 180^ AND 135^ HOOKS.
4. "J" DIMENSIONS ON 180^ HOOKS TO BE SHOWN ONLY WHERE NECESSARY TO RESTRICT HOOK SIZE, OTHERWISE STANDARD HOOKS ARE TO BE USED.
5. WHERE "J" IS NOT SHOWN, "J" WILL BE KEPT EQUAL TO OR LESS THAN "H" ON TRUSS BARS. WHERE "J" CAN EXCEED "H", IT SHALL BE SHOWN.
6. "H" DIMENSIONS OF STIRRUPS TO BE SHOWN WHERE NECESSARY TO FIT WITHIN THE CONCRETE.
7. UNLESS OTHERWISE NOTED, DIAMETER "D" IS THE SAME FOR ALL BENDS AND HOOKS ON A BAR.
8. WHERE SLOPE DIFFERS FROM 45^ OFFSET, "H" AND "K" MUST BE SHOWN.
9. WHERE BARS ARE TO BE BENT MORE ACCURATELY THAN STANDARD BENDING TOLERANCES, BENDING DIMENSIONS WHICH REQUIRE CLOSER FABRICATION SHOULD HAVE LIMITS INDICATED.
10. FOR RECOMMENDED DIAMETER "D", OF BENDS, HOOKS, ETC., REFER TO TABLE AT RIGHT, 'CRSI' OR 'ACI' TABLES.
11. TYPE S1-S12, T1-T16 APPLY TO BAR SIZES 3 THROUGH 6.

ASTM STANDARD ENGLISH REINFORCING BARS				RECOMMENDED END HOOKS, APPLICABLE TO ALL GRADES				
	NOMINAL DIMENSIONS				180° HOOKS		90° HOOKS	
BAR SIZE	DIAMETER (inches)	AREA (inches²)	WEIGHT (lbs./ft.)	D	A OR G	J	A OR G	
3	0.375	0.110	0.376	2½"	5"	3"	6"	
4	0.500	0.200	0.668	3"	6"	4"	8"	
5	0.625	0.310	1.043	3½"	7"	5"	10"	
6	0.750	0.440	1.502	4½"	8"	6"	1'-0"	
7	0.875	0.600	2.044	5½"	10"	7"	1'-2"	
8	1.000	0.790	2.670	6"	11"	8"	1'-4"	
9	1.128	1.000	3.400	9½"	1'-3"	11½"	1'-7"	
10	1.270	1.270	4.303	10½"	1'-5"	1'-1½"	1'-10"	
11	1.410	1.560	5.313	1'-0"	1'-7"	1'-2½"	2'-0"	
14	1.693	2.250	7.650	1'-6½"	2'-3"	1'-9½"	2'-7"	
18	2.257	4.000	13.600	2'-0"	3'-0"	2'-4½"	3'-5"	

STANDARD BAR BENDS

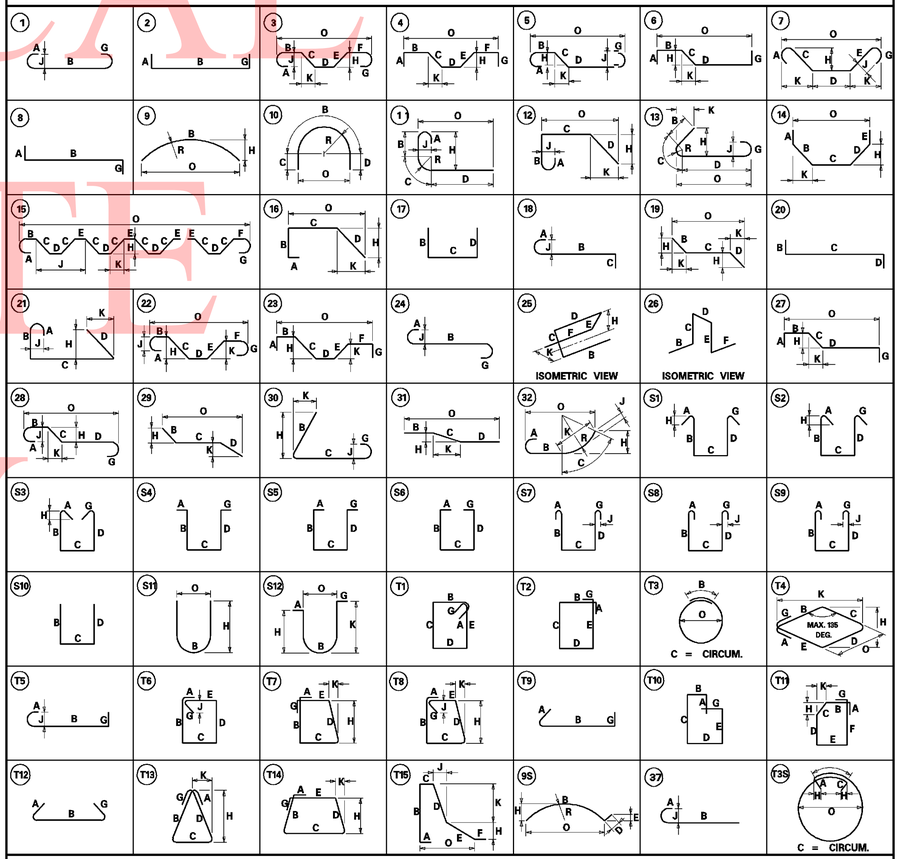

SPECIAL BAR BENDS

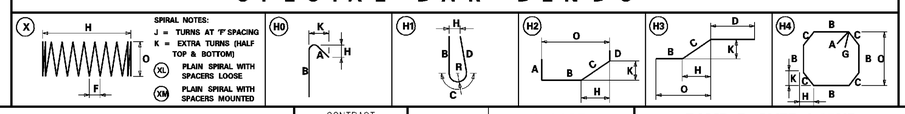

ADDENDUMS / REVISIONS

ADDENDUM NO. 4, REVISED BAR SCHEDULE, 04/01/11, DWD

DELAWARE DEPARTMENT OF TRANSPORTATION

SR1 / I-95 INTERCHANGE

CONTRACT	BRIDGE NO.	1-268B
28-090-03	DESIGNED BY:	
COUNTY	CHECKED BY:	
NEW CASTLE		

RAMP B OVER I-95NB

PIER REINFORCEMENT BAR SCHEDULE-2

SHEET NO.	S6-30A
	477A
TOTAL SHTS.	803

3/28/2011 9:38:12 PM
M:\PROJECTS\2003\03059_DELTRNPK\SR1_MALL\CADD\2809003\PLANS\DOV\ER05_BR-S6_SR1.DGN

UNOFFICIAL WEBSITE COPY

REINFORCING BAR LIST
PIER 1

MARK	LENGTH	NO. BARS	TYPE	A	B	C	D	E	G	H	J	K	O	R	REMARKS
PF601	17'-6"	26	T3S	0'-8"					0'-8"	0'-4½"		1'-6"	4'-6 8"		
PF602	5'-8"	26	T9	0'-8"	4'-0"				1'-0"						
PF603	4'-11"	118	STR.												
PF604	32'-6"	8	STR.												
PF605	23'-6"	8	STR.												
PF701	32'-6"	26	STR.												
PF702	23'-6"	36	STR.												
PF811	26'-8"	72	36	1'-4"	25'-4"										
PF1101	32'-6"	50	STR.												
PF1102	23'-6"	36	STR.												
PP401	9'-7"	108	T3		1'-6"	8'-1"							2'-6¾"		
PP801	8'-11"	192	37	0'-11"	8'-0"						0'-8"				
P601	17'-6"	112	T3S	0'-8"					0'-8"	0'-4½"		1'-6"	4'-8"		
P602	5'-8"	70	T9	0'-8"	4'-0"				1'-0"						
P603	20'-10"	18	10		7'-4"	6'-9"	6'-9"						4'-8"	2'-4"	
P604	6'-4"	18	T9	0'-8"	4'-8"				1'-0"						
P605	4'-8"	15	STR.												
P606	14'-10"	24	10		7'-4"	3'-9"	3'-9"						4'-8"	2'-4"	
P801	11'-4"	72	STR.												
P802	12'-11½"	30	9S		11'-3½"		0'-10"	0'-4"		1'-2"			11'-0"	13'-4¾"	
P803	6'-8½"	1	17		1'-1"	4'-6½"	1'-1"								
P804	7'-8½"	1	17		1'-6"	4'-6½"	1'-6"								
P805	8'-6½"	1	17		2'-0"	4'-6½"	2'-0"								
P806	9'-6½"	1	17		2'-6"	4'-6½"	2'-6"								
P807	10'-8½"	1	17		3'-1"	4'-6½"	3'-1"								
P808	12'-½"	1	17		3'-9"	4'-6½"	3'-9"								
P809	13'-6½"	1	17		4'-6"	4'-6½"	4'-6"								
P8010	15'-6½"	1	17		5'-6"	4'-6½"	5'-6"								
P8011	17'-10½"	1	17		6'-8"	4'-6½"	6'-8"								
P8012	22'-1½"	1	17		8'-9"	4'-6½"	8'-9"								
P8013	23'-4½"	1	17		9'-5"	4'-6½"	9'-5"								
P8014	19'-2½"	1	17		7'-4"	4'-6½"	7'-4"								
P8015	16'-6½"	1	17		6'-0"	4'-6½"	6'-0"								
P8016	14'-8½"	1	17		5'-1"	4'-6½"	5'-1"								
P8017	13'-1½"	1	17		4'-3"	4'-6½"	4'-3"								
P8018	11'-6½"	1	17		3'-6"	4'-6½"	3'-6"								
P8019	10'-2½"	1	17		2'-10"	4'-6½"	2'-10"								
P8020	9'-½"	1	17		2'-3"	4'-6½"	2'-3"								
P8021	8'-½"	1	17		1'-9"	4'-6½"	1'-9"								
P8022	7'-½"	5	17		1'-3"	4'-6½"	1'-3"								
P8023	6'-2½"	2	17		10"	4'-6½"	10"								
P901	16'-5"	2	1	1'-3"	13'-11"				1'-3"		0-11"				
P902	17'-7"	2	1	1'-3"	15'-1"				1'-3"		0-11"				
P903	18'-9"	2	1	1'-3"	16'-3"				1'-3"		0-11"				
P904	19'-2"	3	1	1'-3"	16'-8"				1'-3"		0-11"				
P905	9'-9"	2	1	1'-3"	7'-3"				1'-3"		0-11"				
P906	10'-11"	2	1	1'-3"	8'-5"				1'-3"		0-11"				
P907	12'-1"	2	1	1'-3"	9'-7"				1'-3"		0-11"				
P908	12'-6"	3	1	1'-3"	10'-0"				1'-3"		0-11"				
P909	14'-6"	2	1	1'-3"	12'-0"				1'-3"		0-11"				
P910	15'-8"	2	1	1'-3"	13'-2"				1'-3"		0-11"				
P911	16'-11"	2	1	1'-3"	14'-5"				1'-3"		0-11"				
P912	17'-4"	3	1	1'-3"	14'-10"				1'-3"		0-11"				
P441E	6'-2"	10	STR.												
P442E	5'-7"	16	2	0'-4½"	4'-10"				0'-4½"						
P541E	22'-9"	82	11	0'-5½"	3'-8"	7'-3"	3'-8"	7'-3"	0'-5½"						
P542E	6'-10"	12	11	0'-5½"	3'-8"	5'-11"	3'-8"	5'-11"	0'-5½"						
P641E	27'-5"	16	STR.												
P841E	27'-5"	18	STR.												
P842	4'-6"	16	STR.												ALL THREAD BAR
S841E	33'-6½"	16	STR.												
P601E	5'-11"	18	2	1'-7"	2'-9"				1'-7"						
P602E	8'-2"	12	2	1'-7"	5'-0"				1'-7"						

PIER 2 (NORTH AND SOUTH)

MARK	LENGTH	NO. BARS	TYPE	A	B	C	D	E	G	H	J	K	O	R	REMARKS
PF601	17'-6"	52	T3S	0'-8"					0'-8"	0'-4½"		1'-6"	4'-8"		
PF602	5'-8"	52	T9	0'-8"	4'-0"				1'-0"						
PF603	4'-11"	236	STR.												
PF604	32'-6"	16	STR.												
PF605	23'-6"	16	STR.												
PF701	32'-6"	52	STR.												
PF702	23'-6"	72	STR.												
PF821	14'-8"	188	36	1'-4"	13'-4"										
PF1101	32'-6"	100	STR.												
PF1102	23'-6"	72	STR.												
PP401	9'-7"	216	T3		1'-6"	8'-1"							2'-6¾"		
PP801	8'-11"	384	37	0'-11"	8'-0"						0'-8"				
P601	17'-6"	236	T3S	0'-8"					0'-8"	0'-4½"		1'-6"	4'-8"		
P602	5'-8"	236	T9	0'-8"	4'-0"				1'-0"						
P822	25'-0"	94	STR.												
P823	20'-10"	94	STR.												
P521	13'-3"	480	17		5'-3"	2'-9"	5'-3"								
P523	13'-6"	97	T2	0'-7"	4'-6"	1'-8"	4'-6"	1'-8"	0'-7"						
P526	12'-2"	84	17		5'-3"	1'-8"	5'-3"								
P527	7'-7"	168	2	1'-10"	5'-9"				0'-0"						
P530	6'-0"	42	STR.												
P531	23'-1¾"	21	STR.												
P532	8'-9"	63	STR.												
P533	29'-2½"	21	STR.												
P1421	60'-0"	65	STR.												GRADE 75, ALL THREAD BAR
P1422	31'-8"	65	STR.												GRADE 75, ALL THREAD BAR
P601E	5'-11"	18	2	1'-7"	2'-9"				1'-7"						
P602E	8'-2"	12	2	1'-7"	5'-0"				1'-7"						

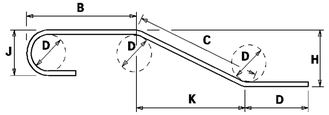

NOTES:

1. FIGURES SHOWN IN CIRCLES REPRESENT BAR BEND TYPES.
2. STANDARD BAR BENDS INCLUDE ONLY TYPES 1-32, S1-S12, AND T1-T16.
3. ALL DIMENSIONS ARE OUT-TO-OUT OF BAR EXCEPT "A" AND "G" ON STANDARD 180^ AND 135^ HOOKS.
4. "J" DIMENSIONS ON 180^ HOOKS TO BE SHOWN ONLY WHERE NECESSARY TO RESTRICT HOOK SIZE, OTHERWISE STANDARD HOOKS ARE TO BE USED.
5. WHERE "J" IS NOT SHOWN, "J" WILL BE KEPT EQUAL TO OR LESS THAN "H" ON TRUSS BARS. WHERE "J" CAN EXCEED "H", IT SHALL BE SHOWN.
6. "H" DIMENSIONS OF STIRRUPS TO BE SHOWN WHERE NECESSARY TO FIT WITHIN THE CONCRETE.
7. UNLESS OTHERWISE NOTED, DIAMETER "D" IS THE SAME FOR ALL BENDS AND HOOKS ON A BAR.
8. WHERE SLOPE DIFFERS FROM 45^ OFFSET, "H" AND "K" MUST BE SHOWN.
9. WHERE BARS ARE TO BE BENT MORE ACCURATELY THAN STANDARD BENDING TOLERANCES, BENDING DIMENSIONS WHICH REQUIRE CLOSER FABRICATION SHOULD HAVE LIMITS INDICATED.
10. FOR RECOMMENDED DIAMETER "D", OF BENDS, HOOKS, ETC., REFER TO TABLE AT RIGHT, 'CRSI' OR 'ACI' TABLES.
11. TYPE S1-S12, T1-T16 APPLY TO BAR SIZES 3 THROUGH 6.

ASTM STANDARD ENGLISH REINFORCING BARS				RECOMMENDED END HOOKS, APPLICABLE TO ALL GRADES				
	NOMINAL DIMENSIONS				180° HOOKS		90° HOOKS	
BAR SIZE	DIAMETER (inches)	AREA (inches²)	WEIGHT (lbs./ft.)	D	A OR G	J	A OR G	
3	0.375	0.110	0.376	2½"	5"	3"	6"	
4	0.500	0.200	0.668	3"	6"	4"	8"	
5	0.625	0.310	1.043	3½"	7"	5"	10"	
6	0.750	0.440	1.502	4½"	8"	6"	1'-0"	
7	0.875	0.600	2.044	5½"	10"	7"	1'-2"	
8	1.000	0.790	2.670	6"	11"	8"	1'-4"	
9	1.128	1.000	3.400	9½"	1'-3"	11½"	1'-7"	
10	1.270	1.270	4.303	10½"	1'-5"	1'-1½"	1'-10"	
11	1.410	1.560	5.313	1'-0"	1'-7"	1'-2½"	2'-0"	
14	1.693	2.250	7.650	1'-6½"	2'-3"	1'-9½"	2'-7"	
18	2.257	4.000	13.600	2'-0"	3'-0"	2'-4½"	3'-5"	

STANDARD BAR BENDS

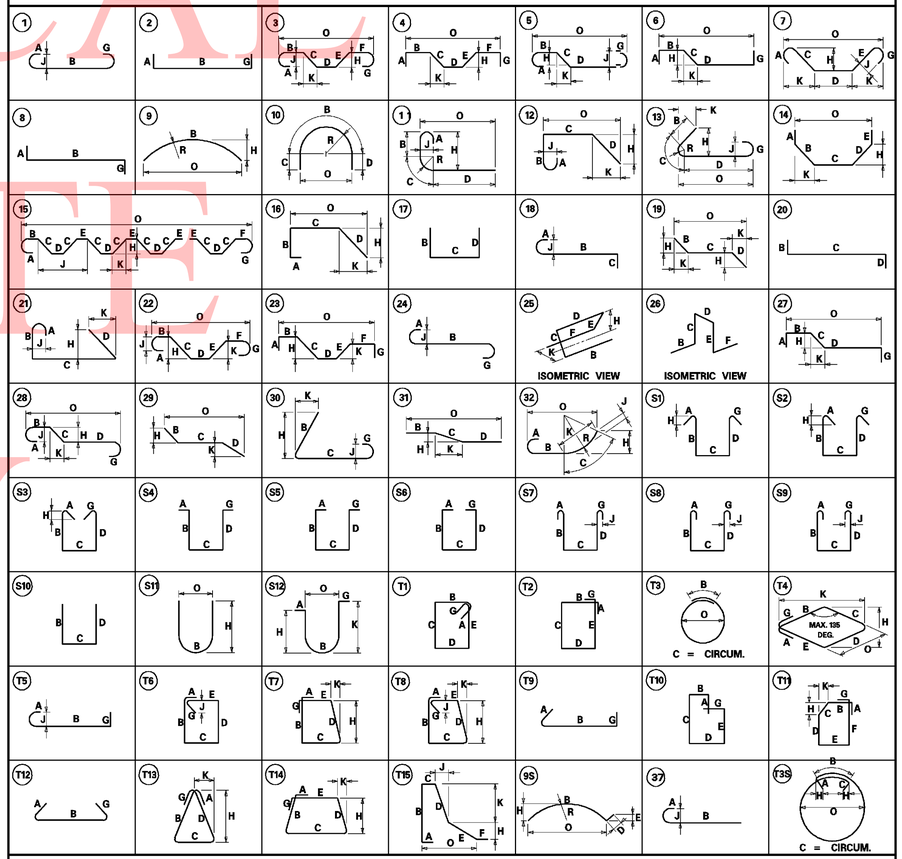

SPECIAL BAR BENDS

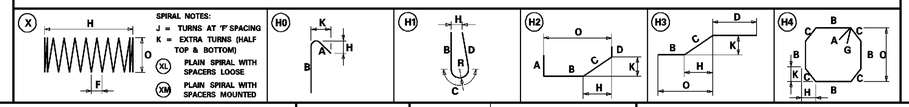

UNOFFICIAL WEBSITE COPY

DELAWARE DEPARTMENT OF TRANSPORTATION

ADDENDUMS / REVISIONS	
ADDENDUM NO. 2, NEW SHEET CREATED,	
04/01/11, DWD	

SR1 / I-95 INTERCHANGE

CONTRACT	BRIDGE NO.	1-268B	RAMP B OVER I-95NB
28-090-03	DESIGNED BY:		PIER REINFORCEMENT BAR SCHEDULE-1
COUNTY	CHECKED BY:		
NEW CASTLE			

S6-30A1	
SHEET NO.	477A1
TOTAL SHTS.	803

3/29/2011 9:07:13 AM
M:\PROJECTS\2003\03059_DELTRNPK\SR1_MALL\CADD\2809003\PLANS.DGN\BR02_BR-S6_SR1_A04.DGN

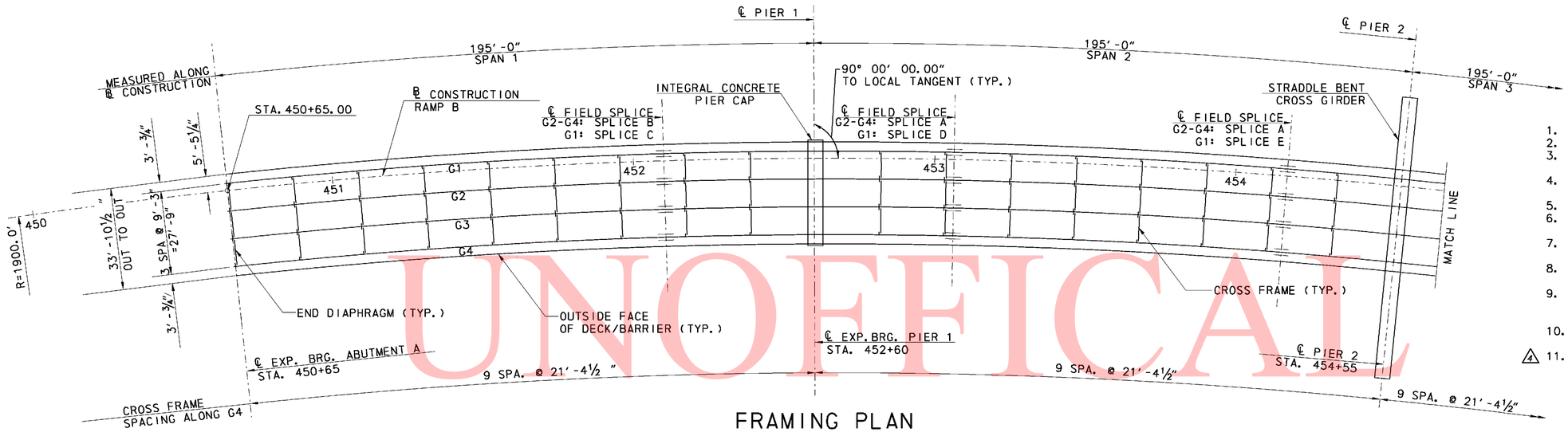

FRAMING PLAN

SCALE: 1″ = 20′-0″

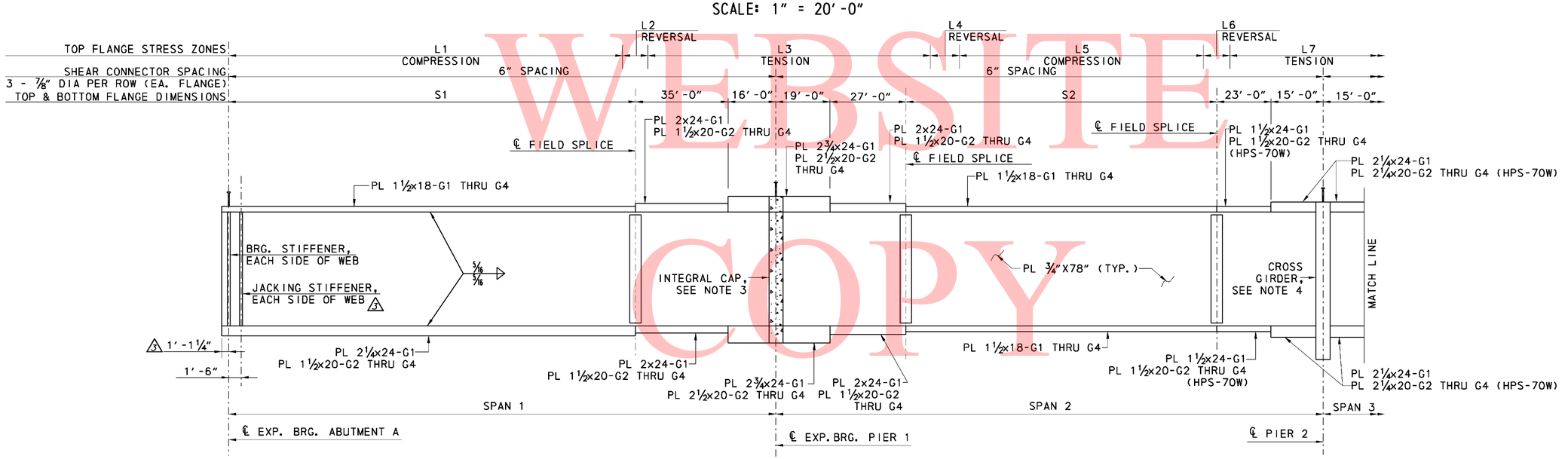

GIRDER ELEVATION

NOT TO SCALE

NOTES:

1. FOR GENERAL NOTES, SEE DWG. S6-02.
2. FOR TYPICAL SECTION, SEE DWG. S6-03.
3. FOR INTEGRAL PIER CAP DETAILS, SEE DWG. S6-028 AND S6-29.
4. FOR CROSS GIRDER DETAILS, SEE DWG. S6-23 THRU S6-25.
5. FOR DIAPHRAGM DETAILS, SEE DWG. S6-35.
6. FOR INTERMEDIATE CROSS FRAME DETAILS, SEE DWG. S6-35.
7. FOR GIRDER FIELD SPLICE DETAILS, SEE DWG. S6-33 AND S6-34.
8. FOR BEARING TYPES AND LOCATIONS, SEE DWG. S6-38.
9. THERE SHALL BE NO FIELD WELDING TO THE TOP FLANGE, EXCEPT FOR SHEAR STUDS, IN THE TENSION AND STRESS REVERSAL AREAS.
10. SHEAR STUDS SHALL BE SPACED TO CLEAR SPLICE BOLTS.
11. ENTIRE SUPERSTRUCTURE FRAMING SHALL BE PRE-ASSEMBLED IN SHOP TO VERIFY FIT.

△4

△3

GIRDER	RADIUS	PLATE LENGTH								STRESS ZONE LENGTHS												
		SPAN 1	SPAN 2	SPAN 3	SPAN 4	S1	S2	S3	S4	L1	L2	L3	L4	L5	L6	L7	L8	L9	L10	L11	L12	L13
G1	1902′-4½″	195′-2⅛″	195′-2⅛″	195′-2⅛″	165′-2½″	144′-2⅛″	111′-2⅛″	111′-2⅛″	121′-2½″	149′-3½″	9′-3¼″	82′-9¼″	17′-2⅜″	92′-9⅝″	9′-11¾″	68′-8⅛″	5′-7⅛″	102′-2⅛″	13′-5⅛″	67′-6⅛″	9′-11⅛″	122′-2⅜″
G2	1893′-1½″	194′-3⅛″	194′-3⅛″	194′-3⅛″	164′-4⅛″	143′-3⅛″	110′-3⅛″	110′-3⅛″	120′-4⅛″	149′-9⅛″	9′-2⅝″	76′-4⅛″	16′-2⅛″	98′-5⅛″	8′-8⅛″	67′-6⅝″	6′-0⅛″	104′-0″	12′-11⅛″	67′-3⅛″	8′-8½″	122′-1⅞″
G3	1883′-10½″	193′-4⅛″	193′-4⅛″	193′-4⅛″	163′-7⅛″	142′-4⅛″	109′-4⅛″	109′-4⅛″	119′-7⅛″	148′-6⅝″	9′-5½″	75′-0⅛″	15′-0″	99′-5⅛″	7′-10⅛″	68′-7⅛″	5′-9⅛″	104′-9⅞″	12′-3½″	66′-1⅛″	8′-9⅛″	121′-9⅛″
G4	1874′-7½″	192′-4¾″	192′-4¾″	192′-4¾″	162′-9⅛″	141′-4¾″	108′-4¾″	108′-4¾″	118′-9⅛″	147′-2¼″	9′-8⅜″	75′-1⅛″	13′-2¼″	99′-6⅛″	8′-0¼″	69′-5⅛″	5′-4⅛″	105′-1⅛″	11′-11¾″	65′-4⅛″	9′-0¾″	120′-9⅛″

UNOFICAL WEBSITE COPY

DELAWARE DEPARTMENT OF TRANSPORTATION	ADDENDUMS / REVISIONS △3, DIMENSION, TABLE, JACKING STIFFENER, 02/18/11, DWD △4, ADDED NOTE, 04/01/11, DWD		SR1 / I-95 INTERCHANGE	CONTRACT 28-090-03 COUNTY NEW CASTLE	BRIDGE NO. 1-268B DESIGNED BY: MDM CHECKED BY: DWD	RAMP B OVER I-95NB FRAMING PLAN AND GIRDER ELEVATION 1	S6-31 SHEET NO. 478 TOTAL SHTS. 803

4/7/2011 2:39:13 PM
M:\PROJECTS\2003\03059_DELTRNPK\SR1_MALL\CADD\2809003\PLANS.DGV\FR01_BR-S6_SR1.DGN

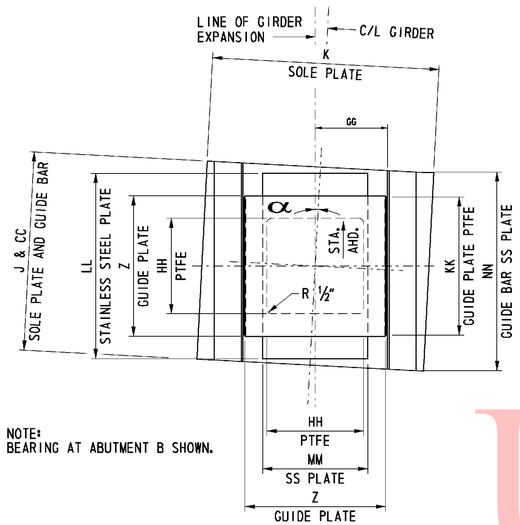

NOTE:
BEARING AT ABUTMENT B SHOWN.

SECTION A-A
NOT TO SCALE

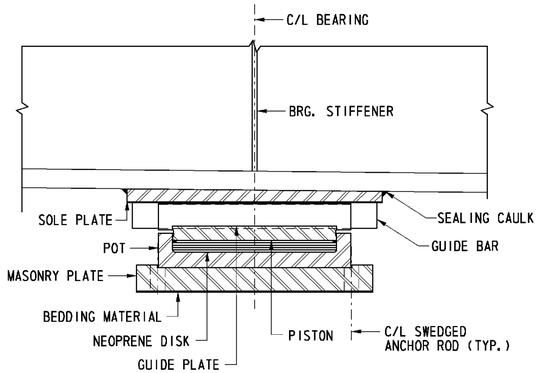

SIDE VIEW
NOT TO SCALE

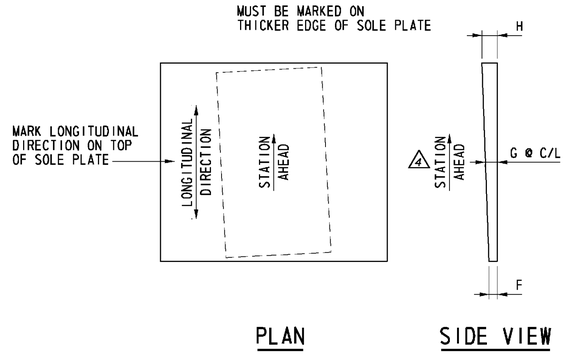

PLAN
SIDE VIEW
SOLE PLATE DETAIL
NOT TO SCALE

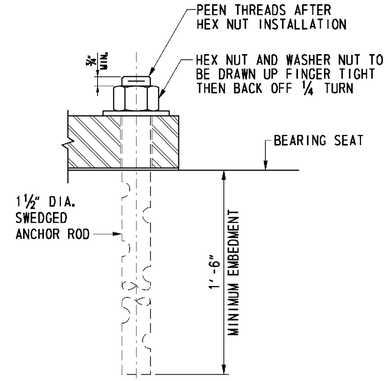

ANCHOR ROD DETAIL
NOT TO SCALE

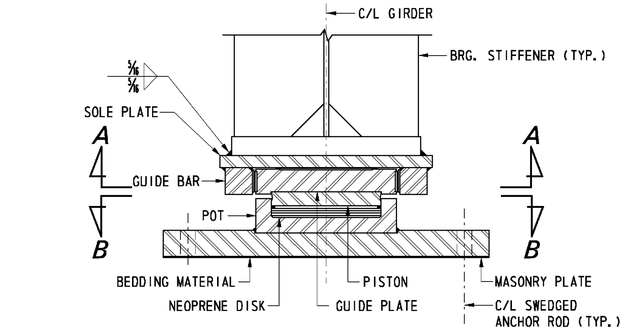

ELEVATION
NOT TO SCALE

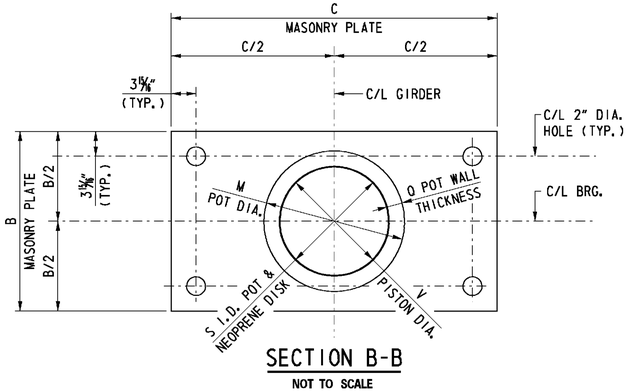

SECTION B-B
NOT TO SCALE

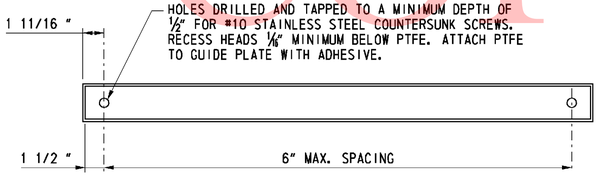

GUIDE PLATE PTFE DETAIL
NOT TO SCALE

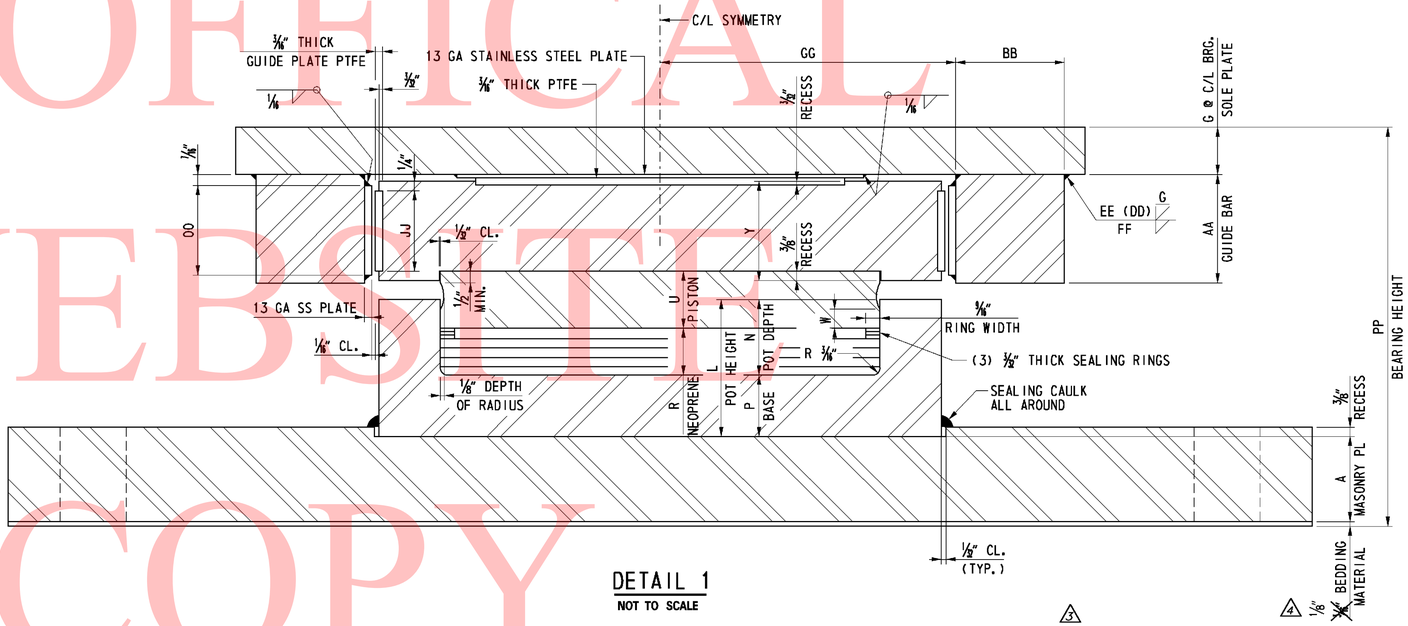

DETAIL 1
NOT TO SCALE

LOCATION	SERVICE	STRENGTH		α	MASONRY PLATE			SOLE PLATE				
	VERTICAL LOAD (kips)	VERTICAL LOAD (kips)	HORIZONTAL LOAD (kips)		A	B	C	F	G	H	J	K
ABUTMENT A - G2-G3	350	450	100	5°51'12" RT	2½"	19"	37½"	100	1⅜"	1⅝"	24"	27"
ABUTMENT B - G2-G3	350	450	100	5°25'41" LT	2½"	19"	37½"	100	1⅜"	1⅝"	24"	27"
PIER 1 - G2 - G3	1500	2200	450	2°56'25" RT	3⅛"	33⅜"	56⅞"	4¼"	2"	1⅞"	35¼"	43⅜"
PIER 3 - G2 - G3	1500	2200	450	2°56'25" LT	3⅛"	33⅜"	56⅞"	4¼"	2"	1⅞"	35¼"	43⅜"

LOCATION	POT					NEOPRENE DISC		PISTON		GUIDE PLATE	
	L	M	N	P	Q	R	S	U	V	Y	Z
ABUTMENT A - G2-G3	3⅝"	14⅞"	2"	100	1⅝"	1¼"	11⅝"	1½"	11.585	½"	2⅝"	14⅞"
ABUTMENT B - G2-G3	3⅝"	14⅞"	2"	100	1⅝"	1¼"	11⅝"	1½"	11.585	½"	2⅝"	14⅞"
PIER 1 - G2 - G3	5¼"	30⅜"	3⅛"	¾"	3⅜"	2⅜"	23⅝"	2⅝"	23.585	1"	4⅛"	30⅜"
PIER 3 - G2 - G3	5¼"	30⅜"	3⅛"	¾"	3⅜"	2⅜"	23⅝"	2⅝"	23.585	1"	4⅛"	30⅜"

N	P
2"	1⅝"
2"	1⅝"
3⅛"	1 1/16"
3⅛"	1 1/16"

F	G	H
1⅜"	1⅛"	1⅝"
1⅝"	1¼"	⅞"
1½"	1 9/16"	1⅝"
1⅝"	1¼"	⅞"

LOCATION	GUIDE BARS							PTFE			STAINLESS STEEL				* BEARING HEIGHT
	AA	BB	CC	DD	EE	FF	GG	HH	JJ	KK	LL	MM	NN	OO	PP
ABUTMENT A - G2-G3	2⅞"	2⅞"	24"	5/16"	7/16"	⅜"	7.684	10⅛"	2⅛"	14⅝"	21⅝"	11⅛"	23¾"	2⅝"	~~10⅝"~~ 10⅞"
ABUTMENT B - G2-G3	2⅞"	2⅞"	24"	5/16"	7/16"	⅜"	7.684	10⅛"	2⅛"	14⅝"	21⅝"	11⅛"	23¾"	2⅝"	~~10⅝"~~ 10⅞"
PIER 1 - G2 - G3	5⅛"	5⅛"	35¼"	¾"	⅞"	¾"	15.465	20¾"	4⅜"	30⅛"	35⅛"	21¾"	35⅛"	4⅝"	~~16⅛"~~ 16⅛"
PIER 3 - G2 - G3	5⅛"	5⅛"	35¼"	¾"	⅞"	¾"	15.465	20¾"	4⅜"	30⅛"	35⅛"	21¾"	35⅛"	4⅝"	~~16⅛"~~ 16⅜"

* BEARING HEIGHT INCLUDES ⅛" BEDDING MATERIAL.
BEARING HEIGHT MEASURED AT C/L BEARING

UNOFICAL WEBSITE COPY

DELAWARE DEPARTMENT OF TRANSPORTATION

ADDENDUMS / REVISIONS
ADDENDUM NO. 3, ADDED ORIENTATION ANGLE, 02/18/11, DWD
ADDENDUM NO. 4, MODIFIED DIMENSIONS, CALLOUT, 04/01/11, DWD

SR1 / I-95 INTERCHANGE

CONTRACT	BRIDGE NO.	1-268B
28-090-03	DESIGNED BY:	RMB
COUNTY	CHECKED BY:	DWD
NEW CASTLE		

RAMP B OVER I-95NB
GUIDED EXPANSION BEARING DETAILS

S6-39
SHEET NO. 486
TOTAL SHTS. 803

3/22/2011 3:05:28 PM
M:\PROJECTS\2003\03059_DELTRNPK\SR1_MALL\CADD\2809003\PLANS\DOV\BD02_BR-S6_SR1.DGN

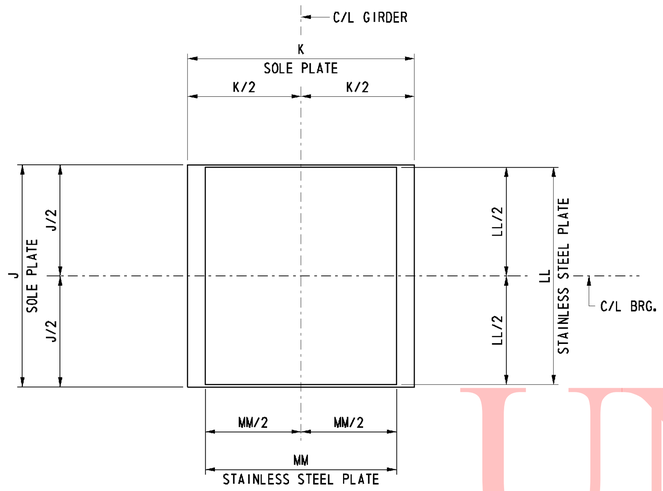

SECTION A-A
NOT TO SCALE

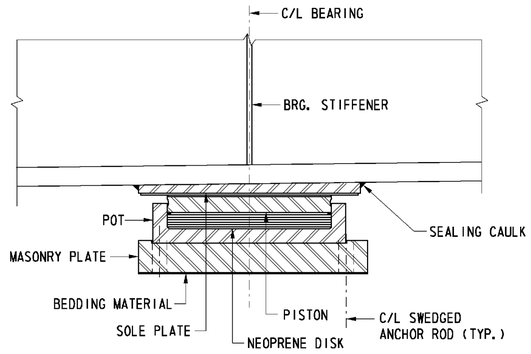

SIDE VIEW
NOT TO SCALE

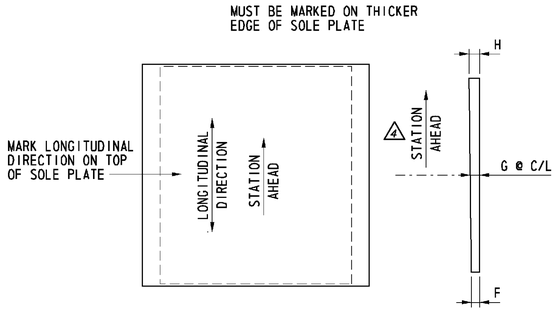

PLAN
SIDE VIEW
SOLE PLATE DETAIL
NOT TO SCALE

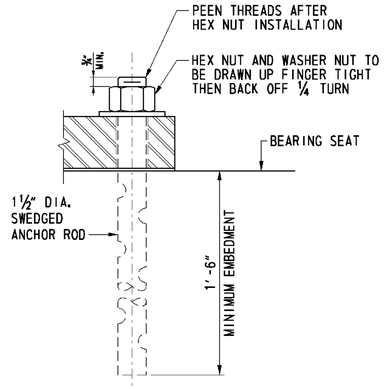

ANCHOR ROD DETAIL
NOT TO SCALE

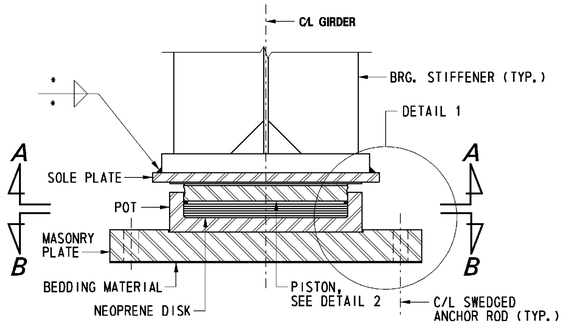

ELEVATION
NOT TO SCALE

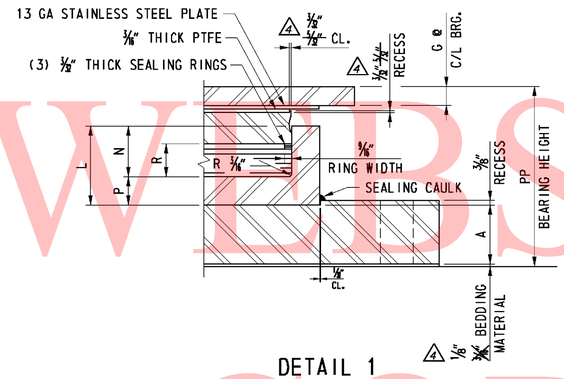

DETAIL 1
NOT TO SCALE

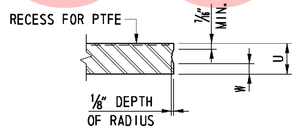

DETAIL 2
NOT TO SCALE

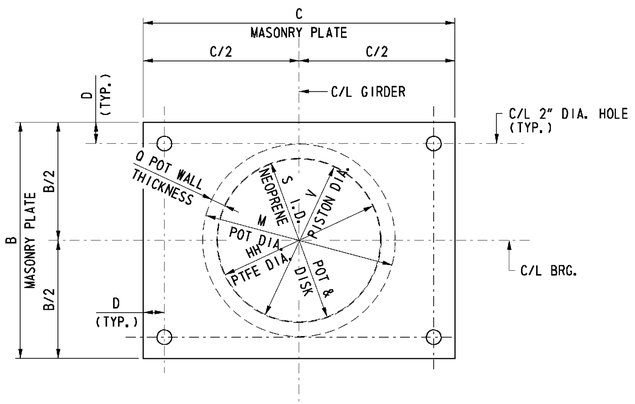

SECTION B-B
NOT TO SCALE

4

F	G	H
1 5/16"	1 1/2"	1 5/8"
1 5/8"	1 1/4"	1 5/16"

LOCATION	SERVICE VERTICAL LOAD (kips)	STRENGTH VERTICAL LOAD (kips)	MASONRY PLATE				SOLE PLATE				POT				
			A	B	C	D	F	G	H	J	K	L	M	N	P	Q
ABUTMENT A - G1 & G4	350	450	2 1/4"	19"	34 1/2"	25/8"	7/8"	1 1/4"	1 5/8"	21"	24"	3 5/8"	14 7/8"	2"	1 5/8"	1 5/8"
ABUTMENT B - G1 & G4	350	450	2 1/4"	19"	34 1/2"	25/8"	1 1/8"	1 1/4"	1 5/8"	21"	24"	3 5/8"	14 7/8"	2"	1 5/8"	1 5/8"

LOCATION	NEOPRENE DISC		PISTON			PTFE	STAINLESS STEEL		ANCHOR ROD		* BEARING HEIGHT
	R	S	U	V	W	HH	LL	MM	QTY.	DIA.	PP
ABUTMENT A - G1 & G4	1 1/4"	11 5/8"	1 1/2"	11.585"	1/2"	11 3/8"	17 1/4"	14 1/2"	4	1 1/2"	~~8 1/16"~~ 8 1/16" 4
ABUTMENT B - G1 & G4	1 1/4"	11 5/8"	1 1/2"	11.585"	1/2"	11 3/8"	17 1/4"	14 1/2"	4	1 1/2"	8 1/16"

* BEARING HEIGHT INCLUDES ⅛" BEDDING MATERIAL.
BEARING HEIGHT MEASURED AT C/L BEARING.

UNOFFICAL WEBSITE COPY

9/24/2010 2:06:37 PM
M:\PROJECTS\2003\03059_DELTRNPK\SR1_MALL\CADD\2809003\PLANS.DGN\BD03_BR-S6_SR1.DGN

DELAWARE DEPARTMENT OF TRANSPORTATION

ADDENDUMS / REVISIONS
ADDENDUM NO. 4, MODIFIED DIMENSIONS, CALLOUT, 04/01/11, DWD

SR1 / I-95 INTERCHANGE

CONTRACT	BRIDGE NO.	1-268B
28-090-03	DESIGNED BY:	RMB
COUNTY	CHECKED BY:	DWD
NEW CASTLE		

RAMP B OVER I-95NB
NON-GUIDED EXPANSION BEARING DETAILS

S6-40
SHEET NO. 487
TOTAL SHTS. 803

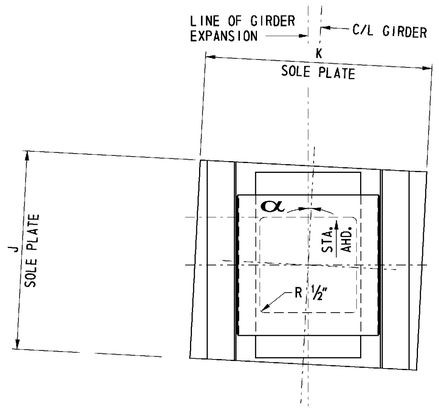

NOTE:
BEARING AT ABUTMENT B SHOWN.

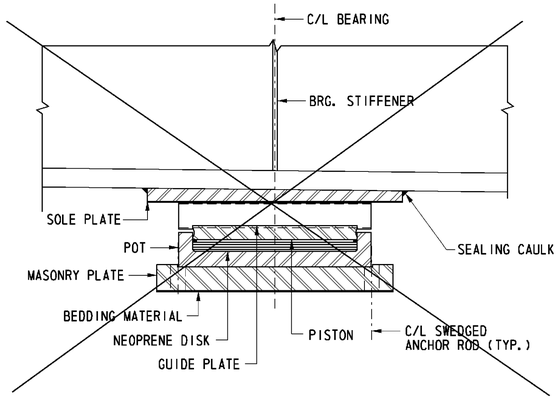

⚠4 SIDE VIEW
NOT TO SCALE

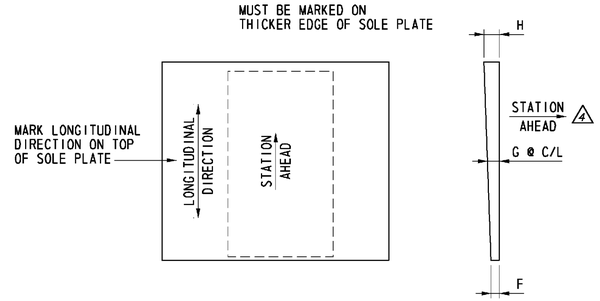

PLAN SIDE VIEW

SOLE PLATE DETAIL
NOT TO SCALE

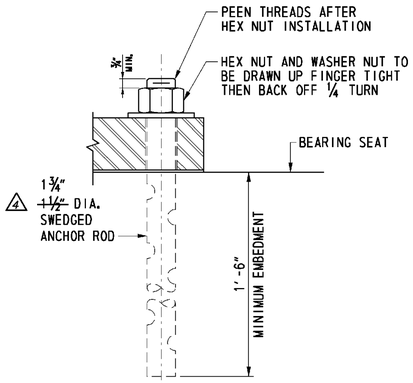

ANCHOR ROD DETAIL
NOT TO SCALE

SECTION A-A
NOT TO SCALE

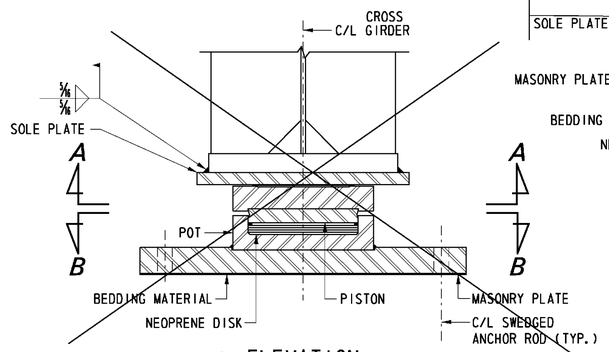

⚠4 ELEVATION
NOT TO SCALE

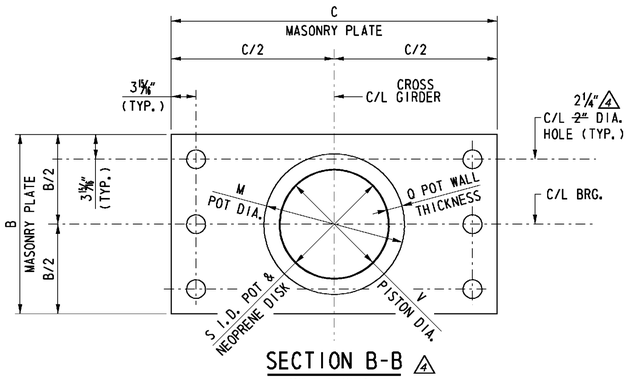

SECTION B-B ⚠4
NOT TO SCALE

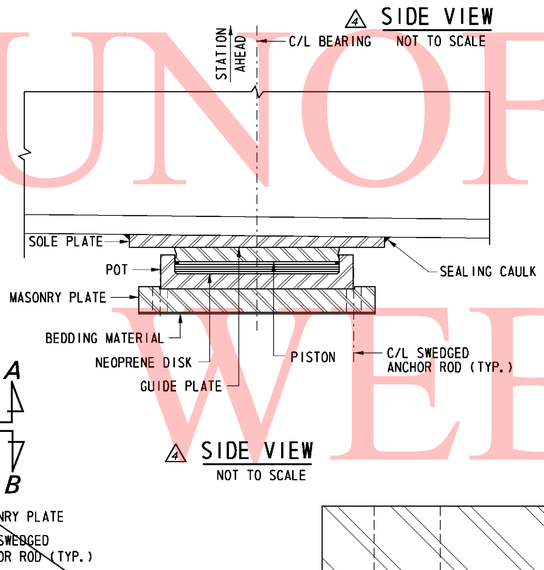

⚠4 SIDE VIEW
NOT TO SCALE

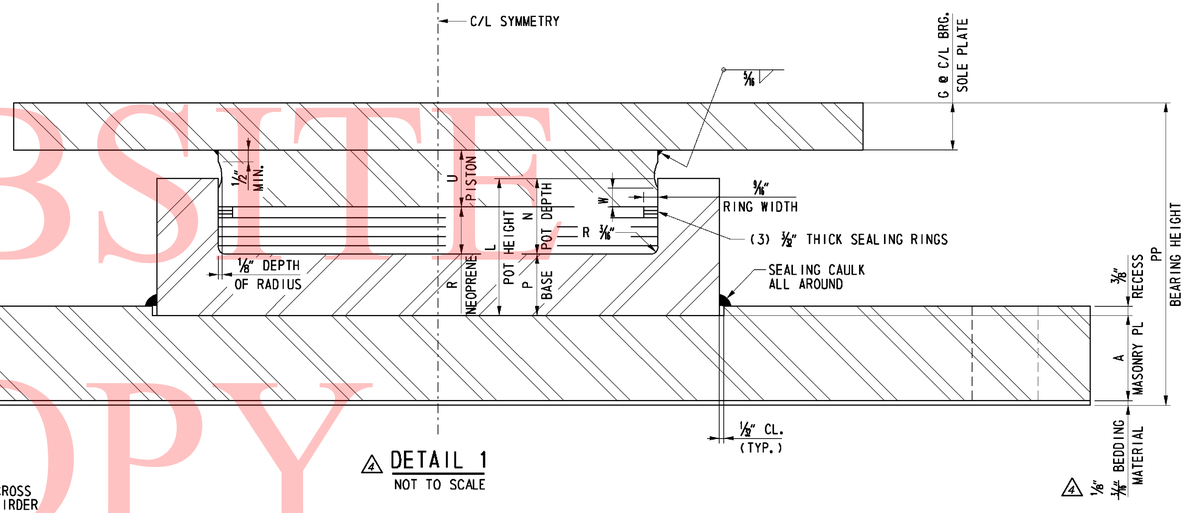

⚠4 DETAIL 1
NOT TO SCALE

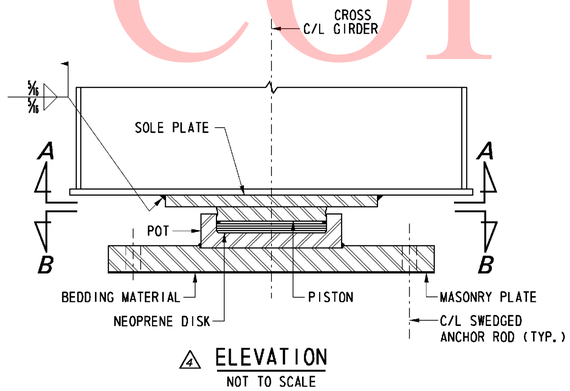

⚠4 ELEVATION
NOT TO SCALE

LOCATION	SERVICE	STRENGTH		α	MASONRY PLATE			SOLE PLATE				
	VERTICAL LOAD (kips)	VERTICAL LOAD (kips)	HORIZONTAL LOAD (kips)		A	B	C	F	G	H	J	K
PIER 2 COL. N & S	1200	2000	360	2°-51'-53" RT	2 5/16"	29 1/8"	40 3/4"	-5"- 3" ⚠4	2"	-15/16"- 1" ⚠4	27¼"	27¼"

LOCATION	POT					NEOPRENE DISC		PISTON			BEARING HEIGHT
	L	M	N	P	Q	R	S	U	V	W	PP
PIER 2 COL. N & S	4 1/16"	27¼"	3 1/16"	-1/16"- 1" ⚠4	3"	2 1/8"	21¼"	2¼"	21.210	⅞"	-8 5/8"- 9 7/8" ⚠4

* BEARING HEIGHT INCLUDES ⅛" BEDDING MATERIAL.
BEARING HEIGHT MEASURED AT C/L BEARING

UNOFFICAL WEBSITE COPY

4/8/2011 2:52:04 PM
M:\PROJECTS\2003\03059_DELTRNPK\SR1_MALL\CADD\2809003\PLANS.DGN\BD04_BR-S6_SR1.DGN

DELAWARE
DEPARTMENT OF TRANSPORTATION

ADDENDUMS / REVISIONS
ADDENDUM NO. ⚠4, BEARING DIMENSIONS, SIDE VIEW, ELEVATION, DETAIL 1, SECTION B-B, ANCHOR ROD, 04/01/11, DWD

SR1 / I-95 INTERCHANGE

CONTRACT	BRIDGE NO.	1-268B
28-090-03	DESIGNED BY:	RMB
COUNTY	CHECKED BY:	DWD
NEW CASTLE		

RAMP B OVER I-95NB
FIXED BEARING DETAILS

S6- 41
SHEET NO. 488
TOTAL SHTS. 803

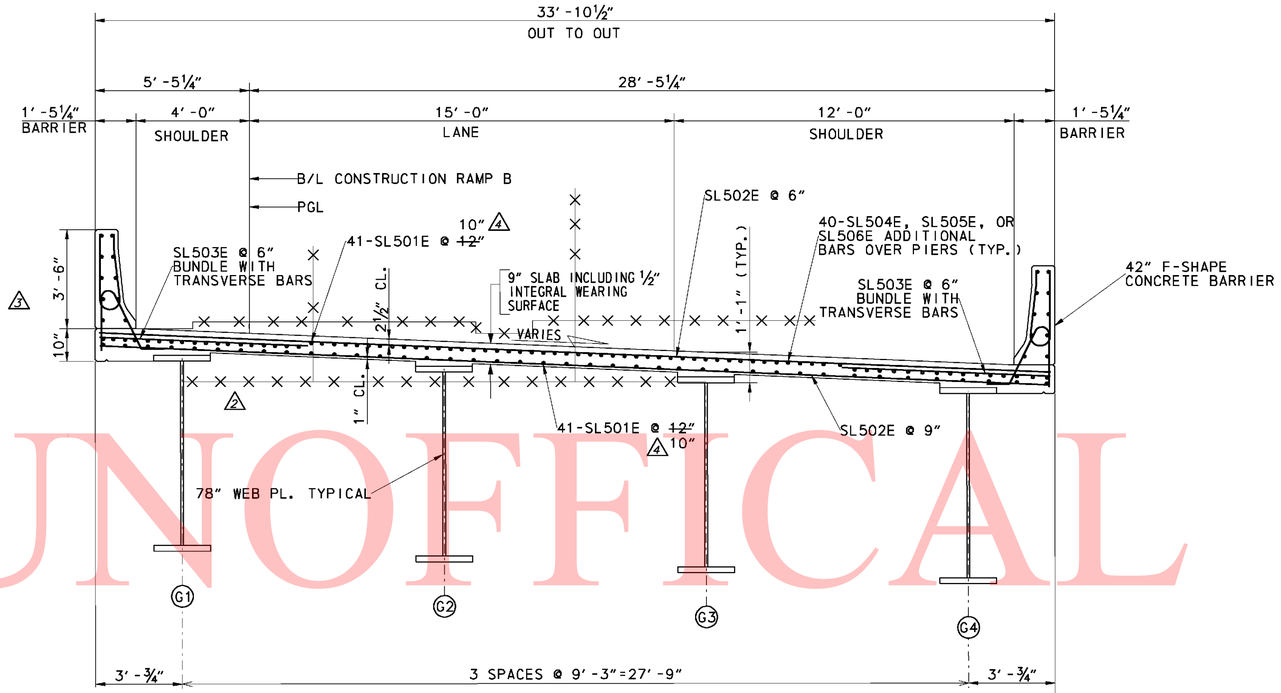

TYPICAL SECTION - RAMP B OVER I-95NB

SCALE: ⅜″ = 1′-0″

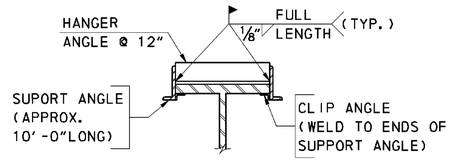

TENSION FLANGE FOR SIP FORMS

SCALE: NTS

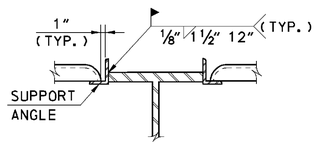

COMPRESSION FLANGE FOR SIP FORMS

SCALE: NTS

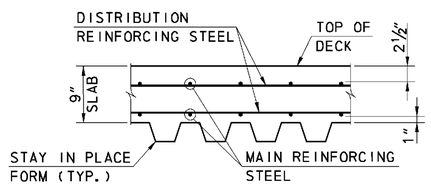

STEEL FORM SECTION

SCALE: NTS

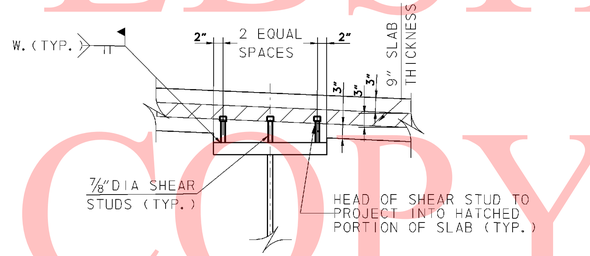

SHEAR STUD DETAIL

SCALE: NTS

NOTE: SIP FORM DETAILS NOT SHOWN

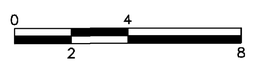

SCALE: ⅜″=1′-0″

UNOFFICAL WEBSITE COPY

DELAWARE DEPARTMENT OF TRANSPORTATION	ADDENDUMS / REVISIONS		SR1/I-95 INTERCHANGE	CONTRACT 28-090-03	BRIDGE NO. 1-268B	RAMP B OVER I-95NB DECK SECTIONS AND DETAILS	S6-46
	ADDENDUM NO. 2, DELETED STRAY LINEWORK, 01/26/11, DWD	ADDENDUM NO. 4, REBAR CALL-OUT, 04/01/11, DWD		COUNTY NEW CASTLE	DESIGNED BY: RMB		SHEET NO. 493
	ADDENDUM NO. 3, DIMENSIONS, 02/18/11, DWD				CHECKED BY: DWD		TOTAL SHTS. 803

3/28/2011 8:05:50 PM
M:\PROJECTS\2003\0.3059_DELTRNPK\SR1_MALL\CADD\2809003\PLANS.DOV\DK05_BR-S6_SR1.DGN

REINFORCING BAR LIST
BRIDGE DECK SLAB AND BARRIER

MARK	LENGTH	NO. BARS	TYPE	A	B	C	D	E	G	H	J	K	O	R	REMARKS
SL501E	60'-0"	1268	STR.												
SL502E	33'-6"	2511	STR.												
SL503E	7'-6"	3012	STR.												
SL504E	23'-3"	160	STR.												
SL505E	39'-3"	40	STR.												
SL506E	28'-3"	40	STR.												
SL507E	6'-5¼"	2246	T15		2'-0"	0'-5¼"	2'-6"				0'-11"	2'-0"	1'-6"		4
PA501E	6'-8¼"	2246	H1		2'-10"	1'-¼"	2'-10"			0'-5"					
PA502E	60'-0"	52	STR.												
PA503E	45'-0"	4	STR.												
PA701E	60'-0"	112	STR.												
PA702E	20'-0"	8	STR.												
PA801E	60'-0"	112	STR.												
PA802E	50'-0"	8	STR.												

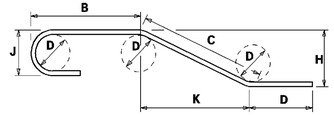

NOTES:
1. FIGURES SHOWN IN CIRCLES REPRESENT BAR BEND TYPES.
2. STANDARD BAR BENDS INCLUDE ONLY TYPES 1-32, S1-S12, AND T1-T16.
3. ALL DIMENSIONS ARE OUT-TO-OUT OF BAR EXCEPT "A" AND "G" ON STANDARD 180^ AND 135^ HOOKS.
4. "J" DIMENSIONS ON 180^ HOOKS TO BE SHOWN ONLY WHERE NECESSARY TO RESTRICT HOOK SIZE, OTHERWISE STANDARD HOOKS ARE TO BE USED.
5. WHERE "J" IS NOT SHOWN, "J" WILL BE KEPT EQUAL TO OR LESS THAN "H" ON TRUSS BARS. WHERE "J" CAN EXCEED "H", IT SHALL BE SHOWN.
6. "H" DIMENSIONS OF STIRRUPS TO BE SHOWN WHERE NECESSARY TO FIT WITHIN THE CONCRETE.
7. UNLESS OTHERWISE NOTED, DIAMETER "D" IS THE SAME FOR ALL BENDS AND HOOKS ON A BAR.
8. WHERE SLOPE DIFFERS FROM 45^ OFFSET, "H" AND "K" MUST BE SHOWN.
9. WHERE BARS ARE TO BE BENT MORE ACCURATELY THAN STANDARD BENDING TOLERANCES, BENDING DIMENSIONS WHICH REQUIRE CLOSER FABRICATION SHOULD HAVE LIMITS INDICATED.
10. FOR RECOMMENDED DIAMETER "D", OF BENDS, HOOKS, ETC., REFER TO TABLE AT RIGHT, 'CRSI' OR 'ACI' TABLES.
11. TYPE S1-S12, T1-T16 APPLY TO BAR SIZES 3 THROUGH 6.

ASTM STANDARD ENGLISH REINFORCING BARS				RECOMMENDED END HOOKS, APPLICABLE TO ALL GRADES			
	NOMINAL DIMENSIONS				180° HOOKS		90° HOOKS
BAR SIZE	DIAMETER (inches)	AREA (inches²)	WEIGHT (lbs./ft.)	D	A OR G	J	A OR G
3	0.375	0.110	0.376	2"	5"	3"	6"
4	0.500	0.200	0.668	3"	6"	4"	8"
5	0.625	0.310	1.043	3"	7"	5"	10"
6	0.750	0.440	1.502	4"	8"	6"	1'-0"
7	0.875	0.600	2.044	5"	10"	7"	1'-2"
8	1.000	0.790	2.670	6"	11"	8"	1'-4"
9	1.128	1.000	3.400	9"	1'-3"	11"	1'-7"
10	1.270	1.270	4.303	10"	1'-5"	1'-1"	1'-10"
11	1.410	1.560	5.313	1'-0"	1'-7"	1'-2"	2'-0"
14	1.693	2.250	7.650	1'-6"	2'-3"	1'-9"	2'-7"
18	2.257	4.000	13.600	2'-0"	3'-0"	2'-4"	3'-5"

STANDARD BAR BENDS

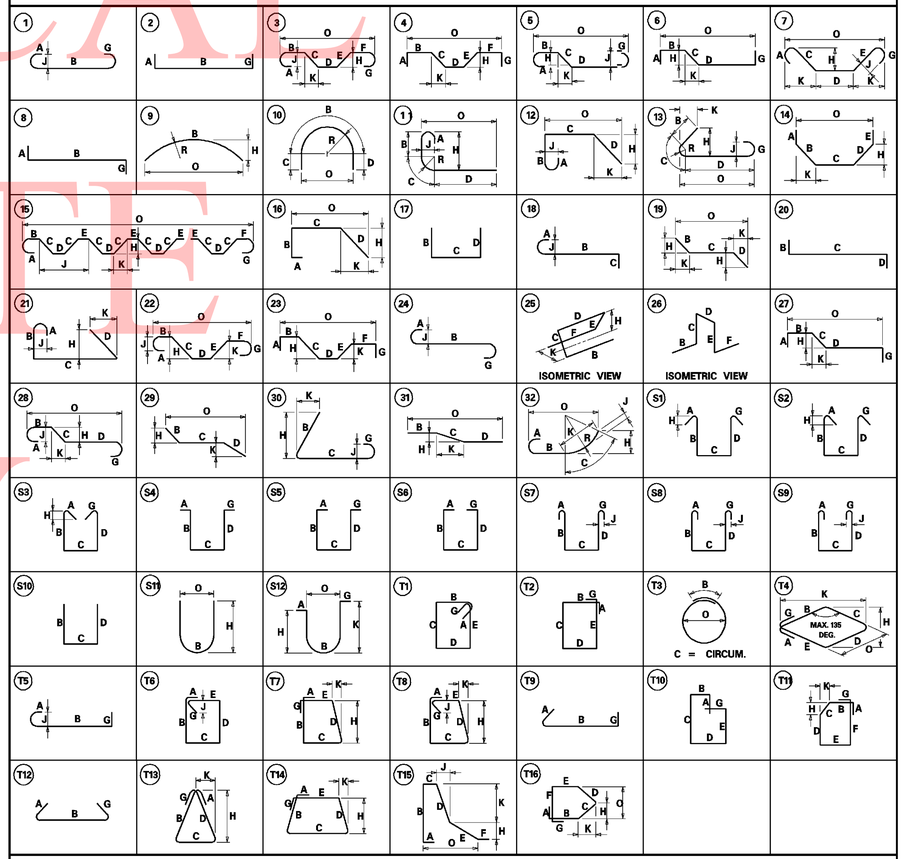

SPECIAL BAR BENDS

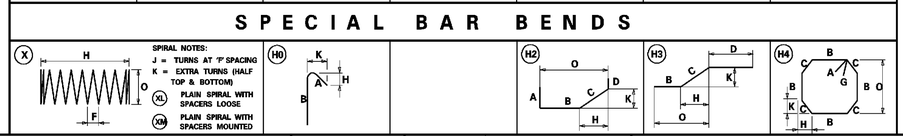

UNOFFICIAL WEBSITE COPY

3/28/2011 8:05:36 PM
M:\PROJECTS\2003\03059_DELTRNPK\SR1_MALL\CADD\2809003\PLANS\DOV\BR03_BR-S6_SR1.DGN

DELAWARE
DEPARTMENT OF TRANSPORTATION

ADDENDUMS / REVISIONS	
ADDENDUM NO. 4, REVISED BAR SCHEDULE,	
04/01/11, DWD	

SR1 / I-95 INTERCHANGE

CONTRACT	BRIDGE NO.	1-268B
28-090-03	DESIGNED BY:	
COUNTY	CHECKED BY:	
NEW CASTLE		

RAMP B OVER I-95NB
BRIDGE DECK & BARRIER
REINFORCMENT BAR
SCHEDULE

S6-48
SHEET NO. 495
TOTAL SHTS. 803

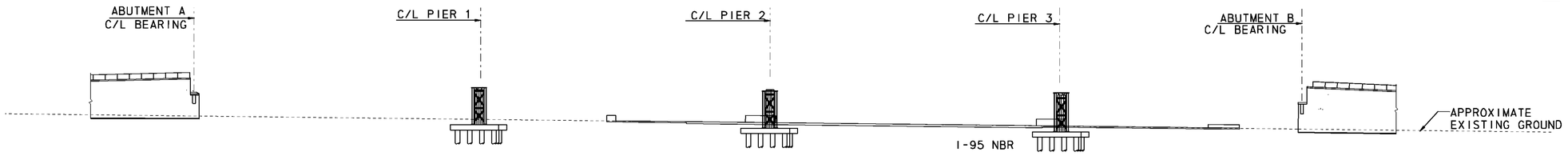

DEVELOPED ELEVATION - ERECTION STAGE 1

SCALE: 1"= 40'-0"

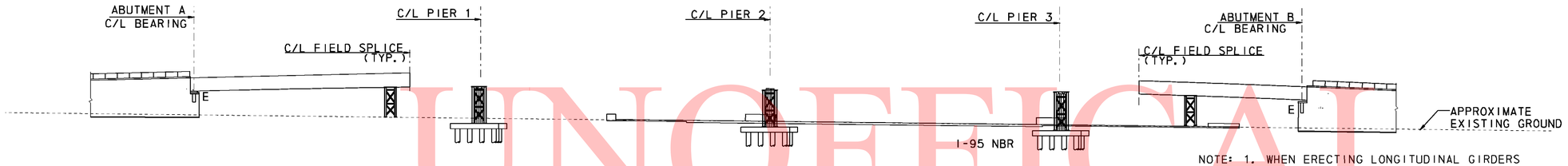

DEVELOPED ELEVATION - ERECTION STAGE 2

SCALE: 1"= 40'-0"

NOTE: 1. WHEN ERECTING LONGITUDINAL GIRDERS PROVIDE FOR JACKING LONGITUDINAL GIRDERS TO CLOSE CONNECTION WITH CROSS GIRDER IN STAGE 5.

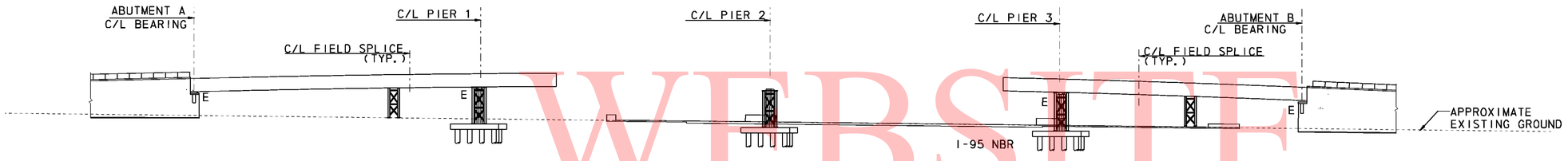

DEVELOPED ELEVATION - ERECTION STAGE 3

SCALE: 1"= 40'-0"

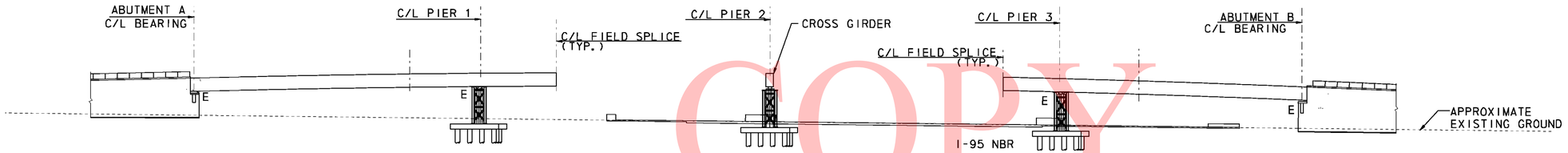

DEVELOPED ELEVATION - ERECTION STAGE 4

SCALE: 1"= 40'-0"

NOTE: 1. CROSS GIRDER MUST BE STABILIZED WITH HOLDING CRANE UNIL ONE LINE OF LONGITUDINAL GIRDERS IN COMPLETE.

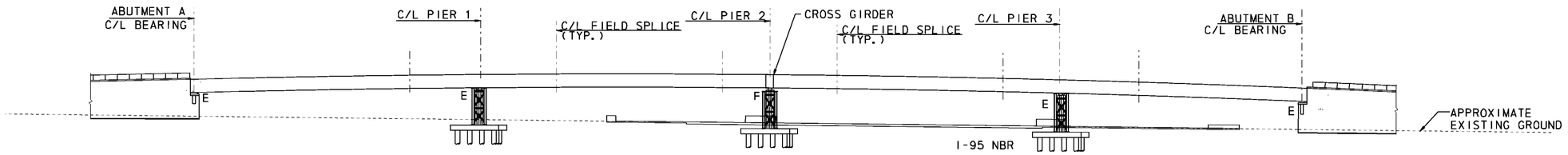

DEVELOPED ELEVATION - ERECTION STAGE 5

SCALE: 1"= 40'-0"

NOTE: 1. GIRDER LINES SHALL BE COMPLETED PRIOR TO ERECTING NEXT LINE OF GIRDERS. ERECT G4, THEN G3 THROUGH G1. REFER TO S6-23 FOR DETAILS.

STAGE 1:
1. ERECT TEMPORARY SHORING AT PIERS 1, 2N, 2S AND 3.

STAGE 2:
1. ERECT TEMPORARY SHORING IN SPAN 1.
2. ERECT GIRDER SECTION IN SPAN 1 WITH ONE END SUPPORTED ON ABUTMENT A AND THE OTHER ON THE TEMPORARY SHORING IN SPAN 1.
3. TIE-DOWN AND STABILIZE ENDS OF GIRDER
4. REPEAT STEPS 2 AND 3 FOR ALL GIRDERS IN SPAN 1, INSTALLING CROSS FRAMES AFTER EACH REMAINING GIRDER IS ERECTED.
5. REPEAT STEPS 2 THROUGH 4 FOR GIRDER SECTIONS SUPPORTED ON ABUTMENT B IN SPAN 4

STAGE 3:
1. ERECT GIRDER SECTION OVER PIER 1 SUPPORTED ON EITHER THE PERMANENT BEARINGS OR THE TEMPORARY SHORING AT PIER 1.
2. HOLD GIRDER SECTION AND MAKE UP FIELD SPLICE CONNECTION IN SPAN 1
3. STABILIZE GIRDER AS NECESSARY
4. REPEAT STEPS 1 THROUGH 4 FOR ALL GIRDERS SPANNING OVER PIER 1.
5. REPEAT STEPS 1 THROUGH 4 FOR GIRDER SECTIONS SPANNING OVER PIER 3 IN SPAN 3.

STAGE 4:
1. ERECT CROSS GIRDER
2. STABILIZE CROSS GIRDER AS NECESSARY

STAGE 5:
1. PRE-ASSEMBLE TWO GIRDER SECTIONS FOR SPAN 3
2. ERECT PRE-ASSEMBLED GIRDER SECTION AND MAKE FIELD SPLICE TO CROSS GIRDER AND LONGITUDINAL GIRDER FIELD SPLICE IN SPAN 3.
3. STABILIZE GIRDER SECTION IN SPAN 3 AS NECESSARY.
4. PRE-ASSEMBLE TWO GIRDER SECTIONS FOR SPAN 2.
5. ERECT PRE-ASSEMBLED GIRDER SECTION AND MAKE FIELD SPLICE TO CROSS-GIRDER AND LONGITUDINAL GIRDER FIELD SPLICE IN SPAN 2.
6. STABILIZE GIRDER SECTION IN SPAN 2 AS NECESSARY.
7. REPEAT STEPS 1 THROUGH 5 FOR REMAINING GIRDERS, INSTALLING CROSS FRAMES AFTER EACH REMAINING GIRDER IS ERECTED.

NOTE TO CONTRACTOR:
THE ERECTION SEQUENCE SHOWN IS ONLY A SUGGESTED METHOD. THE CONTRACTOR IS RESPONSIBLE FOR THE ENTIRE ERECTION OF THE BRIDGE. THE CONTRACTOR SHALL SUBMIT DRAWINGS SEALED BY A PROFESSIONAL ENGINEER \REGISTERED IN THE STATE OF DELAWARE, ILLUSTRATING FULLY THE PROPOSED METHOD OF ERECTION. THE DRAWINGS SHALL SHOW DETAILS OF ALL TEMPORARY SHORING, FALSEWORK, BRACING, GUYS, DEAD-MEN, LIFTING DEVICES, HOLD-DOWN DEVICES AND ATTACHMENTS TO THE BRIDGE MEMBERS. THE DRAWINGS SHALL ALSO INCLUDE THE SEQUENCE OF ERECTION, LOCATION OF CRANES, CRANE CAPACITIES, LOCATION OF LIFTING POINTS ON THE BRIDGE MEMBERS AND WEIGHTS OF MEMBERS. THE PLANS AND DRAWINGS SHALL BE COMPLETE IN DETAIL FOR ALL ANTICIPATED STAGES AND CONDITIONS'S DURING ERECTION. CALCULATIONS SEALED BY A PROFESSIONAL ENGINEER REGISTERED IN THE STATE OF DELAWARE ARE BETWEEN TO DEMONSTRATE THAT ALLOWABLE STRESSES ARE NOT EXCEEDED AND THAT MEMBER CAPACITIES AND FINAL GEOMETRY WILL BE CORRECT.

COST OF ERECTION AND TEMPORARY SHORING IS INCIDENTAL TO "STEEL STRUCTURES"

FOR MAINTENANCE OF TRAFFIC REQUIREMENTS, REFERE TO THE APPROPRIATE SHEETS.

PROVIDE TEMPORARY BRACING BETWEEEN THE GIRDERS IN THE VICINITY OF EACH INTEGRAL PIER CAP DURING SUPERSTRUCTURE ERECTION AND PLACEMENT OF CONCRETE. THE TEMPORARY BRACING SHALL BE REMOVED AFTER THE INTEGRAL PIER CAP BRACING IS PLACED AND PRIOR TO POST-TENSIONING THE INTEGRAL CAP.

UNOFFICAL WEBSITE COPY

3/28/2011 5:55:05 PM
M:\PROJECTS\2003\03059_DELTRNPK\SR1_MALL\CADD\2809003\PLANS.DGN\CS02_BR-S6_SR1.DGN

DELAWARE
DEPARTMENT OF TRANSPORTATION

ADDENDUMS / REVISIONS	
ADDENDUMS NO. 4, ADDED NOTES, 04/01/11, DWD	

SR1 / I-95 INTERCHANGE

CONTRACT	BRIDGE NO.	1-268B
28-090-03	DESIGNED BY:	DWD
COUNTY	CHECKED BY:	
NEW CASTLE		

RAMP B OVER I-95NB

DEVELOPED ELEVATION
ERECTION SEQUENCE

S6-57

SHEET NO.	TOTAL SHTS.
504	803

GENERAL NOTES:

1. DESIGN SPECIFICATIONS
   AASHTO LRFD BRIDGE DESIGN SPECIFICATIONS, 2007, 4TH EDITION WITH ALL CURRENT REVISIONS
   DELAWARE DEPARTMENT OF TRANSPORTATION BRIDGE DESIGN MANUAL
   ANSI/AASHTO/AWS D1.5 BRIDGE WELDING CODE.
2. LOADING
   UNIT WEIGHTS OF MATERIALS ARE IN ACCORDANCE WITH THE DELAWARE DESIGN MANUAL. FUTURE OVERLAY ALLOWANCE IS 25 PSF. STEEL BRIDGE DECK FORMS WHICH STAY IN PLACE (INCLUDING CONCRETE IN FORM CORRUGATIONS) IS 15 PSF. VEHICLE LIVE LOAD IS HL-93, WHICH CONSISTS OF A DESIGN TRUCK OR TANDEM WITH DYNAMIC LOAD ALLOWANCE AND A LANE LOAD RATING, WILL USE ALL DELAWARE LEGAL LOADS SPECIFIED IN THE BRIDGE DESIGN MANUAL. FATIGUE DESIGN SHALL BE BASED ON THE FOLLOWING ONE DIRECTIONAL TRAFFIC VOLUMES:
   DESIGN YEAR 2030 ADT = 74,443, DESIGN ADTT = 6,700
   FOR THERMAL LOADS, CONSIDER THE MODERATE TEMPERATURE RANGE AS STIPULATED IN THE AASHTO LRFD DESIGN SPECIFICATIONS. THE NORMAL TEMPERATURE IS CONSIDERED TO BE 60F. FOR SEISMIC LOADS, THE PROJECT SITE IS LOCATED WITHIN SEISMIC PERFORMANCE ZONE 2, WITH AN ACCELERATION COEFFICIENT=0.1, SOIL PROFILE TYPE II AND IMPORTANCE CATEGORY - ESSENTIAL.
3. PORTLAND CEMENT CONCRETE
   PORTLAND CEMENT CONCRETE FOR CAST-IN-PLACE ELEMENTS SHALL BE AS FOLLOWS:
   (28 DAY COMPRESSIVE STRENGTH)
   ~~ITEM NO. 602001 (CLASS A, F'C=4500 PSI) - ABUTMENT~~
   ~~ITEM NO. 602007 (CLASS A, F'C=4500 PSI) - PIER ABOVE FOOTING~~ △3
   ITEM NO. 602013 (CLASS D, F'C=4500 PSI) - DECK, INTERMADIATE/END/CONTINUITY DIAPHRAGM
   ITEM NO. 602014 (CLASS D, F'C=4500 PSI) - APPROACH SLAB
   ITEM NO. 602017 (CLASS A, F'C=4500 PSI) - PARAPET
   MIX REQUIREMENTS SHALL CONFORM TO SECTION 812 OF THE DELAWARE DEPARTMENT OF TRANSPORTATION STANDARD SPECIFICATIONS. ALL EXPOSED CORNERS OF CONCRETE SHALL BE CHAMFERED WITH 3/4" X 3/4" MILLED CHAMFER STRIPS UNLESS NOTED OTHERWISE, EXCEPT ON UNEXPOSED FOOTINGS OR WHERE INDICATED BY THE NOTATION ON THE PLANS, "DO NOT CHAMFER".
   ~~NO SLIP-FORMING OF PARAPETS IS PERMITTED.~~ △4
4. BAR REINFORCEMENT
   REINFORCING STEEL SHALL CONFORM TO AASHTO M31 (ASTM A615), GRADE 60. ALL REINFORCING STEEL SHALL HAVE A CLEAR COVER OF 2" UNLESS OTHERWISE SPECIFIED ON THE PLANS. EPOXY COATED REINFORCING STEEL SHALL CONFORM TO AASHTO M284 (ASTM D3963), AND IS DENOTED WITH A SUFFIX "E" IN THE BAR MARKS. EPOXY COATED REINFORCING STEEL IS USED IN THE FOLLOWING LOCATIONS:
   APPROACH SLABS
   DECK SLAB
   PARAPETS AND BARRIERS
   BEARING SEAT PADS
   ABUTMENT BEARING SEAT REGIONS
   ABUTMENT BACKWALLS
   PARAPET PORTION OF WINGWALLS
   DO NOT WELD GRADE 60 REINFORCING STEEL.

   ITEM NO. 602717 (CLASS A, F'C=4500 PSI) - ABUTMENT, BACKWALL, PIER △3

GENERAL NOTES CONT'D:

5. SERVICEABILITY
   LIVE LOAD DEFLECTION SHALL BE LIMITED TO L/800. FOR REINFORCEMENT DISTRIBUTION REQUIREMENTS, CONSIDER CLASS 2 EXPOSURE CRITERIA. ACCOMODATION TO JACK GIRDERS FOR FUTURE BEARING REPLACEMENT SHALL BE CONSIDERED IN THE DESIGN.
6. CONSTRUCTION JOINTS
   KEYED CONSTRUCTION JOINTS SHALL BE 2"X4" OR AS NOTED. ALL EXPOSED CONSTRUCTION JOINT EDGES SHALL HAVE A 3/4" V-NOTCH.
7. SHEETING AND SHORING
   SHORING SHALL BE REQUIRED FOR ANY EXCAVATION EXCEEDING FIVE (5) FEET IN HEIGHT, THE COST OF SHORING SHALL BE PAID UNDER ITEM NO. 207501. IN LIEU OF SHORING, THE CONTRACTOR MAY USE A 2:1 CUT SLOPE. NO PAYMENT SHALL BE MADE FOR ADDITIONAL EXCAVATION OR FILL OUTSIDE THE LIMITS AS DEFINED IN SECTION 207 OF THE STANDARD SPECIFICATIONS.
8. EXISTING STRUCTURES
   ALL DIMENSIONS AFFECTED BY THE GEOMETRICS AND/OR LOCATION OF EXISTING STRUCTURES SHALL BE CHECKED IN THE FIELD BY THE CONTRACTOR BEFORE ANY CONSTRUCTION IS DONE, AND BEFORE ANY REINFORCING STEEL, ETC., IS ORDERED OR FABRICATED. IT SHALL BE THE RESPONSIBILITY OF THE CONTRACTOR TO SUPPLY THE ENGINEER WITH ALL FIELD DIMENSIONS REQUIRED TO CHECK DETAIL DRAWINGS. THE + MARKS SHOWN WITH DIMENSIONS DO NOT INDICATE ANY DEGREE OF PRECISION. THESE MARKS (+) INDICATE EXISTING DIMENSIONS THAT MAY VARY AND DO REQUIRE FIELD VERIFICATION BY THE CONTRACTOR.

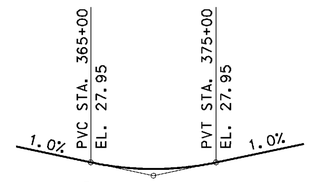

PVI STA. 370+00
EL. 22.95
VC=1000'

SR 1 (NB) PROFILE

NOT TO SCALE

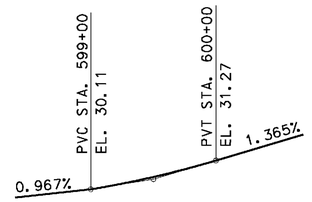

PVI STA. 599+50
EL. 30.59
VC=100'

SR 7 (NB) PROFILE

NOT TO SCALE

UNOFFICIAL WEBSITE COPY

2/25/2011 3:44:35 PM
M:\PROJECTS\2003\03059_DELTRNPK\SR1MALL\CADD\2809003\PLANS\PN01_BR-S8_SR1.DGN

DELAWARE DEPARTMENT OF TRANSPORTATION	ADDENDUMS / REVISIONS		SR1 / I-95 INTERCHANGE	CONTRACT 28-090-03	BRIDGE NO. 331N	SR1 OVER EAGLE RUN PROFILES AND GENERAL NOTES	S8-2 SHEET NO.
	ADDENDUM NO. △2 MODIFIED NOTE, 02/18/11, DWD			COUNTY NEW CASTLE	DESIGNED BY: MDM		514 TOTAL SHTS.
	ADDENDUM NO. △1 MODIFIED NOTE, 04/01/11, DWD				CHECKED BY:		803

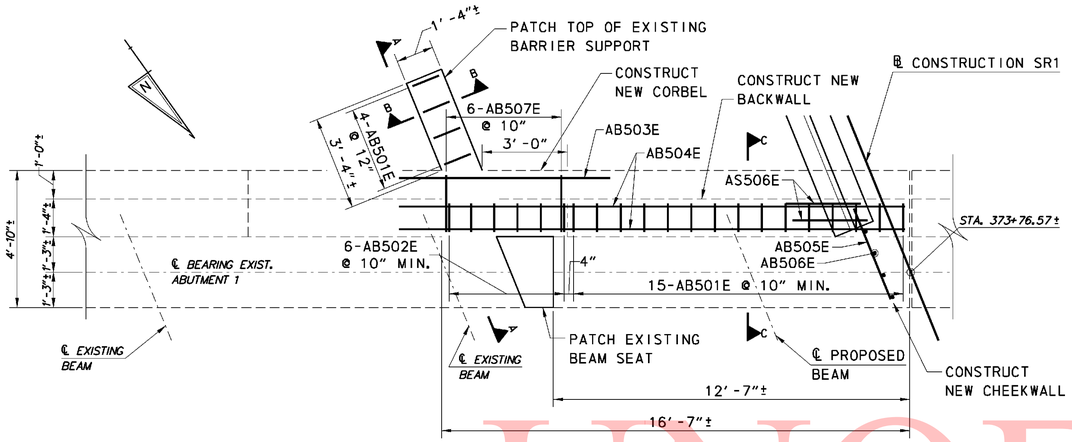

PLAN

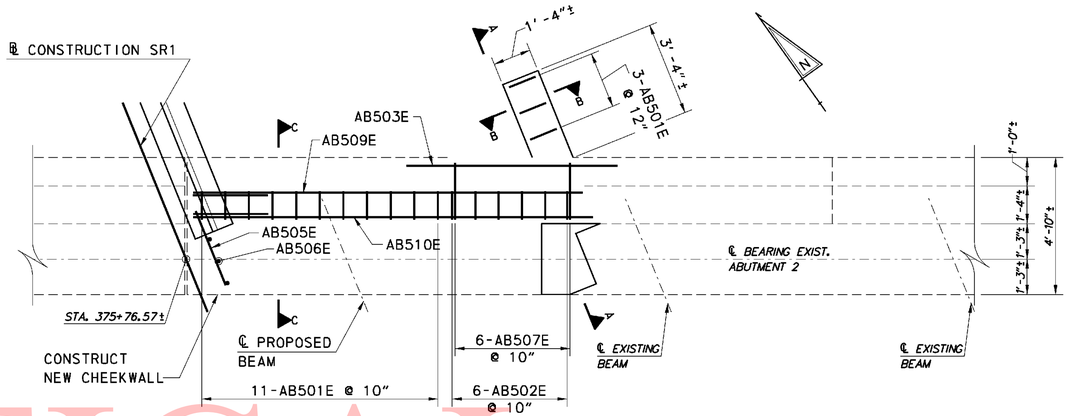

PLAN

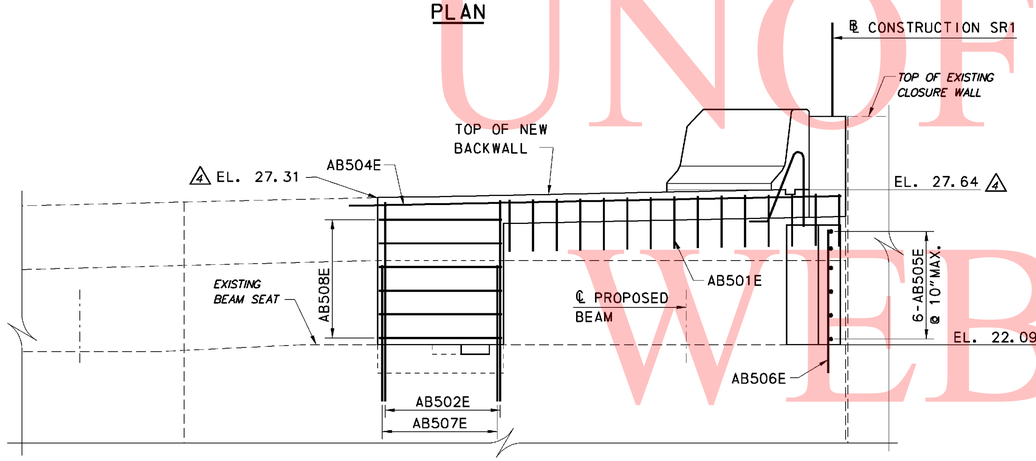

ELEVATION

ABUTMENT 1 CONSTRUCTION

SCALE: 3/8"=1'-0"

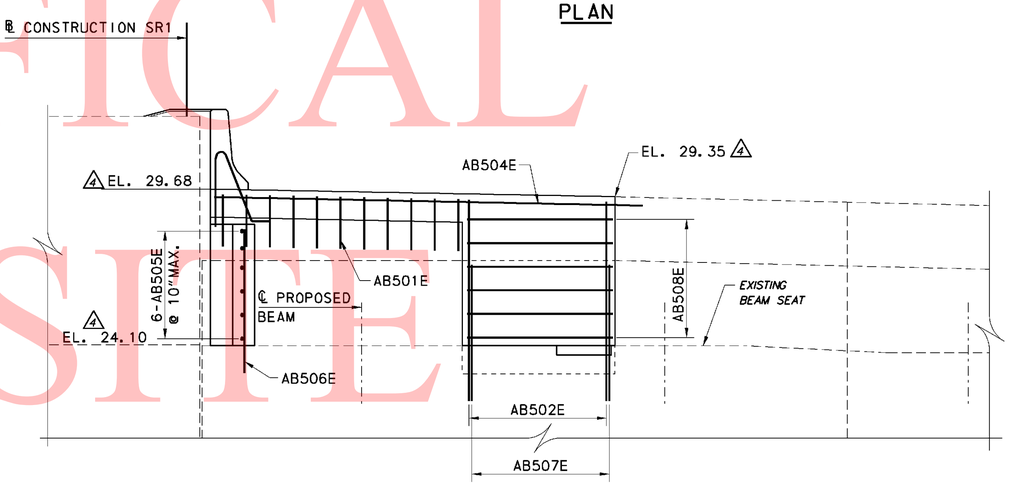

ELEVATION

ABUTMENT 2 CONSTRUCTION

SCALE: 3/8"=1'-0"

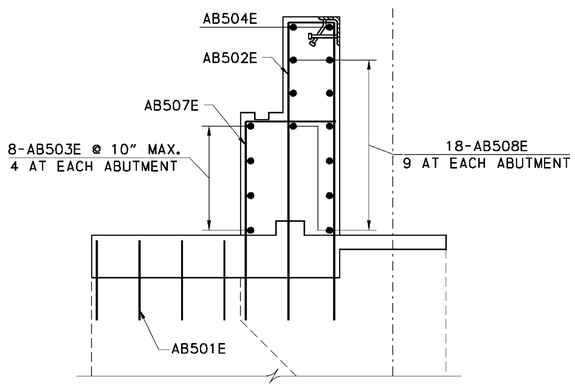

SECTION A-A

SCALE: 1/2"=1'-0"

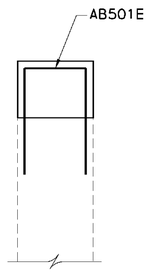

SECTION B-B

SCALE: 3/4"=1'-0"

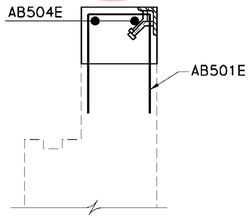

SECTION C-C

SCALE: 3/4"=1'-0"

CROSS REFERENCE NOTES:
1. FOR SEQUENCE OF CONSTRUCTION, SEE SHEET S8-4.
2. FOR ABUTMENT DEMOLITION DETAILS, SEE SHEET S8-5.
3. FOR EXPANSION JOINT DETAILS, SEE SHEET S8-16.
4. FOR APPROACH SLAB DETAILS, SEE SHEETS S8-17 TO S8-19.

0 2 8
1 4
SCALE: 3/8"=1'-0"

UNOFFICAL WEBSITE COPY

5/11/2011 1:58:46 PM
M:\PROJECTS\2003\03059_DELTRNPK\SR1MALL\CADD\2809003\PLANS\AB02_BR-S8_SR1.DGN

DELAWARE DEPARTMENT OF TRANSPORTATION

ADDENDUMS / REVISIONS	
ADDENDUM NO. 4, ADDED ELEVATIONS, 04/01/11, DWD	

SR1 / I-95 INTERCHANGE

CONTRACT	BRIDGE NO.	331N
28-090-03	DESIGNED BY:	MDM
COUNTY	CHECKED BY:	
NEW CASTLE		

SR1 OVER EAGLE RUN ABUTMENTS CONSTRUCTION DETAILS

S8-6
SHEET NO. 518
TOTAL SHTS. 803

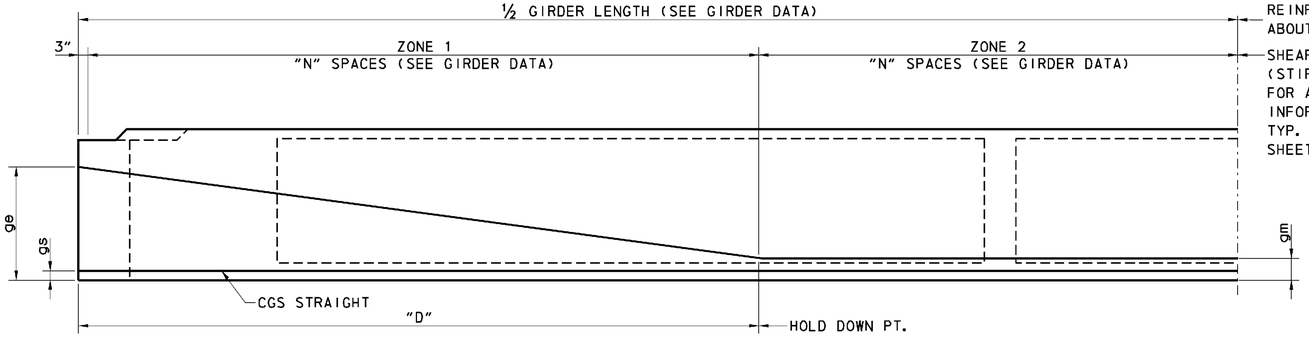

TYPICAL GIRDER HALF SECTION

N. T. S.

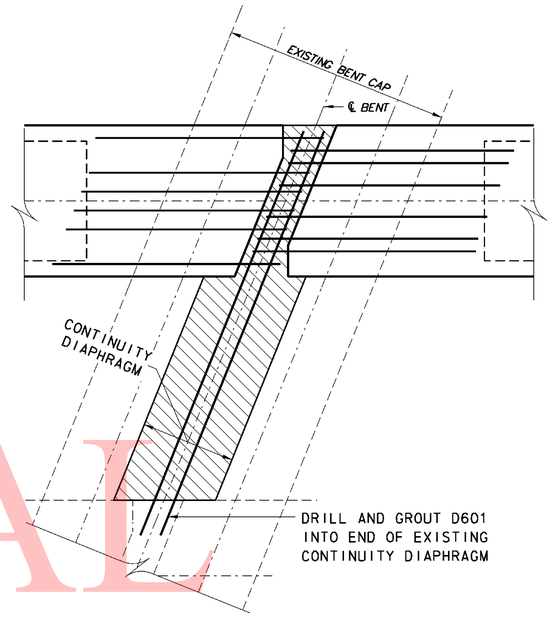

GIRDER END PLAN VIEW @ BENTS

SCALE: ½" = 1'-0"

GIRDER DATA

SPAN	GIRDER LENGTH	STRAND DATA						CONC. DATA		SHEAR REINF.				CAMBER DEFLECTION		
		STRAIGHT		DRAPED STRANDS						ZONE 1		ZONE 2				
		P/S FORCE	gs	P/S FORCE	gm	ge	"D"	F'ci (PSI)	F'c (PSI)	"N"	MAX. SPA.	"N"	MAX. SPA.	A	B	C
1	60'-3"	636.17	3.00	115.67	7.00	40	18'-0"	5100	6000	34	5"	8	24"	1.33	0.28	1.05
2	68'-11"	809.68	3.00	173.50	8.00	40	21'-0"	5100	6000	35	5"	10	24"	2.50	0.52	1.98
3	70'-3"	867.51	3.00	173.50	8.00	40	21'-0"	5100	6000	36	5"	10	24"	2.32	0.52	1.80

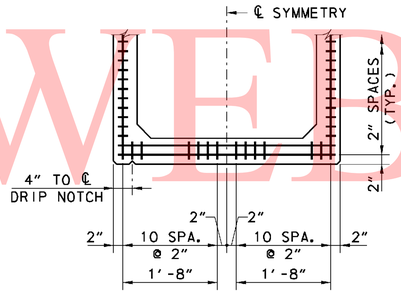

TYPICAL STRAND PATTERN

SCALE: ¾" = 1'-0"

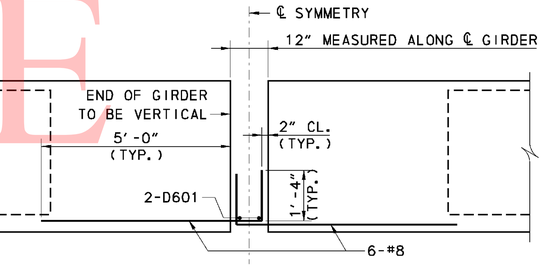

POSITIVE MOMENT CONNECTION DETAIL AT BENTS

SCALE: ½" = 1'-0"

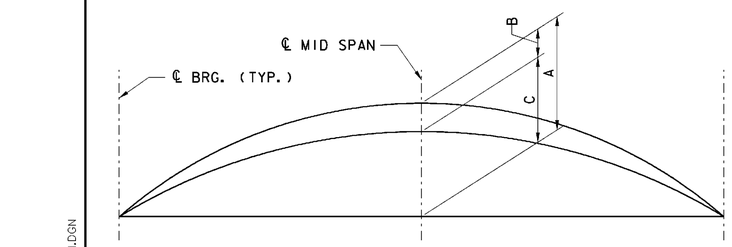

TYPICAL CAMBER DIAGRAM

N. T. S.

CAMBER NOTES:

A = CAMBER LESS DEFLECTION DUE TO DEAD LOAD OF GIRDER TIMES CREEP FACTOR OF 2.0.

B = DEFLECTION DUE TO DEAD LOAD OF SLAB, PERMANENT METAL DECK FORMS AND PARAPET.

C = A - B = NET FINAL CAMBER

1. BEARING SEAT ELEVATION AND SLOPE AND HAUNCH DEPTH ARE CALCULATED CONSIDERING THE VALUE OF C.
2. THE THICKNESS OF HAUNCH ON GIRDERS IS TO BE VARIED TO COMPENSATE FOR ANY INACCURACIES IN THE CAMBER OF GIRDERS.
3. A AND B ARE THEORETICAL VALUES AND MAY VARY WITH ACTUAL CONCRETE STRENGTH AGE, VARIOUS PRESTRESSING CONDITIONS, CREEP FACTOR AND PRESTRESS LOSSES.
4. CAMBER & DEFLECTION VALUES A, B & C ARE GIVEN IN INCHES.

PRESTRESS NOTES:

1. F'CI = COMPRESSIVE STRENGTH OF CONCRETE AT RELEASE.
2. F'C = COMPRESSIVE STRENGTH OF CONCRETE AT 28 DAYS.
3. P/S FORCE - PRESTRESSING FORCE @ RELEASE IN KIPS (DRAPED & STRAIGHT GIVEN SEPARATELY).
4. PRESTRESSING STEEL SHALL BE SEVEN WIRE 1/2" DIA. LOW RELAXATION STRANDS CONFORMING TO ASTM A416 (GRADE 270).
5. INITIAL PRESTRESS PER STRAND SHALL BE 189 KSI.
6. CREEP AND SHRINKAGE FOR CONTINUOUS SPAN EFFECT IS BASED ON:
   (A) RELEASE OF PRESTRESS AT 1 DAY.
   (B) TIME BETWEEN BEAM CASTING AND MOVEMENT CONNECTION OF ~~60~~ 90 DAYS. △4
   (C) RELATIVE HUMIDITY - 70%
7. ALL GIRDER REINFORCEMENT THAT PROJECTS INTO THE DECK SLAB SHALL BE EPOXY COATED.
8. ALL GIRDERS ENDS ARE TO BE FABRICATED NORMAL TO THE CENTERLINE OF GIRDER AND VERTICAL UNDER DEAD LOADS.
9. THE CONCRETE SURFACE OF THE TOP FLANGE WHICH COMES IN CONTACT WITH THE DECK SLAB IS TO RECEIVE A STIFF BROOM FINISH.

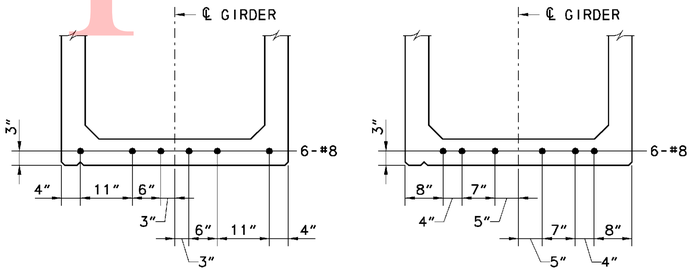

SPANS 1 & 3 — SPAN 2

POSITIVE MOMENT REINF. LOCATIONS

SCALE: ¾" = 1'-0"

CROSS REFERENCE NOTES:

1. FOR GENERAL NOTES AND PROFILES, SEE SHEET S8-2.
2. FOR TYPICAL SECTION, SEE SHEET S8-3.
3. FOR FRAMING PLAN, SEE SHEET S8-9.
4. FOR GIRDER REINFORCING DETAILS, SEE SHEET S8-11.
5. FOR DIAPHRAGM DETAILS, SEE SHEET S8-12.

0 1 4
½ 2
SCALE: ½"=1'-0"

0 1 4
½ 2
SCALE: ¾"=1'-0"

UNOFFICAL WEBSITE COPY

3/30/2011 11:03:13 AM
M:\PROJECTS\2003\03059_DELTRAN\SR1MALL\CADD\2809003\PLANS\BM01_BR-S8_SR1.DGN

DELAWARE DEPARTMENT OF TRANSPORTATION

ADDENDUMS / REVISIONS

ADDENDUM NO. △4, REV. NOTE, 4/1/11, DWD

SR1 / I-95 INTERCHANGE

CONTRACT	BRIDGE NO.	331N
28-090-03	DESIGNED BY:	MDM
COUNTY	CHECKED BY:	
NEW CASTLE		

SR1 OVER EAGLE RUN GIRDER DETAILS - 1

S8-10
SHEET NO. 522
TOTAL SHTS. 803

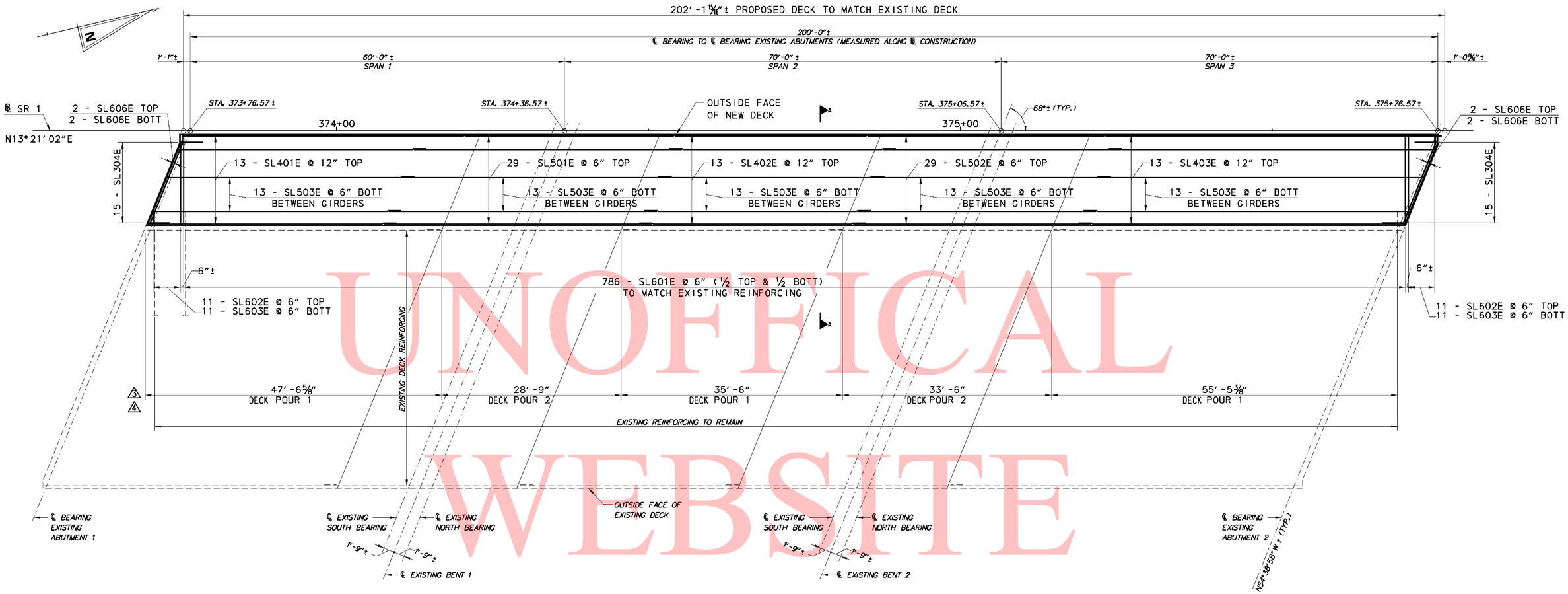

DECK REINFORCING PLAN

SCALE: 1/8″=1′-0″

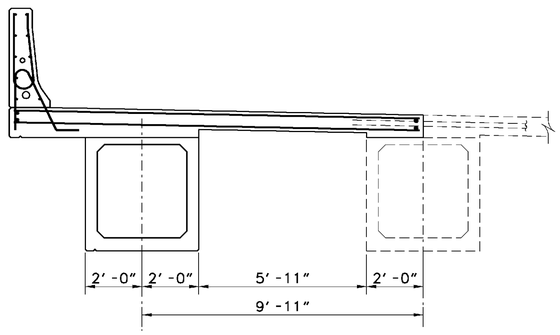

DECK SECTION A-A

SCALE: 3/8″ = 1′-0″

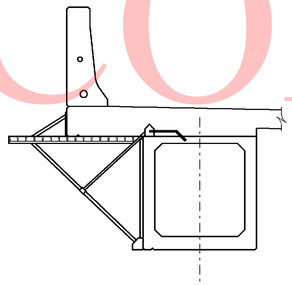

OVERHANG FORM SCHEMATIC DETAIL

N. T. S.

4

CONCRETE DECK PLACEMENT NOTES:

1. CAST INTERMEDIATE DIAPHRAGMS AND END DIAPHRAGMS AT ABUTMENTS. (ATTAIN 0.5fc′ PRIOR TO CASTING POSITIVE MOMENT REGION OF BRIDGE DECK, DECK POUR 1.)
2. CAST POSITIVE MOMENT REGION OF BRIDGE DECK, DECK POUR 1.
3. CAST CONTINUITY DIAPHRAGMS AT PIERS. (ATTAIN 0.5fc′ PRIOR TO CASTING NEGATIVE MOMENT REGION OF BRIDGE DECK, DECK POUR 2.)
4. CAST NEGATIVE MOMENT REGION OF BRIDGE DECK, DECK POUR 2.
5. CAST BARRIERS IN POSITIVE MOMENT REGION, DEPICTED BY DECK POUR 1, THEN NEGATIVE MOMENT REGION, DEPICTED BY DECK POUR 2.
6. TIME FRAMES PER DELDOT STANDARD SPECIFICATIONS 602, UNLESS NOTED OTHERWISE.
7. TIME FROM CASTING OF BEAMS TO POURING OF PIER CONTINUITY DIAPHRAGM MUST BE NO LESS THAN 90 DAYS. IF TIME IS NOT SUFFICIENT, CONTRACTOR MUST SUBMIT DESIGN FOR APPROVAL SHOWING STRUCTURAL DESIGN CALCULATIONS TO ACCOUNT FOR RESTRAINT MOMENT. PIER CONTINUITY DIAPHRAGM CAN NOT BE POURED UNTIL POSITIVE MOMENT DECK REGION IS POURED.

CROSS REFERENCE NOTES:

1. FOR TYPICAL SECTION, SEE SHEET S8-3.
2. FOR FRAMING PLAN, SEE SHEET S8-9.
3. FOR PARAPET DETAILS, SEE SHEET S8-14.

0 2 4 8 16

SCALE: 1/8″=1′-0″

0 1 2 4 8

SCALE: 3/8″=1′-0″

UNOFFICIAL WEBSITE COPY

3/30/2011 11:14:24 AM
M:\PROJECTS\2003\03059_DELTRN\SRIMALL\CADD\2809003\PLANS\DK01_BR-S8_SR1.DGN

DELAWARE DEPARTMENT OF TRANSPORTATION

ADDENDUMS / REVISIONS	
ADDENDUM NO. 3, DIMENSION AND POUR SEQUENCE, 02/18/11, DWD	
ADDENDUM NO. 4, ADD NOTES, 4/1/11, DWD	

SR1 / I-95 INTERCHANGE

CONTRACT	BRIDGE NO.	331N
28-090-03	DESIGNED BY:	MDM
COUNTY	CHECKED BY:	
NEW CASTLE		

SR1 OVER EAGLE RUN DECK REINFORCING PLAN & DETAILS

SHEET NO.	TOTAL SHTS.
S8-13	525 / 803

GENERAL NOTES

SPECIFICATIONS: PROPRIETARY MSE WALLS SHALL BE DESIGNED IN ACCORDANCE WITH THE FOLLOWING:
- AASHTO LRFD BRIDGE DESIGN SPECIFICATIONS, 4TH EDITION WITH ALL CURRENT REVISIONS.
- FEDERAL HIGHWAY ADMINISTRATION PUBLICATION NOS. FHWA-NHI-10-024 AND FHWA-NHI-025, "DESIGN AND CONSTRUCTION OF MECHANICALLY STABILIZED EARTH WALLS AND REINFORCED SOIL SLOPES", VOLUME I AND VOLUME II.

CONCRETE DESIGN SHALL BE PERFORMED USING THE LOAD AND RESISTANCE FACTOR DESIGN METHOD.

CONCRETE: ALL CONCRETE FOR ROADWAY BARRIERS SHALL BE 4,500 PSI. LEVELING PAD CONCRETE SHALL BE 3,500 PSI. MIX REQUIREMENTS SHALL CONFORM TO SECTION 812 OF THE DELAWARE DEPARTMENT OF TRANSPORTATION STANDARD SPECIFICATIONS.

CHAMFERS: ALL EXPOSED CORNERS OF CONCRETE SHALL BE CHAMFERED WITH ¾" x ¾" MILLED CHAMFER STRIPS, UNLESS OTHERWISE NOTED, EXCEPT ON UNEXPOSED FOOTINGS OR WHERE INDICATED BY THE FOLLOWING NOTATION ON THE PLANS: "DO NOT CHAMFER".

REINFORCING STEEL: REINFORCING STEEL SHALL CONFORM TO ASTM A 615, GRADE 60. ALL SPLICES, NOT SHOWN, SHALL BE LAPPED AS PER THE LRFD BRIDGE DESIGN SPECIFICATIONS. MINIMUM COVER FOR ANY BAR SHALL BE 2" UNLESS OTHERWISE NOTED.

FOR TIES AND STIRRUPS, STANDARD ACI BENDING TOLERANCES ARE MODIFIED TO PLUS (+) ZERO INCHES, MINUS (-) NORMAL ACI BENDING TOLERANCE.

ONLY GRADE 60 CAN BE USED ON THIS PROJECT.

ALL REINFORCING STEEL IN THE BARRIER SHALL BE EPOXY COATED, AND SHALL CONFORM TO ASTM D3936.

ALL KEYS ARE NOMINAL SIZE.

THE MSE WALL MANUFACTURER MAY SUBSTITUTE ALTERNATE REINFORCING CONFIGURATIONS AND SUBMIT FOR APPROVAL.

EXPANSION AND CONTRACTION JOINTS: THE LOCATION OF THE EXPANSION AND CONTRACTION JOINTS IN THE BARRIER SHOWN ON THE PLANS MAY BE ADJUSTED TO ACCOMMODATE THE PANEL TYPE USED IN THE PROJECT. ANY CHANGE TO THESE JOINT LOCATIONS SHALL BE SUBMITTED TO THE ENGINEER FOR APPROVAL.

LEVELING PAD: THE PROPRIETARY WALL MANUFACTURER MAY RELOCATE THE LEVELING PAD STEPS AT THEIR DISCRETION PROVIDED THAT THE MINIMUM EMBEDMENT IS MAINTAINED. ANY CHANGE TO THE STEP LOCATIONS SHALL BE SUBMITTED TO THE ENGINEER FOR APPROVAL.

ROADWAY LIMITS: THE PROPRIETARY WALL MANUFACTURER SHALL ASSURE THAT PROPOSED PROPRIETARY WALL COMPONENTS ARE POSITIONED SUCH THAT THE DESIGNATED ROADWAY LIMITS ARE NOT ENCROACHED UPON.

TRAFFIC BARRIER JOINTS: TRAFFIC BARRIER FOOTING SHALL HAVE CONSTRUCTION JOINTS TO COINCIDE WITH THE BARRIER JOINTS.

COORDINATION: CONTRACTOR AND PROPRIETARY WALL MANUFACTURER SHALL COORDINATE LOCATIONS OF INLETS AND PIPES WITH LOCATIONS OF PROPRIETARY WALL TIE BACK SYSTEM.

ARCHITECTURAL FINISH: THE MSE WALL PANELS SHALL RECEIVE AN ARCHITECTURAL FINISH.

SERVICE LIFE: ALL RETAINING WALL COMPONENTS SHALL BE DESIGNED FOR A MINIMUM SERVICE LIFE OF 100 YEARS.

WALL SYSTEM: ONLY ONE MSE WALL SYSTEM MAY BE USED ON THIS PROJECT.

ROADWAY SUPERELEVATION: FOR ROADWAY SUPERELEVATION, SEE SUPERELEVATION TABLES.

MSE WALL BACKFILL: MSE WALL BACKFILL SHALL CONSIST OF SPECIFIED BACKFILL.

△1 PAY ITEMS: MECHANICALLY STABILIZED EARTH WALLS (602772)

~~△3 PCC MASONRY FOR MSE WALLS (602773)~~

BAR REINFORCEMENT. EPOXY COATED (604000)

△3 PCC MASONRY, PARAPET, CLASS A (602017)

SOIL PROPERTIES

SOIL TYPE	UNIT WEIGHT (PCF)	DRAINED ANGLE OF FRICTION (DEGREES)	UNDRAINED SHEAR (PSF)
SELECT FILL	125	34	-
FOUNDATION SOIL	105	28	1400

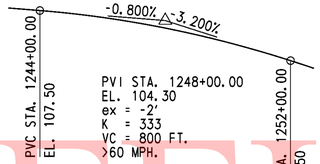

RAMP A
VERTICAL CURVE DATA
NOT TO SCALE

PI STA. 1254+08.88
△ = 48°19'31.68" LT
Dc = 3°05'49.45"
R = 1,850.0000'
T = 829.98'
L = 1,560.36'

RAMP A
HORIZONTAL CURVE NO. 14 DATA

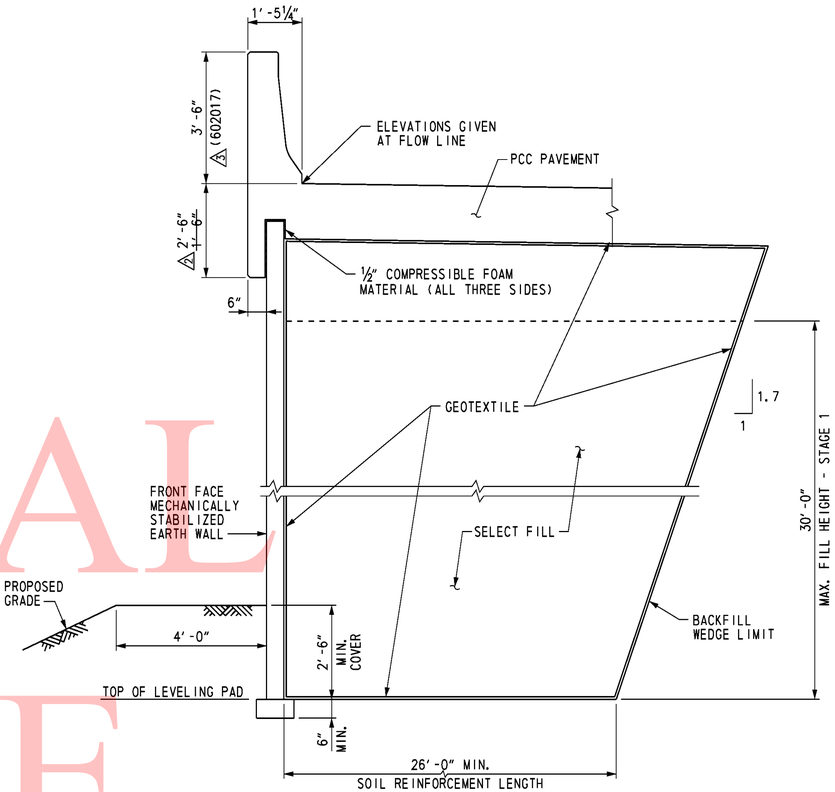

TYPICAL SECTION
SCALE: ½" = 1'-0"

FOUNDATION NOTES:

THE FACTORED BEARING RESISTANCE SHALL BE VERIFIED PRIOR TO CONSTRUCTION OF THE MSE WALL.

THE INTERNAL STABILITY OF THE MSE WALL SHALL BE DESIGNED BY THE CONTRACTOR USING THE SOIL PARAMETERS PROVIDED FOR EACH STRUCTURE LOCATION. THE INTERNAL STABILITY CALCULATIONS SHOULD BE SIGNED AND SEALED BY A PROFESSIONAL ENGINEER LICENSED IN THE STATE OF DELAWARE AS INDICATED IN THE PROJECT SPECIFICATIONS.

ISOLATED AREAS OF UNDERCUTTING OF EXISTING FILL MAY BE ENCOUNTERED DURING CONSTRUCTION OF THIS RETAINING WALL.

△2 A QUARANTINE PERIOD OF ~~APPROXIMATELY~~ THIRTY (30) DAYS IS REQUIRED AFTER CONSTRUCTION OF THE FULL HEIGHT OF THE MSE WALL IS ACHIEVED. THE ENGINEER SHALL APPROVE THE COMPLETION OF THE QUARANTINE PERIOD PRIOR TO CONSTRUCTION OF ANY PAVEMENT OR BARRIER. A TOTAL ESTIMTED SETTLEMENT OF APPROXIMATELY FOUR (4) INCHES IS ANTICIPATED.

△4 INSTALLATION OF THE GEOTEXTILE WILL NOT BE REQUIRED BEHIND THE WALL AS SHOWN IN THE TYPICAL SECTION FOR THE LENGTH OF WALL WHERE THE SOIL REINFORCEMENT LENGTH OVERLAPS THE SOIL REINFORCEMENT LENGTH FOR RETAINING WALL 9. AT ALL OTHER LOCATIONS, THE GEOTEXTILE SHALL BE INSTALLED AS SHOWN IN THE TYPICAL SECTION.

△1 THE CONTRACTOR IS RESPONSIBLE FOR DEVELOPING MEANS AND METHODS, IN CONSULTATION WITH THE MSE WALL MANUFACTURER, FOR CONSTRUCTING THE MSE WALLS TO THE LINES, GRADES, AND DIMENSIONS SHOWN ON THE PLANS. SOIL BORINGS, LABORATORY TEST DATA, AND THE ENGINEER'S SETTLEMENT ESTIMATE(S) ARE CONTAINED IN ONE OF THE FOLLOWING GEOTECHNICAL ENGINEERING REPORTS WHICH HAVE BEEN MADE AVAILABLE BY THE DEPARTMENT: FINAL FOUNDATIONS REPORT - RETAINING WALLS AND FINAL FOUNDATIONS REPORT - BRIDGES AND WINGWALLS DATED APRIL 2009, PREPARED BY RUMMEL, KLEPPER & KAHL, LLP AND URS CORPORATION. THESE SUPPLEMENTAL GEOTECHNICAL REPORTS ARE NOT PART OF THE CONTRACT DOCUMENTS, AND ARE AVAILABLE AT WWW.BIDS.DELAWARE.GOV WEBSITE. CONTRACTORS MAY USE THIS INFORMATION AT THEIR OWN RISK.

UNOFFICAL WEBSITE COPY

O:\2082687-XMR\CAD\Bridge\r01_RW-1_srl.dgn
4/1/2011
Steve_Lambert

R1-1

DELAWARE DEPARTMENT OF TRANSPORTATION

ADDENDUMS / REVISIONS	
ADDENDUM NO. △2 REVISED FOUNDATION NOTES AND COPING DIMENSION, ADDED PAY ITEMS, 01/26/11, RFK	
ADDENDUM NO. △3 REV. PAY ITEMS, 02/18/11, RFK	
ADDENDUM NO. △4 ADDED NOTES, 04/01/11, RFK	

SR1/I-95 INTERCHANGE

CONTRACT	28-090-03
COUNTY	NEW CASTLE
BRIDGE NO.	
DESIGNED BY: R. F. KIRCHNER	
CHECKED BY: J. S. LI	

RETAINING WALL 1

GENERAL NOTES AND TYPICAL SECTION

SHEET NO.	533
TOTAL SHTS.	803

GENERAL NOTES

SPECIFICATIONS: PROPRIETARY MSE WALLS SHALL BE DESIGNED IN ACCORDANCE WITH THE FOLLOWING:
- AASHTO LRFD BRIDGE DESIGN SPECIFICATIONS, 4TH EDITION WITH ALL CURRENT REVISIONS.
- FEDERAL HIGHWAY ADMINISTRATION PUBLICATION NOS. FHWA-NHI-10-024 AND FHWA-NHI-025, "DESIGN AND CONSTRUCTION OF MECHANICALLY STABILIZED EARTH WALLS AND REINFORCED SOIL SLOPES", VOLUME I AND VOLUME II.

CONCRETE DESIGN SHALL BE PERFORMED USING THE LOAD AND RESISTANCE FACTOR DESIGN METHOD.

CONCRETE: ALL CONCRETE FOR BARRIERS, MOMENT SLABS, AND ROADWAY BARRIERS SHALL BE 4,500 PSI. LEVELING PAD CONCRETE SHALL BE 3,500 PSI. MIX REQUIREMENTS SHALL CONFORM TO SECTION 812 OF THE DELAWARE DEPARTMENT OF TRANSPORTATION STANDARD SPECIFICATIONS.

CHAMFERS: ALL EXPOSED CORNERS OF CONCRETE SHALL BE CHAMFERED WITH ¾" x ¾" MILLED CHAMFER STRIPS, UNLESS OTHERWISE NOTED, EXCEPT ON UNEXPOSED FOOTINGS OR WHERE INDICATED BY THE FOLLOWING NOTATION ON THE PLANS: "DO NOT CHAMFER".

REINFORCING STEEL: REINFORCING STEEL SHALL CONFORM TO ASTM A 615, GRADE 60. ALL SPLICES, NOT SHOWN, SHALL BE LAPPED AS PER THE LRFD BRIDGE DESIGN SPECIFICATIONS. MINIMUM COVER FOR ANY BAR SHALL BE 2" UNLESS OTHERWISE NOTED.

FOR TIES AND STIRRUPS, STANDARD ACI BENDING TOLERANCES ARE MODIFIED TO PLUS (+) ZERO INCHES, MINUS (-) NORMAL ACI BENDING TOLERANCE.

ONLY GRADE 60 CAN BE USED ON THIS PROJECT.

ALL REINFORCING STEEL IN THE BARRIER AND MOMENT SLAB SHALL BE EPOXY COATED, AND SHALL CONFORM TO ASTM D3936.

ALL KEYS ARE NOMINAL SIZE.

THE MSE WALL MANUFACTURER MAY SUBSTITUTE ALTERNATE REINFORCING CONFIGURATIONS AND SUBMIT FOR APPROVAL.

EXPANSION AND CONTRACTION JOINTS: THE LOCATION OF THE EXPANSION AND CONTRACTION JOINTS IN THE BARRIER/MOMENT SLAB SHOWN ON THE PLANS MAY BE ADJUSTED TO ACCOMMODATE THE PANEL TYPE USED IN THE PROJECT. ANY CHANGE TO THESE JOINT LOCATIONS SHALL BE SUBMITTED TO THE ENGINEER FOR APPROVAL.

LEVELING PAD: THE PROPRIETARY WALL MANUFACTURER MAY RELOCATE THE LEVELING PAD STEPS AT THEIR DISCRETION PROVIDED THAT THE MINIMUM EMBEDMENT IS MAINTAINED. ANY CHANGE TO THE STEP LOCATIONS SHALL BE SUBMITTED TO THE ENGINEER FOR APPROVAL.

ROADWAY LIMITS: THE PROPRIETARY WALL MANUFACTURER SHALL ASSURE THAT PROPOSED PROPRIETARY WALL COMPONENTS ARE POSITIONED SUCH THAT THE DESIGNATED ROADWAY LIMITS ARE NOT ENCROACHED UPON.

MOMENT SLAB: THE MOMENT SLAB IS DESIGNED IN ACCORDANCE WITH THE SAME CRITERIA SPECIFIED FOR MECHANICALLY STABILIZED EARTH WALLS IN SECTION 11.10.10.2 OF AASHTO LRFD BRIDGE DESIGN SPECIFICATIONS, 4TH. EDITION.

TRAFFIC BARRIER JOINTS: TRAFFIC BARRIER FOOTING/ MOMENT SLAB SHALL HAVE CONSTRUCTION JOINTS TO COINCIDE WITH THE BARRIER JOINTS.

COORDINATION: CONTRACTOR AND PROPRIETARY WALL MANUFACTURER SHALL COORDINATE LOCATIONS OF INLETS AND PIPES WITH LOCATIONS OF PROPRIETARY WALL TIE BACK SYSTEM AND MOMENT SLAB.

ARCHITECTURAL FINISH: THE MSE WALL PANELS SHALL RECEIVE AN ARCHITECTURAL FINISH.

SERVICE LIFE: ALL RETAINING WALL COMPONENTS SHALL BE DESIGNED FOR A MINIMUM SERVICE LIFE OF 100 YEARS.

WALL SYSTEM: ONLY ONE MSE WALL SYSTEM MAY BE USED ON THIS PROJECT.

ROADWAY SUPERELEVATION: FOR ROADWAY SUPERELEVATION, SEE SUPERELEVATION TABLES.

MSE WALL BACKFILL: MSE WALL BACKFILL SHALL CONSIST OF SPECIFIED BACKFILL.

△2 PAY ITEMS: MECHANICALLY STABILIZED EARTH WALLS (602772)

△3 ~~PCC MASONRY FOR MSE WALLS (602773)~~

BAR REINFORCEMENT. EPOXY COATED (604000)

△3 PCC MASONRY, PARAPET, CLASS A (602017)

SOIL PROPERTIES

SOIL TYPE	UNIT WEIGHT (PCF)	DRAINED ANGLE OF FRICTION (DEGREES)	UNDRAINED SHEAR (PSF)
SELECT FILL	125	34	-
△2 ~~LWEF~~	~~40~~	~~38~~	-
NO. 57 STONE	105	38	-
FOUNDATION SOIL	120	27	1250
△2 CONTROLLED LOW STRENGTH MATERIAL (CLSM)	40	38	-

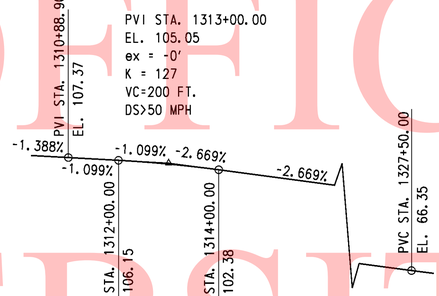

RAMP G1
VERTICAL CURVE DATA
NOT TO SCALE

PI STA. 1310+72.06
△ = 4°47'24.25" RT
Dc = 2°17'30.59"
R = 2,500.0000'
T = 104.56'
L = 209.01'

RAMP G1
HORIZONTAL CURVE NO. 38 DATA

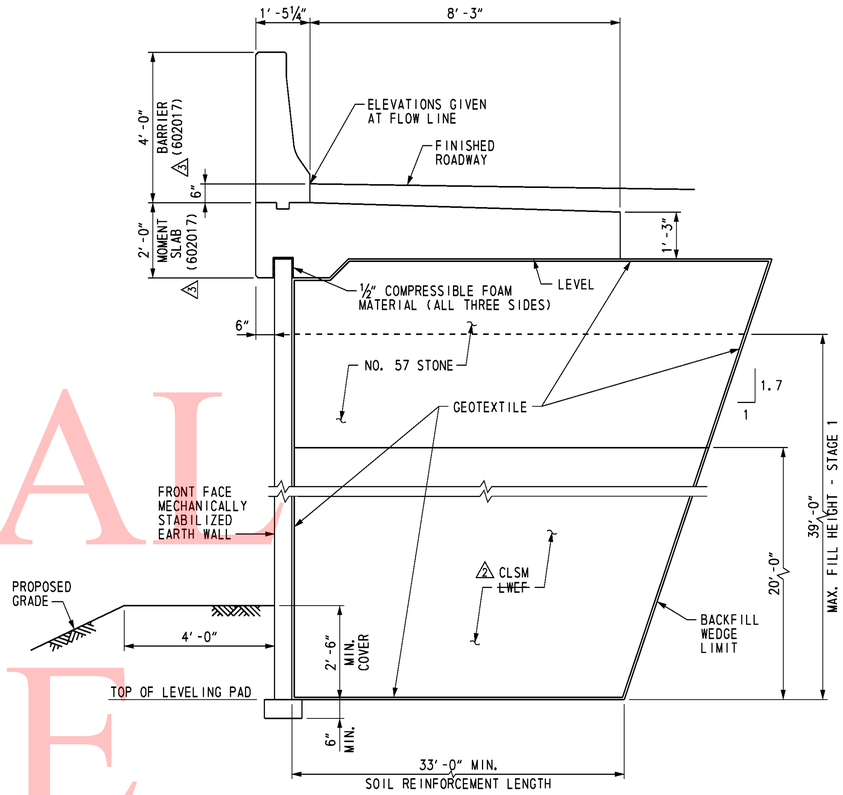

TYPICAL SECTION
SCALE: ½" = 1'-0"

FOUNDATION NOTES:

THE FACTORED BEARING RESISTANCE SHALL BE VERIFIED PRIOR TO CONSTRUCTION OF THE MSE WALL.

THE INTERNAL STABILITY OF THE MSE WALL SHALL BE DESIGNED BY THE CONTRACTOR USING THE SOIL PARAMETERS PROVIDED FOR EACH STRUCTURE LOCATION. THE INTERNAL STABILITY CALCULATIONS SHOULD BE SIGNED AND SEALED BY A PROFESSIONAL ENGINEER LICENSED IN THE STATE OF DELAWARE AS INDICATED IN THE PROJECT SPECIFICATIONS.

ISOLATED AREAS OF UNDERCUTTING OF EXISTING FILL MAY BE ENCOUNTERED DURING CONSTRUCTION OF THIS RETAINING WALL.

△2 A QUARANTINE PERIOD OF ~~APPROXIMATELY~~ THIRTY (30) DAYS IS REQUIRED AFTER CONSTRUCTION OF THE FULL HEIGHT OF THE MSE WALL IS ACHIEVED. THE ENGINEER SHALL APPROVE THE COMPLETION OF THE QUARANTINE PERIOD PRIOR TO CONSTRUCTION OF ANY PAVEMENT OR BARRIER. A TOTAL ESTIMTED SETTLEMENT OF APPROXIMATELY FOUR (4) INCHES IS ANTICIPATED.

△4 THE CONTRACTOR IS RESPONSIBLE FOR DEVELOPING MEANS AND METHODS, IN CONSULTATION WITH THE MSE WALL MANUFACTURER, FOR CONSTRUCTING THE MSE WALLS TO THE LINES, GRADES, AND DIMENSIONS SHOWN ON THE PLANS. SOIL BORINGS, LABORATORY TEST DATA, AND THE ENGINEER'S SETTLEMENT ESTIMATE(S) ARE CONTAINED IN ONE OF THE FOLLOWING GEOTECHNICAL ENGINEERING REPORTS WHICH HAVE BEEN MADE AVAILABLE BY THE DEPARTMENT: FINAL FOUNDATIONS REPORT - RETAINING WALLS AND FINAL FOUNDATIONS REPORT - BRIDGES AND WINGWALLS DATED APRIL 2009, PREPARED BY RUMMEL, KLEPPER & KAHL, LLP AND URS CORPORATION. THESE SUPPLEMENTAL GEOTECHNICAL REPORTS ARE NOT PART OF THE CONTRACT DOCUMENTS, AND ARE AVAILABLE AT WWW.BIDS.DELAWARE.GOV WEBSITE. CONTRACTORS MAY USE THIS INFORMATION AT THEIR OWN RISK.

UNOFICAL WEBSITE COPY

O:\20832687-XMI\CAD\Bridge\ydt01_RW-2_srf.dgn
4/1/2011
Steve_Lambert

DELAWARE DEPARTMENT OF TRANSPORTATION

ADDENDUMS / REVISIONS	
ADDENDUM NO. △2 REVISED FOUNDATION NOTES AND SOIL PROPERTIES, ADDED PAY ITEMS, 01/26/11, RFK	
ADDENDUM NO. △3 REV. PAY ITEMS, 02/18/11, RFK	
ADDENDUM NO. △4 ADDED NOTE, 04/01/11, RFK	

SR1 / I-95 INTERCHANGE

CONTRACT	BRIDGE NO.	
28-090-03	DESIGNED BY: R. F. KIRCHNER	
COUNTY	CHECKED BY: J. S. LI	
NEW CASTLE		

RETAINING WALL 2

GENERAL NOTES AND TYPICAL SECTION

R2-1	
SHEET NO.	537
TOTAL SHTS.	803

GENERAL NOTES

SPECIFICATIONS: PROPRIETARY MSE WALLS SHALL BE DESIGNED IN ACCORDANCE WITH THE FOLLOWING:
- AASHTO LRFD BRIDGE DESIGN SPECIFICATIONS, 4TH EDITION WITH ALL CURRENT REVISIONS.
- FEDERAL HIGHWAY ADMINISTRATION PUBLICATION NOS. FHWA-NHI-10-024 AND FHWA-NHI-025, "DESIGN AND CONSTRUCTION OF MECHANICALLY STABILIZED EARTH WALLS AND REINFORCED SOIL SLOPES", VOLUME I AND VOLUME II.

CONCRETE DESIGN SHALL BE PERFORMED USING THE LOAD AND RESISTANCE FACTOR DESIGN METHOD.

CONCRETE: ALL CONCRETE FOR ROADWAY BARRIERS SHALL BE 4,500 PSI. LEVELING PAD CONCRETE SHALL BE 3,500 PSI. MIX REQUIREMENTS SHALL CONFORM TO SECTION 812 OF THE DELAWARE DEPARTMENT OF TRANSPORTATION STANDARD SPECIFICATIONS.

CHAMFERS: ALL EXPOSED CORNERS OF CONCRETE SHALL BE CHAMFERED WITH ¾" x ¾" MILLED CHAMFER STRIPS, UNLESS OTHERWISE NOTED, EXCEPT ON UNEXPOSED FOOTINGS OR WHERE INDICATED BY THE FOLLOWING NOTATION ON THE PLANS: "DO NOT CHAMFER".

REINFORCING STEEL: REINFORCING STEEL SHALL CONFORM TO ASTM A 615, GRADE 60. ALL SPLICES, NOT SHOWN, SHALL BE LAPPED AS PER THE LRFD BRIDGE DESIGN SPECIFICATIONS. MINIMUM COVER FOR ANY BAR SHALL BE 2" UNLESS OTHERWISE NOTED.

FOR TIES AND STIRRUPS, STANDARD ACI BENDING TOLERANCES ARE MODIFIED TO PLUS (+) ZERO INCHES, MINUS (-) NORMAL ACI BENDING TOLERANCE.

ONLY GRADE 60 CAN BE USED ON THIS PROJECT.

ALL REINFORCING STEEL IN THE BARRIER SHALL BE EPOXY COATED, AND SHALL CONFORM TO ASTM D3936.

ALL KEYS ARE NOMINAL SIZE.

THE MSE WALL MANUFACTURER MAY SUBSTITUTE ALTERNATE REINFORCING CONFIGURATIONS AND SUBMIT FOR APPROVAL.

EXPANSION AND CONTRACTION JOINTS: THE LOCATION OF THE EXPANSION AND CONTRACTION JOINTS IN THE BARRIER SHOWN ON THE PLANS MAY BE ADJUSTED TO ACCOMMODATE THE PANEL TYPE USED IN THE PROJECT. ANY CHANGE TO THESE JOINT LOCATIONS SHALL BE SUBMITTED TO THE ENGINEER FOR APPROVAL.

LEVELING PAD: THE PROPRIETARY WALL MANUFACTURER MAY RELOCATE THE LEVELING PAD STEPS AT THEIR DISCRETION PROVIDED THAT THE MINIMUM EMBEDMENT IS MAINTAINED. ANY CHANGE TO THE STEP LOCATIONS SHALL BE SUBMITTED TO THE ENGINEER FOR APPROVAL.

ROADWAY LIMITS: THE PROPRIETARY WALL MANUFACTURER SHALL ASSURE THAT PROPOSED PROPRIETARY WALL COMPONENTS ARE POSITIONED SUCH THAT THE DESIGNATED ROADWAY LIMITS ARE NOT ENCROACHED UPON.

TRAFFIC BARRIER JOINTS: TRAFFIC BARRIER FOOTING SHALL HAVE CONSTRUCTION JOINTS TO COINCIDE WITH THE BARRIER JOINTS.

COORDINATION: CONTRACTOR AND PROPRIETARY WALL MANUFACTURER SHALL COORDINATE LOCATIONS OF INLETS AND PIPES WITH LOCATIONS OF PROPRIETARY WALL TIE BACK SYSTEM.

ARCHITECTURAL FINISH: THE MSE WALL PANELS SHALL RECEIVE AN ARCHITECTURAL FINISH.

SERVICE LIFE: ALL RETAINING WALL COMPONENTS SHALL BE DESIGNED FOR A MINIMUM SERVICE LIFE OF 100 YEARS.

WALL SYSTEM: ONLY ONE MSE WALL SYSTEM MAY BE USED ON THIS PROJECT.

ROADWAY SUPERELEVATION: FOR ROADWAY SUPERELEVATION, SEE SUPERELEVATION TABLES.

MSE WALL BACKFILL: MSE WALL BACKFILL SHALL CONSIST OF SPECIFIED BACKFILL.

△2 PAY ITEMS: MECHANICALLY STABILIZED EARTH WALLS (602772)

△3 ~~PCC MASONRY FOR MSE WALLS (602773)~~

BAR REINFORCEMENT. EPOXY COATED (604000)

△3 PCC MASONRY, PARAPET, CLASS A (602017)

SOIL PROPERTIES

SOIL TYPE	UNIT WEIGHT (PCF)	DRAINED ANGLE OF FRICTION (DEGREES)	UNDRAINED SHEAR (PSF)
SELECT FILL	125	34	-
△2 ~~LWEF~~	~~40~~	~~38~~	-
NO. 57 STONE	105	38	-
FOUNDATION SOIL	105	28	1250
△2 CONTROLLED LOW STRENGTH MATERIAL (CLSM)	40	38	-

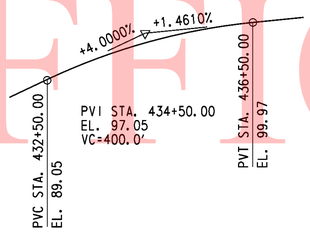

RAMP B
VERTICAL CURVE DATA
NOT TO SCALE

PI STA. 432+05.12
△ = 49°15'06.54" RT
Dc = 3°08'22.18"
R = 1,825.0000'
T = 836.55'
L = 1,568.78'

RAMP B
HORIZONTAL CURVE NO. 18 DATA

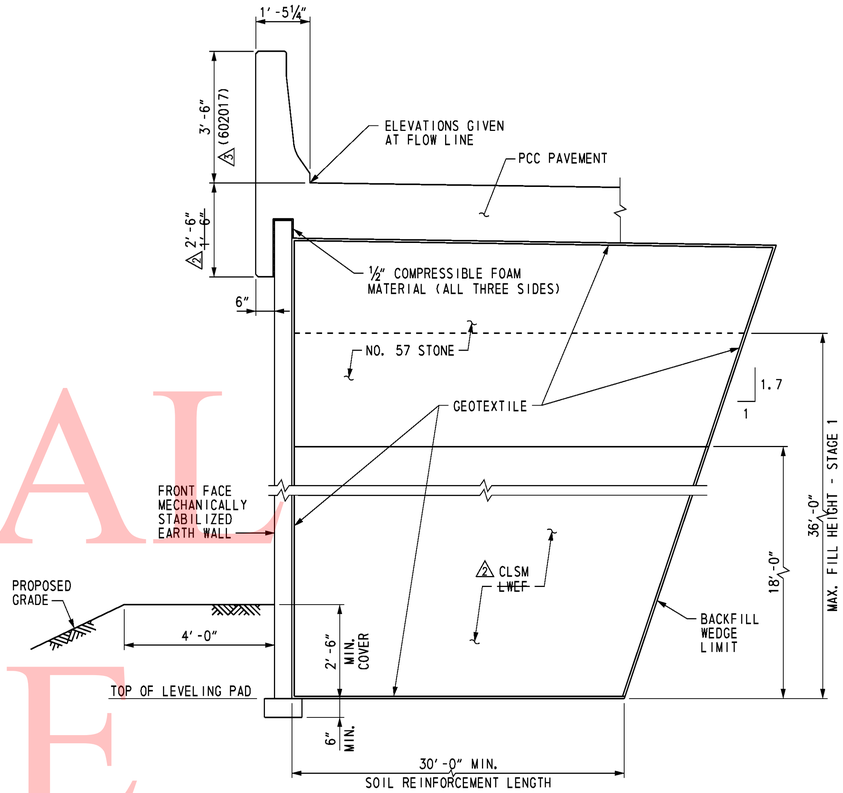

TYPICAL SECTION
SCALE: ½" = 1'-0"

FOUNDATION NOTES:

THE FACTORED BEARING RESISTANCE SHALL BE VERIFIED PRIOR TO CONSTRUCTION OF THE MSE WALL.

THE INTERNAL STABILITY OF THE MSE WALL SHALL BE DESIGNED BY THE CONTRACTOR USING THE SOIL PARAMETERS PROVIDED FOR EACH STRUCTURE LOCATION. THE INTERNAL STABILITY CALCULATIONS SHOULD BE SIGNED AND SEALED BY A PROFESSIONAL ENGINEER LICENSED IN THE STATE OF DELAWARE AS INDICATED IN THE PROJECT SPECIFICATIONS.

ISOLATED AREAS OF UNDERCUTTING OF EXISTING FILL MAY BE ENCOUNTERED DURING CONSTRUCTION OF THIS RETAINING WALL.

△2 A QUARANTINE PERIOD OF ~~APPROXIMATELY~~ THIRTY (30) DAYS IS REQUIRED AFTER CONSTRUCTION OF THE FULL HEIGHT OF THE MSE WALL IS ACHIEVED. THE ENGINEER SHALL APPROVE THE COMPLETION OF THE QUARANTINE PERIOD PRIOR TO CONSTRUCTION OF ANY PAVEMENT OR BARRIER. A TOTAL ESTIMTED SETTLEMENT OF APPROXIMATELY FOUR (4) INCHES IS ANTICIPATED.

△4 THE CONTRACTOR IS RESPONSIBLE FOR DEVELOPING MEANS AND METHODS, IN CONSULTATION WITH THE MSE WALL MANUFACTURER, FOR CONSTRUCTING THE MSE WALLS TO THE LINES, GRADES, AND DIMENSIONS SHOWN ON THE PLANS. SOIL BORINGS, LABORATORY TEST DATA, AND THE ENGINEER'S SETTLEMENT ESTIMATE(S) ARE CONTAINED IN ONE OF THE FOLLOWING GEOTECHNICAL ENGINEERING REPORTS WHICH HAVE BEEN MADE AVAILABLE BY THE DEPARTMENT: FINAL FOUNDATIONS REPORT - RETAINING WALLS AND FINAL FOUNDATIONS REPORT - BRIDGES AND WINGWALLS DATED APRIL 2009, PREPARED BY RUMMEL, KLEPPER & KAHL, LLP AND URS CORPORATION. THESE SUPPLEMENTAL GEOTECHNICAL REPORTS ARE NOT PART OF THE CONTRACT DOCUMENTS, AND ARE AVAILABLE AT WWW.BIDS.DELAWARE.GOV WEBSITE. CONTRACTORS MAY USE THIS INFORMATION AT THEIR OWN RISK.

UNOFFICAL WEBSITE COPY

O:\20832687-XM\CAD\Bridge\v001_RW-3_sr1.dgn
4/1/2011
Steve_Lambert

DELAWARE DEPARTMENT OF TRANSPORTATION

ADDENDUMS / REVISIONS
ADDENDUM NO. △2 REV. FOUNDATION NOTES, COPING DIMENSION AND SOIL PROPERTIES, ADDED PAY ITEMS, 01/26/11, RFK
ADDENDUM NO. △3 REV. PAY ITEMS, 02/18/11, RFK
ADDENDUM NO. △4 ADDED NOTE, 04/01/11, RFK

SR1/I-95 INTERCHANGE

CONTRACT 28-090-03
COUNTY NEW CASTLE
BRIDGE NO.
DESIGNED BY: R. F. KIRCHNER
CHECKED BY: J. S. LI

RETAINING WALL 3
GENERAL NOTES AND TYPICAL SECTION

R3-1
SHEET NO. 542
TOTAL SHTS. 803

GENERAL NOTES

SPECIFICATIONS: PROPRIETARY MSE WALLS SHALL BE DESIGNED IN ACCORDANCE WITH THE FOLLOWING:
- AASHTO LRFD BRIDGE DESIGN SPECIFICATIONS, 4TH EDITION WITH ALL CURRENT REVISIONS.
- FEDERAL HIGHWAY ADMINISTRATION PUBLICATION NO. FHWA-NHI-00-043, "MECHANICALLY STABILIZED EARTH WALLS AND REINFORCED SOIL SLOPES DESIGN AND CONSTRUCTION GUIDELINES"

CONCRETE: CONCRETE DESIGN SHALL BE PERFORMED USING THE LOAD AND RESISTANCE FACTOR DESIGN METHOD.

COPING CONCRETE SHALL BE 3500 PSI. MIX REQUIREMENTS SHALL CONFORM TO SECTION 812 OF THE DELAWARE DEPARTMENT OF TRANSPORTATION STANDARD SPECIFICATIONS.

CHAMFERS: ALL EXPOSED CORNERS OF CONCRETE SHALL BE CHAMFERED WITH ¾" x ¾" MILLED CHAMFER STRIPS, UNLESS OTHERWISE NOTED EXCEPT ON UNEXPOSED FOOTINGS OR WHERE INDICATED BY THE FOLLOWING NOTATION ON THE PLANS: "DO NOT CHAMFER".

REINFORCING STEEL: REINFORCING STEEL SHALL CONFORM TO ASTM A 615, GRADE 60. MINIMUM COVER FOR ANY BAR SHALL BE 2" UNLESS OTHERWISE NOTED.

FOR TIES AND STIRRUPS, STANDARD ACI BENDING TOLERANCES ARE MODIFIED TO PLUS (+) ZERO INCHES, MINUS (-) NORMAL ACI BENDING TOLERANCE.

ONLY GRADE 60 CAN BE USED ON THIS PROJECT.

ALL REINFORCING STEEL IN THE COPING SHALL BE EPOXY COATED.

ALL KEYS ARE NOMINAL SIZE.

THE MSE WALL MANUFACTURER MAY SUBSTITUTE ALTERNATE REINFORCING CONFIGURATIONS AND SUBMIT FOR APPROVAL.

EXPANSION AND CONTRACTION JOINTS: THE LOCATION OF THE EXPANSION AND CONTRACTION JOINTS IN THE COPING SHOWN ON THE PLANS MAY BE ADJUSTED TO ACCOMMODATE THE PANEL TYPE USED IN THE PROJECT. ANY CHANGE TO THESE JOINT LOCATIONS SHALL BE SUBMITTED TO THE ENGINEER FOR APPROVAL. EXPANSION JOINTS ARE LABELED "EJ".

LEVELING PAD: THE PROPRIETARY WALL MANUFACTURER MAY RELOCATE THE LEVELING PAD STEPS AT THEIR DISCRETION PROVIDED THAT THE MINIMUM EMBEDMENT IS MAINTAINED. ANY CHANGE TO THE STEP LOCATIONS SHALL BE SUBMITTED TO THE ENGINEER FOR APPROVAL.

ROADWAY LIMITS: THE PROPRIETARY WALL MANUFACTURER SHALL ASSURE THAT PROPOSED PROPRIETARY WALL COMPONENTS ARE POSITIONED SUCH THAT THE DESIGNATED ROADWAY LIMITS ARE NOT ENCROACHED UPON.

COPING JOINTS: COPING SHALL HAVE CONSTRUCTION JOINTS.

COORDINATION: CONTRACTOR AND PROPRIETARY WALL MANUFACTURER SHALL COORDINATE LOCATIONS OF INLETS AND PIPES WITH LOCATIONS OF PROPRIETARY WALL TIEBACK SYSTEM.

ARCHITECTURAL FINISH: THE MSE WALL PANELS SHALL RECEIVE AN ARCHITECTURAL FINISH.

SERVICE LIFE: ALL RETAINING WALL COMPONENTS SHALL BE DESIGNED FOR A MINIMUM SERVICE LIFE OF ~~75~~ 100 (3) YEARS.

WALL SYSTEM: ONLY ONE MSE WALL SYSTEM MAY BE USED ON THIS PROJECT.

ROADWAY SUPERELEVATION: FOR ROADWAY SUPERELEVATION, SEE SUPERELEVATION TABLES.

MSE WALL BACKFILL: MSE WALL BACKFILL SHALL CONSIST OF SPECIFIED BACKFILL.

PAY ITEMS: MECHANICALLY STABILIZED EARTH WALLS (602772)
PCC MASONRY FOR MSE WALLS (602773)
BAR REINFORCEMENT, EPOXY COATED (604000)

FOUNDATION NOTES

THE FACTORED BEARING RESISTANCE SHALL BE VERIFIED PRIOR TO CONSTRUCTION OF THE MSE WALL.

THE INTERNAL STABILITY OF THE MSE WALL SHALL BE DESIGNED BY THE CONTRACTOR USING THE SOIL PARAMETERS PROVIDED. THE INTERNAL STABILITY SHOULD BE SIGNED AND SEALED BY A PROFESSIONAL ENGINEER LICENSED IN THE STATE OF DELAWARE AS INDICATED IN THE PROJECT SPECIFICATIONS. THE FACTORED APPLIED BEARING STRESS SHALL NOT EXCEED THE FACTORED BEARING RESISTANCE.

ISOLATED AREAS OF UNDERCUTTING OF SOFT SOIL OR EXISTING FILL MAY BE ENCOUNTERED DURING CONSTRUCTION OF THIS RETAINING WALL.

GROUNDWATER MAY BE ENCOUNTERED DURING EXCAVATION TO THE LEVELING PAD AND DURING CONSTRUCTION OF THIS RETAINING WALL. IT IS THE CONTRACTOR'S RESPONSIBILITY TO PROVIDE A RELATIVELY DRY EXCAVATION, INCLUDING DETERMINING APPROPRIATE DEWATERING METHODS DURING CONSTRUCTION.

(2) A QUARANTINE PERIOD OF ~~APPROXIMATELY~~ 30-DAYS IS REQUIRED AFTER CONSTRUCTION OF THE FULL HEIGHT OF THE MSE WALL IS ACHIEVED. THE ENGINEER SHALL APPROVE THE COMPLETION OF THE QUARANTINE PERIOD PRIOR TO CONSTRUCTION OF ANY COPING.

THE DESIGN UNIT WEIGHT INDICATED IN SOIL PROPERTIES TABLE HAS BEEN ADJUSTED DUE TO THE PRESENCE OF SHALLOW GROUNDWATER.

(4) **

SOIL PROPERTIES FOR DESIGN

SOIL TYPE	UNIT WEIGHT (PCF)	ANGLE OF FRICTION (DEGREES)
SELECT FILL	125	34
NO. 57 STONE	105	38
FOUNDATION SOIL	68	24

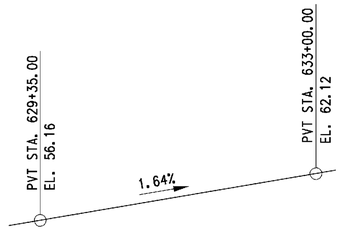

SR7 (NB) VERTICAL CURVE DATA

NO SCALE

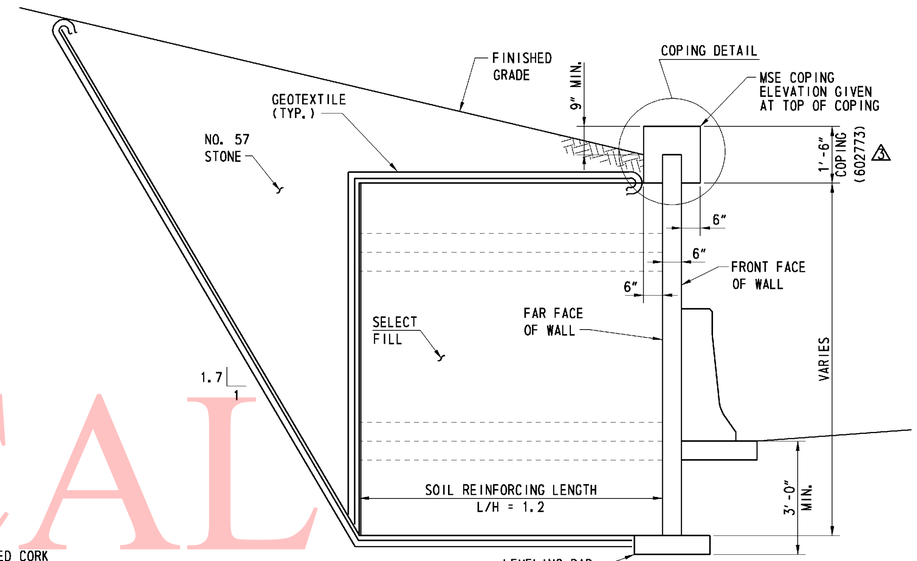

TYPICAL SECTION

(LOOKING AHEAD STATION)
SCALE: ½" = 1'-0"

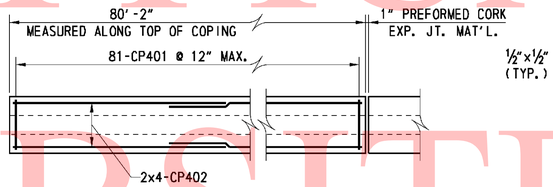

TYPE 1 PANEL (1 REQUIRED)

TYPE 2 PANEL (2 REQUIRED)

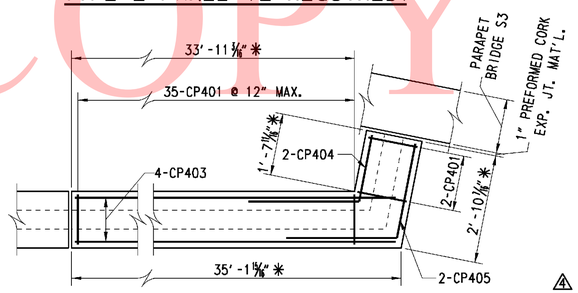

* MEASURED ALONG TOP OF COPING

TYPE 3 PANEL (1 REQUIRED)

COPING REINFORCING PLANS

SCALE: ½" = 1'-0"

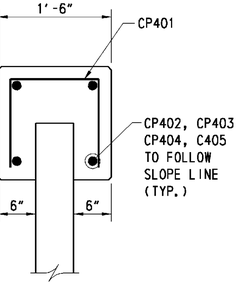

COPING DETAIL

SCALE: 1"= 1'-0"

	SPECIFICATIONS					BENDING DIMENSIONS (FEET-INCHES /QUARTER INCH)						
	QTY.	SIZE	LENGTH	MARK	TYPE	A	B	C	D	H	K	O
COPING	280	4	3-6	CP401	17		1-2	1-2	1-2			
	24	4	41-4 12	CP402	STR							
	4	4	34-9 15/16	CP403	STR							
	2	4	4-6 3/4	CP404	12	0	0	2-11	1-7 3/4	1-7 3/8	0-3 7/8	3-2 7/8
	2	4	5-5 7/16	CP405	12	0	0	2-11	2-6 7/16	2-5 7/8	0-6	3-5

SEE SHEET R7-07 FOR BAR BEND NOTES

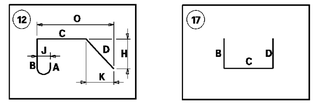

(4) ** THE CONTRACTOR IS RESPONSIBLE FOR DEVELOPING MEANS AND METHODS, IN CONSULTATION WITH THE MSE WALL MANUFACTURER, FOR CONSTRUCTING THE MSE WALLS TO THE LINES, GRADES, AND DIMENSIONS SHOWN ON THE PLANS. SOIL BORINGS, LABORATORY TEST DATA, AND THE ENGINEER'S SETTLEMENT ESTIMATE(S) ARE CONTAINED IN ONE OF THE FOLLOWING GEOTECHNICAL ENGINEERING REPORTS WHICH HAVE BEEN MADE AVAILABLE BY THE DEPARTMENT: FINAL FOUNDATIONS REPORT - RETAINING WALLS AND FINAL FOUNDATIONS REPORT - BRIDGES AND WING WALLS DATED APRIL 2009, PREPARED BY RUMMELL, KLEPPER & KAHL, LLP AND URS CORPORATION. THESE SUPPLEMENTAL GEOTECHNICAL REPORTS ARE NOT PART OF THE CONTRACT DOCUMENTS, AND ARE AVAILABLE AT www.blds.delaware.gov WEBSITE. CONTRACTORS MAY USE THIS INFORMATION AT THEIR OWN RISK.

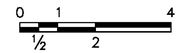

SCALE: ½"=1'-0"

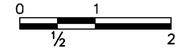

SCALE: 1"=1'-0"

UNOFFICAL WEBSITE COPY

ADDENDUMS / REVISIONS	
ADDENDUM NO. (2), UPDATED FOUNDATION NOTES, 01/26/11, JSW	ADDENDUM NO. (4), ADD NOTE, 4/1/11, JSW
ADDENDUM NO. (3), UPDATED GENERAL NOTES AND TYPICAL SECTION, 02/18/11, JSW	

DELAWARE DEPARTMENT OF TRANSPORTATION

SR1 / I-95 INTERCHANGE

CONTRACT	BRIDGE NO.	
28-090-03	DESIGNED BY:	JMS
COUNTY	CHECKED BY:	JSW
NEW CASTLE		

RETAINING WALL 4
GENERAL NOTES AND TYPICAL SECTION

R4-01

SHEET NO.	TOTAL SHTS.
546	803

4/8/2011 2:34:40 PM
M:\PROJECTS\2003\03059_DELTRNPK\STRMALL\CADD\2809003\PLANS\RD01_WALL-04_SR1.DGN

GENERAL NOTES

SPECIFICATIONS: PROPRIETARY MSE WALLS SHALL BE DESIGNED IN ACCORDANCE WITH THE FOLLOWING:
- AASHTO LRFD BRIDGE DESIGN SPECIFICATIONS, 4TH EDITION WITH ALL CURRENT REVISIONS.
- FEDERAL HIGHWAY ADMINISTRATION PUBLICATION NO. FHWA-NHI-00-043, "MECHANICALLY STABILIZED EARTH WALLS AND REINFORCED SOIL SLOPES DESIGN AND CONSTRUCTION GUIDELINES"

CONCRETE: CONCRETE DESIGN SHALL BE PERFORMED USING THE LOAD AND RESISTANCE FACTOR DESIGN METHOD.

COPING CONCRETE SHALL BE 3500 PSI. MIX REQUIREMENTS SHALL CONFORM TO SECTION 812 OF THE DELAWARE DEPARTMENT OF TRANSPORTATION STANDARD SPECIFICATIONS.

CHAMFERS: ALL EXPOSED CORNERS OF CONCRETE SHALL BE CHAMFERED WITH ¾" x ¾" MILLED CHAMFER STRIPS, UNLESS OTHERWISE NOTED EXCEPT ON UNEXPOSED FOOTINGS OR WHERE INDICATED BY THE FOLLOWING NOTATION ON THE PLANS: "DO NOT CHAMFER".

REINFORCING STEEL: REINFORCING STEEL SHALL CONFORM TO ASTM A 615, GRADE 60. MINIMUM COVER FOR ANY BAR SHALL BE 2" UNLESS OTHERWISE NOTED.

FOR TIES AND STIRRUPS, STANDARD ACI BENDING TOLERANCES ARE MODIFIED TO PLUS (+) ZERO INCHES, MINUS (-) NORMAL ACI BENDING TOLERANCE.

ONLY GRADE 60 CAN BE USED ON THIS PROJECT.

ALL REINFORCING STEEL IN THE COPING SHALL BE EPOXY COATED.

ALL KEYS ARE NOMINAL SIZE.

THE MSE WALL MANUFACTURER MAY SUBSTITUTE ALTERNATE REINFORCING CONFIGURATIONS AND SUBMIT FOR APPROVAL.

EXPANSION AND CONTRACTION JOINTS: THE LOCATION OF THE EXPANSION AND CONTRACTION JOINTS IN THE COPING SHOWN ON THE PLANS MAY BE ADJUSTED TO ACCOMMODATE THE PANEL TYPE USED IN THE PROJECT. ANY CHANGE TO THESE JOINT LOCATIONS SHALL BE SUBMITTED TO THE ENGINEER FOR APPROVAL. EXPANSION JOINTS ARE LABELED "EJ".

LEVELING PAD: THE PROPRIETARY WALL MANUFACTURER MAY RELOCATE THE LEVELING PAD STEPS AT THEIR DISCRETION PROVIDED THAT THE MINIMUM EMBEDMENT IS MAINTAINED. ANY CHANGE TO THE STEP LOCATIONS SHALL BE SUBMITTED TO THE ENGINEER FOR APPROVAL.

ROADWAY LIMITS: THE PROPRIETARY WALL MANUFACTURER SHALL ASSURE THAT PROPOSED PROPRIETARY WALL COMPONENTS ARE POSITIONED SUCH THAT THE DESIGNATED ROADWAY LIMITS ARE NOT ENCROACHED UPON.

COPING JOINTS: COPING SHALL HAVE CONSTRUCTION JOINTS.

COORDINATION: CONTRACTOR AND PROPRIETARY WALL MANUFACTURER SHALL COORDINATE LOCATIONS OF INLETS AND PIPES WITH LOCATIONS OF PROPRIETARY WALL TIEBACK SYSTEM.

ARCHITECTURAL FINISH: THE MSE WALL PANELS SHALL RECEIVE AN ARCHITECTURAL FINISH. 100 △3

SERVICE LIFE: ALL RETAINING WALL COMPONENTS SHALL BE DESIGNED FOR A MINIMUM SERVICE LIFE OF ~~75~~ YEARS.

WALL SYSTEM: ONLY ONE MSE WALL SYSTEM MAY BE USED ON THIS PROJECT.

ROADWAY SUPERELEVATION: FOR ROADWAY SUPERELEVATION, SEE SUPERELEVATION TABLES.

MSE WALL BACKFILL: MSE WALL BACKFILL SHALL CONSIST OF SPECIFIED BACKFILL.

PAY ITEMS: PCC MASONRY, PARAPET, CLASS A (602017)
MECHANICALLY STABILIZED EARTH WALLS (602772)
PCC MASONRY FOR MSE WALLS (602773)
BAR REINFORCEMENT, EPOXY COATED (604000)

FOUNDATION NOTES

THE FACTORED BEARING RESISTANCE SHALL BE VERIFIED PRIOR TO CONSTRUCTION OF THE MSE WALL.

THE INTERNAL STABILITY OF THE MSE WALL SHALL BE DESIGNED BY THE CONTRACTOR USING THE SOIL PARAMETERS PROVIDED. THE INTERNAL STABILITY SHOULD BE SIGNED AND SEALED BY A PROFESSIONAL ENGINEER LICENSED IN THE STATE OF DELAWARE AS INDICATED IN THE PROJECT SPECIFICATIONS. THE FACTORED APPLIED BEARING STRESS SHALL NOT EXCEED THE FACTORED BEARING RESISTANCE.

ISOLATED AREAS OF UNDERCUTTING OF SOFT SOIL OR EXISTING FILL MAY BE ENCOUNTERED DURING CONSTRUCTION OF THIS RETAINING WALL.

GROUNDWATER MAY BE ENCOUNTERED DURING EXCAVATION TO THE LEVELING PAD AND DURING CONSTRUCTION OF THIS RETAINING WALL. IT IS THE CONTRACTOR'S RESPONSIBILITY TO PROVIDE A RELATIVELY DRY EXCAVATION, INCLUDING DETERMINING APPROPRIATE DEWATERING METHODS DURING CONSTRUCTION.

△2 A QUARANTINE PERIOD OF ~~APPROXIMATELY~~ 30-DAYS IS REQUIRED AFTER CONSTRUCTION OF THE FULL HEIGHT OF THE MSE WALL IS ACHIEVED. THE ENGINEER SHALL APPROVE THE COMPLETION OF THE QUARANTINE PERIOD PRIOR TO CONSTRUCTION OF ANY COPING OR PARAPETS.

THE DESIGN UNIT WEIGHT INDICATED IN SOIL PROPERTIES TABLE HAS BEEN ADJUSTED DUE TO THE PRESENCE OF SHALLOW GROUNDWATER.

THE WALL SUPPLIER SHALL PERFORM A DETAILED SEISMIC ANALYSIS FOR BACK TO BACK MSE WALLS WITH L/H LESS THAN 1.1, IF NECESSARY, AS REQUIRED BY FHWA PUBLICATION NO. FHWA-NHI-00-043.

△4 **

SOIL PROPERTIES FOR DESIGN

SOIL TYPE	UNIT WEIGHT (PCF)	ANGLE OF FRICTION (DEGREES)
SELECT FILL	125	34
COMMON BORROW	130	28
FOUNDATION SOIL	63	29

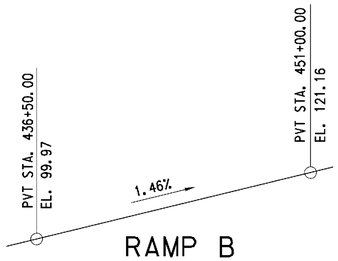

RAMP B VERTICAL CURVE DATA

NO SCALE

CURVE NO. 20

P. I. STA.	453+31.90
△	29°54"47.21" RT
DC	3°00'56.04"
R	1900.00'
TANGENT	507.56'
LENGTH	991.96'

RAMP B HORIZONTAL CURVE DATA

NO SCALE

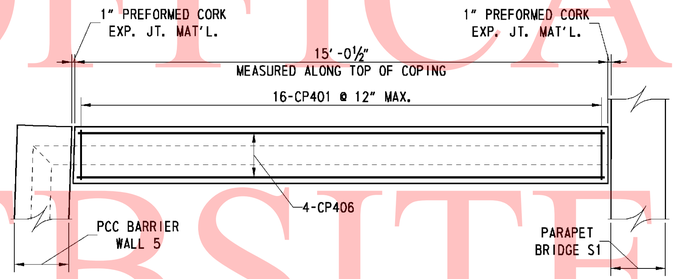

COPING REINFORCING PLAN

SCALE: ½" = 1'-0"

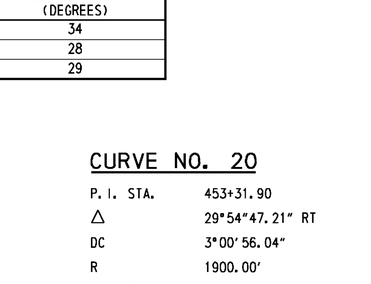

COPING DETAIL

SCALE: 1"= 1'-0"

△4 ** THE CONTRACTOR IS RESPONSIBLE FOR DEVELOPING MEANS AND METHODS, IN CONSULTATION WITH THE MSE WALL MANUFACTURER, FOR CONSTRUCTING THE MSE WALLS TO THE LINES, GRADES, AND DIMENSIONS SHOWN ON THE PLANS. SOIL BORINGS, LABORATORY TEST DATA, AND THE ENGINEER'S SETTLEMENT ESTIMATE(S) ARE CONTAINED IN ONE OF THE FOLLOWING GEOTECHNICAL ENGINEERING REPORTS WHICH HAVE BEEN MADE AVAILABLE BY THE DEPARTMENT: FINAL FOUNDATIONS REPORT - RETAINING WALLS AND FINAL FOUNDATIONS REPORT - BRIDGES AND WING WALLS DATED APRIL 2009, PREPARED BY RUMMELL, KLEPPER & KAHL, LLP AND URS CORPORATION. THESE SUPPLEMENTAL GEOTECHNICAL REPORTS ARE NOT PART OF THE CONTRACT DOCUMENTS, AND ARE AVAILABLE AT www.blds.delaware.gov WEBSITE. CONTRACTORS MAY USE THIS INFORMATION AT THEIR OWN RISK.

	SPECIFICATIONS					BENDING DIMENSIONS (FEET-INCHES /QUARTER INCH)							
	QTY.	SIZE	LENGTH	MARK	TYPE	A	B	C	D	H	K	O	REMARKS
COPING	16	4	3-6	CP401	17		1-2	1-2	1-2				
	4	4	14-8 12	CP406	STR								BEND BARS IN FIELD AS NEEDED

(17) B C D

SEE SHEET R7-07 FOR BAR BEND NOTES

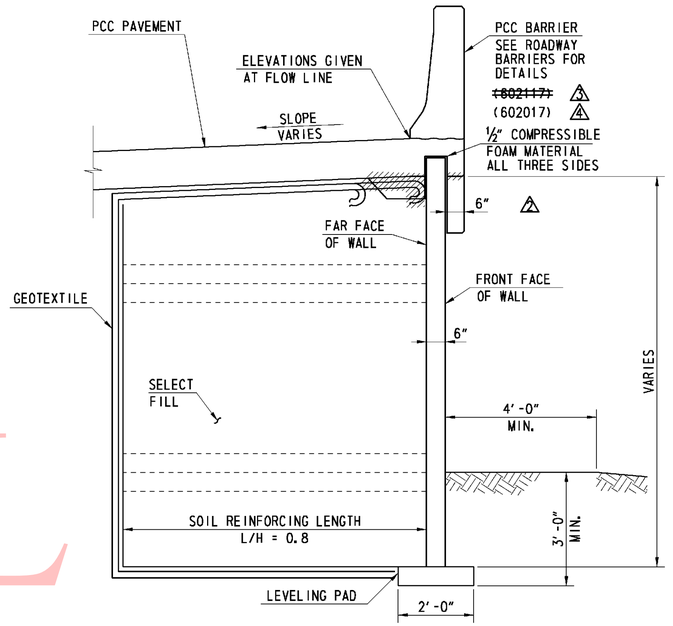

TYPICAL SECTION STA. 449+22.48 TO STA. 450+42.00

(LOOKING BACK STATION)
SCALE: ½" = 1'-0"

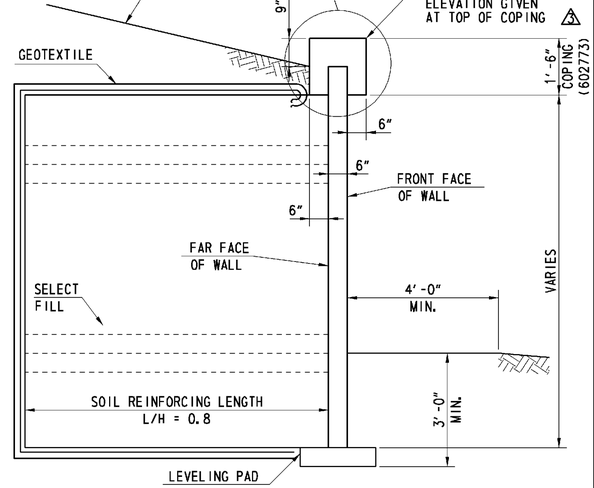

TYPICAL SECTION STA. 449+22.01 TO STA. 449+22.48

SCALE: ½" = 1'-0"

0 ½ 1 2 4
SCALE: ½"=1'-0"

0 ½ 1 2
SCALE: 1"=1'-0"

UNOFICAL WEBSITE COPY

ADDENDUMS / REVISIONS	
ADDENDUM NO. △2, UPDATED FOUNDATION NOTES, SECTION, 01/26/11, JSW	ADDENDUM NO. △4, ADD NOTE, CHANGED PAY ITEM, 4/1/11, JSW
ADDENDUM NO. △3, UPDATED GENERAL NOTES AND TYPICAL SECTION, 02/18/11, JSW	

DELAWARE DEPARTMENT OF TRANSPORTATION

SR1 / I-95 INTERCHANGE

CONTRACT	28-090-03
COUNTY	NEW CASTLE
BRIDGE NO.	
DESIGNED BY:	JMS
CHECKED BY:	JSW

RETAINING WALL 5
GENERAL NOTES AND TYPICAL SECTION

R5-01
SHEET NO. 551
TOTAL SHTS. 803

4/15/2011 10:20:20 AM
M:\PROJECTS\2003\03059_DELTRNPK\SRIMALL\CADD\2809003\PLANS\RD03_WALL-05_SR1.DGN

GENERAL NOTES

SPECIFICATIONS: PROPRIETARY MSE WALLS SHALL BE DESIGNED IN ACCORDANCE WITH THE FOLLOWING:
- AASHTO LRFD BRIDGE DESIGN SPECIFICATIONS, 4TH EDITION WITH ALL CURRENT REVISIONS.
- FEDERAL HIGHWAY ADMINISTRATION PUBLICATION NO. FHWA-NHI-00-043, "MECHANICALLY STABILIZED EARTH WALLS AND REINFORCED SOIL SLOPES DESIGN AND CONSTRUCTION GUIDELINES"

CONCRETE: CONCRETE DESIGN SHALL BE PERFORMED USING THE LOAD AND RESISTANCE FACTOR DESIGN METHOD.

COPING CONCRETE SHALL BE 3500 PSI. MIX REQUIREMENTS SHALL CONFORM TO SECTION 812 OF THE DELAWARE DEPARTMENT OF TRANSPORTATION STANDARD SPECIFICATIONS.

CHAMFERS: ALL EXPOSED CORNERS OF CONCRETE SHALL BE CHAMFERED WITH ¾" x ¾" MILLED CHAMFER STRIPS, UNLESS OTHERWISE NOTED EXCEPT ON UNEXPOSED FOOTINGS OR WHERE INDICATED BY THE FOLLOWING NOTATION ON THE PLANS: "DO NOT CHAMFER".

REINFORCING STEEL: REINFORCING STEEL SHALL CONFORM TO ASTM A 615, GRADE 60. MINIMUM COVER FOR ANY BAR SHALL BE 2" UNLESS OTHERWISE NOTED.

FOR TIES AND STIRRUPS, STANDARD ACI BENDING TOLERANCES ARE MODIFIED TO PLUS (+) ZERO INCHES, MINUS (-) NORMAL ACI BENDING TOLERANCE.

ONLY GRADE 60 CAN BE USED ON THIS PROJECT.

ALL REINFORCING STEEL IN THE COPING SHALL BE EPOXY COATED.

ALL KEYS ARE NOMINAL SIZE.

THE MSE WALL MANUFACTURER MAY SUBSTITUTE ALTERNATE REINFORCING CONFIGURATIONS AND SUBMIT FOR APPROVAL.

EXPANSION AND CONTRACTION JOINTS: THE LOCATION OF THE EXPANSION AND CONTRACTION JOINTS IN THE COPING SHOWN ON THE PLANS MAY BE ADJUSTED TO ACCOMMODATE THE PANEL TYPE USED IN THE PROJECT. ANY CHANGE TO THESE JOINT LOCATIONS SHALL BE SUBMITTED TO THE ENGINEER FOR APPROVAL. EXPANSION JOINTS ARE LABELED "EJ".

LEVELING PAD: THE PROPRIETARY WALL MANUFACTURER MAY RELOCATE THE LEVELING PAD STEPS AT THEIR DISCRETION PROVIDED THAT THE MINIMUM EMBEDMENT IS MAINTAINED. ANY CHANGE TO THE STEP LOCATIONS SHALL BE SUBMITTED TO THE ENGINEER FOR APPROVAL.

ROADWAY LIMITS: THE PROPRIETARY WALL MANUFACTURER SHALL ASSURE THAT PROPOSED PROPRIETARY WALL COMPONENTS ARE POSITIONED SUCH THAT THE DESIGNATED ROADWAY LIMITS ARE NOT ENCROACHED UPON.

COPING JOINTS: COPING SHALL HAVE CONSTRUCTION JOINTS.

COORDINATION: CONTRACTOR AND PROPRIETARY WALL MANUFACTURER SHALL COORDINATE LOCATIONS OF INLETS AND PIPES WITH LOCATIONS OF PROPRIETARY WALL TIEBACK SYSTEM.

ARCHITECTURAL FINISH: THE MSE WALL PANELS SHALL RECEIVE AN ARCHITECTURAL FINISH. 100 △3

SERVICE LIFE: ALL RETAINING WALL COMPONENTS SHALL BE DESIGNED FOR A MINIMUM SERVICE LIFE OF ~~75~~ YEARS.

WALL SYSTEM: ONLY ONE MSE WALL SYSTEM MAY BE USED ON THIS PROJECT.

ROADWAY SUPERELEVATION: FOR ROADWAY SUPERELEVATION, SEE SUPERELEVATION TABLES.

MSE WALL BACKFILL: MSE WALL BACKFILL SHALL CONSIST OF SPECIFIED BACKFILL.

PAY ITEMS: MECHANICALLY STABILIZED EARTH WALLS (602772)
PCC MASONRY FOR MSE WALLS (602773)
BAR REINFORCEMENT, EPOXY COATED (604000)

SOIL PROPERTIES FOR DESIGN

SOIL TYPE	UNIT WEIGHT (PCF)	ANGLE OF FRICTION (DEGREES)
SELECT FILL	125	34
△3 ~~NO. 57 STONE~~	130	28
FOUNDATION SOIL	125	32
COMMON BORROW		

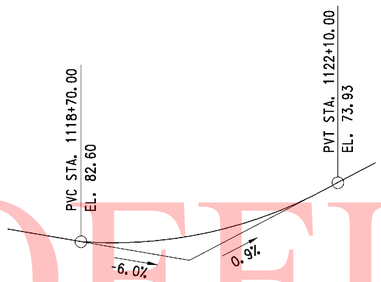

RAMP C
VERTICAL CURVE DATA
NO SCALE

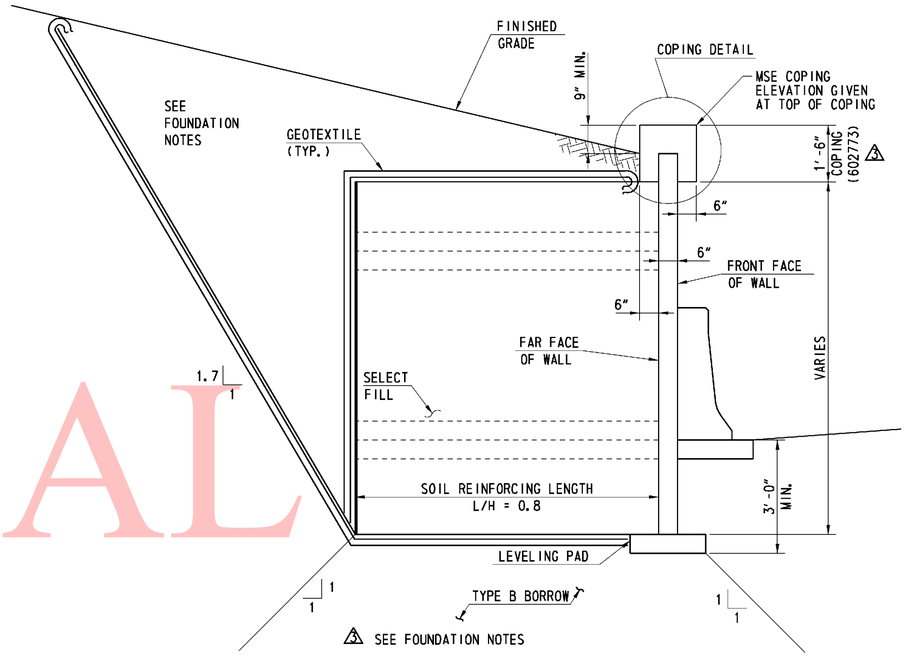

TYPICAL SECTION
(LOOKING BACK STATION)
SCALE: ½" = 1'-0"

CURVE NO. 30

P.I. STA.	1118+29.56
△	39°23'47.64" LT
DC	9°32'57.47"
R	600.00'
TANGENT	214.81'
LENGTH	412.56'

RAMP C
HORIZONTAL CURVE DATA
NO SCALE

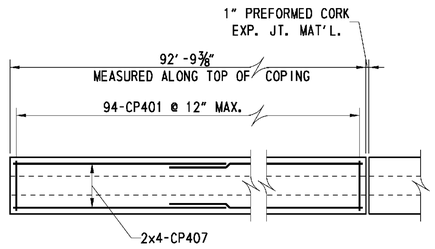

COPING REINFORCING PLAN
(2 REQUIRED)
SCALE: ½" = 1'-0"

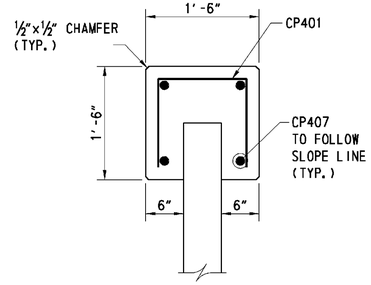

COPING DETAIL
SCALE: 1"= 1'-0"

FOUNDATION NOTES

THE FACTORED BEARING RESISTANCE SHALL BE VERIFIED PRIOR TO CONSTRUCTION OF THE MSE WALL.

THE INTERNAL STABILITY OF THE MSE WALL SHALL BE DESIGNED BY THE CONTRACTOR USING THE SOIL PARAMETERS PROVIDED. THE INTERNAL STABILITY SHOULD BE SIGNED AND SEALED BY A PROFESSIONAL ENGINEER LICENSED IN THE STATE OF DELAWARE AS INDICATED IN THE PROJECT SPECIFICATIONS. THE FACTORED APPLIED BEARING STRESS SHALL NOT EXCEED THE FACTORED BEARING RESISTANCE.

△2 A QUARANTINE PERIOD OF ~~APPROXIMATELY~~ 30-DAYS IS REQUIRED AFTER CONSTRUCTION OF THE FULL HEIGHT OF THE MSE WALL IS ACHIEVED. THE ENGINEER SHALL APPROVE THE COMPLETION OF THE QUARANTINE PERIOD PRIOR TO CONSTRUCTION OF ANY COPING.

RETAINING WALL 6 MUST BE CONSTRUCTED ON SELECT FILL FOUNDATION SOIL.

RETAINING WALL 6 FROM RAMP C STATION 1117+47.08 TO 1117+75 CAN BE CONSTRUCTED WITH SELECT FILL IN THE MSE REINFORCEMENT ZONE AND WITH COMMON BORROW IN THE RETAINED WEDGE. FROM STATION 1117+75 TO STATION 1119+25, SELECT FILL MUST BE USED IN THE MSE REINFORCEMENT ZONE AND IN THE RETAINED WEDGE.

THE WALL SUPPLIER SHAL PERFORM A DETAILED SEISMIC ANALYSIS FOR BACK TO BACK MSE WALLS WITH L/H LESS THAN 1.1, IF NECESSARY, AS REQUIRED BY FHWA PUBLICATION NO. FHWA-NHI-00-043.

△3 PORTIONS OF R6 ARE ON TOP OF CLSM. FOR DETAILS SEE SHEET S4-13

△4 **

△4 ** THE CONTRACTOR IS RESPONSIBLE FOR DEVELOPING MEANS AND METHODS, IN CONSULTATION WITH THE MSE WALL MANUFACTURER, FOR CONSTRUCTING THE MSE WALLS TO THE LINES, GRADES, AND DIMENSIONS SHOWN ON THE PLANS. SOIL BORINGS, LABORATORY TEST DATA, AND THE ENGINEER'S SETTLEMENT ESTIMATE(S) ARE CONTAINED IN ONE OF THE FOLLOWING GEOTECHNICAL ENGINEERING REPORTS WHICH HAVE BEEN MADE AVAILABLE BY THE DEPARTMENT: FINAL FOUNDATIONS REPORT - RETAINING WALLS AND FINAL FOUNDATIONS REPORT - BRIDGES AND WING WALLS DATED APRIL 2009, PREPARED BY RUMWELL, KLEPPER & KAHL, LLP AND URS CORPORATION. THESE SUPPLEMENTAL GEOTECHNICAL REPORTS ARE NOT PART OF THE CONTRACT DOCUMENTS, AND ARE AVAILABLE AT www.bids.delaware.gov WEBSITE. CONTRACTORS MAY USE THIS INFORMATION AT THEIR OWN RISK.

	SPECIFICATIONS					BENDING DIMENSIONS (FEET-INCHES /QUARTER INCH)							
	QTY.	SIZE	LENGTH	MARK	TYPE	A	B	C	D	H	K	O	REMARKS
COPING	188	4	3-6	CP401	17		1-2	1-2	1-2				
	16	4	47-10 3/16	CP407	STR								BEND BARS IN FIELD AS NEEDED

SEE SHEET R7-07 FOR BAR BEND NOTES

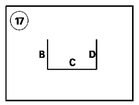

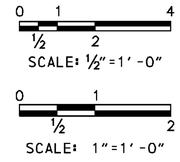

UNOFICAL WEBSITE COPY

ADDENDUMS / REVISIONS	
ADDENDUM NO. △2, UPDATED FOUNDATION NOTES, 01/26/11, JSW	ADDENDUM NO. △4, ADD NOTE, 4/1/11, JSW
ADDENDUM NO. △3, UPDATED GENERAL NOTES, FOUND. NOTES & TYP. SECT., 02/18/11, JSW	

DELAWARE DEPARTMENT OF TRANSPORTATION

SR1 / I-95 INTERCHANGE

CONTRACT	28-090-03
COUNTY	NEW CASTLE
BRIDGE NO.	
DESIGNED BY:	JMS
CHECKED BY:	JSW

RETAINING WALL 6
GENERAL NOTES AND TYPICAL SECTION

R6-01	
SHEET NO.	555
TOTAL SHTS.	803

4/8/2011 2:46:07 PM
M:\PROJECTS\2003\03059_DELTRNPK\SRTMALL\CADD\2809003\PLANS\RD05_WALL-06_SR1.DGN

GENERAL NOTES

SPECIFICATIONS: PROPRIETARY MSE WALLS SHALL BE DESIGNED IN ACCORDANCE WITH THE FOLLOWING:
- AASHTO LRFD BRIDGE DESIGN SPECIFICATIONS, 4TH EDITION WITH ALL CURRENT REVISIONS.
- FEDERAL HIGHWAY ADMINISTRATION PUBLICATION NO. FHWA-NHI-00-043, "MECHANICALLY STABILIZED EARTH WALLS AND REINFORCED SOIL SLOPES DESIGN AND CONSTRUCTION GUIDELINES"

CONCRETE DESIGN SHALL BE PERFORMED USING THE LOAD AND RESISTANCE FACTOR DESIGN METHOD.

CONCRETE: ALL CONCRETE FOR BARRIER AND MOMENT SLABS SHALL BE 4500 PSI. LEVELING PAD CONCRETE SHALL BE 3500 PSI. MIX REQUIREMENTS SHALL CONFORM TO SECTION 812 OF THE DELAWARE DEPARTMENT OF TRANSPORTATION STANDARD SPECIFICATIONS.

CHAMFERS: ALL EXPOSED CORNERS OF CONCRETE SHALL BE CHAMFERED WITH ¾" x ¾" MILLED CHAMFER STRIPS, UNLESS OTHERWISE NOTED EXCEPT ON UNEXPOSED FOOTINGS OR WHERE INDICATED BY THE FOLLOWING NOTATION ON THE PLANS: "DO NOT CHAMFER".

REINFORCING STEEL: REINFORCING STEEL SHALL CONFORM TO ASTM A 615, GRADE 60. MINIMUM COVER FOR ANY BAR SHALL BE 2" UNLESS OTHERWISE NOTED.

FOR TIES AND STIRRUPS, STANDARD ACI BENDING TOLERANCES ARE MODIFIED TO PLUS (+) ZERO INCHES, MINUS (-) NORMAL ACI BENDING TOLERANCE.

ONLY GRADE 60 CAN BE USED ON THIS PROJECT.

ALL REINFORCING STEEL IN THE PARAPET AND MOMENT SLAB SHALL BE EPOXY COATED.

ALL KEYS ARE NOMINAL SIZE.

THE MSE WALL MANUFACTURER MAY SUBSTITUTE ALTERNATE REINFORCING CONFIGURATIONS AND SUBMIT FOR APPROVAL.

EXPANSION AND CONTRACTION JOINTS: THE LOCATION OF THE EXPANSION AND CONTRACTION JOINTS IN THE BARRIER/MOMENT SLAB SHOWN ON THE PLANS MAY BE ADJUSTED TO ACCOMMODATE THE PANEL TYPE USED IN THE PROJECT. ANY CHANGE TO THESE JOINT LOCATIONS SHALL BE SUBMITTED TO THE ENGINEER FOR APPROVAL. EXPANSION JOINTS ARE LABELED "EJ".

LEVELING PAD: THE PROPRIETARY WALL MANUFACTURER MAY RELOCATE THE LEVELING PAD STEPS AT THEIR DISCRETION PROVIDED THAT THE MINIMUM EMBEDMENT IS MAINTAINED. ANY CHANGE TO THE STEP LOCATIONS SHALL BE SUBMITTED TO THE ENGINEER FOR APPROVAL.

ROADWAY LIMITS: THE PROPRIETARY WALL MANUFACTURER SHALL ASSURE THAT PROPOSED PROPRIETARY WALL COMPONENTS ARE POSITIONED SUCH THAT THE DESIGNATED ROADWAY LIMITS ARE NOT ENCROACHED UPON.

TRAFFIC BARRIER JOINTS: TRAFFIC BARRIER/MOMENT SLAB SHALL HAVE CONSTRUCTION JOINTS.

COORDINATION: CONTRACTOR AND PROPRIETARY WALL MANUFACTURER SHALL COORDINATE LOCATIONS OF INLETS AND PIPES WITH LOCATIONS OF PROPRIETARY WALL TIEBACK SYSTEM AND MOMENT SLAB.

ARCHITECTURAL FINISH: THE MSE WALL PANELS SHALL RECEIVE AN ARCHITECTURAL FINISH.

SERVICE LIFE: ALL RETAINING WALL COMPONENTS SHALL BE DESIGNED FOR A MINIMUM SERVICE LIFE OF ~~75~~ 100 YEARS. (3)

WALL SYSTEM: ONLY ONE MSE WALL SYSTEM MAY BE USED ON THIS PROJECT.

ROADWAY SUPERELEVATION: FOR ROADWAY SUPERELEVATION, SEE SUPERELEVATION TABLES.

MSE WALL BACKFILL: MSE WALL BACKFILL SHALL CONSIST OF SPECIFIED BACKFILL.

MOMENT SLAB: THE MOMENT SLAB IS DESIGNED IN ACCORDANCE WITH THE SAME CRITERIA SPECIFIED FOR MECHANICALLY STABILIZED EARTH WALLS IN SECTION 11.10.10.2 OF THE AASHTO LRFD BRIDGE DESIGN SPECIFICATIONS, 4TH ED.

PAY ITEMS: PCC MASONRY, PARAPET, CLASS A (602017)
MECHANICALLY STABILIZED EARTH WALLS (602772)
BAR REINFORCEMENT, EPOXY COATED (604000)

SOIL PROPERTIES FOR DESIGN

SOIL TYPE	UNIT WEIGHT (PCF)	ANGLE OF FRICTION (DEGREES)
SELECT FILL	125	34
COMMON BORROW	130	~~38~~ 28 (4)
FOUNDATION SOIL	68	24

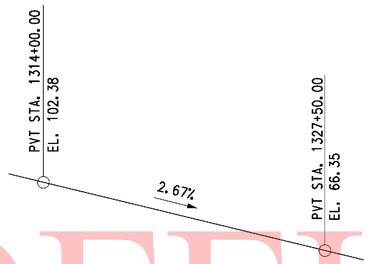

RAMP G1
VERTICAL CURVE DATA
NO SCALE

CURVE NO. 39		CURVE NO. 40	
P.I. STA.	1315+87.20	P.I. STA.	1321+39.36
△	28°50'21.32" LT	△	11°37'48.17" LT
DC	6°51'42.37"	DC	1°41'01.26"
R	835.00'	R	3403.00'
TANGENT	214.70'	TANGENT	346.57'
LENGTH	420.29'	LENGTH	690.75'

RAMP G1
HORIZONTAL CURVE DATA
NO SCALE

(4) ** THE CONTRACTOR IS RESPONSIBLE FOR DEVELOPING MEANS AND METHODS, IN CONSULTATION WITH THE MSE WALL MANUFACTURER, FOR CONSTRUCTING THE MSE WALLS TO THE LINES, GRADES, AND DIMENSIONS SHOWN ON THE PLANS. SOIL BORINGS, LABORATORY TEST DATA, AND THE ENGINEER'S SETTLEMENT ESTIMATE(S) ARE CONTAINED IN ONE OF THE FOLLOWING GEOTECHNICAL ENGINEERING REPORTS WHICH HAVE BEEN MADE AVAILABLE BY THE DEPARTMENT: FINAL FOUNDATIONS REPORT - RETAINING WALLS AND FINAL FOUNDATIONS REPORT - BRIDGES AND WING WALLS DATED APRIL 2009, PREPARED BY RUMMELL, KLEPPER & KAHL, LLP AND URS CORPORATION. THESE SUPPLEMENTAL GEOTECHNICAL REPORTS ARE NOT PART OF THE CONTRACT DOCUMENTS, AND ARE AVAILABLE AT www.bids.delaware.gov WEBSITE. CONTRACTORS MAY USE THIS INFORMATION AT THEIR OWN RISK.

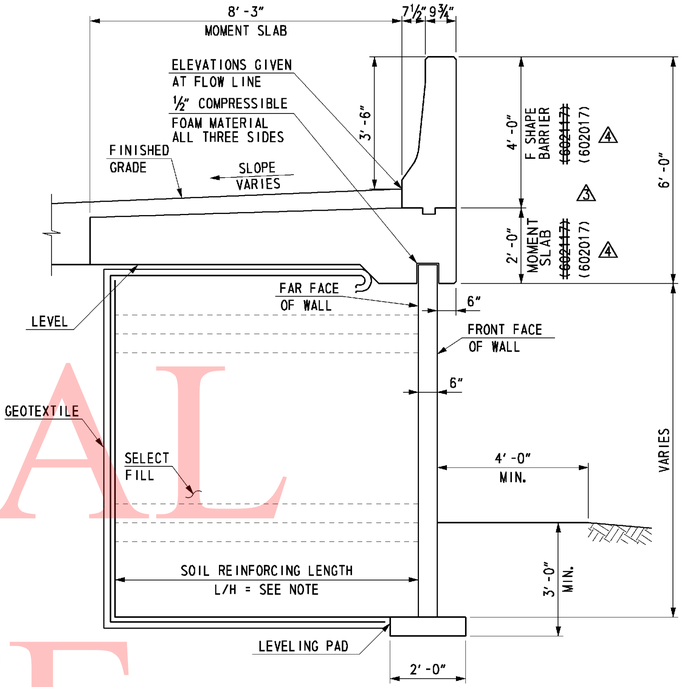

TYPICAL SECTION
(LOOKING AHEAD STATIONS)
SCALE: ½" = 1'-0"

FOUNDATION NOTES

THE FACTORED BEARING RESISTANCE SHALL BE VERIFIED PRIOR TO CONSTRUCTION OF THE MSE WALL.

THE INTERNAL STABILITY OF THE MSE WALL SHALL BE DESIGNED BY THE CONTRACTOR USING THE SOIL PARAMETERS PROVIDED FOR EACH STRUCTURE LOCATION. THE INTERNAL STABILITY SHOULD BE SIGNED AND SEALED BY A PROFESSIONAL ENGINEER LICENSED IN THE STATE OF DELAWARE AS INDICATED IN THE PROJECT SPECIFICATIONS. THE FACTORED APPLIED BEARING STRESS SHALL NOT EXCEED THE FACTORED BEARING RESISTANCE.

GROUNDWATER MAY BE ENCOUNTERED DURING EXCAVATION TO THE LEVELING PAD AND DURING CONSTRUCTION OF THIS RETAINING WALL. IT IS THE CONTRACTOR'S RESPONSIBILITY TO PROVIDE A RELATIVELY DRY EXCAVATION, INCLUDING DETERMINING APPROPRIATE DEWATERING METHODS DURING CONSTRUCTION.

(3) A QUARANTINE PERIOD OF ~~APPROXIMATELY~~ 30-DAYS IS REQUIRED AFTER CONSTRUCTION OF THE FULL HEIGHT OF THE MSE WALL IS ACHIEVED. THE ENGINEER SHALL APPROVE THE COMPLETION OF THE QUARANTINE PERIOD PRIOR TO CONSTRUCTION OF ANY MOMENT SLABS OR PARAPETS.

RETAINING WALL 7 FROM RAMP G1 STA 1317+60.83 TO STA 1318+00 MAY BE CONSTRUCTED WITH SELECT FILL FOR THE FULL HEIGHT OF THE RETAINING WALL. THERE WILL BE NO BACKFILL BETWEEN THE WALLS. THE MINIMUM REINFORCEMENT LENGTH TO HEIGHT RATIO FOR RETAINING WALL 7 IS L/H=0.9. FROM RAMP G1 STA 1318+00 TO STA 1356+88 (END OF WALL), THE REINFORCEMENT LENGTH TO HEIGHT RATIO MUST BE L/H = 1.1. COMMON BORROW MAY BE USED AS BACKFILL BEHIND THE REINFORCEMENT ZONE.

THE DESIGN UNIT WEIGHT INDICATED IN SOIL PROPERTIES TABLE HAS BEEN ADJUSTED DUE TO THE PRESENCE OF SHALLOW GROUNDWATER.

THE WALL SUPPLIER SHAL PERFORM A DETAILED SEISMIC ANALYSIS FOR BACK TO BACK MSE WALLS WITH L/H LESS THAN 1.1, IF NECESSARY, AS REQUIRED BY FHWA PUBLICATION NO. FHWA-NHI-00-043..

(4) **

0 1 4
½ 2
SCALE: ½"=1'-0"

UNOFFICAL WEBSITE COPY

4/15/2011 10:29:13 AM
M:\PROJECTS\2003\03059_DELTRNPK\SRIMALL\CADD\28090003\PLANS\RD07_WALL-07_SR1DGN

DELAWARE DEPARTMENT OF TRANSPORTATION

ADDENDUMS / REVISIONS	
ADDENDUM NO. (3), UPDATED NOTES AND	
TYPICAL SECTION, 02/18/11, JSW	
ADDENDUM NO. (4), REVISE TABLE, ADD NOTE,	
CHANGED PAY ITEM, 4/1/11, JSW	

SR1 / I-95 INTERCHANGE

CONTRACT	BRIDGE NO.	
28-090-03	DESIGNED BY:	JMS
COUNTY	CHECKED BY:	JSW
NEW CASTLE		

RETAINING WALL 7
GENERAL NOTES AND TYPICAL SECTION

R7-01

SHEET NO.	TOTAL SHTS.
559	803

GENERAL NOTES

SPECIFICATIONS: PROPRIETARY MSE WALLS SHALL BE DESIGNED IN ACCORDANCE WITH THE FOLLOWING:
- AASHTO LRFD BRIDGE DESIGN SPECIFICATIONS, 4TH EDITION WITH ALL CURRENT REVISIONS.
- FEDERAL HIGHWAY ADMINISTRATION PUBLICATION NO. FHWA-NHI-00-043, "MECHANICALLY STABILIZED EARTH WALLS AND REINFORCED SOIL SLOPES DESIGN AND CONSTRUCTION GUIDELINES"

CONCRETE: CONCRETE DESIGN SHALL BE PERFORMED USING THE LOAD AND RESISTANCE FACTOR DESIGN METHOD.

COPING CONCRETE SHALL BE 3500 PSI. MIX REQUIREMENTS SHALL CONFORM TO SECTION 812 OF THE DELAWARE DEPARTMENT OF TRANSPORTATION STANDARD SPECIFICATIONS.

CHAMFERS: ALL EXPOSED CORNERS OF CONCRETE SHALL BE CHAMFERED WITH ¾" x ¾" MILLED CHAMFER STRIPS, UNLESS OTHERWISE NOTED EXCEPT ON UNEXPOSED FOOTINGS OR WHERE INDICATED BY THE FOLLOWING NOTATION ON THE PLANS: "DO NOT CHAMFER".

REINFORCING STEEL: REINFORCING STEEL SHALL CONFORM TO ASTM A 615, GRADE 60. MINIMUM COVER FOR ANY BAR SHALL BE 2" UNLESS OTHERWISE NOTED.

FOR TIES AND STIRRUPS, STANDARD ACI BENDING TOLERANCES ARE MODIFIED TO PLUS (+) ZERO INCHES, MINUS (-) NORMAL ACI BENDING TOLERANCE.

ONLY GRADE 60 CAN BE USED ON THIS PROJECT.

ALL REINFORCING STEEL IN THE COPING SHALL BE EPOXY COATED.

ALL KEYS ARE NOMINAL SIZE.

THE MSE WALL MANUFACTURER MAY SUBSTITUTE ALTERNATE REINFORCING CONFIGURATIONS AND SUBMIT FOR APPROVAL.

EXPANSION AND CONTRACTION JOINTS: THE LOCATION OF THE EXPANSION AND CONTRACTION JOINTS IN THE COPING SHOWN ON THE PLANS MAY BE ADJUSTED TO ACCOMMODATE THE PANEL TYPE USED IN THE PROJECT. ANY CHANGE TO THESE JOINT LOCATIONS SHALL BE SUBMITTED TO THE ENGINEER FOR APPROVAL. EXPANSION JOINTS ARE LABELED "EJ".

LEVELING PAD: THE PROPRIETARY WALL MANUFACTURER MAY RELOCATE THE LEVELING PAD STEPS AT THEIR DISCRETION PROVIDED THAT THE MINIMUM EMBEDMENT IS MAINTAINED. ANY CHANGE TO THE STEP LOCATIONS SHALL BE SUBMITTED TO THE ENGINEER FOR APPROVAL.

ROADWAY LIMITS: THE PROPRIETARY WALL MANUFACTURER SHALL ASSURE THAT PROPOSED PROPRIETARY WALL COMPONENTS ARE POSITIONED SUCH THAT THE DESIGNATED ROADWAY LIMITS ARE NOT ENCROACHED UPON.

COPING JOINTS: COPING SHALL HAVE CONSTRUCTION JOINTS.

COORDINATION: CONTRACTOR AND PROPRIETARY WALL MANUFACTURER SHALL COORDINATE LOCATIONS OF INLETS AND PIPES WITH LOCATIONS OF PROPRIETARY WALL TIEBACK SYSTEM.

ARCHITECTURAL FINISH: THE MSE WALL PANELS SHALL RECEIVE AN ARCHITECTURAL FINISH.

SERVICE LIFE: ALL RETAINING WALL COMPONENTS SHALL BE DESIGNED FOR A MINIMUM SERVICE LIFE OF ~~75~~ 100 (3) YEARS.

WALL SYSTEM: ONLY ONE MSE WALL SYSTEM MAY BE USED ON THIS PROJECT.

ROADWAY SUPERELEVATION: FOR ROADWAY SUPERELEVATION, SEE SUPERELEVATION TABLES.

MSE WALL BACKFILL: MSE WALL BACKFILL SHALL CONSIST OF SPECIFIED BACKFILL.

PAY ITEMS: MECHANICALLY STABILIZED EARTH WALLS (602772)
PCC MASONRY FOR MSE WALLS (602773)
BAR REINFORCEMENT, EPOXY COATED (604000)

FOUNDATION NOTES

THE FACTORED BEARING RESISTANCE SHALL BE VERIFIED PRIOR TO CONSTRUCTION OF THE MSE WALL.

THE INTERNAL STABILITY OF THE MSE WALL SHALL BE DESIGNED BY THE CONTRACTOR USING THE SOIL PARAMETERS PROVIDED FOR EACH STRUCTURE LOCATION. THE INTERNAL STABILITY SHOULD BE SIGNED AND SEALED BY A PROFESSIONAL ENGINEER LICENSED IN THE STATE OF DELAWARE AS INDICATED IN THE PROJECT SPECIFICATIONS. THE FACTORED APPLIED BEARING STRESS SHALL NOT EXCEED THE FACTORED BEARING RESISTANCE.

ISOLATED AREAS OF UNDERCUTTING OF EXISTING FILL MAY BE ENCOUNTERED DURING CONSTRUCTION OF THIS RETAINING WALL.

GROUNDWATER MAY BE ENCOUNTERED DURING EXCAVATION TO THE LEVELING PAD AND DURING CONSTRUCTION OF THIS RETAINING WALL. IT IS THE CONTRACTOR'S RESPONSIBILITY TO PROVIDE A RELATIVELY DRY EXCAVATION, INCLUDING DETERMINING APPROPRIATE DEWATERING METHODS DURING CONSTRUCTION.

(2) A QUARANTINE PERIOD OF ~~APPROXIMATELY~~ 30-DAYS IS REQUIRED AFTER CONSTRUCTION OF THE FULL HEIGHT OF THE MSE WALL IS ACHIEVED. THE ENGINEER SHALL APPROVE THE COMPLETION OF THE QUARANTINE PERIOD PRIOR TO CONSTRUCTION OF ANY COPING.

RETAINING WALL 8 FROM RAMP C1 STA 1815+58.62 TO STA 1816+35 MAY BE CONSTRUCTED WITH SELECT FILL FOR THE FULL HEIGHT OF THE RETAINING WALL. THERE WILL BE NO BACKFILL BETWEEN THE WALLS. THE MINIMUM REINFORCEMENT LENGTH TO HEIGHT RATIO FOR RETAINING WALL 8 IS L/H=1.2. FROM RAMP C1 STA 1816+35 TO SR 7 (SB) STA 1815+60, THE REINFORCEMENT LENGTH TO HEIGHT RATIO MUST BE L/H = 1.2. NO. 57 STONE SHOULD BE USED AS BACKFILL BEHIND THE REINFORCEMENT ZONE BETWEEN THESE STATIONS.

THE DESIGN UNIT WEIGHT INDICATED IN SOIL PROPERTIES TABLE HAS BEEN ADJUSTED DUE TO THE PRESENCE OF SHALLOW GROUNDWATER.

THE WALL SUPPLIER SHAL PERFORM A DETAILED SEISMIC ANALYSIS FOR BACK TO BACK MSE WALLS WITH L/H LESS THAN 1.1, IF NECESSARY, AS REQUIRED BY FHWA PUBLICATION NO. FHWA-NHI-00-043.

(4) **

SOIL PROPERTIES FOR DESIGN

SOIL TYPE	UNIT WEIGHT (PCF)	ANGLE OF FRICTION (DEGREES)
SELECT FILL	125	34
NO. 57 STONE	105	38
FOUNDATION SOIL	68	24

SEE SHEETS 53 & 57 FOR RAMP C1 VERTICAL CURVE DATA.

RAMP C1
VERTICAL CURVE DATA

CURVE NO. 33

P.I. STA.	1815+13.61
△	46°23'34.62" RT
DC	22°55'05.92"
R	250.00'
TANGENT	107.13'
LENGTH	202.42'

RAMP C1
HORIZONTAL CURVE DATA

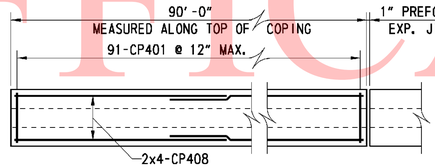

TYPE 1 PANEL (1 REQUIRED)

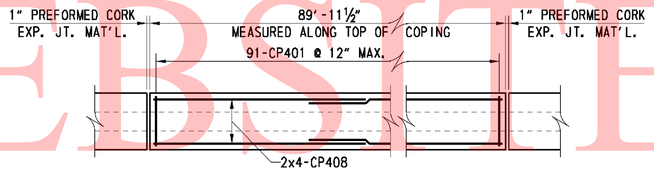

TYPE 2 PANEL (2 REQUIRED)

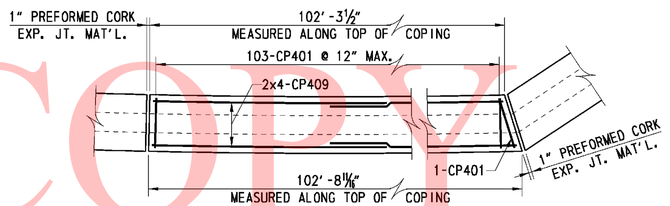

TYPE 3 PANEL (1 REQUIRED)

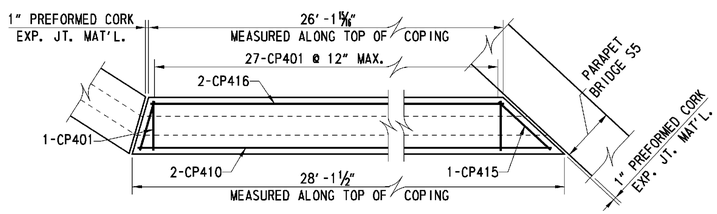

TYPE 4 PANEL (1 REQUIRED)

COPING REINFORCING PLANS

SCALE: ½" = 1'-0"

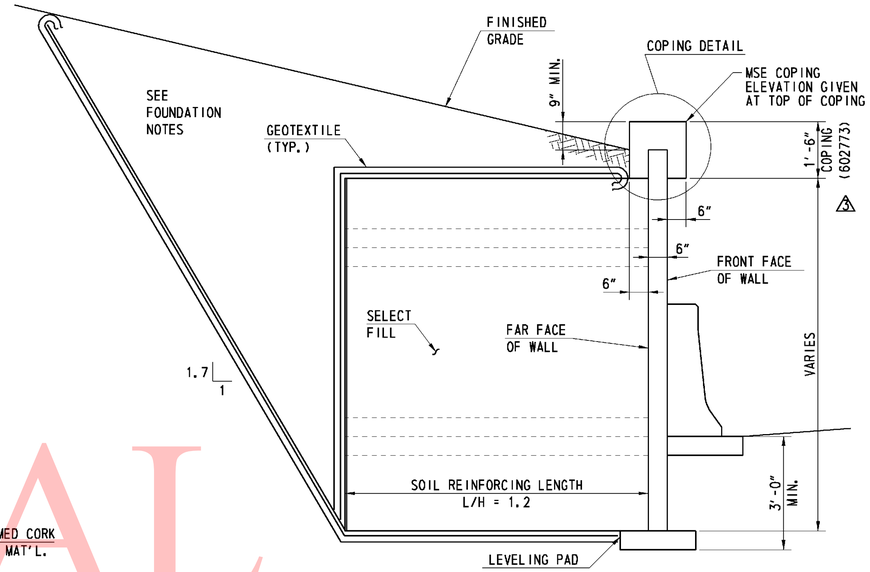

TYPICAL SECTION

(LOOKING BACK STATION)
SCALE: ½" = 1'-0"

(4) ** THE CONTRACTOR IS RESPONSIBLE FOR DEVELOPING MEANS AND METHODS, IN CONSULTATION WITH THE MSE WALL MANUFACTURER, FOR CONSTRUCTING THE MSE WALLS TO THE LINES, GRADES, AND DIMENSIONS SHOWN ON THE PLANS. SOIL BORINGS, LABORATORY TEST DATA, AND THE ENGINEER'S SETTLEMENT ESTIMATE(S) ARE CONTAINED IN ONE OF THE FOLLOWING GEOTECHNICAL ENGINEERING REPORTS WHICH HAVE BEEN MADE AVAILABLE BY THE DEPARTMENT: FINAL FOUNDATIONS REPORT - RETAINING WALLS AND FINAL FOUNDATIONS REPORT - BRIDGES AND WING WALLS DATED APRIL 2009, PREPARED BY RUMMELL, KLEPPER & KAHL, LLP AND URS CORPORATION. THESE SUPPLEMENTAL GEOTECHNICAL REPORTS ARE NOT PART OF THE CONTRACT DOCUMENTS, AND ARE AVAILABLE AT www.bids.delaware.gov WEBSITE. CONTRACTORS MAY USE THIS INFORMATION AT THEIR OWN RISK.

	SPECIFICATIONS					BENDING DIMENSIONS (FEET-INCHES /QUARTER INCH)							
	QTY.	SIZE	LENGTH	MARK	TYPE	A	B	C	D	H	K	O	REMARKS
COPING	405	4	3-6	CP401	17		1-2	1-2	1-2				
	24	4	46-5 12	CP408	STR								BEND BARS IN FIELD AS NEEDED
	8	4	52-7 7/8	CP409	STR								BEND BARS IN FIELD AS NEEDED
	2	4	27-9 12	CP410	STR								BEND BARS IN FIELD AS NEEDED
	1	4	4-2 12	CP415	17		1-2	1-10 12	1-2				
	2	4	25-9 15/16	CP416	STR								BEND BARS IN FIELD AS NEEDED

SEE SHEET R7-07 FOR BAR BEND NOTES

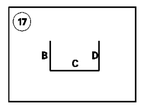

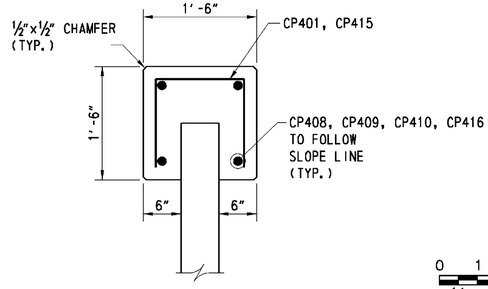

COPING DETAIL

SCALE: 1"= 1'-0"

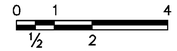

SCALE: ½"=1'-0"

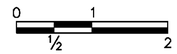

SCALE: 1"=1'-0"

UNOFFICAL WEBSITE COPY

ADDENDUMS / REVISIONS	
ADDENDUM NO. (2), UPDATED FOUNDATION NOTES, 01/26/11, JSW	ADDENDUM NO. (4), ADD NOTE, 4/1/11, JSW
ADDENDUM NO. (3), UPDATED GENERAL NOTES AND TYPICAL SECTION, 02/18/11, JSW	

DELAWARE DEPARTMENT OF TRANSPORTATION

SR1 / I-95 INTERCHANGE

CONTRACT	28-090-03
COUNTY	NEW CASTLE
BRIDGE NO.	
DESIGNED BY:	JMS
CHECKED BY:	JSW

RETAINING WALL 8
GENERAL NOTES AND TYPICAL SECTION

R8-01
SHEET NO. 570
TOTAL SHTS. 803

4/8/2011 2:48:55 PM
M:\PROJECTS\2003\03059_DELTRNPK\SRMALL\CADD\2809003\PLANS\RD12_WALL-08_SR1.DGN

GENERAL NOTES

SPECIFICATIONS: PROPRIETARY MSE WALLS SHALL BE DESIGNED IN ACCORDANCE WITH THE FOLLOWING:
- AASHTO LRFD BRIDGE DESIGN SPECIFICATIONS, 4TH EDITION WITH ALL CURRENT REVISIONS.
- FEDERAL HIGHWAY ADMINISTRATION PUBLICATION NO. FHWA-NHI-00-043, "MECHANICALLY STABILIZED EARTH WALLS AND REINFORCED SOIL SLOPES DESIGN AND CONSTRUCTION GUIDELINES"

CONCRETE DESIGN SHALL BE PERFORMED USING THE LOAD AND RESISTANCE FACTOR DESIGN METHOD.

CONCRETE: CONCRETE FOR BARRIERS SHALL BE 4500 PSI. LEVELING PAD CONCRETE SHALL BE 3500 PSI. MIX REQUIREMENTS SHALL CONFORM TO SECTION 812 OF THE DELAWARE DEPARTMENT OF TRANSPORTATION STANDARD SPECIFICATIONS.

CHAMFERS: ALL EXPOSED CORNERS OF CONCRETE SHALL BE CHAMFERED WITH ¾" x ¾" MILLED CHAMFER STRIPS, UNLESS OTHERWISE NOTED EXCEPT ON UNEXPOSED FOOTINGS OR WHERE INDICATED BY THE FOLLOWING NOTATION ON THE PLANS: "DO NOT CHAMFER".

REINFORCING STEEL: REINFORCING STEEL SHALL CONFORM TO ASTM A 615, GRADE 60. MINIMUM COVER FOR ANY BAR SHALL BE 2" UNLESS OTHERWISE NOTED.

FOR TIES AND STIRRUPS, STANDARD ACI BENDING TOLERANCES ARE MODIFIED TO PLUS (+) ZERO INCHES, MINUS (-) NORMAL ACI BENDING TOLERANCE.

ONLY GRADE 60 CAN BE USED ON THIS PROJECT.

ALL REINFORCING STEEL IN THE PARAPET SHALL BE EPOXY COATED.

ALL KEYS ARE NOMINAL SIZE.

THE MSE WALL MANUFACTURER MAY SUBSTITUTE ALTERNATE REINFORCING CONFIGURATIONS AND SUBMIT FOR APPROVAL.

EXPANSION AND CONTRACTION JOINTS: THE LOCATION OF THE EXPANSION AND CONTRACTION JOINTS IN THE BARRIER SHOWN ON THE PLANS MAY BE ADJUSTED TO ACCOMMODATE THE PANEL TYPE USED IN THE PROJECT. ANY CHANGE TO THESE JOINT LOCATIONS SHALL BE SUBMITTED TO THE ENGINEER FOR APPROVAL. EXPANSION JOINTS ARE LABELED "EJ".

LEVELING PAD: THE PROPRIETARY WALL MANUFACTURER MAY RELOCATE THE LEVELING PAD STEPS AT THEIR DISCRETION PROVIDED THAT THE MINIMUM EMBEDMENT IS MAINTAINED. ANY CHANGE TO THE STEP LOCATIONS SHALL BE SUBMITTED TO THE ENGINEER FOR APPROVAL.

ROADWAY LIMITS: THE PROPRIETARY WALL MANUFACTURER SHALL ASSURE THAT PROPOSED PROPRIETARY WALL COMPONENTS ARE POSITIONED SUCH THAT THE DESIGNATED ROADWAY LIMITS ARE NOT ENCROACHED UPON.

TRAFFIC BARRIER JOINTS: TRAFFIC BARRIER SHALL HAVE CONSTRUCTION JOINTS.

COORDINATION: CONTRACTOR AND PROPRIETARY WALL MANUFACTURER SHALL COORDINATE LOCATIONS OF INLETS AND PIPES WITH LOCATIONS OF PROPRIETARY WALL TIEBACK SYSTEM.

ARCHITECTURAL FINISH: THE MSE WALL PANELS SHALL RECEIVE AN ARCHITECTURAL FINISH.

SERVICE LIFE: ALL RETAINING WALL COMPONENTS SHALL BE DESIGNED FOR A MINIMUM SERVICE LIFE OF ~~75~~ 100 YEARS. (3)

WALL SYSTEM: ONLY ONE MSE WALL SYSTEM MAY BE USED ON THIS PROJECT.

ROADWAY SUPERELEVATION: FOR ROADWAY SUPERELEVATION, SEE SUPERELEVATION TABLES.

MSE WALL BACKFILL: MSE WALL BACKFILL SHALL CONSIST OF SPECIFIED BACKFILL.

PAY ITEMS: PCC MASONRY, PARAPET, CLASS A, (602017)
BAR REINFORCEMENT, EPOXY COATED (604000)
MECHANICALLY STABILIZED EARTH WALLS (602772)

SOIL PROPERTIES FOR DESIGN

SOIL TYPE	UNIT WEIGHT (PCF)	ANGLE OF FRICTION (DEGREES)
SELECT FILL	125	34
(4) COMMON BORROW ~~NO. 57 STONE~~	130	28
FOUNDATION SOIL 1250+84.83 TO 1252+14	92	24
FOUNDATION SOIL 1252+14 TO 1259+50	85	24

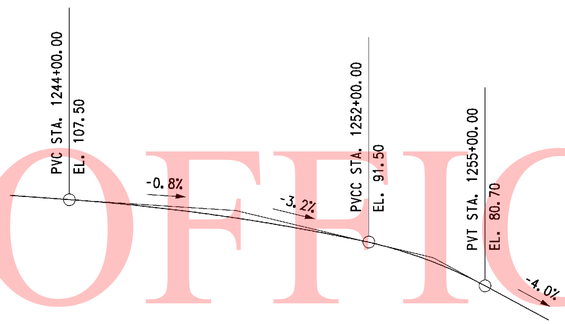

RAMP A
VERTICAL CURVE DATA
NO SCALE

CURVE NO. 14

P.I. STA.	1254+08.88
Δ	48°19'31.68" LT
DC	3°05'48.45"
R	1850.00
TANGENT	829.98
LENGTH	1560.36

RAMP A
HORIZONTAL CURVE DATA
NO SCALE

(4) ** THE CONTRACTOR IS RESPONSIBLE FOR DEVELOPING MEANS AND METHODS, IN CONSULTATION WITH THE MSE WALL MANUFACTURER, FOR CONSTRUCTING THE MSE WALLS TO THE LINES, GRADES, AND DIMENSIONS SHOWN ON THE PLANS. SOIL BORINGS, LABORATORY TEST DATA, AND THE ENGINEER'S SETTLEMENT ESTIMATE(S) ARE CONTAINED IN ONE OF THE FOLLOWING GEOTECHNICAL ENGINEERING REPORTS WHICH HAVE BEEN MADE AVAILABLE BY THE DEPARTMENT: FINAL FOUNDATIONS REPORT - RETAINING WALLS AND FINAL FOUNDATIONS REPORT - BRIDGES AND WING WALLS DATED APRIL 2009, PREPARED BY RUMWELL, KLEPPER & KAHL, LLP AND URS CORPORATION. THESE SUPPLEMENTAL GEOTECHNICAL REPORTS ARE NOT PART OF THE CONTRACT DOCUMENTS, AND ARE AVAILABLE AT www.blds.delaware.gov WEBSITE. CONTRACTORS MAY USE THIS INFORMATION AT THEIR OWN RISK.

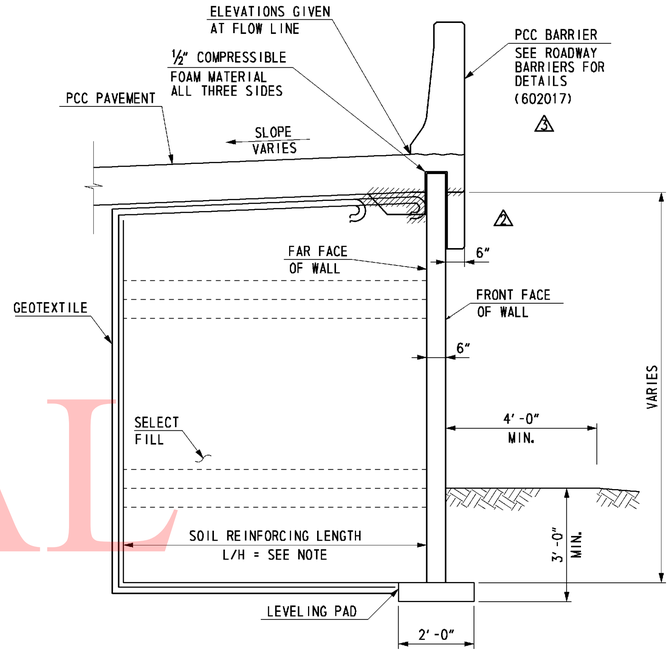

TYPICAL SECTION
(LOOKING AHEAD STATION)
SCALE: ½" = 1'-0"

FOUNDATION NOTES

THE FACTORED BEARING RESISTANCE SHALL BE VERIFIED PRIOR TO CONSTRUCTION OF THE MSE WALL.

THE INTERNAL STABILITY OF THE MSE WALL SHALL BE DESIGNED BY THE CONTRACTOR USING THE SOIL PARAMETERS PROVIDED FOR EACH STRUCTURE LOCATION. THE INTERNAL STABILITY SHOULD BE SIGNED AND SEALED BY A PROFESSIONAL ENGINEER LICENSED IN THE STATE OF DELAWARE AS INDICATED IN THE PROJECT SPECIFICATIONS. THE FACTORED APPLIED BEARING STRESS SHALL NOT EXCEED THE FACTORED BEARING RESISTANCE.

ISOLATED AREAS OF UNDERCUTTING OF EXISTING FILL MAY BE ENCOUNTERED DURING CONSTRUCTION OF THIS RETAINING WALL.

GROUNDWATER MAY BE ENCOUNTERED DURING EXCAVATION TO THE LEVELING PAD AND DURING CONSTRUCTION OF THIS RETAINING WALL. IT IS THE CONTRACTOR'S RESPONSIBILITY TO PROVIDE A RELATIVELY DRY EXCAVATION, INCLUDING DETERMINING APPROPRIATE DEWATERING METHODS DURING CONSTRUCTION.

(1) A QUARANTINE PERIOD OF ~~APPROXIMATELY~~ 30-DAYS IS REQUIRED AFTER CONSTRUCTION OF THE FULL HEIGHT OF THE MSE WALL IS ACHIEVED. THE ENGINEER SHALL APPROVE THE COMPLETION OF THE QUARANTINE PERIOD PRIOR TO CONSTRUCTION OF ANY PARAPETS.

RETAINING WALL 9 FROM RAMP A STA 1250+84.83 TO STA 1252+14 MAY BE CONSTRUCTED WITH SELECT FILL FOR THE FULL HEIGHT OF THE RETAINING WALL. THE MINIMUM REINFORCEMENT LENGTH TO HEIGHT RATIO FOR RETAINING WALL 9 IS L/H=0.7. FROM RAMP A STA 1252+14 TO STA 1259+50, THE REINFORCEMENT LENGTH TO HEIGHT RATIO MUST BE L/H = 1.0. COMMON BORROW MAY BE USED AS BACKFILL BEHIND THE REINFORCEMENT ZONE.

THE DESIGN UNIT WEIGHT INDICATED IN SOIL PROPERTIES TABLE HAS BEEN ADJUSTED DUE TO THE PRESENCE OF SHALLOW GROUNDWATER.

(2) INSTALLATION OF THE GEOTEXTILE WILL NOT BE REQUIRED BEHIND THE WALL WHERE THE SOIL REINFORCEMENT LENGTH OVERLAPS THE SOIL REINFORCEMENT LENGTH FOR WALL 1. IN ALL OTHER LOCATIONS THE GEOTEXTILE SHALL BE INSTALLED AS SHOWN IN THE TYPICAL SECTION.

(4) **

0 1 4
½ 2
SCALE: ½"=1'-0"

UNOFICAL WEBSITE COPY

4/8/2011 2:50:35 PM
M:\PROJECTS\2003\03059_DELTRNPK\SR1MALL\CADD\2809003\PLANS\RD15_WALL-09_SR1DGN

DELAWARE DEPARTMENT OF TRANSPORTATION

ADDENDUMS / REVISIONS	
ADDENDUM NO. (2), UPDATED FOUNDATION NOTES, SECTION, 01/26/11, JSW	ADDENDUM NO. (4), REVISE TABLE AND ADD NOTES, 4/1/11, JSW
ADDENDUM NO. (3), UPDATED GENERAL NOTES AND TYPICAL SECTION, 02/18/11, JSW	

SR1 / I-95 INTERCHANGE

CONTRACT	28-090-03
COUNTY	NEW CASTLE
BRIDGE NO.	
DESIGNED BY:	JMS
CHECKED BY:	JSW

RETAINING WALL 9
GENERAL NOTES AND TYPICAL SECTION

R9-01
SHEET NO. 575
TOTAL SHTS. 803

GENERAL NOTES

SPECIFICATIONS: PROPRIETARY MSE WALLS SHALL BE DESIGNED IN ACCORDANCE WITH THE FOLLOWING:
- AASHTO LRFD BRIDGE DESIGN SPECIFICATIONS, 4TH EDITION WITH ALL CURRENT REVISIONS.
- FEDERAL HIGHWAY ADMINISTRATION PUBLICATION NO. FHWA-NHI-00-043, "MECHANICALLY STABILIZED EARTH WALLS AND REINFORCED SOIL SLOPES DESIGN AND CONSTRUCTION GUIDELINES"

CONCRETE DESIGN SHALL BE PERFORMED USING THE LOAD AND RESISTANCE FACTOR DESIGN METHOD.

CONCRETE: ALL CONCRETE FOR BARRIERS AND MOMENT SLABS SHALL BE 4500 PSI. LEVELING PAD CONCRETE SHALL BE 3500 PSI. MIX REQUIREMENTS SHALL CONFORM TO SECTION 812 OF THE DELAWARE DEPARTMENT OF TRANSPORTATION STANDARD SPECIFICATIONS.

CHAMFERS: ALL EXPOSED CORNERS OF CONCRETE SHALL BE CHAMFERED WITH ¾" x ¾" MILLED CHAMFER STRIPS, UNLESS OTHERWISE NOTED EXCEPT ON UNEXPOSED FOOTINGS OR WHERE INDICATED BY THE FOLLOWING NOTATION ON THE PLANS: "DO NOT CHAMFER".

REINFORCING STEEL: REINFORCING STEEL SHALL CONFORM TO ASTM A 615, GRADE 60. MINIMUM COVER FOR ANY BAR SHALL BE 2" UNLESS OTHERWISE NOTED.

FOR TIES AND STIRRUPS, STANDARD ACI BENDING TOLERANCES ARE MODIFIED TO PLUS (+) ZERO INCHES, MINUS (-) NORMAL ACI BENDING TOLERANCE.

ONLY GRADE 60 CAN BE USED ON THIS PROJECT.

ALL REINFORCING STEEL IN THE PARAPET AND MOMENT SLAB SHALL BE EPOXY COATED.

ALL KEYS ARE NOMINAL SIZE.

THE MSE WALL MANUFACTURER MAY SUBSTITUTE ALTERNATE REINFORCING CONFIGURATIONS AND SUBMIT FOR APPROVAL.

EXPANSION AND CONTRACTION JOINTS: THE LOCATION OF THE EXPANSION AND CONTRACTION JOINTS IN THE BARRIER/MOMENT SLAB SHOWN ON THE PLANS MAY BE ADJUSTED TO ACCOMMODATE THE PANEL TYPE USED IN THE PROJECT. ANY CHANGE TO THESE JOINT LOCATIONS SHALL BE SUBMITTED TO THE ENGINEER FOR APPROVAL. EXPANSION JOINTS ARE LABELED "EJ".

LEVELING PAD: THE PROPRIETARY WALL MANUFACTURER MAY RELOCATE THE LEVELING PAD STEPS AT THEIR DISCRETION PROVIDED THAT THE MINIMUM EMBEDMENT IS MAINTAINED. ANY CHANGE TO THE STEP LOCATIONS SHALL BE SUBMITTED TO THE ENGINEER FOR APPROVAL.

ROADWAY LIMITS: THE PROPRIETARY WALL MANUFACTURER SHALL ASSURE THAT PROPOSED PROPRIETARY WALL COMPONENTS ARE POSITIONED SUCH THAT THE DESIGNATED ROADWAY LIMITS ARE NOT ENCROACHED UPON.

TRAFFIC BARRIER JOINTS: TRAFFIC BARRIER/MOMENT SLAB SHALL HAVE CONSTRUCTION JOINTS.

COORDINATION: CONTRACTOR AND PROPRIETARY WALL MANUFACTURER SHALL COORDINATE LOCATIONS OF INLETS AND PIPES WITH LOCATIONS OF PROPRIETARY WALL TIEBACK SYSTEM AND MOMENT SLAB.

ARCHITECTURAL FINISH: THE MSE WALL PANELS SHALL RECEIVE AN ARCHITECTURAL FINISH.

SERVICE LIFE: ALL RETAINING WALL COMPONENTS SHALL BE DESIGNED FOR A MINIMUM SERVICE LIFE OF ~~75~~ 100 YEARS. (3)

WALL SYSTEM: ONLY ONE MSE WALL SYSTEM MAY BE USED ON THIS PROJECT.

ROADWAY SUPERELEVATION: FOR ROADWAY SUPERELEVATION, SEE SUPERELEVATION TABLES.

MSE WALL BACKFILL: MSE WALL BACKFILL SHALL CONSIST OF SPECIFIED BACKFILL.

MOMENT SLAB: THE MOMENT SLAB IS DESIGNED IN ACCORDANCE WITH THE SAME CRITERIA SPECIFIED FOR MECHANICALLY STABILIZED EARTH WALLS IN SECTION 11.10.10.2 OF THE AASHTO LRFD BRIDGE DESIGN SPECIFICATIONS, 4TH ED.

PAY ITEMS: PCC MASONRY, PARAPET, CLASS A (602017)
MECHANICALLY STABILIZED EARTH WALLS (602772)
BAR REINFORCEMENT, EPOXY COATED (604000)

SOIL PROPERTIES FOR DESIGN

SOIL TYPE	UNIT WEIGHT (PCF)	ANGLE OF FRICTION (DEGREES)
SELECT FILL	125	34
NO. 57 STONE	105	38
FOUNDATION SOIL	68	24

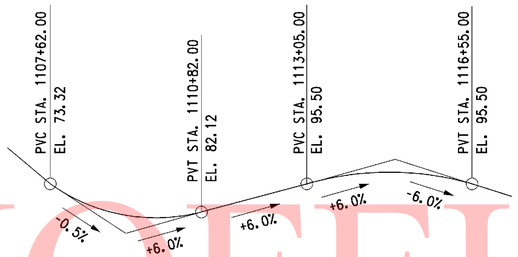

RAMP C
VERTICAL CURVE DATA
NO SCALE

CURVE NO. 30

P.I. STA.	1113+47.25
Δ	77°59'15.14" LT
DC	11°48'48.82"
R	485.00'
TANGENT	392.66'
LENGTH	660.15'

RAMP C
HORIZONTAL CURVE DATA
NO SCALE

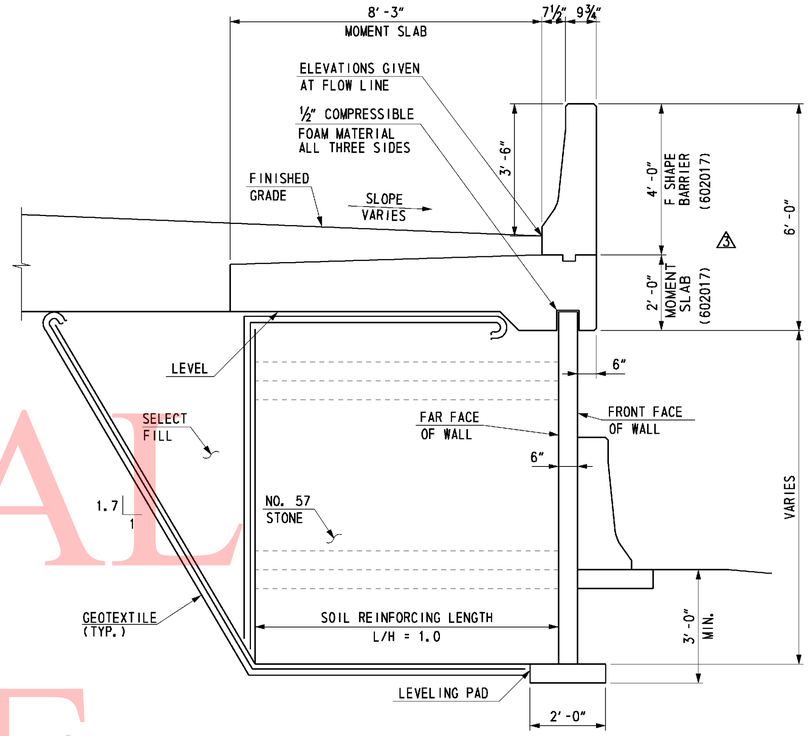

TYPICAL SECTION
(LOOKING BACK STATION)
SCALE: ½" = 1'-0"

FOUNDATION NOTES

THE FACTORED BEARING RESISTANCE SHALL BE VERIFIED PRIOR TO CONSTRUCTION OF THE MSE WALL.

THE INTERNAL STABILITY OF THE MSE WALL SHALL BE DESIGNED BY THE CONTRACTOR USING THE SOIL PARAMETERS PROVIDED FOR EACH STRUCTURE LOCATION. THE INTERNAL STABILITY SHOULD BE SIGNED AND SEALED BY A PROFESSIONAL ENGINEER LICENSED IN THE STATE OF DELAWARE AS INDICATED IN THE PROJECT SPECIFICATIONS. THE FACTORED APPLIED BEARING STRESS SHALL NOT EXCEED THE FACTORED BEARING RESISTANCE.

GROUNDWATER MAY BE ENCOUNTERED DURING EXCAVATION TO THE LEVELING PAD AND DURING CONSTRUCTION OF THIS RETAINING WALL. IT IS THE CONTRACTOR'S RESPONSIBILITY TO PROVIDE A RELATIVELY DRY EXCAVATION, INCLUDING DETERMINING APPROPRIATE DEWATERING METHODS DURING CONSTRUCTION.

(2) A QUARANTINE PERIOD OF ~~APPROXIMATELY~~ 30-DAYS IS REQUIRED AFTER CONSTRUCTION OF THE FULL HEIGHT OF THE MSE WALL IS ACHIEVED. THE ENGINEER SHALL APPROVE THE COMPLETION OF THE QUARANTINE PERIOD PRIOR TO CONSTRUCTION OF ANY MOMENT SLABS OR PARAPETS.

THE DESIGN UNIT WEIGHT INDICATED IN SOIL PROPERTIES TABLE HAS BEEN ADJUSTED DUE TO THE PRESENCE OF SHALLOW GROUNDWATER.

THE WALL SUPPLIER SHAL PERFORM A DETAILED SEISMIC ANALYSIS FOR BACK TO BACK MSE WALLS WITH L/H LESS THAN 1.1, IF NECESSARY, AS REQUIRED BY FHWA PUBLICATION NO. FHWA-NHI-00-043.

(4) THE CONTRACTOR IS RESPONSIBLE FOR DEVELOPING MEANS AND METHODS, IN CONSULTATION WITH THE MSE WALL MANUFACTURER, FOR CONSTRUCTING THE MSE WALLS TO THE LINES, GRADES, AND DIMENSIONS SHOWN ON THE PLANS. SOIL BORINGS, LABORATORY TEST DATA, AND THE ENGINEER'S SETTLEMENT ESTIMATE(S) ARE CONTAINED IN ONE OF THE FOLLOWING GEOTECHNICAL ENGINEERING REPORTS WHICH HAVE BEEN MADE AVAILABLE BY THE DEPARTMENT; FINAL FOUNDATIONS REPORT - RETAINING WALLS AND FINAL FOUNDATIONS REPORT - BRIDGES AND WING WALLS DATED APRIL 2009, PREPARED BY RUMMELL, KLEPPER & KAHL, LLP AND URS CORPORATION. THESE SUPPLEMENTAL GEOTECHNICAL REPORTS ARE NOT PART OF THE CONTRACT DOCUMENTS, AND ARE AVAILABLE AT www.bids.delaware.gov WEBSITE. CONTRACTORS MAY USE THIS INFORMATION AT THEIR OWN RISK.

0 1 4
½ 2
SCALE: ½"=1'-0"

UNOFICAL WEBSITE COPY

4/8/2011 2:51:27 PM
M:\PROJECTS\2003\03059_DELTRNPK\SRIMALL\CADD\2809003\PLANS\RD20_WALL-10_SR1.DGN

DELAWARE DEPARTMENT OF TRANSPORTATION

ADDENDUMS / REVISIONS	
ADDENDUM NO. (2), UPDATED FOUNDATION NOTES, 01/26/11, JSW	ADDENDUM NO. (4), ADD NOTE, 4/1/11, JSW
ADDENDUM NO. (3), UPDATED GENERAL NOTES AND TYPICAL SECTION, 02/18/11, JSW	

SR1 / I-95 INTERCHANGE

CONTRACT	28-090-03	BRIDGE NO.	
COUNTY	NEW CASTLE	DESIGNED BY:	JMS
		CHECKED BY:	JSW

RETAINING WALL 10
GENERAL NOTES AND TYPICAL SECTION

R10-01

SHEET NO.	TOTAL SHTS.
583	803

GENERAL NOTES

SPECIFICATIONS: PROPRIETARY MSE WALLS SHALL BE DESIGNED IN ACCORDANCE WITH THE FOLLOWING:
- AASHTO LRFD BRIDGE DESIGN SPECIFICATIONS, 4TH EDITION WITH ALL CURRENT REVISIONS.
- FEDERAL HIGHWAY ADMINISTRATION PUBLICATION NO. FHWA-NHI-00-043, "MECHANICALLY STABILIZED EARTH WALLS AND REINFORCED SOIL SLOPES DESIGN AND CONSTRUCTION GUIDELINES"

CONCRETE DESIGN SHALL BE PERFORMED USING THE LOAD AND RESISTANCE FACTOR DESIGN METHOD.

CONCRETE: LEVELING PAD CONCRETE SHALL BE 3500 PSI. MIX REQUIREMENTS SHALL CONFORM TO SECTION 812 OF THE DELAWARE DEPARTMENT OF TRANSPORTATION STANDARD SPECIFICATIONS.

CHAMFERS: ALL EXPOSED CORNERS OF CONCRETE SHALL BE CHAMFERED WITH ¾" x ¾" MILLED CHAMFER STRIPS, UNLESS OTHERWISE NOTED EXCEPT ON UNEXPOSED FOOTINGS OR WHERE INDICATED BY THE FOLLOWING NOTATION ON THE PLANS: "DO NOT CHAMFER".

REINFORCING STEEL: REINFORCING STEEL SHALL CONFORM TO ASTM A 615, GRADE 60. MINIMUM COVER FOR ANY BAR SHALL BE 2" UNLESS OTHERWISE NOTED.

FOR TIES AND STIRRUPS, STANDARD ACI BENDING TOLERANCES ARE MODIFIED TO PLUS (+) ZERO INCHES, MINUS (-) NORMAL ACI BENDING TOLERANCE.

ONLY GRADE 60 CAN BE USED ON THIS PROJECT.

ALL REINFORCING STEEL IN THE PARAPET SHALL BE EPOXY COATED.

ALL KEYS ARE NOMINAL SIZE.

THE MSE WALL MANUFACTURER MAY SUBSTITUTE ALTERNATE REINFORCING CONFIGURATIONS AND SUBMIT FOR APPROVAL.

EXPANSION AND CONTRACTION JOINTS: THE LOCATION OF THE EXPANSION AND CONTRACTION JOINTS IN THE BARRIER SHOWN ON THE PLANS MAY BE ADJUSTED TO ACCOMMODATE THE PANEL TYPE USED IN THE PROJECT. ANY CHANGE TO THESE JOINT LOCATIONS SHALL BE SUBMITTED TO THE ENGINEER FOR APPROVAL. EXPANSION JOINTS ARE LABELED "EJ".

LEVELING PAD: THE PROPRIETARY WALL MANUFACTURER MAY RELOCATE THE LEVELING PAD STEPS AT THEIR DISCRETION PROVIDED THAT THE MINIMUM EMBEDMENT IS MAINTAINED. ANY CHANGE TO THE STEP LOCATIONS SHALL BE SUBMITTED TO THE ENGINEER FOR APPROVAL.

ROADWAY LIMITS: THE PROPRIETARY WALL MANUFACTURER SHALL ASSURE THAT PROPOSED PROPRIETARY WALL COMPONENTS ARE POSITIONED SUCH THAT THE DESIGNATED ROADWAY LIMITS ARE NOT ENCROACHED UPON.

TRAFFIC BARRIER JOINTS: TRAFFIC BARRIER SHALL HAVE CONSTRUCTION JOINTS.

COORDINATION: CONTRACTOR AND PROPRIETARY WALL MANUFACTURER SHALL COORDINATE LOCATIONS OF INLETS AND PIPES WITH LOCATIONS OF PROPRIETARY WALL TIEBACK SYSTEM.

ARCHITECTURAL FINISH: THE MSE WALL PANELS SHALL RECEIVE AN ARCHITECTURAL FINISH.

SERVICE LIFE: ALL RETAINING WALL COMPONENTS SHALL BE DESIGNED FOR A MINIMUM SERVICE LIFE OF ~~75~~ 100 YEARS. (3)

WALL SYSTEM: ONLY ONE MSE WALL SYSTEM MAY BE USED ON THIS PROJECT.

ROADWAY SUPERELEVATION: FOR ROADWAY SUPERELEVATION, SEE SUPERELEVATION TABLES.

MSE WALL BACKFILL: MSE WALL BACKFILL SHALL CONSIST OF SPECIFIED BACKFILL.

PAY ITEMS: PCC MASONRY, PARAPET, CLASS A (602017)
BAR REINFORCEMENT, EPOXY COATED (604000)
MECHANICALLY STABILIZED EARTH WALLS (602772)

SOIL PROPERTIES FOR DESIGN

SOIL TYPE	UNIT WEIGHT (PCF)	ANGLE OF FRICTION (DEGREES)
SELECT FILL	125	34
COMMON BORROW	130	28
FOUNDATION SOIL	68	32

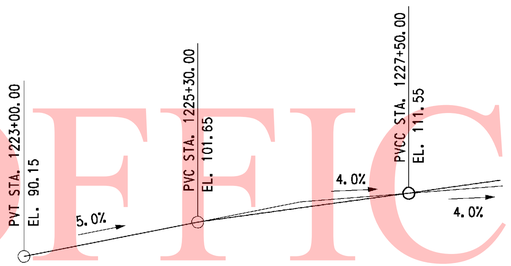

RAMP A
VERTICAL CURVE DATA
NO SCALE

CURVE NO. 12

P.I. STA.	1226+68.24
Δ	27°44'07.64" LT
DC	03°05'49.45"
R	1850.00'
TANGENT	456.72'
LENGTH	895.54'

RAMP A
HORIZONTAL CURVE DATA
NO SCALE

(4) ** THE CONTRACTOR IS RESPONSIBLE FOR DEVELOPING MEANS AND METHODS, IN CONSULTATION WITH THE MSE WALL MANUFACTURER, FOR CONSTRUCTING THE MSE WALLS TO THE LINES, GRADES, AND DIMENSIONS SHOWN ON THE PLANS. SOIL BORINGS, LABORATORY TEST DATA, AND THE ENGINEER'S SETTLEMENT ESTIMATE(S) ARE CONTAINED IN ONE OF THE FOLLOWING GEOTECHNICAL ENGINEERING REPORTS WHICH HAVE BEEN MADE AVAILABLE BY THE DEPARTMENT: FINAL FOUNDATIONS REPORT - RETAINING WALLS AND FINAL FOUNDATIONS REPORT - BRIDGES AND WING WALLS DATED APRIL 2009, PREPARED BY RUMWELL, KLEPPER & KAHL, LLP AND URS CORPORATION. THESE SUPPLEMENTAL GEOTECHNICAL REPORTS ARE NOT PART OF THE CONTRACT DOCUMENTS, AND ARE AVAILABLE AT www.bids.delaware.gov WEBSITE. CONTRACTORS MAY USE THIS INFORMATION AT THEIR OWN RISK.

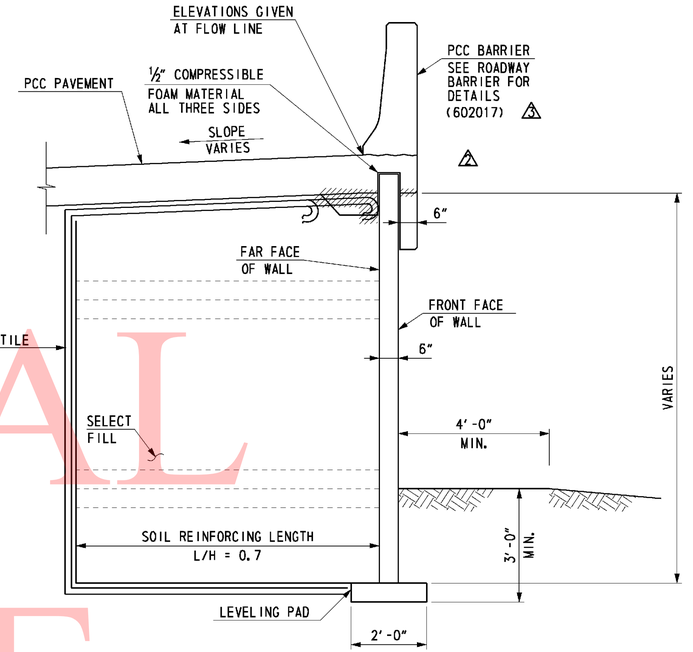

TYPICAL SECTION
(LOOKING AHEAD STATIONS)
SCALE: ½" = 1'-0"

FOUNDATION NOTES

THE FACTORED BEARING RESISTANCE SHALL BE VERIFIED PRIOR TO CONSTRUCTION OF THE MSE WALL.

THE INTERNAL STABILITY OF THE MSE WALL SHALL BE DESIGNED BY THE CONTRACTOR USING THE SOIL PARAMETERS PROVIDED FOR EACH STRUCTURE LOCATION. THE INTERNAL STABILITY SHOULD BE SIGNED AND SEALED BY A PROFESSIONAL ENGINEER LICENSED IN THE STATE OF DELAWARE AS INDICATED IN THE PROJECT SPECIFICATIONS. THE FACTORED APPLIED BEARING STRESS SHALL NOT EXCEED THE FACTORED BEARING RESISTANCE.

ISOLATED AREAS OF UNDERCUTTING OF EXISTING FILL MAY BE ENCOUNTERED DURING CONSTRUCTION OF THIS RETAINING WALL.

IT IS THE CONTRACTOR'S RESPONSIBILITY TO PROVIDE A RELATIVELY DRY EXCAVATION, INCLUDING DETERMINING APPROPRIATE DEWATERING METHODS DURING CONSTRUCTION IF NECESSARY.

(2) A QUARANTINE PERIOD OF ~~APPROXIMATELY~~ 30-DAYS IS REQUIRED AFTER CONSTRUCTION OF THE FULL HEIGHT OF THE MSE WALL IS ACHIEVED. THE ENGINEER SHALL APPROVE THE COMPLETION OF THE QUARANTINE PERIOD PRIOR TO CONSTRUCTION OF ANY PARAPETS.

THE DESIGN UNIT WEIGHT INDICATED IN SOIL PROPERTIES TABLE HAS BEEN ADJUSTED DUE TO THE PRESENCE OF SHALLOW GROUNDWATER.

THE WALL SUPPLIER SHAL PERFORM A DETAILED SEISMIC ANALYSIS FOR BACK TO BACK MSE WALLS WITH L/H LESS THAN 1.1, IF NECESSARY, AS REQUIRED BY FHWA PUBLICATION NO. FHWA-NHI-00-043.

(4) **

0 1 4
½ 2
SCALE: ½"=1'-0"

UNOFICAL WEBSITE COPY

4/8/2011 2:53:46 PM
M:\PROJECTS\2003\03059_DELTRNPK\SR1MALL\CADD\2809003\PLANS\RD23_WALL-12_SR1.DGN

DELAWARE DEPARTMENT OF TRANSPORTATION

ADDENDUMS / REVISIONS	
ADDENDUM NO. (2), UPDATED FOUNDATION NOTES, SECTION, 01/26/11, JSW	ADDENDUM NO. (4), ADD NOTE, 4/1/11, JSW
ADDENDUM NO. (3), UPDATED GENERAL NOTES AND TYPICAL SECTION, 02/18/11, JSW	

SR1 / I-95 INTERCHANGE

CONTRACT	BRIDGE NO.	
28-090-03	DESIGNED BY:	JMS
COUNTY	CHECKED BY:	JSW
NEW CASTLE		

RETAINING WALL 12
GENERAL NOTES AND TYPICAL SECTION

R12-01

SHEET NO.	TOTAL SHTS.
590	803

GENERAL NOTES

SPECIFICATIONS: PROPRIETARY MSE WALLS SHALL BE DESIGNED IN ACCORDANCE WITH THE FOLLOWING:
- AASHTO LRFD BRIDGE DESIGN SPECIFICATIONS, 4TH EDITION WITH ALL CURRENT REVISIONS.
- FEDERAL HIGHWAY ADMINISTRATION PUBLICATION NO. FHWA-NHI-00-043, "MECHANICALLY STABILIZED EARTH WALLS AND REINFORCED SOIL SLOPES DESIGN AND CONSTRUCTION GUIDELINES"

CONCRETE DESIGN SHALL BE PERFORMED USING THE LOAD AND RESISTANCE FACTOR DESIGN METHOD.

CONCRETE: ALL CONCRETE FOR PARAPETS, AND ROADWAY BARRIERS SHALL BE 4500 PSI. LEVELING PAD CONCRETE SHALL BE 3500 PSI. MIX REQUIREMENTS SHALL CONFORM TO SECTION 812 OF THE DELAWARE DEPARTMENT OF TRANSPORTATION STANDARD SPECIFICATIONS.

CHAMFERS: ALL EXPOSED CORNERS OF CONCRETE SHALL BE CHAMFERED WITH ¾" x ¾" MILLED CHAMFER STRIPS, UNLESS OTHERWISE NOTED EXCEPT ON UNEXPOSED FOOTINGS OR WHERE INDICATED BY THE FOLLOWING NOTATION ON THE PLANS: "DO NOT CHAMFER".

REINFORCING STEEL: REINFORCING STEEL SHALL CONFORM TO ASTM A 615, GRADE 60. MINIMUM COVER FOR ANY BAR SHALL BE 2" UNLESS OTHERWISE NOTED.

FOR TIES AND STIRRUPS, STANDARD ACI BENDING TOLERANCES ARE MODIFIED TO PLUS (+) ZERO INCHES, MINUS (-) NORMAL ACI BENDING TOLERANCE.

ONLY GRADE 60 CAN BE USED ON THIS PROJECT.

ALL REINFORCING STEEL IN THE PARAPET SHALL BE EPOXY COATED.

ALL KEYS ARE NOMINAL SIZE.

THE MSE WALL MANUFACTURER MAY SUBSTITUTE ALTERNATE REINFORCING CONFIGURATIONS AND SUBMIT FOR APPROVAL.

EXPANSION AND CONTRACTION JOINTS: THE LOCATION OF THE EXPANSION AND CONTRACTION JOINTS IN THE BARRIER SHOWN ON THE PLANS MAY BE ADJUSTED TO ACCOMMODATE THE PANEL TYPE USED IN THE PROJECT. ANY CHANGE TO THESE JOINT LOCATIONS SHALL BE SUBMITTED TO THE ENGINEER FOR APPROVAL. EXPANSION JOINTS ARE LABELED "EJ".

LEVELING PAD: THE PROPRIETARY WALL MANUFACTURER MAY RELOCATE THE LEVELING PAD STEPS AT THEIR DISCRETION PROVIDED THAT THE MINIMUM EMBEDMENT IS MAINTAINED. ANY CHANGE TO THE STEP LOCATIONS SHALL BE SUBMITTED TO THE ENGINEER FOR APPROVAL.

ROADWAY LIMITS: THE PROPRIETARY WALL MANUFACTURER SHALL ASSURE THAT PROPOSED PROPRIETARY WALL COMPONENTS ARE POSITIONED SUCH THAT THE DESIGNATED ROADWAY LIMITS ARE NOT ENCROACHED UPON.

TRAFFIC BARRIER JOINTS: TRAFFIC BARRIER SHALL HAVE CONSTRUCTION JOINTS.

COORDINATION: CONTRACTOR AND PROPRIETARY WALL MANUFACTURER SHALL COORDINATE LOCATIONS OF INLETS AND PIPES WITH LOCATIONS OF PROPRIETARY WALL TIEBACK SYSTEM.

ARCHITECTURAL FINISH: THE MSE WALL PANELS SHALL RECEIVE AN ARCHITECTURAL FINISH.

SERVICE LIFE: ALL RETAINING WALL COMPONENTS SHALL BE DESIGNED FOR A MINIMUM SERVICE LIFE OF ~~75~~ 100 YEARS. (3)

WALL SYSTEM: ONLY ONE MSE WALL SYSTEM MAY BE USED ON THIS PROJECT.

ROADWAY SUPERELEVATION: FOR ROADWAY SUPERELEVATION, SEE SUPERELEVATION TABLES.

MSE WALL BACKFILL: MSE WALL BACKFILL SHALL CONSIST OF SPECIFIED BACKFILL.

PAY ITEMS: PCC MASONRY, PARAPET, CLASS A (602017)
BAR REINFORCEMENT, EPOXY COATED (604000)
MECHANICALLY STABILIZED EARTH WALLS (602772)

SOIL PROPERTIES FOR DESIGN

SOIL TYPE	UNIT WEIGHT (PCF)	ANGLE OF FRICTION (DEGREES)
SELECT FILL	125	34
COMMON BORROW	130	28
FOUNDATION SOIL	68	32

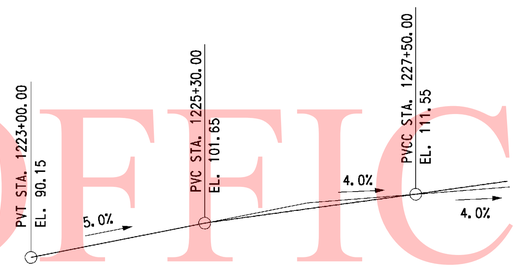

RAMP A
VERTICAL CURVE DATA
NO SCALE

CURVE NO. 12

P. I. STA.	1226+68.24
Δ	27°44'07.64" LT
DC	03°05'49.45"
R	1850.00'
TANGENT	456.72'
LENGTH	895.54'

RAMP A
HORIZONTAL CURVE DATA
NO SCALE

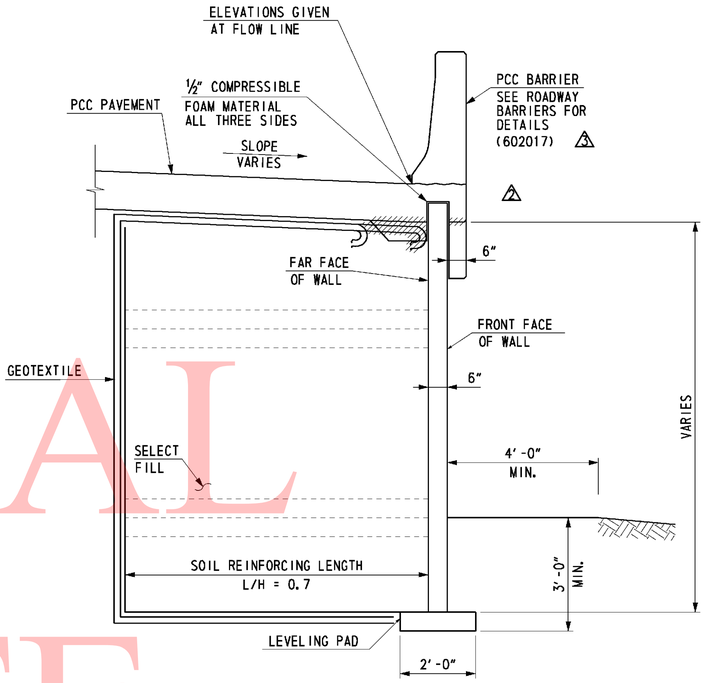

TYPICAL SECTION
(LOOKING BACK STATIONS)
SCALE: ½" = 1'-0"

FOUNDATION NOTES

THE FACTORED BEARING RESISTANCE SHALL BE VERIFIED PRIOR TO CONSTRUCTION OF THE MSE WALL.

THE INTERNAL STABILITY OF THE MSE WALL SHALL BE DESIGNED BY THE CONTRACTOR USING THE SOIL PARAMETERS PROVIDED FOR EACH STRUCTURE LOCATION. THE INTERNAL STABILITY SHOULD BE SIGNED AND SEALED BY A PROFESSIONAL ENGINEER LICENSED IN THE STATE OF DELAWARE AS INDICATED IN THE PROJECT SPECIFICATIONS. THE FACTORED APPLIED BEARING STRESS SHALL NOT EXCEED THE FACTORED BEARING RESISTANCE.

ISOLATED AREAS OF UNDERCUTTING OF EXISTING FILL MAY BE ENCOUNTERED DURING CONSTRUCTION OF THIS RETAINING WALL.

IT IS THE CONTRACTOR'S RESPONSIBILITY TO PROVIDE A RELATIVELY DRY EXCAVATION, INCLUDING DETERMINING APPROPRIATE DEWATERING METHODS DURING CONSTRUCTION IF NECESSARY.

(2) A QUARANTINE PERIOD OF ~~APPROXIMATELY~~ 30-DAYS IS REQUIRED AFTER CONSTRUCTION OF THE FULL HEIGHT OF THE MSE WALL IS ACHIEVED. THE ENGINEER SHALL APPROVE THE COMPLETION OF THE QUARANTINE PERIOD PRIOR TO CONSTRUCTION OF ANY PARAPETS.

THE DESIGN UNIT WEIGHT INDICATED IN SOIL PROPERTIES TABLE HAS BEEN ADJUSTED DUE TO THE PRESENCE OF SHALLOW GROUNDWATER.

THE WALL SUPPLIER SHAL PERFORM A DETAILED SEISMIC ANALYSIS FOR BACK TO BACK MSE WALLS WITH L/H LESS THAN 1.1, IF NECESSARY, AS REQUIRED BY FHWA PUBLICATION NO. FHWA-NHI-00-043.

(4) **

(4) ** THE CONTRACTOR IS RESPONSIBLE FOR DEVELOPING MEANS AND METHODS, IN CONSULTATION WITH THE MSE WALL MANUFACTURER, FOR CONSTRUCTING THE MSE WALLS TO THE LINES, GRADES, AND DIMENSIONS SHOWN ON THE PLANS. SOIL BORINGS, LABORATORY TEST DATA, AND THE ENGINEER'S SETTLEMENT ESTIMATE(S) ARE CONTAINED IN ONE OF THE FOLLOWING GEOTECHNICAL ENGINEERING REPORTS WHICH HAVE BEEN MADE AVAILABLE BY THE DEPARTMENT: FINAL FOUNDATIONS REPORT - RETAINING WALLS AND FINAL FOUNDATIONS REPORT - BRIDGES AND WING WALLS DATED APRIL 2009, PREPARED BY RUMMELL, KLEPPER & KAHL, LLP AND URS CORPORATION. THESE SUPPLEMENTAL GEOTECHNICAL REPORTS ARE NOT PART OF THE CONTRACT DOCUMENTS, AND ARE AVAILABLE AT www.bids.delaware.gov WEBSITE. CONTRACTORS MAY USE THIS INFORMATION AT THEIR OWN RISK.

0 1 4
½ 2
SCALE: ½"=1'-0"

UNOFICAL WEBSITE COPY

DELAWARE DEPARTMENT OF TRANSPORTATION

ADDENDUMS / REVISIONS	
ADDENDUM NO. (2), UPDATED FOUNDATION NOTES, SECTION, 01/26/11, JSW	ADDENDUM NO. (4), ADD NOTE, 4/1/11, JSW
ADDENDUM NO. (3), UPDATED GENERAL NOTES AND TYPICAL SECTION, 02/18/11, JSW	

SR1 / I-95 INTERCHANGE

CONTRACT	BRIDGE NO.	
28-090-03	DESIGNED BY:	JMS
COUNTY	CHECKED BY:	JSW
NEW CASTLE		

RETAINING WALL 13
GENERAL NOTES AND TYPICAL SECTION

R13-01

SHEET NO.	TOTAL SHTS.
596	803

4/8/2011 2:55:13 PM
M:\PROJECTS\2003\03059_DELTRNPK\SR1MALL\CADD\2809003\PLANS\RD26_WALL-13_SR1DGN

GENERAL NOTES

SPECIFICATIONS: PROPRIETARY MSE WALLS SHALL BE DESIGNED IN ACCORDANCE WITH THE FOLLOWING:
- AASHTO LRFD BRIDGE DESIGN SPECIFICATIONS, 4TH EDITION WITH ALL CURRENT REVISIONS.
- FEDERAL HIGHWAY ADMINISTRATION PUBLICATION NO. FHWA-NHI-00-043, "MECHANICALLY STABILIZED EARTH WALLS AND REINFORCED SOIL SLOPES DESIGN AND CONSTRUCTION GUIDELINES"

CONCRETE DESIGN SHALL BE PERFORMED USING THE LOAD AND RESISTANCE FACTOR DESIGN METHOD.

CONCRETE: ALL CONCRETE FOR PARAPETS AND ROADWAY BARRIERS SHALL BE 4500 PSI. LEVELING PAD CONCRETE SHALL BE 3500 PSI. MIX REQUIREMENTS SHALL CONFORM TO SECTION 812 OF THE DELAWARE DEPARTMENT OF TRANSPORTATION STANDARD SPECIFICATIONS.

CHAMFERS: ALL EXPOSED CORNERS OF CONCRETE SHALL BE CHAMFERED WITH ¾" x ¾" MILLED CHAMFER STRIPS, UNLESS OTHERWISE NOTED EXCEPT ON UNEXPOSED FOOTINGS OR WHERE INDICATED BY THE FOLLOWING NOTATION ON THE PLANS: "DO NOT CHAMFER".

REINFORCING STEEL: REINFORCING STEEL SHALL CONFORM TO ASTM A 615, GRADE 60. MINIMUM COVER FOR ANY BAR SHALL BE 2" UNLESS OTHERWISE NOTED.

FOR TIES AND STIRRUPS, STANDARD ACI BENDING TOLERANCES ARE MODIFIED TO PLUS (+) ZERO INCHES, MINUS (-) NORMAL ACI BENDING TOLERANCE.

ONLY GRADE 60 CAN BE USED ON THIS PROJECT.

ALL REINFORCING STEEL IN THE PARAPET SHALL BE EPOXY COATED.

ALL KEYS ARE NOMINAL SIZE.

THE MSE WALL MANUFACTURER MAY SUBSTITUTE ALTERNATE REINFORCING CONFIGURATIONS AND SUBMIT FOR APPROVAL.

EXPANSION AND CONTRACTION JOINTS: THE LOCATION OF THE EXPANSION AND CONTRACTION JOINTS IN THE BARRIER SHOWN ON THE PLANS MAY BE ADJUSTED TO ACCOMMODATE THE PANEL TYPE USED IN THE PROJECT. ANY CHANGE TO THESE JOINT LOCATIONS SHALL BE SUBMITTED TO THE ENGINEER FOR APPROVAL. EXPANSION JOINTS ARE LABELED "EJ".

LEVELING PAD: THE PROPRIETARY WALL MANUFACTURER MAY RELOCATE THE LEVELING PAD STEPS AT THEIR DISCRETION PROVIDED THAT THE MINIMUM EMBEDMENT IS MAINTAINED. ANY CHANGE TO THE STEP LOCATIONS SHALL BE SUBMITTED TO THE ENGINEER FOR APPROVAL.

ROADWAY LIMITS: THE PROPRIETARY WALL MANUFACTURER SHALL ASSURE THAT PROPOSED PROPRIETARY WALL COMPONENTS ARE POSITIONED SUCH THAT THE DESIGNATED ROADWAY LIMITS ARE NOT ENCROACHED UPON.

TRAFFIC BARRIER JOINTS: TRAFFIC BARRIER SHALL HAVE CONSTRUCTION JOINTS.

COORDINATION: CONTRACTOR AND PROPRIETARY WALL MANUFACTURER SHALL COORDINATE LOCATIONS OF INLETS AND PIPES WITH LOCATIONS OF PROPRIETARY WALL TIEBACK SYSTEM.

ARCHITECTURAL FINISH: THE MSE WALL PANELS SHALL RECEIVE AN ARCHITECTURAL FINISH.

SERVICE LIFE: ALL RETAINING WALL COMPONENTS SHALL BE DESIGNED FOR A MINIMUM SERVICE LIFE OF ~~75~~ 100 YEARS. (3)

WALL SYSTEM: ONLY ONE MSE WALL SYSTEM MAY BE USED ON THIS PROJECT.

ROADWAY SUPERELEVATION: FOR ROADWAY SUPERELEVATION, SEE SUPERELEVATION TABLES.

MSE WALL BACKFILL: MSE WALL BACKFILL SHALL CONSIST OF SPECIFIED BACKFILL.

PAY ITEMS: PCC MASONRY, PARAPET, CLASS A (602017)
BAR REINFORCEMENT, EPOXY COATED (604000)
MECHANICALLY STABILIZED EARTH WALLS (602772)

SOIL PROPERTIES FOR DESIGN

SOIL TYPE	UNIT WEIGHT (PCF)	ANGLE OF FRICTION (DEGREES)
SELECT FILL	125	34
FOUNDATION SOIL	68	24

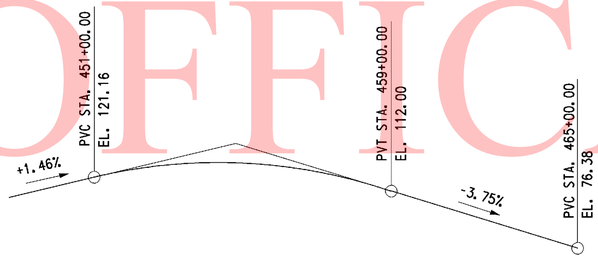

RAMP B
VERTICAL CURVE DATA
NO SCALE

(4) ** THE CONTRACTOR IS RESPONSIBLE FOR DEVELOPING MEANS AND METHODS, IN CONSULTATION WITH THE MSE WALL MANUFACTURER, FOR CONSTRUCTING THE MSE WALLS TO THE LINES, GRADES, AND DIMENSIONS SHOWN ON THE PLANS. SOIL BORINGS, LABORATORY TEST DATA, AND THE ENGINEER'S SETTLEMENT ESTIMATE(S) ARE CONTAINED IN ONE OF THE FOLLOWING GEOTECHNICAL ENGINEERING REPORTS WHICH HAVE BEEN MADE AVAILABLE BY THE DEPARTMENT: FINAL FOUNDATIONS REPORT - RETAINING WALLS AND FINAL FOUNDATIONS REPORT - BRIDGES AND WING WALLS DATED APRIL 2009, PREPARED BY RUMWELL, KLEPPER & KAHL, LLP AND URS CORPORATION. THESE SUPPLEMENTAL GEOTECHNICAL REPORTS ARE NOT PART OF THE CONTRACT DOCUMENTS, AND ARE AVAILABLE AT www.blds.delaware.gov WEBSITE. CONTRACTORS MAY USE THIS INFORMATION AT THEIR OWN RISK.

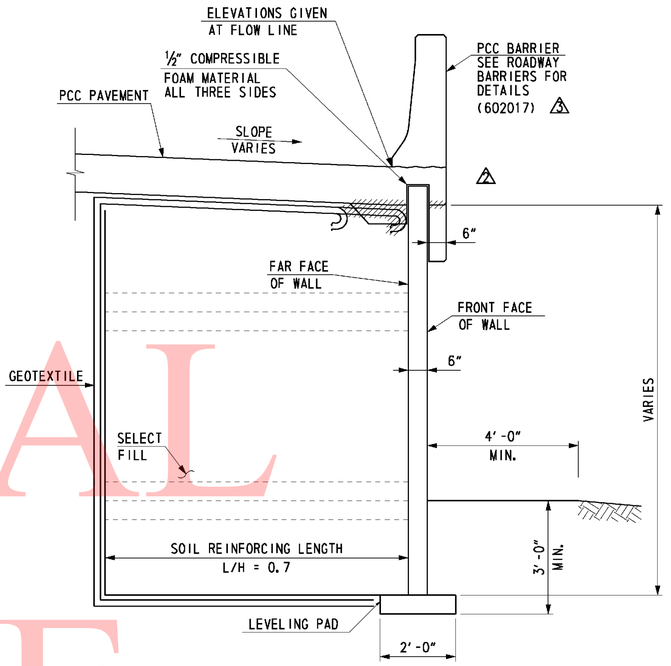

TYPICAL SECTION
(LOOKING AHEAD STATIONS)
SCALE: ½" = 1'-0"

FOUNDATION NOTES

THE FACTORED BEARING RESISTANCE SHALL BE VERIFIED PRIOR TO CONSTRUCTION OF THE MSE WALL.

THE INTERNAL STABILITY OF THE MSE WALL SHALL BE DESIGNED BY THE CONTRACTOR USING THE SOIL PARAMETERS PROVIDED FOR EACH STRUCTURE LOCATION. THE INTERNAL STABILITY SHOULD BE SIGNED AND SEALED BY A PROFESSIONAL ENGINEER LICENSED IN THE STATE OF DELAWARE AS INDICATED IN THE PROJECT SPECIFICATIONS. THE FACTORED APPLIED BEARING STRESS SHALL NOT EXCEED THE FACTORED BEARING RESISTANCE.

GROUNDWATER MAY BE ENCOUNTERED DURING EXCAVATION TO THE LEVELING PAD AND DURING CONSTRUCTION OF THIS RETAINING WALL. IT IS THE CONTRACTOR'S RESPONSIBILITY TO PROVIDE A RELATIVELY DRY EXCAVATION, INCLUDING DETERMINING APPROPRIATE DEWATERING METHODS DURING CONSTRUCTION.

(2) A QUARANTINE PERIOD OF ~~APPROXIMATELY~~ 30-DAYS IS REQUIRED AFTER CONSTRUCTION OF THE FULL HEIGHT OF THE MSE WALL IS ACHIEVED. THE ENGINEER SHALL APPROVE THE COMPLETION OF THE QUARANTINE PERIOD PRIOR TO CONSTRUCTION OF ANY PARAPETS.

THE DESIGN UNIT WEIGHT INDICATED IN SOIL PROPERTIES TABLE HAS BEEN ADJUSTED DUE TO THE PRESENCE OF SHALLOW GROUNDWATER.

THE WALL SUPPLIER SHAL PERFORM A DETAILED SEISMIC ANALYSIS FOR BACK TO BACK MSE WALLS WITH L/H LESS THAN 1.1, IF NECESSARY, AS REQUIRED BY FHWA PUBLICATION NO. FHWA-NHI-00-043.

(4) INSTALLATION OF THE GEOTEXTILE WILL NOT BE REQUIRED BEHIND THE WALL WHERE THE SOIL REINFORCEMENT LENGTH OVERLAPS THE SOIL REINFORCEMENT LENGTH FOR WALL 15. IN ALL OTHER LOCATIONS THE GEOTEXTILE SHALL BE INSTALLED AS SHOWN IN THE TYPICAL SECTION.

(4) **

0 1 4
½ 2
SCALE: ½"=1'-0"

UNOFFICAL WEBSITE COPY

4/8/2011 2:56:19 PM
M:\PROJECTS\2003\03059_DELTRNPK\SRTMALL\CADD\2809003\PLANS\RD29_WALL-14_SR1.DGN

DELAWARE DEPARTMENT OF TRANSPORTATION

ADDENDUMS / REVISIONS

ADDENDUM NO. (2), UPDATED FOUNDATION NOTES, SECTION, 01/26/11, JSW	ADDENDUM NO. (4), ADD NOTES, 4/1/11, JSW
ADDENDUM NO. (3), UPDATED GENERAL NOTES AND TYPICAL SECTION, 02/18/11, JSW	

SR1 / I-95 INTERCHANGE

CONTRACT	BRIDGE NO.	
28-090-03	DESIGNED BY:	JMS
COUNTY	CHECKED BY:	JSW
NEW CASTLE		

RETAINING WALL 14
GENERAL NOTES AND TYPICAL SECTION

R14-01

SHEET NO.	TOTAL SHTS.
602	803

GENERAL NOTES

SPECIFICATIONS: PROPRIETARY MSE WALLS SHALL BE DESIGNED IN ACCORDANCE WITH THE FOLLOWING:
- AASHTO LRFD BRIDGE DESIGN SPECIFICATIONS, 4TH EDITION WITH ALL CURRENT REVISIONS.
- FEDERAL HIGHWAY ADMINISTRATION PUBLICATION NO. FHWA-NHI-00-043, "MECHANICALLY STABILIZED EARTH WALLS AND REINFORCED SOIL SLOPES DESIGN AND CONSTRUCTION GUIDELINES"

CONCRETE DESIGN SHALL BE PERFORMED USING THE LOAD AND RESISTANCE FACTOR DESIGN METHOD.

CONCRETE: ALL CONCRETE FOR PARAPETS, AND ROADWAY BARRIERS SHALL BE 4500 PSI. LEVELING PAD CONCRETE SHALL BE 3500 PSI. MIX REQUIREMENTS SHALL CONFORM TO SECTION 812 OF THE DELAWARE DEPARTMENT OF TRANSPORTATION STANDARD SPECIFICATIONS.

CHAMFERS: ALL EXPOSED CORNERS OF CONCRETE SHALL BE CHAMFERED WITH ¾" x ¾" MILLED CHAMFER STRIPS, UNLESS OTHERWISE NOTED EXCEPT ON UNEXPOSED FOOTINGS OR WHERE INDICATED BY THE FOLLOWING NOTATION ON THE PLANS: "DO NOT CHAMFER".

REINFORCING STEEL: REINFORCING STEEL SHALL CONFORM TO ASTM A 615, GRADE 60. MINIMUM COVER FOR ANY BAR SHALL BE 2" UNLESS OTHERWISE NOTED.

FOR TIES AND STIRRUPS, STANDARD ACI BENDING TOLERANCES ARE MODIFIED TO PLUS (+) ZERO INCHES, MINUS (-) NORMAL ACI BENDING TOLERANCE.

ONLY GRADE 60 CAN BE USED ON THIS PROJECT.

ALL REINFORCING STEEL IN THE PARAPET SHALL BE EPOXY COATED.

ALL KEYS ARE NOMINAL SIZE.

THE MSE WALL MANUFACTURER MAY SUBSTITUTE ALTERNATE REINFORCING CONFIGURATIONS AND SUBMIT FOR APPROVAL.

EXPANSION AND CONTRACTION JOINTS: THE LOCATION OF THE EXPANSION AND CONTRACTION JOINTS IN THE BARRIER SHOWN ON THE PLANS MAY BE ADJUSTED TO ACCOMMODATE THE PANEL TYPE USED IN THE PROJECT. ANY CHANGE TO THESE JOINT LOCATIONS SHALL BE SUBMITTED TO THE ENGINEER FOR APPROVAL. EXPANSION JOINTS ARE LABELED "EJ".

LEVELING PAD: THE PROPRIETARY WALL MANUFACTURER MAY RELOCATE THE LEVELING PAD STEPS AT THEIR DISCRETION PROVIDED THAT THE MINIMUM EMBEDMENT IS MAINTAINED. ANY CHANGE TO THE STEP LOCATIONS SHALL BE SUBMITTED TO THE ENGINEER FOR APPROVAL.

ROADWAY LIMITS: THE PROPRIETARY WALL MANUFACTURER SHALL ASSURE THAT PROPOSED PROPRIETARY WALL COMPONENTS ARE POSITIONED SUCH THAT THE DESIGNATED ROADWAY LIMITS ARE NOT ENCROACHED UPON.

TRAFFIC BARRIER JOINTS: TRAFFIC BARRIER SHALL HAVE CONSTRUCTION JOINTS.

COORDINATION: CONTRACTOR AND PROPRIETARY WALL MANUFACTURER SHALL COORDINATE LOCATIONS OF INLETS AND PIPES WITH LOCATIONS OF PROPRIETARY WALL TIEBACK SYSTEM.

ARCHITECTURAL: FINISH THE MSE WALL PANELS SHALL RECEIVE AN ARCHITECTURAL FINISH.

SERVICE LIFE: ALL RETAINING WALL COMPONENTS SHALL BE DESIGNED FOR A MINIMUM SERVICE LIFE OF ~~75~~ 100 YEARS. (3)

WALL SYSTEM: ONLY ONE MSE WALL SYSTEM MAY BE USED ON THIS PROJECT.

ROADWAY: SUPERELEVATION FOR ROADWAY SUPERELEVATION, SEE SUPERELEVATION TABLES.

MSE WALL: BACKFILL MSE WALL BACKFILL SHALL CONSIST OF SPECIFIED BACKFILL.

PAY ITEMS: PCC MASONRY, PARAPET, CLASS A (602017)
BAR REINFORCEMENT, EPOXY COATED (604000)
MECHANICALLY STABILIZED EARTH WALLS (602772)

SOIL PROPERTIES FOR DESIGN

SOIL TYPE	UNIT WEIGHT (PCF)	ANGLE OF FRICTION (DEGREES)
SELECT FILL	125	34
FOUNDATION SOIL	68	24

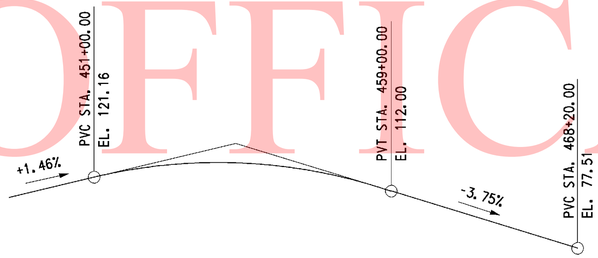

RAMP B
VERTICAL CURVE DATA
NO SCALE

(4) ** THE CONTRACTOR IS RESPONSIBLE FOR DEVELOPING MEANS AND METHODS, IN CONSULTATION WITH THE MSE WALL MANUFACTURER, FOR CONSTRUCTING THE MSE WALLS TO THE LINES, GRADES, AND DIMENSIONS SHOWN ON THE PLANS. SOIL BORINGS, LABORATORY TEST DATA, AND THE ENGINEER'S SETTLEMENT ESTIMATE(S) ARE CONTAINED IN ONE OF THE FOLLOWING GEOTECHNICAL ENGINEERING REPORTS WHICH HAVE BEEN MADE AVAILABLE BY THE DEPARTMENT: FINAL FOUNDATIONS REPORT - RETAINING WALLS AND FINAL FOUNDATIONS REPORT - BRIDGES AND WING WALLS DATED APRIL 2009, PREPARED BY RUMMELL, KLEPPER & KAHL, LLP AND URS CORPORATION. THESE SUPPLEMENTAL GEOTECHNICAL REPORTS ARE NOT PART OF THE CONTRACT DOCUMENTS, AND ARE AVAILABLE AT www.bids.delaware.gov WEBSITE. CONTRACTORS MAY USE THIS INFORMATION AT THEIR OWN RISK.

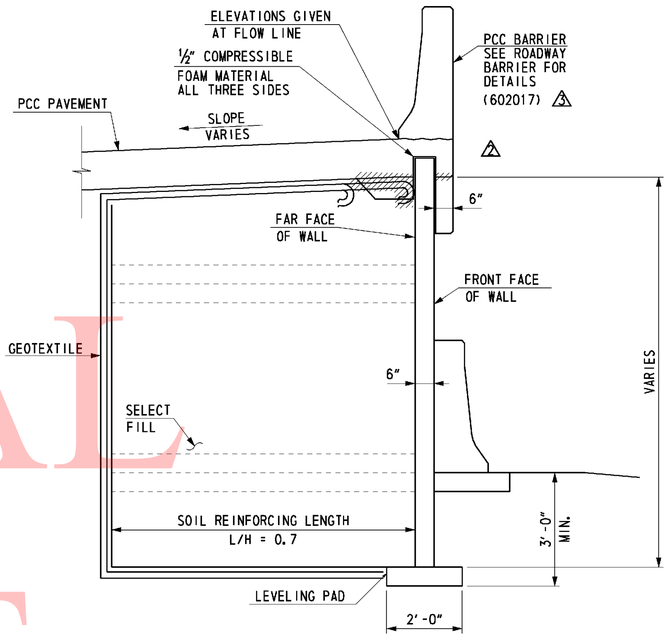

TYPICAL SECTION
(LOOKING BACK STATION)
SCALE: ½" = 1'-0"

FOUNDATION NOTES

THE FACTORED BEARING RESISTANCE SHALL BE VERIFIED PRIOR TO CONSTRUCTION OF THE MSE WALL.

THE INTERNAL STABILITY OF THE MSE WALL SHALL BE DESIGNED BY THE CONTRACTOR USING THE SOIL PARAMETERS PROVIDED FOR EACH STRUCTURE LOCATION. THE INTERNAL STABILITY SHOULD BE SIGNED AND SEALED BY A PROFESSIONAL ENGINEER LICENSED IN THE STATE OF DELAWARE AS INDICATED IN THE PROJECT SPECIFICATIONS. THE FACTORED APPLIED BEARING STRESS SHALL NOT EXCEED THE FACTORED BEARING RESISTANCE.

GROUNDWATER MAY BE ENCOUNTERED DURING EXCAVATION TO THE LEVELING PAD AND DURING CONSTRUCTION OF THIS RETAINING WALL. IT IS THE CONTRACTOR'S RESPONSIBILITY TO PROVIDE A RELATIVELY DRY EXCAVATION, INCLUDING DETERMINING APPROPRIATE DEWATERING METHODS DURING CONSTRUCTION.

(2) A QUARANTINE PERIOD OF ~~APPROXIMATELY~~ 30-DAYS IS REQUIRED AFTER CONSTRUCTION OF THE FULL HEIGHT OF THE MSE WALL IS ACHIEVED. THE ENGINEER SHALL APPROVE THE COMPLETION OF THE QUARANTINE PERIOD PRIOR TO CONSTRUCTION OF ANY PARAPETS.

THE DESIGN UNIT WEIGHT INDICATED IN SOIL PROPERTIES TABLE HAS BEEN ADJUSTED DUE TO THE PRESENCE OF SHALLOW GROUNDWATER.

THE WALL SUPPLIER SHAL PERFORM A DETAILED SEISMIC ANALYSIS FOR BACK TO BACK MSE WALLS WITH L/H LESS THAN 1.1, IF NECESSARY, AS REQUIRED BY FHWA PUBLICATION NO. FHWA-NHI-00-043.

(4) INSTALLATION OF THE GEOTEXTILE WILL NOT BE REQUIRED BEHIND THE WALL WHERE THE SOIL REINFORCEMENT LENGTH OVERLAPS THE SOIL REINFORCEMENT LENGTH FOR WALL 14. IN ALL OTHER LOCATIONS THE GEOTEXTILE SHALL BE INSTALLED AS SHOWN IN THE TYPICAL SECTION.

(4) **

0 1 4
½ 2
SCALE: ½" = 1'-0"

UNOFFICAL WEBSITE COPY

4/8/2011 2:57:31 PM
M:\PROJECTS\2003\03059_DELTRNPK\SR1MALL\CADD\2809003\PLANS\RD33_WALL-15_SR1.DGN

DELAWARE DEPARTMENT OF TRANSPORTATION

ADDENDUMS / REVISIONS	
ADDENDUM NO. (2), UPDATED FOUNDATION NOTES, SECTION, 01/26/11, JSW	ADDENDUM NO. (4), ADD NOTES, 4/1/11, JSW
ADDENDUM NO. (3), UPDATED GENERAL NOTES AND TYPICAL SECTION, 02/18/11, JSW	

SR1 / I-95 INTERCHANGE

CONTRACT	BRIDGE NO.	
28-090-03	DESIGNED BY:	JMS
COUNTY	CHECKED BY:	JSW
NEW CASTLE		

RETAINING WALL 15
GENERAL NOTES AND TYPICAL SECTION

R15-01

SHEET NO.	TOTAL SHTS.
610	803

GENERAL NOTES

SPECIFICATIONS: PROPRIETARY MSE WALLS SHALL BE DESIGNED IN ACCORDANCE WITH THE FOLLOWING:
- AASHTO LRFD BRIDGE DESIGN SPECIFICATIONS, 4TH EDITION WITH ALL CURRENT REVISIONS.
- FEDERAL HIGHWAY ADMINISTRATION PUBLICATION NO. FHWA-NHI-00-043, "MECHANICALLY STABILIZED EARTH WALLS AND REINFORCED SOIL SLOPES DESIGN AND CONSTRUCTION GUIDELINES"

CONCRETE: CONCRETE DESIGN SHALL BE PERFORMED USING THE LOAD AND RESISTANCE FACTOR DESIGN METHOD.

COPING CONCRETE SHALL BE 3500 PSI. MIX REQUIREMENTS SHALL CONFORM TO SECTION 812 OF THE DELAWARE DEPARTMENT OF TRANSPORTATION STANDARD SPECIFICATIONS.

CHAMFERS: ALL EXPOSED CORNERS OF CONCRETE SHALL BE CHAMFERED WITH ¾" x ¾" MILLED CHAMFER STRIPS, UNLESS OTHERWISE NOTED EXCEPT ON UNEXPOSED FOOTINGS OR WHERE INDICATED BY THE FOLLOWING NOTATION ON THE PLANS: "DO NOT CHAMFER".

REINFORCING STEEL: REINFORCING STEEL SHALL CONFORM TO ASTM A 615, GRADE 60. MINIMUM COVER FOR ANY BAR SHALL BE 2" UNLESS OTHERWISE NOTED.

FOR TIES AND STIRRUPS, STANDARD ACI BENDING TOLERANCES ARE MODIFIED TO PLUS (+) ZERO INCHES, MINUS (-) NORMAL ACI BENDING TOLERANCE.

ONLY GRADE 60 CAN BE USED ON THIS PROJECT.

ALL REINFORCING STEEL IN THE COPING SHALL BE EPOXY COATED.

ALL KEYS ARE NOMINAL SIZE.

THE MSE WALL MANUFACTURER MAY SUBSTITUTE ALTERNATE REINFORCING CONFIGURATIONS AND SUBMIT FOR APPROVAL.

EXPANSION AND CONTRACTION JOINTS: THE LOCATION OF THE EXPANSION AND CONTRACTION JOINTS IN THE COPING SHOWN ON THE PLANS MAY BE ADJUSTED TO ACCOMMODATE THE PANEL TYPE USED IN THE PROJECT. ANY CHANGE TO THESE JOINT LOCATIONS SHALL BE SUBMITTED TO THE ENGINEER FOR APPROVAL. EXPANSION JOINTS ARE LABELED "EJ".

LEVELING PAD: THE PROPRIETARY WALL MANUFACTURER MAY RELOCATE THE LEVELING PAD STEPS AT THEIR DISCRETION PROVIDED THAT THE MINIMUM EMBEDMENT IS MAINTAINED. ANY CHANGE TO THE STEP LOCATIONS SHALL BE SUBMITTED TO THE ENGINEER FOR APPROVAL.

ROADWAY LIMITS: THE PROPRIETARY WALL MANUFACTURER SHALL ASSURE THAT PROPOSED PROPRIETARY WALL COMPONENTS ARE POSITIONED SUCH THAT THE DESIGNATED ROADWAY LIMITS ARE NOT ENCROACHED UPON.

COPING JOINTS: COPING SHALL HAVE CONSTRUCTION JOINTS.

COORDINATION: CONTRACTOR AND PROPRIETARY WALL MANUFACTURER SHALL COORDINATE LOCATIONS OF INLETS AND PIPES WITH LOCATIONS OF PROPRIETARY WALL TIEBACK SYSTEM.

ARCHITECTURAL FINISH: THE MSE WALL PANELS SHALL RECEIVE AN ARCHITECTURAL FINISH.

SERVICE LIFE: ALL RETAINING WALL COMPONENTS SHALL BE DESIGNED FOR A MINIMUM SERVICE LIFE OF ~~75~~ 100 YEARS. 3

WALL SYSTEM: ONLY ONE MSE WALL SYSTEM MAY BE USED ON THIS PROJECT.

ROADWAY SUPERELEVATION: FOR ROADWAY SUPERELEVATION, SEE SUPERELEVATION TABLES.

MSE WALL BACKFILL: MSE WALL BACKFILL SHALL CONSIST OF SPECIFIED BACKFILL.

PAY ITEMS: MECHANICALLY STABILIZED EARTH WALLS (602772)
PCC MASONRY FOR MSE WALLS (602773)
BAR REINFORCEMENT, EPOXY COATED (604000)

FOUNDATION NOTES

THE FACTORED BEARING RESISTANCE SHALL BE VERIFIED PRIOR TO CONSTRUCTION OF THE MSE WALL.

THE INTERNAL STABILITY OF THE MSE WALL SHALL BE DESIGNED BY THE CONTRACTOR USING THE SOIL PARAMETERS PROVIDED FOR EACH STRUCTURE LOCATION. THE INTERNAL STABILITY SHOULD BE SIGNED AND SEALED BY A PROFESSIONAL ENGINEER LICENSED IN THE STATE OF DELAWARE AS INDICATED IN THE PROJECT SPECIFICATIONS. THE FACTORED APPLIED BEARING STRESS SHALL NOT EXCEED THE FACTORED BEARING RESISTANCE.

ISOLATED AREAS OF UNDERCUTTING OF EXISTING FILL MAY BE ENCOUNTERED DURING CONSTRUCTION OF THIS RETAINING WALL.

GROUNDWATER MAY BE ENCOUNTERED DURING EXCAVATION TO THE LEVELING PAD AND DURING CONSTRUCTION OF THIS RETAINING WALL. IT IS THE CONTRACTOR'S RESPONSIBILITY TO PROVIDE A RELATIVELY DRY EXCAVATION, INCLUDING DETERMINING APPROPRIATE DEWATERING METHODS DURING CONSTRUCTION.

2 A QUARANTINE PERIOD OF ~~APPROXIMATELY~~ 30-DAYS IS REQUIRED AFTER CONSTRUCTION OF THE FULL HEIGHT OF THE MSE WALL IS ACHIEVED. THE ENGINEER SHALL APPROVE THE COMPLETION OF THE QUARANTINE PERIOD PRIOR TO CONSTRUCTION OF ANY COPING.

THE DESIGN UNIT WEIGHT INDICATED IN SOIL PROPERTIES TABLE HAS BEEN ADJUSTED DUE TO THE PRESENCE OF SHALLOW GROUNDWATER.

THE WALL SUPPLIER SHAL PERFORM A DETAILED SEISMIC ANALYSIS FOR BACK TO BACK MSE WALLS WITH L/H LESS THAN 1.1, IF NECESSARY, AS REQUIRED BY FHWA PUBLICATION NO. FHWA-NHI-00-043.

4 **

4 ** THE CONTRACTOR IS RESPONSIBLE FOR DEVELOPING MEANS AND METHODS, IN CONSULTATION WITH THE MSE WALL MANUFACTURER, FOR CONSTRUCTING THE MSE WALLS TO THE LINES, GRADES, AND DIMENSIONS SHOWN ON THE PLANS. SOIL BORINGS, LABORATORY TEST DATA, AND THE ENGINEER'S SETTLEMENT ESTIMATE(S) ARE CONTAINED IN ONE OF THE FOLLOWING GEOTECHNICAL ENGINEERING REPORTS WHICH HAVE BEEN MADE AVAILABLE BY THE DEPARTMENT: FINAL FOUNDATIONS REPORT - RETAINING WALLS AND FINAL FOUNDATIONS REPORT - BRIDGES AND WING WALLS DATED APRIL 2009, PREPARED BY RUMMELL, KLEPPER & KAHL, LLP AND URS CORPORATION. THESE SUPPLEMENTAL GEOTECHNICAL REPORTS ARE NOT PART OF THE CONTRACT DOCUMENTS, AND ARE AVAILABLE AT www.bids.delaware.gov WEBSITE. CONTRACTORS MAY USE THIS INFORMATION AT THEIR OWN RISK.

SOIL PROPERTIES FOR DESIGN

SOIL TYPE	UNIT WEIGHT (PCF)	ANGLE OF FRICTION (DEGREES)
LIGHT WEIGHT ENGINEERED FILL (LWEF)	42	38
FOUNDATION SOIL	68	24
TYPE F	125	28
CONTROLLED LOW STRENGTH MATERIAL (CLSM)	42	38

2

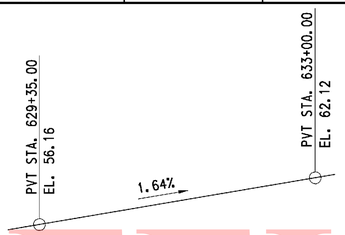

SR7 (NB)
VERTICAL CURVE DATA
NO SCALE

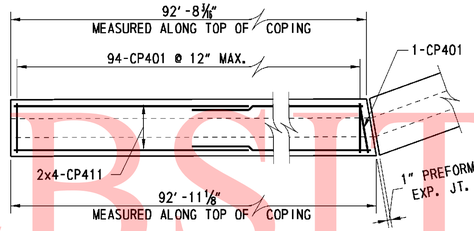

TYPE 1 PANEL (1 REQUIRED)

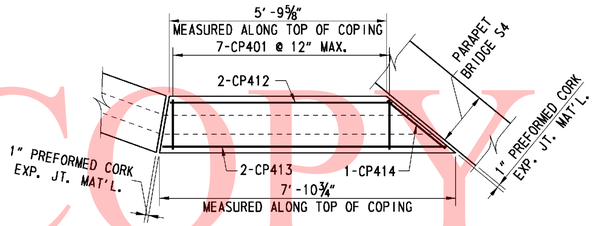

TYPE 2 PANEL (1 REQUIRED)

COPING REINFORCING PLANS
SCALE: ½" = 1'-0"

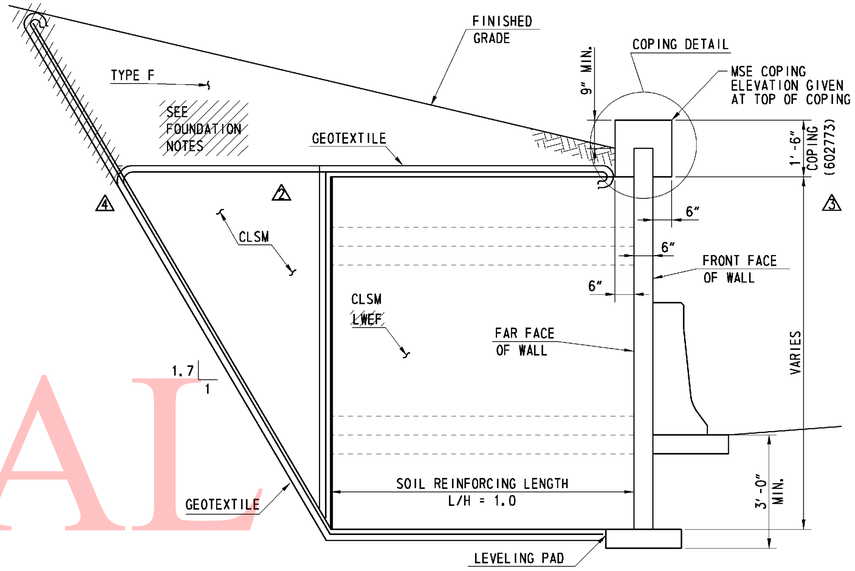

TYPICAL SECTION
(LOOKING BACK STATION)
SCALE: ½" = 1'-0"

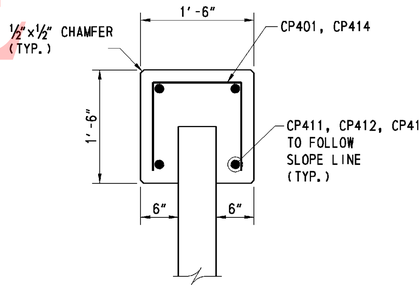

COPING DETAIL
SCALE: 1"= 1'-0"

	QTY.	SIZE	LENGTH	MARK	TYPE	A	B	C	D	H	K	O
COPING	101	4	3-6	CP401	17		1-2	1-2	1-2			
	8	4	47-9 1/16	CP411	STR							
	2	4	5-7	CP412	STR							
	2	4	7-8 1/8	CP413	STR							
	1	4	4-4 5/16	CP414	17		1-2	2-0 5/16	1-2			

BENDING DIMENSIONS (FEET-INCHES /QUARTER INCH)

SEE SHEET R7-07 FOR BAR BEND NOTES

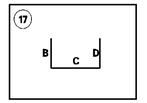

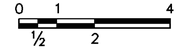

SCALE: ½"=1'-0"

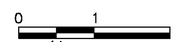

SCALE: 1"=1'-0"

UNOFICAL WEBSITE COPY

ADDENDUMS / REVISIONS	
ADDENDUM NO. 2, UPDATED FOUNDATION NOTES, SECTION, 01/26/11, JSW	ADDENDUM NO. 4, ADD NOTE, REV. TYPICAL SECTION, 4/1/11, JSW
ADDENDUM NO. 3, UPDATED GENERAL NOTES AND TYPICAL SECTION, 02/18/11, JSW	

DELAWARE DEPARTMENT OF TRANSPORTATION

SR1 / I-95 INTERCHANGE

CONTRACT	BRIDGE NO.	
28-090-03	DESIGNED BY:	JMS
COUNTY	CHECKED BY:	JSW
NEW CASTLE		

RETAINING WALL 16
GENERAL NOTES AND TYPICAL SECTION

R16-01
SHEET NO. 619
TOTAL SHTS. 803

4/8/2011 2:58:43 PM
M:\PROJECTS\2003\03059_DELTRNPK\SRIMALL\CADD\2809003\PLANS\RD38_WALL-16_SR1.DGN

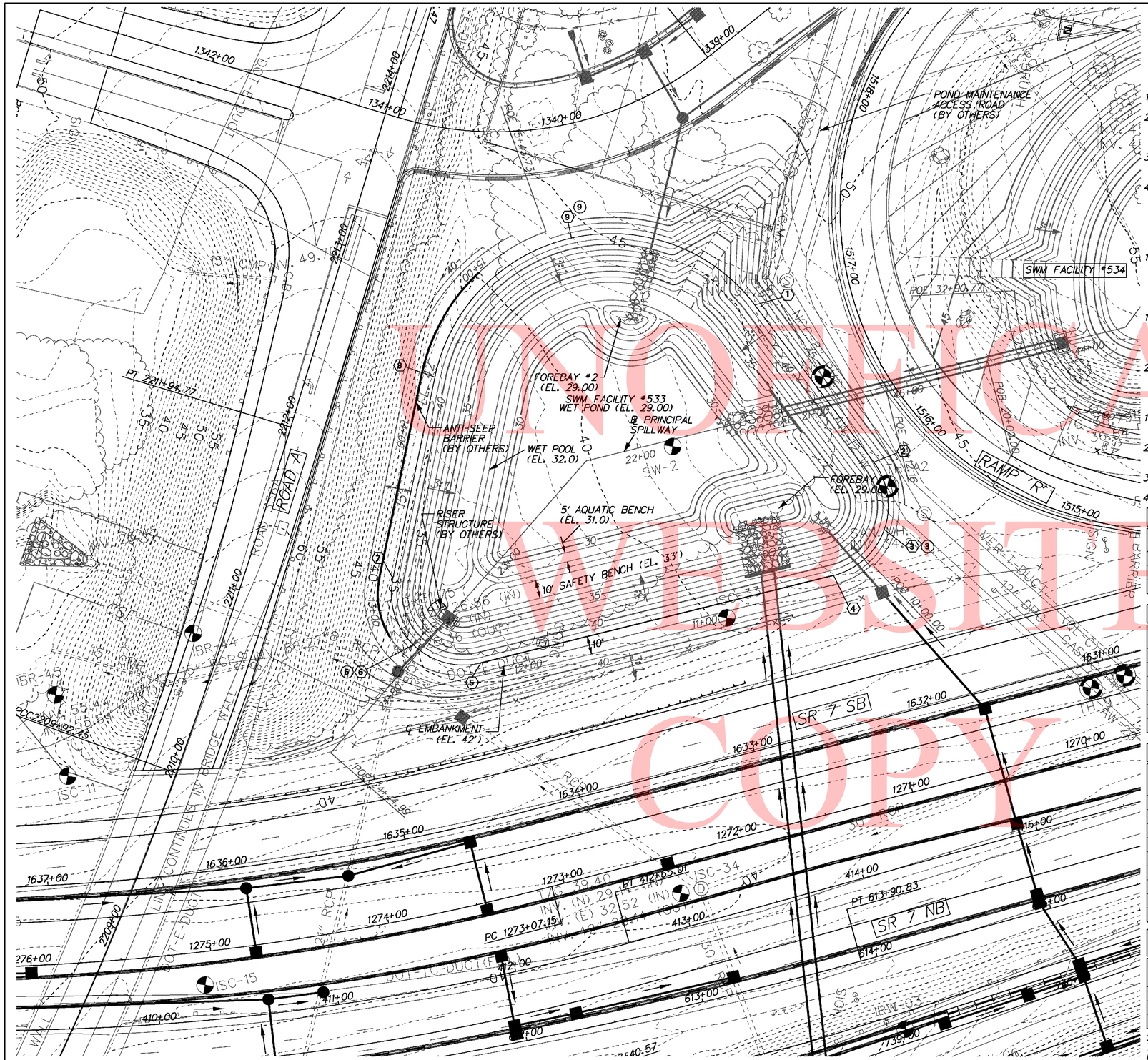

NOTE:
CONSTRUCTION OF DelDOT FACILITY #533 SHALL BE COMPLETED, BY OTHERS, UNDER CONTRACT NO. T201009004 AND LEFT AS A SEDIMENT BASIN. CONVERSION OF THE FACILITY TO A PERMANENT STORMWATER MANAGEMENT FACILITY SHALL BE PAID FOR UNDER ITEM ~~271001~~ (STORMWATER MANAGEMENT POND).
271000 (4)

GENERAL

1. THE STORMWATER MANAGEMENT POND SHALL FUNCTION AS A SEDIMENT BASIN DURING CONSTRUCTION.
2. THE POND SHALL BE CONSTRUCTED IN ACCORDANCE WITH THE FOLLOWING SECTIONS OF THE STANDARD SPECIFICATIONS:
   SECTION 271 - STORMWATER MANAGEMENT POND
3. UPON COMPLETION OF POND CONSTRUCTION, AS-BUILT PLANS OF THE BASIN CONTOURS SHALL BE SUBMITTED TO THE DELDOT STORMWATER ENGINEER.
4. ANY DISTURBANCE TO THE POND BASIN SHALL BE REPAIRED IN ACCORDANCE WITH THE FOLLOWING:
   - SOIL RETENTION BLANKET MULCH, TYPE 4 (734015) ABOVE ELEV. 32.0
   - PERMANENT GRASS SEED WET GROUND (734015) FROM ELEV. 32.0 TO ELEV. 33.0.
   - PERMANENT GRASS SEED DRY GROUND (734013) ABOVE ELEV 33.0.

CONSTRUCTION SEQUENCE

1. INSPECT PERIMETER SEDIMENT CONTROLS AND SKIMMER DEWATERING DEVICE INSTALLED DURING CONTRACT NO. T201009004. REPLACE AND/OR REPAIR THESE MEASURES AS NEEDED.

MAINTENANCE OF POND AS A SEDIMENT BASIN

1. CONTRACTOR SHALL MAINTAIN OR REPLACE THE CLEAN OUT STAKE PLACED DURING CONTRACT NO. T201009004. THE STAKE SHALL CLEARLY MARK THE CLEAN OUT ELEVATION AND SHALL BE DRIVEN INTO THE GROUND AT A LOCATION CLEARLY VISIBLE FROM THE EMBANKMENT. SEDIMENT REMOVED FROM THE BASIN SHALL BE DISPOSED OF AT A LOCATION APPROVED BY THE ENGINEER.
2. INSPECT THE BASIN IMMEDIATELY AFTER EVERY RAIN AND MAKE REPAIRS AS NECESSARY.

CONVERSION TO PERMANENT STORMWATER MANAGEMENT POND

1. CONVERT THE BASIN INTO THE PERMANENT STORMWATER MANAGEMENT POND AFTER ALL AREAS DRAINING TO THE POND HAVE BEEN PERMANENTLY STABILIZED AND THE ENGINEER HAS APPROVED THE CONVERSION.
2. REMOVE EXCESS ACCUMULATED SEDIMENT, IF ANY, TO THE SPECIFIED FINISHED LINES AND GRADES SHOWN IN THE PLAN AND DISPOSE SEDIMENT AT A LOCATION APPROVED BY THE ENGINEER.
3. COMPLETE STABILIZATION OF ALL BARE AREAS.
4. REMOVE EROSION AND SEDIMENT CONTROL MEASURES AND DE-ACTIVATE SKIMMER DEWATERING DEVICE.

SEDIMENT CLEANOUT:

WHEN POND IS FUNCTIONING AS A SEDIMENT BASIN, CLEANOUT SHALL OCCUR WHEN SEDIMENT HAS FILLED UP TO ELEVATION 31.00.

BASELINE PRINCIPAL SPILLWAY

STATION	NORTHING	EASTING
POB 20+00.00	610,119.7	432,585.3
PI 22+29.78	609,909.2	432,677.5
POE 24+44.99	609,797.0	462,861.1

BASELINE POND EMBANKMENT

STATION / RADIUS	NORTHING	EASTING
POB 10+00 / 45.0'	610,075.5	432,707.1
PT 10+23.27	610,057.5	432,721.4
PC 12+27.76 / 45.0'	609,870.2	432,803.5
PT 13+18.61	609,807.1	432,760.7
PC 14+33.99 / 107.39'	609,811.2	462,645.4
POE 15+43.73	609,865.8	432,555.6

POND FACILITY BASELINE STAKEOUT

@ SWM NO. 533 STA. / OFFSET	NORTHING	EASTING	CURVE NO.	RADIUS
(1) 21+17.95, 61.59 RT.	609,986.9	432,576.2		
(2) 20+74.84, 39.00 LT.	610,066.8	432,651.0		
(3) 20+78.21, 76.78 LT.	610,078.8	432,687.0	(3)	40'
(4) 21+11.60, 94.76 LT.	610,055.5	432,716.8	(6)	40'
(5) 23+52.61, 29.83 LT.	609,870.6	432,797.8	(9)	100'
(6) 23+69.67, 4.89 RT.	609,832.1	432,794.3		
(7) 23+49.36, 37.82 RT.	609,814.6	432,759.8		
(8) 22+49.85, 93.91 RT.	609,818.6	432,645.6		
(9) 22+07.70, 122.17 RT.	609,880.4	432,556.7		

POND FACILITY DESIGN SUMMARY

DESIGN STORM	FACILITY INFLOW	FACILITY DISCHARGE	WATER SURFACE EL.	STORAGE VOLUME
2-YEAR	84.07 CFS	29.48 CFS	35.59 FT.	2.185 AC.-FT.
10-YEAR	133.59 CFS	78.53 CFS	37.13 FT.	3.325 AC.-FT.
100-YEAR	256.97 CFS	121.41 CFS	40.81 FT.	6.706 AC.-FT.

STORMWATER MANAGEMENT WET POND SHALL PROVIDE QUALITY MANAGEMENT OF THE FIRST ONE INCH OF RUNOFF. THE POND SHALL ALSO PROVIDE QUANTITY MANAGEMENT FOR THE 2, 10, AND 100 YEAR STORMS.

HAZARD CLASSIFICATION: CLASS A AS PER POND 378 CODE

DRAINAGE AREA TO FACILITIES #533 & 534: 85.79 ACRES

PLAN – SWM FACILITY NO. 533

UNOFFICIAL WEBSITE COPY

2/6/2009 10:09:28 AM
M:\PROJECTS\2003\03059_DELTRNPK\SRIMALL\CADD\2809003\PLANS\SW01_SR1.DGN

DELAWARE DEPARTMENT OF TRANSPORTATION

ADDENDUMS / REVISIONS	
ADDENDUM (4) CHANGED PAY ITEM, 04/01/11, RLS	

SCALE 0 30 60 90 FEET

SR1 / I-95 INTERCHANGE

CONTRACT	28-090-03
COUNTY	NEW CASTLE
BRIDGE NO.	
DESIGNED BY:	MK
CHECKED BY:	REP

STORMWATER MANAGEMENT DETAILS DelDOT SWM FACILITY #533

SHEET NO.	624
TOTAL SHTS.	803

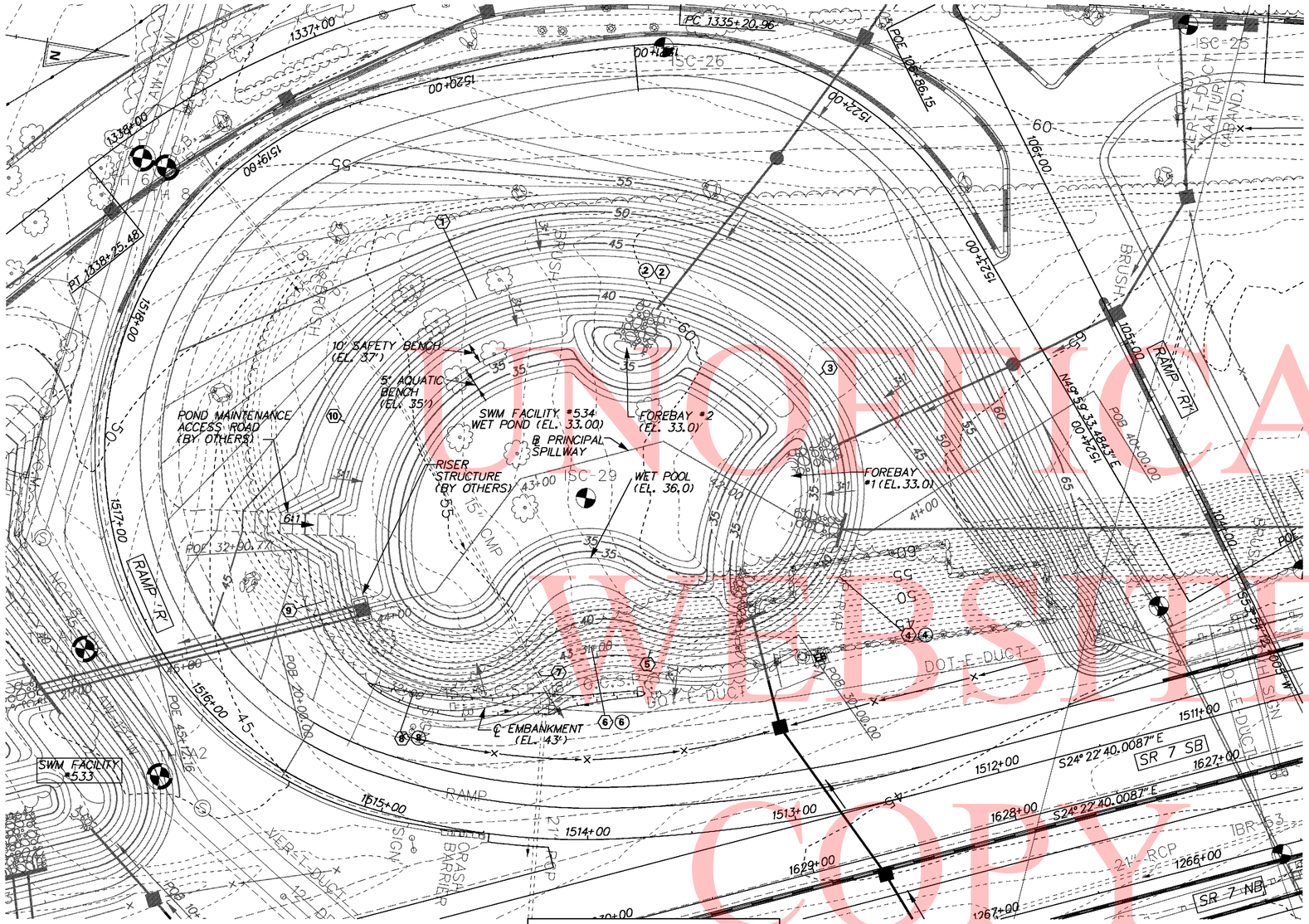

PLAN – SWM FACILITY NO. 534

NOTE:
CONSTRUCTION OF DelDOT FACILITY #534 SHALL BE COMPLETED, BY OTHERS, UNDER CONTRACT NO. T201009004 AND LEFT AS A SEDIMENT BASIN. CONVERSION OF THE FACILITY TO A PERMANENT STORMWATER MANAGEMENT FACILITY SHALL BE PAID FOR UNDER ITEM ~~271002~~ (STORMWATER MANAGEMENT POND).
271000 (A)

GENERAL

1. THE STORMWATER MANAGEMENT POND SHALL FUNCTION AS A SEDIMENT BASIN DURING CONSTRUCTION.
2. THE POND SHALL BE CONSTRUCTED IN ACCORDANCE WITH THE FOLLOWING SECTIONS OF THE STANDARD SPECIFICATIONS:
   SECTION 271 - STORMWATER MANAGEMENT POND
3. UPON COMPLETION OF POND CONSTRUCTION, AS-BUILT PLANS OF THE BASIN CONTOURS SHALL BE SUBMITTED TO THE DELDOT STORMWATER ENGINEER.
4. ANY DISTURBANCE TO THE POND BASIN SHALL BE REPAIRED IN ACCORDANCE WITH THE FOLLOWING:
   - SOIL RETENTION BLANKET MULCH, TYPE 4 (734015) ABOVE ELEV. 36.0
   - PERMANENT GRASS SEED WET GROUND (734015) FROM ELEV. 36.0 TO ELEV. 37.0.
   - PERMANENT GRASS SEED DRY GROUND (734013) ABOVE ELEV 37.0.

CONSTRUCTION SEQUENCE

1. INSPECT PERIMETER SEDIMENT CONTROLS AND SKIMMER DEWATERING DEVICE INSTALLED DURING CONTRACT NO. T201009004. REPLACE AND/OR REPAIR THESE MEASURES AS NEEDED.

MAINTENANCE OF POND AS A SEDIMENT BASIN

1. CONTRACTOR SHALL MAINTAIN OR REPLACE THE CLEAN OUT STAKE PLACED DURING CONTRACT NO. T201009004. THE STAKE SHALL CLEARLY MARK THE CLEAN OUT ELEVATION AND SHALL BE DRIVEN INTO THE GROUND AT A LOCATION CLEARLY VISIBLE FROM THE EMBANKMENT. SEDIMENT REMOVED FROM THE BASIN SHALL BE DISPOSED OF AT A LOCATION APPROVED BY THE ENGINEER.
2. INSPECT THE BASIN IMMEDIATELY AFTER EVERY RAIN AND MAKE REPAIRS AS NECESSARY.

CONVERSION TO PERMANENT STORMWATER MANAGEMENT POND

1. CONVERT THE BASIN INTO THE PERMANENT STORMWATER MANAGEMENT POND AFTER ALL AREAS DRAINING TO THE POND HAVE BEEN PERMANENTLY STABILIZED AND THE ENGINEER HAS APPROVED THE CONVERSION.
2. REMOVE EXCESS ACCUMULATED SEDIMENT, IF ANY, TO THE SPECIFIED FINISHED LINES AND GRADES SHOWN IN THE PLAN AND DISPOSE SEDIMENT AT A LOCATION APPROVED BY THE ENGINEER.
3. COMPLETE STABILIZATION OF ALL BARE AREAS.
4. REMOVE EROSION AND SEDIMENT CONTROL MEASURES AND DE-ACTIVATE SKIMMER DEWATERING DEVICE.

BASELINE PRINCIPAL SPILLWAY

STATION	NORTHING	EASTING
POB 40+00.00	610,485.8	432,405.7
PI 41+30.14	610,389.0	432,492.7
PI 41+64.90	610,354.4	432,489.1
PI 42+36.73	610,287.0	432,464.4
PI 43+07.50	610,222.5	432,493.6
PI 43+75.16	610,191.6	432,553.8
POE 45+12.16	610,065.9	432,608.2

BASELINE POND EMBANKMENT

STATION / RADIUS	NORTHING	EASTING
POB 30+00 / 85.0'	610,366.4	432,544.6
PRC 30+75.74/ 55.0'	610,297.2	432,568.6
PRC 31+27.91 / 69.0'	610,250.2	432,586.4
PCC 32+64.43 / 127.0'	610,136.2	432,568.9
POE 32+90.77	610,127.8	432,544.0

POND FACILITY BASELINE STAKEOUT

℄ SWM NO. 534 STA. / OFFSET	NORTHING	EASTING	CURVE NO.	RADIUS
(1) 43+05.83, 88.46 RT.	610,187.5	432,412.3	(2)	148'
(2) -	610,272.6	432,390.4	(4)	80'
(3) 41+87.82, 64.62 RT.	610,355.1	432,420.5	(6)	60'
(4) 41+36.05, 21.98 LT.	610,380.9	432,513.9	(8)	64'
(5) 41+92.51, 89.51 LT.	610,297.7	432,563.6	(10)	122'
(6) 43+51.35, 75.64 LT.	610,269.8	432,567.2		
(7) 42+33.93, 125.39 LT.	610,246.5	432,583.1		
(8) 43+97.08, 44.68 LT.	610,189.3	432,603.5		
(9) 44+27.00, 8.21 RT.	610,140.9	432,566.8		
(10) 43+36.12, 83.78 RT.	610,134.9	432,480.7		

POND FACILITY DESIGN SUMMARY

DESIGN STORM	FACILITY INFLOW	FACILITY DISCHARGE	WATER SURFACE EL.	STORAGE VOLUME
2-YEAR	65.98 CFS	22.07 CFS	38.25 FT.	1.318 AC.-FT.
10-YEAR	111.11 CFS	41.54 CFS	39.51 FT.	2.244 AC.-FT.
100-YEAR	200.56 CFS	87.47 CFS	41.51 FT.	3.876 AC.-FT.

STORMWATER MANAGEMENT WET POND SHALL PROVIDE QUALITY MANAGEMENT OF THE FIRST ONE INCH OF RUNOFF. THE POND SHALL ALSO PROVIDE QUANTITY MANAGEMENT FOR THE 2, 10, AND 100 YEAR STORMS.

HAZARD CLASSIFICATION: CLASS A AS PER POND 378 CODE

DRAINAGE AREA TO FACILITIES #533 & 534: 85.79 ACRES

SEDIMENT CLEANOUT:
WHEN POND IS FUNCTIONING AS A SEDIMENT BASIN, CLEANOUT SHALL OCCUR WHEN SEDIMENT HAS FILLED UP TO ELEVATION 34.50.

UNOFFICIAL WEBSITE COPY

DELAWARE DEPARTMENT OF TRANSPORTATION

ADDENDUMS / REVISIONS	
ADDENDUM (A) CHANGED PAY ITEM, 04/01/11, RLS	

SCALE 0 30 60 90 FEET

SR1 / I-95 INTERCHANGE

CONTRACT	BRIDGE NO.	
28-090-03	DESIGNED BY:	MK
COUNTY	CHECKED BY:	REP
NEW CASTLE		

STORMWATER MANAGEMENT DETAILS DelDOT SWM FACILITY #534

SHEET NO.	625
TOTAL SHTS.	803

2/6/2009 10:09:28 AM
M:\PROJECTS\2003\03059_DEL TRNPK\SR1MALL\CADD\2809003\PLANS\SW10_SR1.DGN

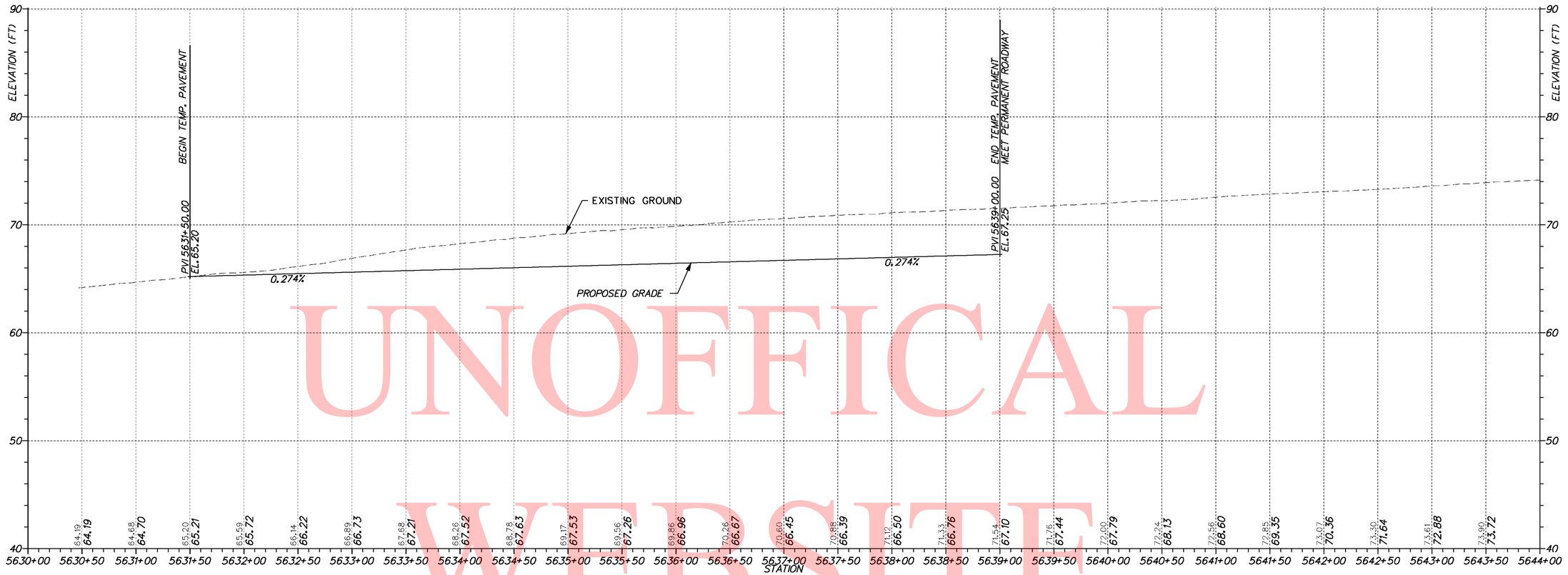

TEMPORARY RAMP SR7 - PHASE 2

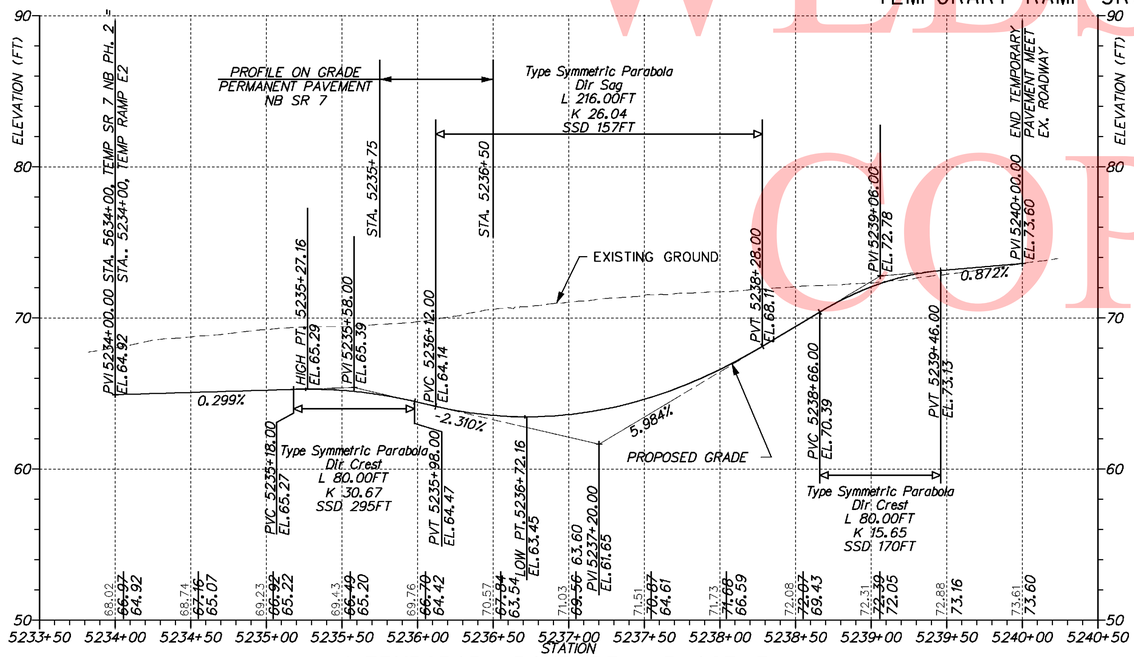

⚠4 TEMPORARY RAMP E3 - PHASE 3

UNOFFICAL WEBSITE COPY

DELAWARE DEPARTMENT OF TRANSPORTATION	ADDENDUMS / REVISIONS ADDENDUM NO. ⚠4 REVISED PROPOSED ELEVATIONS FOR PROFILE TEMP. RAMP E3 04/01/2011, EDJ	SCALE 0 50 100 150 FEET	SR1 / I-95 INTERCHANGE	CONTRACT 28-090-03 COUNTY NEW CASTLE	BRIDGE NO. DESIGNED BY: EDJ CHECKED BY: RLS	CONSTRUCTION PHASING, MOT AND EROSION CONTROL PHASE 2 TEMPORARY ROADWAY	SHEET NO. 670 TOTAL SHTS. 803

3/31/2011 10:20:36 AM
M:\PROJECTS\2003\03059_DELTRNPK\SRTMALL\CADD\2809003\PLANS\CS33_PH2_SR1.DGN

LIGHTING SERVICE SCHEDULE

SERVICE RUN	DISTANCE (L.F.)	# OF CONDUITS	SIZE	DESCRIPTION	INSTALLATION
4*	245	1	3.0"	(3)#2, #2 GROUND	TRENCH
5*	390	1	3.0"	(3)#2, #2 GROUND	TRENCH
6	175	1	3.0"	(3)#2, #2 GROUND	BORE
7	45	1	3.0"	(3)#2, #2 GROUND	TRENCH
8	200	1	3.0"	(3)#6, #6 GROUND	TRENCH
9*	105	1	3.0"	(4)#6, #6 GROUND	TRENCH
10	60	1	3.0"	(4)#6, #6 GROUND	TRENCH
11*	175	1	3.0"	(2)#6, #6 GROUND	TRENCH
12	100	1	3.0"	(3)#6, #6 GROUND	TRENCH

*DISTANCE CONTINUES ON ADJACENT PLAN SHEET.

NOTES: A. SERVICE RUN DISTANCE REFLECTS CONDUIT LENGTH ONLY.

LIGHTING SERVICE SCHEDULE (CONT.)

SERVICE RUN	DISTANCE (L.F.)	# OF CONDUITS		DESCRIPTION	INSTALLATION
13	60	1	3.0"	(4)#6, #6 GROUND	TRENCH
14	200	1	3.0"	(4)#6, #6 GROUND	TRENCH
15*	225	1	3.0"	(4)#6, #6 GROUND	TRENCH
137	40	1	1.0"	(3)#8, #8 GROUND	TRENCH/ON STR.
138	10	1	0.75"	(2)#10, #10 GROUND	ON STRUCTURE
139	130	1	1.0"	(3)#8, #8 GROUND	ON STRUCTURE
140	10	1	1.0"	(3)#8, #8 GROUND	ON STRUCTURE
141	10	1	0.75"	(2)#10, #10 GROUND	ON STRUCTURE
142	10	1	0.75"	(2)#10, #10 GROUND	ON STRUCTURE
143	100	1	1.0"	(2)#8, #8 GROUND	ON STRUCTURE
144	10	1	0.75"	(2)#10, #10 GROUND	ON STRUCTURE

*DISTANCE CONTINUES ON ADJACENT PLAN SHEET.

NOTES: A. SERVICE RUN DISTANCE REFLECTS CONDUIT LENGTH ONLY.

UNOFFICAL WEBSITE COPY

NOTES:

1. RELOCATE EXISTING HIGH MAST LIGHT TOWER TO NEW FOUNDATION PRIOR TO PHASE 5 OF CONSTRUCTION. THE CONTRACTOR SHALL VERIFY THE REQUIRED BOLT PATTERN AND BOLT SIZE OF THE EXISTING HIGH MAST LIGHT TOWER DESIGNATED TO BE RELOCATED AND APPLY TO THE NEW FOUNDATION. RELOCATE EXISTING TOWER CONTROL CABINET AS NEEDED. CONNECT PROPOSED CONDUITS AND CABLES TO THE RELOCATED CONTROL CABINET AND HIGH MAST TOWERS.
2. SPLICE PROPOSED ELECTRICAL CABLES IN THE EXISTING JUNCTION WELL.
3. LOCATE AND INTERCEPT EXISTING CONDUIT WITH A TYPE 1 JUNCTION WELL. CUT AND/OR PULL BACK THE EXISTING CABLES IN THE CONDUIT TO THE PROPOSED JUNCTION WELL SO THAT THE ELECTRICAL SERVICE CAN BE MAINTAINED FOR EXISTING CIRCUITS A, B, C AND D. ENSURE SUFFICIENT CABLE LENGTH IS AVAILABLE FOR SPLICING TO NEW CABLES IN THE PROPOSED CONDUIT RUNS THAT ENTER THIS JUNCTION WELL.
4. UNDERPASS LIGHTS SHALL BE MOUNTED TO THE EXISTING BRIDGE ABUTMENT AND PIER. OFFSETS PROVIDED IN THE LIGHTING STANDARD SCHEDULE ARE APPROXIMATE.
5. ADJUST EXISTING JUNCTION WELL TO FINAL GRADE.

LIGHTING STANDARD SCHEDULE

NO.	CCT. NO.	STATION	OFFSET	HEIGHT	ARM	LIGHT STANDARD	DISTR. TYPE	WATTAGE/LAMP TYPE
LST-10	10	~~834+27.3~~ (4) 739+53.4	~~29.3' RT.~~ 42.1' RT.	40'	15'	COBRAHEAD, DAVIT ARM POLE	TYPE III	250W HPS
LST-11	12	836+17.0	33.0' RT.	40'	15'	COBRAHEAD, DAVIT ARM POLE	TYPE III	250W HPS
LST-12	8	~~739+53.4~~ (4) 834+27.3	~~42.1' RT.~~ 29.3' RT.	35'	15'	COBRAHEAD, DAVIT ARM POLE	TYPE III	250W HPS
HM 2-1	EX.C/D	213+92.5	33.7' LT.	100'	N/A	RELOCATED HIGHMAST TOWER	TYPE V	6-1000W HPS
UP 5	2	1636+24.1	56.4' RT.	16'	N/A	UNDERPASS LIGHT, WALLPACK	TYPE IV	70W HPS
UP 6	4	1275+69.2	18.5' LT.	16'	N/A	UNDERPASS LIGHT, WALLPACK	TYPE IV	70W HPS
UP 7	2	410+59.9	14.1' LT.	16'	N/A	UNDERPASS LIGHT, WALLPACK	TYPE IV	70W HPS
UP 8	4	609+17.3	42.8' RT.	16'	N/A	UNDERPASS LIGHT, WALLPACK	TYPE IV	70W HPS

NOTE: HM 2-1 IS CONNECTED TO THE EXISTING 240/480V SINGLE PHASE LIGHTING LOAD CENTER ALONG ROAD A. ALL OTHER LUMINAIRES IN THIS SCHEDULE ARE CONNECTED TO THE 277/480V THREE PHASE LIGHTING LOAD CENTER ALONG RAMP R1 INSTALLED UNDER CONTRACT 30-090-04.

3/21/2011 11:09:58 AM
M:\PROJECTS\2003\03059_DELTRNPK\SR1MALL\CADD\2809003\PLANS\CP63_LI_SR1.DGN

DELAWARE DEPARTMENT OF TRANSPORTATION

ADDENDUMS / REVISIONS

ADDENDUM NO. (4) REVISED LIGHTING STANDARD SCHEDULE STATION AND OFFSET, 04/01/2011, SM

SCALE 0 50 100 150 FEET

SR1 / I-95 INTERCHANGE

CONTRACT 28-090-03 | COUNTY NEW CASTLE | BRIDGE NO. | DESIGNED BY: SMK | CHECKED BY: HEH

LIGHTING PLAN

LI-04

SHEET NO. 685 | TOTAL SHTS. 803

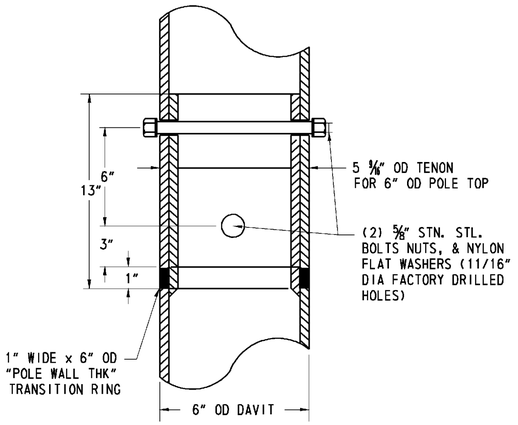

FLUSH JOINT DETAIL

NOT TO SCALE

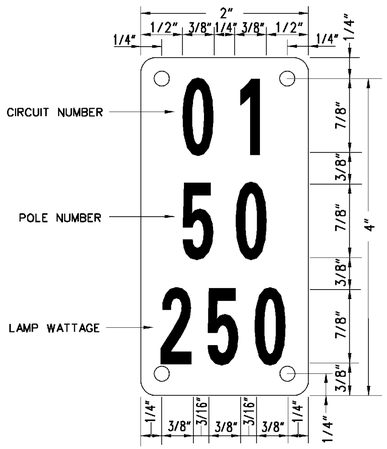

TYPICAL POLE I.D. TAG

NOT TO SCALE

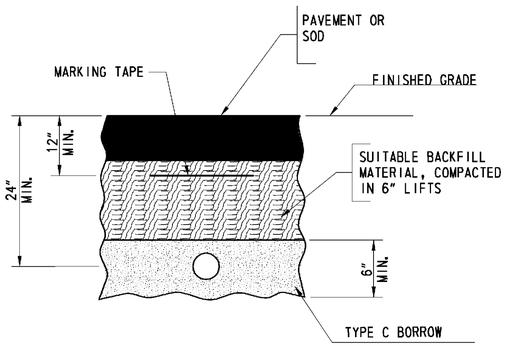

BURIED CONDUIT DETAIL

NOT TO SCALE

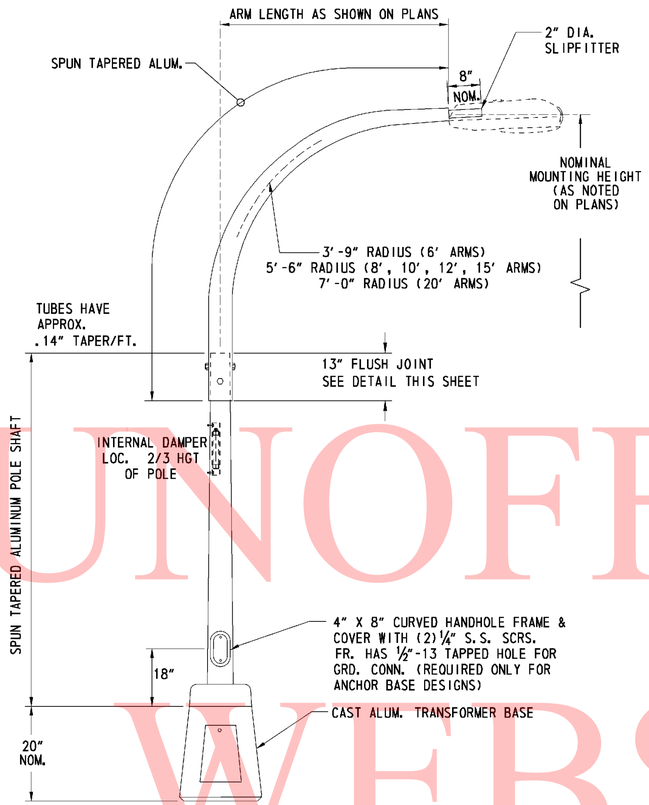

DAVIT ARM LIGHT POLE DETAIL

NOT TO SCALE

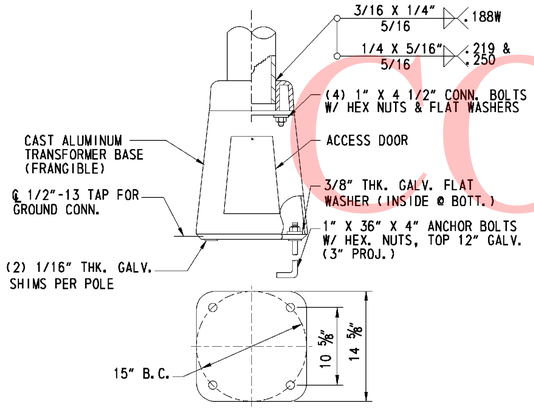

TRANSFORMER BASE DETAIL

NOT TO SCALE

NOTES:
1. TRANSFORMER BASE SHALL BE PROVIDED WITH ALL LIGHT POLES, WHETHER PROTECTED OR UNPROTECTED, UNLESS OTHERWISE NOTED.
2. REFER TO NOTES FOR THE ANCHOR BASE DETAIL FOR CONDITIONS WHERE AN ANCHOR BASE IS REQUIRED.

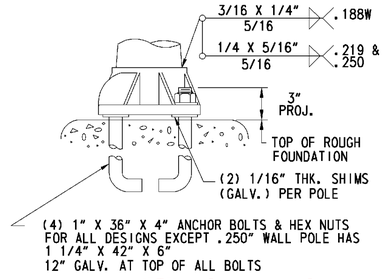

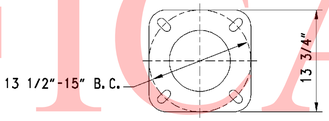

ANCHOR BASE DETAIL

NOT TO SCALE

NOTES:
1. ANCHOR BASES SHALL BE USED AT ALL LOCATIONS WHERE LIGHT POLES ARE MOUNTED ON TOP OF CONCRETE MEDIAN BARRIER.

⚠4 STRUCTURAL DETAILS, EXCLUDING CONCRETE FOUNDATION, ARE FOR BIDDING PURPOSES ONLY. UPON AWARD, THE CONTRACTOR SHALL SUBMIT COMPLETE CONSTRUCTION DETAILS FOR THE STRUCTURAL ITEMS. THE DETAILS SHALL BE SUBSTANTIATED WITH DESIGN CALCULATIONS SIGNED AND SEALED BY A PROFESSIONAL ENGINEER LICENSED IN THE STATE OF DELAWARE.

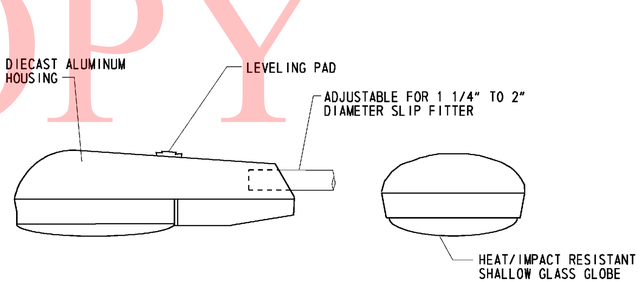

COBRAHEAD LUMINAIRE DETAIL

NOT TO SCALE

NOTES:
1. COBRAHEAD STYLE ROADWAY LUMINAIRES SHALL BE HIGH PRESSURE SODIUM WITH CUTOFF OPTICS. HORIZONTAL DISTRIBUTION TYPE AND WATTAGE SHALL BE AS SPECIFIED ON PLANS. ALL LUMINAIRES SHALL BE MOUNTED AT A ZERO DEGREE TILT ANGLE. PHOTOCONTROL SHALL BE LOCATED AT THE LIGHTING CONTROL CENTER ENCLOSURE, UNLESS OTHERWISE NOTED.

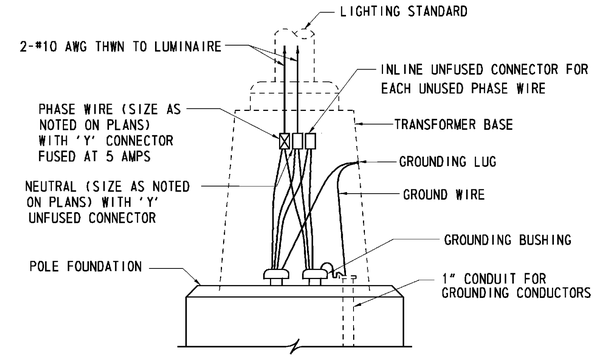

TYPICAL LUMINAIRE CONNECTION 240/480V

NOT TO SCALE

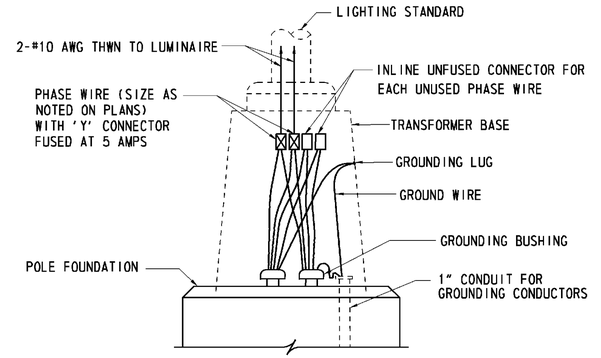

TYPICAL LUMINAIRE CONNECTION 120/240V

NOT TO SCALE

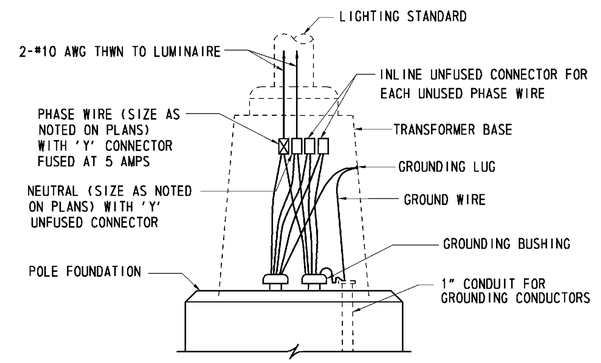

TYPICAL LUMINAIRE CONNECTION 277/480V

NOT TO SCALE

UNOFFICIAL WEBSITE COPY

3/23/2011 11:31:22 AM
M:\PROJECTS\2003\03059_DELTRNPK\SR1MALL\CADD\2809003\PLANS\CP76_LL_SR1.DGN

DELAWARE DEPARTMENT OF TRANSPORTATION	ADDENDUMS / REVISIONS	NOT TO SCALE	SR1 / I-95 INTERCHANGE	CONTRACT 28-090-03	BRIDGE NO.	LIGHTING DETAILS	LI-18
	ADDENDUM NO. ⚠4, ADDED NOTE, 4/1/11, JSW			COUNTY NEW CASTLE	DESIGNED BY: SMK		SHEET NO. 699
					CHECKED BY: HEH		TOTAL SHTS. 803

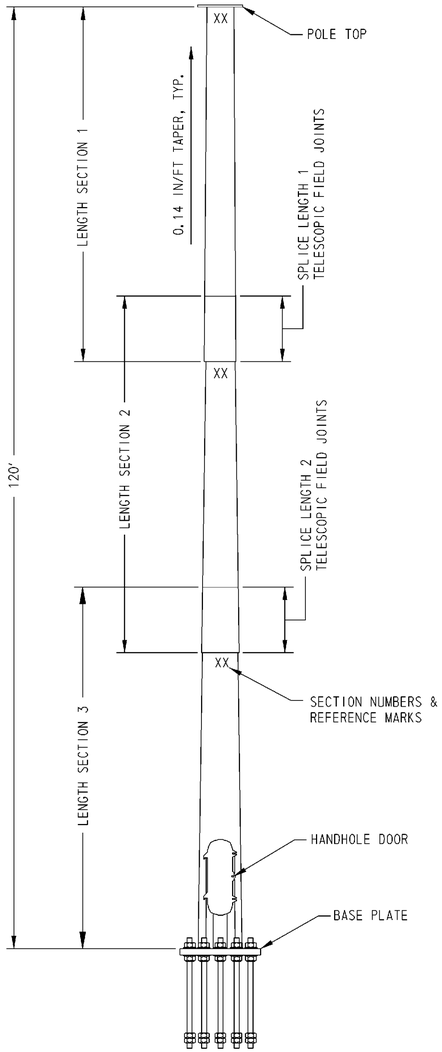

HIGH MAST TOWER POLE ASSEMBLY (3 SECTION)

ELEVATION VIEW

DETAILS ⚠4

STRUCTURAL ~~REQUIREMENTS~~ FOR LIGHT POLE (SEE NOTE)																
SECTION 1 (TOP)						SECTION 2					SECTION 3					
HEIGHT	LENGTH	THICKNESS	MAX SPLICE LENGTH	TIP DIA. (F-F)	BASE DIA. (F-F)	LENGTH	THICKNESS	MAX SPLICE LENGTH	TIP DIA. (F-F)	BASE DIA. (F-F)	LENGTH	THICKNESS	MAX SPLICE LENGTH	TIP DIA. (F-F)	BASE DIA. (F-F)
120'	44'-9"	0.250"	2'-0"	6.25"	12.531"	40'-0"	0.250"	2'-9"	11.688"	17.313"	40'-0"	0.313"	---	16.375"	22.000"

DETAILS ⚠4

STRUCTURAL ~~REQUIREMENTS~~ FOR LIGHT POLE (SEE NOTE)							
BASE PLATE & BOLTS TABLE							
BASE PLATE DIA.	BASE PLATE THK.	"TW"	"BW"	BOLT CIRCLE DIA.	NO. BOLTS	BOLT DIA.	BOLT EMBED.
36.0"	2.750"	0.375"	0.250"	29.0"	8	1.75"	45"

~~NOTE: STRUCTURAL REQUIREMENTS ARE BASED ON 110 MPH DESIGN WIND SPEED.~~

⚠4

⚠4

STRUCTURAL DETAILS, EXCLUDING CONCRETE FOUNDATION, ARE FOR BIDDING PURPOSES ONLY. UPON AWARD, THE CONTRACTOR SHALL SUBMIT COMPLETE CONSTRUCTION DETAILS FOR THE STRUCTURAL ITEMS. THE DETAILS SHALL BE SUBSTANTIATED WITH DESIGN CALCULATIONS SIGNED AND SEALED BY A PROFESSIONAL ENGINEER LICENSED IN THE STATE OF DELAWARE.

POLE BASE DETAIL

PORTABLE DRIVE MOTOR

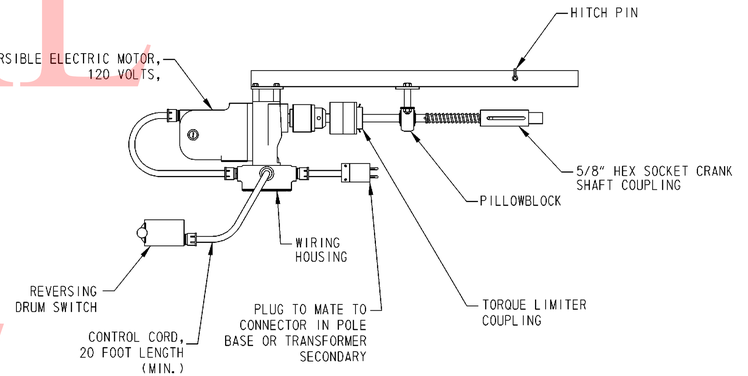

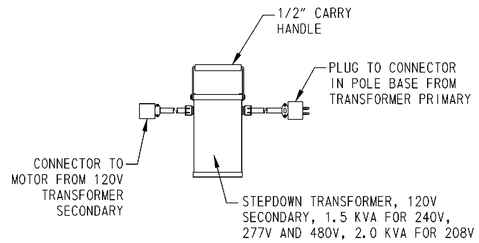

⚠4

~~THE CONTRACTOR MAY, AT HIS OPTION, SUBMIT FOR APPROVAL ALTERNATE DESIGNS FOR HIGH-MAST LIGHT POLES AND ANCHOR BOLTS. ALL ALTERNATE DESIGNS SHALL BE SUBSTANTIATED WITH DESIGN CALCULATIONS.~~

UNOFFICAL WEBSITE COPY

3/23/2011 11:58:16 AM
M:\PROJECTS\2003\03059_DELTRNPK\SRMALL\CADD\2809003\PLANS\CP77_LI_SR1.DGN

DELAWARE DEPARTMENT OF TRANSPORTATION

ADDENDUMS / REVISIONS	
ADDENDUM NO. ⚠4, ADDED NOTE, DELETED	
NOTE, 4/1/11, JSW	

NOT TO SCALE

SR1 / I-95 INTERCHANGE

CONTRACT	BRIDGE NO.
28-090-03	
COUNTY	DESIGNED BY: SMK
NEW CASTLE	CHECKED BY: HEH

LIGHTING DETAILS

LI-19
SHEET NO.
700
TOTAL SHTS.
803

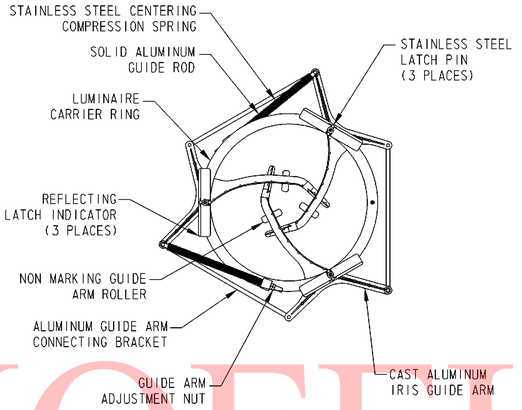

RING ASSEMBLY

PLAN VIEW

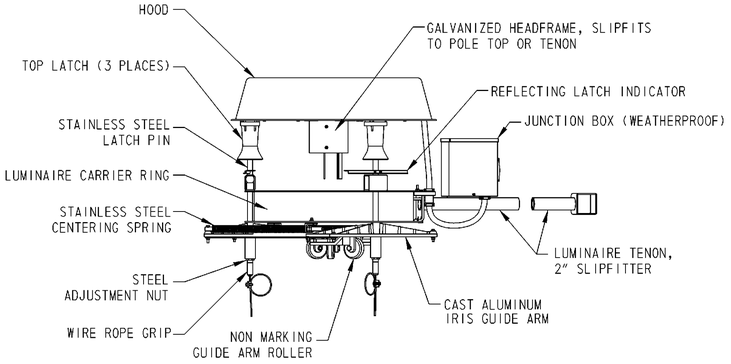

HEADFRAME AND RING ASSEMBLY

ELEVATION VIEW

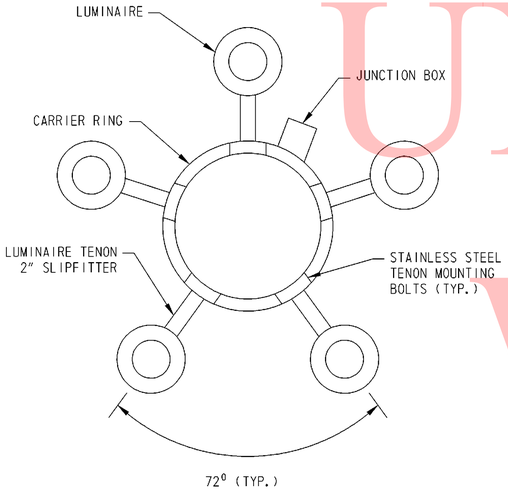

FIVE LUMINAIRE ARRAY

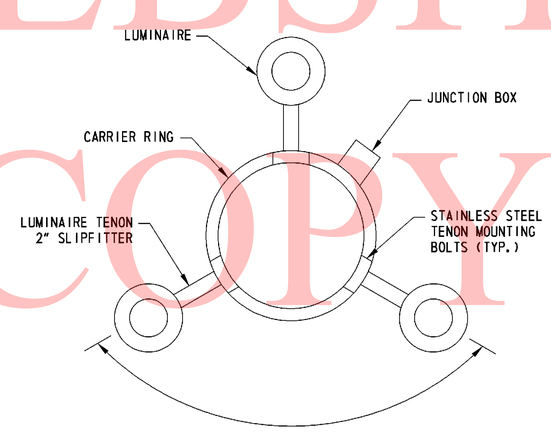

THREE LUMINAIRE ARRAY

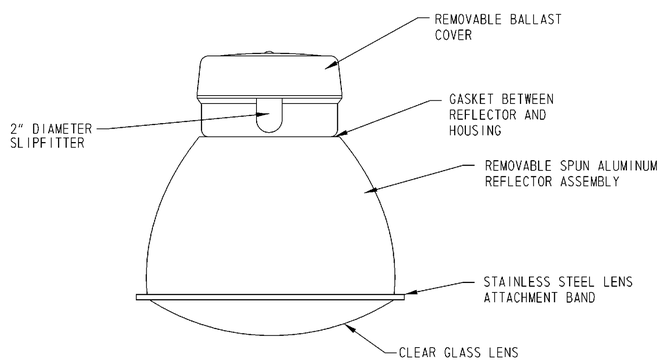

HIGH MAST LUMINAIRE

△4

STRUCTURAL DETAILS, EXCLUDING CONCRETE FOUNDATION, ARE FOR BIDDING PURPOSES ONLY. UPON AWARD, THE CONTRACTOR SHALL SUBMIT COMPLETE CONSTRUCTION DETAILS FOR THE STRUCTURAL ITEMS. THE DETAILS SHALL BE SUBSTANTIATED WITH DESIGN CALCULATIONS SIGNED AND SEALED BY A PROFESSIONAL ENGINEER LICENSED IN THE STATE OF DELAWARE.

NOTES:

1. LUMINAIRES SHALL BE 1000W H.P.S. WITH CUTOFF OPTICS, TYPE V HORIZONTAL DISTRIBUTION, AND SHORT VERTICAL DISTRIBUTION.

UNOFFICAL WEBSITE COPY

3/23/2011 11:34:19 AM
M:\PROJECTS\2003\03059_DELTRNPK\SRIMALL\CADD\2809003\PLANS\CP77A_LI_SR.DGN

DELAWARE DEPARTMENT OF TRANSPORTATION

ADDENDUMS / REVISIONS	
ADDENDUM NO.△4, ADDED NOTE, 4/1/11, JSW	

NOT TO SCALE

SR1 / I-95 INTERCHANGE

CONTRACT	BRIDGE NO.	
28-090-03	DESIGNED BY: SMK	
COUNTY	CHECKED BY: HEH	
NEW CASTLE		

LIGHTING DETAILS

LI-20	
SHEET NO.	700A
TOTAL SHTS.	803

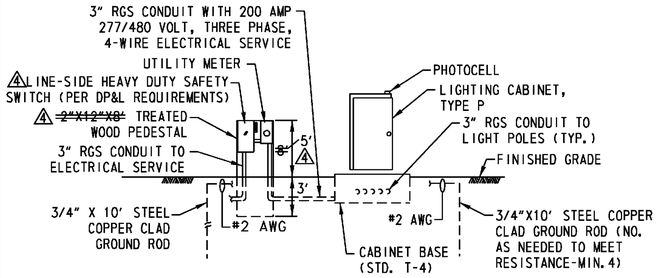

ELECTRICAL SERVICE ON PEDESTAL AND LIGHTING CONTROL AND DISTRIBUTION ENCLOSURE (FRONT VIEW)

NOT TO SCALE

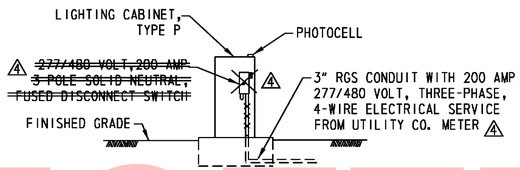

LIGHTING CONTROL AND DISTRIBUTION ENCLOSURE (REAR VIEW)

NOT TO SCALE

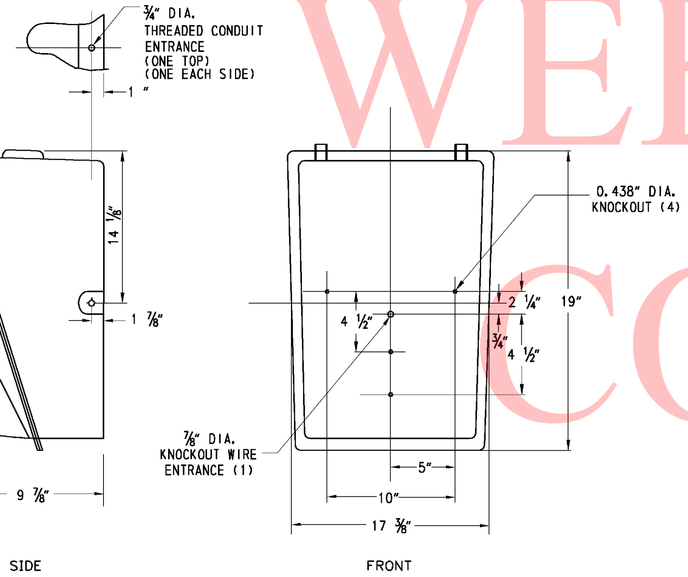

UNDERPASS LIGHTING DETAIL

NOT TO SCALE

UNDERPASS LIGHTING DETAIL NOTES:

1. UNDERPASS LIGHT SHALL BE EQUIPPED WITH A 70 WATT HIGH PRESSURE SODIUM LAMP.

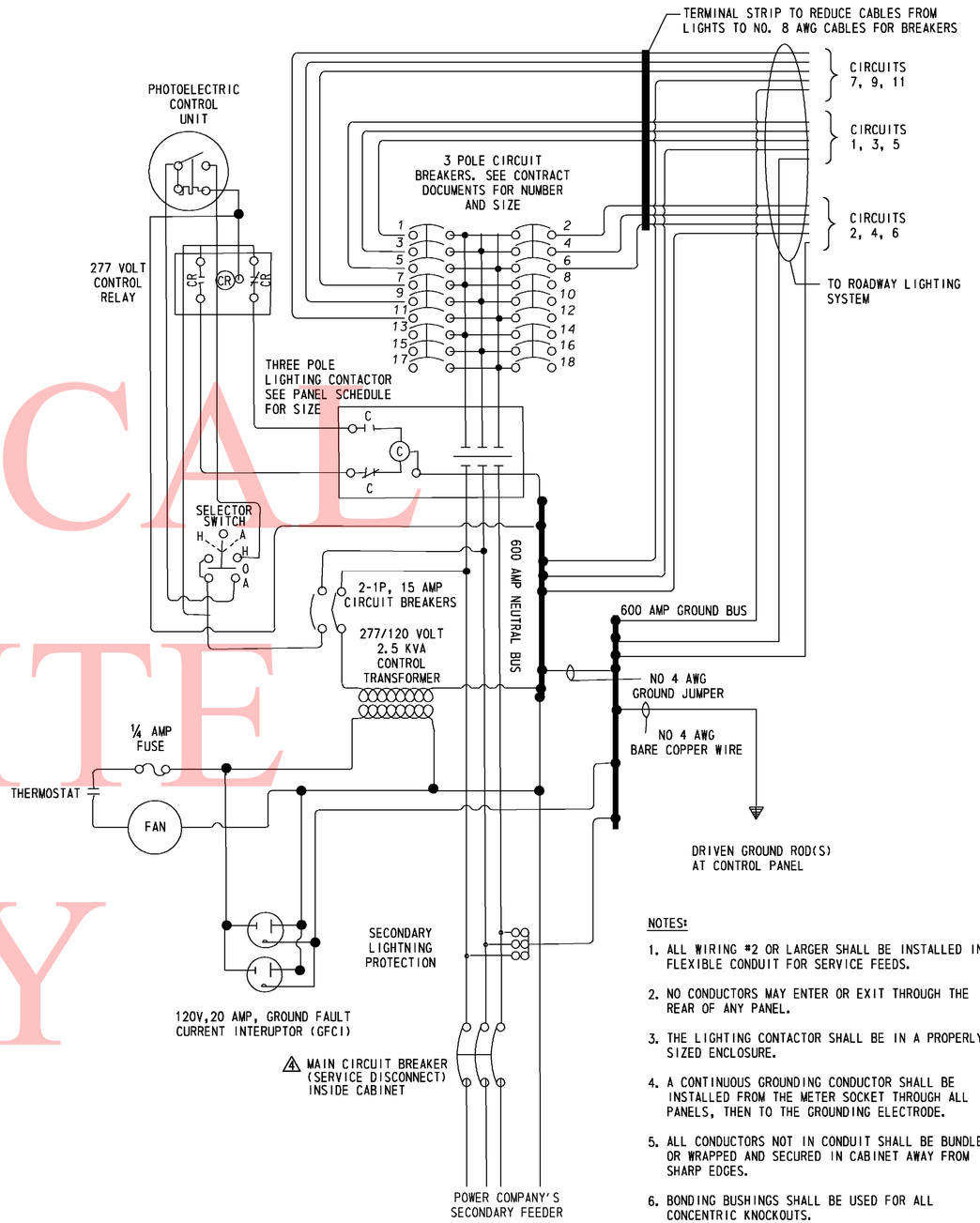

LIGHTING CONTROL CENTER WIRING DIAGRAM

NOT TO SCALE

NOTES:

1. ALL WIRING #2 OR LARGER SHALL BE INSTALLED IN FLEXIBLE CONDUIT FOR SERVICE FEEDS.
2. NO CONDUCTORS MAY ENTER OR EXIT THROUGH THE REAR OF ANY PANEL.
3. THE LIGHTING CONTACTOR SHALL BE IN A PROPERLY SIZED ENCLOSURE.
4. A CONTINUOUS GROUNDING CONDUCTOR SHALL BE INSTALLED FROM THE METER SOCKET THROUGH ALL PANELS, THEN TO THE GROUNDING ELECTRODE.
5. ALL CONDUCTORS NOT IN CONDUIT SHALL BE BUNDLED OR WRAPPED AND SECURED IN CABINET AWAY FROM SHARP EDGES.
6. BONDING BUSHINGS SHALL BE USED FOR ALL CONCENTRIC KNOCKOUTS.
7. ALL CABLES SHALL MEET AMPACITY REQUIREMENTS OF THE NATIONAL ELECTRIC CODE. THE MINIMUM CABLE SIZE WITHIN THE CONTROL CENTER SHALL BE NO. 12 AWG.
8. REFER TO PANEL SCHEDULE FOR NUMBER AND SIZE OF CIRCUIT BREAKERS.

UNOFFICIAL WEBSITE COPY

3/30/2011 12:26:37 PM
M:\PROJECTS\2003\03059_DELTRNPK\SRIMALL\CADD\2809003\PLANS\CP78_LI_SR1.DGN

DELAWARE DEPARTMENT OF TRANSPORTATION	ADDENDUMS / REVISIONS		NOT TO SCALE	SR1 / I-95 INTERCHANGE	CONTRACT 28-090-03	BRIDGE NO.	LIGHTING DETAILS	LI-21
	ADDENDUM NO. 4 , REVISE ELECTRICAL SERVICE DETAIL AND WIRING DIAGRAM, 4/1/11, HEH				COUNTY NEW CASTLE	DESIGNED BY: SMK		SHEET NO. 701
						CHECKED BY: HEH		TOTAL SHTS. 803

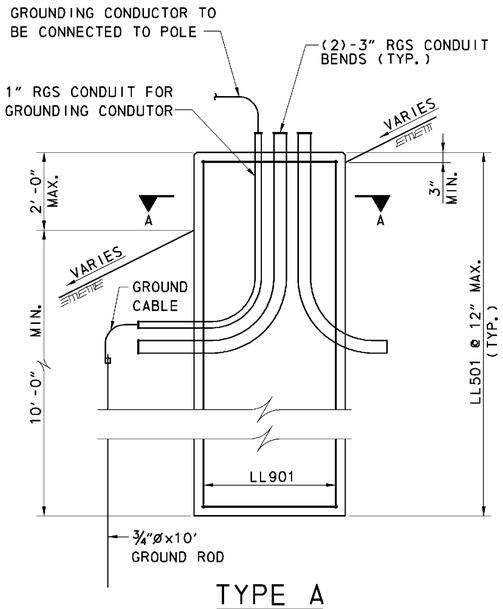

TYPE A

SCALE: NTS

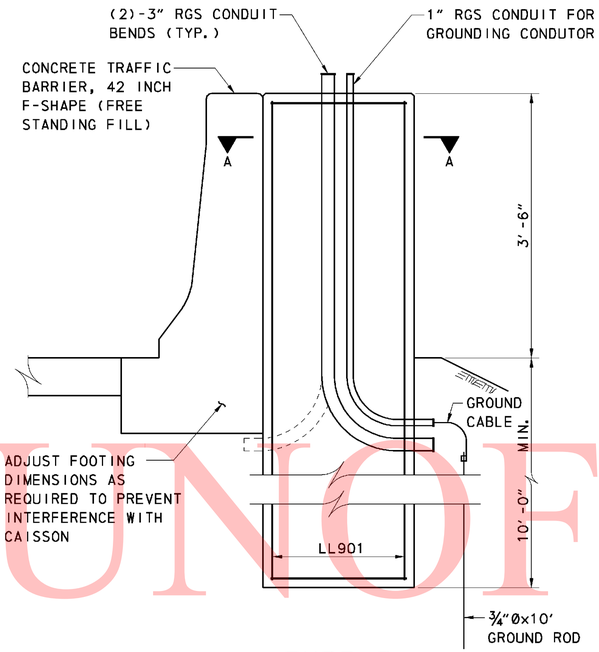

TYPE B

SCALE: NTS

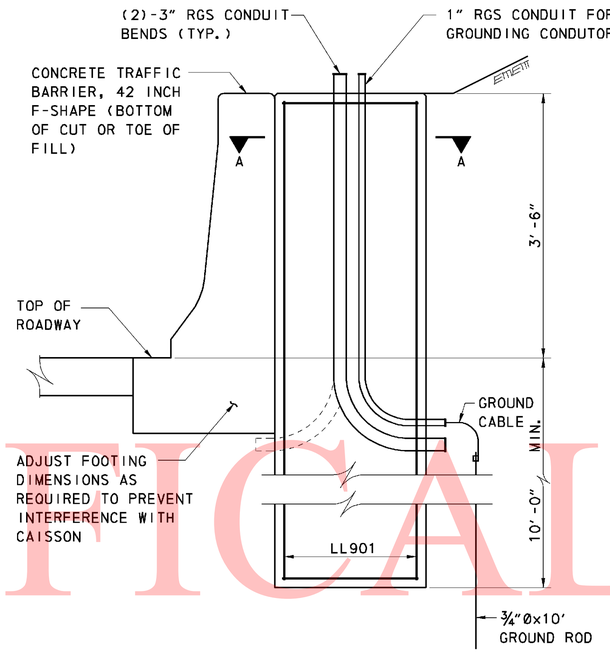

TYPE C

SCALE: NTS

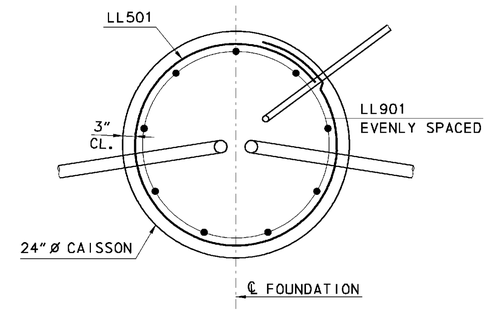

SECTION A-A
LOW LEVEL LIGHTING FOUNDATION

SCALE: 1½"=1'-0"

GENERAL NOTES

SPECIFICATIONS: DELDOT STANDARD SPECIFICATIONS, AUGUST 2001 AND ALL CURRENT INTERIMS.

STANDARD SPECIFICATIONS FOR STRUCTURAL SUPPORTS FOR HIGHWAY SIGNS, LUMINAIRES AND TRAFFIC SIGNALS, 4TH EDITION, 2001, AND ALL CURRENT INTERIMS.

PORTLAND CEMENT CONCRETE: CONCRETE SHALL CONFORM TO SECTION 812, CLASS B.

REINFORCEMENT: REINFORCEMENT SHALL CONFORM TO SECTION 603, GRADE 60.

ANCHOR BOLTS: ANCHOR BOLTS SHALL BE HOT-DIPPED GALVANIZED AND MEET THE REQUIREMENTS OF AASHTO M 314. ANCHOR BOLTS SHALL HAVE A MINIMUM YIELD STRENGTH OF 55,000 PSI.

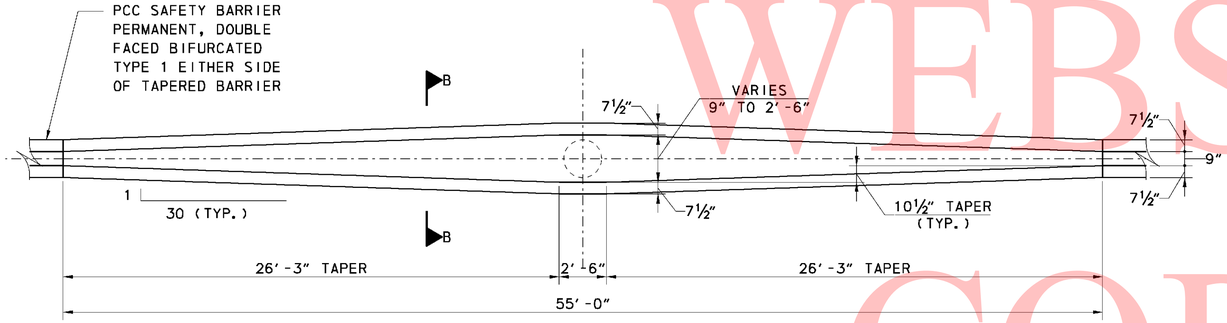

PLAN

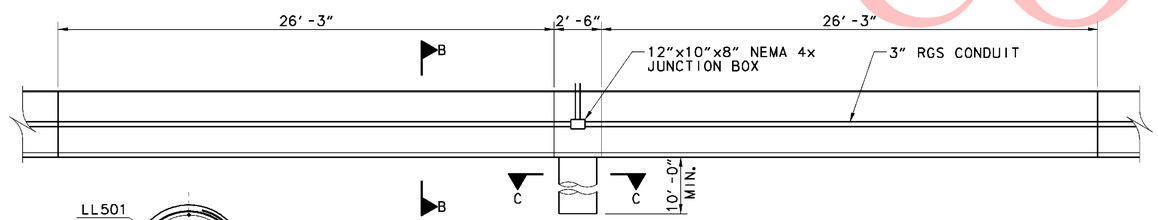

ELEVATION

TYPE D

SCALE: NTS

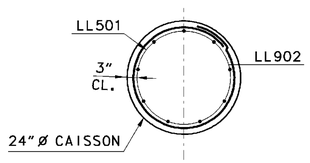

SECTION C-C

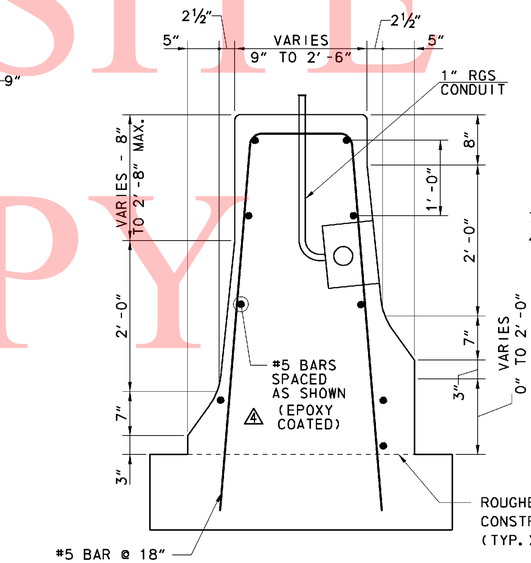

SECTION B-B

SCALE: NTS

4 6'-10⅝"

2'-2"

REINFORCING BAR CHART

	QTY	SIZE	LENGTH	MARK	TYPE	B	C	D
786	~~914~~	5	~~6'-2⅛"~~	LL501	T3	~~1'-6"~~	4'-8⅝"	1'-6"
477	~~522~~	9	~~13'-6"~~	LL901	STR			
	36	9	11'-6"	LL902	STR			

13'-1"

NOTES:

1. COORDINATE ANCHOR BOLT PLACEMENT AND EMBEDMENT LENGTH WITH LOW LEVEL POLE MANUFACTURER.
2. PAYMENT FOR LOW LIGHTING FOUNDATIONS SHALL BE PAID FOR UNDER ITEM 602774 - PCC MASONRY FOR LIGHT POLE FOUNDATION.
4. 4. FOR LOW LEVEL LIGHTING FOUNDATION SCHEDULE, SEE SHEET LI-24.

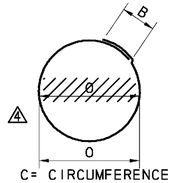

TYPE T3

SCALE: 1½"=1'-0"

UNOFFICAL WEBSITE COPY

3/1/2011 12:03:37 PM
M:\PROJECTS\2003\03059_DELTRNPK\SRMALL\CADD\2809003\PLANS\CP78B_LI_SR1.DGN

DELAWARE DEPARTMENT OF TRANSPORTATION

ADDENDUMS / REVISIONS	
ADDENDUM NO. 4, REVISE REINFORCING AND NOTES, 4/1/11, JSW	

SR1 / I-95 INTERCHANGE

CONTRACT	28-090-03	BRIDGE NO.	1-223
COUNTY	NEW CASTLE	DESIGNED BY:	JMS
		CHECKED BY:	JSW

LIGHTING DETAILS LIGHT POLE FOUNDATIONS

	LI-23
SHEET NO.	703
TOTAL SHTS.	803

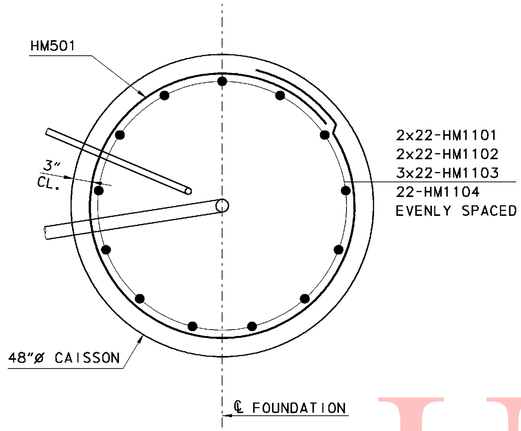

PLAN
HIGH MAST LIGHTING FOUNDATION
SCALE: 1"= 1'-0"

HIGH MAST LIGHTING FOUNDATION LENGTHS	
NO.	A
HM-1	25'-0"
HM-2	15'-0"
HM-3	20'-0"
HM-4	15'-0"
HM-5	20'-0"
HM-6	20'-0"
HM-7	35'-0"
HM2-1	25'-0"

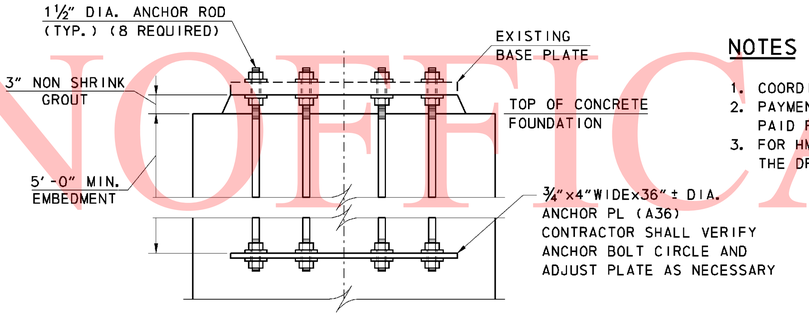

ANCHOR BOLT DETAIL FOR HM2-1
NO SCALE ⚠4

GENERAL NOTES

SPECIFICATIONS: DELDOT STANDARD SPECIFICATIONS, AUGUST 2001 AND ALL CURRENT INTERIMS.

STANDARD SPECIFICATIONS FOR STRUCTURAL SUPPORTS FOR HIGHWAY SIGNS, LUMINAIRES AND TRAFFIC SIGNALS, 4TH EDITION, 2001, AND ALL CURRENT INTERIMS.

PORTLAND CEMENT CONCRETE : CONCRETE SHALL CONFORM TO SECTION 812, CLASS B.

REINFORCEMENT: REINFORCEMENT SHALL CONFORM TO SECTION 603, GRADE 60.

ANCHOR BOLTS: ANCHOR BOLTS SHALL BE HOT-DIPPED GALVANIZED AND MEET THE REQUIREMENTS OF AASHTO M 314. ANCHOR BOLTS SHALL HAVE A MINIMUM YIELD STRENGTH OF 55,000 PSI.

NOTES

⚠3 602774 - MASONRY FOR LIGHT POLE FOUNDATION.

1. COORDINATE ANCHOR BOLT PLACEMENT AND EMBEDMENT LENGTH WITH HIGH MAST POLE MANUFACTURER, ⚠4 EXCEPT HM2-1.
2. PAYMENT FOR HIGH MAST LIGHTING FOUNDATIONS INCLUDING CONCRETE PADS, SHALL BE PAID FOR UNDER ITEM #~~716561, HIGH MAST LIGHTING POLE AND FOUNDATION.~~
3. FOR HM-3, TEMPORARY CASING SHALL BE USED FOR THE ENTIRE LENGTH OF THE DRILLED SHAFT DURING CONSTRUCTION IN ACCORDANCE WITH THE SPECIFICATIONS.

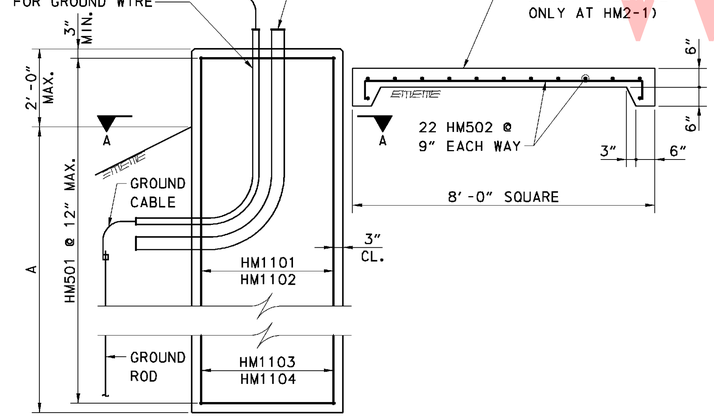

ELEVATION
HIGH MAST LIGHTING FOUNDATION
SCALE: NTS

REINFORCING BAR CHART								
QTY.	SIZE	LENGTH	MARK	TYPE	B	C	O	⚠4
183	5	13'-0"	HM501	T3	2'-2"	10'-10"	~~3"-8¾"~~	3'-6"
44	11	24'-6"	HM1101	STR				
44	11	14'-6"	HM1102	STR				
66	11	19'-6"	HM1103	STR				
22	11	34'-6"	HM1104	STR				
22	5	8'-6"	HM502	T2	7'-6"	6"	6"	

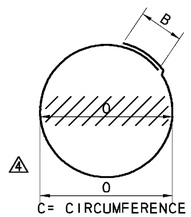

TYPE T3

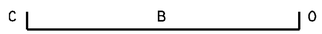

TYPE T2

LOW LEVEL LIGHTING FOUNDATION SCHEDULE		
PLAN SHEET	POLE NO.	FOUNDATION TYPE
LI-02	LST-A-10	Type A
LI-02	LST-B-9	Type A
LI-02	LST-A-9	Type A
LI-03	LST-A-7	Type A
LI-04	LST-10	Type C
LI-04	LST-11	Type A
LI-04	LST-12	Type A
LI-05	LST-13	Type A
LI-05	LST-14	Type A
LI-05	LST-15	Type A
LI-05	LST-16	Type A
LI-07	LST-8	Type C
LI-07	LST-9	Type C
LI-08	LST-17	Type C
LI-08	LST-18	Type C
LI-09	LST-19	Type A
LI-09	LST-20	Type A
LI-09	LST-21	Type A
LI-09	LST-22	Type B
LI-09	LST-23	Type B
LI-09	LST-24	Type B
LI-09	LST-25	Type A
LI-10	LST-26	Type A
LI-10	LST-27	Type A
LI-10	LST-28	Type A
LI-10	LST-29	Type A
LI-11	LST-30	Type B
LI-11	LST-A-25	Type A
LI-11	LST-A-26	Type A
LI-11	LST-A-27	Type A
LI-11	LST-A-28	Type A
LI-11	LST-A-29	Type A

LOW LEVEL LIGHTING FOUNDATION SCHEDULE		
PLAN SHEET	POLE NO.	FOUNDATION TYPE
LI-13	LST-32	Type A
LI-13	LST-33	Type A
LI-13	LST-34	Type B
LI-14	LST-35	Type B
LI-14	LST-36	Type C
LI-14	LST-37	Type C
LI-14	LST-38	Type C
LI-14	LST-39	Type B
LI-14	LST-40	Type B
LI-14	LST-41	Type C
LI-14	LST-42	Type C
LI-14	LST-43	Type C
LI-14	LST-44	Type D
LI-15	LST-45	Type D
LI-15	LST-46	Type D
LI-15	LST-47	Type D
LI-15	LST-48	Type B
LI-15	LST-49	Type B
LI-15	LST-50	Type C
LI-15	LST-51	Type C
LI-15	LST-52	Type C
LI-16	LST-53	Type C
LI-16	LST-54	Type C
LI-16	LST-55	Type C
LI-16	LST-56	Type C

0 1 4
.5 2
SCALE: 1" = 1'-0"

UNOFFICAL WEBSITE COPY

4/20/11 3:05:39 PM
M:\PROJECTS\2003\03059_DELTRNPK\SR1MALL\CADD\2809003\PLANS\CP78C_LI_SR1.DGN

DELAWARE DEPARTMENT OF TRANSPORTATION

ADDENDUMS / REVISIONS	
ADDENDUM NO. ⚠3, UPDATED NOTES, 02/18/11, JSW	
ADDENDUM NO. ⚠4, REVISE REINF., ADD DET. AND LIGHTING SCHEDULE, 4/1/11, JSW	

SR1/I-95 INTERCHANGE

CONTRACT	BRIDGE NO.	
28-090-03	DESIGNED BY:	JMS
COUNTY	CHECKED BY:	JSW
NEW CASTLE		

HIGHMAST LIGHTING FOUNDATIONS

LI-24
SHEET NO. 704
TOTAL SHTS. 803

UTILITY TEST HOLE SCHEDULE

NO.	UTILITY	STATION	OFFSET	GRND EL.	COVER	O.D. & MATERIAL
TH-5	WATER (A)	1337+36.07	51.08' RT	53.61	5.40	12.75" D.I.
TH-6	WATER (A)	1338+02.35	11.90' LT	54.37	4.67	12.75" D.I.
TH-7	TELE (VER)	1337+26.26	41.13' RT	54.56	4.37	(6)4" PLAS. COND.
TH-8	TELE (VER)	1337+95.09	22.20' LT	54.11	3.10	24"x14" RPC DUCT

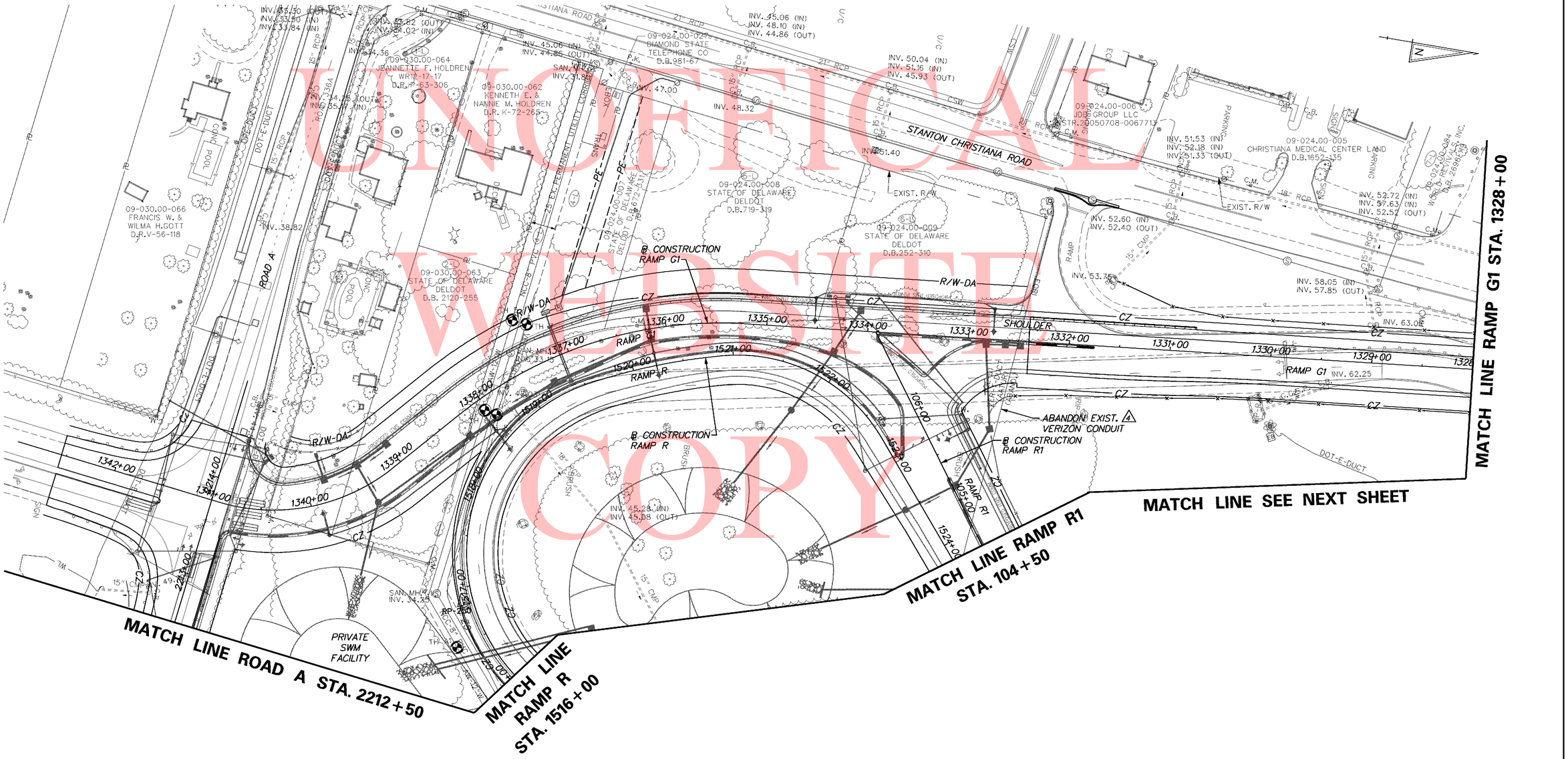

UNOFFICIAL WEBSITE COPY

3/28/2011 5:18:48 PM
M:\PROJECTS\2003\03059_DELTRNPK\SRIMALL\CADD\2809003\PLANS\UT02_SR1.DGN

DELAWARE DEPARTMENT OF TRANSPORTATION	ADDENDUMS / REVISIONS	SCALE	SR1 / I-95 INTERCHANGE	CONTRACT 28-090-03	BRIDGE NO.	UTILITY RELOCATION PLAN	SHEET NO. 706
	ADDENDUM NO. 4 ABANDON VERIZON CONDUIT, 04/01/2011, RLS	0 50 100 150 FEET		COUNTY NEW CASTLE	DESIGNED BY:		TOTAL SHTS. 803
					CHECKED BY:		

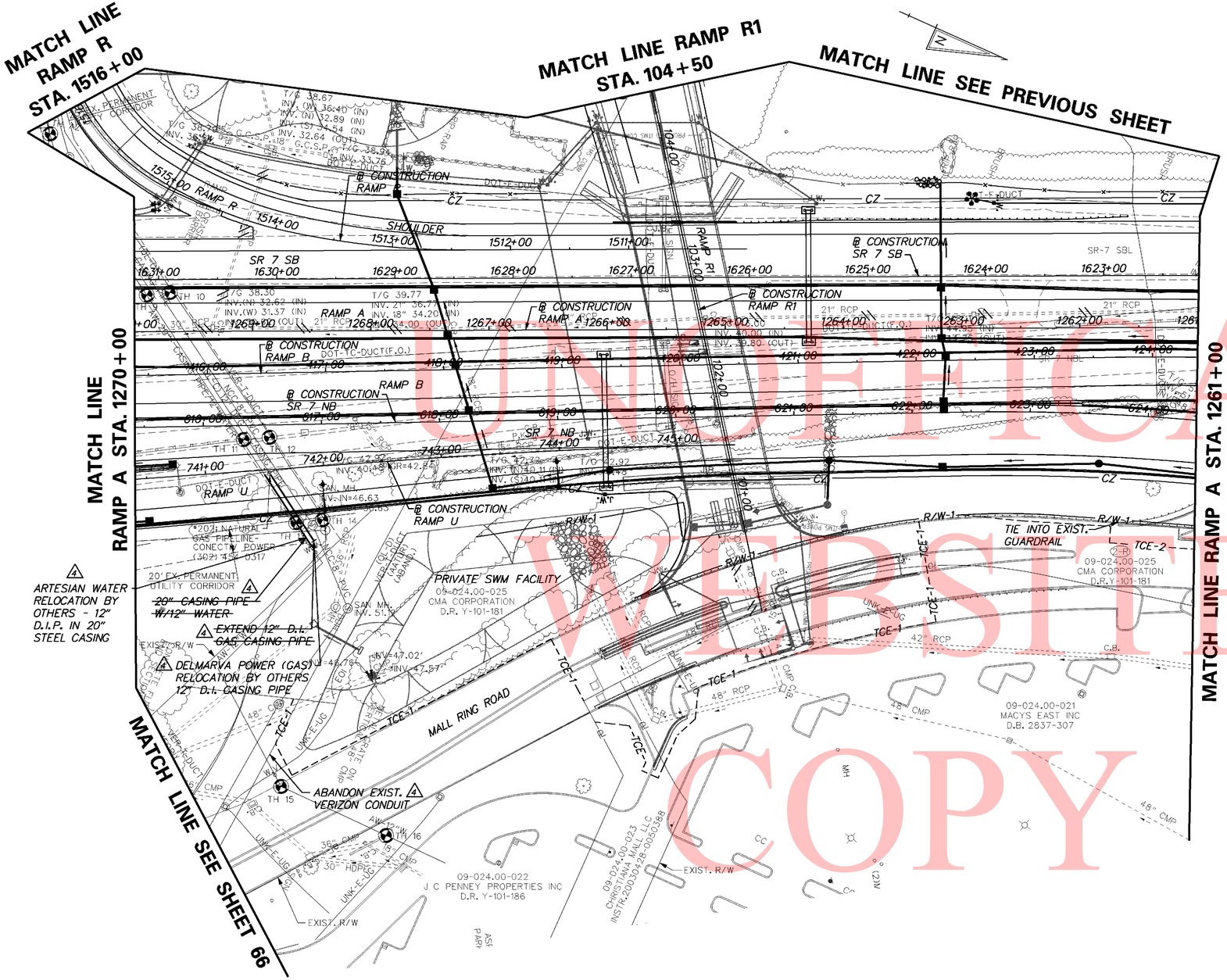

UNOFFICIAL WEBSITE COPY

UTILITY TEST HOLE SCHEDULE

NO.	UTILITY	STATION	OFFSET	GRND EL.	COVER	O.D. & MATERIAL
TH-9	WATER (A)	1269+89.56	30.88' RT	43.41	7.61	21" STL CASING
	GAS			43.41	6.04	13" METALLIC
TH-10	TELE (VER)	1269+69.90	32.99' RT	43.55	6.60	24"x16" RPC DUCT
TH-11	WATER (A)	616+34.14	11.78' RT	44.67	7.59	21" STL CASING
TH-12	TELE (VER)	616+55.93	10.37' RT	44.48	6.80	24"x14" RPC DUCT
TH-13	WATER (A)	741+73.57	46.32' RT	60.23	5.02	12.75" D.I.
TH-14	TELE (VER)	741+96.16	45.45' RT	59.79	5.96	(6)4" PLAS. COND.
TH-15	WATER (A)	741+45.03	268.11' RT	61.03	4.21	12.75" D.I.
TH-16	WATER (A)	742+30.77	315.86' RT	61.50	4.57	12.75" D.I.

DELAWARE
DEPARTMENT OF TRANSPORTATION

ADDENDUMS / REVISIONS	
ADDENDUM NO. 4 ADDED ARTESIAN AND DELMARVA RELOCATION BY OTHERS, ABANDON VERIZON CONDUIT, 04/01/2011, RLS	

SCALE
0 50 100 150
FEET

SR1 / I-95 INTERCHANGE

CONTRACT	BRIDGE NO.	
28-090-03	DESIGNED BY:	
COUNTY	CHECKED BY:	
NEW CASTLE		

UTILITY RELOCATION PLAN

SHEET NO.
707
TOTAL SHTS.
803

3/28/2011 5:43:10 PM
M:\PROJECTS\2003\03059_DELTRNPK\SRIMALL\CADD\2809003\PLANS\UT03_SR1.DGN

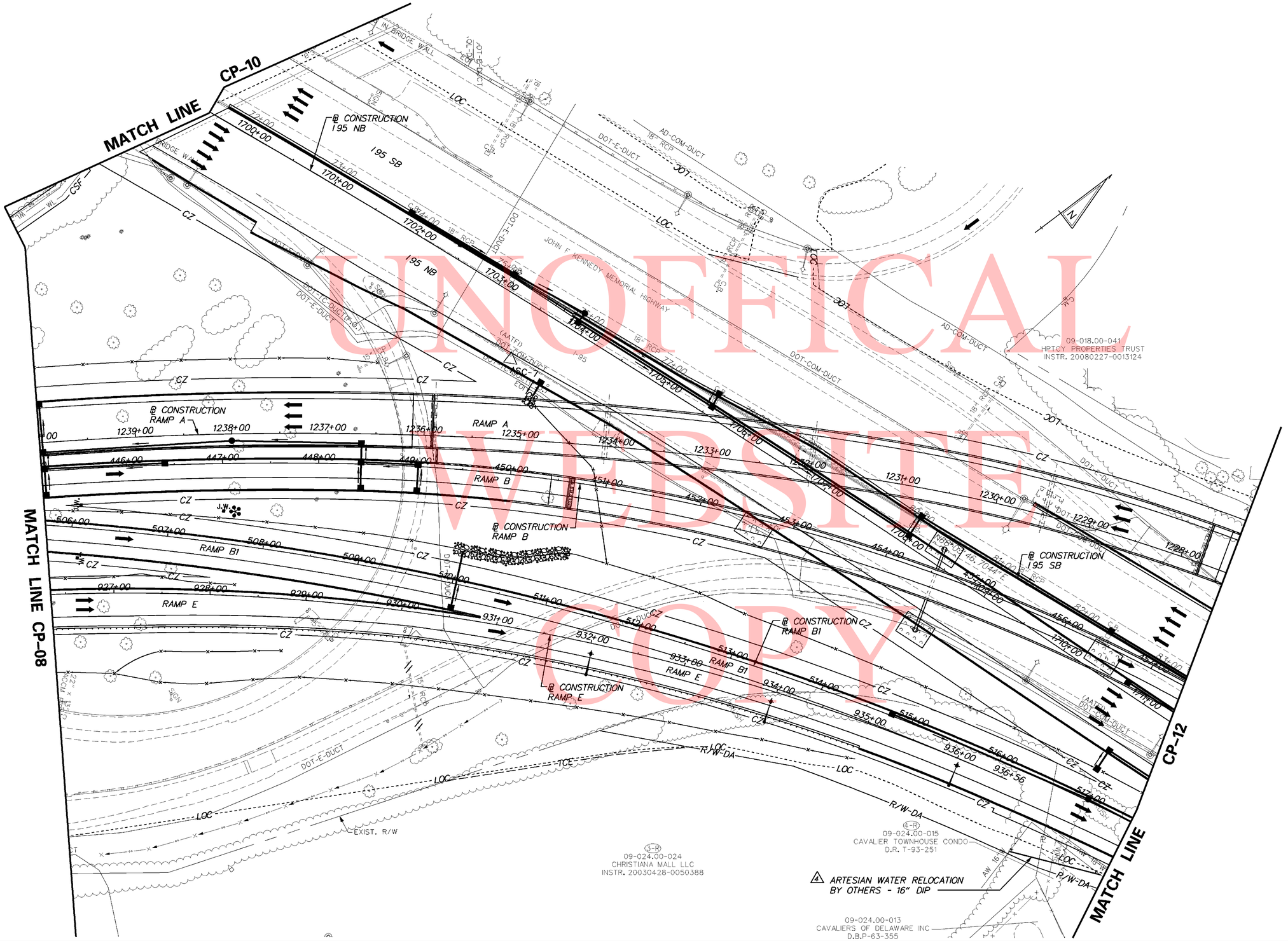

UNOFFICAL
WEBSITE
COPY

3/29/2011 3:21:33 PM
M:\projects\2003\03059_deltrnok\SRiMall\Cadd\2809003\Plansut05a_sr1.dgn

DELAWARE
DEPARTMENT OF TRANSPORTATION

ADDENDUMS / REVISIONS	
ADDENDUM NO. 4 NEW SHEET, 16" DIP	
ARTESIAN WATER RELOCATION BY OTHERS	
04/01/2011, RLS	

SCALE
0 50 100 150
FEET

SR1 / I-95 INTERCHANGE

CONTRACT	BRIDGE NO.
28-090-03	DESIGNED BY:
COUNTY	CHECKED BY:
NEW CASTLE	

UTILITY RELOCATION PLAN

UT-05A
SHEET NO. 709A
TOTAL SHTS. 803

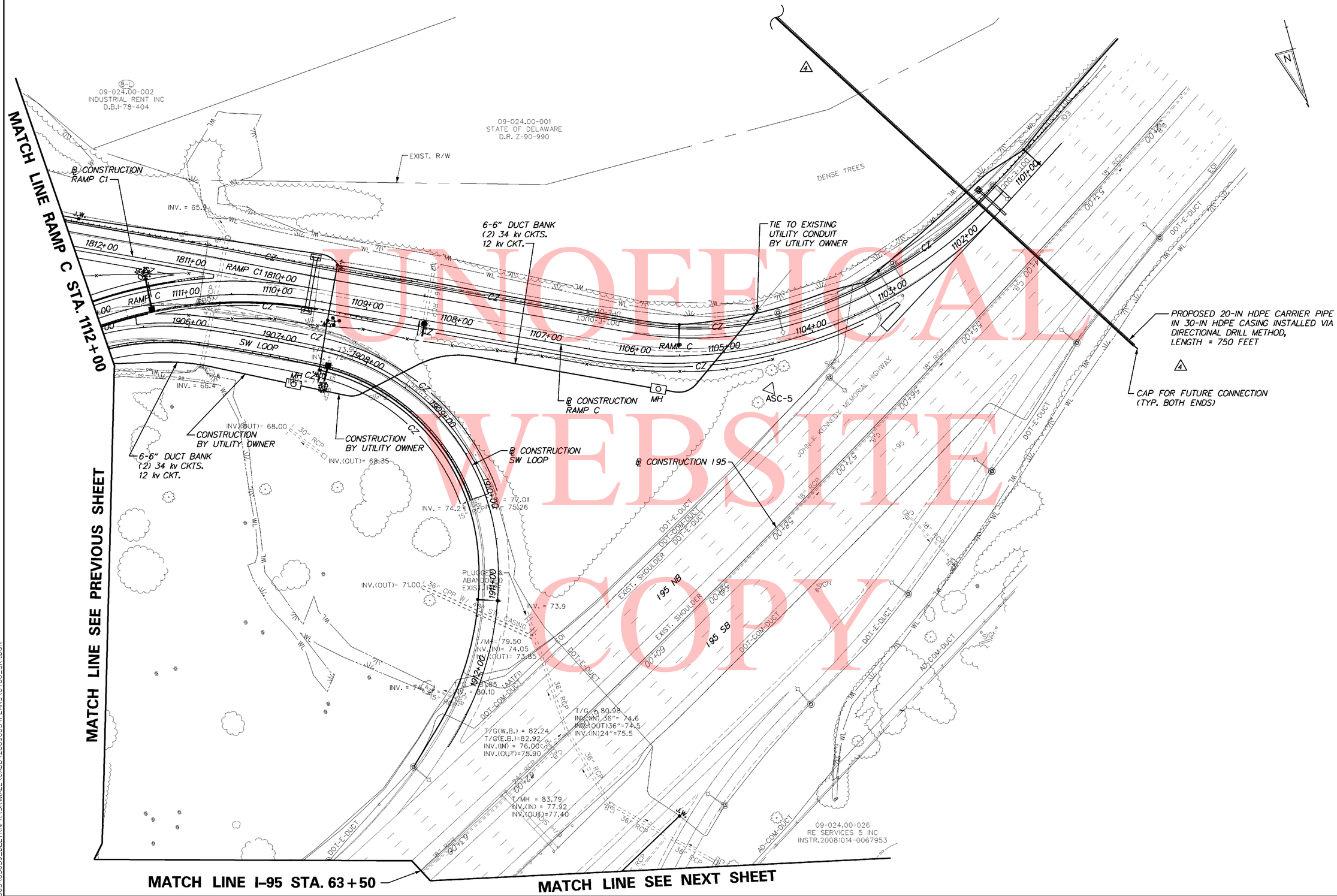

UNOFFICIAL WEBSITE COPY

3/28/2011 5:45:12 PM
M:\PROJECTS\2003\03059_DELTRNPK\SRTMALL\CADD\2809003\PLANS\UT06_SR1.DGN

DELAWARE DEPARTMENT OF TRANSPORTATION	ADDENDUMS / REVISIONS ADDENDUM NO. 4 ADDED NEW ARTESIAN UTILITY BY OTHERS, 04/01/2011, RLS	SCALE 0 50 100 150 FEET	**SR1 / I-95 INTERCHANGE**	CONTRACT 28-090-03 COUNTY NEW CASTLE	BRIDGE NO. DESIGNED BY: CHECKED BY:	**UTILITY RELOCATION PLAN**	SHEET NO. 710 TOTAL SHTS. 803