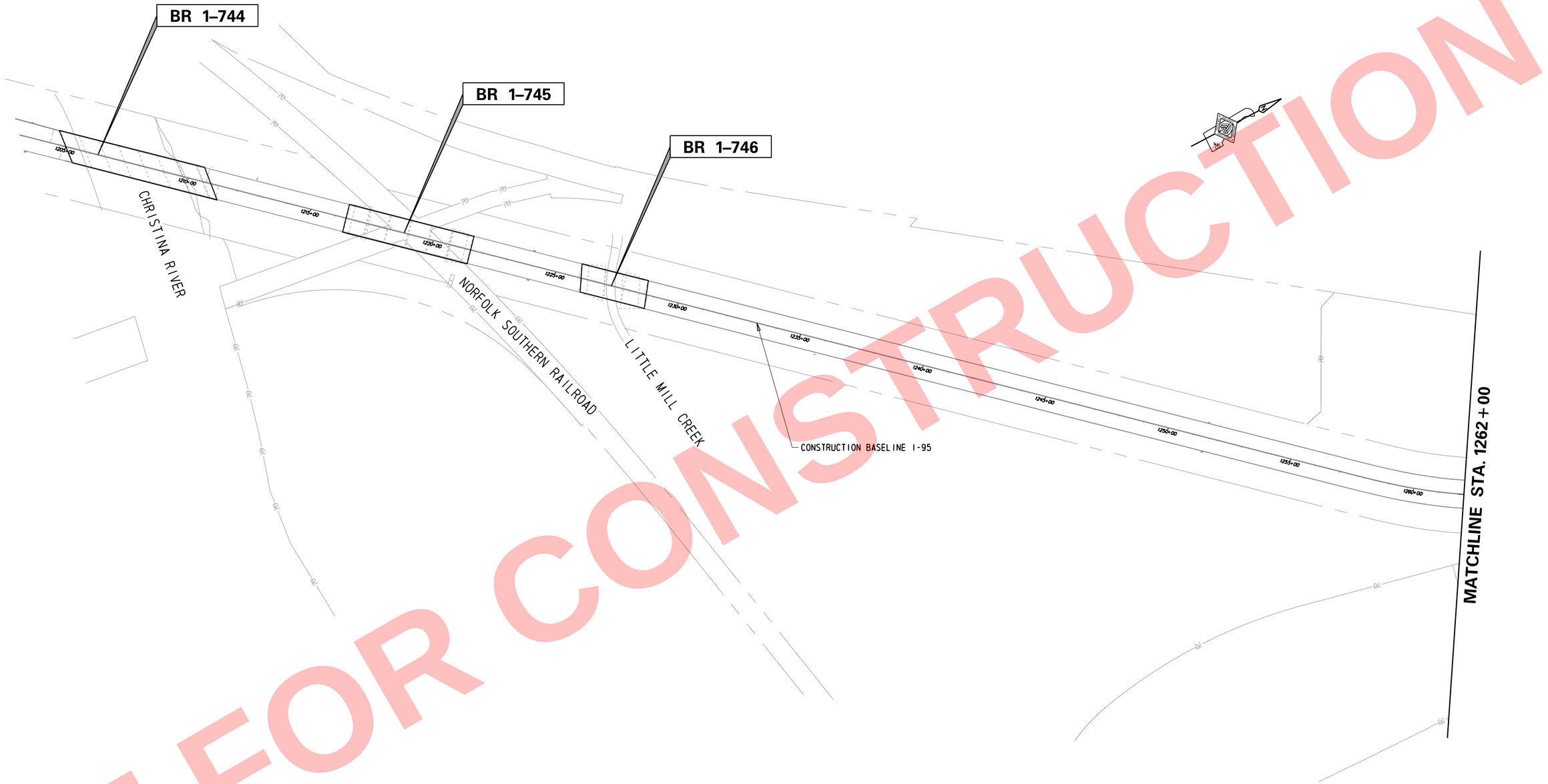

NOT FOR CONSTRUCTION

STRUCTURE LOCATION PLAN - CONTRACT T201407404

N:\31987-004\Contract I-95\CADD\Bridge\BR_IS04.dgn
5/31/2019 12:11:26 PM

ADDENDA / REVISIONS	

SCALE
0 200 400 600
FEET

REHABILITATION OF I-95 FROM I-495 TO NORTH OF BRANDYWINE RIVER BRIDGE

CONTRACT	BRIDGE NO.
T201407404	
COUNTY	DESIGNED BY: DAN
NEW CASTLE	CHECKED BY: WAG

STRUCTURE LOCATION PLAN 1 OF 3

IS-04
SECTION
WRA
SHEET NO.
2-001

NOT FOR CONSTRUCTION

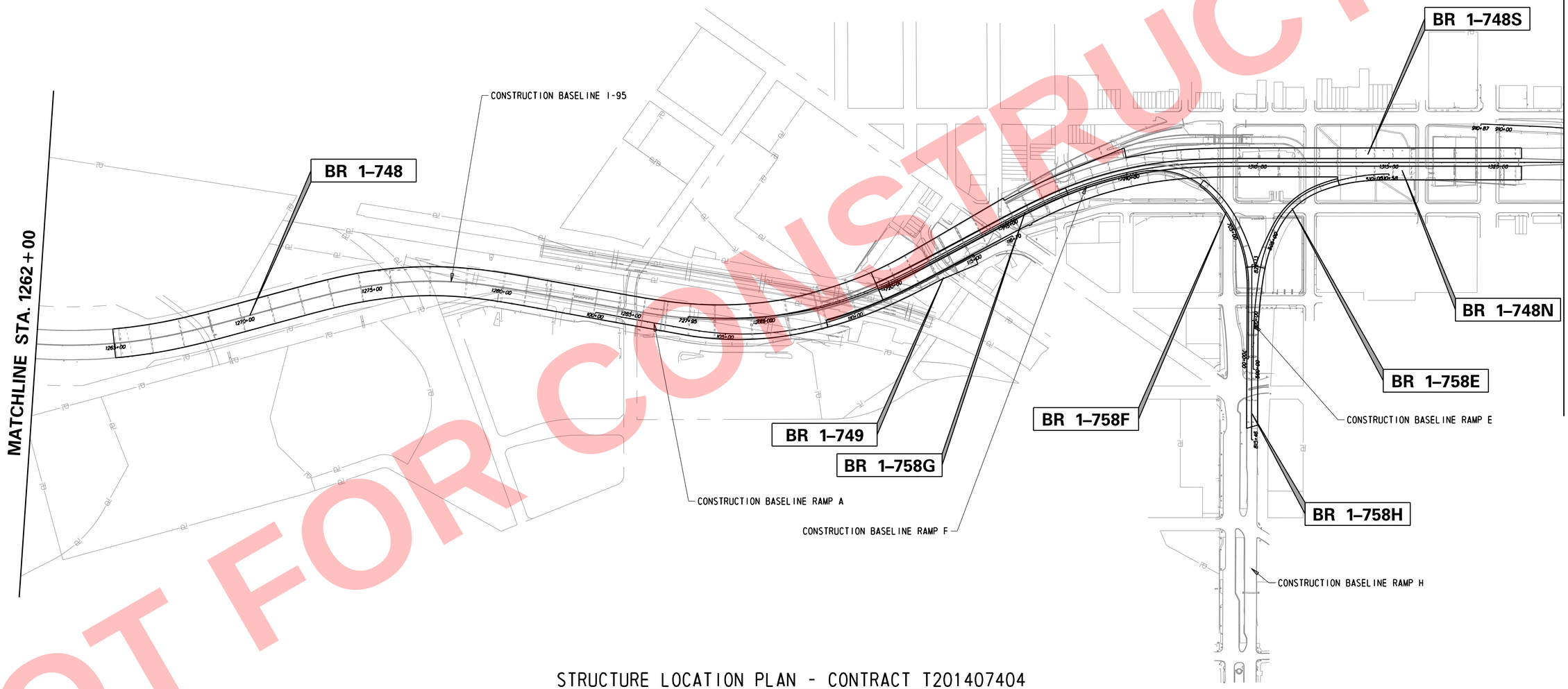

STRUCTURE LOCATION PLAN - CONTRACT T201407404

N:\31987-004\Control I-95\CADD\Bridge\BR_IS05.dgn
5/31/2019 12:11:27 PM

ADDENDA / REVISIONS	

SCALE
0 200 400 600
FEET

REHABILITATION OF I-95 FROM I-495 TO NORTH OF BRANDYWINE RIVER BRIDGE

CONTRACT	BRIDGE NO.
T201407404	
COUNTY	DESIGNED BY: DAN
NEW CASTLE	CHECKED BY: WAG

STRUCTURE LOCATION PLAN 2 OF 3

IS-05
SECTION
WRA
SHEET NO.
2-002

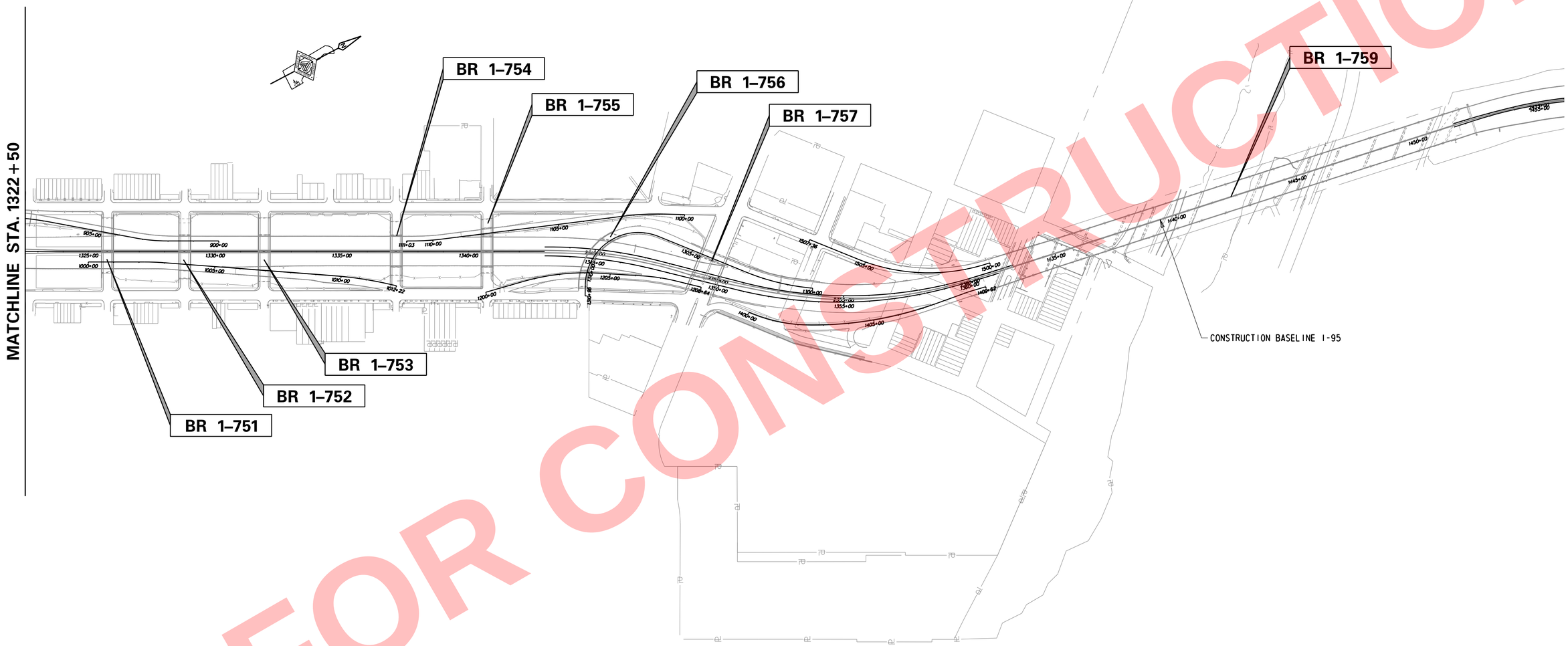

NOT FOR CONSTRUCTION

STRUCTURE LOCATION PLAN - CONTRACT T201407404

N:\31987-00A\Contract I-95\C4D\Bridge\BR_IS06.dgn
5/31/2019 12:15:18 PM

ADDENDA / REVISIONS		SCALE 0 200 400 600 FEET	REHABILITATION OF I-95 FROM I-495 TO NORTH OF BRANDYWINE RIVER BRIDGE	CONTRACT T201407404	BRIDGE NO.	STRUCTURE LOCATION PLAN 3 OF 3	IS-06
				COUNTY NEW CASTLE	DESIGNED BY: DAN		SECTION WRA
					CHECKED BY: WAG		SHEET NO. 2-003

SECTION 200

1. REMOVAL OF STRUCTURES AND OBSTRUCTIONS:
   ITEMS TO BE REMOVED UNDER ITEM 211000 - REMOVAL OF STRUCTURES AND OBSTRUCTIONS ASSOCIATED WITH BRIDGE 1-744 SHALL INCLUDE, BUT NOT BE LIMITED TO, THE FOLLOWING:
   - APPROACH SLABS
   - PORTION OF BACKWALLS, WINGWALLS AND APPROACH BARRIER WALL
   - ABUTMENT DECK JOINTS
   - PARAPETS AT ABUTMENTS

SECTION 600

2. PORTLAND CEMENT CONCRETE:
   USE PORTLAND CEMENT CONCRETE FOR CAST-IN-PLACE ELEMENTS AS FOLLOWS:
   (f'c = 28-DAY COMPRESSIVE STRENGTH)
   CLASS A - PARAPETS, ABUTMENTS (f'c = 4.5 ksi)
   CLASS D - DECK, APPROACH SLABS, SLEEPER SLABS (f'c = 4.5 ksi)
   A HIGHER CLASS CONCRETE MAY BE SUBSTITUTED FOR A LOWER CLASS CONCRETE AT NO ADDITIONAL COST TO THE DEPARTMENT WITH APPROVAL OF THE ENGINEER.
   - CHAMFER ALL EXPOSED EDGES ¾" X ¾" UNLESS OTHERWISE NOTED.
   - CONTRACTOR WILL SUPPLY CONCRETE FOR THE PARAPETS, BRIDGE DECK, AND APPROACH SLABS THAT INCLUDES A SHRINKAGE-REDUCING/COMPENSATING ADMIXTURE. PAYMENT FOR ADMIXTURE WILL BE INCIDENTAL TO ITS RESPECTIVE CONCRETE ITEM (ITEMS 610008, 610017, AND 610018). THE ADMIXTURE MAY BE SUPPLIED BY ONE PRODUCT THAT PROVIDES BOTH EXPANSION AND PORE WATER SURFACE TENSION OR TWO SEPARATE PRODUCTS EACH ADDED AT DOSAGE RECOMMENDED BY MANUFACTURER'S TECHNICAL DATA SHEETS AND HAVING THE FOLLOWING CHARACTERISTICS:
   (A) DESIGNED TO PROVIDE BOTH THE FOLLOWING CHARACTERISTICS:
      I. EXPANDS AT A RATE THAT CLOSELY COMPENSATES FOR SHRINKAGE OF THE CONCRETE MIX.
      II. REDUCES THE CAPILLARY SURFACE TENSION OF THE CONCRETE PORE WATER.
   (B) PROVIDES AT LEAST 80% SHRINKAGE REDUCTION AS MEASURED AND DOCUMENTED BY FIELD PERFORMANCE.
   (C) FORMULATED FOR USE IN FREEZING AND THAWING WEATHER.

3. BAR REINFORCEMENT:
   - REINFORCING STEEL SHALL CONFORM TO AASHTO M31 (ASTM A615), GRADE 60.
   - REINFORCING STEEL SHALL HAVE A 3" CLEAR COVER IF CAST AGAINST EARTH OR A 2" CLEAR COVER ELSEWHERE, UNLESS OTHERWISE SPECIFIED ON THE PLANS.
   - ALL REINFORCING STEEL SHALL BE PROTECTED WITH FUSION BONDED EPOXY, EXCEPT AS NOTED ON THE PLANS. EPOXY COATED REINFORCING STEEL SHALL CONFORM TO ASTM A775.
   - ANY FIELD CUTTING OR FIELD BENDING MUST BE APPROVED BY THE ENGINEER. PAYMENT SHALL BE INCIDENTAL TO THE BAR REINFORCEMENT ITEM.
   - GALVANIZED REINFORCING STEEL MAY BE SUBSTITUTED FOR EPOXY-COATED REINFORCING STEEL AT NO ADDITIONAL COST TO THE DEPARTMENT WITH APPROVAL OF THE ENGINEER.
   - WELDING OF REINFORCEMENT DURING FABRICATION OR CONSTRUCTION IS NOT PERMITTED UNLESS SPECIFIED.

4. CONCRETE SEALER:
   REFER TO DIAGRAMS CONTAINING SILICONE ACRYLIC CONCRETE SEALER LIMITS ON DWGS. TS-01, AB-01, AB-02, PR-01 TO PR-12 AND AS-01 TO AS-04. EPOXY CONCRETE SEALER SHALL BE APPLIED TO THE BEAM SEATS AND BEARING PEDESTALS AT EACH PIER. SILICONE ACRYLIC CONCRETE SEALER SHALL BE APPLIED TO THE REMAINING EXPOSED CONCRETE SURFACES AT THE ABUTMENTS, PIERS, AND WINGWALLS.

5. NOTE INTENTIONALLY DELETED.

6. CLEAN AND PAINT EXISTING STRUCTURAL STEEL:
   CLEANING AND PAINTING OF EXISTING STRUCTURAL STEEL SHALL BE IN ACCORDANCE WITH DELAWARE DEPARTMENT OF TRANSPORTATION STANDARD SPECIFICATIONS, SECTION 616.

7. NOTE INTENTIONALLY DELETED.

MISCELLANEOUS

8. DESIGN SPECIFICATIONS:
   (A) DELDOT BRIDGE DESIGN MANUAL, 2017 EDITION.
   (B) AASHTO LRFD BRIDGE SPECIFICATIONS, 2014, 7TH EDITION, CUSTOMARY U.S. UNITS INCLUDING 2015 AND 2016 INTERIMS.
   (C) PROVIDE MATERIALS AND PERFORM WORK IN ACCORDANCE WITH THE 2016 DELDOT STANDARD SPECIFICATIONS AND 2018 SUPPLEMENTAL SPECIFICATIONS.

9. LOADING:
   - DEAD LOADS INCLUDE 25 PSF FOR FUTURE WEARING SURFACE ON DECK SLAB AND 15 PSF FOR STAY-IN-PLACE FORMS (INCLUDES CONCRETE IN FORM CORRUGATIONS). PARAPET LOADS ARE DISTRIBUTED 75% TO THE EXTERIOR AND 25% TO THE FIRST INTERIOR BEAM.
   - DESIGN LIVE LOADS INCLUDE HL-93 LOADING.
   - FATIGUE DESIGN IS BASED ON THE FOLLOWING ONE DIRECTIONAL TRAFFIC VOLUMES: ADTT = 3,910 IN YEAR 2040.
   - LIVE LOAD DISTRIBUTION TO THE GIRDERS IS BASED ON THE AASHTO SIMPLIFIED METHOD.
   - THERMAL LOADS AND MOVEMENTS ARE BASED ON THE MODERATE TEMPERATURE RANGE AS STIPULATED IN THE AASHTO LRFD DESIGN SPECIFICATIONS AS 0° TO 120°F. THE NORMAL TEMPERATURE SHALL BE CONSIDERED TO BE 68° F.
   - LIVE LOAD DEFLECTION SHALL BE LIMITED TO L/800.
   - FOR REINFORCEMENT DISTRIBUTION REQUIREMENTS, CONSIDER CLASS 1 EXPOSURE CRITERIA FOR DECKS.

10. EXISTING CONDITIONS:
    - ALL EXISTING DIMENSIONS AND ELEVATIONS SHOWN ARE BASED ON THE BEST AVAILABLE INFORMATION AND ARE APPROXIMATE ONLY. THE CONTRACTOR SHALL FIELD VERIFY ALL EXISTING DIMENSIONS, GEOMETRY, AND ELEVATIONS AS NECESSARY PRIOR TO ORDERING ANY MATERIALS AND COMMENCING CONSTRUCTION TO ENSURE PROPER FIT OF THE PROPOSED CONSTRUCTION. PAYMENT SHALL BE INCIDENTAL TO ITEM 763501 - CONSTRUCTION ENGINEERING.

11. CONTINGENT QUANTITIES:
    THESE CONTRACT DRAWINGS HAVE BEEN PREPARED BASED ON ORIGINAL CONTRACT PLANS AND FIELD INSPECTION NOTES TAKEN FROM NOVEMBER 16, 2014 THROUGH FEBRUARY 5, 2015. ADDITIONAL REPAIRS HAVE BEEN ADDED BASED ON THE APRIL 2016 BIENNIAL BRIDGE INSPECTION REPORT. ACTUAL CONDITIONS MAY REQUIRE MODIFICATION IN CONSTRUCTION DETAILS AND WORK QUANTITIES. ALL DIMENSIONS AND DETAILS SHOWN ON THE PLANS SHALL BE VERIFIED BY THE CONTRACTOR PRIOR TO ORDERING ANY MATERIALS. SEE DWG. PN-04 FOR PAY ITEM CONTINGENCY PERCENTAGES.

12. UTILITIES:
    SEE UTILITY STATEMENT AND UTILITY RELOCATION PLAN SHEETS FOR FURTHER INFORMATION ON UTILITY COORDINATION.

13. ENVIRONMENTAL COMPLIANCE:
    REFER TO THE ENVIRONMENTAL COMPLIANCE PLAN FOR RESTRICTIONS AND ADDITIONAL GUIDANCE THAT MAY BE ASSOCIATED WITH THIS PROJECT.

14. ABBREVIATIONS:

ABUT. = ABUTMENT	LT = LEFT
BOT. = BOTTOM	MAX. = MAXIMUM
BRG. = BEARING	MIN. = MINIMUM
C/C = CENTER TO CENTER	N.T.S. = NOT TO SCALE
℄ = CENTERLINE	NB = NORTHBOUND
CLR. = CLEAR	NO. = NUMBER
DIA. = DIAMETER	P.C.C. = PORTLAND CEMENT CONCRETE
DWG. = DRAWING	P/R = POINT OF ROTATION
E.F. = EACH FACE	R = RADIUS
EL. = ELEVATION	R.F. = REAR FACE
EQ = ENTIRE QUANTITY	RT = RIGHT
EXP. = EXPANSION	S.W. = SHOP WELD
F.F. = FRONT FACE	SB = SOUTHBOUND
FRP = FIBER REINFORCED PLASTIC	SCH. = SCHEDULE
FIX. = FIXED	SHLD. = SHOULDER
GR. = GRADE	STA. = STATION
L.L.V. = LONG LEG VERTICAL	TYP. = TYPICAL
LMC = LATEX MODIFIED CONCRETE	

15. PRIOR TO SHIFTING TRAFFIC TO STAGE 2A THE CONTRACTOR SHALL CLEAN THE EXISTING BRIDGE SCUPPERS ON I-95 SB. IN ADDITION, AFTER STAGE 3 CONSTRUCTION IS COMPLETE, ALL BRIDGE SCUPPERS SHALL BE CLEANED AS NECESSARY AND CLEAR OF DEBRIS PRIOR TO COMPLETION OF THE CONTRACT. ALL WORK SHALL BE PERFORMED IN ACCORDANCE WITH THESE PLANS AND ITEM 601503 - CLEANING BRIDGE SCUPPERS.

    PRIOR TO BEGINNING WORK, THE CONTRACTOR SHALL SUBMIT FOR APPROVAL THE SOURCE OF THE WATER TO BE USED TO CLEAN THE BRIDGE SCUPPERS. ONLY WATER THAT IS SAFE FOR DOWNSTREAM ENVIRONMENTS SHALL BE USED.

INDEX OF BRIDGE 1-744 SHEETS

BR. SHEET Nº	BR. DWG. Nº	TABLE OF CONTENTS
2-4	PN-01	BRIDGE PROJECT NOTES
2-5	PN-02	CONCRETE REPAIR DETAILS
2-6	PN-03	QUANTITIES AND LOAD RATINGS
2-7	PN-04	SUMMARY OF PROPOSED REPAIR AND RECONSTRUCTION ITEMS
2-8	PE-01	GENERAL PLAN AND ELEVATION
2-9	TS-01	BRIDGE TYPICAL SECTIONS
2-10 TO 2-13	SC-01 TO SC-04	SEQUENCE OF CONSTRUCTION
2-14 TO 2-17	AB-01 TO AB-04	ABUTMENT CONCRETE REPAIR DETAILS
2-18	AB-05	ABUTMENT EROSION REPAIR DETAILS
2-21, 2-22, 2-25, 2-26	PR-03, PR-04, PR-07, PR-08	PIER CONCRETE REPAIR DETAILS
2-31	PR-13	FRP JACKET REPAIR DETAILS
2-32	DM-01	MILLING AND HYDRODEMOLITION DETAILS
2-35	SO-01	SOFFIT REPAIR PLAN
2-36	PA-01	PARAPET DETAILS
2-37 TO 2-40	EX-01 TO EX-04	EXPANSION JOINT DETAILS
2-41 TO 2-42	EX-05 TO EX-06	DECK OVER DETAILS
2-43 TO 2-47	AS-01 TO AS-04	APPROACH SLAB DETAILS
2-48 TO 2-54	AS-05 TO AS-12	SLEEPER SLAB DETAILS
2-55	BR-01	REINFORCEMENT SCHEDULE
TOTAL BRIDGE SHEETS: 42		

NOT FOR CONSTRUCTION

DELAWARE
DEPARTMENT OF TRANSPORTATION

ADDENDUMS / REVISIONS	

NOT TO SCALE

REHABILITATION OF I-95
FROM I-495 TO NORTH OF
BRANDYWINE RIVER BRIDGE

CONTRACT	T201407404	
COUNTY	NEW CASTLE	
BRIDGE NO.	1 744 059	
DESIGNED BY: BSD		
CHECKED BY: JRQ/CWM		

BRIDGE
PROJECT NOTES

1-744 PN-01	
SHEET NO.	2-4
TOTAL SHTS.	2-731

\744PN_01.dgn
5/16/2019 9:38:12 PM

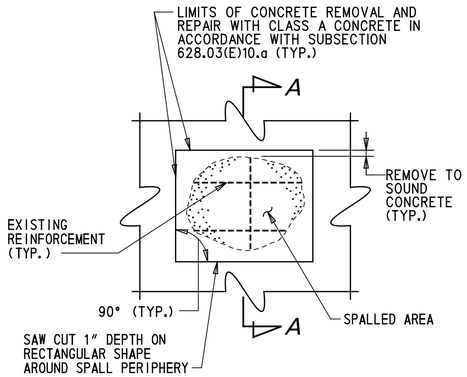

PLAN

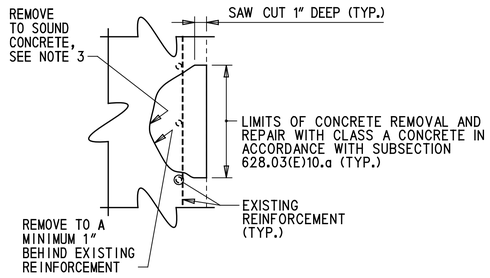

SECTION A-A

DEEP SPALL REPAIR

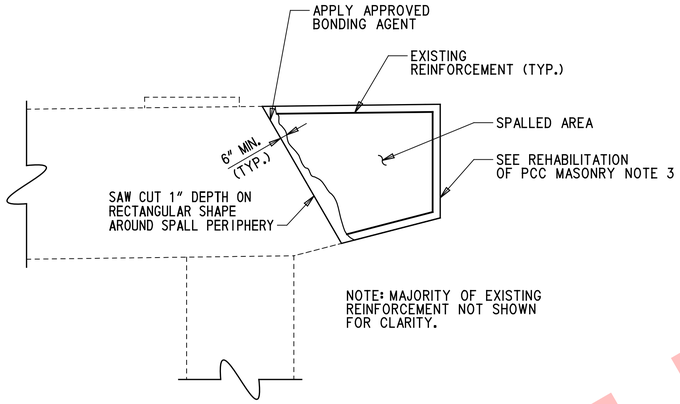

REHABILITATION OF PCC MASONRY

LEGEND:

- LIMITS OF REMOVAL, MECHANICAL MILLING (ITEM 760013)
- LIMITS OF HYDRODEMOLITION (ITEM 760500)
- LIMITS OF REMOVAL (ITEM 628053 OR 628502)
- CLASS D CONCRETE

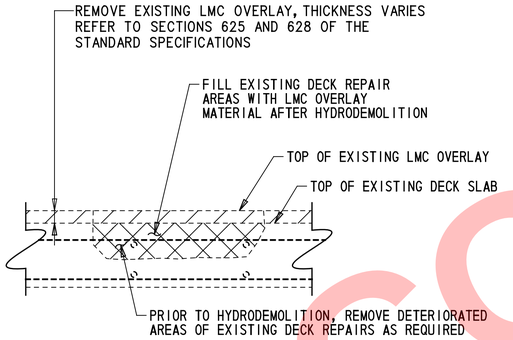

REMOVAL OF EXISTING DECK REPAIRS (ITEM 628502)

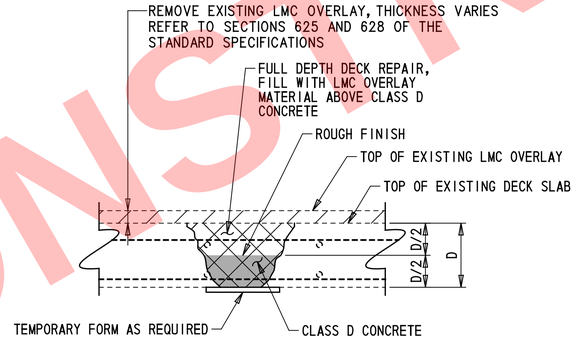

DECK REPAIR, FULL DEPTH (ITEM 628053)

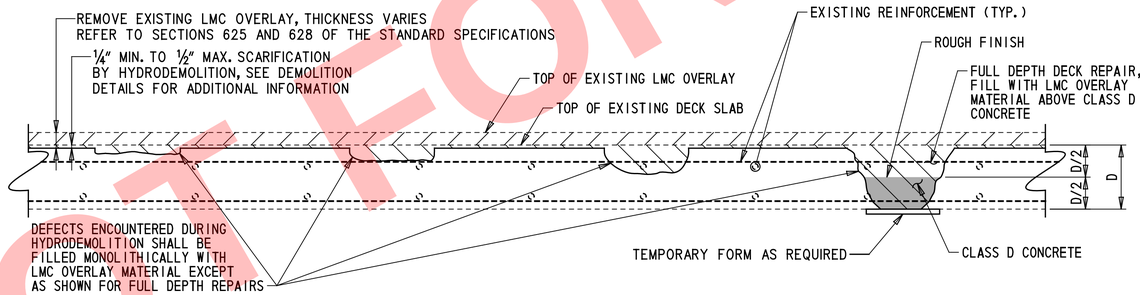

HYDRODEMOLITION AND DECK REPAIR (WITH OVERLAY)

DEEP SPALL REPAIR NOTES

1. DEEP SPALL REPAIRS ARE DEFINED AS PATCHES THAT EXTEND BELOW THE TOP MAT OF REINFORCEMENT. DELAMINATED CONCRETE HAS BEEN ASSUMED AS DEEP SPALL REPAIRS.
2. ALL WORK INVOLVING METHODS OF CONCRETE REMOVAL; CLEANING OF CONCRETE SURFACE AND EXISTING REINFORCEMENT; REPAIRING OR REPLACING DAMAGED REINFORCEMENT AS RESULT OF CONSTRUCTION ACTIVITIES OR SECTION LOSS; PRESENCE OF CONTRACTION OR EXPANSION JOINTS; SURFACE PREPARATION; AND CONCRETE PLACEMENT SHALL BE PERFORMED IN ACCORDANCE WITH SUBSECTION 628.03(E) OF THE STANDARD SPECIFICATIONS. PAYMENT INCIDENTAL TO 628041 - DEEP SPALL REPAIR.
3. IF DEPTH OF REPAIR EXTENDS MORE THAN 6" BEYOND SURFACE OF CONCRETE, CONTRACTOR SHALL STOP WORK AND NOTIFY THE ENGINEER IMMEDIATELY.
4. FOR ANY DEEP SPALL REPAIR TO TAKE PLACE WITHIN THE SPLASH ZONE OR UNDERWATER, THE CONTRACTOR SHALL SUBMIT A WORKING DRAWING IN ACCORDANCE WITH SUBSECTION 628.03(E)(2).

REHABILITATION OF PCC MASONRY NOTES

1. REHABILITATION OF PCC MASONRY IS DEFINED AS DEEP SPALL PATCHES THAT EXCEED THE 0.5 C.Y. THRESHOLD IN A SINGLE AREA.
2. ALL WORK INVOLVING METHODS OF CONCRETE REMOVAL; CLEANING OF CONCRETE SURFACE AND EXISTING REINFORCEMENT; REPAIRING OR REPLACING DAMAGED REINFORCEMENT AS RESULT OF CONSTRUCTION ACTIVITIES OR SECTION LOSS; PRESENCE OF CONTRACTION OR EXPANSION JOINTS; SURFACE PREPARATION; AND CONCRETE PLACEMENT SHALL BE PERFORMED IN ACCORDANCE WITH SUBSECTION 628.03(E) OF THE STANDARD SPECIFICATIONS. PAYMENT INCIDENTAL TO 628042 - REHABILITATION OF PCC MASONRY.
3. DETAIL SHOWN FOR "REHABILITATION OF EXISTING PCC MASONRY" UTILIZES A GENERIC EXAMPLE USING PARTIAL RECONSTRUCTION OF AN EXISTING PIER CAP. SEE ABUTMENT AND PIER REHABILITATION SHEETS FOR SIZE AND LOCATION OF REPAIRS AT EACH SUBSTRUCTURE UNIT.
4. IF DEPTH OF REPAIR EXTENDS MORE THAN 6" BEYOND SURFACE OF CONCRETE, CONTRACTOR SHALL STOP WORK AND NOTIFY THE ENGINEER IMMEDIATELY.
5. FOR ANY WORK INCLUDED UNDER REHABILITATION OF PCC MASONRY TO TAKE PLACE WITHIN THE Ssplash ZONE OR UNDERWATER, THE CONTRACTOR SHALL SUBMIT A WORKING DRAWING IN ACCORDANCE WITH SUBSECTION 628.03(E)(2).

REMOVAL OF EXISTING DECK REPAIR NOTES

1. AFTER EXISTING OVERLAY IS REMOVED, PRIOR TO HYDRODEMOLITION, ANY EXISTING DECK REPAIRS THAT ARE LOOSE, PARTIALLY DELAMINATED, OR OTHERWISE UNSOUND, WILL BE MEASURED BY THE ENGINEER AND MARKED FOR REMOVAL.
2. THE CONTRACTOR SHALL REMOVE THE EXISTING DECK REPAIRS IN ACCORDANCE WITH SECTION 628.03(F).
3. THE REMOVAL SHALL NOT INCLUDE ANY UNSOUND ORIGINAL BRIDGE DECK CONCRETE.
4. REFER TO ITEM 6285xx - REMOVAL OF EXISTING DECK REPAIR FOR PAYMENT AND ADDITIONAL INFORMATION.
5. IF REMOVAL OF EXISTING DECK REPAIR REACHES FULL DEPTH, AND WITH THE APPROVAL OF THE ENGINEER, REPAIR AREA SHALL BE REPAIRED IN ACCORDANCE WITH SUBSECTION 628.03(F) AND PAID FOR UNDER ITEM 628053 - DECK REPAIR, FULL DEPTH. REMOVAL OF EXISTING DECK REPAIRS THAT ARE CHANGED TO DECK REPAIR, FULL DEPTH WILL ONLY BE PAID FOR ONCE UNDER ITEM 628053.

DECK REPAIR NOTES

1. AFTER EXISTING OVERLAY IS REMOVED, PRIOR TO HYDRODEMOLITION, EXISTING AREAS OF DECK REQUIRING FULL DEPTH REPAIR AS DIRECTED BY THE ENGINEER, SHALL BE REPAIRED USING DETAIL SHOWN ON THIS SHEET.
2. ALL WORK INVOLVING METHODS OF CONCRETE REMOVAL; CLEANING OF CONCRETE SURFACE AND EXISTING REINFORCEMENT; REPAIRING OR REPLACING DAMAGED REINFORCEMENT AS RESULT OF CONSTRUCTION ACTIVITIES OR SECTION LOSS; PRESENCE OF CONTRACTION OR EXPANSION JOINTS; SURFACE PREPARATION; AND CONCRETE PLACEMENT SHALL BE PERFORMED IN ACCORDANCE WITH SUBSECTION 628.03(F) OF THE STANDARD SPECIFICATIONS AND ITEMS 7605xx - TOTAL SURFACE HYDRODEMOLITION, AND ITEM 6255xx - ADDITIONAL LATEX-MODIFIED CONCRETE FOR PARTIAL DECK REPAIRS. PAYMENT FOR FULL DEPTH DECK REPAIRS MADE AFTER MILLING AND PRIOR TO HYDRODEMOLITION WILL BE MADE UNDER ITEM 628053 - DECK REPAIR, FULL DEPTH. PAYMENT FOR FULL DEPTH DECK REPAIRS MADE AFTER HYDRODEMOLITION WILL BE MADE UNDER ITEM 628053 - DECK REPAIR, FULL DEPTH.
3. MILLING, HYDRODEMOLITION, AND LMC OVERLAY WILL BE PAID FOR UNDER THEIR RESPECTIVE ITEMS.

NOT FOR CONSTRUCTION

QUANTITIES

ITEM Nº	ITEM TITLE	UNIT	QUANTITY
207000	STRUCTURAL EXCAVATION	CY	260
211000	REMOVAL OF STRUCTURES AND OBSTRUCTIONS	LS	1
301001	GRADED AGGREGATE BASE COURSE, TYPE B	CY	220
302002	DELAWARE NO. 3 STONE	TON	3
602XXX	CLEANING BRIDGE SCUPPER	EA	14
604001	PROTECTIVE SHIELD	LS	1
610002	PORTLAND CEMENT CONCRETE MASONRY, ABUTMENT ABOVE FOOTING, CLASS A	CY	55
610008	PORTLAND CEMENT CONCRETE MASONRY, PARAPET, CLASS A	CY	45
610017	PORTLAND CEMENT CONCRETE MASONRY, SUPERSTRUCTURE, CLASS D	CY	124
610018	PORTLAND CEMENT CONCRETE MASONRY, APPROACH SLAB, CLASS D	CY	620
611000	BAR REINFORCEMENT	LB	38580
611001	BAR REINFORCEMENT, EPOXY COATED	LB	87400
613000	EPOXY CONCRETE SEALER	SF	4043
613001	SILICONE-BASED ACRYLIC CONCRETE SEALER	SF	42410
613003	HIGH MOLECULAR WEIGHT METHACRYLATE CONCRETE SEALER	SF	58800
615004	REPLACING STEEL RIVETS/BOLTS	EA	8
616000	CLEANING AND PAINTING EXISTING STEEL	LS	1
623004	CLEAN AND GREASE BRIDGE BEARINGS	EA	168
624000	PREFABRICATED EXPANSION JOINT SYSTEMS, 3"	LF	1069
625000	LATEX-MODIFIED CONCRETE OVERLAY INSTALLATION	SY-IN	17740
625001	FURNISHING LATEX-MODIFIED CONCRETE OVERLAY	CY	475
6255XX	ADDITIONAL LATEX-MODIFIED CONCRETE FOR PARTIAL DECK REPAIRS	CY	50
628001	REPAIR OF CONCRETE STRUCTURES BY EPOXY INJECTION	LF	219
628041	DEEP SPALL REPAIR	CF	42
628042	REHABILITATION OF PCC MASONRY	CY	1
628053	DECK REPAIR, FULL DEPTH	SF	60
6285XX	REMOVAL OF EXISTING DECK REPAIRS	SF	38
6285XY	FRP JACKET AND EPOXY GROUT CONCRETE PIER ENCASEMENT	SF	4990
707016	RIPRAP, R-5	TON	10
708003	GEOTEXTILES, RIPRAP	SY	7
760013	PAVEMENT MILLING, PORTLAND CEMENT CONCRETE PAVEMENT	SY-IN	14690
7605XX	TOTAL SURFACE HYDRODEMOLITION	SY	6530

NOTE:

QUANTITIES INCLUDE CONTINGENT PERCENTAGES AS NOTED IN NOTE 11 ON DWG. PN-01 AND AS SHOWN IN THE REPAIR TABLE ON DWG. PN-04.

LOAD RATING SUMMARY

DESIGN VEHICLE	*RATING FACTOR*	*RATING WEIGHT (TON)*	*CONTROLLING MEMBER*	*CONTROLLING POINT*	*LOAD EFFECT*
HL-93 TRUCK (INVENTORY)	*1.46*	*N/A*	*SPAN 2: EXTERIOR BEAM*	*105*	*FLEXURE*
HL-93 TANDEM (INVENTORY)	*1.68*	*N/A*	*SPAN 2: EXTERIOR BEAM*	*105*	*FLEXURE*
HL-93 TRUCK TRAIN (INVENTORY)	*N/A*	*N/A*	*N/A*	*N/A*	*N/A*
HS-20 TRUCK (INVENTORY)	*1.94*	*69.75*	*SPAN 2: EXTERIOR BEAM*	*105*	*FLEXURE*
HL-93 TRUCK (OPERATING)	*1.89*	*N/A*	*SPAN 2: EXTERIOR BEAM*	*105*	*FLEXURE*
HL-93 TANDEM (OPERATING)	*2.18*	*N/A*	*SPAN 2: EXTERIOR BEAM*	*105*	*FLEXURE*
HL-93 TRUCK TRAIN (OPERATING)	*N/A*	*N/A*	*N/A*	*N/A*	*N/A*
HS-20 TRUCK (OPERATING)	*2.51*	*90.42*	*SPAN 2: EXTERIOR BEAM*	*105*	*FLEXURE*
DE S220 & LEGAL-LANE (LEGAL)	*3.50*	*70.06*	*SPAN 2: EXTERIOR BEAM*	*105*	*FLANGE STRESS*
DE S335 & LEGAL-LANE (LEGAL)	*1.95*	*68.19*	*SPAN 2: EXTERIOR BEAM*	*105*	*FLANGE STRESS*
DE S437 & LEGAL-LANE (LEGAL)	*1.85*	*67.93*	*SPAN 2: EXTERIOR BEAM*	*105*	*FLANGE STRESS*
DE T330 & LEGAL-LANE (LEGAL)	*2.76*	*82.85*	*SPAN 2: EXTERIOR BEAM*	*105*	*FLANGE STRESS*
DE T435 & LEGAL-LANE (LEGAL)	*2.43*	*85.17*	*SPAN 2: EXTERIOR BEAM*	*105*	*FLANGE STRESS*
DE T540 & LEGAL-LANE (LEGAL)	*2.16*	*86.49*	*SPAN 2: EXTERIOR BEAM*	*105*	*FLANGE STRESS*

NOTE: LOAD RATING INCLUDES FUTURE WEARING SURFACE AS NOTED IN THE PLANS.

NOT FOR CONSTRUCTION

REPAIR NO.	REPAIR DESCRIPTION	LOCATION	REMARKS	DWG. NO.	ITEM NO.	ITEM DESCRIPTION	UNIT	QTY.	CONTINGENT %	TOTAL QTY.
1	JOINT REPLACEMENT (FULL REPLACEMENT)	PIER 1, PIER 2, PIER 3, PIER 4, PIER 5, PIER 6		EX-01 TO EX-04	610008	PORTLAND CEMENT CONCRETE MASONRY, PARAPET, CLASS A	CY	10	0	10
					610017	PORTLAND CEMENT CONCRETE MASONRY, SUPERSTRUCTURE, CLASS D	CY	90	0	90
					611000	BAR REINFORCEMENT	LB	23300	0	23300
					624000	PREFABRICATED EXPANSION JOINT SYSTEMS, 3"	LF	805	0	805
3	MILL EXISTING DECK/OVERLAY	ENTIRE BRIDGE		DM-01, PN-02	628053	DECK REPAIR, FULL DEPTH	SF	0	EQ	60
					760013	PAVEMENT MILLING, PORTLAND CEMENT CONCRETE PAVEMENT	SY-IN	14690	0	14690
4	HYDRODEMOLITION OF EXISTING DECK SURFACE	ENTIRE BRIDGE		DM-01, PN-02	6285XX	REMOVAL OF EXISTING DECK REPAIRS	SF	30	25	38
					7605XX	TOTAL SURFACE HYDRODEMOLITION	SY	6530	0	6530
5	FURNISH AND INSTALL LMC OVERLAY	ENTIRE BRIDGE		DM-01, PN-02	625000	LATEX-MODIFIED CONCRETE OVERLAY INSTALLATION	SY-IN	17740	0	17740
					625001	FURNISHING LATEX-MODIFIED CONCRETE OVERLAY	CY	380	25	475
					6255XX	ADDITIONAL LATEX-MODIFIED CONCRETE FOR PARTIAL DECK REPAIRS	CY	40	25	50
6	REPAIR SPALL/DELAMINATION IN SOFFIT	SEE SOFFIT REPAIR PLAN		SO-01	628041	DEEP SPALL REPAIR	CF	11	25	14
9	REMOVE AND REPLACE CONCRETE APPROACH SLAB	APPROACH A; APPROACH B		AB-04, AS-01 TO AS-12	207000	STRUCTURAL EXCAVATION	CY	260	0	260
					211000	REMOVAL OF STRUCTURES AND OBSTRUCTIONS	LS	1	0	1
					301001	GRADED AGGREGATE BASE COURSE, TYPE B	CY	220	0	220
					610008	PORTLAND CEMENT CONCRETE MASONRY, PARAPET, CLASS A	CY	30	0	30
					610018	PORTLAND CEMENT CONCRETE MASONRY, APPROACH SLAB, CLASS D	CY	620	0	620
					611000	BAR REINFORCEMENT	LB	180	0	180
					611001	BAR REINFORCEMENT, EPOXY COATED	LB	86400	0	86400
					624000	PREFABRICATED EXPANSION JOINT SYSTEMS, 3"	LF	264	0	264
10	CLEAN SCUPPER AND DOWNSPOUT	ENTIRE BRIDGE - 1 EACH DIRECTION PER SPAN, 14 TOTAL			602XXX	CLEANING BRIDGE SCUPPER	EA	14	0	14
32	CLEAN AND PAINT EXISTING STEEL STRUCTURE	ENTIRE BRIDGE			616000	CLEANING AND PAINTING EXISTING STEEL	LS	1	0	1
33	CLEAN AND GREASE BRIDGE BEARINGS	EXISTING BRIDGE BEARINGS TO REMAIN			623004	CLEAN AND GREASE BRIDGE BEARINGS	EA	168	0	168
34	SEAL CRACKS IN CONCRETE SUBSTRUCTURE	ABUTMENT A; PIERS 1 THROUGH 6; ABUTMENT B		AB-01, AB-02, PR-03, PR-04, PR-07, PR-08	628001	REPAIR OF CONCRETE STRUCTURES BY EPOXY INJECTION	LF	175	25	219
37	REPAIR DEEP SPALLS IN CONCRETE SUBSTRUCTURE	ABUTMENT A; PIERS 2 AND 4; ABUTMENT B		AB-01, AB-02, PR-03, PR-04, PR-07, PR-08	628041	DEEP SPALL REPAIR	CF	33	25	42
					628042	REHABILITATION OF PCC MASONRY	CY	0	EQ	1
41	CLEAN AND SEAL CONCRETE SURFACES	ABUTMENT A; PIERS 1 THROUGH 6; ABUTMENT B: MEDIAN AND EXTERIOR PARAPETS, FULL LENGTH OF BRIDGE	INCLUDES CLEANING DIRT AND DEBRIS FROM TOPS OF SUBSTRUCTURE UNITS	TS-01, AB-01, AB-02, PR-03 PR-04, PR-07, PR-08, AS-05	613000	EPOXY CONCRETE SEALER	SF	4043	0	4043
					613001	SILICONE-BASED ACRYLIC CONCRETE SEALER	SF	42410	0	42410
43	REPAIR SCOUR/SLOPE EROSION	ABUTMENT A; ABUTMENT B		AB-05	302002	DELAWARE NO. 3 STONE	TON	2	25	3
					707016	RIPRAP, R-5	TON	8	25	10
					708003	GEOTEXTILES, RIPRAP	SY	5	25	7
45	SEAL DECK WITH HMWM CONCRETE SEALER	ENTIRE BRIDGE		TS-01	613003	HIGH MOLECULAR WEIGHT METHACRYLATE CONCRETE SEALER	SF	58800	0	58800
46	REPLACE ABUTMENT JOINT WITH DECK-OVER	ABUTMENT A; ABUTMENT B		AB-01 TO AB-03, EX-05 TO EX-06	211000	REMOVAL OF STRUCTURES AND OBSTRUCTIONS	LS	1	0	1
					610002	PORTLAND CEMENT CONCRETE MASONRY, ABUTMENT ABOVE FOOTING, CLASS A	CY	55	0	55
					610008	PORTLAND CEMENT CONCRETE MASONRY, PARAPET, CLASS A	CY	5	0	5
					610017	PORTLAND CEMENT CONCRETE MASONRY, SUPERSTRUCTURE, CLASS D	CY	34	0	34
					611000	BAR REINFORCEMENT	LB	15100	0	15100
					611001	BAR REINFORCEMENT, EPOXY COATED	LB	1000	0	1000
M1	BR 1-744: INSTALL FIBERGLASS JACKET AROUND PIER COLUMN	PIERS 2 THROUGH 5		PR-13	6285XY	FRP JACKET AND EPOXY GROUT CONCRETE PIER ENCASEMENT	SF	4990	0	4990

NOT FOR CONSTRUCTION

LMC OVERLAY NOTES:

1. LONGITUDINAL CONSTRUCTION JOINTS SHALL BE LIMITED TO ONLY THOSE NECESSARY TO COMPLETE THE WORK, HOWEVER THE CONTRACTOR MAY ELECT TO PLACE AN OPTIONAL CONSTRUCTION JOINT IN THE LMC OVERLAY AS NECESSITATED BY THE WIDTH OF THE BRIDGE. LONGITUDINAL CONSTRUCTION JOINTS IN THE LMC OVERLAY MAY ONLY BE PLACED AT THE LOCATION OF THE FINAL LANE LINES.

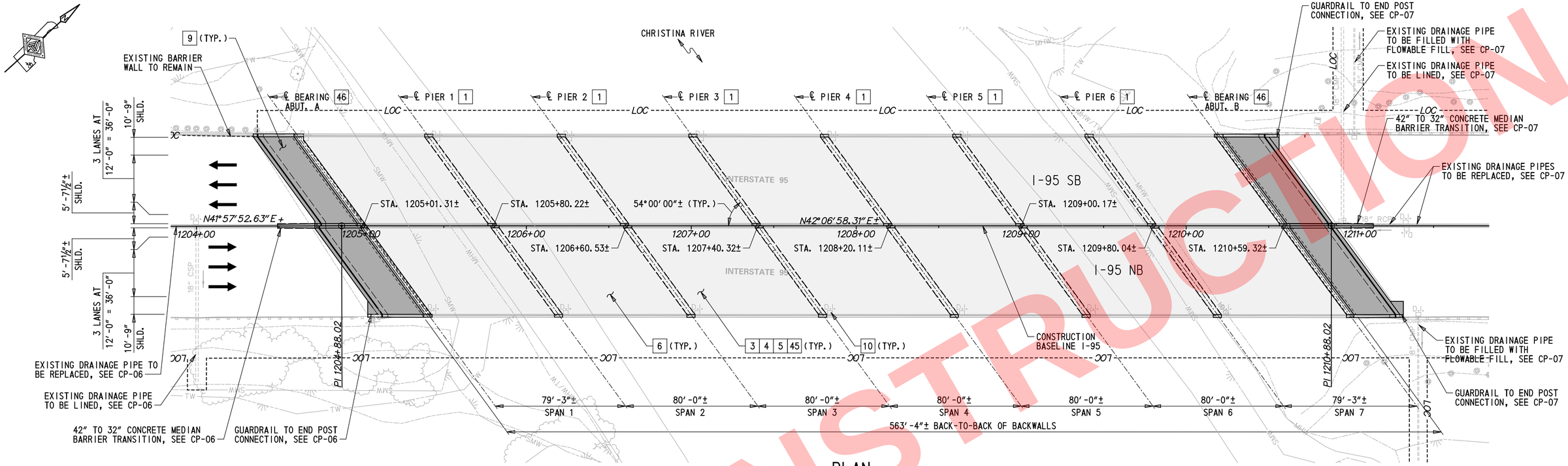

PLAN

KEY:

1 REPAIR NUMBER AS SHOWN ON DWG. PN-04

LEGEND:

- MILL AND OVERLAY DECK
- REMOVAL AND RECONSTRUCTION
- RIPRAP

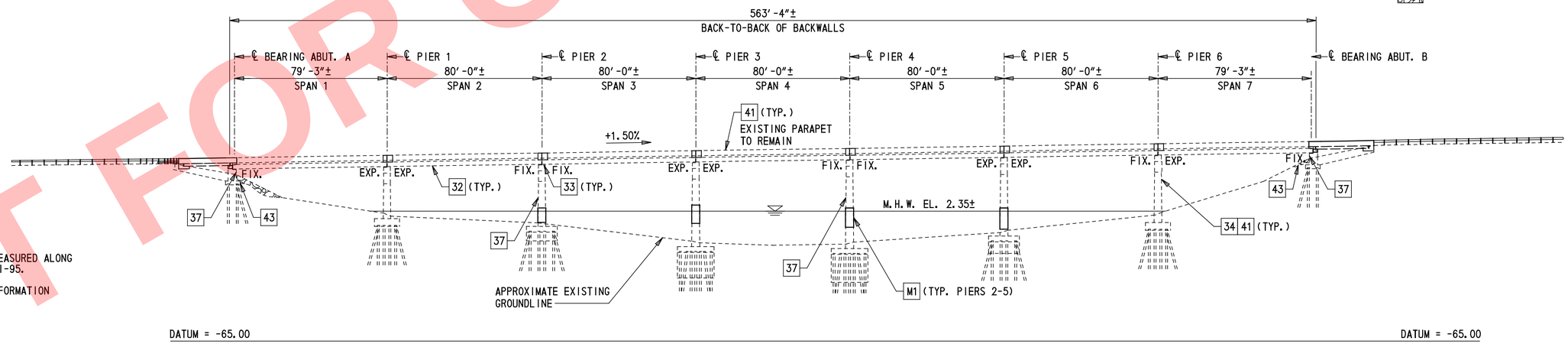

DEVELOPED SECTION ALONG CONSTRUCTION BASELINE I-95

NOTES:

1. DIMENSIONS SHOWN ARE MEASURED ALONG CONSTRUCTION BASELINE I-95.
2. PILES SHOWN ARE FOR INFORMATION PURPOSES ONLY.

NOT FOR CONSTRUCTION

DELAWARE DEPARTMENT OF TRANSPORTATION	ADDENDUMS / REVISIONS	SCALE 0 30 60 90 FEET	REHABILITATION OF I-95 FROM I-495 TO NORTH OF BRANDYWINE RIVER BRIDGE	CONTRACT T201407404	BRIDGE NO. 1 744 059	GENERAL PLAN AND ELEVATION	1-744 PE-01
				COUNTY NEW CASTLE	DESIGNED BY: BSD		SHEET NO. 2-8
					CHECKED BY: CWM		TOTAL SHTS. 2-731

5/16/2019 5:35:17 PM

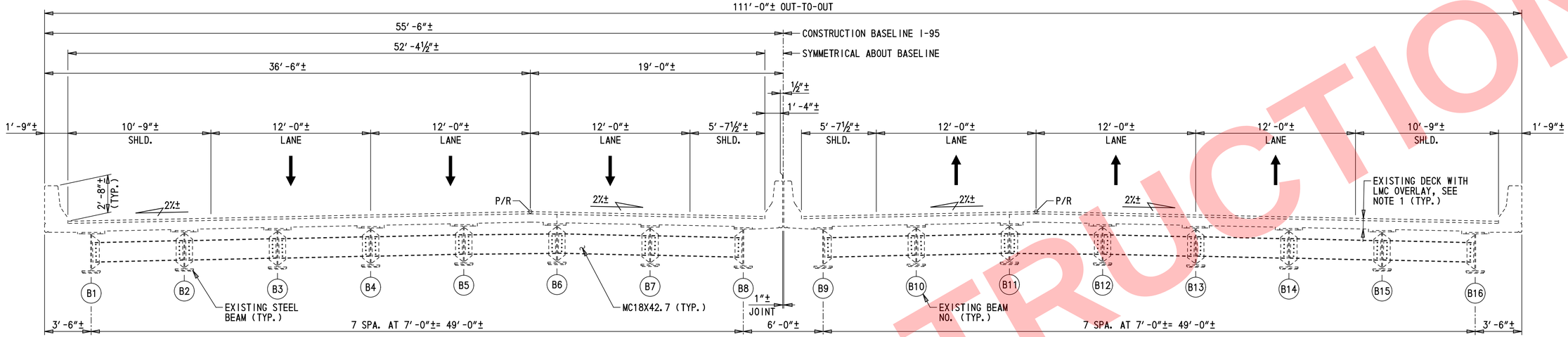

EXISTING TYPICAL SECTION

¼″ = 1′-0″

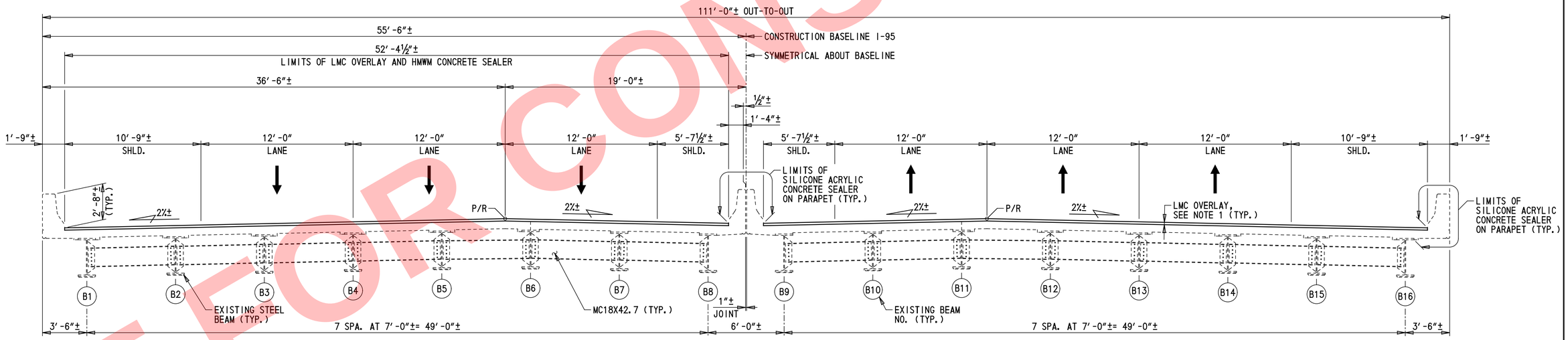

PROPOSED TYPICAL SECTION

¼″ = 1′-0″

NOTES:

1. THICKNESS OF EXISTING DECK AND PROPOSED LMC OVERLAYS VARY, SEE DM-01 FOR DETAILS.
2. FOR PARAPET DETAIL AND DRIP NOTCH DETAIL SEE DWG. PA-01.

NOT FOR CONSTRUCTION

DELAWARE DEPARTMENT OF TRANSPORTATION	ADDENDUMS / REVISIONS	SCALE AS NOTED	REHABILITATION OF I-95 FROM I-495 TO NORTH OF BRANDYWINE RIVER BRIDGE	CONTRACT T201407404	BRIDGE NO. 1 744 059	BRIDGE TYPICAL SECTIONS
				COUNTY NEW CASTLE	DESIGNED BY: CWM	1-744 TS-01
					CHECKED BY: JRQ	SHEET NO. 2-9
						TOTAL SHTS. 2-731

S:\Bridge 1-744\1744TS_01.dgn
5/16/2019 5:35:18 PM

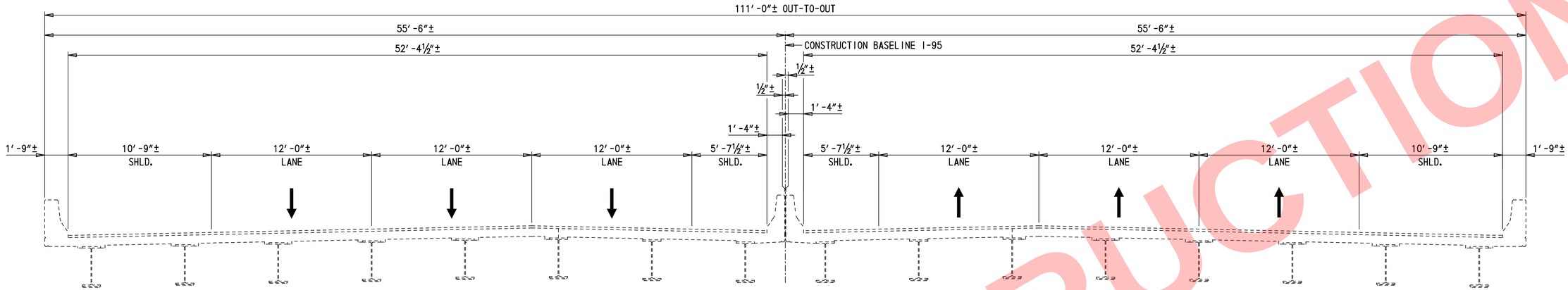

EXISTING TYPICAL SECTION

¼" = 1'-0"

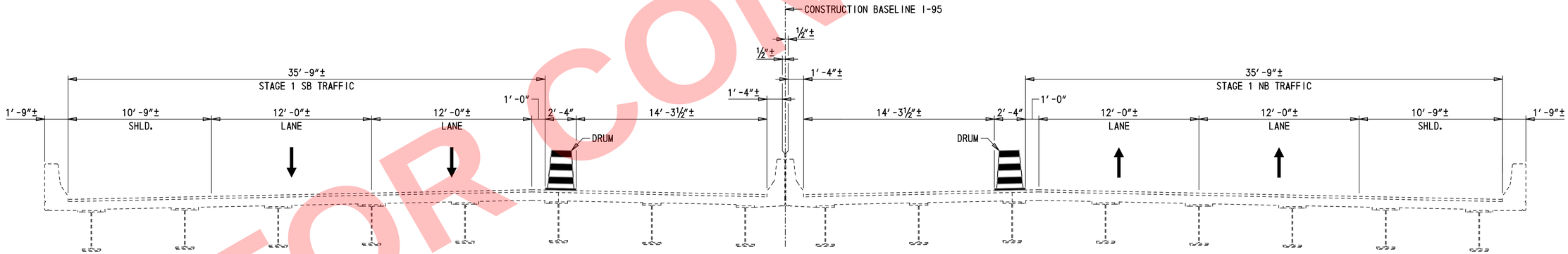

STAGE 1

¼" = 1'-0"

NOTES:

1. PROTECTIVE SHIELDS NOT SHOWN.
2. NO BRIDGE DECK WORK IN STAGE 1. SHOWN FOR INFORMATIONAL PURPOSES ONLY.

SEQUENCE OF CONSTRUCTION NOTES:

1. SET UP THE STAGE 1 MOT AND SHIFT TRAFFIC TO THE NEW LANE CONFIGURATION.

NOT FOR CONSTRUCTION

...\Bridge 1-744\744SC_01.dgn
5/16/2019 5:35:18 PM

DELAWARE DEPARTMENT OF TRANSPORTATION	ADDENDUMS / REVISIONS	SCALE AS NOTED	REHABILITATION OF I-95 FROM I-495 TO NORTH OF BRANDYWINE RIVER BRIDGE	CONTRACT T201407404	BRIDGE NO. 1 744 059	SEQUENCE OF CONSTRUCTION – 1	1-744 SC-01
				COUNTY NEW CASTLE	DESIGNED BY: BSD		SHEET NO. 2-10
					CHECKED BY: JRQ		TOTAL SHTS. 2-731

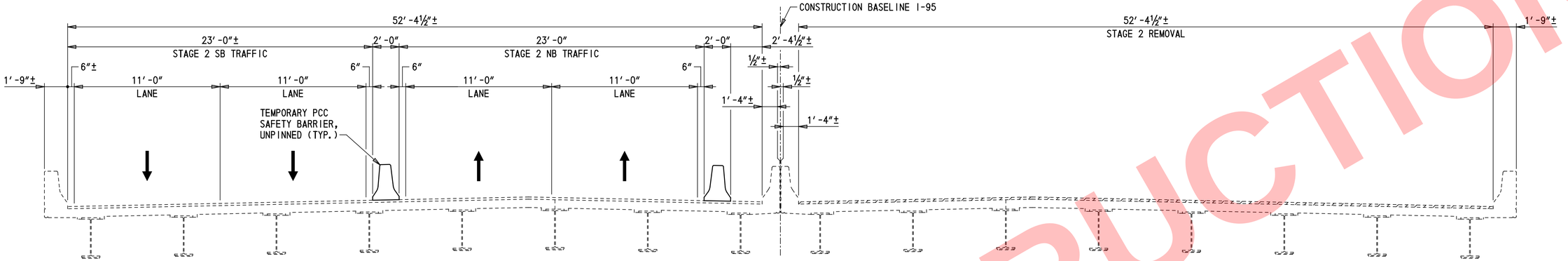

STAGE 2 REMOVAL

¼″ = 1′-0″

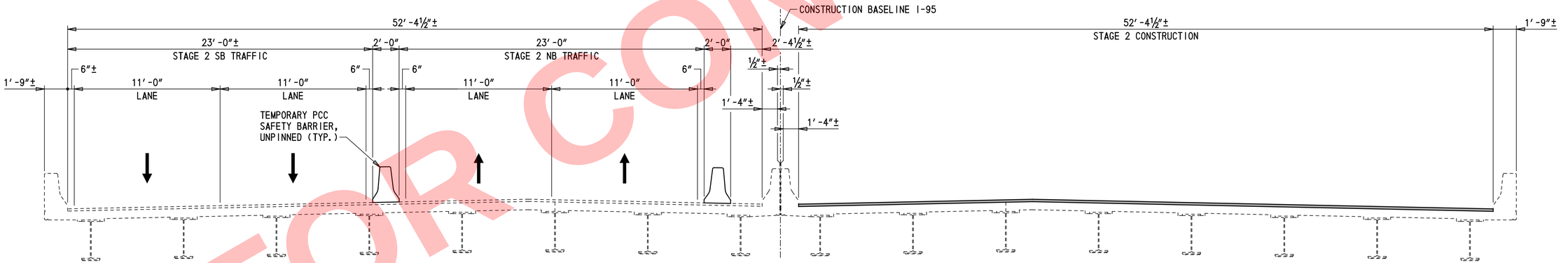

STAGE 2 CONSTRUCTION

¼″ = 1′-0″

LEGEND:

REMOVAL LIMITS

PROPOSED CONSTRUCTION

NOTES:

1. PROTECTIVE SHIELDS NOT SHOWN.

SEQUENCE OF CONSTRUCTION NOTES:

1. SET UP THE STAGE 2 MOT AND SHIFT TRAFFIC TO THE NEW LANE CONFIGURATION.
2. PERFORM STAGE 2 REMOVAL.
3. PLACE NEW LMC OVERLAY WITHIN THE LIMITS OF STAGE 2 CONSTRUCTION.

NOT FOR CONSTRUCTION

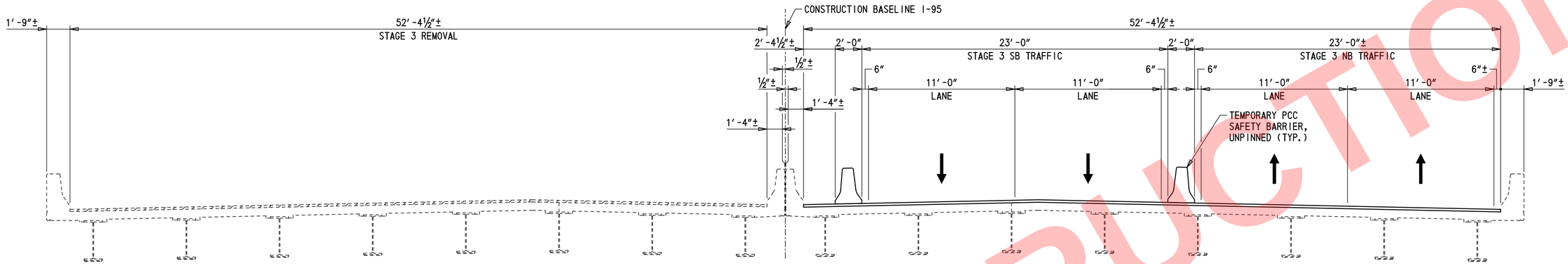

STAGE 3 REMOVAL

¼″ = 1′-0″

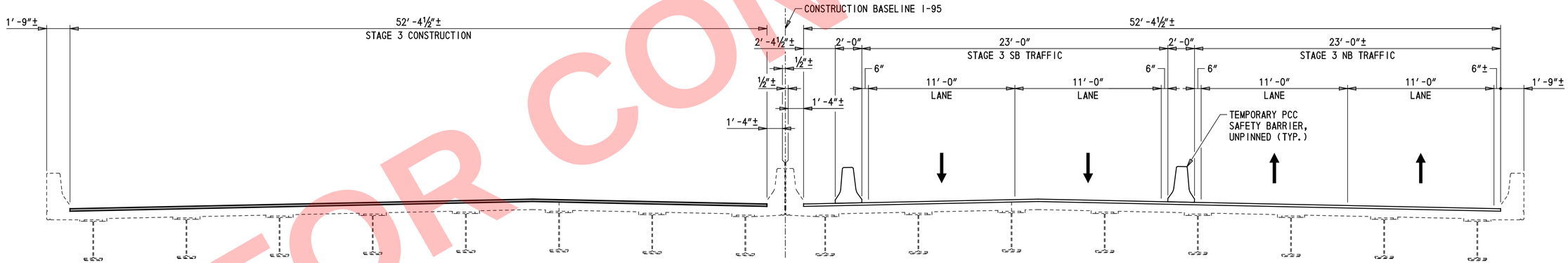

STAGE 3 CONSTRUCTION

¼″ = 1′-0″

LEGEND:

REMOVAL LIMITS

PROPOSED CONSTRUCTION

NOTES:

1. PROTECTIVE SHIELDS NOT SHOWN.

SEQUENCE OF CONSTRUCTION NOTES:

1. SET UP THE STAGE 3 MOT AND SHIFT TRAFFIC TO THE NEW LANE CONFIGURATION.
2. PERFORM STAGE 3 REMOVAL.
3. PLACE NEW LMC OVERLAY WITHIN THE LIMITS OF STAGE 3 CONSTRUCTION.

NOT FOR CONSTRUCTION

DELAWARE DEPARTMENT OF TRANSPORTATION	ADDENDUMS / REVISIONS	SCALE AS NOTED	REHABILITATION OF I-95 FROM I-495 TO NORTH OF BRANDYWINE RIVER BRIDGE	CONTRACT T201407404	BRIDGE NO. 1 744 059	SEQUENCE OF CONSTRUCTION – 3	1-744 SC-03
				COUNTY NEW CASTLE	DESIGNED BY: BSD		SHEET NO. 2-12
					CHECKED BY: JRQ		TOTAL SHTS. 2-731

\Bridge 1-744\744SC_03.dgn
5/18/2018 5:33:19 PM

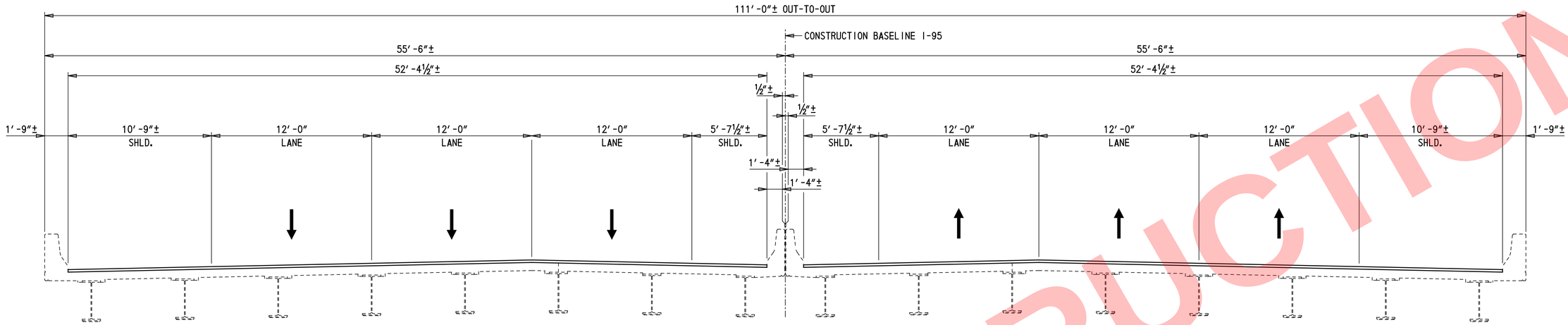

COMPLETED TYPICAL SECTION

¼″ = 1′-0″

NOTES:

1. NO BRIDGE DECK WORK IN STAGE 4.

NOT FOR CONSTRUCTION

DELAWARE DEPARTMENT OF TRANSPORTATION	ADDENDUMS / REVISIONS	SCALE AS NOTED	REHABILITATION OF I-95 FROM I-495 TO NORTH OF BRANDYWINE RIVER BRIDGE	CONTRACT T201407404	BRIDGE NO. 1 744 059	SEQUENCE OF CONSTRUCTION – 4	1-744 SC-04
				COUNTY NEW CASTLE	DESIGNED BY: BSD		SHEET NO. 2-13
					CHECKED BY: CWM		TOTAL SHTS. 2-731

5/16/2019 5:39:20 PM \Bridge 1-744\744SC_04.dgn

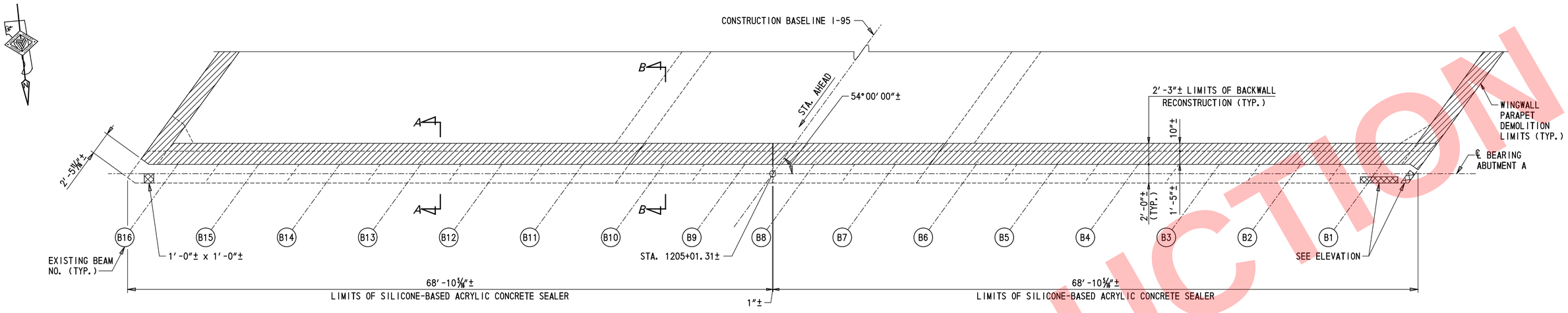

ABUTMENT A - PLAN VIEW

⅜″ = 1′-0″

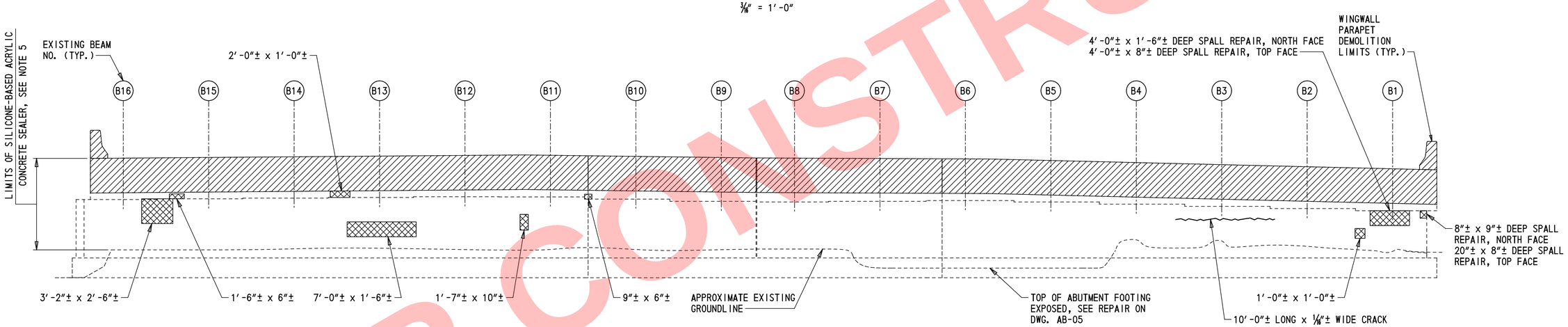

ABUTMENT A - ELEVATION

⅜″ = 1′-0″

LEGEND:

- REPAIR OF CONCRETE STRUCTURES BY EPOXY INJECTION
- DEEP SPALL REPAIR
- REMOVAL LIMITS - ITEM 211000

CONCRETE REPAIR QUANTITIES
ABUTMENT A

REPAIR Nº	ITEM Nº	ITEM TITLE	UNIT	QUANTITY
34	628001	REPAIR OF CONCRETE STRUCTURES BY EPOXY INJECTION	LF	0
37	628041	DEEP SPALL REPAIR	CF	7
41	613001	SILICONE-BASED ACRYLIC CONCRETE SEALER	SF	1670

NOTE: QUANTITIES SHOWN ARE TOTAL PER ABUTMENT AND DO NOT INCLUDE CONTINGENT PERCENTAGE.

NOTES:

1. THE LOCATION AND QUANTITIES OF THE REPAIRS SHOWN ON THIS DRAWING ARE BASED ON INSPECTION FIELD NOTES (SEE NOTE 11 ON DWG. PN-01) AND ARE APPROXIMATE AND DO REQUIRE VERIFICATION. PRIOR TO STARTING EACH REPAIR, THE LIMITS SHALL BE VERIFIED BY THE CONTRACTOR IN THE PRESENCE OF THE ENGINEER.
2. WHERE CRACKS AND SPALLS EXIST CONCURRENTLY, COMPLETE THE SPALL REPAIR COMPLETELY REMOVING THE ASSOCIATED CRACK. IF THE CRACK EXTENDS LESS THAN 1′-0″ BEYOND THE LIMITS OF THE SPALL REPAIR, EXTEND THE LIMITS OF THE SPALL REPAIR TO ENCOMPASS THE CRACK. IF THE CRACK EXTENDS DEEPER THAN THE LIMITS OF CONCRETE REMOVAL, THE CONTRACTOR SHALL REMOVE ADDITIONAL CONCRETE UNTIL THE CRACK IS FULLY REMOVED. IF THE DEPTH OF REMOVAL REACHES MORE THAN 6″ FROM THE ORIGINAL FACE OF CONCRETE, ALL WORK ON THE REPAIR SHALL STOP AND THE ENGINEER SHALL BE NOTIFIED IMMEDIATELY. IF THE CRACK EXTENDS MORE THAN 1′-0″ BEYOND THE LIMITS OF THE SPALL REPAIR INTO SOUND CONCRETE THE CRACK SHALL BE REPAIRED BY EPOXY INJECTION AND PAID FOR UNDER ITEM 628001 - REPAIR OF CONCRETE STRUCTURES BY EPOXY INJECTION BEYOND THE LIMITS OF THE SPALL REPAIR. CRACKS LOCATED WITHIN SPALL REPAIRS WILL NOT BE PAID FOR AND WILL BE CONSIDERED INCIDENTAL TO ITEM 628041 - DEEP SPALL REPAIR.
3. FOR CONCRETE REPAIR DETAILS, SEE DWG. PN-02.

NOTES (CONTINUED):

4. CONTRACTOR SHALL TAKE CARE TO PROTECT THE BEARINGS DURING APPLICATION OF THE SILICONE-BASED ACRYLIC CONCRETE SEALER. ANY CLEAN-UP REQUIRED TO REMOVE THE SEALER FROM THE BEARINGS WILL BE AT NO ADDITIONAL COST TO THE DEPARTMENT AND TO THE SATISFACTION OF THE ENGINEER.
5. SILICONE-BASED ACRYLIC CONCRETE SEALER SHALL BE APPLIED TO ALL EXPOSED CONCRETE ABUTMENT AND WINGWALL SURFACES. PAYMENT WILL BE MADE UNDER ITEM 613001 - SILICONE-BASED ACRYLIC CONCRETE SEALER. QUANTITY SHOWN ON THIS SHEET INCLUDES SEALER ON WINGWALLS.
6. CONTRACTOR SHALL REMOVE DEBRIS FROM THE BEAM SEAT PRIOR TO APPLICATION OF SILICONE-BASED CONCRETE SEALER. PAYMENT FOR THIS WORK WILL BE INCIDENTAL TO ITEM 613001 - SILICONE-BASED ACRYLIC CONCRETE SEALER.
7. SILICONE-BASED ACRYLIC CONCRETE SEALER SHALL ONLY BE APPLIED AFTER ALL CONCRETE REPAIRS ARE COMPLETED AT THE ABUTMENT.
8. FOR SECTIONS A-A, B-B, AND ABUTMENT BACKWALL RECONSTRUCTION DETAILS, SEE DWG. AB-03.
9. FOR WINGWALL PARAPET DEMOLITION LIMITS AND DETAILS, SEE DWG. AB-04.

NOT FOR CONSTRUCTION

DELAWARE DEPARTMENT OF TRANSPORTATION	ADDENDUMS / REVISIONS	SCALE AS NOTED	REHABILITATION OF I-95 FROM I-495 TO NORTH OF BRANDYWINE RIVER BRIDGE	CONTRACT T201407404	BRIDGE NO. 1 744 059	ABUTMENT A CONCRETE REPAIR DETAILS
				COUNTY NEW CASTLE	DESIGNED BY: PAS	
					CHECKED BY: JRQ	

1-744 AB-01 | SHEET NO. 2-14 | TOTAL SHTS. 2-731

\\744B_01.dgn 5/16/2019 5:35:20 PM

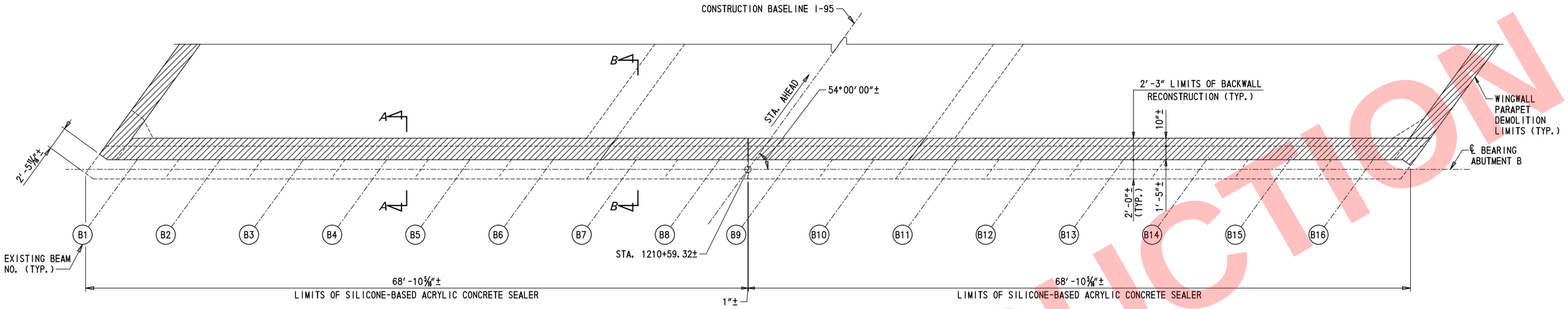

ABUTMENT B - PLAN VIEW

⅜" = 1'-0"

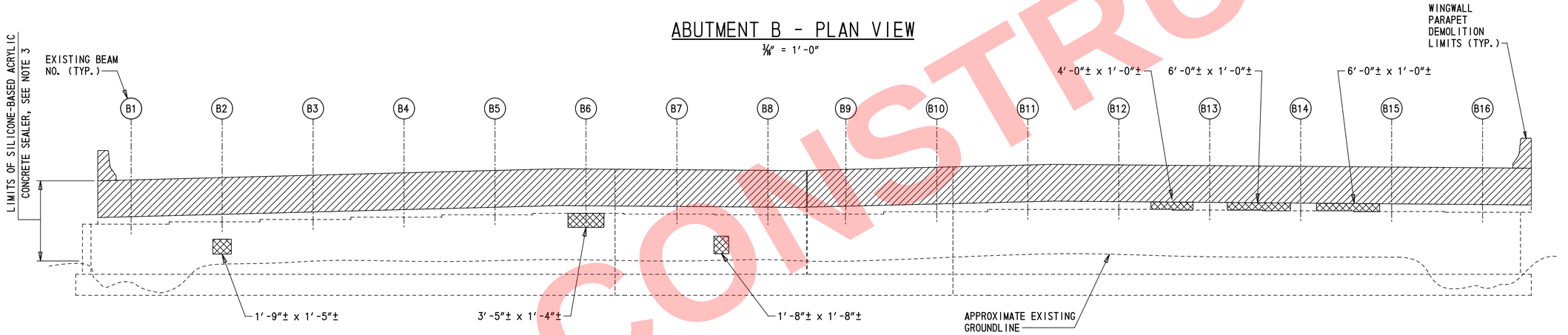

ABUTMENT B - ELEVATION

⅜" = 1'-0"

LEGEND:

- REPAIR OF CONCRETE STRUCTURES BY EPOXY INJECTION
- DEEP SPALL REPAIR
- REMOVAL LIMITS - ITEM 211000

CONCRETE REPAIR QUANTITIES
ABUTMENT B

REPAIR Nº	ITEM Nº	ITEM TITLE	UNIT	QUANTITY
34	628001	REPAIR OF CONCRETE STRUCTURES BY EPOXY INJECTION	LF	0
37	628041	DEEP SPALL REPAIR	CF	8
41	613001	SILICONE-BASED ACRYLIC CONCRETE SEALER	SF	1670

NOTE: QUANTITIES SHOWN ARE TOTAL PER ABUTMENT AND DO NOT INCLUDE CONTINGENT PERCENTAGE.

NOTES:

1. THE LOCATION AND QUANTITIES OF THE REPAIRS SHOWN ON THIS DRAWING ARE BASED ON INSPECTION FIELD NOTES (SEE NOTE 11 ON DWG. PN-01) AND ARE APPROXIMATE AND DO REQUIRE VERIFICATION. PRIOR TO STARTING EACH REPAIR, THE LIMITS SHALL BE VERIFIED BY THE CONTRACTOR IN THE PRESENCE OF THE ENGINEER.
2. WHERE CRACKS AND SPALLS EXIST CONCURRENTLY, COMPLETE THE SPALL REPAIR COMPLETELY REMOVING THE ASSOCIATED CRACK. IF THE CRACK EXTENDS LESS THAN 1'-0" BEYOND THE LIMITS OF THE SPALL REPAIR, EXTEND THE LIMITS OF THE SPALL REPAIR TO ENCOMPASS THE CRACK. IF THE CRACK EXTENDS DEEPER THAN THE LIMITS OF CONCRETE REMOVAL, THE CONTRACTOR SHALL REMOVE ADDITIONAL CONCRETE UNTIL THE CRACK IS FULLY REMOVED. IF THE DEPTH OF REMOVAL REACHES MORE THAN 6" FROM THE ORIGINAL FACE OF CONCRETE, ALL WORK ON THE REPAIR SHALL STOP AND THE ENGINEER SHALL BE NOTIFIED IMMEDIATELY. IF THE CRACK EXTENDS MORE THAN 1'-0" BEYOND THE LIMITS OF THE SPALL REPAIR INTO SOUND CONCRETE THE CRACK SHALL BE REPAIRED BY EPOXY INJECTION AND PAID FOR UNDER ITEM 628001 - REPAIR OF CONCRETE STRUCTURES BY EPOXY INJECTION BEYOND THE LIMITS OF THE SPALL REPAIR. CRACKS LOCATED WITHIN SPALL REPAIRS WILL NOT BE PAID FOR AND WILL BE CONSIDERED INCIDENTAL TO ITEM 628041 - DEEP SPALL REPAIR.
3. FOR CONCRETE REPAIR DETAILS, SEE DWG. PN-02.

NOTES (CONTINUED):

4. CONTRACTOR SHALL TAKE CARE TO PROTECT THE BEARINGS DURING APPLICATION OF THE SILICONE-BASED ACRYLIC CONCRETE SEALER. ANY CLEAN-UP REQUIRED TO REMOVE THE SEALER FROM THE BEARINGS WILL BE AT NO ADDITIONAL COST TO THE DEPARTMENT AND TO THE SATISFACTION OF THE ENGINEER.
5. SILICONE-BASED ACRYLIC CONCRETE SEALER SHALL BE APPLIED TO ALL EXPOSED CONCRETE ABUTMENT AND WINGWALL SURFACES. PAYMENT WILL BE MADE UNDER ITEM 613001 - SILICONE-BASED ACRYLIC CONCRETE SEALER. QUANTITY SHOWN ON THIS SHEET INCLUDES SEALER ON WINGWALLS.
6. CONTRACTOR SHALL REMOVE DEBRIS FROM THE BEAM SEAT PRIOR TO APPLICATION OF SILICONE-BASED CONCRETE SEALER. PAYMENT FOR THIS WORK WILL BE INCIDENTAL TO ITEM 613001 - SILICONE-BASED ACRYLIC CONCRETE SEALER.
7. SILICONE-BASED ACRYLIC CONCRETE SEALER SHALL ONLY BE APPLIED AFTER ALL CONCRETE REPAIRS ARE COMPLETED AT THE ABUTMENT.
8. FOR SECTIONS A-A, B-B, AND ABUTMENT BACKWALL RECONSTRUCTION DETAILS, SEE DWG. AB-03.
9. FOR WINGWALL PARAPET DEMOLITION LIMITS AND DETAILS, SEE DWG. AB-04.

NOT FOR CONSTRUCTION

1-744
AB-02

DELAWARE
DEPARTMENT OF TRANSPORTATION

ADDENDUMS / REVISIONS

SCALE AS NOTED

REHABILITATION OF I-95
FROM I-495 TO NORTH OF
BRANDYWINE RIVER BRIDGE

CONTRACT	BRIDGE NO.	1 744 059
T201407404	DESIGNED BY: PAS	
COUNTY	CHECKED BY: JRQ	
NEW CASTLE		

ABUTMENT B CONCRETE REPAIR DETAILS

SHEET NO.	TOTAL SHTS.
2-15	2-731

I-744AB_02.dgn
5/16/2019 5:35:21 PM

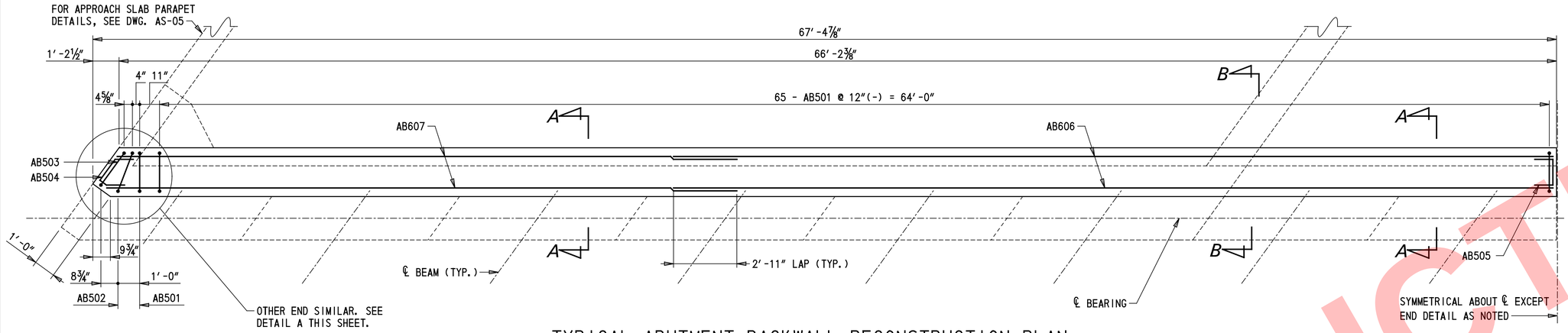

TYPICAL ABUTMENT BACKWALL RECONSTRUCTION PLAN

⅜″ = 1′-0″

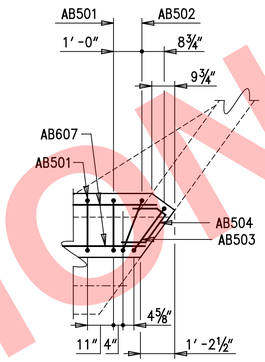

DETAIL A

⅜″ = 1′-0″

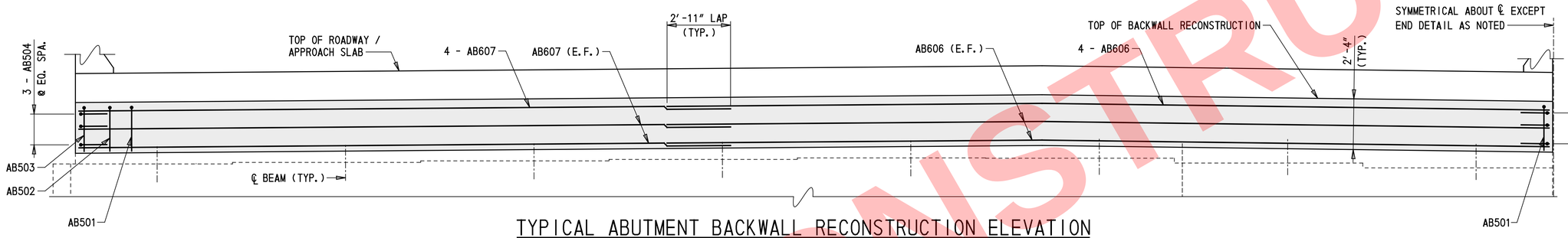

TYPICAL ABUTMENT BACKWALL RECONSTRUCTION ELEVATION

⅜″ = 1′-0″

NOTES:

1. REMOVE CONCRETE BACKWALL TO THE LIMITS SHOWN. THE CONTRACTOR SHALL USE CARE DURING THE REMOVAL OF THE EXISTING CONCRETE TO AVOID DAMAGE TO THE EXISTING PORTIONS OF THE STRUCTURE THAT ARE TO REMAIN IN PLACE. ANY DAMAGE INCURRED TO EXISTING PORTIONS OF THE STRUCTURE TO REMAIN SHALL BE REPAIRED BY THE CONTRACTOR TO THE COMPLETE SATISFACTION OF THE ENGINEER AT NO ADDITIONAL COST TO THE DEPARTMENT.
2. EXISTING BARS TO REMAIN SHALL BE CLEANED IN ACCORDANCE WITH SECTION 628.03(E)7. BARS WITH CORROSION, BROKEN, OR WITH INADEQUATE BOND SHALL BE REPAIRED IN ACCORDANCE WITH SECTION 628.03(E)7.
3. PROPOSED REINFORCEMENT REQUIRED TO COMPLETE REPAIRS SHALL HAVE 2″ MIN. CONCRETE COVER UNLESS OTHERWISE SHOWN. PAYMENT FOR PROPOSED REINFORCEMENT SHALL BE UNDER ITEM 611000 - BAR REINFORCEMENT.
4. CUT EXISTING REINFORCEMENT TO REMAIN 2″ CLEAR OF NEW TOP OF BACKWALL.

LEGEND:

REMOVAL LIMITS - ITEM 211000

PROPOSED CONSTRUCTION

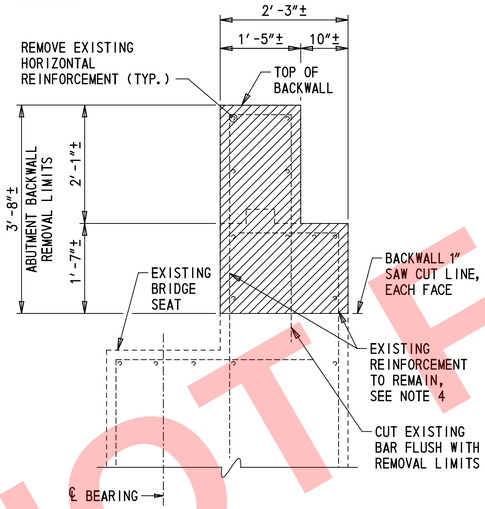

SECTION A-A REMOVAL

¾″ = 1′-0″

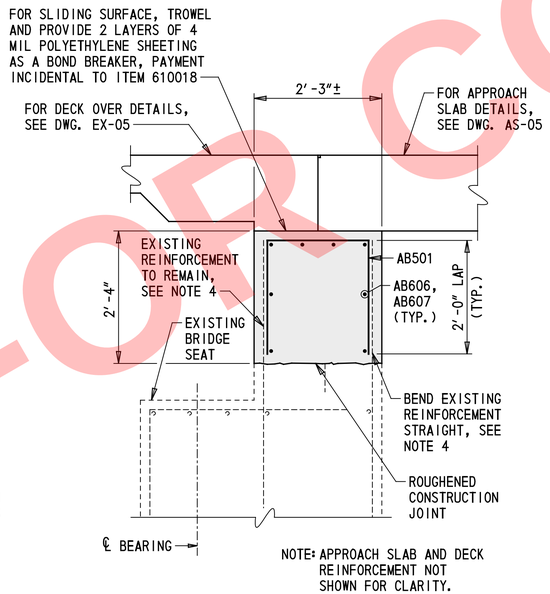

SECTION A-A RECONSTRUCTION

¾″ = 1′-0″

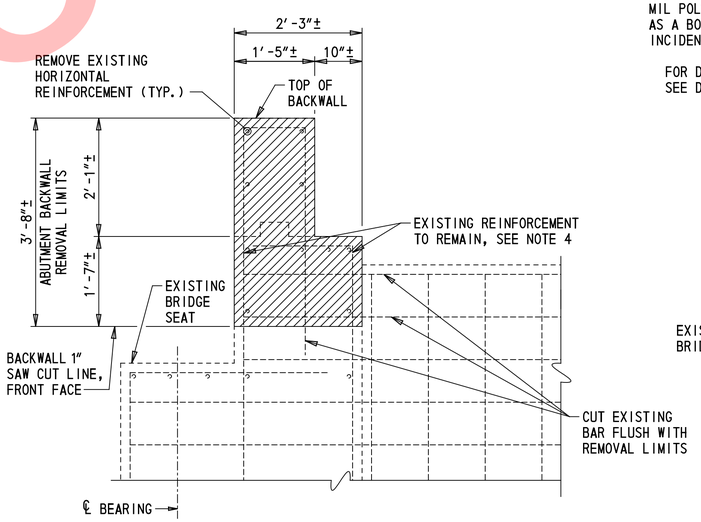

SECTION B-B REMOVAL

¾″ = 1′-0″

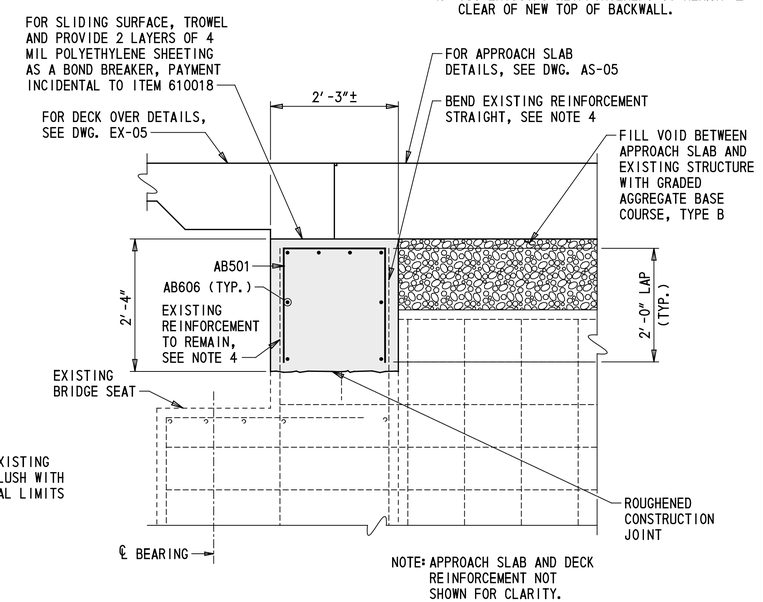

SECTION B-B RECONSTRUCTION

¾″ = 1′-0″

NOT FOR CONSTRUCTION

DELAWARE DEPARTMENT OF TRANSPORTATION	ADDENDUMS / REVISIONS	SCALE AS NOTED	REHABILITATION OF I-95 FROM I-495 TO NORTH OF BRANDYWINE RIVER BRIDGE	CONTRACT T201407404	BRIDGE NO. 1 744 059	ABUTMENT BACKWALL RECONSTRUCTION DETAILS
				COUNTY NEW CASTLE	DESIGNED BY: MLA	
					CHECKED BY: CWM	

1-744 AB-03
SHEET NO. 2-16
TOTAL SHTS. 2-731

\Bridge 1-744\744AB_03.dgn 5/16/2019 5:35:21 PM

TYPICAL WINGWALL PARTIAL DEMOLITION PLAN

3/8" = 1'-0"

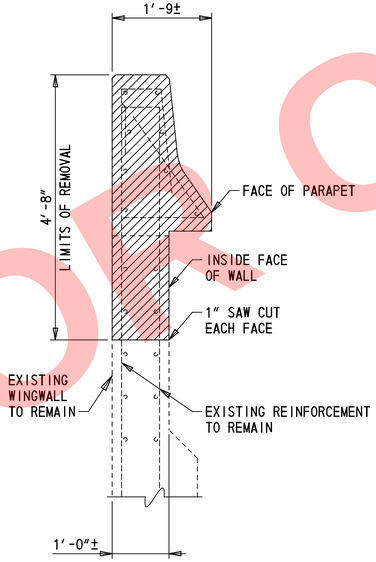

SECTION C-C REMOVAL

3/4" = 1'-0"

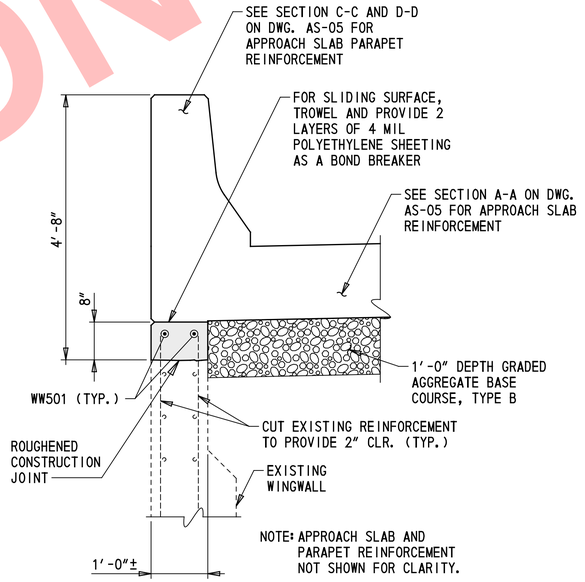

SECTION C-C RECONSTRUCTION

3/4" = 1'-0"

LEGEND:

- REMOVAL LIMITS - ITEM 211000
- PROPOSED CONSTRUCTION

NOTES:

1. EXISTING REINFORCING TO REMAIN SHALL BE CLEANED IN ACCORDANCE WITH SECTION 628.

NOT FOR CONSTRUCTION

\\Bridge 1-744\1744AB_04.dgn
5/16/2019 5:35:22 PM

DELAWARE DEPARTMENT OF TRANSPORTATION	ADDENDUMS / REVISIONS	SCALE AS NOTED	REHABILITATION OF I-95 FROM I-495 TO NORTH OF BRANDYWINE RIVER BRIDGE	CONTRACT T201407404	BRIDGE NO. 1 744 059	ABUTMENT WINGWALL RECONSTRUCTION DETAILS	1-744 AB-04
				COUNTY NEW CASTLE	DESIGNED BY: CWM		SHEET NO. 2-17
					CHECKED BY: JRQ		TOTAL SHTS. 2-731

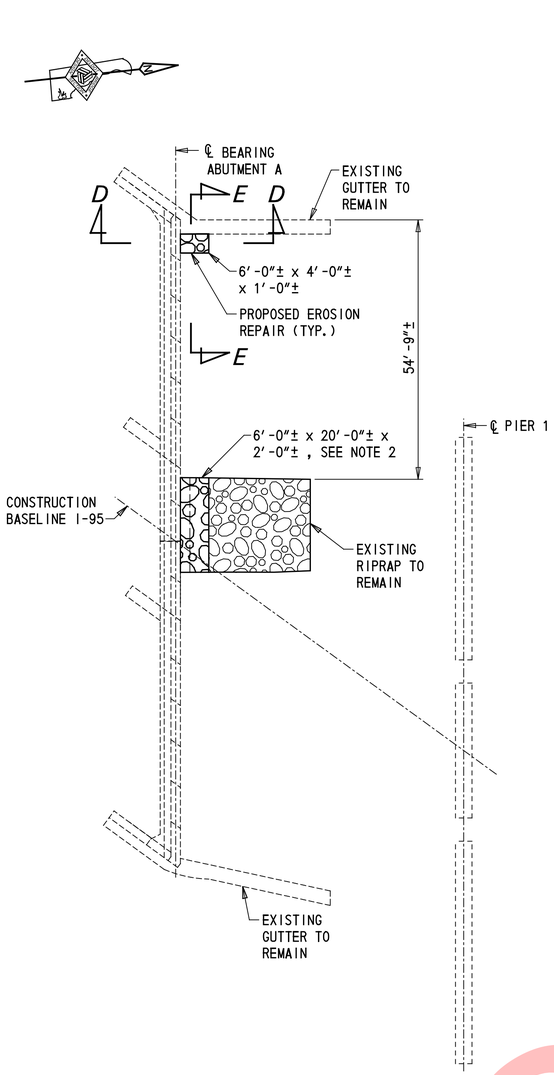

PLAN VIEW

1/16″ = 1′-0″

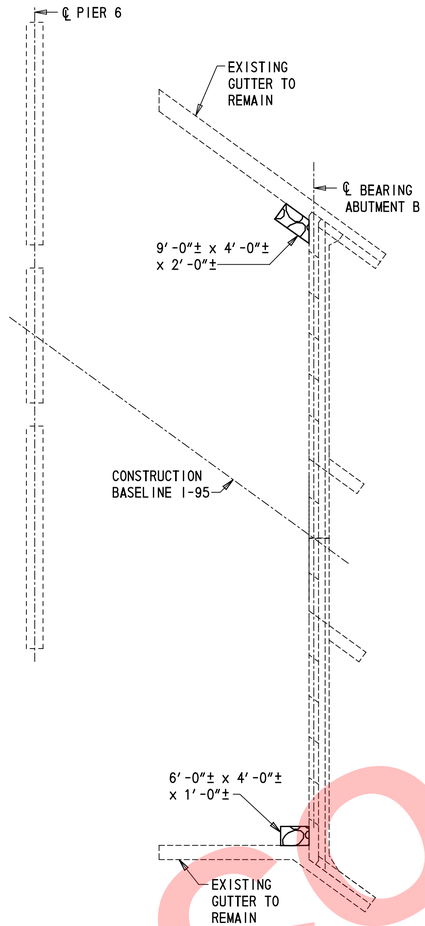

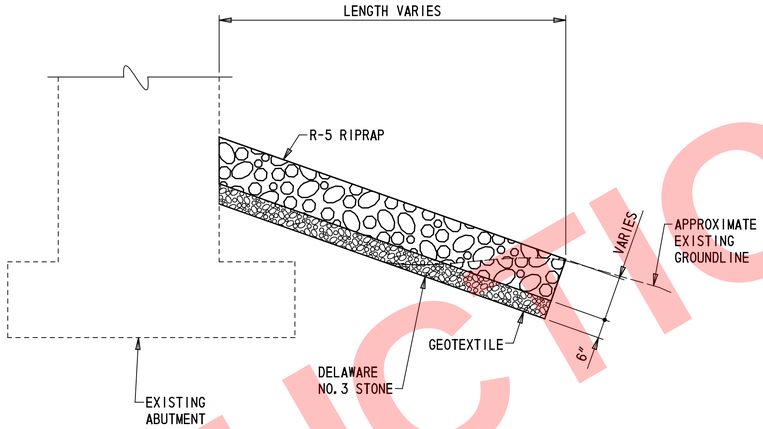

SECTION D-D

1/2″ = 1′-0″

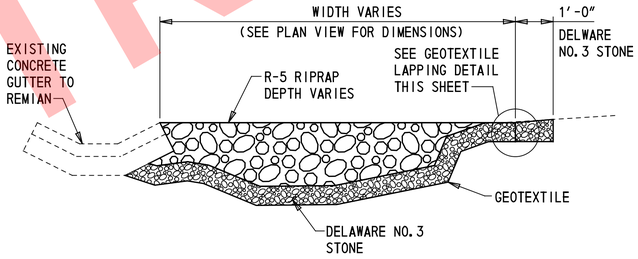

SECTION E-E

(TYPICAL EROSION REPAIR DETAIL)

1/2″ = 1′-0″

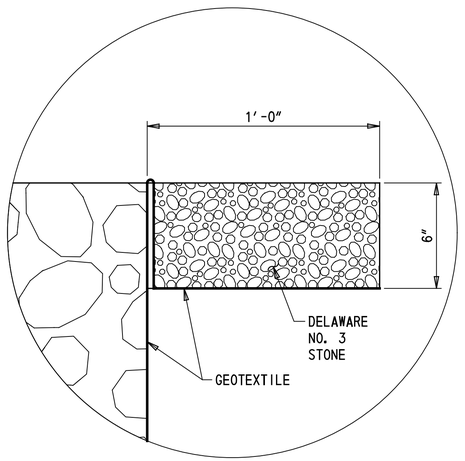

GEOTEXTILE LAPPING DETAIL

NOT TO SCALE

LEGEND:

- EXISTING RIPRAP TO REMAIN
- PROPOSED EROSION REPAIR

EROSION REPAIR PLACEMENT PROCEDURE:

1. REMOVE ALL VEGETATION AND EXCAVATE EXISTING UNSUITABLE SOILS WITHIN THE LIMITS OF THE PROPOSED EROSION REPAIR.
2. PLACE GEOTEXTILE FABRIC AND CONSTRUCT GEOTEXTILE LAPPING DETAIL AT EACH EDGE OF EROSION REPAIR ADJACENT TO EXISTING SOIL.
3. PLACE 6″ DEPTH OF DELAWARE NO. 3 STONE AS SHOWN.
4. FILL REMAINING DEPTH WITH R-5 RIPRAP TO MATCH EXISTING GROUND SLOPE.

NOTES:

1. REPAIR AREAS SHOWN ARE APPROXIMATE, EROSION AREAS TO BE REPAIRED AS DIRECTED BY THE ENGINEER.
2. PLACE R-5 RIPRAP ABOVE THE EXPOSED ABUTMENT FOOTING TO A MINIMUM OF 2′-0″ ABOVE THE TOP OF FOOTING.

NOT FOR CONSTRUCTION

DELAWARE DEPARTMENT OF TRANSPORTATION	ADDENDUMS / REVISIONS	SCALE AS NOTED	REHABILITATION OF I-95 FROM I-495 TO NORTH OF BRANDYWINE RIVER BRIDGE	CONTRACT T201407404	BRIDGE NO. 1 744 059	ABUTMENT EROSION REPAIR DETAILS	1-744 AB-05
				COUNTY NEW CASTLE	DESIGNED BY: CWM		SHEET NO. 2-18
					CHECKED BY: JRQ		TOTAL SHTS. 2-731

\Bridge 1-744\744AB_05.dgn
5/16/2019 5:35:23 PM

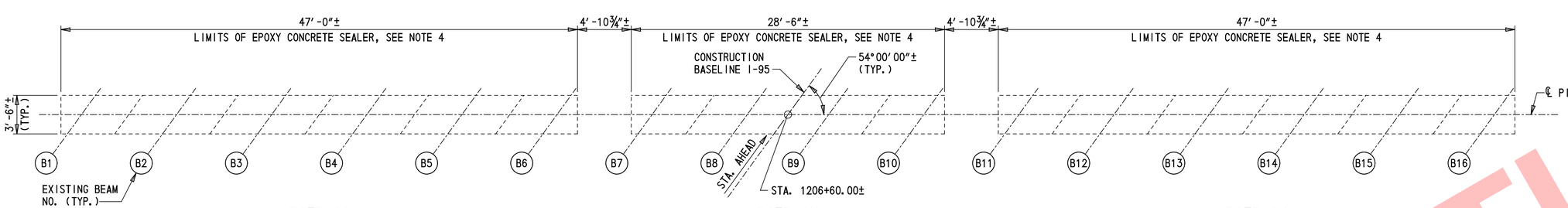

PIER 2S PIER 2W PIER 2N

PIER 2 - PLAN VIEW

3/16″ = 1′-0″

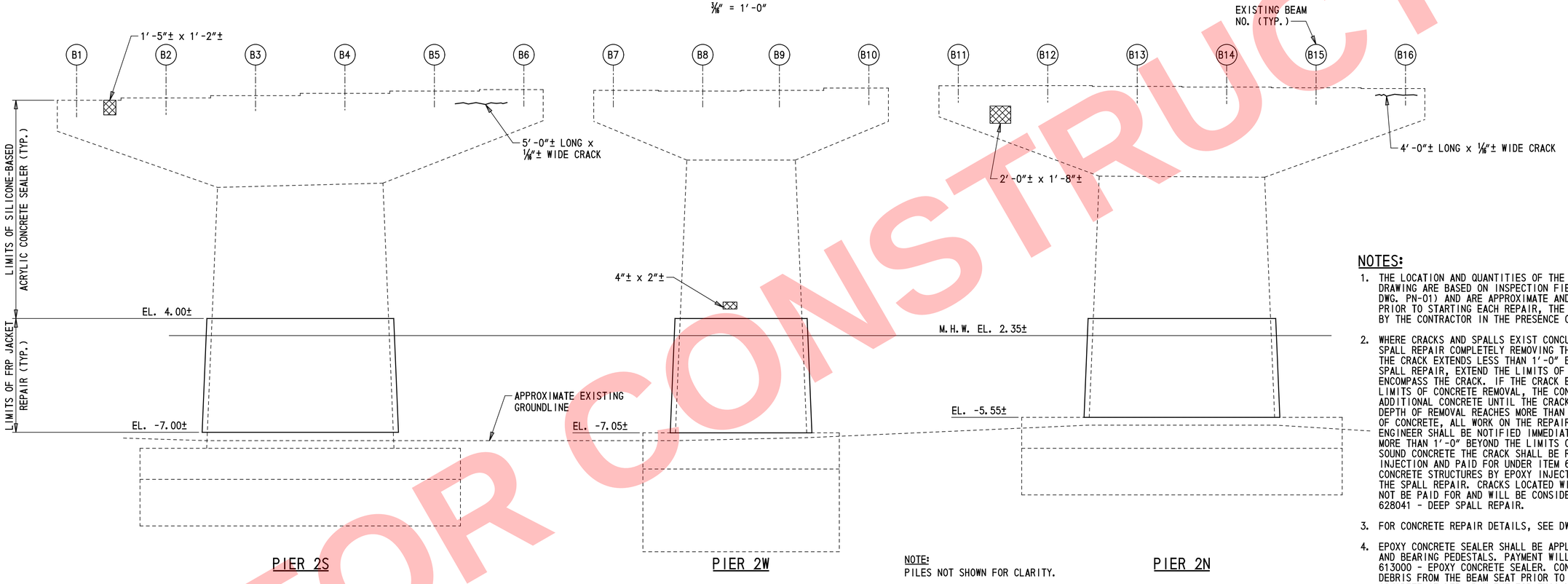

PIER 2S PIER 2W PIER 2N

PIER 2 - SOUTH ELEVATION

3/16″ = 1′-0″

NOTE:
PILES NOT SHOWN FOR CLARITY.

LEGEND:

REPAIR OF CONCRETE STRUCTURES BY EPOXY INJECTION

DEEP SPALL REPAIR

CONCRETE REPAIR QUANTITIES
PIER 2

REPAIR Nº	ITEM Nº	ITEM TITLE	UNIT	QUANTITY
34	628001	REPAIR OF CONCRETE STRUCTURES BY EPOXY INJECTION	LF	15
37	628041	DEEP SPALL REPAIR	CF	7
41	613000	EPOXY CONCRETE SEALER	SF	674
41	613001	SILICONE-BASED ACRYLIC CONCRETE SEALER	SF	3510
M1	6285XY	FRP JACKET AND EPOXY GROUT CONCRETE PIER ENCASEMENT	SF	1300

NOTE: QUANTITIES SHOWN ARE TOTAL PER PIER AND DO NOT INCLUDE CONTINGENT PERCENTAGE.

NOTES:

1. THE LOCATION AND QUANTITIES OF THE REPAIRS SHOWN ON THIS DRAWING ARE BASED ON INSPECTION FIELD NOTES (SEE NOTE 11 ON DWG. PN-01) AND ARE APPROXIMATE AND DO REQUIRE VERIFICATION. PRIOR TO STARTING EACH REPAIR, THE LIMITS SHALL BE VERIFIED BY THE CONTRACTOR IN THE PRESENCE OF THE ENGINEER.
2. WHERE CRACKS AND SPALLS EXIST CONCURRENTLY, COMPLETE THE SPALL REPAIR COMPLETELY REMOVING THE ASSOCIATED CRACK. IF THE CRACK EXTENDS LESS THAN 1′-0″ BEYOND THE LIMITS OF THE SPALL REPAIR, EXTEND THE LIMITS OF THE SPALL REPAIR TO ENCOMPASS THE CRACK. IF THE CRACK EXTENDS DEEPER THAN THE LIMITS OF CONCRETE REMOVAL, THE CONTRACTOR SHALL REMOVE ADDITIONAL CONCRETE UNTIL THE CRACK IS FULLY REMOVED. IF THE DEPTH OF REMOVAL REACHES MORE THAN 6″ FROM THE ORIGINAL FACE OF CONCRETE, ALL WORK ON THE REPAIR SHALL STOP AND THE ENGINEER SHALL BE NOTIFIED IMMEDIATELY. IF THE CRACK EXTENDS MORE THAN 1′-0″ BEYOND THE LIMITS OF THE SPALL REPAIR INTO SOUND CONCRETE THE CRACK SHALL BE REPAIRED BY EPOXY INJECTION AND PAID FOR UNDER ITEM 628001 - REPAIR OF CONCRETE STRUCTURES BY EPOXY INJECTION BEYOND THE LIMITS OF THE SPALL REPAIR. CRACKS LOCATED WITHIN SPALL REPAIRS WILL NOT BE PAID FOR AND WILL BE CONSIDERED INCIDENTAL TO ITEM 628041 - DEEP SPALL REPAIR.
3. FOR CONCRETE REPAIR DETAILS, SEE DWG. PN-02.
4. EPOXY CONCRETE SEALER SHALL BE APPLIED TO THE BEAM SEATS AND BEARING PEDESTALS. PAYMENT WILL BE MADE UNDER ITEM 613000 - EPOXY CONCRETE SEALER. CONTRACTOR SHALL REMOVE DEBRIS FROM THE BEAM SEAT PRIOR TO APPLICATION OF EPOXY CONCRETE SEALER. PAYMENT FOR THIS WORK WILL BE INCIDENTAL TO ITEM 613000 - EPOXY CONCRETE SEALER.
5. CONTRACTOR SHALL TAKE CARE TO PROTECT THE BEARINGS DURING APPLICATION OF THE EPOXY CONCRETE SEALER. ANY CLEAN-UP REQUIRED TO REMOVE THE SEALER FROM THE BEARINGS WILL BE AT NO ADDITIONAL COST TO THE DEPARTMENT AND TO THE SATISFACTION OF THE ENGINEER.
6. SILICONE-BASED ACRYLIC CONCRETE SEALER SHALL BE APPLIED TO ALL EXPOSED CONCRETE PIER SURFACES THAT DO NOT REQUIRE EPOXY SEALER. PAYMENT WILL BE MADE UNDER ITEM 613001 - SILICONE-BASED ACRYLIC CONCRETE SEALER.
7. EPOXY CONCRETE SEALER AND SILICONE-BASED ACRYLIC CONCRETE SEALER SHALL ONLY BE APPLIED AFTER ALL CONCRETE REPAIRS ARE COMPLETED AT EACH PIER.
8. FOR FRP JACKET REPAIR DETAILS, SEE DWG. PR-13.

NOT FOR CONSTRUCTION

DELAWARE DEPARTMENT OF TRANSPORTATION

ADDENDUMS / REVISIONS

SCALE AS NOTED

REHABILITATION OF I-95 FROM I-495 TO NORTH OF BRANDYWINE RIVER BRIDGE

CONTRACT	BRIDGE NO.	1 744 059
T201407404	DESIGNED BY: BJM	
COUNTY		
NEW CASTLE	CHECKED BY: JRQ	

PIER 2 – CONCRETE REPAIR DETAILS (SOUTH ELEVATION)

1-744 PR-03	
SHEET NO.	2-21
TOTAL SHTS.	2-731

\744PR_03.dgn
5/16/2019 3:35:23 PM

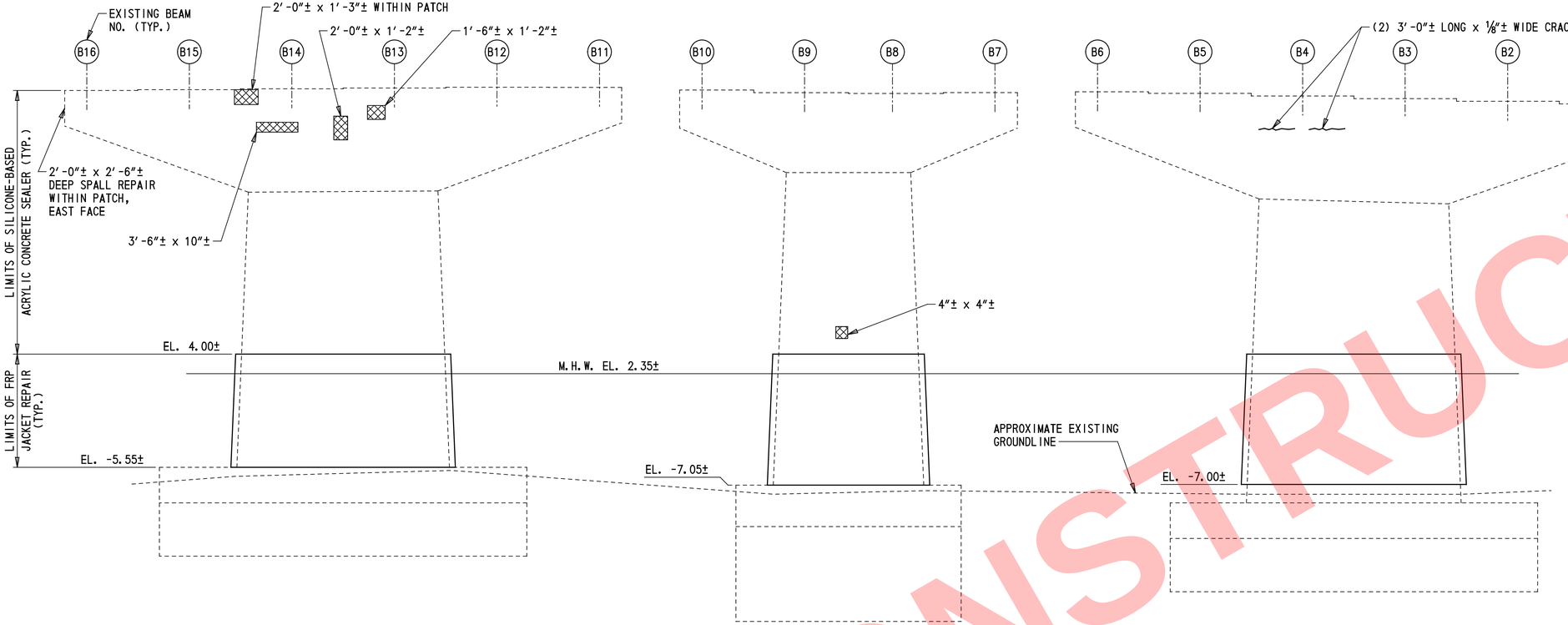

PIER 2N PIER 2W PIER 2S

NOTE:
PILES NOT SHOWN FOR CLARITY.

PIER 2 - NORTH ELEVATION

3/16" = 1'-0"

LEGEND:

REPAIR OF CONCRETE STRUCTURES BY EPOXY INJECTION

DEEP SPALL REPAIR

NOTES:

1. THE LOCATION AND QUANTITIES OF THE REPAIRS SHOWN ON THIS DRAWING ARE BASED ON INSPECTION FIELD NOTES (SEE NOTE 11 ON DWG. PN-01) AND ARE APPROXIMATE AND DO REQUIRE VERIFICATION. PRIOR TO STARTING EACH REPAIR, THE LIMITS SHALL BE VERIFIED BY THE CONTRACTOR IN THE PRESENCE OF THE ENGINEER.
2. WHERE CRACKS AND SPALLS EXIST CONCURRENTLY, COMPLETE THE SPALL REPAIR COMPLETELY REMOVING THE ASSOCIATED CRACK. IF THE CRACK EXTENDS LESS THAN 1'-0" BEYOND THE LIMITS OF THE SPALL REPAIR, EXTEND THE LIMITS OF THE SPALL REPAIR TO ENCOMPASS THE CRACK. IF THE CRACK EXTENDS DEEPER THAN THE LIMITS OF CONCRETE REMOVAL, THE CONTRACTOR SHALL REMOVE ADDITIONAL CONCRETE UNTIL THE CRACK IS FULLY REMOVED. IF THE DEPTH OF REMOVAL REACHES MORE THAN 6" FROM THE ORIGINAL FACE OF CONCRETE, ALL WORK ON THE REPAIR SHALL STOP AND THE ENGINEER SHALL BE NOTIFIED IMMEDIATELY. IF THE CRACK EXTENDS MORE THAN 1'-0" BEYOND THE LIMITS OF THE SPALL REPAIR INTO SOUND CONCRETE THE CRACK SHALL BE REPAIRED BY EPOXY INJECTION AND PAID FOR UNDER ITEM 628001 - REPAIR OF CONCRETE STRUCTURES BY EPOXY INJECTION BEYOND THE LIMITS OF THE SPALL REPAIR. CRACKS LOCATED WITHIN SPALL REPAIRS WILL NOT BE PAID FOR AND WILL BE CONSIDERED INCIDENTAL TO ITEM 628041 - DEEP SPALL REPAIR.
3. FOR CONCRETE REPAIR DETAILS, SEE DWG. PN-02.
4. EPOXY CONCRETE SEALER SHALL BE APPLIED TO THE BEAM SEATS AND BEARING PEDESTALS. PAYMENT WILL BE MADE UNDER ITEM 613000 - EPOXY CONCRETE SEALER. CONTRACTOR SHALL REMOVE DEBRIS FROM THE BEAM SEAT PRIOR TO APPLICATION OF EPOXY CONCRETE SEALER. PAYMENT FOR THIS WORK WILL BE INCIDENTAL TO ITEM 613000 - EPOXY CONCRETE SEALER.
5. CONTRACTOR SHALL TAKE CARE TO PROTECT THE BEARINGS DURING APPLICATION OF THE EPOXY CONCRETE SEALER. ANY CLEAN-UP REQUIRED TO REMOVE THE SEALER FROM THE BEARINGS WILL BE AT NO ADDITIONAL COST TO THE DEPARTMENT AND TO THE SATISFACTION OF THE ENGINEER.
6. SILICONE-BASED ACRYLIC CONCRETE SEALER SHALL BE APPLIED TO ALL EXPOSED CONCRETE PIER SURFACES THAT DO NOT REQUIRE EPOXY SEALER. PAYMENT WILL BE MADE UNDER ITEM 613001 - SILICONE-BASED ACRYLIC CONCRETE SEALER.
7. EPOXY CONCRETE SEALER AND SILICONE-BASED ACRYLIC CONCRETE SEALER SHALL ONLY BE APPLIED AFTER ALL CONCRETE REPAIRS ARE COMPLETED AT EACH PIER.
8. FOR FRP JACKET REPAIR DETAILS, SEE DWG. PR-13.
9. FOR CONCRETE REPAIR QUANTITIES TABLE, SEE DWG. PR-03.

NOT FOR CONSTRUCTION

1-744 PR-04

DELAWARE DEPARTMENT OF TRANSPORTATION

ADDENDUMS / REVISIONS

SCALE AS NOTED

REHABILITATION OF I-95 FROM I-495 TO NORTH OF BRANDYWINE RIVER BRIDGE

CONTRACT T201407404

COUNTY NEW CASTLE

BRIDGE NO. 1 744 059

DESIGNED BY: BJM

CHECKED BY: JRQ

PIER 2 – CONCRETE REPAIR DETAILS (NORTH ELEVATION)

SHEET NO. 2-22

TOTAL SHTS. 2-731

\744PR_04.dgn
5/16/2019 5:35:24 PM

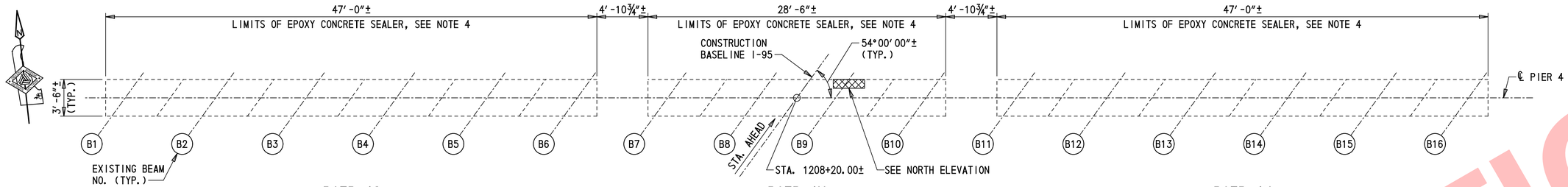

PIER 4 - PLAN VIEW

3/16″ = 1′-0″

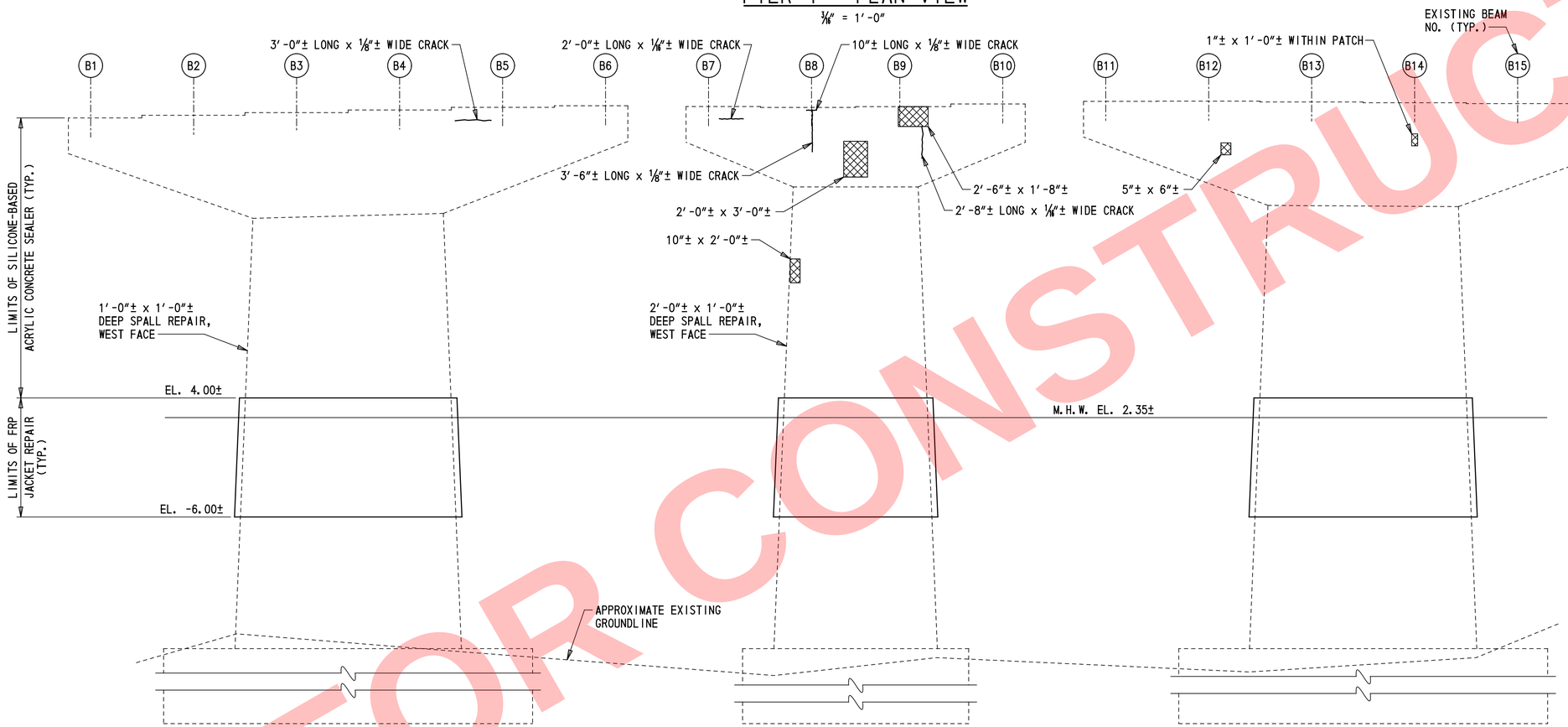

NOTE:
PILES NOT SHOWN FOR CLARITY.

PIER 4 - SOUTH ELEVATION

3/16″ = 1′-0″

LEGEND:

REPAIR OF CONCRETE STRUCTURES BY EPOXY INJECTION

DEEP SPALL REPAIR

CONCRETE REPAIR QUANTITIES
PIER 4

REPAIR Nº	ITEM Nº	ITEM TITLE	UNIT	QUANTITY
34	628001	REPAIR OF CONCRETE STRUCTURES BY EPOXY INJECTION	LF	29
37	628041	DEEP SPALL REPAIR	CF	11
41	613000	EPOXY CONCRETE SEALER	SF	674
41	613001	SILICONE-BASED ACRYLIC CONCRETE SEALER	SF	3790
M1	6285XY	FRP JACKET AND EPOXY GROUT CONCRETE PIER ENCASEMENT	SF	1250

NOTE: QUANTITIES SHOWN ARE TOTAL PER PIER AND DO NOT INCLUDE CONTINGENT PERCENTAGE.

NOTES:

1. THE LOCATION AND QUANTITIES OF THE REPAIRS SHOWN ON THIS DRAWING ARE BASED ON INSPECTION FIELD NOTES (SEE NOTE 11 ON DWG. PN-01) AND ARE APPROXIMATE AND DO REQUIRE VERIFICATION. PRIOR TO STARTING EACH REPAIR, THE LIMITS SHALL BE VERIFIED BY THE CONTRACTOR IN THE PRESENCE OF THE ENGINEER.
2. WHERE CRACKS AND SPALLS EXIST CONCURRENTLY, COMPLETE THE SPALL REPAIR COMPLETELY REMOVING THE ASSOCIATED CRACK. IF THE CRACK EXTENDS LESS THAN 1′-0″ BEYOND THE LIMITS OF THE SPALL REPAIR, EXTEND THE LIMITS OF THE SPALL REPAIR TO ENCOMPASS THE CRACK. IF THE CRACK EXTENDS DEEPER THAN THE LIMITS OF CONCRETE REMOVAL, THE CONTRACTOR SHALL REMOVE ADDITIONAL CONCRETE UNTIL THE CRACK IS FULLY REMOVED. IF THE DEPTH OF REMOVAL REACHES MORE THAN 6″ FROM THE ORIGINAL FACE OF CONCRETE, ALL WORK ON THE REPAIR SHALL STOP AND THE ENGINEER SHALL BE NOTIFIED IMMEDIATELY. IF THE CRACK EXTENDS MORE THAN 1′-0″ BEYOND THE LIMITS OF THE SPALL REPAIR INTO SOUND CONCRETE THE CRACK SHALL BE REPAIRED BY EPOXY INJECTION AND PAID FOR UNDER ITEM 628001 - REPAIR OF CONCRETE STRUCTURES BY EPOXY INJECTION BEYOND THE LIMITS OF THE SPALL REPAIR. CRACKS LOCATED WITHIN SPALL REPAIRS WILL NOT BE PAID FOR AND WILL BE CONSIDERED INCIDENTAL TO ITEM 628041 - DEEP SPALL REPAIR.
3. FOR CONCRETE REPAIR DETAILS, SEE DWG. PN-02.
4. EPOXY CONCRETE SEALER SHALL BE APPLIED TO THE BEAM SEATS AND BEARING PEDESTALS. PAYMENT WILL BE MADE UNDER ITEM 613000 - EPOXY CONCRETE SEALER. CONTRACTOR SHALL REMOVE DEBRIS FROM THE BEAM SEAT PRIOR TO APPLICATION OF EPOXY CONCRETE SEALER. PAYMENT FOR THIS WORK WILL BE INCIDENTAL TO ITEM 613000 - EPOXY CONCRETE SEALER.
5. CONTRACTOR SHALL TAKE CARE TO PROTECT THE BEARINGS DURING APPLICATION OF THE EPOXY CONCRETE SEALER. ANY CLEAN-UP REQUIRED TO REMOVE THE SEALER FROM THE BEARINGS WILL BE AT NO ADDITIONAL COST TO THE DEPARTMENT AND TO THE SATISFACTION OF THE ENGINEER.
6. SILICONE-BASED ACRYLIC CONCRETE SEALER SHALL BE APPLIED TO ALL EXPOSED CONCRETE PIER SURFACES THAT DO NOT REQUIRE EPOXY SEALER. PAYMENT WILL BE MADE UNDER ITEM 613001 - SILICONE-BASED ACRYLIC CONCRETE SEALER.
7. EPOXY CONCRETE SEALER AND SILICONE-BASED ACRYLIC CONCRETE SEALER SHALL ONLY BE APPLIED AFTER ALL CONCRETE REPAIRS ARE COMPLETED AT EACH PIER.
8. FOR FRP JACKET REPAIR DETAILS, SEE DWG. PR-13.

NOT FOR CONSTRUCTION

DELAWARE DEPARTMENT OF TRANSPORTATION

ADDENDUMS / REVISIONS

SCALE AS NOTED

REHABILITATION OF I-95 FROM I-495 TO NORTH OF BRANDYWINE RIVER BRIDGE

CONTRACT	BRIDGE NO.	1 744 059
T201407404	DESIGNED BY: BJM	
COUNTY		
NEW CASTLE	CHECKED BY: JRQ	

PIER 4 – CONCRETE REPAIR DETAILS (SOUTH ELEVATION)

1-744 PR-07

SHEET NO. 2-25

TOTAL SHTS. 2-731

\744PR_07.dgn
5/16/2019 5:35:24 PM

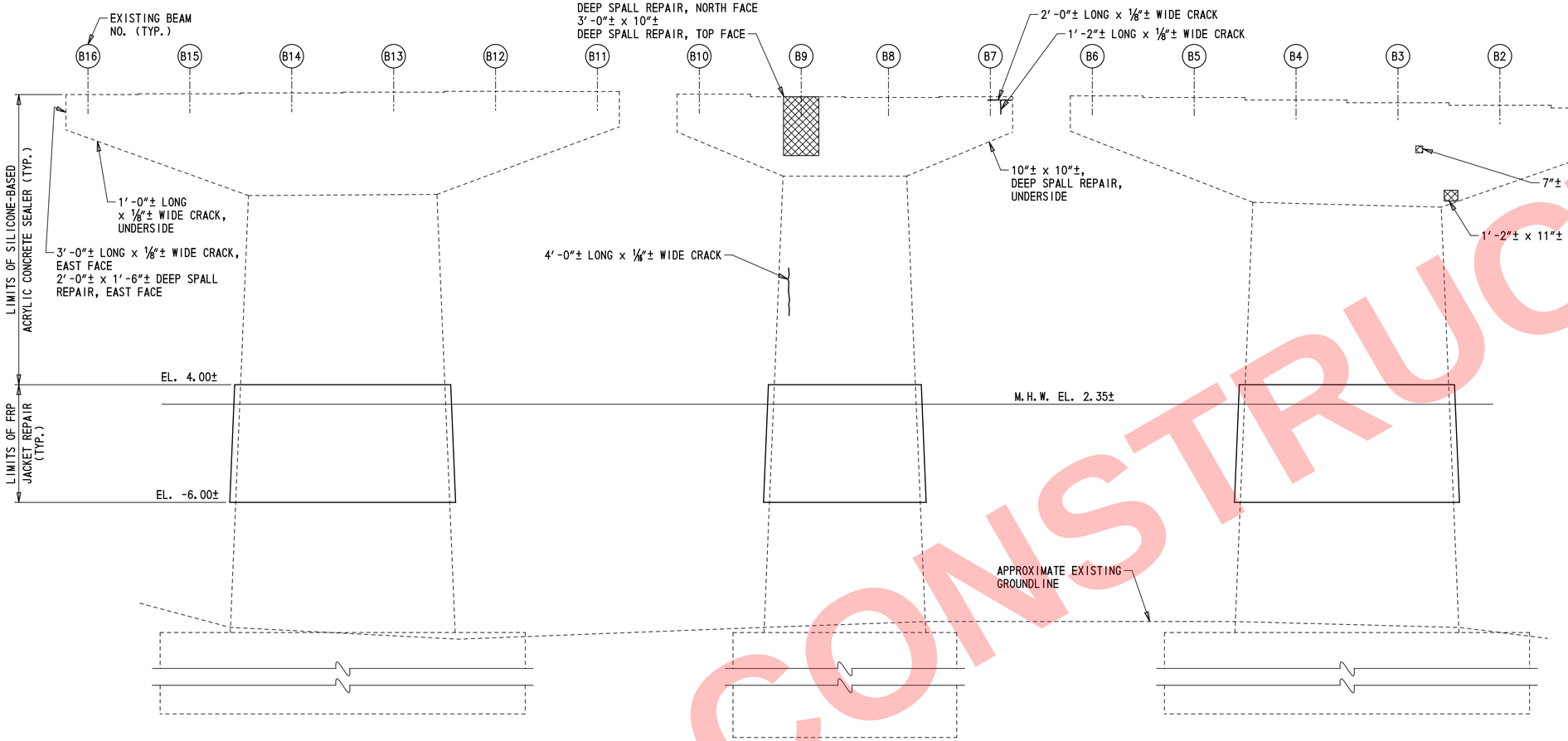

PIER 4N PIER 4W PIER 4S

PIER 4 - NORTH ELEVATION

3/16″ = 1′-0″

NOTE:
PILES NOT SHOWN FOR CLARITY.

LEGEND:

- REPAIR OF CONCRETE STRUCTURES BY EPOXY INJECTION
- DEEP SPALL REPAIR

NOTES:

1. THE LOCATION AND QUANTITIES OF THE REPAIRS SHOWN ON THIS DRAWING ARE BASED ON INSPECTION FIELD NOTES (SEE NOTE 11 ON DWG. PN-01) AND ARE APPROXIMATE AND DO REQUIRE VERIFICATION. PRIOR TO STARTING EACH REPAIR, THE LIMITS SHALL BE VERIFIED BY THE CONTRACTOR IN THE PRESENCE OF THE ENGINEER.
2. WHERE CRACKS AND SPALLS EXIST CONCURRENTLY, COMPLETE THE SPALL REPAIR COMPLETELY REMOVING THE ASSOCIATED CRACK. IF THE CRACK EXTENDS LESS THAN 1′-0″ BEYOND THE LIMITS OF THE SPALL REPAIR, EXTEND THE LIMITS OF THE SPALL REPAIR TO ENCOMPASS THE CRACK. IF THE CRACK EXTENDS DEEPER THAN THE LIMITS OF CONCRETE REMOVAL, THE CONTRACTOR SHALL REMOVE ADDITIONAL CONCRETE UNTIL THE CRACK IS FULLY REMOVED. IF THE DEPTH OF REMOVAL REACHES MORE THAN 6″ FROM THE ORIGINAL FACE OF CONCRETE, ALL WORK ON THE REPAIR SHALL STOP AND THE ENGINEER SHALL BE NOTIFIED IMMEDIATELY. IF THE CRACK EXTENDS MORE THAN 1′-0″ BEYOND THE LIMITS OF THE SPALL REPAIR INTO SOUND CONCRETE THE CRACK SHALL BE REPAIRED BY EPOXY INJECTION AND PAID FOR UNDER ITEM 628001 - REPAIR OF CONCRETE STRUCTURES BY EPOXY INJECTION BEYOND THE LIMITS OF THE SPALL REPAIR. CRACKS LOCATED WITHIN SPALL REPAIRS WILL NOT BE PAID FOR AND WILL BE CONSIDERED INCIDENTAL TO ITEM 628041 - DEEP SPALL REPAIR.
3. FOR CONCRETE REPAIR DETAILS, SEE DWG. PN-02.
4. EPOXY CONCRETE SEALER SHALL BE APPLIED TO THE BEAM SEATS AND BEARING PEDESTALS. PAYMENT WILL BE MADE UNDER ITEM 613000 - EPOXY CONCRETE SEALER. CONTRACTOR SHALL REMOVE DEBRIS FROM THE BEAM SEAT PRIOR TO APPLICATION OF EPOXY CONCRETE SEALER. PAYMENT FOR THIS WORK WILL BE INCIDENTAL TO ITEM 613000 - EPOXY CONCRETE SEALER.
5. CONTRACTOR SHALL TAKE CARE TO PROTECT THE BEARINGS DURING APPLICATION OF THE EPOXY CONCRETE SEALER. ANY CLEAN-UP REQUIRED TO REMOVE THE SEALER FROM THE BEARINGS WILL BE AT NO ADDITIONAL COST TO THE DEPARTMENT AND TO THE SATISFACTION OF THE ENGINEER.
6. SILICONE-BASED ACRYLIC CONCRETE SEALER SHALL BE APPLIED TO ALL EXPOSED CONCRETE PIER SURFACES THAT DO NOT REQUIRE EPOXY SEALER. PAYMENT WILL BE MADE UNDER ITEM 613001 - SILICONE-BASED ACRYLIC CONCRETE SEALER.
7. EPOXY CONCRETE SEALER AND SILICONE-BASED ACRYLIC CONCRETE SEALER SHALL ONLY BE APPLIED AFTER ALL CONCRETE REPAIRS ARE COMPLETED AT EACH PIER.
8. FOR FRP JACKET REPAIR DETAILS, SEE DWG. PR-13.
9. FOR CONCRETE REPAIR QUANTITIES TABLE, SEE DWG. PR-07.

NOT FOR CONSTRUCTION

DELAWARE DEPARTMENT OF TRANSPORTATION	ADDENDUMS / REVISIONS	SCALE AS NOTED	REHABILITATION OF I-95 FROM I-495 TO NORTH OF BRANDYWINE RIVER BRIDGE	CONTRACT T201407404 / COUNTY NEW CASTLE	BRIDGE NO. 1 744 059 / DESIGNED BY: BJM / CHECKED BY: JRQ	PIER 4 – CONCRETE REPAIR DETAILS (NORTH ELEVATION)

1-744 PR-08 | SHEET NO. 2-26 | TOTAL SHTS. 2-731

\\744PR_08.dgn 5/16/2019 8:38:24 PM

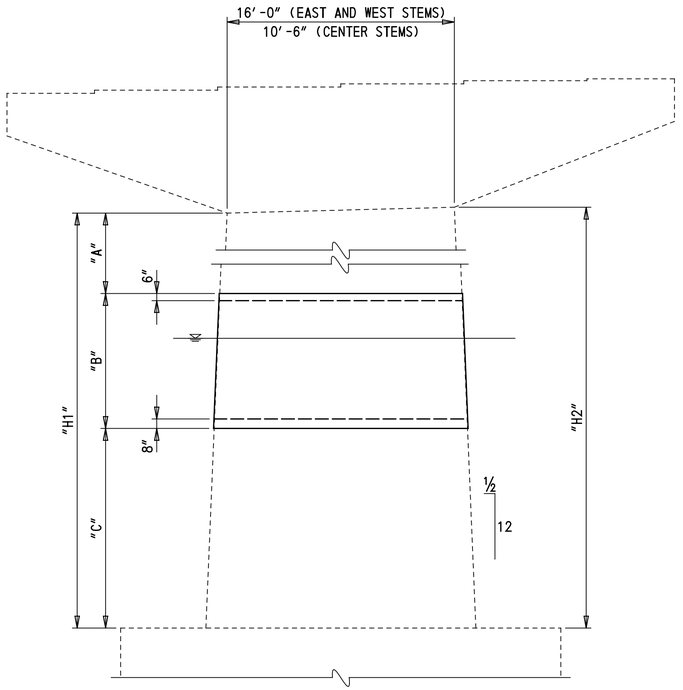

TYPICAL PIER - ELEVATION VIEW

3/16″ = 1′-0″

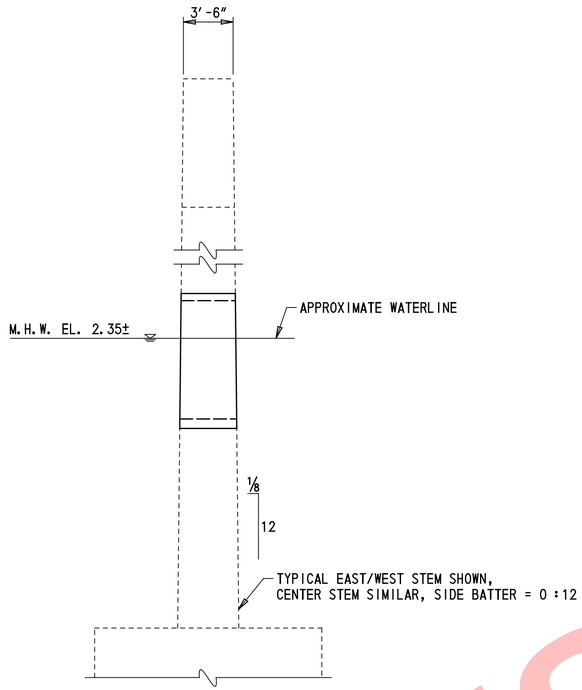

SIDE VIEW

3/16″ = 1′-0″

FRP JACKET REPAIR DIMENSION TABLE												
PIER DESIGNATION	PIER 2S	PIER 2W	PIER 2N	PIER 3S	PIER 3W	PIER 3N	PIER 4S	PIER 4W	PIER 4N	PIER 5S	PIER 5W	PIER 5N
PIER LOCATION	WEST	CENTER	EAST	WEST	CENTER	EAST	WEST	CENTER	EAST	WEST	CENTER	EAST
BOTTOM OF CAP (MIN EL.)	16.68	19.32	17.66	17.88	20.52	18.86	19.08	21.72	20.06	20.28	22.92	21.26
MIN. EL. LOCATION	W. END	-	E. END	W. END	-	E. END	W. END	-	E. END	W. END	-	E. END
TOP OF WRAP EL.	3.43	3.32	3.41	5.38	5.27	5.36	3.58	3.47	3.56	3.53	3.42	3.51
BOTTOM OF WRAP EL.	-7.57	-7.05	-5.55	-4.12	-3.98	-4.14	-6.17	-6.03	-6.19	-7.72	-4.08	-6.24
TOP OF FOOTING EL.	-8.55	-7.05	-5.55	-18.05	-17.05	-16.05	-17.05	-17.05	-17.05	-9.55	-10.05	-10.55
DIMENSION "H1" (FT)	25.23	26.37	23.31	35.93	37.57	35.01	36.13	38.77	37.22	29.83	32.97	31.92
DIMENSION "H2" (FT)	25.64	26.37	23.21	36.34	37.57	34.91	36.54	38.77	37.12	30.24	32.97	31.81
DIMENSION "A" (FT)	13.25	16.00	14.25	12.50	15.25	13.50	15.50	18.25	16.50	16.75	19.50	17.75
DIMENSION "B" (FT)	11.00	10.37	8.97	9.50	9.25	9.50	9.75	9.50	9.75	11.25	7.50	9.75
DIMENSION "C" (FT)	0.98	0.00	0.00	13.93	13.07	11.92	10.88	11.02	10.87	1.83	5.97	4.32

LEGEND:

- EPOXY GROUT
- COMPRESSIBLE SEALING STRIP
- ½″ STANDOFF

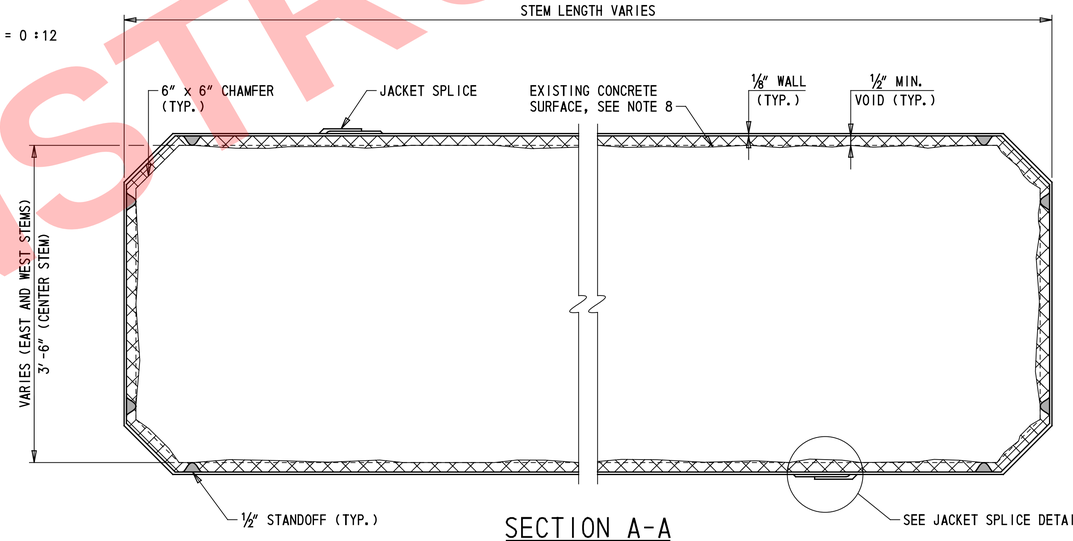

SECTION A-A

N.T.S

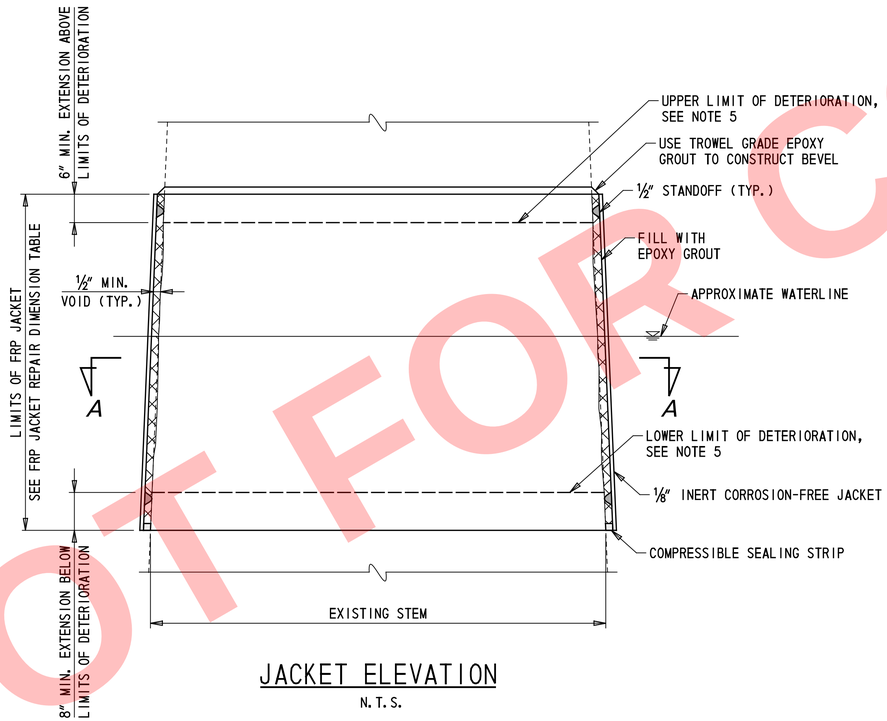

JACKET ELEVATION

N.T.S.

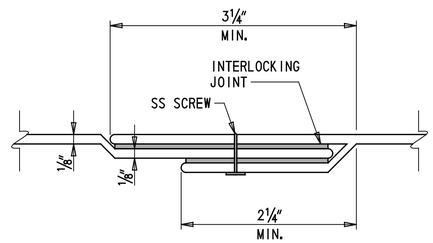

JACKET SPLICE DETAIL

12″ = 1′-0″

NOTES:

1. REFER TO TABLE FOR FRP JACKET LOCATIONS AND DIMENSIONS.
2. FOR PIER CONFIGURATION DETAILS, SEE DWGS. PR-01 THROUGH PR-12.
3. FOR REPAIR QUANTITIES AND CONTINGENCIES SEE DWG. PN-04 AND NOTE 11 ON DWG. PN-01.
4. EXISTING PIER DIMENSIONS SHOWN ARE BASED ON EXISTING PLANS DATED MAY 25, 1962 AND AUGUST 23, 1977.
5. LIMITS OF DETERIORATION PER UNDERWATER INSPECTION REPORT DATED JANUARY 20, 2015.
6. CONTRACTOR TO FIELD VERIFY PIER DIMENSIONS AND LIMITS OF REPAIR.
7. THE CONTRACTOR SHALL SUBMIT WORKING DRAWINGS OF FRP JACKET REPAIRS FOR APPROVAL.
8. CLEAN EXISTING CONCRETE SURFACE AND EXPOSED REINFORCEMENT PRIOR TO PLACING FRP JACKET AND EPOXY GROUT IN ACCORDANCE WITH ITEM 6285XY - FRP JACKET AND EPOXY GROUT CONCRETE PIER ENCASEMENT.

NOT FOR CONSTRUCTION

DELAWARE
DEPARTMENT OF TRANSPORTATION

ADDENDUMS / REVISIONS

SCALE AS NOTED

REHABILITATION OF I-95
FROM I-495 TO NORTH OF
BRANDYWINE RIVER BRIDGE

CONTRACT	BRIDGE NO. 1 744 059
T201407404	DESIGNED BY: BSD
COUNTY	CHECKED BY: JRQ
NEW CASTLE	

FRP JACKET
REPAIR DETAILS

1-744
PR-13

SHEET NO. 2-31
TOTAL SHTS. 2-731

\744PR-13.dgn
5/16/2019 9:35:25 PM

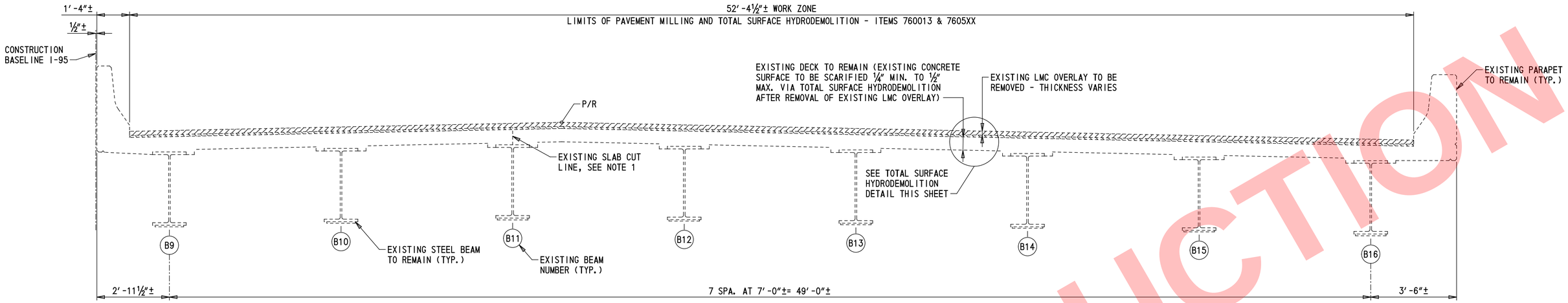

LIMITS OF DEMOLITION - STAGE 2

(STAGE 3 OPPOSITE HAND)

½″ = 1′-0″

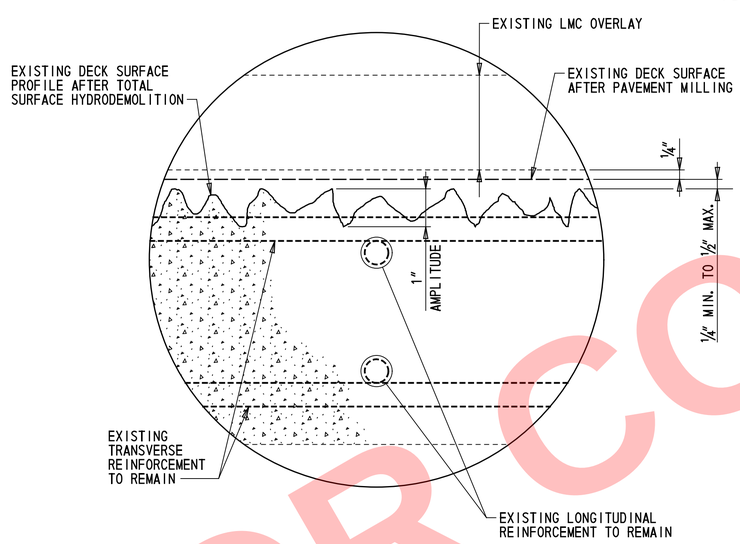

HYDRODEMOLITION AMPLITUDE DETAIL

6″ = 1′-0″

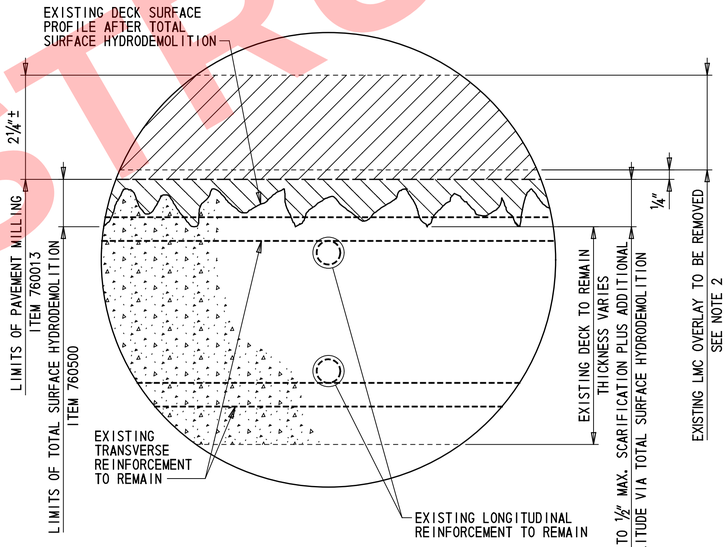

TOTAL SURFACE HYDRODEMOLITION DETAIL

6″ = 1′-0″

SUGGESTED SEQUENCE OF CONSTRUCTION:

THIS SEQUENCE OF CONSTRUCTION REPRESENTS THE GENERAL ORDER OF OPERATIONS REQUIRED TO PLACE THE PROPOSED OVERLAY. IT IS NOT INTENDED TO REPRESENT ALL ACTIVITIES NECESSARY TO COMPLETE THE WORK AS SPECIFIED. THE CONTRACTOR MAY ALTER THIS SUGGESTED SEQUENCE AND THE REMOVAL AND RECONSTRUCTION LIMITS SUBJECT TO PRIOR APPROVAL BY THE ENGINEER.

1. INSTALL TEMPORARY WORKS INCLUDING PROTECTIVE SHIELDS, ETC. AS NECESSARY TO PROTECT THE WORK ZONE AND AREAS UNDER AND ADJACENT TO THE CONSTRUCTION.
2. REMOVE EXISTING LMC OVERLAY VIA PAVEMENT MILLING WITHIN THE LIMITS OF TOTAL SURFACE HYDRODEMOLITION AS SHOWN.
3. PERFORM TOTAL SURFACE HYDRODEMOLITION TO THE LIMITS SHOWN.
4. PLACE NEW LMC OVERLAY.

LEGEND:

- LIMITS OF REMOVAL, PAVEMENT MILLING (ITEM 760013)
- LIMITS OF REMOVAL, HYDRODEMOLITION (ITEM 7605XX)

DEMOLITION NOTES:

1. RECALIBRATION OF THE HYDRODEMOLITION EQUIPMENT MAY BE REQUIRED BETWEEN THE ORIGINAL AND WIDENED PORTIONS OF THE STRUCTURE AT EXISTING SLAB CUT LINE.
2. THICKNESS OF EXISTING LMC OVERLAY VARIES. DECK CORES DEPICTING THE OVERLAY THICKNESS WERE TAKEN IN NOVEMBER/DECEMBER 2014. THE CORING REPORT IS INCLUDED WITH THE CONTRACT DOCUMENTS.
3. VEHICLES AND EQUIPMENT SHOULD BE KEPT OFF OF AREAS OF THE DECK THAT HAVE RECEIVED TOTAL SURFACE HYDRODEMOLITION AS MUCH AS REASONABLY POSSIBLE - ONLY EQUIPMENT NECESSARY TO COMPLETE THE WORK WILL BE ALLOWED ON THOSE AREAS.

NOT FOR CONSTRUCTION

DELAWARE DEPARTMENT OF TRANSPORTATION	ADDENDUMS / REVISIONS	SCALE AS NOTED	REHABILITATION OF I-95 FROM I-495 TO NORTH OF BRANDYWINE RIVER BRIDGE	CONTRACT T201407404	BRIDGE NO. 1 744 059	MILLING AND HYDRODEMOLITION DETAILS	1-744 DM-01
				COUNTY NEW CASTLE	DESIGNED BY: BSD		SHEET NO. 2-32
					CHECKED BY: JRQ		TOTAL SHTS. 2-731

\\Bridge 1-744\744DM_01.dgn
5/16/2019 5:35:28 PM

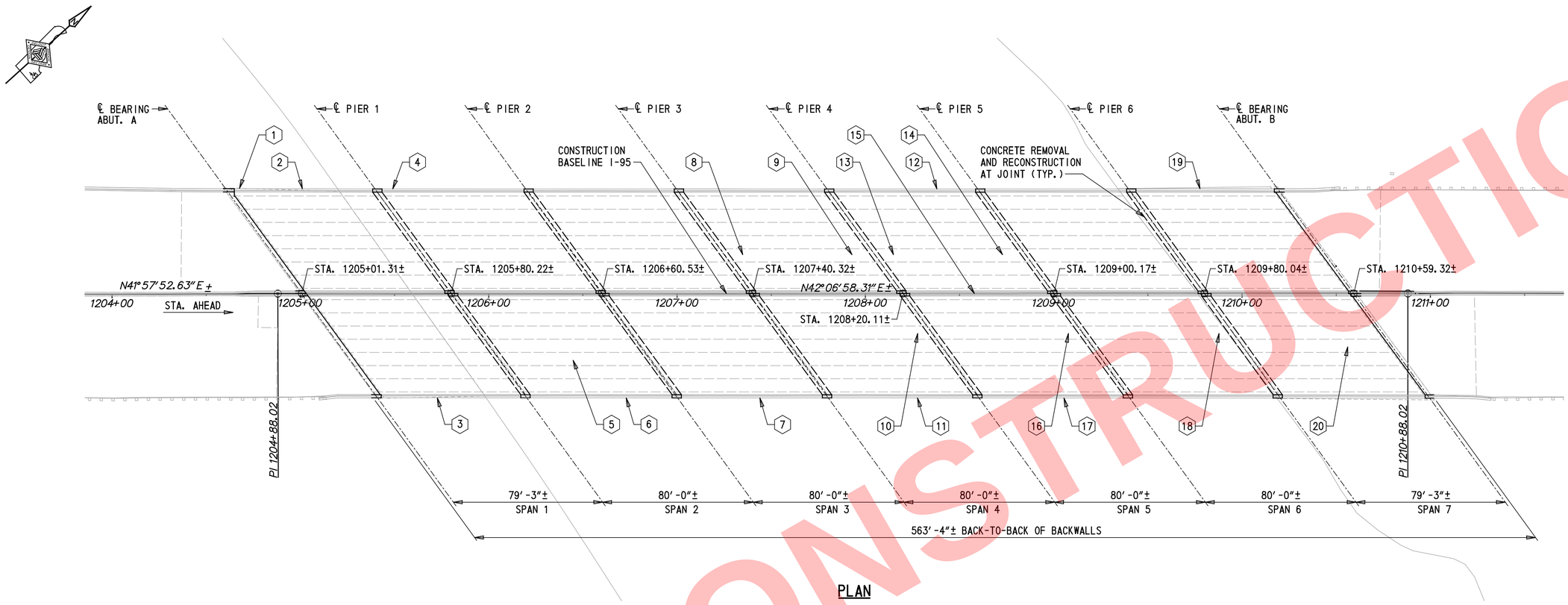

PLAN

KEY:

(1) SOFFIT REPAIR DEFECT NUMBER

CONCRETE SOFFIT REPAIRS

DEFECT №	LOCATION	QUANTITY OF REPAIRS	DEEP SPALL REPAIR SIZE
1	SPAN 1, WEST OVERHANG, NEAR PIER 1	1 EACH	2'-0"± x 2'-0"±
2	SPAN 1, WEST OVERHANG, RANDOM THROUGHOUT SPAN	8 EACH	6"± x 6"±
3	SPAN 1, EAST OVERHANG, RANDOM THROUGHOUT SPAN	8 EACH	6"± x 6"±
4	SPAN 2, WEST OVERHANG, NEAR PIER 1	1 EACH	1'-6"± x 1'-4"±
5	SPAN 2, BAY 13, MIDSPAN	1 EACH	1'-0"± x 3"±
6	SPAN 2, EAST OVERHANG, RANDOM THROUGHOUT SPAN	2 EACH	6"± x 6"±
7	SPAN 3, EAST FACE OF DECK	2 EACH	6"± x 6"±
8	SPAN 4, BAY 5, NEAR PIER 3	1 EACH	1'-3"± x 10"±
9	SPAN 4, BAY 5, NEAR PIER 4	1 EACH	1'-0"± x 1'-0"±
10	SPAN 4, BAY 11, NEAR PIER 4	1 EACH	1'-6"± x 1'-0"±
11	SPAN 4, EAST OVERHANG, RANDOM THROUGHOUT SPAN	4 EACH	6"± x 6"±
12	SPAN 5, WEST OVERHANG, NEAR PIER 5	1 EACH	3'-0"± x 2'-0"±
13	SPAN 5, BAY 5, NEAR PIER 4	1 EACH	1'-6"± x 1'-6"±
14	SPAN 5, BAY 5, NEAR PIER 5	1 EACH	1'-3"± x 1'-3"±
15	SPAN 5, BAY 8, MIDSPAN	1 EACH	2'-0"± x 6"±
16	SPAN 5, BAY 11, NEAR PIER 5	1 EACH	1'-1"± x 6"±
17	SPAN 5, EAST OVERHANG, MIDSPAN	1 EACH	2'-0"± x 2'-0"±
18	SPAN 6, BAY 11, NEAR PIER 6	1 EACH	1'-3"± x 5"±
19	SPAN 7, WEST FACE OF DECK	1 EACH	6"± x 6"±
20	SPAN 7, BAY 12, 2/3 SPAN	1 EACH	3'-0"± x 2'-6"±

NOTES:

1. THE LOCATION AND QUANTITIES OF THE REPAIRS SHOWN ON THIS DRAWING ARE BASED ON INSPECTION FIELD NOTES (SEE NOTE 11 ON DWG. PN-01). PRIOR TO STARTING EACH REPAIR, THE LIMITS SHALL BE VERIFIED BY THE CONTRACTOR IN THE PRESENCE OF THE ENGINEER.
2. FOR CONCRETE REPAIR DETAILS, SEE DWG. PN-02.
3. SILICONE-BASED ACRYLIC CONCRETE SEALER SHALL BE APPLIED TO ALL EXPOSED CONCRETE SURFACES OF THE EXTERIOR PARAPETS, EXTERIOR OVERHANGS AND THE MEDIAN PARAPETS AS SHOWN ON DWG. TS-01. PAYMENT WILL BE MADE UNDER ITEM 613001 - SILICONE-BASED ACRYLIC CONCRETE SEALER.
4. SILICONE-BASED ACRYLIC CONCRETE SEALER SHALL ONLY BE APPLIED AFTER ALL CONCRETE REPAIRS ARE COMPLETED ON EACH SPAN.

NOT FOR CONSTRUCTION

DELAWARE DEPARTMENT OF TRANSPORTATION

ADDENDUMS / REVISIONS

SCALE 0 30 60 90 FEET

REHABILITATION OF I-95 FROM I-495 TO NORTH OF BRANDYWINE RIVER BRIDGE

CONTRACT	BRIDGE NO.	1 744 059
T201407404	DESIGNED BY: BSD	
COUNTY	CHECKED BY: JRQ	
NEW CASTLE		

SOFFIT REPAIR PLAN

1-744 SO-01
SHEET NO. 2-35
TOTAL SHTS. 2-731

\744SO_01.dgn 5/16/2019 9:35:27 PM

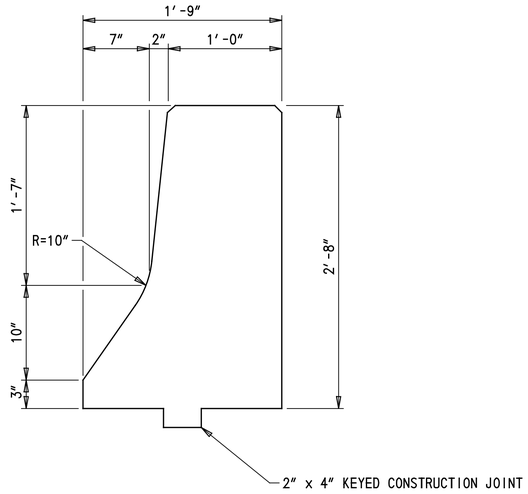

EXTERIOR PARAPET - APPROACH SLAB DETAIL

1½″ = 1′-0″

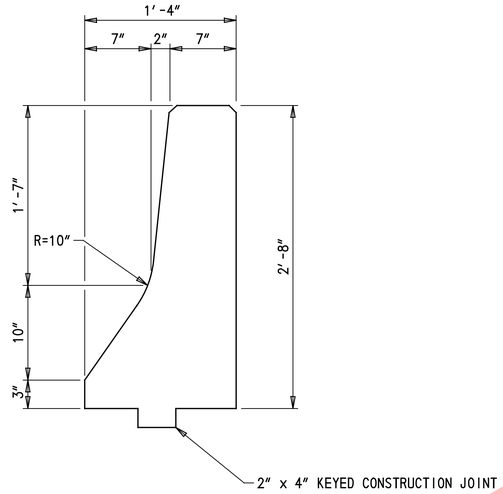

MEDIAN PARAPET - APPROACH SLAB DETAIL

1½″ = 1′-0″

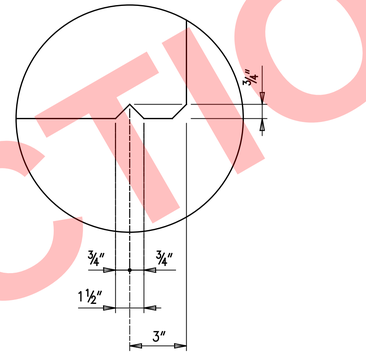

MEDIAN PARAPET - DRIP NOTCH DETAIL

3″ = 1′-0″

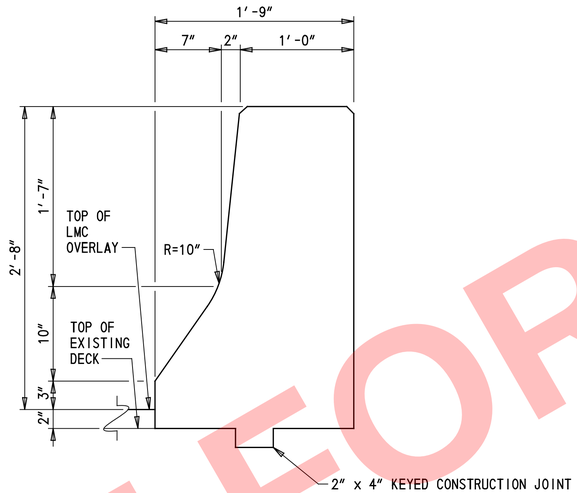

EXTERIOR PARAPET - BRIDGE DETAIL

1½″ = 1′-0″

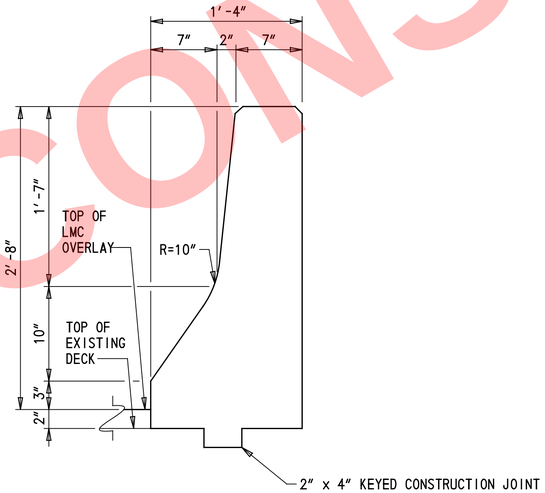

MEDIAN PARAPET - BRIDGE DETAIL

1½″ = 1′-0″

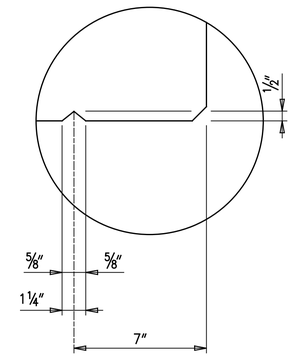

EXTERIOR PARAPET - DRIP NOTCH DETAIL

3″ = 1′-0″

NOT FOR CONSTRUCTION

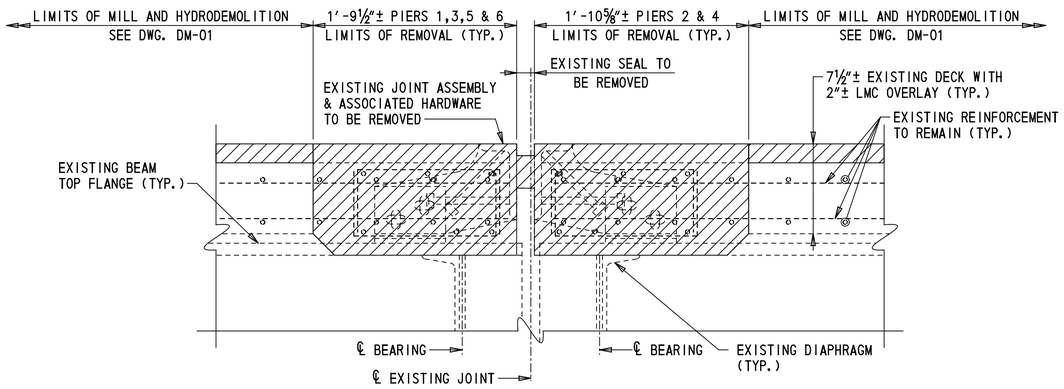

REMOVAL DETAIL - ALL PIERS

(SHOWN ALONG SKEW)
1½" = 1'-0"

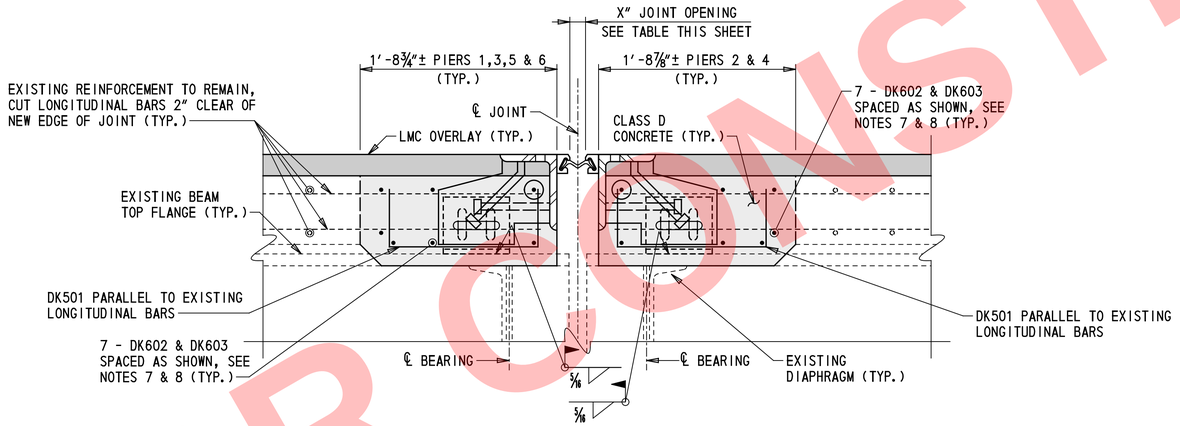

JOINT DETAILS - ALL PIERS

(SHOWN ALONG SKEW)
1½" = 1'-0"

JOINT RECONSTRUCTION NOTES:

1. NEW STRIP SEAL ASSEMBLY SHOWN FOR GRAPHICAL PURPOSES ONLY. DETAILS MAY VARY BY MANUFACTURER. STRIP SEAL AND ASSEMBLY SHALL BE IN ACCORDANCE WITH ITEM 624000 - PREFABRICATED EXPANSION JOINT SYSTEM, 3".
2. CLASS D CONCRETE SHALL BE IN ACCORDANCE WITH ITEM 610017 - P.C.C. MASONRY, SUPERSTRUCTURE, CLASS D. CLEAN AND APPLY EPOXY BONDING COMPOUND TO ALL REMOVAL AND ROUGHENED SURFACES PRIOR TO PLACING CONCRETE. COST FOR THIS WORK WILL BE INCIDENTAL TO ITEM 610017.
3. EXISTING BARS TO REMAIN SHALL BE CLEANED IN ACCORDANCE WITH SECTION 628.03(E)7. BARS WITH CORROSION, BROKEN, OR WITH INADEQUATE BOND SHALL BE REPAIRED IN ACCORDANCE WITH SECTION 628.03(E)7. PAYMENT FOR THIS WORK WILL BE INCIDENTAL TO ITEM 624000 - PREFABRICATED EXPANSION JOINT SYSTEM, 3".
4. ALL NEW REINFORCING STEEL REQUIRED TO COMPLETE THE JOINT HEADER REPAIRS SHALL HAVE 2" MIN. CONCRETE COVER UNLESS SHOWN OTHERWISE. PAYMENT FOR ALL NEW REINFORCING STEEL SHALL BE UNDER ITEM 611000 - BAR REINFORCEMENT.
5. THE CONTRACTOR SHALL USE CARE DURING THE REMOVAL OF THE EXISTING CONCRETE AND PORTIONS OF THE JOINT SYSTEM TO AVOID DAMAGE TO THE EXISTING PORTIONS OF THE STRUCTURE THAT ARE TO REMAIN IN PLACE. ANY DAMAGE INCURRED TO EXISTING PORTIONS OF THE STRUCTURE TO REMAIN SHALL BE REPAIRED BY THE CONTRACTOR TO COMPLETE SATISFACTION OF THE ENGINEER AT NO ADDITIONAL COST TO THE DEPARTMENT.
6. PRIOR TO REMOVAL OF THE EXISTING ROADWAY JOINT AND FABRICATION OF THE PROPOSED ROADWAY MATERIALS, THE CONTRACTOR SHALL FIELD VERIFY THE CROSS SLOPE OF THE ROADWAY AT EACH INDIVIDUAL JOINT LOCATION.
7. EXISTING LONGITUDINAL AND TRANSVERSE DECK STEEL REINFORCEMENT PARALLEL TO THE BASELINE TO REMAIN. EXISTING REINFORCEMENT PARALLEL TO THE JOINT TO BE REMOVED.
8. SPLICE DK601 AND DK602 BARS ALONG JOINT. MINIMUM SPLICE LENGTH = 2'-3".

LEGEND:

- REMOVAL LIMITS
- PROPOSED CONSTRUCTION
- PROPOSED LMC OVERLAY

DECK JOINT OPENINGS

LOCATION	TEMPERATURE (°F)										MOVEMENT CLASSIFICATION
	20	30	40	50	60	68	70	80	90	100	
PIER 1,3,5	2 1/16"	2 1/16"	1 15/16"	1 7/8"	1 3/4"	1 11/16"	1 5/8"	1 1/4"	1 7/16"	1 3/8"	3"
PIER 2,4	1 5/8"	1 5/8"	1 5/8"	1 5/8"	1 5/8"	1 5/8"	1 5/8"	1 5/8"	1 5/8"	1 5/8"	3"
PIER 6	1 15/16"	1 7/8"	1 7/8"	1 13/16"	1 3/4"	1 11/16"	1 11/16"	1 5/8"	1 5/8"	1 1/16"	3"

NOTES:

1. FOR JOINT ASSEMBLY DETAIL AND STRIP SEAL EXPANSION JOINT NOTES, SEE DWG. EX-02.
2. FOR PARAPET RECONSTRUCTION AT JOINTS, SEE DWG. EX-04.
3. FOR TYPICAL JOINT PLAN, SEE DWG. EX-03.

NOT FOR CONSTRUCTION

DELAWARE
DEPARTMENT OF TRANSPORTATION

ADDENDUMS / REVISIONS

SCALE AS NOTED

REHABILITATION OF I-95
FROM I-495 TO NORTH OF
BRANDYWINE RIVER BRIDGE

CONTRACT	BRIDGE NO. 1 744 059
T201407404	DESIGNED BY: BSD
COUNTY: NEW CASTLE	CHECKED BY: CWM

EXPANSION JOINT
DETAILS - 1

1-744 EX-01	
SHEET NO.	2-37
TOTAL SHTS.	2-731

\\Bridges 1-744\1744EX_01.dgn
5/18/2019 5:35:28 PM

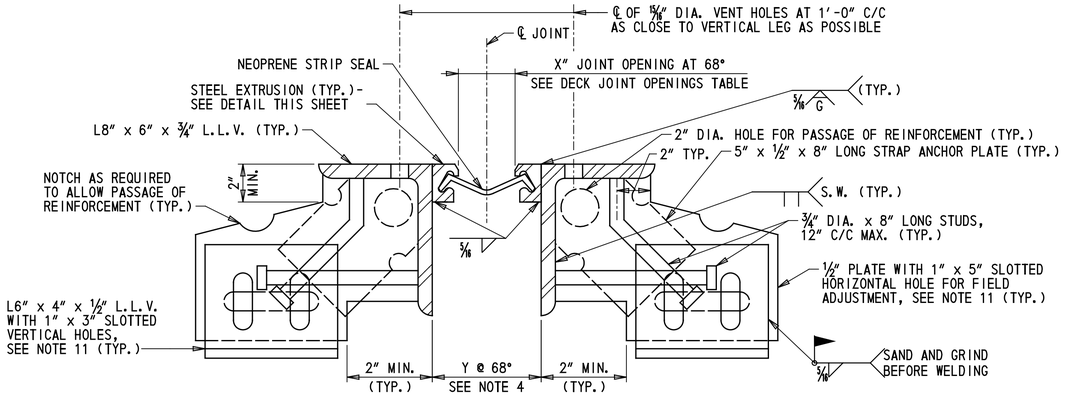

JOINT ASSEMBLY DETAIL

3" = 1'-0"

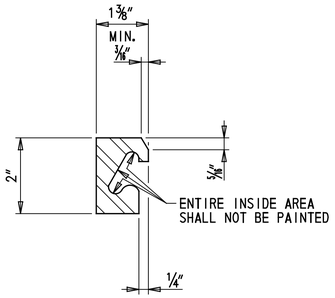

STEEL EXTRUSION DETAIL

6" = 1'-0"

STRIP SEAL EXPANSION JOINT NOTES:

1. STEEL FOR DECK JOINTS AND STEEL EXTRUSIONS SHALL BE AASHTO M270, GR. 36 (ASTM A36) AT MINIMUM.
2. NEOPRENE EXTRUSION TO MEET D-2628-81 MODIFIED, (RECOVERY TESTS EXCLUDED).
3. THE EXPANSION JOINT SHALL BE CAPABLE OF SEALING THE DECK TO PREVENT MOISTURE AND OTHER CONTAMINANTS FROM DESCENDING THROUGH THE JOINT.
4. THE CONTRACTOR SHALL ADJUST THE OPEN JOINT (Y) AS REQUIRED BY THE WIDTH OF THE STEEL EXTRUSION USED SO AS TO PROVIDE A X" JOINT OPENING AT 68°F.
5. THE STRIP SEAL SHALL BE INSTALLED IN ONE PIECE ACROSS THE BRIDGE WIDTH. SPLICING OF THE STRIP SEAL IS NOT PERMITTED.
6. THE EXPANSION JOINT SYSTEM WILL BE PAID FOR UNDER ITEM 624000 - PREFABRICATED EXPANSION JOINT SYSTEM, 3".
7. STEEL EXTRUSIONS SHALL BE HOT-DIP GALVANIZED. ENTIRE EXPANSION DAM SHALL BE PAINTED AFTER FABRICATION USING URETHANE SYSTEM. COLOR OF PAINT SYSTEM TO BE APPLIED SHALL MATCH THE COLOR OF THE PROPOSED PAINT SYSTEM FOR THE EXISTING STEEL STRUCTURE.
8. LUBRICANT-ADHESIVE FOR USE IN INSTALLING AND BONDING NEOPRENE SEAL ELEMENTS TO STEEL JOINT COMPONENTS SHALL BE A ONE QUART MOISTURE CURING POLYURETHANE AND HYDROCARBON SOLVENT MIXTURE HAVING THE FOLLOWING PHYSICAL PROPERTIES:

AVERAGE WEIGHT, POUNDS PER GALLON	8±10%
SOLIDS CONTENT	65%
ADHESIVE SHALL REMAIN LIQUID FROM	5°F TO 120°F
FILM STRENGTH, AS PER ASTM D-412	2,000 PSI
ELONGATION	250%

9. HOLES SHALL BE PLACED IN THE RIB PLATES AND STRAP ANCHORS PLATES FOR BAR REINFORCEMENT. IF THIS IS DONE IN THE FIELD AN APPROVED EPOXY-BONDED PAINT SHALL BE USED TO TOUCH-UP THE HOLES. PAYMENT INCIDENTAL TO ITEM 624000 - PREFABRICATED EXPANSION JOINT SYSTEM, 3".
10. ANCHOR PLATE AND STEEL EXTRUSION SHALL BE WELDED TO WATERTIGHT AT SPLICE JOINTS. PAYMENT INCIDENTAL TO ITEM 624000 - PREFABRICATED EXPANSION JOINT SYSTEM, 3".
11. IF WELD OPTION IS PROPOSED, SLOTTED HOLES IN 1/2" PLATE AND L6" x 4" x 1/2" MAY BE OMITTED.
12. AT AREAS WHERE STEEL MEMBERS ARE TO BE SPLICED, USE OF COMPLETE JOINT PENETRATION (CJP) AND PARTIAL JOINT PENETRATION (PJP) WELD ARE BOTH PERMITTED. THE THICKNESS OF PJP WELD MUST BE MINIMUM HALF OF THE STEEL MEMBER THICKNESS.
13. SEE TYPICAL JOINT PLAN ON DWG. EX-03 FOR LAYOUT OF L6" x 4" x 1/2" AND STRAP ANCHORS.

NOTES:

1. FOR DECK JOINT OPENINGS TABLE, SEE DWG. EX-01.

NOT FOR CONSTRUCTION

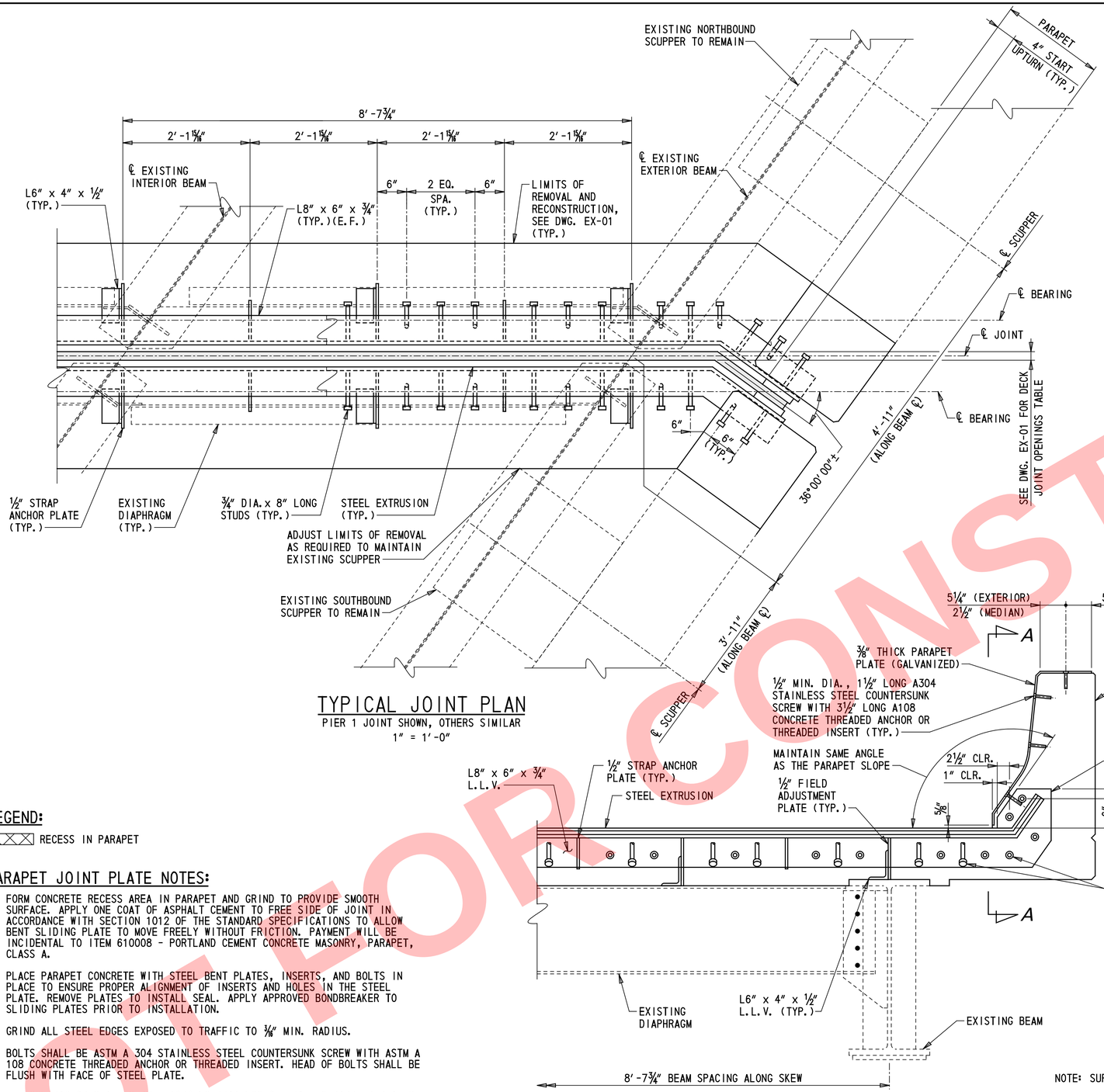

TYPICAL JOINT PLAN

PIER 1 JOINT SHOWN, OTHERS SIMILAR
1" = 1'-0"

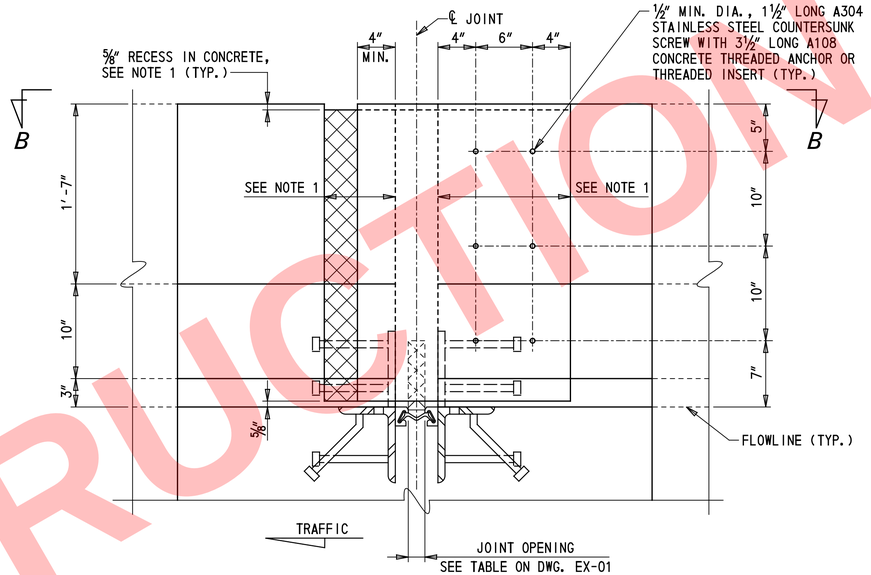

VIEW A-A

1½" = 1'-0"

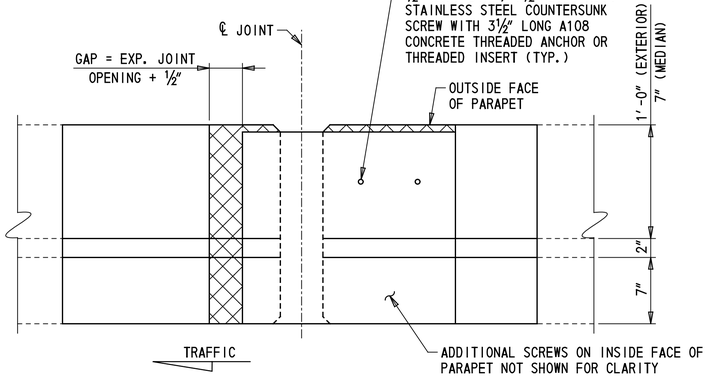

VIEW B-B

1½" = 1'-0"

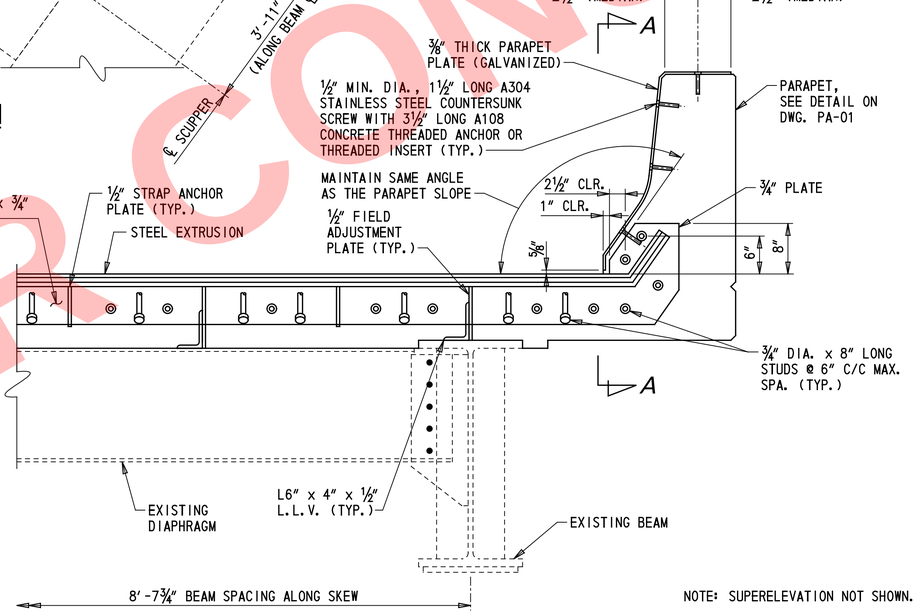

TYPICAL SECTION AT JOINT

SHOWN ALONG CENTERLINE OF JOINT
1" = 1'-0"

NOTE: SUPERELEVATION NOT SHOWN.

LEGEND:

RECESS IN PARAPET

PARAPET JOINT PLATE NOTES:

1. FORM CONCRETE RECESS AREA IN PARAPET AND GRIND TO PROVIDE SMOOTH SURFACE. APPLY ONE COAT OF ASPHALT CEMENT TO FREE SIDE OF JOINT IN ACCORDANCE WITH SECTION 1012 OF THE STANDARD SPECIFICATIONS TO ALLOW BENT SLIDING PLATE TO MOVE FREELY WITHOUT FRICTION. PAYMENT WILL BE INCIDENTAL TO ITEM 610008 - PORTLAND CEMENT CONCRETE MASONRY, PARAPET, CLASS A.
2. PLACE PARAPET CONCRETE WITH STEEL BENT PLATES, INSERTS, AND BOLTS IN PLACE TO ENSURE PROPER ALIGNMENT OF INSERTS AND HOLES IN THE STEEL PLATE. REMOVE PLATES TO INSTALL SEAL. APPLY APPROVED BONDBREAKER TO SLIDING PLATES PRIOR TO INSTALLATION.
3. GRIND ALL STEEL EDGES EXPOSED TO TRAFFIC TO ⅜" MIN. RADIUS.
4. BOLTS SHALL BE ASTM A 304 STAINLESS STEEL COUNTERSUNK SCREW WITH ASTM A 108 CONCRETE THREADED ANCHOR OR THREADED INSERT. HEAD OF BOLTS SHALL BE FLUSH WITH FACE OF STEEL PLATE.
5. THE CONTRACTOR SHALL SUBMIT WORKING DRAWINGS OF TRAFFIC BARRIER PLATES FOR APPROVAL.
6. FOR ADDITIONAL JOINT NOTES AND DETAILS, SEE DWGS. EX-01 AND EX-02.
7. PAYMENT FOR PARAPET JOINT PLATES AND PARTIAL REMOVAL OF PARAPET FOR JOINT RECONSTRUCTION WILL BE INCIDENTAL TO ITEM 624000 - PREFABRICATED EXPANSION JOINT SYSTEM, 3".

NOT FOR CONSTRUCTION

DELAWARE DEPARTMENT OF TRANSPORTATION	ADDENDUMS / REVISIONS	SCALE AS NOTED	REHABILITATION OF I-95 FROM I-495 TO NORTH OF BRANDYWINE RIVER BRIDGE	CONTRACT T201407404	BRIDGE NO. 1 744 059	EXPANSION JOINT DETAILS – 3	1-744 EX-03
				COUNTY NEW CASTLE	DESIGNED BY: BSD		SHEET NO. 2-39
					CHECKED BY: CWM		TOTAL SHTS. 2-731

\Bridges 1-744\744EX_03.dgn
5/16/2019 5:35:29 PM

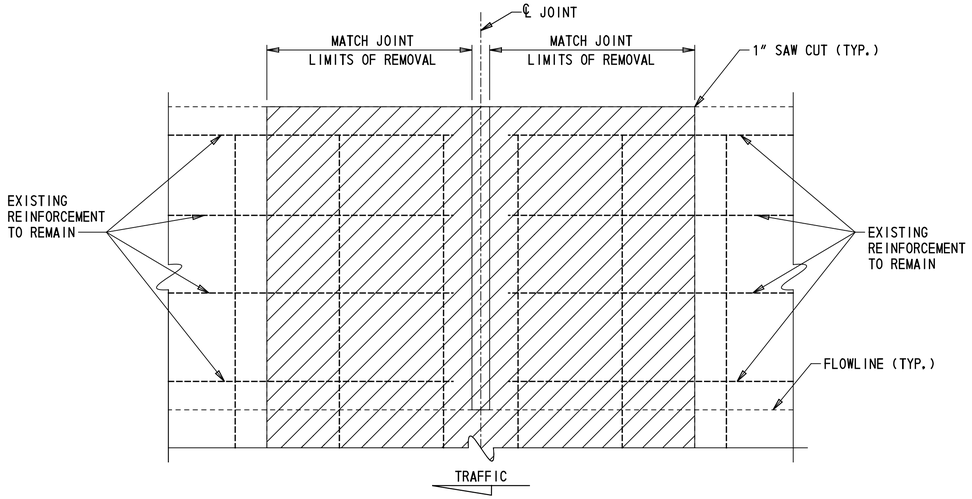

PARAPET REMOVAL AT EXPANSION JOINTS

1½" = 1'-0"

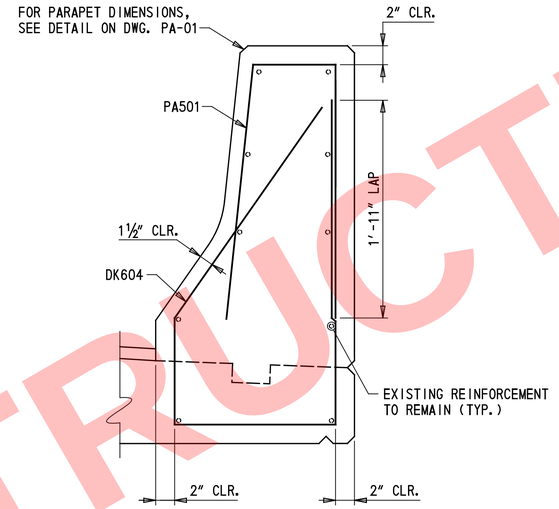

EXTERIOR PARAPET DETAIL AT EXPANSION JOINTS

1½" = 1'-0"

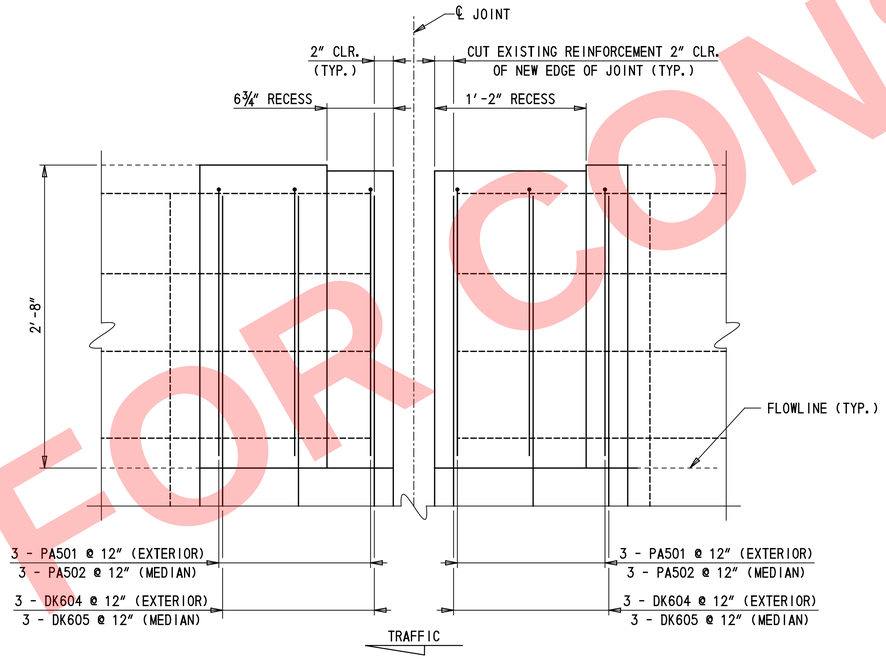

PARAPET RECONSTRUCTION AT EXPANSION JOINTS

1½" = 1'-0"

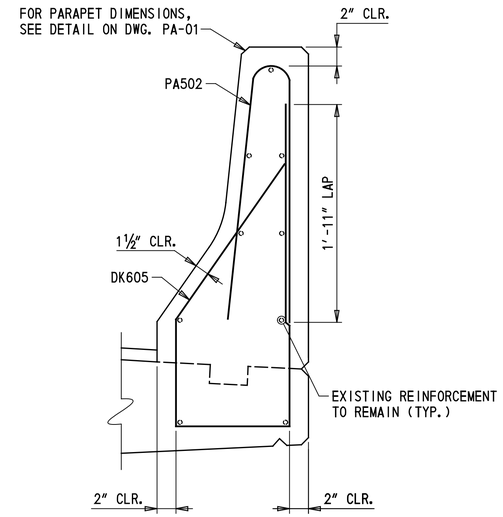

MEDIAN PARAPET DETAIL AT EXPANSION JOINTS

1½" = 1'-0"

NOTES:

1. FOR ADDITIONAL JOINT NOTES AND DETAILS, SEE DWGS. EX-01 THROUGH EX-03.

LEGEND:

REMOVAL LIMITS

NOT FOR CONSTRUCTION

\\Bridge 1-744\744EX_04.dgn
5/16/2019 5:39:30 PM

DELAWARE DEPARTMENT OF TRANSPORTATION	ADDENDUMS / REVISIONS	SCALE AS NOTED	REHABILITATION OF I-95 FROM I-495 TO NORTH OF BRANDYWINE RIVER BRIDGE	CONTRACT T201407404	BRIDGE NO. 1 744 059	EXPANSION JOINT DETAILS – 4
				COUNTY NEW CASTLE	DESIGNED BY: BSD	
					CHECKED BY: CWM	

1-744 EX-04
SHEET NO. 2-40
TOTAL SHTS. 2-731

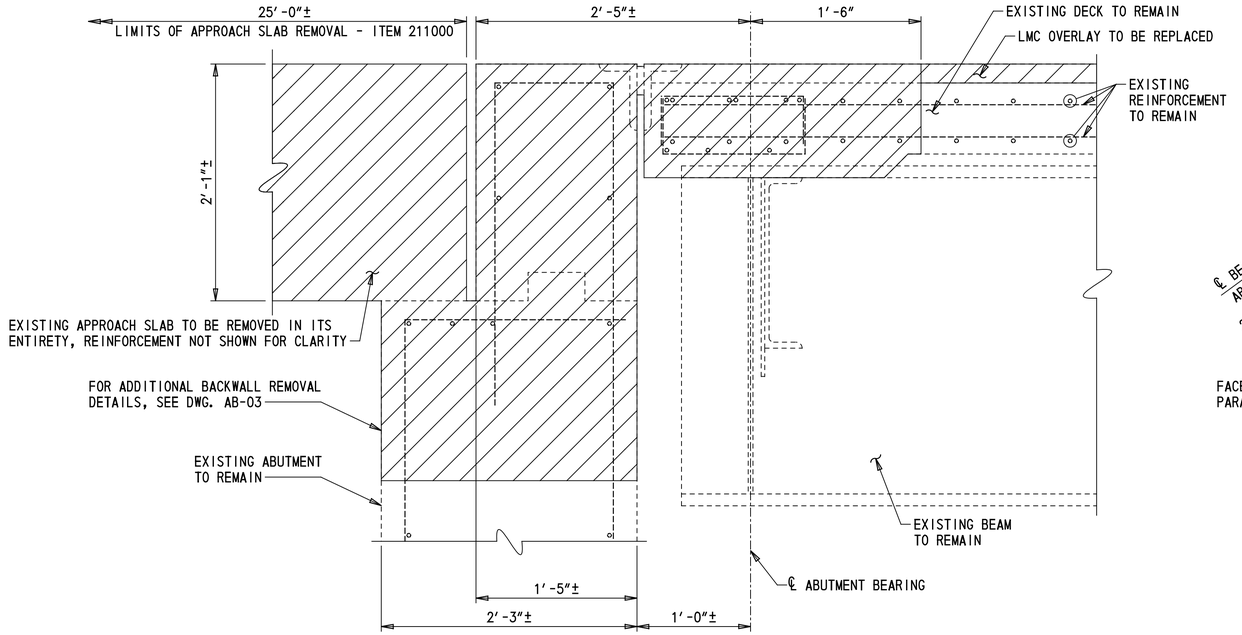

ABUTMENT JOINT REMOVAL DETAIL

1½″ = 1′-0″

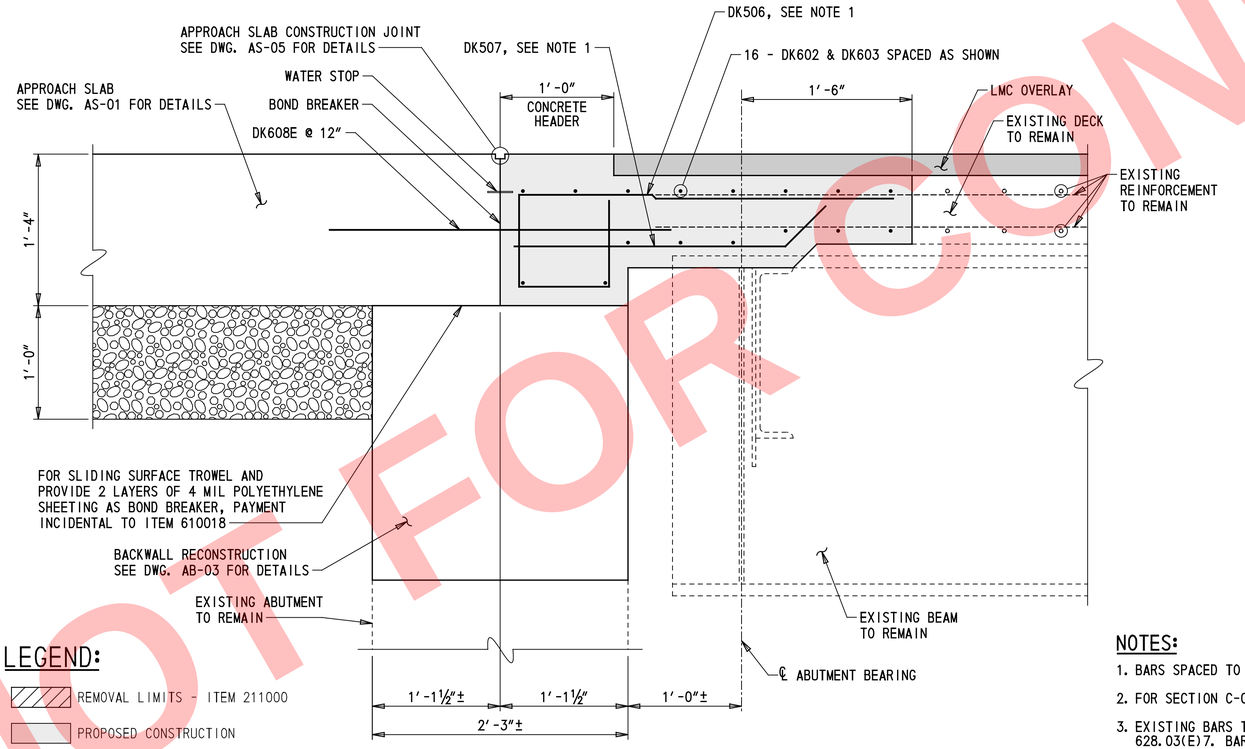

DECK OVER DETAIL

1½″ = 1′-0″

LEGEND:

- REMOVAL LIMITS - ITEM 211000
- PROPOSED CONSTRUCTION
- PROPOSED LMC OVERLAY

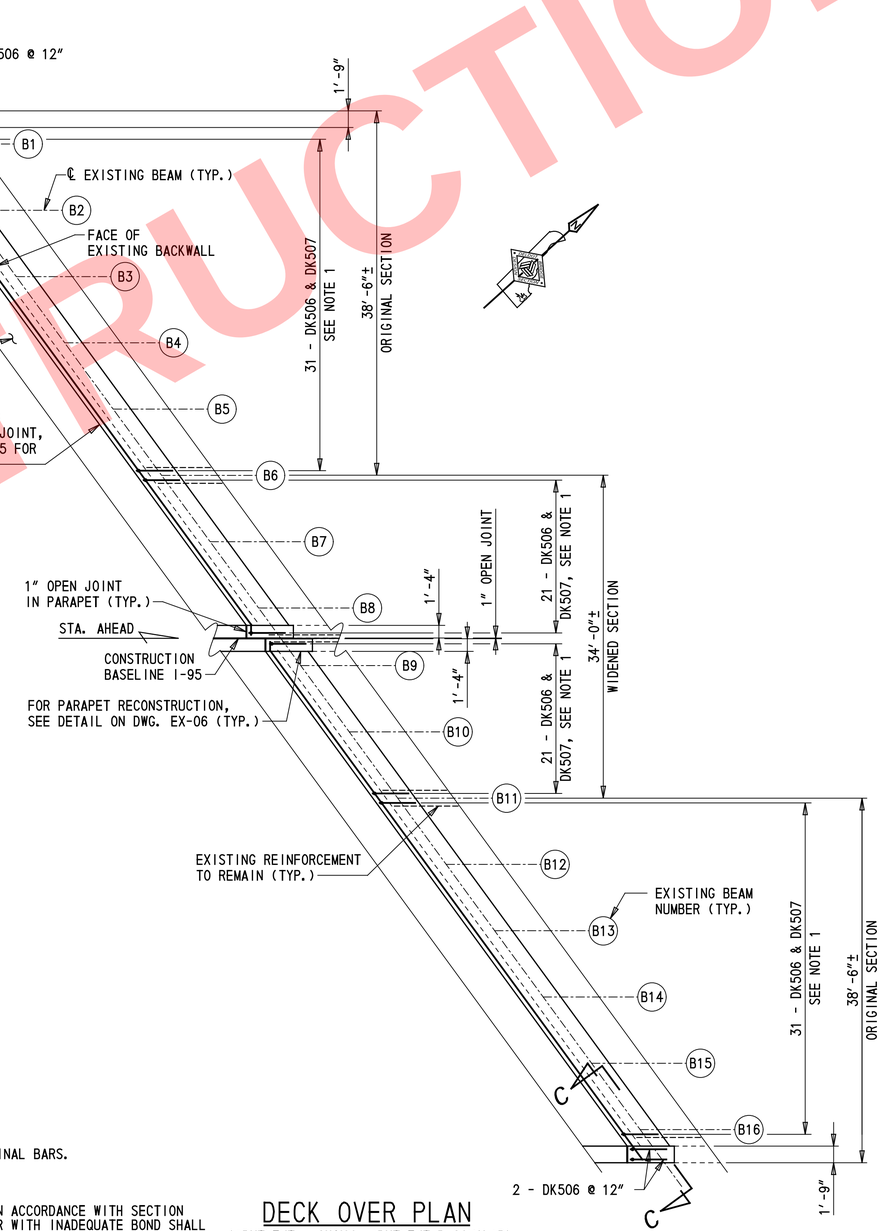

DECK OVER PLAN

(ABUTMENT A SHOWN, ABUTMENT B SIMILAR)

⅛″ = 1′-0″

NOTES:

1. BARS SPACED TO MATCH EXISTING TOP LONGITUDINAL BARS.
2. FOR SECTION C-C, SEE DWG. EX-06.
3. EXISTING BARS TO REMAIN SHALL BE CLEANED IN ACCORDANCE WITH SECTION 628.03(E)7. BARS WITH CORROSION, BROKEN, OR WITH INADEQUATE BOND SHALL BE REPAIRED IN ACCORDANCE WITH SECTION 628.03(E)7. PAYMENT FOR THIS WORK WILL BE INCIDENTAL TO ITEM 610017 - PORTLAND CEMENT CONCRETE MASONRY, SUPERSTRUCTURE, CLASS D.

NOT FOR CONSTRUCTION

DELAWARE DEPARTMENT OF TRANSPORTATION

ADDENDUMS / REVISIONS

SCALE AS NOTED

REHABILITATION OF I-95 FROM I-495 TO NORTH OF BRANDYWINE RIVER BRIDGE

CONTRACT	BRIDGE NO.	1 744 059
T201407404	DESIGNED BY: BJM	
COUNTY	CHECKED BY: JRQ	
NEW CASTLE		

ABUTMENT DECK OVER DETAILS – 1

1-744 EX-05	
SHEET NO.	2-41
TOTAL SHTS.	2-731

...\Bridge 1-744\744EX_05.dgn
5/16/2019 5:33:31 PM

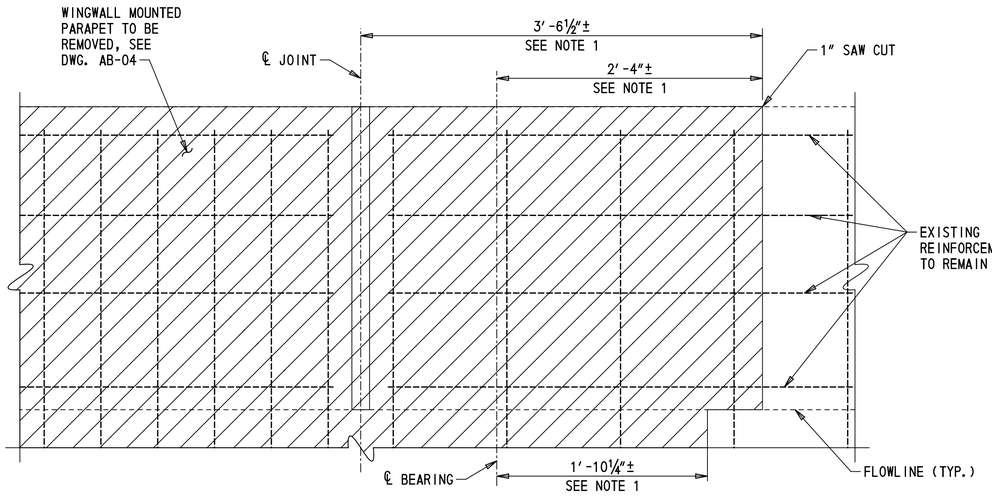

PARAPET REMOVAL AT DECK OVER

1½″ = 1′-0″

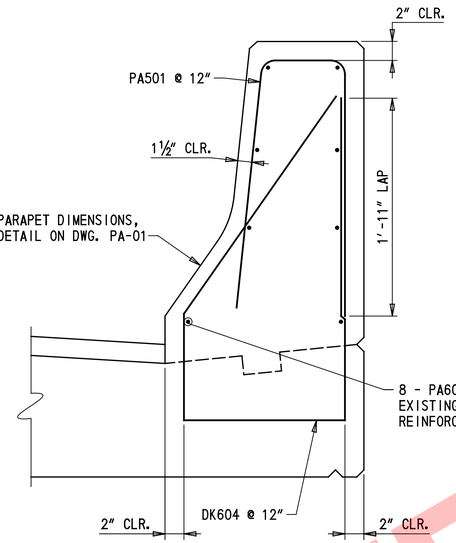

EXTERIOR PARAPET DETAIL AT DECK OVER

1½″ = 1′-0″

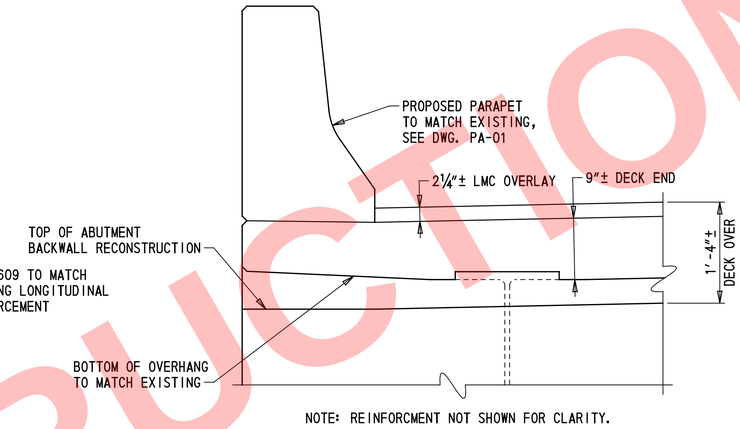

NOTE: REINFORCMENT NOT SHOWN FOR CLARITY.

SECTION C-C

(EXTERIOR PARAPET SHOWN, MEDIAN PARAPET SIMILAR)
1″ = 1′-0″

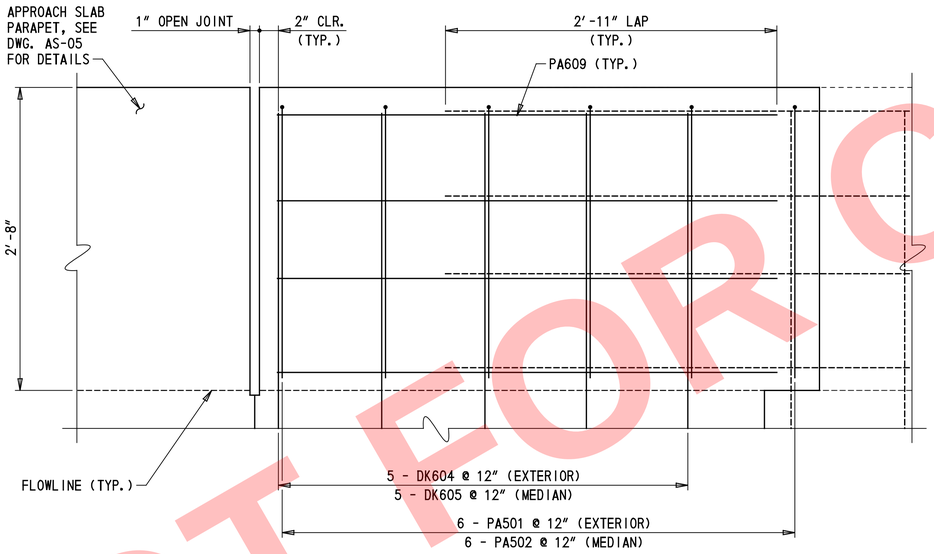

PARAPET RECONSTRUCTION AT DECK OVER

1½″ = 1′-0″

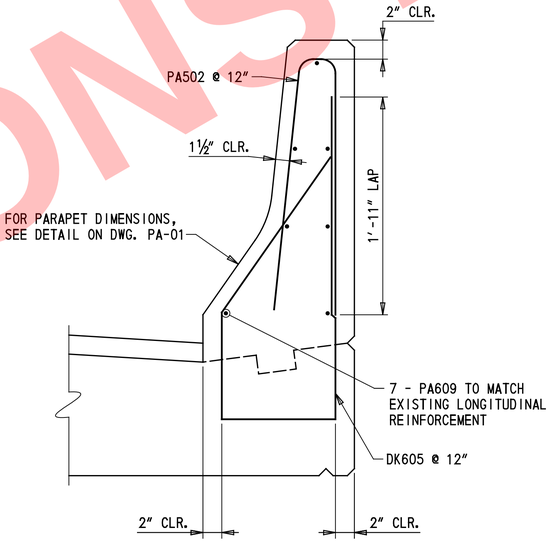

MEDIAN PARAPET DETAIL AT DECK OVER

1½″ = 1′-0″

LEGEND:

REMOVAL LIMITS

NOTES:

1. DIMENSION SHOWN IS PARALLEL TO THE PARAPET AT THE FRONT FACE OF THE PARAPET.
2. EXISTING BARS TO REMAIN SHALL BE CLEANED IN ACCORDANCE WITH SECITON 628.03(E)7. BARS WITH CORROSION, BROKEN, OR WITH INADEQUATE BOND SHALL BE REPAIRED IN ACCORDANCE WITH SECTION 628.03(E)7. PAYMENT FOR THIS WORK WILL BE INCIDENTAL TO ITEM 610008 - PORTLAND CEMENT CONCRETE MASONRY, PARAPET, CLASS A.

NOT FOR CONSTRUCTION

DELAWARE DEPARTMENT OF TRANSPORTATION

ADDENDUMS / REVISIONS

SCALE AS NOTED

REHABILITATION OF I-95 FROM I-495 TO NORTH OF BRANDYWINE RIVER BRIDGE

CONTRACT	BRIDGE NO. 1 744 059
T201407404	DESIGNED BY: BJM
COUNTY	CHECKED BY: JRQ
NEW CASTLE	

ABUTMENT DECK OVER DETAILS – 2

1-744 EX-06	
SHEET NO.	2-42
TOTAL SHTS.	2-731

\\Bridge 1-744\744EX_06.dgn
5/18/2019 5:35:31 PM

APPROACH SLAB WORKING POINTS				
LOCATION	POINT	STATION	OFFSET	ELEVATION
APPROACH SLAB A WEST	WP1	1204+75.83±	1.38′ ± LT	26.52
	WP2	1204+97.53±	1.38′ ± LT	24.27
	WP3	1204+84.71±	19.00′ ± LT	23.97
	WP4	1204+59.27±	54.04′ ± LT	23.32
	WP5	1204+37.49±	54.09′ ± LT	26.21
	WP6	1204+63.01±	19.00′ ± LT	26.35

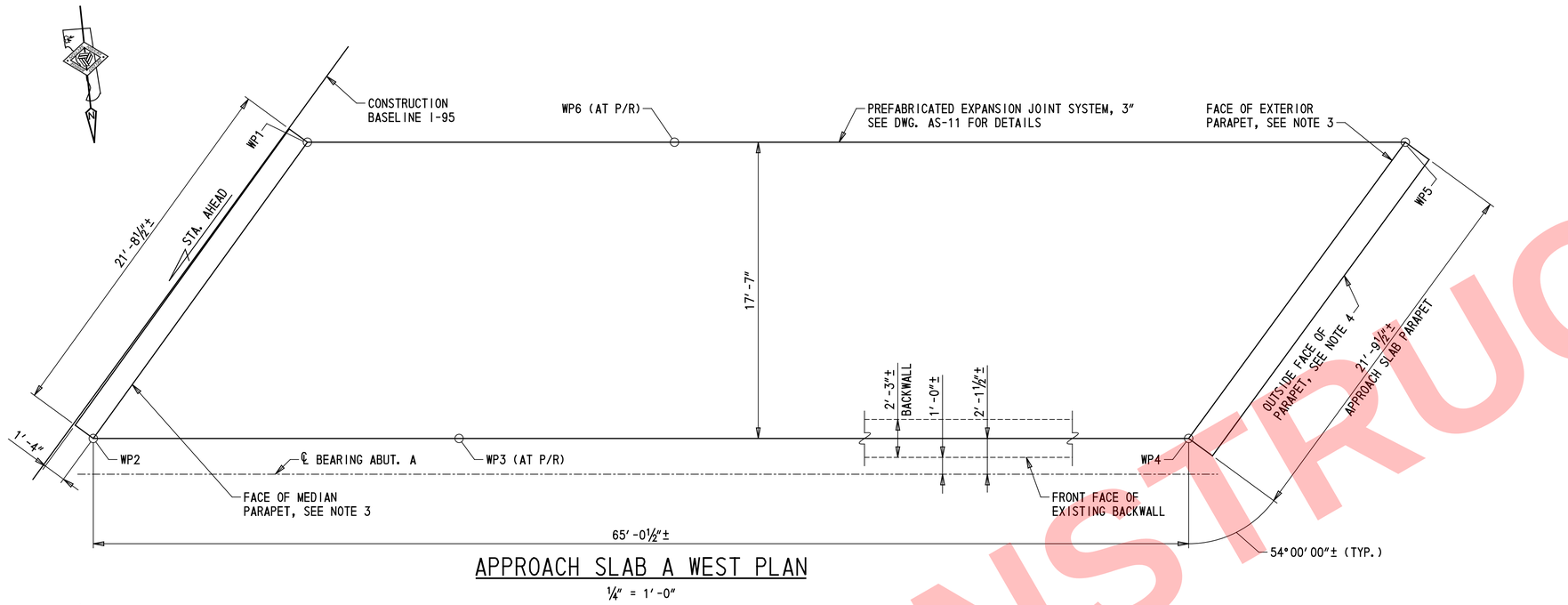

APPROACH SLAB A WEST PLAN

¼" = 1′-0"

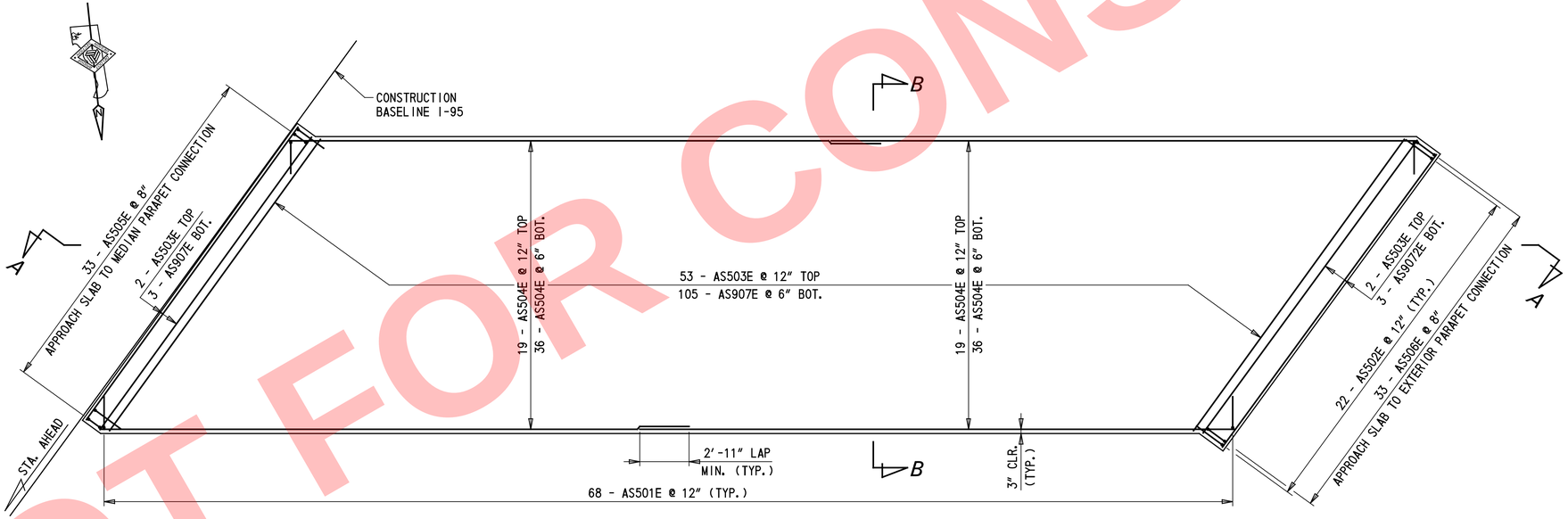

APPROACH SLAB A WEST REINFORCEMENT PLAN

¼" = 1′-0"

NOTES:

1. FOR SECTIONS A-A AND B-B, SEE DWG. AS-05.
2. FOR LANE AND SHOULDER CONFIGURATION AND ADDITIONAL REQUIREMENTS, SEE DWG. TS-01.
3. FLOWLINE AT PARAPET SHALL MATCH FLOWLINE OF PARAPET ON BRIDGE AND WINGWALL.
4. OUTSIDE FACE OF PARAPET SHALL BE CONSTRUCTED FLUSH WITH FRONT FACE OF EXISTING WINGWALL.

NOT FOR CONSTRUCTION

DELAWARE DEPARTMENT OF TRANSPORTATION	ADDENDUMS / REVISIONS	SCALE AS NOTED	REHABILITATION OF I-95 FROM I-495 TO NORTH OF BRANDYWINE RIVER BRIDGE	CONTRACT T201407404	BRIDGE NO. 1 744 059	APPROACH SLAB PLAN – 1	1-744 AS-01
				COUNTY NEW CASTLE	DESIGNED BY: BJM		SHEET NO. 2-43
					CHECKED BY: JRQ		TOTAL SHTS. 2-731

\Bridge 1-744\1744AS_01.dgn
5/16/2019 5:35:32 PM

NOT FOR CONSTRUCTION

APPROACH SLAB WORKING POINTS				
LOCATION	POINT	STATION	OFFSET	ELEVATION
APPROACH SLAB A EAST	WP1	1205+12.82±	53.63′ ± RT	26.73
	WP2	1205+37.82±	53.63′ ± RT	24.80
	WP3	1205+12.50±	19.00′ ± RT	24.46
	WP4	1204+99.53±	1.28′ ± RT	24.28
	WP5	1204+74.63±	1.38′ ± RT	26.85
	WP6	1204+87.45±	19.00′ ± RT	26.72

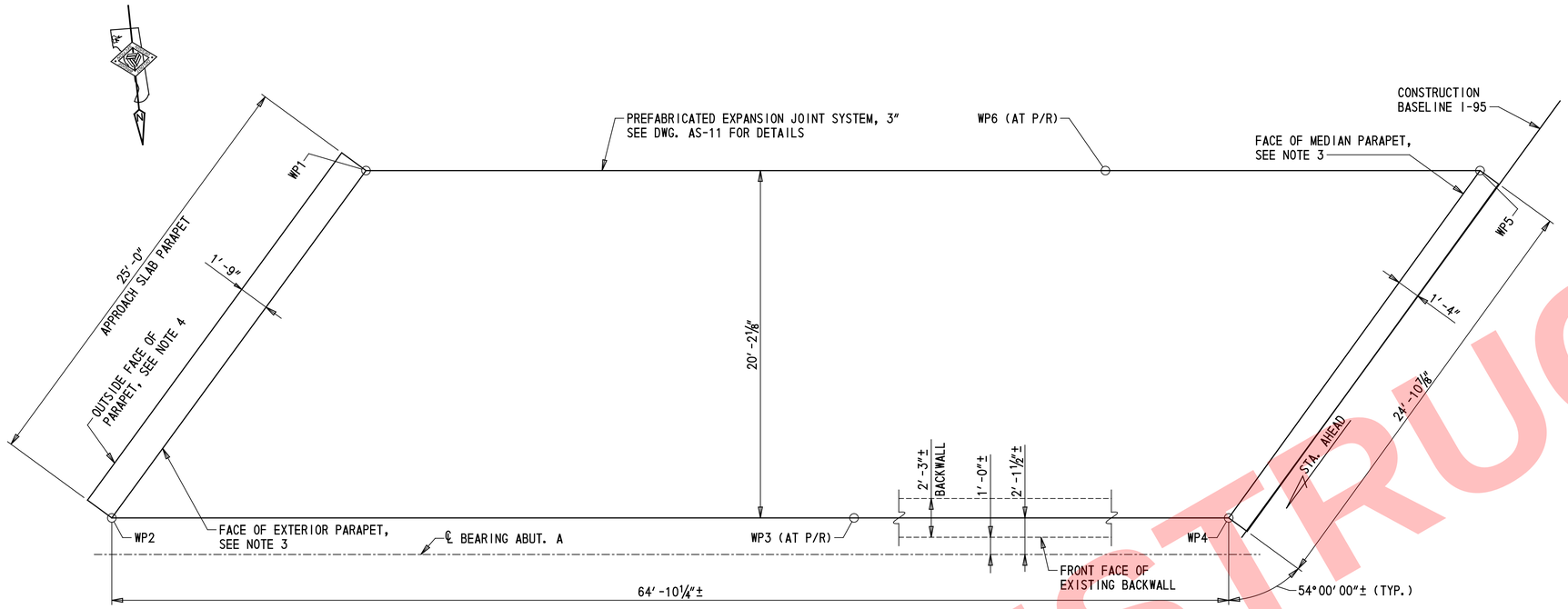

APPROACH SLAB A EAST PLAN

¼″ = 1′-0″

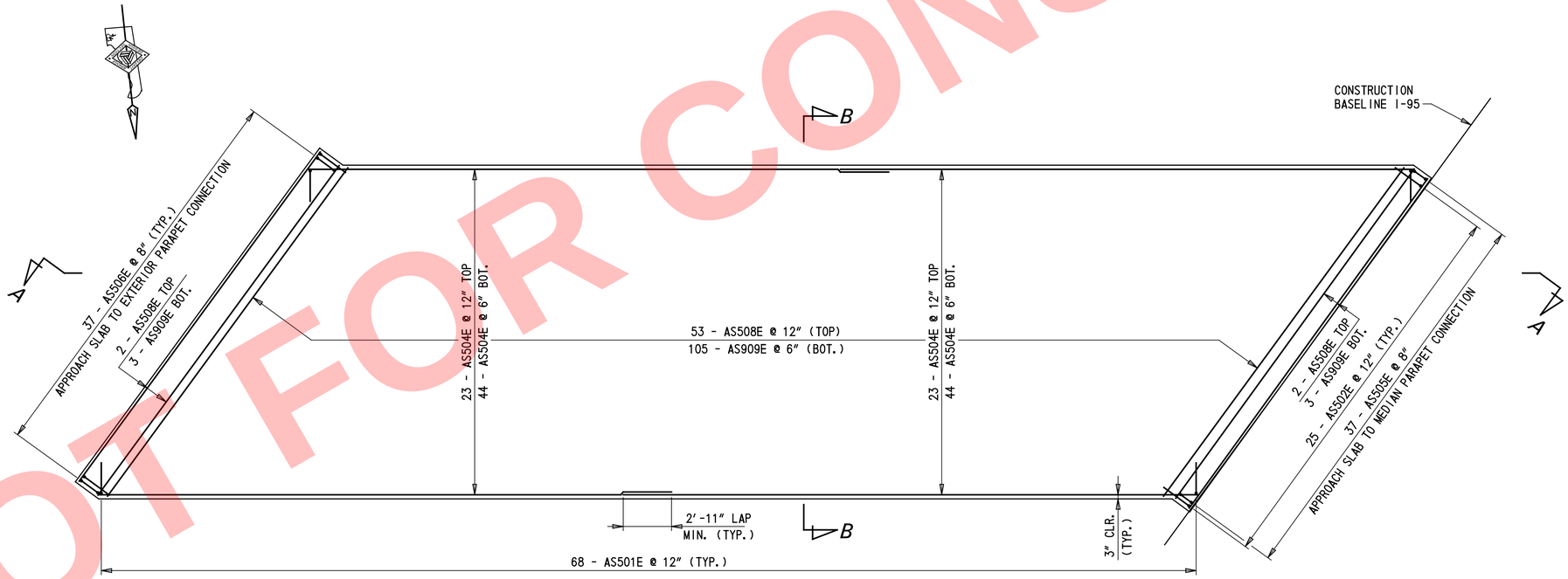

APPROACH SLAB A EAST REINFORCEMENT PLAN

¼″ = 1′-0″

NOTES:

1. FOR SECTIONS A-A AND B-B, SEE DWG. AS-05.
2. FOR LANE AND SHOULDER CONFIGURATION AND ADDITIONAL REQUIREMENTS, SEE DWG. TS-01.
3. FLOWLINE AT PARAPET SHALL MATCH FLOWLINE OF PARAPET ON BRIDGE AND WINGWALL.
4. OUTSIDE FACE OF PARAPET SHALL BE CONSTRUCTED FLUSH WITH FRONT FACE OF EXISTING WINGWALL.

DELAWARE
DEPARTMENT OF TRANSPORTATION

ADDENDUMS / REVISIONS

SCALE AS NOTED

REHABILITATION OF I-95
FROM I-495 TO NORTH OF
BRANDYWINE RIVER BRIDGE

CONTRACT	BRIDGE NO.	1 744 059
T201407404	DESIGNED BY: BJM	
COUNTY	CHECKED BY: JRQ	
NEW CASTLE		

APPROACH SLAB
PLAN – 2

1-744 AS-02
SHEET NO. 2-44
TOTAL SHTS. 2-731

...\Bridge 1-744\744AS_02.dgn
5/16/2019 5:35:32 PM

APPROACH SLAB WORKING POINTS				
LOCATION	POINT	STATION	OFFSET	ELEVATION
APPROACH SLAB B WEST	WP1	1210+47.38±	53.79′ ± LT	34.77
	WP2	1210+22.38±	53.79′ ± LT	31.88
	WP3	1210+48.03±	19.00′ ± LT	32.42
	WP4	1210+61.05±	1.33′ ± LT	32.69
	WP5	1210+86.02±	1.38′ ± LT	35.54
	WP6	1210+73.03±	19.00′ ± LT	35.29

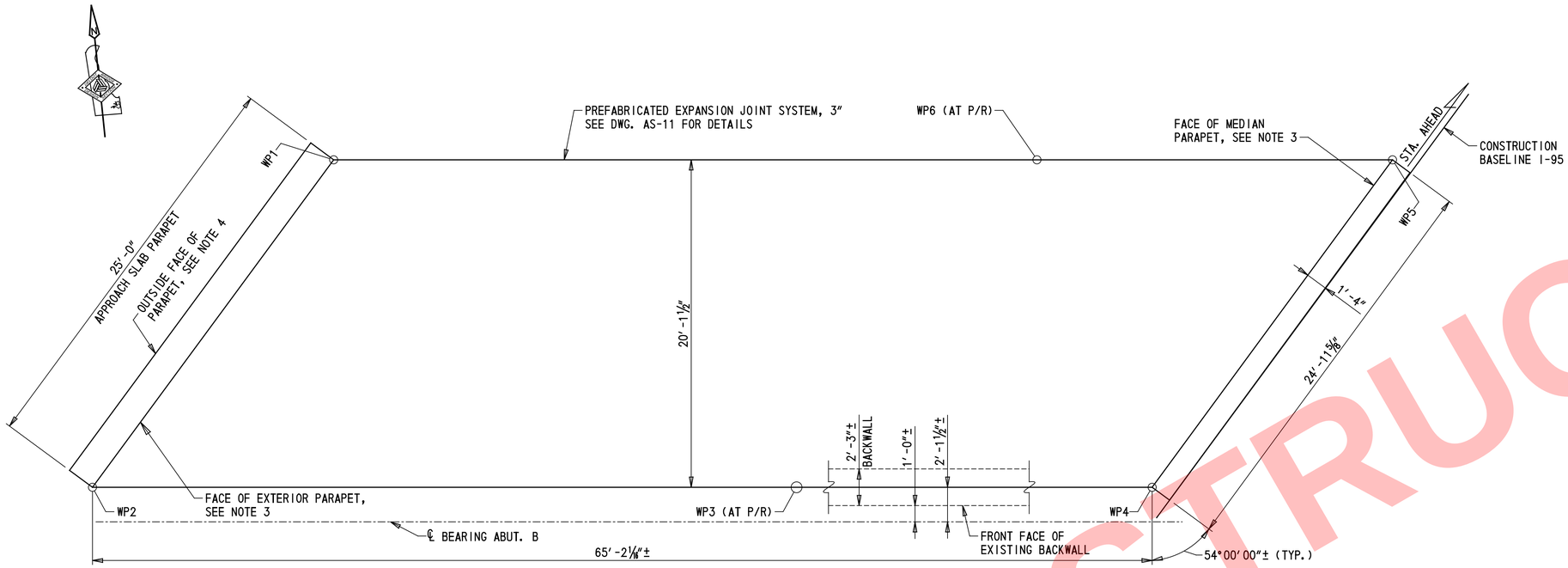

APPROACH SLAB B WEST PLAN

¼″ = 1′-0″

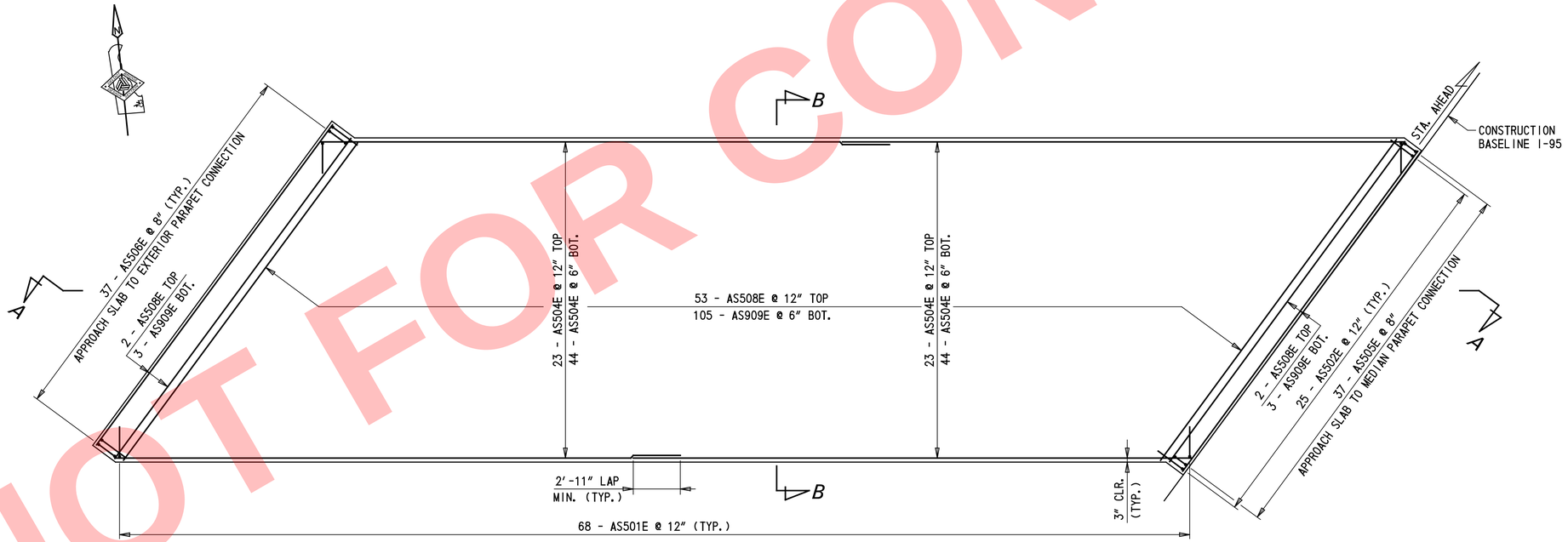

APPROACH SLAB B WEST REINFORCEMENT PLAN

¼″ = 1′-0″

NOTES:

1. FOR SECTIONS A-A AND B-B, SEE DWG. AS-05.
2. FOR LANE AND SHOULDER CONFIGURATION AND ADDITIONAL REQUIREMENTS, SEE DWG. TS-01.
3. FLOWLINE AT PARAPET SHALL MATCH FLOWLINE OF PARAPET ON BRIDGE AND WINGWALL.
4. OUTSIDE FACE OF PARAPET SHALL BE CONSTRUCTED FLUSH WITH FRONT FACE OF EXISTING WINGWALL.

NOT FOR CONSTRUCTION

...\Bridge 1-744\744AS_03.dgn
5/16/2019 5:35:32 PM

DELAWARE DEPARTMENT OF TRANSPORTATION	ADDENDUMS / REVISIONS	SCALE AS NOTED	REHABILITATION OF I-95 FROM I-495 TO NORTH OF BRANDYWINE RIVER BRIDGE	CONTRACT T201407404 / COUNTY NEW CASTLE	BRIDGE NO. 1 744 059 / DESIGNED BY: BJM / CHECKED BY: JRQ	APPROACH SLAB PLAN – 3

1-744
AS-03

SHEET NO. 2-45

TOTAL SHTS. 2-731

APPROACH SLAB WORKING POINTS				
LOCATION	POINT	STATION	OFFSET	ELEVATION
APPROACH SLAB B EAST	WP1	1210+88.05±	1.42′ ± RT	35.82
	WP2	1210+63.08±	1.38′ ± RT	32.84
	WP3	1210+76.04±	19.00′ ± RT	33.11
	WP4	1211+01.69±	53.79′ ± RT	32.71
	WP5	1211+26.69±	53.79′ ± RT	35.58
	WP6	1211+01.04±	19.00′ ± RT	36.32

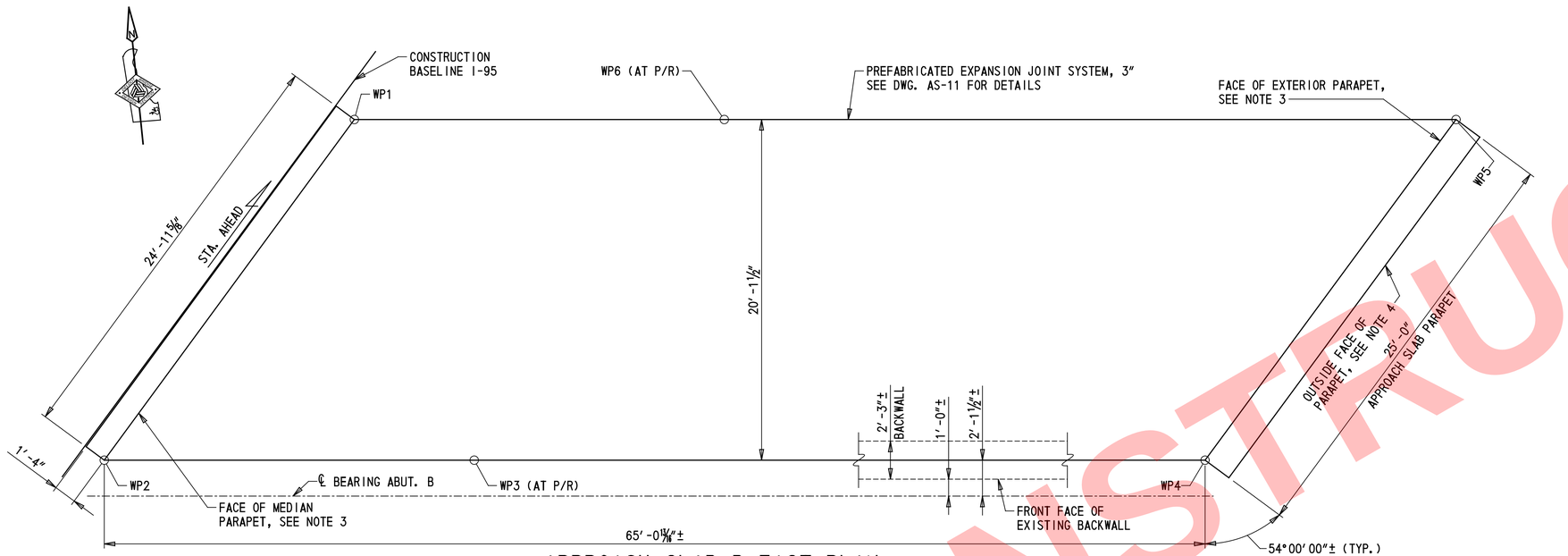

APPROACH SLAB B EAST PLAN

¼″ = 1′-0″

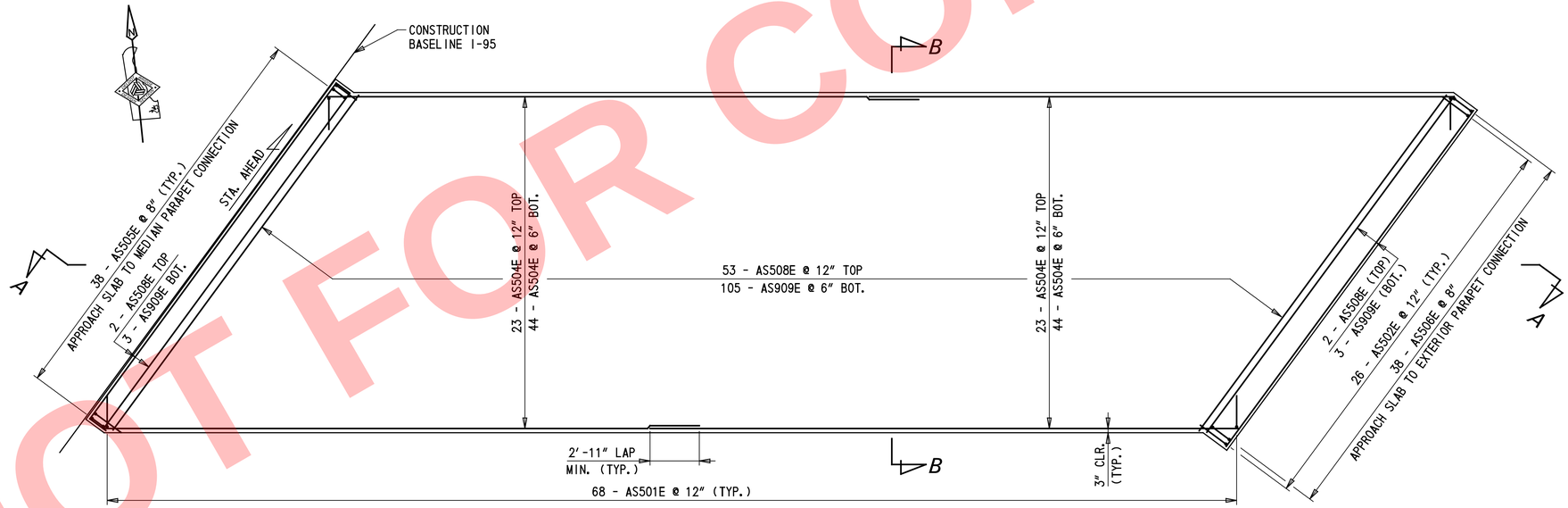

APPROACH SLAB B EAST REINFORCEMENT PLAN

¼″ = 1′-0″

NOTES:

1. FOR SECTIONS A-A AND B-B, SEE DWG. AS-05.
2. FOR LANE AND SHOULDER CONFIGURATION AND ADDITIONAL REQUIREMENTS, SEE DWG. TS-01.
3. FLOWLINE AT PARAPET SHALL MATCH FLOWLINE OF PARAPET ON BRIDGE AND WINGWALL.
4. OUTSIDE FACE OF PARAPET SHALL BE CONSTRUCTED FLUSH WITH FRONT FACE OF EXISTING WINGWALL.

NOT FOR CONSTRUCTION

DELAWARE DEPARTMENT OF TRANSPORTATION

ADDENDUMS / REVISIONS

SCALE AS NOTED

REHABILITATION OF I-95 FROM I-495 TO NORTH OF BRANDYWINE RIVER BRIDGE

CONTRACT	BRIDGE NO.	1 744 059
T201407404	DESIGNED BY: BJM	
COUNTY	CHECKED BY: JRQ	
NEW CASTLE		

APPROACH SLAB PLAN – 4

1-744 AS-04

SHEET NO.	TOTAL SHTS.
2-46	2-731

\Bridge 1-744\1744AS_04.dgn
5/16/2016 5:35:33 PM

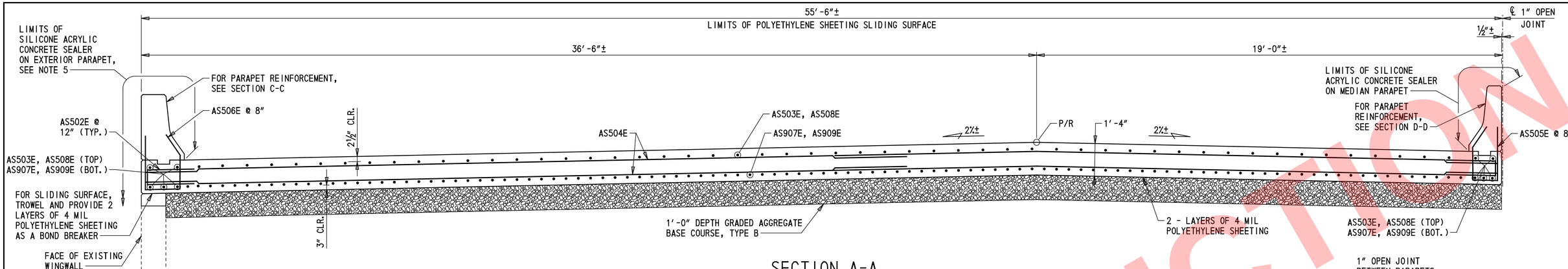

SECTION A-A

½″ = 1′-0″

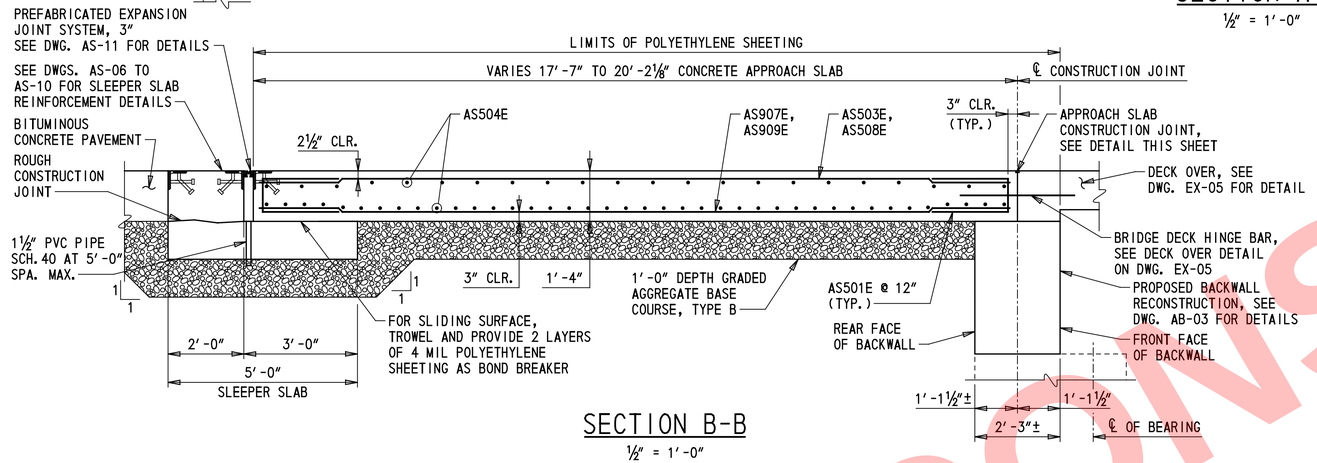

SECTION B-B

½″ = 1′-0″

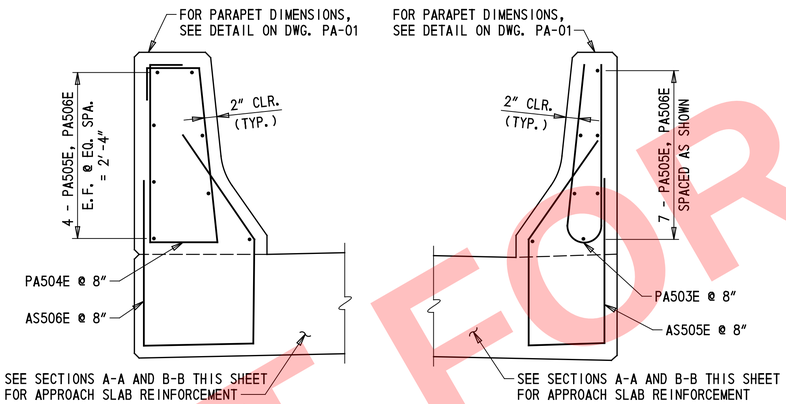

SECTION C-C

1″ = 1′-0″

SECTION D-D

1″ = 1′-0″

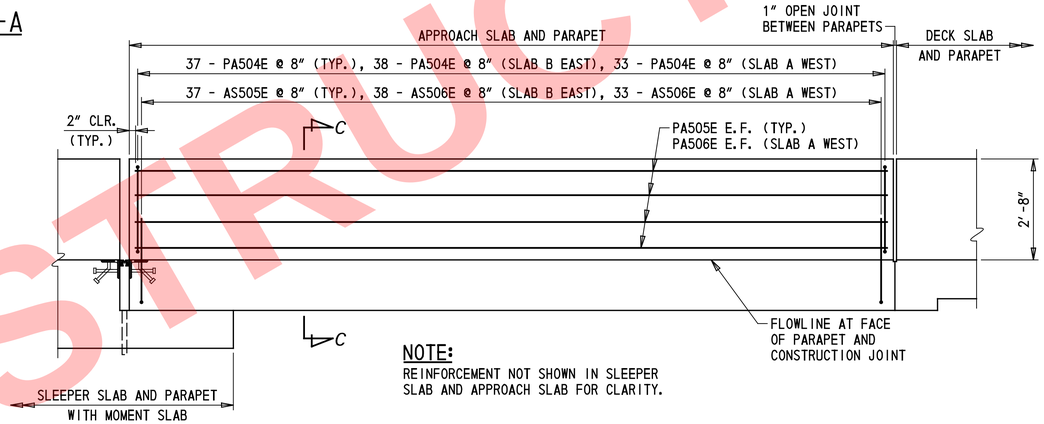

NOTE:
REINFORCEMENT NOT SHOWN IN SLEEPER SLAB AND APPROACH SLAB FOR CLARITY.

APPROACH SLAB EXTERIOR PARAPET REINFORCEMENT ELEVATION

½″ = 1′-0″

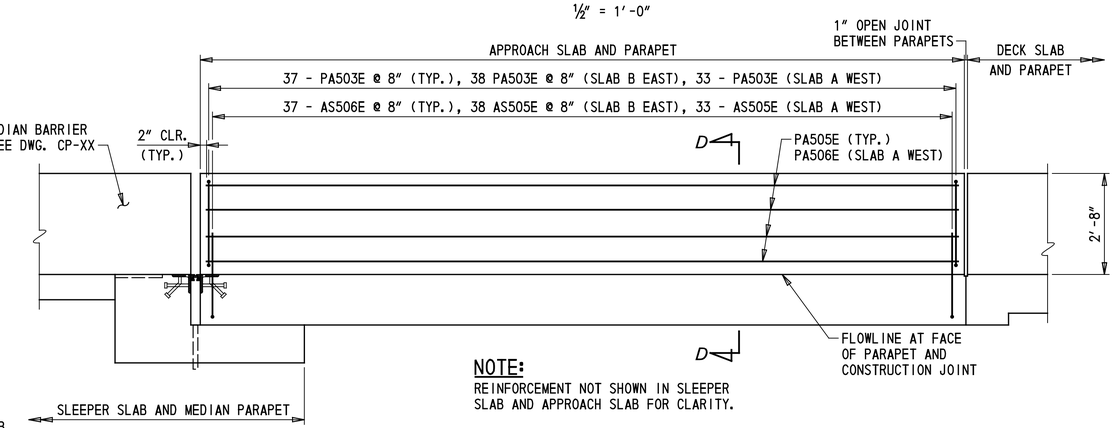

NOTE:
REINFORCEMENT NOT SHOWN IN SLEEPER SLAB AND APPROACH SLAB FOR CLARITY.

APPROACH SLAB MEDIAN PARAPET REINFORCEMENT ELEVATION

½″ = 1′-0″

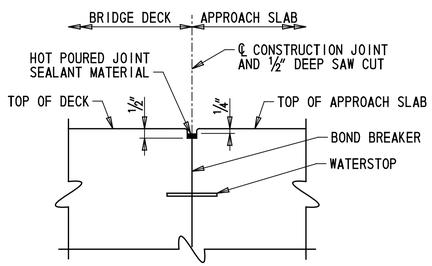

APPROACH SLAB CONSTRUCTION JOINT

NOT TO SCALE

NOTES:

1. FOR ARMORED STRIP SEAL EXPANSION JOINT DETAILS, SEE DWG. AS-11.
2. FOR ADDITIONAL APPROACH SLAB REINFORCEMENT DETAILS, SEE DWGS. AS-01 TO AS-04.
3. PAYMENT FOR POLYETHYLENE SHEETING, BOND BREAKER, WATERSTOP, ½″ DEEP SAW CUT AND HOT POURED JOINT SEALANT WILL BE INCIDENTAL TO ITEM 610018 - PORTLAND CEMENT CONCRETE, APPROACH SLAB, CLASS D.
4. FOR ADDITIONAL ROADWAY PAVEMENT DETAILS, SEE DELDOT STANDARD P-1. PAYMENT FOR ROADWAY JOINTS WILL BE INCIDENTAL TO ROADWAY PAVEMENT ITEM.
5. LIMITS OF SILICONE ACRYLIC CONCRETE SEALER SHALL EXTEND FROM INSIDE FACE OF PARAPET TO EXISTING GROUNDLINE AT OUTSIDE FACE OF WINGWALL.

NOT FOR CONSTRUCTION

DELAWARE DEPARTMENT OF TRANSPORTATION	ADDENDUMS / REVISIONS	SCALE AS NOTED	REHABILITATION OF I-95 FROM I-495 TO NORTH OF BRANDYWINE RIVER BRIDGE	CONTRACT T201407404	BRIDGE NO. 1 744 059	APPROACH SLAB DETAILS
				COUNTY NEW CASTLE	DESIGNED BY: BJM	
					CHECKED BY: JRQ	

1-744 AS-05

SHEET NO. 2-47

TOTAL SHTS. 2-731

\\Bridge 1-744\744AS_05.dgn
5/16/2019 5:35:33 PM

SLEEPER SLAB WORKING POINTS				
LOCATION	POINT	STATION	OFFSET	ELEVATION
SLEEPER SLAB A	WP1	1205+12.36±	53.75′ ± RT	27.40
	WP2	1205+03.86±	53.75′ ± RT	26.76
	WP3	1204+84.52±	19.00′ ± RT	27.03
	WP4	1204+86.99±	19.00′ ± RT	26.77
	WP5	1204+74.15±	1.38′ ± RT	26.90
	WP6	1204+75.38±	1.38′ ± LT	26.57
	WP7	1204+60.08±	19.00′ ± LT	26.67
	WP8	1204+62.56±	19.00′ ± LT	26.40
	WP9	1204+34.55±	53.75′ ± LT	26.53
	WP10	1204+37.03±	53.75′ ± LT	26.26

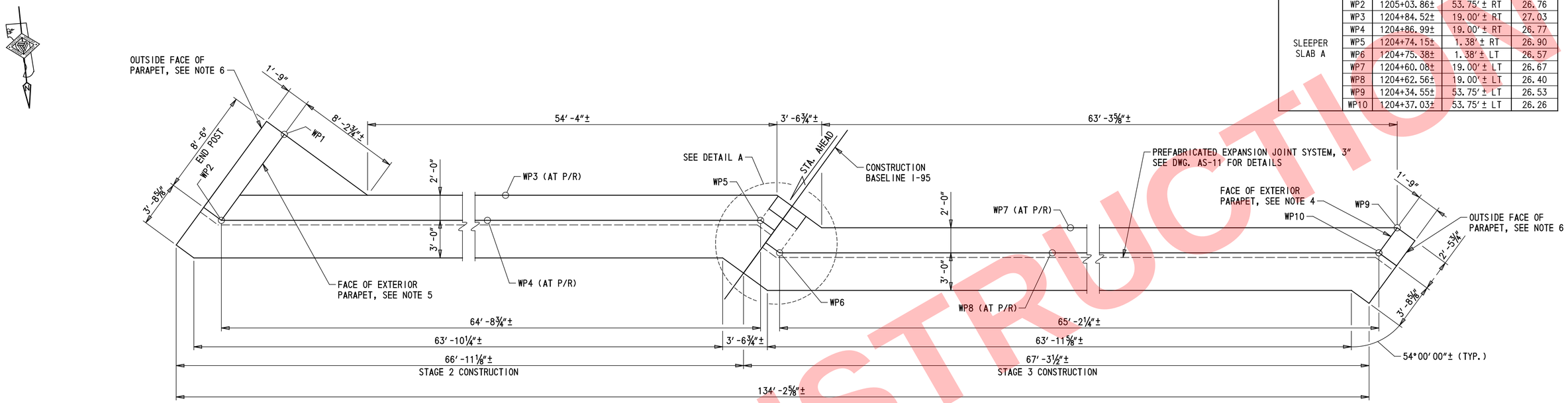

SLEEPER SLAB A PLAN

¼″ = 1′-0″

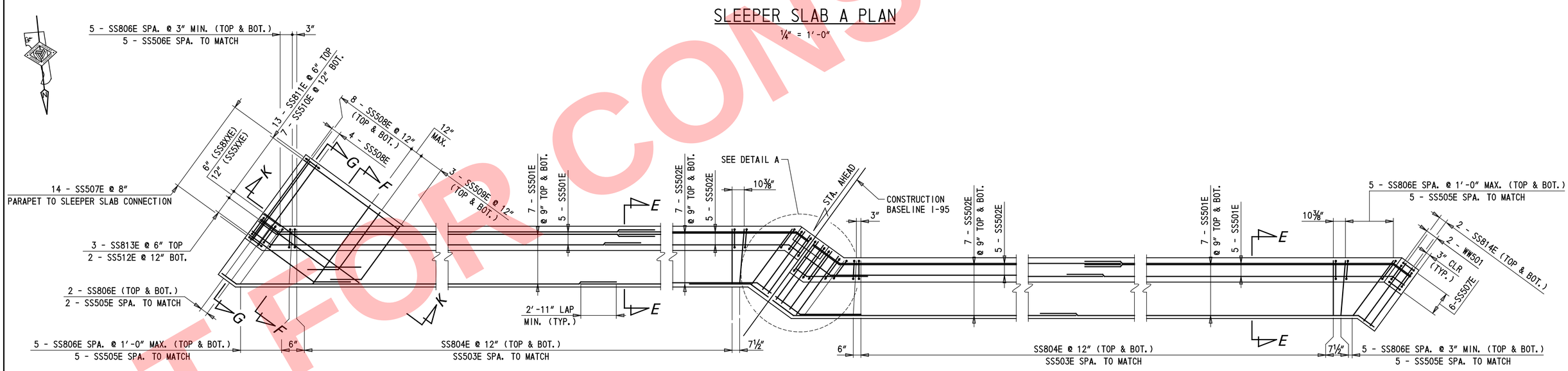

SLEEPER SLAB A REINFORCEMENT PLAN

¼″ = 1′-0″

NOTES:

1. FOR DETAIL A, SEE DWG. AS-08.
2. FOR SECTIONS E-E, F-F, G-G, AND K-K, SEE DWG. AS-09.
3. FOR LANE AND SHOULDER CONFIGURATION AND ADDITIONAL REQUIREMENTS, SEE DWG. TS-01.
4. FLOWLINE AT PARAPET SHALL MATCH FLOWLINE OF PARAPET ON APPROACH SLAB.
5. FLOWLINE AT PARAPET SHALL MATCH FLOWLINE OF PARAPET ON WINGWALL AND BARRIER WALL.
6. OUTSIDE FACE OF PARAPET SHALL BE CONSTRUCTED FLUSH WITH FRONT FACE OF EXISTING WINGWALL AND BARRIER WALL. SEE DWGS. AS-11 AND AS-12 FOR SLEEPER SLAB TO EXISTING BARRIER WALL CONNECTION DETAILS.
7. SLEEPER SLAB LAYOUT AND REINFORCEMENT TO BE REVISED TO ACCOMMODATE PCC APPROACH PAVEMENT.

NOT FOR CONSTRUCTION

DELAWARE DEPARTMENT OF TRANSPORTATION

ADDENDUMS / REVISIONS

SCALE AS NOTED

REHABILITATION OF I-95 FROM I-495 TO NORTH OF BRANDYWINE RIVER BRIDGE

CONTRACT	BRIDGE NO. 1 744 059
T201407404	DESIGNED BY: CWM
COUNTY	CHECKED BY: JRQ
NEW CASTLE	

SLEEPER SLAB A PLAN

1-744 AS-06
SHEET NO. 2-48
TOTAL SHTS. 2-731

\\Bridge 1-744\744AS_06.dgn
5/18/2019 5:35:34 PM

SLEEPER SLAB WORKING POINTS				
LOCATION	POINT	STATION	OFFSET	ELEVATION
SLEEPER SLAB B	WP1	1210+56.34±	53.75′ ± LT	35.77
	WP2	1210+47.84±	53.75′ ± LT	34.82
	WP3	1210+75.97±	19.00′ ± LT	35.63
	WP4	1210+73.49±	19.00′ ± LT	35.35
	WP5	1210+86.48±	1.38′ ± LT	35.59
	WP6	1210+88.51±	1.38′ ± RT	35.63
	WP7	1211+03.99±	19.00′ ± RT	36.18
	WP8	1211+01.50±	19.00′ ± RT	35.87
	WP9	1211+31.65±	53.75′ ± RT	37.05
	WP10	1211+27.15±	53.75′ ± RT	36.38

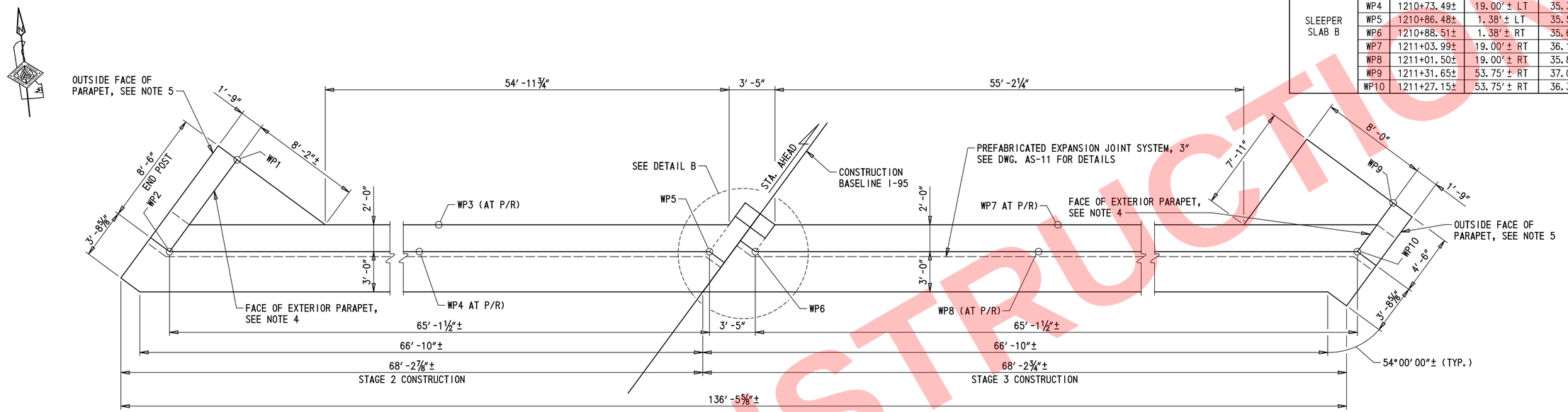

SLEEPER SLAB B PLAN

¼″ = 1′-0″

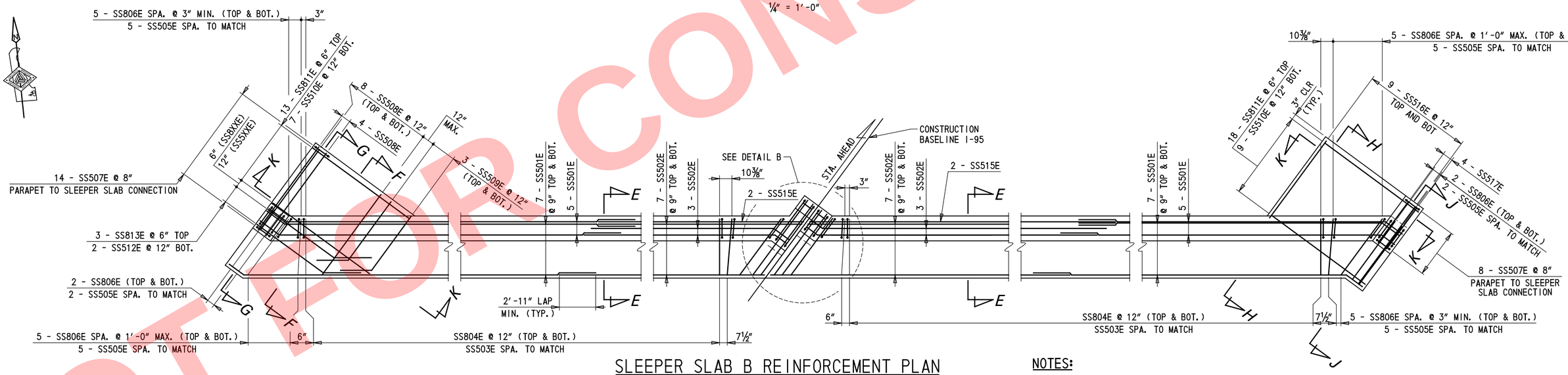

SLEEPER SLAB B REINFORCEMENT PLAN

¼″ = 1′-0″

NOTES:

1. FOR DETAIL B, SEE DWG. AS-08.
2. FOR SECTIONS E-E, F-F, G-G, AND K-K, SEE DWG. AS-09. FOR SECTIONS H-H AND J-J, SEE DWG. AS-10
3. FOR LANE AND SHOULDER CONFIGURATION AND ADDITIONAL REQUIREMENTS, SEE DWG. TS-01.
4. FLOWLINE AT PARAPET SHALL MATCH FLOWLINE OF PARAPET ON APPROACH SLAB.
5. OUTSIDE FACE OF PARAPET SHALL BE CONSTRUCTED FLUSH WITH FRONT FACE OF EXISTING WINGWALL.
6. SLEEPER SLAB LAYOUT AND REINFORCEMENT TO BE REVISED TO ACCOMMODATE PCC APPROACH PAVEMENT.

NOT FOR CONSTRUCTION

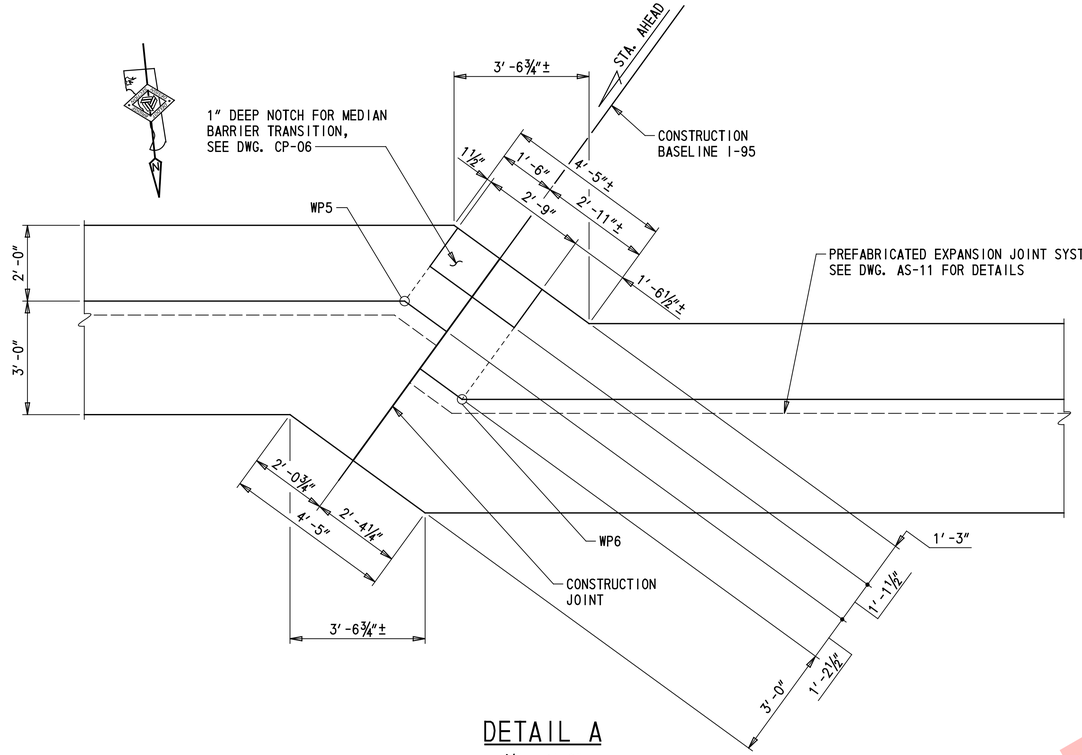

DETAIL A

½″ = 1′-0″

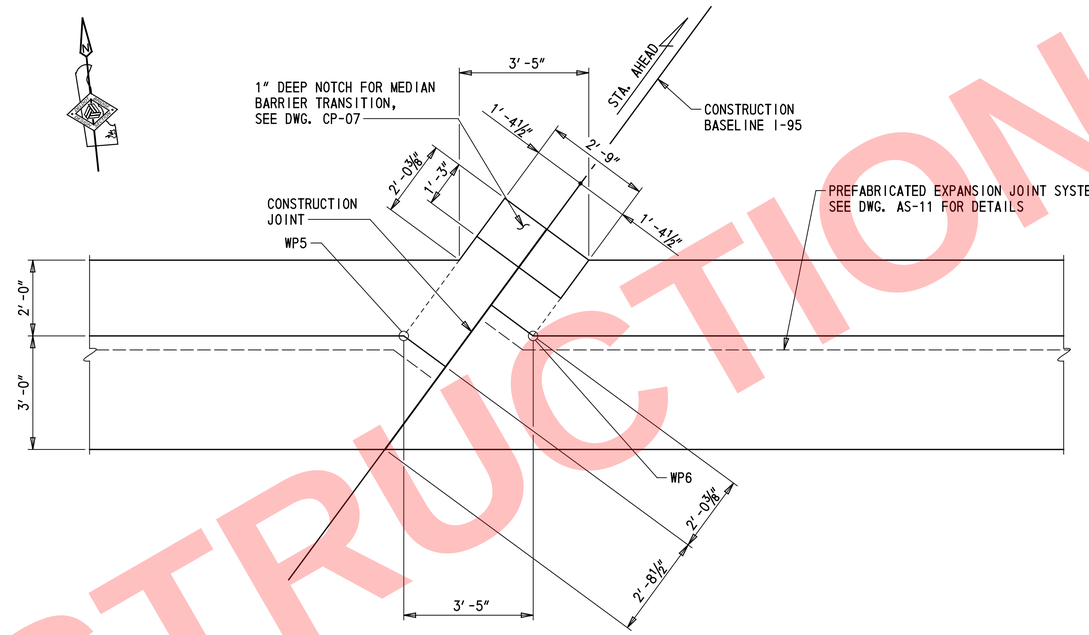

DETAIL B

½″ = 1′-0″

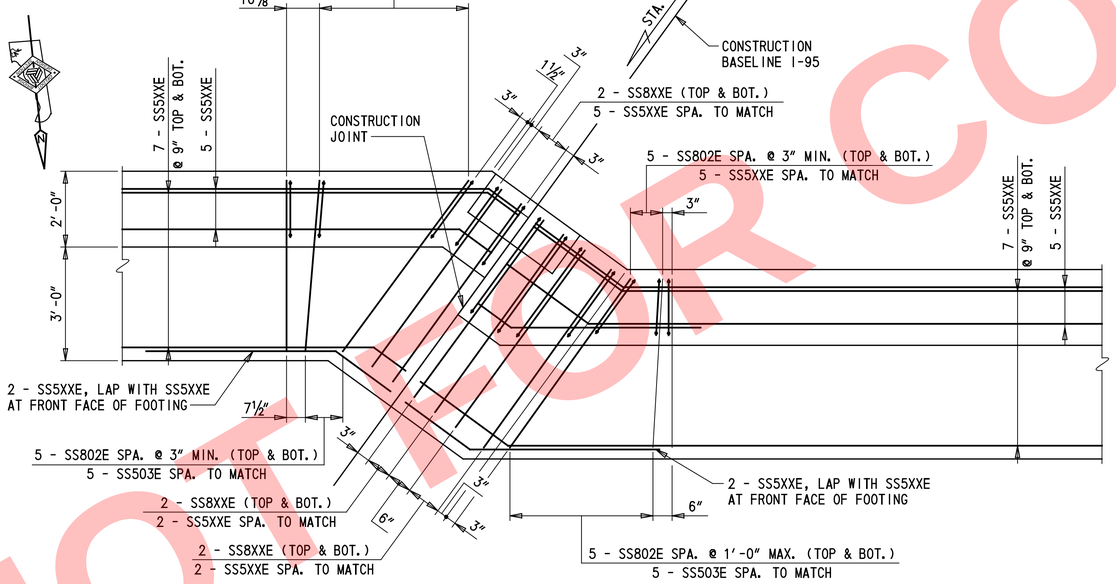

DETAIL A REINFORCEMENT

½″ = 1′-0″

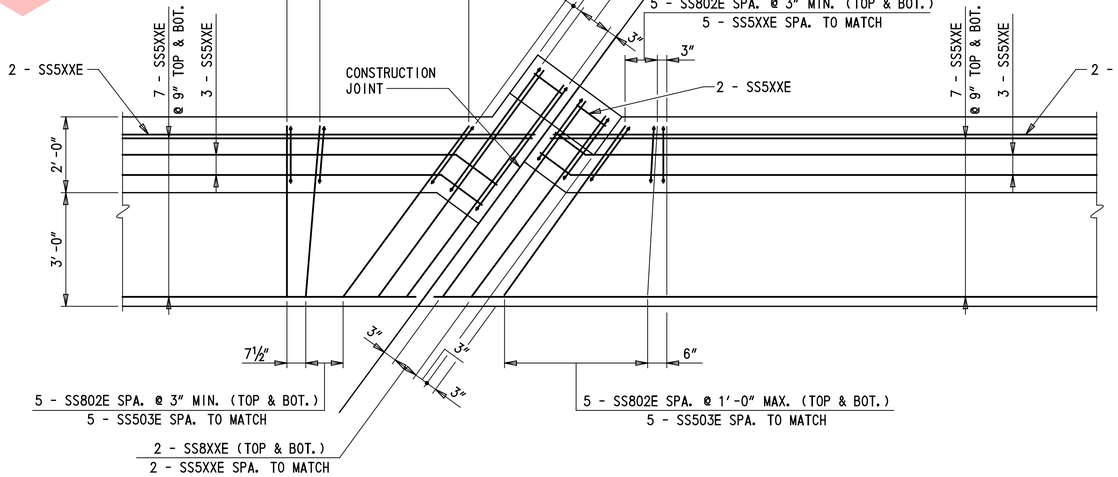

DETAIL B REINFORCEMENT

½″ = 1′-0″

NOTES:

1. SLEEPER SLAB LAYOUT AND REINFORCEMENT TO BE REVISED TO ACCOMMODATE PCC APPROACH PAVEMENT.

NOT FOR CONSTRUCTION

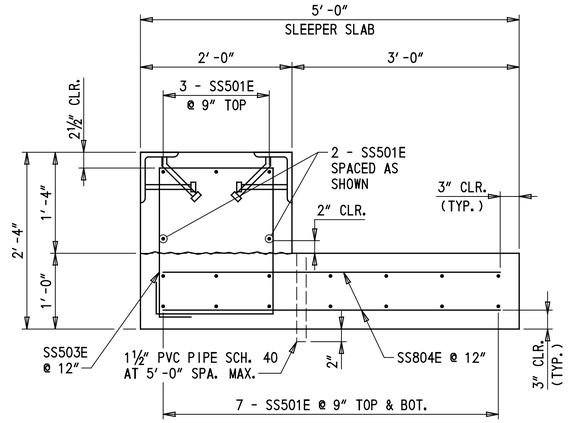

SECTION E-E

1″ = 1′-0″

NOTE:

APPROACH SLAB NOT SHOWN FOR CLARITY.

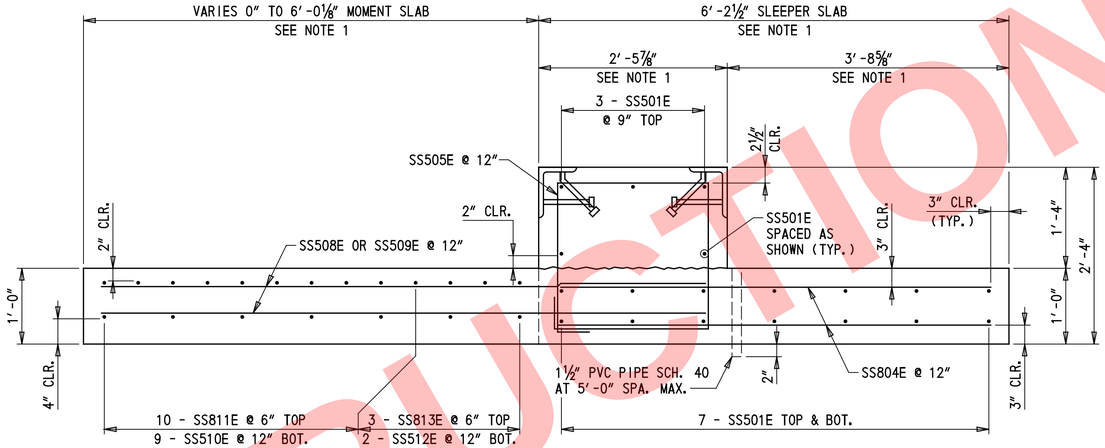

SECTION F-F

1″ = 1′-0″

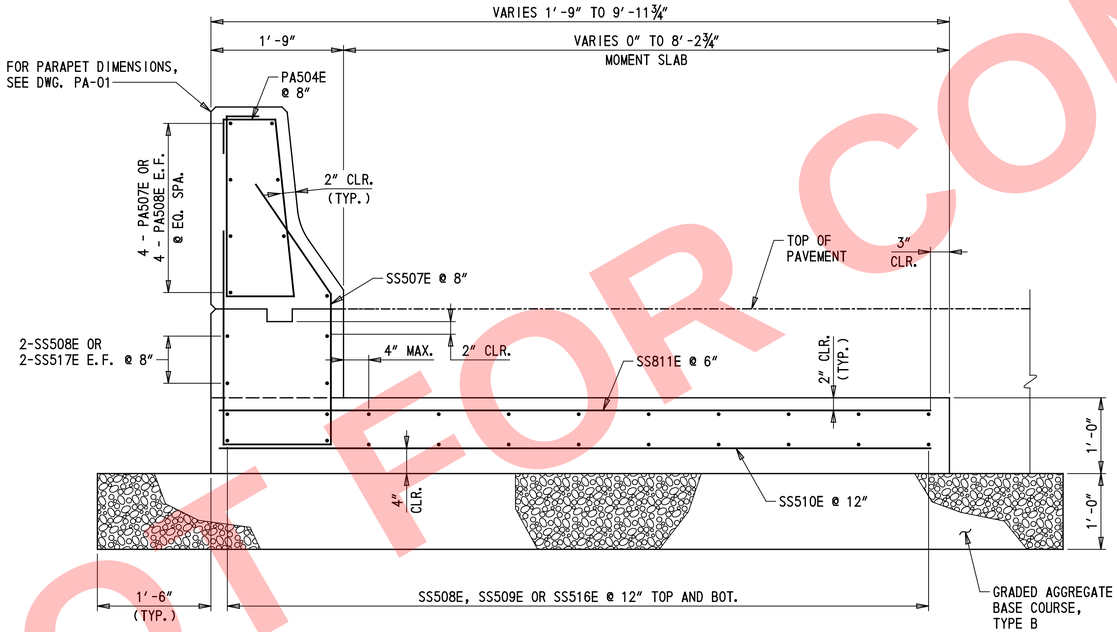

NOTE: SLEEPER SLAB NOT SHOWN FOR CLARITY

SECTION K-K

1″ = 1′-0″

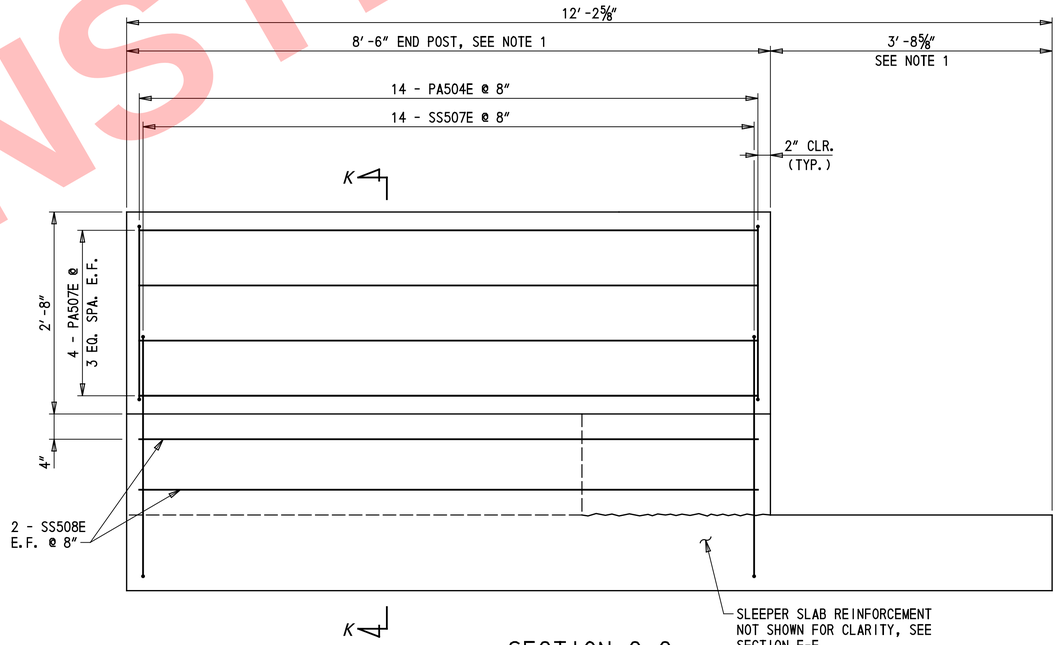

SECTION G-G

1″ = 1′-0″

NOTES:

1. INDICATED DIMENSIONS ARE MEASURED PARALLEL TO FACE OF PARAPET.

NOT FOR CONSTRUCTION

DELAWARE DEPARTMENT OF TRANSPORTATION	ADDENDUMS / REVISIONS	SCALE AS NOTED	REHABILITATION OF I-95 FROM I-495 TO NORTH OF BRANDYWINE RIVER BRIDGE	CONTRACT T201407404	BRIDGE NO. 1 744 059	SLEEPER SLAB DETAILS – 2
				COUNTY NEW CASTLE	DESIGNED BY: BJM	
					CHECKED BY: JRQ	

1-744 AS-09
SHEET NO. 2-51
TOTAL SHTS. 2-731

\Bridge 1-744\744AS_09.dgn
5/16/2019 5:35:55 PM

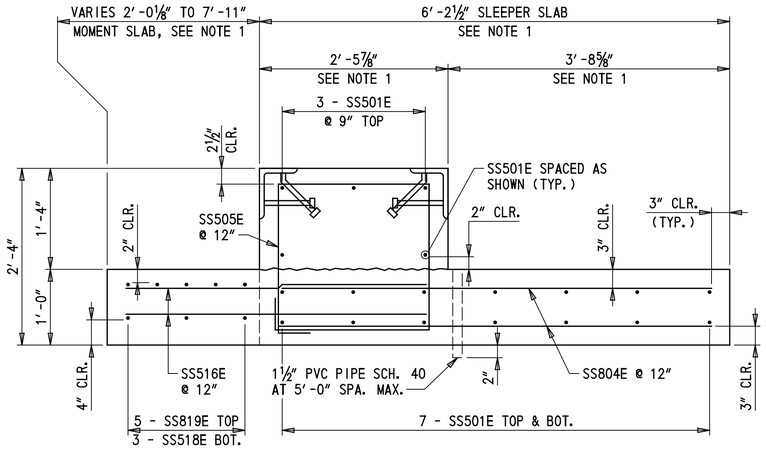

SECTION H-H

1″ = 1′-0″

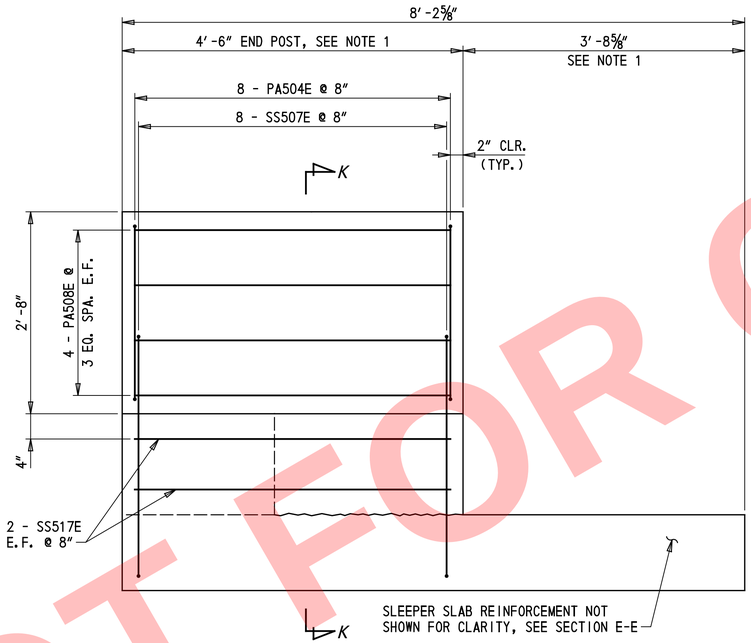

SECTION J-J

1″ = 1′-0″

NOTE:

APPROACH SLAB NOT SHOWN FOR CLARITY.

NOTES:

1. INDICATED DIMENSIONS ARE MEASURED PARALLEL TO FACE OF PARAPET.
2. FOR SECTION K-K, SEE DWG. AS-09.

NOT FOR CONSTRUCTION

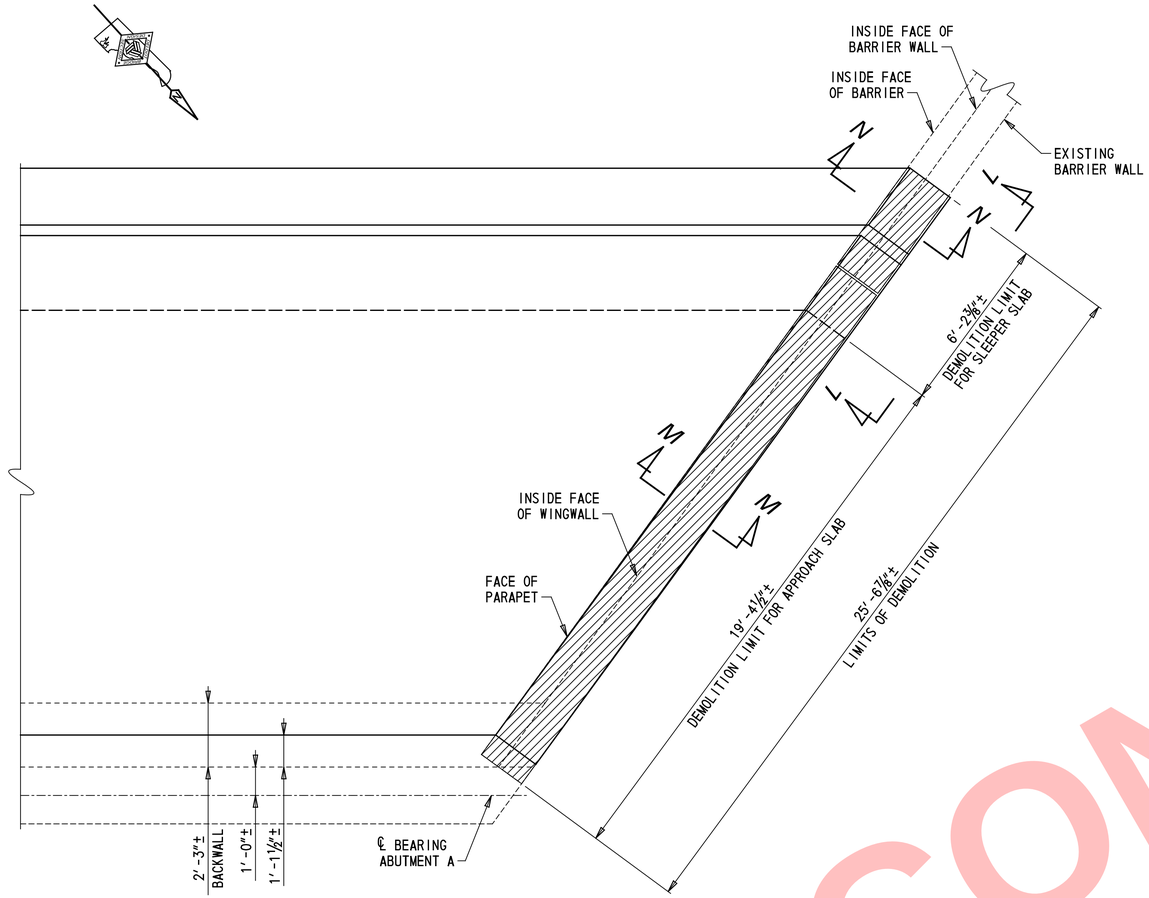

APPROACH SLAB A WEST AND EXISTING BARRIER WALL PARTIAL DEMOLITION PLAN

⅜" = 1'-0"

LEGEND:

REMOVAL LIMITS - ITEM 211000

APPROACH SLAB JOINT OPENINGS

LOCATION	TEMPERATURE (°F)										MOVEMENT CLASSIFICATION
	20	30	40	50	60	68	70	80	90	100	
APPROACH SLAB A WEST JOINT	1 7/8"	1 11/16"	1 15/16"	1 3/4"	1 3/4"	1 3/4"	1 3/4"	1 11/16"	1 11/16"	1 5/8"	3"
TYPICAL APPROACH SLAB JOINT	1 7/8"	1 7/8"	1 15/16"	1 3/4"	1 3/4"	1 3/4"	1 3/4"	1 11/16"	1 5/8"	1 5/8"	3"

NOTES:

1. FOR SECTIONS L-L, M-M, AND N-N SEE DWG. AS-12.

STRIP SEAL EXPANSION JOINT NOTES:

1. STEEL FOR DECK JOINTS AND STEEL EXTRUSIONS SHALL BE AASHTO M270, GR. 36 (ASTM A36) AT MINIMUM.
2. NEOPRENE EXTRUSION TO MEET D-2628-81 MODIFIED, (RECOVERY TESTS EXCLUDED).
3. THE EXPANSION JOINT SHALL BE CAPABLE OF SEALING THE APPROACH SLAB TO SLEEPER SLAB JOINT TO PREVENT MOISTURE AND OTHER CONTAMINANTS FROM DESCENDING THROUGH THE JOINT.
4. THE CONTRACTOR SHALL ADJUST THE OPEN JOINT (Y) AS REQUIRED BY THE WIDTH OF THE STEEL EXTRUSION USED SO AS TO PROVIDE A X" JOINT OPENING AT 68°F.
5. THE STRIP SEAL SHALL BE INSTALLED IN ONE PIECE ACROSS THE APPROACH SLAB BRIDGE WIDTH. SPLICING OF THE STRIP SEAL IS NOT PERMITTED.
6. THE EXPANSION JOINT SYSTEM WILL BE PAID FOR UNDER ITEM 624000 - PREFABRICATED EXPANSION JOINT SYSTEM, 3".
7. STEEL EXTRUSIONS SHALL BE HOT-DIP GALVANIZED. ENTIRE EXPANSION DAM SHALL BE PAINTED AFTER FABRICATION USING URETHANE SYSTEM. COLOR OF PAINT SYSTEM TO BE APPLIED SHALL MATCH THE COLOR OF THE PROPOSED PAINT SYSTEM FOR THE EXISTING STEEL STRUCTURE.
8. LUBRICANT-ADHESIVE FOR USE IN INSTALLING AND BONDING NEOPRENE SEAL ELEMENTS TO STEEL JOINT COMPONENTS SHALL BE A ONE QUART MOISTURE CURING POLYURETHANE AND HYDROCARBON SOLVENT MIXTURE HAVING THE FOLLOWING PHYSICAL PROPERTIES:

AVERAGE WEIGHT, POUNDS PER GALLON	8±10%
SOLIDS CONTENT	65%
ADHESIVE SHALL REMAIN LIQUID FROM	5°F TO 120°F
FILM STRENGTH, AS PER ASTM D-412	2,000 PSI
ELONGATION	250%

9. STEEL EXTRUSIONS SHALL BE WELDED TO WATERTIGHT AT CONSTRUCTION JOINTS. PAYMENT INCIDENTAL TO ITEM 624000 - PREFABRICATED EXPANSION JOINT SYSTEM, 3".
10. TRAFFIC PARAPET PLATES ARE REQUIRED. SEE DETAILS ON DWG. EX-03, DWG. EX-04, AND JOINT OPENING TABLE, THIS SHEET.

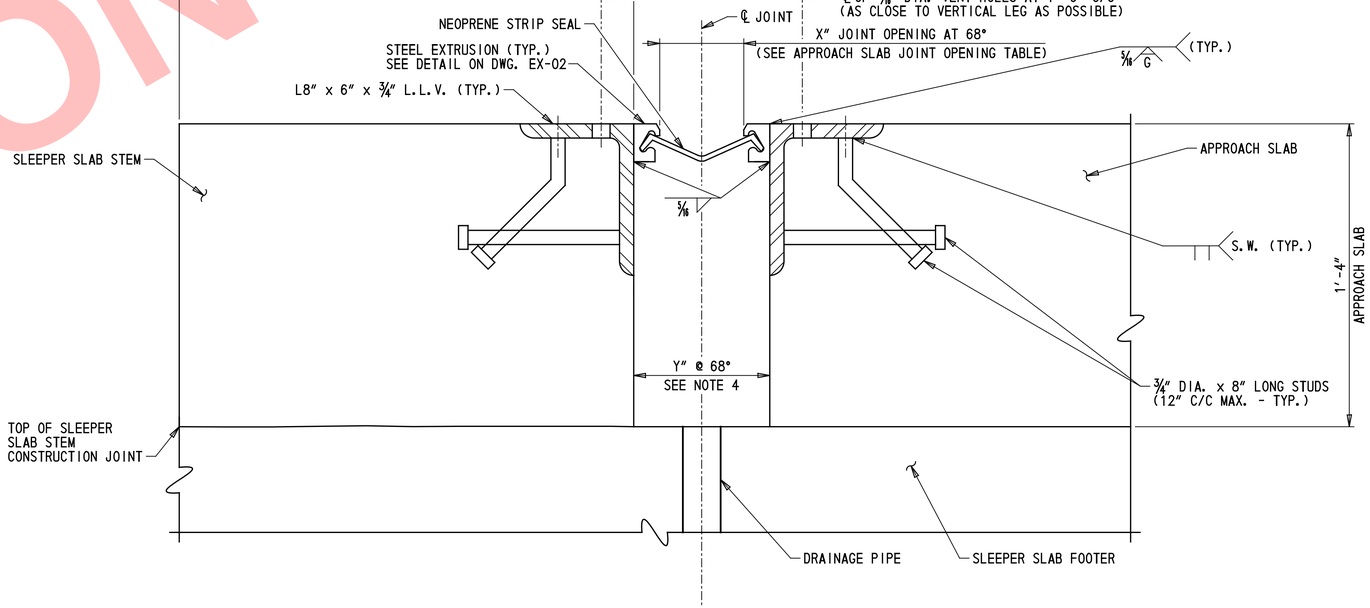

APPROACH SLAB JOINT ASSEMBLY DETAIL

3" = 1'-0"

NOT FOR CONSTRUCTION

\Bridge 1-744\744AS_11.dgn
5/16/2016 9:35:06 PM

DELAWARE DEPARTMENT OF TRANSPORTATION

ADDENDUMS / REVISIONS

SCALE AS NOTED

REHABILITATION OF I-95 FROM I-495 TO NORTH OF BRANDYWINE RIVER BRIDGE

CONTRACT	BRIDGE NO. 1 744 059
T201407404	DESIGNED BY: CWM
COUNTY	CHECKED BY: JRQ
NEW CASTLE	

APPROACH SLAB REMOVAL AND JOINT ASSEMBLY DETAILS

1-744 AS-11

SHEET NO. 2-53

TOTAL SHTS. 2-731

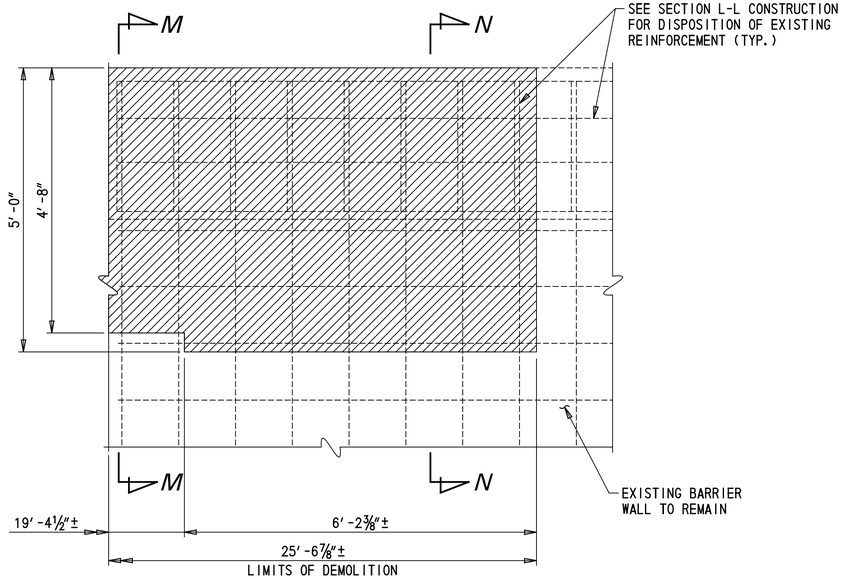

SECTION L-L REMOVAL

¾" = 1'-0"

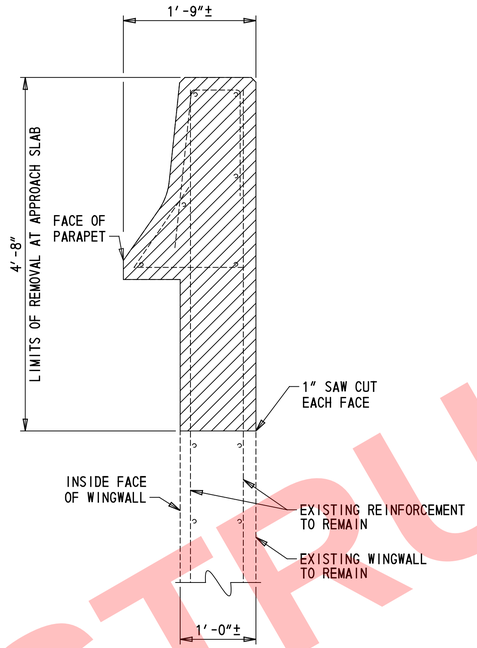

SECTION M-M REMOVAL

1" = 1'-0"

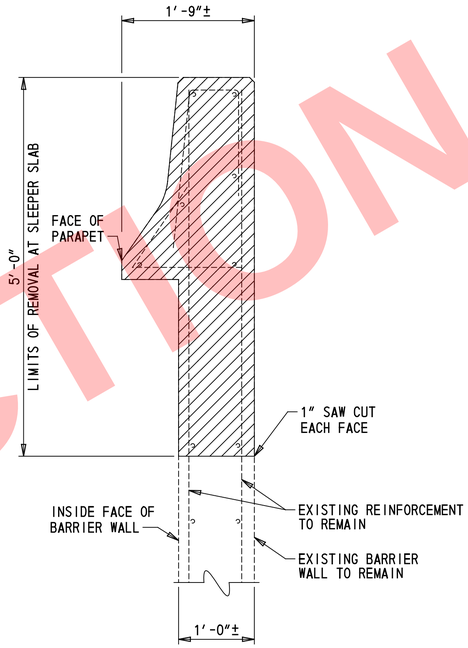

SECTION N-N REMOVAL

1" = 1'-0"

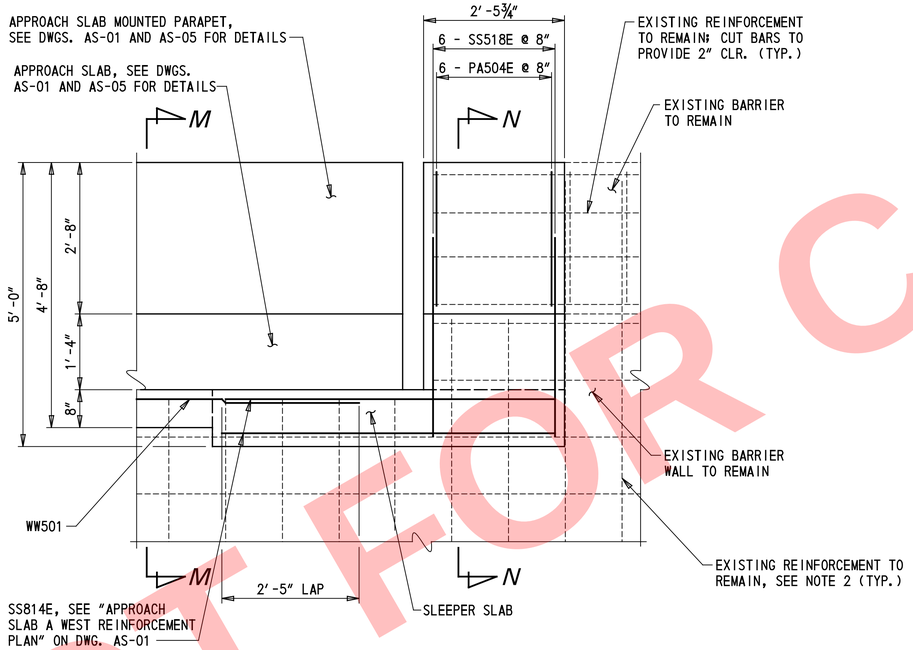

SECTION L-L CONSTRUCTION

¾" = 1'-0"

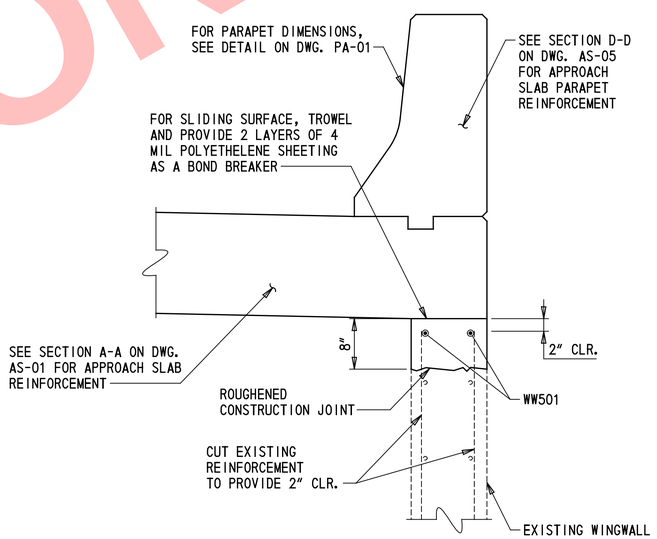

SECTION M-M CONSTRUCTION

1" = 1'-0"

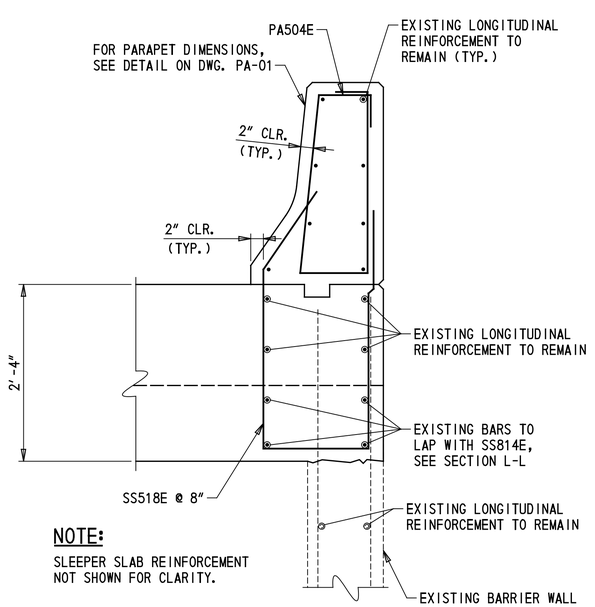

SECTION N-N CONSTRUCTION

1" = 1'-0"

NOTE:
SLEEPER SLAB REINFORCEMENT NOT SHOWN FOR CLARITY.

LEGEND:

REMOVAL LIMITS - ITEM 211000

NOTES:

1. FOR APPROACH SLAB A WEST AND EXISTING BARRIER WALL PARTIAL DEMOLITION PLAN, SEE DWG. AS-11.
2. EXISTING REINFORCING TO REMAIN SHALL BE CLEANED IN ACCORDANCE WITH SECTION 628.

NOT FOR CONSTRUCTION

DELAWARE DEPARTMENT OF TRANSPORTATION	ADDENDUMS / REVISIONS	SCALE AS NOTED	REHABILITATION OF I-95 FROM I-495 TO NORTH OF BRANDYWINE RIVER BRIDGE	CONTRACT T201407404	BRIDGE NO. 1 744 059	WINGWALL AND BARRIER WALL PARTIAL REMOVAL AND RECONSTRUCTION
				COUNTY NEW CASTLE	DESIGNED BY: CWM	1-744 AS-12
					CHECKED BY: JRQ	SHEET NO. 2-54
						TOTAL SHTS. 2-731

...\Bridge 1-744\744_AS_12.dgn
5/16/2019
5:35:57 PM

(1) ANY MARK NUMBER WITH SUFFIX 'E' DENOTES EPOXY COATED REINFORCING STEEL.

(2) ALL MARK 'LOCATION PREFIXES' SHALL CONSIST OF TWO LETTERS AND ARE AS FOLLOWS: AB = ABUTMENT, AS = APPROACH SLAB, BC = BOX CULVERT, BW = BACKWALL, CL = COLUMN, DK = DECK, DL = DOWEL, FT = FOOTING, HW = HEADWALL, MS = MISC. BARS, PA = PARAPET, PR = PIER, SC = SHEETPILE CAP, SL = SLAB, TW = TOEWALL, WL = WALL (UNIQUE LOCATION), WW = WINGWALL

SPECIFICATIONS					BENDING DIMENSIONS (FEET-INCHES /QUARTER INCH)										
QTY.	SIZE	LENGTH	MARK	TYPE	A	B	C	D	E	F/R	G	H	J	K	O
ABUTMENT															
264	5	5-11	AB501	17		2-00	1-11	2-00							
4	5	6-02	AB502	17		2-00	2-02	2-00							
4	5	5-11	AB503	17		2-00	1-11	2-00							
12	5	6-51	AB504	DE14		0-90	1-81	2-00	0-00	2-00		1-20	1-20	1-71	2-42
12	5	5-90	AB505	17		2-00	1-90	2-00							
32	6	40-00	AB606	STR		40-00									
32	6	29-60	AB607	STR		29-60									
WINGWALL															
8	5	20-11	WW501	STR		20-11									
DECK															
1296	5	2-72	DK501	17		0-60	1-72	0-60							
232	6	40-00	DK602	STR		40-00									
232	6	29-00	DK603	STR		29-00									
92	6	7-60	DK604	DE16		2-10	1-50	0-11	2-40	0-00		2-00		1-32	
92	6	6-50	DK605	DE16		2-10	1-00	0-11	1-80	0-00		1-42		0-11	
216	5	6-63	DK506	DE15		4-03	0-92	0-11	0-90	0-00					
208	5	3-43	DK507	16	0-00	0-00	2-10	0-60				0-41		0-41	3-30
216	6	3-00	DK608E	STR		3-00									
PARAPET															
96	5	5-21	PA501	16	0-00	2-30	0-80	2-31				2-30		0-32	0-11
96	5	4-82	PA502	H1		2-11	0-53	2-12		0-13		0-62			
145	5	4-11	PA503E	H1		2-12	0-82	2-13		0-30		0-23			
187	5	7-30	PA504E	SP04	0-52	0-11	2-41	0-80	2-43		0-52	2-40		0-30	
45	5	24-60	PA505E	STR		24-60									
15	5	21-42	PA506E	STR		21-42									
16	5	8-20	PA507E	STR		8-20									
8	5	4-20	PA508E	STR		4-20									
60	6	4-50	PA609	STR		4-50									

SPECIFICATIONS					BENDING DIMENSIONS (FEET-INCHES /QUARTER INCH)										
QTY.	SIZE	LENGTH	MARK	TYPE	A	B	C	D	E	F/R	G	H	J	K	O
APPROACH SLAB															
544	5	4-10	AS501E	17		2-00	0-10	2-00							
196	5	4-83	AS502E	17		2-00	0-83	2-00							
57	5	21-22	AS503E	STR		21-22									
512	5	35-90	AS504E	STR		35-90									
145	5	6-03	AS505E	DE16		2-20	1-00	1-33	1-70	0-00		1-32		0-11	
145	5	6-61	AS506E	DE16		2-20	1-50	1-31	1-80	0-00		1-42		0-11	
111	9	21-22	AS907E	STR		21-22									
171	5	24-50	AS508E	STR		24-50									
333	9	24-50	AS909E	STR		24-50									
SLEEPER SLAB															
76	5	45-31	SS501E	STR		45-31									
72	5	25-50	SS502E	16	0-00	0-00	24-00	1-50					0-10		0-10	25-50
242	5	7-90	SS503E	T2	0-60	1-60	1-10	1-60	1-10		0-60				
484	8	4-60	SS804E	STR		4-60									
28	5	7-90	SS505E	STR	0-60	1-60	1-10	1-60	1-10		0-60				
56	8	4-63	SS806E	STR		4-63									
36	5	8-11	SS507E	DE16		2-10	1-50	2-02	1-90	0-00			1-51		1-00	
30	5	5-60	SS508E	STR		5-60									
3	5	5-60	SS509E	STR		5-60									
27	5	8-83	SS510E	STR		8-83									
50	8	8-83	SS811E	STR		8-83									
2	5	8-83	SS512E	STR		8-83									
3	8	8-83	SS813E	STR		8-83									
4	8	6-22	SS814E	STR		6-22									
4	5	25-11	SS515E	16	0-00	0-00	24-60	1-50					0-10		0-10	25-11
18	5	7-50	SS516E	STR		7-50									
4	5	1-61	SS517E	STR		1-61									
6	5	8-22	SS518E	DE16		3-13	1-50	2-43	1-30	0-00		1-01		0-82	

SPECIFICATIONS					BENDING DIMENSIONS (FEET-INCHES /QUARTER INCH)										
QTY.	SIZE	LENGTH	MARK	TYPE	A	B	C	D	E	F/R	G	H	J	K	O

NOT FOR CONSTRUCTION

ASTM STANDARD ENGLISH REINFORCING BARS

BAR SIZE	NOMINAL DIAMETER (INCHES)	NOMINAL AREA (INCHES²)	NOMINAL WEIGHT (LBS./FT.)
3	0.375	0.110	0.376
4	0.500	0.200	0.668
5	0.625	0.310	1.043
6	0.750	0.440	1.502
7	0.875	0.600	2.044
8	1.000	0.790	2.670
9	1.128	1.000	3.400
10	1.270	1.270	4.303
11	1.410	1.560	5.313
14	1.693	2.250	7.650
18	2.257	4.000	13.600

RECOMMENDED END HOOKS, APPLICABLE TO ALL GRADES

BAR SIZE	180° HOOKS D	180° HOOKS A OR G	180° HOOKS J	90° HOOKS A OR G
3	2¼″	5″	3″	6″
4	3″	6″	4″	8″
5	3¾″	7″	5″	10″
6	4½″	8″	6″	1-0″
7	5¼″	10″	7″	1-2″
8	6″	11″	8″	1-4″
9	9½″	1-3″	11¾″	1-7″
10	10¾″	1-5″	1-1¼″	1-10″
11	1-0″	1-7″	1-2¾″	2-0″
14	1-6¼″	2-3″	1-9¾″	2-7″
18	2-0″	3-0″	2-4½″	3-5″

STIRRUP AND TIE HOOKS, APPLICABLE TO ALL GRADES

BAR SIZE	90° HOOK D	90° HOOK A OR G	135° HOOK A OR G	135° HOOK A OR G
3	1½″	4″	4″	2½″
4	2″	4½″	4½″	3″
5	2½″	6″	5½″	3¾″
6	4½″	1-0″	8″	4½″
7	5¼″	1-2″	9″	5¼″
8	6″	1-4″	10½″	6″

NOTES:

1. FIGURES SHOWN IN CIRCLES REPRESENT BAR BEND TYPES.
2. STANDARD BAR BENDS INCLUDE ONLY THOSE TYPES BELOW, INDICATED AS SUCH.
3. ALL DIMENSIONS OUT-TO-OUT, EXCEPT "A" AND "G" ON STD. 180° AND 135° HOOKS.
4. "J" DIMENSIONS ON 180° HOOKS TO BE SHOWN ONLY WHERE NECESSARY TO RESTRICT HOOK SIZE, OTHERWISE STANDARD 'ACI' HOOKS ARE TO BE USED.
5. WHERE "J" IS NOT SHOWN, "J" WILL BE KEPT EQUAL TO OR LESS THAN "H" ON TYPES 3, 5 AND 22. WHERE "J" CAN EXCEED "H", IT SHALL BE SHOWN.
6. "H" DIMENSIONS OF STIRRUPS TO BE SHOWN AS NEEDED TO FIT WITHIN THE CONCRETE.
7. UNLESS OTHERWISE NOTED, DIAMETER "D" IS THE SAME FOR ALL BENDS AND HOOKS ON A BAR (EXCEPT FOR BEND TYPES 11 AND 13).
8. WHERE SLOPE DIFFERS FROM 45° OFFSET, "H" AND "K" MUST BE SHOWN.
9. WHERE BARS ARE TO BE BENT MORE ACCURATELY THAN STANDARD BENDING TOLERANCES, BENDING DIMENSIONS REQUIRING CLOSER FABRICATION SHOULD HAVE LIMITS INDICATED.
10. FOR RECOMMENDED DIAMETER "D", OF BENDS, HOOKS, ETC., REFER TO TABLE ABOVE, 'CRSI' OR 'ACI' TABLES WHERE APPLICABLE AND REQUIRED.
11. TYPE S1-S6, S11, T1-T3 AND T6-T9 APPLICABLE TO BAR SIZES #3 THROUGH #8.

STIRRUP AND TIE HOOKS

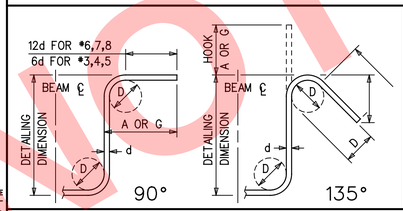

180° AND 90° END HOOKS

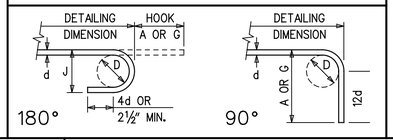

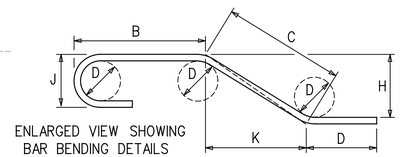

STANDARD BAR BENDS

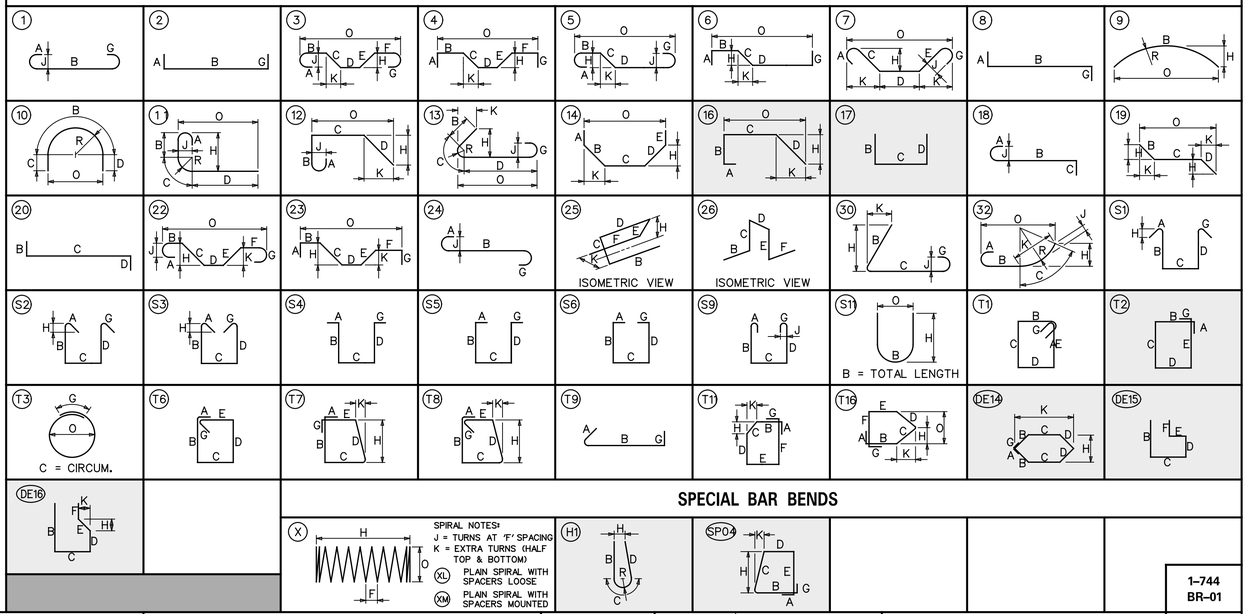

SPECIAL BAR BENDS

DELAWARE DEPARTMENT OF TRANSPORTATION

ADDENDUMS / REVISIONS

NOT TO SCALE

REHABILITATION OF I-95 FROM I-495 TO NORTH OF BRANDYWINE RIVER BRIDGE

CONTRACT	BRIDGE NO.	1 744 059
T201407404	DESIGNED BY: BSD	
COUNTY	CHECKED BY: JRQ	
NEW CASTLE		

REINFORCEMENT SCHEDULE

1-744 BR-01	
SHEET NO.	2-55
TOTAL SHTS.	2-731

...\Bridge 1-744\744BR_01.dgn
5/16/2019 5:35:37 PM

SECTION 200

1. REMOVAL OF STRUCTURES AND OBSTRUCTIONS:
   ITEMS TO BE REMOVED UNDER ITEM 211000 - REMOVAL OF STRUCTURES AND OBSTRUCTIONS ASSOCIATED WITH BRIDGE 1-745 SHALL INCLUDE, BUT NOT BE LIMITED TO, THE FOLLOWING:
   - APPROACH SLABS
   - PORTION OF BACKWALLS AND WINGWALLS
   - ABUTMENT DECK JOINTS
   - PARAPETS AT ABUTMENTS
   - RAILROAD PROTECTIVE BARRIER

2. HAZARDOUS MATERIAL:
   THE CONTRACTOR IS ADVISED THAT THE EXISTING STRUCTURE OVER NORFOLK SOUTHERN RAILROAD DOES CONTAIN LEAD BASED PAINT ON THE CROSS GIRDER INTERIORS. AS A RESULT, THE CONTRACTOR'S PROPOSED DEMOLITION PLAN MUST ADDRESS, AS A MINIMUM, METHODS OF CUTTING THE STIFFENERS AND/OR DIAPHRAGMS, IF REQUIRED, AND HOW THOSE PERSONS PERFORMING SUCH WORK WILL BE PROTECTED IN ACCORDANCE WITH APPLICABLE OSHA REGULATIONS. ADDITIONALLY, THE CONTRACTOR MUST ADDRESS WHEN AND HOW THE LEAD BASED PAINT WILL BE REMOVED FROM THE STRUCTURAL STEEL AND ALL RELATED BRIDGE COMPONENTS. IF THE WORK IS PERFORMED ON SITE, THEN PROPER PROTECTION, CONTAINMENT, AND FINAL LEAD PAINT DISPOSAL MUST BE ADDRESSED IN THE PROPOSED PLAN. IF THE REMOVED STEEL MEMBERS WILL BE TRANSPORTED WITH THE PAINT STILL INTACT, THEN THE PLAN SHALL DETAIL HOW THE STRUCTURAL COMPONENTS WILL BE PROTECTED DURING TRANSPORT, WHERE AND HOW THE PAINT WILL BE REMOVED, AND THE LOCATION OF FINAL PAINT DISPOSAL, AGAIN IN ACCORDANCE WITH OSHA REGULATIONS. WRITTEN DOCUMENTATION MUST BE PROVIDED TO THE ENGINEER, PRIOR TO FINAL CONTRACT ACCEPTANCE, NOTING WHEN AND WHERE THE LEAD BASED PAINT WAS REMOVED, AND THE LOCATION OF FINAL PAINT DISPOSAL. ALL COSTS INVOLVED WITH THE ABOVE LISTED WORK SHALL BE INCIDENTAL TO ITEM 211000 - REMOVAL OF STRUCTURES AND OBSTRUCTIONS.

SECTION 600

3. PORTLAND CEMENT CONCRETE:
   USE PORTLAND CEMENT CONCRETE FOR CAST-IN-PLACE ELEMENTS AS FOLLOWS:
   (f'c = 28-DAY COMPRESSIVE STRENGTH)
   CLASS A - PARAPETS, PIERS, ABUTMENTS (f'c = 4.5 ksi)
   CLASS D - DECK, APPROACH SLABS, SLEEPER SLABS (f'c = 4.5 ksi)
   A HIGHER CLASS CONCRETE MAY BE SUBSTITUTED FOR A LOWER CLASS CONCRETE AT NO ADDITIONAL COST TO DELDOT WITH APPROVAL OF THE BRIDGE DESIGN ENGINEER.
   - CHAMFER ALL EXPOSED EDGES ¾" X ¾" UNLESS OTHERWISE NOTED.
   - CONTRACTOR WILL SUPPLY CONCRETE FOR THE PARAPETS, BRIDGE DECK, AND APPROACH SLABS THAT INCLUDES A SHRINKAGE-REDUCING/COMPENSATING ADMIXTURE. PAYMENT FOR ADMIXTURE WILL BE INCIDENTAL TO ITS RESPECTIVE CONCRETE ITEM (ITEMS 610008, 610017, AND 610018). THE ADMIXTURE MAY BE SUPPLIED BY ONE PRODUCT THAT PROVIDES BOTH EXPANSION AND PORE WATER SURFACE TENSION OR TWO SEPARATE PRODUCTS EACH ADDED AT DOSAGE RECOMMENDED BY MANUFACTURER'S TECHNICAL DATA SHEETS AND HAVING THE FOLLOWING CHARACTERISTICS:
   (A) DESIGNED TO PROVIDE BOTH THE FOLLOWING CHARACTERISTICS:
      I. EXPANDS AT A RATE THAT CLOSELY COMPENSATES FOR SHRINKAGE OF THE CONCRETE MIX.
      II. REDUCES THE CAPILLARY SURFACE TENSION OF THE CONCRETE PORE WATER.
   (B) PROVIDES AT LEAST 80% SHRINKAGE REDUCTION AS MEASURED AND DOCUMENTED BY FIELD PERFORMANCE.
   (C) FORMULATED FOR USE IN FREEZING AND THAWING WEATHER.

4. BAR REINFORCEMENT:
   - REINFORCING STEEL SHALL CONFORM TO AASHTO M31 (ASTM A615), GRADE 60.
   - REINFORCING STEEL SHALL HAVE A 3" CLEAR COVER IF CAST AGAINST EARTH OR A 2" CLEAR COVER ELSEWHERE, UNLESS OTHERWISE SPECIFIED ON THE PLANS.
   - ALL REINFORCING STEEL SHALL BE PROTECTED WITH FUSION BONDED EPOXY, EXCEPT AS NOTED ON THE PLANS. EPOXY COATED REINFORCING STEEL SHALL CONFORM TO AASHTO M284 (ASTM D3963).
   - ANY FIELD CUTTING OR FIELD BENDING MUST BE APPROVED BY THE ENGINEER. PAYMENT SHALL BE INCIDENTAL TO THE BAR REINFORCEMENT ITEM.
   - GALVANIZED REINFORCING STEEL MAY BE SUBSTITUTED FOR EPOXY-COATED REINFORCING STEEL AT NO ADDITIONAL COST TO THE DEPARTMENT WITH APPROVAL OF THE ENGINEER.
   - WELDING OF REINFORCEMENT DURING FABRICATION OR CONSTRUCTION IS NOT PERMITTED UNLESS SPECIFIED.

5. CONCRETE SEALER:
   REFER TO DIAGRAMS CONTAINING SILICONE ACRYLIC CONCRETE SEALER LIMITS ON DWGS. TS-01, AB-01, AB-02, PR-01 TO PR-07 AND AS-02. SILICONE ACRYLIC CONCRETE SEALER SHALL BE APPLIED TO EXPOSED CONCRETE SURFACES AT THE ABUTMENTS, PIERS AND WINGWALLS.

6. STRUCTURAL STEEL:
   PROVIDE STRUCTURAL STEEL CONFORMING TO AASHTO M270, GRADE 50 (ASTM A709, GRADE 50) DESIGNATION, EXCEPT WHEN NOTED OTHERWISE. THE ADDITIONAL REQUIREMENTS FOR CHARPY V-NOTCH TESTING (DENOTED AS 'CVN' ON PLANS) OF AASHTO M270 FOR PRIMARY LOAD CARRYING MEMBERS SHALL BE INCLUDED. SUPPLEMENTAL NOTCH TOUGHNESS REQUIREMENTS ARE MANDATORY FOR:
   - ALL DIAPHRAGM MEMBERS AND DIAPHRAGM CONNECTION PLATES
   - JACKING DIAPHRAGMS AND CONNECTION PLATES

   ALL FASTENERS ARE ⅞" DIAMETER ASTM A325 HIGH STRENGTH BOLTS, TYPE I, UNLESS OTHERWISE NOTED.

   PROVIDE MATERIALS AND PERFORM WORK IN ACCORDANCE WITH AASHTO/AWS D1.5M/D1.5:2015 BRIDGE WELDING CODE, AND CONTRACT DOCUMENTS. MAKE TACK WELDS WITH THE SAME TYPE OF ELECTRODE AND INCORPORATE IN THE FINAL WELD. NO OTHER TACK WELDING WILL BE PERMITTED, EXCEPT AS NOTED ON THE PLANS.

SECTION 600 (CONTINUED)

6. STRUCTURAL STEEL (CONTINUED):
   DO NOT USE FORM SUPPORT SYSTEMS THAT WILL CAUSE UNACCEPTABLE OVERSTRESS OR DEFORMATION TO PERMANENT BRIDGE MEMBERS.

   SET ANCHOR BOLTS TO TEMPLATE IN CORED HOLES. FILL THE HOLES WITH NON-SHRINK GROUT TO BE FLUSH WITH THE TOP CONCRETE SURFACE.

7. CLEAN AND PAINT EXISTING STRUCTURAL STEEL:
   - CLEANING AND PAINTING OF EXISTING STRUCTURAL STEEL SHALL BE IN ACCORDANCE WITH DELAWARE DEPARTMENT OF TRANSPORTATION STANDARD SPECIFICATIONS, SECTION 616.

8. BEARINGS:
   ALL ELASTOMERIC BEARINGS SHALL BE LAMINATED ELASTOMERIC DESIGNED AS PER AASHTO 14.7.5, METHOD B, AND SHALL CONFORM TO SECTION 623 OF THE STANDARD SPECIFICATIONS. PAYMENT FOR ELASTOMERIC BEARINGS AND REPLACEMENT OF ANCHOR BOLTS AT ABUTMENT B WILL BE MADE UNDER ITEM 623000 - ELASTOMERIC BEARING.

   ANCHOR BOLTS SHALL CONFORM TO ASTM F1554.

   FOR REPAIR 26, REPLACEMENT NUTS SHALL CONFORM TO ASTM A563.

MISCELLANEOUS

9. DESIGN SPECIFICATIONS:
   (A) DELDOT BRIDGE DESIGN MANUAL, 2016 EDITION.
   (B) AASHTO LRFD BRIDGE SPECIFICATIONS, 2014, 7TH EDITION, CUSTOMARY U.S. UNITS INCLUDING 2015 AND 2016 INTERIMS.
   (C) PROVIDE MATERIALS AND PERFORM WORK IN ACCORDANCE WITH THE DELDOT STANDARD SPECIFICATIONS, AUGUST 2016.

10. LOADING:
    - DEAD LOADS INCLUDE 25 PSF FOR FUTURE WEARING SURFACE ON DECK SLAB AND 15 PSF FOR STAY-IN-PLACE FORMS (INCLUDES CONCRETE IN FORM CORRUGATIONS). PARAPET LOADS ARE DISTRIBUTED 75% TO THE EXTERIOR AND 25% TO THE FIRST INTERIOR BEAM.
    - DESIGN LIVE LOADS INCLUDE HL-93 LOADING.
    - FATIGUE DESIGN IS BASED ON THE FOLLOWING ONE DIRECTIONAL TRAFFIC VOLUMES: ADTT = 3,910 IN YEAR 2040.
    - LIVE LOAD DISTRIBUTION TO THE GIRDERS IS BASED ON THE AASHTO SIMPLIFIED METHOD.
    - THERMAL LOADS AND MOVEMENTS ARE BASED ON THE MODERATE TEMPERATURE RANGE AS STIPULATED IN THE AASHTO LRFD DESIGN SPECIFICATIONS AS 0° TO 120°F. THE NORMAL TEMPERATURE SHALL BE CONSIDERED TO BE 68° F.
    - LIVE LOAD DEFLECTION SHALL BE LIMITED TO L/800.
    - FOR REINFORCEMENT DISTRIBUTION REQUIREMENTS, CONSIDER CLASS 1 EXPOSURE CRITERIA FOR DECKS.

11. EXISTING CONDITIONS:
    - ALL EXISTING DIMENSIONS AND ELEVATIONS SHOWN ARE BASED ON THE BEST AVAILABLE INFORMATION AND ARE APPROXIMATE ONLY. THE CONTRACTOR SHALL FIELD VERIFY ALL EXISTING DIMENSIONS, GEOMETRY, AND ELEVATIONS AS NECESSARY PRIOR TO ORDERING ANY MATERIALS AND COMMENCING CONSTRUCTION TO ENSURE PROPER FIT OF THE PROPOSED CONSTRUCTION. PAYMENT SHALL BE INCIDENTAL TO ITEM 763501 - CONSTRUCTION ENGINEERING.

12. RAILROAD CLEARANCES:
    A MINIMUM OF 23'-0" SHALL BE MAINTAINED ABOVE ALL RAILROADS.

13. CONTINGENT QUANTITIES:
    THESE CONTRACT DRAWINGS HAVE BEEN PREPARED BASED ON ORIGINAL CONTRACT PLANS AND FIELD INSPECTION NOTES TAKEN FROM NOVEMBER 16, 2014 THROUGH FEBRUARY 5, 2015. ADDITIONAL REPAIRS HAVE BEEN ADDED BASED ON THE APRIL 2017 BIENNIAL BRIDGE INSPECTION REPORT. ACTUAL CONDITIONS MAY REQUIRE MODIFICATION IN CONSTRUCTION DETAILS AND WORK QUANTITIES. ALL DIMENSIONS AND DETAILS SHOWN ON THE PLANS SHALL BE VERIFIED BY THE CONTRACTOR PRIOR TO ORDERING ANY MATERIALS. SEE DWG. PN-04 FOR PAY ITEM CONTINGENCY PERCENTAGES.

14. UTILITIES:
    SEE UTILITY STATEMENT AND UTILITY RELOCATION PLAN SHEETS FOR FURTHER INFORMATION ON UTILITY COORDINATION.

15. ENVIRONMENTAL COMPLIANCE:
    REFER TO THE ENVIRONMENTAL COMPLIANCE PLAN FOR RESTRICTIONS AND ADDITIONAL GUIDANCE THAT MAY BE ASSOCIATED WITH THIS PROJECT.

16. ABBREVIATIONS:

ABUT. = ABUTMENT	F.F. = FRONT FACE	P.C.C. = PORTLAND CEMENT CONCRETE
BOT. = BOTTOM	FIX. = FIXED	P/R = POINT OF ROTATION
BRG. = BEARING	GR. = GRADE	R = RADIUS
C/C = CENTER TO CENTER	L.L.V. = LONG LEG VERTICAL	R.F. = REAR FACE
L = CENTERLINE	LMC = LATEX MODIFIED CONCRETE	RT = RIGHT
CLR. = CLEAR	LT = LEFT	S.W. = SHOP WELD
℄DIA. = DIAMETER	MAX. = MAXIMUM	SB = SOUTHBOUND
DWG. = DRAWING	MIN. = MINIMUM	SCH. = SCHEDULE
E.F. = EACH FACE	N.T.S. = NOT TO SCALE	SHLD. = SHOULDER
EL. = ELEVATION	NB = NORTHBOUND	STA. = STATION
EQ = ENTIRE QUANTITY	NO. = NUMBER	TRK = TRACK
EXP. = EXPANSION	OH = OVERHEAD	TYP. = TYPICAL

MISCELLANEOUS (CONTINUED)

17. PRIOR TO SHIFTING TRAFFIC TO STAGE 2A THE CONTRACTOR SHALL CLEAN THE EXISTING BRIDGE SCUPPER ON I-95 SB. THE WORK CONSISTS OF FURNISHING PROPER EQUIPMENT AND CLEANING THE EXISTING BRIDGE SCUPPERS AND DOWNSPOUTS IN ACCORDANCE WITH NOTES AND LOCATIONS ON THE PLANS AND AS DIRECTED BY THE ENGINEER.

    CONSTRUCTION METHODS:
    THE CONTRACTOR SHALL REMOVE SEDIMENT, DEBRIS, ETC., FROM THE BOX OF THE SCUPPER AND PIPE OUTFALLS. ONCE THIS BLOCKAGE HAS BEEN REMOVED, THE CONTRACTOR SHALL ROUT, IF REQUIRED, AND FLUSH DOWNSPOUTS WITH WATER UNDER PRESSURE TO REMOVE ANY OBSTRUCTIONS AND CLEANSE THE SYSTEM. ROUTING AND FLUSHING EQUIPMENT SHALL BE INDUSTRY ACCEPTED EQUIPMENT FOR THIS TYPE OF CLEANING AND FLUSHING OPERATION.

    METHOD OF MEASUREMENT:
    THE QUALITY OF SCUPPERS CLEANED WILL BE MEASURED AS THE ACTUAL NUMBER OF EACH SCUPPER CLEANED AND ACCEPTED BY THE ENGINEER.

    BASIS OF PAYMENT:
    THE QUANTITY OF SCUPPERS CLEANED WILL BE PAID FOR AT THE CONTRACT UNIT PRICE PER EACH UNDER ITEM XXXXXX - CLEANING BRIDGE SCUPPERS. PRICE AND PAYMENT SHALL CONSTITUTE FULL COMPENSATION FOR CLEANING, ROUTING AND FLUSHING IN PIPE FROM SCUPPER TO PIPE DISCHARGE, DISPOSAL OF REMOVED MATERIALS, AND FOR ALL LABOR, TOOLS, EQUIPMENT, AND NECESSARY INCIDENTALS TO COMPLETE THE WORK.

RAILROAD COORDINATION - NORFOLK SOUTHERN

18. ALL WORK ON, OVER, UNDER, OR ADJACENT TO NORFOLK SOUTHERN (NS) RIGHT-OF-WAY SHALL BE DONE IN ACCORDANCE WITH THE NORFOLK SOUTHERN "SPECIAL PROVISIONS FOR PROTECTION OF RAILWAY INTERESTS" (NS SPECIAL PROVISIONS).

19. NORFOLK SOUTHERN CONTACT INFORMATION:
    NORFOLK SOUTHERN CORPORATION
    BRIDGES AND STRUCTURES DEPARTMENT
    ATTN. MR. S.A. OVERBEY, ENGINEER PUBLIC IMPROVEMENTS
    1200 PEACHTREE STREET NE
    ATLANTA, GA 30309
    PHONE: (404) 582-5588
    EMAIL: SCOTT.OVERBEY@NSCORP.COM

20. "ONE CALL" SERVICES DO NOT LOCATE BURIED RAILROAD SIGNAL AND COMMUNICATION LINES. THE CONTRACTOR SHALL CONTACT THE RAILROAD'S REPRESENTATIVE TWO (2) DAYS IN ADVANCE OF THOSE PLACES WHERE EXCAVATION, PILE DRIVING, OR HEAVY LOADS MAY DAMAGE RAILROAD UNDERGROUND LINES ON RAILROAD PROPERTY. UPON REQUEST FROM THE CONTRACTOR OR AGENCY, RAILROAD SIGNAL FORCES WILL LOCATE AND PAINT MARK OR FLAG RAILROAD UNDERGROUND SIGNAL, COMMUNICATION, AND POWER LINES IN THE AREA TO BE DISTURBED FOR THE CONTRACTOR. THE CONTRACTOR SHALL AVOID EXCAVATION OR OTHER DISTURBANCE OF THESE LINES WHICH ARE CRITICAL TO THE SAFETY OF THE RAILROAD AND THE PUBLIC. IF DISTURBANCE OR EXCAVATION IS REQUIRED NEAR A BURIED RAILROAD SIGNAL, COMMUNICATION, OR POWER LINE, THE LINE SHALL BE POTHOLED MANUALLY WITH CAREFUL HAND EXCAVATION BY THE CONTRACTOR AND PROTECTED BY THE CONTRACTOR DURING THE COURSE OF THE DISTURBANCE UNDER THE SUPERVISION AND DIRECTION OF A RAILROAD SIGNAL REPRESENTATIVE.

21. ALL UTILITY INSTALLATIONS OR RELOCATIONS ON NORFOLK SOUTHERN RIGHT-OF-WAY THAT ARE REQUIRED IN CONJUNCTION WITH THIS PROJECT CAN BE INSTALLED OR RELOCATED AS PART OF THE PROJECT PROVIDED THE CONSTRUCTION IS PERFORMED BY THE PROJECT CONTRACTOR OR PROJECT CONTRACTOR'S SUB-CONTRACTOR. HOWEVER, THE UTILITY MUST SUBMIT AN APPLICATION FOR THE INSTALLATION OR RELOCATION TO AECOM FOR APPROPRIATE HANDLING FOR LICENSE AGREEMENT AND APPLICABLE FEES. FOR UTILITY APPLICATIONS GO TO: WWW.NSCORP.COM > REAL ESTATE > NS SERVICES > WIRE, PIPELINE, AND FIBER OPTICS PROJECTS. NOTE: LICENSE AGREEMENT MUST BE EXECUTED PRIOR TO UTILITY BEING INSTALLED OR RELOCATED.

22. FOR PROJECTS EXCEEDING 30 DAYS OF CONSTRUCTION, CONTRACTOR SHALL PROVIDE THE FLAGMAN A SMALL WORK AREA WITH A DESK/COUNTER AND CHAIR WITHIN THE FIELD/SITE TRAILER, INCLUDING THE USE OF BATHROOM FACILITIES, WHERE THE FLAGMAN CAN CHECK IN/OUT WITH THE PROJECT, AS WELL AS TO THE FLAGMAN'S HOME TERMINAL. THE WORK AREA SHOULD PROVIDE ACCESS TO TWO (2) ELECTRICAL OUTLETS FOR RECHARGING RADIO(S), AND A LAPTOP COMPUTER; AND HAVE THE ABILITY TO PRINT OFF NEEDED DOCUMENTATION AND ORDERS AS NEEDED AT THE FIELD/SITE TRAILER. THIS SHOULD AID IN MAXIMIZING THE FLAGMAN'S TIME AND EFFICIENCY ON THE PROJECT.

23. NORFOLK SOUTHERN WILL BE PROVIDED AS-BUILT DRAWINGS OF THE BRIDGES SHOWING THE ACTUAL CLEARANCES AS CONSTRUCTED. DEPTH, SIZE, AND LOCATION OF ALL FOUNDATION COMPONENTS SHALL BE SHOWN ON THE DRAWINGS.

24. CONTRACTOR SHALL DESIGN TEMPORARY SHIELDING OVER NORFOLK SOUTHERN IN ACCORDANCE WITH AASHTO LRFD BRIDGE DESIGN SPECIFICATIONS AND NORFOLK SOUTHERN DESIGN CRITERIA.

NOT FOR CONSTRUCTION

INDEX OF BRIDGE 1-745 SHEETS

BR. SHEET Nº	BR. DWG. Nº	TABLE OF CONTENTS
2-56	PN-01	BRIDGE PROJECT NOTES
2-57	PN-02	INDEX OF SHEETS, QUANTITIES, AND LOAD RATINGS
2-58	PN-03	CONCRETE REPAIR DETAILS
2-59	PN-04	SUMMARY OF PROPOSED REPAIR AND RECONSTRUCTION ITEMS
2-60	PE-01	GENERAL PLAN AND ELEVATION
2-61	TS-01	BRIDGE TYPICAL SECTIONS
2-62 TO 2-65	SC-01 TO SC-04	SEQUENCE OF CONSTRUCTION
2-66 TO 2-69	AB-01 TO AB-04	ABUTMENT CONCRETE REPAIR DETAILS
2-70	AB-05	ABUTMENT EROSION REPAIR DETAILS
2-71 TO 2-77	PR-01 TO PR-07	PIER CONCRETE REPAIR DETAILS
2-78 TO 2-80	BM-01 TO BM-03	CROSS GIRDER REPAIR DETAILS
2-81	DM-01	MILLING AND HYDRODEMOLITION DETAILS
2-82	BB-01	BEARING DETAILS
2-83	RH-01	JACKING DETAILS
2-84	SO-01	SOFFIT REPAIR PLAN
2-85	PA-01	PARAPET DETAILS
2-86	PA-02	RAILROAD PROTECTIVE BARRIER DETAILS
2-87 TO 2-90	EX-01 TO EX-04	EXPANSION JOINT DETAILS
2-91 TO 2-92	EX-05 TO EX-06	DECK OVER DETAILS
2-93 TO 2-94	AS-01 TO AS-02	APPROACH SLAB DETAILS
2-95 TO 2-97	AS-03 TO AS-05	SLEEPER SLAB DETAILS
2-98	BR-01	REINFORCEMENT SCHEDULE
TOTAL BRIDGE SHEETS: 43		

LOAD RATING SUMMARY

DESIGN VEHICLE	RATING FACTOR	RATING WEIGHT (TON)	CONTROLLING MEMBER	CONTROLLING POINT	LOAD EFFECT
HL-93 TRUCK (INVENTORY)	1.01	N/A	SPAN 4: INTERIOR BEAM	110	BEARING
HL-93 TANDEM (INVENTORY)	1.23	N/A	SPAN 4: INTERIOR BEAM	110	BEARING
HL-93 TRUCK TRAIN (INVENTORY)	N/A	N/A	N/A	N/A	N/A
HS-20 TRUCK (INVENTORY)	1.33	47.72	SPAN 4: INTERIOR BEAM	110	BEARING
HL-93 TRUCK (OPERATING)	1.31	N/A	SPAN 4: INTERIOR BEAM	110	BEARING
HL-93 TANDEM (OPERATING)	1.59	N/A	SPAN 4: INTERIOR BEAM	110	BEARING
HL-93 TRUCK TRAIN (OPERATING)	N/A	N/A	N/A	N/A	N/A
HS-20 TRUCK (OPERATING)	1.72	61.85	SPAN 4: INTERIOR BEAM	110	BEARING
DE S220 & LEGAL-LANE (LEGAL)	2.74	54.79	SPAN 4: INTERIOR BEAM	110	BEARING
DE S335 & LEGAL-LANE (LEGAL)	1.57	54.92	SPAN 4: INTERIOR BEAM	110	BEARING
DE S437 & LEGAL-LANE (LEGAL)	1.52	55.54	SPAN 4: INTERIOR BEAM	110	BEARING
DE T330 & LEGAL-LANE (LEGAL)	2.11	63.35	SPAN 4: INTERIOR BEAM	110	BEARING
DE T435 & LEGAL-LANE (LEGAL)	1.75	61.16	SPAN 4: INTERIOR BEAM	110	BEARING
DE T540 & LEGAL-LANE (LEGAL)	1.67	66.65	SPAN 4: INTERIOR BEAM	110	BEARING
NOTE: LOAD RATING INCLUDES FUTURE WEARING SURFACE AS NOTED IN THE PLANS.					

QUANTITIES

ITEM Nº	ITEM TITLE	UNIT	QUANTITY
207000	STRUCTURAL EXCAVATION	CY	220
211000	REMOVAL OF STRUCTURES AND OBSTRUCTIONS	LS	1
301001	GRADED AGGREGATE BASE COURSE, TYPE B	CY	220
302002	DELAWARE NO. 3 STONE	TON	9
601192	PVC PIPE, 8"	LF	20
602XXX	CLEANING BRIDGE SCUPPER	EA	12
604000	JACKING BRIDGE	LS	1
604001	PROTECTIVE SHIELD	LS	1
610002	PORTLAND CEMENT CONCRETE MASONRY, ABUTMENT ABOVE FOOTING, CLASS A	CY	44
610008	PORTLAND CEMENT CONCRETE MASONRY, PARAPET, CLASS A	CY	40
610017	PORTLAND CEMENT CONCRETE MASONRY, SUPERSTRUCTURE, CLASS D	CY	141
610018	PORTLAND CEMENT CONCRETE MASONRY, APPROACH SLAB, CLASS D	CY	330
611000	BAR REINFORCEMENT	LB	28830
611001	BAR REINFORCEMENT, EPOXY COATED	LB	87200
613001	SILICONE-BASED ACRYLIC CONCRETE SEALER	SF	22890
613003	HIGH MOLECULAR WEIGHT METHACRYLATE CONCRETE SEALER	SF	49100
615004	REPLACING STEEL RIVETS/BOLTS	EA	64
615005	STEEL STRUCTURE REPAIR	LB	100
616000	CLEANING AND PAINTING EXISTING STEEL	LS	1
616003	TESTING AND DISPOSAL OF EXISTING HAZARDOUS STEEL COATING	LS	1
623000	ELASTOMERIC BEARING	EA	16
623004	CLEAN AND GREASE BRIDGE BEARINGS	EA	176
624000	PREFABRICATED EXPANSION JOINT SYSTEMS, 3"	LF	1308
625000	LATEX-MODIFIED CONCRETE OVERLAY INSTALLATION	SY-IN	17180
625001	FURNISHING LATEX-MODIFIED CONCRETE OVERLAY	CY	600
6255XX	ADDITIONAL LATEX-MODIFIED CONCRETE FOR PARTIAL DECK REPAIRS	CY	25
628001	REPAIR OF CONCRETE STRUCTURES BY EPOXY INJECTION	LF	159
628041	DEEP SPALL REPAIR	CF	129
628042	REHABILITATION OF PCC MASONRY	CY	1
628053	DECK REPAIR, FULL DEPTH	SF	50
6285XX	REMOVAL OF EXISTING DECK REPAIRS	SF	200
707016	RIPRAP, R-5	TON	52
708003	GEOTEXTILES, RIPRAP	SY	34
727007	BRIDGE SAFETY FENCE, TYPE 1	LF	164
760013	PAVEMENT MILLING, PORTLAND CEMENT CONCRETE PAVEMENT	SY-IN	12050
7605XX	TOTAL SURFACE HYDRODEMOLITION	SY	5360

NOTE:
QUANTITIES INCLUDE CONTINGENT PERCENTAGES AS NOTED IN NOTE 13 ON DWG. PN-01 AND AS SHOWN IN THE REPAIR TABLE ON DWG. PN-04.

NOT FOR CONSTRUCTION

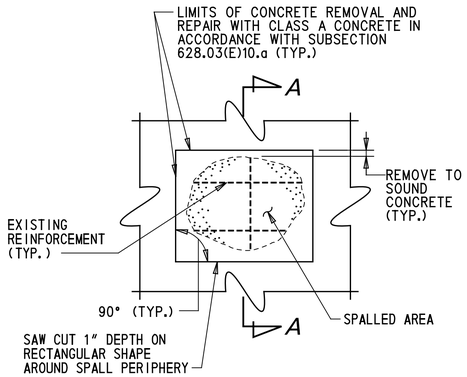

PLAN

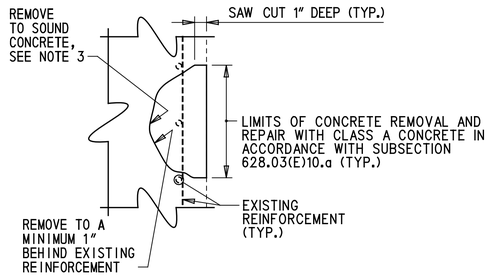

SECTION A-A

DEEP SPALL REPAIR

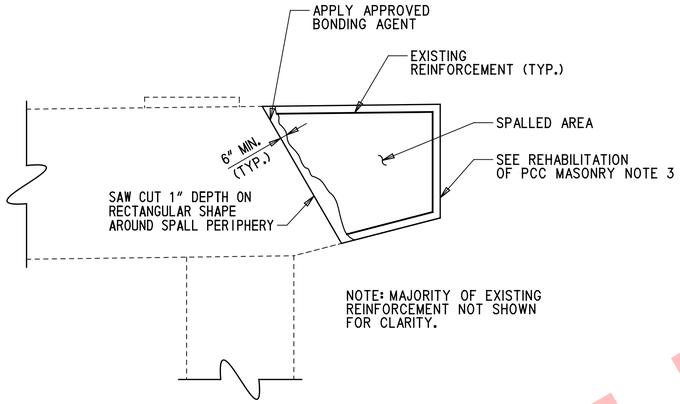

REHABILITATION OF PCC MASONRY

DEEP SPALL REPAIR NOTES

1. DEEP SPALL REPAIRS ARE DEFINED AS PATCHES THAT EXTEND BELOW THE TOP MAT OF REINFORCEMENT. DELAMINATED CONCRETE HAS BEEN ASSUMED AS DEEP SPALL REPAIRS.
2. ALL WORK INVOLVING METHODS OF CONCRETE REMOVAL; CLEANING OF CONCRETE SURFACE AND EXISTING REINFORCEMENT; REPAIRING OR REPLACING DAMAGED REINFORCEMENT AS RESULT OF CONSTRUCTION ACTIVITIES OR SECTION LOSS; PRESENCE OF CONTRACTION OR EXPANSION JOINTS; SURFACE PREPARATION; AND CONCRETE PLACEMENT SHALL BE PERFORMED IN ACCORDANCE WITH SUBSECTION 628.03(E) OF THE STANDARD SPECIFICATIONS. PAYMENT INCIDENTAL TO 628041 - DEEP SPALL REPAIR.
3. IF DEPTH OF REPAIR EXTENDS MORE THAN 6" BEYOND SURFACE OF CONCRETE, CONTRACTOR SHALL STOP WORK AND NOTIFY THE ENGINEER IMMEDIATELY.

REHABILITATION OF PCC MASONRY NOTES

1. REHABILITATION OF PCC MASONRY IS DEFINED AS DEEP SPALL PATCHES THAT EXCEED THE 0.5 C.Y. THRESHOLD IN A SINGLE AREA.
2. ALL WORK INVOLVING METHODS OF CONCRETE REMOVAL; CLEANING OF CONCRETE SURFACE AND EXISTING REINFORCEMENT; REPAIRING OR REPLACING DAMAGED REINFORCEMENT AS RESULT OF CONSTRUCTION ACTIVITIES OR SECTION LOSS; PRESENCE OF CONTRACTION OR EXPANSION JOINTS; SURFACE PREPARATION; AND CONCRETE PLACEMENT SHALL BE PERFORMED IN ACCORDANCE WITH SUBSECTION 628.03(E) OF THE STANDARD SPECIFICATIONS. PAYMENT INCIDENTAL TO 628042 - REHABILITATION OF PCC MASONRY.
3. DETAIL SHOWN FOR "REHABILITATION OF EXISTING PCC MASONRY" UTILIZES A GENERIC EXAMPLE USING PARTIAL RECONSTRUCTION OF AN EXISTING PIER CAP. SEE ABUTMENT AND PIER REHABILITATION SHEETS FOR SIZE AND LOCATION OF REPAIRS AT EACH SUBSTRUCTURE UNIT.
4. IF DEPTH OF REPAIR EXTENDS MORE THAN 6" BEYOND SURFACE OF CONCRETE, CONTRACTOR SHALL STOP WORK AND NOTIFY THE ENGINEER IMMEDIATELY.

REMOVAL OF EXISTING DECK REPAIR NOTES

1. AFTER EXISTING OVERLAY IS REMOVED, PRIOR TO HYDRODEMOLITION, ANY EXISTING DECK REPAIRS THAT ARE LOOSE, PARTIALLY DELAMINATED, OR OTHERWISE UNSOUND, WILL BE MEASURED BY THE ENGINEER AND MARKED FOR REMOVAL.
2. THE CONTRACTOR SHALL REMOVE THE EXISTING DECK REPAIRS IN ACCORDANCE WITH SECTION 628.03(F).
3. THE REMOVAL SHALL NOT INCLUDE ANY UNSOUND ORIGINAL BRIDGE DECK CONCRETE.
4. REFER TO ITEM 6285xx - REMOVAL OF EXISTING DECK REPAIR FOR PAYMENT AND ADDITIONAL INFORMATION.
5. IF REMOVAL OF EXISTING DECK REPAIR REACHES FULL DEPTH, AND WITH THE APPROVAL OF THE ENGINEER, REPAIR AREA SHALL BE REPAIRED IN ACCORDANCE WITH SUBSECTION 628.03(F) AND PAID FOR UNDER ITEM 628053 - DECK REPAIR, FULL DEPTH. REMOVAL OF EXISTING DECK REPAIRS THAT ARE CHANGED TO DECK REPAIR, FULL DEPTH WILL ONLY BE PAID FOR ONCE UNDER ITEM 628053.

DECK REPAIR NOTES

1. AFTER EXISTING OVERLAY IS REMOVED, PRIOR TO HYDRODEMOLITION, EXISTING AREAS OF DECK REQUIRING FULL DEPTH REPAIR AS DIRECTED BY THE ENGINEER, SHALL BE REPAIRED USING DETAIL SHOWN ON THIS SHEET.
2. ALL WORK INVOLVING METHODS OF CONCRETE REMOVAL; CLEANING OF CONCRETE SURFACE AND EXISTING REINFORCEMENT; REPAIRING OR REPLACING DAMAGED REINFORCEMENT AS RESULT OF CONSTRUCTION ACTIVITIES OR SECTION LOSS; PRESENCE OF CONTRACTION OR EXPANSION JOINTS; SURFACE PREPARATION; AND CONCRETE PLACEMENT SHALL BE PERFORMED IN ACCORDANCE WITH SUBSECTION 628.03(F) OF THE STANDARD SPECIFICATIONS AND ITEMS 7605xx - TOTAL SURFACE HYDRODEMOLITION, AND ITEM 6255xx - ADDITIONAL LATEX-MODIFIED CONCRETE FOR PARTIAL DECK REPAIRS. PAYMENT FOR FULL DEPTH DECK REPAIRS MADE AFTER MILLING AND PRIOR TO HYDRODEMOLITION WILL BE MADE UNDER ITEM 628053 - DECK REPAIR, FULL DEPTH. PAYMENT FOR FULL DEPTH DECK REPAIRS MADE AFTER HYDRODEMOLITION WILL BE MADE UNDER ITEM 628053 - DECK REPAIR, FULL DEPTH.
3. MILLING, HYDRODEMOLITION, AND LMC OVERLAY WILL BE PAID FOR UNDER THEIR RESPECTIVE ITEMS.

LEGEND:

- LIMITS OF REMOVAL, MECHANICAL MILLING (ITEM 760013)
- LIMITS OF HYDRODEMOLITION (ITEM 7605xx)
- LIMITS OF REMOVAL (ITEM 628053 OR 6285xx)
- CLASS D CONCRETE

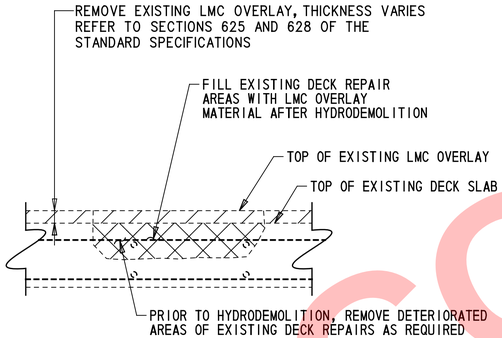

REMOVAL OF EXISTING DECK REPAIRS (ITEM 6285xx)

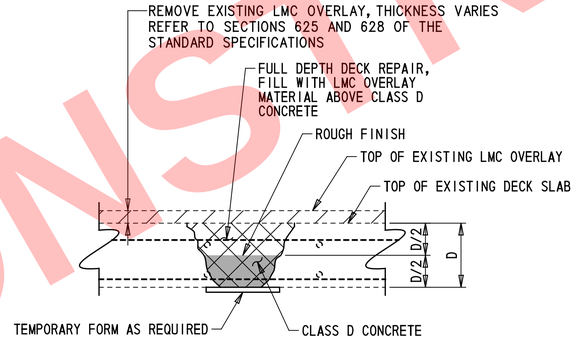

DECK REPAIR, FULL DEPTH (ITEM 628053)

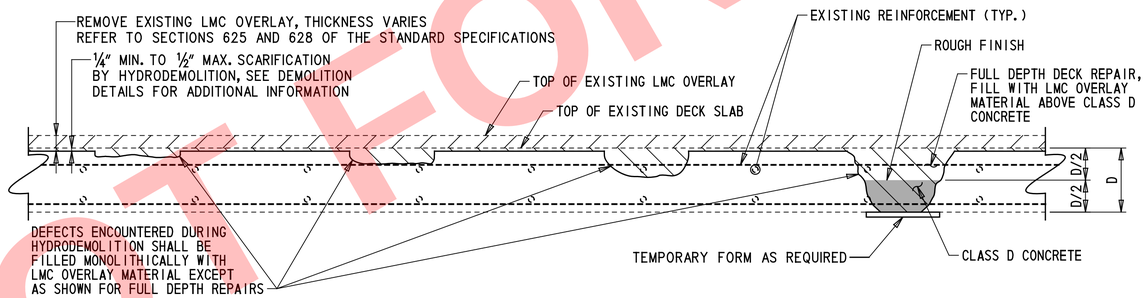

HYDRODEMOLITION AND DECK REPAIR (WITH OVERLAY)

NOT FOR CONSTRUCTION

REPAIR NO.	REPAIR DESCRIPTION	LOCATION	REMARKS	DWG. NO.	ITEM NO.	ITEM DESCRIPTION	UNIT	QTY.	CONTINGENT %	TOTAL QTY.
1	JOINT REPLACEMENT (FULL REPLACEMENT)	PIER 1, PIER 2, PIER 3, PIER 4, PIER 5		EX-01 TO EX-04	610008	PORTLAND CEMENT CONCRETE MASONRY, PARAPET, CLASS A	CY	20	0	20
					610017	PORTLAND CEMENT CONCRETE MASONRY, SUPERSTRUCTURE, CLASS D	CY	115	0	115
					611000	BAR REINFORCEMENT	LB	17300	0	17300
					611001	BAR REINFORCEMENT, EPOXY COATED	LB	16200	0	16200
					624000	PREFABRICATED EXPANSION JOINT SYSTEMS, 3"	LF	1090	0	1090
3	MILL EXISTING DECK/OVERLAY	ENTIRE BRIDGE		DM-01, PN-03	628053	DECK REPAIR, FULL DEPTH	SF	0	EQ	50
					760013	PAVEMENT MILLING, PORTLAND CEMENT CONCRETE PAVEMENT	SY-IN	12050	0	12050
4	HYDRODEMOLITION OF EXISTING DECK SURFACE	ENTIRE BRIDGE		DM-01, PN-03	6285XX	REMOVAL OF EXISTING DECK REPAIRS	SF	160	25	200
					7605XX	TOTAL SURFACE HYDRODEMOLITION	SY	5360	0	5360
5	FURNISH AND INSTALL LMC OVERLAY	ENTIRE BRIDGE		DM-01, PN-03	625000	LATEX-MODIFIED CONCRETE OVERLAY INSTALLATION	SY-IN	17180	0	17180
					625001	FURNISHING LATEX-MODIFIED CONCRETE OVERLAY	CY	480	25	600
					6255XX	ADDITIONAL LATEX-MODIFIED CONCRETE FOR PARTIAL DECK REPAIRS	CY	20	25	25
6	REPAIR SPALL/DELAMINATION IN SOFFIT	SEE SOFFIT REPAIR PLAN		SO-01	628041	DEEP SPALL REPAIR	CF	11	25	14
9	REMOVE AND REPLACE CONCRETE APPROACH SLAB	APPROACH A; APPROACH B	APPROACH A; APPROACH B	AB-04, AS-01 TO AS-05	207000	STRUCTURAL EXCAVATION	CY	220	0	220
					211000	REMOVAL OF STRUCTURES AND OBSTRUCTIONS	LS	1	0	1
					301001	GRADED AGGREGATE BASE COURSE, TYPE B	CY	220	0	220
					610008	PORTLAND CEMENT CONCRETE MASONRY, PARAPET, CLASS A	CY	15	0	15
					610018	PORTLAND CEMENT CONCRETE MASONRY, APPROACH SLAB, CLASS D	CY	330	0	330
					611000	BAR REINFORCEMENT	LB	130	0	130
					611001	BAR REINFORCEMENT, EPOXY COATED	LB	70000	0	70000
					624000	PREFABRICATED EXPANSION JOINT SYSTEMS, 3"	LF	218	0	218
10	CLEAN SCUPPER AND DOWNSPOUT	ENTIRE BRIDGE - 1 EACH DIRECTION PER SPAN, 12 TOTAL			602XXX	CLEANING BRIDGE SCUPPER	EA	12	0	12
13	REPLACE SCUPPER DOWNSPOUT	PIER 4, COLUMN 1, SOUTH FACE			601192	PVC PIPE, 8"	LF	20	0	20
24	JACK AND REPLACE EXISTING BRIDGE BEARINGS	SPAN 6 ABUTMENT B	REPLACE ALL BEARINGS WITHIN THE SPECIFIED BEARING LINE.	RH-01, BB-01	604000	JACKING BRIDGE	LS	1	0	1
					623000	ELASTOMERIC BEARING	EA	16	0	16
26	REPLACE EXISTING LOOSE OR MISSING BOLTS	CROSS GIRDER 1, INT BAYS 9/10/12, BOLSTER 9; CROSS GIRDER 3, INT BAYS 3/5/7/8/12/13; CROSS GIRDER 4, BOLSTERS 8/13, BEARINGS 8/11/14; CROSS GIRDER 5, INT BAYS 3/4/9, BOLSTERS 11/12	SEE CROSS GIRDER REPAIR PLANS FOR LOCATION INFORMATION	BM-01 TO BM-03	615004	REPLACING STEEL RIVETS/BOLTS	EA	32	100	64
32	CLEAN AND PAINT EXISTING STEEL STRUCTURE	ENTIRE SUPERSTRUCTURE INCLUDING CROSS GIRDERS	HAZARADOUS MATERIAL WARNING - CROSS GIRDERS CONTAIN LEAD BASED PAINT	BM-03	616000	CLEANING AND PAINTING EXISTING STEEL	LS	1	0	1
					616003	TESTING AND DISPOSAL OF EXISTING HAZARDOUS STEEL COATING	LS	1	0	1
33	CLEAN AND GREASE BRIDGE BEARINGS	EXISTING BRIDGE BEARINGS TO REMAIN			623004	CLEAN AND GREASE BRIDGE BEARINGS	EA	176	0	176
34	SEAL CRACKS IN CONCRETE SUBSTRUCTURE	ABUTMENT A; PIERS 1 THROUGH 5; ABUTMENT B		AB-01, AB-02, PR-01 TO PR-12	628001	REPAIR OF CONCRETE STRUCTURES BY EPOXY INJECTION	LF	127	25	159
37	REPAIR DEEP SPALLS IN CONCRETE SUBSTRUCTURE	ABUTMENT A; PIERS 1 THROUGH 5; ABUTMENT B		AB-01, AB-02, PR-01 TO PR-12	628041	DEEP SPALL REPAIR	CF	92	25	115
					628042	REHABILITATION OF PCC MASONRY	CY	0	EQ	1
41	CLEAN AND SEAL CONCRETE SURFACES	ABUTMENT A; PIERS 1 THROUGH 5; ABUTMENT B; MEDIAN AND EXTERIOR PARAPETS, FULL LENGTH OF BRIDGE	INCLUDES CLEANING DIRT & DEBRIS FROM TOPS OF OF SUBSTRUCTURE UNITS	TS-01, AB-01, AB-02, PR-01 TO PR-12	613001	SILICONE-BASED ACRYLIC CONCRETE SEALER	SF	22890	0	22890
43	REPAIR SCOUR/SLOPE EROSION	ABUTMENT A, ABUTMENT B		AB-05	302002	DELAWARE NO. 3 STONE	TON	7	25	9
					707016	RIPRAP, R-5	TON	41	25	52
					708003	GEOTEXTILES, RIPRAP	SY	27	25	34
45	SEAL DECK WITH HMWM CONCRETE SEALER	ENTIRE BRIDGE		TS-01	613003	HIGH MOLECULAR WEIGHT METHACRYLATE CONCRETE SEALER	SF	49100	0	49100
46	REPLACE ABUTMENT JOINT WITH DECK-OVER	ABUTMENT A, ABUTMENT B		AB-01 TO AB-03, EX-05 TO EX-06	211000	REMOVAL OF STRUCTURES AND OBSTRUCTIONS	LS	1	0	1
					610002	PORTLAND CEMENT CONCRETE MASONRY, ABUTMENT ABOVE FOOTING, CLASS A	CY	44	0	44
					610008	PORTLAND CEMENT CONCRETE MASONRY, PARAPET, CLASS A	CY	5	0	5
					610017	PORTLAND CEMENT CONCRETE MASONRY, SUPERSTRUCTURE, CLASS D	CY	26	0	26
					611000	BAR REINFORCEMENT	LB	11400	0	11400
					611001	BAR REINFORCEMENT, EPOXY COATED	LB	1000	0	1000
M2	BR 1-745: REPAIR SECTION LOSS AT BOLSTER STIFFENER AT SPAN 2, PIER 2, BEAM 16	SPAN 2, BOLSTER 16 AT CROSS GIRDER 2, WEST AND CENTER STIFFENER		BM-03	615005	STEEL STRUCTURE REPAIR	LB	20	100	40
M4	BR 1-745: REPAIR SECTION LOSS TO CROSS GIRDER WEB STIFFENERS	CROSS GIRDER 1, NORTH FACE, BAY 8; CROSS GIRDER 2, SOUTH FACE, BAYS 8/15; CROSS GIRDER 4, SOUTH AND NORTH FACES, BAY 8		BM-03	615005	STEEL STRUCTURE REPAIR	LB	30	100	60
M9	BR 1-745: REPLACE RAILROAD PROTECTIVE BARRIER WITH BRIDGE SAFETY FENCE, TYPE 1	SPANS 2 & 3 WEST PARAPET; SPANS 5 & 6 EAST PARAPET		PA-02	211000	REMOVAL OF STRUCTURES AND OBSTRUCTIONS	LS	1	0	1
					727007	BRIDGE SAFETY FENCE, TYPE 1	LF	164	0	164

NOT FOR CONSTRUCTION

LMC OVERLAY NOTES:

1. LONGITUDINAL CONSTRUCTION JOINTS SHALL BE LIMITED TO ONLY THOSE NECESSARY TO COMPLETE THE WORK, HOWEVER THE CONTRACTOR MAY ELECT TO PLACE AN OPTIONAL CONSTRUCTION JOINT IN THE LMC OVERLAY AS NECESSITATED BY THE WIDTH OF THE BRIDGE. LONGITUDINAL CONSTRUCTION JOINTS IN THE LMC OVERLAY MAY ONLY BE PLACED AT THE LOCATION OF THE FINAL LANE LINES.

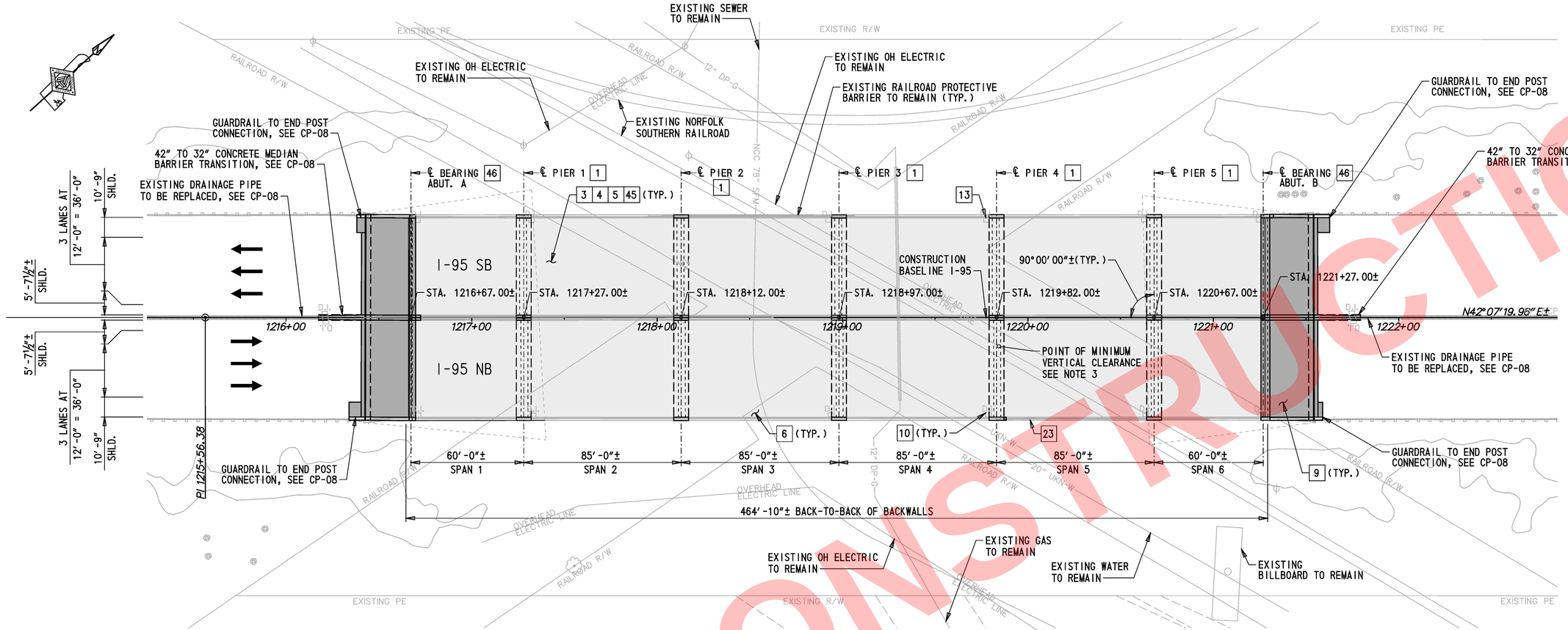

PLAN

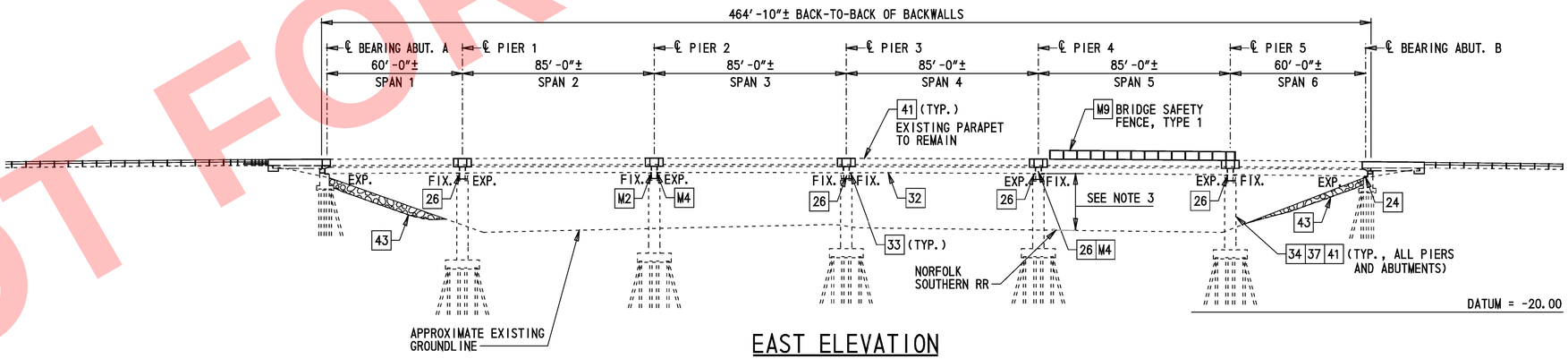

EAST ELEVATION

KEY:

1 REPAIR NUMBER AS SHOWN ON DWG. PN-04

LEGEND:

- MILL AND OVERLAY DECK
- REMOVAL AND RECONSTRUCTION
- RIPRAP

NOTES:

1. DIMENSIONS SHOWN ARE MEASURED ALONG CONSTRUCTION BASELINE I-95.
2. PILES SHOWN ARE FOR INFORMATIONAL PURPOSES ONLY.
3. MINIMUM VERTICAL CLEARANCE IS BASED ON 2015 NBIS INSPECTION REPORT. MINIMUM CLEARANCE ABOVE NORFOLK SOUTHERN RAILROAD = 25'-10"±.

NOT FOR CONSTRUCTION

DELAWARE DEPARTMENT OF TRANSPORTATION	ADDENDUMS / REVISIONS	SCALE 0 30 60 90 FEET	REHABILITATION OF I-95 FROM I-495 TO NORTH OF BRANDYWINE RIVER BRIDGE	CONTRACT T201407404 / COUNTY NEW CASTLE	BRIDGE NO. 1 745 059 / DESIGNED BY: BSD / CHECKED BY: CWM	GENERAL PLAN AND ELEVATION

1-745 PE-01
SHEET NO. 2-60
TOTAL SHTS. 2-731

...\Bridge 1-745\745PE_01.dgn
2/8/2018 17:43:06

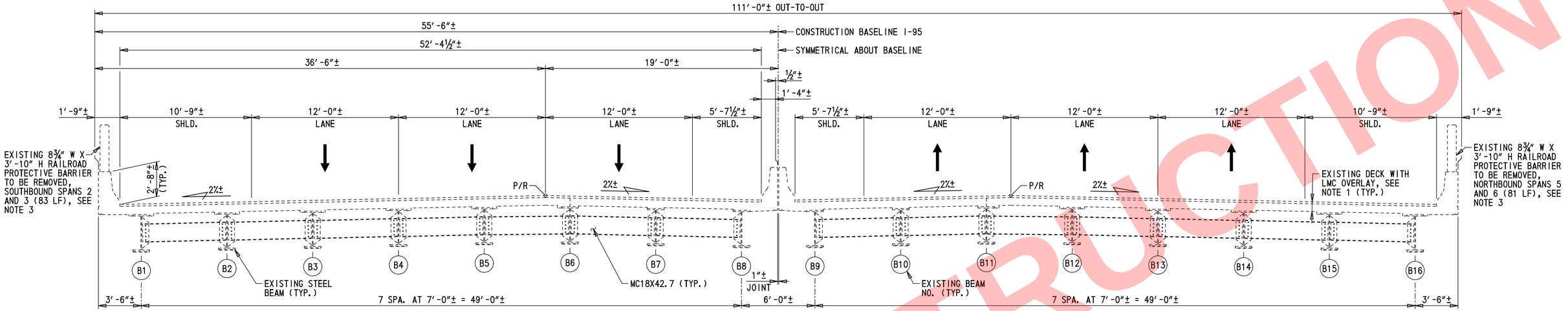

EXISTING TYPICAL SECTION

¼" = 1'-0"

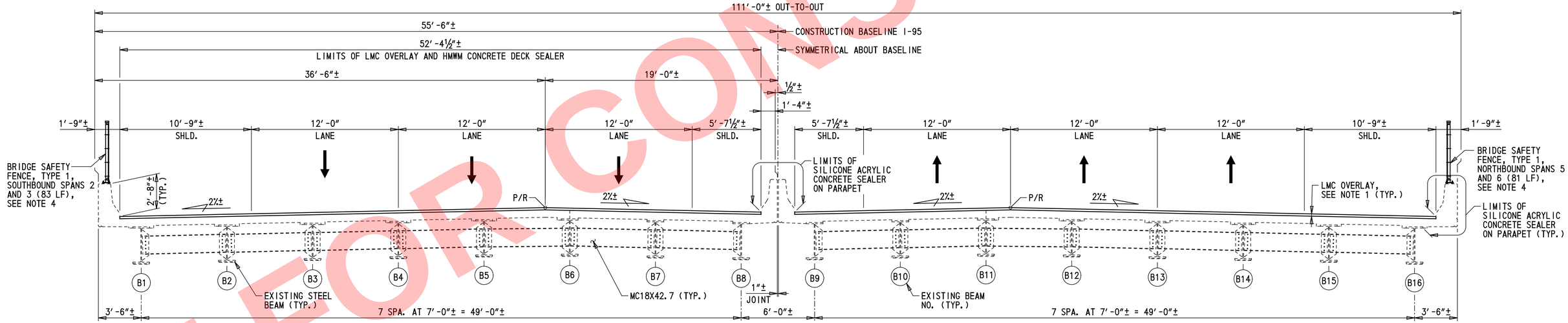

PROPOSED TYPICAL SECTION

¼" = 1'-0"

NOTES:

1. THICKNESS OF EXISTING DECK AND PROPOSED LMC OVERLAYS VARY, SEE DM-01 FOR DETAILS.
2. FOR PARAPET DETAIL AND DRIP NOTCH DETAIL SEE DWG. PA-01.
3. PAYMENT FOR REMOVAL OF EXISTING RAILROAD PROTECTIVE BARRIER WILL BE PAID FOR UNDER ITEM 211000 - REMOVAL OF STRUCTURES AND OBSTRUCTIONS.
4. FOR LIMITS OF FENCE, SEE FENCE LAYOUT ON DWG. PA-02. FOR DETAILS, SEE STANDARD NO. M-10 BRIDGE SAFETY FENCE.

NOT FOR CONSTRUCTION

DELAWARE DEPARTMENT OF TRANSPORTATION	ADDENDUMS / REVISIONS	SCALE AS NOTED	REHABILITATION OF I-95 FROM I-495 TO NORTH OF BRANDYWINE RIVER BRIDGE	CONTRACT T201407404	BRIDGE NO. 1 745 059	BRIDGE TYPICAL SECTIONS	1-745 TS-01
				COUNTY NEW CASTLE	DESIGNED BY: BSD		SHEET NO. 2-61
					CHECKED BY: CWM		TOTAL SHTS. 2-731

\Bridge 1-745\745TS_01.dgn
2/8/2018 17:43:05

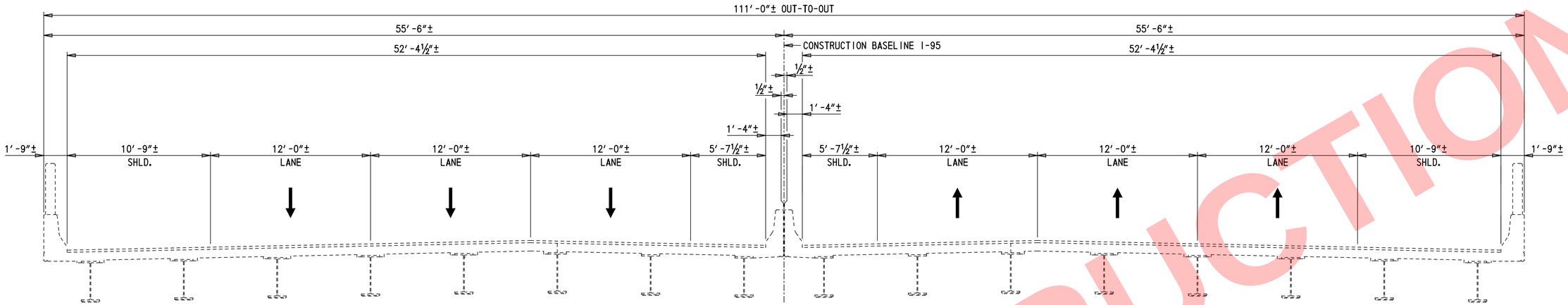

EXISTING TYPICAL SECTION

¼″ = 1′-0″

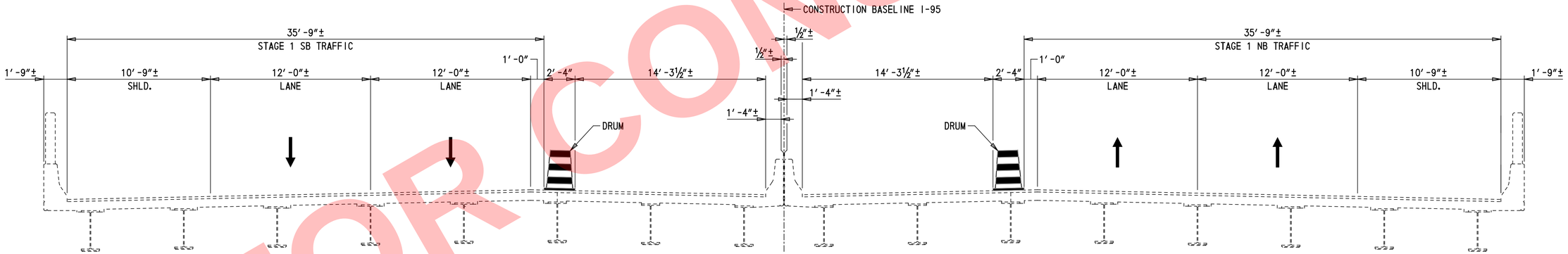

STAGE 1

¼″ = 1′-0″

NOTES:

1. DEMO SHIELDS NOT SHOWN.
2. NO BRIDGE DECK WORK IN STAGE 1. SHOWN FOR INFORMATIONAL PURPOSES ONLY.

SEQUENCE OF CONSTRUCTION NOTES:

1. SET UP THE STAGE 1 MOT AND SHIFT TRAFFIC TO THE NEW LANE CONFIGURATION.

NOT FOR CONSTRUCTION

DELAWARE DEPARTMENT OF TRANSPORTATION	ADDENDUMS / REVISIONS	SCALE AS NOTED	REHABILITATION OF I-95 FROM I-495 TO NORTH OF BRANDYWINE RIVER BRIDGE	CONTRACT T201407404 / COUNTY NEW CASTLE	BRIDGE NO. 1 745 059 / DESIGNED BY: BSD / CHECKED BY: CWM	SEQUENCE OF CONSTRUCTION – 1	1-745 SC-01 / SHEET NO. 2-62 / TOTAL SHTS. 2-731

...\Bridge 1-745\745SC_01.dgn
2/8/2018 1743406

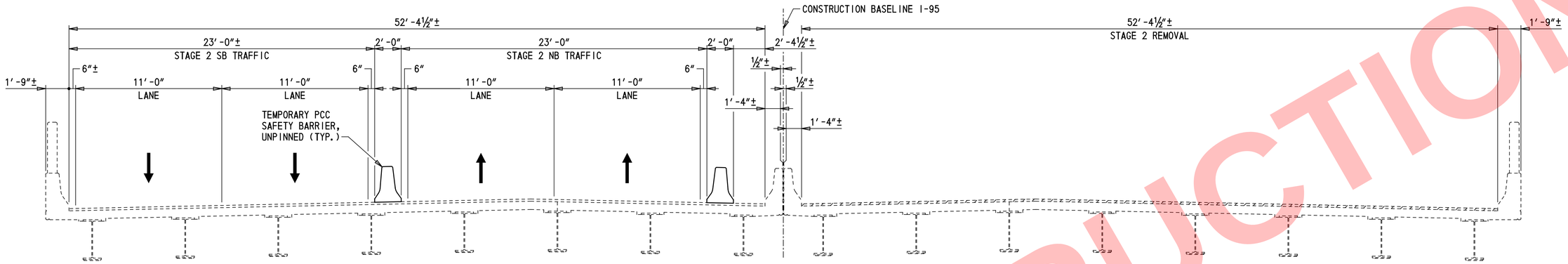

STAGE 2 REMOVAL

¼" = 1'-0"

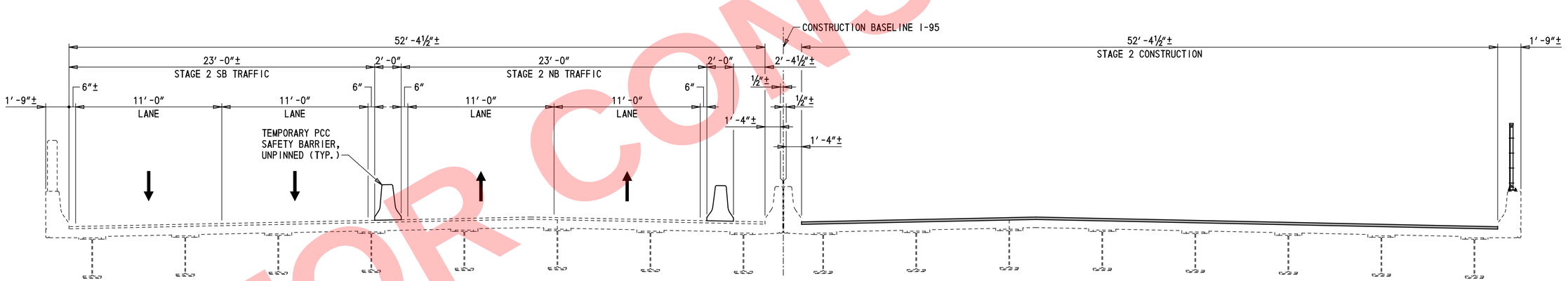

STAGE 2 CONSTRUCTION

¼" = 1'-0"

LEGEND:

REMOVAL LIMITS

PROPOSED CONSTRUCTION

NOTES:

1. DEMO SHIELDS NOT SHOWN.

SEQUENCE OF CONSTRUCTION NOTES:

1. SET UP THE STAGE 2 MOT AND SHIFT TRAFFIC TO THE NEW LANE CONFIGURATION.
2. PERFORM STAGE 2 REMOVAL.
3. PLACE NEW LMC OVERLAY WITHIN THE LIMITS OF STAGE 2 CONSTRUCTION.

NOT FOR CONSTRUCTION

DELAWARE DEPARTMENT OF TRANSPORTATION	ADDENDUMS / REVISIONS	SCALE AS NOTED	REHABILITATION OF I-95 FROM I-495 TO NORTH OF BRANDYWINE RIVER BRIDGE	CONTRACT T201407404	BRIDGE NO. 1 745 059	SEQUENCE OF CONSTRUCTION – 2	1-745 SC-02
				COUNTY NEW CASTLE	DESIGNED BY: BSD		SHEET NO. 2-63
					CHECKED BY: JRQ		TOTAL SHTS. 2-731

...\Bridge 1-745\745SC_02.dgn
2/8/2018 17:43:06

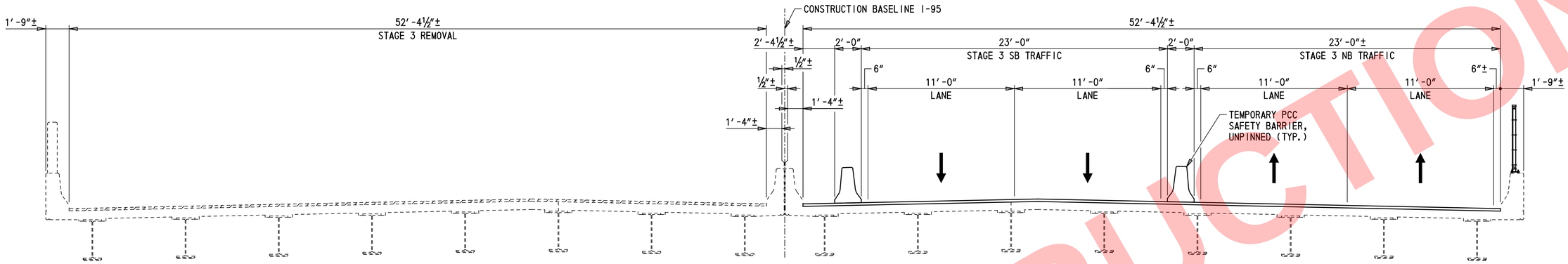

STAGE 3 REMOVAL

¼" = 1'-0"

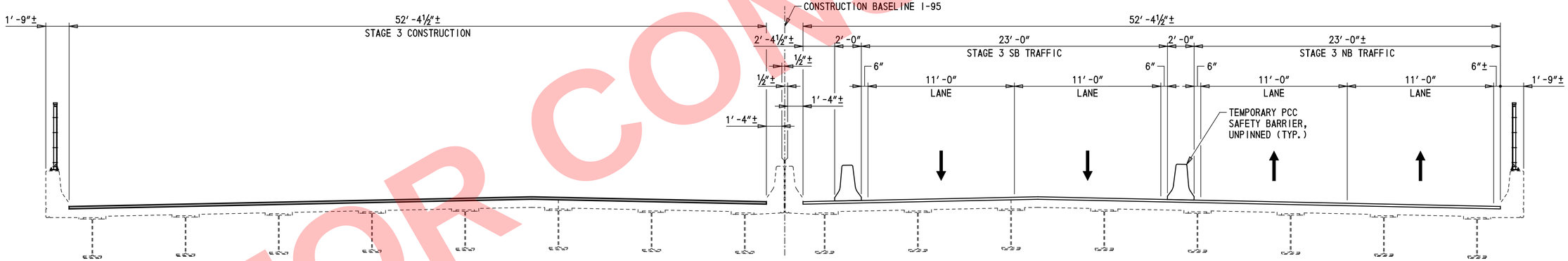

STAGE 3 CONSTRUCTION

¼" = 1'-0"

LEGEND:

REMOVAL LIMITS

PROPOSED CONSTRUCTION

NOTES:

1. DEMO SHIELDS NOT SHOWN.

SEQUENCE OF CONSTRUCTION NOTES:

1. SET UP THE STAGE 3 MOT AND SHIFT TRAFFIC TO THE NEW LANE CONFIGURATION.
2. PERFORM STAGE 3 REMOVAL.
3. PLACE NEW LMC OVERLAY WITHIN THE LIMITS OF STAGE 3 CONSTRUCTION.

NOT FOR CONSTRUCTION

...\Bridge 1-745\745SC_03.dgn
2/8/2018 17:43:06

DELAWARE DEPARTMENT OF TRANSPORTATION	ADDENDUMS / REVISIONS	SCALE AS NOTED	REHABILITATION OF I-95 FROM I-495 TO NORTH OF BRANDYWINE RIVER BRIDGE	CONTRACT T201407404	BRIDGE NO. 1 745 059	SEQUENCE OF CONSTRUCTION – 3	1-745 SC-03
				COUNTY NEW CASTLE	DESIGNED BY: BSD		SHEET NO. 2-64
					CHECKED BY: JRQ		TOTAL SHTS. 2-731

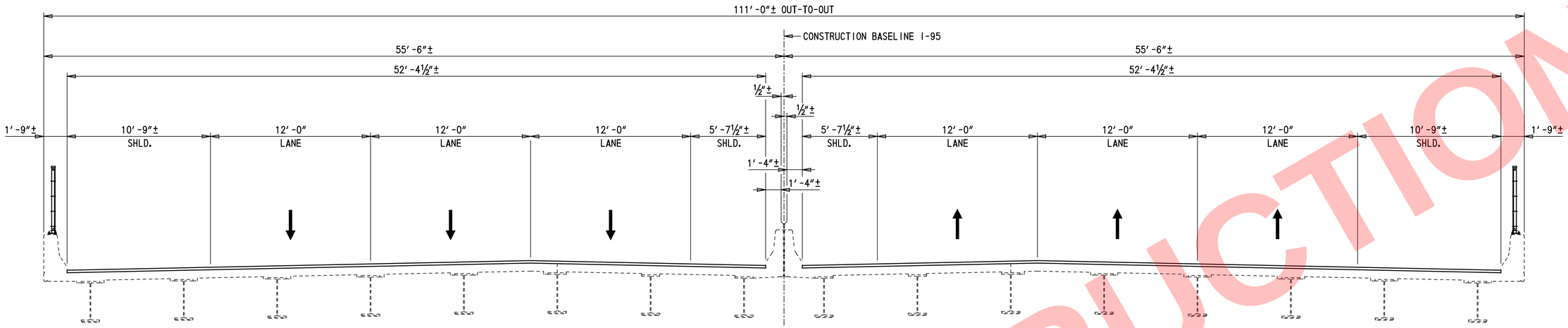

COMPLETED TYPICAL SECTION

1/4″ = 1′-0″

NOTES:

1. NO BRIDGE DECK WORK IN STAGE 4.

NOT FOR CONSTRUCTION

DELAWARE DEPARTMENT OF TRANSPORTATION	ADDENDUMS / REVISIONS	SCALE AS NOTED	REHABILITATION OF I-95 FROM I-495 TO NORTH OF BRANDYWINE RIVER BRIDGE	CONTRACT T201407404 / COUNTY NEW CASTLE	BRIDGE NO. 1 745 059 / DESIGNED BY: BSD / CHECKED BY: JRQ	SEQUENCE OF CONSTRUCTION – 4

1-745 SC-04

SHEET NO. 2-65

TOTAL SHTS. 2-731

...\Bridge 1-745\745SC_04.dgn
2/8/2018 1743407

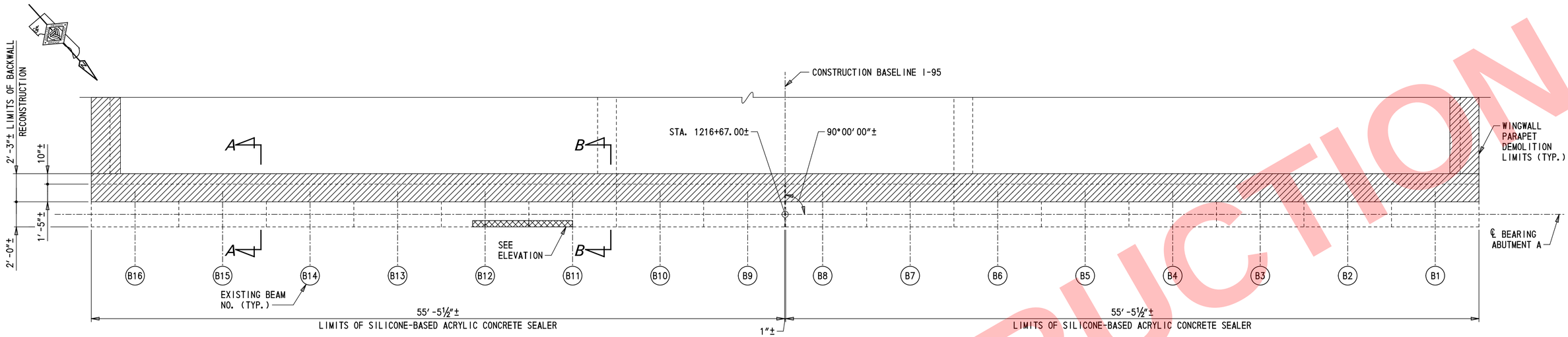

ABUTMENT A - PLAN VIEW

¼″ = 1′-0″

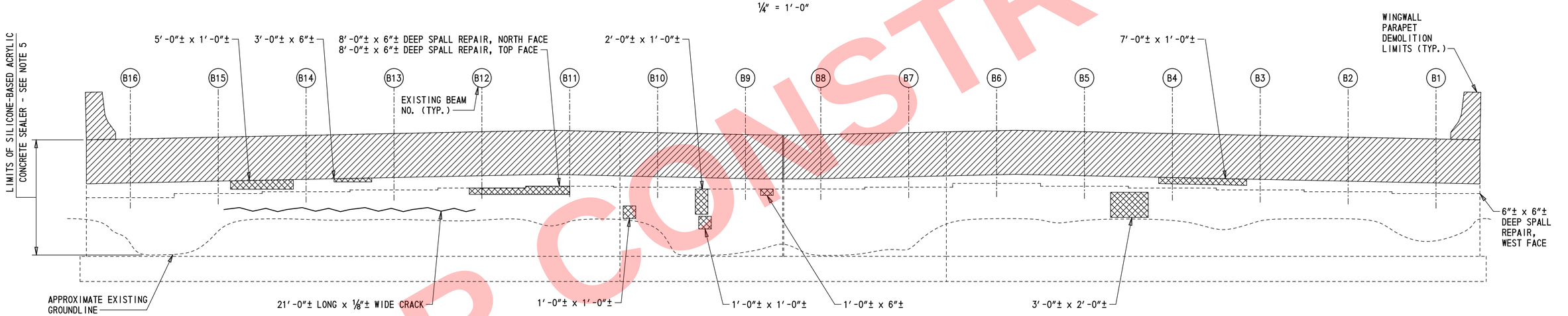

ABUTMENT A - ELEVATION

¼″ = 1′-0″

NOTE:
PILES NOT SHOWN FOR CLARITY.

LEGEND:

- REPAIR OF CONCRETE STRUCTURES BY EPOXY INJECTION
- DEEP SPALL REPAIR
- REMOVAL LIMITS - ITEM 211000

CONCRETE REPAIR QUANTITIES
ABUTMENT A

REPAIR Nº	ITEM Nº	ITEM TITLE	UNIT	QUANTITY
34	628001	REPAIR OF CONCRETE STRUCTURES BY EPOXY INJECTION	LF	21
37	628041	DEEP SPALL REPAIR	CF	10
41	613001	SILICONE-BASED ACRYLIC CONCRETE SEALER	SF	1198

NOTE: QUANTITIES SHOWN ARE TOTAL PER ABUTMENT AND DO NOT INCLUDE CONTINGENT PERCENTAGE.

NOTES:

1. THE LOCATION AND QUANTITIES OF THE REPAIRS SHOWN ON THIS DRAWING ARE BASED ON INSPECTION FIELD NOTES (SEE NOTE 13 ON DWG. PN-01) AND ARE APPROXIMATE AND DO REQUIRE VERIFICATION. PRIOR TO STARTING EACH REPAIR, THE LIMITS SHALL BE VERIFIED BY THE CONTRACTOR IN THE PRESENCE OF THE ENGINEER.
2. WHERE CRACKS AND SPALLS EXIST CONCURRENTLY, COMPLETE THE SPALL REPAIR COMPLETELY REMOVING THE ASSOCIATED CRACK. IF THE CRACK EXTENDS LESS THAN 1′-0″ BEYOND THE LIMITS OF THE SPALL REPAIR, EXTEND THE LIMITS OF THE SPALL REPAIR TO ENCOMPASS THE CRACK. IF THE CRACK EXTENDS DEEPER THAN THE LIMITS OF CONCRETE REMOVAL, THE CONTRACTOR SHALL REMOVE ADDITIONAL CONCRETE UNTIL THE CRACK IS FULLY REMOVED. IF THE DEPTH OF REMOVAL REACHES MORE THAN 6″ FROM THE ORIGINAL FACE OF CONCRETE, ALL WORK ON THE REPAIR SHALL STOP AND THE ENGINEER SHALL BE NOTIFIED IMMEDIATELY. IF THE CRACK EXTENDS MORE THAN 1′-0″ BEYOND THE LIMITS OF THE SPALL REPAIR INTO SOUND CONCRETE THE CRACK SHALL BE REPAIRED BY EPOXY INJECTION AND PAID FOR UNDER ITEM 628001 - REPAIR OF CONCRETE STRUCTURES BY EPOXY INJECTION BEYOND THE LIMITS OF THE SPALL REPAIR. CRACKS LOCATED WITHIN SPALL REPAIRS WILL NOT BE PAID FOR AND WILL BE CONSIDERED INCIDENTAL TO ITEM 628041 - DEEP SPALL REPAIR.
3. FOR CONCRETE REPAIR DETAILS, SEE DWG. PN-02.

NOTES (CONTINUED):

4. CONTRACTOR SHALL TAKE CARE TO PROTECT THE BEARINGS DURING APPLICATION OF THE SILICONE-BASED ACRYLIC CONCRETE SEALER. ANY CLEAN-UP REQUIRED TO REMOVE THE SEALER FROM THE BEARINGS WILL BE AT NO ADDITIONAL COST TO THE DEPARTMENT AND TO THE SATISFACTION OF THE ENGINEER.
5. SILICONE-BASED ACRYLIC CONCRETE SEALER SHALL BE APPLIED TO ALL EXPOSED CONCRETE ABUTMENT AND WINGWALL SURFACES. PAYMENT WILL BE MADE UNDER ITEM 613001 - SILICONE-BASED ACRYLIC CONCRETE SEALER. QUANTITY SHOWN ON THIS SHEET INCLUDES SEALER ON WINGWALLS.
6. CONTRACTOR SHALL REMOVE DEBRIS FROM THE BEAM SEAT PRIOR TO APPLICATION OF SILICONE-BASED CONCRETE SEALER. PAYMENT FOR THIS WORK WILL BE INCIDENTAL TO ITEM 613001 - SILICONE-BASED ACRYLIC CONCRETE SEALER.
7. SILICONE-BASED ACRYLIC CONCRETE SEALER SHALL ONLY BE APPLIED AFTER ALL CONCRETE REPAIRS ARE COMPLETED AT THE ABUTMENT.
8. FOR SECTIONS A-A, B-B, AND ABUTMENT BACKWALL RECONSTRUCTION DETAILS, SEE DWG. AB-03.
9. FOR WINGWALL PARAPET DEMOLITION LIMITS AND DETAILS, SEE DWG. AB-04.

NOT FOR CONSTRUCTION

DELAWARE DEPARTMENT OF TRANSPORTATION	ADDENDUMS / REVISIONS	SCALE AS NOTED	REHABILITATION OF I-95 FROM I-495 TO NORTH OF BRANDYWINE RIVER BRIDGE	CONTRACT T201407404	BRIDGE NO. 1 745 059	ABUTMENT A CONCRETE REPAIR DETAILS	1-745 AB-01
				COUNTY NEW CASTLE	DESIGNED BY: PAS		SHEET NO. 2-66
					CHECKED BY: JRQ		TOTAL SHTS. 2-731

\Bridge 1-745\1745AB_01.dgn
2/8/2018 1743307

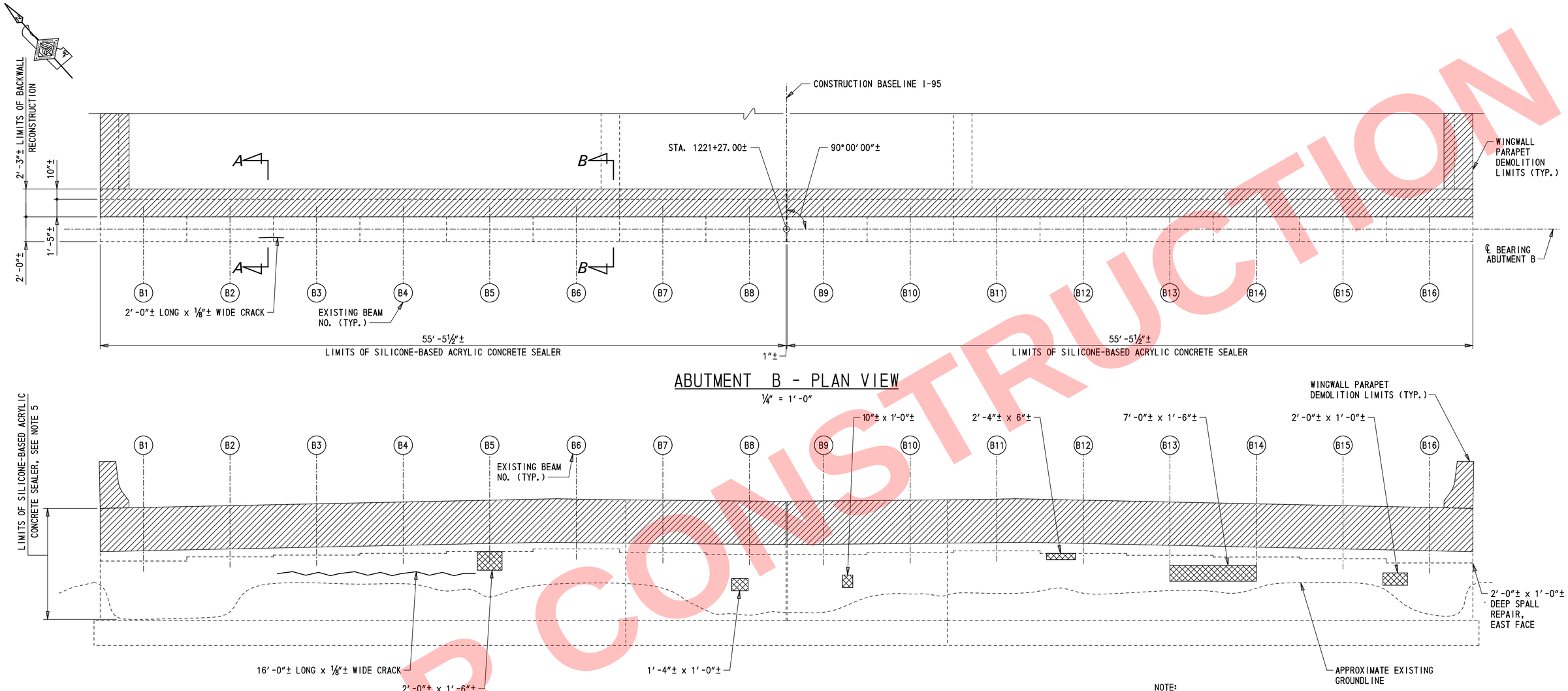

ABUTMENT B - PLAN VIEW

¼" = 1'-0"

ABUTMENT B - ELEVATION

¼" = 1'-0"

NOTE:
PILES NOT SHOWN FOR CLARITY.

LEGEND:

- REPAIR OF CONCRETE STRUCTURES BY EPOXY INJECTION
- DEEP SPALL REPAIR
- REMOVAL LIMITS - ITEM 211000

CONCRETE REPAIR QUANTITIES
ABUTMENT B

REPAIR Nº	ITEM Nº	ITEM TITLE	UNIT	QUANTITY
34	628001	REPAIR OF CONCRETE STRUCTURES BY EPOXY INJECTION	LF	18
37	628041	DEEP SPALL REPAIR	CF	4
41	613001	SILICONE-BASED ACRYLIC CONCRETE SEALER	SF	1198

NOTE: QUANTITIES SHOWN ARE TOTAL PER ABUTMENT AND DO NOT INCLUDE CONTINGENT PERCENTAGE.

NOTES:

1. THE LOCATION AND QUANTITIES OF THE REPAIRS SHOWN ON THIS DRAWING ARE BASED ON INSPECTION FIELD NOTES (SEE NOTE 13 ON DWG. PN-01) AND ARE APPROXIMATE AND DO REQUIRE VERIFICATION. PRIOR TO STARTING EACH REPAIR, THE LIMITS SHALL BE VERIFIED BY THE CONTRACTOR IN THE PRESENCE OF THE ENGINEER.
2. WHERE CRACKS AND SPALLS EXIST CONCURRENTLY, COMPLETE THE SPALL REPAIR COMPLETELY REMOVING THE ASSOCIATED CRACK. IF THE CRACK EXTENDS LESS THAN 1'-0" BEYOND THE LIMITS OF THE SPALL REPAIR, EXTEND THE LIMITS OF THE SPALL REPAIR TO ENCOMPASS THE CRACK. IF THE CRACK EXTENDS DEEPER THAN THE LIMITS OF CONCRETE REMOVAL, THE CONTRACTOR SHALL REMOVE ADDITIONAL CONCRETE UNTIL THE CRACK IS FULLY REMOVED. IF THE DEPTH OF REMOVAL REACHES MORE THAN 6" FROM THE ORIGINAL FACE OF CONCRETE, ALL WORK ON THE REPAIR SHALL STOP AND THE ENGINEER SHALL BE NOTIFIED IMMEDIATELY. IF THE CRACK EXTENDS MORE THAN 1'-0" BEYOND THE LIMITS OF THE SPALL REPAIR INTO SOUND CONCRETE THE CRACK SHALL BE REPAIRED BY EPOXY INJECTION AND PAID FOR UNDER ITEM 628001 - REPAIR OF CONCRETE STRUCTURES BY EPOXY INJECTION BEYOND THE LIMITS OF THE SPALL REPAIR. CRACKS LOCATED WITHIN SPALL REPAIRS WILL NOT BE PAID FOR AND WILL BE CONSIDERED INCIDENTAL TO ITEM 628041 - DEEP SPALL REPAIR.
3. FOR CONCRETE REPAIR DETAILS, SEE DWG. PN-02.

NOTES (CONTINUED):

4. CONTRACTOR SHALL TAKE CARE TO PROTECT THE BEARINGS DURING APPLICATION OF THE SILICONE-BASED ACRYLIC CONCRETE SEALER. ANY CLEAN-UP REQUIRED TO REMOVE THE SEALER FROM THE BEARINGS WILL BE AT NO ADDITIONAL COST TO THE DEPARTMENT AND TO THE SATISFACTION OF THE ENGINEER.
5. SILICONE-BASED ACRYLIC CONCRETE SEALER SHALL BE APPLIED TO ALL EXPOSED CONCRETE ABUTMENT AND WINGWALL SURFACES. PAYMENT WILL BE MADE UNDER ITEM 613001 - SILICONE-BASED ACRYLIC CONCRETE SEALER. QUANTITY SHOWN ON THIS SHEET INCLUDES SEALER ON WINGWALLS.
6. CONTRACTOR SHALL REMOVE DEBRIS FROM THE BEAM SEAT PRIOR TO APPLICATION OF SILICONE-BASED CONCRETE SEALER. PAYMENT FOR THIS WORK WILL BE INCIDENTAL TO ITEM 613001 - SILICONE-BASED ACRYLIC CONCRETE SEALER.
7. SILICONE-BASED ACRYLIC CONCRETE SEALER SHALL ONLY BE APPLIED AFTER ALL CONCRETE REPAIRS ARE COMPLETED AT THE ABUTMENT.
8. FOR SECTIONS A-A, B-B, AND ABUTMENT BACKWALL RECONSTRUCTION DETAILS, SEE DWG. AB-03.
9. FOR WINGWALL PARAPET DEMOLITION LIMITS AND DETAILS, SEE DWG. AB-04.

NOT FOR CONSTRUCTION

DELAWARE DEPARTMENT OF TRANSPORTATION	ADDENDUMS / REVISIONS	SCALE AS NOTED	REHABILITATION OF I-95 FROM I-495 TO NORTH OF BRANDYWINE RIVER BRIDGE	CONTRACT T201407404	BRIDGE NO. 1 745 059	ABUTMENT B CONCRETE REPAIR DETAILS
				COUNTY NEW CASTLE	DESIGNED BY: PAS	
					CHECKED BY: JRQ	

1-745 AB-02 | SHEET NO. 2-67 | TOTAL SHTS. 2-731

J:\Bridge 1-745\745B_02.dgn
2/8/2018 1:43:08

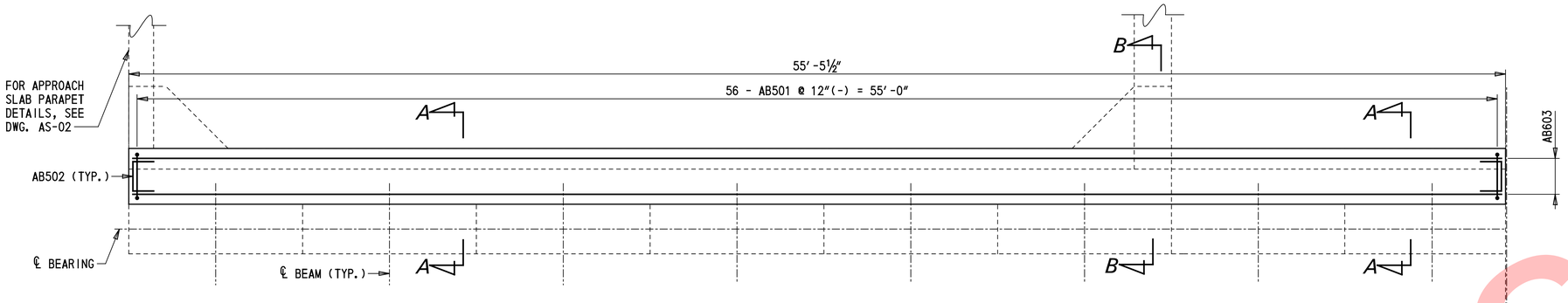

TYPICAL ABUTMENT BACKWALL RECONSTRUCTION PLAN

⅜" = 1'-0"

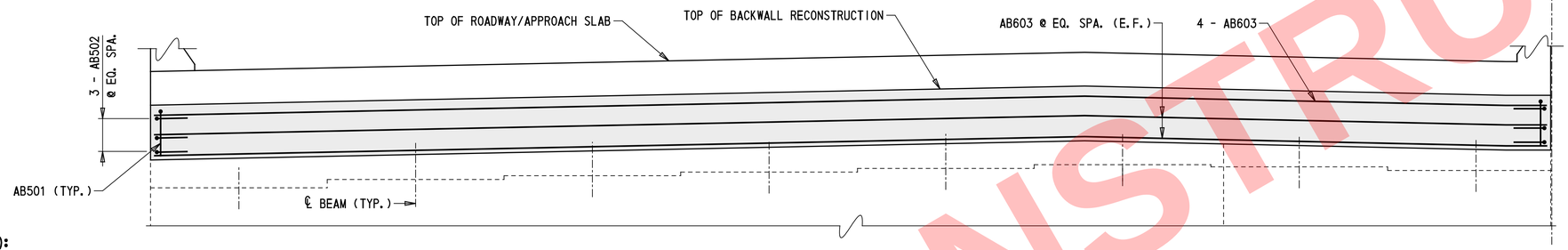

TYPICAL ABUTMENT BACKWALL RECONSTRUCTION ELEVATION

⅜" = 1'-0"

LEGEND:

REMOVAL LIMITS - ITEM 211000

PROPOSED CONSTRUCTION

NOTES:

1. REMOVE CONCRETE BACKWALL TO THE LIMITS SHOWN. THE CONTRACTOR SHALL USE CARE DRUING THE REMOVAL OF THE EXISTING CONCRETE TO AVOID DAMAGE TO THE EXISTING PORTIONS OF THE STRUCTURE THAT ARE TO REMAIN IN PLACE. ANY DAMAGE INCURRED TO EXISTING PORTIONS OF THE STRUCTURE TO REMAIN SHALL BE REPAIRED BY THE CONTRACTOR TO THE COMPLETE SATISFACTION OF THE ENGINEER AT NO ADDITIONAL COST TO THE DEPARTMENT.
2. EXISTING BARS TO REMAIN SHALL BE CLEANED IN ACCORDANCE WITH SECTION 628.03(E)7. BARS WITH CORROSION, BROKEN, OR WITH INADEQUATE BOND SHALL BE REPAIRED IN ACCORDANCE WITH SECTION 628.03(E)7.
3. PROPOSED REINFORCEMENT REQUIRED TO COMPLETE REPAIRS SHALL HAVE 2" MIN. CONCRETE COVER UNLESS OTHERWISE SHOWN. PAYMENT FOR PROPOSED REINFORCEMENT SHALL BE UNDER ITEM 611000 - BAR REINFORCEMENT.
4. CUT EXISTING REINFORCEMENT TO REMAIN 2" CLEAR OF NEW TOP OF BACKWALL.

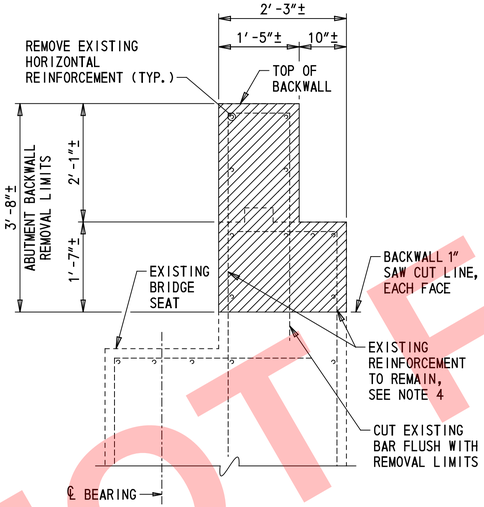

SECTION A-A REMOVAL

¾" = 1'-0"

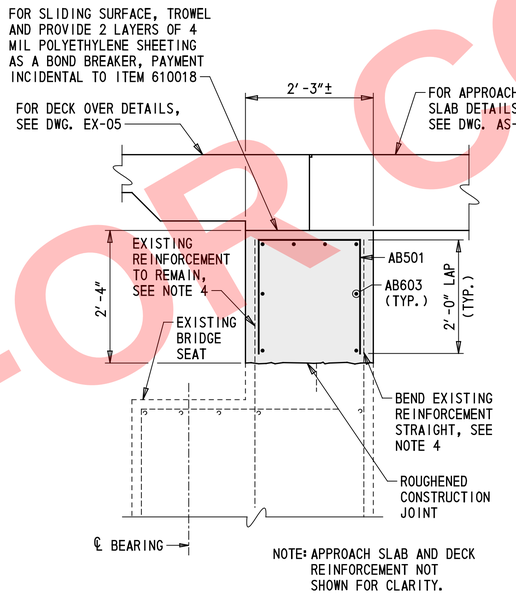

SECTION A-A RECONSTRUCTION

¾" = 1'-0"

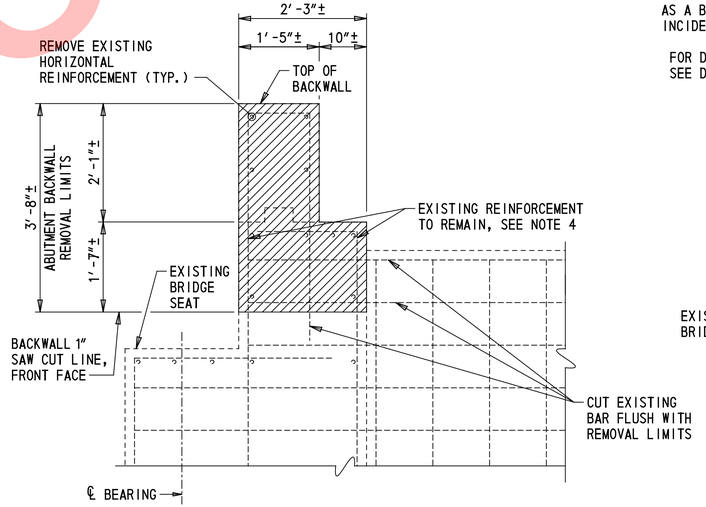

SECTION B-B REMOVAL

¾" = 1'-0"

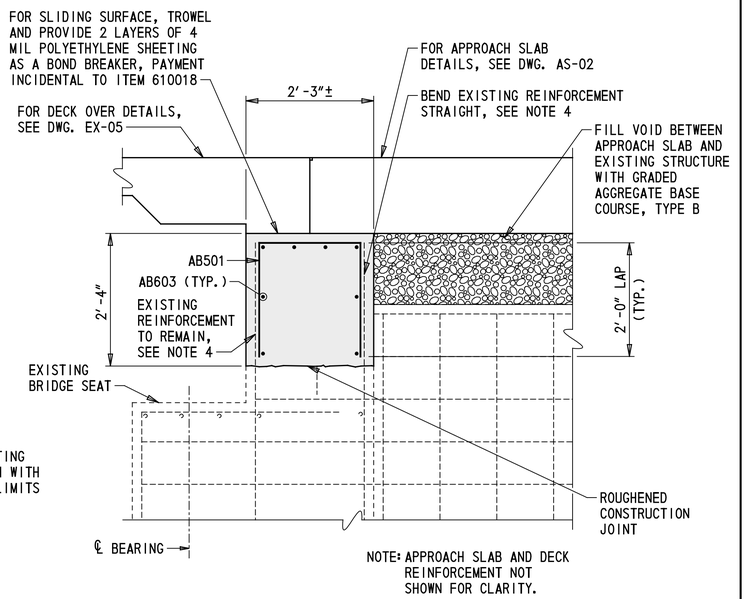

SECTION B-B RECONSTRUCTION

¾" = 1'-0"

NOT FOR CONSTRUCTION

DELAWARE DEPARTMENT OF TRANSPORTATION	ADDENDUMS / REVISIONS	SCALE AS NOTED	REHABILITATION OF I-95 FROM I-495 TO NORTH OF BRANDYWINE RIVER BRIDGE	CONTRACT T201407404	BRIDGE NO. 1 745 059	ABUTMENT BACKWALL RECONSTRUCTION DETAILS	1-745 AB-03
				COUNTY NEW CASTLE	DESIGNED BY: MLA		SHEET NO. 2-68
					CHECKED BY: CWM		TOTAL SHTS. 2-731

...\Bridge 1-745\745AB_03.dgn
2/6/2018 1:43:08

TYPICAL WINGWALL PARTIAL DEMOLITION PLAN

⅜" = 1'-0"

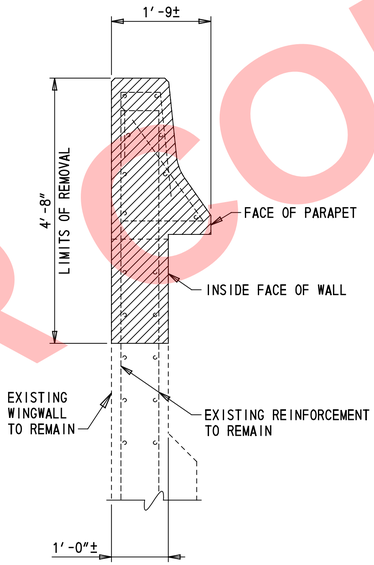

SECTION C-C REMOVAL

¾" = 1'-0"

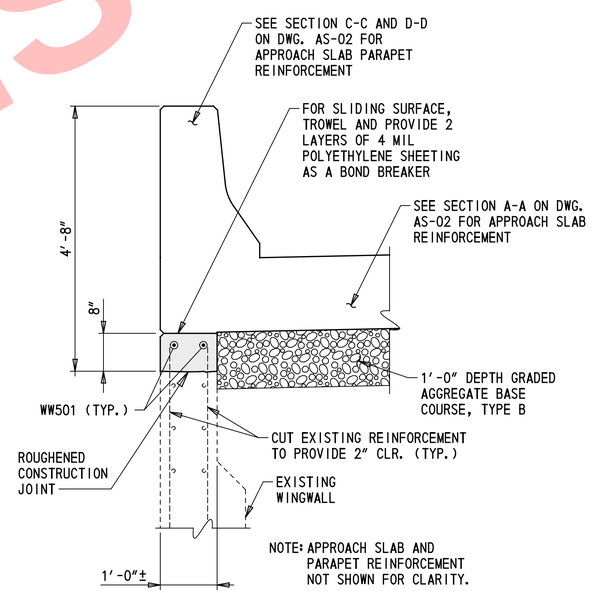

SECTION C-C RECONSTRUCTION

¾" = 1'-0"

LEGEND:

- REMOVAL LIMITS - ITEM 211000
- PROPOSED CONSTRUCTION

NOTES:

1. EXISTING REINFORCING TO REMAIN SHALL BE CLEANED IN ACCORDANCE WITH SECTION 628.

NOT FOR CONSTRUCTION

DELAWARE DEPARTMENT OF TRANSPORTATION	ADDENDUMS / REVISIONS	SCALE AS NOTED	REHABILITATION OF I-95 FROM I-495 TO NORTH OF BRANDYWINE RIVER BRIDGE	CONTRACT T201407404	BRIDGE NO. 1 745 059	ABUTMENT WINGWALL RECONSTRUCTION DETAILS	1-745 AB-04
				COUNTY NEW CASTLE	DESIGNED BY: CWM		SHEET NO. 2-69
					CHECKED BY: JRQ		TOTAL SHTS. 2-731

J:\Bridge 1-745\1745AB_04.dgn
2/8/2018 1743309

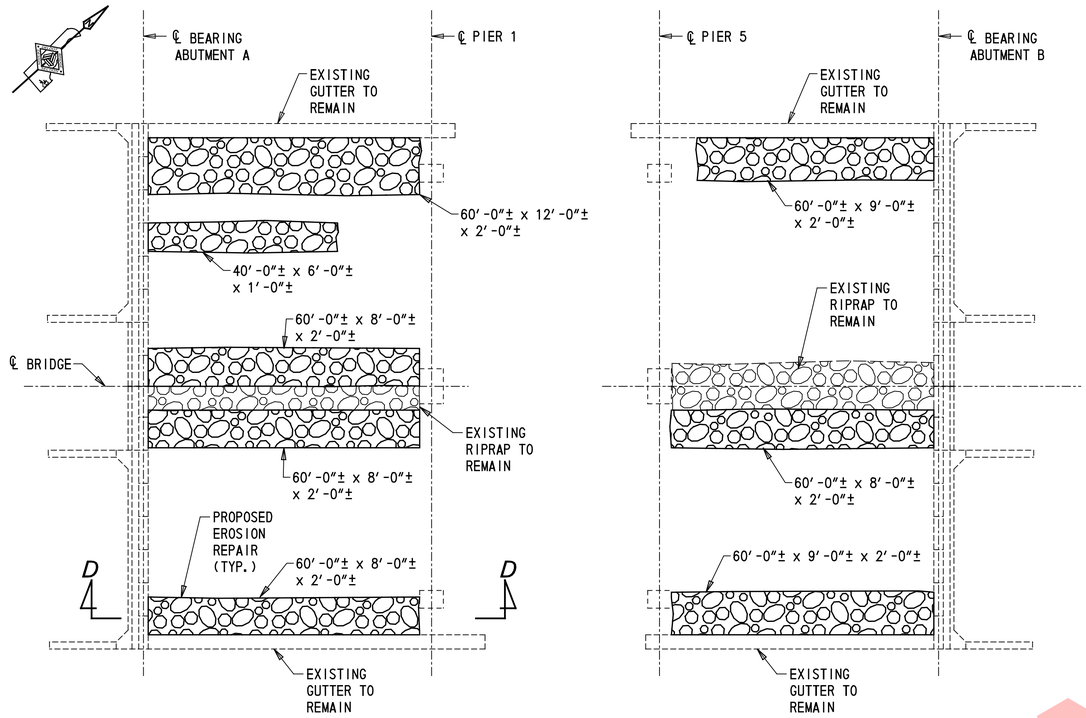

PLAN VIEW

1/16" = 1'-0"

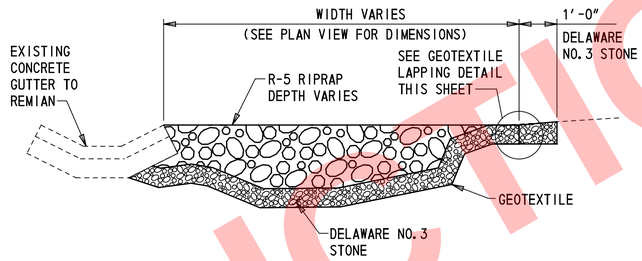

SECTION E-E

(TYPICAL EROSION REPAIR DETAIL)

1/2" = 1'-0"

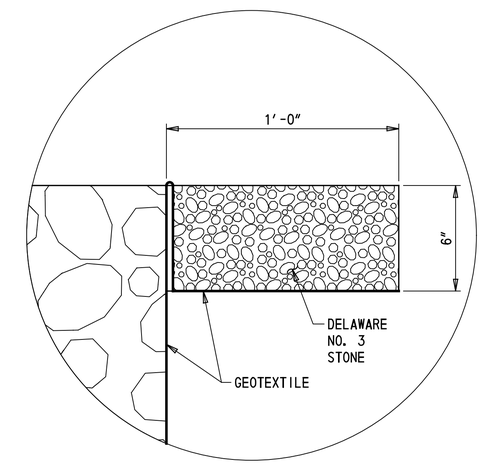

GEOTEXTILE LAPPING DETAIL

NOT TO SCALE

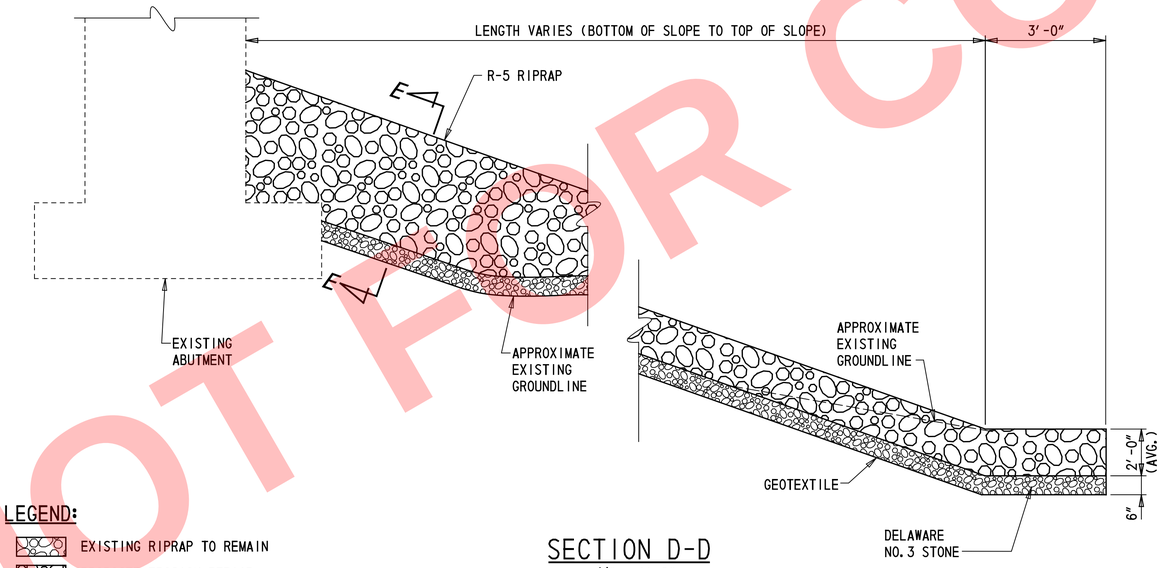

SECTION D-D

1/2" = 1'-0"

LEGEND:

EXISTING RIPRAP TO REMAIN

PROPOSED EROSION REPAIR

EROSION REPAIR PLACEMENT PROCEDURE:

1. REMOVE ALL VEGETATION AND EXCAVATE EXISTING UNSUITABLE SOILS WITHIN THE LIMITS OF THE PROPOSED EROSION REPAIR.
2. PLACE GEOTEXTILE FABRIC AND CONSTRUCT GEOTEXTILE LAPPING DETAIL AT EACH EDGE OF EROSION REAPIR ADJACENT TO EXISTING SOIL.
3. PLACE 6" DEPTH OF DELAWARE NO. 3 STONE AS SHOWN.
4. FILL REMAINING DEPTH WITH R-5 RIPRAP TO MATCH EXISTING GROUND SLOPE.

NOTES:

1. REPAIR AREAS SHOWN ARE APPROXIMATE, EROSION AREAS TO BE REPAIRED AS DIRECTED BY THE ENGINEER.

NOT FOR CONSTRUCTION

DELAWARE DEPARTMENT OF TRANSPORTATION	ADDENDUMS / REVISIONS	SCALE AS NOTED	REHABILITATION OF I-95 FROM I-495 TO NORTH OF BRANDYWINE RIVER BRIDGE	CONTRACT T201407404 / COUNTY NEW CASTLE	BRIDGE NO. 1 745 059 / DESIGNED BY: MLA / CHECKED BY: JRQ	ABUTMENT EROSION REPAIR DETAILS	1-745 AB-05 / SHEET NO. 2-70 / TOTAL SHTS. 2-731

...\Bridge 1-745\745AB_05.dgn
2/8/2018 1714309

NOTES:

1. THE LOCATION AND QUANTITIES OF THE REPAIRS SHOWN ON THIS DRAWING ARE BASED ON INSPECTION FIELD NOTES (SEE NOTE 13 ON DWG. PN-01) AND ARE APPROXIMATE AND DO REQUIRE VERIFICATION. PRIOR TO STARTING EACH REPAIR, THE LIMITS SHALL BE VERIFIED BY THE CONTRACTOR IN THE PRESENCE OF THE ENGINEER.

2. WHERE CRACKS AND SPALLS EXIST CONCURRENTLY, COMPLETE THE SPALL REPAIR COMPLETELY REMOVING THE ASSOCIATED CRACK. IF THE CRACK EXTENDS LESS THAN 1′-0″ BEYOND THE LIMITS OF THE SPALL REPAIR, EXTEND THE LIMITS OF THE SPALL REPAIR TO ENCOMPASS THE CRACK. IF THE CRACK EXTENDS DEEPER THAN THE LIMITS OF CONCRETE REMOVAL, THE CONTRACTOR SHALL REMOVE ADDITIONAL CONCRETE UNTIL THE CRACK IS FULLY REMOVED. IF THE DEPTH OF REMOVAL REACHES MORE THAN 6″ FROM THE ORIGINAL FACE OF CONCRETE, ALL WORK ON THE REPAIR SHALL STOP AND THE ENGINEER SHALL BE NOTIFIED IMMEDIATELY. IF THE CRACK EXTENDS MORE THAN 1′-0″ BEYOND THE LIMITS OF THE SPALL REPAIR INTO SOUND CONCRETE THE CRACK SHALL BE REPAIRED BY EPOXY INJECTION AND PAID FOR UNDER ITEM 628001 - REPAIR OF CONCRETE STRUCTURES BY EPOXY INJECTION BEYOND THE LIMITS OF THE SPALL REPAIR. CRACKS LOCATED WITHIN SPALL REPAIRS WILL NOT BE PAID FOR AND WILL BE CONSIDERED INCIDENTAL TO ITEM 628041 - DEEP SPALL REPAIR.

3. FOR CONCRETE REPAIR DETAILS, SEE DWG. PN-02.

4. SILICONE-BASED ACRYLIC CONCRETE SEALER SHALL BE APPLIED TO ALL EXPOSED CONCRETE PIER SURFACES. CONTRACTOR SHALL REMOVE DEBRIS FROM THE TOPS OF COLUMNS PRIOR TO APPLICATION OF SILICONE-BASED ACRYLIC CONCRETE SEALER. CONTRACTOR SHALL TAKE CARE TO PROTECT THE BEARINGS DURING APPLICATION OF THE SILICONE-BASED ACRYLIC CONCRETE SEALER. ANY CLEAN-UP REQUIRED TO REMOVE THE SEALER FROM THE BEARINGS WILL BE AT NO ADDITIONAL COST TO THE DEPARTMENT AND TO THE SATISFACTION OF THE ENGINEER. PAYMENT WILL BE MADE UNDER ITEM 613001 - SILICONE-BASED ACRYLIC CONCRETE SEALER.

5. SILICONE-BASED ACRYLIC CONCRETE SEALER SHALL ONLY BE APPLIED AFTER ALL CONCRETE REPAIRS ARE COMPLETED AT EACH PIER.

6. NO DEFECTS OBSERVED ON SOUTH FACE OF PIER 1.

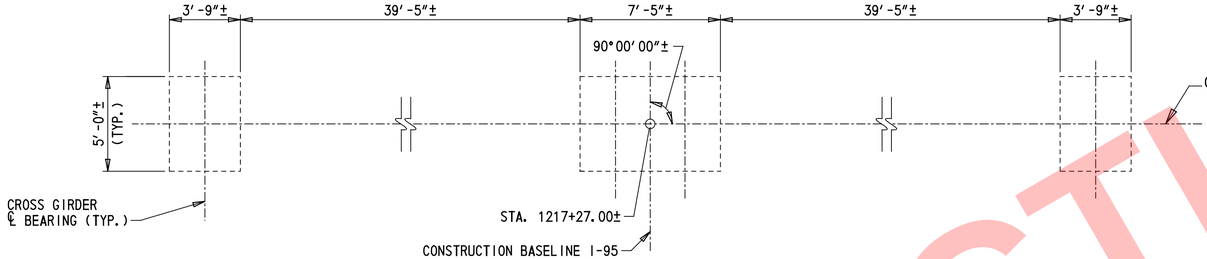

PIER 1 - PLAN VIEW

1/4″ = 1′-0″

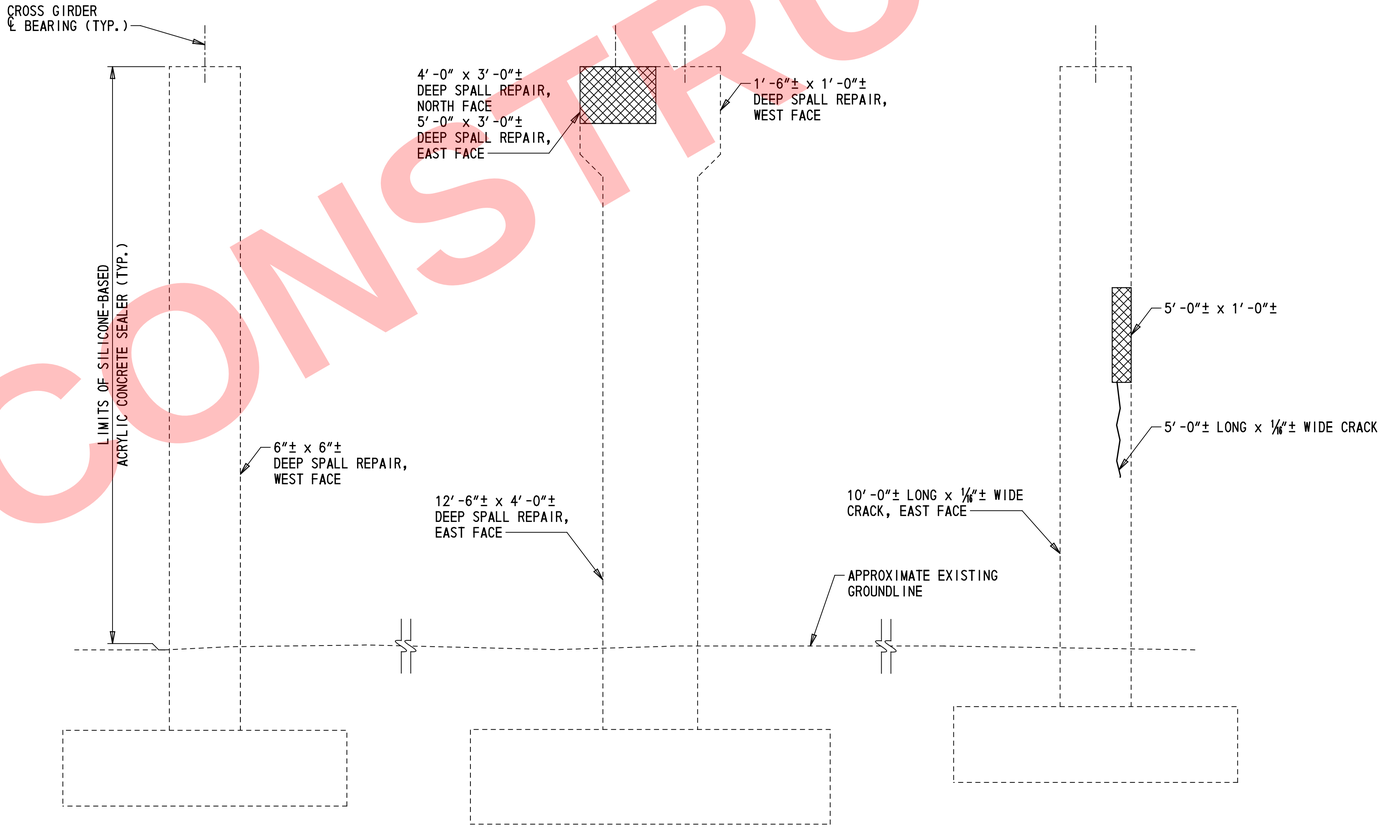

PIER 1 - NORTH ELEVATION

1/4″ = 1′-0″

NOTE:
PILES NOT SHOWN FOR CLARITY.

LEGEND:

REPAIR OF CONCRETE STRUCTURES BY EPOXY INJECTION

DEEP SPALL REPAIR

CONCRETE REPAIR QUANTITIES
PIER 1

REPAIR Nº	ITEM Nº	ITEM TITLE	UNIT	QUANTITY
34	628001	REPAIR OF CONCRETE STRUCTURES BY EPOXY INJECTION	LF	15
37	628041	DEEP SPALL REPAIR	CF	24
41	613001	SILICONE-BASED ACRYLIC CONCRETE SEALER	SF	1742

NOTE: QUANTITIES SHOWN ARE TOTAL PER PIER AND DO NOT INCLUDE CONTINGENT PERCENTAGE.

NOT FOR CONSTRUCTION

DELAWARE DEPARTMENT OF TRANSPORTATION	ADDENDUMS / REVISIONS	SCALE AS NOTED	REHABILITATION OF I-95 FROM I-495 TO NORTH OF BRANDYWINE RIVER BRIDGE	CONTRACT T201407404 / COUNTY NEW CASTLE	BRIDGE NO. 1 745 059 / DESIGNED BY: BSD / CHECKED BY: JRQ	PIER 1 – CONCRETE REPAIR DETAILS (NORTH ELEVATION)	1-745 PR-01 / SHEET NO. 2-71 / TOTAL SHTS. 2-731

\Bridge 1-745\745PR_01.dgn
2/8/2018 1744309

NOTES:

1. THE LOCATION AND QUANTITIES OF THE REPAIRS SHOWN ON THIS DRAWING ARE BASED ON INSPECTION FIELD NOTES (SEE NOTE 13 ON DWG. PN-01) AND ARE APPROXIMATE AND DO REQUIRE VERIFICATION. PRIOR TO STARTING EACH REPAIR, THE LIMITS SHALL BE VERIFIED BY THE CONTRACTOR IN THE PRESENCE OF THE ENGINEER.

2. WHERE CRACKS AND SPALLS EXIST CONCURRENTLY, COMPLETE THE SPALL REPAIR COMPLETELY REMOVING THE ASSOCIATED CRACK. IF THE CRACK EXTENDS LESS THAN 1′-0″ BEYOND THE LIMITS OF THE SPALL REPAIR, EXTEND THE LIMITS OF THE SPALL REPAIR TO ENCOMPASS THE CRACK. IF THE CRACK EXTENDS DEEPER THAN THE LIMITS OF CONCRETE REMOVAL, THE CONTRACTOR SHALL REMOVE ADDITIONAL CONCRETE UNTIL THE CRACK IS FULLY REMOVED. IF THE DEPTH OF REMOVAL REACHES MORE THAN 6″ FROM THE ORIGINAL FACE OF CONCRETE, ALL WORK ON THE REPAIR SHALL STOP AND THE ENGINEER SHALL BE NOTIFIED IMMEDIATELY. IF THE CRACK EXTENDS MORE THAN 1′-0″ BEYOND THE LIMITS OF THE SPALL REPAIR INTO SOUND CONCRETE THE CRACK SHALL BE REPAIRED BY EPOXY INJECTION AND PAID FOR UNDER ITEM 628001 - REPAIR OF CONCRETE STRUCTURES BY EPOXY INJECTION BEYOND THE LIMITS OF THE SPALL REPAIR. CRACKS LOCATED WITHIN SPALL REPAIRS WILL NOT BE PAID FOR AND WILL BE CONSIDERED INCIDENTAL TO ITEM 628041 - DEEP SPALL REPAIR.

3. FOR CONCRETE REPAIR DETAILS, SEE DWG. PN-02.

4. SILICONE-BASED ACRYLIC CONCRETE SEALER SHALL BE APPLIED TO ALL EXPOSED CONCRETE PIER SURFACES. CONTRACTOR SHALL REMOVE DEBRIS FROM THE TOPS OF COLUMNS PRIOR TO APPLICATION OF SILICONE-BASED ACRYLIC CONCRETE SEALER. CONTRACTOR SHALL TAKE CARE TO PROTECT THE BEARINGS DURING APPLICATION OF THE SILICONE-BASED ACRYLIC CONCRETE SEALER. ANY CLEAN-UP REQUIRED TO REMOVE THE SEALER FROM THE BEARINGS WILL BE AT NO ADDITIONAL COST TO THE DEPARTMENT AND TO THE SATISFACTION OF THE ENGINEER. PAYMENT WILL BE MADE UNDER ITEM 613001 - SILICONE-BASED ACRYLIC CONCRETE SEALER.

5. SILICONE-BASED ACRYLIC CONCRETE SEALER SHALL ONLY BE APPLIED AFTER ALL CONCRETE REPAIRS ARE COMPLETED AT EACH PIER.

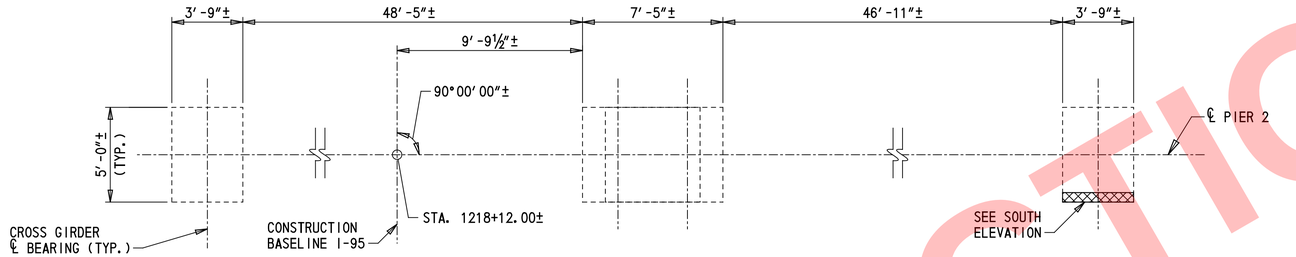

PIER 2 - PLAN VIEW

¼″ = 1′-0″

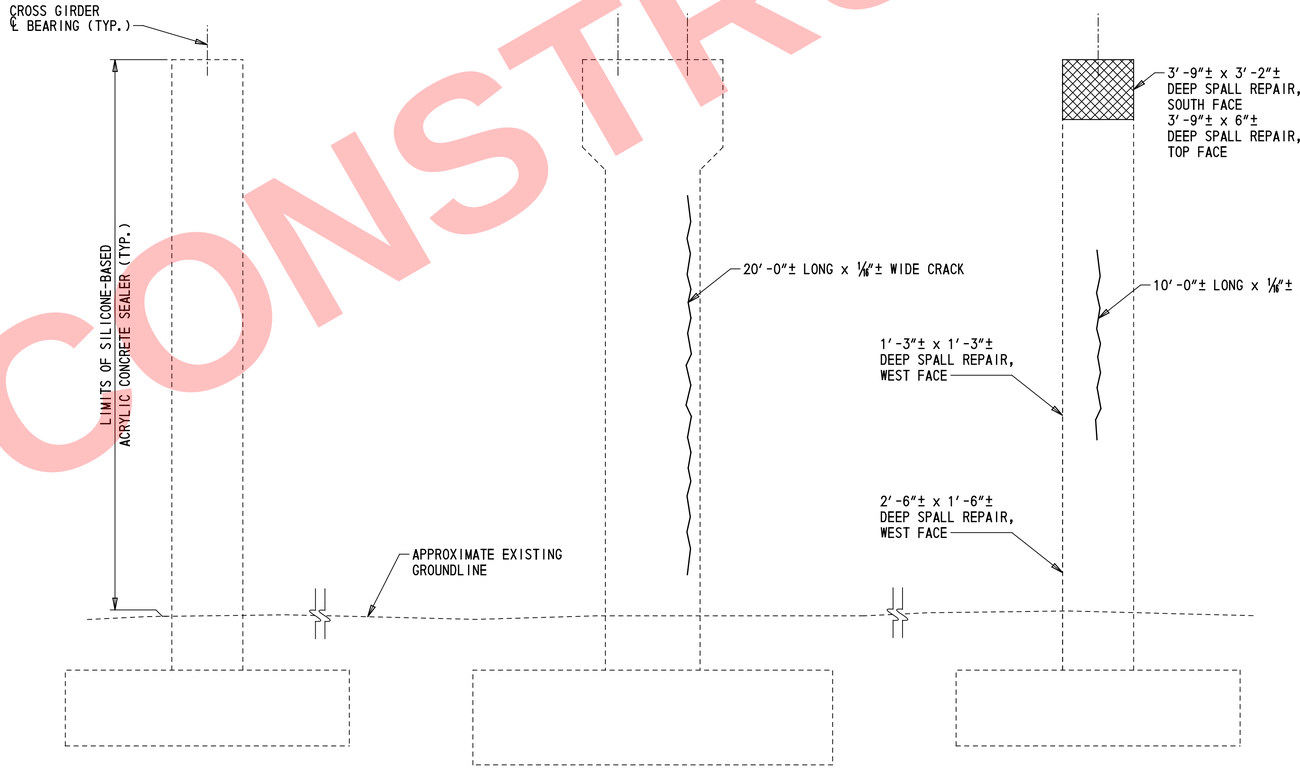

PIER 2 - SOUTH ELEVATION

¼″ = 1′-0″

NOTE:
PILES NOT SHOWN FOR CLARITY.

LEGEND:

REPAIR OF CONCRETE STRUCTURES BY EPOXY INJECTION

DEEP SPALL REPAIR

CONCRETE REPAIR QUANTITIES
PIER 2

REPAIR Nº	ITEM Nº	ITEM TITLE	UNIT	QUANTITY
34	628001	REPAIR OF CONCRETE STRUCTURES BY EPOXY INJECTION	LF	30
37	628041	DEEP SPALL REPAIR	CF	14
41	613001	SILICONE-BASED ACRYLIC CONCRETE SEALER	SF	1651

NOTE: QUANTITIES SHOWN ARE TOTAL PER PIER AND DO NOT INCLUDE CONTINGENT PERCENTAGE.

NOT FOR CONSTRUCTION

DELAWARE
DEPARTMENT OF TRANSPORTATION

ADDENDUMS / REVISIONS

SCALE AS NOTED

REHABILITATION OF I-95
FROM I-495 TO NORTH OF
BRANDYWINE RIVER BRIDGE

CONTRACT	BRIDGE NO. 1 745 059
T201407404	DESIGNED BY: BSD
COUNTY	CHECKED BY: JRQ
NEW CASTLE	

PIER 2 – CONCRETE
REPAIR DETAILS
(SOUTH ELEVATION)

	1-745 PR-02
SHEET NO.	2-72
TOTAL SHTS.	2-731

\\Bridge 1-745\745PR_02.dgn
2/7/2018 1743.310

NOTES:

1. THE LOCATION AND QUANTITIES OF THE REPAIRS SHOWN ON THIS DRAWING ARE BASED ON INSPECTION FIELD NOTES (SEE NOTE 13 ON DWG. PN-01) AND ARE APPROXIMATE AND DO REQUIRE VERIFICATION. PRIOR TO STARTING EACH REPAIR, THE LIMITS SHALL BE VERIFIED BY THE CONTRACTOR IN THE PRESENCE OF THE ENGINEER.
2. WHERE CRACKS AND SPALLS EXIST CONCURRENTLY, COMPLETE THE SPALL REPAIR COMPLETELY REMOVING THE ASSOCIATED CRACK. IF THE CRACK EXTENDS LESS THAN 1'-0" BEYOND THE LIMITS OF THE SPALL REPAIR, EXTEND THE LIMITS OF THE SPALL REPAIR TO ENCOMPASS THE CRACK. IF THE CRACK EXTENDS DEEPER THAN THE LIMITS OF CONCRETE REMOVAL, THE CONTRACTOR SHALL REMOVE ADDITIONAL CONCRETE UNTIL THE CRACK IS FULLY REMOVED. IF THE DEPTH OF REMOVAL REACHES MORE THAN 6" FROM THE ORIGINAL FACE OF CONCRETE, ALL WORK ON THE REPAIR SHALL STOP AND THE ENGINEER SHALL BE NOTIFIED IMMEDIATELY. IF THE CRACK EXTENDS MORE THAN 1'-0" BEYOND THE LIMITS OF THE SPALL REPAIR INTO SOUND CONCRETE THE CRACK SHALL BE REPAIRED BY EPOXY INJECTION AND PAID FOR UNDER ITEM 628001 - REPAIR OF CONCRETE STRUCTURES BY EPOXY INJECTION BEYOND THE LIMITS OF THE SPALL REPAIR. CRACKS LOCATED WITHIN SPALL REPAIRS WILL NOT BE PAID FOR AND WILL BE CONSIDERED INCIDENTAL TO ITEM 628041 - DEEP SPALL REPAIR.
3. FOR CONCRETE REPAIR DETAILS, SEE DWG. PN-02.
4. SILICONE-BASED ACRYLIC CONCRETE SEALER SHALL BE APPLIED TO ALL EXPOSED CONCRETE PIER SURFACES. CONTRACTOR SHALL REMOVE DEBRIS FROM THE TOPS OF COLUMNS PRIOR TO APPLICATION OF SILICONE-BASED ACRYLIC CONCRETE SEALER. CONTRACTOR SHALL TAKE CARE TO PROTECT THE BEARINGS DURING APPLICATION OF THE SILICONE-BASED ACRYLIC CONCRETE SEALER. ANY CLEAN-UP REQUIRED TO REMOVE THE SEALER FROM THE BEARINGS WILL BE AT NO ADDITIONAL COST TO THE DEPARTMENT AND TO THE SATISFACTION OF THE ENGINEER. PAYMENT WILL BE MADE UNDER ITEM 613001 - SILICONE-BASED ACRYLIC CONCRETE SEALER.
5. SILICONE-BASED ACRYLIC CONCRETE SEALER SHALL ONLY BE APPLIED AFTER ALL CONCRETE REPAIRS ARE COMPLETED AT EACH PIER.
6. FOR CONCRETE REPAIR QUANTITIES TABLE, SEE DWG. PR-02.

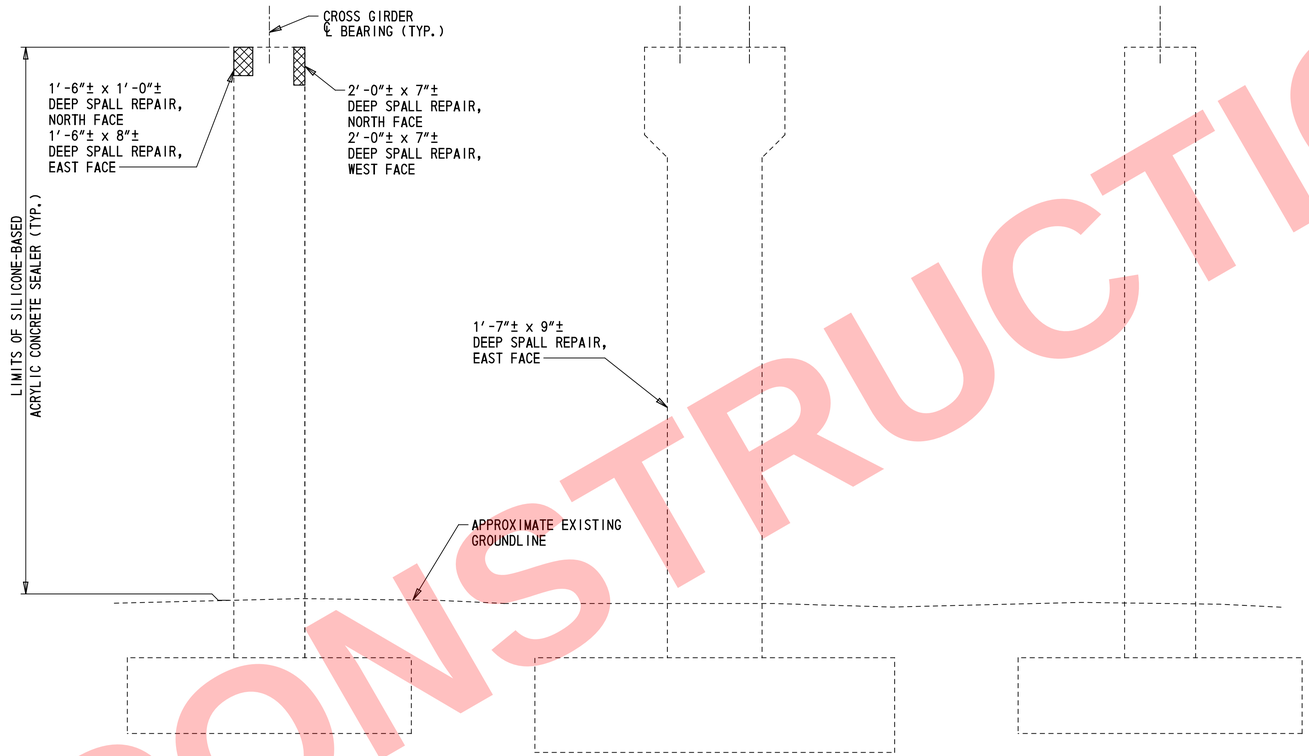

PIER 2 - NORTH ELEVATION

¼" = 1'-0"

LEGEND:

REPAIR OF CONCRETE STRUCTURES BY EPOXY INJECTION

DEEP SPALL REPAIR

NOT FOR CONSTRUCTION

DELAWARE DEPARTMENT OF TRANSPORTATION

ADDENDUMS / REVISIONS

SCALE AS NOTED

REHABILITATION OF I-95 FROM I-495 TO NORTH OF BRANDYWINE RIVER BRIDGE

CONTRACT T201407404

COUNTY NEW CASTLE

BRIDGE NO. 1 745 059

DESIGNED BY: BSD

CHECKED BY: JRQ

PIER 2 – CONCRETE REPAIR DETAILS (NORTH ELEVATION)

1-745 PR-03

SHEET NO. 2-73

TOTAL SHTS. 2-731

...\Bridge 1-745\745PR_03.dgn 2/8/2018 17:43:10

NOTES:

1. THE LOCATION AND QUANTITIES OF THE REPAIRS SHOWN ON THIS DRAWING ARE BASED ON INSPECTION FIELD NOTES (SEE NOTE 13 ON DWG. PN-01) AND ARE APPROXIMATE AND DO REQUIRE VERIFICATION. PRIOR TO STARTING EACH REPAIR, THE LIMITS SHALL BE VERIFIED BY THE CONTRACTOR IN THE PRESENCE OF THE ENGINEER.

2. WHERE CRACKS AND SPALLS EXIST CONCURRENTLY, COMPLETE THE SPALL REPAIR COMPLETELY REMOVING THE ASSOCIATED CRACK. IF THE CRACK EXTENDS LESS THAN 1'-0" BEYOND THE LIMITS OF THE SPALL REPAIR, EXTEND THE LIMITS OF THE SPALL REPAIR TO ENCOMPASS THE CRACK. IF THE CRACK EXTENDS DEEPER THAN THE LIMITS OF CONCRETE REMOVAL, THE CONTRACTOR SHALL REMOVE ADDITIONAL CONCRETE UNTIL THE CRACK IS FULLY REMOVED. IF THE DEPTH OF REMOVAL REACHES MORE THAN 6" FROM THE ORIGINAL FACE OF CONCRETE, ALL WORK ON THE REPAIR SHALL STOP AND THE ENGINEER SHALL BE NOTIFIED IMMEDIATELY. IF THE CRACK EXTENDS MORE THAN 1'-0" BEYOND THE LIMITS OF THE SPALL REPAIR INTO SOUND CONCRETE THE CRACK SHALL BE REPAIRED BY EPOXY INJECTION AND PAID FOR UNDER ITEM 628001 - REPAIR OF CONCRETE STRUCTURES BY EPOXY INJECTION BEYOND THE LIMITS OF THE SPALL REPAIR. CRACKS LOCATED WITHIN SPALL REPAIRS WILL NOT BE PAID FOR AND WILL BE CONSIDERED INCIDENTAL TO ITEM 628041 - DEEP SPALL REPAIR.

3. FOR CONCRETE REPAIR DETAILS, SEE DWG. PN-02.

4. SILICONE-BASED ACRYLIC CONCRETE SEALER SHALL BE APPLIED TO ALL EXPOSED CONCRETE PIER SURFACES. CONTRACTOR SHALL REMOVE DEBRIS FROM THE TOPS OF COLUMNS PRIOR TO APPLICATION OF SILICONE-BASED ACRYLIC CONCRETE SEALER. CONTRACTOR SHALL TAKE CARE TO PROTECT THE BEARINGS DURING APPLICATION OF THE SILICONE-BASED ACRYLIC CONCRETE SEALER. ANY CLEAN-UP REQUIRED TO REMOVE THE SEALER FROM THE BEARINGS WILL BE AT NO ADDITIONAL COST TO THE DEPARTMENT AND TO THE SATISFACTION OF THE ENGINEER. PAYMENT WILL BE MADE UNDER ITEM 613001 - SILICONE-BASED ACRYLIC CONCRETE SEALER.

5. SILICONE-BASED ACRYLIC CONCRETE SEALER SHALL ONLY BE APPLIED AFTER ALL CONCRETE REPAIRS ARE COMPLETED AT EACH PIER.

6. NO DEFECTS OBSERVED ON NORTH FACE OF PIER 3.

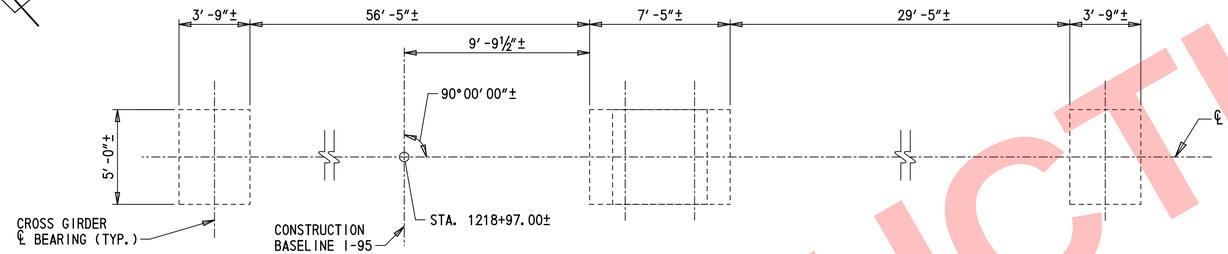

PIER 3 - PLAN VIEW

¼" = 1'-0"

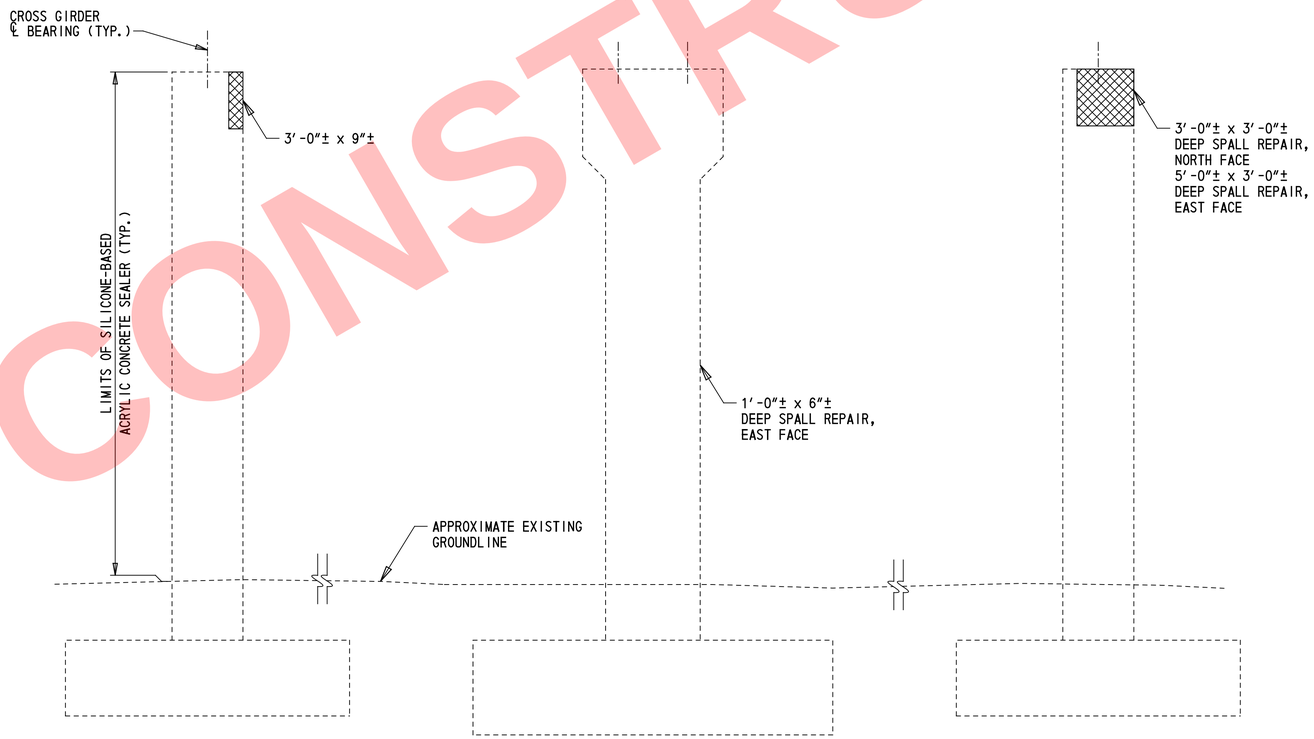

PIER 3 - SOUTH ELEVATION

¼" = 1'-0"

NOTE:
PILES NOT SHOWN FOR CLARITY.

LEGEND:

REPAIR OF CONCRETE STRUCTURES BY EPOXY INJECTION

DEEP SPALL REPAIR

CONCRETE REPAIR QUANTITIES
PIER 3

REPAIR Nº	ITEM Nº	ITEM TITLE	UNIT	QUANTITY
34	628001	REPAIR OF CONCRETE STRUCTURES BY EPOXY INJECTION	LF	0
37	628041	DEEP SPALL REPAIR	CF	10
41	613001	SILICONE-BASED ACRYLIC CONCRETE SEALER	SF	1531

NOTE: QUANTITIES SHOWN ARE TOTAL PER PIER AND DO NOT INCLUDE CONTINGENT PERCENTAGE.

NOT FOR CONSTRUCTION

NOTES:

1. THE LOCATION AND QUANTITIES OF THE REPAIRS SHOWN ON THIS DRAWING ARE BASED ON INSPECTION FIELD NOTES (SEE NOTE 13 ON DWG. PN-01) AND ARE APPROXIMATE AND DO REQUIRE VERIFICATION. PRIOR TO STARTING EACH REPAIR, THE LIMITS SHALL BE VERIFIED BY THE CONTRACTOR IN THE PRESENCE OF THE ENGINEER.

2. WHERE CRACKS AND SPALLS EXIST CONCURRENTLY, COMPLETE THE SPALL REPAIR COMPLETELY REMOVING THE ASSOCIATED CRACK. IF THE CRACK EXTENDS LESS THAN 1′-0″ BEYOND THE LIMITS OF THE SPALL REPAIR, EXTEND THE LIMITS OF THE SPALL REPAIR TO ENCOMPASS THE CRACK. IF THE CRACK EXTENDS DEEPER THAN THE LIMITS OF CONCRETE REMOVAL, THE CONTRACTOR SHALL REMOVE ADDITIONAL CONCRETE UNTIL THE CRACK IS FULLY REMOVED. IF THE DEPTH OF REMOVAL REACHES MORE THAN 6″ FROM THE ORIGINAL FACE OF CONCRETE, ALL WORK ON THE REPAIR SHALL STOP AND THE ENGINEER SHALL BE NOTIFIED IMMEDIATELY. IF THE CRACK EXTENDS MORE THAN 1′-0″ BEYOND THE LIMITS OF THE SPALL REPAIR INTO SOUND CONCRETE THE CRACK SHALL BE REPAIRED BY EPOXY INJECTION AND PAID FOR UNDER ITEM 628001 - REPAIR OF CONCRETE STRUCTURES BY EPOXY INJECTION BEYOND THE LIMITS OF THE SPALL REPAIR. CRACKS LOCATED WITHIN SPALL REPAIRS WILL NOT BE PAID FOR AND WILL BE CONSIDERED INCIDENTAL TO ITEM 628041 - DEEP SPALL REPAIR.

3. FOR CONCRETE REPAIR DETAILS, SEE DWG. PN-02.

4. SILICONE-BASED ACRYLIC CONCRETE SEALER SHALL BE APPLIED TO ALL EXPOSED CONCRETE PIER SURFACES. CONTRACTOR SHALL REMOVE DEBRIS FROM THE TOPS OF COLUMNS PRIOR TO APPLICATION OF SILICONE-BASED ACRYLIC CONCRETE SEALER. CONTRACTOR SHALL TAKE CARE TO PROTECT THE BEARINGS DURING APPLICATION OF THE SILICONE-BASED ACRYLIC CONCRETE SEALER. ANY CLEAN-UP REQUIRED TO REMOVE THE SEALER FROM THE BEARINGS WILL BE AT NO ADDITIONAL COST TO THE DEPARTMENT AND TO THE SATISFACTION OF THE ENGINEER. PAYMENT WILL BE MADE UNDER ITEM 613001 - SILICONE-BASED ACRYLIC CONCRETE SEALER.

5. SILICONE-BASED ACRYLIC CONCRETE SEALER SHALL ONLY BE APPLIED AFTER ALL CONCRETE REPAIRS ARE COMPLETED AT EACH PIER.

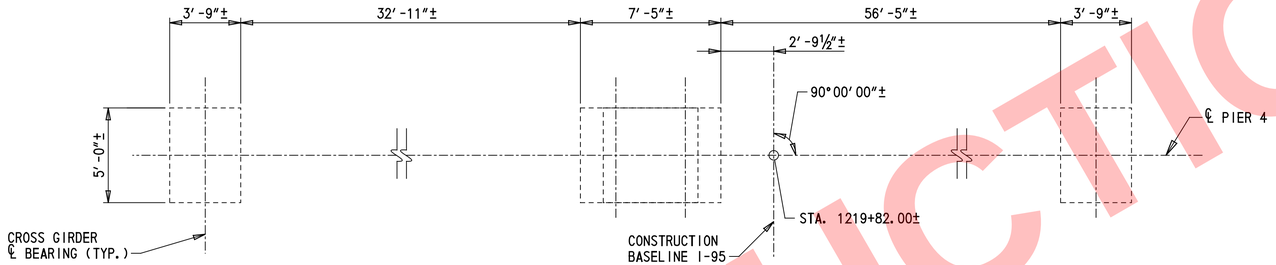

COLUMN 4W | COLUMN 4C | COLUMN 4E

PIER 4 - PLAN VIEW

¼″ = 1′-0″

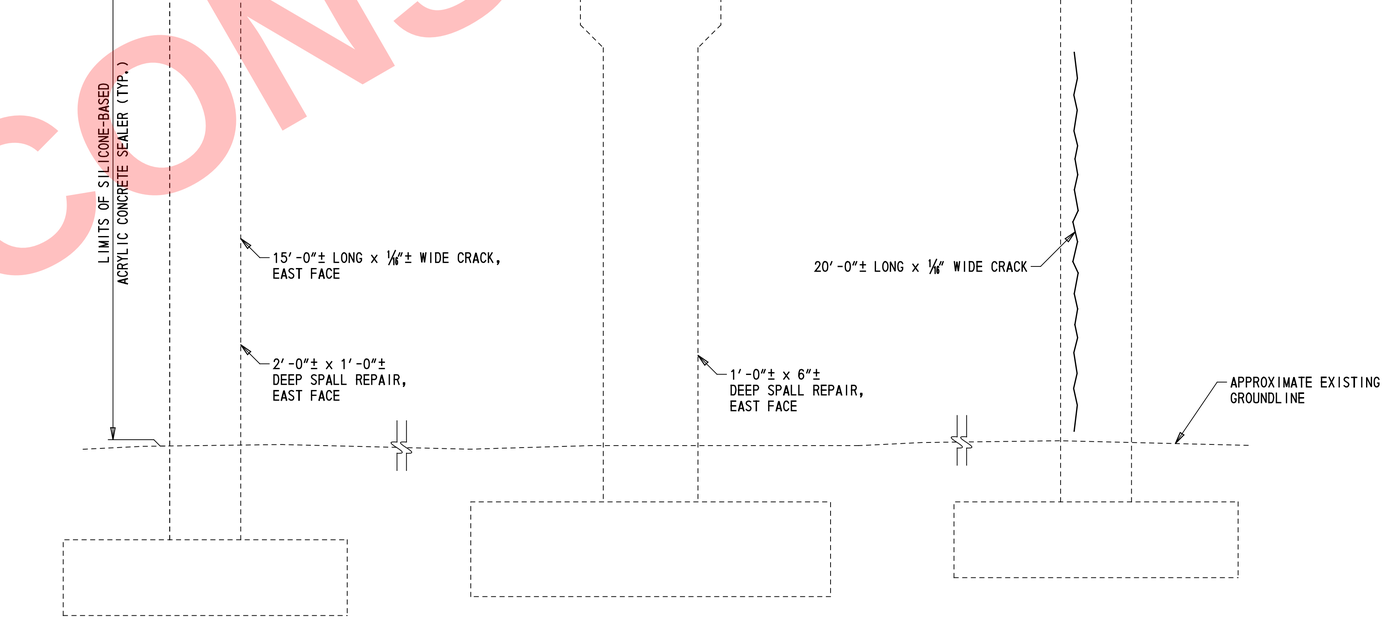

COLUMN 4W | COLUMN 4C | COLUMN 4E

PIER 4 - SOUTH ELEVATION

¼″ = 1′-0″

NOTE:
PILES NOT SHOWN FOR CLARITY.

LEGEND:

REPAIR OF CONCRETE STRUCTURES BY EPOXY INJECTION

DEEP SPALL REPAIR

CONCRETE REPAIR QUANTITIES

PIER 4

REPAIR Nº	ITEM Nº	ITEM TITLE	UNIT	QUANTITY
34	628001	REPAIR OF CONCRETE STRUCTURES BY EPOXY INJECTION	LF	35
37	628041	DEEP SPALL REPAIR	CF	4
41	613001	SILICONE-BASED ACRYLIC CONCRETE SEALER	SF	1559

NOTE: QUANTITIES SHOWN ARE TOTAL PER PIER AND DO NOT INCLUDE CONTINGENT PERCENTAGE.

NOT FOR CONSTRUCTION

DELAWARE
DEPARTMENT OF TRANSPORTATION

ADDENDUMS / REVISIONS

SCALE AS NOTED

REHABILITATION OF I-95
FROM I-495 TO NORTH OF
BRANDYWINE RIVER BRIDGE

CONTRACT	BRIDGE NO. 1 745 059
T201407404	DESIGNED BY: BSD
COUNTY: NEW CASTLE	CHECKED BY: JRQ

PIER 4 – CONCRETE
REPAIR DETAILS
(SOUTH ELEVATION)

1-745 PR-05
SHEET NO. 2-75
TOTAL SHTS. 2-731

2/8/2016 J:\Bridge\1-745\1745PR_05.dgn 1745311

NOTES:

1. THE LOCATION AND QUANTITIES OF THE REPAIRS SHOWN ON THIS DRAWING ARE BASED ON INSPECTION FIELD NOTES (SEE NOTE 13 ON DWG. PN-01) AND ARE APPROXIMATE AND DO REQUIRE VERIFICATION. PRIOR TO STARTING EACH REPAIR, THE LIMITS SHALL BE VERIFIED BY THE CONTRACTOR IN THE PRESENCE OF THE ENGINEER.

2. WHERE CRACKS AND SPALLS EXIST CONCURRENTLY, COMPLETE THE SPALL REPAIR COMPLETELY REMOVING THE ASSOCIATED CRACK. IF THE CRACK EXTENDS LESS THAN 1'-0" BEYOND THE LIMITS OF THE SPALL REPAIR, EXTEND THE LIMITS OF THE SPALL REPAIR TO ENCOMPASS THE CRACK. IF THE CRACK EXTENDS DEEPER THAN THE LIMITS OF CONCRETE REMOVAL, THE CONTRACTOR SHALL REMOVE ADDITIONAL CONCRETE UNTIL THE CRACK IS FULLY REMOVED. IF THE DEPTH OF REMOVAL REACHES MORE THAN 6" FROM THE ORIGINAL FACE OF CONCRETE, ALL WORK ON THE REPAIR SHALL STOP AND THE ENGINEER SHALL BE NOTIFIED IMMEDIATELY. IF THE CRACK EXTENDS MORE THAN 1'-0" BEYOND THE LIMITS OF THE SPALL REPAIR INTO SOUND CONCRETE THE CRACK SHALL BE REPAIRED BY EPOXY INJECTION AND PAID FOR UNDER ITEM 628001 - REPAIR OF CONCRETE STRUCTURES BY EPOXY INJECTION BEYOND THE LIMITS OF THE SPALL REPAIR. CRACKS LOCATED WITHIN SPALL REPAIRS WILL NOT BE PAID FOR AND WILL BE CONSIDERED INCIDENTAL TO ITEM 628041 - DEEP SPALL REPAIR.

3. FOR CONCRETE REPAIR DETAILS, SEE DWG. PN-02.

4. SILICONE-BASED ACRYLIC CONCRETE SEALER SHALL BE APPLIED TO ALL EXPOSED CONCRETE PIER SURFACES. CONTRACTOR SHALL REMOVE DEBRIS FROM THE TOPS OF COLUMNS PRIOR TO APPLICATION OF SILICONE-BASED ACRYLIC CONCRETE SEALER. CONTRACTOR SHALL TAKE CARE TO PROTECT THE BEARINGS DURING APPLICATION OF THE SILICONE-BASED ACRYLIC CONCRETE SEALER. ANY CLEAN-UP REQUIRED TO REMOVE THE SEALER FROM THE BEARINGS WILL BE AT NO ADDITIONAL COST TO THE DEPARTMENT AND TO THE SATISFACTION OF THE ENGINEER. PAYMENT WILL BE MADE UNDER ITEM 613001 - SILICONE-BASED ACRYLIC CONCRETE SEALER.

5. SILICONE-BASED ACRYLIC CONCRETE SEALER SHALL ONLY BE APPLIED AFTER ALL CONCRETE REPAIRS ARE COMPLETED AT EACH PIER.

6. FOR CONCRETE REPAIR QUANTITIES TABLE, SEE DWG. PR-05.

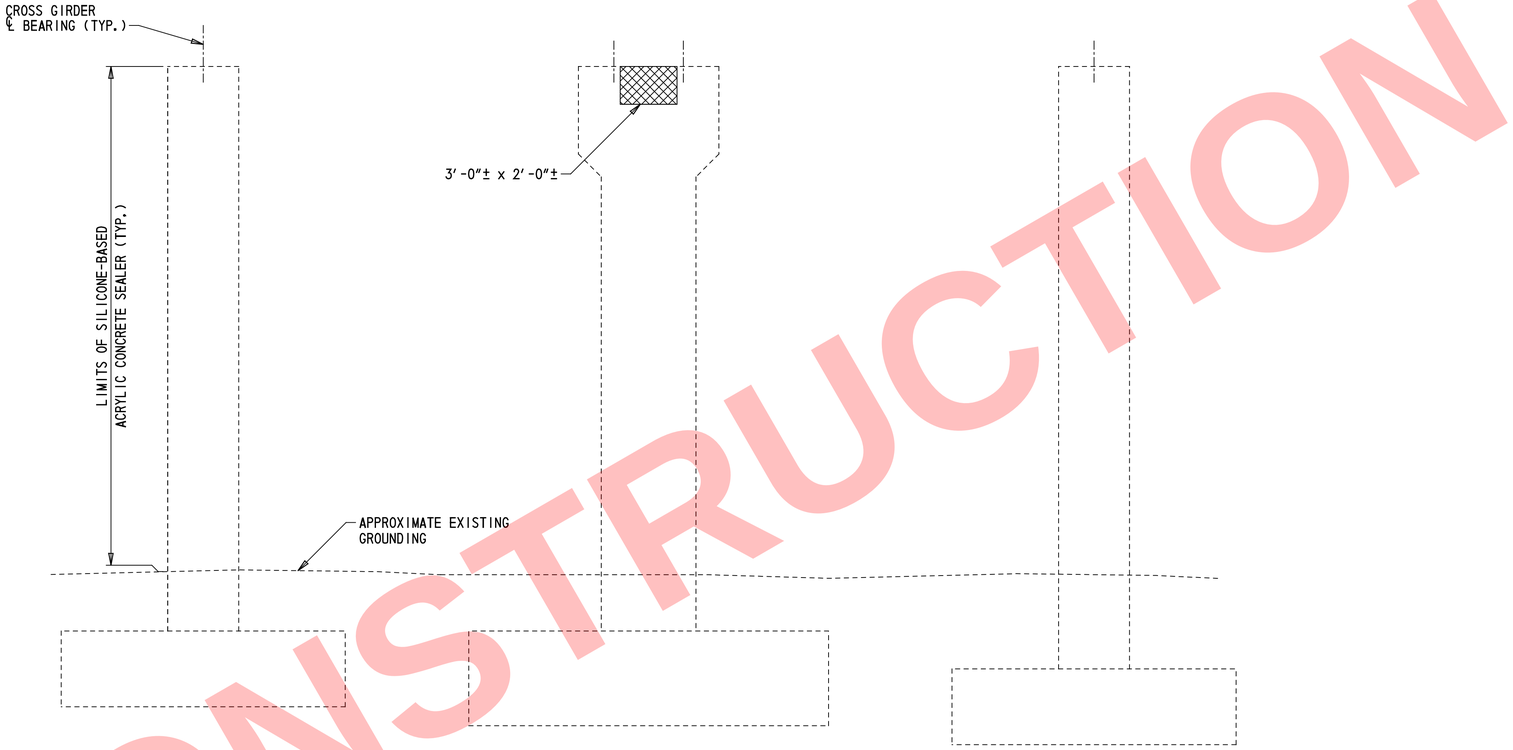

PIER 4 - NORTH ELEVATION

1/4" = 1'-0"

LEGEND:

REPAIR OF CONCRETE STRUCTURES BY EPOXY INJECTION

DEEP SPALL REPAIR

NOT FOR CONSTRUCTION

DELAWARE DEPARTMENT OF TRANSPORTATION	ADDENDUMS / REVISIONS	SCALE AS NOTED	REHABILITATION OF I-95 FROM I-495 TO NORTH OF BRANDYWINE RIVER BRIDGE	CONTRACT T201407404	BRIDGE NO. 1 745 059	PIER 4 – CONCRETE REPAIR DETAILS (NORTH ELEVATION)	1-745 PR-06
				COUNTY NEW CASTLE	DESIGNED BY: BSD		SHEET NO. 2-76
					CHECKED BY: JRQ		TOTAL SHTS. 2-731

C:\Bridge 1-745\745PR_06.dgn
2/8/2018 17:43:11

NOTES:

1. THE LOCATION AND QUANTITIES OF THE REPAIRS SHOWN ON THIS DRAWING ARE BASED ON INSPECTION FIELD NOTES (SEE NOTE 13 ON DWG. PN-01) AND ARE APPROXIMATE AND DO REQUIRE VERIFICATION. PRIOR TO STARTING EACH REPAIR, THE LIMITS SHALL BE VERIFIED BY THE CONTRACTOR IN THE PRESENCE OF THE ENGINEER.

2. WHERE CRACKS AND SPALLS EXIST CONCURRENTLY, COMPLETE THE SPALL REPAIR COMPLETELY REMOVING THE ASSOCIATED CRACK. IF THE CRACK EXTENDS LESS THAN 1′-0″ BEYOND THE LIMITS OF THE SPALL REPAIR, EXTEND THE LIMITS OF THE SPALL REPAIR TO ENCOMPASS THE CRACK. IF THE CRACK EXTENDS DEEPER THAN THE LIMITS OF CONCRETE REMOVAL, THE CONTRACTOR SHALL REMOVE ADDITIONAL CONCRETE UNTIL THE CRACK IS FULLY REMOVED. IF THE DEPTH OF REMOVAL REACHES MORE THAN 6″ FROM THE ORIGINAL FACE OF CONCRETE, ALL WORK ON THE REPAIR SHALL STOP AND THE ENGINEER SHALL BE NOTIFIED IMMEDIATELY. IF THE CRACK EXTENDS MORE THAN 1′-0″ BEYOND THE LIMITS OF THE SPALL REPAIR INTO SOUND CONCRETE THE CRACK SHALL BE REPAIRED BY EPOXY INJECTION AND PAID FOR UNDER ITEM 628001 - REPAIR OF CONCRETE STRUCTURES BY EPOXY INJECTION BEYOND THE LIMITS OF THE SPALL REPAIR. CRACKS LOCATED WITHIN SPALL REPAIRS WILL NOT BE PAID FOR AND WILL BE CONSIDERED INCIDENTAL TO ITEM 628041 - DEEP SPALL REPAIR.

3. FOR CONCRETE REPAIR DETAILS, SEE DWG. PN-02.

4. SILICONE-BASED ACRYLIC CONCRETE SEALER SHALL BE APPLIED TO ALL EXPOSED CONCRETE PIER SURFACES. CONTRACTOR SHALL REMOVE DEBRIS FROM THE TOPS OF COLUMNS PRIOR TO APPLICATION OF SILICONE-BASED ACRYLIC CONCRETE SEALER. CONTRACTOR SHALL TAKE CARE TO PROTECT THE BEARINGS DURING APPLICATION OF THE SILICONE-BASED ACRYLIC CONCRETE SEALER. ANY CLEAN-UP REQUIRED TO REMOVE THE SEALER FROM THE BEARINGS WILL BE AT NO ADDITIONAL COST TO THE DEPARTMENT AND TO THE SATISFACTION OF THE ENGINEER. PAYMENT WILL BE MADE UNDER ITEM 613001 - SILICONE-BASED ACRYLIC CONCRETE SEALER.

5. SILICONE-BASED ACRYLIC CONCRETE SEALER SHALL ONLY BE APPLIED AFTER ALL CONCRETE REPAIRS ARE COMPLETED AT EACH PIER.

6. NO DEFECTS OBSERVED ON NORTH FACE OF PIER 5.

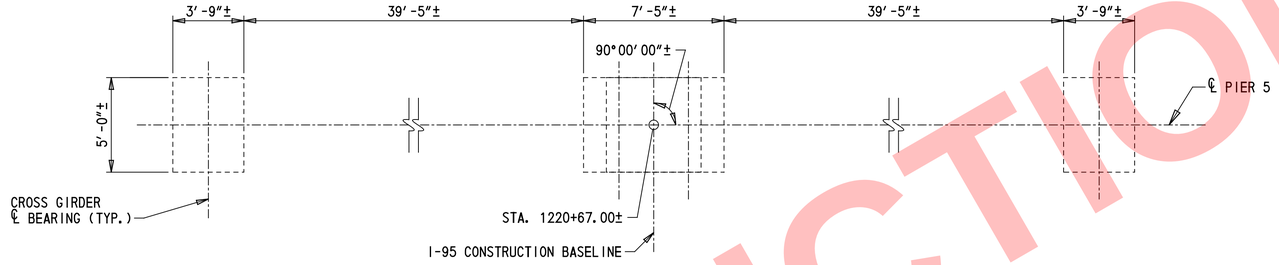

PIER 5 - PLAN VIEW

¼″ = 1′-0″

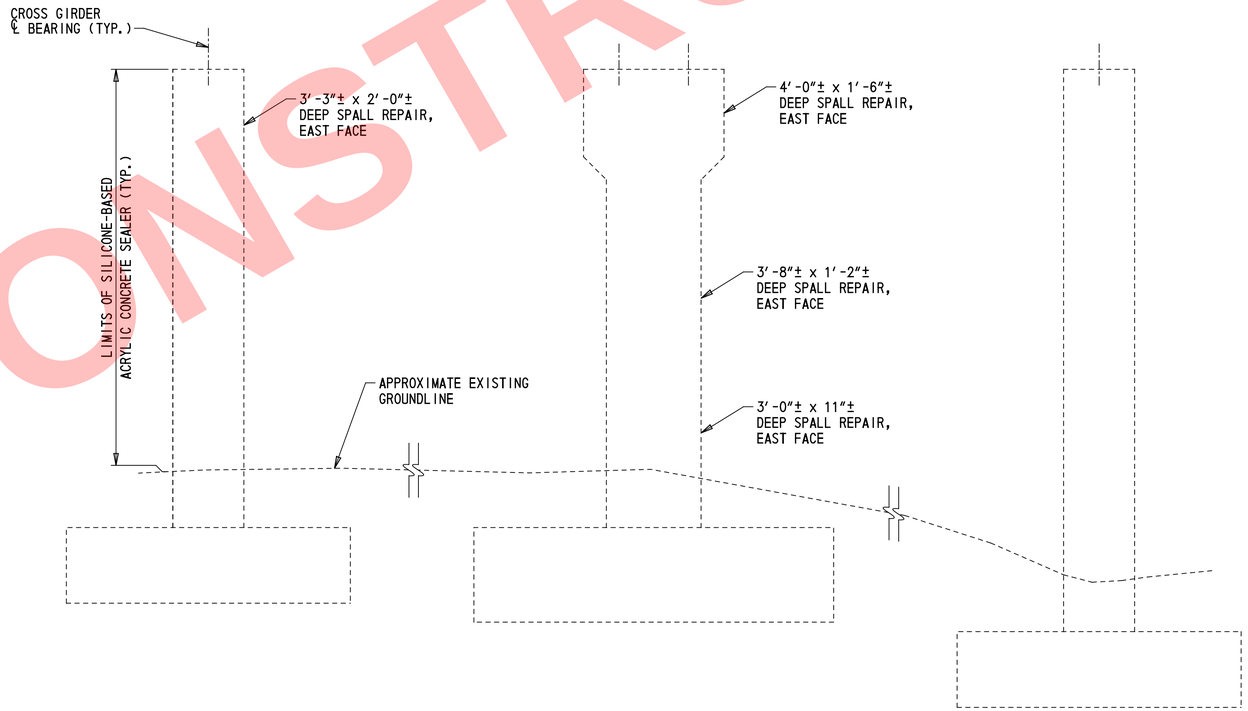

PIER 5 - SOUTH ELEVATION

¼″ = 1′-0″

NOTE:
PILES NOT SHOWN FOR CLARITY.

LEGEND:

REPAIR OF CONCRETE STRUCTURES BY EPOXY INJECTION

DEEP SPALL REPAIR

CONCRETE REPAIR QUANTITIES

PIER 5

REPAIR Nº	ITEM Nº	ITEM TITLE	UNIT	QUANTITY
34	628001	REPAIR OF CONCRETE STRUCTURES BY EPOXY INJECTION	LF	3
37	628041	DEEP SPALL REPAIR	CF	8
41	613001	SILICONE-BASED ACRYLIC CONCRETE SEALER	SF	1304

NOTE: QUANTITIES SHOWN ARE TOTAL PER PIER AND DO NOT INCLUDE CONTINGENT PERCENTAGE.

NOT FOR CONSTRUCTION

DELAWARE
DEPARTMENT OF TRANSPORTATION

ADDENDUMS / REVISIONS

SCALE AS NOTED

REHABILITATION OF I-95
FROM I-495 TO NORTH OF
BRANDYWINE RIVER BRIDGE

CONTRACT T201407404
COUNTY NEW CASTLE
BRIDGE NO. 1 745 059
DESIGNED BY: BSD
CHECKED BY: JRQ

PIER 5 – CONCRETE
REPAIR DETAILS
(SOUTH ELEVATION)

1-745
PR-07
SHEET NO. 2-77
TOTAL SHTS. 2-731

\Bridge 1-745\745PR_07.dgn
2/8/2018 17:43:11

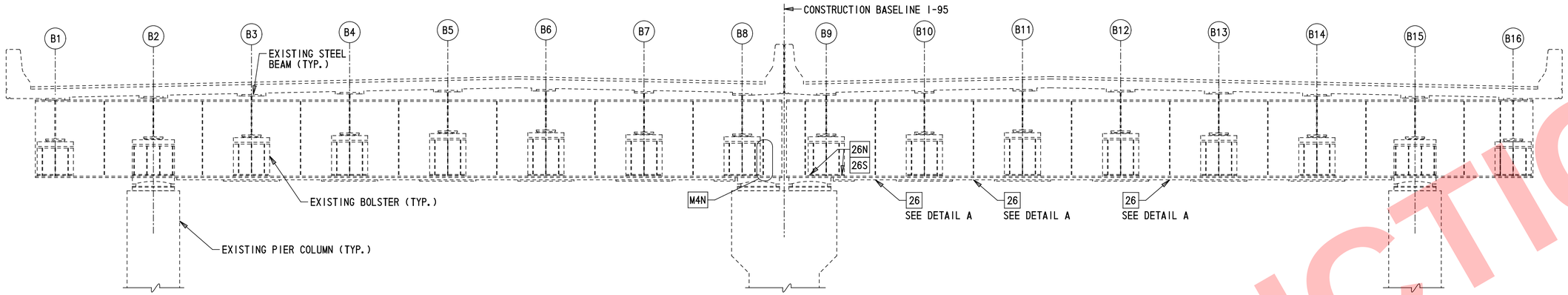

CROSS GIRDER 1 ELEVATION

(SOUTH ELEVATION)
1/4" = 1'-0"

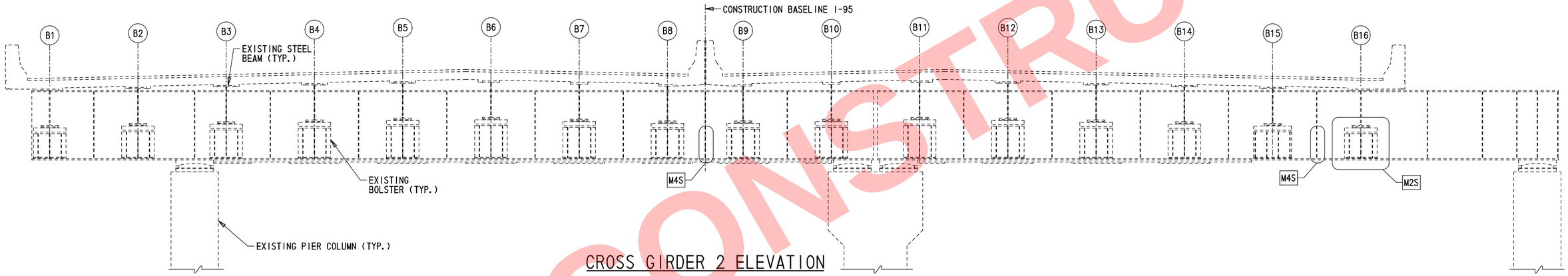

CROSS GIRDER 2 ELEVATION

(SOUTH ELEVATION)
1/4" = 1'-0"

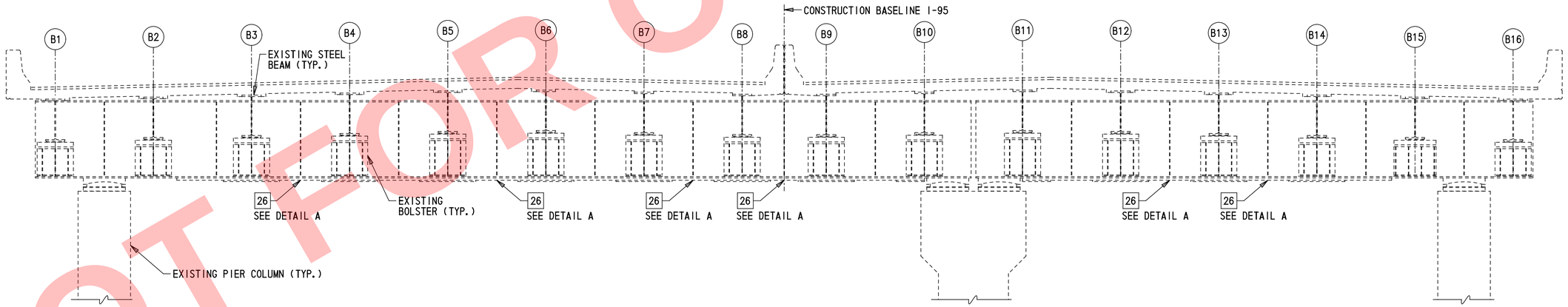

CROSS GIRDER 3 ELEVATION

(SOUTH ELEVATION)
1/4" = 1'-0"

LEGEND:

B# — BEAM NUMBER

##X — REPAIR NUMBER — N (NORTH FACE) / S (SOUTH FACE)

NOTES:

1. FOR TYPICAL SECTION, SEE DWG. BM-02.
2. REPAIR LOCATIONS SHOWN, FOR DETAILS OF REPAIRS, SEE DWG. BM-03.

NOT FOR CONSTRUCTION

DELAWARE DEPARTMENT OF TRANSPORTATION	ADDENDUMS / REVISIONS	SCALE AS NOTED	REHABILITATION OF I-95 FROM I-495 TO NORTH OF BRANDYWINE RIVER BRIDGE	CONTRACT T201407404	BRIDGE NO. 1 745 059	CROSS GIRDER REPAIR DETAILS – 1
				COUNTY NEW CASTLE	DESIGNED BY: MLA	
					CHECKED BY: CWM	

1-745 BM-01 | SHEET NO. 2-78 | TOTAL SHTS. 2-731

C:\Bridge 1-745\745BM_01.dgn
2/8/2018 1743:12

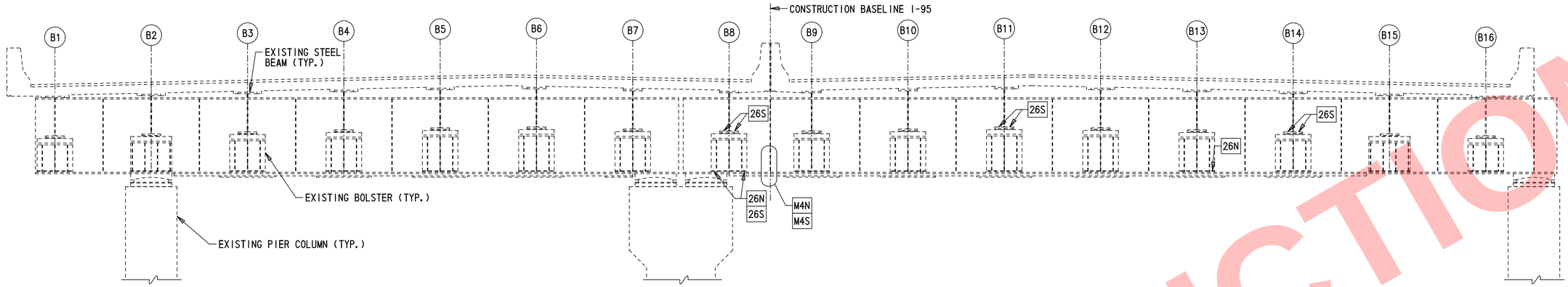

CROSS GIRDER 4 ELEVATION

(SOUTH ELEVATION)
1/4" = 1'-0"

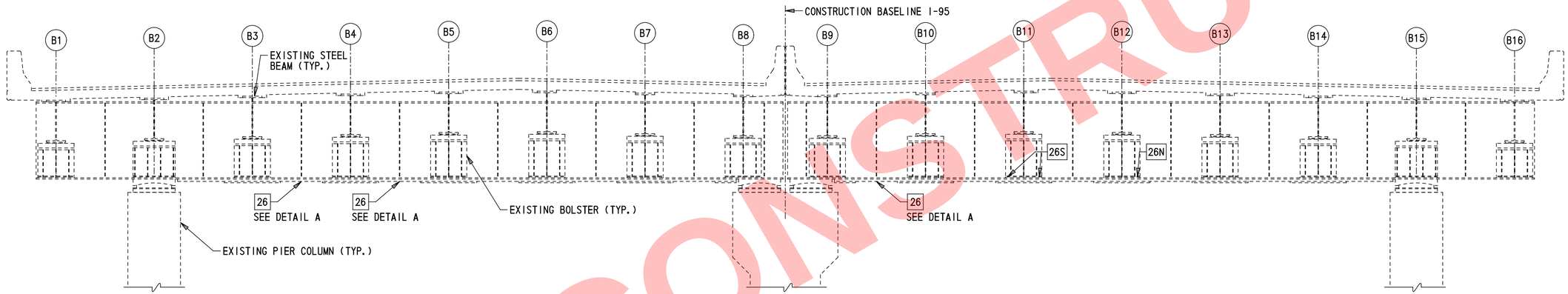

CROSS GIRDER 5 ELEVATION

(SOUTH ELEVATION)
1/4" = 1'-0"

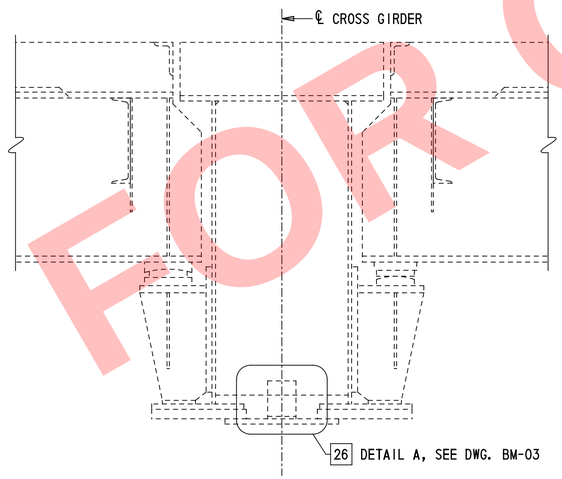

TYPICAL SECTION

TYPICAL SECTION THROUGH CROSS GIRDER
3/4" = 1'-0"

LEGEND:

B# — BEAM NUMBER

##X — REPAIR NUMBER; N (NORTH FACE) / S (SOUTH FACE)

NOTES:

1. REPAIR LOCATIONS SHOWN, FOR DETAILS OF REPAIRS, SEE DWG. BM-03.

NOT FOR CONSTRUCTION

DELAWARE DEPARTMENT OF TRANSPORTATION	ADDENDUMS / REVISIONS	SCALE AS NOTED	REHABILITATION OF I-95 FROM I-495 TO NORTH OF BRANDYWINE RIVER BRIDGE	CONTRACT T201407404	BRIDGE NO. 1 745 059	CROSS GIRDER REPAIR DETAILS – 2	1-745 BM-02
				COUNTY NEW CASTLE	DESIGNED BY: MLA		SHEET NO. 2-79
					CHECKED BY: CWM		TOTAL SHTS. 2-731

I:\Bridge 1-745\1745BM_02.dgn
2/8/2018 17:43:12

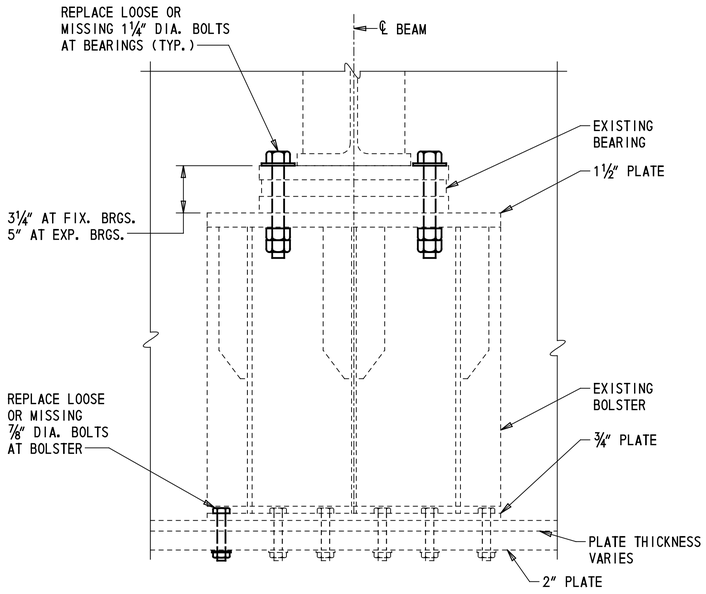

BOLSTER ELEVATION

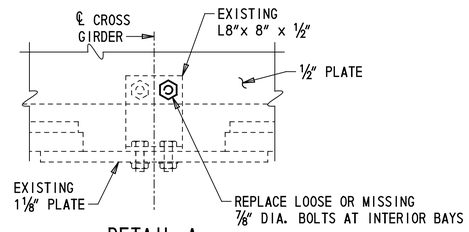

DETAIL A

REPAIR 26

REPLACE LOOSE OR MISSING BOLTS

SCALE: 1½" = 1'-0"

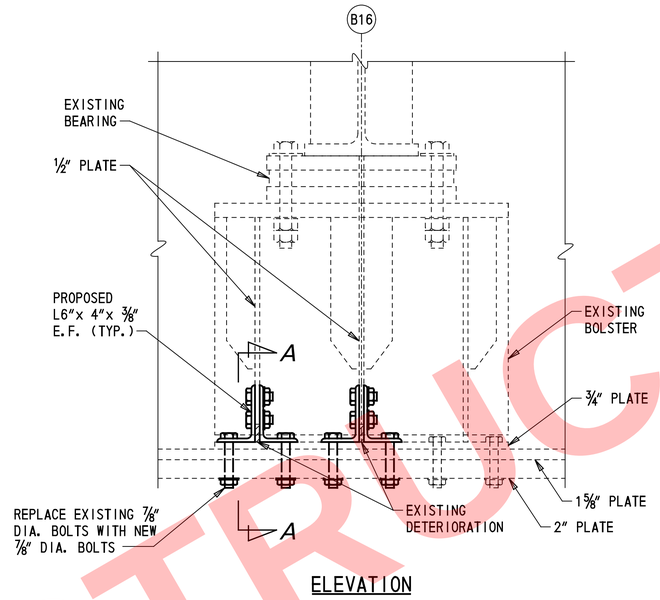

ELEVATION

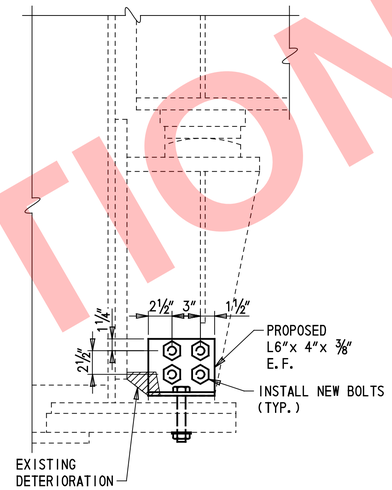

SECTION A-A

REPAIR M2

BOLSTER STIFFENER REPAIR

SCALE: 1½" = 1'-0"

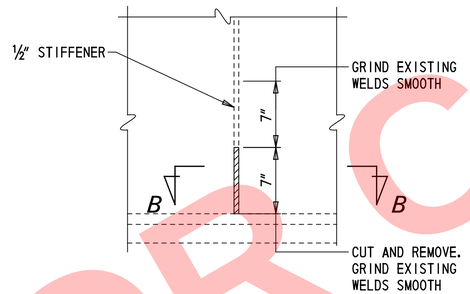

EXISTING CONDITION ELEVATION

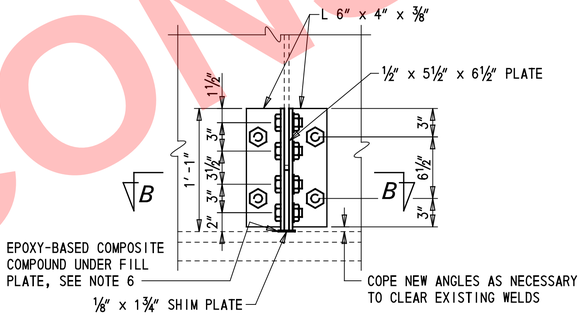

REPAIR ELEVATION

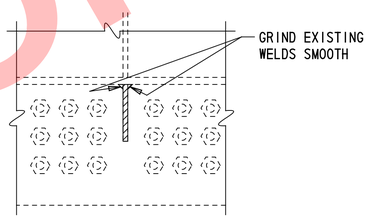

SECTION B-B
EXISTING CONDITION

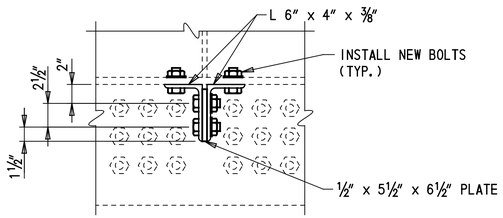

SECTION B-B
REPAIR

REPAIR M4

TYPICAL STIFFENER REPAIR

SCALE: 1½" = 1'-0"

NOTES:

1. FOR LOCATIONS OF REPAIRS, SEE DWGS. BM-01 AND BM-02.
2. FOR LOCATION OF DETAIL A, SEE DWG. BM-02.
3. SEE DWG. PN-04 FOR REPAIR PAY ITEMS AND QUANTITIES.
4. PRIOR TO PERFORMING ANY REPAIRS, CLEAN STEEL AND REMOVE DEBRIS FROM THE INTERIOR AND EXTERIOR EXISTING CROSS GIRDER IN ACCORDANCE WITH ITEM 616000 - CLEANING AND PAINTING EXISTING STEEL AND ITEM 616003 - TESTING AND DISPOSAL OF EXISTING HAZARDOUS STEEL COATING.
5. ALL REPAIRS TO BE PAINTED IN ACCORDANCE WITH ITEM 616000 - CLEANING AN PAINTING EXISTING STEEL.
6. PLACE EPOXY-BASED COMPOSITE COMPOUND BETWEEN THE FILL PLATE AND THE FLANGE TO PROVIDE CONTACT BEARING SURFACE. EPOXY COMPOUND SHALL BE CARBOLINE KOP-COAT A-788 OR APPROVED EQUAL.

NOT FOR CONSTRUCTION

1-745
BM-03

DELAWARE DEPARTMENT OF TRANSPORTATION

ADDENDUMS / REVISIONS

SCALE AS NOTED

REHABILITATION OF I-95 FROM I-495 TO NORTH OF BRANDYWINE RIVER BRIDGE

CONTRACT T201407404
COUNTY NEW CASTLE
BRIDGE NO. 1 745 059
DESIGNED BY: MLA
CHECKED BY: CWM

CROSS GIRDER REPAIR DETAILS - 3

SHEET NO. 2-80
TOTAL SHTS. 2-731

\Bridge 1-745\745BM_03.dgn
2/8/2018 17:43:13

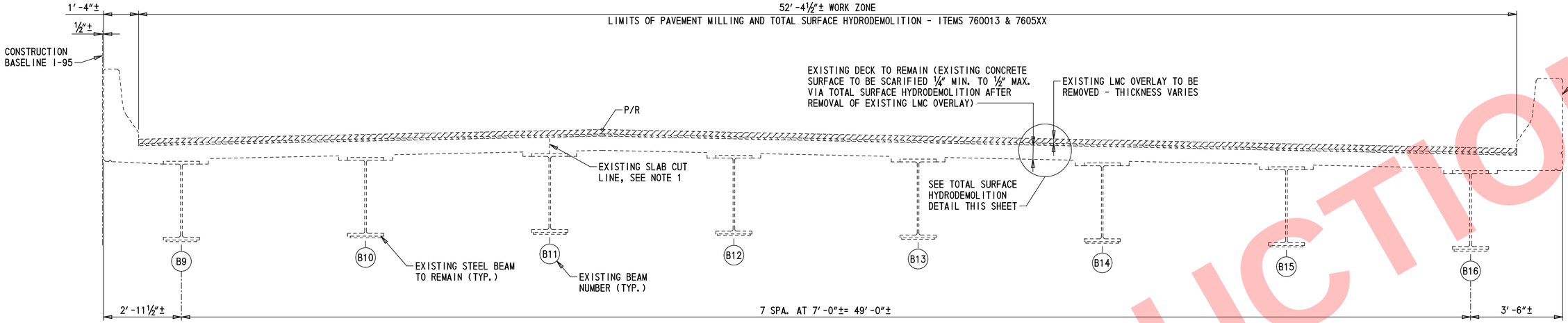

LIMITS OF DEMOLITION - STAGE 2

(STAGE 3 OPPOSITE HAND)

½″ = 1′-0″

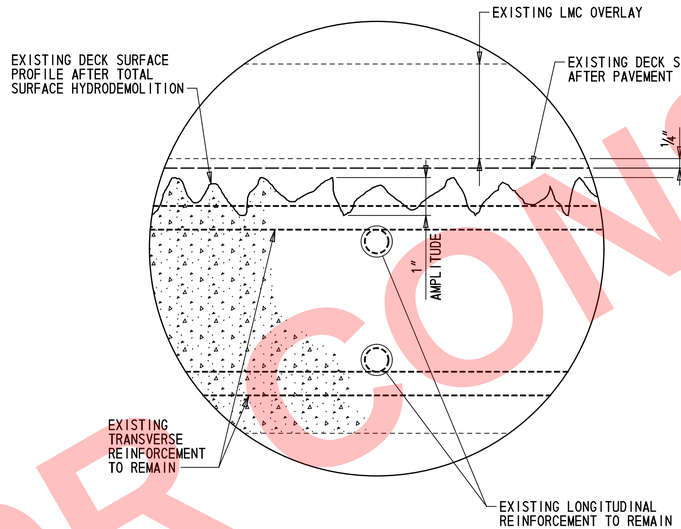

HYDRODEMOLITION AMPLITUDE DETAIL

6″ = 1′-0″

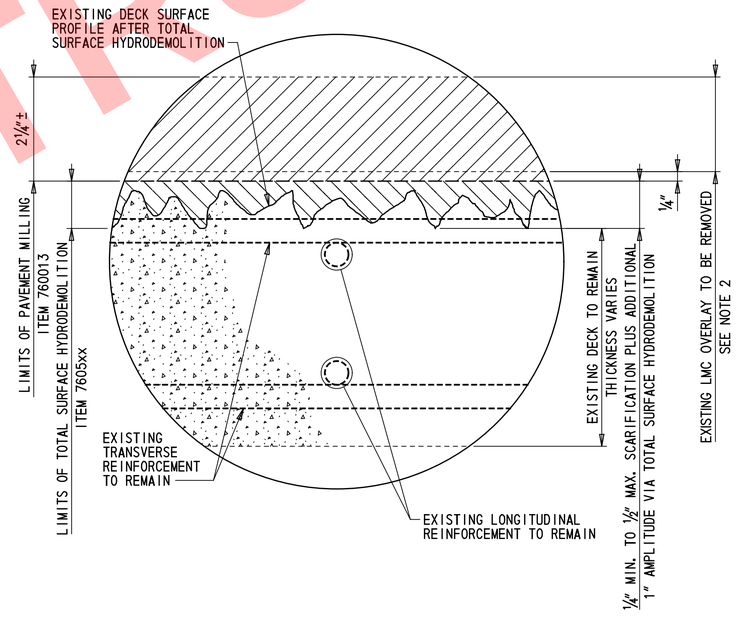

TOTAL SURFACE HYDRODEMOLITION DETAIL

6″ = 1′-0″

NOTES:

1. BRIDGE SAFETY FENCE, TYPE 1 NOT SHOWN FOR CLARITY.

SUGGESTED SEQUENCE OF CONSTRUCTION:

THIS SEQUENCE OF CONSTRUCTION REPRESENTS THE GENERAL ORDER OF OPERATIONS REQUIRED TO PLACE THE PROPOSED OVERLAY. IT IS NOT INTENDED TO REPRESENT ALL ACTIVITIES NECESSARY TO COMPLETE THE WORK AS SPECIFIED. THE CONTRACTOR MAY ALTER THIS SUGGESTED SEQUENCE AND THE REMOVAL AND RECONSTRUCTION LIMITS SUBJECT TO PRIOR APPROVAL BY THE ENGINEER.

1. INSTALL TEMPORARY WORKS INCLUDING PROTECTIVE SHIELDS, ETC. AS NECESSARY TO PROTECT THE WORK ZONE AND AREAS UNDER AND ADJACENT TO THE CONSTRUCTION.
2. REMOVE EXISTING LMC OVERLAY VIA PAVEMENT MILLING WITHIN THE LIMITS OF TOTAL SURFACE HYDRODEMOLITION AS SHOWN.
3. PERFORM TOTAL SURFACE HYDRODEMOLITION TO THE LIMITS SHOWN.
4. PLACE NEW LMC OVERLAY.

LEGEND:

LIMITS OF REMOVAL, PAVEMENT MILLING (ITEM 760013)

LIMITS OF REMOVAL, HYDRODEMOLITION (ITEM 7605XX)

DEMOLITION NOTES:

1. RECALIBRATION OF THE HYDRODEMOLITION EQUIPMENT MAY BE REQUIRED BETWEEN THE ORIGINAL AND WIDENED PORTIONS OF THE STRUCTURE AT EXISTING SLAB CUT LINE.
2. THICKNESS OF EXISTING LMC OVERLAY VARIES. DECK CORES DEPICTING THE OVERLAY THICKNESS WERE TAKEN IN NOVEMBER/DECEMBER 2014. THE CORING REPORT IS INCLUDED WITH THE CONTRACT DOCUMENTS.
3. VEHICLES AND EQUIPMENT SHOULD BE KEPT OFF OF AREAS OF THE DECK THAT HAVE RECEIVED TOTAL SURFACE HYDRODEMOLITION AS MUCH AS REASONABLY POSSIBLE - ONLY EQUIPMENT NECESSARY TO COMPLETE THE WORK WILL BE ALLOWED ON THOSE AREAS.

NOT FOR CONSTRUCTION

DELAWARE DEPARTMENT OF TRANSPORTATION	ADDENDUMS / REVISIONS	SCALE AS NOTED	REHABILITATION OF I-95 FROM I-495 TO NORTH OF BRANDYWINE RIVER BRIDGE	CONTRACT T201407404	BRIDGE NO. 1 745 059	MILLING AND HYDRODEMOLITION DETAILS	1-745 DM-01
				COUNTY NEW CASTLE	DESIGNED BY: BSD		SHEET NO. 2-81
					CHECKED BY: JRQ		TOTAL SHTS. 2-731

...\Bridge 1-745\745DM_01.dgn
2/8/2018 1743:13

STEEL REINFORCED ELASTOMERIC BEARING NOTES:

1. PROVIDE ALL STEEL REINFORCED ELASTOMERIC BEARINGS IN ACCORDANCE WITH SECTION 623 - 'BEARING DEVICES' OF THE STANDARD SPECIFICATIONS.

2. ANCHOR BOLTS SHALL BE UNPAINTED AASHTO M 314 (ASTM F 1554) GRADE 105 GALVANIZED STEEL. NUTS AND WASHERS SHALL BE UNPAINTED ASTM A 563 AND ASTM F 436 GALVANIZED STEEL, RESPECTIVELY. PLATE WASHERS SHALL BE UNPAINTED ASTM A 709, GRADE 36 GALVANIZED STEEL. ANCHOR BOLTS AND HARDWARE SHALL BE HOT-DIP GALVANIZED IN ACCORDANCE WITH ASTM A 153. SET NUTS ¼" CLEAR OF SOLE PLATES AND BURR THREADS ABOVE AND BELOW NUTS.

3. USE SWEDGED ANCHOR BOLTS. BOLTS SHALL BE GROUTED IN CORED HOLES. THE CORED HOLES SHALL HAVE A DIAMETER OF 3¾" UNLESS OTHERWISE NOTED. WHEN CORING HOLES, DO NOT COME INTO CONTACT WITH THE STEEL REINFORCEMENT.

4. MASONRY AND SOLE PLATES SHALL BE ASTM A 709 GRADE 50. SOLE PLATES SHALL BE BEVELED TO MATCH GRADE WHEN GRADE EXCEEDS 1 PERCENT. STEEL SURFACES OF SOLE PLATES TO BE MACHINE FINISHED AS SHOWN IN THE DETAILS, MEASURED IN ACCORDANCE WITH ANSI B46.1.

5. SOLE PLATES SHALL MEET A FLATNESS REQUIREMENT OF 0.5 PERCENT IN THE DIRECTION BEING MEASURED (WIDTH, LENGTH, AND DIAGONALS) MAXIMUM, BUT NOT TO EXCEED ⅛".

6. BEARING SHALL BE PLACED NORMAL TO CENTERLINE OF BEAM.

7. FILL HOLES IN MASONRY PLATE AROUND ANCHOR BOLTS WITH AN APPROVED NON-HARDENING CAULKING COMPOUND OR ELASTIC JOINT SEALER.

8. EXPANSION BEARINGS:
   USE 1⅞" X 4½" SLOTS IN SOLE PLATE AND ⅜" X 4" X 7" WASHERS WITH 1¾" DIA. HOLE IN WASHERS.

9. STEEL REINFORCED ELASTOMERIC BEARINGS SHALL BE VULCANIZED IN ACCORDANCE WITH SECTION 623.03(C) OF THE STANDARD SPECIFICATIONS.

10. PAYMENT FOR FABRICATION AND INSTALLATION OF STEEL REINFORCED ELASTOMERIC BEARINGS, ANCHOR BOLTS, NUTS, WASHERS, MASONRY PLATES AND SOLE PLATES WILL BE MADE UNDER ITEM 623000 - ELASTOMERIC BEARING.

11. SOLE PLATE SHALL BE SHOP PAINTED IN ACCORDANCE WITH SECTION 616. CONTRACTOR SHALL TOUCH UP SOLE PLATE PAINT SYSTEM, IN ACCORDANCE WITH THE MANUFACTURER'S RECOMMENDATIONS, AFTER WELDING THE SOLE PLATE TO THE BEAM. CONTRACTOR SHALL TOUCH UP THE PAINT SYSTEM FOR THE BEAMS AFFECTED BY BEARING INSTALLATION. ALL PAINT SHALL CONFORM TO SECTION 616 OF THE STANDARD SPECIFICATIONS AND MATCH THE COLOR OF THE PROPOSED PAINT SYSTEM.

12. CONTRACTOR TO FIELD VERIFY ALL EXISTING DIMENSIONS.

STEEL REINFORCED ELASTOMERIC BEARING TABLE

LOCATION	BEARING DESIGNATION				CAPACITY PER PAD		LAMINATED ELASTOMERIC BEARING					
							DIMENSION					
	MARK	TYPE	NEOPRENE HARDNESS (SHORE A)	TOTAL NO. REQUIRED	REACTION ⊗	MOVEMENT ⊠	'L'	'W'	LAYER THICKNESS 'T1'	LAYER THICKNESS 'Te'	INTERIOR LAYERS	TOTAL PAD THICKNESS 'T'
ABUTMENT B, SPAN 6	E1	EXP.	60± 5 DURO	16	109.21 KIPS	0.543"	10"	12"	0.442"	0.250"	4	2.4735"

LEGEND:

⊗ MAX. UN-FACTORED SERVICE 1 REACTION (W/O DYNAMIC LOAD ALLOWANCE)
⊠ TEMPERATURE MOVEMENT
PORTION OF EXISTING STRUCTURE TO BE REMOVED
PROPOSED STEEL REINFORCED ELASTOMERIC BEARING

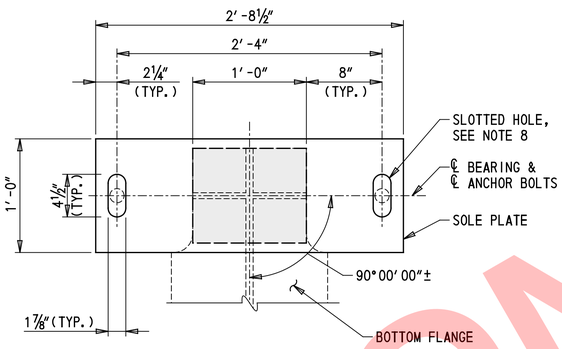

PROPOSED BEARING PLAN
1½" = 1'-0"

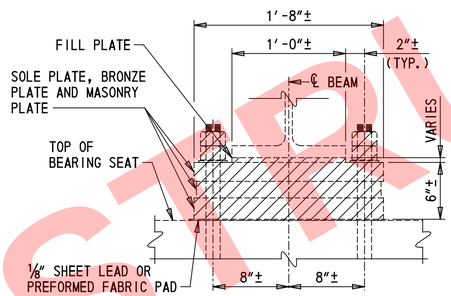

EXISTING BEARING ELEVATION
1½" = 1'-0"

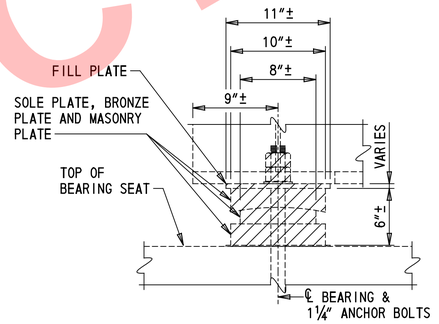

EXISTING BEARING SIDE ELEVATION
1½" = 1'-0"

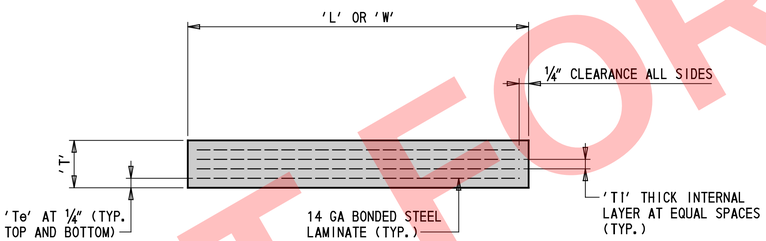

STEEL REINFORCED ELASTOMERIC BEARING ELEVATION
NOT TO SCALE

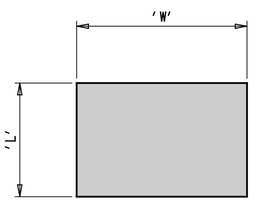

STEEL REINFORCED ELASTOMERIC BEARING PLAN
NOT TO SCALE

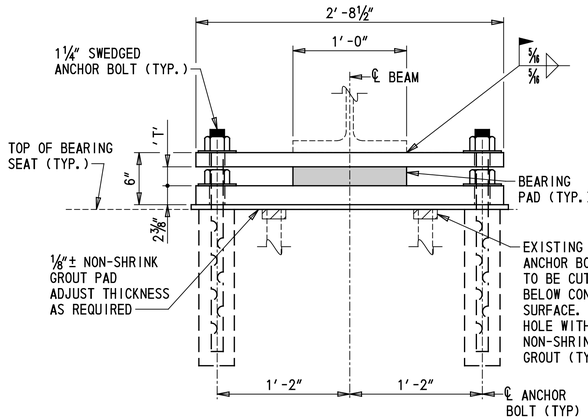

PROPOSED BEARING ELEVATION
1½" = 1'-0"

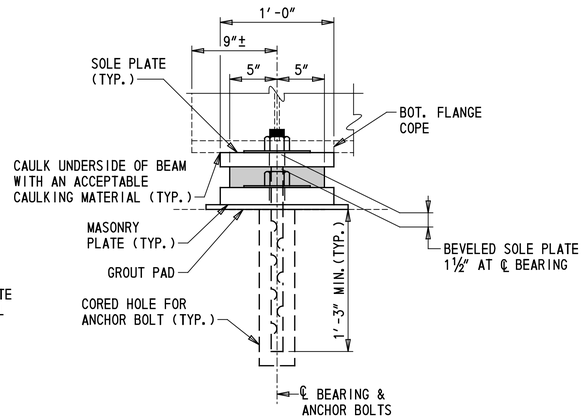

PROPOSED BEARING SIDE ELEVATION
1½" = 1'-0"

NOT FOR CONSTRUCTION

DELAWARE DEPARTMENT OF TRANSPORTATION	ADDENDUMS / REVISIONS	SCALE AS NOTED	REHABILITATION OF I-95 FROM I-495 TO NORTH OF BRANDYWINE RIVER BRIDGE	CONTRACT T201407404 / COUNTY NEW CASTLE	BRIDGE NO. 1 745 059 / DESIGNED BY: BJM / CHECKED BY: CWM	BEARING DETAILS

1-745 BB-01
SHEET NO. 2-82
TOTAL SHTS. 2-731

\Bridge 1-745\745BB_01.dgn
2/8/2018 17:43:14

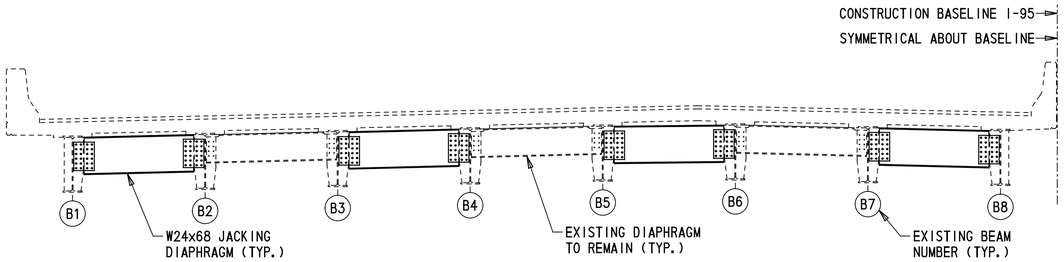

TYPICAL SECTION - JACKING AT ABUTMENT

1/4" = 1'-0"

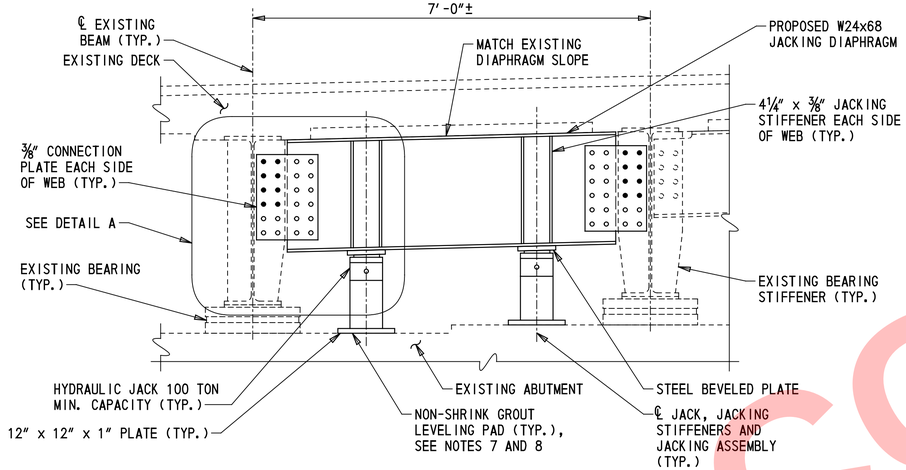

JACKING SCHEME - ELEVATION

3/4" = 1'-0"

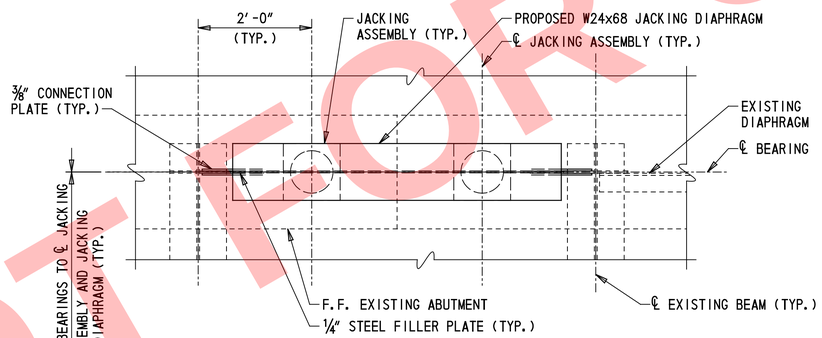

JACKING SCHEME - PLAN

3/4" = 1'-0"

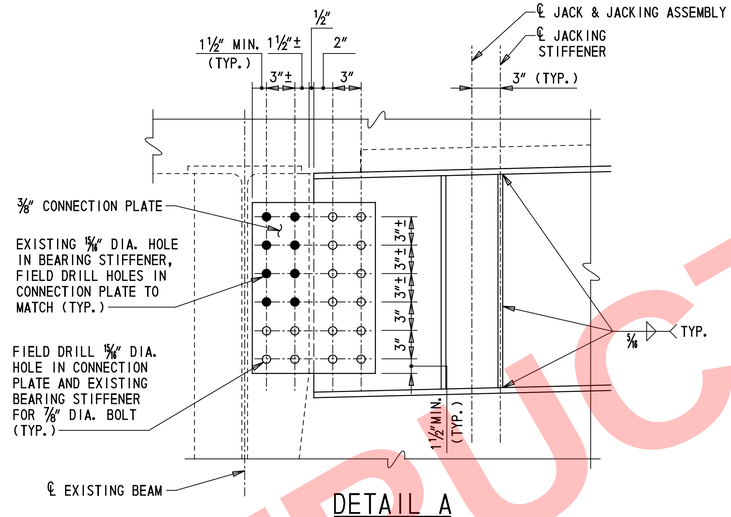

DETAIL A

1 1/2" = 1'-0"

UNFACTORED LOADS FOR JACKING			
SUBSTRUCTURE UNIT	GIRDER	DL+15%	DL+LL+IMP
ABUTMENT B	B1/B8/ B9/B16	50.5 KIP	113.9 KIP
	B2-B7/ B10-B15	41.5 KIP	114.9 KIP

FACTORED LOADS FOR JACKING			
SUBSTRUCTURE UNIT	GIRDER	DL+15%	DL+LL+IMP
ABUTMENT B	B1/B8/ B9/B16	65.6 KIP	176.6 KIP
	B2-B7/ B10-B15	54.0 KIP	182.4 KIP

NOTES:

1. CONTRACTOR SHALL VERIFY COMPATIBILITY OF THE JACKING ASSEMBLY WITH HYDRAULIC JACK PRIOR TO FABRICATION. ALTERNATE JACKING SCHEMES OR ASSEMBLIES MAY BE SUBMITTED TO THE ENGINEER FOR APPROVAL. ANY ALTERNATIVE DESIGN SHALL BE STRUCTURALLY EQUIVALENT AND MAY BE REJECTED BY THE ENGINEER FOR ANY REASON INCLUDING REASONS NOT RELATED TO STRUCTURAL EQUIVALENCY.
2. THE CONTRACTOR SHALL VERIFY ALL EXISTING FIELD DIMENSIONS PRIOR TO ORDERING OR FABRICATING THE JACKING DIAPHRAGM, JACKING ASSEMBLY AND PRIOR TO DRILLING HOLES IN EXISTING CONNECTION PLATES.
3. ALL STEEL PLATES AND STEEL ROLLED SHAPES SHALL BE AASHTO M270 GRADE 50 MATERIAL.
4. UNLESS OTHERWISE NOTED, ALL BOLTS SHALL BE 7/8" DIAMETER ASTM F3125 GR. A325. ALL BOLTS ARE DESIGNED WITH THE THREADS INCLUDED IN THE SHEAR PLANE. ALL HOLES FOR BOLTS SHALL BE 15/16" DIAMETER.
5. ALL METAL WORK AND ALL WELDING SHALL BE PERFORMED IN ACCORDANCE WITH THE STANDARD SPECIFICATIONS, SECTION 615.
6. JACKING ASSEMBLY, JACKING STIFFENERS, AND TEMPORARY BEARING STIFFENERS SHALL BE SET PLUMB TO VERTICAL.
7. NON-SHRINK GROUT SHALL BE IN ACCORDANCE WITH THE STANDARD SPECIFICATIONS, SECTION 1047.02.
8. PLACE A NON-SHRINK GROUT PAD BENEATH THE JACKING ASSEMBLY AND THE EXISTING BEAM SEAT TO ENSURE FULL AND LEVEL BEARING.
9. THE WORK SHALL CONSIST OF JACKING THE EXISTING BEAMS ALONG THE BEARING LINE, REMOVING THE EXISTING BEARINGS, AND INSTALLING NEW ELASTOMERIC BEARING ASSEMBLIES.
10. THE ENGINEER SHALL BE PRESENT DURING ALL JACKING OPERATIONS TO ENSURE CONFORMANCE WITH ALL PERTINENT CONTRACT PROVISIONS PRIOR TO COMMENCING THE JACKING OPERATION.
11. THE CONTRACTOR SHALL HAVE THE PROPOSED BEARING ASSEMBLIES FOR THE BEARING LINE BEING REPLACED ON SITE PRIOR TO JACKING.
12. JACKING AND BEARING REPLACEMENT SHALL BE PERFORMED PRIOR TO CONSTRUCTION OF THE NEW DECK OVER AND APPROACH SLAB.
13. THE HYDRAULIC JACKS ON THE BEARING LINE REQUIRED TO LIFT THE EXISTING BEAMS SHALL BE OPERATED CONCURRENTLY (MANIFOLDED) TO PROVIDE AN EQUAL AND BALANCED LIFTING FORCE SUCH THAT THE BRIDGE IS LIFTED EVENLY.

    THE MAXIMUM DIFFERENTIAL DISPLACEMENT BETWEEN ANY TWO ADJACENT BEAMS IS NOT TO EXCEED 1/8" AT ANY TIME.

    THE MAXIMUM VERTICAL DISPLACEMENT OF ANY BEAM FROM THE EXISTING LOCATION SHALL NOT EXCEED 1/4" AT ANY TIME.
14. THE CONTRACTOR SHALL USE ONLY THOSE JACKS WITH LOCK-NUTS CAPABLE OF SUPPORTING A LOAD EQUAL TO THE RATED CAPACITY OF THE JACK IN THE EVENT THE JACK LOSES HYDRAULIC PRESSURETHE CONTRACTOR SHALL ADVANCE THE LOCK-NUTS ON ALL JACKS SUCH THAT THE MAXIMUM DISTANCE BETWEEN THE TOP OF A JACK AND THE LOCK-NUT SHALL NOT EXCEED 1/8" AT ANY TIME DURING THE JACKING PROCEDURE.
15. LIVE LOAD SHALL BE TEMPORARILY REMOVED FROM THE BRIDGE DURING JACKING AND UNTIL THE BRIDGE IS FULLY SUPPORTED BY THE JACKING ASSEMBLIES.
16. THE HYDRAULIC JACKS SHALL HAVE A MINIMUM CAPACITY OF 100 TONS. THE FACTORED LOADS FOR JACKING WERE USED TO SIZE THE JACKING DIAPHRAGM, JACKING ASSEMBLY, AND HYDRAULIC JACK. IT IS RECOMMENDED TO PERFORM THIS WORK DURING STAGE 2 FOR THE NORTHBOUND STRUCTURE AND STAGE 3 FOR THE SOUTHBOUND STRUCTURE, WHEN THE BRIDGE IS CLOSED TO LIVE LOAD. IF THE CONTRACTOR ELECTS TO PERFORM THE WORK IN STAGE 2 FOR THE NORTHBOUND STRUCTURE AND STAGE 3 FOR THE SOUTHBOUND STRUCTURE, THE JACKING DIAPHRAGM, JACKING ASSEMBLY, AND HYDRAULIC JACK MAY BE REDESIGNED FOR FACTORED DEAD LOADS AND ANY APPLIED CONSTRUCTION LOADS. REDESIGN OF THESE ELEMENTS WILL BE THE SOLE RESPONSIBILITY OF THE CONTRACTOR.
17. THE FACTORED LOADS FOR JACKING USE A DEAD LOAD FACTOR OF 1.30 AND A LIVE LOAD FACTOR OF 1.75. THE FACTORED LOADS SHOWN WERE USED FOR THE DESIGN OF THE JACKING ASSEMBLY AND THE HYDRAULIC JACK.
18. EXISTING STEEL CONNECTION PLATES THAT ARE TO BE CONNECTED TO NEW JACKING DIAPHRAGMS SHALL BE THOROUGHLY CLEANED AND PRIMED PRIOR TO PLACING NEW STEEL IN CONFORMANCE WITH SECTION 616. THE INSIDE SURFACE OF THE JACKING DIAPHAGM THAT IS TO CONNECT TO THE CONNECTION PLATE SHALL RECIEVE A SHOP PRIME COAT. THE REMAINDER OF THE JACKING DIAPHRAGM SHALL BE PRIMED AND PAINTED IN ACCORDANCE WITH SECTION 616.
19. THE INSIDE SURFACES OF THE TWO CONNECTION PLATES SHALL BE SHOP PRIMED. THE OUTSIDE FACES OF THE CONNECTION PLATES SHALL BE SHOP PRIMED AND PAINTED.

    JACKING STIFFENERS SHALL BE SHOP WELDED TO THE JACKING DIAPHRAGMS. THE CONTRACTOR SHALL CLIP THE INSIDE CORNERS OF THE STIFFENER PLATES 3/4" x 3/4".
20. BRIDGE JACKING SHALL BE PAID FOR UNDER ITEM 604000 - JACKING BRIDGE.

NOT FOR CONSTRUCTION

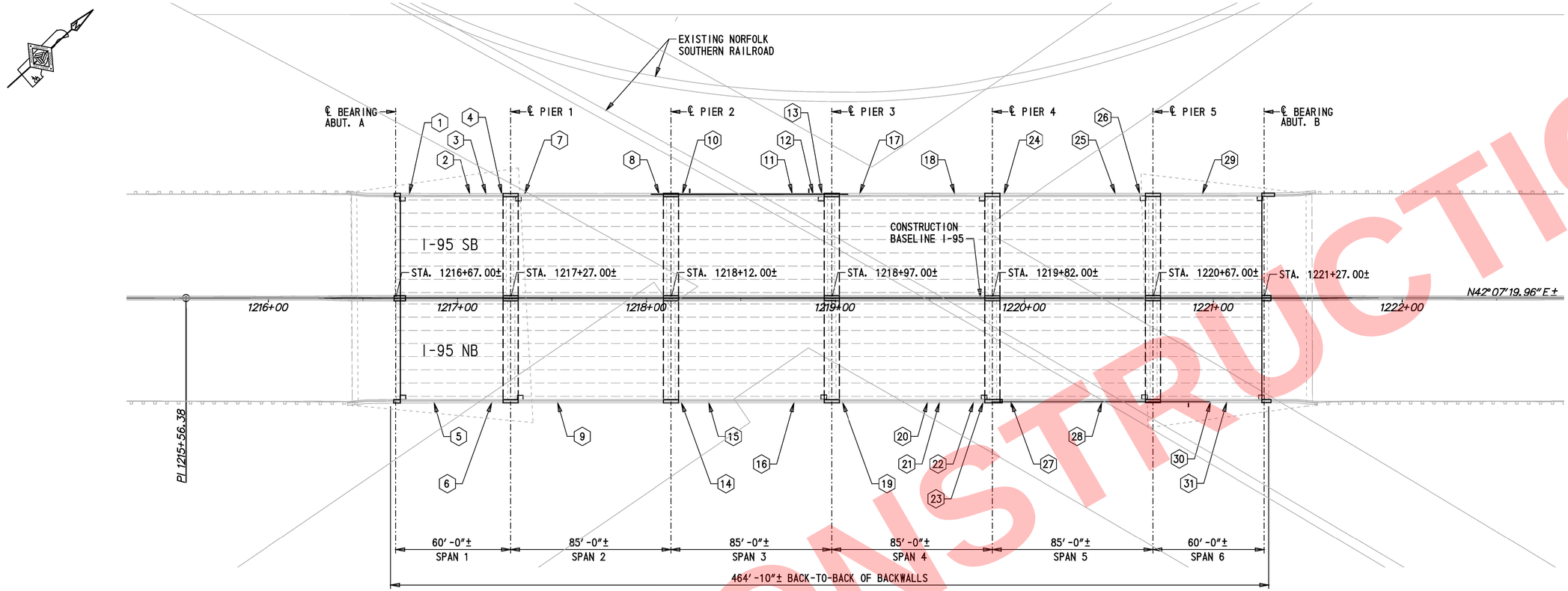

PLAN

KEY:

(1) SOFFIT REPAIR DEFECT NUMBER

NOTES:

1. THE LOCATION AND QUANTITIES OF THE REPAIRS SHOWN ON THIS DRAWING ARE BASED ON INSPECTION FIELD NOTES (SEE NOTE 11 ON DWG. PN-01). PRIOR TO STARTING EACH REPAIR, THE LIMITS SHALL BE VERIFIED BY THE CONTRACTOR IN THE PRESENCE OF THE ENGINEER.
2. FOR CONCRETE REPAIR DETAILS, SEE DWG. PN-02.
3. SILICONE-BASED ACRYLIC CONCRETE SEALER SHALL BE APPLIED TO ALL EXPOSED CONCRETE SURFACES OF THE EXTERIOR PARAPETS, EXTERIOR OVERHANGS AND THE MEDIAN PARAPETS AS SHOWN ON DWG. TS-01. PAYMENT WILL BE MADE UNDER ITEM 613001 - SILICONE-BASED CONCRETE SEALER.
4. SILICONE-BASED ACRYLIC CONCRETE SEALER SHALL ONLY BE APPLIED AFTER ALL CONCRETE REPAIRS ARE COMPLETED ON EACH SPAN.

CONCRETE SOFFIT REPAIRS

DEFECT Nº	LOCATION	QUANTITY OF REPAIRS	DEEP SPALL REPAIR SIZE
1	SPAN 1, WEST OVERHANG, SOUTH HALF OF SPAN	8 EACH	6"± x 3"±
2	SPAN 1, WEST OVERHANG, 21' SOUTH OF PIER 1	1 EACH	1'-0"± x 6"±
3	SPAN 1, WEST OVERHANG, 10' SOUTH OF PIER 1	1 EACH	1'-0"± x 1'-0"±
4	SPAN 1, WEST OVERHANG, 5' SOUTH OF PIER 1	3 EACH	1'-6"± x 3"±
5	SPAN 1, EAST OVERHANG, SOUTH HALF OF SPAN	8 EACH	6"± x 3"±
6	SPAN 1, EAST OVERHANG, 10' SOUTH OF PIER 1	1 EACH	1'-4"± x 10"±
7	SPAN 2, WEST OVERHANG, NEAR PIER 1	3 EACH	1'-6"± x 6"±
8	SPAN 2, WEST OVERHANG, NEAR PIER 2	1 EACH	6"± x 6"±
9	SPAN 2, EAST OVERHANG, SOUTH HALF OF SPAN	7 EACH	6"± x 4"±
10	SPAN 3, WEST OVERHANG, NEAR PIER 2	1 EACH	2'-0"± x 1'-6"±
11	SPAN 3, WEST OVERHANG, 10' SOUTH OF PIER 3	1 EACH	1'-4"± x 6"±
12	SPAN 3, WEST OVERHANG, 7' SOUTH OF PIER 3	1 EACH	10"± x 4"±
13	SPAN 3, WEST OVERHANG, NEAR PIER 3	1 EACH	1'-6"± x 4"±
14	SPAN 3, EAST OVERHANG, NEAR PIER 2	1 EACH	1'-0"± x 10"±
15	SPAN 3, EAST OVERHANG, 20' NORTH OF PIER 2	1 EACH	6"± x 6"±
16	SPAN 3, EAST OVERHANG, 20' SOUTH OF PIER 3	3 EACH	6"± x 6"±

CONCRETE SOFFIT REPAIRS

DEFECT Nº	LOCATION	QUANTITY OF REPAIRS	DEEP SPALL REPAIR SIZE
17	SPAN 4, WEST OVERHANG, 15' NORTH OF PIER 3	5 EACH	2'-0"± x 6"±
18	SPAN 4, WEST OVERHANG, 20' SOUTH OF PIER 4	7 EACH	1'-0"± x 3"±
19	SPAN 4, EAST OVERHANG, NEAR PIER 3	1 EACH	1'-0"± x 10"±
20	SPAN 4, EAST OVERHANG, MIDSPAN	2 EACH	1'-0"± x 1'-0"±
21	SPAN 4, EAST OVERHANG, 28' SOUTH OF PIER 4	6 EACH	6"± x 6"±
22	SPAN 4, EAST OVERHANG, 10' SOUTH OF PIER 4	1 EACH	1'-0"± x 6"±
23	SPAN 4, EAST OVERHANG, NEAR PIER 4	1 EACH	1'-6"± x 1'-0"±
24	SPAN 5, WEST OVERHANG, NEAR PIER 4	4 EACH	1'-6"± x 6"±
25	SPAN 5, WEST OVERHANG, 20' SOUTH OF PIER 5	1 EACH	8"± x 6"±
26	SPAN 5, WEST OVERHANG, NEAR PIER 5	2 EACH	1'-0"± x 6"±
27	SPAN 5, EAST OVERHANG, 10' NORTH OF PIER 4	1 EACH	1'-0"± x 3"±
28	SPAN 5, EAST OVERHANG, NORTH HALF OF SPAN	13 EACH	6"± x 6"±
29	SPAN 6, WEST OVERHANG, RANDOM THROUGHOUT	20 EACH	6"± x 3"±
30	SPAN 6, EAST OVERHANG, RANDOM THROUGHOUT	20 EACH	6"± x 3"±
31	SPAN 6, EAST OVERHANG, 20' SOUTH OF ABUTMENT	1 EACH	2'-0"± x 1'-0""±

NOT FOR CONSTRUCTION

DELAWARE DEPARTMENT OF TRANSPORTATION

ADDENDUMS / REVISIONS

SCALE 0 30 60 90 FEET

REHABILITATION OF I-95 FROM I-495 TO NORTH OF BRANDYWINE RIVER BRIDGE

CONTRACT	BRIDGE NO. 1 745 059
T201407404	DESIGNED BY: BSD
COUNTY	CHECKED BY: JRQ
NEW CASTLE	

SOFFIT REPAIR PLAN

1-745 SO-01
SHEET NO. 2-84
TOTAL SHTS. 2-731

\Bridge 1-745\745SO_01.dgn
2/8/2018 1:43:28

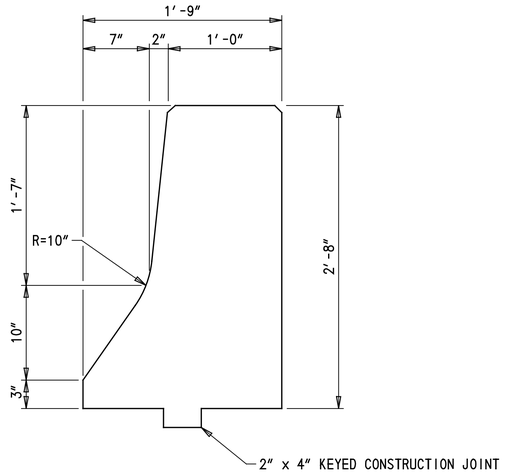

EXTERIOR PARAPET - APPROACH SLAB DETAIL

1½″ = 1′-0″

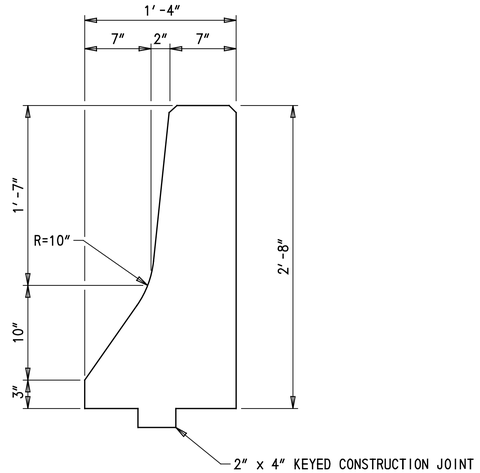

MEDIAN PARAPET - APPROACH SLAB DETAIL

1½″ = 1′-0″

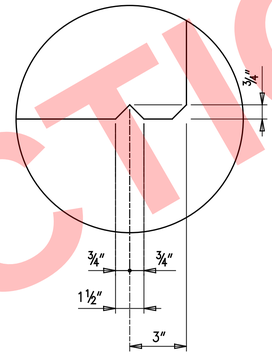

MEDIAN PARAPET - DRIP NOTCH DETAIL

3″ = 1′-0″

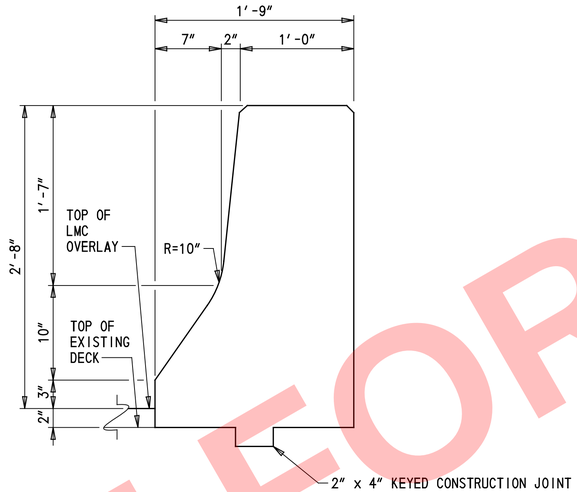

EXTERIOR PARAPET - BRIDGE DETAIL

1½″ = 1′-0″

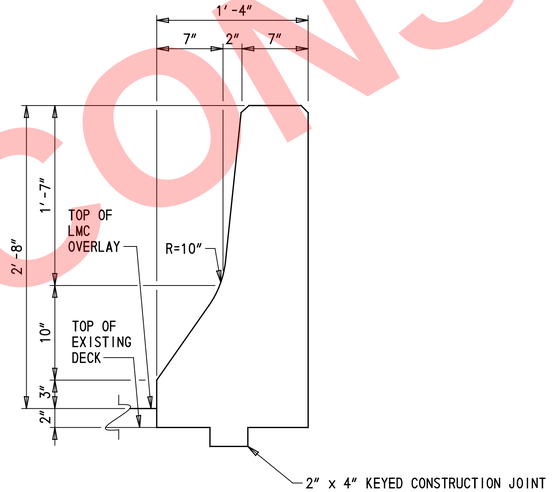

MEDIAN PARAPET - BRIDGE DETAIL

1½″ = 1′-0″

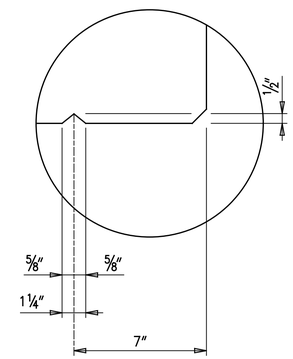

EXTERIOR PARAPET - DRIP NOTCH DETAIL

3″ = 1′-0″

NOT FOR CONSTRUCTION

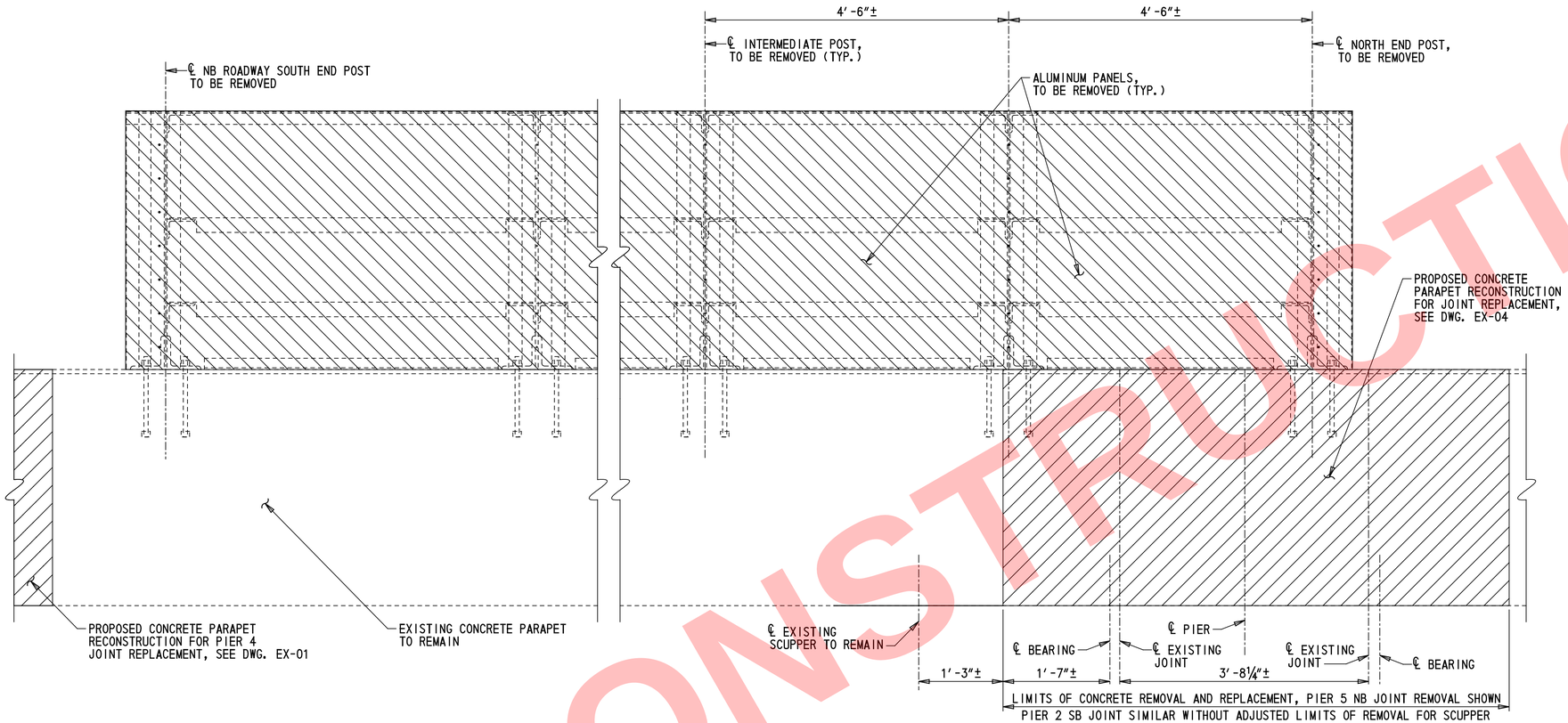

RAILROAD PROTECTIVE BARRIER REMOVAL AND PARTIAL PARAPET DEMOLITION

(EAST PARAPET SHOWN, WEST PARAPET SIMILAR)
1" = 1'-0"

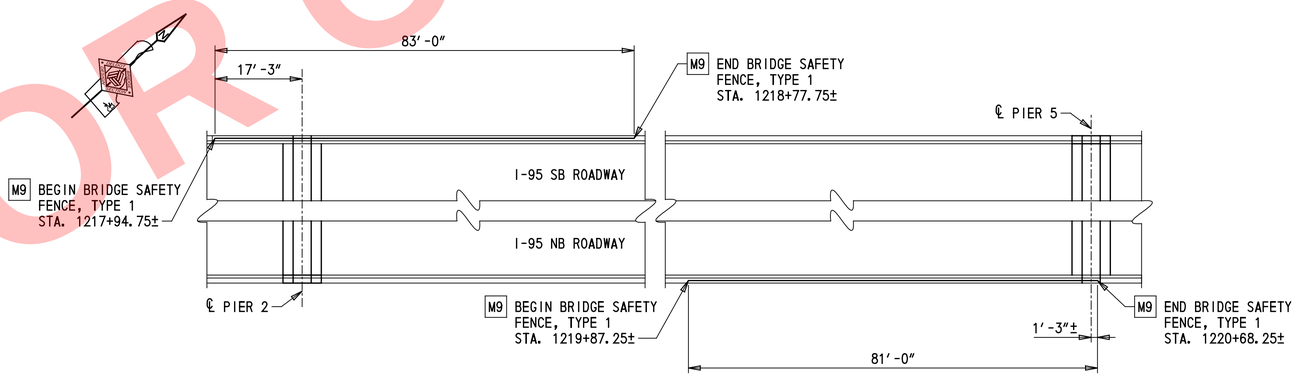

FENCE LAYOUT

1" = 15'

LEGEND:

- PARAPET REMOVAL LIMITS
- RAILROAD PROTECTIVE BARRIER REMOVAL LIMITS - ITEM 211000
- M9 REPAIR NUMBER AS SHOWN ON DWG. PN-04

NOTES:

1. FOR FENCE DETAILS, SEE BRIDGE SAFETY FENCE, TYPE 1, STANDARD NO. M-10.

NOT FOR CONSTRUCTION

DELAWARE DEPARTMENT OF TRANSPORTATION	ADDENDUMS / REVISIONS	SCALE AS NOTED	REHABILITATION OF I-95 FROM I-495 TO NORTH OF BRANDYWINE RIVER BRIDGE	CONTRACT T201407404	BRIDGE NO. 1 745 059	RAILROAD PROTECTIVE BARRIER DETAILS	1-745 PA-02
				COUNTY NEW CASTLE	DESIGNED BY: BSD		SHEET NO. 2-86
					CHECKED BY: JRQ		TOTAL SHTS. 2-731

...\Bridge 1-745\745PA_02.dgn
2/8/2018 17:43:30

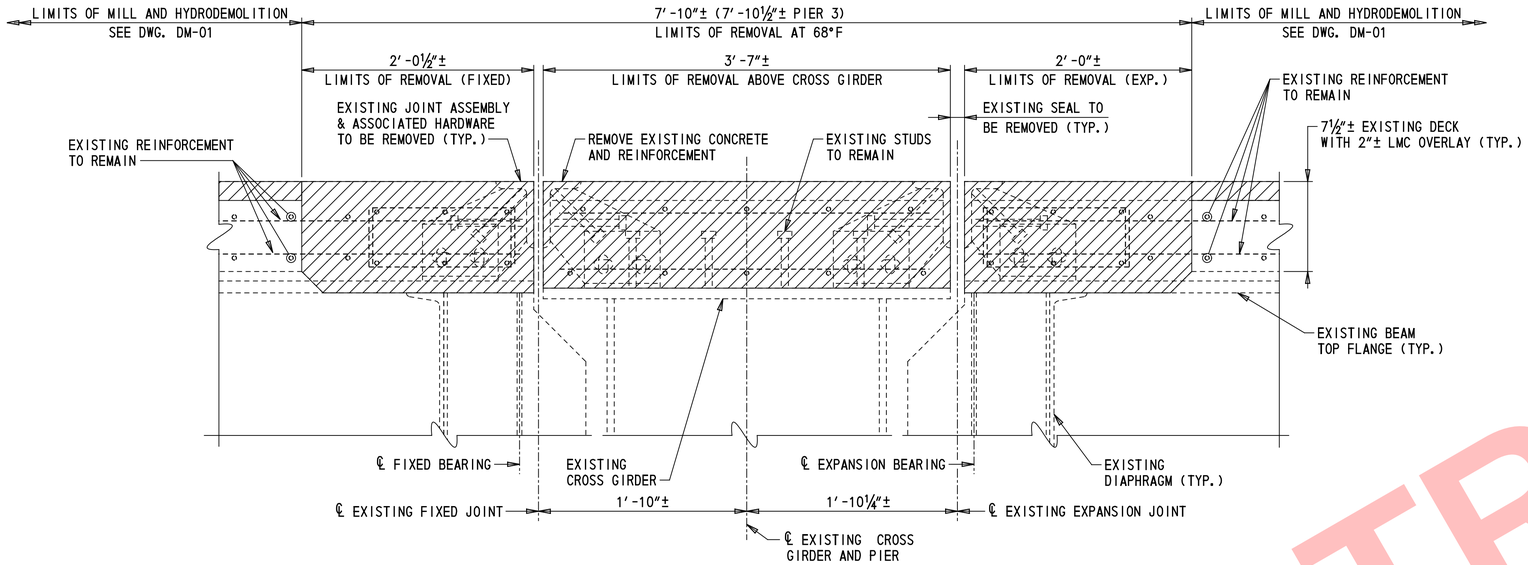

REMOVAL DETAIL - PIER 1 SHOWN

1½″ = 1′-0″

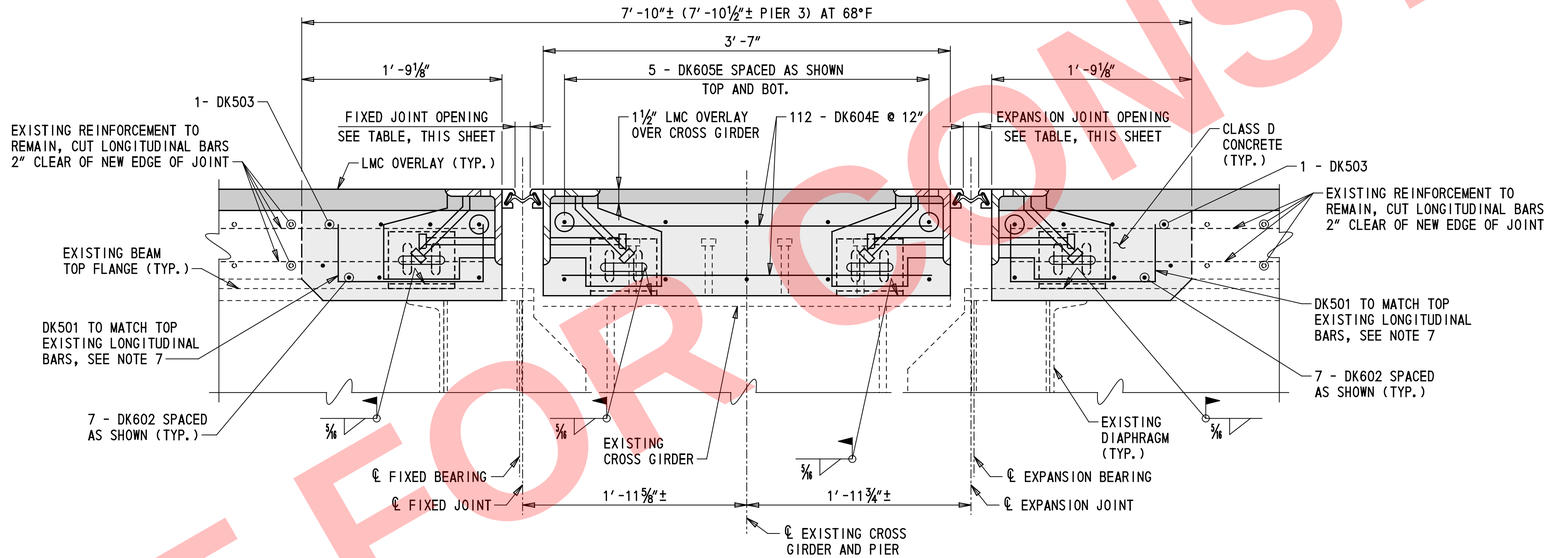

JOINT DETAILS - PIER 1 SHOWN

1½″ = 1′-0″

JOINT RECONSTRUCTION NOTES:

1. NEW STRIP SEAL ASSEMBLY SHOWN FOR GRAPHICAL PURPOSES ONLY. DETAILS MAY VARY BY MANUFACTURER. STRIP SEAL AND ASSEMBLY SHALL BE IN ACCORDANCE WITH ITEM 624000 - PREFABRICATED EXPANSION JOINT SYSTEM, 3″. PAYMENT FOR REMOVAL OF EXISTING STRIP SEAL JOINT MATERIAL SHALL BE INCIDENTAL TO ITEM 624000.
2. CLASS D CONCRETE SHALL BE IN ACCORDANCE WITH ITEM 610017 - P.C.C. MASONRY, SUPERSTRUCTURE, CLASS D. CLEAN AND APPLY EPOXY BONDING COMPOUND TO ALL REMOVAL AND ROUGHENED SURFACES PRIOR TO PLACING CONCRETE. COST FOR THIS WORK WILL BE INCIDENTAL TO ITEM 610017.
3. EXISTING BARS TO REMAIN SHALL BE CLEANED IN ACCORDANCE WITH SECTION 628.03(E)7. BARS WITH CORROSION, BROKEN, OR WITH INADEQUATE BOND SHALL BE REPAIRED IN ACCORDANCE WITH SECTION 628.03(E)7. PAYMENT FOR THIS WORK WILL BE INCIDENTAL TO ITEM 624000 - PREFABRICATED EXPANSION JOINT SYSTEM, 3″.
4. ALL NEW REINFORCING STEEL REQUIRED TO COMPLETE THE JOINT HEADER REPAIRS SHALL HAVE 2″ MIN. CONCRETE COVER UNLESS SHOWN OTHERWISE. PAYMENT FOR ALL NEW REINFORCING STEEL SHALL BE UNDER ITEM 611000 - BAR REINFORCEMENT.
5. THE CONTRACTOR SHALL USE CARE DURING THE REMOVAL OF THE EXISTING CONCRETE AND PORTIONS OF THE JOINT SYSTEM TO AVOID DAMAGE TO THE EXISTING PORTIONS OF THE STRUCTURE THAT ARE TO REMAIN IN PLACE. ANY DAMAGE INCURRED TO EXISTING PORTIONS OF THE STRUCTURE TO REMAIN SHALL BE REPAIRED BY THE CONTRACTOR TO COMPLETE SATISFACTION OF THE ENGINEER AT NO ADDITIONAL COST TO THE DEPARTMENT.
6. PRIOR TO REMOVAL OF THE EXISTING ROADWAY JOINT AND FABRICATION OF THE PROPOSED ROADWAY MATERIALS, THE CONTRACTOR SHALL FIELD VERIFY THE CROSS SLOPE OF THE ROADWAY AT EACH INDIVIDUAL JOINT LOCATION.
7. DK501 REINFORCEMENT BARS ARE SPACED TO MATCH EXISTING TOP LONGITUDINAL REINFORCEMENT BARS. BAR SPACING AND QUANTITY MATCHES BAR DK511 SHOWN IN THE DECK OVER PLAN ON DWG. EX-05. TOTAL QUANTITY OF BARS PER DECK END IN EACH DIRECTION IS 55.

LEGEND:

- REMOVAL LIMITS
- PROPOSED CONSTRUCTION
- PROPOSED LMC OVERLAY

DECK JOINT OPENINGS

LOCATION	TEMPERATURE (°F)										MOVEMENT CLASSIFICATION
	20	30	40	50	60	68	70	80	90	100	
PIER EXPANSION JOINT	2″	1 15/16″	1 7/8″	1 13/16″	1 ¾″	1 11/16″	1 11/16″	1 5/8″	1 9/16″	1 ½″	3″
PIER FIXED JOINT	1 5/8″	1 9/16″	1 5/8″	1 5/8″	1 5/8″	1 5/8″	1 5/8″	1 5/8″	1 5/8″	1 5/8″	3″

NOTES:

1. FOR JOINT ASSEMBLY DETAIL AND STRIP SEAL EXPANSION JOINT NOTES, SEE DWG. EX-02.
2. FOR PARAPET RECONSTRUCTION AT JOINTS, SEE DWG. EX-04.
3. FOR TYPICAL JOINT PLAN, SEE DWG. EX-03.

NOT FOR CONSTRUCTION

DELAWARE DEPARTMENT OF TRANSPORTATION	ADDENDUMS / REVISIONS	SCALE AS NOTED	REHABILITATION OF I-95 FROM I-495 TO NORTH OF BRANDYWINE RIVER BRIDGE	CONTRACT T201407404	BRIDGE NO. 1 745 059	EXPANSION JOINT DETAILS - 1
				COUNTY NEW CASTLE	DESIGNED BY: MLA	
					CHECKED BY: JRQ	

1-745 EX-01 | SHEET NO. 2-87 | TOTAL SHTS. 2-731

\\Bridge 1-745\745EX_01.dgn 2/18/2016 17:43:30

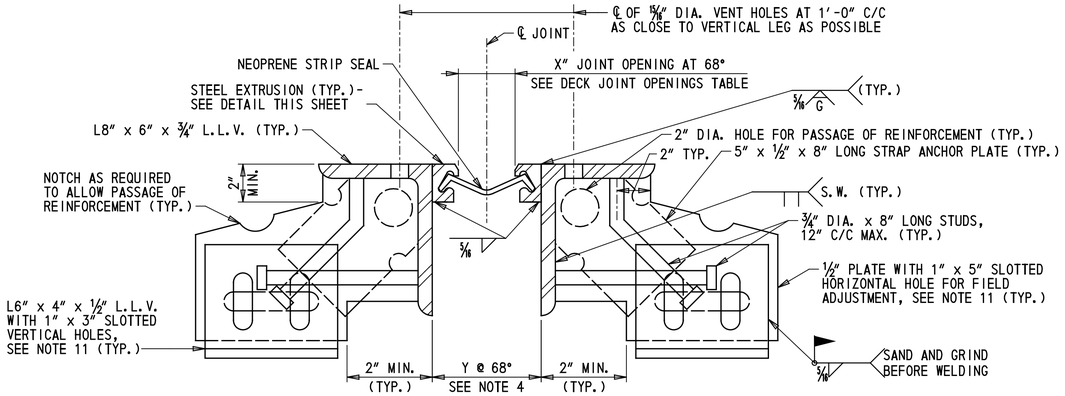

JOINT ASSEMBLY DETAIL

3" = 1'-0"

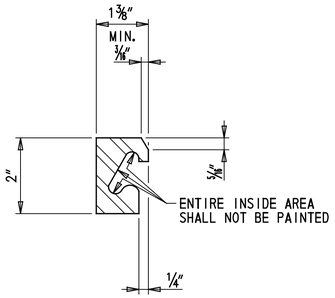

STEEL EXTRUSION DETAIL

6" = 1'-0"

STRIP SEAL EXPANSION JOINT NOTES:

1. STEEL FOR DECK JOINTS AND STEEL EXTRUSIONS SHALL BE AASHTO M270, GR. 36 (ASTM A36) AT MINIMUM.
2. NEOPRENE EXTRUSION TO MEET D-2628-81 MODIFIED, (RECOVERY TESTS EXCLUDED).
3. THE EXPANSION JOINT SHALL BE CAPABLE OF SEALING THE DECK TO PREVENT MOISTURE AND OTHER CONTAMINANTS FROM DESCENDING THROUGH THE JOINT.
4. THE CONTRACTOR SHALL ADJUST THE OPEN JOINT (Y) AS REQUIRED BY THE WIDTH OF THE STEEL EXTRUSION USED SO AS TO PROVIDE A X" JOINT OPENING AT 68°F.
5. THE STRIP SEAL SHALL BE INSTALLED IN ONE PIECE ACROSS THE BRIDGE WIDTH. SPLICING OF THE STRIP SEAL IS NOT PERMITTED.
6. THE EXPANSION JOINT SYSTEM WILL BE PAID FOR UNDER ITEM 624000 - PREFABRICATED EXPANSION JOINT SYSTEM, 3".
7. STEEL EXTRUSIONS SHALL BE HOT-DIP GALVANIZED. ENTIRE EXPANSION DAM SHALL BE PAINTED AFTER FABRICATION USING URETHANE SYSTEM. COLOR OF PAINT SYSTEM TO BE APPLIED SHALL MATCH THE COLOR OF THE PROPOSED PAINT SYSTEM FOR THE EXISTING STEEL STRUCTURE.
8. LUBRICANT-ADHESIVE FOR USE IN INSTALLING AND BONDING NEOPRENE SEAL ELEMENTS TO STEEL JOINT COMPONENTS SHALL BE A ONE QUART MOISTURE CURING POLYURETHANE AND HYDROCARBON SOLVENT MIXTURE HAVING THE FOLLOWING PHYSICAL PROPERTIES:

AVERAGE WEIGHT, POUNDS PER GALLON	8±10%
SOLIDS CONTENT	65%
ADHESIVE SHALL REMAIN LIQUID FROM	5°F TO 120°F
FILM STRENGTH, AS PER ASTM D-412	2,000 PSI
ELONGATION	250%

9. HOLES SHALL BE PLACED IN THE RIB PLATES AND STRAP ANCHORS PLATES FOR BAR REINFORCEMENT. IF THIS IS DONE IN THE FIELD AN APPROVED EPOXY-BONDED PAINT SHALL BE USED TO TOUCH-UP THE HOLES. PAYMENT INCIDENTAL TO ITEM 624000 - PREFABRICATED EXPANSION JOINT SYSTEM, 3".
10. ANCHOR PLATE AND STEEL EXTRUSION SHALL BE WELDED TO WATERTIGHT AT SPLICE JOINTS. PAYMENT INCIDENTAL TO ITEM 624000 - PREFABRICATED EXPANSION JOINT SYSTEM, 3".
11. IF WELD OPTION IS PROPOSED, SLOTTED HOLES IN 1/2" PLATE AND L6" x 4" x 1/2" MAY BE OMITTED.
12. AT AREAS WHERE STEEL MEMBERS ARE TO BE SPLICED, USE OF COMPLETE JOINT PENETRATION (CJP) AND PARTIAL JOINT PENETRATION (PJP) WELD ARE BOTH PERMITTED. THE THICKNESS OF PJP WELD MUST BE MINIMUM HALF OF THE STEEL MEMBER THICKNESS.
13. SEE TYPICAL JOINT PLAN ON DWG. EX-03 FOR LAYOUT OF L6" x 4" x 1/2" AND STRAP ANCHORS.

NOTES:

1. FOR DECK JOINT OPENINGS TABLE, SEE DWG. EX-01.

NOT FOR CONSTRUCTION

DELAWARE DEPARTMENT OF TRANSPORTATION	ADDENDUMS / REVISIONS	SCALE AS NOTED	REHABILITATION OF I-95 FROM I-495 TO NORTH OF BRANDYWINE RIVER BRIDGE	CONTRACT T201407404	BRIDGE NO. 1 745 059	EXPANSION JOINT DETAILS – 2	1-745 EX-02 / SHEET NO. 2-88 / TOTAL SHTS. 2-731
				COUNTY NEW CASTLE	DESIGNED BY: MLA		
					CHECKED BY: JRQ		

\\Bridge\ 1-745\1745EX_02.dgn
2/7/2018 1743350

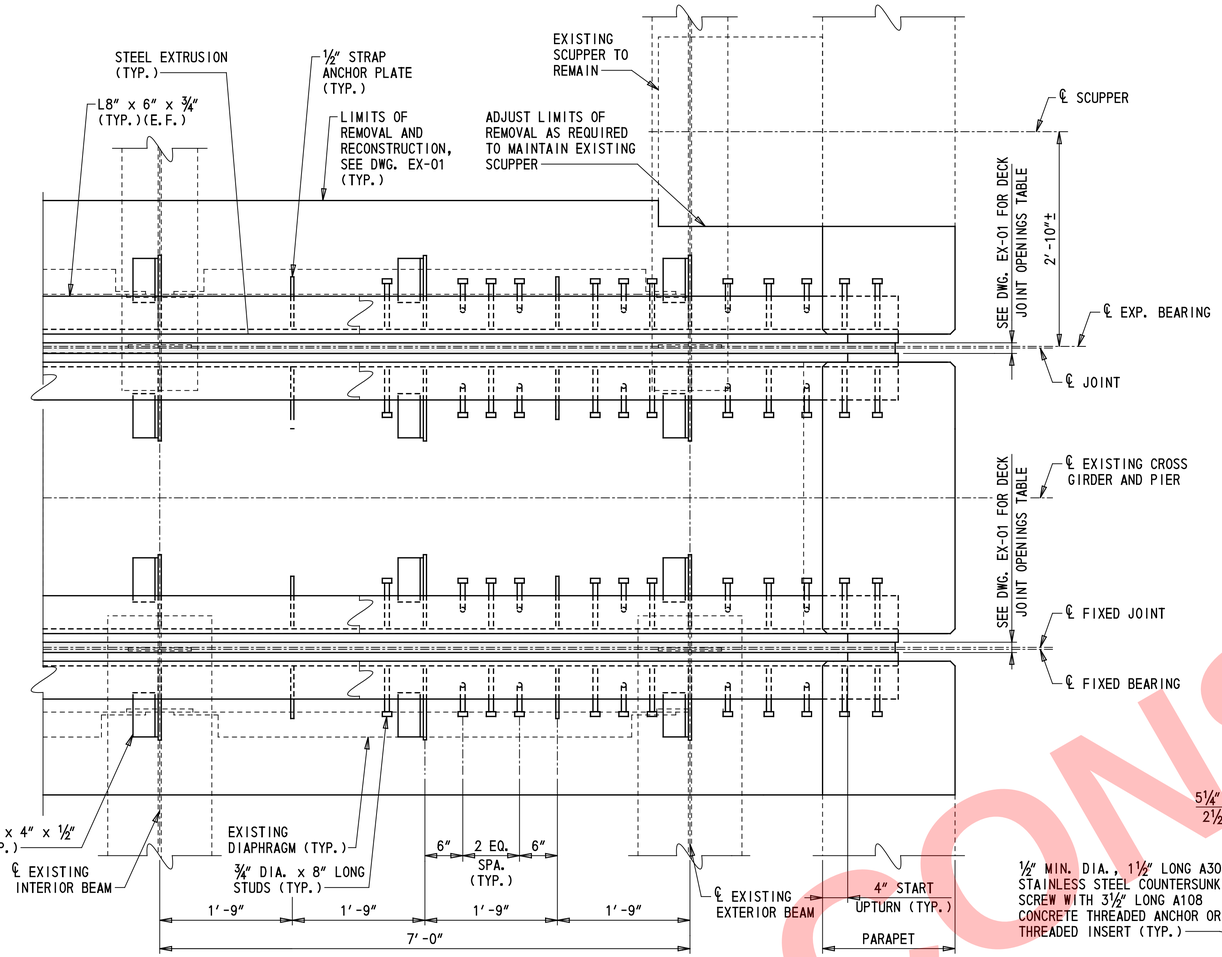

TYPICAL JOINT PLAN

(PIER 1 JOINT AT EXTERIOR PARAPET SHOWN, OTHERS SIMILAR)

1" = 1'-0"

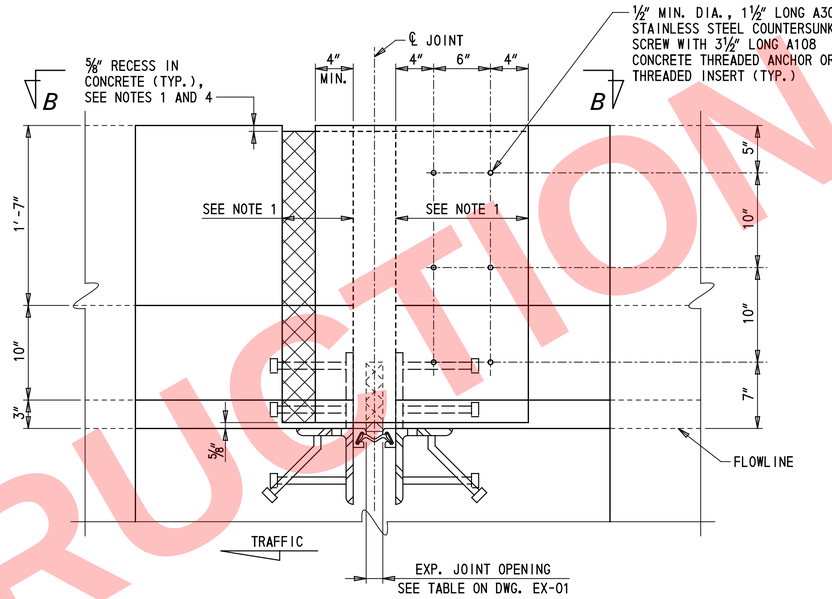

VIEW A-A

1½" = 1'-0"

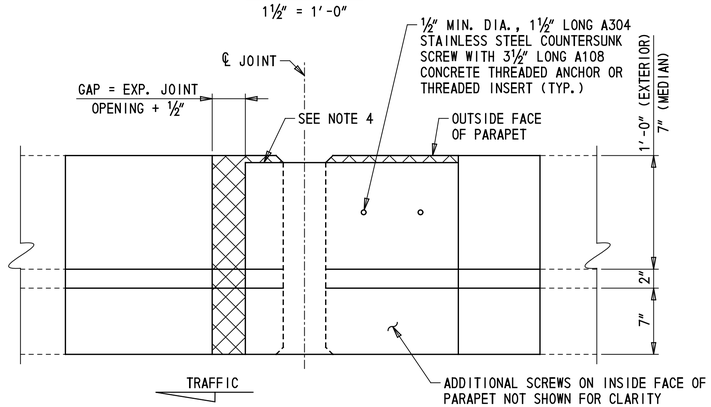

VIEW B-B

1½" = 1'-0"

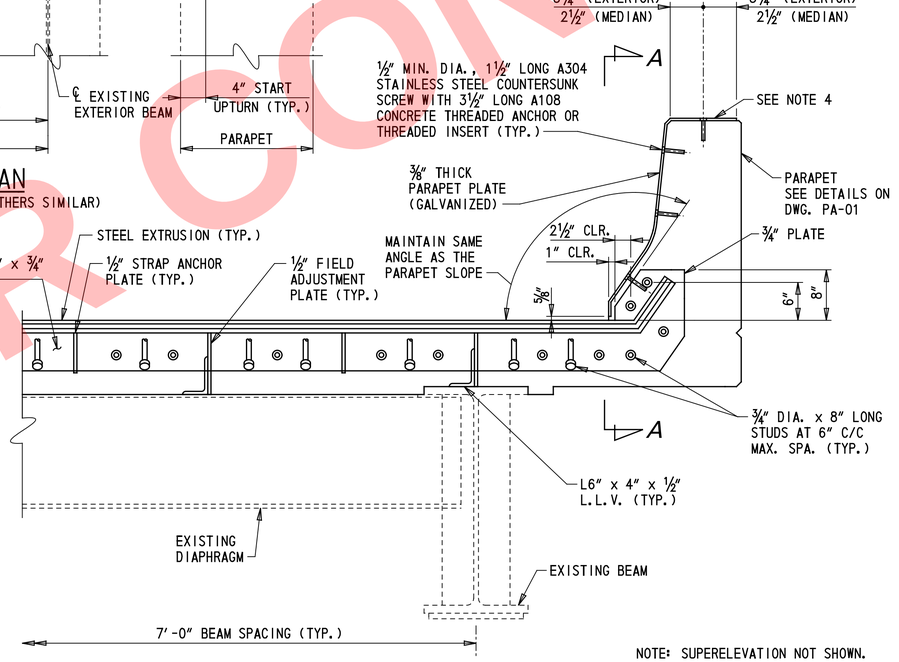

NOTE: SUPERELEVATION NOT SHOWN.

TYPICAL SECTION AT JOINT

1" = 1'-0"

PARAPET JOINT PLATE NOTES:

1. FORM CONCRETE RECESS AREA IN PARAPET AND GRIND TO PROVIDE SMOOTH SURFACE. APPLY ONE COAT OF ASPHALT CEMENT TO THE FREE SIDE OF THE JOINT IN ACCORDANCE WITH SECTION 1012 OF THE STANDARD SPECIFICATIONS TO ALLOW BENT SLIDING PLATE TO MOVE FREELY WITHOUT FRICTION. PAYMENT WILL BE INCIDENTAL TO ITEM 610008 - PORTLAND CEMENT CONCRETE MASONRY, PARAPET, CLASS A.
2. PLACE PARAPET CONCRETE WITH STEEL BENT PLATES, INSERTS, AND BOLTS IN PLACE TO ENSURE PROPER ALIGNMENT OF INSERTS AND HOLES IN THE STEEL PLATE. REMOVE PLATES TO INSTALL SEAL. APPLY APPROVED BONDBREAKER TO SLIDING PLATES PRIOR TO INSTALLATION.
3. GRIND ALL STEEL EDGES EXPOSED TO TRAFFIC TO ⅜" MIN. RADIUS.
4. WHERE PARAPET JOINT PLATES CONFLICT WITH BRIDGE SAFETY FENCE POSTS, OMIT THE TOP PLATE AND ASSOCIATED CONCRETE RECESS. MAINTAIN A 1" CLEAR TO THE TOP CHAMFER.
5. BOLTS SHALL BE ASTM A 304 STAINLESS STEEL COUNTERSUNK SCREW WITH ASTM A 108 CONCRETE THREADED ANCHOR OR THREADED INSERT. HEAD OF BOLTS SHALL BE FLUSH WITH FACE OF STEEL PLATE.
6. THE CONTRACTOR SHALL SUBMIT WORKING DRAWINGS OF TRAFFIC BARRIER PLATES FOR APPROVAL.
7. FOR ADDITIONAL JOINT NOTES AND DETAILS, SEE DWGS. EX-01 AND EX-02.
8. PAYMENT FOR PARAPET JOINT PLATES AND PARTIAL REMOVAL OF PARAPET FOR JOINT RECONSTRUCTION WILL BE INCIDENTAL TO ITEM 624000 - PREFABRICATED EXPANSION JOINT SYSTEM, 3".

LEGEND:

RECESS IN PARAPET

NOT FOR CONSTRUCTION

DELAWARE DEPARTMENT OF TRANSPORTATION	ADDENDUMS / REVISIONS	SCALE AS NOTED	REHABILITATION OF I-95 FROM I-495 TO NORTH OF BRANDYWINE RIVER BRIDGE	CONTRACT T201407404	BRIDGE NO. 1 745 059	EXPANSION JOINT DETAILS – 3
				COUNTY NEW CASTLE	DESIGNED BY: BSD	
					CHECKED BY: JRQ	

1-745 EX-03

SHEET NO. 2-89

TOTAL SHTS. 2-731

\Bridge 1-745\745EX_03.dgn
27/8/2018
1743/1931

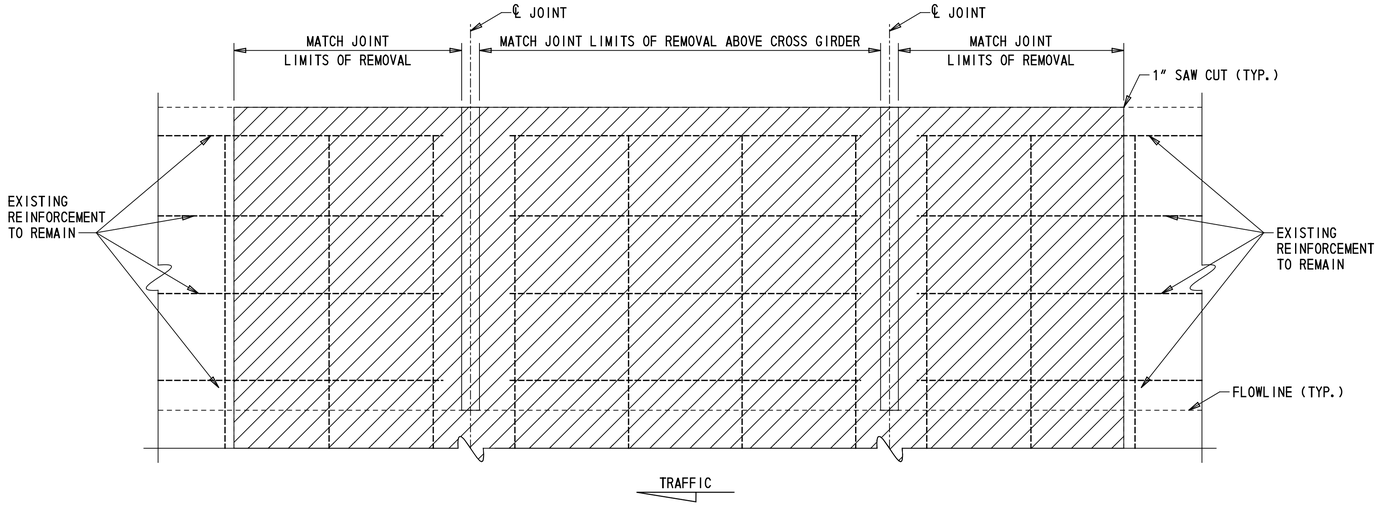

PARAPET REMOVAL AT EXPANSION JOINTS

1½" = 1'-0"

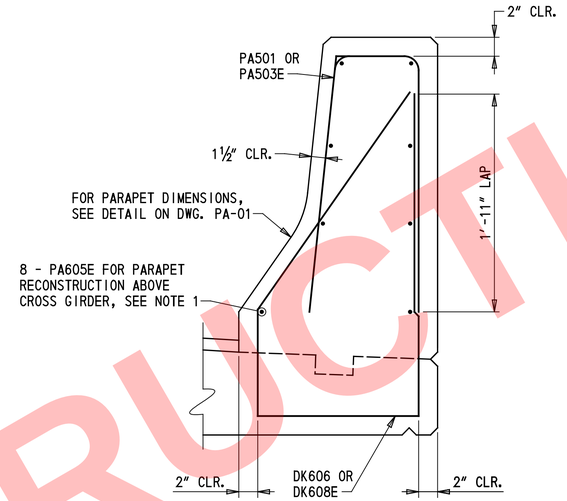

EXTERIOR PARAPET DETAIL AT EXPANSION JOINTS

1½" = 1'-0"

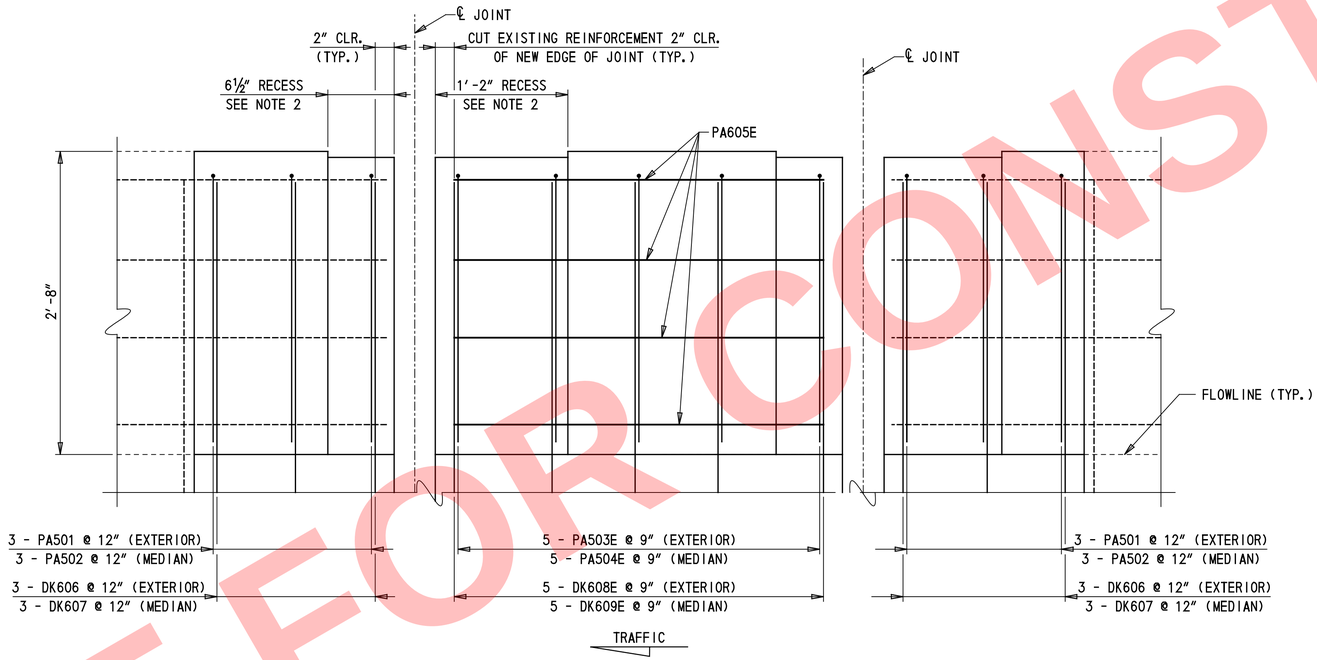

PARAPET RECONSTRUCTION AT EXPANSION JOINTS

1½" = 1'-0"

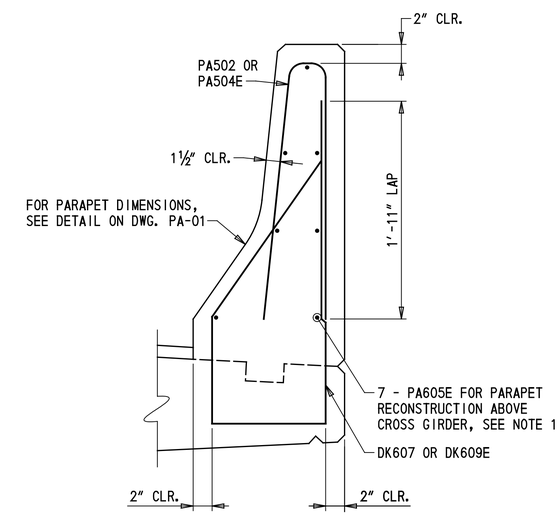

MEDIAN PARAPET DETAIL AT EXPANSION JOINTS

1½" = 1'-0"

NOTES:

1. FOR PARAPET RECONSTRUCTION OTHER THAN ABOVE CROSS GIRDER, EXISTING LONGITUDINAL REINFORCEMENT IS TO REMAIN.
2. WHERE PARAPET JOINT PLATES CONFLICT WITH BRIDGE SAFETY FENCE POSTS, OMIT THE TOP PLATE AND ASSOCIATED CONCRETE RECESS. MAINTAIN A 1" CLEAR TO THE TOP CHAMFER.
3. PROVIDE 1" PREMOLDED FILLER AND 1" SEALANT BETWEEN MEDIAN PARAPETS. PAYMENT WILL BE INCIDENTAL TO ITEM 610008 - PORTLAND CEMENT CONCRETE MASONRY, PARAPET, CLASS A.
4. FOR ADDITIONAL JOINT NOTES AND DETAILS, SEE DWGS. EX-01 THROUGH EX-03.

LEGEND:

REMOVAL LIMITS

NOT FOR CONSTRUCTION

DELAWARE DEPARTMENT OF TRANSPORTATION	ADDENDUMS / REVISIONS	SCALE AS NOTED	REHABILITATION OF I-95 FROM I-495 TO NORTH OF BRANDYWINE RIVER BRIDGE	CONTRACT T201407404 / COUNTY NEW CASTLE	BRIDGE NO. 1 745 059 / DESIGNED BY: BSD / CHECKED BY: JRQ	EXPANSION JOINT DETAILS - 4

1-745 EX-04

SHEET NO. 2-90

TOTAL SHTS. 2-731

...\Bridge 1-745\745EX_04.dgn 2/8/2018 17:43:31

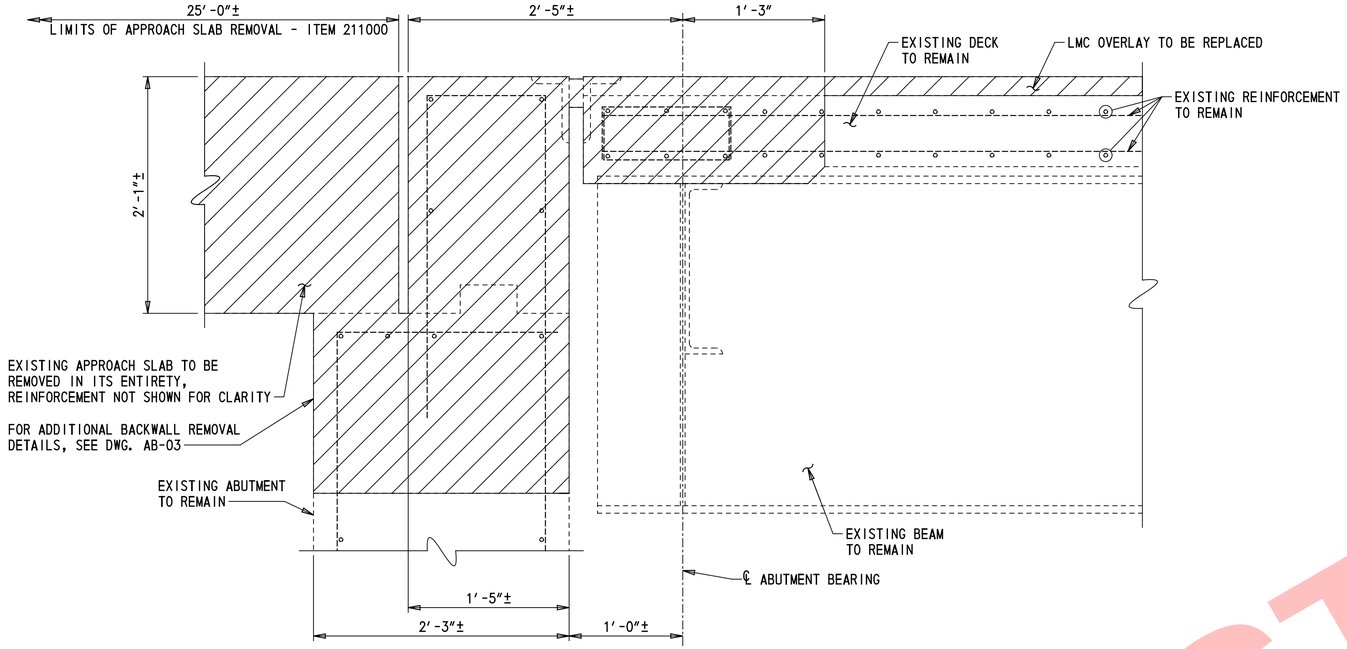

ABUTMENT JOINT REMOVAL DETAIL

1½″ = 1′-0″

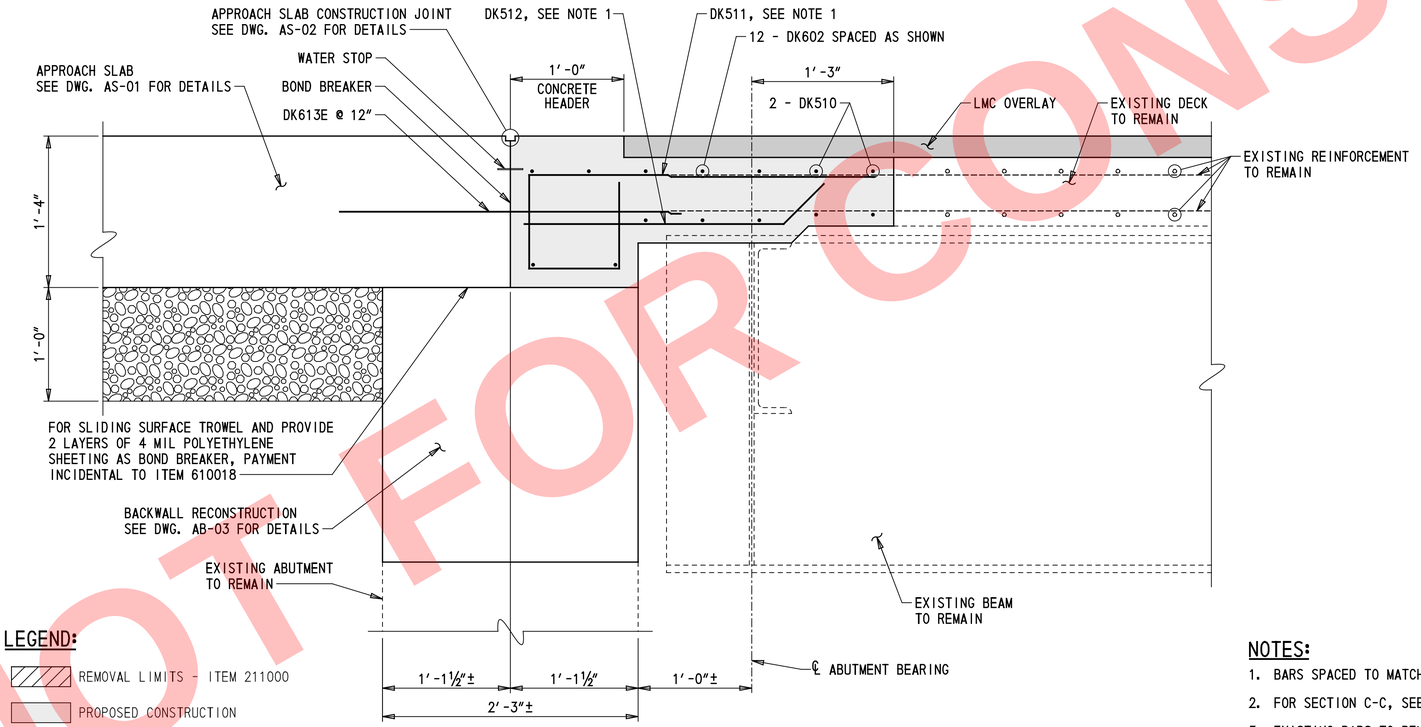

LEGEND:

- REMOVAL LIMITS - ITEM 211000
- PROPOSED CONSTRUCTION
- PROPOSED LMC OVERLAY

DECK OVER DETAIL

1½″ = 1′-0″

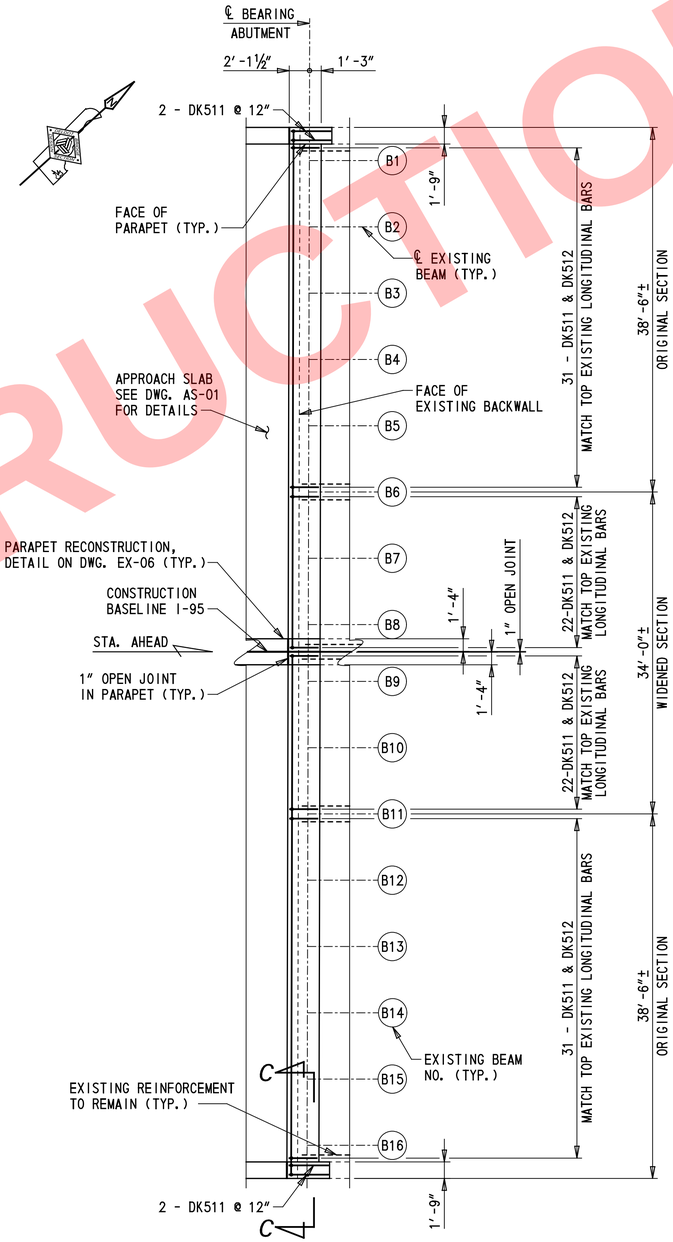

DECK OVER PLAN

(ABUTMENT A SHOWN, ABUTMENT B SIMILAR)

⅛″ = 1′-0″

NOTES:

1. BARS SPACED TO MATCH EXISTING TOP LONGITUDINAL BARS.
2. FOR SECTION C-C, SEE DWG. EX-06.
3. EXISTING BARS TO REMAIN SHALL BE CLEANED IN ACCORDANCE WITH SECTION 628.03(E)7. BARS WITH CORROSION, BROKEN, OR WITH INADEQUATE BOND SHALL BE REPAIRED IN ACCORDANCE WITH SECTION 628.03(E)7. PAYMENT FOR THIS WORK WILL BE INCIDENTAL TO ITEM 610017 - PORTLAND CEMENT CONCRETE MASONRY, SUPERSTRUCTURE, CLASS D.

NOT FOR CONSTRUCTION

DELAWARE DEPARTMENT OF TRANSPORTATION

ADDENDUMS / REVISIONS

SCALE AS NOTED

REHABILITATION OF I-95 FROM I-495 TO NORTH OF BRANDYWINE RIVER BRIDGE

CONTRACT	BRIDGE NO. 1 745 059
T201407404	DESIGNED BY: BJM
COUNTY	CHECKED BY: JRQ
NEW CASTLE	

ABUTMENT DECK OVER DETAILS – 1

1-745 EX-05
SHEET NO. 2-91
TOTAL SHTS. 2-731

J:\Bridge 1-745\745EX_05.dgn
2/8/2018 1743432

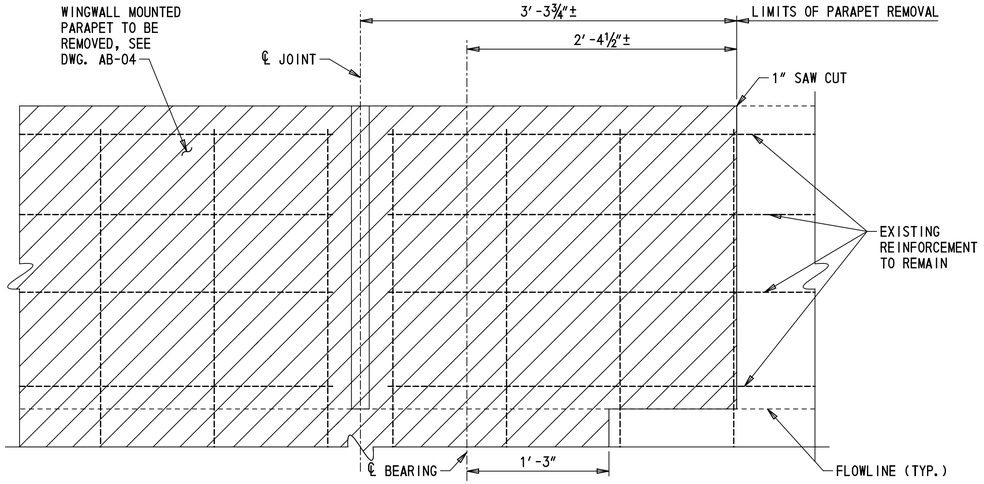

PARAPET REMOVAL AT DECK OVER

1½" = 1'-0"

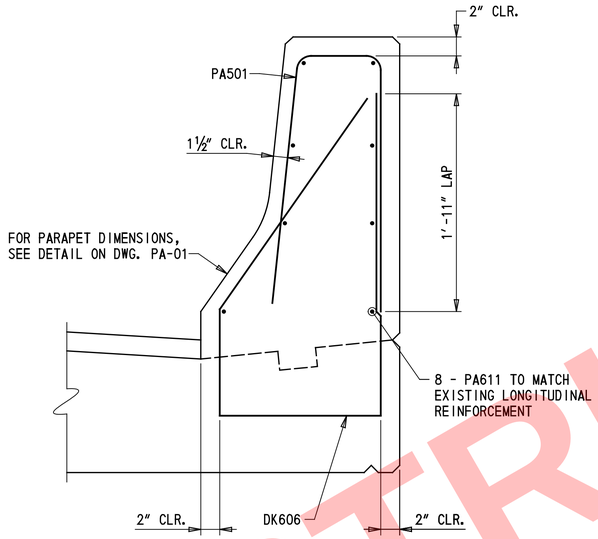

EXTERIOR PARAPET DETAIL AT DECK OVER

1½" = 1'-0"

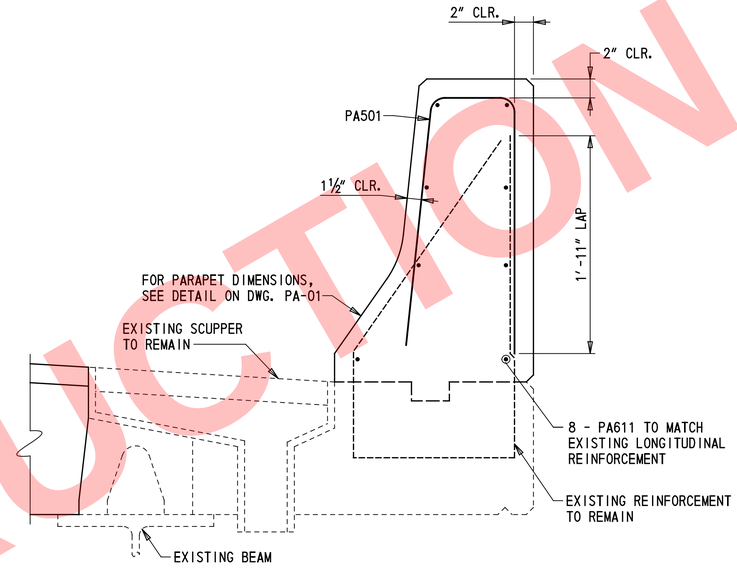

EXTERIOR PARAPET DETAIL AT SCUPPER

1½" = 1'-0"

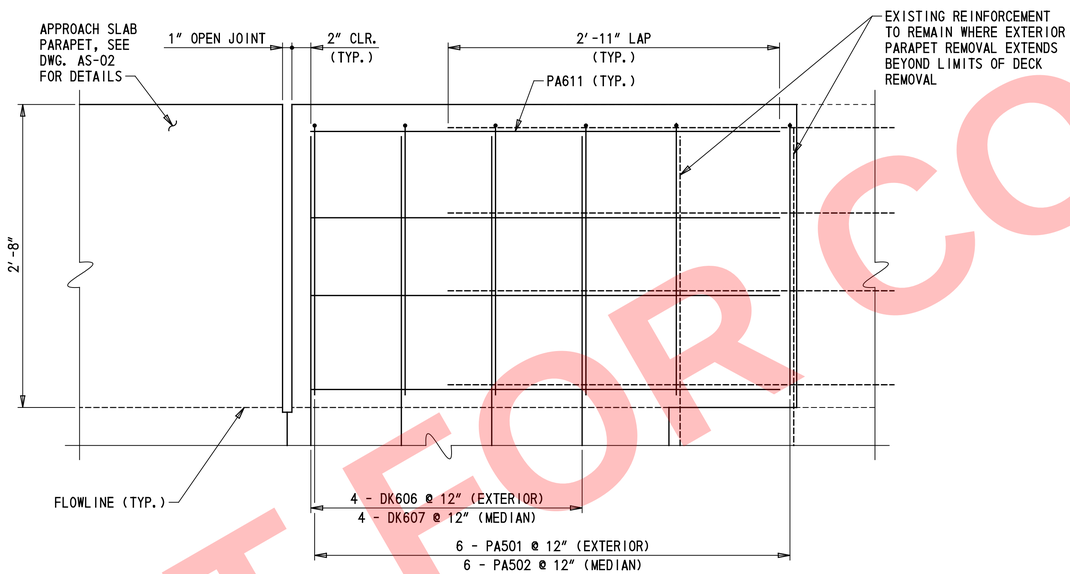

PARAPET RECONSTRUCTION AT DECK OVER

1½" = 1'-0"

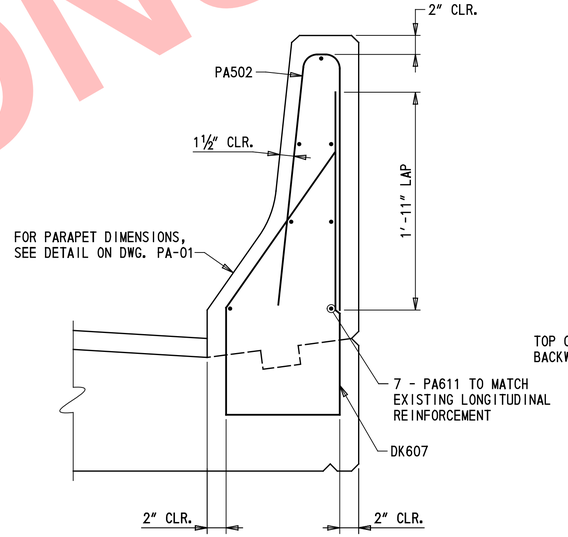

MEDIAN PARAPET DETAIL AT DECK OVER

1½" = 1'-0"

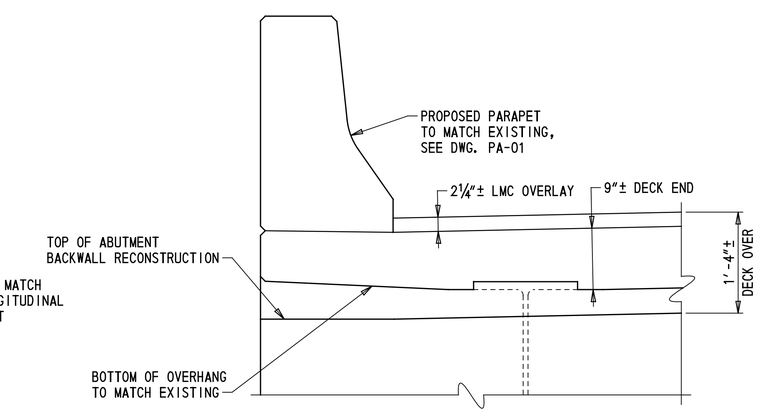

NOTE: REINFORCMENT NOT SHOWN FOR CLARITY.

SECTION C-C

(EXTERIOR PARAPET SHOWN, MEDIAN PARAPET SIMILAR)

1" = 1'-0"

LEGEND:

REMOVAL LIMITS

NOTES:

1. EXISTING BARS TO REMAIN SHALL BE CLEANED IN ACCORDANCE WITH SECTION 628.03(E)7. BARS WITH CORROSION, BROKEN, OR WITH INADEQUATE BOND SHALL BE REPAIRED IN ACCORDANCE WITH SECTION 628.03(E)7. PAYMENT FOR THIS WORK WILL BE INCIDENTAL TO ITEM 610008 - PORTLAND CEMENT CONCRETE MASONRY, PARAPET, CLASS A.

NOT FOR CONSTRUCTION

DELAWARE DEPARTMENT OF TRANSPORTATION

ADDENDUMS / REVISIONS

SCALE AS NOTED

REHABILITATION OF I-95 FROM I-495 TO NORTH OF BRANDYWINE RIVER BRIDGE

CONTRACT T201407404
COUNTY NEW CASTLE
BRIDGE NO. 1 745 059
DESIGNED BY: BJM
CHECKED BY: JRQ

ABUTMENT DECK OVER DETAILS - 2

1-745 EX-06
SHEET NO. 2-92
TOTAL SHTS. 2-731

...\Bridge 1-745\745EX_06.dgn 2/8/2018 17:43:32

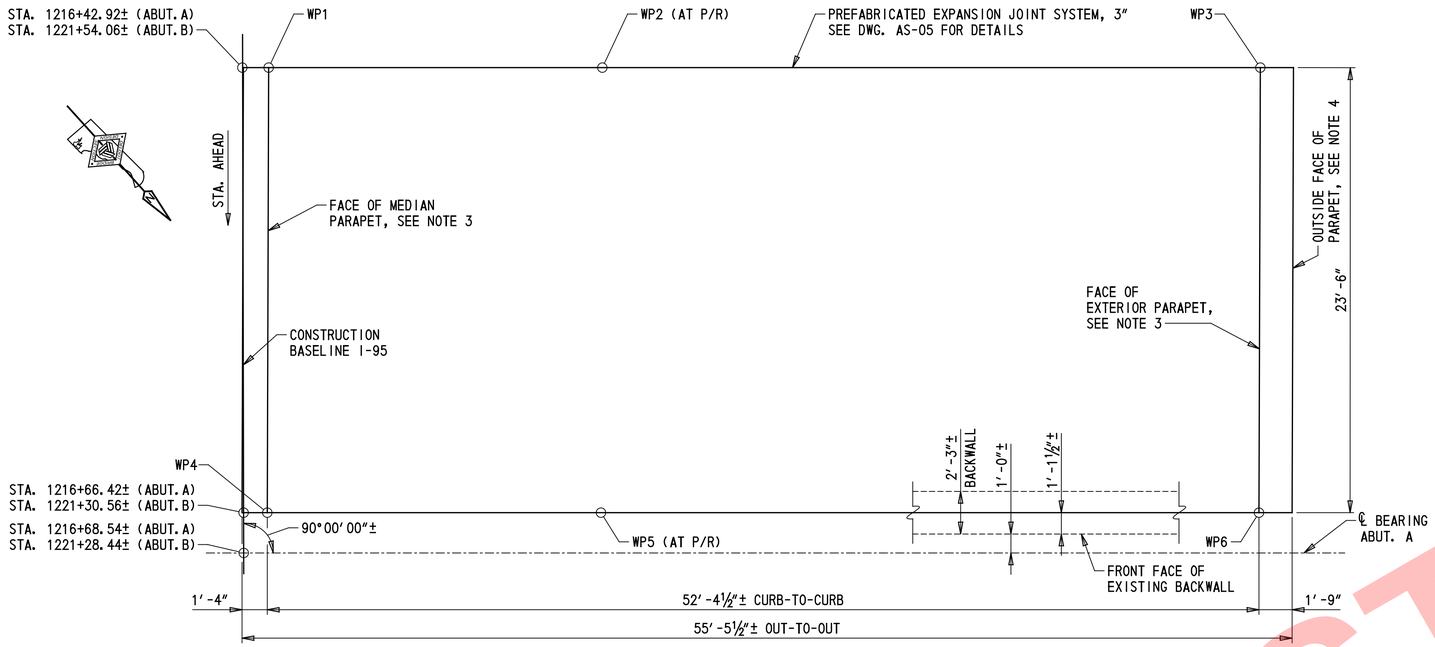

APPROACH SLAB PLAN

(SLAB A WEST SHOWN, OTHERS SIMILAR)

¼" = 1'-0"

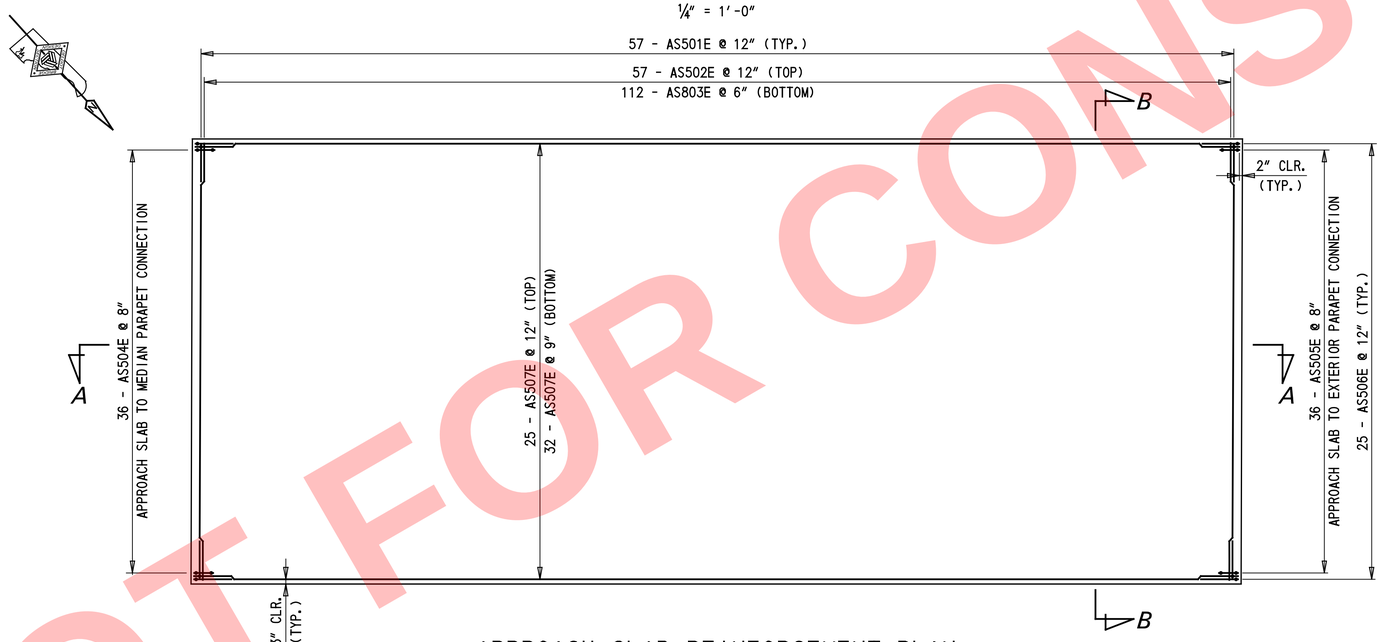

APPROACH SLAB REINFORCEMENT PLAN

¼" = 1'-0"

APPROACH SLAB WORKING POINTS				
LOCATION	POINT	STATION	OFFSET	ELEVATION
APPROACH SLAB A WEST	WP1	1216+42.92±	1.38'± LT	42.08
	WP2	1216+42.96±	19.00'± LT	41.89
	WP3	1216+43.04±	53.75'± LT	41.51
	WP4	1216+66.42±	1.25'± LT	34.97
	WP5	1216+66.46±	18.87'± LT	34.87
	WP6	1216+66.54±	53.62'± LT	34.61
APPROACH SLAB A EAST	WP1	1216+42.92±	1.38'± RT	42.11
	WP2	1216+42.87±	19.00'± RT	42.30
	WP3	1216+42.79±	53.75'± RT	42.66
	WP4	1216+66.41±	1.50'± RT	34.98
	WP5	1216+66.37±	19.13'± RT	35.07
	WP6	1216+66.29±	53.88'± RT	35.31
APPROACH SLAB B WEST	WP1	1221+54.06±	1.38'± LT	41.76
	WP2	1221+54.03±	19.00'± LT	41.87
	WP3	1221+53.98±	53.83'± LT	42.12
	WP4	1221+30.56±	1.37'± LT	33.79
	WP5	1221+30.53±	19.00'± LT	33.82
	WP6	1221+30.47±	53.83'± LT	33.90
APPROACH SLAB B EAST	WP1	1221+54.07±	1.38'± RT	41.73
	WP2	1221+54.09±	19.00'± RT	41.60
	WP3	1221+54.15±	53.79'± RT	41.34
	WP4	1221+30.57±	1.38'± RT	33.75
	WP5	1221+30.59±	19.00'± RT	33.64
	WP6	1221+30.65±	53.80'± RT	33.43

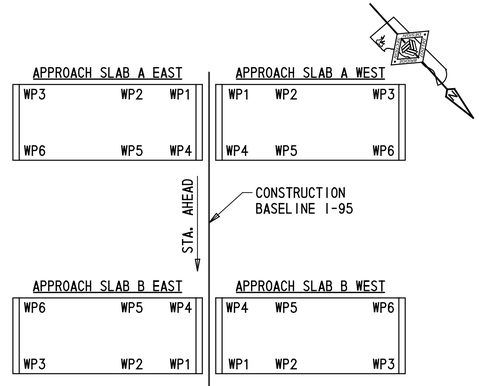

APPROACH SLAB SCHEMATIC PLAN

NOT TO SCALE

NOTES:

1. FOR SECTIONS A-A AND B-B, SEE DWG. AS-02.
2. FOR LANE AND SHOULDER CONFIGURATION AND ADDITIONAL REQUIREMENTS, SEE DWG. TS-01.
3. FLOWLINE AT PARAPET SHALL MATCH FLOWLINE OF EXISTING PARAPET ON BRIDGE, AND WINGWALL.
4. OUTSIDE FACE OF PARAPET SHALL BE CONSTRUCTED FLUSH WITH FRONT FACE OF EXISTING WINGWALL.

NOT FOR CONSTRUCTION

DELAWARE
DEPARTMENT OF TRANSPORTATION

ADDENDUMS / REVISIONS

SCALE AS NOTED

REHABILITATION OF I-95
FROM I-495 TO NORTH OF
BRANDYWINE RIVER BRIDGE

CONTRACT	BRIDGE NO.	1 745 059
T201407404	DESIGNED BY: BJM	
COUNTY		
NEW CASTLE	CHECKED BY: JRQ	

APPROACH SLAB PLAN

1-745 AS-01
SHEET NO. 2-93
TOTAL SHTS. 2-731

I:\Bridge 1-745\745AS_01.dgn
2/8/2018 7:43:33

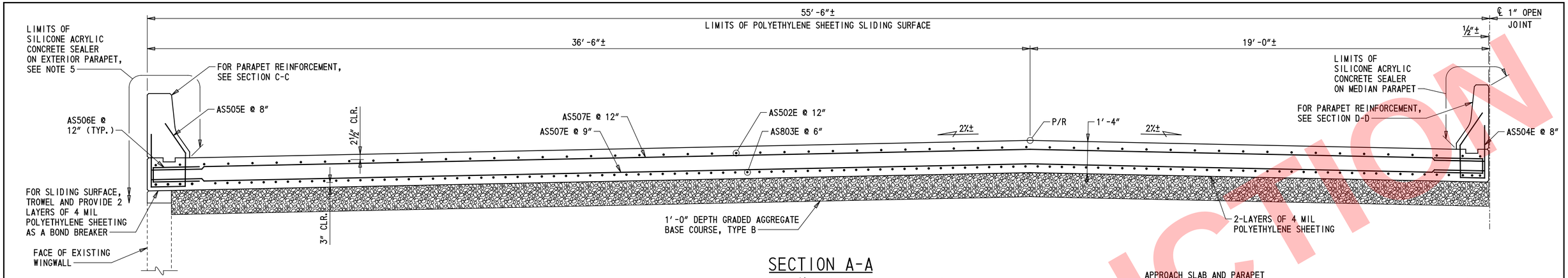

SECTION A-A

½″ = 1′-0″

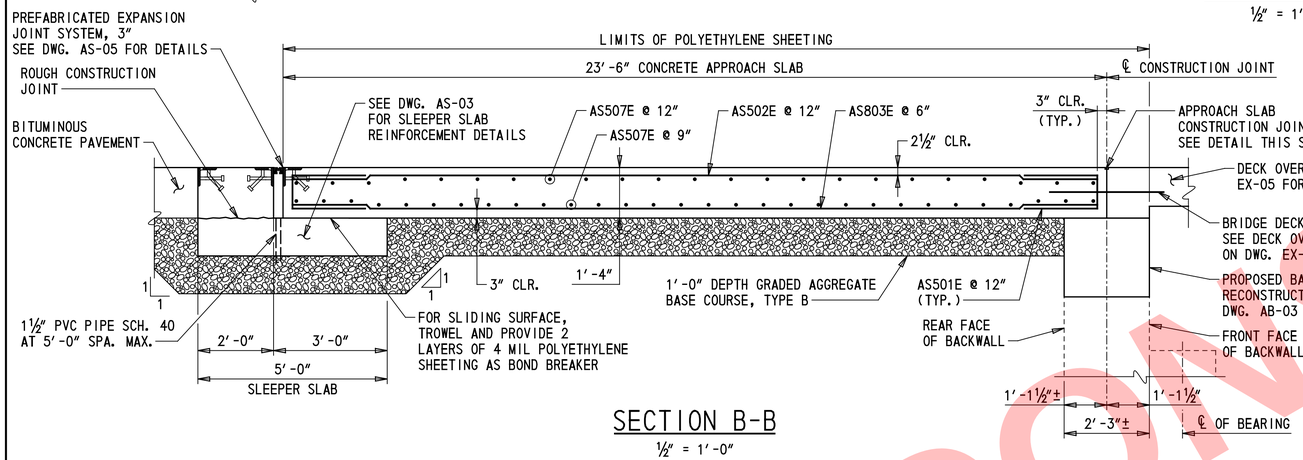

SECTION B-B

½″ = 1′-0″

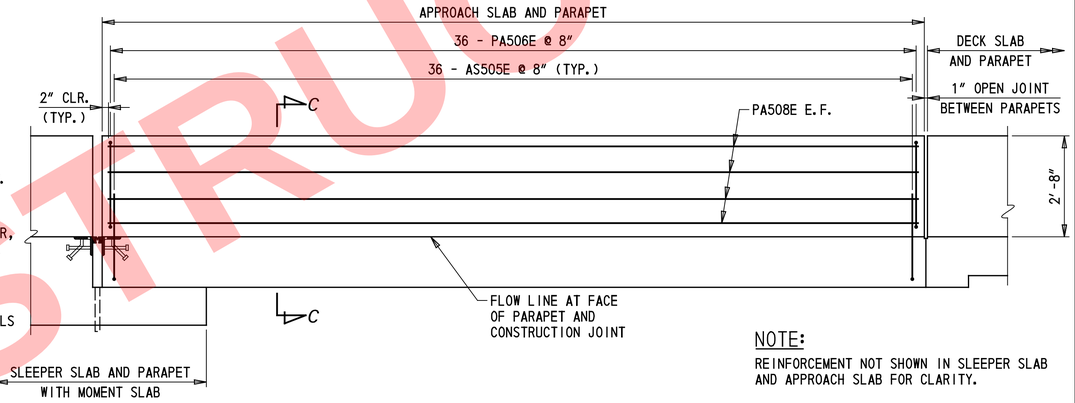

NOTE:
REINFORCEMENT NOT SHOWN IN SLEEPER SLAB AND APPROACH SLAB FOR CLARITY.

APPROACH SLAB EXTERIOR PARAPET REINFORCEMENT ELEVATION

½″ = 1′-0″

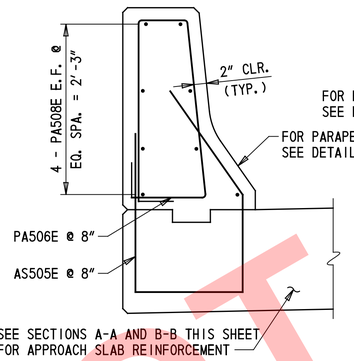

SECTION C-C

1″ = 1′-0″

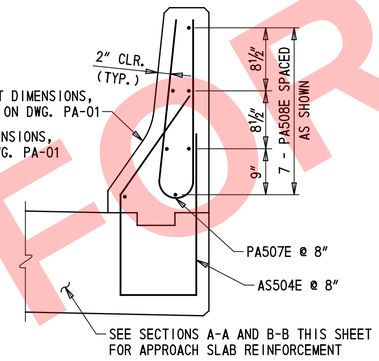

SECTION D-D

1″ = 1′-0″

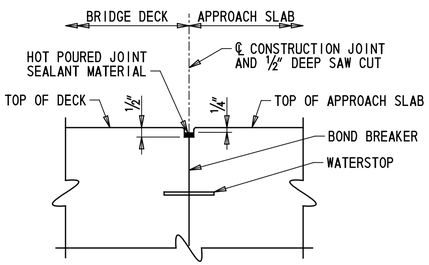

APPROACH SLAB CONSTRUCTION JOINT

NOT TO SCALE

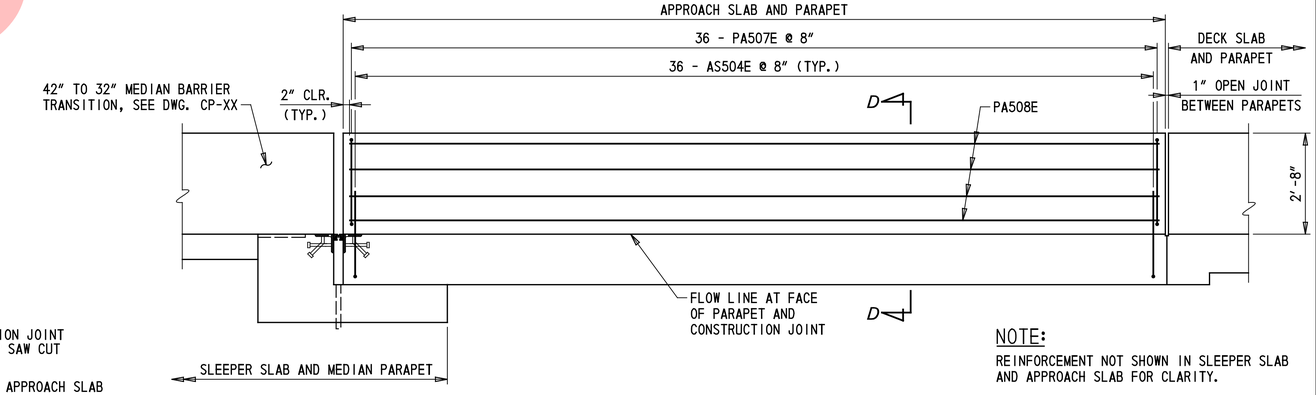

APPROACH SLAB MEDIAN PARAPET REINFORCEMENT ELEVATION

½″ = 1′-0″

NOTE:
REINFORCEMENT NOT SHOWN IN SLEEPER SLAB AND APPROACH SLAB FOR CLARITY.

NOTES:

1. FOR ARMORED STRIP SEAL EXPANSION JOINT DETAILS, SEE DWG. AS-05.
2. FOR ADDITIONAL APPROACH SLAB REINFORCEMENT DETAILS, SEE DWG. AS-01.
3. PAYMENT FOR POLYETHYLENE SHEETING, BOND BREAKER, WATERSTOP, ½″ DEEP SAW CUT, AND HOT POURED JOINT SEALANT WILL BE INCIDENTAL TO ITEM 610018 - PORTLAND CEMENT CONCRETE, APPROACH SLAB, CLASS D.
4. FOR ADDITIONAL ROADWAY PAVEMENT DETAILS, SEE DELDOT STANDARD P-1. PAYMENT FOR ROADWAY JOINTS WILL BE INCIDENTAL TO ROADWAY PAVEMENT ITEM.
5. LIMITS OF SILICONE ACRYLIC CONCRETE SEALER SHALL EXTEND FROM INSIDE FACE OF PARAPET TO EXISTING GROUNDLINE AT OUTSIDE FACE OF WINGWALL.

NOT FOR CONSTRUCTION

DELAWARE DEPARTMENT OF TRANSPORTATION	ADDENDUMS / REVISIONS	SCALE AS NOTED	REHABILITATION OF I-95 FROM I-495 TO NORTH OF BRANDYWINE RIVER BRIDGE	CONTRACT T201407404 / COUNTY NEW CASTLE / BRIDGE NO. 1 745 059 / DESIGNED BY: BJM / CHECKED BY: JRQ	APPROACH SLAB DETAILS

1-745 AS-02

SHEET NO. 2-94
TOTAL SHTS. 2-731

J:\Bridge 1-745\1745S_02.dgn
2/8/2018 17:43:33

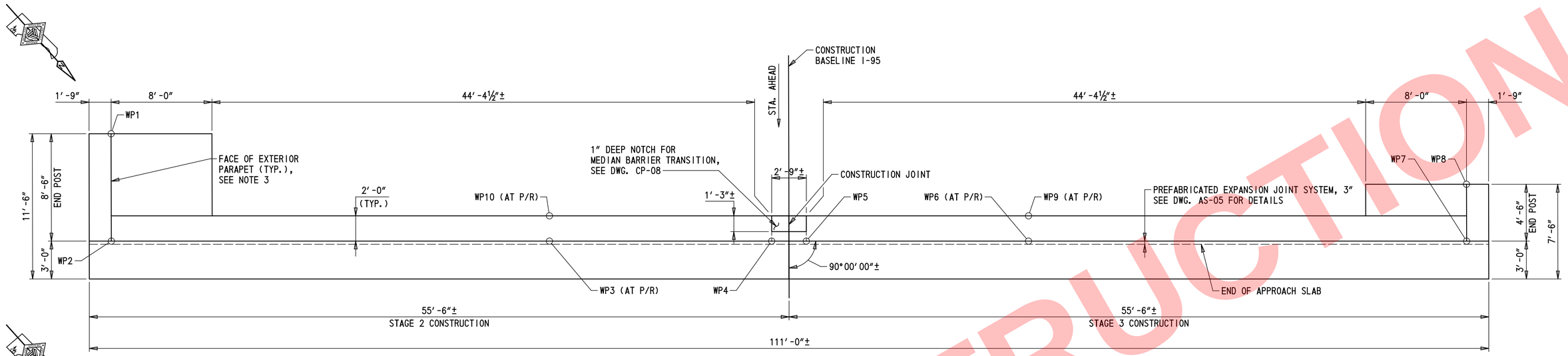

SLEEPER SLAB PLAN

(APPROCH A SHOWN, APPROACH B SIMILAR)
¼″ = 1′-0″

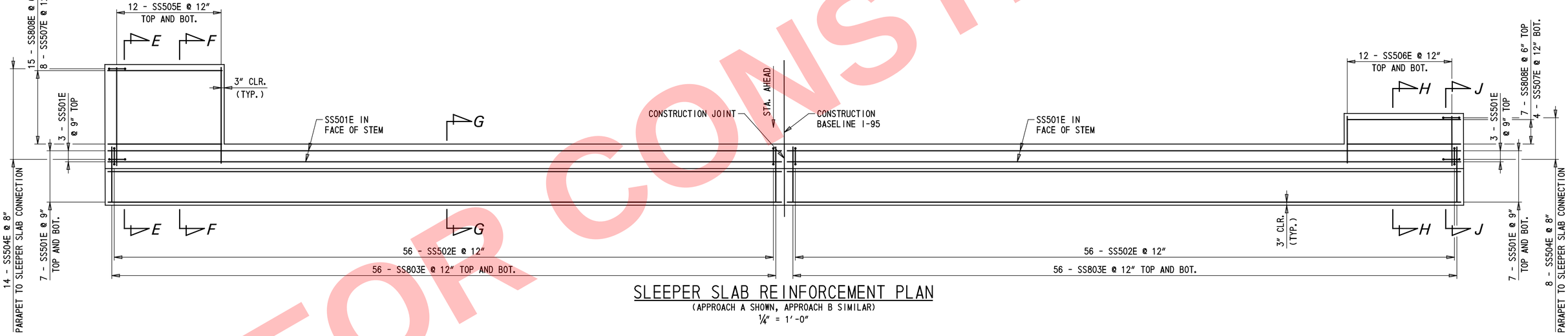

SLEEPER SLAB REINFORCEMENT PLAN

(APPROACH A SHOWN, APPROACH B SIMILAR)
¼″ = 1′-0″

SLEEPER SLAB WORKING POINTS

LOCATION	POINT	STATION	OFFSET	ELEVATION	LOCATION	POINT	STATION	OFFSET	ELEVATION
APPROACH A SLEEPER SLAB	WP1	1216+33.92±	53.75′ ± RT	43.87	APPROACH B SLEEPER SLAB	WP1	1221+62.85±	53.83′ ± RT	42.63
	WP2	1216+42.42±	53.75′ ± RT	43.15		WP2	1221+54.35±	53.83′ ± RT	42.68
	WP3	1216+42.50±	19.00′ ± RT	42.79		WP3	1221+54.40±	19.00′ ± RT	42.40
	WP4	1216+42.55±	1.38′ ± RT	42.60		WP4	1221+54.43±	1.38′ ± RT	42.27
	WP5	1216+42.55±	1.38′ ± LT	42.58		WP5	1221+54.44±	1.38′ ± LT	42.24
	WP6	1216+42.59±	19.00′ ± LT	42.39		WP6	1221+54.46±	19.00′ ± LT	42.11
	WP7	1216+42.67±	53.75′ ± LT	42.01		WP7	1221+54.52±	53.79′ ± LT	41.84
	WP8	1216+38.17±	53.75′ ± LT	43.90		WP8	1221+59.02±	53.79′ ± LT	42.65
	WP9	1216+40.59±	19.00′ ± LT	44.57		WP9	1221+56.46±	19.00′ ± LT	43.36
	WP10	1216+17.55±	1.00′ ± LT	44.54		WP10	1221+79.43±	1.00′ ± LT	43.26

NOTES:

1. FOR SECTIONS E-E, F-F AND G-G, SEE DWG. AS-04.
2. FOR SECTIONS H-H AND J-J, SEE DWG. AS-05.
3. FLOWLINE AT PARAPET SHALL MATCH FLOWLINE OF EXISTING PARAPET ON APPROACH SLAB.

NOT FOR CONSTRUCTION

DELAWARE DEPARTMENT OF TRANSPORTATION

ADDENDUMS / REVISIONS

SCALE AS NOTED

REHABILITATION OF I-95 FROM I-495 TO NORTH OF BRANDYWINE RIVER BRIDGE

CONTRACT	BRIDGE NO.	1 745 059
T201407404	DESIGNED BY: BJM	
COUNTY	CHECKED BY: CWM	
NEW CASTLE		

SLEEPER SLAB PLAN

1-745 AS-03
SHEET NO. 2-95
TOTAL SHTS. 2-731

...\Bridge 1-745\745AS_03.dgn
2/8/2016 11:43:34

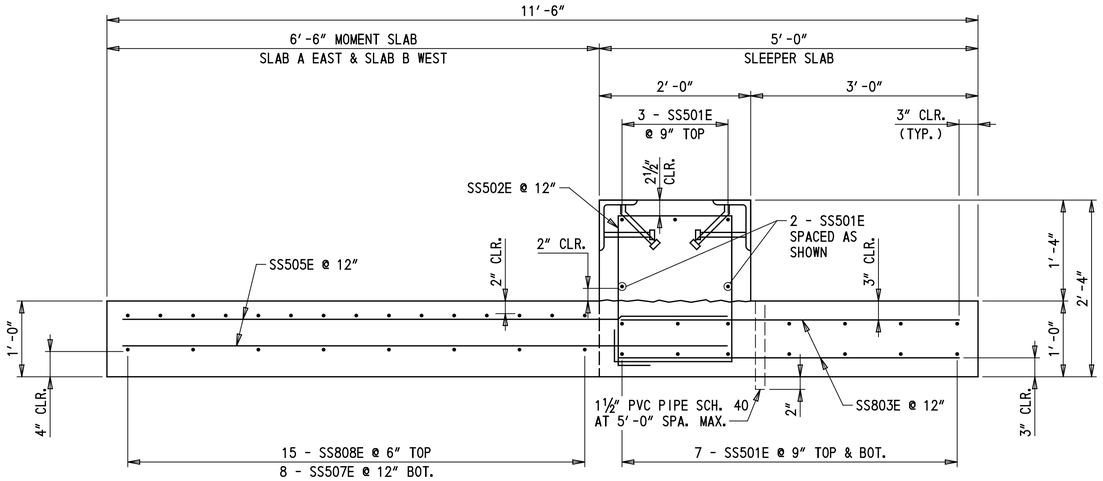

SECTION F-F
1" = 1'-0"

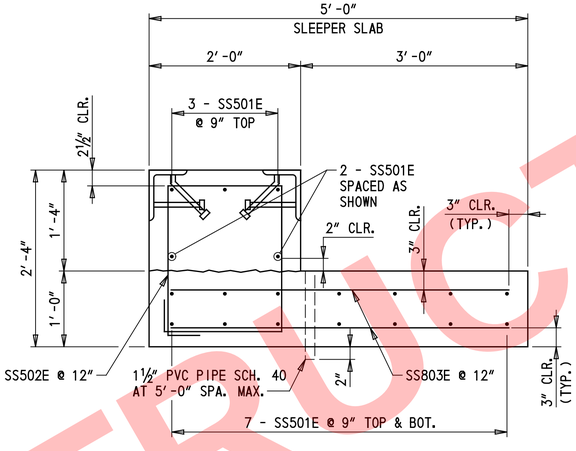

SECTION G-G
1" = 1'-0"

NOTE:
APPROACH SLAB NOT SHOWN FOR CLARITY.

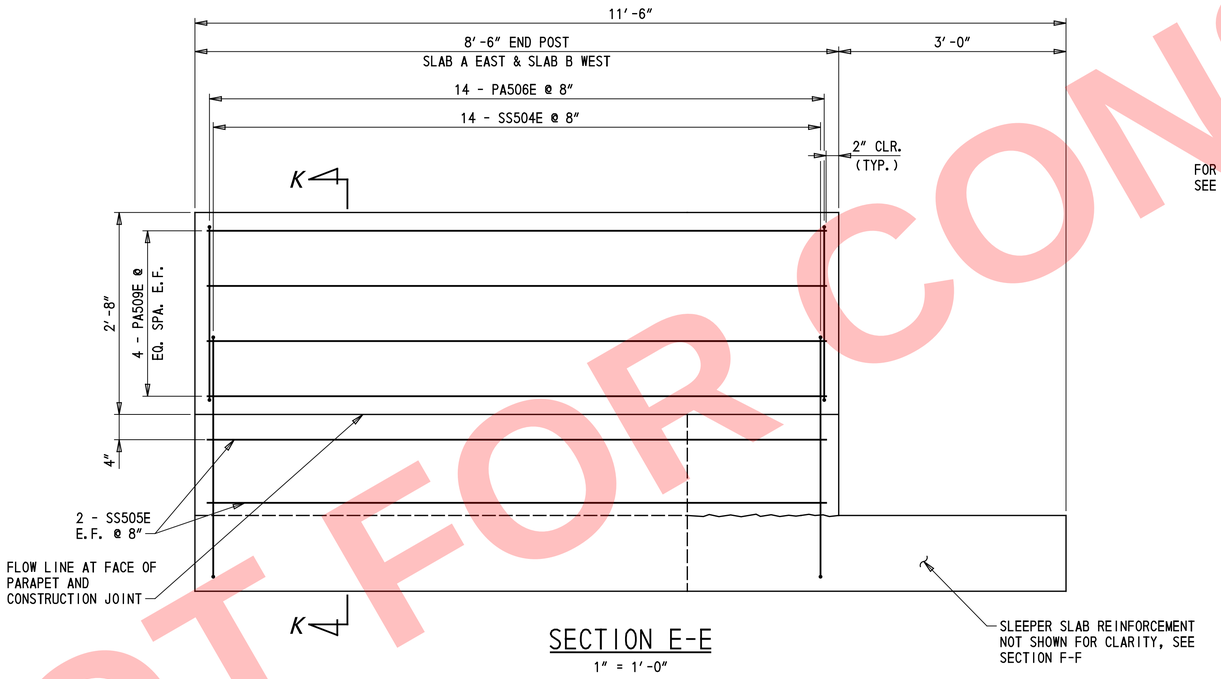

SECTION E-E
1" = 1'-0"

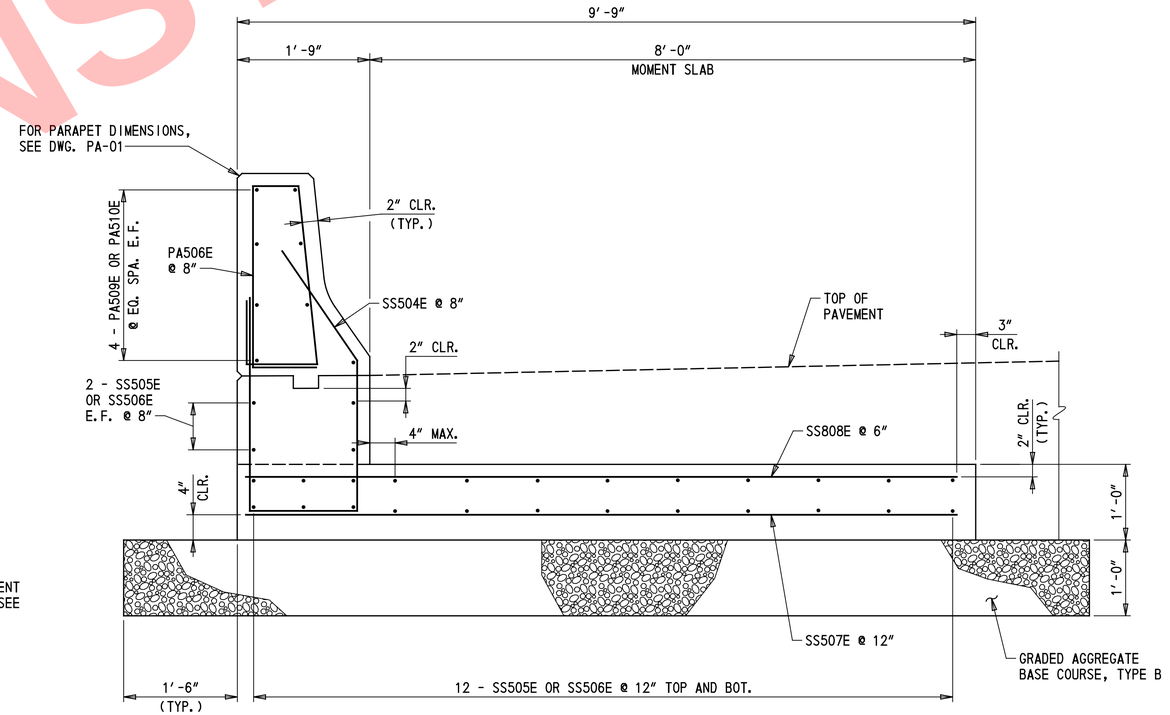

SECTION K-K
1" = 1'-0"

NOT FOR CONSTRUCTION

NOTES:

1. FOR APPROACH SLAB PLAN AND DETAILS, SEE DWGS. AS-01 AND AS-02.
2. FOR SLEEPER SLAB PLAN AND REINFORCEMENT PLAN, SEE DWG. AS-03.

DELAWARE DEPARTMENT OF TRANSPORTATION

ADDENDUMS / REVISIONS

SCALE AS NOTED

REHABILITATION OF I-95 FROM I-495 TO NORTH OF BRANDYWINE RIVER BRIDGE

CONTRACT T201407404
COUNTY NEW CASTLE
BRIDGE NO. 1 745 059
DESIGNED BY: BJM
CHECKED BY: JRQ

SLEEPER SLAB DETAILS

1-745
AS-04
SHEET NO. 2-96
TOTAL SHTS. 2-731

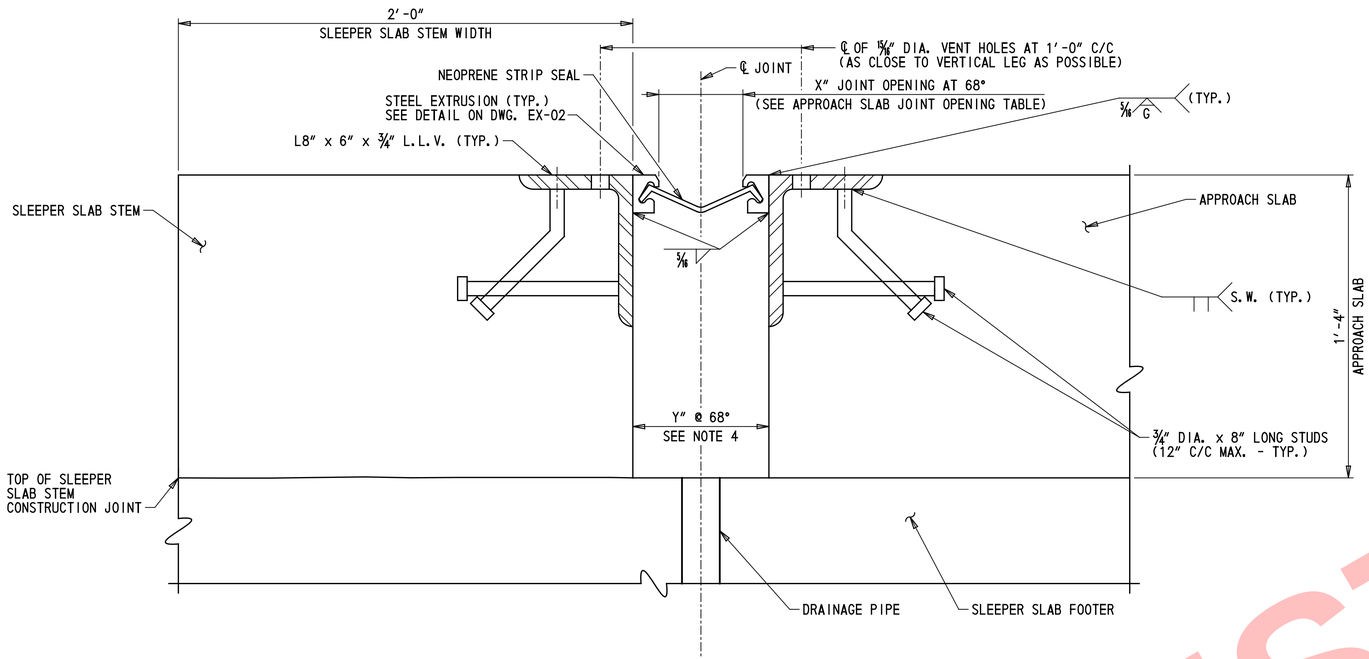

APPROACH SLAB JOINT ASSEMBLY DETAIL

3″ = 1′-0″

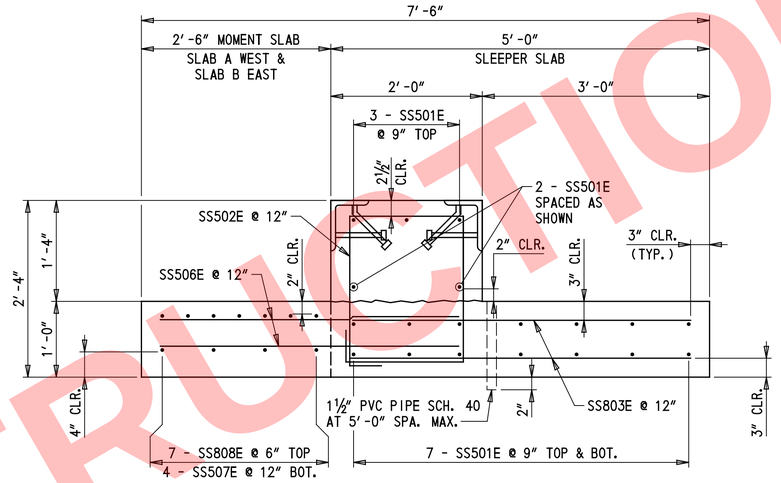

SECTION H-H

1″ = 1′-0″

NOTE:

APPROACH SLAB NOT SHOWN FOR CLARITY.

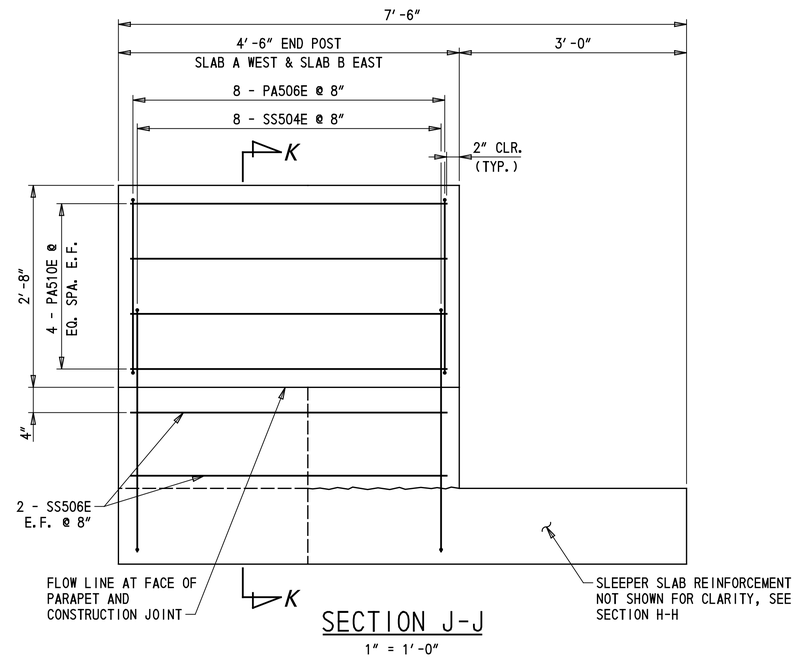

SECTION J-J

1″ = 1′-0″

STRIP SEAL EXPANSION JOINT NOTES:

1. STEEL FOR DECK JOINTS AND STEEL EXTRUSIONS SHALL BE AASHTO M270, GR.36 (ASTM A36) AT MINIMUM.
2. NEOPRENE EXTRUSION TO MEET ASTM D-2628-81 MODIFIED, (RECOVERY TEST EXCLUDED).
3. THE EXPANSION JOINT SHALL BE CAPABLE OF SEALING THE APPROACH SLAB TO SLEEPER SLAB JOINT TO PREVENT MOISTURE AND OTHER CONTAMINANTS FROM DESCENDING THROUGH THE JOINT.
4. THE CONTRACTOR SHALL ADJUST THE OPEN JOINT (Y) AS REQUIRED BY THE WIDTH OF THE STEEL EXTRUSION USED SO AS TO PROVIDE A X″ JOINT OPENING AT 68°F.
5. THE STRIP SEAL SHALL BE INSTALLED IN ONE PIECE ACROSS THE APPROACH SLAB WIDTH. SPLICING OF THE STRIP SEAL IS NOT PERMITTED.
6. THE EXPANSION JOINT SYSTEM WILL BE PAID FOR UNDER ITEM 624000 - PREFABRICATED EXPANSION JOINT SYSTEM, 3″.
7. STEEL EXTRUSIONS SHALL BE HOT-DIP GALVANIZED. ENTIRE EXPANSION DAM SHALL BE PAINTED AFTER FABRICATION USING URETHANE SYSTEM, UNLESS OTHERWISE NOTED. COLOR OF PAINT SYSTEM TO BE APPLIED SHALL MATCH THE COLOR OF THE PROPOSED PAINT SYSTEM FOR THE EXISTING STEEL STRUCTURE.
8. LUBRICANT-ADHESIVE FOR USE IN INSTALLING AND BONDING NEOPRENE SEAL ELEMENTS TO STEEL JOINT COMPONENTS SHALL BE A ONE QUART MOISTURE-CURING POLYURETHANE AND HYDROCARBON SOLVENT MIXTURE HAVING THE FOLLOWING PHYSICAL PROPERTIES:

AVERAGE WEIGHT, POUNDS PER GALLON	8±10%
SOLIDS CONTENT	65%
ADHESIVE SHALL REMAIN LIQUID FROM	5°F TO 120°F
FILM STRENGTH, AS PER ASTM D-412	2,000 PSI
ELONGATION	250%

9. STEEL EXTRUSIONS SHALL BE WELDED TO WATERTIGHT AT CONSTRUCTION JOINTS. PAYMENT INCIDENTAL TO ITEM 624000 - PREFABRICATED EXPANSION JOINT SYSTEM, 3″.
10. TRAFFIC BARRIER PLATES ARE REQUIRED. SEE DETAILS ON DWG. EX-03, DWG. EX-04, AND JOINT OPENING TABLE THIS SHEET.

APPROACH SLAB JOINT OPENINGS

LOCATION	TEMPERATURE (°F)										MOVEMENT CLASSIFICATION
	20	30	40	50	60	68	70	80	90	100	
ABUTMENTS A & B	2 1/16″	2″	1 15/16″	1 15/16″	1 3/4″	1 11/16″	1 11/16″	1 5/8″	1 1/2″	1 7/16″	3″

NOTES:

1. FOR APPROACH SLAB PLAN AND DETAILS, SEE DWGS. AS-01 AND AS-02.
2. FOR SLEEPER SLAB PLAN AND SECTIONS, SEE DWGS. AS-03 AND AS-04.
3. REMAINING SLEEPER SLAB AND APPROACH SLAB REINFORCEMENT NOT SHOWN FOR CLARITY. SEE DWGS. AS-01 THROUGH AS-04 FOR MORE INFORMATION.
4. GRIND ALL STEEL EDGES EXPOSED TO TRAFFIC TO 3/16″ MIN. RADIUS.

NOT FOR CONSTRUCTION

2/8/2016 \\Bridge 1-745\1745AS_05.dgn 1743334

DELAWARE
DEPARTMENT OF TRANSPORTATION

ADDENDUMS / REVISIONS

SCALE AS NOTED

REHABILITATION OF I-95
FROM I-495 TO NORTH OF
BRANDYWINE RIVER BRIDGE

CONTRACT T201407404
COUNTY NEW CASTLE
BRIDGE NO. 1 745 059
DESIGNED BY: BJM
CHECKED BY: JRQ

APPROACH SLAB
JOINT DETAILS

1-745
AS-05
SHEET NO. 2-97
TOTAL SHTS. 2-731

① ANY MARK NUMBER WITH SUFFIX 'E' DENOTES EPOXY COATED REINFORCING STEEL.

② ALL MARK 'LOCATION PREFIXES' SHALL CONSIST OF TWO LETTERS AND ARE AS FOLLOWS: AB = ABUTMENT, AS = APPROACH SLAB, BC = BOX CULVERT, BW = BACKWALL, CL = COLUMN, DK = DECK, DL = DOWEL, FT = FOOTING, HW = HEADWALL, MS = MISC. BARS, PA = PARAPET, PR = PIER, SC = SHEETPILE CAP, SL = SLAB, TW = TOEWALL, WL = WALL (UNIQUE LOCATION), WW = WINGWALL

SPECIFICATIONS					BENDING DIMENSIONS (FEET-INCHES /QUARTER INCH)										
QTY.	SIZE	LENGTH	MARK	TYPE	A	B	C	D	E	F/R	G	H	J	K	O
ABUTMENT															
224	5	5-11⓪	AB501	17		2-00	1-11⓪	2-00							
24	5	3-53	AB502	17		2-00	1-93	2-00							
32	6	55-12	AB603	STR		55-12									
WINGWALL															
8	5	15-20	WW501	STR		15-20									
DECK															
1100	5	2-32	DK501	17		0-60	1-32	0-60							
188	6	55-12	DK602	STR		55-12									
20	5	55-82	DK503	1	0-70	55-12					0-00		0-50		
1120	6	3-40	DK604E	STR		3-40									
100	6	55-12	DK605E	STR		55-12									
76	6	7-60	DK606	DE16		2-100	1-50	0-110	2-40	0-00		2-00		1-32	
76	6	6-50	DK607	DE16		2-100	1-00	0-110	1-80	0-00		1-42		0-112	
50	6	7-60	DK608E	DE16		2-100	1-50	0-110	2-40	0-00		2-00		1-32	
50	6	6-50	DK609E	DE16		2-100	1-00	0-110	1-80	0-00		1-42		0-112	
8	5	56-32	DK510	1	0-70	55-12					0-70		0-50		
220	5	5-40	DK511	DE15		3-02	0-92	0-92	0-82	0-00					
212	5	2-83	DK512	16	0-00	0-00	2-23	0-60				0-41		0-41	2-70
220	6	3-00	DK613E	STR		3-00									
PARAPET															
84	5	5-21	PA501	16	0-00	2-30	0-80	2-31				2-30		0-32	0-112
84	5	4-82	PA502	H1		2-11	0-53	2-12		0-13		0-62			
50	5	5-21	PA503E	16	0-00	2-30	0-80	2-31				2-30		0-32	0-112
50	5	4-82	PA504E	H1		2-11	0-53	2-12		0-13		0-62			
150	6	3-40	PA605E	STR		3-40									
188	5	7-30	PA506E	SP04	0-52	0-110	2-41	0-80	2-43		0-52	2-40		0-30	
144	5	4-113	PA507E	H1		2-12	0-82	2-13		0-30		0-23			
60	5	23-20	PA508E	STR		23-20									
16	5	8-20	PA509E	STR		8-20									
16	5	4-20	PA510E	STR		4-20									
60	6	4-12	PA611	STR		4-12									

SPECIFICATIONS					BENDING DIMENSIONS (FEET-INCHES /QUARTER INCH)										
QTY.	SIZE	LENGTH	MARK	TYPE	A	B	C	D	E	F/R	G	H	J	K	O
APPROACH SLAB															
456	5	4-102	AS501E	17		2-00	0-102	2-00							
228	5	23-00	AS502E	STR		23-00									
448	8	23-00	AS803E	STR		23-00									
144	5	6-03	AS504E	DE16		2-20	1-00	1-33	1-70	0-00		1-32		0-110	
144	5	6-61	AS505E	DE16		2-20	1-50	1-31	1-80	0-00		1-42		0-111	
200	5	4-83	AS506E	17		2-00	0-83	2-00							
228	5	55-12	AS507E	STR		55-12									
SLEEPER SLAB															
76	5	55-30	SS501E	STR		55-30									
224	5	7-90	SS502E	T2	0-60	1-60	1-102	1-60	1-102		0-60				
448	8	4-60	SS803E	STR		4-60									
44	5	8-10	SS504E	DE16		2-102	1-50	2-02	1-90	0-00		1-51		1-00	
56	5	8-00	SS505E	STR		8-00									
56	5	4-00	SS506E	STR		4-00									
24	5	9-50	SS507E	STR		9-50									
44	8	9-50	SS808E	STR		9-50									

SPECIFICATIONS					BENDING DIMENSIONS (FEET-INCHES /QUARTER INCH)										
QTY.	SIZE	LENGTH	MARK	TYPE	A	B	C	D	E	F/R	G	H	J	K	O

ASTM STANDARD ENGLISH REINFORCING BARS

BAR SIZE	NOMINAL DIMENSIONS DIAMETER (INCHES)	AREA (INCHES²)	WEIGHT (LBS./FT.)
3	0.375	0.110	0.376
4	0.500	0.200	0.668
5	0.625	0.310	1.043
6	0.750	0.440	1.502
7	0.875	0.600	2.044
8	1.000	0.790	2.670
9	1.128	1.000	3.400
10	1.270	1.270	4.303
11	1.410	1.560	5.313
14	1.693	2.250	7.650
18	2.257	4.000	13.600

RECOMMENDED END HOOKS, APPLICABLE TO ALL GRADES

BAR SIZE	180° HOOKS D	180° HOOKS A OR G	180° HOOKS J	90° HOOKS A OR G
3	2¼"	5"	3"	6"
4	3"	6"	4"	8"
5	3¾"	7"	5"	10"
6	4½"	8"	6"	1-0"
7	5¼"	10"	7"	1-2"
8	6"	11"	8"	1-4"
9	9½"	1-3"	11¾"	1-7"
10	10¾"	1-5"	1-1¼"	1-10"
11	1-0"	1-7"	1-2¾"	2-0"
14	1-6¼"	2-3"	1-9¾"	2-7"
18	2-0"	3-0"	2-4½"	3-5"

STIRRUP AND TIE HOOKS, APPLICABLE TO ALL GRADES

BAR SIZE	90° HOOK D	90° HOOK A OR G	135° HOOK A OR G	135° HOOK A OR G
3	1½"	4"	4"	2½"
4	2½"	4½"	4½"	3"
5	2½"	6"	5½"	3¾"
6	4½"	1-0"	8"	4½"
7	5¼"	1-2"	9"	5¼"
8	6"	1-4"	10½"	6"

NOTES:

1. FIGURES SHOWN IN CIRCLES REPRESENT BAR BEND TYPES.
2. STANDARD BAR BENDS INCLUDE ONLY THOSE TYPES BELOW, INDICATED AS SUCH.
3. ALL DIMENSIONS OUT-TO-OUT, EXCEPT "A" AND "G" ON STD. 180° AND 135° HOOKS.
4. "J" DIMENSIONS ON 180° HOOKS TO BE SHOWN ONLY WHERE NECESSARY TO RESTRICT HOOK SIZE, OTHERWISE STANDARD 'ACI' HOOKS ARE TO BE USED.
5. WHERE "J" IS NOT SHOWN, "J" WILL BE KEPT EQUAL TO OR LESS THAN "H" ON TYPES 3, 5 AND 22. WHERE "J" CAN EXCEED "H", IT SHALL BE SHOWN.
6. "H" DIMENSIONS OF STIRRUPS TO BE SHOWN AS NEEDED TO FIT WITHIN THE CONCRETE.
7. UNLESS OTHERWISE NOTED, DIAMETER "D" IS THE SAME FOR ALL BENDS AND HOOKS ON A BAR (EXCEPT FOR BEND TYPES 11 AND 13).
8. WHERE SLOPE DIFFERS FROM 45° OFFSET, "H" AND "K" MUST BE SHOWN.
9. WHERE BARS ARE TO BE BENT MORE ACCURATELY THAN STANDARD BENDING TOLERANCES, BENDING DIMENSIONS REQUIRING CLOSER FABRICATION SHOULD HAVE LIMITS INDICATED.
10. FOR RECOMMENDED DIAMETER "D", OF BENDS, HOOKS, ETC., REFER TO TABLE ABOVE, 'CRSI' OR 'ACI' TABLES WHERE APPLICABLE AND REQUIRED.
11. TYPE S1-S6, S11, T1-T3 AND T6-T9 APPLICABLE TO BAR SIZES #3 THROUGH #8.

STIRRUP AND TIE HOOKS

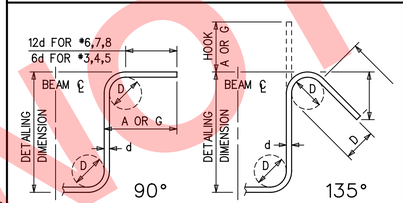

180° AND 90° END HOOKS

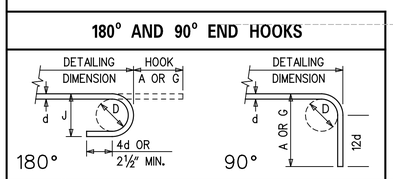

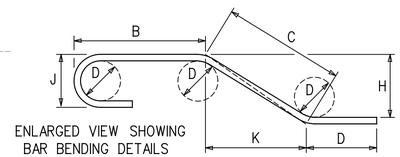

STANDARD BAR BENDS

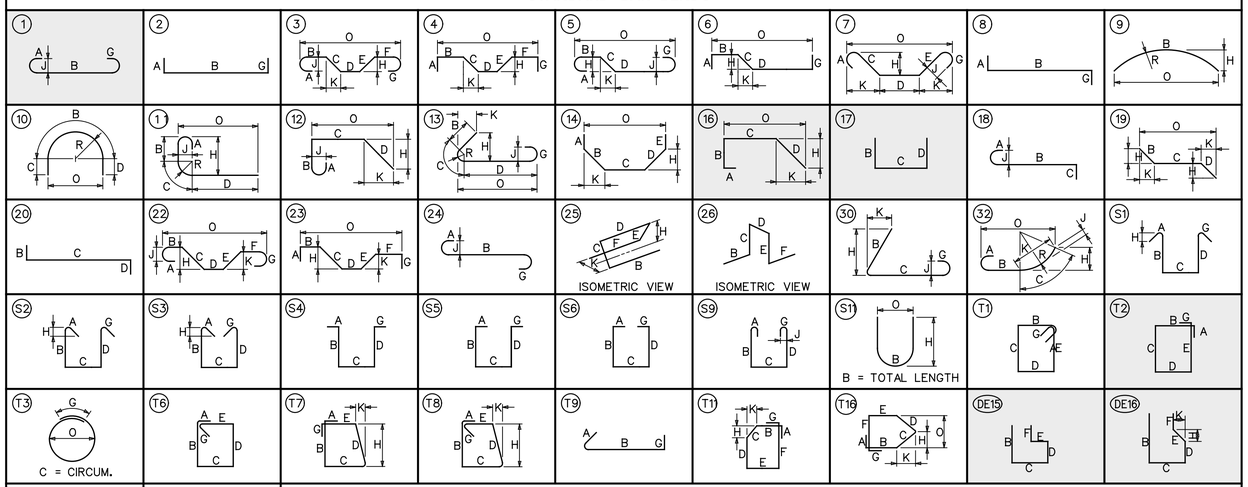

SPECIAL BAR BENDS

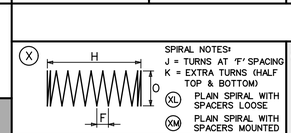

NOT FOR CONSTRUCTION

DELAWARE DEPARTMENT OF TRANSPORTATION

ADDENDUMS / REVISIONS

NOT TO SCALE

REHABILITATION OF I-95 FROM I-495 TO NORTH OF BRANDYWINE RIVER BRIDGE

CONTRACT	BRIDGE NO.	1 745 059
T201407404	DESIGNED BY: BSD	
COUNTY	CHECKED BY: JRQ	
NEW CASTLE		

REINFORCEMENT SCHEDULE

1-745 BR-01	
SHEET NO.	2-98
TOTAL SHTS.	2-731

\\Bridges 1-745\745BR_01.dgn 2/18/2016 17:43:33

SECTION 200

1. REMOVAL OF STRUCTURES AND OBSTRUCTIONS:
   ITEMS TO BE REMOVED UNDER ITEM #211000 - REMOVAL OF STRUCTURES AND OBSTRUCTIONS ASSOCIATED WITH BRIDGE 1-746 SHALL INCLUDE, BUT NOT BE LIMITED TO, THE FOLLOWING:
   - APPROACH SLABS
   - PORTION OF BACKWALLS, WINGWALLS, AND APPROACH BARRIER WALL
   - ABUTMENT DECK JOINTS
   - PARAPETS AT ABUTMENTS

SECTION 600

2. PORTLAND CEMENT CONCRETE:
   USE PORTLAND CEMENT CONCRETE FOR CAST-IN-PLACE ELEMENTS AS FOLLOWS:
   (f'c = 28-DAY COMPRESSIVE STRENGTH)
   CLASS A - PARAPETS, ABUTMENTS, PIERS (f'c = 4.5 ksi)
   CLASS D - DECK, APPROACH SLABS, SLEEPER SLABS (f'c = 4.5 ksi)
   A HIGHER CLASS CONCRETE MAY BE SUBSTITUTED FOR A LOWER CLASS CONCRETE AT NO ADDITIONAL COST TO THE DEPARTMENT WITH APPROVAL OF THE ENGINEER.
   -CHAMFER ALL EXPOSED EDGES ¾" X ¾" UNLESS OTHERWISE NOTED.
   -DO NOT SLIP-FORM BARRIERS, UNLESS OTHERWISE APPROVED BY THE DEPARTMENT.
   -CONTRACTOR WILL SUPPLY CONCRETE FOR THE PARAPETS, BRIDGE DECK, AND APPROACH SLABS THAT INCLUDES A SHRINKAGE-REDUCING/COMPENSATING ADMIXTURE. PAYMENT FOR ADMIXTURE WILL BE INCIDENTAL TO ITS RESPECTIVE CONCRETE ITEM (ITEMS 610008, 610017, AND 610018). THE ADMIXTURE MAY BE SUPPLIED BY ONE PRODUCT THAT PROVIDES BOTH EXPANSION AND PORE WATER SURFACE TENSION OR TWO SEPARATE PRODUCTS EACH ADDAD AT DOSAGE RECOMMENDED BY MANUFACTURER'S TECHNICAL DATA SHEETS AND HAVING THE FOLLOWING CHARACTERISTICS:

   (A) DESIGNED TO PROVIDE BOTH THE FOLLOWING CHARACTERISTICS:
   I. EXPANDS AT A RATE THAT CLOSELY COMPENSATES FOR SHRINKAGE OF THE CONCRETE MIX.
   II. REDUCES THE CAPILLARY SURFACE TENSION OF THE CONCRETE PORE WATER.
   (B) PROVIDES AT LEAST 80% SHRINKAGE REDUCTION AS MEASURED AND DOCUMENTED BY FIELD PERFORMANCE.
   (C) FORMULATED FOR USE IN FREEZING AND THAWING WEATHER.

3. BAR REINFORCEMENT:
   -REINFORCING STEEL SHALL CONFORM TO AASHTO M31 (ASTM A615), GRADE 60.
   -REINFORCING STEEL SHALL HAVE A 3" CLEAR COVER IF CAST AGAINST EARTH OR A 2" CLEAR COVER ELSEWHERE, UNLESS OTHERWISE SPECIFIED ON THE PLANS.
   -ALL REINFORCING STEEL SHALL BE PROTECTED WITH FUSION BONDED EPOXY, EXCEPT AS NOTED ON THE PLANS. EPOXY COATED REINFORCING STEEL SHALL CONFORM TO AASHTO M284 (ASTM D3963).
   -ANY FIELD CUTTING OR FIELD BENDING MUST BE APPROVED BY THE ENGINEER. PAYMENT SHALL BE INCIDENTAL TO THE BAR REINFORCEMENT ITEM.
   -GALVANIZED REINFORCING STEEL MAY BE SUBSTITUTED FOR EPOXY-COATED REINFORCING STEEL AT NO ADDITIONAL COST TO THE DEPARTMENT WITH APPROVAL OF THE ENGINEER.
   -WELDING OF REINFORCEMENT DURING FABRICATION OR CONSTRUCTION IS NOT PERMITTED UNLESS SPECIFIED.

4. CONCRETE SEALER:
   REFER TO DIAGRAMS CONTAINING SILICONE ACRYLIC CONCRETE SEALER LIMITS ON DWGS. AB-01, AB-02, PR-01 TO PR-04. EPOXY CONCRETE SEALER SHALL BE APPLIED TO THE BEAM SEATS AND BEARING PEDESTALS AT PIERS. SILICONE ACRYLIC CONCRETE SEALER SHALL BE APPLIED TO THE REMAINING EXPOSED CONCRETE SURFACES AT THE ABUTMENTS, PIERS, AND WINGWALLS.

5. CLEAN AND PAINT EXISTING STRUCTURAL STEEL:
   - CLEANING AND PAINTING OF EXISTING STRUCTURAL STEEL SHALL BE IN ACCORDANCE WITH DELAWARE DEPARTMENT OF TRANSPORTATION STANDARD SPECIFICATIONS, SECTION 616.

MISCELLANEOUS

6. DESIGN SPECIFICATIONS:
   (A) 2016 DELDOT BRIDGE DESIGN MANUAL.
   (B) 2014 AASHTO LRFD BRIDGE SPECIFICATIONS, 7TH EDITION, CUSTOMARY U.S. UNITS INCLUDING 2015 AND 2016 INTERIM REVISIONS.
   (C) PROVIDE MATERIALS AND PERFORM WORK IN ACCORDANCE WITH THE 2016 DELDOT STANDARD SPECIFICATIONS.

7. LOADING:
   -DEAD LOADS INCLUDE 25 PSF FOR FUTURE WEARING SURFACE ON DECK SLAB AND 15 PSF FOR STAY-IN-PLACE FORMS (INCLUDES CONCRETE IN FORM CORRUGATIONS). PARAPET LOADS ARE DISTRIBUTED 75 PERCENT TO THE EXTERIOR AND 25 PERCENT TO THE FIRST INTERIOR BEAM.
   -DESIGN LIVE LOADS INCLUDE HL-93 LOADING.
   -FATIGUE DESIGN IS BASED ON THE FOLLOWING ONE DIRECTIONAL TRAFFIC VOLUMES: ADTT = 3,910 IN YEAR 2040.
   -LIVE LOAD DISTRIBUTION TO THE GIRDERS IS BASED ON THE AASHTO SIMPLIFIED METHOD.
   -THERMAL LOADS AND MOVEMENTS ARE BASED ON THE MODERATE TEMPERATURE RANGE AS STIPULATED IN THE AASHTO LRFD DESIGN SPECIFICATIONS AS 0°F TO 120°F. THE NORMAL TEMPERATURE SHALL BE CONSIDERED TO BE 68° F.
   -LIVE LOAD DEFLECTION SHALL BE LIMITED TO L/800.
   -FOR REINFORCEMENT DISTRIBUTION REQUIREMENTS, CONSIDER CLASS I EXPOSURE CRITERIA FOR DECKS.

MISCELLANEOUS (CONTINUED)

8. EXISTING CONDITIONS:
   -ALL EXISTING DIMENSIONS AND ELEVATIONS SHOWN ARE BASED ON THE BEST AVAILABLE INFORMATION AND ARE APPROXIMATE ONLY. THE CONTRACTOR SHALL FIELD VERIFY ALL EXISTING DIMENSIONS, GEOMETRY, AND ELEVATIONS AS NECESSARY PRIOR TO ORDERING ANY MATERIALS AND COMMENCING CONSTRUCTION TO ENSURE PROPER FIT OF THE PROPOSED CONSTRUCTION. PAYMENT SHALL BE INCIDENTAL TO ITEM 763501 - CONSTRUCTION ENGINEERING.

9. CONTINGENT QUANTITIES:
   THESE CONTRACT DRAWINGS HAVE BEEN PREPARED BASED ON ORIGINAL CONTRACT PLANS AND FIELD INSPECTION NOTES. ACTUAL CONDITIONS MAY REQUIRE MODIFICATION IN CONSTRUCTION DETAILS AND WORK QUANTITIES. ALL DIMENSIONS AND DETAILS SHOWN ON THE PLANS SHALL BE VERIFIED BY THE CONTRACTOR PRIOR TO ORDERING ANY MATERIALS. SEE DWG. PN-04 FOR PAY ITEM CONTINGENCY FACTORS.

10. UTILITIES:
    SEE UTILITY STATEMENT AND UTILITY RELOCATION PLAN SHEETS FOR FURTHER INFORMATION ON UTILITY COORDINATION.

11. ENVIRONMENTAL COMPLIANCE:
    REFER TO THE ENVIRONMENTAL COMPLIANCE PLAN FOR RESTRICTIONS AND ADDITIONAL GUIDANCE THAT MAY BE ASSOCIATED TO THIS PROJECT.

12. ABBREVIATIONS:

ACCEL. = ACCELERATION	M.H.W. = MEAN HIGH WATER
BOT. = BOTTOM	NB = NORTHBOUND
C/C = CENTER-TO-CENTER	NO. = NUMBER
℄ = CENTERLINE	N.T.S. = NOT TO SCALE
CLR. = CLEAR	P.C.C. = PORTLAND CEMENT CONCRETE
DIA. = DIAMETER	R = RADIUS
DWG. = DRAWING	RT = RIGHT
E.F. = EACH FACE	SB = SOUTHBOUND
EL. = ELEVATION	SHLD. = SHOULDER
EQ = ENTIRE QUANTITY	STA. = STATION
EXP. = EXPANSION	SPA. = SPACED
FIX. = FIXED	S.W. = SHOP WELD
L.L.V. = LONG LEG VERTICAL	TYP. = TYPICAL
LMC = LATEX MODIFIED CONCRETE	T.B.D. = TO BE DETERMINED
LT = LEFT	
MAX. = MAXIMUM	
MIN. = MINIMUM	

13. PRIOR TO SHIFTING TRAFFIC TO STAGE 2 THE CONTRACTOR SHALL CLEAN THE EXISTING BRIDGE SCUPPER ON I-95 SB. THE WORK CONSISTS OF FURNISHING PROPER EQUIPMENT AND CLEANING THE EXISTING BRIDGE SCUPPERS AND DOWNSPOUTS IN ACCORDANCE WITH NOTES AND LOCATIONS ON THE PLANS AND AS DIRECTED BY THE ENGINEER.

    CONSTRUCTION METHOD:
    THE CONTRACTOR SHALL REMOVE SEDIMENT, DEBRIS, ETC., FROM THE BOX OF THE SCUPPER AND PIPE OUTFALLS. ONCE THIS BLOCKAGE HAS BEEN REMOVED, THE CONTRACTOR SHALL ROUT, IF REQUIRED, AND FLUSH DOWNSPOUTS WITH WATER UNDER PRESSURE TO REMOVE ANY OBSTRUCTIONS AND CLEANSE THE SYSTEM. ROUTING AND FLUSHING EQUIPMENT SHALL BE INDUSTRY ACCEPTED EQUIPMENT FOR THIS TYPE OF CLEANING AND FLUSHING OPERATION.

    METHOD OF MEASUREMENT:
    THE QUALITY OF SCUPPERS CLEANED WILL BE MEASURED AS THE ACTUAL NUMBER OF EACH SCUPPER CLEANED AND ACCEPTED BY THE ENGINEER.

    BASIS OF PAYMENT:
    THE QUANTITY OF SCUPPER CLEANED WILL BE PAID FOR AT THE CONTRACT UNIT PRICE PER EACH UNDER ITEM 602XXX - CLEANING BRIDGE SCUPPERS. PRICE AND PAYMENT SHALL CONSTITUTE FULL COMPENSATION FOR CLEANING, ROUTING AND FLUSHING IN PIPE FROM SCUPPER TO PIPE DISCHARGE, DISPOSAL OF REMOVED MATERIALS, AND FOR ALL LABOR, TOOLS, EQUIPMENT, AND NECESSARY INCIDENTALS TO COMPLETE THE WORK.

INDEX OF BRIDGE 1-746 SHEETS

BR. SHEET Nº	BR. DWG. Nº	TABLE OF CONTENTS
2-99	PN-01	BRIDGE PROJECT NOTES
2-100	PN-02	MISCELLANEOUS DETAILS
2-101	PN-03	QUANTITIES AND LOAD RATINGS
2-102	PN-04	PROPOSED REPAIR AND RECONSTRUCTION ITEMS
2-103	PE-01	GENERAL PLAN AND ELEVATION
2-104	TS-01	BRIDGE TYPICAL SECTIONS
2-105	SC-01	SEQUENCE OF CONSTRUCTION - 1
2-106	SC-02	SEQUENCE OF CONSTRUCTION - 2
2-107	SC-03	SEQUENCE OF CONSTRUCTION - 3
2-108	SC-04	SEQUENCE OF CONSTRUCTION - 4
2-109	AB-01	ABUTMENT A CONCRETE REPAIR DETAILS
2-110	AB-02	ABUTMENT B CONCRETE REPAIR DETAILS
2-111	AB-03	ABUTMENT BACKWALL REINFORCEMENT PLAN AND ELEVATION
2-112	AB-04	ABUTMENT BACKWALL RECONSTRUCTION DETAILS
2-113	AB-05	WINGWALL CONCRETE REPAIR DETAILS
2-114	PR-01	PIER 1 CONCRETE REPAIR DETAILS - SOUTH ELEVATION
2-115	PR-02	PIER 1 CONCRETE REPAIR DETAILS - NORTH ELEVATION
2-116	PR-03	PIER 2 CONCRETE REPAIR DETAILS - SOUTH ELEVATION
2-117	PR-04	PIER 2 CONCRETE REPAIR DETAILS - NORTH ELEVATION
2-118	SO-01	SOFFIT CONCRETE REPAIR DETAILS
2-119	DM-01	DEMOLITION DETAILS
2-120	PA-01	PARAPET DETAILS
2-121	EX-01	EXPANSION JOINT DETAILS - 1
2-122	EX-02	EXPANSION JOINT DETAILS - 2
2-123	EX-03	EXPANSION JOINT DETAILS - 3
2-124	EX-04	EXPANSION JOINT DETAILS - 4
2-125	EX-05	DECK OVER PLAN AND REINFORCEMENT PLAN
2-126	EX-06	DECK OVER DETAILS
2-127	EX-07	DECK OVER PARAPET DETAILS
2-128	AS-01	APPROACH SLAB PLAN
2-129	AS-02	APPROACH SLAB REINFORCEMENT PLAN
2-130	AS-03	APPROACH SLAB DETAILS - 1
2-131	AS-04	APPROACH SLAB DETAILS - 2
2-132	AS-05	SLEEPER SLAB PLAN AND REINFORCEMENT PLAN
2-133	AS-06	SLEEPER SLAB DETAILS - 1
2-134	AS-07	SLEEPER SLAB DETAILS - 2
2-135	BR-01	REINFORCEMENT SCHEDULE

TOTAL BRIDGE SHEETS: 37

NOT FOR CONSTRUCTION

$DONAME$ $DATE$ $TIME$

DELAWARE
DEPARTMENT OF TRANSPORTATION

ADDENDUMS / REVISIONS

NOT TO SCALE

REHABILITATION OF I-95
FROM I-495 TO NORTH OF
BRANDYWINE RIVER BRIDGE

CONTRACT T201407404
COUNTY NEW CASTLE
BRIDGE NO. 1 746 059
DESIGNED BY: TB
CHECKED BY: HQ

BRIDGE
PROJECT NOTES

1-746
PN-01
SHEET NO. 2-99
TOTAL SHTS. 2-731

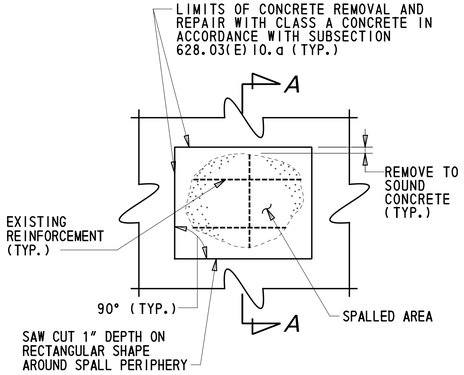

PLAN

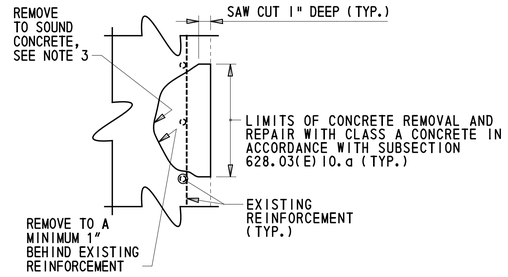

SECTION A-A

DEEP SPALL REPAIR

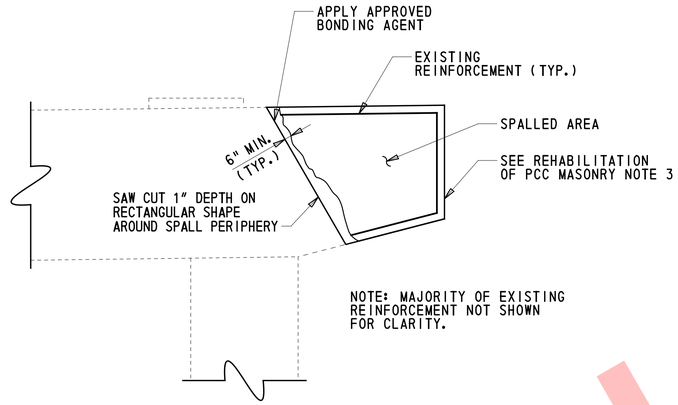

REHABILITATION OF PCC MASONRY

DEEP SPALL REPAIR NOTES

1. DEEP SPALL REPAIRS ARE DEFINED AS PATCHES THAT EXTEND BELOW THE TOP MAT OF REINFORCEMENT. DELAMINATED CONCRETE HAS BEEN ASSUMED AS DEEP SPALL REPAIRS.
2. ALL WORK INVOLVING METHODS OF CONCRETE REMOVAL; CLEANING OF CONCRETE SURFACE AND EXISTING REINFORCEMENT; REPAIRING OR REPLACING DAMAGED REINFORCEMENT AS RESULT OF CONSTRUCTION ACTIVITIES OR SECTION LOSS; PRESENCE OF CONTRACTION OR EXPANSION JOINTS; SURFACE PREPARATION; AND CONCRETE PLACEMENT SHALL BE PERFORMED IN ACCORDANCE WITH SUBSECTION 628.03(E) OF THE STANDARD SPECIFICATIONS. PAYMENT INCIDENTAL TO 628041 - DEEP SPALL REPAIR.
3. IF DEPTH OF REPAIR EXTENDS MORE THAN 6" BEYOND SURFACE OF CONCRETE, CONTRACTOR SHALL STOP WORK AND NOTIFY THE ENGINEER IMMEDIATELY.

REHABILITATION OF PCC MASONRY NOTES

1. REHABILITATION OF PCC MASONRY IS DEFINED AS DEEP SPALL PATCHES THAT EXCEED THE 0.5 C.Y. THRESHOLD IN A SINGLE AREA.
2. ALL WORK INVOLVING METHODS OF CONCRETE REMOVAL; CLEANING OF CONCRETE SURFACE AND EXISTING REINFORCEMENT; REPAIRING OR REPLACING DAMAGED REINFORCEMENT AS RESULT OF CONSTRUCTION ACTIVITIES OR SECTION LOSS; PRESENCE OF CONTRACTION OR EXPANSION JOINTS; SURFACE PREPARATION; AND CONCRETE PLACEMENT SHALL BE PERFORMED IN ACCORDANCE WITH SUBSECTION 628.03(E) OF THE STANDARD SPECIFICATIONS. PAYMENT INCIDENTAL TO 628042 - REHABILITATION OF PCC MASONRY.
3. DETAIL SHOWN FOR "REHABILITATION OF EXISTING PCC MASONRY" UTILIZES A GENERIC EXAMPLE USING PARTIAL RECONSTRUCTION OF AN EXISTING PIER CAP. SEE ABUTMENT AND PIER REHABILITATION SHEETS FOR SIZE AND LOCATION OF REPAIRS AT EACH SUBSTRUCTURE UNIT.
4. IF DEPTH OF REPAIR EXTENDS MORE THAN 6" BEYOND SURFACE OF CONCRETE, CONTRACTOR SHALL STOP WORK AND NOTIFY THE ENGINEER IMMEDIATELY.

REMOVAL OF EXISTING DECK REPAIR NOTES

1. AFTER EXISTING OVERLAY IS REMOVED, PRIOR TO HYDRODEMOLITION, ANY EXISTING DECK REPAIRS THAT ARE LOOSE, PARTIALLY DELAMINATED, OR OTHERWISE UNSOUND, WILL BE MEASURED BY THE ENGINEER AND MARKED FOR REMOVAL.
2. THE CONTRACTOR SHALL REMOVE THE EXISTING DECK REPAIRS IN ACCORDANCE WITH SECTION 628.03(F).
3. THE REMOVAL SHALL NOT INCLUDE ANY UNSOUND ORIGINAL BRIDGE DECK CONCRETE.
4. REFER TO ITEM 6285xx - REMOVAL OF EXISTING DECK REPAIR FOR PAYMENT AND ADDITIONAL INFORMATION.
5. IF REMOVAL OF EXISTING DECK REPAIR REACHES FULL DEPTH, AND WITH THE APPROVAL OF THE ENGINEER, REPAIR AREA SHALL BE REPAIRED IN ACCORDANCE WITH SUBSECTION 628.03(F) AND PAID FOR UNDER ITEM 628053 - DECK REPAIR, FULL DEPTH. REMOVAL OF EXISTING DECK REPAIRS THAT ARE CHANGED TO DECK REPAIR, FULL DEPTH WILL ONLY BE PAID FOR ONCE UNDER ITEM 628053.

DECK REPAIR NOTES

1. AFTER EXISTING OVERLAY IS REMOVED, PRIOR TO HYDRODEMOLITION, EXISTING AREAS OF DECK REQUIRING FULL DEPTH REPAIR AS DIRECTED BY THE ENGINEER, SHALL BE REPAIRED USING DETAIL SHOWN ON THIS SHEET.
2. ALL WORK INVOLVING METHODS OF CONCRETE REMOVAL; CLEANING OF CONCRETE SURFACE AND EXISTING REINFORCEMENT; REPAIRING OR REPLACING DAMAGED REINFORCEMENT AS RESULT OF CONSTRUCTION ACTIVITIES OR SECTION LOSS; PRESENCE OF CONTRACTION OR EXPANSION JOINTS; SURFACE PREPARATION; AND CONCRETE PLACEMENT SHALL BE PERFORMED IN ACCORDANCE WITH SUBSECTION 628.03(F) OF THE STANDARD SPECIFICATIONS AND ITEMS 7605xx - TOTAL SURFACE HYDRODEMOLITION, AND ITEM 6255xx - ADDITIONAL LATEX-MODIFIED CONCRETE FOR PARTIAL DECK REPAIRS. PAYMENT FOR FULL DEPTH DECK REPAIRS MADE AFTER MILLING AND PRIOR TO HYDRODEMOLITION WILL BE MADE UNDER ITEM 628053 - DECK REPAIR, FULL DEPTH. PAYMENT FOR FULL DEPTH DECK REPAIRS MADE AFTER HYDRODEMOLITION WILL BE MADE UNDER ITEM 628053 - DECK REPAIR, FULL DEPTH.
3. MILLING, HYDRODEMOLITION, AND LMC OVERLAY WILL BE PAID FOR UNDER THEIR RESPECTIVE ITEMS.

LEGEND:

- LIMITS OF REMOVAL, MECHANICAL MILLING (ITEM 760013)
- LIMITS OF HYDRODEMOLITION (ITEM 7605xx)
- LIMITS OF REMOVAL (ITEM 628053 OR 6285xx)
- CLASS D CONCRETE

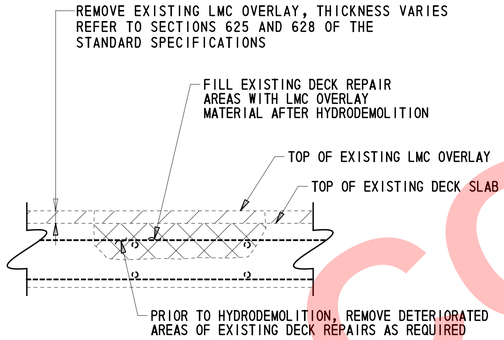

REMOVAL OF EXISTING DECK REPAIRS (ITEM 6285xx)

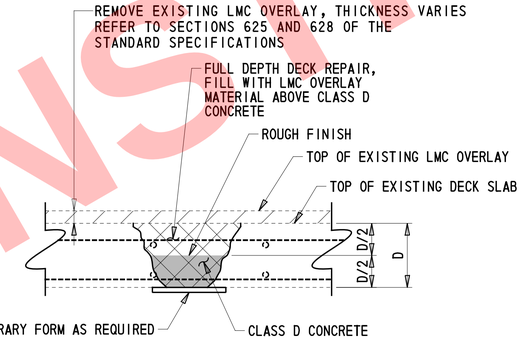

DECK REPAIR, FULL DEPTH (ITEM 628053)

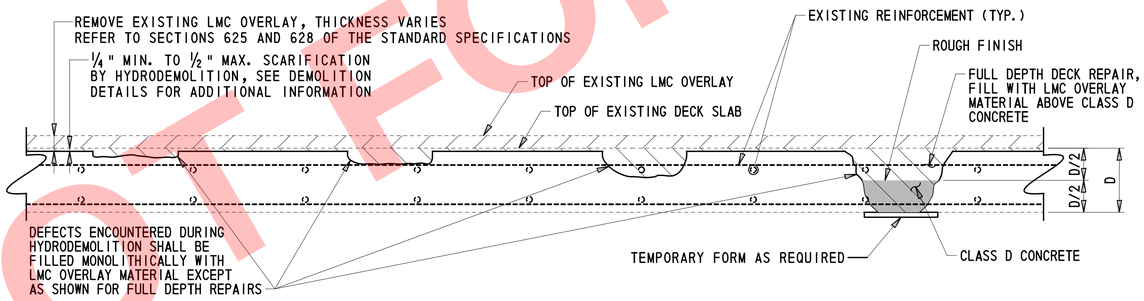

HYDRODEMOLITION AND DECK REPAIR (WITH OVERLAY)

NOT FOR CONSTRUCTION

DELAWARE DEPARTMENT OF TRANSPORTATION	ADDENDUMS / REVISIONS	NOT TO SCALE	REHABILITATION OF I-95 FROM I-495 TO NORTH OF BRANDYWINE RIVER BRIDGE	CONTRACT T201407404	BRIDGE NO. 1 746 059	MISCELLANEOUS DETAILS
				COUNTY NEW CASTLE	DESIGNED BY: TB	
					CHECKED BY: HQ	

1-746 PN-02

SHEET NO. 2-100

TOTAL SHTS. 2-731

$DGNNAME$ $$DATE$$ $TIME$

QUANTITIES

ITEM Nº	ITEM TITLE	UNIT	QUANTITY
207000	STRUCTURAL EXCAVATION	CY	290
211000	REMOVAL OF STRUCTURES AND OBSTRUCTIONS	LS	1
301001	GRADED AGGREGATE BASE COURSE, TYPE B	CY	235
602XXX	CLEANING BRIDGE SCUPPER	EA	6
610002	PORTLAND CEMENT CONCRETE MASONRY, SUBSTRUCTURE, CLASS A	CY	41
610008	PORTLAND CEMENT CONCRETE MASONRY, PARAPET, CLASS A	CY	30
610017	PORTLAND CEMENT CONCRETE MASONRY, SUPERSTRUCTURE, CLASS D	CY	63
610018	PORTLAND CEMENT CONCRETE MASONRY, APPROACH SLAB, CLASS D	CY	304
611000	BAR REINFORCEMENT	LB	20175
611001	BAR REINFORCEMENT, EPOXY COATED	LB	71202
613000	EPOXY CONCRETE SEALER	SF	650
613001	SILICONE BASED ACRYLIC CONCRETE SEALER	SF	16200
613003	HIGH MOLECULAR WEIGHT METHACRYLATE CONCRETE SEALER	SF	22800
615004	REPLACING STEEL RIVETS/BOLTS	EACH	8
616000	CLEANING AND PAINTING EXISTING STEEL	LS	1
623004	CLEAN AND GREASE BRIDGE BEARINGS	EA	96
624000	PREFABRICATED EXPANSION JOINT SYSTEM, 3"	LF	452
625000	LATEX-MODIFIED CONCRETE OVERLAY INSTALLATION	SY-IN	5696
625001	FURNISHING LATEX?MODIFIED CONCRETE OVERLAY	CY	199
6255XX	ADDITIONAL LATEX-MODIFIED CONCRETE FOR PARTIAL DECK REPAIRS	CY	20
628001	REPAIR OF CONCRETE STRUCTURES BY EPOXY INJECTION	LF	172
628041	DEEP SPALL REPAIR	CF	23
628042	REHABILITATION OF P.C.C. MASONRY	CY	1
628053	DECK REPAIR, FULL DEPTH	SF	2
6285XX	REMOVAL OF EXISTING DECK REPAIRS	CY	177
760013	PAVEMENT MILLING, PORTLAND CEMENT CONCRETE PAVEMENT	SY-IN	5107
7605XX	HYDRODEMOLITION	SY	2270

NOTE: QUANTITIES INCLUDE CONTINGENT PERCENTAGES AS NOTED IN NOTE 9 ON DWG. PN-01 AND AS SHOWN IN THE REPAIR TABLE ON DWG. PN-04.

LOAD RATING SUMMARY

DESIGN VEHICLE	RATING FACTOR	RATING WEIGHT (TON)	CONTROLLING MEMBER	CONTROLLING POINT	LOAD EFFECT
HL-93 TRUCK (INVENTORY)	1.57	N/A	EXTERIOR BEAM	105	FLANGE STRESS
HL-93 TANDEM (INVENTORY)	1.77	N/A	EXTERIOR BEAM	105	FLANGE STRESS
HL-93 TRUCK TRAIN (INVENTORY)	N/A	N/A	N/A	N/A	N/A
HS-20 (INVENTORY)	2.03	73.18	EXTERIOR BEAM	105	FLANGE STRESS
HL-93 TRUCK (OPERATING)	20.4	N/A	EXTERIOR BEAM	105	FLANGE STRESS
HL-93 TANDEM (OPERATING)	2.31	N/A	EXTERIOR BEAM	105	FLANGE STRESS
HL-93 TRUCK TRAIN (OPERATING)	N/A	N/A	N/A	N/A	N/A
HS-20 (OPERATING)	2.64	95.13	EXTERIOR BEAM	105	FLANGE STRESS
DE S220 & LEGAL-LANE (LEGAL)	3.42	68.39	EXTERIOR BEAM	105	FLANGE STRESS
DE S335 & LEGAL-LANE (LEGAL)	1.89	66.12	EXTERIOR BEAM	105	FLANGE STRESS
DE S437 & LEGAL-LANE (LEGAL)	1.80	65.85	EXTERIOR BEAM	105	FLANGE STRESS
DE S330 & LEGAL-LANE (LEGAL)	2.78	83.48	EXTERIOR BEAM	105	FLANGE STRESS
DE S435 & LEGAL-LANE (LEGAL)	2.45	85.81	EXTERIOR BEAM	104	FLANGE STRESS
DE S540 & LEGAL-LANE (LEGAL)	2.19	87.72	EXTERIOR BEAM	105	FLANGE STRESS

NOTE: LOAD RATING INCLUDES FUTURE WEARING SURFACE AS NOTED IN THE PLANS.

NOT FOR CONSTRUCTION

$DGNNAME$
$$DATE$$ $TIME$

DELAWARE
DEPARTMENT OF TRANSPORTATION

ADDENDUMS / REVISIONS

NOT TO SCALE

REHABILITATION OF I-95
FROM I-495 TO NORTH OF
BRANDYWINE RIVER BRIDGE

CONTRACT T201407404
COUNTY NEW CASTLE
BRIDGE NO. 1 746 059
DESIGNED BY: TB
CHECKED BY: HQ

QUANTITIES AND
LOAD RATINGS

1-746
PN-03
SHEET NO. 2-101
TOTAL SHTS. 2-731

REPAIR NO.	REPAIR DESCRIPTION	LOCATION	REMARKS	DWG. NO.	ITEM NO.	ITEM DESCRIPTION	UNIT	QTY.	CONTINGENT %	TOTAL QTY.
1	JOINT REPLACEMENT (FULL REPLACEMENT)	PIER 1, PIER 2		EX-01	610008	PORTLAND CEMENT CONCRETE MASONRY, PARAPET, CLASS A	CY	4	0	4
				TO	610017	PORTLAND CEMENT CONCRETE MASONRY, SUPERSTRUCTURE, CLASS D	CY	30	0	30
				EX-07	611000	BAR REINFORCEMENT	LB	7548	0	7548
					624000	PREFABRICATED EXPANSION JOINT SYSTEMS, 3"	LF	226	0	226
3	MILL EXISTING DECK/OVERLAY	ENTIRE BRIDGE		DM-01	628053	DECK REPAIR, FULL DEPTH	SF	0	EQ	2
					760013	PAVEMENT MILLING, PORTLAND CEMENT CONCRETE PAVEMENT	SY-IN	5107	0	5107
4	HYDRODEMOLITION OF EXISTING DECK SURFACE	ENTIRE BRIDGE		DM-01	6285XX	REMOVAL OF EXISTING DECK REPAIRS	SF	141	25	177
					7605XX	HYDRODEMOLITION	SY	2270	0	2270
5	FURNISH AND INSTALL LMC OVERLAY	ENTIRE BRIDGE		DM-01	625000	LATEX-MODIFIED CONCRETE OVERLAY INSTALLATION	SY-IN	5696	0	5696
					625001	FURNISHING LATEX-MODIFIED CONCRETE OVERLAY	CY	159	25	199
					6255XX	ADDITIONAL LATEX-MODIFIED CONCRETE FOR PARTIAL DECK REPAIRS	CY	16	25	20
6	REPAIR SPALL/DELAMINATION IN SOFFIT	SEE LOCATIONS ON SOFFIT REPAIR PLAN		SO-01	628041	DEEP SPALL REPAIR	CF	4	25	5
9	REMOVE AND REPLACE CONCRETE APPROACH SLAB	ABUTMENT A, ABUTMENT B		AS-01	207000	STRUCTURAL EXCAVATION	CY	290	0	290
				TO	211000	REMOVAL OF STRUCTURES AND OBSTRUCTIONS	LS	1	0	1
				AS-07	301001	GRADED AGGREGATE BASE COURSE, TYPE B	CY	235	0	235
					610008	PORTLAND CEMENT CONCRETE MASONRY, PARAPET, CLASS A	CY	22	0	22
					610018	PORTLAND CEMENT CONCRETE MASONRY, APPROACH SLAB, CLASS D	CY	304	0	304
					611000	BAR REINFORCEMENT	LB	128	0	128
					611001	BAR REINFORCEMENT, EPOXY COATED	LB	69808	0	69808
					624000	PREFABRICATED EXPANSION JOINT SYSTEMS, 3"	LF	226	0	226
10	CLEAN SCUPPER AND DOWNSPOUT	ENTIRE BRIDGE - 1 EACH DRECTION PER SPAN, 6 TOTAL			602XXX	CLEANING BRIDGE SCUPPER	EA	6	0	6
27	REPLACE ANCHOR BOLT NUTS	ABUTMENT A: BEARING 2 WEST ANCHOR BOLT, BEARING 3 WEST ANCHOR BOLT, BEARING 7 EAST ANCHOR BOLT, BEARING 16 WEST ANCHOR BOLT			615004	REPLACING STEEL RIVETS/BOLTS	EA	4	100	8
32	CLEAN AND PAINT EXISTING STEEL STRUCTURE	ENTIRE SUPERSTRUCTURE			616000	CLEANING AND PAINTING EXISTING STEEL	LS	1	0	1
33	CLEAN AND GREASE BRIDGE BEARINGS	ENTIRE BRIDGE			623004	CLEAN AND GREASE BRIDGE BEARINGS	EA	96	0	96
34	SEAL CRACKS IN CONCRETE SUBSTRUCTURE	ABUTMENT A, ABUTMENT B, PIER 1, PIER 2, SEE DWGS. AB-01 THROUGH AB-05, AND DWGS. PR-01 THROUGH PR-04.			628001	REPAIR OF CONCRETE STRUCTURES BY EPOXY INJECTION	LF	137	25	172
37	REPAIR DEEP SPALLS IN CONCRETE SUBSTRUCTURE	ABUTMENT A, ABUTMENT B, PIER 1, PIER 2, SEE DWGS. AB-01 THROUGH AB-05, AND DWGS. PR-01 THROUGH PR-04.	INCLUDES CLEANING DIRT AND DEBRIS FROM TOPS OF SUBSTRUCTURE UNITS		628041	DEEP SPALL REPAIR	CF	14	25	18
					628042	REHABILITATION OF PCC MASONRY	CY	0	EQ	1
41	CLEAN AND SEAL CONCRETE SURFACES	ABUTMENT A, ABUTMENT B, PIER 1, PIER 2. MEDIAN AND EXTERIOR PARAPETS, FULL LENGTH OF BRIDGE.			613000	EPOXY CONCRETE SEALER	SF	650	0	650
					613001	SILICONE-BASED ACRYLIC CONCRETE SEALER	SF	16200	0	16200
45	SEAL DECK WITH HMWM CONCRETE SEALER	ENTIRE BRIDGE		TS-01	613003	HIGH MOLECULAR WEIGHT METHACRYLATE CONCRETE SEALER	SF	22800	0	22800
46	REPLACE ABUTMENT JOINT WITH DECK-OVER	ABUTMENT A, ABUTMENT B		EX-05	211000	REMOVAL OR STRUCTURES AND OBSTRUCTIONS	LS	1	0	1
				TO	610002	PORTLAND CEMENT CONCRETE MASONRY, SUBSTRUCTURE, CLASS A	CY	41	0	41
				EX-07	610008	PORTLAND CEMENT CONCRETE MASONRY, PARAPET, CLASS A	CY	4	0	4
					610017	PORTLAND CEMENT CONCRETE MASONRY, SUPERSTRUCTURE, CLASS D	CY	33	0	33
					611000	BAR REINFORCEMENT	LB	12499	0	12499
					611001	BAR REINFORCEMENT, EPOXY COATED	LB	1394	0	1394

NOT FOR CONSTRUCTION

1-746
PN-04

DELAWARE
DEPARTMENT OF TRANSPORTATION

ADDENDUMS / REVISIONS

NOT TO SCALE

REHABILITATION OF I-95
FROM I-495 TO NORTH OF
BRANDYWINE RIVER BRIDGE

CONTRACT T201407404
COUNTY NEW CASTLE
BRIDGE NO. 1 746 059
DESIGNED BY: TB
CHECKED BY: HQ

PROPOSED REPAIR AND
RECONSTRUCTION ITEMS

SHEET NO. 2-102
TOTAL SHTS. 2-731

$DGNNAME$
$$DATE$$ $TIME$

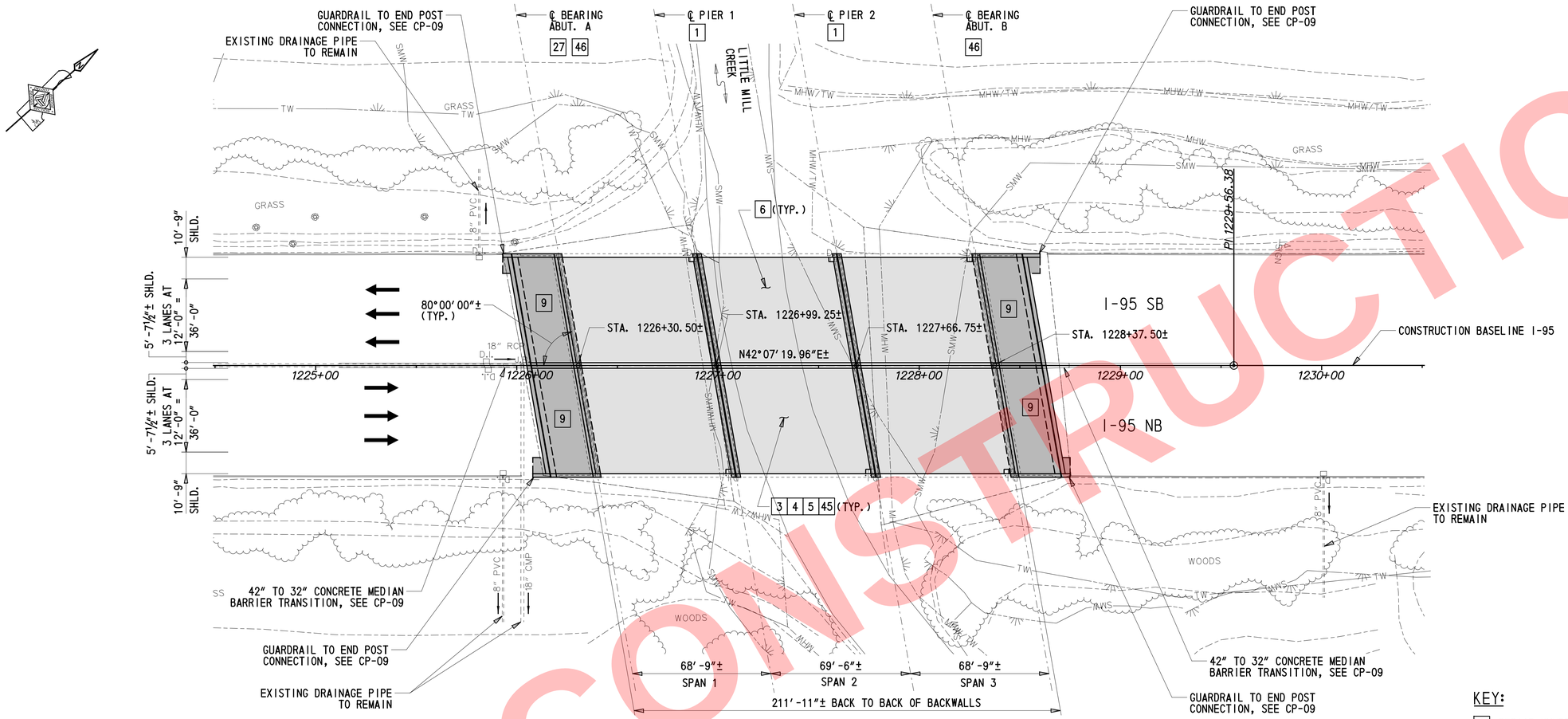

PLAN

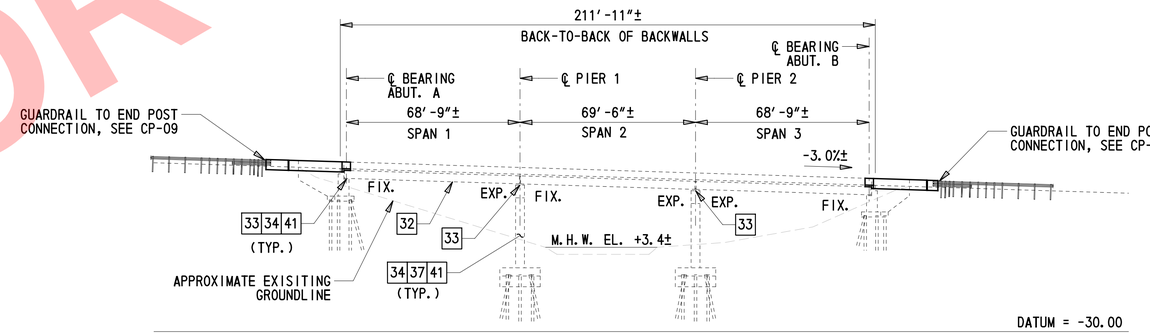

ELEVATION

NOTES:

1. SEE DWG. PN-04 FOR REPAIR TABLE.
2. DIMENSIONS SHOWN ARE MEASURED ALONG CONSTRUCTION BASELINE I-95.
3. PILES SHOWN ARE BASED ON AS-BUILT PLANS DATED MAY 25, 1962.

KEY:

1 REPAIR NUMBER AS SHOWN ON DWG. PN-04

LEGEND:

MILL AND OVERLAY DECK

REMOVAL AND RECONSTRUCTION

NOT FOR CONSTRUCTION

$DGNNAME$ $DATE$ $TIME$

DELAWARE DEPARTMENT OF TRANSPORTATION

ADDENDUMS / REVISIONS

SCALE 0 30 60 90 FEET

REHABILITATION OF I-95 FROM I-495 TO NORTH OF BRANDYWINE RIVER BRIDGE

CONTRACT	T201407404
COUNTY	NEW CASTLE
BRIDGE NO.	1 746 059
DESIGNED BY:	TB
CHECKED BY:	HQ

GENERAL PLAN AND ELEVATION

	1-746 PE-01
SHEET NO.	2-103
TOTAL SHTS.	2-731

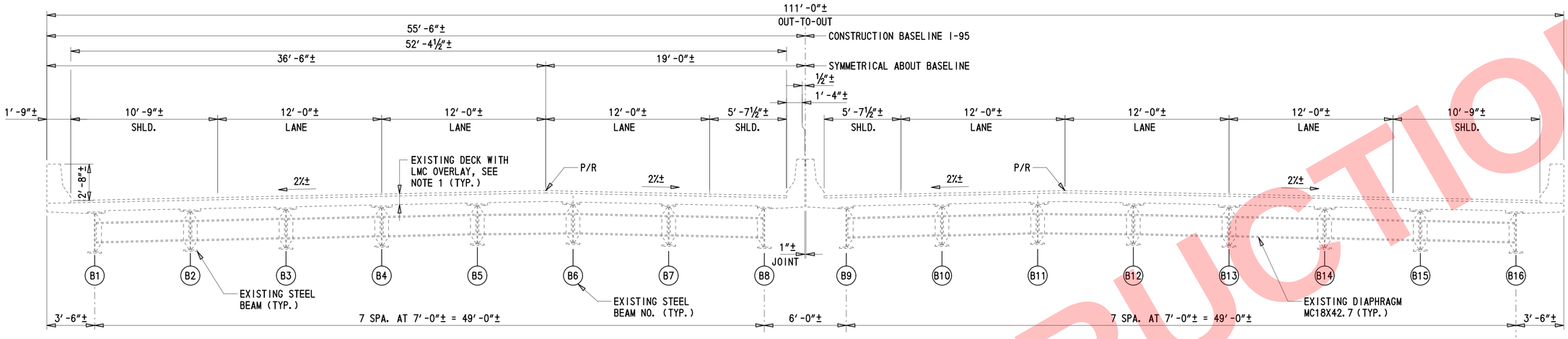

EXISTING TYPICAL SECTION

¼″ = 1′-0″

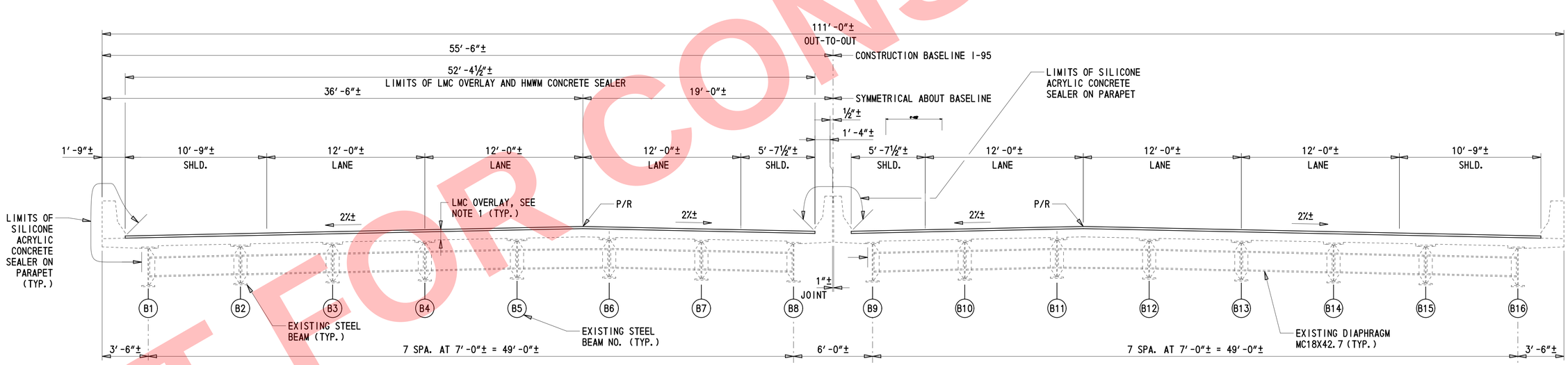

PROPOSED TYPICAL SECTION

¼″ = 1′-0″

NOTES:

1. THICKNESS OF EXISTING DECK AND PROPOSED LMC OVERLAYS VARY, SEE DM-01 FOR DETAILS AND DECK CORE RESULTS.

NOT FOR CONSTRUCTION

$DGNNAME$ $$DATE$$ $TIME$

DELAWARE DEPARTMENT OF TRANSPORTATION

ADDENDUMS / REVISIONS

SCALE AS NOTED

REHABILITATION OF I-95 FROM I-495 TO NORTH OF BRANDYWINE RIVER BRIDGE

CONTRACT	BRIDGE NO. 1 746 059
T201407404	DESIGNED BY: KY
COUNTY	CHECKED BY: HQ
NEW CASTLE	

BRIDGE TYPICAL SECTIONS

1-746 TS-01

SHEET NO.	TOTAL SHTS.
2-104	2-731

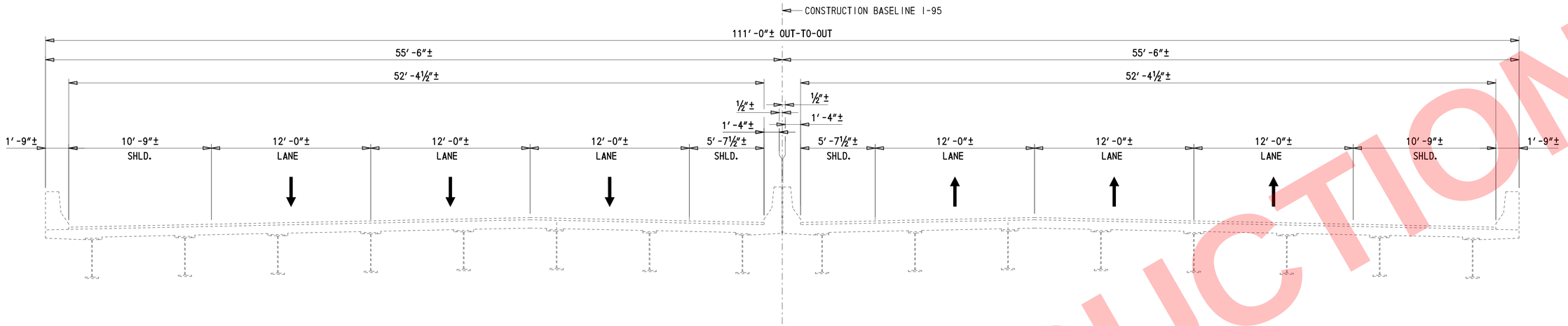

EXISTING TYPICAL SECTION

¼″ = 1′-0″

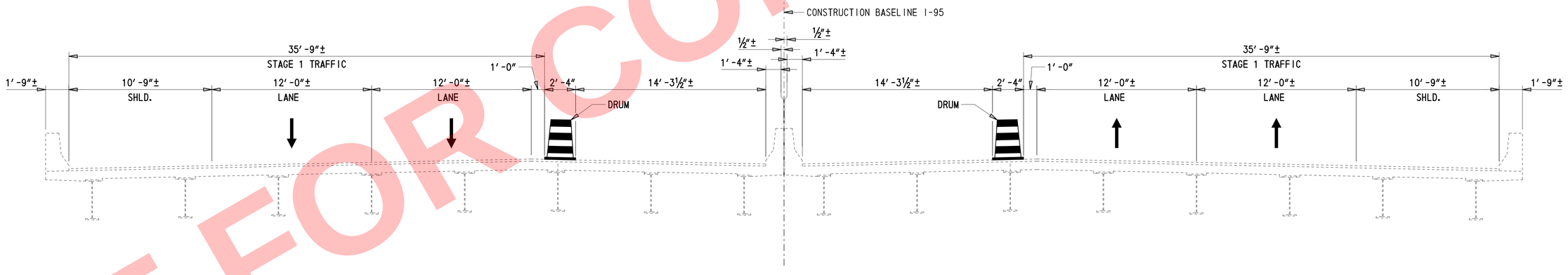

STAGE 1

¼″ = 1′-0″

SEQUENCE OF CONSTRUCTION NOTES - STAGE 1:

1. SET UP THE STAGE 1 MOT AND SHIFT TRAFFIC TO THE NEW LANE CONFIGUATION.

NOTES:

1. DEMO SHIELDS NOT SHOWN.
2. NO BRIDGE DECK WORK IN STAGE 1, SHOWN FOR INFORMATION PURPOSE ONLY.

NOT FOR CONSTRUCTION

$DGNNAME$ $DATE$ $TIME$

DELAWARE
DEPARTMENT OF TRANSPORTATION

ADDENDUMS / REVISIONS

SCALE AS NOTED

REHABILITATION OF I-95
FROM I-495 TO NORTH OF
BRANDYWINE RIVER BRIDGE

CONTRACT	BRIDGE NO. 1 746 059
T201407404	DESIGNED BY: KY
COUNTY	
NEW CASTLE	CHECKED BY: HQ

SEQUENCE OF
CONSTRUCTION – 1

1-746 SC-01
SHEET NO. 2-105
TOTAL SHTS. 2-731

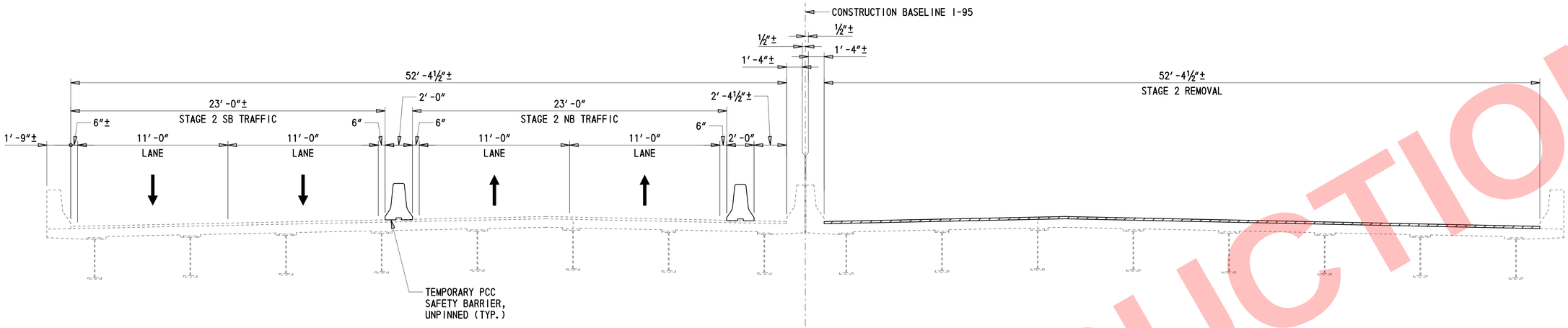

STAGE 2 REMOVAL

¼" = 1'-0"

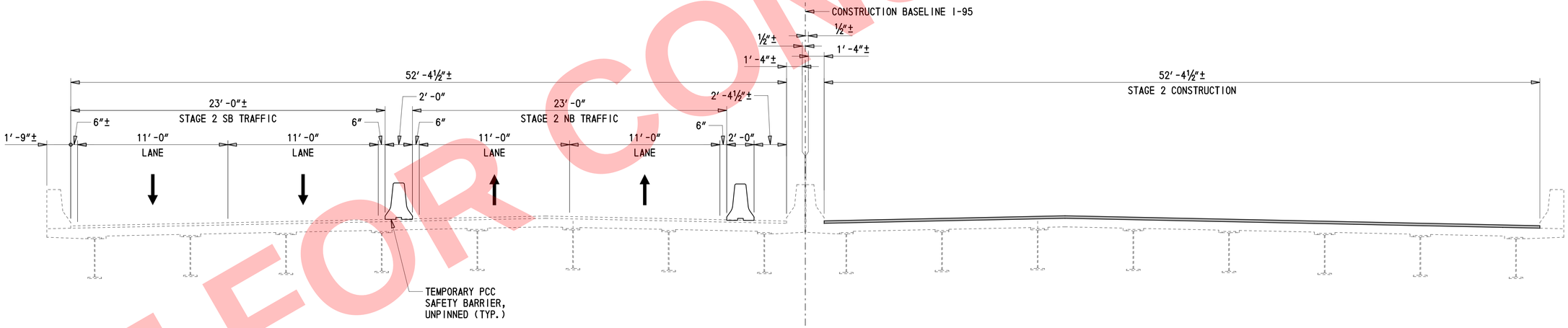

STAGE 2 CONSTRUCTION

¼" = 1'-0"

LEGEND:

- LIMITS OF REMOVAL
- PROPOSED CONSTRUCTION

SEQUENCE OF CONSTRUCTION NOTES - STAGE 2:

1. SET UP THE STAGE 2 MOT AND SHIFT TRAFFIC TO THE NEW LANE CONFIGURATION.
2. PERFORM STAGE 2 REMOVAL.
3. PLACE NEW LMC OVERLAY WITHIN THE LIMITS OF STAGE 2 CONSTRUCTION.

NOTES:

1. DEMO SHIELDS NOT SHOWN.

NOT FOR CONSTRUCTION

$DGNNAME$ $DATE$ $TIME$

DELAWARE
DEPARTMENT OF TRANSPORTATION

ADDENDUMS / REVISIONS

SCALE AS NOTED

REHABILITATION OF I-95
FROM I-495 TO NORTH OF
BRANDYWINE RIVER BRIDGE

CONTRACT	BRIDGE NO. 1 746 059
T201407404	DESIGNED BY: KY
COUNTY	CHECKED BY: HQ
NEW CASTLE	

SEQUENCE OF
CONSTRUCTION – 2

1-746 SC-02	
SHEET NO.	2-106
TOTAL SHTS.	2-731

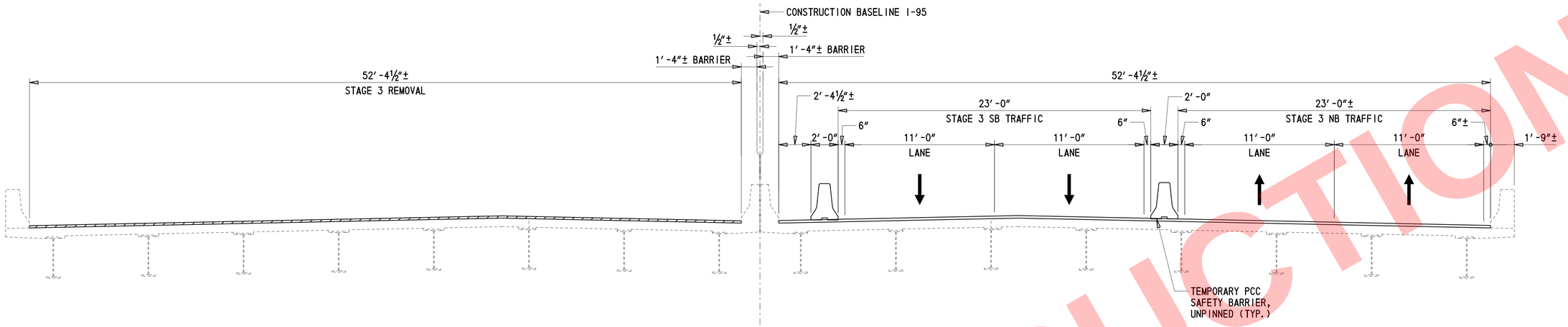

STAGE 3 REMOVAL

¼" = 1'-0"

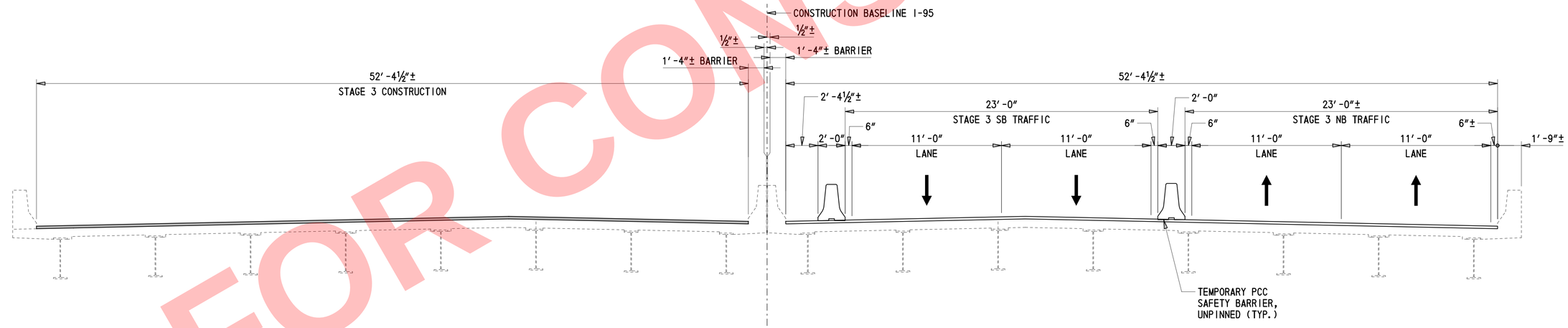

STAGE 3 CONSTRUCTION

¼" = 1'-0"

LEGEND:

- LIMITS OF REMOVAL
- PROPOSED CONSTRUCTION

SEQUENCE OF CONSTRUCTION NOTES - STAGE 3:

1. SET UP THE STAGE 3 MOT AND SHIFT TRAFFIC TO THE NEW LANE CONFIGURATION.
2. PERFORM STAGE 3 REMOVAL.
3. PLACE NEW LMC OVERLAY WITHIN THE LIMITS OF STAGE 3 CONSTRUCTION.

NOTES:

1. DEMO SHIELDS NOT SHOWN.

NOT FOR CONSTRUCTION

$DGNNAME$ $TIME$
$DATE$

DELAWARE
DEPARTMENT OF TRANSPORTATION

ADDENDUMS / REVISIONS

SCALE AS NOTED

REHABILITATION OF I-95
FROM I-495 TO NORTH OF
BRANDYWINE RIVER BRIDGE

CONTRACT	BRIDGE NO.	1 746 059
T201407404	DESIGNED BY: KY	
COUNTY	CHECKED BY: HQ	
NEW CASTLE		

SEQUENCE OF
CONSTRUCTION - 3

1-746 SC-03
SHEET NO. 2-107
TOTAL SHTS. 2-731

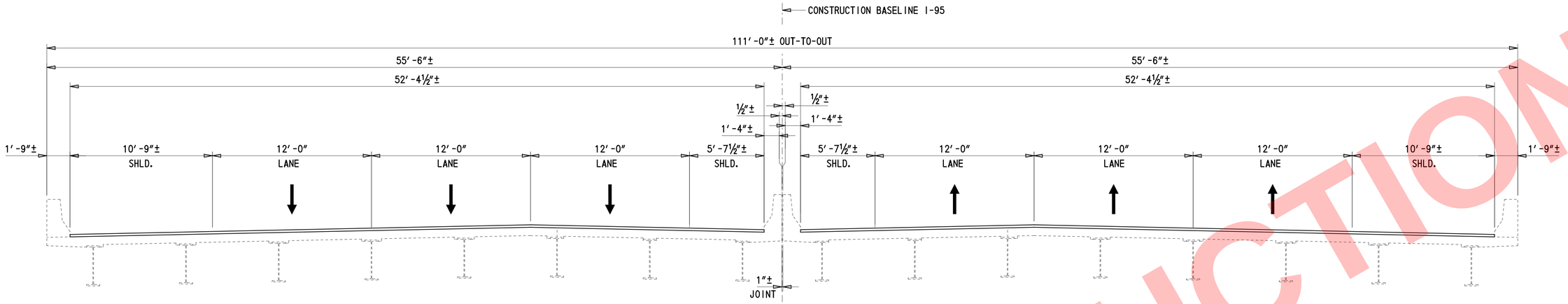

COMPLETED TYPICAL SECTION

¼″ = 1′-0″

NOTES:

1. NO BRIDGE DECK WORK IN STAGE 4.

NOT FOR CONSTRUCTION

$DGNNAME$
$$DATE$$ $TIME$

DELAWARE
DEPARTMENT OF TRANSPORTATION

ADDENDUMS / REVISIONS	

SCALE AS NOTED

REHABILITATION OF I-95
FROM I-495 TO NORTH OF
BRANDYWINE RIVER BRIDGE

CONTRACT	T201407404
COUNTY	NEW CASTLE
BRIDGE NO.	1 746 059
DESIGNED BY:	KY
CHECKED BY:	HQ

SEQUENCE OF
CONSTRUCTION – 4

1-746 SC-04	
SHEET NO.	2-108
TOTAL SHTS.	2-731

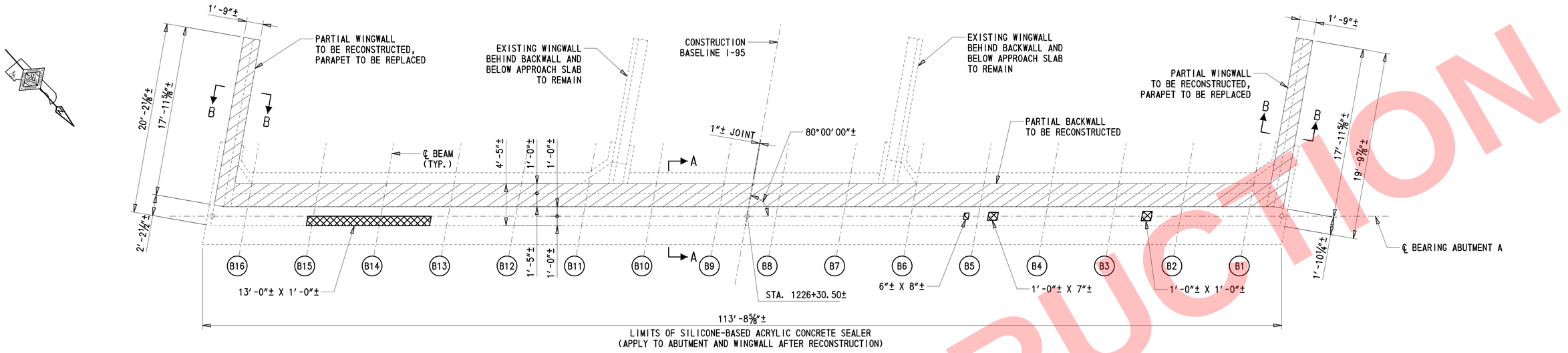

ABUTMENT A - PLAN

⅛″ = 1′-0″

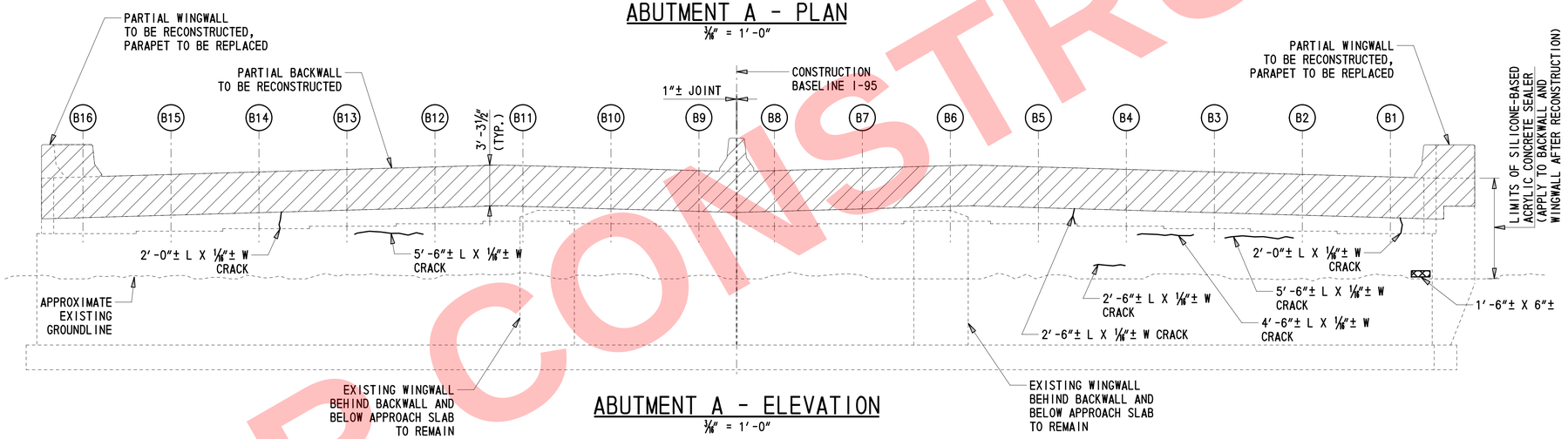

ABUTMENT A - ELEVATION

⅛″ = 1′-0″

LEGEND:

REPAIR OF CONCRETE STRUCTURES BY EPOXY INJECTION

DEEP SPALL REPAIR

REMOVAL LIMITS

CONCRETE REPAIR QUANTITIES - ABUTMENT A

REPAIR NO.	ITEM NO.	ITEM TITLE	UNIT	QUANTITY
34	628001	REPAIR OF CONCRETE STRUCTURES BY EPOXY INJECTION	LF	30
37	628041	DEEP SPALL REPAIR	CF	4
41	613001	SILICONE BASED ACRYLIC CONCRETE SEALER	SF	1318

NOTE: QUANTITIES SHOWN ARE TOTAL PER PIER AND DO NOT INCLUDE CONTINGENT PERCENTAGE.

NOTES:

1. THE LOCATION AND QUANTITIES OF THE REPAIRS SHOWN ON THIS DRAWING ARE BASED ON INSPECTION FIELD NOTES (SEE 9 ON DWG. PN-01) AND ARE APPROXIMATE AND DO REQUIRE VERIFICATION. PRIOR TO STARTING EACH REPAIR, THE LIMITS SHALL BE VERIFIED BY THE CONTRACTOR IN THE PRESENCE OF THE ENGINEER.
2. WHERE CRACKS AND SPALLS EXIST CONCURRENTLY, COMPLETE THE SPALL REPAIR COMPLETELY REMOVING THE ASSOCIATED CRACK. IF THE CRACK EXTENDS LESS THAN 1′-0″ BEYOND THE LIMITS OF THE SPALL REPAIR, EXTEND THE LIMIS OF THE SPALL REPAIR TO ENCOMPASS THE CRACK. IF THE CRACK EXTENDS DEEPER THAN THE LIMITS OF CONCRETE REMOVAL, THE CONTRACTOR SHALL REMOVE ADDITIONAL CONCRETE UNTIL THE CRACK IS FULLY REMOVED. IF THE DEPTH OF REMOVAL REACHS MORE THAN 6″ FROM THE ORIGINAL FACE OF CONCRETE, ALL WORK ON THE REPAIR SHALL STOP AND THE ENGINEER SHALL BE NOTIFIED IMMEDIATELY. IF THE CRACK EXTENDS MORE THAN 1′-0″ BEYOND THE LIMITS OF THE SPALL REPAIR INTO SOUND CONCRETE THE CRACK SHALL BE REPAIRED BY EPOXY INJECTION AND PAID FOR UNDER ITEM 628001 - REPAIR OF CONCRETE STRUCTURES BY EPOXY INJECTION BEYOND THE LIMITS OF THE SPALL REPAIR. CRACKS LOCATED WITHIN SPALL REPAIRS WILL NOT BE PAID FOR AND WILL BE CONSIDERED INCIDENTAL TO ITEM 628041 - DEEP SPALL REPAIR.
3. FOR CONCRETE REPAIR DETAILS, SEE DWG. PN-02.

NOTES (CONTINUED):

4. CONTRACTOR SHALL TAKE CARE TO PROTECT THE BEARINGS DURING APPLICATION OF THE SILICONE-BASED ACRYLIC CONCRETE SEALER. ANY CLEAN-UP REQUIRED TO REMOVE THE FROM THE BEARINGS WILL BE AT NO ADDITIONAL COST TO THE DEPARTMENT AND TO THE SATISFACTION OF THE ENGINEER.
5. SILICONE-BASED ACRYLIC CONCRETE SEALER SHALL BE APPLIED TO ALL EXPOSED CONCRETE ABUTMENT AND WINGWALL SURFACES. PAYMENT WILL BE MADE UNDER ITEM 613001 - SILICONE-BASED ACRYLIC CONCRETE SEALER. QUANTITY SHOWN ON THIS SHEET INCLUDES SEALER ON WINGWALLS.
6. CONTRACTOR SHALL REMOVE DEBRIS FROM THE BEAM SEAT PRIOR TO APPLICATION OF SILICONE-BASED CONCRETE SEALER. PAYMENT FOR THIS WORK WILL BE INCIDENTAL TO ITEM 613001 - SILICONE-BASED ACRYLIC CONCRETE SEALER.
7. SILICONE-BASED ACRYLIC CONCRETE SEALER SHALL ONLY BE APPLIED AFTER ALL CONCRETE REPAIRS ARE COMPLETED AT THE ABUTMENT.
8. FOR SECTIONS A-A, B-B, AND ABUTMENT BACKWALL RECONSTRUCTION DETAILS, SEE DWG. AB-03.
9. FOR WINGWALL PARAPET DEMOLITION LIMITS AND DETAILS, SEE DWG. AB-04.

NOT FOR CONSTRUCTION

DELAWARE DEPARTMENT OF TRANSPORTATION	ADDENDUMS / REVISIONS	SCALE AS NOTED	REHABILITATION OF I-95 FROM I-495 TO NORTH OF BRANDYWINE RIVER BRIDGE	CONTRACT T201407404	BRIDGE NO. 1 746 059	ABUTMENT A CONCRETE REPAIR DETAILS (NORTH ELEVATION)
				COUNTY NEW CASTLE	DESIGNED BY: TB	
					CHECKED BY: HQ	

1-746 AB-01

SHEET NO. 2-109

TOTAL SHTS. 2-731

$DONAME$ $DATE$ $TIME$

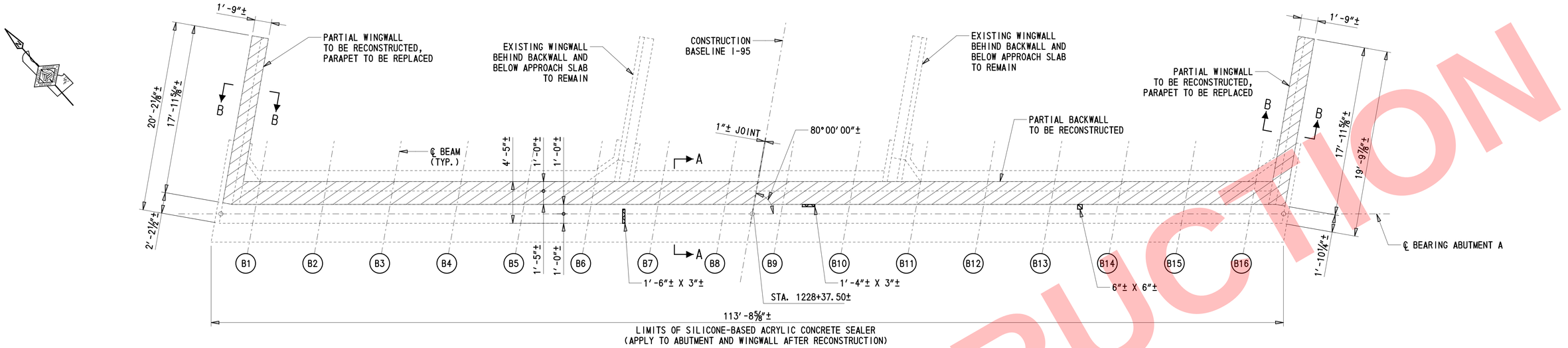

ABUTMENT B - PLAN

⅜″ = 1′-0″

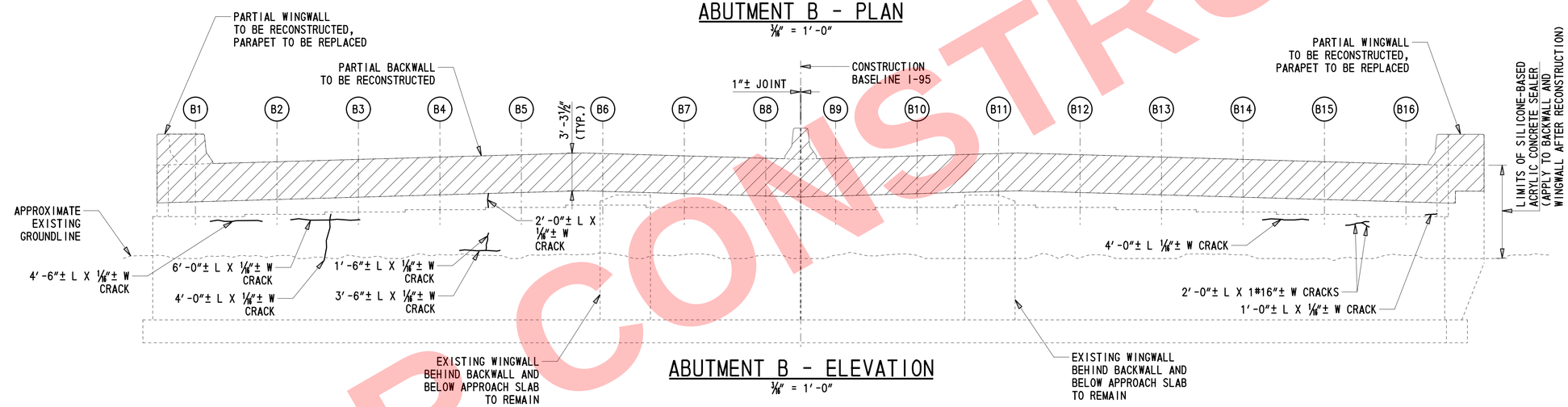

ABUTMENT B - ELEVATION

⅜″ = 1′-0″

LEGEND:

REPAIR OF CONCRETE STRUCTURES BY EPOXY INJECTION

DEEP SPALL REPAIR

REMOVAL LIMITS

CONCRETE REPAIR QUANTITIES - ABUTMENT B

REPAIR NO.	ITEM NO.	ITEM TITLE	UNIT	QUANTITY
34	628001	REPAIR OF CONCRETE STRUCTURES BY EPOXY INJECTION	LF	33
37	628041	DEEP SPALL REPAIR	CF	1
41	613001	SILICONE BASED ACRYLIC CONCRETE SEALER	SF	1318

NOTE: QUANTITIES SHOWN ARE TOTAL PER PIER AND DO NOT INCLUDE CONTINGENT PERCENTAGE.

NOTES:

1. THE LOCATION AND QUANTITIES OF THE REPAIRS SHOWN ON THIS DRAWING ARE BASED ON INSPECTION FIELD NOTES (SEE 9 ON DWG. PN-01) AND ARE APPROXIMATE AND DO REQUIRE VERIFICATION. PRIOR TO STARTING EACH REPAIR, THE LIMITS SHALL BE VERIFIED BY THE CONTRACTOR IN THE PRESENCE OF THE ENGINEER.
2. WHERE CRACKS AND SPALLS EXIST CONCURRENTLY, COMPLETE THE SPALL REPAIR COMPLETELY REMOVING THE ASSOCIATED CRACK. IF THE CRACK EXTENDS LESS THAN 1′-0″ BEYOND THE LIMITS OF THE SPALL REPAIR, EXTEND THE LIMIS OF THE SPALL REPAIR TO ENCOMPASS THE CRACK. IF THE CRACK EXTENDS DEEPER THAN THE LIMITS OF CONCRETE REMOVAL, THE CONTRACTOR SHALL REMOVE ADDITIONAL CONCRETE UNTIL THE CRACK IS FULLY REMOVED. IF THE DEPTH OF REMOVAL REACHS MORE THAN 6″ FROM THE ORIGINAL FACE OF CONCRETE, ALL WORK ON THE REPAIR SHALL STOP AND THE ENGINEER SHALL BE NOTIFIED IMMEDIATELY. IF THE CRACK EXTENDS MORE THAN 1′-0″ BEYOND THE LIMITS OF THE SPALL REPAIR INTO SOUND CONCRETE THE CRACK SHALL BE REPAIRED BY EPOXY INJECTION AND PAID FOR UNDER ITEM 628001 - REPAIR OF CONCRETE STRUCTURES BY EPOXY INJECTION BEYOND THE LIMITS OF THE SPALL REPAIR. CRACKS LOCATED WITHIN SPALL REPAIRS WILL NOT BE PAID FOR AND WILL BE CONSIDERED INCIDENTAL TO ITEM 628041 - DEEP SPALL REPAIR.
3. FOR CONCRETE REPAIR DETAILS, SEE DWG. PN-02.

NOTES (CONTINUED):

4. CONTRACTOR SHALL TAKE CARE TO PROTECT THE BEARINGS DURING APPLICATION OF THE SILICONE-BASED ACRYLIC CONCRETE SEALER. ANY CLEAN-UP REQUIRED TO REMOVE THE FROM THE BEARINGS WILL BE AT NO ADDITIONAL COST TO THE DEPARTMENT AND TO THE SATISFACTION OF THE ENGINEER.
5. SILICONE-BASED ACRYLIC CONCRETE SEALER SHALL BE APPLIED TO ALL EXPOSED CONCRETE ABUTMENT AND WINGWALL SURFACES. PAYMENT WILL BE MADE UNDER ITEM 613001 - SILICONE-BASED ACRYLIC CONCRETE SEALER. QUANTITY SHOWN ON THIS SHEET INCLUDES SEALER ON WINGWALLS.
6. CONTRACTOR SHALL REMOVE DEBRIS FROM THE BEAM SEAT PRIOR TO APPLICATION OF SILICONE-BASED CONCRETE SEALER. PAYMENT FOR THIS WORK WILL BE INCIDENTAL TO ITEM 613001 - SILICONE-BASED ACRYLIC CONCRETE SEALER.
7. SILICONE-BASED ACRYLIC CONCRETE SEALER SHALL ONLY BE APPLIED AFTER ALL CONCRETE REPAIRS ARE COMPLETED AT THE ABUTMENT.
8. FOR SECTIONS A-A, B-B, AND ABUTMENT BACKWALL RECONSTRUCTION DETAILS, SEE DWG. AB-03.
9. FOR WINGWALL PARAPET DEMOLITION LIMITS AND DETAILS, SEE DWG. AB-04.

NOT FOR CONSTRUCTION

1-746
AB-02

DELAWARE
DEPARTMENT OF TRANSPORTATION

ADDENDUMS / REVISIONS

SCALE AS NOTED

REHABILITATION OF I-95 FROM I-495 TO NORTH OF BRANDYWINE RIVER BRIDGE

CONTRACT T201407404
COUNTY NEW CASTLE
BRIDGE NO. 1 746 059
DESIGNED BY: TB
CHECKED BY: HQ

ABUTMENT B CONCRETE REPAIR DETAILS (SOUTH ELEVATION)

SHEET NO. 2-110
TOTAL SHTS. 2-731

$$SIGNNAME$$ $$TIME$$
$$DATE$$

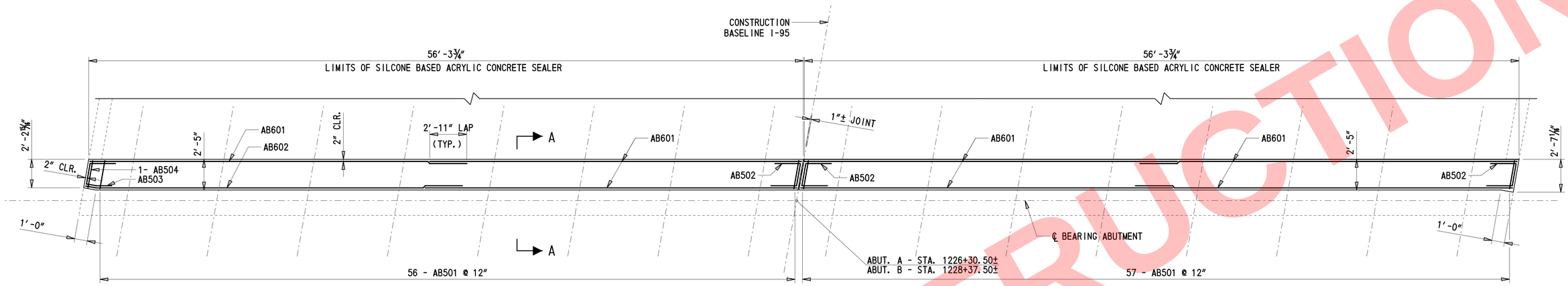

TYPICAL ABUTMENT BACKWALL REINFORCEMENT PLAN

¼″ = 1′-0″

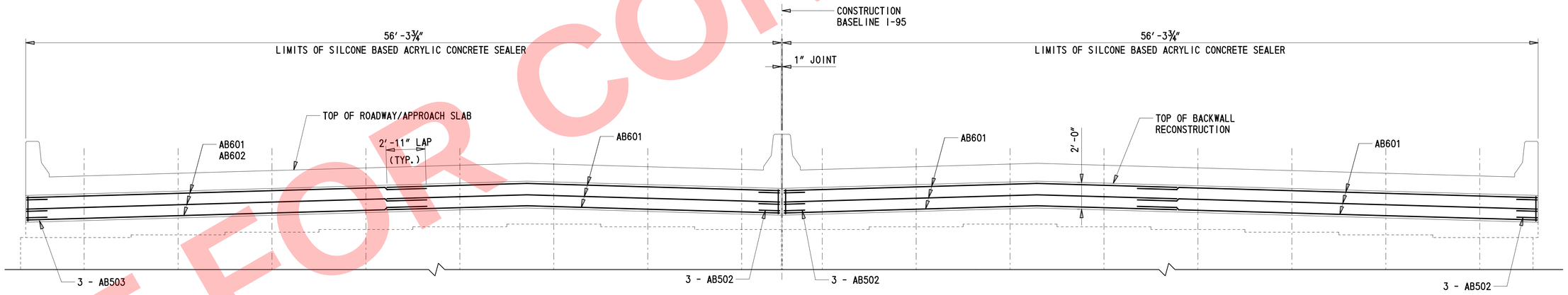

TYPICAL ABUTMENT BACKWALL REINFORCEMENT ELEVATION

¼″ = 1′-0″

NOTE:

1. FOR SECTION A-A, ABUTMENT BACKWALL RECONSTRUCTION DETAILS, AND ADDITIONAL NOTES, SEE DWG. AB-04.

NOT FOR CONSTRUCTION

$DGNNAME$ $DATE$ $TIME$	DELAWARE DEPARTMENT OF TRANSPORTATION	ADDENDUMS / REVISIONS	SCALE AS NOTED	REHABILITATION OF I-95 FROM I-495 TO NORTH OF BRANDYWINE RIVER BRIDGE	CONTRACT T201407404	BRIDGE NO. 1 746 059	ABUTMENT BACKWALL REINFORCEMENT PLAN AND ELEVATION	1-746 AB-03
					COUNTY NEW CASTLE	DESIGNED BY: TB		SHEET NO. 2-111
						CHECKED BY: HQ		TOTAL SHTS. 2-731

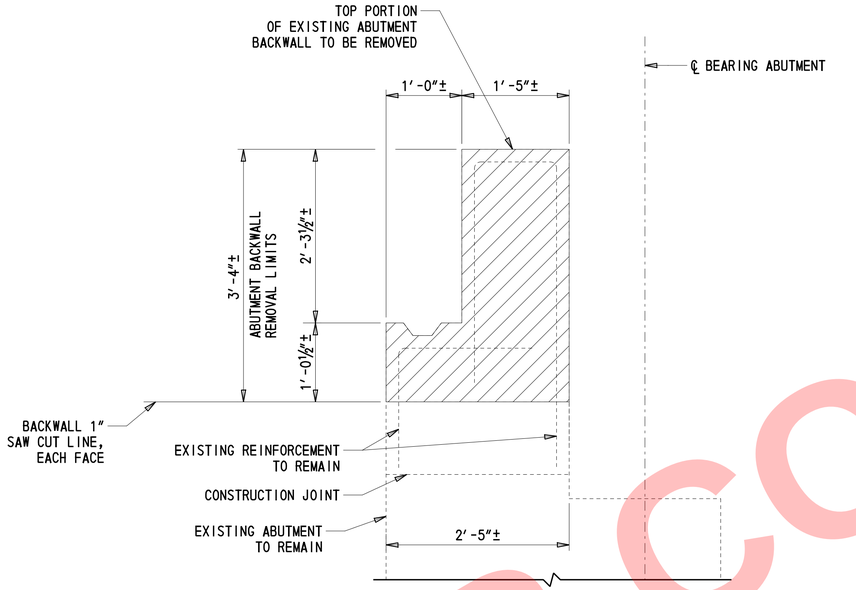

SECTION A-A (REMOVAL)

1" = 1'-0"

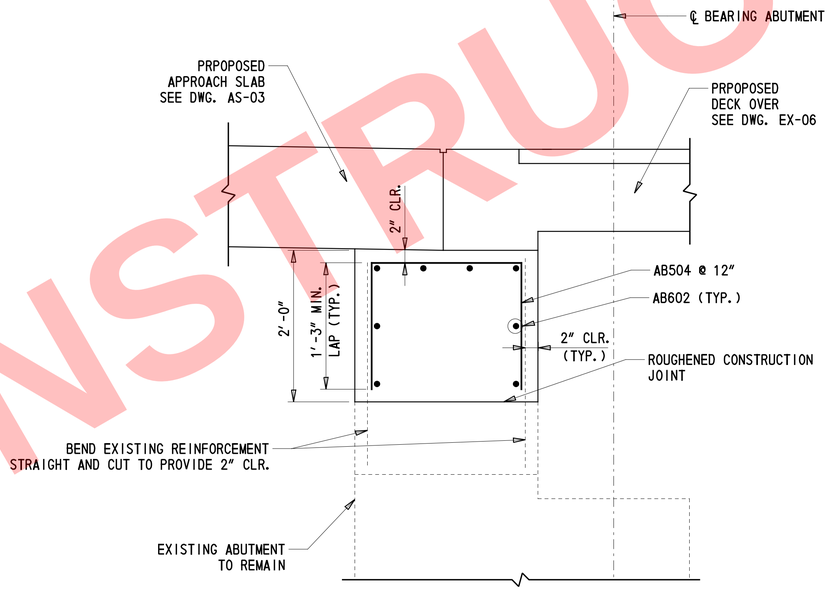

SECTION A-A (RECONSTRUCTION)

1" = 1'-0"

NOTE:

1. REMOVE EXISTING HORIZONTAL REINFORCEMENT WITHIN ABUTMENT BACKWALL REMOVAL LIMITS.

LEGEND:

LIMITS OF REMOVAL

NOT FOR CONSTRUCTION

DELAWARE DEPARTMENT OF TRANSPORTATION	ADDENDUMS / REVISIONS	SCALE AS NOTED	REHABILITATION OF I-95 FROM I-495 TO NORTH OF BRANDYWINE RIVER BRIDGE	CONTRACT T201407404 / COUNTY NEW CASTLE	BRIDGE NO. 1 746 059 / DESIGNED BY: KY / CHECKED BY: HQ	ABUTMENT BACKWALL RECONSTRUCTION DETAILS	1-746 AB-04 / SHEET NO. 2-112 / TOTAL SHTS. 2-731

$DGNNAME$ $DATE$$ $TIME$

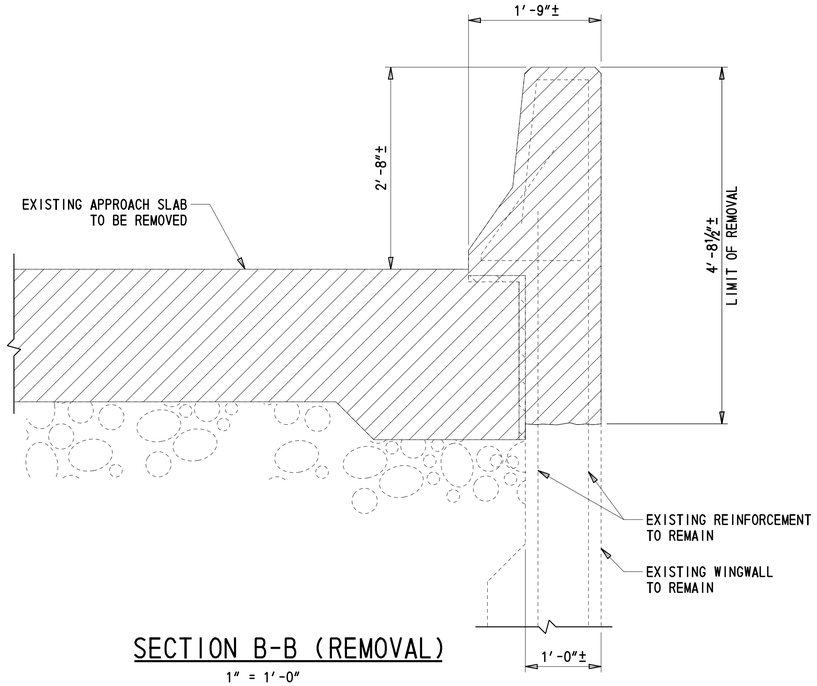

SECTION B-B (REMOVAL)

1″ = 1′-0″

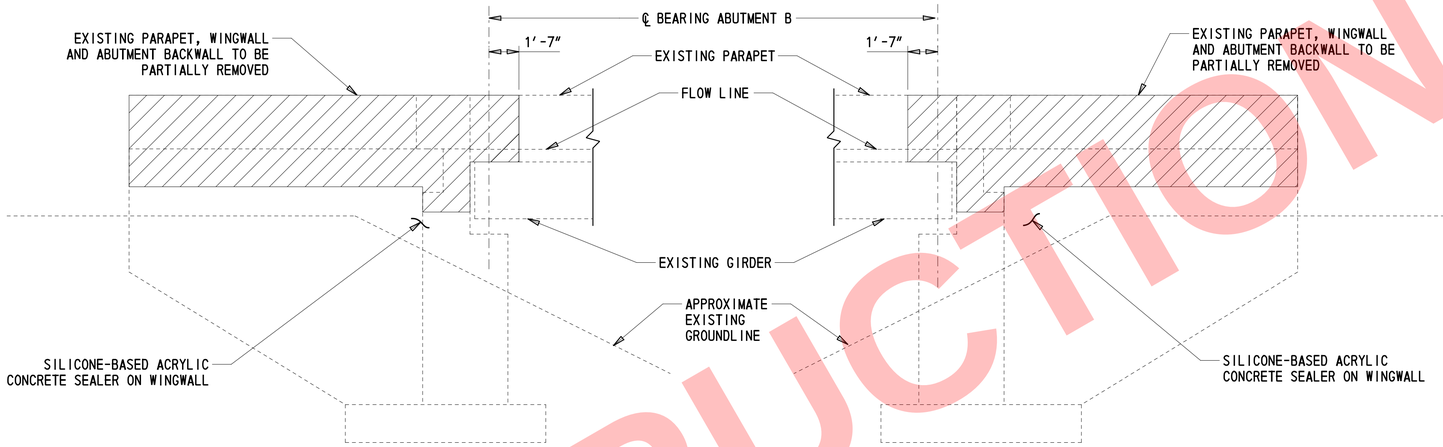

NORTHWEST WINGWALL - ELEVATION

¼″ = 1′-0″

NORTHEAST WINGWALL - ELEVATION

¼″ = 1′-0″

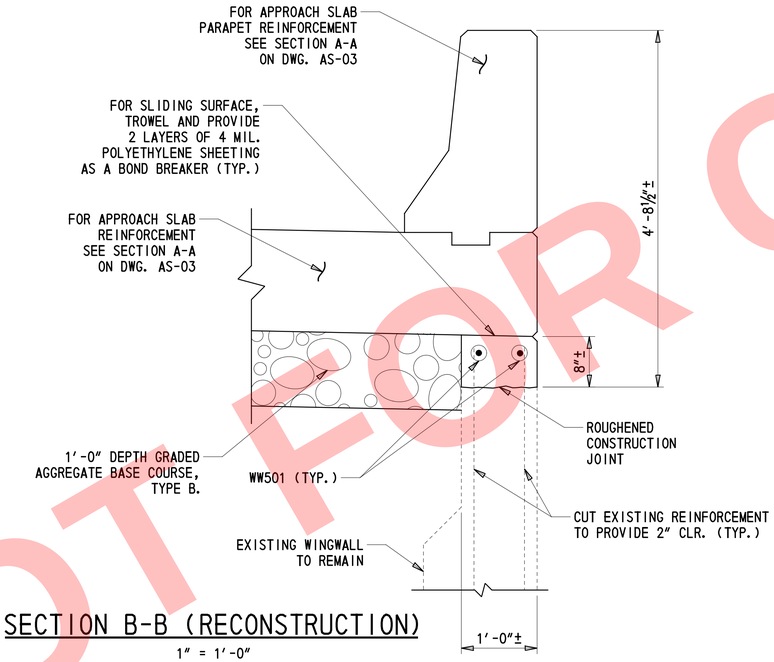

SECTION B-B (RECONSTRUCTION)

1″ = 1′-0″

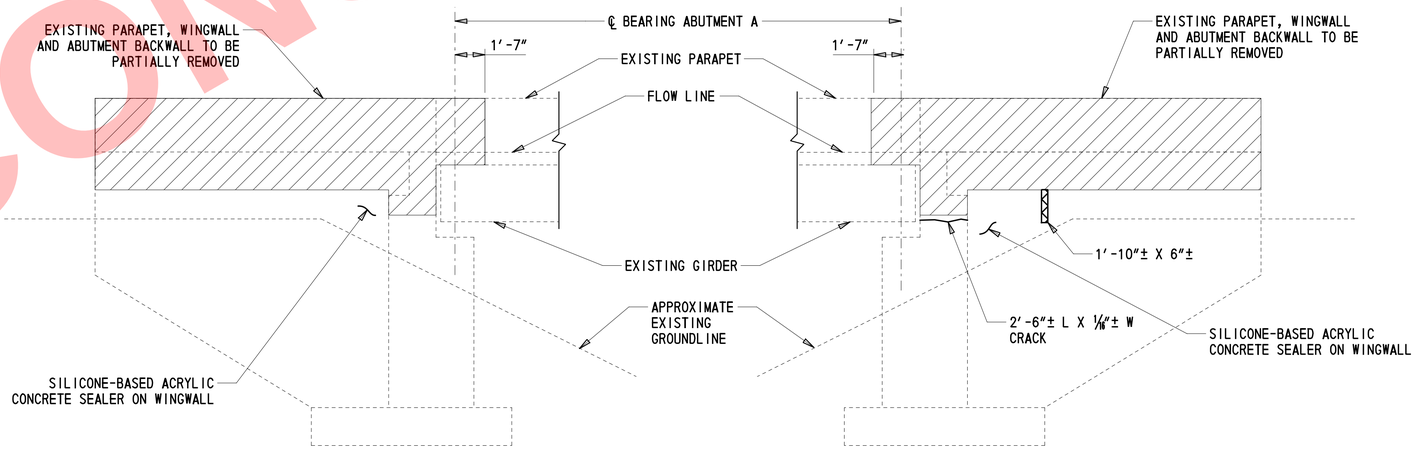

SOUTHEAST WINGWALL - ELEVATION

¼″ = 1′-0″

SOUTHWEST WINGWALL - ELEVATION

¼″ = 1′-0″

LEGEND:

- REPAIR OF CONCRETE STRUCTURES BY EPOXY INJECTION
- DEEP SPALL REPAIR
- LIMITS OF REMOVAL

NOTES:

1. FOR CONCRETE REPAIR DETAILS, SEE DWG. PN-02.

NOT FOR CONSTRUCTION

$DGNNAME$ $DATE$ $TIME$

DELAWARE
DEPARTMENT OF TRANSPORTATION

ADDENDUMS / REVISIONS

SCALE AS NOTED

REHABILITATION OF I-95
FROM I-495 TO NORTH OF
BRANDYWINE RIVER BRIDGE

CONTRACT	BRIDGE NO. 1 746 059
T201407404	DESIGNED BY: KY
COUNTY: NEW CASTLE	CHECKED BY: HQ

WINGWALL CONCRETE
REPAIR DETAILS

1-746 AB-05	
SHEET NO.	2-113
TOTAL SHTS.	2-731

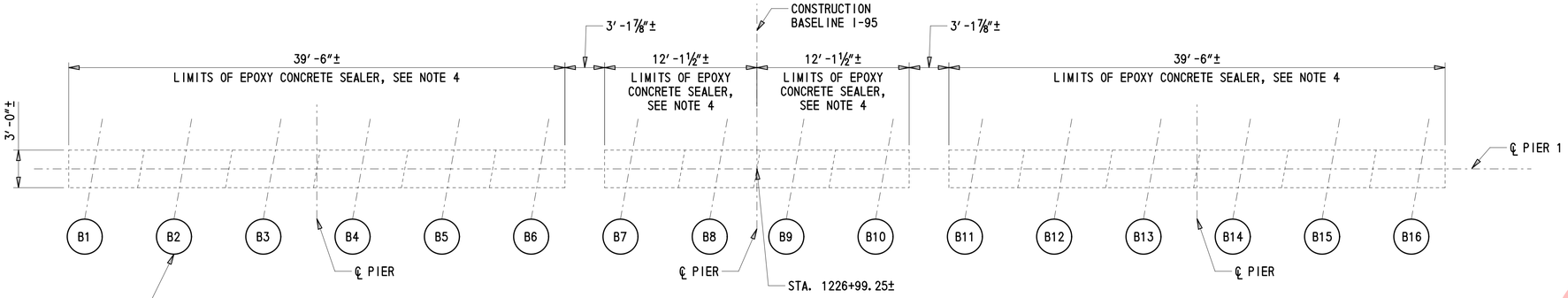

PIER 1 - PLAN VIEW

¼″ = 1′-0″

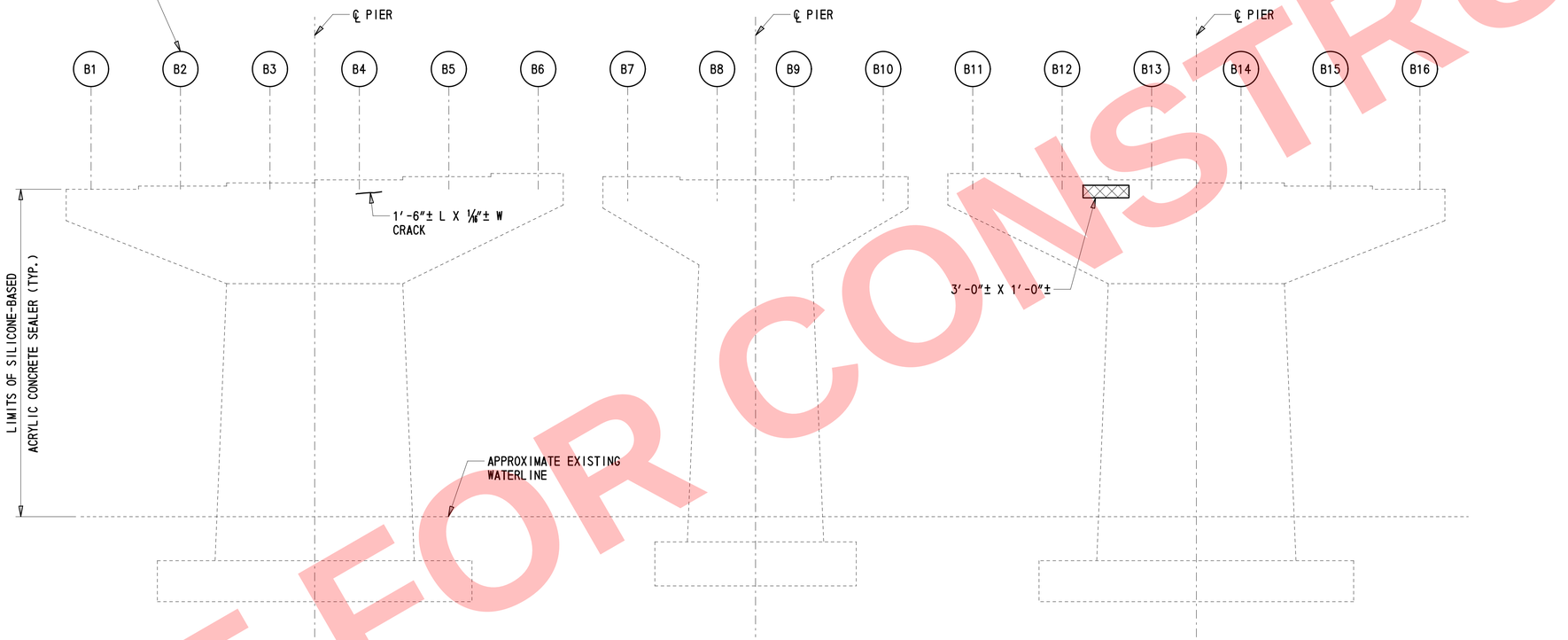

PIER 1 - SOUTH ELEVATION

¼″ = 1′-0″

NOTE:

PILES NOT SHOWN FOR CLARITY.

LEGEND:

REPAIR OF CONCRETE STRUCTURES BY EPOXY INJECTION

DEEP SPALL REPAIR

NOTES:

1. THE LOCATION AND QUANTITIES OF THE REPAIRS SHOWN ON THIS DRAWING ARE BASED ON INSPECTION FIELD NOTES (SEE NOTE 9 ON DWG. PN-01) AND ARE APPROXIMATE AND DO REQUIRE VERIFICATION. PRIOR TO STARTING EACH REPAIR, THE LIMITS SHALL BE VERIFIED BY THE CONTRACTOR IN THE PRESENCE OF THE ENGINEER.
2. WHERE CRACKS AND SPALLS ARE SHOWN CONCURRENTLY, COMPLETE THE SPALL REPAIR COMPLETELY REMOVING THE ASSOCIATED CRACK. IF THE CRACK EXTENDS LESS THAN 1′-0″ BEYOND THE LIMITS OF THE SPALL REPAIR, EXTEND THE LIMITS OF THE SPALL REPAIR TO ENCOMPASS THE CRACK. IF THE CRACK EXTENDS DEEPER THAN THE LIMITS OF CONCRETE REMOVAL, THE CONTRACTOR SHALL REMOVE ADDITIONAL CONCRETE UNTIL THE CRACK IS FULLY REMOVED. IF THE DEPTH OF REMOVAL REACHES MORE THAN 6″ FROM THE ORIGINAL FACE OF CONCRETE, ALL WORK ON THE REPAIR SHALL STOP AND THE ENGINEER SHALL BE NOTIFIED IMMEDIATELY. IF THE CRACK EXTENDS MORE THAN 1′-0″ BEYOND THE LIMITS OF THE SPALL REPAIR INTO SOUND CONCRETE THE CRACK SHALL BE REPAIRED BY EPORXY INJECTION. CRACKS LOCATED WITHIN SPALL REPAIRS WILL NOT BE PAID FOR AND WILL BE CONSIDERED INCIDENTAL TO ITEM 628041 - DEEP SPALL REPAIR.
3. FOR CONCRETE REPAIR DETAILS, SEE DWG. PN-02.
4. EPOXY CONCRETE SEALER SHALL BE APPLIED TO THE BEAM SEATS AND AT LEAST 1′-0″ BELOW TOP EDGE OF PIER. PAYMENT WILL BE MADE UNDER ITEM 613000. CONTRACTOR SHALL REMOVE DEBRIS FROM THE BEAM SEAT PRIOR TO APPLICATION OF EPOXY CONCRETE SEALER. PAYMENT FOR THIS WORK WILL BE INCIDENTAL TO ITEM 613000 - EPOXY CONCRETE SEALER.
5. CONTRACTOR SHALL TAKE CARE TO PROTECT THE BEARINGS DURING APPLICATION OF THE EPOXY CONCRETE SEALER. ANY CLEAN-UP REQUIRED TO REMOVE THE SEALER FROM THE BEARINGS WILL BE AT NO ADDITIONAL COST TO THE DEPARTMENT AND TO THE SATISFACTION OF THE ENGINEER.
6. SILICONE-BASED ACRYLIC CONCRETE SEALER SHALL BE APPLIED TO ALL EXPOSED CONCRETE PIER SURFACES THAT DO NOT REQUIRE EPOXY SEALER. PAYMENT WILL BE MADE UNDER ITEM 613001 - SILICONE BASED ACRYLIC CONCRETE SEALER.
7. EPOXY CONCRETE SEALER AND SILICONE-BASED ACRYLIC CONCRETE SEALER SHALL ONLY BE APPLIED AFTER ALL PIER CONCRETE REPAIRS ARE COMPLETED AT EACH PIER.

CONCRETE REPAIR QUANTITIES - PIER 1

REPAIR NO.	ITEM NO.	ITEM TITLE	UNIT	QUANTITY
34	628001	REPAIR OF CONCRETE STRUCTURES BY EPOXY INJECTION	LF	17
37	628041	DEEP SPALL REPAIR	CF	8
41	613000	EPOXY CONCRETE SEALER	SF	325
41	613001	SILICONE BASED ACRYLIC CONCRETE SEALER	SF	3632

NOTE: QUANTITIES SHOWN ARE TOTAL PER PIER AND DO NOT INCLUDE CONTINGENT PERCENTAGE.

NOT FOR CONSTRUCTION

1-746
PR-01

DELAWARE
DEPARTMENT OF TRANSPORTATION

$DONAME$ $TIME$
$DATE$

ADDENDUMS / REVISIONS

SCALE AS NOTED

REHABILITATION OF I-95
FROM I-495 TO NORTH OF
BRANDYWINE RIVER BRIDGE

CONTRACT T201407404
COUNTY NEW CASTLE
BRIDGE NO. 1 746 059
DESIGNED BY: TB
CHECKED BY: HQ

PIER 1 CONCRETE
REPAIR DETAILS
(SOUTH ELEVATION)

SHEET NO. 2-114
TOTAL SHTS. 2-731

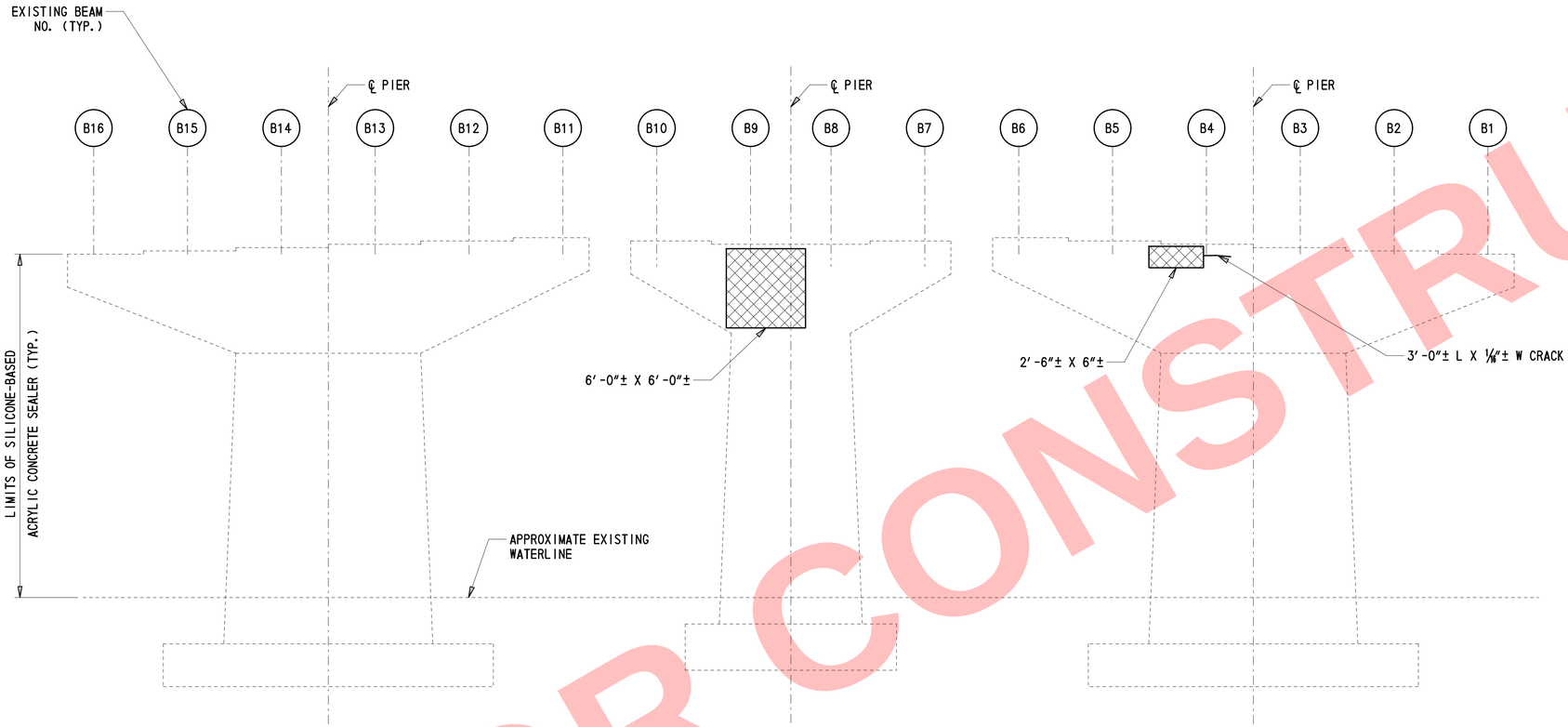

PIER 1 - EAST

PIER 1 - CENTER

PIER 1 - WEST

PIER 1 - NORTH ELEVATION

1/4″ = 1′-0″

NOTE:

PILES NOT SHOWN FOR CLARITY.

NOTES:

1. THE LOCATION AND QUANTITIES OF THE REPAIRS SHOWN ON THIS DRAWING ARE BASED ON INSPECTION FIELD NOTES (SEE NOTE 9 ON DWG. PN-01) AND ARE APPROXIMATE AND DO REQUIRE VERIFICATION. PRIOR TO STARTING EACH REPAIR, THE LIMITS SHALL BE VERIFIED BY THE CONTRACTOR IN THE PRESENCE OF THE ENGINEER.

2. WHERE CRACKS AND SPALLS ARE SHOWN CONCURRENTLY, COMPLETE THE SPALL REPAIR COMPLETELY REMOVING THE ASSOCIATED CRACK. IF THE CRACK EXTENDS LESS THAN 1′-0″ BEYOND THE LIMITS OF THE SPALL REPAIR, EXTEND THE LIMITS OF THE SPALL REPAIR TO ENCOMPASS THE CRACK. IF THE CRACK EXTENDS DEEPER THAN THE LIMITS OF CONCRETE REMOVAL, THE CONTRACTOR SHALL REMOVE ADDITIONAL CONCRETE UNTIL THE CRACK IS FULLY REMOVED. IF THE DEPTH OF REMOVAL REACHES MORE THAN 6″ FROM THE ORIGINAL FACE OF CONCRETE, ALL WORK ON THE REPAIR SHALL STOP AND THE ENGINEER SHALL BE NOTIFIED IMMEDIATELY. IF THE CRACK EXTENDS MORE THAN 1′-0″ BEYOND THE LIMITS OF THE SPALL REPAIR INTO SOUND CONCRETE THE CRACK SHALL BE REPAIRED BY EPORXY INJECTION. CRACKS LOCATED WITHIN SPALL REPAIRS WILL NOT BE PAID FOR AND WILL BE CONSIDERED INCIDENTAL TO ITEM 628041 - DEEP SPALL REPAIR.

3. FOR CONCRETE REPAIR DETAILS, SEE DWG. PN-02.

4. EPOXY CONCRETE SEALER SHALL BE APPLIED TO THE BEAM SEATS AND AT LEAST 1′-0″ BELOW TOP EDGE OF PIER. PAYMENT WILL BE MADE UNDER ITEM 613000. CONTRACTOR SHALL REMOVE DEBRIS FROM THE BEAM SEAT PRIOR TO APPLICATION OF EPOXY CONCRETE SEALER. PAYMENT FOR THIS WORK WILL BE INCIDENTAL TO ITEM 613000 - EPOXY CONCRETE SEALER.

5. CONTRACTOR SHALL TAKE CARE TO PROTECT THE BEARINGS DURING APPLICATION OF THE EPOXY CONCRETE SEALER. ANY CLEAN-UP REQUIRED TO REMOVE THE SEALER FROM THE BEARINGS WILL BE AT NO ADDITIONAL COST TO THE DEPARTMENT AND TO THE SATISFACTION OF THE ENGINEER.

6. SILICONE-BASED ACRYLIC CONCRETE SEALER SHALL BE APPLIED TO ALL EXPOSED CONCRETE PIER SURFACES THAT DO NOT REQUIRE EPOXY SEALER. PAYMENT WILL BE MADE UNDER ITEM 613001 - SILICONE BASED ACRYLIC CONCRETE SEALER.

7. EPOXY CONCRETE SEALER AND SILICONE-BASED ACRYLIC CONCRETE SEALER SHALL ONLY BE APPLIED AFTER ALL PIER CONCRETE REPAIRS ARE COMPLETED AT EACH PIER.

8. FOR PLAN VIEW AND CONCRETE REPAIR QUANTITIES SEE DWG. PR-01.

LEGEND:

REPAIR OF CONCRETE STRUCTURES BY EPOXY INJECTION

DEEP SPALL REPAIR

NOT FOR CONSTRUCTION

$DONNAME$ $TIME$
$$DATE$$

DELAWARE
DEPARTMENT OF TRANSPORTATION

ADDENDUMS / REVISIONS

SCALE AS NOTED

REHABILITATION OF I-95
FROM I-495 TO NORTH OF
BRANDYWINE RIVER BRIDGE

CONTRACT T201407404
COUNTY NEW CASTLE
BRIDGE NO. 1 746 059
DESIGNED BY: TB
CHECKED BY: HQ

PIER 1 CONCRETE
REPAIR DETAILS
(NORTH ELEVATION)

1-746
PR-02
SHEET NO. 2-115
TOTAL SHTS. 2-731

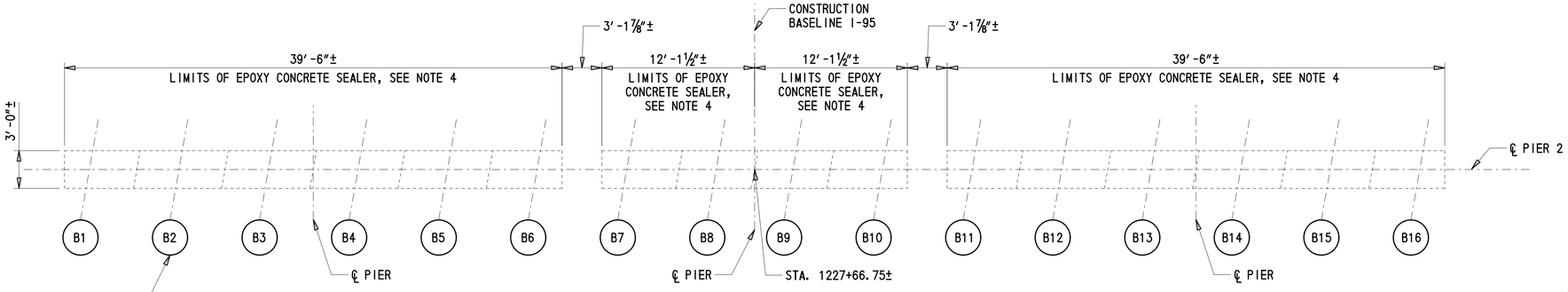

PIER 2 - WEST | PIER 2 - CENTER | PIER 2 - EAST

PIER 2 - PLAN VIEW

¼″ = 1′-0″

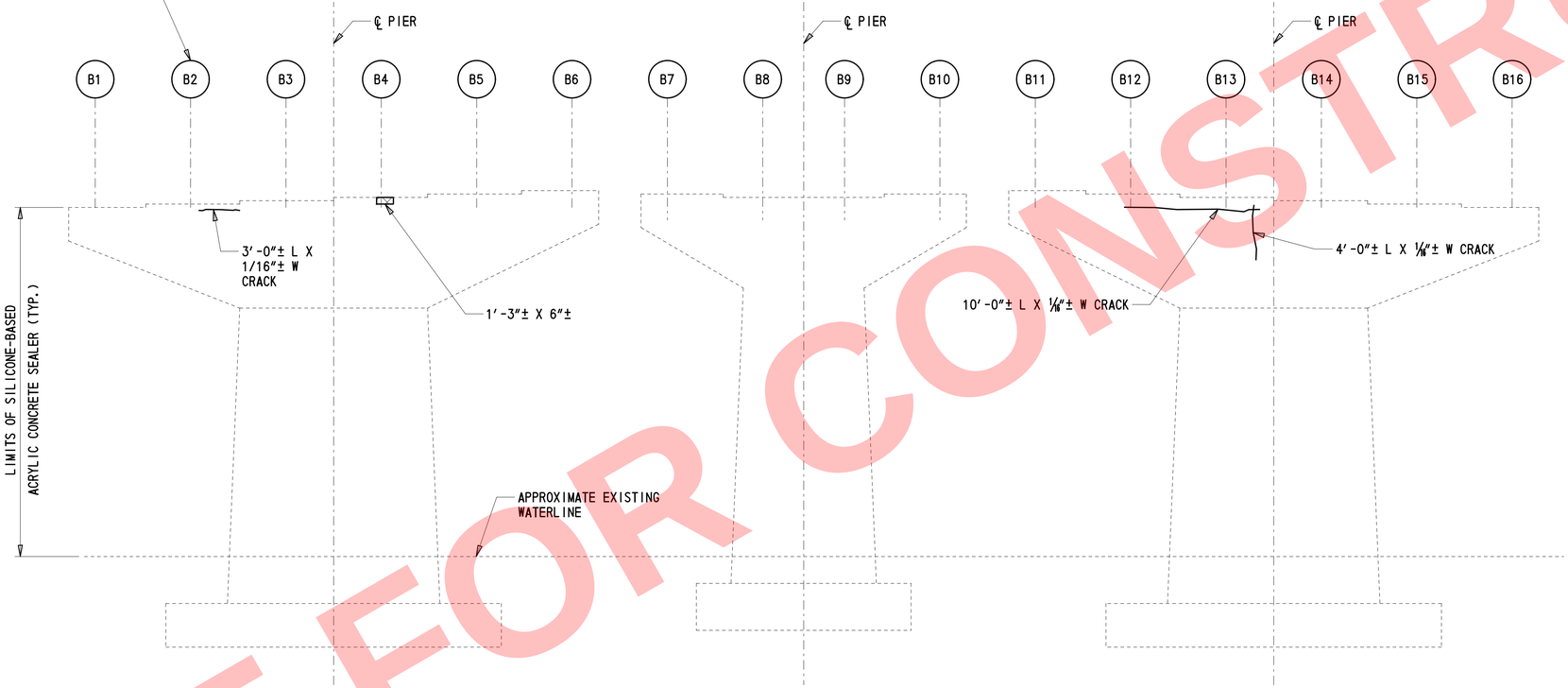

PIER 2 - WEST | PIER 2 - CENTER | PIER 2 - EAST

PIER 2 - SOUTH ELEVATION

¼″ = 1′-0″

NOTE:

PILES NOT SHOWN FOR CLARITY.

LEGEND:

REPAIR OF CONCRETE STRUCTURES BY EPOXY INJECTION

DEEP SPALL REPAIR

NOTES:

1. THE LOCATION AND QUANTITIES OF THE REPAIRS SHOWN ON THIS DRAWING ARE BASED ON INSPECTION FIELD NOTES (SEE NOTE 9 ON DWG. PN-01) AND ARE APPROXIMATE AND DO REQUIRE VERIFICATION. PRIOR TO STARTING EACH REPAIR, THE LIMITS SHALL BE VERIFIED BY THE CONTRACTOR IN THE PRESENCE OF THE ENGINEER.
2. WHERE CRACKS AND SPALLS ARE SHOWN CONCURRENTLY, COMPLETE THE SPALL REPAIR COMPLETELY REMOVING THE ASSOCIATED CRACK. IF THE CRACK EXTENDS LESS THAN 1′-0″ BEYOND THE LIMITS OF THE SPALL REPAIR, EXTEND THE LIMITS OF THE SPALL REPAIR TO ENCOMPASS THE CRACK. IF THE CRACK EXTENDS DEEPER THAN THE LIMITS OF CONCRETE REMOVAL, THE CONTRACTOR SHALL REMOVE ADDITIONAL CONCRETE UNTIL THE CRACK IS FULLY REMOVED. IF THE DEPTH OF REMOVAL REACHES MORE THAN 6″ FROM THE ORIGINAL FACE OF CONCRETE, ALL WORK ON THE REPAIR SHALL STOP AND THE ENGINEER SHALL BE NOTIFIED IMMEDIATELY. IF THE CRACK EXTENDS MORE THAN 1′-0″ BEYOND THE LIMITS OF THE SPALL REPAIR INTO SOUND CONCRETE THE CRACK SHALL BE REPAIRED BY EPORXY INJECTION. CRACKS LOCATED WITHIN SPALL REPAIRS WILL NOT BE PAID FOR AND WILL BE CONSIDERED INCIDENTAL TO ITEM 628041 - DEEP SPALL REPAIR.
3. FOR CONCRETE REPAIR DETAILS, SEE DWG. PN-02.
4. EPOXY CONCRETE SEALER SHALL BE APPLIED TO THE BEAM SEATS AND AT LEAST 1′-0″ BELOW TOP EDGE OF PIER. PAYMENT WILL BE MADE UNDER ITEM 613000. CONTRACTOR SHALL REMOVE DEBRIS FROM THE BEAM SEAT PRIOR TO APPLICATION OF EPOXY CONCRETE SEALER. PAYMENT FOR THIS WORK WILL BE INCIDENTAL TO ITEM 613000 - EPOXY CONCRETE SEALER.
5. CONTRACTOR SHALL TAKE CARE TO PROTECT THE BEARINGS DURING APPLICATION OF THE EPOXY CONCRETE SEALER. ANY CLEAN-UP REQUIRED TO REMOVE THE SEALER FROM THE BEARINGS WILL BE AT NO ADDITIONAL COST TO THE DEPARTMENT AND TO THE SATISFACTION OF THE ENGINEER.
6. SILICONE-BASED ACRYLIC CONCRETE SEALER SHALL BE APPLIED TO ALL EXPOSED CONCRETE PIER SURFACES THAT DO NOT REQUIRE EPOXY SEALER. PAYMENT WILL BE MADE UNDER ITEM 613001 - SILICONE BASED ACRYLIC CONCRETE SEALER.
7. EPOXY CONCRETE SEALER AND SILICONE-BASED ACRYLIC CONCRETE SEALER SHALL ONLY BE APPLIED AFTER ALL PIER CONCRETE REPAIRS ARE COMPLETED AT EACH PIER.

CONCRETE REPAIR QUANTITIES - PIER 2

REPAIR NO.	ITEM NO.	ITEM TITLE	UNIT	QUANTITY
34	628001	REPAIR OF CONCRETE STRUCTURES BY EPOXY INJECTION	LF	57
37	628041	DEEP SPALL REPAIR	CF	1
41	613000	EPOXY CONCRETE SEALER	SF	325
41	613001	SILICONE BASED ACRYLIC CONCRETE SEALER	SF	3632

NOTE: QUANTITIES SHOWN ARE TOTAL PER PIER AND DO NOT INCLUDE CONTINGENT PERCENTAGE.

NOT FOR CONSTRUCTION

DELAWARE DEPARTMENT OF TRANSPORTATION

ADDENDUMS / REVISIONS

SCALE AS NOTED

REHABILITATION OF I-95 FROM I-495 TO NORTH OF BRANDYWINE RIVER BRIDGE

CONTRACT T201407404 | COUNTY NEW CASTLE | BRIDGE NO. 1 746 059 | DESIGNED BY: TB | CHECKED BY: HQ

PIER 2 CONCRETE REPAIR DETAILS (SOUTH ELEVATION)

1-746 PR-03

SHEET NO. 2-116

TOTAL SHTS. 2-731

$DGNNAME$ $DATE$ $TIME$

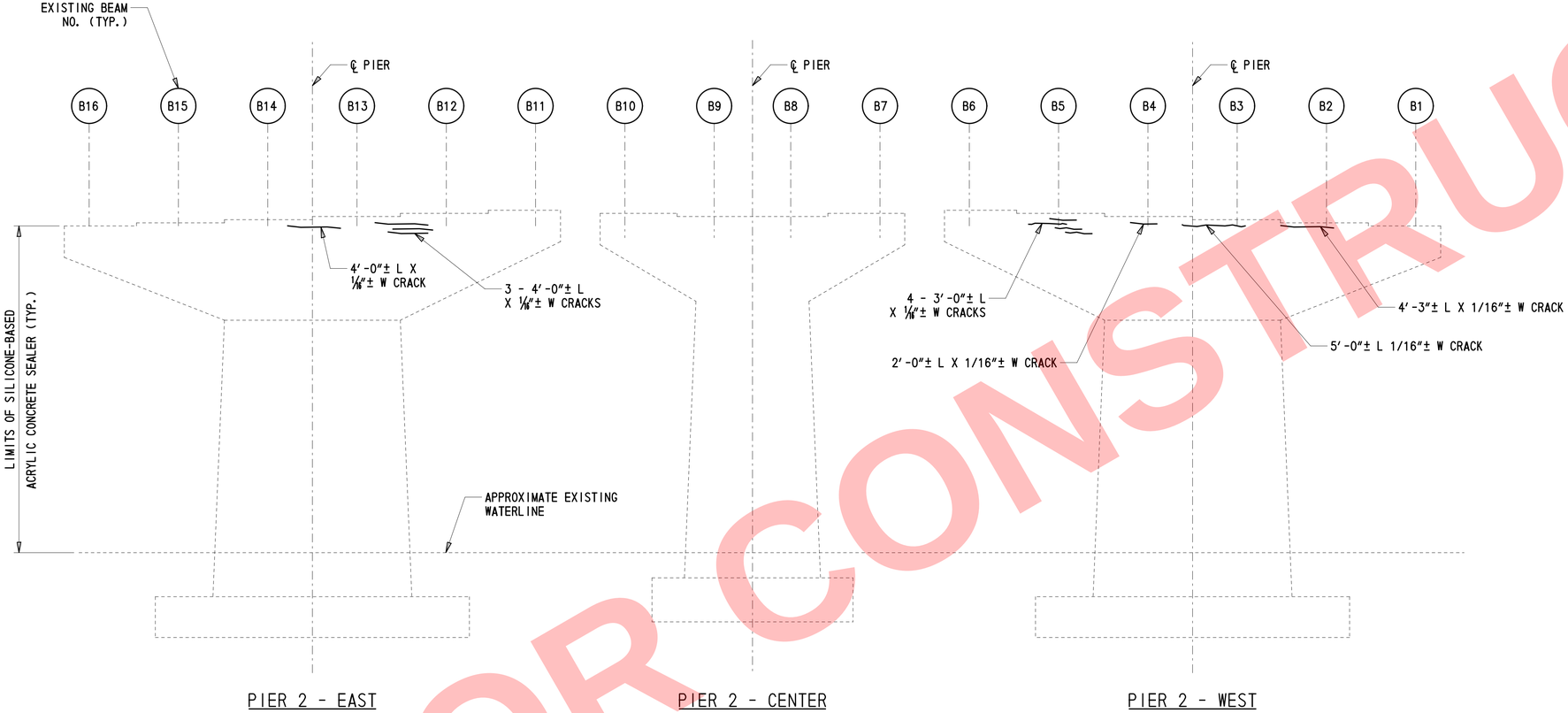

PIER 2 - EAST | PIER 2 - CENTER | PIER 2 - WEST

PIER 2 - NORTH ELEVATION

1/4″ = 1′-0″

NOTE:

PILES NOT SHOWN FOR CLARITY.

NOTES:

1. THE LOCATION AND QUANTITIES OF THE REPAIRS SHOWN ON THIS DRAWING ARE BASED ON INSPECTION FIELD NOTES (SEE NOTE 9 ON DWG. PN-01) AND ARE APPROXIMATE AND DO REQUIRE VERIFICATION. PRIOR TO STARTING EACH REPAIR, THE LIMITS SHALL BE VERIFIED BY THE CONTRACTOR IN THE PRESENCE OF THE ENGINEER.
2. WHERE CRACKS AND SPALLS ARE SHOWN CONCURRENTLY, COMPLETE THE SPALL REPAIR COMPLETELY REMOVING THE ASSOCIATED CRACK. IF THE CRACK EXTENDS LESS THAN 1′-0″ BEYOND THE LIMITS OF THE SPALL REPAIR, EXTEND THE LIMITS OF THE SPALL REPAIR TO ENCOMPASS THE CRACK. IF THE CRACK EXTENDS DEEPER THAN THE LIMITS OF CONCRETE REMOVAL, THE CONTRACTOR SHALL REMOVE ADDITIONAL CONCRETE UNTIL THE CRACK IS FULLY REMOVED. IF THE DEPTH OF REMOVAL REACHES MORE THAN 6″ FROM THE ORIGINAL FACE OF CONCRETE, ALL WORK ON THE REPAIR SHALL STOP AND THE ENGINEER SHALL BE NOTIFIED IMMEDIATELY. IF THE CRACK EXTENDS MORE THAN 1′-0″ BEYOND THE LIMITS OF THE SPALL REPAIR INTO SOUND CONCRETE THE CRACK SHALL BE REPAIRED BY EPORXY INJECTION. CRACKS LOCATED WITHIN SPALL REPAIRS WILL NOT BE PAID FOR AND WILL BE CONSIDERED INCIDENTAL TO ITEM 628041 - DEEP SPALL REPAIR.
3. FOR CONCRETE REPAIR DETAILS, SEE DWG. PN-02.
4. EPOXY CONCRETE SEALER SHALL BE APPLIED TO THE BEAM SEATS AND AT LEAST 1′-0″ BELOW TOP EDGE OF PIER. PAYMENT WILL BE MADE UNDER ITEM 613000. CONTRACTOR SHALL REMOVE DEBRIS FROM THE BEAM SEAT PRIOR TO APPLICATION OF EPOXY CONCRETE SEALER. PAYMENT FOR THIS WORK WILL BE INCIDENTAL TO ITEM 613000 - EPOXY CONCRETE SEALER.
5. CONTRACTOR SHALL TAKE CARE TO PROTECT THE BEARINGS DURING APPLICATION OF THE EPOXY CONCRETE SEALER. ANY CLEAN-UP REQUIRED TO REMOVE THE SEALER FROM THE BEARINGS WILL BE AT NO ADDITIONAL COST TO THE DEPARTMENT AND TO THE SATISFACTION OF THE ENGINEER.
6. SILICONE-BASED ACRYLIC CONCRETE SEALER SHALL BE APPLIED TO ALL EXPOSED CONCRETE PIER SURFACES THAT DO NOT REQUIRE EPOXY SEALER. PAYMENT WILL BE MADE UNDER ITEM 613001 - SILICONE BASED ACRYLIC CONCRETE SEALER.
7. EPOXY CONCRETE SEALER AND SILICONE-BASED ACRYLIC CONCRETE SEALER SHALL ONLY BE APPLIED AFTER ALL PIER CONCRETE REPAIRS ARE COMPLETED AT EACH PIER.
8. FOR PLAN VIEW AND CONCRETE REPAIR QUANTITIES SEE DWG. PR-03.

LEGEND:

REPAIR OF CONCRETE STRUCTURES BY EPOXY INJECTION

DEEP SPALL REPAIR

NOT FOR CONSTRUCTION

$DGNNAME$ $$DATE$$ $TIME$

DELAWARE DEPARTMENT OF TRANSPORTATION

ADDENDUMS / REVISIONS

SCALE AS NOTED

REHABILITATION OF I-95 FROM I-495 TO NORTH OF BRANDYWINE RIVER BRIDGE

CONTRACT T201407404

COUNTY NEW CASTLE

BRIDGE NO. 1 746 059

DESIGNED BY: TB

CHECKED BY: HQ

PIER 2 CONCRETE REPAIR DETAILS (NORTH ELEVATION)

1-746 PR-04

SHEET NO. 2-117

TOTAL SHTS. 2-731

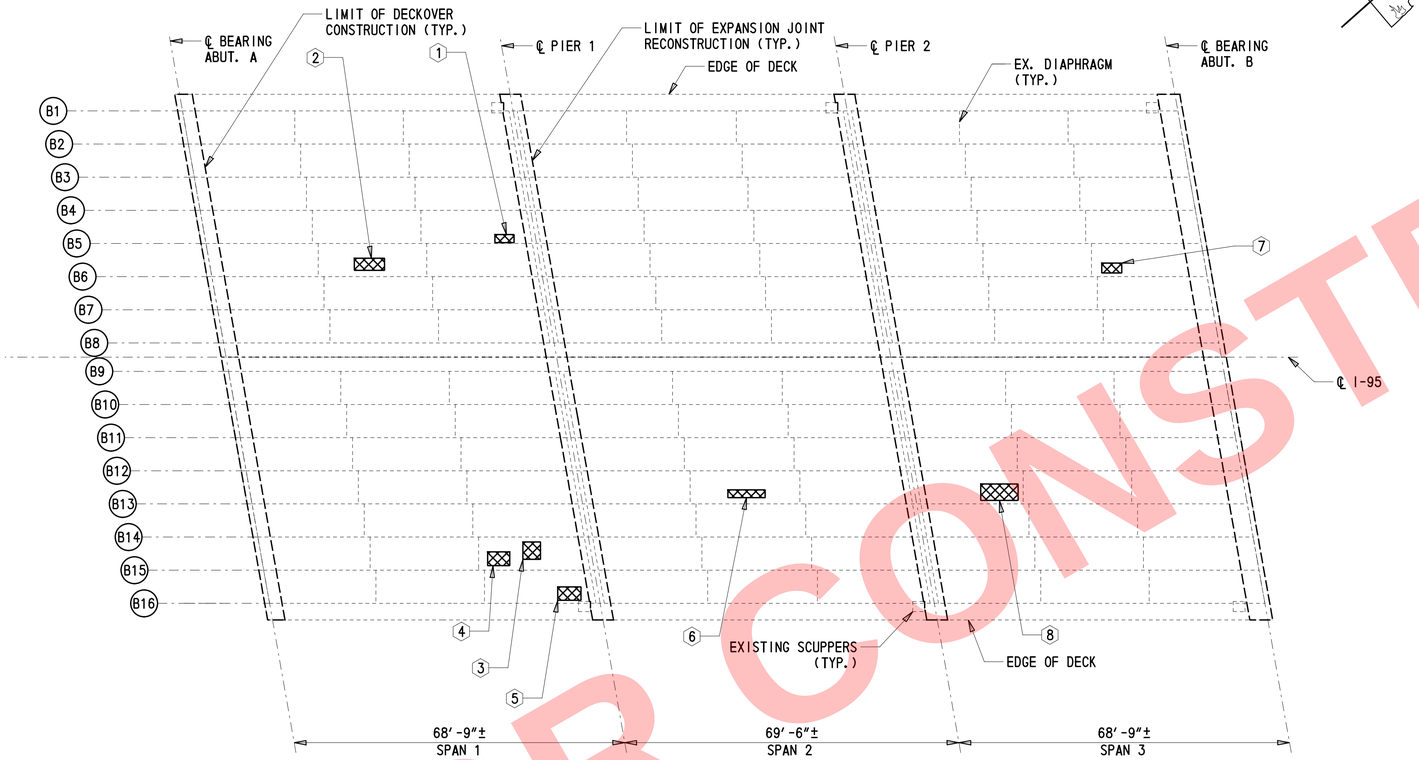

SOFFIT PLAN

1/16″ = 1′-0″

NOTES:

1. THE LOCATION AND QUANTITIES OF THE REPAIRS SHOWN ON THIS DRAWING ARE BASED ON INSPECTION FIELD NOTES (SEE NOTE 9 ON DWG. PN-01) AND ARE APPROXIMATE AND DO REQUIRE VERIFICATION. PRIOR TO STARTING EACH REPAIR, THE LIMITS SHALL BE VERIFIED BY THE CONTRACTOR IN THE PRESENCE OF THE ENGINEER.
2. FOR CONCRETE REPAIR DETAILS, SEE DWG. PN-02.

CONCRETE SOFIT REPAIRS

DEFECT NO.	LOCATION	DEEP SPALL REPAIR SIZE
1	SPAN 1, BETWEEN GIRDERS 4 AND 5, 6′ SOUTH OF PIER 1	2′-0″± x 1′-0″±
2	SPAN 1, BETWEEN GIRDERS 5 AND 6, 35′ SOUTH OF PIER 1	2′-6″± x 8″±
3	SPAN 1, BETWEEN GIRDERS 14 AND 15,12′ SOUTH OF PIER 1	1′-0″± x 1′-0″±
4	SPAN 1, BETWEEN GIRDERS 14 AND 15, 20′ SOUTH OF PIER 1	1′-0″± x 1′-0″±
5	SPAN 1, BETWEEN GIRDERS 15 AND 16, 8′ SOUTH OF PIER 1	2′-0″± x 1′-0″±
6	SPAN 2, BETWEEN GIRDERS 12 AND 13, 32′ NORH OF PIER 1	1′-6″± x 6″±
7	SPAN 3, BETWEEN GIRDERS 5 AND 6, 50′ NORTH OF PIER 2	1′-6″± x 1′-6″±
8	SPAN 3, BETWEEN GIRDERS 12 AND 13, 17′ NORTH OF PIER 2	2′-6″± x 2′-0″±

KEY:

(1) SOFFIT REPAIR DEFECT NUMBER

LEGEND:

SOFFIT DEEP SPALL REPAIR

NOT FOR CONSTRUCTION

$DGNNAME$
$$DATE$$ $TIME$

DELAWARE
DEPARTMENT OF TRANSPORTATION

ADDENDUMS / REVISIONS

SCALE AS NOTED

REHABILITATION OF I-95
FROM I-495 TO NORTH OF
BRANDYWINE RIVER BRIDGE

CONTRACT	BRIDGE NO.	1 746 059
T201407404	DESIGNED BY: KY	
COUNTY	CHECKED BY: HQ	
NEW CASTLE		

SOFFIT REPAIR

1-746
SO-01

SHEET NO. 2-118
TOTAL SHTS. 2-731

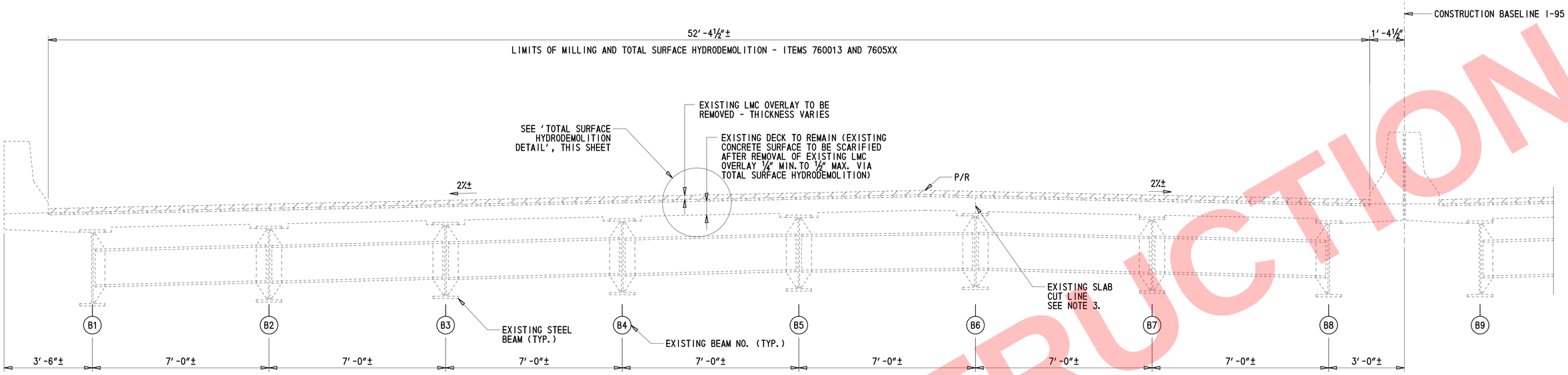

LIMITS OF DEMOLITION - STAGE 3

½″ = 1′-0″

NOTES:

1. STAGE 3 SHOWN, STAGE 2 OPPOSITE HAND.

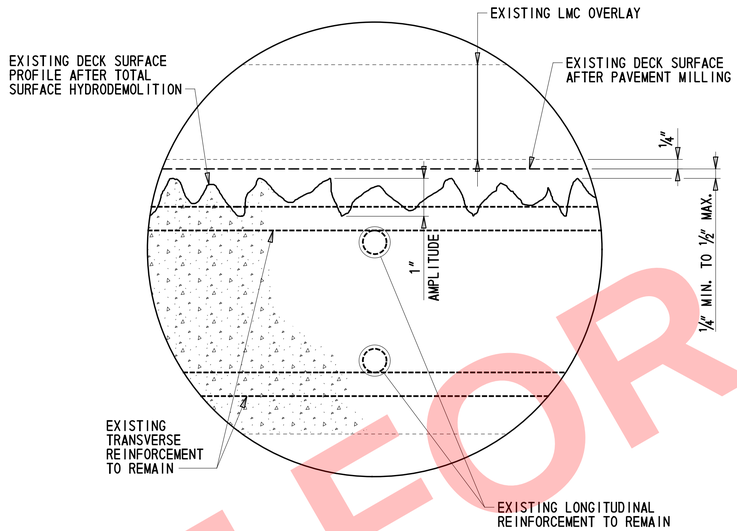

HYDRODEMOLITION AMPLITUDE DETAIL

6″ = 1′-0″

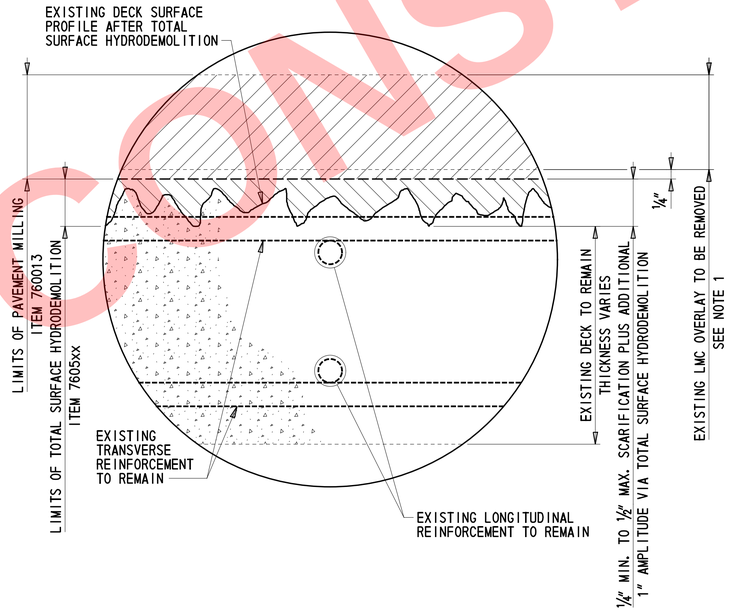

TOTAL SURFACE HYDRODEMOLITION DETAIL

6″ = 1′-0″

LEGEND:

- LIMITS OF REMOVAL, MECHANICAL MILLING (ITEM 760013)
- LIMITS OF REMOVAL, HYDRODEMOLITION (ITEM 7605XX)

DEMOLITION NOTES:

1. THICKNESS OF EXISTING LMC OVERLAY VARIES. DECK CORES DEPICTING THE THICKNESS WERE TAKEN IN NOVEMBER/DECEMBER 2014. THE CORING REPORT IS AVAILABLE UPON REQUEST.
2. VEHICLES AND EQUIPMENT SHOULD BE KEPT OFF OF AREAS OF THE DECK THAT HAVE RECEIVED TOTAL SURFACE HYDRODEMOLITION AS MUCH REASONABLE POSSIBLE - ONLY EQUIPMENT NECESSARY TO COMPLETE THE WORK WILL BE ALLOWED ON THOSE AREAS.
3. RECALIBRATION OF THE HYDRODEMOLITION EQUIPMENT MAY BE REQUIRED BETWEEN THE ORIGINAL AND WIDENED PORTIONS OF THE STRUCTURE AT EXISTING SLAB CUT LINE.
4. LONGITUDINAL CONSTRUCTION JOINTS SHALL BE LIMITED TO ONLY THOSE NECESSARY TO COMPLETE THE WORK, HOWEVER THE CONTRACTOR MAY ELECT TO PLACE AN OPTIONAL LONGITUDINAL CONSTRUCTION JOINT IN THE LMC OVERLAY IN STAGE 2 AS NECESSITATED BY THE WIDTH OF THE BRIDGE. LONGITUDINAL CONSTRUCTION JOINTS IN THE LMC OVERLAY MAY ONLY BE PLACED AT THE LOCATION OF THE FINAL LANE LINES.

NOT FOR CONSTRUCTION

$DONAME$ $DATE$ $TIME$

DELAWARE
DEPARTMENT OF TRANSPORTATION

ADDENDUMS / REVISIONS

SCALE AS NOTED

REHABILITATION OF I-95
FROM I-495 TO NORTH OF
BRANDYWINE RIVER BRIDGE

CONTRACT	BRIDGE NO.	1 746 059
T201407404	DESIGNED BY: KY	
COUNTY	CHECKED BY: HQ	
NEW CASTLE		

DEMOLITION DETAILS

1-746 DM-01	
SHEET NO.	2-119
TOTAL SHTS.	2-731

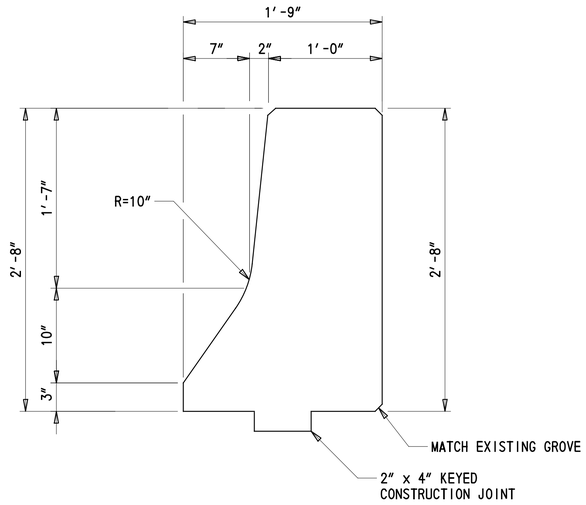

EXTERIOR PARAPET - APPROACH SLAB DETAIL

1½″ = 1′-0″

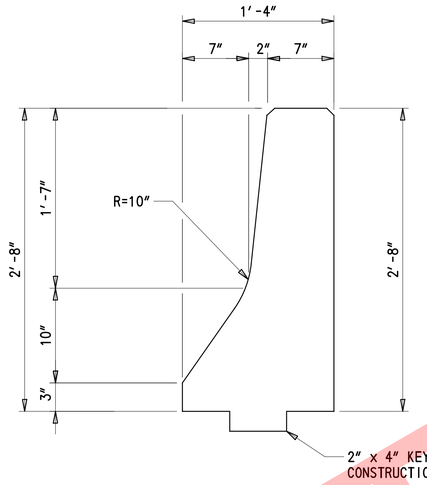

MEDIAN PARAPET - APPROACH SLAB DETAIL

1½″ = 1′-0″

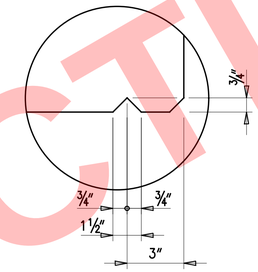

MEDIAN PARAPET - DRIP NOTCH DETAIL

3″ = 1′-0″

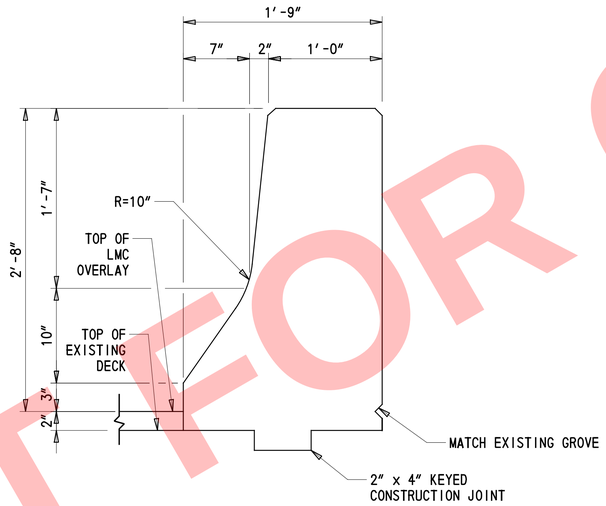

EXTERIOR PARAPET-BRIDGE DETAIL

1½″ = 1′-0″

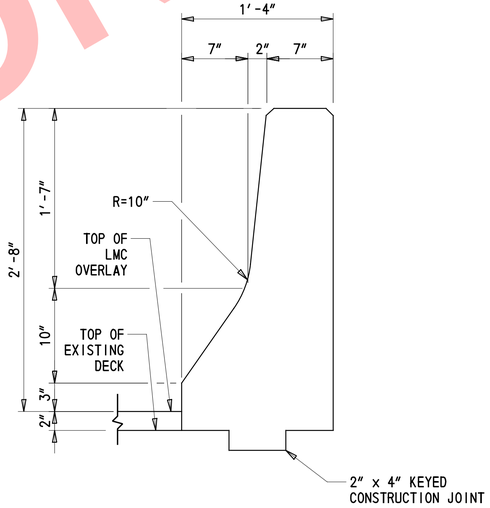

MEDIAN PARAPET - BRIDGE DETAIL

1½″ = 1′-0″

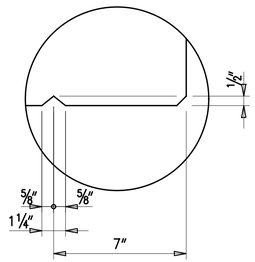

EXTERIOR PARAPET - DRIP NOTCH DETAIL

3″ = 1′-0″

NOT FOR CONSTRUCTION

$DGNNAME$
$DATE$ $TIME$

DELAWARE
DEPARTMENT OF TRANSPORTATION

ADDENDUMS / REVISIONS

SCALE AS NOTED

REHABILITATION OF I-95
FROM I-495 TO NORTH OF
BRANDYWINE RIVER BRIDGE

CONTRACT T201407404
COUNTY NEW CASTLE
BRIDGE NO. 1 746 059
DESIGNED BY: KY
CHECKED BY: HQ

PARAPET DETAILS

1-746
PA-01
SHEET NO. 2-120
TOTAL SHTS. 2-731

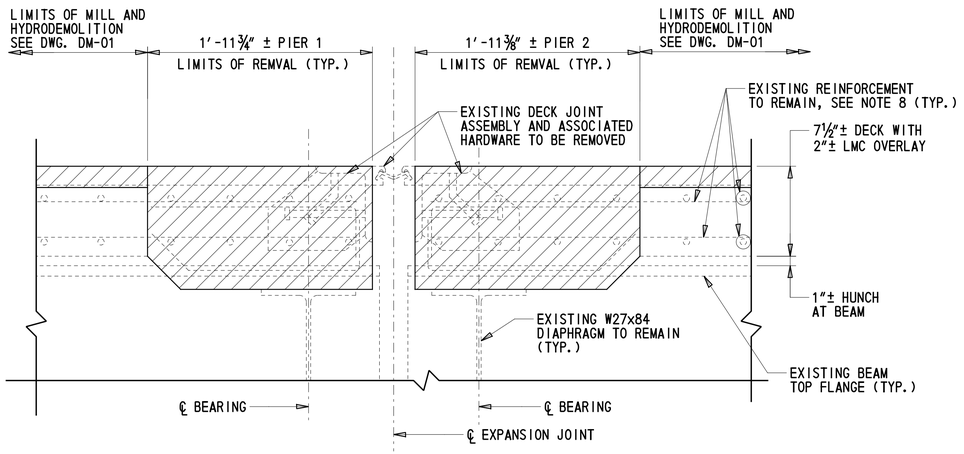

REMOVAL DETAIL - PIER

1½″ = 1′-0″

JOINT RECONSTRUCTION NOTES:

1. NEW STRIP SEAL ASSEMBLY SHOWN FOR GRAPHICAL PURPOSES ONLY. DETAILS MAY VARY BY MANUFACTURER. STRIP SEAL AND ASSEMBLY SHALL BE IN ACCORDANCE WITH ITEM 624000 - PREFABRICATED EXPANSION JOINT SYSTEM, 3″.
2. CLASS D CONCRETE SHALL BE IN ACCORDANCE WITH ITEM 610017 - P.C.C. MASONRY, SUPERSTRUCTURE, CLASS D. CLEAN AND APPLY EPOXY BONDING COMPOUND TO ALL REMOVAL AND ROUGHENED SURFACES PRIOR TO PLACING CONCRETE. COST FOR THIS WORK SHALL BE INCIDENTAL TO ITEM 610017 - P.C.C. MASONRY, SUPERSTRUCTURE, CLASS D.
3. EXISTING BARS TO REMAIN SHALL BE CLEANED IN ACCORDANCE WITH SECTIN 628.03(E)7. BARS WITH CORROSION, BROKEN, OR WITH INADEQUANTED BOND SHALL BE REPAIRED IN ACCORDANCE WITH SCTION 628.03(E)7. PAYMENT FOR THIS WORK WILL BE INCIDENTAL TO ITEM 624000 - PREFABRICATED EXPANSION JOINT SYSTEM, 3″.
4. ALL NEW REINFORCING STEEL REQUIRED TO COMPLETE THE JOINT HEADER REPAIRS SHALL HAVE 2″ MIN. CONCRETE COVER UNLESS SHOWN OTHERWISE. PAYMENT FOR ALL NEW REINFORCING STEEL SHALL BE UNDER ITEM 611000 - BAR REINFORCEMENT.
5. COLOR OF PAINT SYSTEM TO BE APPLIED TO THE NEW STEEL EXTRUSIONS SHALL BE T.B.D.
6. THE CONTRACTOR SHALL USE CARE DURING THE REMOVAL OF THE EXISTING CONCRETE AND PORTIONS OF THE JOINT SYSTEM TO AVOID DAMAGE TO THE EXISTING PORTIONS OF THE STRUCTURE THAT ARE TO REMAIN IN PLACE. ANY DAMAGE INCURRED TO EXISTING PORTIONS OF THE STRUCTURE TO REMAIN SHALL BE REPAIRED BY THE CONTRACTOR TO COMPLETE SATISFACTION OF THE ENGINEER AT NO ADDITIONAL COST TO THE DEPARTMENT.
7. PRIOR TO REMOVAL OF THE EXISTING ROADWAY JOINT AND FABRICATION OF THE PROPOSED ROADWAY MATERIALS, THE CONTRACTOR SHALL FIELD VERIFY THE CROSS SLOPE OF THE ROADWAY AT THE INDIVIDUAL JOINT LOCATIONS.
8. CUT EXISTING LONGITUDINAL DECK REINFORCEMENT 2″ CLEAR OF NEW EDGE OF JOINT.

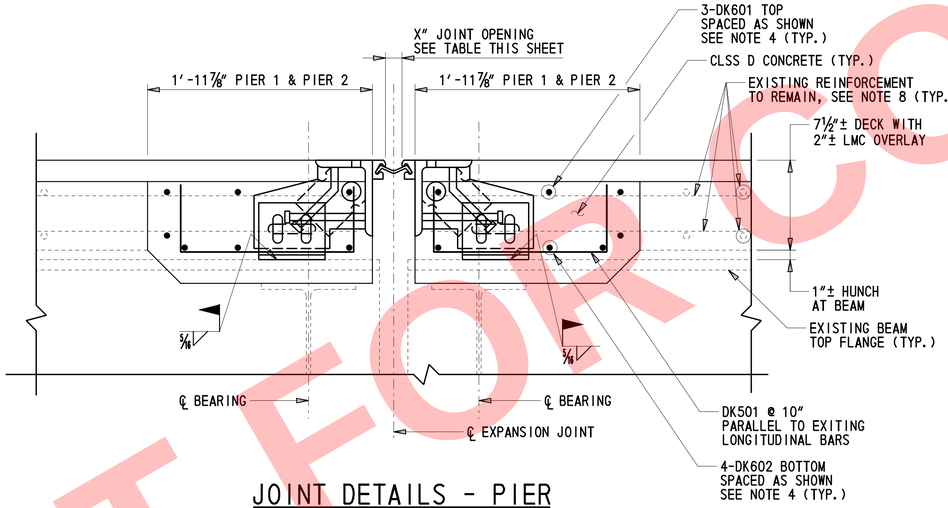

JOINT DETAILS - PIER

1½″ = 1′-0″

LEGEND:

LIMITS OF REMOVAL

NOTES:

1. FOR JOINT ASSEMBLY DETAIL AND STRIP SEAL EXPANSION JOINT NOTES, SEE DWG. EX-02.

DECK JOINT OPENINGS

LOCATION	TEMPERATURE (°F)									MOVEMENT CLASSIFICATION
	20	30	40	50	60	68	80	90	100	
PIER 1	1 15/16″	1 15/16″	1 7/8″	1 13/16″	1 3/4″	1 11/16″	1 5/8″	1 9/16″	1 9/16″	3″
PIER 2	2 1/16″	2 1/16″	1 15/16″	1 7/8″	1 3/4″	1 11/16″	1 5/8″	1 7/16″	1 5/16″	3″

NOT FOR CONSTRUCTION

$DGNNAME$ $DATE$ $TIME$

DELAWARE
DEPARTMENT OF TRANSPORTATION

ADDENDUMS / REVISIONS

SCALE AS NOTED

REHABILITATION OF I-95
FROM I-495 TO NORTH OF
BRANDYWINE RIVER BRIDGE

CONTRACT T201407404
COUNTY NEW CASTLE
BRIDGE NO. 1 746 059
DESIGNED BY: KY
CHECKED BY: HQ

EXPANSION JOINT
DETAILS - 1

1-746
EX-01
SHEET NO. 2-121
TOTAL SHTS. 2-731

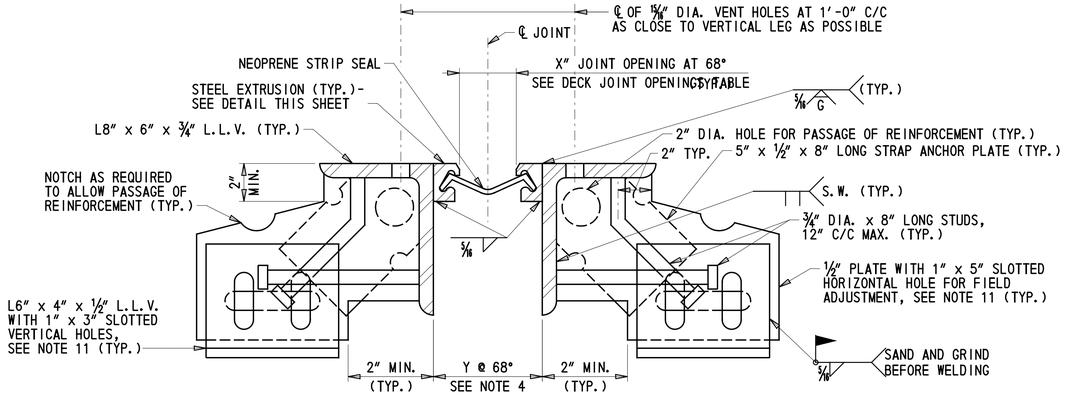

JOINT ASSEMBLY DETAIL

3" = 1'-0"

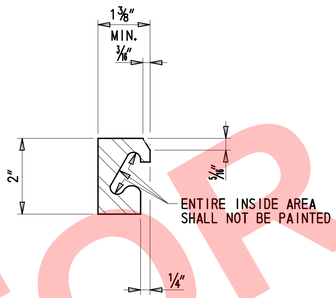

STEEL EXTRUSION DETAIL

6" = 1'-0"

STRIP SEAL EXPANSION JOINT NOTES:

1. STEEL FOR DECK JOINTS AND STEEL EXTRUSIONS SHALL BE AASHTO M270, GR. 36 (ASTM A36) AT MINIMUM.
2. NEOPRENE EXTRUSION TO MEET D-2628-81 MODIFIED, (RECOVERY TESTS EXCLUDED).
3. THE EXPANSION JOINT SHALL BE CAPABLE OF SEALING THE DECK TO PREVENT MOISTURE AND OTHER CONTAMINANTS FROM DESCENDING THROUGH THE JOINT.
4. THE CONTRACTOR SHALL ADJUST THE OPEN JOINT (Y) AS REQUIRED BY THE WIDTH OF THE STEEL EXTRUSION USED SO AS TO PROVIDE A X" JOINT OPENING AT 68°F AS SHOWN IN DECK JOINT OPENINGS TABLE.
5. THE STRIP SEAL SHALL BE INSTALLED IN ONE PIECE ACROSS THE BRIDGE WIDTH. SPLICING OF THE STRIP MATERIAL IS NOT PERMITTED.
6. THE EXPANSION JOINT SYSTEM IS PAID FOR UNDER ITEM 624000 - PREFABRICATED EXPANSION JOINT SYSTEM, 3".
7. ENTIRE EXPANSION DAM SHALL BE PAINTED AFTER FABRICATION USING URETHANE SYSTEM.
8. LUBRICANT-ADHESIVE FOR USE IN INSTALLING AND BONDING NEOPRENE SEAL ELEMENTS TO STEEL JOINT COMPONENTS SHALL BE A ONE QUART MOISTURE CURING POLYURETHANE AND HYDROCARBON SOLVENT MIXTURE HAVING THE FOLLOWING PHYSICAL PROPERTIES:

AVERAGE WEIGHT, POUNDS PER GALLON	8 ±10%
SOLIDS CONTENT	65%
ADHESIVE SHALL REMAIN LIQUID FORM	5°F TO 120°F
FILM STRENGTH, AS PER ASTM D-412	2,000 PSI
ELONGATION	250%

9. HOLES SHALL BE PLACED IN THE RIB PLATES AND STRAP ANCHORS PLATES FOR BAR REINFORCEMENT. IF THIS IS DONE IN THE FIELD AN APPROVED EPOXY-BONDED PAINT SHALL BE USED TO TOUCH-UP THE HOLES. PAYMENT INCIDENTAL TO ITEM 624000 - PREFABRICATED EXPANSION JOINT SYSTEM, 3".
10. ANCHOR PLATE AND STEEL EXTRUSION SHALL BE WELDED TO BE WATERTIGHT AT CONSTRUCTION JOINTS. PAYMENT INCIDENTAL TO ITEM 624000 - PREFABRICATED EXPANSION JOINT SYSTEM, 3". AT AREAS WHERE STEEL MEMBERS ARE TO BE SPLICED, USE OF COMPLETE JOINT PENETRATION (CJP) AND PARTIAL JOINT PENETRATION (PJP) WELD ARE BOTH PERMITTED. THE THICKNESS OF PJP WELD MUST BE MINIMUM OF THE STEEL MEMBER THICKNESS.
11. IF WELD OPTION IS PROPOSED, SLOTTED HOLES IN 1/2" PLATE AND L6" X 4" X 1/2" L.L.V. MAY BE OMITTED.
12. L.L.V. DENOTES LONG LEG VERTICAL.

NOTES:

1. FOR DECK JOINT OPENING TABLE, SEE DWG. EX-01.

NOT FOR CONSTRUCTION

$DGNNAME$ $DATE$ $TIME$

DELAWARE DEPARTMENT OF TRANSPORTATION

ADDENDUMS / REVISIONS

SCALE AS NOTED

REHABILITATION OF I-95 FROM I-495 TO NORTH OF BRANDYWINE RIVER BRIDGE

CONTRACT	T201407404
COUNTY	NEW CASTLE
BRIDGE NO.	1 746 059
DESIGNED BY:	KY
CHECKED BY:	HQ

EXPANSION JOINT DETAILS - 2

1-746 EX-02	
SHEET NO.	2-122
TOTAL SHTS.	2-731

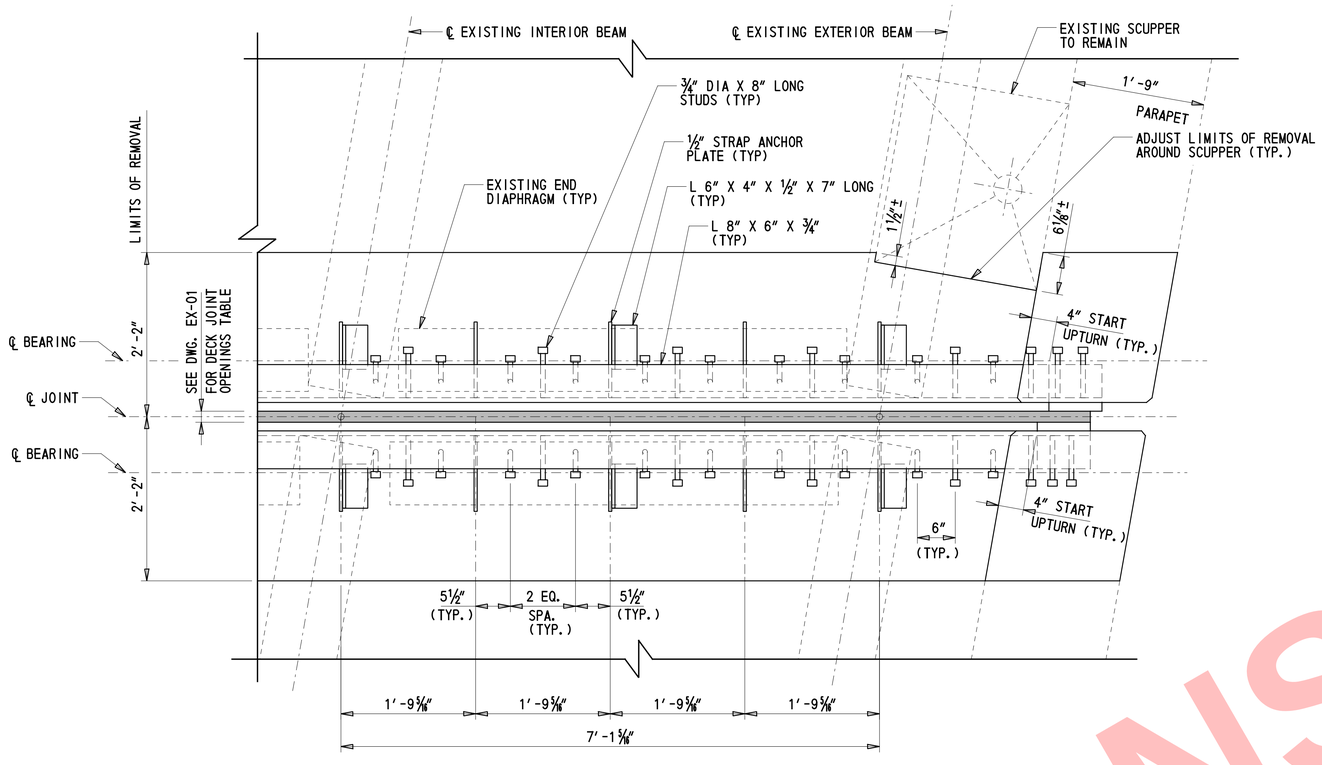

PARTIAL PLAN - TYPICAL EXPANSION JOINT PLAN

1″ = 1′-0″

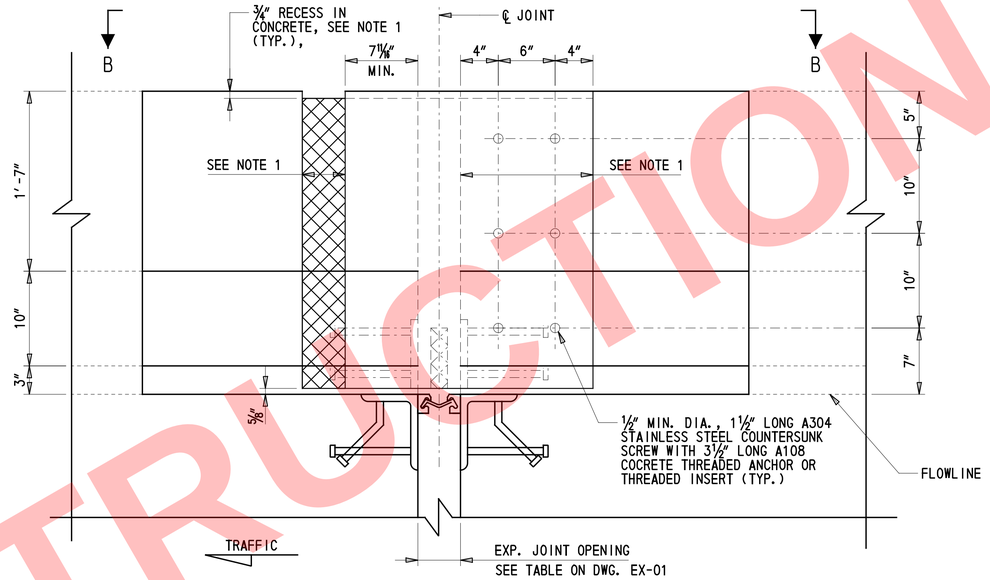

VIEW A-A

1½″ = 1′-0″

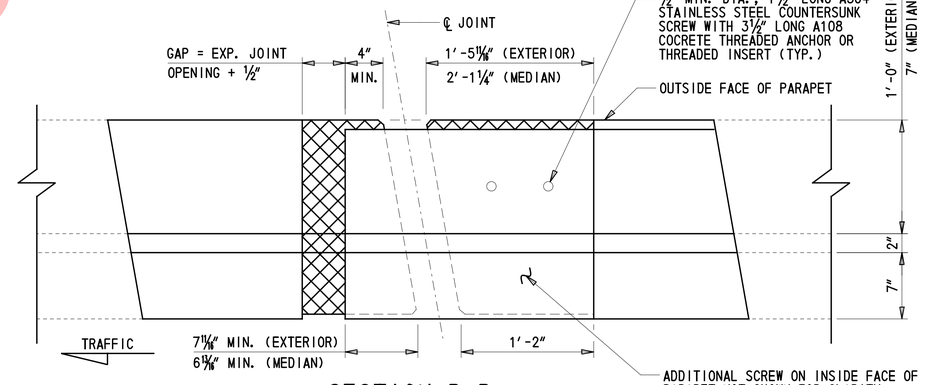

SECTION B-B

1½″ = 1′-0″

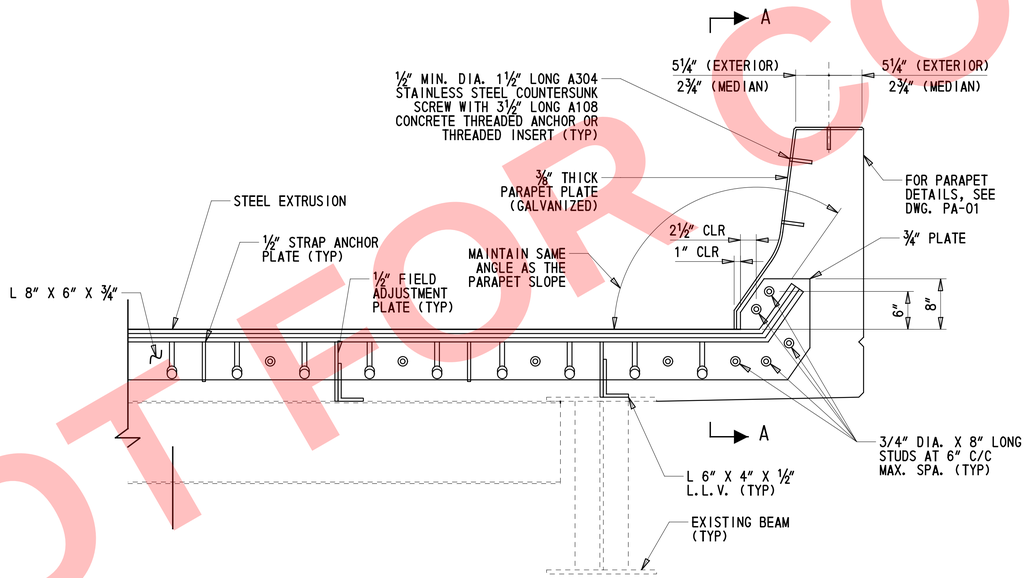

TYPICAL SECTION AT JOINT

1″ = 1′-0″

NOTES:

1. FORM CONCRETE RECESS AREA IN PARAPET AND GRIND THE FREE SIDE OF THE JOINT TO PROVIDE SMOOTH SURFACE. APPLY ONE COAT OF ASPHALT CEMENT IN ACCORDANCE WITH SECTION 1012 OF THE STANDARD SPECIFICATIONS TO ALLOW BENT SLIDING PLATE TO MOVE FREELY WITHOUT FRICTION. WORK SHALL BE INCIDENTAL TO ITEM 610008.
2. PLACE PARAPET CONCRETE WITH STEEL BENT PLATES, INSERTS, AND BOLTS IN PLACE TO ENSURE PROPER ALIGNMENT OF INSERTS AND HOLES IN THE STEEL PLATE. REMOVE PLATES TO INSTALL SEAL. APPLY APPROVED BONDBREAKER TO SLIDING PLATES PRIOR TO INSTALLATION.
3. GRIND ALL STEEL EDGES EXPOSED TO TRAFFIC TO ⅜″ MIN. RADIUS.
4. BOLTS SHALL BE ASTM A 304 STAINLESS STEEL COUNTERSUNK SCREW WITH ASTM A 108 CONCRETE THREADED ANCHOR OR THREADED INSERT. HEAD OF BOLTS SHALL BE FLUSH WITH FACE OF STEEL PLATE.
5. THE CONTRACTOR SHALL SUBMIT WORKING DRAWINGS OF TRAFFIC BARRIER PLATES FOR APPROVAL
6. FOR ADDITIONAL JOINT NOTES AND DETAILS, SEE DWGS. EX-01 AND EX-02.
7. PAYMENT FOR PARAPET JOINT PLATES AND PARTIAL REMOVAL OF PARAPET FOR JOINT RECONSTRUCTION SHALL BE INCIDENTAL TO ITEM 624000 - PREFABRICATED EXPANSION JOINT SYSTEM, 3″.

NOT FOR CONSTRUCTION

$DGNNAME$ $DATE$ $TIME$

DELAWARE
DEPARTMENT OF TRANSPORTATION

ADDENDUMS / REVISIONS

SCALE AS NOTED

REHABILITATION OF I-95 FROM I-495 TO NORTH OF BRANDYWINE RIVER BRIDGE

CONTRACT	BRIDGE NO.	1 746 059
T201407404	DESIGNED BY: KY	
COUNTY	CHECKED BY: HQ	
NEW CASTLE		

EXPANSION JOINT DETAILS - 3

1-746
EX-03

SHEET NO.	TOTAL SHTS.
2-123	2-731

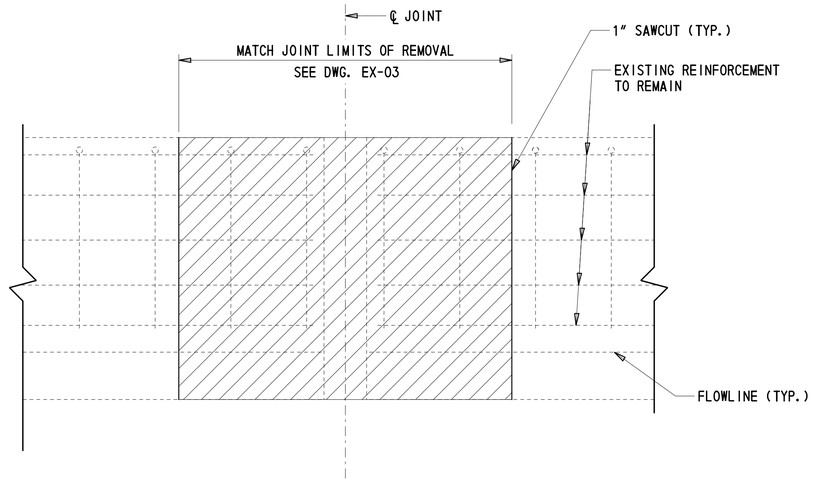

PARAPET REMOVAL AT EXPANSION JOINT

1" = 1'-0"

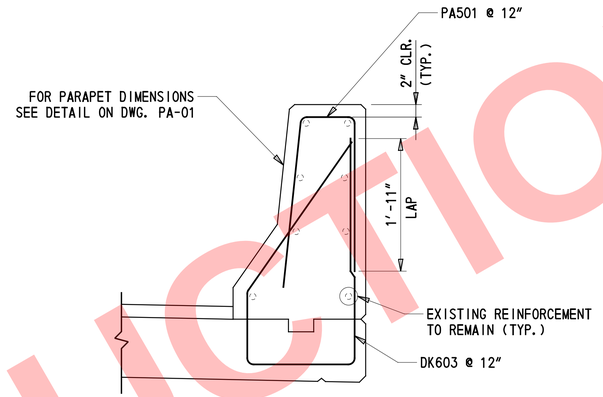

EXTERIOR PARAPET DETAIL AT EXPANSION JOINT

1" = 1'-0"

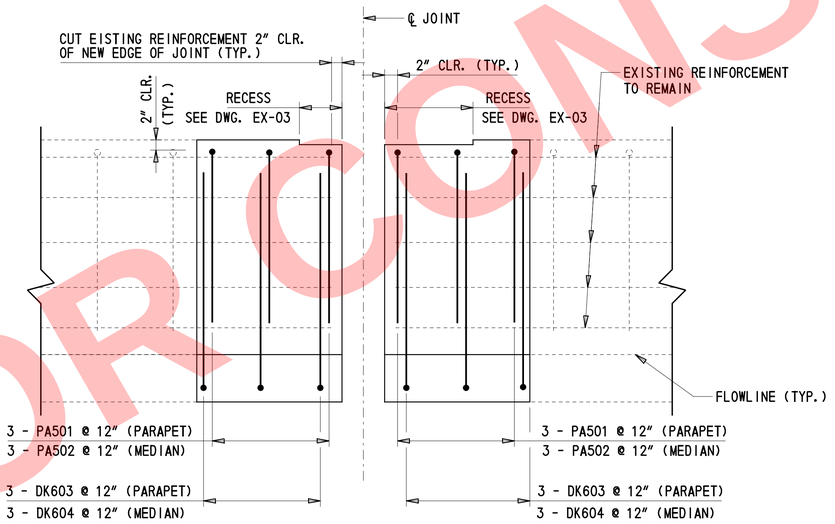

PARAPET RECONSTRUCTION

1" = 1'-0"

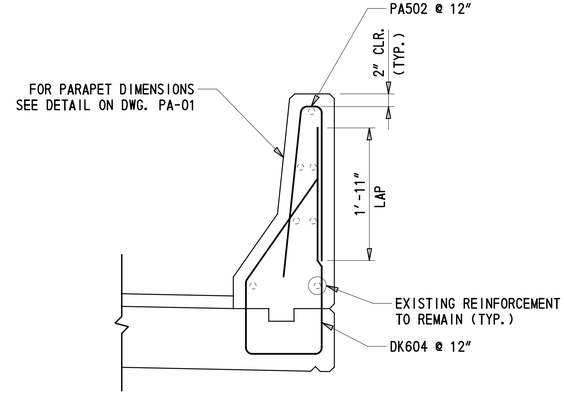

MEDIAN PARAPET DETAIL AT EXPANSION JOINT

1" = 1'-0"

LEGEND:

LIMITS OF REMOVAL

NOT FOR CONSTRUCTION

DELAWARE DEPARTMENT OF TRANSPORTATION	ADDENDUMS / REVISIONS	SCALE AS NOTED	REHABILITATION OF I-95 FROM I-495 TO NORTH OF BRANDYWINE RIVER BRIDGE	CONTRACT T201407404	BRIDGE NO. 1 746 059	EXPANSION JOINT DETAILS – 4	1-746 EX-04
				COUNTY NEW CASTLE	DESIGNED BY: KY		SHEET NO. 2-124
					CHECKED BY: HQ		TOTAL SHTS. 2-731

$DGNNAME$ $DATE$ $TIME$

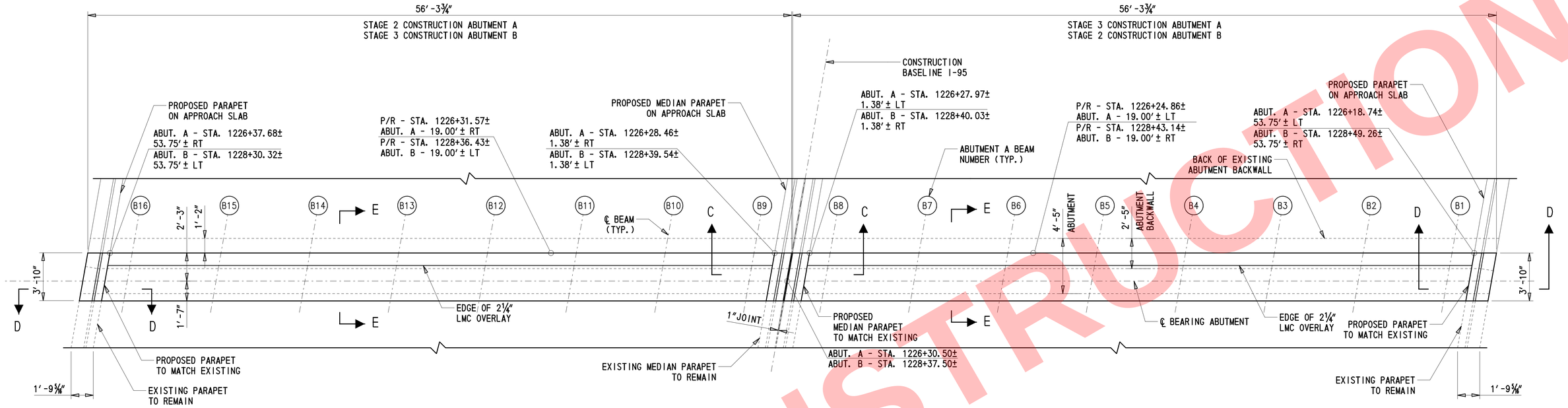

DECK OVER PLAN

¼″ = 1′-0″

NOTES:

1. FOR CLARITY, ABUTMENT A BEAM NUMBERS SHOWN, ABUTMENT B BEAM NUMBERS OPPOSITE TO ABUTMENT A BEAM NUMBERS.

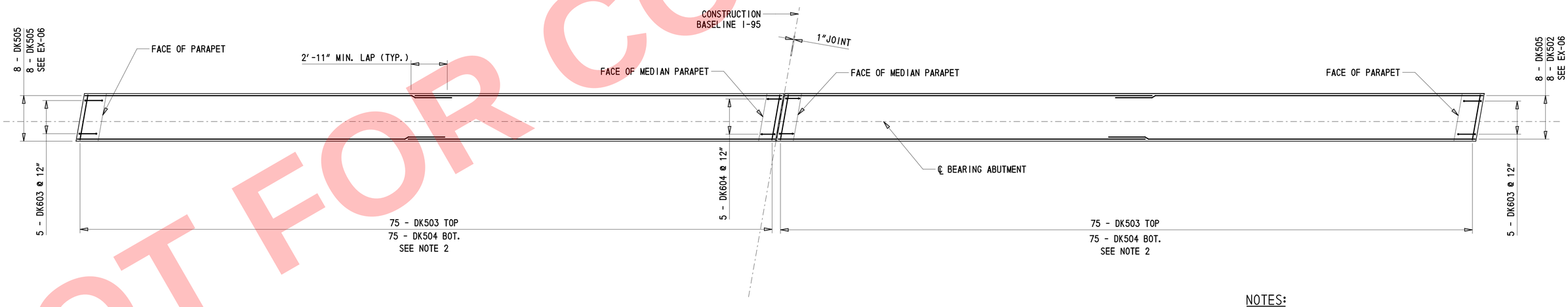

DECK OVER REINFORCING PLAN

¼″ = 1′-0″

NOTES:

1. FOR SECTIONS C-C, D-D, AND E-E SEE DWG. EX-06.
2. DK503 & DK504 SPACED TO MATCH EXISTING TOP LONGITUDINAL REINFORCEMENT.

NOT FOR CONSTRUCTION

$DONNAME$ $DATE$ $TIME$	DELAWARE DEPARTMENT OF TRANSPORTATION	ADDENDUMS / REVISIONS	SCALE AS NOTED	REHABILITATION OF I-95 FROM I-495 TO NORTH OF BRANDYWINE RIVER BRIDGE	CONTRACT T201407404	BRIDGE NO. 1 746 059	DECK OVER PLAN AND REINFORCEMENT PLAN	1-746 EX-05
					COUNTY NEW CASTLE	DESIGNED BY: KY		SHEET NO. 2-125
						CHECKED BY: HQ		TOTAL SHTS. 2-731

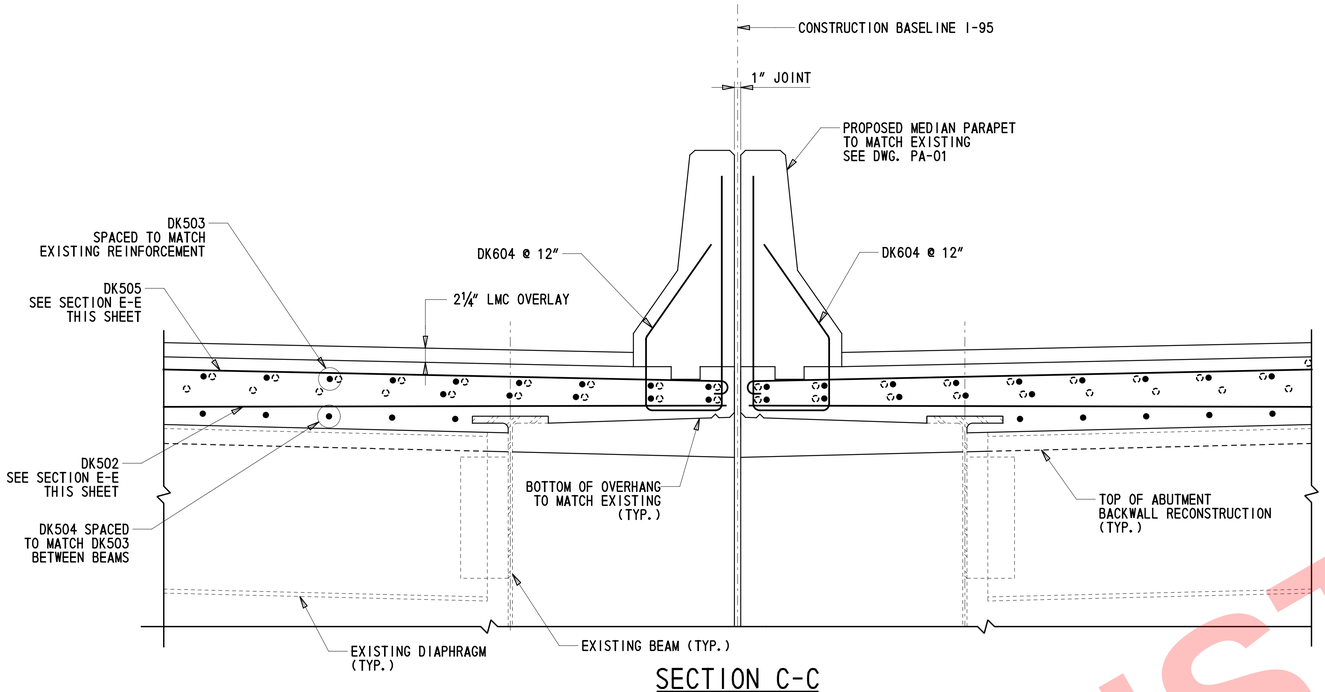

SECTION C-C

1" = 1'-0"

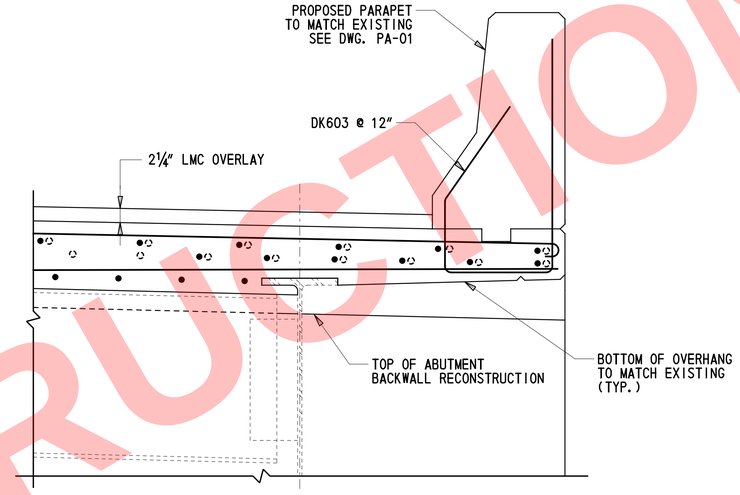

SECTION D-D

1" = 1'-0"

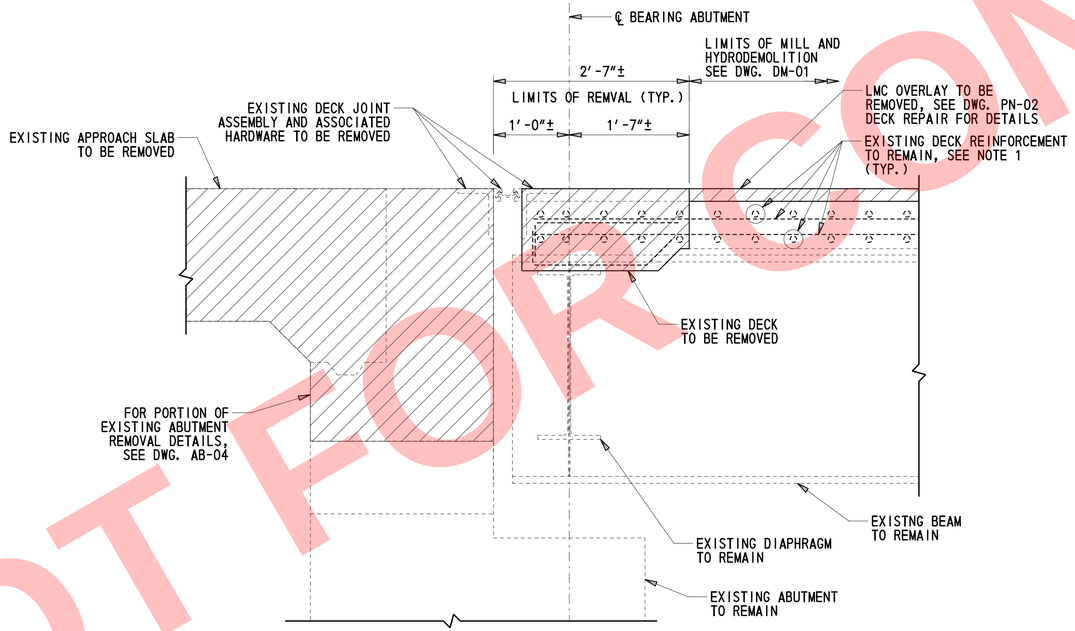

SECTION E-E (REMOVAL)

1" = 1'-0"

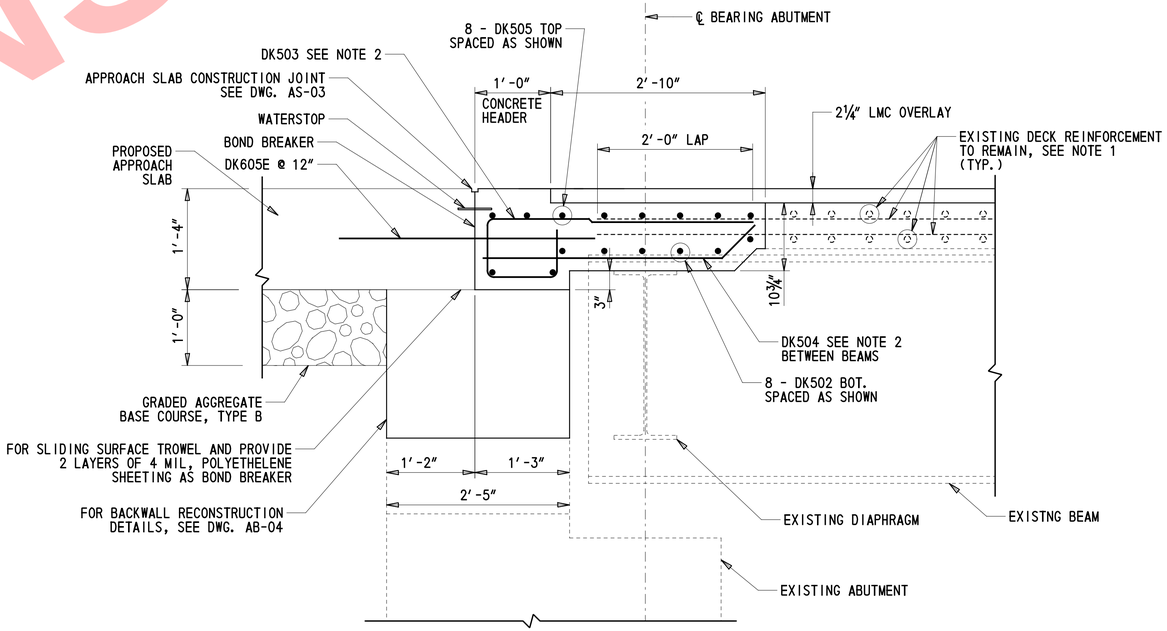

SECTION E-E

1" = 1'-0"

LEGEND:

LIMITS OF REMOVAL

NOTES:

1. CUT EXISTING LONGITUDINAL DECK REINFORCEMENT 2" CLEAR OF NEW EDGE OF JOINT.
2. BARS SPACED TO MATCH EXISTING TOP LONGITUDINAL BARS.

NOT FOR CONSTRUCTION

DELAWARE DEPARTMENT OF TRANSPORTATION	ADDENDUMS / REVISIONS	SCALE AS NOTED	REHABILITATION OF I-95 FROM I-495 TO NORTH OF BRANDYWINE RIVER BRIDGE	CONTRACT T201407404	BRIDGE NO. 1 746 059	DECK OVER DETAILS	1-746 EX-06
				COUNTY NEW CASTLE	DESIGNED BY: KY		SHEET NO. 2-126
					CHECKED BY: HQ		TOTAL SHTS. 2-731

$DGNNAME$ $$DATE$$ $TIME$

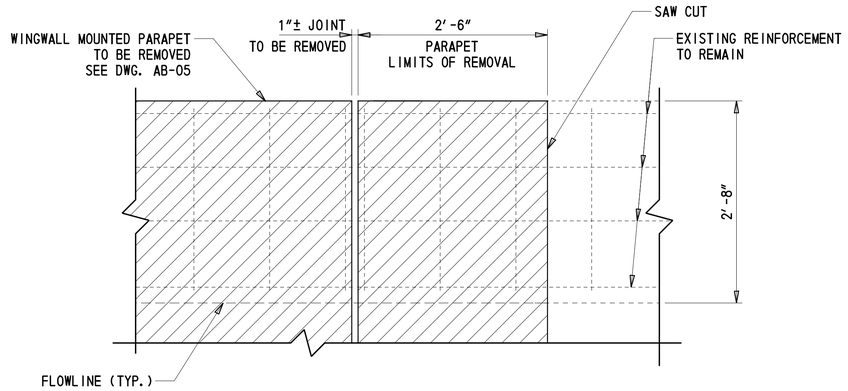

PARAPET REMOVAL AT DECK OVER

1" = 1'-0"

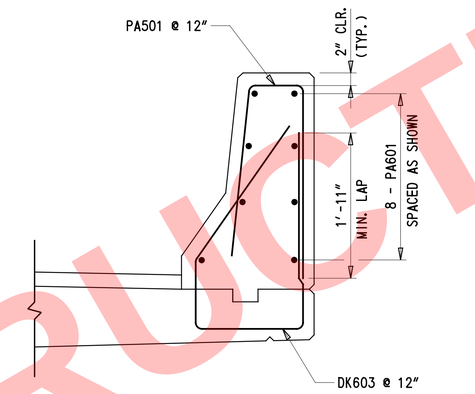

EXTERIOR PARAPET DETAIL AT DECK OVER

1" = 1'-0"

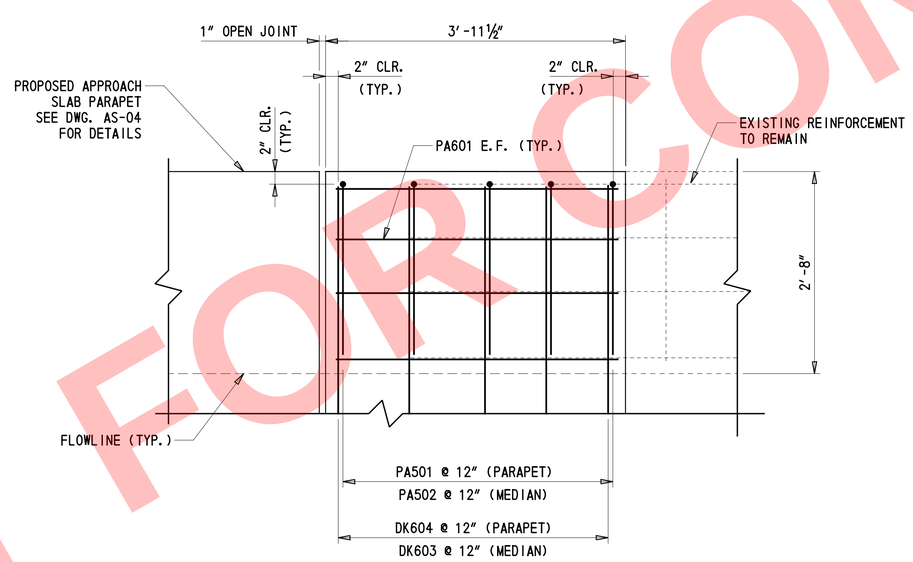

PARAPET RECONSTRUCTION AT DECK OVER

1" = 1'-0"

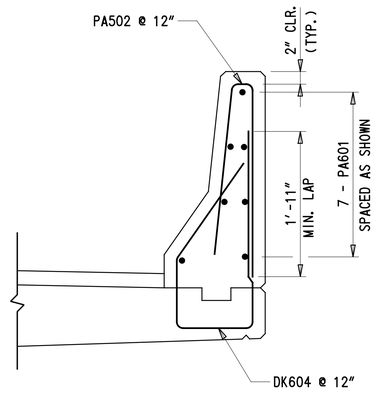

MEDIAN PARAPET DETAIL AT DECK OVER

1" = 1'-0"

LEGEND:

LIMITS OF REMOVAL

NOT FOR CONSTRUCTION

$DGNNAME$ $TIME$
$DATE$

DELAWARE
DEPARTMENT OF TRANSPORTATION

ADDENDUMS / REVISIONS

SCALE AS NOTED

REHABILITATION OF I-95
FROM I-495 TO NORTH OF
BRANDYWINE RIVER BRIDGE

CONTRACT	BRIDGE NO.	1 746 059
T201407404	DESIGNED BY:	KY
COUNTY	CHECKED BY:	HQ
NEW CASTLE		

DECK OVER
PARAPET DETAILS

1-746 EX-07	
SHEET NO.	2-127
TOTAL SHTS.	2-731

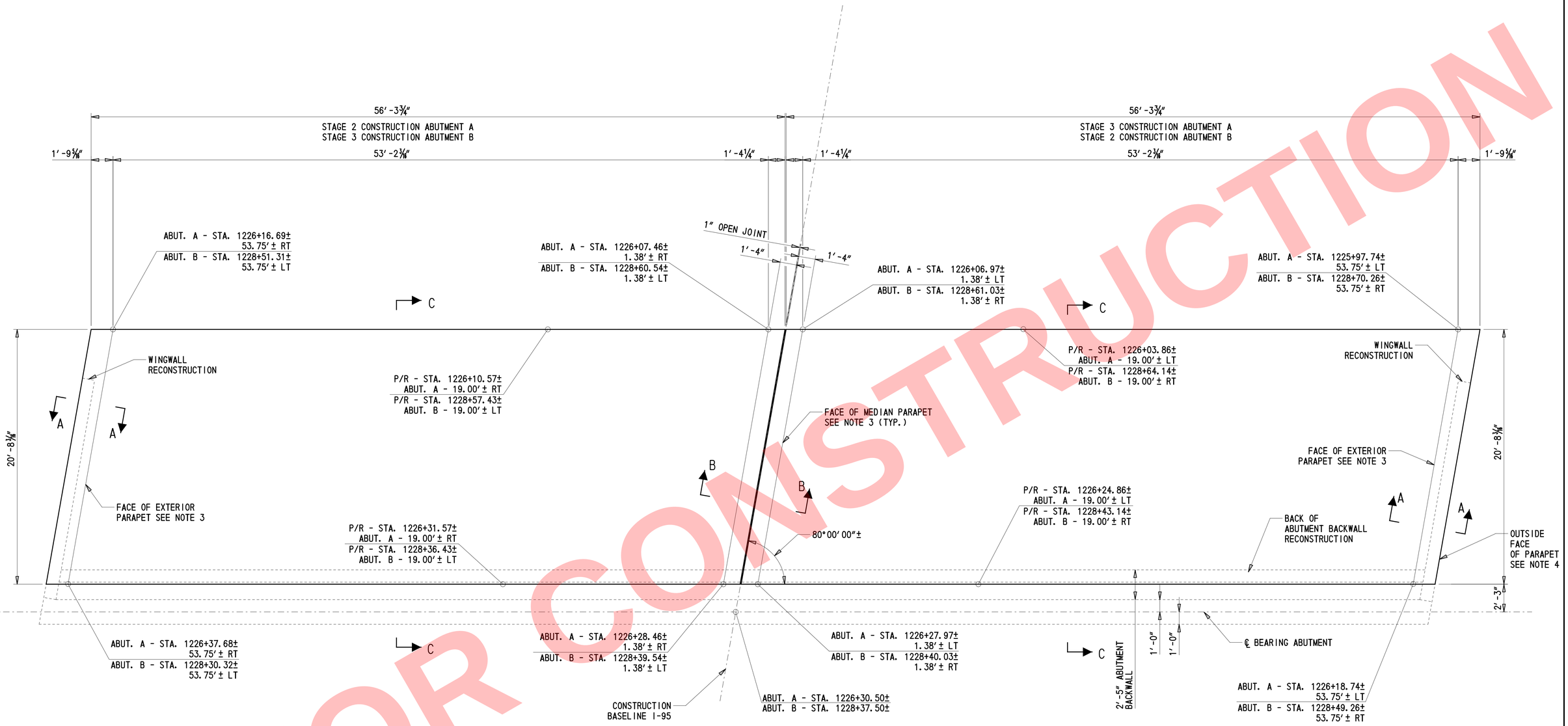

APPROACH SLAB PLAN

1/4″ = 1′-0″

NOTES:

1. FOR SECTIONS A-A, B-B AND C-C, SEE DWG. AS-03.
2. FOR LANE AND SHOULDER CONFIGURATION AND ADDITIONAL REQUIREMENTS, SEE DWG. TS-01.
3. FLOWLINE AT PARAPET SHOULD MATCH FLOWLINE OF EXISTING PARAPET ON BRIDGE.
4. OUTSIDE FACE OF PARAPET SHOULD BE CONSTRUCTED FLUSH WITH EXTERIOR FACE OF EXISTING WINGWALL.

NOT FOR CONSTRUCTION

DELAWARE DEPARTMENT OF TRANSPORTATION	ADDENDUMS / REVISIONS	SCALE AS NOTED	REHABILITATION OF I-95 FROM I-495 TO NORTH OF BRANDYWINE RIVER BRIDGE	CONTRACT T201407404	BRIDGE NO. 1 746 059	APPROACH SLAB PLAN	1-746 AS-01
				COUNTY NEW CASTLE	DESIGNED BY: TB		SHEET NO. 2-128
					CHECKED BY: HQ		TOTAL SHTS. 2-731

$DGNNAME$ $$DATE$$ $TIME$

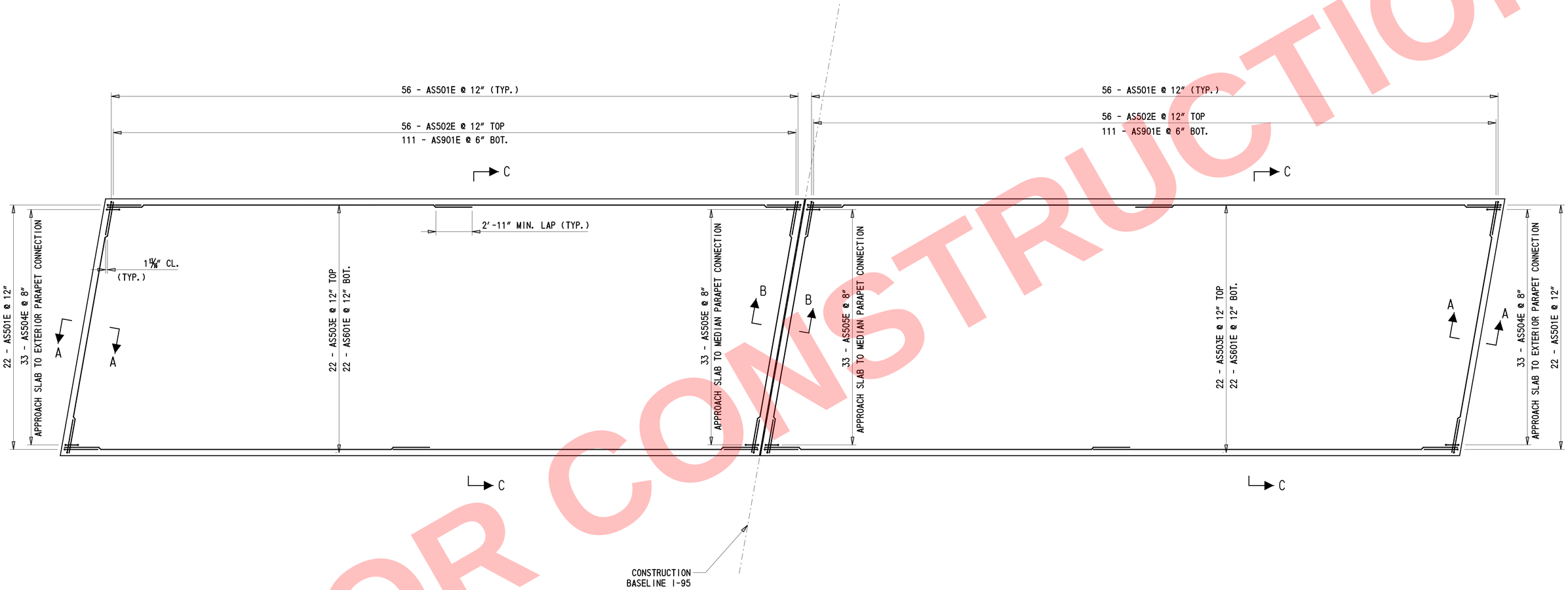

APPROACH SLAB REINFORCEMENT PLAN

1/4" = 1'-0"

NOTES:

1. APPROACH SLAB A SHOWN, APPROACH SLAB B IS SIMILAR.

NOT FOR CONSTRUCTION

DELAWARE DEPARTMENT OF TRANSPORTATION	ADDENDUMS / REVISIONS	SCALE AS NOTED	REHABILITATION OF I-95 FROM I-495 TO NORTH OF BRANDYWINE RIVER BRIDGE	CONTRACT T201407404	BRIDGE NO. 1 746 059	APPROACH SLAB REINFORCEMENT PLAN	1-746 AS-02
				COUNTY NEW CASTLE	DESIGNED BY: TB		SHEET NO. 2-129
					CHECKED BY: HQ		TOTAL SHTS. 2-731

$DGNNAME$ $TIME$
$SDATE$

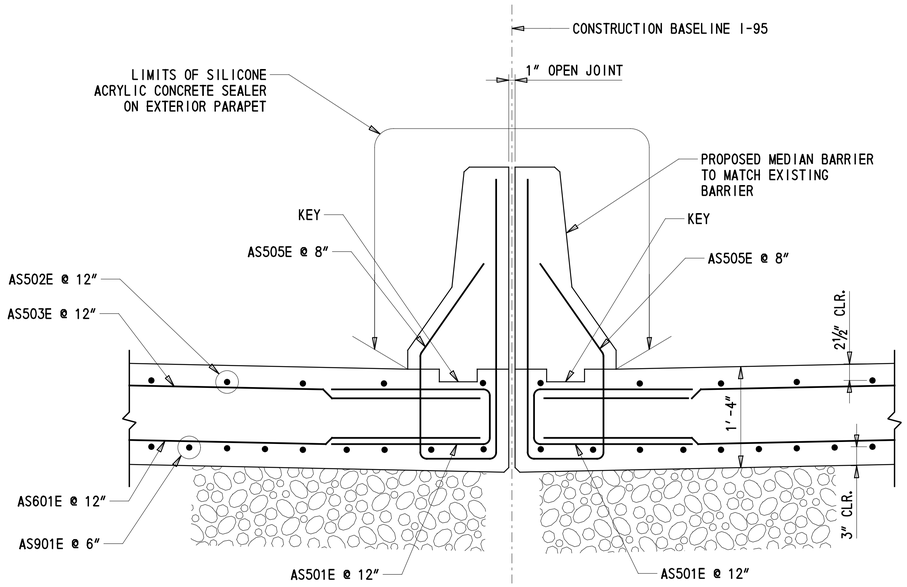

SECTION B-B

1" = 1'-0"

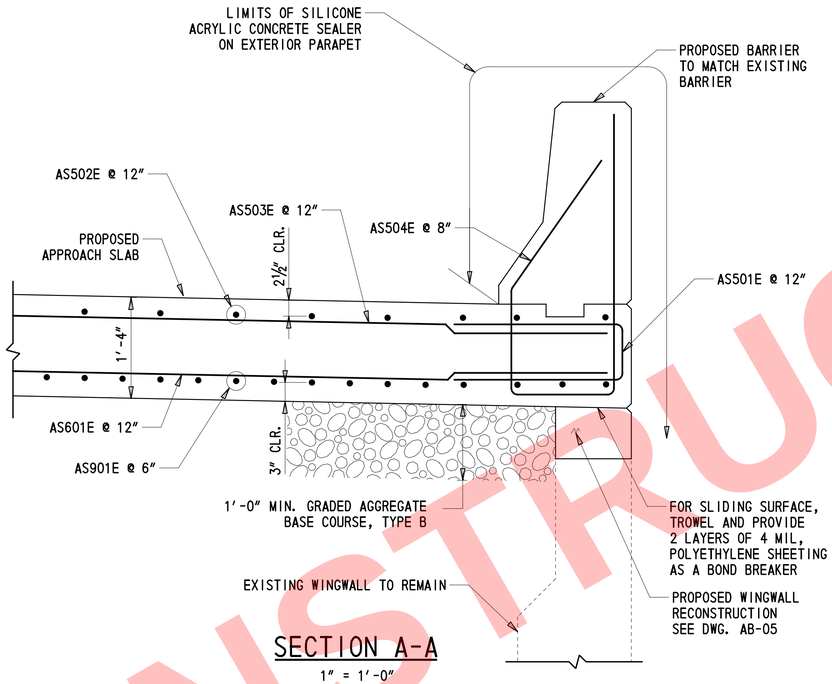

SECTION A-A

1" = 1'-0"

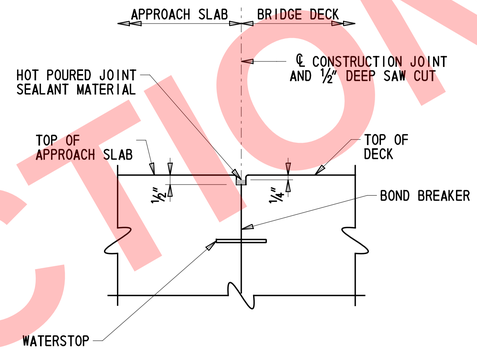

APPROACH SLAB CONSTRUCTION JOINT

NOT TO SCALE

NOTES:

1. FOR ARMORED STRIP SEAL EXPANSION JOINT DETAILS, SEE DWG. AS-07.
2. PAYMENT FOR POLYETHYLENE SHEETING, BOND BREAKER, WATERSTOP, ½" DEEP SAW CUT, PVC PIPE, AND HOT POURED JOINT SEALANT WILL BE INCIDENTAL TO ITEM 610018 - PORTLAND CEMENT CONCRETE, APPROACH SLAB, CLASS D.
3. FOR ADDITIONAL ROADWAY PAVEMENT DETAILS, SEE DELDOT STANDARD P-1. PAYMENT FOR ROADWAY JOINTS SHALL BE INCIDENTAL TO ROADWAY PAVEMENT ITEM.

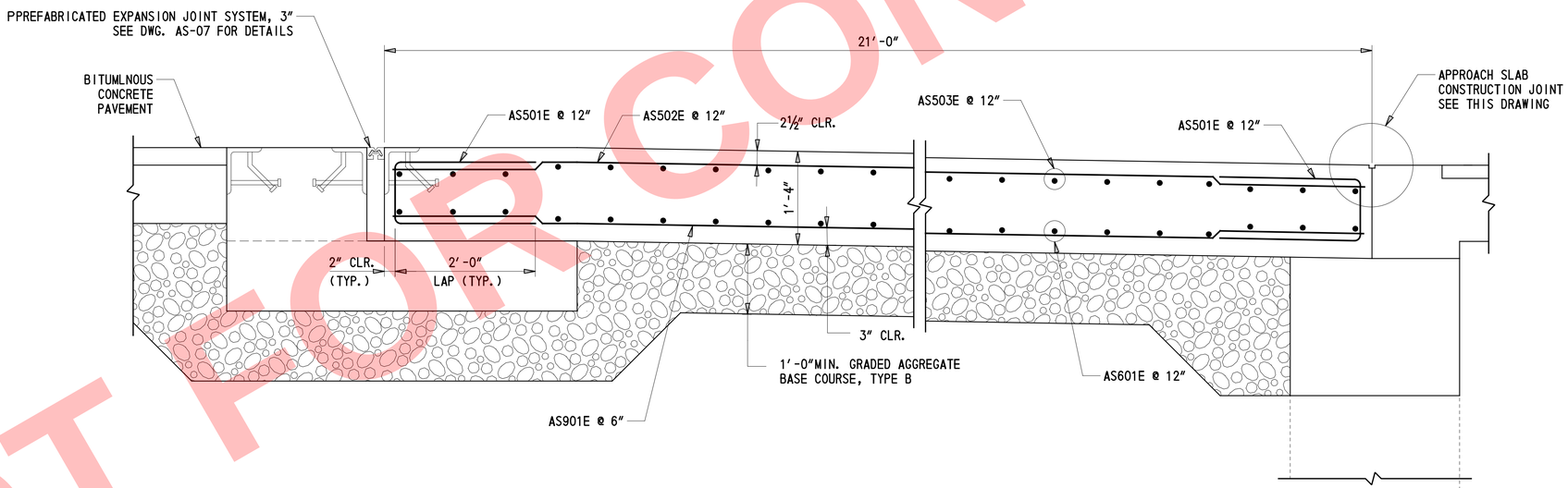

SECTION C-C

1" = 1'-0"

NOT FOR CONSTRUCTION

DELAWARE DEPARTMENT OF TRANSPORTATION	ADDENDUMS / REVISIONS	SCALE AS NOTED	REHABILITATION OF I-95 FROM I-495 TO NORTH OF BRANDYWINE RIVER BRIDGE	CONTRACT T201407404	BRIDGE NO. 1 746 059	APPROACH SLAB DETAILS - 1	1-746 AS-03
				COUNTY NEW CASTLE	DESIGNED BY: KY		SHEET NO. 2-130
					CHECKED BY: HQ		TOTAL SHTS. 2-731

$DGNNAME$ $DATE$$ $TIME$

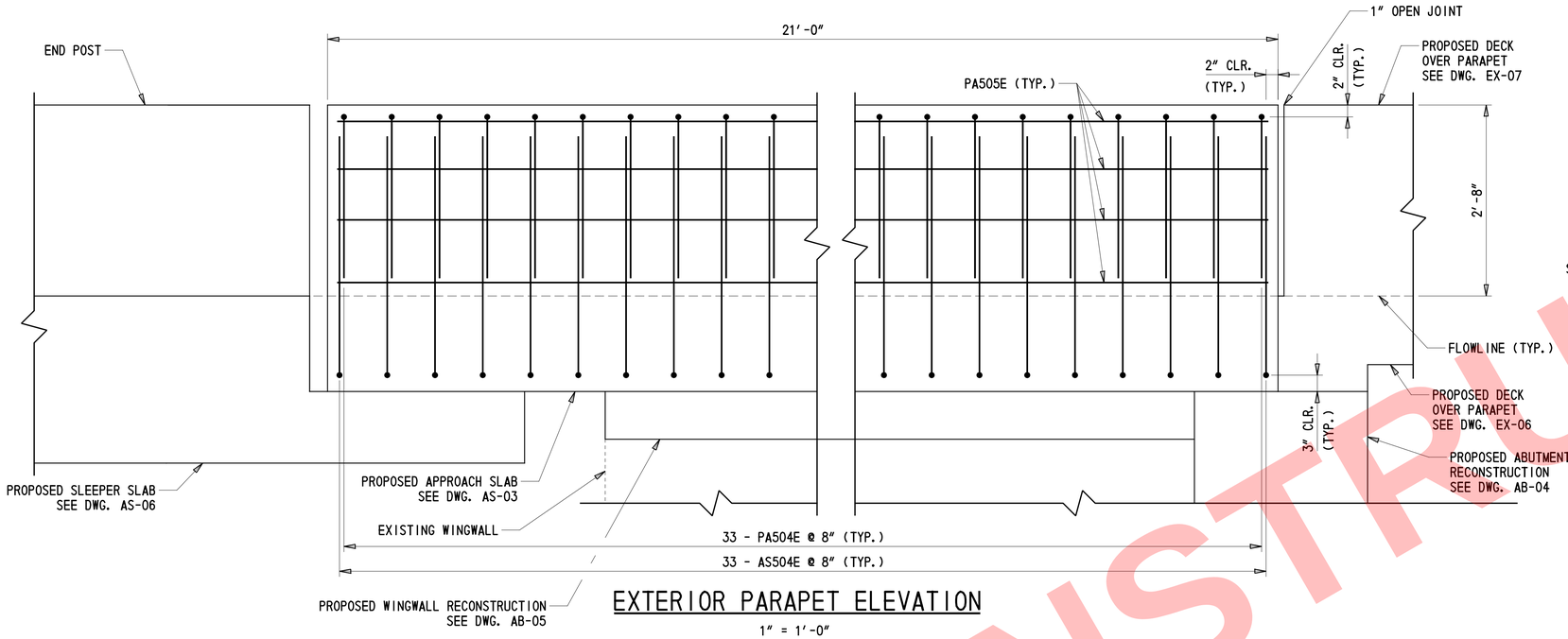

EXTERIOR PARAPET ELEVATION

1″ = 1′-0″

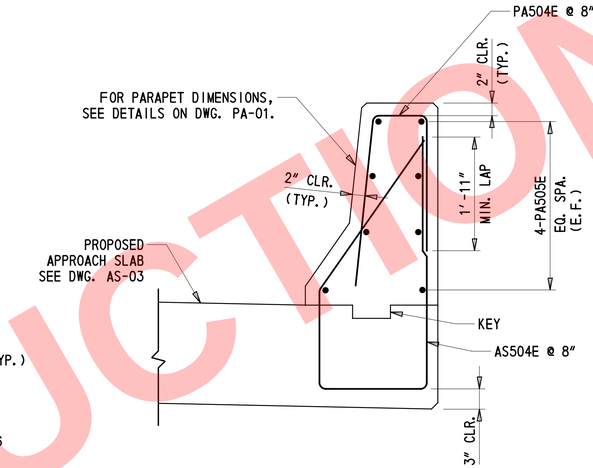

EXTERIOR PARAPET DETAIL

1″ = 1′-0″

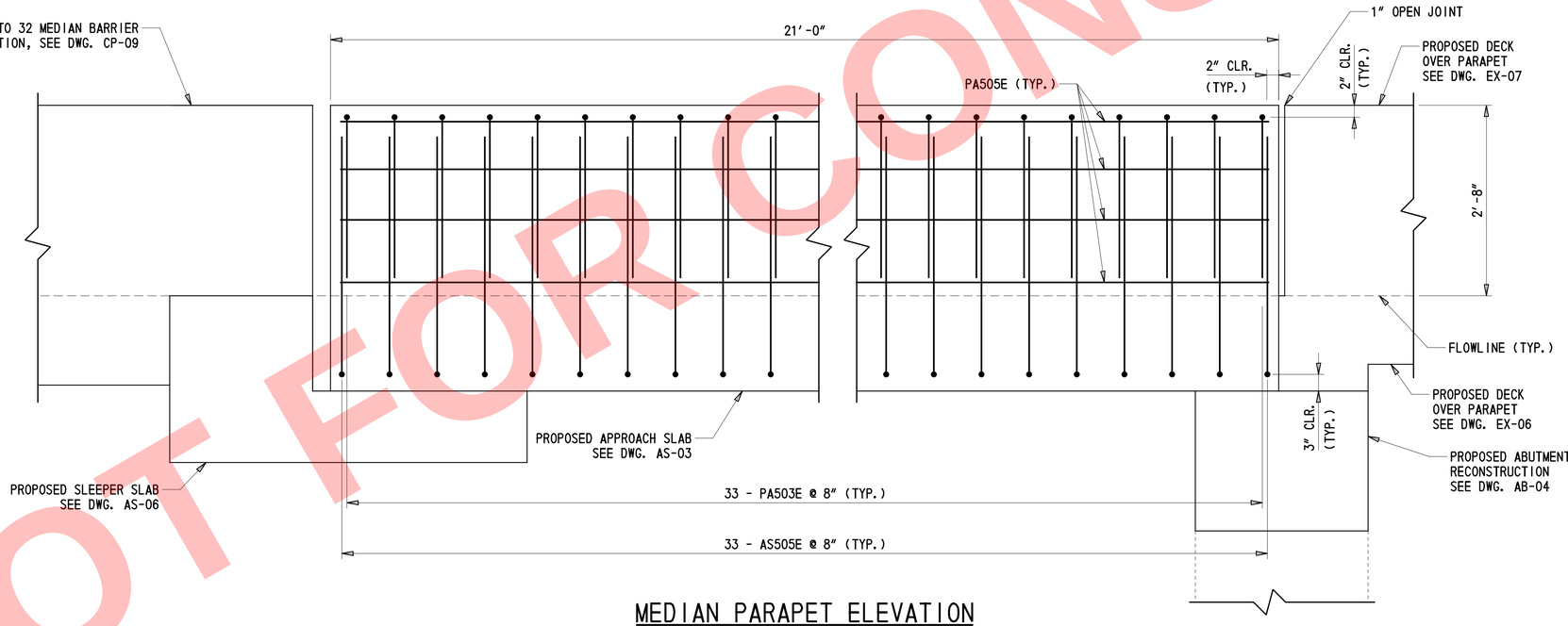

MEDIAN PARAPET ELEVATION

1″ = 1′-0″

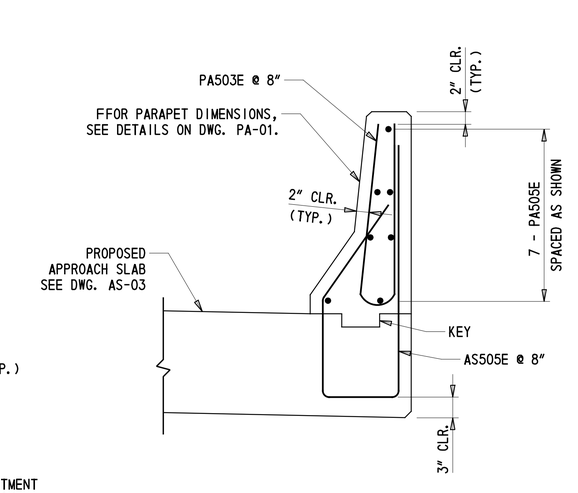

MEDIAN PARAPET DETAIL

1″ = 1′-0″

NOT FOR CONSTRUCTION

$DONAME$ $TIME$
$DATE$

DELAWARE
DEPARTMENT OF TRANSPORTATION

ADDENDUMS / REVISIONS

SCALE AS NOTED

REHABILITATION OF I-95
FROM I-495 TO NORTH OF
BRANDYWINE RIVER BRIDGE

CONTRACT	BRIDGE NO. 1 746 059
T201407404	DESIGNED BY: KY
COUNTY	CHECKED BY: HQ
NEW CASTLE	

APPROACH SLAB
DETAILS - 2

1-746 AS-04
SHEET NO. 2-131
TOTAL SHTS. 2-731

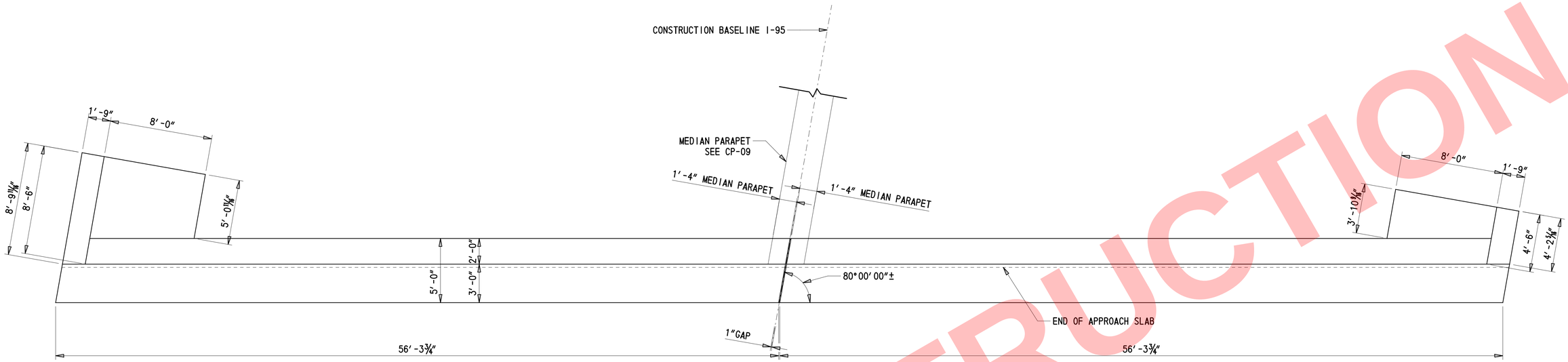

SLEEPER SLAB PLAN

1/4" = 1'-0"

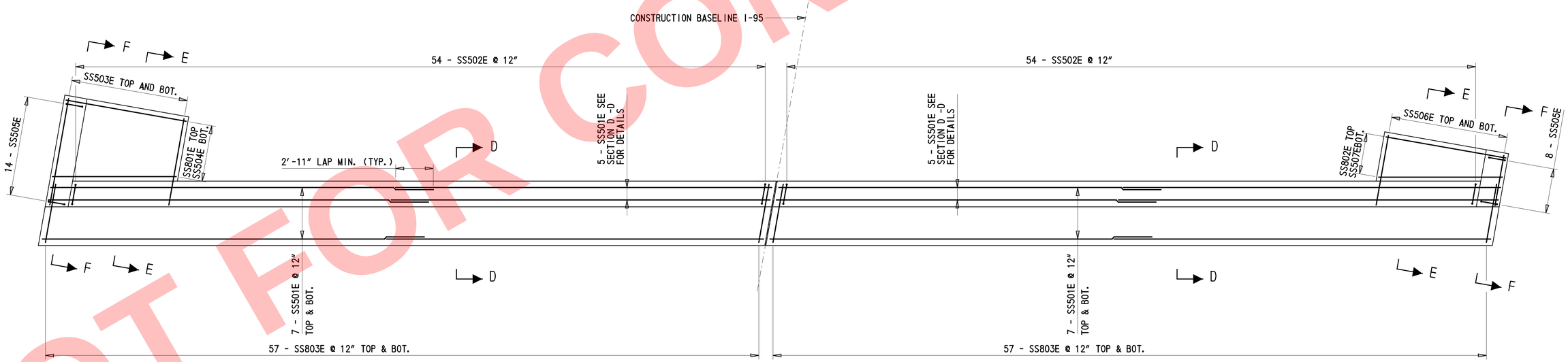

SLEEPER SLAB REINFORCING PLAN

1/4" = 1'-0"

NOTES:

1. FOR SECTIONS D-D, E-E AND F-F, SEE DWG. AS-06.

NOT FOR CONSTRUCTION

$DONAME$ $DATE$ $TIME$

DELAWARE
DEPARTMENT OF TRANSPORTATION

ADDENDUMS / REVISIONS

SCALE AS NOTED

REHABILITATION OF I-95
FROM I-495 TO NORTH OF
BRANDYWINE RIVER BRIDGE

CONTRACT	T201407404
COUNTY	NEW CASTLE
BRIDGE NO.	1 746 059
DESIGNED BY:	TB
CHECKED BY:	HQ

SLEEPER SLAB PLAN
AND REINFORCEMENT PLAN

1-746 AS-05	
SHEET NO.	2-132
TOTAL SHTS.	2-731

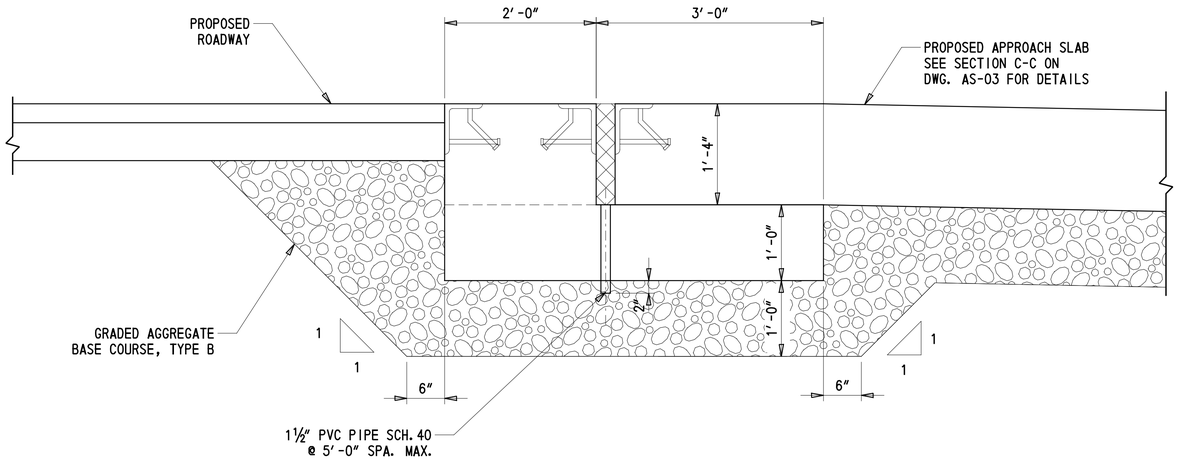

NOTE:
EXPANSION JOINT DETAILS NOT SHOWN FOR CLARITY.

SLEEPER SLAB TYPICAL SECTION

1″ = 1′-0″

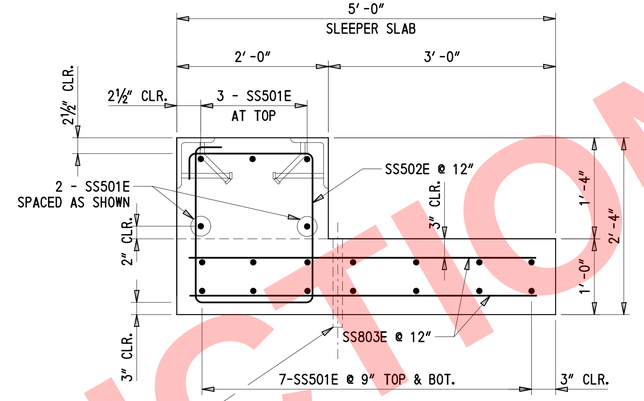

NOTE:

1. EXPANSION JOINT DETAILS NOT SHOWN FOR CLARITY.

SECTION D-D

1″ = 1′-0″

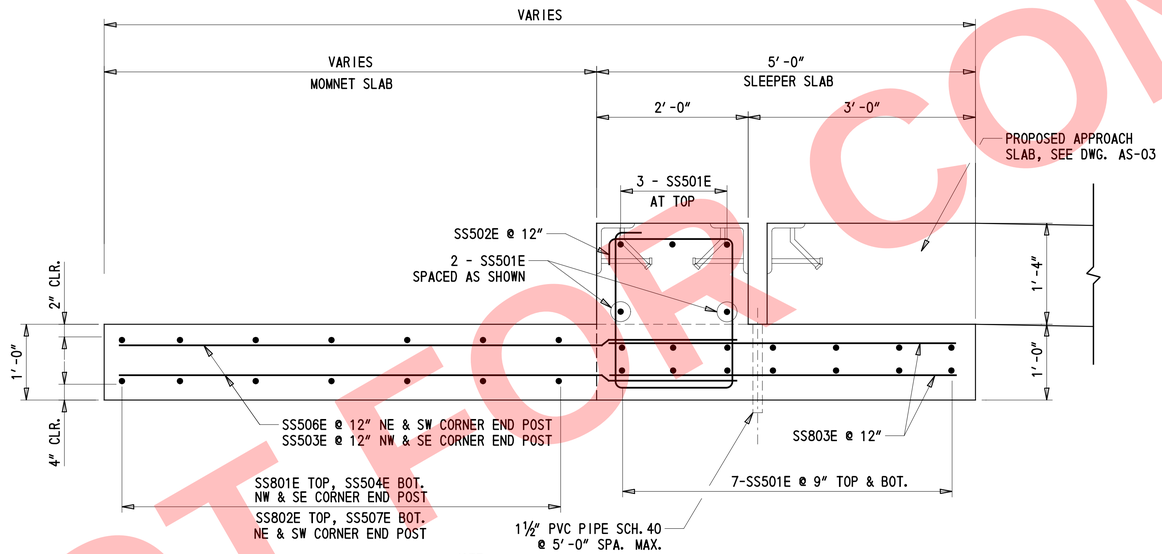

NOTE:
EXPANSION JOINT DETAILS NOT SHOWN FOR CLARITY.

SECTION E-E

1″ = 1′-0″

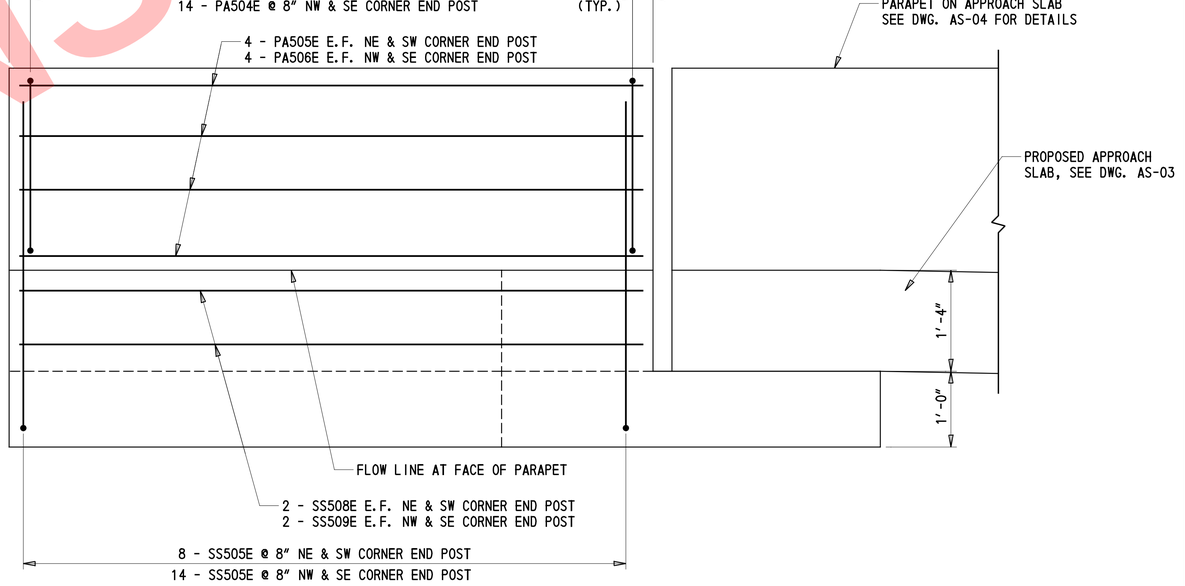

NOTE:
EXPANSION JOINT DETAILS NOT SHOWN FOR CLARITY.
SLEEPER SLAB REINFORCEMENT NOT SHOWN FOR CLARITY.

SECTION F-F

1″ = 1′-0″

NOT FOR CONSTRUCTION

$DGNNAME$ $DATE$ $TIME$

DELAWARE DEPARTMENT OF TRANSPORTATION

ADDENDUMS / REVISIONS

SCALE AS NOTED

REHABILITATION OF I-95 FROM I-495 TO NORTH OF BRANDYWINE RIVER BRIDGE

CONTRACT	BRIDGE NO. 1 746 059
T201407404	DESIGNED BY: TB
COUNTY	CHECKED BY: HQ
NEW CASTLE	

SLEEPER SLAB DETAILS - 1

1-746 AS-06	
SHEET NO.	2-133
TOTAL SHTS.	2-731

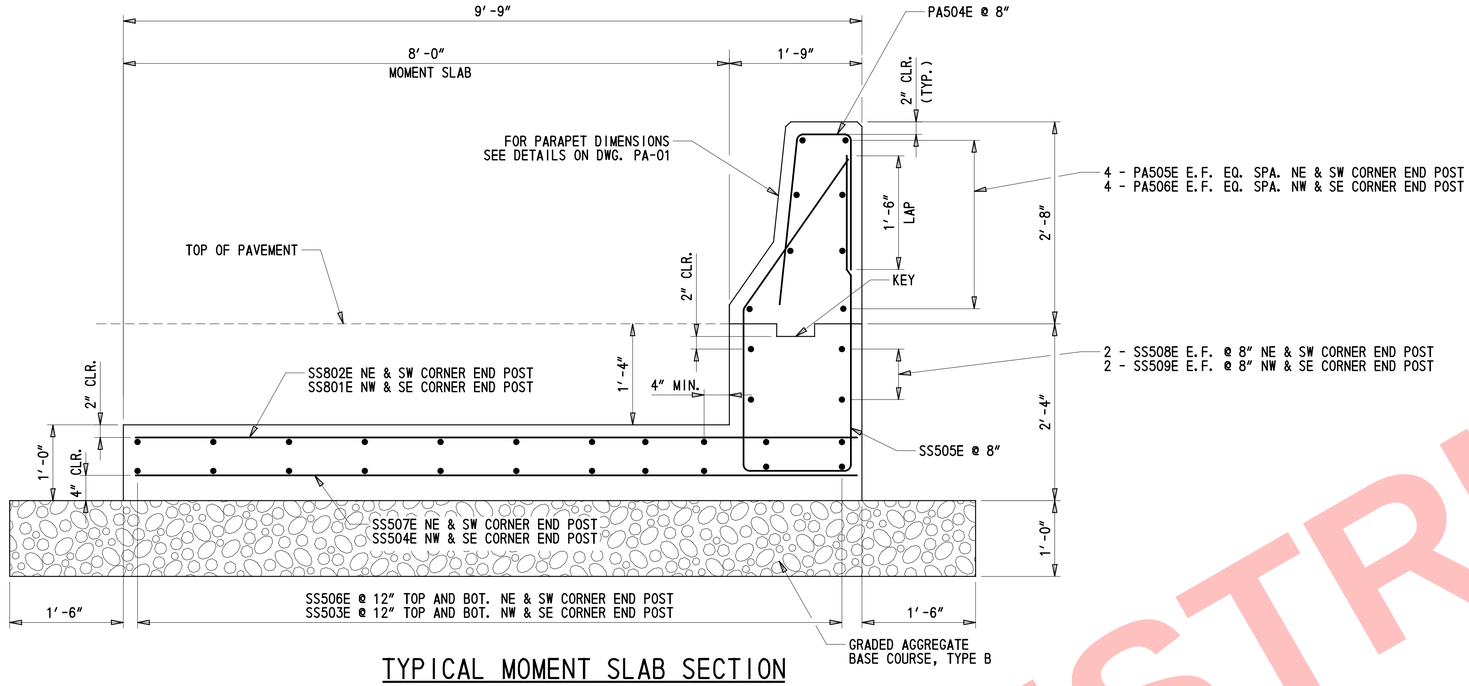

TYPICAL MOMENT SLAB SECTION

1″ = 1′-0″

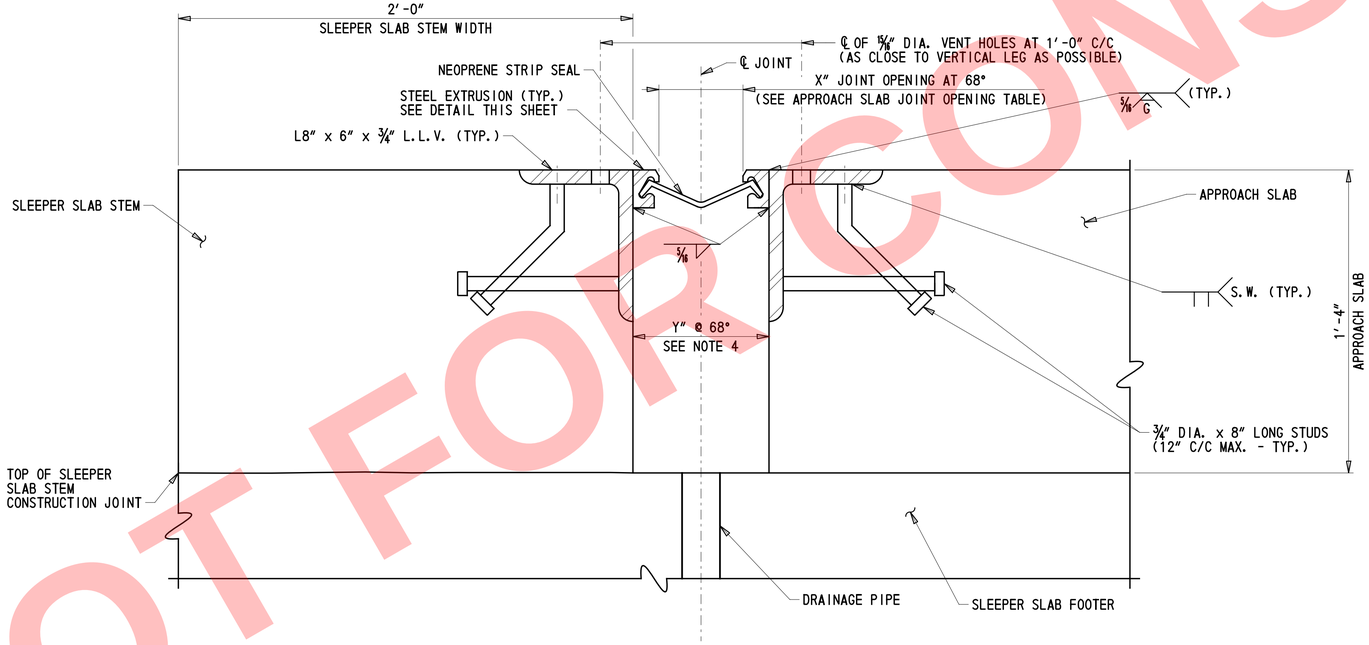

APPROACH SLAB JOINT ASSEMBLY DETAIL

3″ = 1′-0″

STRIP SEAL EXPANSION JOINT NOTES:

1. STEEL FOR DECK JOINTS AND STEEL EXTRUSIONS SHALL BE AASHTO M270, GR. 36 (ASTM A36) AT MINIMUM.
2. NEOPRENE EXTRUSION TO MEET D-2628-81 MODIFIED, (RECOVERY TESTS EXCLUDED).
3. THE EXPANSION JOINT SHALL BE CAPABLE OF SEALING THE DECK TO PREVENT MOISTURE AND OTHER CONTAMINANTS FROM DESCENDING THROUGH THE JOINT.
4. THE CONTRACTOR SHALL ADJUST THE OPEN JOINT (Y) AS REQUIRED BY THE WIDTH OF THE STEEL EXTRUSION USED TO PROVIDE A JOINT OPENING AT 68°F AS SHOWN IN DECK JOINT OPENINGS TABLE.
5. THE STRIP SEAL SHALL BE INSTALLED IN ONE PIECE ACROSS THE BRIDGE WIDTH. SPLICING OF THE STRIP MATERIAL IS NOT PERMITTED.
6. THE EXPANSION JOINT SYSTEM IS PAID FOR UNDER ITEM 624000 - PREFABRICATED EXPANSION JOINT SYSTEM, 3″.
7. ENTIRE EXPANSION DAM SHALL BE PAINTED AFTER FABRICATION USING URETHANE SYSTEM, UNLESS NOTED OTHERWISE.
8. LUBRICANT-ADHESIVE FOR USE IN INSTALLING AND BONDING NEOPRENE SEAL ELEMENTS TO STEEL JOINT COMPONENTS SHALL BE A ONE QUART MOISTURE CURING POLYURETHANE AND HYDROCARBON SOLVENT MIXTURE HAVING THE FOLLOWING PHYSICAL PROPERTIES:

AVERAGE WEIGHT, POUNDS PER GALLON	8 ±10%
SOLIDS CONTENT	65%
ADHESIVE SHALL REMAIN LIQUID FORM	5°F TO 120°F
FILM STRENGTH, AS PER ASTM D-412	2,000 PSI
ELONGATION	250%

9. STEEL EXTRUSION BE WELDED TO BE WATERTIGHT AT CONSTRUCTION JOINTS. PAYMENT INCIDENTAL TO ITEM 624000 - PREFABRICATED EXPANSION JOINT SYSTEM, 3″.
10. L.L.V. DENOTES LONG LEG VERTICAL.
11. TRAFFIC BARRIER PLATES ARE REQUIRED. SEE DETAILS ON EX-04 AND JOINT OPENING TABLE ON THIS SHEET.

APPROACH SLAB JOINT OPENINGS

LOCATION	TEMPERATURE (°F)									MOVEMENT CLASSIFICATION
	20	30	40	50	60	68	80	90	100	
APPROACHES	1 15/16″	1 13/16″	1 13/16″	1 3/4″	1 3/4″	1 3/4″	1 3/4″	1 11/16″	1 11/16″	3″

NOT FOR CONSTRUCTION

$DONAME$ $DATE$ $TIME$

DELAWARE
DEPARTMENT OF TRANSPORTATION

ADDENDUMS / REVISIONS

SCALE AS NOTED

REHABILITATION OF I-95
FROM I-495 TO NORTH OF
BRANDYWINE RIVER BRIDGE

CONTRACT T201407404
COUNTY NEW CASTLE
BRIDGE NO. 1 746 059
DESIGNED BY: TB
CHECKED BY: HQ

SLEEPER SLAB
DETAILS – 2

1-746
AS-07
SHEET NO. 2-134
TOTAL SHTS. 2-731

(1) ANY MARK NUMBER WITH SUFFIX 'E' DENOTES EPOXY COATED REINFORCING STEEL.

(2) ALL MARK 'LOCATION PREFIXES' SHALL CONSIST OF TWO LETTERS AND ARE AS FOLLOWS: AB = ABUTMENT, AS = APPROACH SLAB, BC = BOX CULVERT, BW = BACKWALL, CL = COLUMN, DK = DECK, DL = DOWEL, FT = FOOTING, HW = HEADWALL, MS = MISC. BARS, PA = PARAPET, PR = PIER, SC = SHEETPILE CAP, SL = SLAB, TW = TOEWALL, WL = WALL (UNIQUE LOCATION), WW = WINGWALL

SPECIFICATIONS					BENDING DIMENSIONS (FEET-INCHES /QUARTER INCH)										
QTY.	SIZE	LENGTH	MARK	TYPE	A	B	C	D	E	F / R	G	H	J	K	O
624	5	6-92	AS501E	17		2-110	0-112	2-110							
224	5	20-100	AS502E	STR		20-100									
176	5	31-00	AS503E	STR		31-00									
132	5	7-92	AS504E	T11			2-41	1-01	1-41	3-00		1-110		1-41	
132	5	7-23	AS505E	T11			1-72	1-01	0-111	3-00		1-40		0-111	
176	6	31-00	AS601E	STR		31-00									
444	9	20-100	AS901E	STR		20-100									
152	5	31-00	SS501E	STR		31-00									
216	5	8-10	SS502E	T2	0-60	1-71	1-111	1-71	1-111		0-60				
44	5	8-60	SS503E	STR		8-60									
1X16	5	9-50	SS504E	STR		9-50									
		T0				T0									
		9-63				9-63									
44	5	9-83	SS505E	T11		0-50	1-72	2-02	1-41	3-100		1-40		0-111	
44	5	5-90	SS506E	STR		5-90									
1X10	5	9-50	SS507E	STR		9-50									
		T0				T0									
		9-63				9-63									
1X28	8	9-50	SS801E	STR		9-50									
		T0				T0									
		9-63				9-63									
1X18	8	9-50	SS802E	STR		9-50									
		T0				T0									
		9-63				9-63									
456	8	4-90	SS803E	STR		4-90									
548	5	2-40	DK501	17		0-60	1-40	0-60							
64	5	31-00	DK502	STR		31-00									
300	5	6-10	DK503	16	0-100	0-102	0-82	3-80				3-80			0-82
300	5	4-00	DK504	12			3-22	0-92				0-63		0-63	3-91
64	5	31-70	DK505	18	0-70	31-00							0-50		
48	6	31-80	DK601	18	0-80	31-00							0-60		
64	6	31-00	DK602	STR		31-00									
44	6	7-11	DK603	T11			2-41	0-81	1-41	2-80		1-111			
44	6	6-63	DK604	T11			1-72	0-81	0-111	2-80		1-40			
232	6	4-00	DK605E	STR		4-00									
230	5	5-70	AB501	17		1-90	2-10	1-90							
18	5	7-92	AB502	17a		2-110	1-112	2-110				0-40		1-10	

SPECIFICATIONS					BENDING DIMENSIONS (FEET-INCHES /QUARTER INCH)										
QTY.	SIZE	LENGTH	MARK	TYPE	A	B	C	D	E	F / R	G	H	J	K	O
6	5	7-72	AB503	17b		2-110	1-32	1-112	112		0-112	0-32	0-20	1-80	
2	5	5-40	AB504	17		1-90	1-100	1-90							
32	6	55-113	AB601	STR		55-113									
3	6	30-82	AB602	19		1-01	28-80					0-20		1-00	30-80
8	5	15-30	WW501	STR		15-30									
44	5	5-92	PA501	16		2-70	0-71	2-71				2-70			0-102
44	5	5-42	PA502	16		2-70	0-21	2-71				2-70			0-52
132	5	5-43	PA503E	H1		2-40	0-90	2-33		0-23		0-21			
132	5	7-01	PA504E	T7	0-60	2-31	0-101	2-32	0-71		0-60	2-31			
60	6	3-72	PA601	STR		3-72									
60	6	20-80	PA602E	STR		20-80									
16	6	4-20	PA603E	STR		4-20									
16	6	8-20	PA604E	STR		8-20									

SPECIFICATIONS					BENDING DIMENSIONS (FEET-INCHES /QUARTER INCH)										
QTY.	SIZE	LENGTH	MARK	TYPE	A	B	C	D	E	F / R	G	H	J	K	O

NOTES:

1. FIGURES SHOWN IN CIRCLES REPRESENT BAR BEND TYPES.
2. STANDARD BAR BENDS INCLUDE ONLY THOSE TYPES BELOW, INDICATED AS SUCH.
3. ALL DIMENSIONS OUT-TO-OUT, EXCEPT "A" AND "G" ON STD. 180° AND 135° HOOKS.
4. "J" DIMENSIONS ON 180° HOOKS TO BE SHOWN ONLY WHERE NECESSARY TO RESTRICT HOOK SIZE, OTHERWISE STANDARD 'ACI' HOOKS ARE TO BE USED.
5. WHERE "J" IS NOT SHOWN, "J" WILL BE KEPT EQUAL TO OR LESS THAN "H" ON TYPES 3, 5 AND 22. WHERE "J" CAN EXCEED "H", IT SHALL BE SHOWN.
6. "H" DIMENSIONS OF STIRRUPS TO BE SHOWN AS NEEDED TO FIT WITHIN THE CONCRETE.
7. UNLESS OTHERWISE NOTED, DIAMETER "D" IS THE SAME FOR ALL BENDS AND HOOKS ON A BAR (EXCEPT FOR BEND TYPES 11 AND 13).
8. WHERE SLOPE DIFFERS FROM 45° OFFSET, "H" AND "K" MUST BE SHOWN.
9. WHERE BARS ARE TO BE BENT MORE ACCURATELY THAN STANDARD BENDING TOLERANCES, BENDING DIMENSIONS REQUIRING CLOSER FABRICATION SHOULD HAVE LIMITS INDICATED.
10. FOR RECOMMENDED DIAMETER "D", OF BENDS, HOOKS, ETC., REFER TO TABLE ABOVE, 'CRSI' OR 'ACI' TABLES WHERE APPLICABLE AND REQUIRED.
11. TYPE S1-S6, S11, T1-T3 AND T6-T9 APPLICABLE TO BAR SIZES #3 THROUGH #8.

ASTM STANDARD ENGLISH REINFORCING BARS				RECOMMENDED END HOOKS, APPLICABLE TO ALL GRADES				STIRRUP AND TIE HOOKS, APPLICABLE TO ALL GRADES			
	NOMINAL DIMENSIONS				180° HOOKS		90° HOOKS		90° HOOK	135° HOOK	
BAR SIZE	DIAMETER (INCHES)	AREA (INCHES²)	WEIGHT (LBS./FT.)	D	A OR G	J	A OR G	D	A OR G	A OR G	A OR G
3	0.375	0.110	0.376	2¼"	5"	3"	6"	1½"	4"	4"	2½"
4	0.500	0.200	0.668	3"	6"	4"	8"	2"	4½"	4½"	3"
5	0.625	0.310	1.043	3¾"	7"	5"	10"	2½"	6"	5½"	3¾"
6	0.750	0.440	1.502	4½"	8"	6"	1-0"	4½"	1-0"	8"	4½"
7	0.875	0.600	2.044	5¼"	10"	7"	1-2"	5¼"	1-2"	9"	5¼"
8	1.000	0.790	2.670	6"	11"	8"	1-4"	6"	1-4"	10½"	6"
9	1.128	1.000	3.400	9½"	1-3"	11¾"	1-7"				
10	1.270	1.270	4.303	10¾"	1-5"	1-1¼"	1-10"				
11	1.410	1.560	5.313	1-0"	1-7"	1-2¾"	2-0"				
14	1.693	2.250	7.650	1-6¼"	2-3"	1-9¾"	2-7"				
18	2.257	4.000	13.600	2-0"	3-0"	2-4½"	3-5"				

STIRRUP AND TIE HOOKS

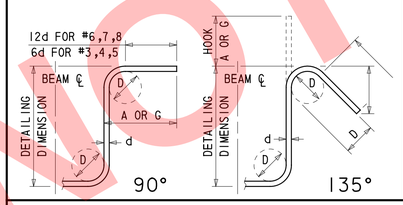

180° AND 90° END HOOKS

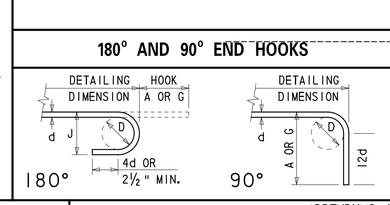

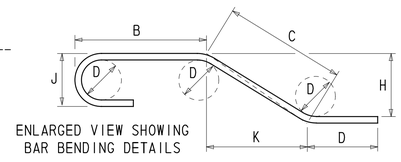

STANDARD BAR BENDS

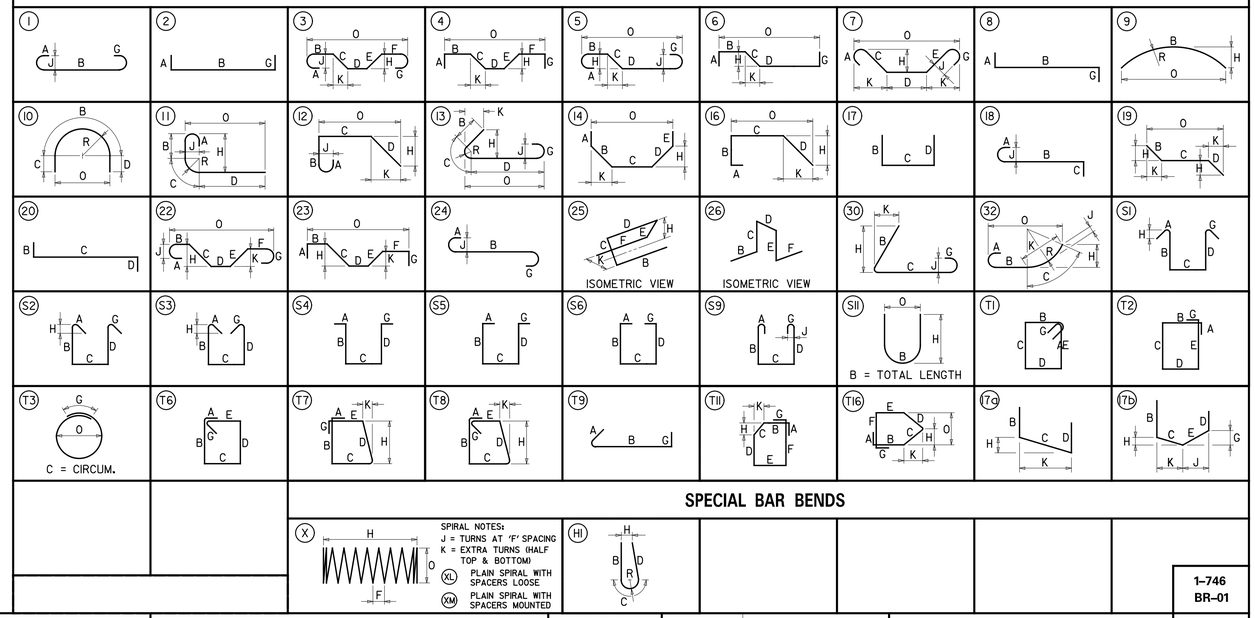

SPECIAL BAR BENDS

1-746
BR-01

DELAWARE
DEPARTMENT OF TRANSPORTATION

ADDENDUMS / REVISIONS

SCALE AS NOTED

REHABILITATION OF I-95
FROM I-495 TO NORTH OF
BRANDYWINE RIVER BRIDGE

CONTRACT	BRIDGE NO.	1 746 059
T201407404	DESIGNED BY: TB	
COUNTY	CHECKED BY: HQ	
NEW CASTLE		

REINFORCEMENT SCHEDULE

SHEET NO. 2-135
TOTAL SHTS. 2-731

$DONNAME$
$$DATE$$ $TIME$

NOT FOR CONSTRUCTION

SECTION 200

1. REMOVAL OF STRUCTURES AND OBSTRUCTIONS:
   ITEMS TO BE REMOVED UNDER ITEM 211000 - REMOVAL OF STRUCTURES AND OBSTRUCTIONS ASSOCIATED WITH BRIDGE 1-748, 1-748N, AND 1-748S SHALL INCLUDE, BUT NOT BE LIMITED TO, THE FOLLOWING:
   - EXTERIOR PARAPETS BRS. 1-748, 1-748N, AND 1-748S (INLCUDING PARAPETS AT ABUTMENTS)
   - INTERIOR PARAPETS BRS. 1-748N AND 1-748S (INCLUDING PARAPETS AT ABUTMENTS)
   - EXTERIOR DECK OVERHANGS (BRS. 1-748, 1-748N, AND 1-748S)
   - INTERIOR DECK OVERHANGS (BRS. 1-748N AND 1-748S)
   - BRIDGE-MOUNTED OVERHEAD SIGN STRUCTURES
   - STEEL SIGN SUPPORT BRACKETS
   - TRAFFIC SIGNS
   - CHAIN LINK FENCING
   - RAILROAD PROTECTIVE BARRIER
   - DECORATIVE BARRIER (SALVAGE POSTS)
   - CONCRETE APPROACH SLABS
   - EXPANSION JOINTS AT ABUTMENTS INCLUDING PORTION OF CONCRETE RECTANGULAR PARAPET AT NORTH ABUTMENT
   - PORTION OF CONCRETE BACKWALLS AND WINGWALLS

2. SIGNING:
   TO AVOID DAMAGE, SIGNS WITHIN PROJECT LIMITS MAY BE REMOVED DURING CONSTRUCTION IF NEEDED, BUT MUST BE REPLACED TO MATCH EXISTING CONDITIONS BEFORE REOPENING THE ROADWAY. ALL WORK RELATED TO MOVING AND REINSTALLING THE SIGN SHALL BE INCIDENTAL TO ITEM 211000 - REMOVAL OF STRUCTURES AND OBSTRUCTIONS. IF THE SIGN IS DAMAGED DURING CONSTRUCTION, THE SIGN MUST BE REPLACED AT THE CONTRACTOR'S EXPENSE.

SECTION 600

3. PORTLAND CEMENT CONCRETE:
   USE PORTLAND CEMENT CONCRETE FOR CAST-IN-PLACE ELEMENTS AS FOLLOWS:
   (f'c = 28-DAY COMPRESSIVE STRENGTH)
   CLASS A - PARAPETS (f'c = 4.5 ksi)
   CLASS D - DECK, APPROACH SLABS, SLEEPER SLABS (f'c = 4.5 ksi)
   A HIGHER CLASS CONCRETE MAY BE SUBSTITUTED FOR A LOWER CLASS CONCRETE AT NO ADDITIONAL COST TO DELDOT WITH APPROVAL OF THE ENGINEER.
   -CHAMFER ALL EXPOSED EDGES ¾" X ¾" UNLESS OTHERWISE NOTED.
   -DO NOT SLIP-FORM PARAPETS, UNLESS OTHERWISE APPROVED BY THE DEPARTMENT. SLIP FORMING WILL ONLY BE CONSIDERED FOR PARAPETS THAT ARE NOT SUBJECT TO LIVE LOAD VIBRATIONS DURING STAGE 2 AND WILL NOT BE ALLOWED WHERE ANCHOR BOLTS FOR FENCES, RAILROAD PROTECTIVE BARRIER, AND DECORATIVE BARRIERS ARE REQUIRED.
   -CONTRACTOR SHALL SUPPLY CONCRETE FOR THE PARAPETS, BRIDGE DECK, AND APPROACH SLABS THAT INCLUDES A SHRINKAGE-REDUCING/COMPENSATING ADMIXTURE. PAYMENT FOR ADMIXTURE WILL BE INCIDENTAL TO ITS RESPECTIVE CONCRETE ITEM (ITEMS 610008, 610016, 610017, AND 610018). THE ADMIXTURE MAY BE SUPPLIED BY ONE PRODUCT THAT PROVIDES BOTH EXPANSION AND PORE WATER SURFACE TENSION OR TWO SEPARATE PRODUCTS EACH ADDED AT DOSAGE RECOMMENDED BY MANUFACTURER'S TECHNICAL DATA SHEETS AND HAVING THE FOLLOWING CHARACTERISTICS:

   (A) DESIGNED TO PROVIDE BOTH THE FOLLOWING CHARACTERISTICS:
   I. EXPANDS AT A RATE THAT CLOSELY COMPENSATES FOR SHRINKAGE OF THE CONCRETE MIX.
   II. REDUCES THE CAPILLARY SURFACE TENSION OF THE CONCRETE PORE WATER.
   (B) PROVIDES AT LEAST 80% SHRINKAGE REDUCTION AS MEASURED AND DOCUMENTED BY FIELD PERFORMANCE.
   (C) FORMULATED FOR USE IN FREEZING AND THAWING WEATHER.

4. BAR REINFORCEMENT:
   -REINFORCING STEEL SHALL CONFORM TO AASHTO M 31 (ASTM A615), GRADE 60.
   -REINFORCING STEEL SHALL HAVE A 3" CLEAR COVER IF CAST AGAINST EARTH OR A 2" CLEAR COVER

   ELSEWHERE, UNLESS OTHERWISE SPECIFIED ON THE PLANS.
   -ALL REINFORCING STEEL SHALL BE PROTECTED WITH FUSION BONDED EPOXY UNLESS OTHERWISE SPECIFIED ON THE PLANS. EPOXY COATED REINFORCING STEEL SHALL CONFORM TO ASTM A775.
   -ANY FIELD CUTTING OR FIELD BENDING MUST BE APPROVED BY THE ENGINEER. PAYMENT SHALL BE INCIDENTAL TO THE BAR REINFORCEMENT ITEM.
   -GALVANIZED REINFORCING STEEL MAY BE SUBSTITUTED FOR EPOXY-COATED REINFORCING STEEL AT NO ADDITIONAL COST TO DELDOT WITH APPROVAL OF THE ENGINEER.
   -WELDING OF REINFORCEMENT DURING FABRICATION OR CONSTRUCTION IS NOT PERMITTED UNLESS SPECIFIED.

5. CONCRETE SEALER:
   REFER TO DIAGRAMS CONTAINING SILICONE-BASED ACRYLIC CONCRETE SEALER LIMITS ON PARAPETS AND DECK OVERHANGS ON DWGS. TS-01 TO TS-12 AND AS-02. EPOXY CONCRETE SEALER SHALL BE APPLIED TO THE BEAM SEATS AND BEARING PEDESTALS AT PIERS 23 TO 26. SILICONE-BASED ACRYLIC CONCRETE SEALER SHALL BE APPLIED TO THE REMAINING EXPOSED CONCRETE SURFACES AT PIERS 23 TO 26. PAYMENT FOR SILICONE-BASED ACRYLIC CONCRETE SEALER AND EPOXY CONCRETE SEALER WILL BE MADE UNDER ITEMS 613001 AND 613000, RESPECTIVELY.

SECTION 600 (CONTINUED)

6. STRUCTURAL STEEL:
   PROVIDE STRUCTURAL STEEL CONFORMING TO AASHTO M 270, GRADE 50 (ASTM A709, GRADE 50) DESIGNATION, EXCEPT WHEN NOTED OTHERWISE. THE ADDITIONAL REQUIREMENTS FOR CHARPY V-NOTCH TESTING (DENOTED AS 'CVN' ON PLANS) OF AASHTO M 270 FOR PRIMARY LOAD CARRYING MEMBERS SHALL BE INCLUDED.
   SUPPLEMENTAL NOTCH TOUGHNESS REQUIREMENTS ARE MANDATORY FOR:
   - GIRDER REPAIR PLATES

   ALL FASTENERS ARE ⅞" DIAMETER ASTM F3125 GR A325 HIGH STRENGTH BOLTS, TYPE 1, UNLESS OTHERWISE NOTED. REAM SUBDRILLED OR SUBPUNCHED HOLES FOR FIELD SPLICES IN FABRICATION SHOP.

   PROVIDE MATERIALS AND PERFORM WORK IN ACCORDANCE WITH AASHTO/AWS D1.5M/1.5:2015 BRIDGE WELDING CODE, AND CONTRACT DOCUMENTS. MAKE TACK WELDS WITH THE SAME TYPE OF ELECTRODE AND INCORPORATE IN THE FINAL WELD. NO OTHER TACK WELDING WILL BE PERMITTED.

   DO NOT USE FORM SUPPORT SYSTEMS THAT WILL CAUSE UNACCEPTABLE OVERSTRESS OR DEFORMATION TO PERMANENT BRIDGE MEMBERS.

   DO NOT WELD PERMANENT METAL DECK FORMS OR OTHER ATTACHMENTS TO GIRDER TOP FLANGES IN TENSION ZONES. TENSION ZONES OF TOP FLANGE ARE DESIGNATED ON THE PLANS. THREADED STUDS FOR THE SUPPORT OF THE DECK OVERHANG FORMING BRACKET ARE PERMITTED PROVIDED THE THREADED STUD IS ATTACHED WITH THE SAME WELDING PROCESS AS THE SHEAR STUDS.

   VERTICALLY ADJUST STAY-IN-PLACE FORMS TO ATTAIN FINISHED LINES AND GRADES REQUIRED ON THE PLANS.

   PAINTING OF EXISTING STEEL SHALL BE IN ACCORDANCE WITH SECTION 616. EXISTING STEEL SHALL BE PAINTED AS INDICATED IN PLANS AND COLOR SHALL MATCH EXISTING. IN ADDITION, INTERIORS OF CROSS GIRDERS SHALL BE CLEANED AND PAINTED . FINISH COAT COLOR INSIDE GIRDERS TRANSVERSE BOX SHALL BE WHITE.

7. BEARINGS:
   STEEL PLATE FIXED BEARINGS SHALL BE IN ACCORDANCE WITH THE REQUIREMENTS OF SECTION 615 AND IN ACCORDANCE WITH CHAPTER 18 OF THE 2017 AASHTO LRFD BRIDGE CONSTRUCTION SPECIFICATIONS, 4TH EDITION. PAYMENT FOR STEEL PLATE FIXED BEARINGS WILL BE MADE UNDER ITEM NO. 615001 - STEEL STRUCTURES.

   BRONZE SLIDING PLATE EXPANSION BEARINGS SHALL CONFORM TO ITEM 623500 - BRONZE BEARINGS. PAYMENT WILL BE MADE UNDER ITEM 623500.

SECTION 800

8. TEMPORARY MOUNTED BARRIERS:
   THE CONTRACTOR SHALL SUBMIT TO THE ENGINEER FOR APPROVAL A WORKING DRAWING SUBMITTAL DETAILING THE PROPOSED MEANS AND METHODS TO ANCHOR THE PORTABLE P.C.C. STRUCTURE MOUNTED BARRIER (DESIGNED FOR TL-3 IMPACT LOADING) AND TO REPAIR THE BOLT HOLES IN THE DECK. THE CONTRACTOR SHALL ADJUST THE LOCATION OF ANCHORS TO AVOID CONFLICT WITH TOP FLANGE OF GIRDERS AND BAR REINFORCEMENT IN THE DECK. PAYMENT INCIDENTAL TO ITEM 807003 - FURNISH AND INSTALL TEMPORARY PCC SAFETY BARRIER, PINNED IN CONCRETE.
9. SAWCUTTING:
   ALL PAVED AREAS TO BE RECONSTRUCTED OR WIDENED SHALL BE SAWCUT AT THE POINT WHERE THE NEW PAVEMENT IS TO TIE INTO THE EXISTING PAVEMENT. ALL HOT-MIX OR P.C.C. SAWCUTTING SHALL BE FULL DEPTH, UNLESS OTHERWISE NOTED ON THE PLANS, OR AS DIRECTED BY THE ENGINEER.

MISCELLANEOUS

10. DESIGN SPECIFICATIONS:
    (A) DELDOT BRIDGE DESIGN MANUAL, 2017 EDITION.
    (B) 2014 AASHTO LRFD BRIDGE DESIGN SPECIFICATIONS, 7TH EDITION, U.S. CUSTOMARY UNITS INCLUDING 2015 AND 2016 INTERIM.
    (C) PROVIDE MATERIALS AND PERFORM WORK IN ACCORDANCE WITH THE 2016 DELDOT STANDARD SPECIFICATIONS INCLUDING 2018 SUPPLEMENTAL SPECIFICATIONS.

11. LOADING:
    -DEAD LOADS INCLUDE 25 PSF FOR FUTURE WEARING SURFACE ON DECK SLAB AND 15 PSF FOR STAY-IN-PLACE FORMS (INCLUDES CONCRETE IN FORM CORRUGATIONS).
    -DESIGN LIVE LOADS INCLUDE HL-93 LOADING.
    -FATIGUE DESIGN IS BASED ON THE FOLLOWING ONE DIRECTIONAL TRAFFIC VOLUMES: ADTT = 3,910 IN YEAR 2040.
    -LIVE LOAD DISTRIBUTION TO THE GIRDERS IS BASED ON THE AASHTO SIMPLIFIED METHOD.
    -THERMAL LOADS AND MOVEMENTS ARE BASED ON THE MODERATE TEMPERATURE RANGE AS STIPULATED IN THE AASHTO LRFD DESIGN SPECIFICATIONS AS 0° TO 110°F. THE NORMAL TEMPERATURE SHALL BE CONSIDERED TO BE 68° F.
    -LIVE LOAD DEFLECTION SHALL BE LIMITED TO L/800.
    -FOR SEISMIC LOADS, CONSIDER SEISMIC PERFORMANCE ZONE 1, WITH A SITE CLASS = D AND OPERATIONAL CATEGORY = ESSENTIAL.
    -FOR REINFORCEMENT DISTRIBUTION REQUIREMENTS, CONSIDER CLASS I EXPOSURE CRITERIA FOR DECKS.
    -PARAPETS HAVE BEEN DESIGNED FOR MASH TEST LEVEL 4 (TL-4).

MISCELLANEOUS (CONTINUED)

12. EXISTING CONDITIONS:
    ALL EXISTING DIMENSIONS AND ELEVATIONS SHOWN ARE BASED ON THE BEST AVAILABLE INFORMATION AND ARE APPROXIMATE ONLY. THE CONTRACTOR SHALL FIELD VERIFY ALL EXISTING DIMENSIONS, GEOMETRY, AND ELEVATIONS AS NECESSARY PRIOR TO ORDERING ANY MATERIALS AND COMMENCING CONSTRUCTION TO ENSURE PROPER FIT OF THE PROPOSED CONSTRUCTION. PAYMENT SHALL BE INCIDENTAL TO ITEM 763501 - CONSTRUCTION ENGINEERING.

13. ROADWAY CLEARANCES:
    A MINIMUM OF 16'-6" SHALL BE MAINTAINED ABOVE ALL ROADWAYS. A MINIMUM OF 23'-0" SHALL BE MAINTAINED ABOVE ALL RAILROADS.

14. CONTINGENT QUANTITIES:
    THESE CONTRACT DRAWINGS HAVE BEEN PREPARED BASED ON ORIGINAL CONTRACT PLANS, SHOP DRAWINGS, AND FIELD INSPECTION NOTES TAKEN FROM NOVEMBER 16, 2014 THROUGH FEBRUARY 5, 2015. ADDITIONAL REPAIRS HAVE BEEN ADDED BASED ON THE MARCH 2017 BIENNIAL BRIDGE INSPECTION REPORT. ACTUAL CONDITIONS MAY REQUIRE MODIFICATION IN CONSTRUCTION DETAILS AND WORK QUANTITIES. ALL `DIMENSIONS AND DETAILS SHOWN ON THE PLANS SHALL BE VERIFIED BY THE CONTRACTOR PRIOR TO ORDERING ANY MATERIALS. SEE DWG. PN-05 AND PN-06 FOR PAY ITEM CONTINGENCY PERCENTAGES.

15. UTILITIES:
    SEE UTILITY STATEMENT AND UTILITY RELOCATION PLAN SHEETS FOR FURTHER INFORMATION ON UTILITY COORDINATION.

    THE CONTRACTOR SHALL CALL MISS UTILITY AND LOCATE ALL UNDERGROUND UTILITIES BEFORE COMMENCING ANY EXCAVATION OR INSTALLING ANDY FOUNDATIONS.

16. ENVIRONMENTAL COMPLIANCE:
    REFER TO THE ENVIRONMENTAL COMPLIANCE PLAN FOR RESTRICTIONS AND ADDITIONAL GUIDANCE THAT MAY BE ASSOCIATED TO THIS PROJECT.

17. COORDINATION WITH DART:
    BRIDGE NOS. 1-748N AND 1-748S ARE LOCATED OVER PARKING LOTS OCCUPIED BY DART. THE CONTRACTOR SHALL NOTIFY VINCENT DAMIANI AT (302) 598-0570 AND DAVID REESE AT (302) 353-0897 AT LEAST 35 DAYS PRIOR TO THE START OF ANY WORK IN THE DART PARKING LOTS. AFTER THIS INITIAL CONTACT, THE CONTRACTOR SHALL NOTIFY DART 14 DAYS IN ADVANCE OF ANY ADDITIONAL COORDINATION REQUIREMENTS AND/OR CHANGES IN THE TRAFFIC PATTERNS. AT NO TIME SHALL THE CONTRACTOR OCCUPY AN AREA ON THE GROUND IN THE PARKING LOTS GREATER THAN THE AREA OF TWO SPANS. THE CONTRACTOR SHALL MAINTAIN ACCESS FOR DART BUSSES AND EMPLOYEES TO THE REMAINING PORTIONS OF THE PARKING LOT. ADDITIONALLY THE CONTRACTOR WILL NOT BE PERMITTED TO WORK IN MORE THAN ONE PARKING LOT AT A TIME.

18. CONFINED SPACE REQUIREMENTS:
    THE INTERIOR OF THE STEEL TRANSVERSE BOX GIRDERS ARE CONFINED SPACES. ALL WORK INSIDE OF ANY CONFINED SPACE SHALL BE IN ACCORDANCE WITH ALL APPLICABLE OSHA REGULATIONS. ANY INDIVIDUAL ENTERING A CONFINED SPACE SHALL HAVE ALL TRAINING REQUIRED BY OSHA. ADDITIONALLY, PROPOER VENTILATION IN ACCORDANCE WITH OSHA REQURIEMENTS SHALL BE PROVIDED.

19. COORDINATION WITH THE CITY OF WILMINGTON:
    THE CONTRACTOR SHALL COORDINATE ALL WORK WITH THE CITY OF WILMINGTON, ESPECIALLY WORK WHICH IMPACTS CITY STREETS. THE CONTRACTOR SHALL NOTIFY BRIAN MITCHELL AT (302) 576-3089 AT LEAST 14 DAYS PRIOR TO ANY COORDINATION REQUIREMENTS AND/OR CHANGES IN TRAFFIC PATTERNS.

20. CONTRACTOR SUBMISSIONS:
    ALL SHOP DRAWINGS FOR ITEMS OF WORK THAT ARE TO BE REVIEWED BY A RAILROAD SHOULD BE SUBMITTED AS SOON AS POSSIBLE. THE CONTRACTOR SHOULD CONSIDER THE LENGHT OF TIME REQUIRED FOR EACH RAILROAD TO REVIEW SHOP DRAWINGS IN HIS SCHEDULE OF WORK.

    PRIOR TO OR WITH THE SHOP DRAWINGS, THE CONTRACTOR SHALL SUBMIT THE FIELD VERIFICATION NOTES ON MEMBER SIZES AND DIMENSIONS NECESSARY TO REVIEW THE SHOP DRAWINGS.

21. CONSTRUCTION SAFETY FENCE:
    CONSTRUCTION SAFETY FENCE IS REQUIRED AROUND THE PERIMETER OF ALL BELOW-DECK WORK AREAS AND AT LOCATIONS DIRECTED BY THE ENGINEER.

22. CLEARING AND GRUBBING:
    ALL VEGETATIVE GROWTH SHALL BE REMOVED FROM THE PIERS, ABUTMENTS, AND SUPERSTRUCTURE ELEMENTS AS DIRECTED BY THE ENGINEER.

    AT THE DIRECTION OF THE ENGINEER, THE CONTRACTOR SHALL REMOVE ALL EXISTING DEBRIS FROM BENEATH THE VIADUCT (BRS 1-748, 1-748N, & 1-748S) INCLUDING DEBRIS IN STREAMS AND DEBRIS IN THE VICINITY OF THE AMTRAK BRICK AND STONE VIADUCT. THE CONTRACTOR SHALL NOT DAMAGE OR REMOVE ABANDONED TRACKS WITHOUT PRIOR APPROVAL OF THE APPROPRIATE RAILROAD. REFER TO THE SPECIFICAITONS FOR ADDITIONAL INFORMATION.

NOT FOR CONSTRUCTION

ADDENDA / REVISIONS		NOT TO SCALE	REHABILITATION OF I-95 FROM I-495 TO NORTH OF BRANDYWINE RIVER BRIDGE	CONTRACT T201407404	BRIDGE NO. 1 748 059	BRIDGE PROJECT NOTES 1 OF 2	PN-01
				COUNTY NEW CASTLE	DESIGNED BY: DAN		SECTION WRA
					CHECKED BY: WAG		SHEET NO. 2-136

N:\31987-004\Contract_I-95\CADD\Bridge\BR1-748_PN01.dgn
5/31/2019 12:11:29 PM

MISCELLANEOUS (CONTINUED)

23. CONTRACT RESTRICTIONS:
THE DEPARTMENT HAS NOT OBTAINED A NOISE WAIVER UNDER THE PROVISIONS OF THE CITY OF WILMINGTON CODE FOR THE PURPOSE OF WORKING EXTENDED HOURS AT NIGHT. WORKING HOURS FOR THIS PROJECT SHALL BE LIMITED TO 8:00AM TO 7:00PM, MONDAY THROUGH FRIDAY; 9:00AM TO 7:00PM SATURDAY; 10:00AM TO 5:00PM SUNDAY AND HOLIDAYS. THE CONTRACTOR MAY COORDINATE AND SUBMIT TO OBTAIN A NOISE WAIVER FOR PURPOSES OF EXPEDITING HIS CONSTRUCTION EFFORTS AT NO ADDITIONAL COST TO THE DEPARTMENT. THE CONTRACTOR SHALL ADDRESS ANY CONCERNS ABOUT THE NOISE WAIVER TO THE DEPARTMENT OF LICENSES AND INSPECTIONS, CITY OF WILMINGTON, 800 FRENCH ST., 5TH FLOOR, WILMINGTON, DELAWARE 19801. THE DEPARTMENT WILL NOT BE HELD RESPONSIBLE FOR ANY ISSUES/DELAYS/OR REJECTIONS WITH THE COORDINATION, RECEIPT OR EXECUTION OF THE WORK IN CONJUNCTION WITH THE NOISE WAIVER AND CANNOT BE CAUSE FOR A DELAY CLAIM.

IN ADDITION, BRIDGE AND ROAD CLOSURES WILL NOT BE PERMITTED ON THE FOLLOWING WEEKENDS:
T.B.D.

NOTE: THESE ARE PROJECTED DATES AND SHALL BE CONFIRMED WITH THE CITY OF WILMINGTON'S EVENTS CALENDAR.

http://sites.google.com/site/wilmingtoneventswept/Home

FOR ADDITIONAL WORK RESTRICTIONS, SEE THE CONSTRUCTION PHASING, M.O.T. AND EROSION CONTROL PLAN SHEETS ON DWGS. CS-01 TO CS-301.

24. STOCKPILES:
STOCKPILES OF BORROW AND/OR OTHER MATERIALS WILL NOT BE ALLOWED UNDER THE BRIDGES AND NEAR BRIDGE FOUNDATIONS.

25. ABBREVIATIONS:

ACCEL. = ACCELERATION
BOT. = BOTTOM
C/C = CENTER-TO-CENTER
℄ = CENTERLINE
CLR. = CLEAR
DIA. = DIAMETER
DWG. = DRAWING
E.F. = EACH FACE
EL. = ELEVATION
EQ = ENTIRE QUANTITY
EXP. = EXPANSION
FIX. = FIXED
ITS = INTELLIGENT TRANSPORTATION SYSTEM
J.B. = JUNCTION BOX
L.L.V. = LONG LEG VERTICAL
LMC = LATEX MODIFIED CONCRETE
LT = LEFT
MAX. = MAXIMUM
MIN. = MINIMUM
NB = NORTHBOUND
NO. = NUMBER
N/S = NORFOLK SOUTHERN
N.T.S. = NOT TO SCALE
OH = OVERHEAD
P.C.C. = PORTLAND CEMENT CONCRETE
R = RADIUS
RT = RIGHT
SB = SOUTHBOUND
SCH. = SCHEDULE
SHLD. = SHOULDER
S.S. = STAINLESS STEEL
STA. = STATION
S.W. = SHOP WELD
TRK = TRACK
TYP. = TYPICAL
UG = UNDERGROUND
UHPC = ULTRA HIGH PERFORMANCE CONCRETE

RAILROAD COORDINATION - NORFOLK SOUTHERN

26. ALL WORK ON, OVER, UNDER, OR ADJACENT TO NORFOLK SOUTHERN (NS) RIGHT-OF-WAY SHALL BE PERFORMED IN ACCORDANCE WITH ITEM 801501 - MAINTENANCE OF RAILROAD TRAFFIC NORFOLK SOUTHERN.

27. NORFOLK SOUTHERN CONTACT INFORMATION:
NORFOLK SOUTHERN CORPORATION
BRIDGES AND STRUCTURES DEPARTMENT
ATTN. MR. S.A. OVERBEY, ENGINEER PUBLIC IMPROVEMENTS
1200 PEACHTREE STREET NE
ATLANTA, GA 30309
PHONE: (404)582-5588
EMAIL: SCOTT.OVERBEY@NSCORP.COM

28. "ONE CALL" SERVICES DO NOT LOCATE BURIED RAILROAD SIGNAL AND COMMUNICATIONS LINES. THE CONTRACTOR SHALL CONTACT THE RAILROAD'S REPRESENTATIVE TWO (2) DAYS IN ADVANCE OF THOSE PLACES WHERE EXCAVATION, PILE DRIVING, OR HEAVY LOADS MAY DAMAGE RAILROAD UNDERGROUND LINES ON RAILROAD PROPERTY. UPON REQUEST FROM THE CONTRACTOR OR AGENCY, RAILROAD SIGNAL FORCES WILL LOCATE AND PAINT MARK OR FLAG RAILROAD UNDERGROUND SIGNAL, COMMUNICATION, AND POWER LINES IN THE AREA TO BE DISTURBED FOR THE CONTRACTOR. THE CONTRACTOR SHALL AVOID EXCAVATION OR OTHER DISTURBANCE OF THESE LINES WHICH ARE CRITICAL TO THE SAFETY OF THE RAILROAD AND THE PUBLIC. IF DISTURBANCE OR EXCAVATION IS REQUIRED NEAR A BURIED RAILROAD SIGNAL, COMMUNICATION, OR POWER LINE, THE LINE SHALL BE POTHOLED MANUALLY WITH CAREFUL HAND EXCAVATION BY THE CONTRACTOR AND PROTECTED BY THE CONTRACTOR DURING THE COURSE OF THE DISTURBANCE UNDER THE SUPERVISION AND DIRECTION OF A RAILROAD SIGNAL REPRESENTATIVE.

29. ALL UTILITY INSTALLATIONS OR RELOCATIONS ON NORFOLK SOUTHERN RIGHT-OF-WAY THAT ARE REQUIRED IN CONJUNCTION WITH THIS PROJECT CAN BE INSTALLED OR RELOCATED AS PART OF THE PROJECT PROVIDED THE CONSTRUCTION IS PERFORMED BY THE PROJECT CONTRACTOR OR PROJECT CONTRACTOR'S SUB-CONTRACTOR. HOWEVER, THE UTILITY MUST SUBMIT AN APPLICATION FOR THE INSTALLATION OR RELOCATION TO AECOM FOR APPROPRIATE HANDLING FOR LICENSE AGREEMENT AND APPLICABLE FEES. FOR UTILITY APPLICATIONS GO TO: WWW.NSCORP.COM >REAL ESTATE >NS SERVICES > WIRE, PIPELINE, AND FIBER OPTICS PROJECTS. NOTE: LICENSE AGREEMENT MUST BE EXECUTED PRIOR TO UTILITY BEING INSTALLED OR RELOCATED.

30. FOR PROJECTS EXCEEDING 30 DAYS OF CONSTRUCTION, CONTRACTOR SHALL PROVIDE THE FLAGMAN A SMALL WORK AREA WITH A DESK/COUNTER AND CHAIR WITHIN THE FIELD/SITE TRAILER, INCLUDING THE USE OF BATHROOM FACILITIES, WHERE THE FLAGMAN CAN CHECK IN/OUT WITH THE PROJECT, AS WELL AS TO THE FLAGMAN'S HOME TERMINAL. THE WORK AREA SHOULD PROVIDE ACCESS TO TWO (2) ELECTRICAL OUTLETS FOR RECHARGING RADIO(S), AND A LAPTOP COMPUTER; AND HAVE THE ABILITY TO PRINT OFF NEEDED DOCUMENTATION AND ORDERS AS NEEDED AT THE FIELD/SITE TRAILER. THIS SHOULD AID IN MAXIMIZING THE FLAGMAN'S TIME AND EFFICIENCY ON THE PROJECT.

31. NORFOLK SOUTHERN WILL BE PROVIDED AS-BUILT DRAWINGS OF THE BRIDGES SHOWING THE ACTUAL CLEARANCES AS CONSTRUCTED. DEPTH, SIZE, AND LOCATION OF ALL FOUNDATION COMPONENTS SHALL BE SHOWN ON THE DRAWINGS.

32. RAILROAD SAFETY TRAINING:
ALL PERSONELL SHALL RECIEVE NORFOLK SOUTHERN SAFETY TRAINING PRIOR TO ENTERING NORFOLK SOUTHERN RAILROAD COMPANY PROPERTY. NORFOLK SOUTHERN SAFETY TRAINING EXPIERS AFTER ONE (1) YEAR. AS SUCH, PERSONNEL MAY NEED TO REPEAT THE TRAINING COURSE. IN ADDITION, THE CONTRACTOR SHALL COMPLY WITH ALL OSHA REGULATIONS. REFER TO THE SPECIFICATIONS AND ITEM 801501 - MAINTENANCE OF RAILROAD TRAFFIC (NORFOLK SOUTHERN) FOR ADDITIONAL INFORMATION.

RAILROAD COORDINATION - AMTRAK

33. PROTECTION OF RAILROAD FACILITIES:
REFER TO ITEM 801519 - MAINTENANCE OF RAILROAD TRAFFIC (AMTRAK) FOR WORK OVER THE RAILROAD. HIGH VOLTAGE ELECTRICAL LINES (CATENARY WIRES) CROSS UNDER THE VIADUCT AND ARE ATTACHED TO THE UNDERSIDE OF THE SUPERSTRUCTURE OF BR I-748. THE CONTRACTOR SHALL FURNISH, INSTALL, AND REMOVE RAILROAD PROTECTIVE SHIELDS IN ACCORDANCE WITH THE SPECIAL PROVISIONS AND THE PRE-APPROVED DETAILS SHOWN ON THE PLANS.

ALL TEMPORARY AND PERMANENT PROTECTIVE SHIELDS IN THE VICINITY OF AMTRAK'S CATENARY WIRES SHALL BE BONDED AND GROUNDED AS INDICATED IN THE SPECIAL PROVISIONS. THE DESIGN OF BONDING AND GROUNDING DETAILS MAY BE PERFORMED BY AMTRAK OR AN AMTRAK APPROVED CONSULTANT. THE CONTRACOTOR SHALL CONTACT AMTRAK FOR A CURRENT LIST OF APPROVED CONSULTANS. THE CONTRACTOR WILL BE REIMBURSED FOR THE COST OF THE DESIGN OF THE BONDING AND GROUNDING DETAILS UNDER ITEM 801519. THE CONTRACTOR SHALL CONSIDER THE TIME REQUIED TO PREPARE BONDING AND GROUNDING DETAILS IN HIS SCHEDULE OF WORK.

THE MINIMUM CLEARNACE BETWEEN THE CATENARY WIRES AND ANY TEMPORARY OR PERMANENT WORKS SHALL BE 9" AT THE CATENARY WIRE SUPPORTS AND 18" AWAY FROM THE SUPPORTS.

34. ALL PERSONNEL SHALL RECIEVE AMTRAK SAFETY TRAINING PRIOR TO ENTERING MATRAK PROPERTY. AMTRAK SAFETY TRAINING EXPIRES AFTER ONE (1) YEAR. AS SUCH, PERSONELL MAY NEED TO REPEAT THE TRAINING COURSE DURING THE COURSE OF THE CONTRACT. IN ADDITION, THE CONTRACTOR SHALL COMPLY WITH ALL OSHA REGULATIONS. REFER TO THE SPECIFICATIONS AND ITEM 801519 - MAINTENANCE OF RAILROAD TRAFFIC (AMTRAK) FOR ADDITIONAL INFORMATION.

INDEX OF BRIDGE I-748 SHEETS

BR. SHEET Nº	BR. DWG. Nº	TABLE OF CONTENTS
2-136 TO 2-137	PN-01 TO PN-02	BRIDGE PROJECT NOTES
2-138	PN-03	CONCRETE REPAIR DETAILS
2-139	PN-04	QUANTITIES AND LOAD RATINGS
2-140 TO 2-141	PN-05 TO PN-06	SUMMARY OF PROPOSED REPAIR AND RECONSTRUCTION ITEMS
2-142 TO 2-149	PE-01 TO PE-08	GENERAL PLAN AND ELEVATION
2-150 TO 2-161	TS-01 TO TS-12	BRIDGE TYPICAL SECTIONS
2-162 TO 2-171	SC-01 TO SC-10	SEQUENCE OF CONSTRUCTION
2-172 TO 2-175	DM-01 TO DM-04	DEMOLITION DETAILS
2-176 TO 2-179	DM-04A TO DM-08	RAILROAD PROTECTIVE SHIELD DETAILS
2-180 TO 2-181	DM-09 TO DM-10	EXISTING BRACKET REMOVAL DETAILS
2-193	AB-02	ABUTMENT CONCRETE REPAIR DETAILS
2-230 TO 2-236	PR-36 TO PR-42	PIER CONCRETE REPAIR DETAILS
2-307A TO 2-314	BB-01 TO BB-14	BEARING DETAILS
2-315 TO 2-324	RH-01 TO RH-10	JACKING DETAILS
2-331	RH-16	MISCELLANEOUS SUPERSTRUCTURE REPAIR DETAILS
2-336 TO 2-339	DK-01 TO DK-04	DECK OVERHANG DETAILS
2-354 TO 2-363G	PA-01 TO PA-16	PARAPET DETAILS
2-364 TO 2-372	RA-01 TO RA-09	FENCE AND BARRIER LAYOUT
2-373 TO 2-373A	RA-10 TO RA-11	RAILROAD AND DECORATIVE BARRIER DETAILS
2-381 TO 2-397	EX-01 TO EX-17	EXPANSION JOINT DETAILS
2-398 TO 2-403	EX-18 TO EX-23	DECK OVER AND LINK SLAB DETAILS
2-408 TO 2-409	DT-05 TO DT-06	SCUPPER DETAILS
2-410 TO 2-424	AS-01 TO AS-15	APPROACH SLAB AND SLEEPER SLAB DETAILS
		TOTAL BRIDGE SHEETS: 147

NOT FOR CONSTRUCTION

ADDENDA / REVISIONS		NOT TO SCALE	REHABILITATION OF I-95 FROM I-495 TO NORTH OF BRANDYWINE RIVER BRIDGE	CONTRACT T201407404	BRIDGE NO. 1 748 059	BRIDGE PROJECT NOTES 2 OF 2	PN-02
				COUNTY NEW CASTLE	DESIGNED BY: DAN		SECTION WRA
					CHECKED BY: WAG		SHEET NO. 2-137

N:\31987-004\Contract\I-95\ADD\Bridge\BRI-748_PN06.dgn
5/31/2019 12:11:30 PM

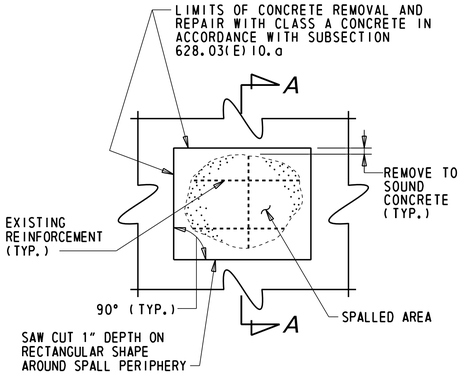

PLAN

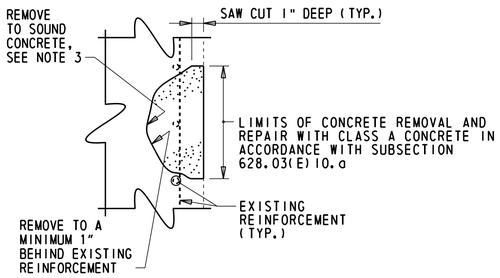

SECTION A-A

DEEP SPALL REPAIR (ITEM 628041)

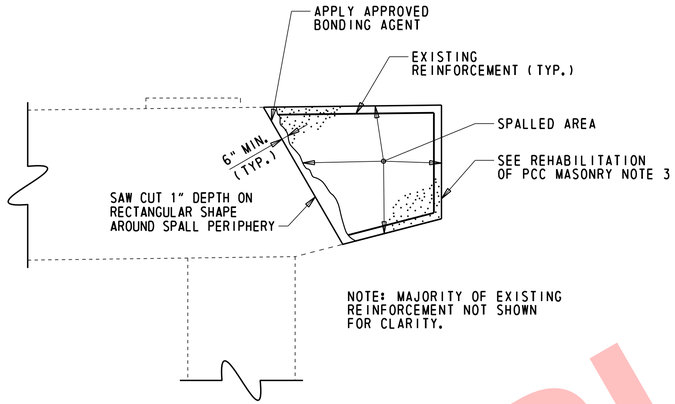

REHABILITATION OF PCC MASONRY (ITEM 628042)

DEEP SPALL REPAIR NOTES

1. DEEP SPALL REPAIRS ARE DEFINED AS PATCHES THAT EXTEND BELOW THE TOP MAT OF REINFORCEMENT. DELAMINATED CONCRETE HAS BEEN ASSUMED AS DEEP SPALL REPAIRS.
2. ALL WORK INVOLVING METHODS OF CONCRETE REMOVAL; CLEANING OF CONCRETE SURFACE AND EXISTING REINFORCEMENT; REPAIRING OR REPLACING DAMAGED REINFORCEMENT AS RESULT OF CONSTRUCTION ACTIVITIES OR SECTION LOSS; PRESENCE OF CONTRACTION OR EXPANSION JOINTS; SURFACE PREPARATION; AND CONCRETE PLACEMENT SHALL BE PERFORMED IN ACCORDANCE WITH SUBSECTION 628.03(E) OF THE STANDARD SPECIFICATIONS. PAYMENT INCIDENTAL TO ITEM 628041 - DEEP SPALL REPAIR.
3. IF DEPTH OF REPAIR EXTENDS MORE THAN 6" BEYOND SURFACE OF CONCRETE, CONTRACTOR SHALL STOP WORK AND NOTIFY THE ENGINEER IMMEDIATELY.

REHABILITATION OF PCC MASONRY NOTES

1. REHABILITATION OF PCC MASONRY IS DEFINED AS DEEP SPALL PATCHES THAT EXCEED THE 0.5 C.Y. THRESHOLD IN A SINGLE AREA.
2. ALL WORK INVOLVING METHODS OF CONCRETE REMOVAL; CLEANING OF CONCRETE SURFACE AND EXISTING REINFORCEMENT; REPAIRING OR REPLACING DAMAGED REINFORCEMENT AS RESULT OF CONSTRUCTION ACTIVITIES OR SECTION LOSS; PRESENCE OF CONTRACTION OR EXPANSION JOINTS; SURFACE PREPARATION; AND CONCRETE PLACEMENT SHALL BE PERFORMED IN ACCORDANCE WITH SUBSECTION 628.03(E) OF THE STANDARD SPECIFICATIONS. PAYMENT INCIDENTAL TO ITEM 628042 - REHABILITATION OF PCC MASONRY.
3. DETAIL SHOWN FOR "REHABILITATION OF EXISTING PCC MASONRY" UTILIZES A GENERIC EXAMPLE USING PARTIAL RECONSTRUCTION OF AN EXISTING PIER CAP. SEE ABUTMENT AND PIER REHABILITATION SHEETS FOR SIZE AND LOCATION OF REPAIRS AT EACH SUBSTRUCTURE UNIT.
4. IF DEPTH OF REPAIR EXTENDS MORE THAN 6" BEYOND SURFACE OF CONCRETE, CONTRACTOR SHALL STOP WORK AND NOTIFY THE ENGINEER IMMEDIATELY.

REMOVAL OF EXISTING DECK REPAIR NOTES

1. AFTER EXISTING OVERLAY IS REMOVED, PRIOR TO HYDRODEMOLITION, ANY EXISTING DECK REPAIRS THAT ARE LOOSE, PARTIALLY DELAMINATED, OR OTHERWISE UNSOUND, WILL BE MEASURED BY THE ENGINEER AND MARKED FOR REMOVAL.
2. THE CONTRACTOR SHALL REMOVE THE EXISTING DECK REPAIRS IN ACCORDANCE WITH SECTION 628.03(F).
3. THE REMOVAL SHALL NOT INCLUDE ANY UNSOUND ORIGINAL BRIDGE DECK CONCRETE.
4. REFER TO ITEM 628502 - REMOVAL OF EXISTING DECK REPAIR FOR PAYMENT AND ADDITIONAL INFORMATION.
5. IF REMOVAL OF EXISTING DECK REPAIR REACHES FULL DEPTH, AND WITH THE APPROVAL OF THE ENGINEER, REPAIR AREA SHALL BE REPAIRED IN ACCORDANCE WITH SUBSECTION 628.03(F) AND PAID FOR UNDER ITEM 628053 - DECK REPAIR, FULL DEPTH. REMOVAL OF EXISTING DECK REPAIRS THAT ARE CHANGED TO DECK REPAIR, FULL DEPTH WILL ONLY BE PAID FOR ONCE UNDER ITEM 628053.

DECK REPAIR NOTES

1. AFTER EXISTING OVERLAY IS REMOVED, PRIOR TO HYDRODEMOLITION, EXISTING AREAS OF DECK REQUIRING FULL DEPTH REPAIR AS DIRECTED BY THE ENGINEER, SHALL BE REPAIRED USING DETAIL SHOWN ON THIS SHEET.
2. ALL WORK INVOLVING METHODS OF CONCRETE REMOVAL; CLEANING OF CONCRETE SURFACE AND EXISTING REINFORCEMENT; REPAIRING OR REPLACING DAMAGED REINFORCEMENT AS RESULT OF CONSTRUCTION ACTIVITIES OR SECTION LOSS; PRESENCE OF CONTRACTION OR EXPANSION JOINTS; SURFACE PREPARATION; AND CONCRETE PLACEMENT SHALL BE PERFORMED IN ACCORDANCE WITH SUBSECTION 628.03(F) OF THE STANDARD SPECIFICATIONS AND ITEMS 760500 - TOTAL SURFACE HYDRODEMOLITION, ITEM 760501 - DEEP CUT HYDRODEMOLITION, AND ITEM 625500 - ADDITIONAL LATEX-MODIFIED CONCRETE FOR PARTIAL DECK REPAIRS. PAYMENT FOR FULL DEPTH DECK REPAIRS MADE AFTER MILLING AND PRIOR TO HYDRODEMOLITION WILL BE MADE UNDER ITEM 628053 - DECK REPAIR, FULL DEPTH. PAYMENT FOR FULL DEPTH DECK REPAIRS MADE AFTER HYDRODEMOLITION WILL BE MADE UNDER ITEM 628053 - DECK REPAIR, FULL DEPTH.
3. MILLING, HYDRODEMOLITION, AND LMC OVERLAY WILL BE PAID FOR UNDER THEIR RESPECTIVE ITEMS.

PPC SAND MIX FOR RUMBLE STRIPS NOTES

1. PRIOR TO SHIFTING TRAFFIC TO A CONFIGURATION WHERE TRAFFIC WILL BE RIDING ON EXISITNG BRIDGE DECK RUMBLE STRIPS, ALL EXISTING RUMBLE STRIPS ON THE BRIDGE DECK SHALL BE FILLED WITH PPC SAND MIX IN ACCORDANCE WITH THE DETAIL ON THIS SHEET AND ITEM 625504 - POLYESTER POLYMER CONCRETE SAND MIX FOR RUMBLE STRIPS.

LEGEND:

- SPALLED CONCRETE
- LIMITS OF REMOVAL, PAVEMENT MILLING (ITEM 760013)
- LIMITS OF HYDRODEMOLITION (ITEM 760500 OR 760501)
- LIMITS OF REMOVAL (ITEM 628053 OR 628502)
- CLASS D CONCRETE
- PPC SAND MIX FOR RUMBLE STRIPS (ITEM 625504)

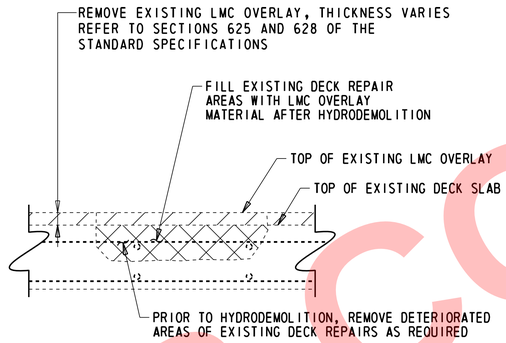

REMOVAL OF EXISTING DECK REPAIRS (ITEM 628502)

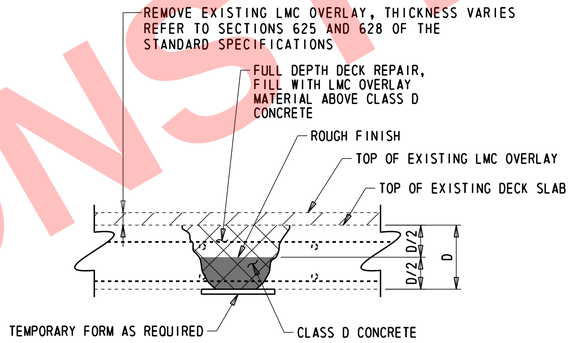

DECK REPAIR, FULL DEPTH (ITEM 628053)

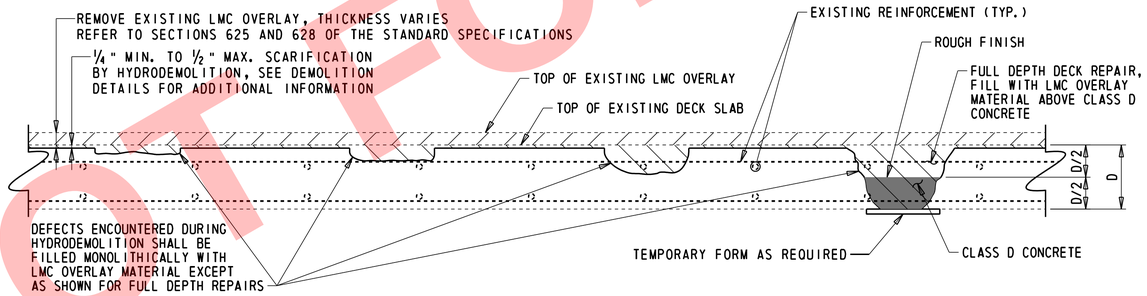

HYDRODEMOLITION AND DECK REPAIR (WITH OVERLAY)

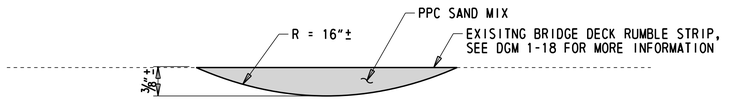

PPC SAND MIX FOR RUMBLE STRIPS DETAIL

NOT FOR CONSTRUCTION

N:\31987-00A\Control_I-95\CADD\Bridge\BR1-748_PN05.dgn
5/31/2019 12:11:31 PM

ADDENDA / REVISIONS		NOT TO SCALE	REHABILITATION OF I-95 FROM I-495 TO NORTH OF BRANDYWINE RIVER BRIDGE	CONTRACT T201407404	BRIDGE NO. 1 748 059	CONCRETE REPAIR DETAILS	PN-03 SECTION WRA
				COUNTY NEW CASTLE	DESIGNED BY: DAN		SHEET NO. 2-138
					CHECKED BY: WAG		

QUANTITIES

ITEM Nº	ITEM TITLE	UNIT	QUANTITY
207000	STRUCTURAL EXCAVATION	CY	179
211000	REMOVAL OF STRUCTURES AND OBSTRUCTIONS	LS	1
301001	GRADED AGGREGATE BASE COURSE, TYPE B	CY	169
601503	CLEANING BRIDGE SCUPPER	EACH	38
604000	JACKING BRIDGE	LS	1
604001	PROTECTIVE SHIELD	LS	1
604501	RAILROAD PROTECTIVE SHIELD	LS	1
610008	PORTLAND CEMENT CONCRETE MASONRY, PARAPET, CLASS A	CY	1750
610016	PORTLAND CEMENT CONCRETE MASONRY, CLASS D	CY	14
610017	PORTLAND CEMENT CONCRETE MASONRY, SUPERSTRUCTURE, CLASS D	CY	1884
610018	PORTLAND CEMENT CONCRETE MASONRY, APPROACH SLAB, CLASS D	CY	266
610019	HIGH EARLY STRENGTH CONCRETE	CY	359
610500	ULTRA HIGH PERFORMANCE CONCRETE	CF	1173
611000	BAR REINFORCEMENT	LB	720390
611001	BAR REINFORCEMENT, EPOXY COATED	LB	742774
613000	EPOXY CONCRETE SEALER	SF	16384
613001	SILICONE BASED ACRYLIC CONCRETE SEALER	SF	198923
613003	HIGH MOLECULAR WEIGHT METHACRYLATE CONCRETE SEALER	SF	558000
615001	STEEL STRUCTURES	LS	1
615004	REPLACING STEEL RIVETS/BOLTS	EACH	222
615006	STEEL STRUCTURE REPAIR	LS	1
615007	WELDING REPAIR	LF	4
616000	CLEANING AND PAINTING EXISTING STEEL	LS	1
617000	STEEL SIGN STRUCTURE, TUBULAR ARCH, CANTILEVER	LS	1
617003	STEEL SIGN STRUCTURE, TRUSS TYPE, OVERHEAD	LS	1
624000	PREFABRICATED EXPANSION JOINT SYSTEM, 3"	LF	6822
625000	LATEX-MODIFIED CONCRETE OVERLAY INSTALLATION	SY-IN	200470
625001	FURNISHING LATEX-MODIFIED CONCRETE OVERLAY	CY	6960
625503	ADDITIONAL LATEX-MODIFIED CONCRETE FOR PARTIAL DECK REPAIRS	CY	1038
625504	POLYESTER POLYMER CONCRETE SAND MIX FOR RUMBLE STRIPS	CY	80
628001	REPAIR OF CONCRETE STRUCTURES BY EPOXY INJECTION	LF	404
628041	DEEP SPALL REPAIR	CF	405
628042	REHABILITATION OF P.C.C. MASONRY	CY	2
628053	DECK REPAIR, FULL DEPTH	SF	610
628502	REMOVAL OF EXISTING DECK REPAIRS	SF	610
724004	PERMANENT IMPACT ATTENUATOR, TYPE 4	EACH	1
727007	BRIDGE SAFETY FENCE, TYPE 1	LF	140
727503	DECORATIVE BARRIER	LF	2339
727504	RAILROAD PROTECTIVE BARRIER	LF	267
760005	RUMBLE STRIPS, CONCRETE, SHALLOW DEPTH	LF	
760013	PAVEMENT MILLING, PORTLAND CEMENT CONCRETE PAVEMENT	SY-IN	153548
760500	TOTAL SURFACE HYDRODEMOLITION	SY	49050
760501	DEEP CUT HYDRODEMOLITION	SY	11653
762002	SAW CUTTING, CONCRETE, VARIABLE DEPTH	LF	5464
801501	MAINTENANCE OF RAILROAD TRAFFIC (NORFOLK SOUTHERN)	LS	1
801519	MAINTENANCE OF RAILROAD TRAFFIC (AMTRAK)	LS	1

LOAD RATING SUMMARY BR 1-748

DESIGN VEHICLE	RATING FACTOR	RATING WEIGHT (TON)	CONTROLLING MEMBER	CONTROLLING POINT	LOAD EFFECT
HL-93 TRUCK (INVENTORY)	X.XX	N/A	XXXXXXXXXXXXXX	XXX	XXXXXXX
HL-93 TANDEM (INVENTORY)	X.XX	N/A	XXXXXXXXXXXXXX	XXX	XXXXXXX
HL-93 TRUCK TRAIN (INVENTORY)	X.XX	N/A	XXXXXXXXXXXXXX	XXX	XXXXXXX
HS-20 (INVENTORY)	X.XX	XX.XX	XXXXXXXXXXXXXX	XXX	XXXXXXX
HL-93 TRUCK (OPERATING)	X.XX	N/A	XXXXXXXXXXXXXX	XXX	XXXXXXX
HL-93 TANDEM (OPERATING)	X.XX	N/A	XXXXXXXXXXXXXX	XXX	XXXXXXX
HL-93 TRUCK TRAIN (OPERATING)	X.XX	N/A	XXXXXXXXXXXXXX	XXX	XXXXXXX
HS-20 (OPERATING)	X.XX	XX.XX	XXXXXXXXXXXXXX	XXX	XXXXXXX
DE S220 & LEGAL-LANE (LEGAL)	X.XX	XX.XX	XXXXXXXXXXXXXX	XXX	XXXXXXX
DE S335 & LEGAL-LANE (LEGAL)	X.XX	XX.XX	XXXXXXXXXXXXXX	XXX	XXXXXXX
DE S437 & LEGAL-LANE (LEGAL)	X.XX	XX.XX	XXXXXXXXXXXXXX	XXX	XXXXXXX
DE S330 & LEGAL-LANE (LEGAL)	X.XX	XX.XX	XXXXXXXXXXXXXX	XXX	XXXXXXX
DE S435 & LEGAL-LANE (LEGAL)	X.XX	XX.XX	XXXXXXXXXXXXXX	XXX	XXXXXXX
DE S540 & LEGAL-LANE (LEGAL)	X.XX	XX.XX	XXXXXXXXXXXXXX	XXX	XXXXXXX

NOTE: LOAD RATING INCLUDES FUTURE WEARING SURFACE AS NOTED IN THE PLANS.

LOAD RATING SUMMARY BR 1-748N

DESIGN VEHICLE	RATING FACTOR	RATING WEIGHT (TON)	CONTROLLING MEMBER	CONTROLLING POINT	LOAD EFFECT
HL-93 TRUCK (INVENTORY)	X.XX	N/A	XXXXXXXXXXXXXX	XXX	XXXXXXX
HL-93 TANDEM (INVENTORY)	X.XX	N/A	XXXXXXXXXXXXXX	XXX	XXXXXXX
HL-93 TRUCK TRAIN (INVENTORY)	X.XX	N/A	XXXXXXXXXXXXXX	XXX	XXXXXXX
HS-20 (INVENTORY)	X.XX	XX.XX	XXXXXXXXXXXXXX	XXX	XXXXXXX
HL-93 TRUCK (OPERATING)	X.XX	N/A	XXXXXXXXXXXXXX	XXX	XXXXXXX
HL-93 TANDEM (OPERATING)	X.XX	N/A	XXXXXXXXXXXXXX	XXX	XXXXXXX
HL-93 TRUCK TRAIN (OPERATING)	X.XX	N/A	XXXXXXXXXXXXXX	XXX	XXXXXXX
HS-20 (OPERATING)	X.XX	XX.XX	XXXXXXXXXXXXXX	XXX	XXXXXXX
DE S220 & LEGAL-LANE (LEGAL)	X.XX	XX.XX	XXXXXXXXXXXXXX	XXX	XXXXXXX
DE S335 & LEGAL-LANE (LEGAL)	X.XX	XX.XX	XXXXXXXXXXXXXX	XXX	XXXXXXX
DE S437 & LEGAL-LANE (LEGAL)	X.XX	XX.XX	XXXXXXXXXXXXXX	XXX	XXXXXXX
DE S330 & LEGAL-LANE (LEGAL)	X.XX	XX.XX	XXXXXXXXXXXXXX	XXX	XXXXXXX
DE S435 & LEGAL-LANE (LEGAL)	X.XX	XX.XX	XXXXXXXXXXXXXX	XXX	XXXXXXX
DE S540 & LEGAL-LANE (LEGAL)	X.XX	XX.XX	XXXXXXXXXXXXXX	XXX	XXXXXXX

NOTE: LOAD RATING INCLUDES FUTURE WEARING SURFACE AS NOTED IN THE PLANS.

LOAD RATING SUMMARY BR 1-748S

DESIGN VEHICLE	RATING FACTOR	RATING WEIGHT (TON)	CONTROLLING MEMBER	CONTROLLING POINT	LOAD EFFECT
HL-93 TRUCK (INVENTORY)	X.XX	N/A	XXXXXXXXXXXXXX	XXX	XXXXXXX
HL-93 TANDEM (INVENTORY)	X.XX	N/A	XXXXXXXXXXXXXX	XXX	XXXXXXX
HL-93 TRUCK TRAIN (INVENTORY)	X.XX	N/A	XXXXXXXXXXXXXX	XXX	XXXXXXX
HS-20 (INVENTORY)	X.XX	XX.XX	XXXXXXXXXXXXXX	XXX	XXXXXXX
HL-93 TRUCK (OPERATING)	X.XX	N/A	XXXXXXXXXXXXXX	XXX	XXXXXXX
HL-93 TANDEM (OPERATING)	X.XX	N/A	XXXXXXXXXXXXXX	XXX	XXXXXXX
HL-93 TRUCK TRAIN (OPERATING)	X.XX	N/A	XXXXXXXXXXXXXX	XXX	XXXXXXX
HS-20 (OPERATING)	X.XX	XX.XX	XXXXXXXXXXXXXX	XXX	XXXXXXX
DE S220 & LEGAL-LANE (LEGAL)	X.XX	XX.XX	XXXXXXXXXXXXXX	XXX	XXXXXXX
DE S335 & LEGAL-LANE (LEGAL)	X.XX	XX.XX	XXXXXXXXXXXXXX	XXX	XXXXXXX
DE S437 & LEGAL-LANE (LEGAL)	X.XX	XX.XX	XXXXXXXXXXXXXX	XXX	XXXXXXX
DE S330 & LEGAL-LANE (LEGAL)	X.XX	XX.XX	XXXXXXXXXXXXXX	XXX	XXXXXXX
DE S435 & LEGAL-LANE (LEGAL)	X.XX	XX.XX	XXXXXXXXXXXXXX	XXX	XXXXXXX
DE S540 & LEGAL-LANE (LEGAL)	X.XX	XX.XX	XXXXXXXXXXXXXX	XXX	XXXXXXX

NOTE: LOAD RATING INCLUDES FUTURE WEARING SURFACE AS NOTED IN THE PLANS.

NOT FOR CONSTRUCTION

N:\31987-004\Contract_I-95\COD\Bridge\BRI-748_PN04.dgn
5/31/2019 12:11:31 PM

ADDENDA / REVISIONS		NOT TO SCALE	REHABILITATION OF I-95 FROM I-495 TO NORTH OF BRANDYWINE RIVER BRIDGE	CONTRACT T201407404	BRIDGE NO. 1 748 059	QUANTITIES AND LOAD RATINGS	PN-04 SECTION WRA
				COUNTY NEW CASTLE	DESIGNED BY: DAN		SHEET NO. 2-139
					CHECKED BY: WAG		

REPAIR NO.	REPAIR DESCRIPTION	LOCATION	REMARKS	DWG. NO.	ITEM NO.	ITEM DESCRIPTION	UNIT	QTY.	CONTINGENT %	TOTAL QTY.
1	JOINT REPLACEMENT (FULL REPLACEMENT)	PIERS 1 TROUGH 26, 27S THROUGH 39S, 27N, 28N, 30N, 32, 34N, 35N, 37N, 39N, 41N, 41S, 43N, 43S, 45N, 45S, 47N, 47S, 49N, 49S, 51N, 51S, 53N, 53S, 55N, 55S, 57N, 57S, 59N, 59S	PARTIAL WIDTH IN SPANS 26S THROUGH 39S	EX-01 TO EX-17	610008	PORTLAND CEMENT CONCRETE MASONRY, PARAPET, CLASS A	CY	32	0	32
					610017	PORTLAND CEMENT CONCRETE MASONRY, SUPERSTRUCTURE, CLASS D	CY	300	0	300
					610019	HIGH EARLY STRENGTH CONCRETE	CY	290	25	363
					611000	BAR REINFORCEMENT	LB	100000	0	100000
					624000	PREFABRICATED EXPANSION JOINT SYSTEMS, 3"	LF	6748	0	6748
2	REPLACE EXISTING JOINT WITH LINK SLAB	PIERS 29N, 31N, 33N, 36N, 38N, 40N, 42N, 42S, 44N, 44S, 46N, 46S, 48N, 48S, 50N, 50S, 52N, 52S, 54N, 54S, 56N, 56S, 58N, 58S		BB-07, EX-23	211000	REMOVAL OF STRUCTURES AND OBSTRUCTIONS	LS	1	0	1
					604000	JACKING BRIDGE	LS	1	0	1
					610500	ULTRA HIGH PERFORMANCE CONCRETE	CY	44	0	44
					611000	BAR REINFORCEMENT	LB	40000	0	40000
3	MILL EXISTING DECK/OVERLAY	ENTIRE BRIDGE	PARTIAL WIDTH IN SPANS 26S THROUGH 39S	DM-01 TO DM-04	628053	DECK REPAIR, FULL DEPTH	SF	500	25	625
					628502	REMOVAL OF EXISTING DECK REPAIRS	SF	500	25	625
					760013	PAVEMENT MILLING, PORTLAND CEMENT CONCRETE PAVEMENT	SY-IN	157000	0	157000
4	HYDRODEMOLITION OF EXISTING DECK SURFACE	ENTIRE BRIDGE	PARTIAL WIDTH IN SPANS 26S THROUGH 39S	DM-01 - DM-04	760500	TOTAL SURFACE HYDRODEMOLITION	SY	50000	0	50000
					760501	DEEP CUT HYDRODEMOLITION	SY	12000	0	12000
5	FURNISH AND INSTALL LMC OVERLAY	ENTIRE BRIDGE	PARTIAL WIDTH IN SPANS 26S THROUGH 39S	DM-01 TO DM-04	625000	LATEX-MODIFIED CONCRETE OVERLAY INSTALLATION	SY-IN	207000	0	207000
					625001	FURNISHING LATEX-MODIFIED CONCRETE OVERLAY	CY	5750	25	7188
					625503	ADDITIONAL LATEX-MODIFIED CONCRETE FOR PARTIAL DECK REPAIRS	CY	850	25	1063
					625504	POLYESTER POLYMER CONCRETE SAND MIX FOR RUMBLE STRIPS	CF	100	25	125
9	REMOVE AND REPLACE CONCRETE APPROACH SLAB	SOUTH ABUTMENT AND NORTH ABUTMENT		AS-01 TO AS-10	207000	STRUCTURAL EXCAVATION	CY	179	0	179
					211000	REMOVAL OF STRUCTURES AND OBSTRUCTIONS	LS	1	0	1
					610008	PORTLAND CEMENT CONCRETE MASONRY, PARAPET, CLASS A	CY	24	0	24
					610018	PORTLAND CEMENT CONCRETE MASONRY, APPROACH SLAB, CLASS D	CY	258	0	258
					611001	BAR REINFORCEMENT, EPOXY COATED	LB	11075	0	11075
					624000	PREFABRICATED EXPANSION JOINT SYSTEMS, 3"	LF	228	0	228
10	CLEAN SCUPPER AND DOWNSPOUT	SPAN 0 NB; SPAN 5 SB; SPAN 6 SB; SPAN 7 SB; SPAN 12 SB; SPAN 18 NB; SPAN 20 NB; SPAN 25 NB; SPAN 27 NB; SPAN 28 NB			601503	CLEANING BRIDGE SCUPPER	EA	58	0	58
12	REPLACE BRIDGE SCUPPER/ ADD NEW BRIDGE SCUPPER	SPANS 0 SB, 1 SB, 2 SB, 3 SB, 4 NB, 4 SB, 5 NB, 5 SB, 6 NB, 7 NB, 8 NB, 9 NB, 10 NB, 11 NB, 12 NB, 13 NB, 13 SB, 14 NB, 14 SB, 15 NB, 15 SB, 16 NB, 16 SB, 17 NB, 17 SB, 18 SB, 19 SB, 20 SB, 21 SB, 22 SB, 23 SB, 24 SB, 25 SB (2), 26 NB, 27 NB, 28 NB, 29 NB, 30 NB, 31 NB, 32 NB, 33 NB, 34 NB, 35 SB (NEW), 36 NB, 36 SB, 37 SB (NEW), 38 NB, 38 SB, 39 SB (NEW), 40 NB, 40 SB, 41 NB, 41 SB, 42 NB, 42 SB, 43 NB, 43 SB, 44 SB, 45 NB, 45 SB, 46 NB, 46 SB, 47 NB, 47 SB, 48 NB, 48 SB, 49 NB, 49 SB, 50 NB, 50 SB, 51 NB, 51 SB, 52 SB, 53 SB, 54 SB, 55 SB, 56 SB, 57 SB, 58 SB, 59 SB	83 SCUPPERS	DT-05 TO DT-06	615001	STEEL STRUCTURES	LS	1	0	1
13	REPLACE SCUPPER DOWNSPOUT	SOUTH ABUTMENT: PIER 1, COLUMN 1; PIER 5, COLUMN 1; PIER 11, COLUMN 2; PIER 12, COLUMN 2. PIER 13, COLUMN 2; PIER 17, COLUMN 3; PIER 18, COLUMN 2; PIER 19, COLUMN 2; PIER 19, COLUMN 1; PIER 21, COLUMN 1; PIER 22, COLUMN 1; PIER 22, COLUMN 2; PIER 23, COLUMN 1; PIER 26, COLUMN 1; PIER 27N, COLUMN 2; PIER 28N, COLUMN 1, PIER 44S, COLUMN 2; PIER 57S, COLUMN 1	19 LOCATIONS	PE-01 TO PE-08	615001	STEEL STRUCTURES	LS	1	0	1
14	REMOVE AND REPLACE BRIDGE PARAPET	EXTERIOR PARAPETS, SPANS 1N TO 50N, 1S TO 25S, 40S TO 59S INTERIOR PARAPETS, SPANS 26 TO 59 N & S	INCLUDES REMOVING AND REPLACING A PORTION OF THE DECK AND OVERHANG	DM-05 TO DM-08, PA-01 TO PA-10, RA-01 TO RA-09	211000	REMOVAL OF STRUCTURES AND OBSTRUCTIONS	LS	1	0	1
					604001	PROTECTIVE SHIELD	LS	1	0	1
					604501	RAILROAD PROTECTIVE SHIELD	LS	1	0	1
					610008	PORTLAND CEMENT CONCRETE MASONRY, PARAPET, CLASS A	CY	1818	0	1818
					610017	PORTLAND CEMENT CONCRETE MASONRY, SUPERSTRUCTURE, CLASS D	CY	2088	0	2088
					611000	BAR REINFORCEMENT	LB	530942	0	530942
					611001	BAR REINFORCEMENT, EPOXY COATED	LB	822941	0	822941
					613001	SILICONE-BASED ACRYLIC CONCRETE SEALER	SF	163443	0	163443
					724004	PERMANENT IMPACT ATTENUATOR, TYPE 4	EA	1	0	1
					762002	SAWCUTTING, CONCRETE, VARIABLE DEPTH	LF	5464	0	5464

NOT FOR CONSTRUCTION

LMC OVERLAY NOTES:

1. LONGITUDINAL CONSTRUCTION JOINTS SHALL BE LIMITED TO ONLY THOSE NECESSARY TO COMPLETE THE WORK, HOWEVER THE CONTRACTOR MAY ELECT TO PLACE AN OPTIONAL LONGITUDINAL CONSTRUCTION JOINT IN THE LMC OVERLAY IN STAGE 2 AS NECESSITATED BY THE WIDTH OF THE BRIDGE. LONGITUDINAL CONSTRUCTION JOINTS IN THE LMC OVERLAY MAY ONLY BE PLACED AT THE LOCATION OF THE FINAL LANE LINES.

ADDENDA / REVISIONS	

NOT TO SCALE

REHABILITATION OF I-95 FROM I-495 TO NORTH OF BRANDYWINE RIVER BRIDGE

CONTRACT	BRIDGE NO. 1 748 059
T201407404	DESIGNED BY: DAN
COUNTY	CHECKED BY: WAG
NEW CASTLE	

SUMMARY OF PROPOSED REPAIR AND RECONSTRUCTION ITEMS

PN-05

SECTION
WRA
SHEET NO.
2-140

N:\31987-004\Contract\I-95\C\ADD\Bridge\BR1-748_PN02.dgn
5/31/2019 12:11:32 PM

REPAIR NO.	REPAIR DESCRIPTION		REMARKS	DWG. NO.	ITEM NO.	ITEM DESCRIPTION	UNIT	QTY.	CONTINGENT %	TOTAL QTY.
16	RAILROAD PROTECTIVE BARRIER	SPANS 23S THROUGH 24S, WEST SIDE; SPANS 25N THROUGH 26N, EAST SIDE		RA-10	211000	REMOVAL OF STRUCTURES AND OBSTRUCTIONS	LS	1	0	1
					727007	BRIDGE SAFETY FENCE, TYPE 1	LF	140	0	140
					727504	RAILROAD PROTECTIVE BARRIER	LF	267	0	267
17	SALVAGE, REFURBISH, AND REINSTALL DECORATIVE BARRIER	SPANS 44N THROUGH 48N, 51N THROUGH 59N, EAST SIDE; SPANS 24S TO 28S; SPANS 42S THROUGH 55S WEST SIDE		RA-10	211000	REMOVAL OF STRUCTURES AND OBSTRUCTIONS	LS	1	0	1
					727503	DECORATIVE BARRIER	LF	2339	0	2339
19	REPLACE BRIDGE LIGHTING	ENTIRE BRIDGE	SEE LIGHTING PLANS FOR ITEMS AND PAYMENT							
21	REMOVE EXISTING BRIDGE MOUNTED SIGN STRUCTURE	SPANS 18, 23, AND 59	INCLUDES REMOVING EXISTING STEEL SIGN SUPPORT BRACKETS	DM-09, DM-10	211000	REMOVAL OF STRUCTURES AND OBSTRUCTIONS	LS	1	0	1 0
23	BOLTED DOWN PCC SAFETY BARRIER	SPANS 56N TO 59N			610008	PORTLAND CEMENT CONCRETE MASONRY, PARAPET, CLASS A	CY		0	0
24	JACK AND REPLACE EXISTING BRIDGE BEARINGS	SEE BB-01 TO BB-05		BB-01 TO BB-06, RH-01 TO RH-15	604000	JACKING BRIDGE	LS	1	0	1
					615001	STEEL STRUCTURES	LS	1	0	1
25	REPLACE EXISTING STEEL RIVETS	CROSS GIRDER 12; CROSS GIRDER 22, BAY 7; CROSS GIRDER 24, BAY 7 & BELOW BEAM 17		RH-XX	615004	REPLACING STEEL RIVETS/BOLTS	EA	100	100	200
26	REPLACE EXISTING LOOSE OR MISSING BOLTS	SPAN 0, BAY 9, DIAPHRAGM 3; SPAN 10, BAY 7, DIAPHRAGM 1; CROSS GIRDER 20, INTERIOR BAYS 10 & 11		RH-XX	615004	REPLACING STEEL RIVETS/BOLTS	EA	4	100	8
27	REPLACE ANCHOR BOLT NUTS	SPAN 14, PIER 15, CROSS GIRDER BEARING 2; SPAN 38N, PIER 38N, BEARING 3, WEST ANCHOR BOLT; SPAN 39N, PIER 40N, BEARING 1, WEST ANCHOR BOLT; SPAN 42N, PIER 43N, CROSS GIRDER BEARING 2; SPAN 43N, PIER 44N, BEARING 6, EAST ANCHOR BOLT; SPAN 50N, PIER 51N, BEARING 6, EAST ANCHOR BOLT; SPAN 51N, PIER 51N, BEARING 6, EAST ANCHOR BOLT		RH-XX	615004	REPLACING STEEL RIVETS/BOLTS	EA	7	100	14
28	REMOVE STEEL SIGN SUPPORT BRACKETS	SPAN 0 AT BEAM N-6, SPAN 11 AT BEAM N-6, SPAN 24 AT BEAM S-6, SPAN 34N AT BEAM N-6, SPAN 42 AT BEAM N-6, SPAN 49 AT BEAM N-6		DM-09, DM-10	211000	REMOVAL OF STRUCTURES AND OBSTRUCTIONS	LS	1	0	1
32	CLEAN AND PAINT EXISTING STEEL STRUCTURE	INTERIOR OF TRANSVERSE BOX GIRDERS AT PIERS 10, 11, 12, 20 THROUGH 26			616000	CLEANING AND PAINTING EXISTING STEEL	LS	1	0	1
34	SEAL CRACKS IN CONCRETE SUBSTRUCTURE	PIERS 23 THROUGH 26, NORTH ABUTMENT			628001	REPAIR OF CONCRETE STRUCTURES BY EPOXY INJECTION	LF	323	25	404
37	REPAIR DEEP SPALLS IN CONCRETE SUBSTRUCTURE	PIERS 23 THROUGH 26, NORTH ABUTMENT			628041	DEEP SPALL REPAIR	CF	340	25	425
					628042	REHABILITATION OF PCC MASONRY	CY	1	25	2
41	COATING CONCRETE SURFACES	PIERS 23 THROUGH 26, NORTH ABUTMENT	INCLUDES CLEANING DIRT AND DEBRIS FROM TOPS OF SUBSTRUCTURE UNITS		613000	EPOXY CONCRETE SEALER	SF	16418	0	16418
					613001	SILICONE-BASED ACRYLIC CONCRETE SEALER	SF	309175	0	309175
42	REMOVE VEGETATIVE GROWTH FROM STRUCTURE	PIER 5, COLUMN 6; PIER 6, COLUMN 6; NORTH ABUTMENT, WEST END			201000	CLEARING AND GRUBBING	LS	1	0	1
45	SEAL DECK WITH HMWM CONCRETE SEALER	ENTIRE BRIDGE			613003	HIGH MOLECULAR WEIGHT METHACRYLATE CONCRETE SEALER	SF	558000	0	558000
46	REPLACE ABUTMENT JOINT WITH DECK-OVER	SOUTH ABUTMENT AND NORTH ABUTMENT		EX-18 TO EX-22	211000	REMOVAL OF STRUCTURES AND OBSTRUCTIONS	LS	1	0	1
					610002	PORTLAND CEMENT CONCRETE MASONRY, ABUTMENT ABOVE FOOTING, CLASS A	CY	6	0	6
					610008	PORTLAND CEMENT CONCRETE MASONRY, PARAPET, CLASS A	CY	2		2
					610017	PORTLAND CEMENT CONCRETE MASONRY, SUPERSTRUCTURE, CLASS D	CY	25	0	25
					611000	BAR REINFORCEMENT	LB	1283	0	1283
47	FILL RUMBLE STRIPS			PN-03	625504	POLYESTER POLYMER CONCRETE SAND MIX FOR RUMBLE STRIPS	CF	75	25	94
48	CUT NEW RUMBLE STRIPS				760005	RUMBLE STRIPS, CONCRETE, SHALLOW DEPTH	LF	21891	0	21891
M11	BR 1-748: INSTALL REPAIR PLATES SPAN 25, PIER 24, BEAM 17	BEAM 17, PIER 24, SPAN 24		RH-17	615006	STEEL STRUCTURE REPAIR	LS	1	0	1

NOT FOR CONSTRUCTION

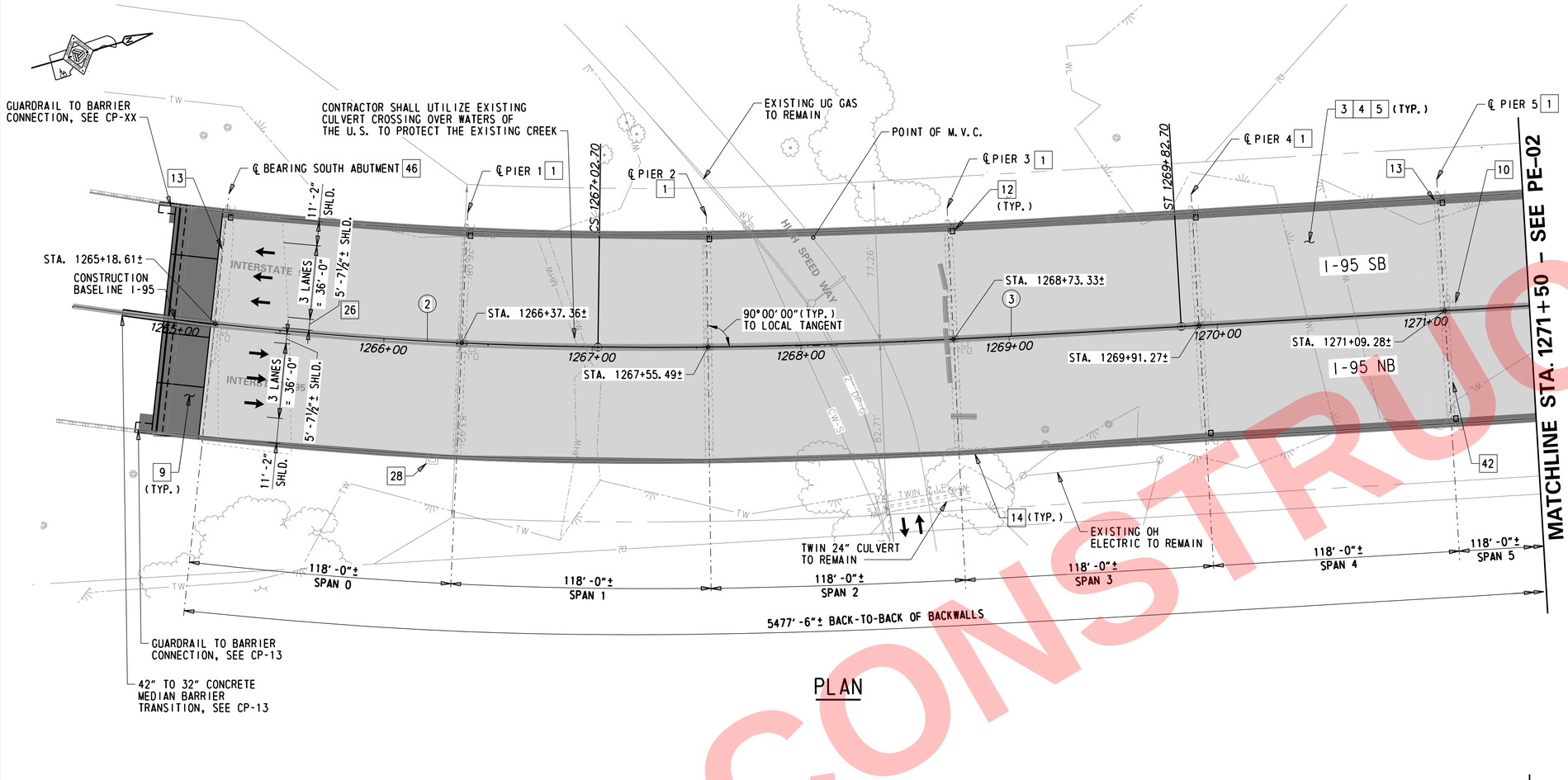

PLAN

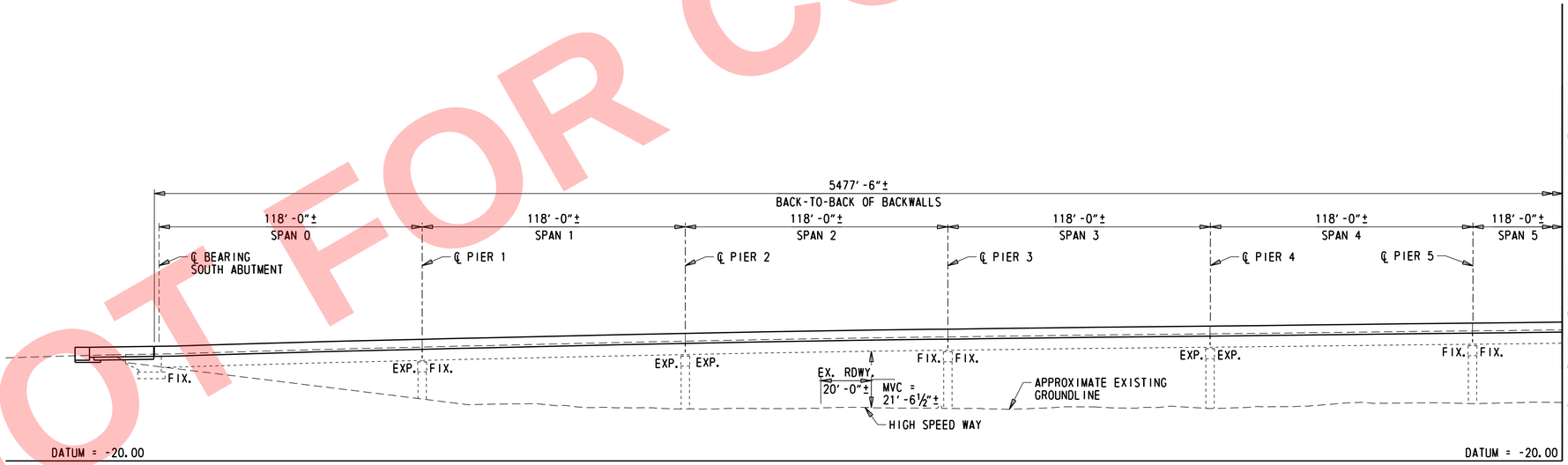

DEVELOPED SECTION ALONG CONSTRUCTION BASELINE I-95

NOTES:

1. DIMENSIONS SHOWN ARE MEASURED ALONG CONSTRUCTION BASELINE I-95.
2. MINIMUM VERTICAL CLEARANCE (MVC) IS BASED ON 2013 NBIS INSPECTION REPORT.
3. SIGNING NOT SHOWN FOR CLARITY, SEE SIGNING PLAN ON DWGS. SS-13 AND SS-14 FOR DETAILS
4. CONSTRUCTION STAGING LIMITS NOT SHOWN FOR CLARITY. SEE SEQUENCE OF CONSTRUCTION ON DWGS. SC-01 THROUGH SC-10.

KEY:

[1] REPAIR NUMBER AS SHOWN ON DWG. PN-04 AND PN-05.

(1) CURVE DATA

LEGEND:

[3][4][5] MILL EXISTING OVERLAY, HYDRODEMO EXISTING DECK SURFACE, AND FURNISH AND INSTALL NEW LMC OVERLAY

[9][14] REMOVE AND RECONSTRUCT PARAPET AND PORTION OF DECK; REMOVE AND RECONSTRUCT APPROACH SLAB

HORIZONTAL CURVE DATA

CURVE (2)	CURVE (3)
P.I. STA. 1263+41.77	SCS P.I. STA. 1267+96.08
DELTA = 21°-41'-33.9346"	Ls = 280'
Dc = 2°-58'-07.2957"	P = 1.6922'
R = 1930.00'	K = 139.9754'
T = 369.79'	Xc = 279.8527'
L = 730.72'	Yc = 6.7677'
E = 35.11'	LT = 186.7182'
P.C. STA. = 1259+71.98	ST = 93.38'
P.T. STA. = 1267+02.70	LC = 279.8527'

NOT FOR CONSTRUCTION

ADDENDA / REVISIONS		SCALE 0 30 60 90 FEET	REHABILITATION OF I-95 FROM I-495 TO NORTH OF BRANDYWINE RIVER BRIDGE	CONTRACT T201407404	BRIDGE NO. 1 748 059	GENERAL PLAN AND ELEVATION 1 OF 8	PE-01
				COUNTY NEW CASTLE	DESIGNED BY: DAN		SECTION WRA
					CHECKED BY: WAG		SHEET NO. 2-142

N:\31987-00A\Contract_I-95\CADD\Bridge\BR1-748_PE01.dgn
5/31/2019 12:11:36 PM

NOTES:

1. DIMENSIONS SHOWN ARE MEASURED ALONG CONSTRUCTION BASELINE I-95.
2. SIGNING NOT SHOWN FOR CLARITY, SEE SIGNING PLAN ON DWGS. SS-14 AND SS-15 FOR DETAILS.
3. CONSTRUCTION STAGING LIMITS NOT SHOWN FOR CLARITY. SEE SEQUENCE OF CONSTRUCTION ON DWGS. SC-01 THROUGH SC-10.

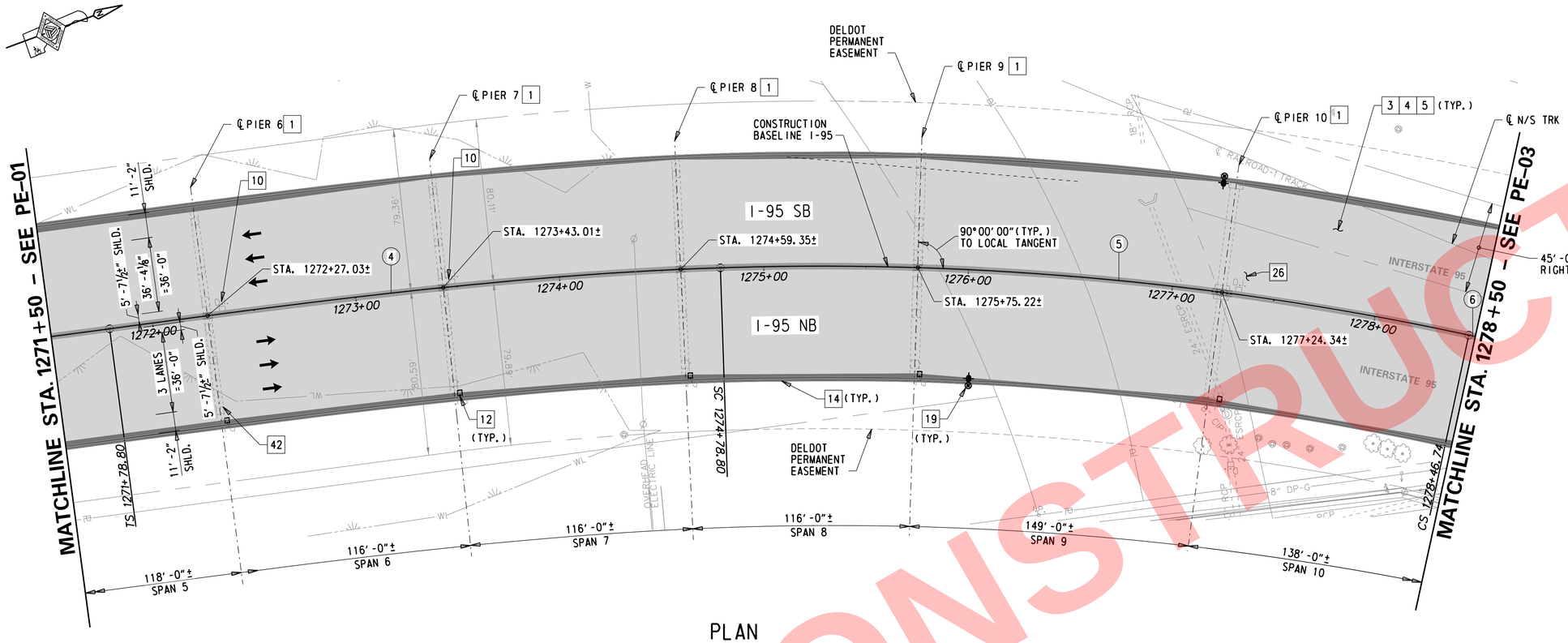

PLAN

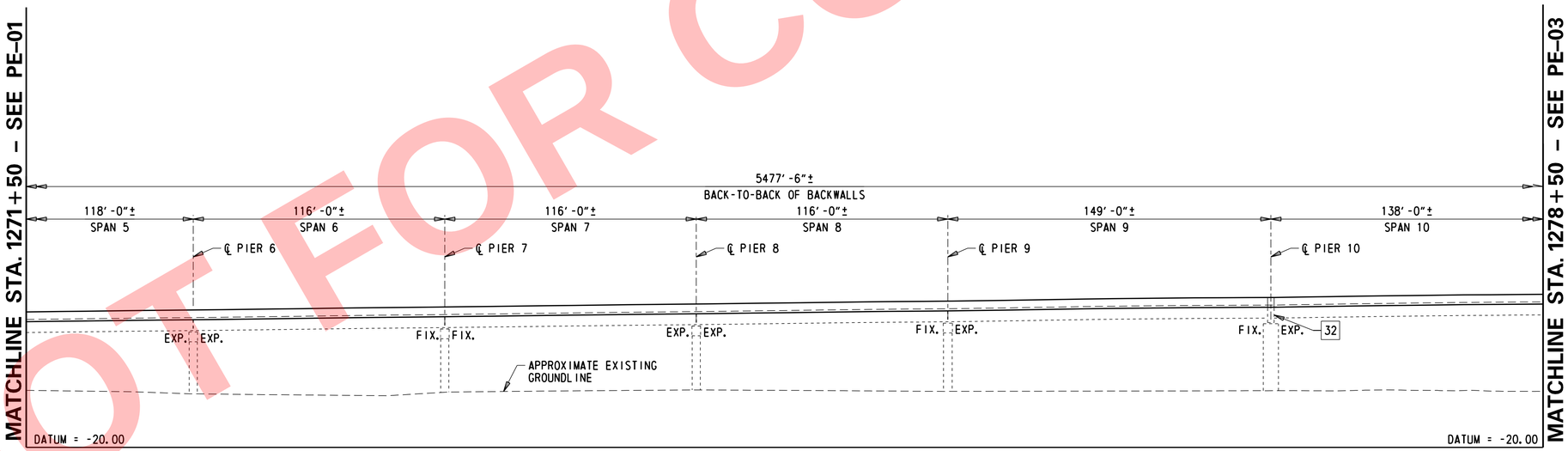

DEVELOPED SECTION ALONG CONSTRUCTION BASELINE I-95

KEY:

1 REPAIR NUMBER AS SHOWN ON DWG. PN-04 AND PN-05

1 CURVE DATA

PROPOSED BRIDGE MOUNTED LIGHT POLE

LEGEND:

3 4 5 MILL EXISTING OVERLAY, HYDRODEMO EXISTING DECK SURFACE, AND FURNISH AND INSTALL NEW LMC OVERLAY

14 REMOVE AND RECONSTRUCT PARAPET AND PORTION OF DECK

HORIZONTAL CURVE DATA

CURVE 4	CURVE 5
SCS P.I. STA. 1273+78.90	P.I. STA. 1276+63.69
Ls = 300'	DELTA = 14°-03'-15.6441" R
P = 9.9929'	Dc = 3°-49'-10.9871"
K = 149.95'	R = 1500'
Xc = 299.7001'	T = 184.90'
Yc = 9.9929'	L = 367.94'
LT = 200.1049'	E = 11.35
ST = 100.0953'	P.C. STA. = 1274+78.80
LC = 299.8667'	P.T. STA. = 1278+46.74

NOTE: SEE DWG. PE-03 FOR CURVE 6

NOT FOR CONSTRUCTION

ADDENDA / REVISIONS

SCALE 0 30 60 90 FEET

REHABILITATION OF I-95 FROM I-495 TO NORTH OF BRANDYWINE RIVER BRIDGE

CONTRACT	BRIDGE NO.	1 748 059
T201407404	DESIGNED BY: DAN	
COUNTY	CHECKED BY: WAG	
NEW CASTLE		

GENERAL PLAN AND ELEVATION 2 OF 8

PE-02

SECTION WRA

SHEET NO. 2-143

N:\31987-004\Contract_I-95\CADD\Bridge\BR1-748_PE02.dgn 5/31/2019 12:11:37 PM

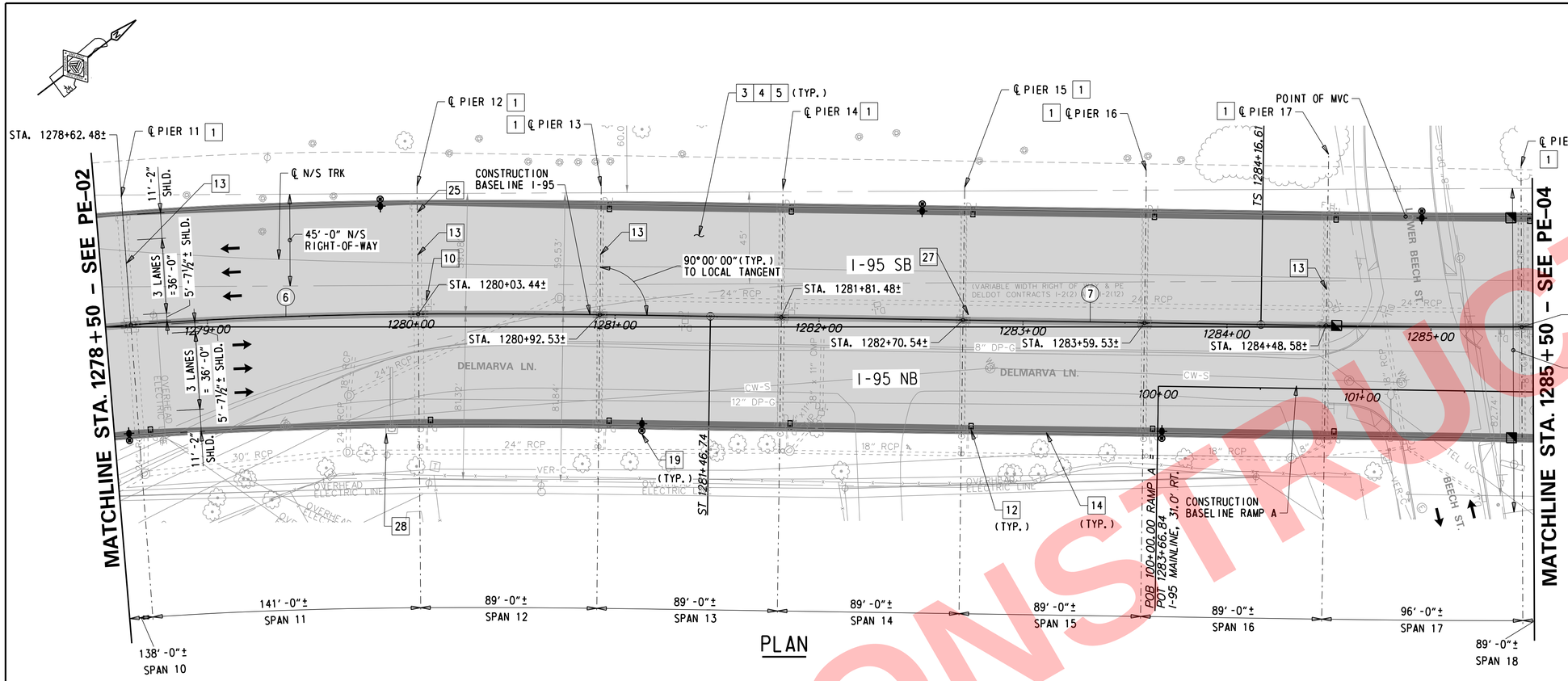

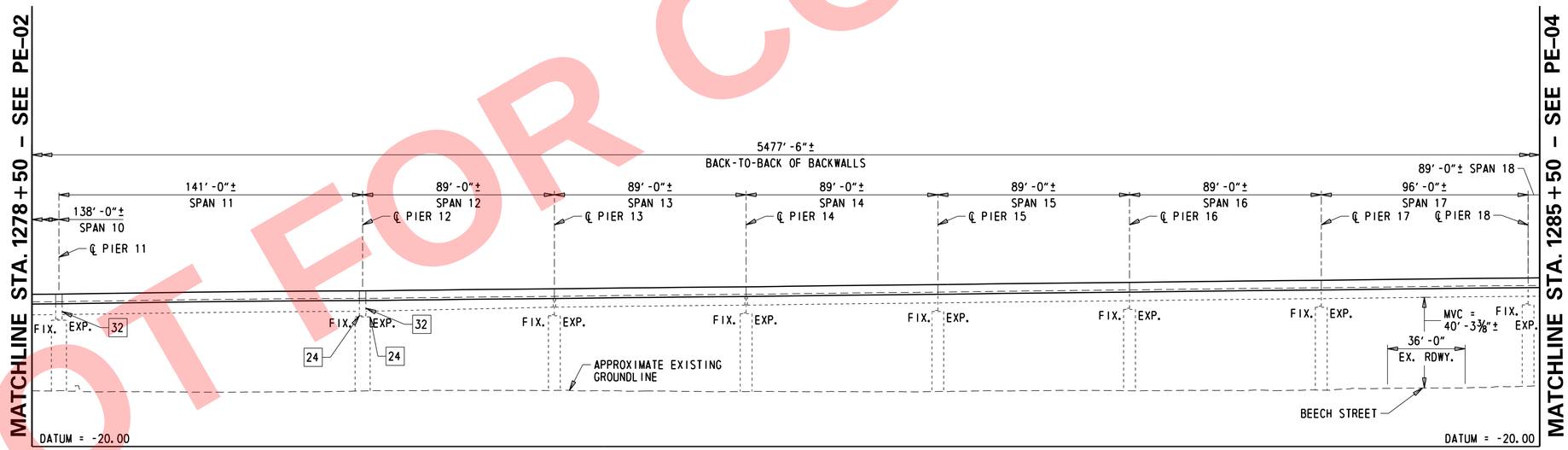

DEVELOPED SECTION ALONG CONSTRUCTION BASELINE I-95

NOTES:

1. DIMENSIONS SHOWN ARE MEASURED ALONG CONSTRUCTION BASELINE I-95.
2. MINIMUM VERTICAL CLEARANCE (MVC) IS BASED ON 2013 NBIS INSPECTION REPORT.
3. SIGNING NOT SHOWN FOR CLARITY, SEE SIGNING PLAN ON DWGS. SS-15 AND SS-16 FOR DETAILS.
4. CONSTRUCTION STAGING LIMITS NOT SHOWN FOR CLARITY. SEE SEQUENCE OF CONSTRUCTION ON DWGS. SC-01 THROUGH SC-10.

KEY:

- [1] REPAIR NUMBER AS SHOWN ON DWG. PN-04 AND PN-05
- (1) CURVE DATA
- PROPOSED BRIDGE MOUNTED LIGHT POLE
- PROPOSED UNDER BRIDGE LIGHT FIXTURE

LEGEND:

- [3 4 5] MILL EXISTING OVERLAY, HYDRODEMO EXISTING DECK SURFACE, AND FURNISH AND INSTALL NEW LMC OVERLAY
- [14] REMOVE AND RECONSTRUCT PARAPET AND PORTION OF DECK

HORIZONTAL CURVE DATA

CURVE (6)

SCS P.I. STA. 1279+46.8327
Ls = 300'
P = 2.4991'
K = 149.95'
Xc = 299.7001'
Yc = 9.9929'
LT = 200.1049'
ST = 100.0953'
LC = 299.8667'

CURVE (7)

SCS P.I. STA. 1286+16.7163
Ls = 300'
P = 2.4991'
K = 149.95'
Xc = 299.7001'
Yc = 9.9929'
LT = 200.1049'
ST = 100.0953'
LC = 299.8667'

NOT FOR CONSTRUCTION

ADDENDA / REVISIONS

SCALE 0 30 60 90 FEET

REHABILITATION OF I-95 FROM I-495 TO NORTH OF BRANDYWINE RIVER BRIDGE

CONTRACT	BRIDGE NO.	1 748 059
T201407404	DESIGNED BY: DAN	
COUNTY	CHECKED BY: WAG	
NEW CASTLE		

GENERAL PLAN AND ELEVATION 3 OF 8

PE-03
SECTION
WRA
SHEET NO.
2-144

N:\31987-00A\Contract_I-95\CADD\Bridge\BR1-748_PE03.dgn
5/31/2019 12:11:38 PM

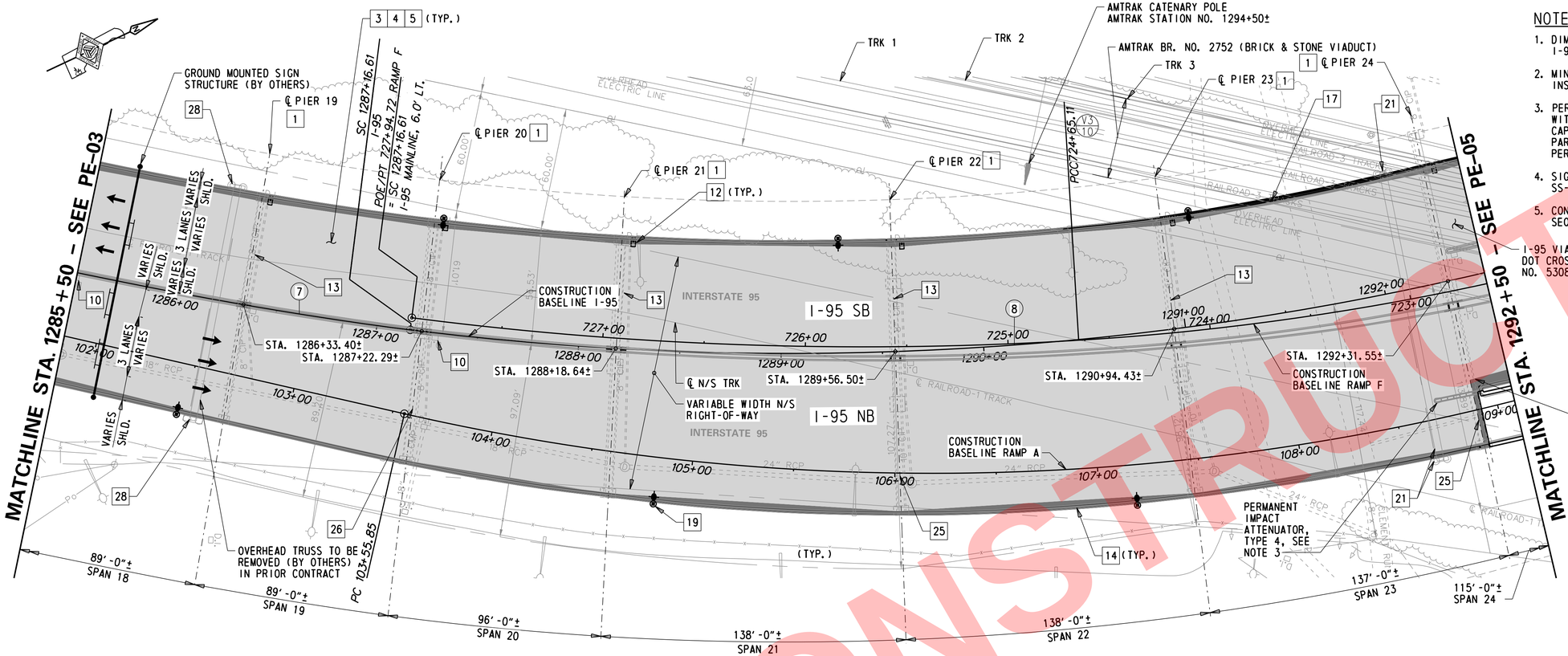

PLAN

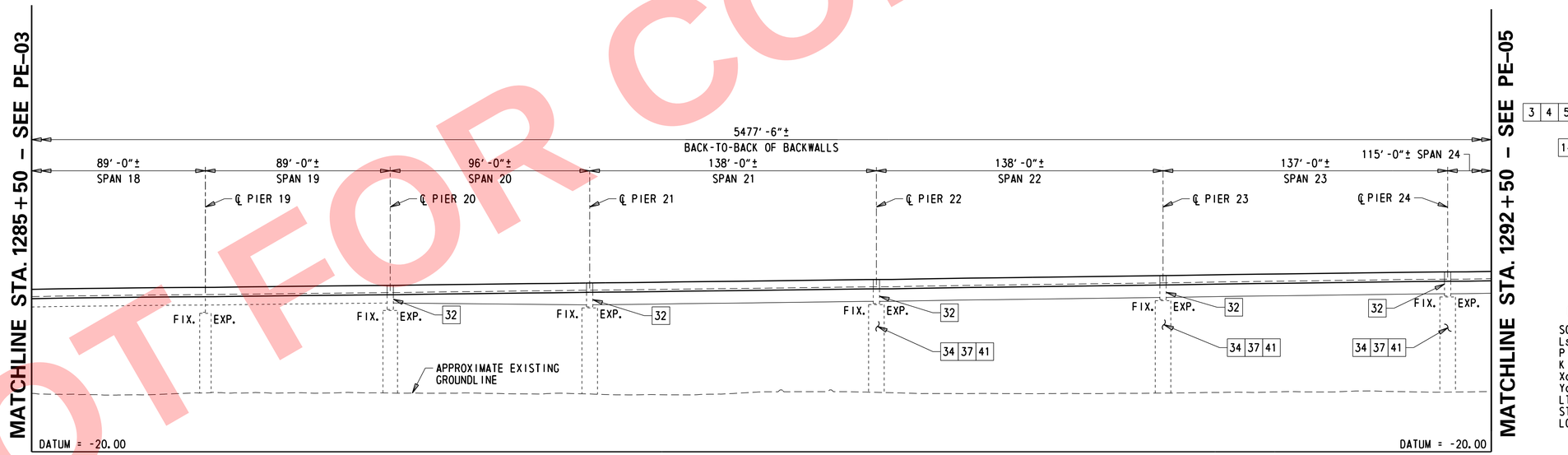

DEVELOPED SECTION ALONG BASELINE I-95

NOTES:

1. DIMENSIONS SHOWN ARE MEASURED ALONG CONSTRUCTION BASELINE I-95.
2. MINIMUM VERTICAL CLEARANCE (MVC) IS BASED ON 2013 NBIS INSPECTION REPORT.
3. PERMANENT IMPACT ATTENUATOR, TYPE 4 SHALL BE COMPATIBLE WITH AND APPROVED FOR BRIDGE MOUNTED APPLICATIONS AND CAPABLE OF FULLY PROTECTING THE BLUNT END OF THE BRIDGE PARAPET. PAYMENT WILL BE MADE UNDER ITEM 724004 - PERMANENT IMPACT ATTENUATOR, TYPE 4.
4. SIGNING NOT SHOWN FOR CLARITY, SEE SIGNING PLAN ON DWGS. SS-16 AND SS-17 FOR DETAILS.
5. CONSTRUCTION STAGING LIMITS NOT SHOWN FOR CLARITY. SEE SEQUENCE OF CONSTRUCTION ON DWGS. SC-01 THROUGH SC-10.

KEY:

- [1] REPAIR NUMBER AS SHOWN ON DWG. PN-04
- (1) CURVE DATA
- (V3 / 10) AMTRAK VALUATION SECTION & SHEET NUMBER
- PROPOSED BRIDGE MOUNTED LIGHT POLE

LEGEND:

- [3 4 5] MILL EXISTING OVERLAY, HYDRODEMO EXISTING DECK SURFACE, AND FURNISH AND INSTALL NEW LMC OVERLAY
- [14] REMOVE AND RECONSTRUCT PARAPET AND PORTION OF DECK

HORIZONTAL CURVE DATA

CURVE (7)

SCS P.I. STA. 1286+16.7163
Ls = 300'
P = 2.4991'
K = 149.95'
Xc = 299.7001'
Yc = 9.9929'
LT = 200.1049'
ST = 100.0953'
LC = 299.8667'

CURVE (8)

P.I. STA. 1290+75.00
DELTA = 26°52'30.5407" L
Dc = 3°49'10.9871"
R = 1500'
T = 358.39'
L = 703.59'
E = 42.2
P.C. STA. = 1287+16.61
P.T. STA. = 1294+20.20

NOT FOR CONSTRUCTION

ADDENDA / REVISIONS		SCALE 0 30 60 90 FEET	REHABILITATION OF I-95 FROM I-495 TO NORTH OF BRANDYWINE RIVER BRIDGE	CONTRACT T201407404	BRIDGE NO. 1 748 059	GENERAL PLAN AND ELEVATION 4 OF 8	PE-04 SECTION WRA SHEET NO. 2-145
				COUNTY NEW CASTLE	DESIGNED BY: DAN		
					CHECKED BY: WAG		

N:\31987-00A\Contract_I-95\CADD\Bridge\BRI-748_PE04.dgn
5/31/2019 12:11:40 PM

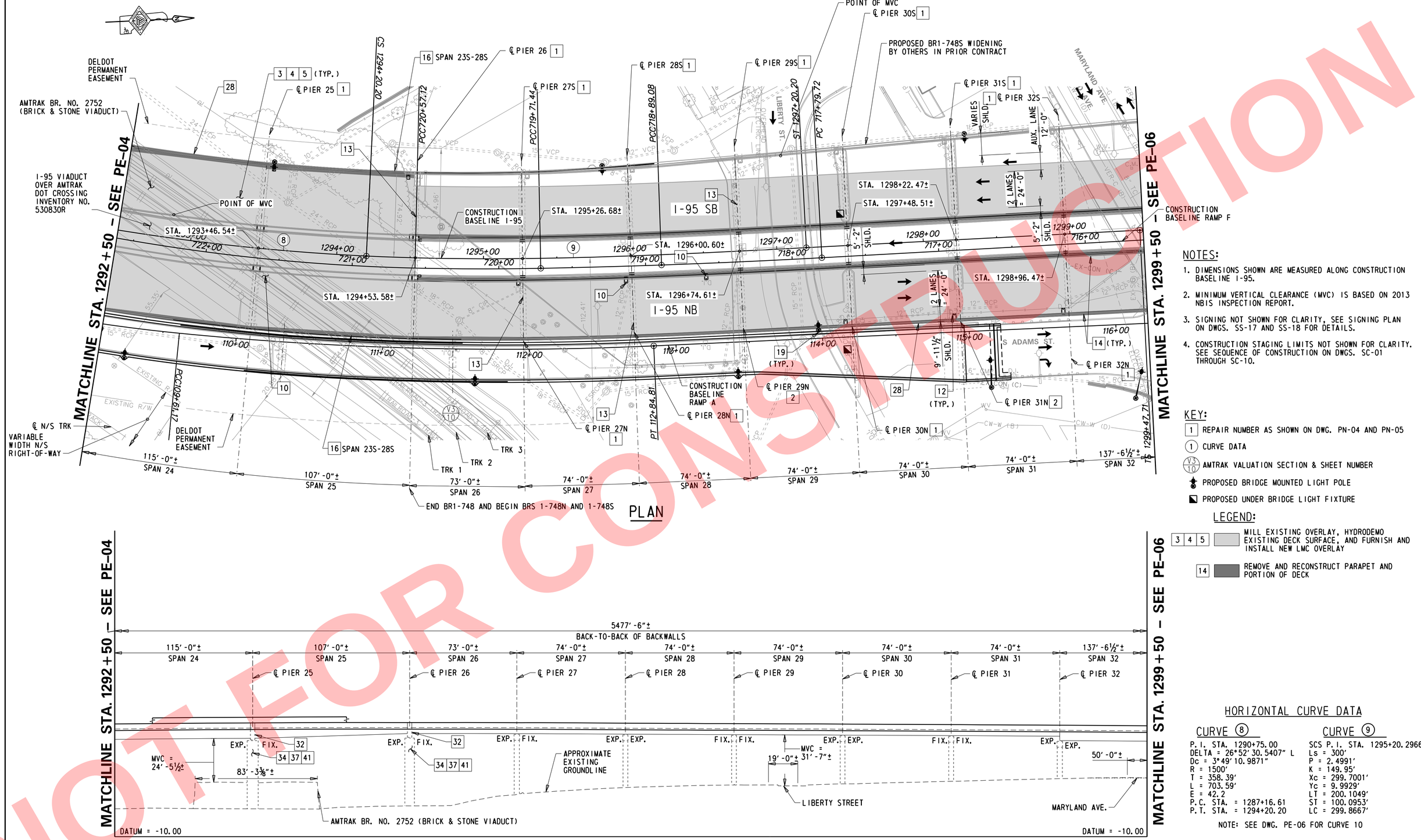

DEVELOPED SECTION ALONG BASELINE I-95

NOTES:

1. DIMENSIONS SHOWN ARE MEASURED ALONG CONSTRUCTION BASELINE I-95.
2. MINIMUM VERTICAL CLEARANCE (MVC) IS BASED ON 2013 NBIS INSPECTION REPORT.
3. SIGNING NOT SHOWN FOR CLARITY, SEE SIGNING PLAN ON DWGS. SS-17 AND SS-18 FOR DETAILS.
4. CONSTRUCTION STAGING LIMITS NOT SHOWN FOR CLARITY. SEE SEQUENCE OF CONSTRUCTION ON DWGS. SC-01 THROUGH SC-10.

KEY:

- 1 REPAIR NUMBER AS SHOWN ON DWG. PN-04 AND PN-05
- (1) CURVE DATA
- (V3/10) AMTRAK VALUATION SECTION & SHEET NUMBER
- PROPOSED BRIDGE MOUNTED LIGHT POLE
- PROPOSED UNDER BRIDGE LIGHT FIXTURE

LEGEND:

- 3 4 5 MILL EXISTING OVERLAY, HYDRODEMO EXISTING DECK SURFACE, AND FURNISH AND INSTALL NEW LMC OVERLAY
- 14 REMOVE AND RECONSTRUCT PARAPET AND PORTION OF DECK

HORIZONTAL CURVE DATA

CURVE (8)	CURVE (9)
P.I. STA. 1290+75.00	SCS P.I. STA. 1295+20.2966
DELTA = 26°52'30.5407" L	Ls = 300'
Dc = 3°49'10.9871"	P = 2.4991'
R = 1500'	K = 149.95'
T = 358.39'	Xc = 299.7001'
L = 703.59'	Yc = 9.9929'
E = 42.2	LT = 200.1049'
P.C. STA. = 1287+16.61	ST = 100.0953'
P.T. STA. = 1294+20.20	LC = 299.8667'

NOTE: SEE DWG. PE-06 FOR CURVE 10

NOT FOR CONSTRUCTION

N:\31987-00A\Contract_I-95\C&D\Bridge\BR1-748_PE05.dgn
5/31/2019 12:11:43 PM

ADDENDA / REVISIONS

SCALE 0 30 60 90 FEET

REHABILITATION OF I-95 FROM I-495 TO NORTH OF BRANDYWINE RIVER BRIDGE

CONTRACT	BRIDGE NO.	1 748 059
T201407404	DESIGNED BY: DAN	
COUNTY	CHECKED BY: WAG	
NEW CASTLE		

GENERAL PLAN AND ELEVATION 5 OF 8

PE-05
SECTION: WRA
SHEET NO.: 2-146

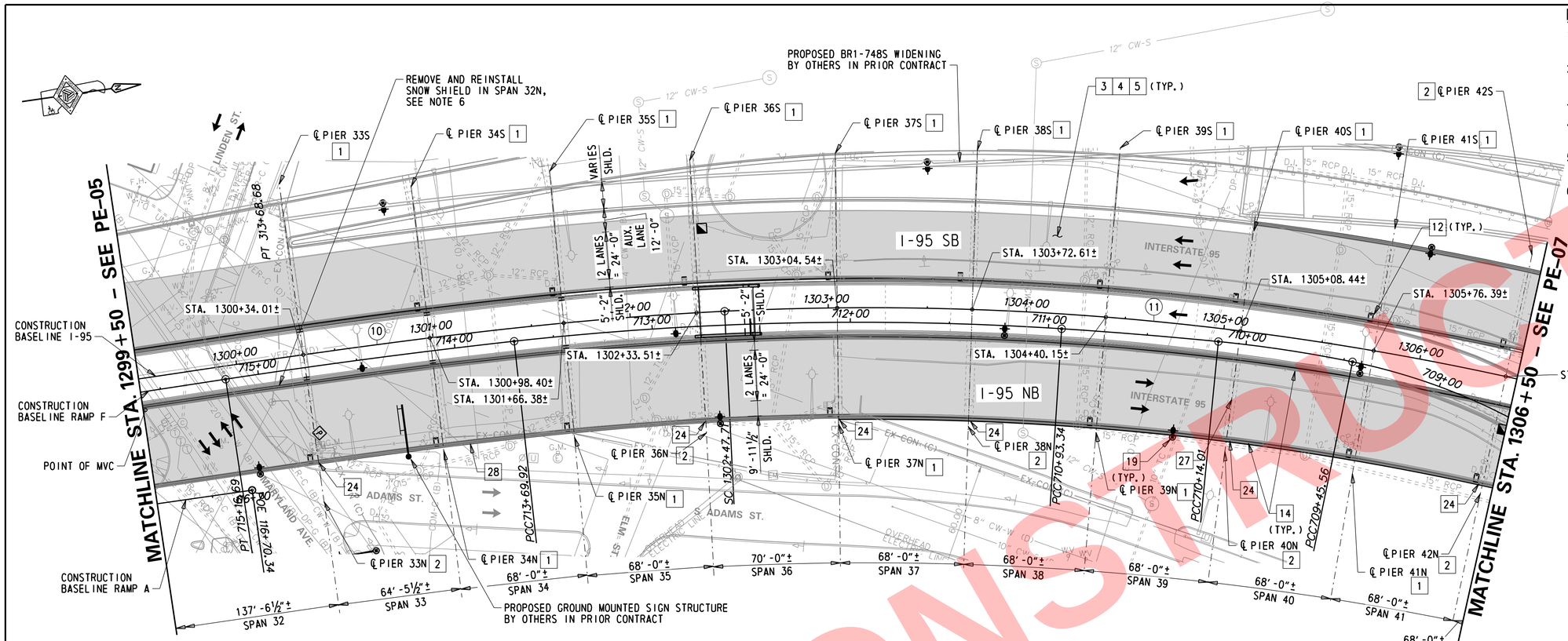

PLAN

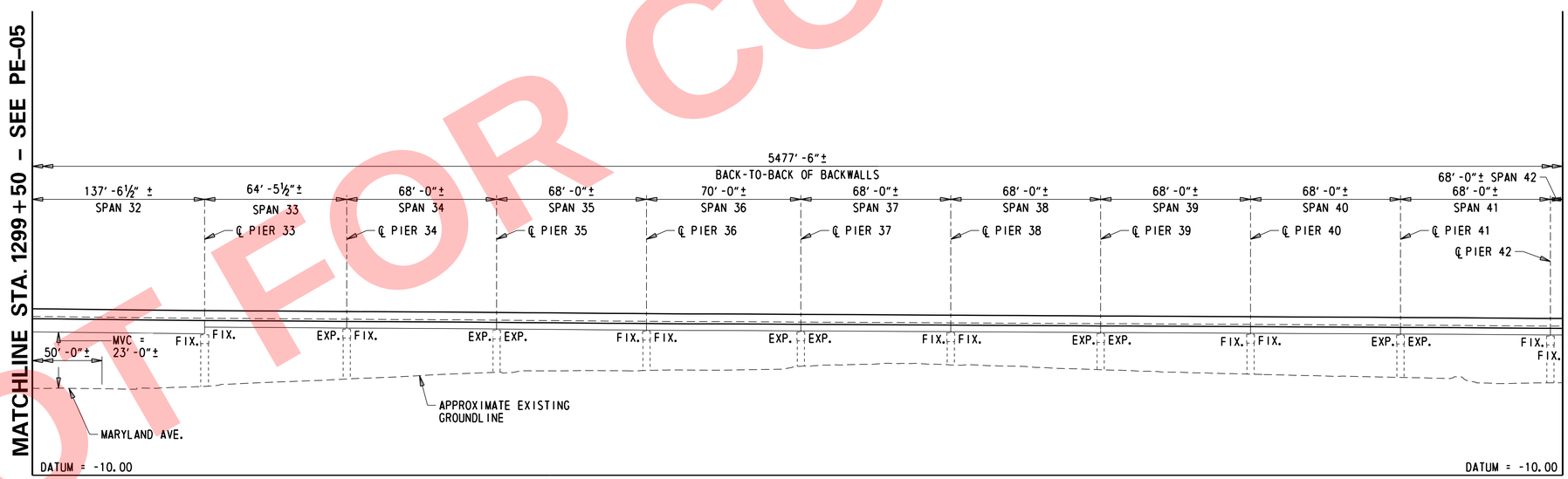

DEVELOPED SECTION ALONG BASELINE I-95

NOTES:

1. DIMENSIONS SHOWN ARE MEASURED ALONG CONSTRUCTION BASELINE I-95.
2. MINIMUM VERTICAL CLEARANCE (MVC) IS BASED ON 2013 NBIS INSPECTION REPORT.
3.
4. SIGNING NOT SHOWN FOR CLARITY, SEE SIGNING PLAN ON DWGS. SS-18 AND SS-19 FOR DETAILS.
5. CONSTRUCTION STAGING LIMITS NOT SHOWN FOR CLARITY. SEE SEQUENCE OF CONSTRUCTION ON DWGS. SC-01 THROUGH SC-10.
6. SNOW SHIELD IS APPROXIMATELY 30'-0" LONG AND ATTACHED TO THE WEST PARAPET ON BR 1-748N SOUTH OF PIER 33N. COST TO REMOVE AND REINSTALL SHALL BE INCIDENTAL TO ITEM 211000 - REMOVAL OF STRUCTURES AND OBSTRUCTIONS.

KEY:

- [1] REPAIR NUMBER AS SHOWN ON DWG. PN-04 AND PN-05
- (1) CURVE DATA
- PROPOSED BRIDGE MOUNTED LIGHT POLE
- PROPOSED UNDER BRIDGE LIGHT FIXTURE
- BORING LOCATION

LEGEND:

- [3][4][5] MILL EXISTING OVERLAY, HYDRODEMO EXISTING DECK SURFACE, AND FURNISH AND INSTALL NEW LMC OVERLAY
- [14] REMOVE AND RECONSTRUCT PARAPET AND PORTION OF DECK

HORIZONTAL CURVE DATA

CURVE (10)	CURVE (11)
SCS P.I. STA. 1301+47.8159	P.I. STA. 1304+66.04
Ls = 300'	DELTA = 16°33'44.7653" L
P = 2.4991'	Dc = 3°49'10.9871"
K = 149.95'	R = 1500'
Xc = 299.7001'	T = 218.32'
Yc = 9.9929'	L = 433.60'
LT = 200.1049'	E = 15.81
ST = 100.0953'	P.C. STA. = 1302+47.71
LC = 299.8667'	P.T. STA. = 1306+81.31

NOT FOR CONSTRUCTION

ADDENDA / REVISIONS	SCALE	REHABILITATION OF I-95 FROM I-495 TO NORTH OF BRANDYWINE RIVER BRIDGE	CONTRACT T201407404	BRIDGE NO. 1 748 059	GENERAL PLAN AND ELEVATION 6 OF 8	PE-06 SECTION WRA SHEET NO. 2-147
	0 30 60 90 FEET		COUNTY NEW CASTLE	DESIGNED BY: DAN CHECKED BY: WAG		

N:\31987-00A\Contract_I-95\CADD\Bridge\BR1-748_PE06.dgn
5/31/2019 12:11:14 PM

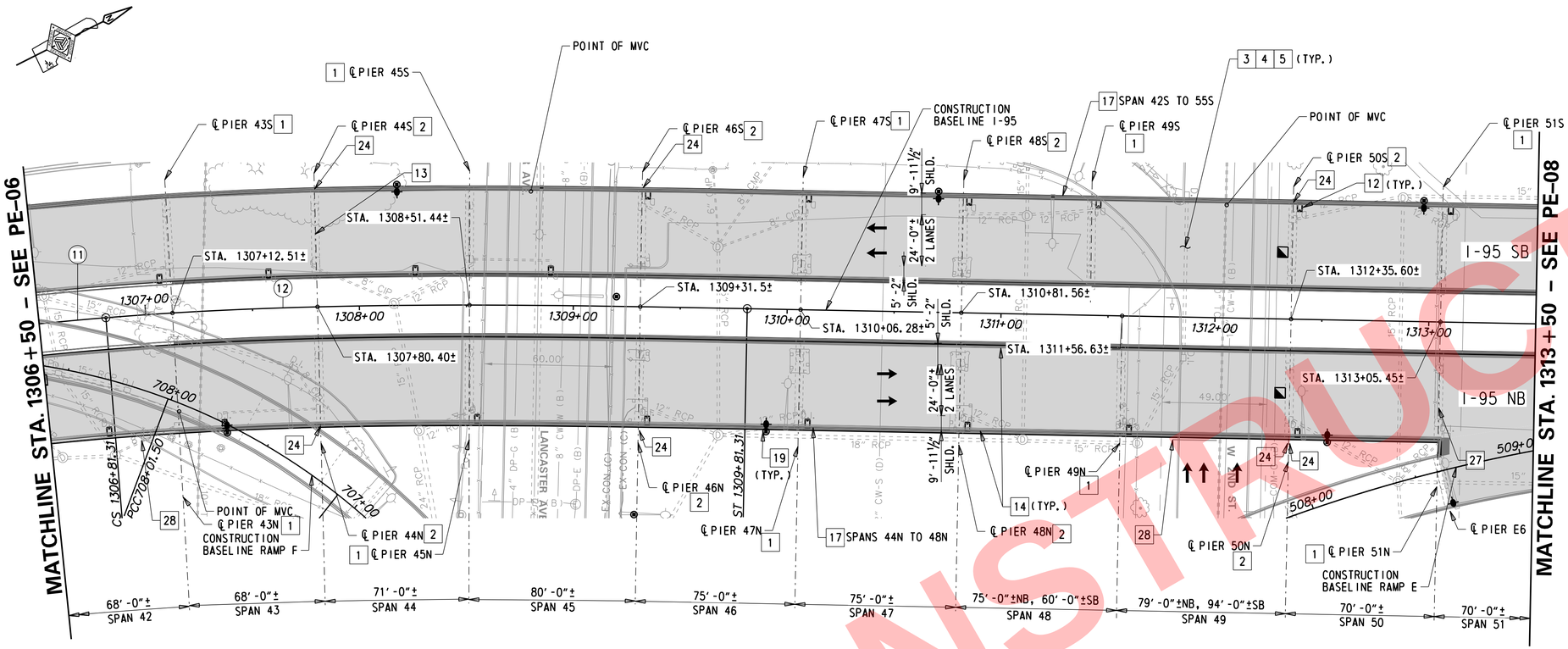

NOTES:

1. DIMENSIONS SHOWN ARE MEASURED ALONG CONSTRUCTION BASELINE I-95.
2. MINIMUM VERTICAL CLEARANCE (MVC) IS BASED ON 2013 NBIS INSPECTION REPORT.
3. SIGNING NOT SHOWN FOR CLARITY, SEE SIGNING PLAN ON DWGS. SS-19 AND SS-20 FOR DETAILS.
4. CONSTRUCTION STAGING LIMITS NOT SHOWN FOR CLARITY. SEE SEQUENCE OF CONSTRUCTION ON DWGS. SC-01 THROUGH SC-10.

PLAN

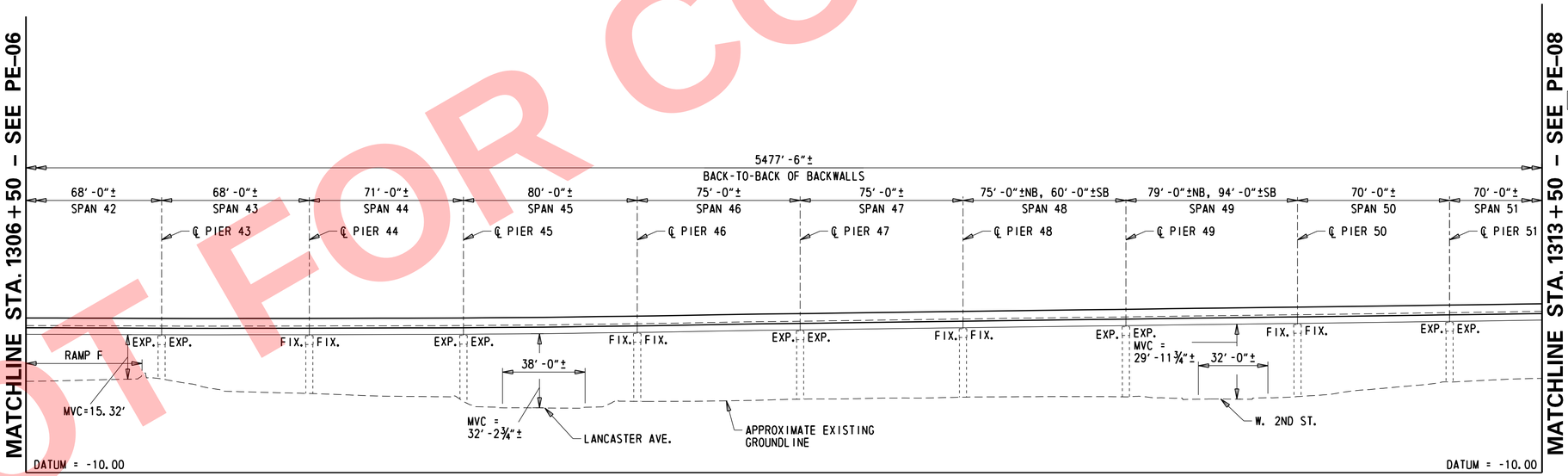

DEVELOPED SECTION ALONG BASELINE I-95

KEY:

- 1 REPAIR NUMBER AS SHOWN ON DWG. PN-04 AND PN-05
- (1) CURVE DATA
- PROPOSED BRIDGE MOUNTED LIGHT POLE
- PROPOSED UNDER BRIDGE LIGHT FIXTURE

LEGEND:

- 3 4 5 MILL EXISTING OVERLAY, HYDRODEMO EXISTING DECK SURFACE, AND FURNISH AND INSTALL NEW LMC OVERLAY
- 14 REMOVE AND RECONSTRUCT PARAPET AND PORTION OF DECK

HORIZONTAL CURVE DATA

CURVE (11)		CURVE (12)	
P.I. STA.	1304+66.04	SCS P.I. STA.	1307+81.4099
DELTA	16°33'44.7653" L	Ls	300'
Dc	3°49'10.9871"	P	2.4991'
R	1500'	K	149.95'
T	218.32'	Xc	299.7001'
L	433.60'	Yc	9.9929'
E	15.81	LT	200.1049'
P.C. STA.	1302+47.71	ST	100.0953'
P.T. STA.	1306+81.31	LC	299.8667'

NOT FOR CONSTRUCTION

N:\31987-00A\Contract I-95\CADD\Bridge\BR1-748_PE07.dgn
5/31/2019 12:11:15 PM

ADDENDA / REVISIONS	SCALE	REHABILITATION OF I-95 FROM I-495 TO NORTH OF BRANDYWINE RIVER BRIDGE	CONTRACT T201407404	BRIDGE NO. 1 748 059	GENERAL PLAN AND ELEVATION 7 OF 8	PE-07 SECTION WRA SHEET NO. 2-148
	0 30 60 90 FEET		COUNTY NEW CASTLE	DESIGNED BY: DAN CHECKED BY: WAG		

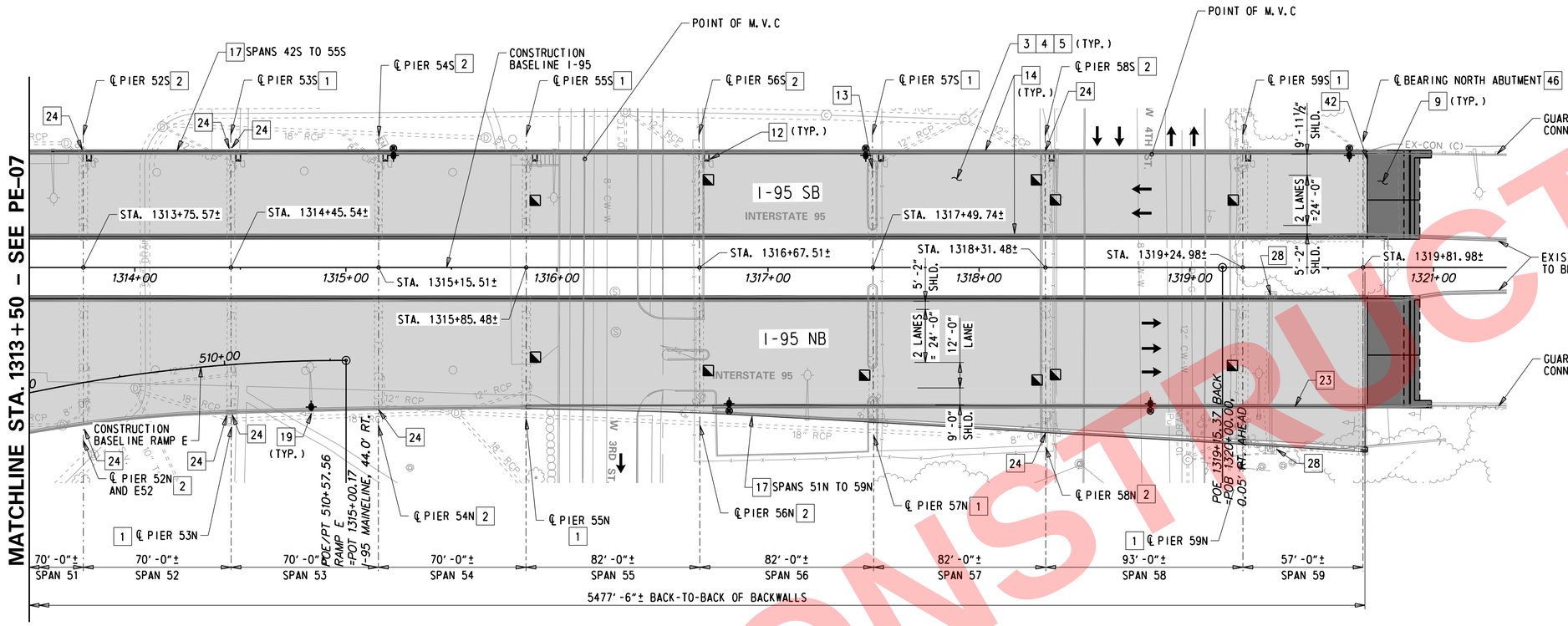

PLAN

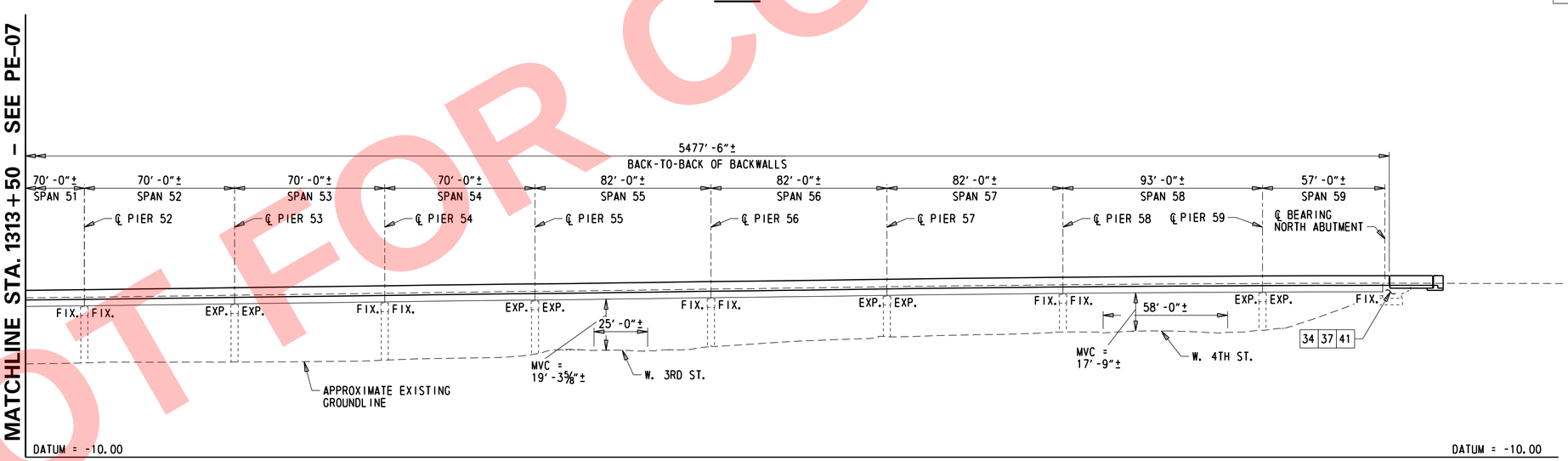

DEVELOPED SECTION ALONG BASELINE I-95

NOTES:

1. DIMENSIONS SHOWN ARE MEASURED ALONG CONSTRUCTION BASELINE I-95.
2. MINIMUM VERTICAL CLEARANCE (MVC) IS BASED ON 2013 NBIS INSPECTION REPORT.
3. SIGNING NOT SHOWN FOR CLARITY, SEE SIGNING PLAN ON DWGS. SS-20 AND SS-23 FOR DETAILS.
4. CONSTRUCTION STAGING LIMITS NOT SHOWN FOR CLARITY. SEE SEQUENCE OF CONSTRUCTION ON DWGS. SC-01 THROUGH SC-10.

KEY:

1 REPAIR NUMBER AS SHOWN ON DWG. PN-04 AND PN-05

1 CURVE DATA

PROPOSED BRIDGE MOUNTED LIGHT POLE

PROPOSED UNDER BRIDGE LIGHT FIXTURE

LEGEND:

3 4 5 MILL EXISTING OVERLAY, HYDRODEMO EXISTING DECK SURFACE, AND FURNISH AND INSTALL NEW LMC OVERLAY

9 14 REMOVE AND RECONSTRUCT PARAPET AND PORTION OF DECK; REMOVE AND RECONSTRUCT APPROACH SLAB

NOT FOR CONSTRUCTION

ADDENDA / REVISIONS	SCALE 0 30 60 90 FEET	REHABILITATION OF I-95 FROM I-495 TO NORTH OF BRANDYWINE RIVER BRIDGE	CONTRACT T201407404 / COUNTY NEW CASTLE	BRIDGE NO. 1 748 059 / DESIGNED BY: DAN / CHECKED BY: WAG	GENERAL PLAN AND ELEVATION 8 OF 8	PE-08 / SECTION WRA / SHEET NO. 2-149

N:\31987-004\Contract_I-95\CADD\Bridge\BR1-748_PE08.dgn 5/31/2019 12:11:46 PM

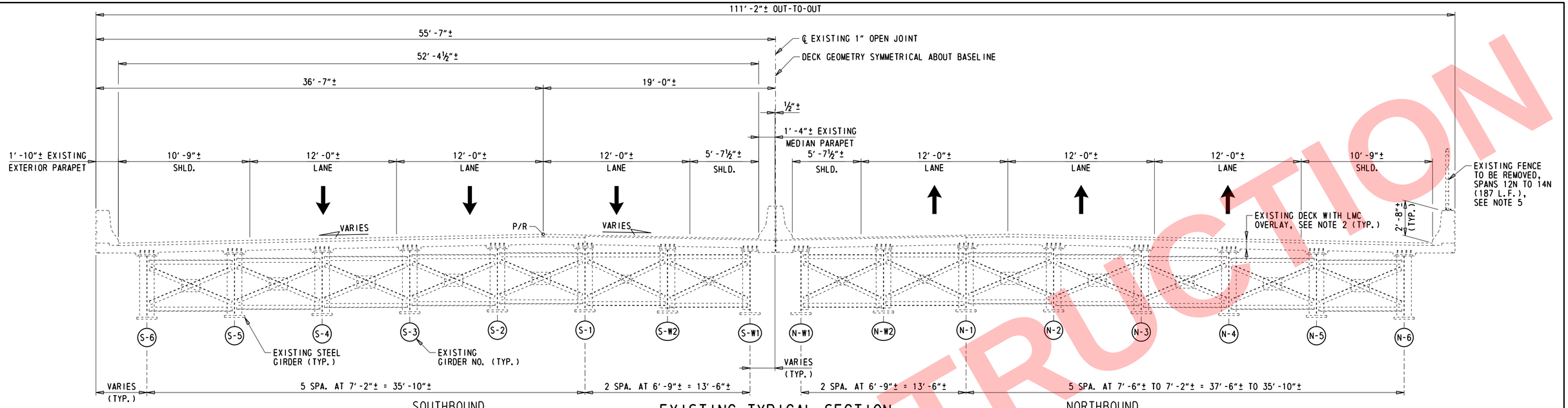

EXISTING TYPICAL SECTION

(STA. 1265+18.61 TO 1284+16.61)

¼″ = 1′-0″

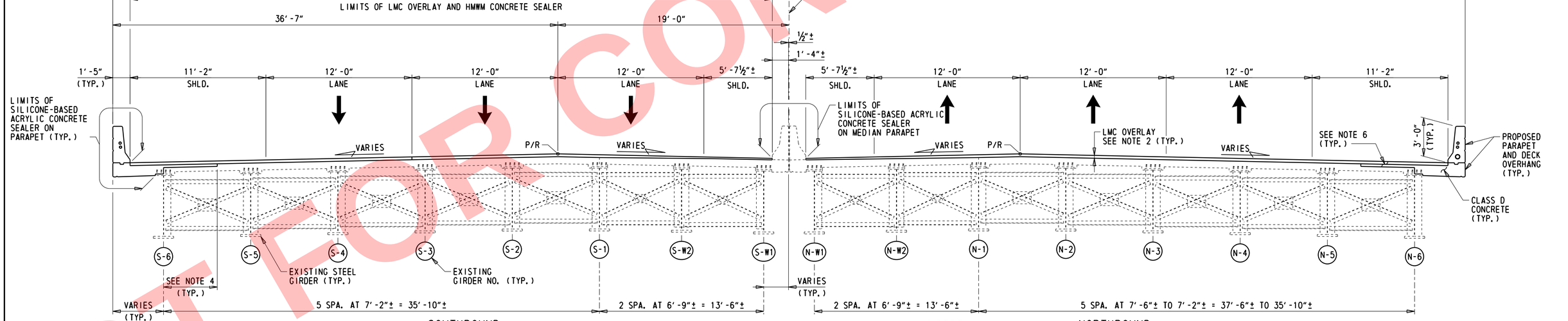

PROPOSED TYPICAL SECTION

(STA. 1265+18.61 TO 1284+16.61)

¼″ = 1′-0″

NOTES:

1. FOR PARAPET DETAIL, DRIP NOTCH DETAIL, AND ARCHITECTURAL GROOVE DETAIL, SEE DWG. PA-01.
2. THICKNESSES OF EXISTING DECK AND PROPOSED LMC OVERLAYS VARY, SEE DWGS. DM-01 THROUGH DM-04 FOR DETAILS.
3. SUPERELEVATION VARIES, SECTION TAKEN WITHIN TANGENT PORTION OF I-95.
4. FOR LOCATION OF DECK OVERHANG RECONSTRUCTION LIMITS SEE DETAILS ON DWGS. DM-01 THROUGH DM-03.
5. PAYMENT FOR REMOVAL OF EXISTING FENCE WILL BE INCIDENTAL TO ITEM 211000 - REMOVAL OF STRUCTURES AND OBSTRUCTIONS.
6. THE TOP SURFACE OF THE CLASS D CONCRETE DECK SHALL BE ROUGH FINISHED TO A FULL AMPLITUDE OF ¼″. THE CONCRETE SHALL BE SCRUBBED TRANSVERSELY WITH A COARSE WIRE BRUSH TO REMOVE ALL LAITANCE AND TO PRODUCE A ROUGHENED SURFACE FOR BONDING WITH THE LMC OVERLAY.

NOT FOR CONSTRUCTION

ADDENDA / REVISIONS		SCALE AS NOTED	REHABILITATION OF I-95 FROM I-495 TO NORTH OF BRANDYWINE RIVER BRIDGE	CONTRACT T201407404	BRIDGE NO. 1 748 059	BRIDGE TYPICAL SECTIONS STA. 1265+18 TO 1284+16	TS-01
				COUNTY NEW CASTLE	DESIGNED BY: DAN		SECTION WRA
					CHECKED BY: WAG		SHEET NO. 2-150

N:\31987-004\Contract I-95\CADD\Bridge\BR1-748_TS01.dgn
5/31/2019 12:11:47 PM

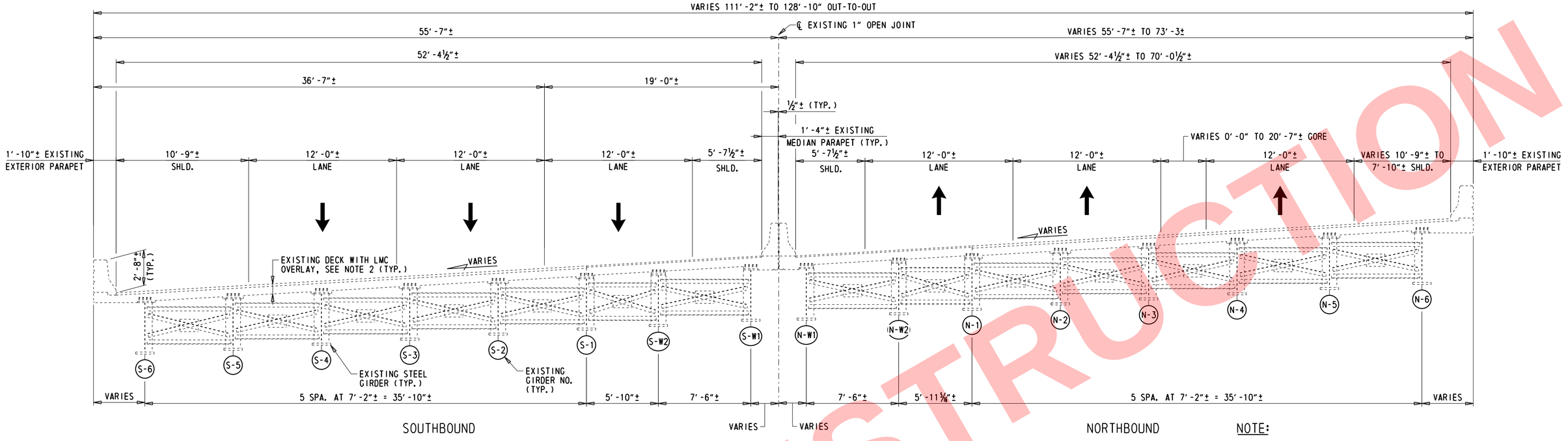

EXISTING TYPICAL SECTION

(STA. 1284+16.61 TO STA. 1288+18.64)

¼" = 1'-0"

NOTE:

GIRDER SPACING FOR EXISTING AND PROPOSED ARE TAKEN AT STA. 1285+44. SEE CONTRACT NOS. 1-2(12) AND 78-091-01 FOR ADDITIONAL GIRDER SPACING INFORMATION.

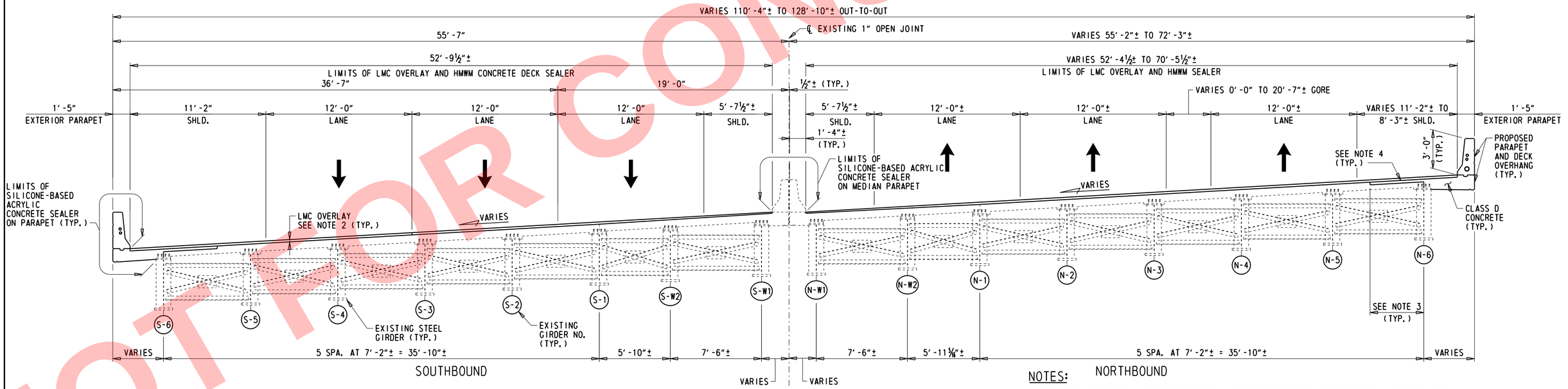

PROPOSED TYPICAL SECTION

(STA. 1284+16.61 TO STA. 1288+18.64)

¼" = 1'-0"

NOTES:

1. FOR PARAPET DETAIL, DRIP NOTCH DETAIL, AND ARCHITECTURAL GROOVE DETAIL, SEE DWG. PA-01.
2. THICKNESSES OF EXISTING DECK AND PROPOSED LMC OVERLAYS VARY, SEE DWGS. DM-01 THROUGH DM-04 FOR DETAILS.
3. FOR LOCATION OF DECK OVERHANG RECONSTRUCTION LIMITS SEE DETAILS ON DWGS. DM-01 THROUGH DM-03.
4. THE TOP SURFACE OF THE CLASS D CONCRETE DECK SHALL BE ROUGH FINISHED TO ALL FULL AMPLITUDE OF ¼". THE CONCRETE SHALL BE SCRUBBED TRANSVERSELY WITH A COARSE WIRE BRUSH TO REMOVE ALL LAITANCE AND TO PRODUCE A ROUGHENED SUBSURFACE FOR BONDING WITH THE LMC OVERLAY.

NOT FOR CONSTRUCTION

ADDENDA / REVISIONS	SCALE AS NOTED	REHABILITATION OF I-95 FROM I-495 TO NORTH OF BRANDYWINE RIVER BRIDGE	CONTRACT T201407404	BRIDGE NO. 1 748 059	BRIDGE TYPICAL SECTIONS STA. 1284+16 TO 1288+18	TS-02
			COUNTY NEW CASTLE	DESIGNED BY: DAN		SECTION WRA
				CHECKED BY: WAG		SHEET NO. 2-151

N:\31987-004\Contract_I-95\C4DD\Bridge\BRI-748_TS02.dgn
5/31/2019 12:11:48 PM

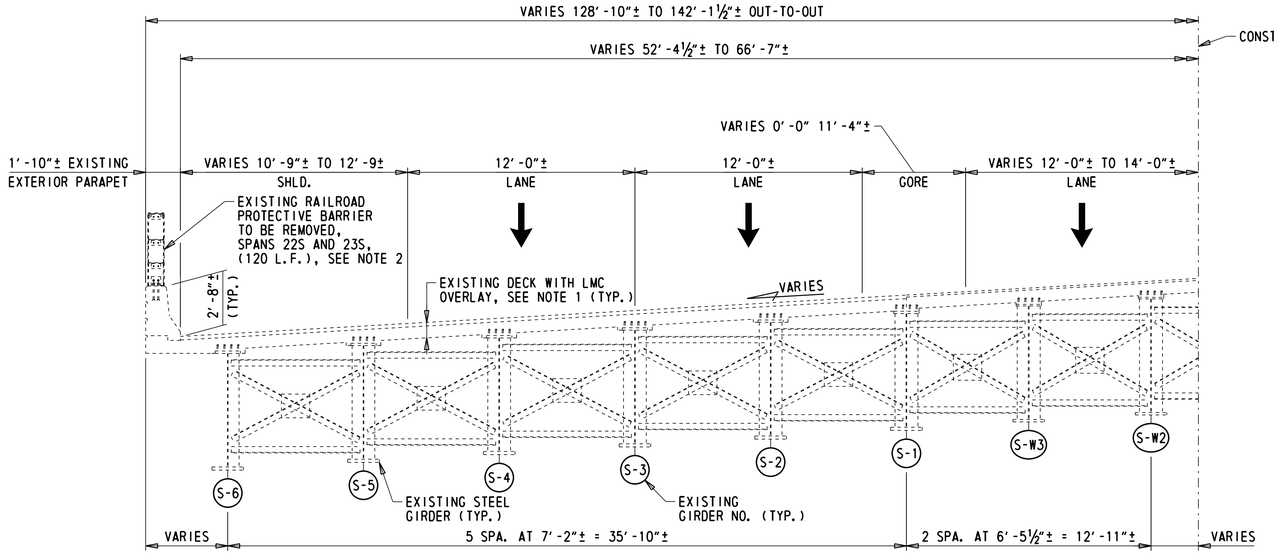

SOUTHBOUND

NOTE:

GIRDER SPACING FOR EXISTING ARE TAKEN AT STA. 1290+94. SEE CONTRACT NOS. 64-03-004 AND 78-091-01 FOR ADDITIONAL GIRDER SPACING INFORMATION.

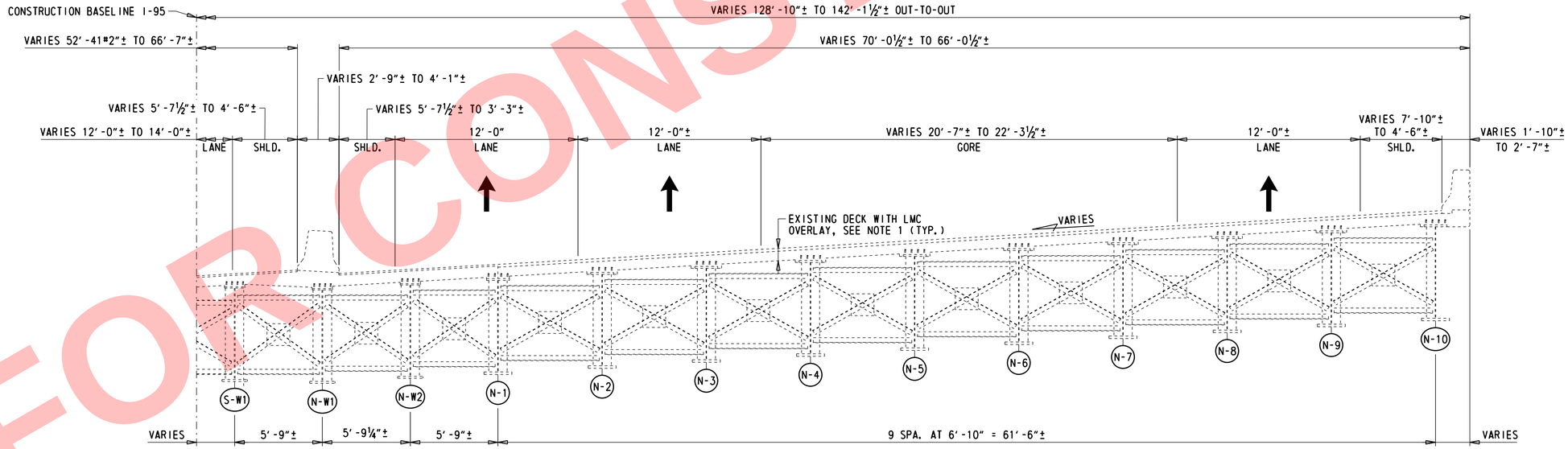

NORTHBOUND

EXISTING TYPICAL SECTION

(STA. 1288+18.64 TO STA. 1292+31.55)

¼" = 1'-0"

NOTES:

1. THICKNESSES OF EXISTING DECK AND PROPOSED LMC OVERLAYS VARY, SEE DWGS. DM-01 THROUGH DM-04 FOR DETAILS.
2. REMOVAL OF RAILROAD PROTECTIVE BARRIER WILL BE INCIDENTAL TO ITEM 211000 - REMOVAL OF STRUCTURES AND OBSTRUCTIONS.

NOT FOR CONSTRUCTION

ADDENDA / REVISIONS		SCALE AS NOTED	REHABILITATION OF I-95 FROM I-495 TO NORTH OF BRANDYWINE RIVER BRIDGE	CONTRACT T201407404	BRIDGE NO. 1 748 059	BRIDGE TYPICAL SECTIONS STA. 1288+18 TO 1292+31	TS-03
				COUNTY NEW CASTLE	DESIGNED BY: DAN		SECTION WRA
					CHECKED BY: WAG		SHEET NO. 2-152

N:\31987-004\Contract_I-95\C&D\Bridge\BRI-748_TS03.dgn
5/31/2019 12:11:48 PM

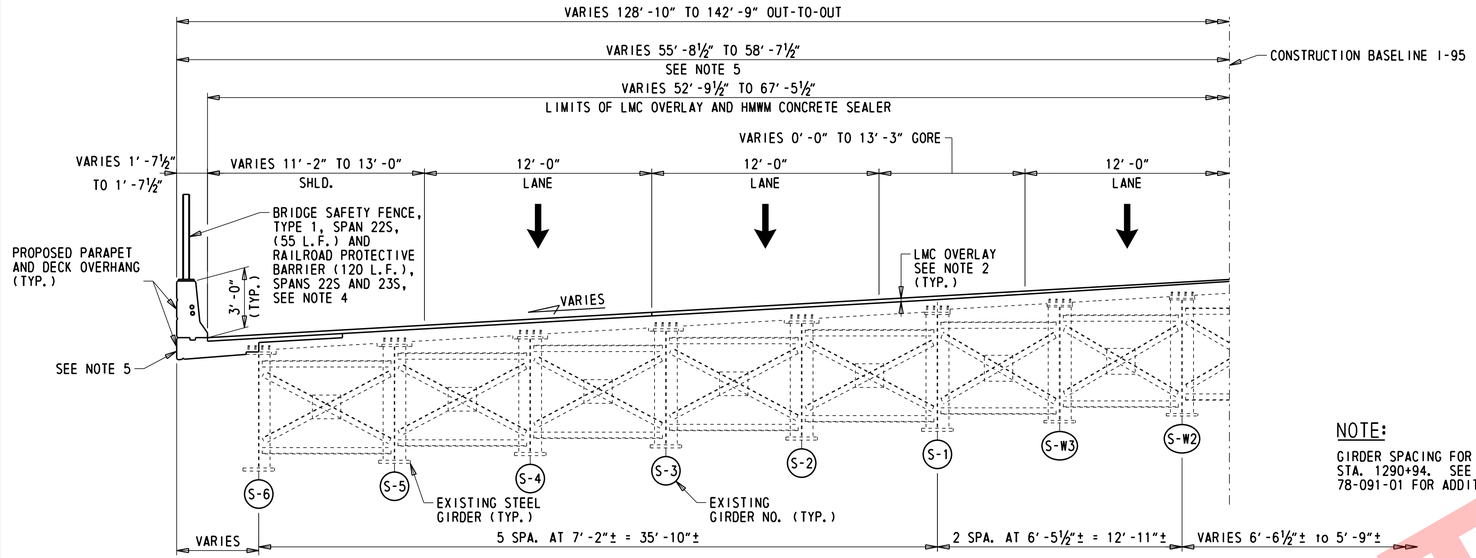

SOUTHBOUND

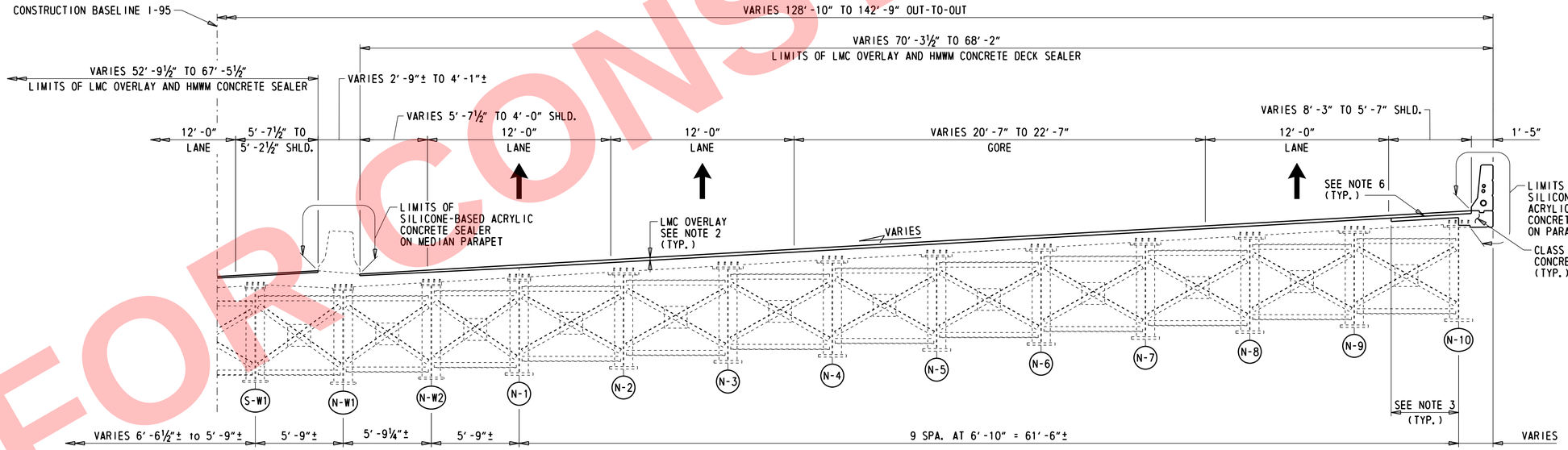

NORTHBOUND

PROPOSED TYPICAL SECTION

(STA. 1288+18.64 TO STA. 1292+31.55)

¼" = 1'-0"

NOTE:

GIRDER SPACING FOR EXISTING AND PROPOSED ARE TAKEN AT STA. 1290+94. SEE CONTRACT NOS. 64-03-004 AND 78-091-01 FOR ADDITIONAL GIRDER SPACING INFORMATION.

NOTES:

1. FOR PARAPET DETAIL, DRIP NOTCH DETAIL, AND ARCHITECTURAL GROOVE DETAIL, SEE DWG. PA-01.
2. THICKNESSES OF EXISTING DECK AND PROPOSED LMC OVERLAYS VARY, SEE DWGS. DM-01 THROUGH DM-04 FOR DETAILS.
3. FOR LOCATION OF DECK OVERHANG RECONSTRUCTION LIMITS SEE DETAILS ON DWGS. DM-01 THROUGH DM-03.
4. FOR LIMITS OF BRIDGE SAFETY FENCE AND RAILROAD PROTECTIVE BARRIER, SEE FENCE AND BARRIER LAYOUT ON DWGS. RA-01 TO RA-03. FOR DETAILS, SEE STANDARD NO. M-10 BRIDGE SAFETY FENCE AND DWG. RA-10. APPLY SILICONE-BASED ACRYLIC CONCRETE SEALER ON PARAPET PRIOR TO INSTALLATION OF BRIDGE SAFETY FENCE AND RAILROAD PROTECTIVE BARRIER.
5. AT STA. 1290+95.20 PROPOSED WEST EDGE OF DECK NO LONGER FOLLOWS EXISTING WEST EDGE OF DECK AND BEGINS TO FLARE WITH NEW RAMP D. FOR LAYOUT, SEE DWGS. PA-09 AND PA-10.
6. THE TOP SURFACE OF THE CLASS D CONCRETE DECK SHALL BE ROUGH FINISHED TO ALL FULL AMPLITUDE OF ¼". THE CONCRETE SHALL BE SCRUBBED TRANSVERSELY WITH A COARSE WIRE BRUSH TO REMOVE ALL LAITANCE AND TO PRODUCE A ROUGHENED SURFACE FOR BONDING WITH THE LMC OVERLAY.

NOT FOR CONSTRUCTION

ADDENDA / REVISIONS		SCALE AS NOTED	REHABILITATION OF I-95 FROM I-495 TO NORTH OF BRANDYWINE RIVER BRIDGE	CONTRACT	BRIDGE NO. 1 748 059	BRIDGE TYPICAL SECTIONS STA. 1288+18 TO 1292+31	TS-04
				T201407404	DESIGNED BY: DAN		SECTION WRA
				COUNTY NEW CASTLE	CHECKED BY: WAG		SHEET NO. 2-153

N:\31987-004\Contract_I-95\COD\Bridge\BRI-748_TS04.dgn
5/31/2019 12:11:49 PM

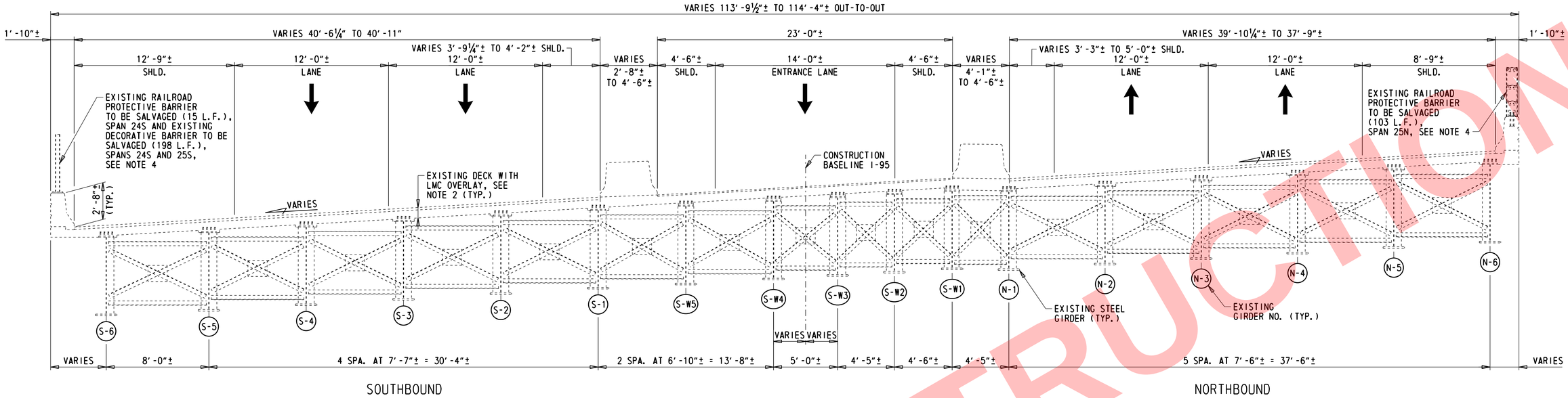

SOUTHBOUND NORTHBOUND

EXISTING TYPICAL SECTION

(STA. 1292+31.55 TO STA. 1294+53.58)

¼" = 1'-0"

NOTE:

GIRDER SPACING FOR EXISTING ARE TAKEN AT STA. 1293+46. SEE CONTRACT NOS. 64-03-004 AND 78-091-01 FOR ADDITIONAL GIRDER SPACING INFORMATION.

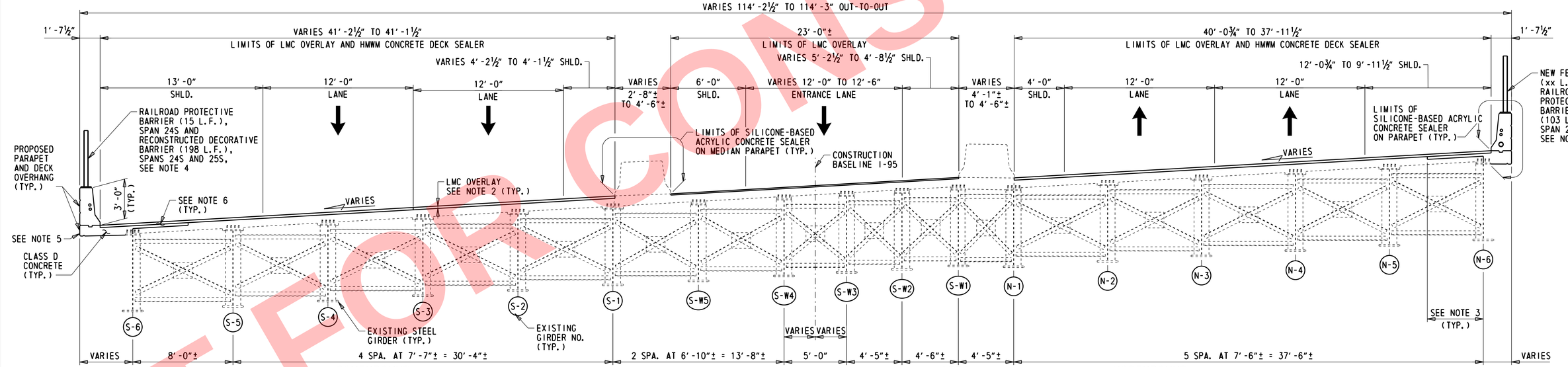

SOUTHBOUND NORTHBOUND

PROPOSED TYPICAL SECTION

(STA. 1292+31.55 TO STA. 1294+53.58)

¼" = 1'-0"

NOTES:

1. FOR PARAPET DETAIL, DRIP NOTCH DETAIL, AND ARCHITECTURAL GROOVE DETAIL, SEE DWG. PA-01.
2. THICKNESSES OF EXISTING DECK AND PROPOSED LMC OVERLAYS VARY, SEE DWGS. DM-01 THROUGH DM-04 FOR DETAILS.
3. FOR LOCATION OF DECK OVERHANG RECONSTRUCTION LIMITS SEE DETAILS ON DWGS. DM-01 THROUGH DM-03.
4. FOR LIMITS OF BRIDGE SAFETY FENCE, RAILROAD PROTECTIVE BARRIER, AND DECORATIVE BARRIER, SEE FENCE AND BARRIER LAYOUT ON DWGS. RA-01 TO RA-03. FOR DETAILS, SEE STANDARD NO. M-10 BRIDGE SAFETY FENCE AND DWGS. RA-10 AND RA-11. APPLY SILICONE-BASED ACRYLIC CONCRETE SEALER TO PARAPET PRIOR TO INSTALLATION OF BRIDGE SAFETY FENCE, RAILROAD PROTECTIVE BARRIER, AND DECORATIVE BARRIER.
5. AT STA. 1290+95.20 PROPOSED WEST EDGE OF DECK NO LONGER FOLLOWS EXISTING WEST EDGE OF DECK AND BEGINS TO FLARE WITH NEW RAMP D. FOR LAYOUT, SEE DWGS. PA-09 AND PA-10.
6. THE TOP SURFACE OF THE CLASS D CONCRETE D SHALL BE ROUGH FINISHED TO A FULL AMPLITUDE OF ¼". THE CONCRETE SHALL BE SCRUBBED TRANSVERSELY WITH A COARSE WIRE BRUSH TO REMOVE ALL LAITANCE AND TO PRODUCE A ROUGHENED SURFACE FOR BONDING WITH THE LMC OVERLAY.

NOT FOR CONSTRUCTION

ADDENDA / REVISIONS		SCALE AS NOTED	REHABILITATION OF I-95 FROM I-495 TO NORTH OF BRANDYWINE RIVER BRIDGE	CONTRACT T201407404	BRIDGE NO. 1 748 059	BRIDGE TYPICAL SECTIONS STA. 1292+31 TO 1294+53	TS-05
				COUNTY NEW CASTLE	DESIGNED BY: DAN		SECTION WRA
					CHECKED BY: WAG		SHEET NO. 2-154

N:\31987-004\Cntrct\I-95\C\ADD\Bridge\BRI-748_TS05.dgn
5/31/2019 12:11:50 PM

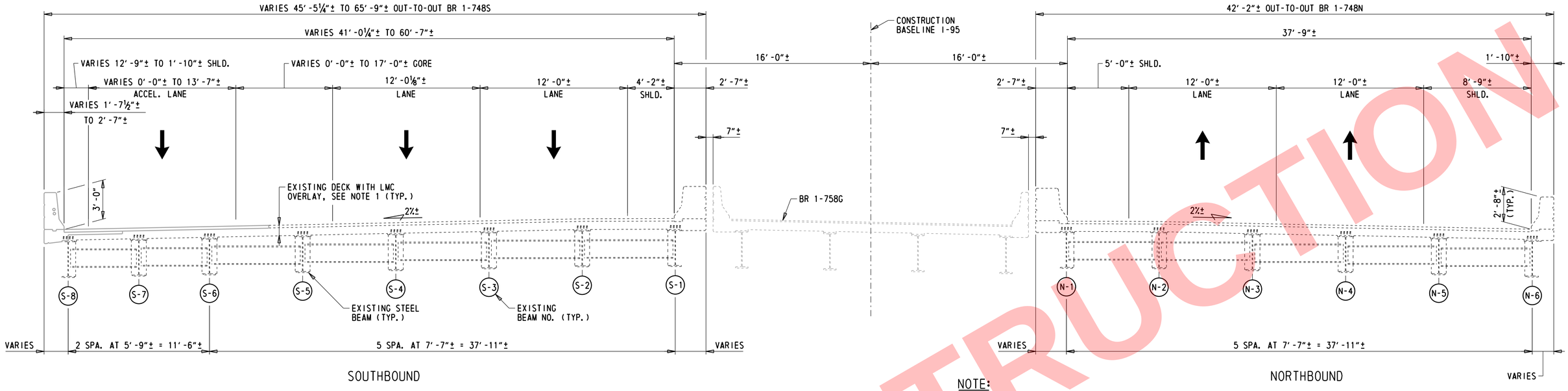

EXISTING TYPICAL SECTION

(STA. 1294+53.58 TO STA. 1300+34.01)

¼" = 1'-0"

NOTE:

GIRDER SPACING FOR EXISTING IS TAKEN AT STA. 1297+48.
SEE CONTRACT NO. 64-03-004 FOR ADDITIONAL GIRDER SPACING INFORMATION. SECTION TAKEN WITHIN TANGENT PORTION OF I-95.

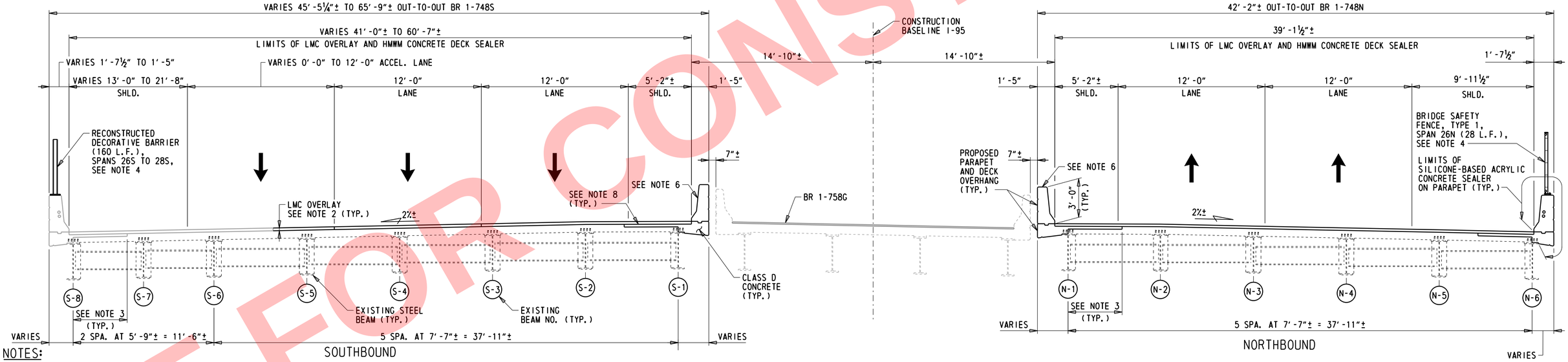

PROPOSED TYPICAL SECTION

(STA. 1294+53.58 TO STA. 1300+34.01)

¼" = 1'-0"

NOTES:

1. FOR PARAPET DETAIL, DRIP NOTCH DETAIL, AND ARCHITECTURAL GROOVE DETAIL, SEE DWG. PA-01.
2. THICKNESSES OF EXISTING DECK AND PROPOSED LMC OVERLAYS VARY, SEE DWGS. DM-01 THROUGH DM-04 FOR DETAILS.
3. FOR LOCATION OF DECK OVERHANG RECONSTRUCTION LIMITS SEE DETAILS ON DWGS. DM-01 THROUGH DM-03.
4. FOR LIMITS OF BRIDGE SAFETY FENCE, RAILROAD PROTECTIVE BARRIER, AND DECORATIVE BARRIER, SEE FENCE AND BARRIER LAYOUT ON DWGS. RA-01 TO RA-03. FOR DETAILS, SEE STANDARD NO. M-10 BRIDGE SAFETY FENCE AND DWG. RA-10. APPLY SILICONE-BASED ACRYLIC SEALER TO PARAPET PRIOR TO INSTALLATION OF BRIDGE SAFETY FENCE AND DECORATIVE BARRIER.
5. NOTE DELETED.
6. SEE DWG. PA-xx FOR PARAPET FLARE DETAIL AT SOUTH END OF SPAN 26.
7. SEE DWG. 1-758G TS-01 FOR TYPICAL SECTION FOR BR 1-758G.
8. THE TOP SURFACE OF THE CLASS D CONCRETE DECK SHALL BE ROUGH FINISHED TO ALL FULL AMPLITUDE OF ¼". THE CONCRETE SHALL BE SCRUBBED TRANSVERSELY WITH A COARSE WIRE BRUSH TO REMOVE ALL LAITANCE AND TO PRODUCE A ROUGHENED SURFACE FOR BONDING WITH THE LMC OVERLAY.

NOT FOR CONSTRUCTION

N:\31987-00\Contract_I-95\CADD\Bridge\BR1-748_TS06.dgn 5/21/2021 12:18:51 PM

ADDENDA / REVISIONS		SCALE AS NOTED	REHABILITATION OF I-95 FROM I-495 TO NORTH OF BRANDYWINE RIVER BRIDGE	CONTRACT T201407404	BRIDGE NO. 1 748 059	BRIDGE TYPICAL SECTIONS STA. 1294+53 TO 1300+34	TS-06
				COUNTY NEW CASTLE	DESIGNED BY: DAN		SECTION WRA
					CHECKED BY: WAG		SHEET NO. 2-155

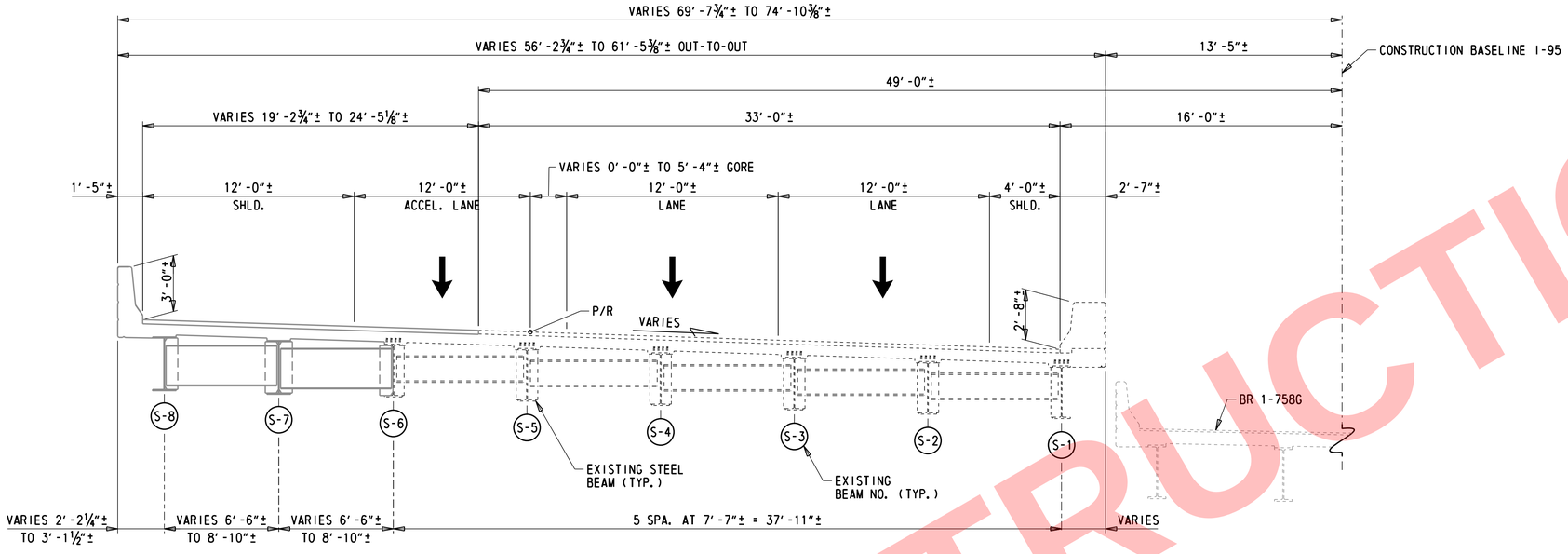

EXISTING TYPICAL SECTION SPANS 33S TO 37S

(STA. 1300+34.01 TO 1303+72.61 I-95 SB)

¼" = 1'-0"

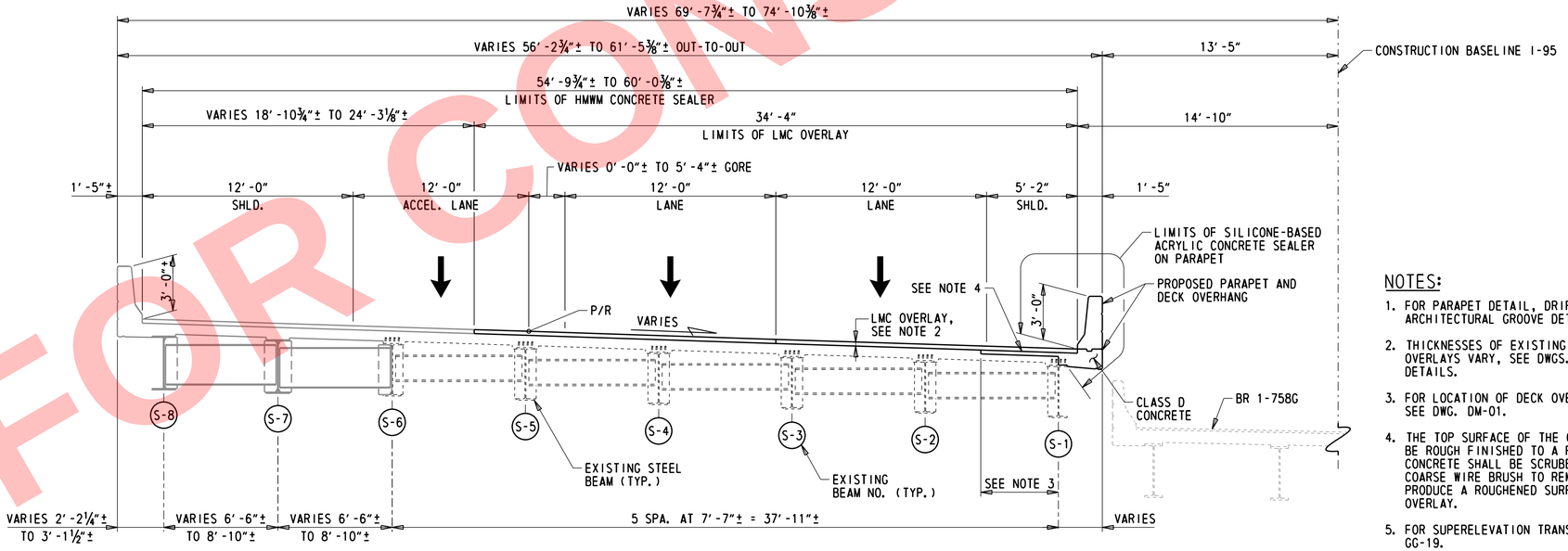

PROPOSED TYPICAL SECTION SPANS 33S TO 37S

(STA. 1300+34.01 TO 1303+72.61 I-95 SB)

¼" = 1'-0"

NOTES:

1. FOR PARAPET DETAIL, DRIP NOTCH DETAIL, AND ARCHITECTURAL GROOVE DETAIL, SEE DWG. PA-01.
2. THICKNESSES OF EXISTING DECK AND PROPOSED LMC OVERLAYS VARY, SEE DWGS. DM-01 THROUGH DM-04 FOR DETAILS.
3. FOR LOCATION OF DECK OVERHANG RECONSTRUCTION LIMITS SEE DWG. DM-01.
4. THE TOP SURFACE OF THE CLASS D CONCRETE DECK SHALL BE ROUGH FINISHED TO A FULL AMPLITUDE OF 1#4". THE CONCRETE SHALL BE SCRUBBED TRANSVERSELY WITH A COARSE WIRE BRUSH TO REMOVE ALL LAITANCE AND TO PRODUCE A ROUGHENED SURFACE FOR BONDING WITH THE LMC OVERLAY.
5. FOR SUPERELEVATION TRANSITIONS SEE DWGS. GG-18 AND GG-19.

NOT FOR CONSTRUCTION

N:\31987-004\Contract I-95\CADD\Bridge\BR1-748_TS07.dgn
5/31/2019 12:11:52 PM

ADDENDA / REVISIONS		SCALE AS NOTED	REHABILITATION OF I-95 FROM I-495 TO NORTH OF BRANDYWINE RIVER BRIDGE	CONTRACT T201407404	BRIDGE NO. 1 748 059	BRIDGE TYPICAL SECTIONS SOUTHBOUND STA. 1300+34 TO 1303+72	TS-07 SECTION
				COUNTY NEW CASTLE	DESIGNED BY: DAN		WRA SHEET NO.
					CHECKED BY: WAG		2-156

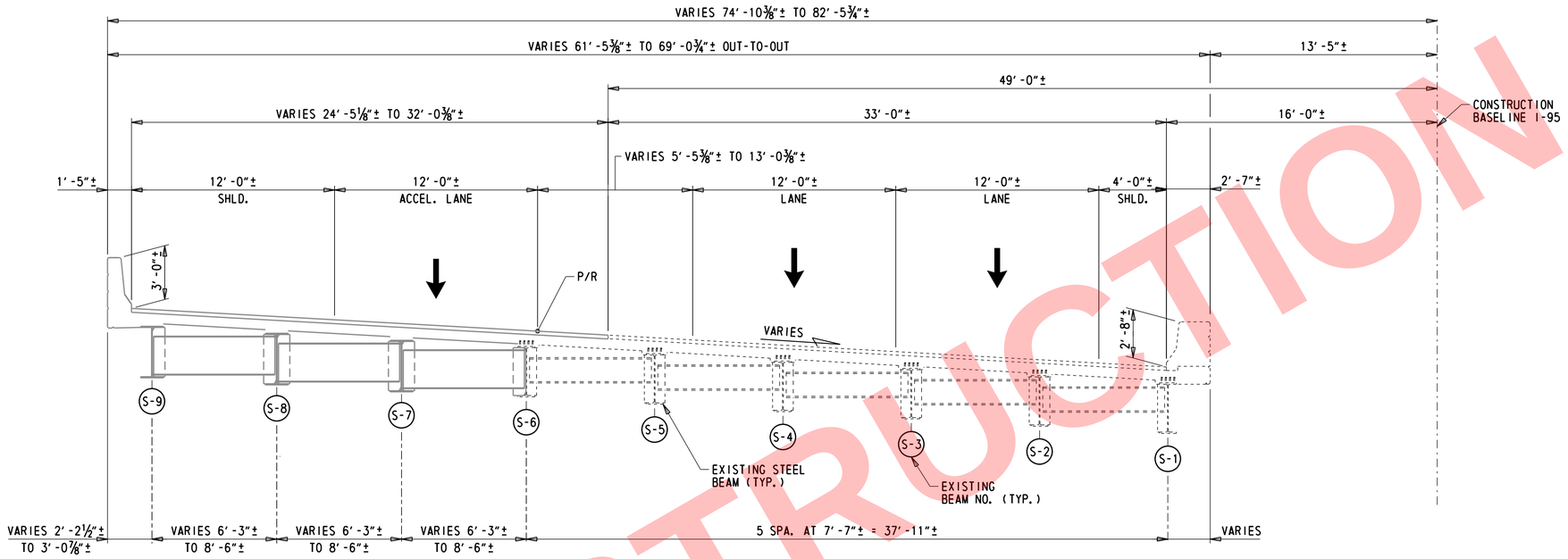

EXISTING TYPICAL SECTION SPAN 38S

(STA. 1303+72.61 TO STA. 1304+40.15 I-95 SB)

¼" = 1'-0"

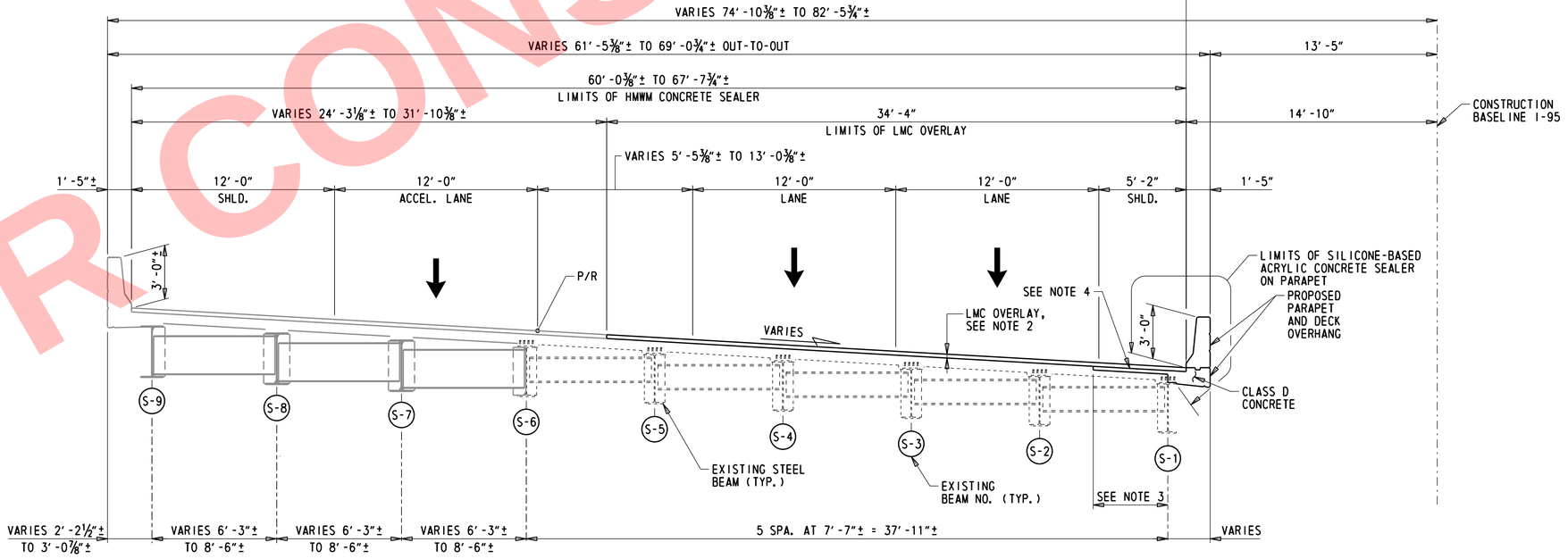

PROPOSED TYPICAL SECTION SPAN 38S

(STA. 1303+72.61 TO STA. 1304+40.15 I-95 SB)

¼" = 1'-0"

NOTES:

1. FOR PARAPET DETAIL, DRIP NOTCH DETAIL, AND ARCHITECTURAL GROOVE DETAIL, SEE DWG. PA-01.
2. THICKNESSES OF EXISTING DECK AND PROPOSED LMC OVERLAYS VARY, SEE DWGS. DM-01 THROUGH DM-04 FOR DETAILS.
3. FOR LOCATION OF DECK OVERHANG RECONSTRUCTION LIMITS SEE DWG. DM-01.
4. THE TOP SURFACE OF THE CLASS D CONCRETE DECK SHALL BE ROUGH FINISHED TO A FULL AMPLITUDE OF 1#4". THE CONCRETE SHALL BE SCRUBBED TRANSVERSELY WITH A COARSE WIRE BRUSH TO REMOVE ALL LAITANCE AND TO PRODUCE A ROUGHENED SURFACE FOR BONDING WITH THE LMC OVERLAY.
5. FOR SUPERELEVATION TRANSITIONS SEE DWGS. GG-18 AND GG-19.

NOT FOR CONSTRUCTION

N:\31987-004\Control I-95\CADD\Bridge\BR1-748_TS08.dgn
5/31/2019 12:11:52 PM

ADDENDA / REVISIONS		SCALE AS NOTED	REHABILITATION OF I-95 FROM I-495 TO NORTH OF BRANDYWINE RIVER BRIDGE	CONTRACT T201407404	BRIDGE NO. 1 748 059	BRIDGE TYPICAL SECTIONS SOUTHBOUND STA. 1303+72 TO 1304+40	TS-08
				COUNTY NEW CASTLE	DESIGNED BY: DAN		SECTION WRA
					CHECKED BY: WAG		SHEET NO. 2-157

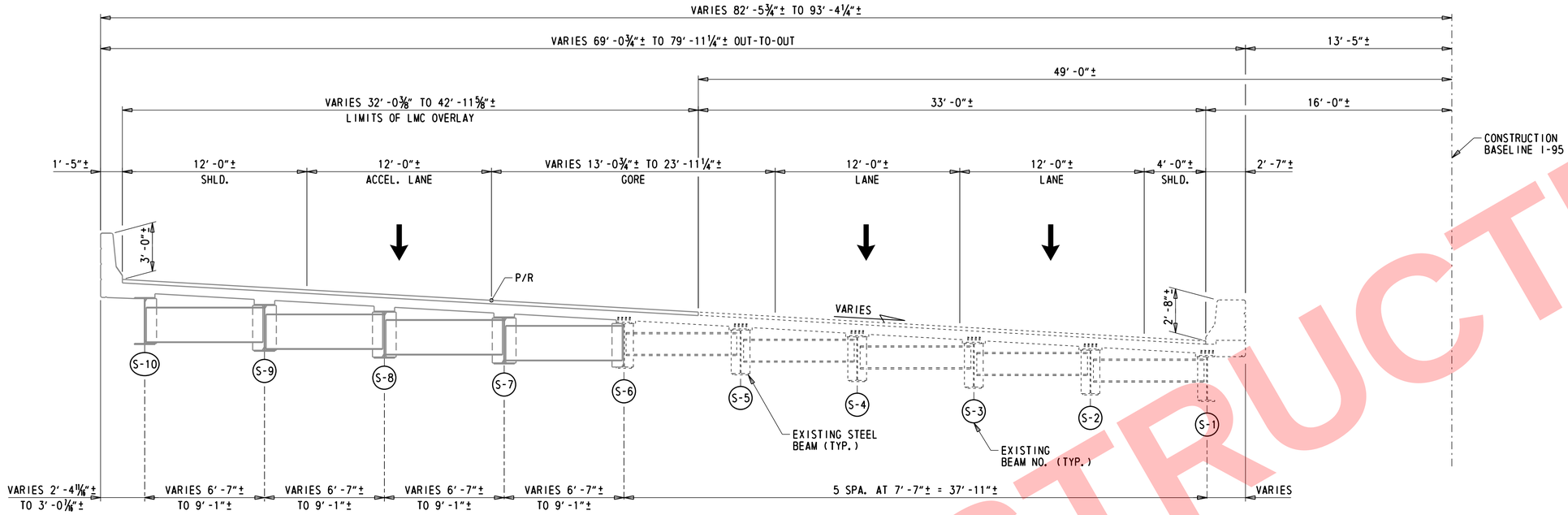

EXISTING TYPICAL SECTION SPAN 39S

(STA. 1304+40.15 TO STA. 1305+08.44 I-95 SB)

¼" = 1'-0"

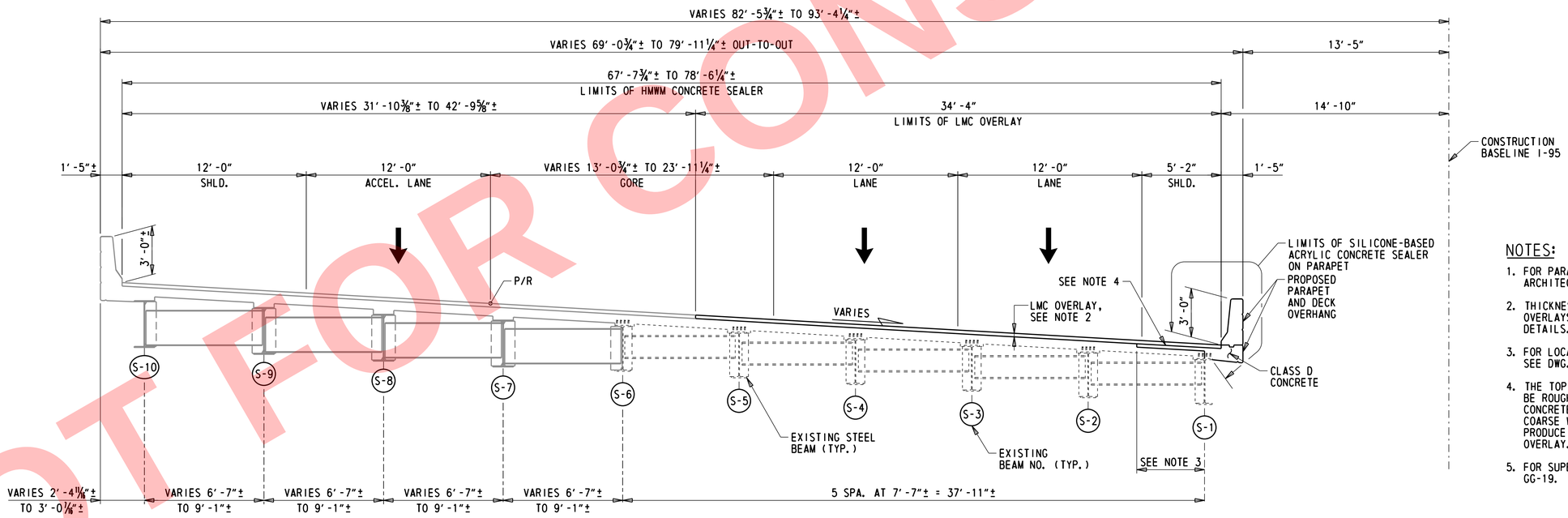

PROPOSED TYPICAL SECTION SPAN 39S

(STA. 1304+40.15 TO STA. 1305+08.44 I-95 SB)

¼" = 1'-0"

NOTES:

1. FOR PARAPET DETAIL, DRIP NOTCH DETAIL, AND ARCHITECTURAL GROOVE DETAIL, SEE DWG. PA-01.
2. THICKNESSES OF EXISTING DECK AND PROPOSED LMC OVERLAYS VARY, SEE DWGS. DM-01 THROUGH DM-04 FOR DETAILS.
3. FOR LOCATION OF DECK OVERHANG RECONSTRUCTION LIMITS SEE DWG. DM-01.
4. THE TOP SURFACE OF THE CLASS D CONCRETE DECK SHALL BE ROUGH FINISHED TO A FULL AMPLITUDE OF 1#4". THE CONCRETE SHALL BE SCRUBBED TRANSVERSELY WITH A COARSE WIRE BRUSH TO REMOVE ALL LAITANCE AND TO PRODUCE A ROUGHENED SURFACE FOR BONDING WITH THE LMC OVERLAY.
5. FOR SUPERELEVATION TRANSITIONS SEE DWGS. GG-18 AND GG-19.

NOT FOR CONSTRUCTION

N:\31987-004\Contract I-95\CADD\Bridge\BR1-748_TS09.dgn
5/31/2019 12:11:53 PM

ADDENDA / REVISIONS		SCALE AS NOTED	REHABILITATION OF I-95 FROM I-495 TO NORTH OF BRANDYWINE RIVER BRIDGE	CONTRACT T201407404	BRIDGE NO. 1 748 059	BRIDGE TYPICAL SECTIONS SOUTHBOUND STA. 1304+40 TO 1305+08	TS-09
				COUNTY NEW CASTLE	DESIGNED BY: DAN		SECTION WRA
					CHECKED BY: WAG		SHEET NO. 2-158

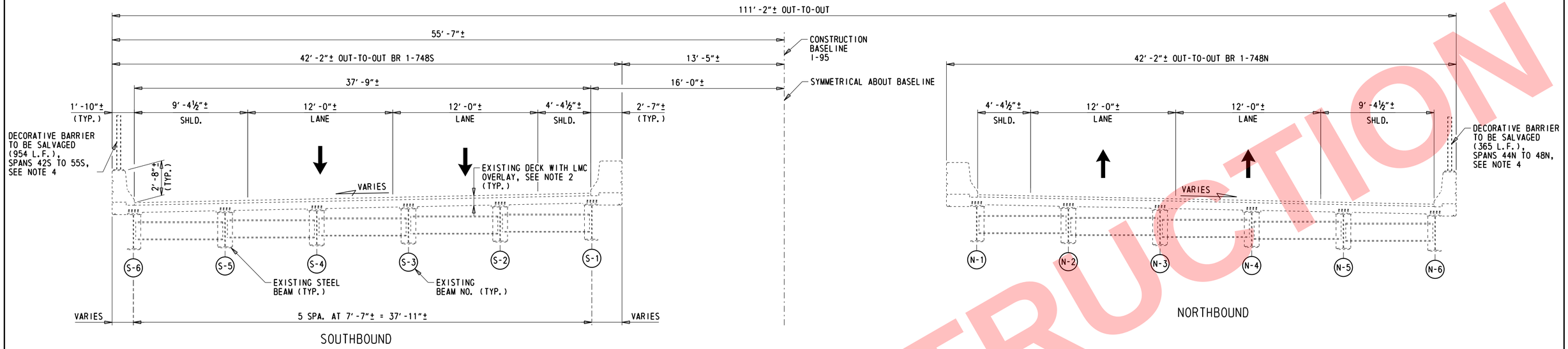

EXISTING TYPICAL SECTION

(STA. 1305+08.44 TO 1319+81.98 I-95 SB, 1300+34.01 TO 1313+05.45 I-95 NB)

1/4″ = 1′-0″

PROPOSED TYPICAL SECTION

(STA. 1305+08.44 TO 1319+81.98 I-95 SB, 1300+34.01 TO 1313+05.45 I-95 NB)

1/4″ = 1′-0″

NOTES:

1. FOR PARAPET DETAIL, DRIP NOTCH DETAIL, ARCHITECTURAL GROOVE DETAIL, AND DECORATIVE BARRIER DETAIL, SEE DWG. PA-01.
2. THICKNESSES OF EXISTING DECK AND PROPOSED LMC OVERLAYS VARY, SEE DWGS. DM-01 THROUGH DM-04 FOR DETAILS.
3. FOR LOCATION OF DECK OVERHANG RECONSTRUCTION LIMITS SEE DETAILS ON DWGS. DM-01 THROUGH DM-03.
4. FOR LIMITS OF DECORATIVE BARRIER, SEE FENCE AND BARRIER LAYOUT ON DWGS. RA-05 TO RA-09. FOR DETAILS, SEE DWG. RA-10. APPLY SILICONE-BASED ACRYLIC CONCRETE SEALER TO PARAPET PRIOR TO INSTALLATION OF DECORATIVE BARRIER.
5. THE TOP SURFACE OF THE CLASS D CONCRETE DECK SHALL BE ROUGH FINISHED TO A FULL AMPLITUDE OF ¼″. THE CONCRETE SHALL BE SCRUBBED TRANSVERSELY WITH A COARSE WIRE BRUSH TO REMOVE ALL LAITANCE AND TO PRODUCE A ROUGHENED SURFACE FOR BONDING WITH THE LMC OVERLAY.

NOT FOR CONSTRUCTION

ADDENDA / REVISIONS		SCALE AS NOTED	REHABILITATION OF I-95 FROM I-495 TO NORTH OF BRANDYWINE RIVER BRIDGE	CONTRACT	BRIDGE NO. 1 748 059	BRIDGE TYPICAL SECTIONS STA. 1300+34 TO 1319+82	TS-10
				T201407404	DESIGNED BY: DAN		SECTION
				COUNTY			WRA
				NEW CASTLE	CHECKED BY: WAG		SHEET NO.
							2-159

N:\31987-004\Control_I-95\C_OD\Bridge\BRI-748_TS10.dgn
5/31/2019 12:11:54 PM

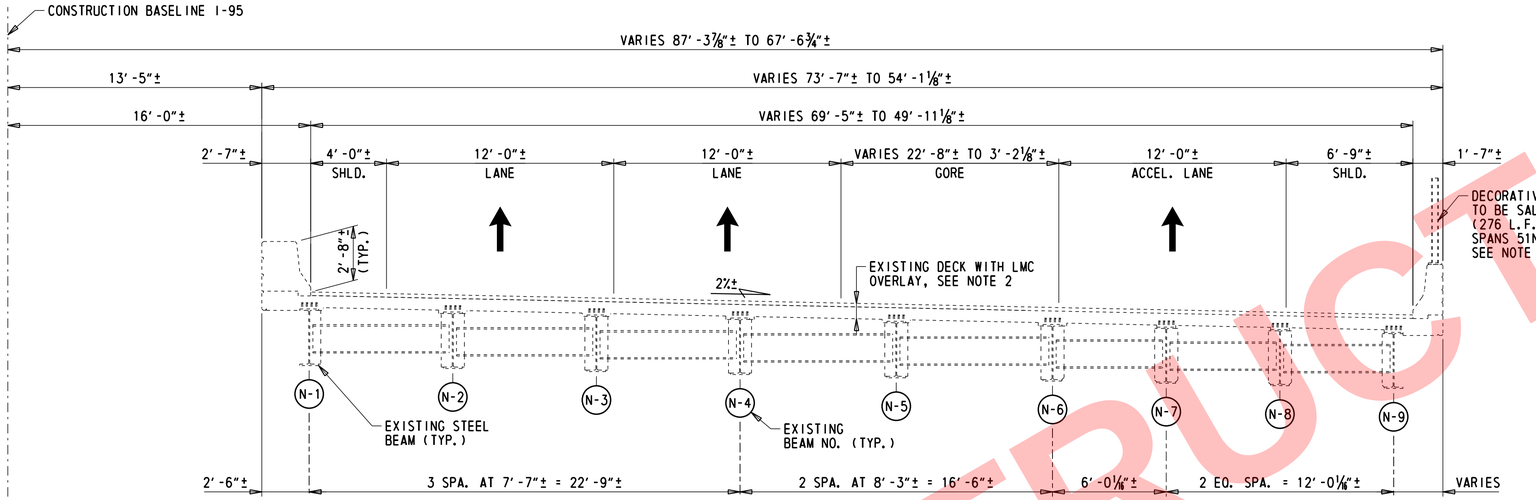

NORTHBOUND

EXISTING TYPICAL SECTION

(1313+05.45 TO 1316+67.51 I-95 NB)

1/4" = 1'-0"

NOTE:

TYPICAL SECTION TAKEN AT STA. 1313+75, SEE FRAMING PLAN FOR EXISTING STEEL BEAM SPACING ON DWG. FR-09.

NOTES:

1. FOR PARAPET DETAIL, DRIP NOTCH DETAIL, ARCHITECTURAL GROOVE DETAIL, AND DECORATIVE BARRIER DETAIL, SEE DWG. PA-01.
2. THICKNESSES OF EXISTING DECK AND PROPOSED LMC OVERLAYS VARY, SEE DWGS. DM-01 THROUGH DM-04 FOR DETAILS.
3. FOR LOCATION OF DECK OVERHANG RECONSTRUCTION LIMITS SEE DETAILS ON DWGS. DM-01 THROUGH DM-03.
4. FOR LIMITS OF DECORATIVE BARRIER, SEE FENCE AND BARRIER LAYOUT ON DWGS. RA-05 TO RA-09. FOR DETAILS, SEE DWG. RA-10. APPLY SILICONE-BASED ACRYLIC CONCRETE SEALER TO PARAPET PRIOR TO INSTALLATION OF DECORATIVE BARRIER.
5. THE TOP SURFACE OF THE CLASS D CONCRETE DECK SHALL BE ROUGH FINISHED TO A FULL AMPLITUDE OF ¼". THE CONCRETE SHALL BE SCRUBBED TRANSVERSELY WITH A COARSE WIRE BRUSH TO REMOVE ALL LAITANCE AND TO PRODUCE A ROUGHENED SURFACE FOR BONDING WITH THE LMC OVERLAY.

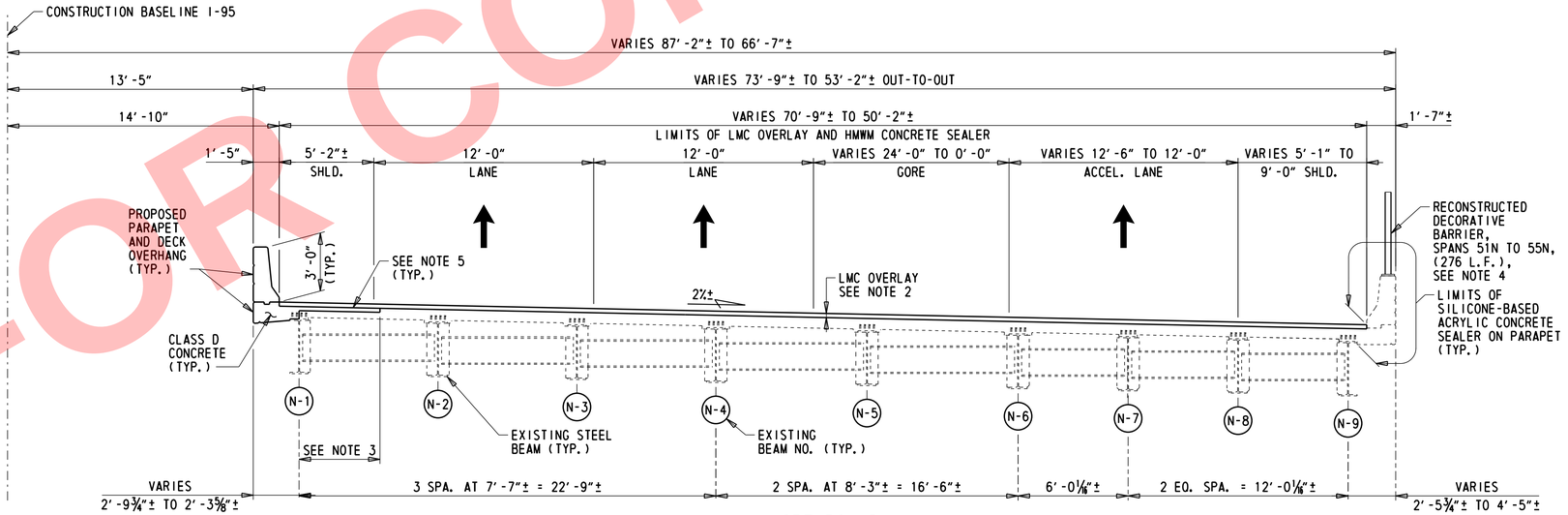

NORTHBOUND

PROPOSED TYPICAL SECTION

(1313+05.45 TO 1316+67.51 I-95 NB)

1/4" = 1'-0"

NOT FOR CONSTRUCTION

N:\31987-004\Contract_I-95\C400\Bridge\BR1-748_TS11.dgn
5/31/2019 12:15:54 PM

ADDENDA / REVISIONS	SCALE AS NOTED	REHABILITATION OF I-95 FROM I-495 TO NORTH OF BRANDYWINE RIVER BRIDGE	CONTRACT T201407404	BRIDGE NO. 1 748 059	BRIDGE TYPICAL SECTIONS NORTHBOUND STA. 1313+05 TO 1316+67	TS-11
			COUNTY NEW CASTLE	DESIGNED BY: DAN		SECTION WRA
				CHECKED BY: WAG		SHEET NO. 2-160

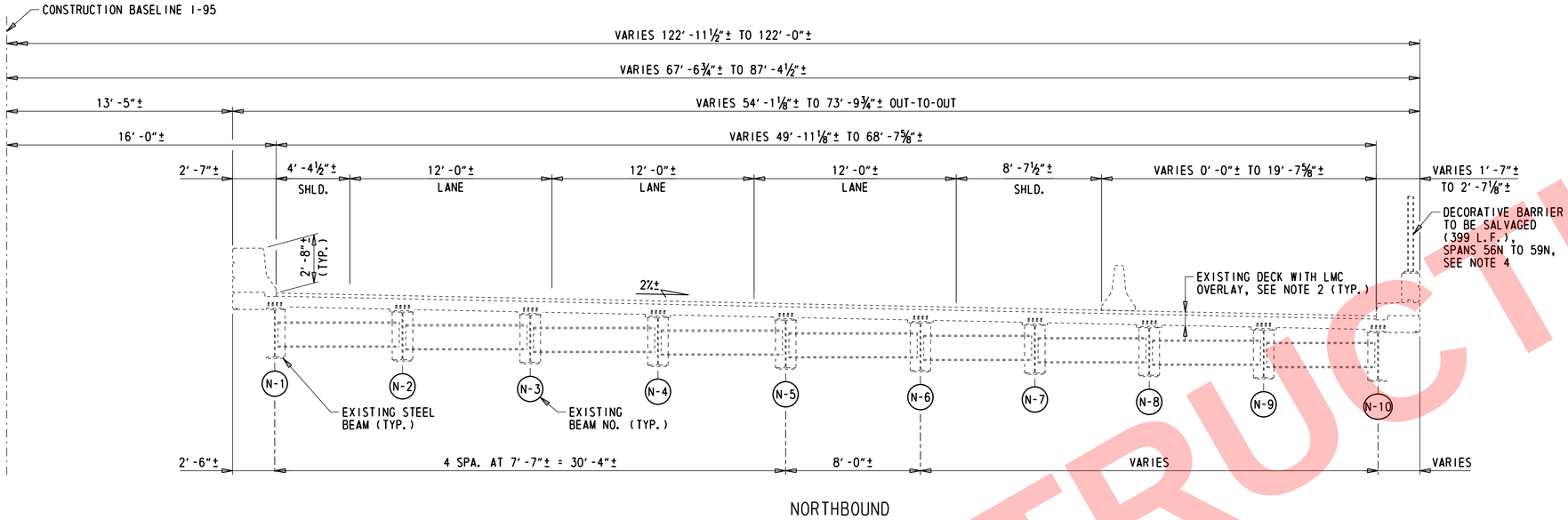

NORTHBOUND

EXISTING TYPICAL SECTION

(STA. 1316+67.51 TO 1319+81.98 I-95 NB)

1/4" = 1'-0"

NOTE:

TYPICAL SECTION TAKEN AT 1319+09, SEE EXISTING PLANS FOR EXISTING STEEL BEAM SPACING.

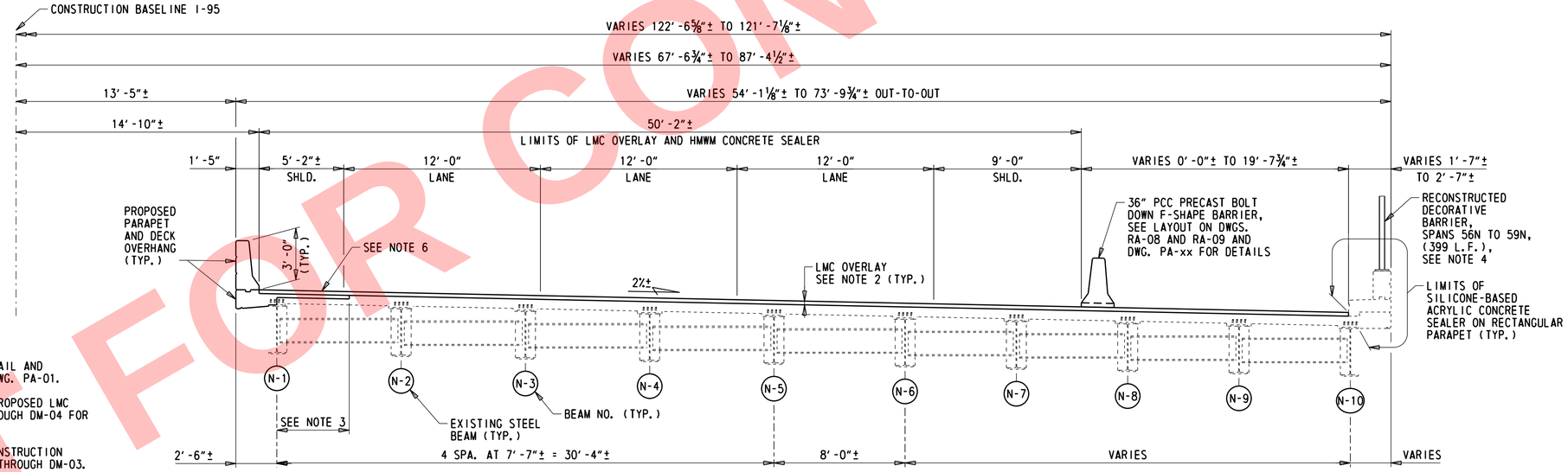

NORTHBOUND

PROPOSED TYPICAL SECTION

(STA. 1316+67.51 TO 1319+81.98 I-95 NB)

1/4" = 1'-0"

NOTES:

1. FOR PARAPET DETAIL, DRIP NOTCH DETAIL AND ARCHITECTURAL GROOVE DETAIL, SEE DWG. PA-01.
2. THICKNESSES OF EXISTING DECK AND PROPOSED LMC OVERLAYS VARY, SEE DWGS. DM-01 THROUGH DM-04 FOR DETAILS.
3. FOR LOCATION OF DECK OVERHANG RECONSTRUCTION LIMITS SEE DETAILS ON DWGS. DM-01 THROUGH DM-03.
4. FOR LIMITS OF DECORATIVE BARRIER, SEE FENCE AND BARRIER LAYOUT ON DWGS. RA-05 TO RA-09. FOR DETAILS, SEE DWG. RA-10.
5. FOR BR 1-748S, SEE TS-10.
6. THE TOP SURFACE OF THE CLASS D CONCRETE DECK SHALL BE ROUGH FINISHED TO A FULL AMPLITUDE OF ¼". THE CONCRETE SHALL BE SCRUBBED TRANSVERSELY WITH A COARSE WIRE BRUSH TO REMOVE ALL LAITANCE AND TO PRODUCE A ROUGHENED SURFACE FOR BONDING WITH THE LMC OVERLAY.

NOT FOR CONSTRUCTION

N:\31987-004\Contract I-95\CADD\Bridge\BR1-748_TS12.dgn
5/31/2019 12:11:55 PM

ADDENDA / REVISIONS		SCALE AS NOTED	REHABILITATION OF I-95 FROM I-495 TO NORTH OF BRANDYWINE RIVER BRIDGE	CONTRACT T201407404	BRIDGE NO. 1 748 059	BRIDGE TYPICAL SECTIONS NORTHBOUND STA. 1316+67 TO 1319+82	TS-12 SECTION WRA
				COUNTY NEW CASTLE	DESIGNED BY: DAN		SHEET NO. 2-161
					CHECKED BY: WAG		

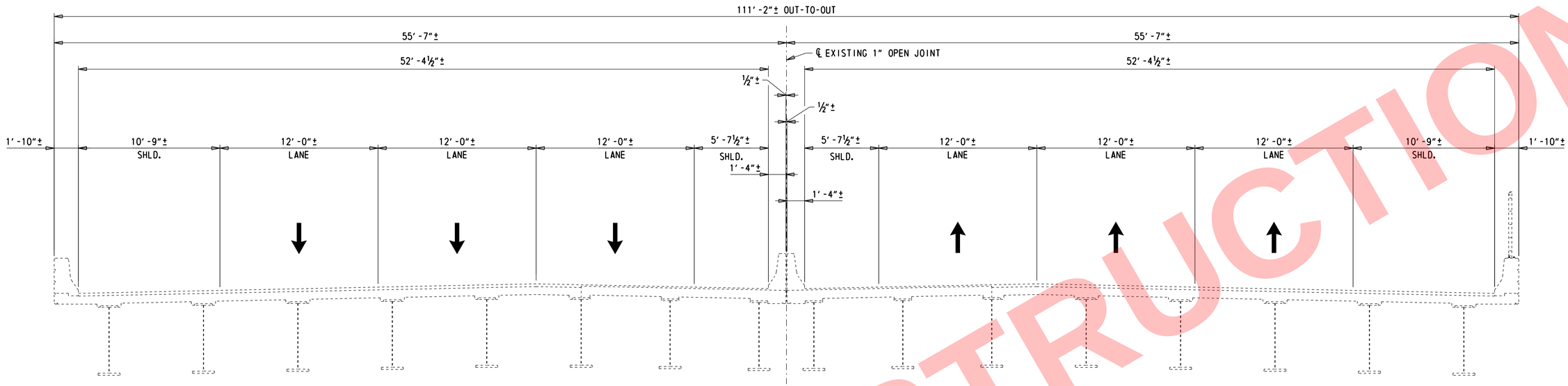

EXISTING TYPICAL SECTION

(STA. 1265+18 TO 1284+16)

1/4" = 1'-0"

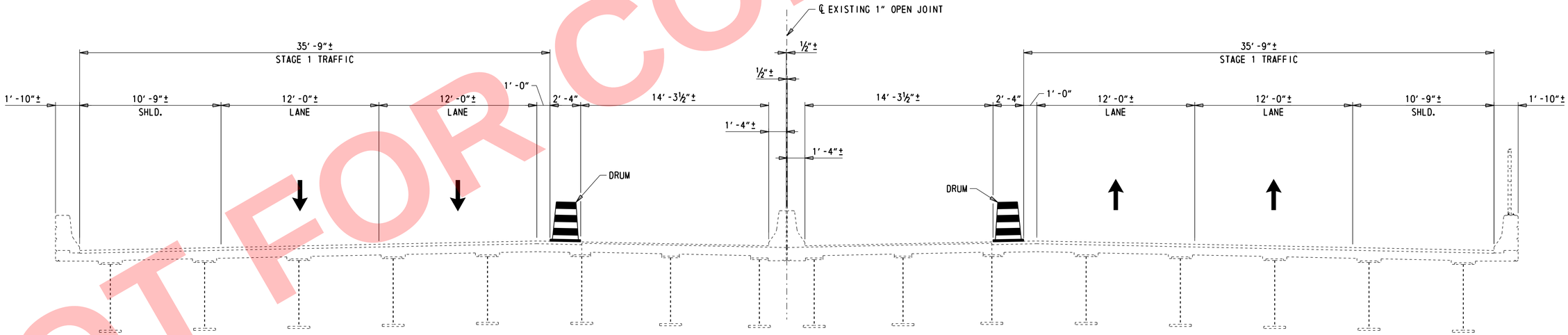

STAGE 1

(STA. 1265+18 TO 1284+16)

¼" = 1'-0"

LEGEND:

LIMITS OF REMOVAL

PROPOSED CONSTRUCTION

NOTES:

1. DEMO SHIELDS NOT SHOWN.
2. NO BRIDGE DECK WORK IN STAGE 1. SHOWN FOR INFORMATIONAL PURPOSES ONLY.

SEQUENCE OF CONSTRUCTION NOTES:

1. SET UP THE STAGE 1 MOT AND SHIFT TRAFFIC TO THE NEW LANE CONFIGURATION.

NOT FOR CONSTRUCTION

ADDENDA / REVISIONS	SCALE AS NOTED	REHABILITATION OF I-95 FROM I-495 TO NORTH OF BRANDYWINE RIVER BRIDGE	CONTRACT T201407404	BRIDGE NO. 1 748 059	SEQUENCE OF CONSTRUCTION – 1	SC-01
			COUNTY NEW CASTLE	DESIGNED BY: DAN		SECTION WRA
				CHECKED BY: WAG		SHEET NO. 2-162

N:\31987-004\Contract_I-95\CADD\Bridge\BR1-748_SC01.dgn
5/31/2019 12:11:56 PM

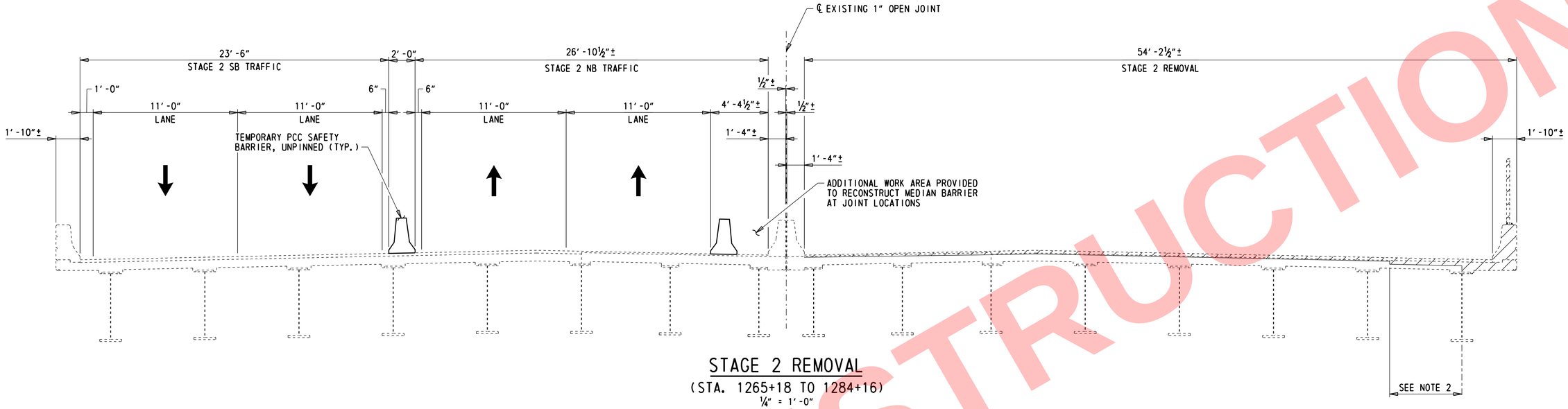

STAGE 2 REMOVAL
(STA. 1265+18 TO 1284+16)
¼" = 1'-0"

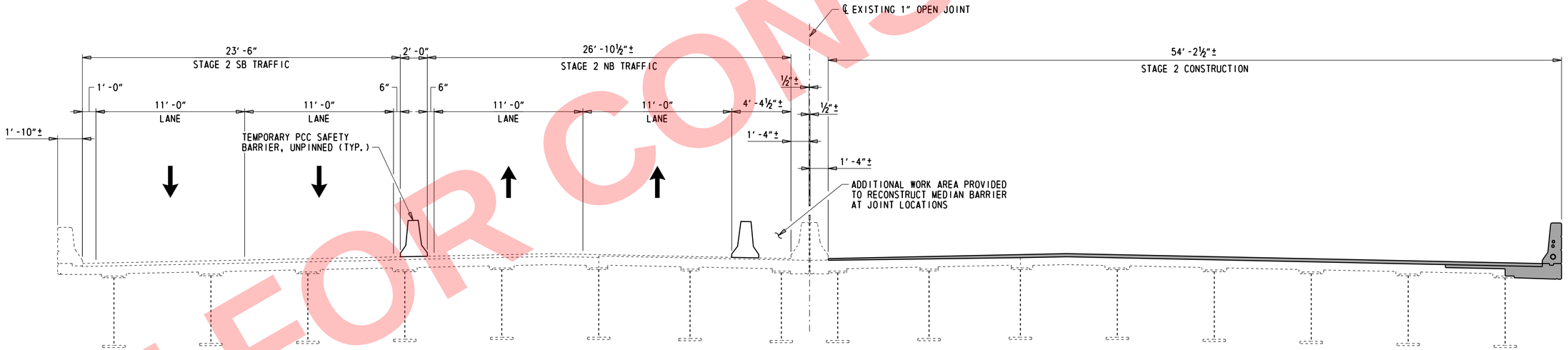

STAGE 2 CONSTRUCTION
(STA. 1265+18 TO 1284+16)
¼" = 1'-0"

LEGEND:

- LIMITS OF REMOVAL
- PROPOSED CONSTRUCTION

NOTES:

1. DEMO SHIELDS NOT SHOWN.
2. FOR LOCATION OF DECK OVERHANG RECONSTRUCTION LIMITS, SEE DETAILS ON DWGS. DM-01 THROUGH DM-03.

SEQUENCE OF CONSTRUCTION NOTES:

1. SET UP THE STAGE 2 MOT AND SHIFT TRAFFIC TO THE NEW LANE CONFIGURATION.
2. PERFORM STAGE 2 REMOVAL.
3. CONSTRUCT THE NEW OVERHANG AND PARAPET.
4. PLACE NEW LMC OVERLAY WITHIN THE LIMITS OF STAGE 2 CONSTRUCTION.

NOT FOR CONSTRUCTION

N:\31987-004\Control\I-95\CADD\Bridge\BR1-748_SC02.dgn
5/31/2019 12:11:57 PM

ADDENDA / REVISIONS		SCALE AS NOTED	REHABILITATION OF I-95 FROM I-495 TO NORTH OF BRANDYWINE RIVER BRIDGE	CONTRACT T201407404	BRIDGE NO. 1 748 059	SEQUENCE OF CONSTRUCTION – 2	SC-02
				COUNTY NEW CASTLE	DESIGNED BY: DAN		SECTION WRA
					CHECKED BY: WAG		SHEET NO. 2-163

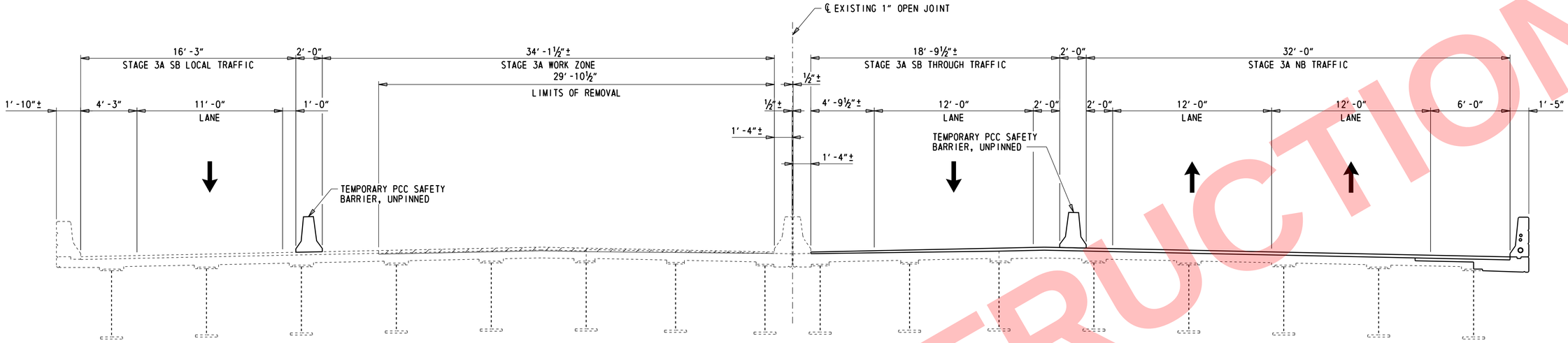

STAGE 3A REMOVAL

(STA. 1265+18 TO 1284+16)

¼" = 1'-0"

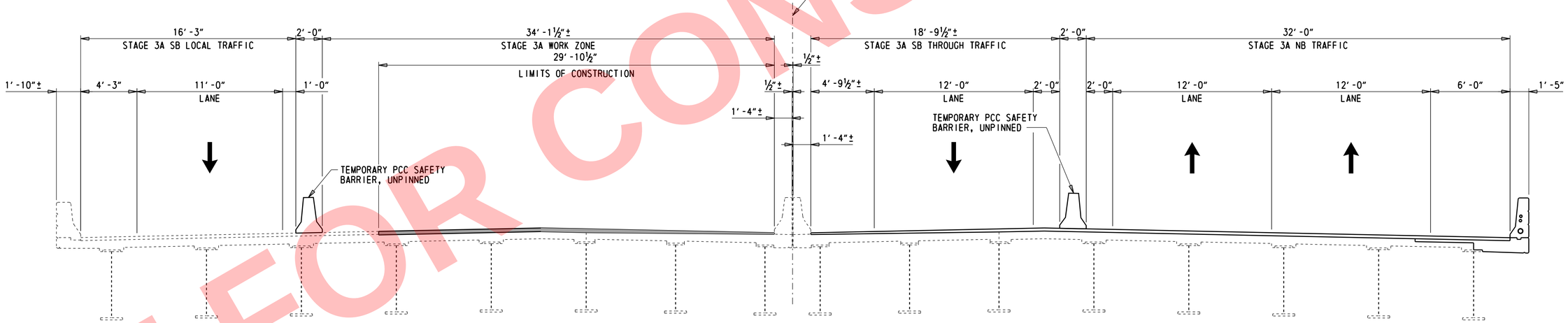

STAGE 3A CONSTRUCTION

(STA. 1265+18 TO 1284+16)

¼" = 1'-0"

LEGEND:

- LIMITS OF REMOVAL
- PROPOSED CONSTRUCTION

NOTES:

1. DEMO SHIELDS NOT SHOWN.
2. FOR LOCATION OF DECK OVERHANG RECONSTRUCTION LIMITS, SEE DETAILS ON DWGS. DM-01 THROUGH DM-03.

SEQUENCE OF CONSTRUCTION NOTES:

1. SET UP THE STAGE 3A MOT AND SHIFT TRAFFIC TO THE NEW LANE CONFIGURATION.
2. PERFORM STAGE 3A REMOVAL.
3. PLACE NEW LMC OVERLAY WITHIN THE LIMITS OF STAGE 3A CONSTRUCTION.

NOT FOR CONSTRUCTION

N:\31987-004\Contract_I-95\COD\Bridge\BRI-748_SC03.dgn
5/31/2019 12:11:57 PM

ADDENDA / REVISIONS		SCALE AS NOTED	REHABILITATION OF I-95 FROM I-495 TO NORTH OF BRANDYWINE RIVER BRIDGE	CONTRACT T201407404	BRIDGE NO. 1 748 059	SEQUENCE OF CONSTRUCTION – 3	SC-03 SECTION WRA
				COUNTY NEW CASTLE	DESIGNED BY: DAN		SHEET NO. 2-164
					CHECKED BY: WAG		

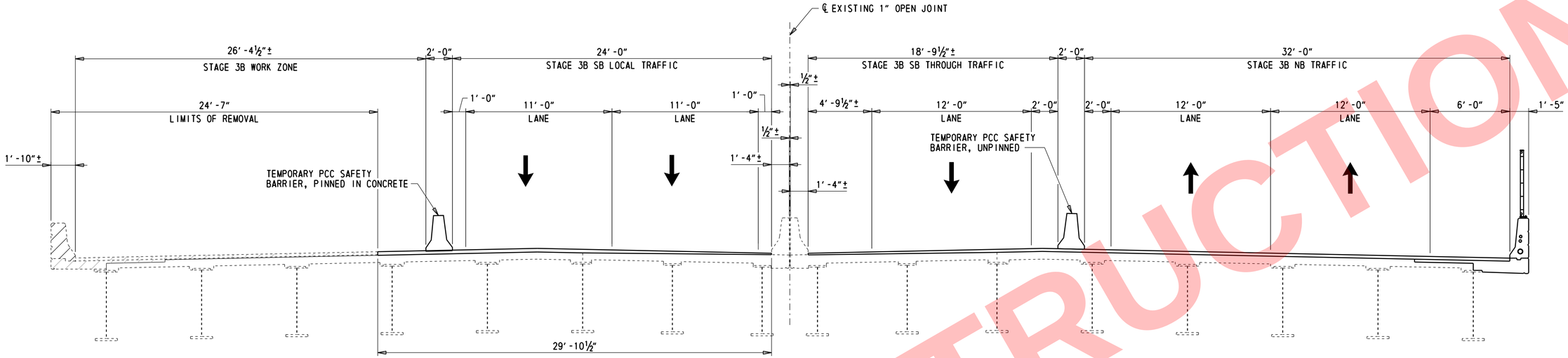

STAGE 3B REMOVAL

(STA. 1265+18 TO 1284+16)

¼" = 1' -0"

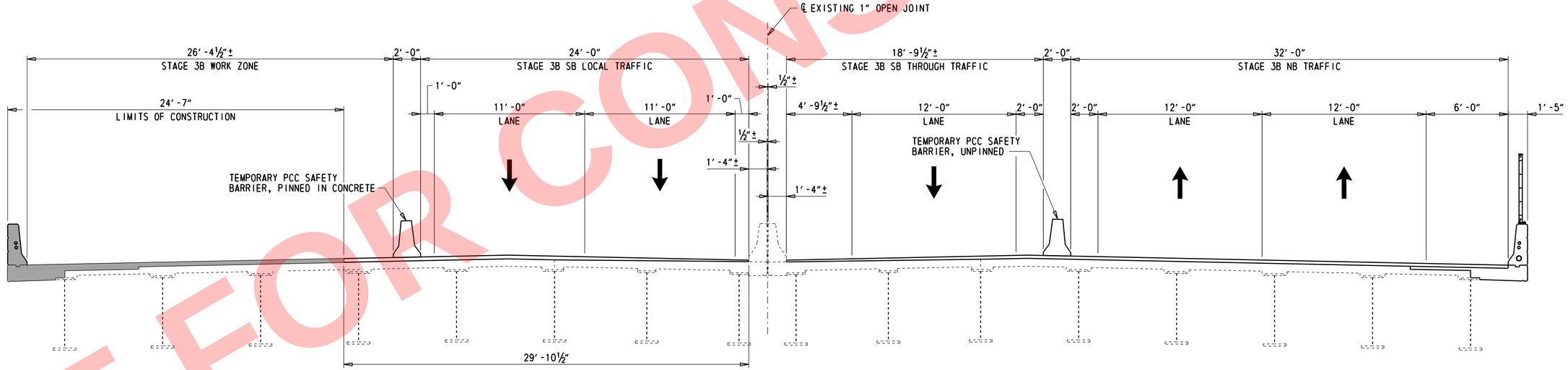

STAGE 3B CONSTRUCTION

(STA. 1265+18 TO 1284+16)

¼" = 1' -0"

LEGEND:

- LIMITS OF REMOVAL
- PROPOSED CONSTRUCTION

NOTES:

1. DEMO SHIELDS NOT SHOWN.
2. LOCATION OF DECK OVERHANG RECONSTRUCTION LIMITS, SEE DETAILS ON DWGS. DM-01 AND DM-03.

SEQUENCE OF CONSTRUCTION NOTES:

1. SET UP THE STAGE 3B MOT AND SHIFT TRAFFIC TO THE NEW LANE CONFIGURATION.
2. PERFORM STAGE 3B REMOVAL.
3. CONSTRUCT NEW OVERHANG AND PARAPET.
4. PLACE NEW LMC OVERLAY WITHIN THE LIMITS OF STAGE 3B CONSTRUCTION.

NOT FOR CONSTRUCTION

ADDENDA / REVISIONS		SCALE AS NOTED	REHABILITATION OF I-95 FROM I-495 TO NORTH OF BRANDYWINE RIVER BRIDGE	CONTRACT T201407404	BRIDGE NO. 1 748 059	SEQUENCE OF CONSTRUCTION – 4	SC-04
				COUNTY NEW CASTLE	DESIGNED BY: DAN		SECTION WRA
					CHECKED BY: WAG		SHEET NO. 2-165

N:\31987-004\Contract_I-95\C-ADD\Bridge\BRI-748_SC04.dgn
5/31/2019 12:11:58 PM

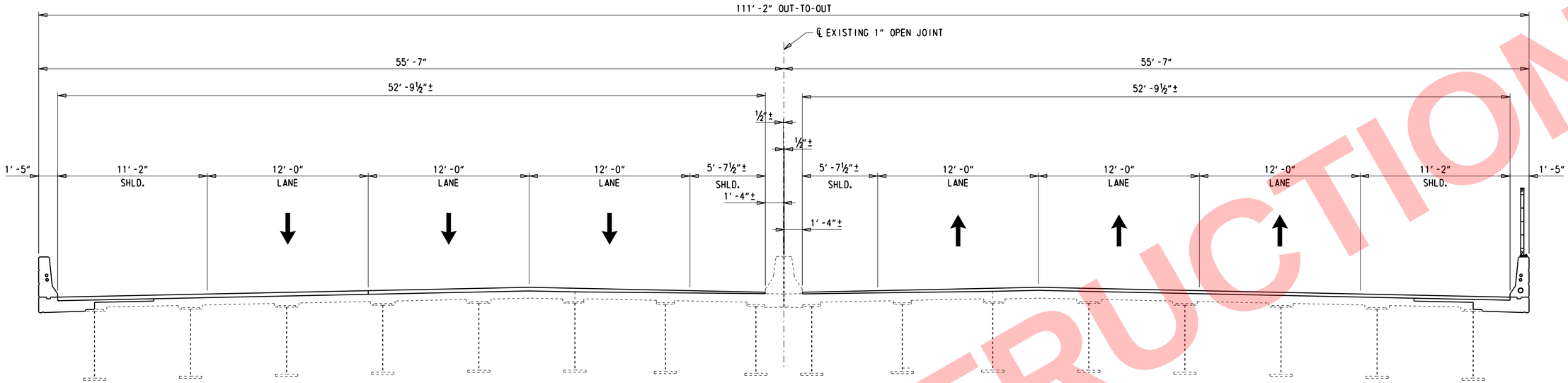

COMPLETED TYPICAL SECTION

(STA. 1265+18 TO 1284+16)

¼″ = 1′-0″

NOT FOR CONSTRUCTION

NOTES:

1. NO BRIDGE DECK WORK IN STAGE 4.

N:\31987-004\Contract I-95\CADD\Bridge\BR1-748_SC05.dgn
5/31/2019 12:15:59 PM

ADDENDA / REVISIONS		SCALE AS NOTED	REHABILITATION OF I-95 FROM I-495 TO NORTH OF BRANDYWINE RIVER BRIDGE	CONTRACT T201407404	BRIDGE NO. 1 748 059	SEQUENCE OF CONSTRUCTION – 5	SC-05
				COUNTY NEW CASTLE	DESIGNED BY: DAN		SECTION WRA
					CHECKED BY: WAG		SHEET NO. 2-166

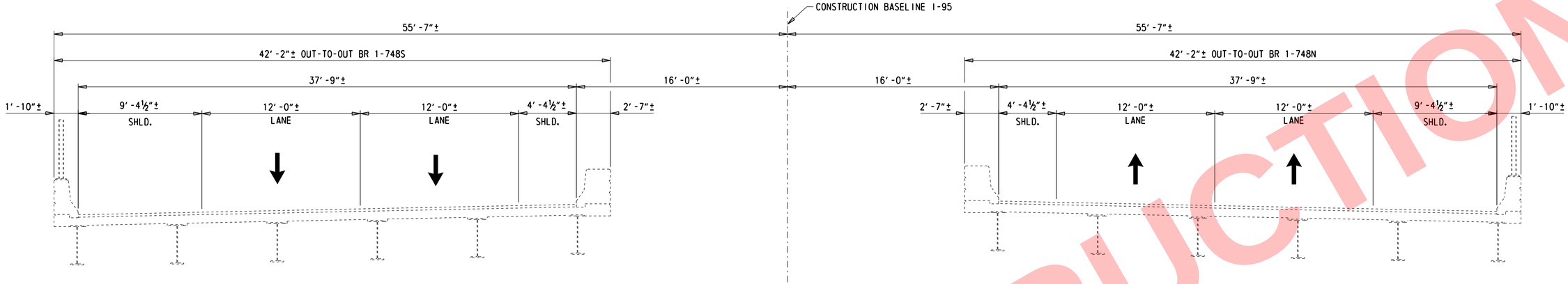

EXISTING TYPICAL SECTION

(STA. 1305+08 TO 1319+82 I-95 SB, STA. 1300+34 TO 1313+05 I-95 NB)

1/4" = 1'-0"

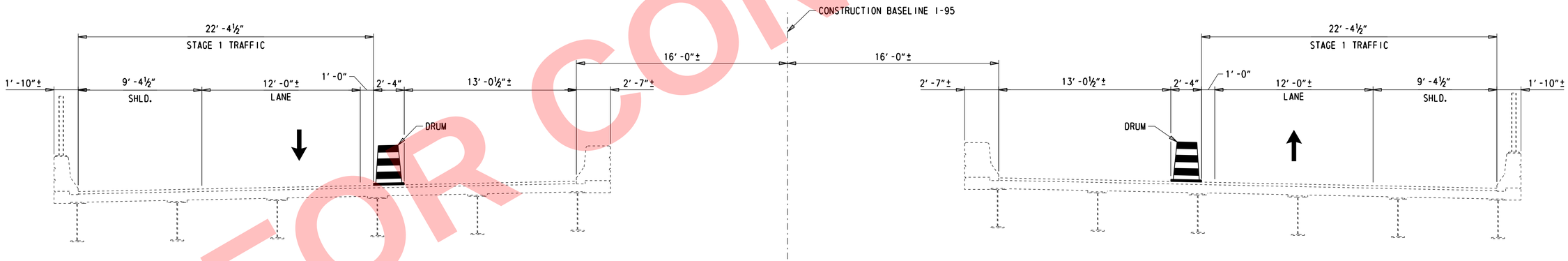

STAGE 1

(STA. 1305+08 TO 1319+82 I-95 SB, STA. 1300+34 TO 1313+04 I-95 NB)

1/4" = 1'-0"

NOTES:

1. DEMO SHIELDS NOT SHOWN.
2. NO BRIDGE DECK WORK IN STAGE 1, SHOWN FOR INFORMATIONAL PURPOSES ONLY.

SEQUENCE OF CONSTRUCTION NOTES:

1. SET UP THE STAGE 1 MOT AND SHIFT TRAFFIC TO THE NEW LANE CONFIGURATION.

NOT FOR CONSTRUCTION

N:\31987-004\Control\I-95\ADD\Bridge\BR1-748_SC06.dgn
5/31/2019 12:02:00 PM

ADDENDA / REVISIONS	SCALE AS NOTED	REHABILITATION OF I-95 FROM I-495 TO NORTH OF BRANDYWINE RIVER BRIDGE	CONTRACT T201407404	BRIDGE NO. 1 748 059	SEQUENCE OF CONSTRUCTION – 6	SC-06 SECTION
			COUNTY NEW CASTLE	DESIGNED BY: DAN		WRA SHEET NO.
				CHECKED BY: WAG		2-167

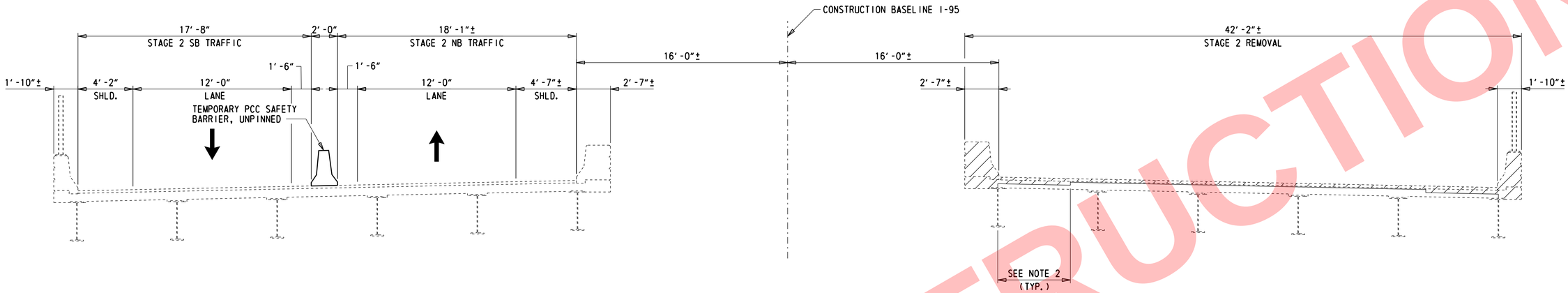

STAGE 2 REMOVAL

(STA. 1305+08 TO 1319+82 I-95 SB, STA. 1300+34 TO 1313+05 I-95 NB)

1/4" = 1'-0"

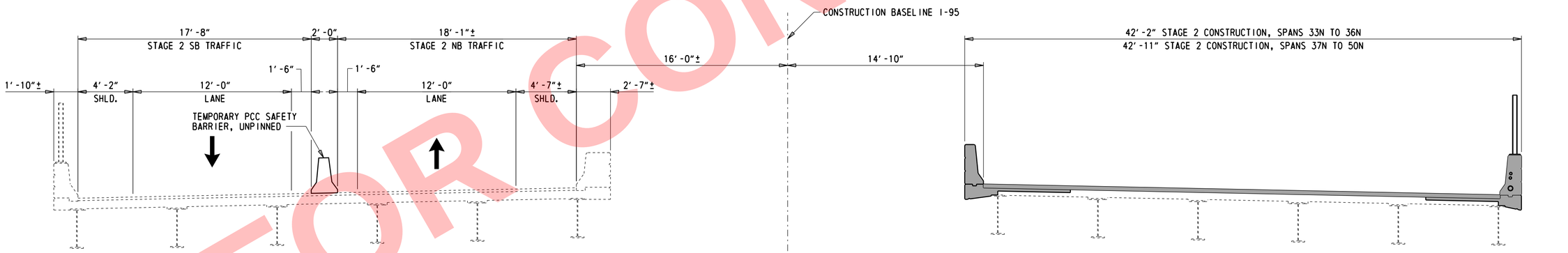

STAGE 2 CONSTRUCTION

(STA. 1305+08 TO 1319+82 I-95 SB, STA. 1300+34 TO 1313+05 I-95 NB)

1/4" = 1'-0"

LEGEND:

- LIMITS OF REMOVAL
- PROPOSED CONSTRUCTION

NOTES:

1. DEMO SHIELDS NOT SHOWN.
2. FOR LOCATION OF DECK OVERHANG RECONSTRUCTION LIMITS, SEE DETAILS ON DWGS. DM-01 THROUGH DM-03.

SEQUENCE OF CONSTRUCTION NOTES:

1. SET UP THE STAGE 2 MOT AND SHIFT TRAFFIC TO THE NEW LANE CONFIGURATION.
2. PERFORM STAGE 2 REMOVAL.
3. CONSTRUCT NEW OVERHANGS AND PARAPETS.
4. PLACE NEW LMC OVERLAY WITHIN THE LIMITS OF STAGE 2 CONSTRUCTION.

NOT FOR CONSTRUCTION

ADDENDA / REVISIONS	SCALE AS NOTED	REHABILITATION OF I-95 FROM I-495 TO NORTH OF BRANDYWINE RIVER BRIDGE	CONTRACT T201407404	BRIDGE NO. 1 748 059	SEQUENCE OF CONSTRUCTION – 7	SC-07 SECTION WRA
			COUNTY NEW CASTLE	DESIGNED BY: DAN		SHEET NO. 2-168
				CHECKED BY: WAG		

N:\31987-004\Contract I-95\CADD\Bridge\BR1-748_SC07.dgn 5/17/2019 12:02:01 PM

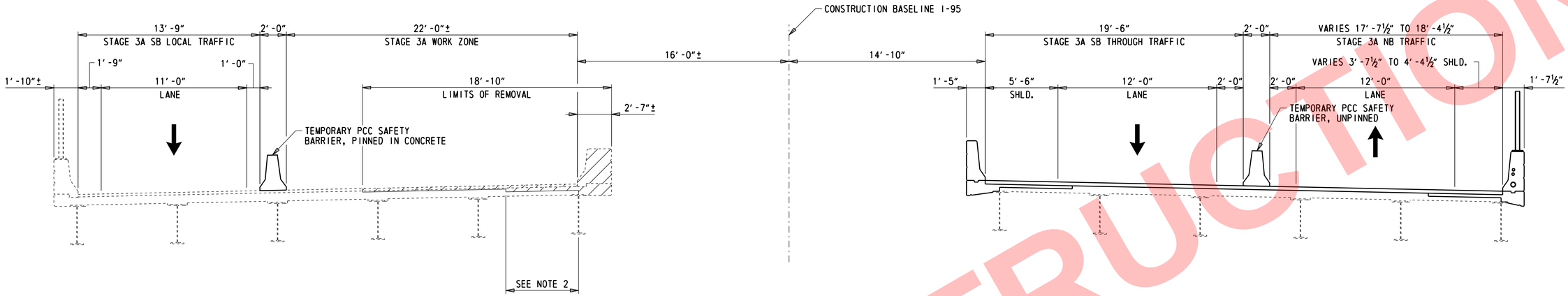

STAGE 3A REMOVAL

(STA. 1305+08 TO 1319+82 I-95 SB, STA. 1300+34 TO 1313+05 I-95 NB)

1/4" = 1'-0"

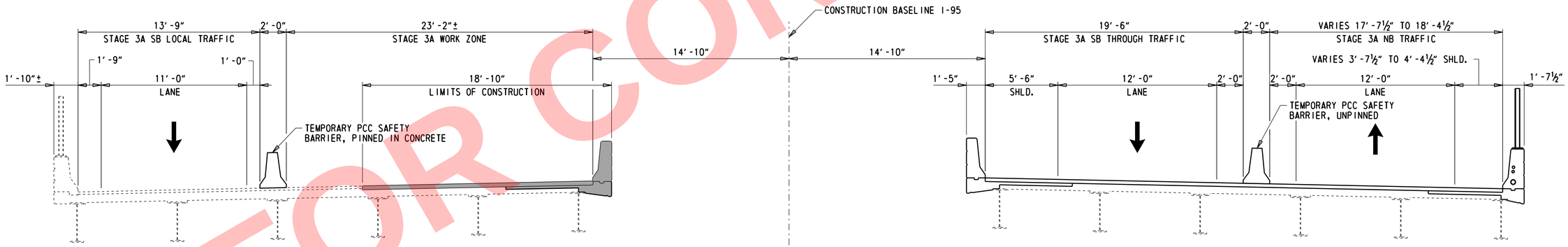

STAGE 3A CONSTRUCTION

(STA. 1305+08 TO 1319+82 I-95 SB, STA. 1300+34 TO 1313+05 I-95 NB)

1/4" = 1'-0"

NOTES:

1. DEMO SHIELDS NOT SHOWN.
2. FOR LOCATION OF DECK OVERHANG RECONSTRUCTION LIMITS, SEE DETAILS ON DWGS. DM-01 THROUGH DM-03.

SEQUENCE OF CONSTRUCTION NOTES:

1. SET UP STAGE 3A MOT AND SHIFT TRAFFIC TO THE NEW LANE CONFIGURATION.
2. PERFORM STAGE 3A REMOVAL.
3. CONSTRUCT NEW OVERHANG AND PARAPET.
4. PLACE NEW LMC OVERLAY WITHIN THE LIMITS OF STAGE 3A CONSTRUCTION.

LEGEND:

LIMITS OF REMOVAL

PROPOSED CONSTRUCTION

NOT FOR CONSTRUCTION

N:\31987-004\Contract_I-95\CADD\Bridge\BR1-748_SC08.dgn
5/31/2019 12:12:01 PM

ADDENDA / REVISIONS	SCALE AS NOTED	REHABILITATION OF I-95 FROM I-495 TO NORTH OF BRANDYWINE RIVER BRIDGE	CONTRACT T201407404	BRIDGE NO. 1 748 059	SEQUENCE OF CONSTRUCTION – 8	SC-08
			COUNTY NEW CASTLE	DESIGNED BY: DAN		SECTION WRA
				CHECKED BY: WAG		SHEET NO. 2-169

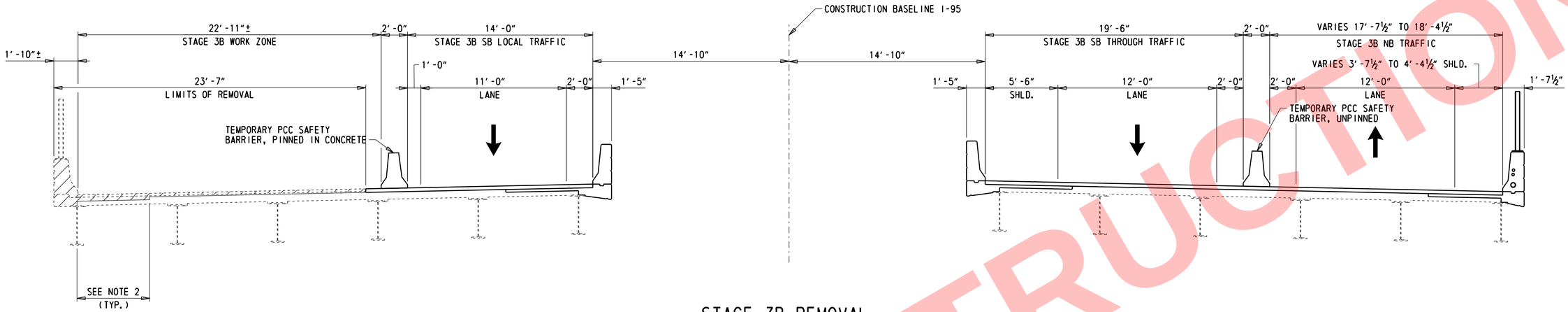

STAGE 3B REMOVAL

(STA. 1305+08 TO 1319+82 I-95 SB, STA. 1300+34 TO 1313+05 I-95 NB)

1/4" = 1'-0"

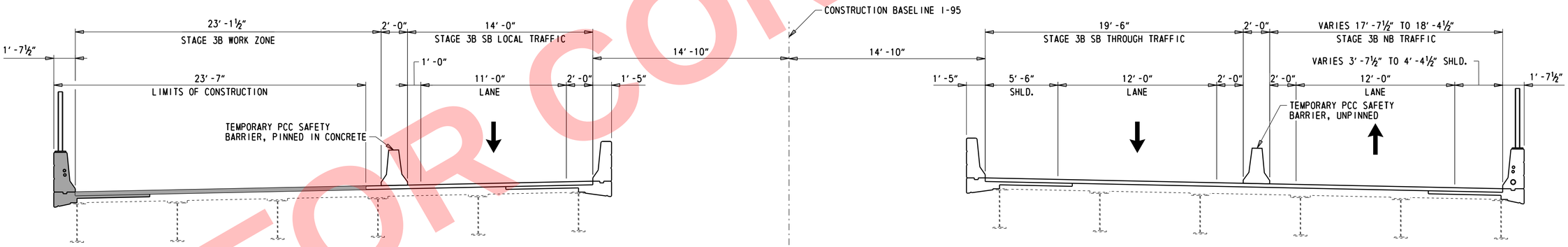

STAGE 3B CONSTRUCTION

(STA. 1305+08 TO 1319+82 I-95 SB, STA. 1300+34 TO 1313+05 I-95 NB)

1/4" = 1'-0"

LEGEND:

LIMITS OF REMOVAL

PROPOSED CONSTRUCTION

NOTES:

1. DEMO SHIELDS NOT SHOWN.
2. FOR LOCATION OF DECK OVERHANG RECONSTRUCTION LIMITS SEE DETAILS ON DWGS. DM-01 THROUGH DM-03.

SEQUENCE OF CONSTRUCTION NOTES:

1. SET UP STAGE 3B MOT AND SHIFT TRAFFIC TO THE NEW LANE CONFIGURATION.
2. PERFORM STAGE 3B REMOVAL.
3. CONSTRUCT THE NEW OVERHANG AND PARAPET.
4. PLACE NEW LMC OVERLAY WITHIN THE LIMITS OF THE STAGE 3B CONSTRUCTION.

NOT FOR CONSTRUCTION

N:\31987-004\Contract_I-95\CADD\Bridge\BR1-748_SC09.dgn
5/31/2019 12:12:02 PM

ADDENDA / REVISIONS	SCALE AS NOTED	REHABILITATION OF I-95 FROM I-495 TO NORTH OF BRANDYWINE RIVER BRIDGE	CONTRACT T201407404	BRIDGE NO. 1 748 059	SEQUENCE OF CONSTRUCTION – 9	SC-09
			COUNTY NEW CASTLE	DESIGNED BY: DAN		SECTION WRA
				CHECKED BY: WAG		SHEET NO. 2-170

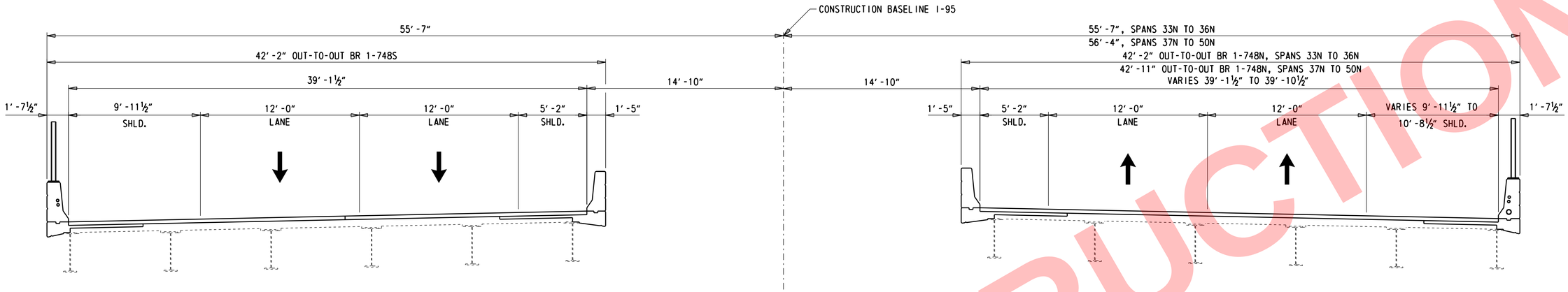

COMPLETED TYPICAL SECTION

(STA. 1305+08 TO 1319+82 I-95 SB, STA. 1300+34 TO 1313+05 I-95 NB)

1/4" = 1'-0"

NOT FOR CONSTRUCTION

NOTES:

1. NO BRIDGE DECK WORK IN STAGE 4.

N:\31987-004\Contract_I-95\CADD\Bridge\BR1-748_SC10.dgn
5/31/2019 12:12:03 PM

ADDENDA / REVISIONS		SCALE AS NOTED	REHABILITATION OF I-95 FROM I-495 TO NORTH OF BRANDYWINE RIVER BRIDGE	CONTRACT T201407404	BRIDGE NO. 1 748 059	SEQUENCE OF CONSTRUCTION – 10	SC-10
				COUNTY NEW CASTLE	DESIGNED BY: DAN		SECTION WRA
					CHECKED BY: WAG		SHEET NO. 2-171

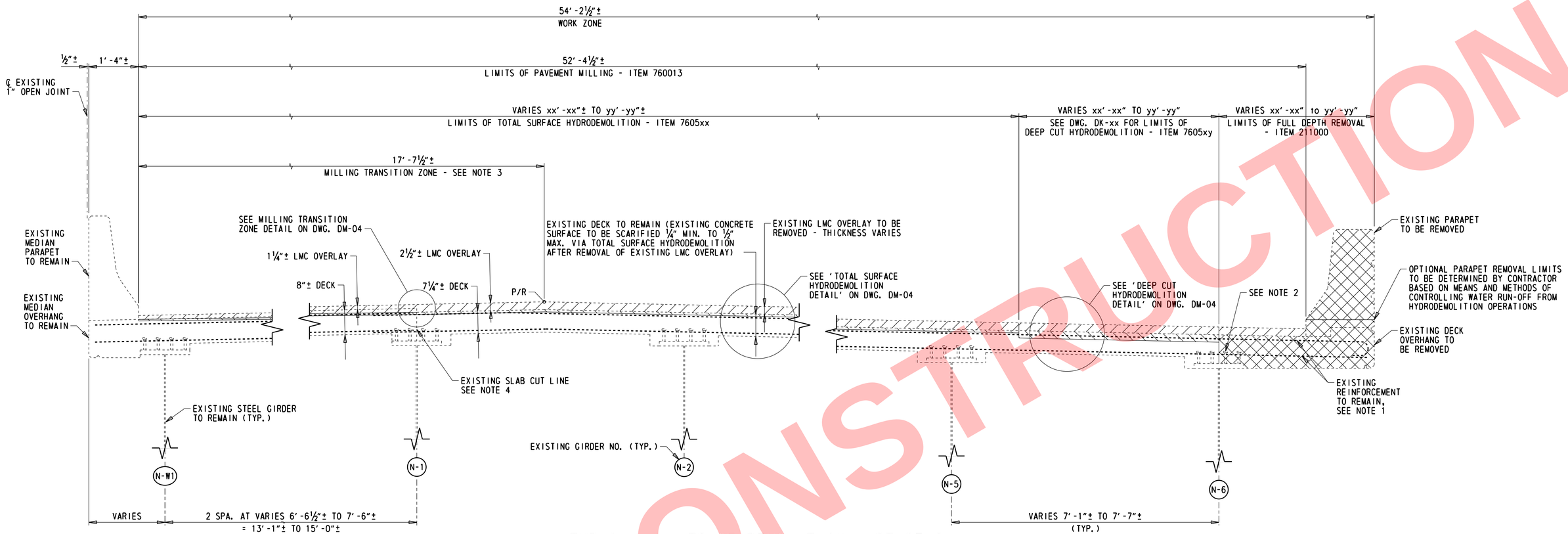

TYPICAL LIMITS OF DEMOLITION - STAGE 2

(1265+18.61 TO 1284+16.61 I-95 NB)

¾" = 1'-0"

SUGGESTED SEQUENCE OF CONSTRUCTION:

THIS SEQUENCE OF CONSTRUCTION REPRESENTS THE GENERAL ORDER OF OPERATIONS REQUIRED TO RECONSTRUCT THE FASCIA PARAPETS AND PLACE THE PROPOSED OVERLAY. IT IS NOT INTENDED TO REPRESENT ALL ACTIVITIES NECESSARY TO COMPLETE THE WORK AS SPECIFIED. THE CONTRACTOR MAY ALTER THIS SUGGESTED SEQUENCE AND THE REMOVAL AND RECONSTRUCTION LIMITS SUBJECT TO PRIOR APPROVAL BY THE ENGINEER.

1. INSTALL TEMPORARY WORKS INCLUDING PROTECTIVE SHIELDS, RAILINGS, ETC. AS NECESSARY TO PROTECT THE WORK ZONE AND AREAS UNDER AND ADJACENT TO THE CONSTRUCTION.
2. REMOVE EXISTING EXTERIOR PARAPET TO THE LIMITS SHOWN.
3. REMOVE EXISTING LMC OVERLAY VIA PAVEMENT MILLING WITHIN THE LIMITS OF DEEP CUT HYDRODEMOLITION AS SHOWN.
4. PERFORM DEEP CUT HYDRODEMOLITION TO THE LIMITS SHOWN.
5. REMOVE THE EXISTING OVERHANG TO THE LIMITS SHOWN.
6. RECONSTRUCT THE DECK OVERHANG. SEE DWG. DK-xx FOR DETAILS.
7. CONSTRUCT NEW 36" F-SHAPE PARAPET. SEE DWG. DK-xx FOR DETAILS.
8. REMOVE EXISTING LMC OVERLAY VIA PAVEMENT MILLING WITHIN THE LIMITS OF TOTAL SURFACE HYDRODEMOLITION AS SHOWN.
9. PERFORM TOTAL SURFACE HYDRODEMOLITION TO THE LIMITS SHOWN.
10. PLACE NEW LMC OVERLAY.

LEGEND:

- LIMITS OF REMOVAL, PAVEMENT MILLING (ITEM 760013)
- LIMITS OF REMOVAL, HYDRODEMOLITION (ITEM 7605xx OR 7605xy)
- LIMITS OF REMOVAL (ITEM 211000)

DEMOLITION NOTES:

1. EXISTING TOP AND BOTTOM TRANSVERSE REINFORCEMENT BARS TO REMAIN SHALL BE INTEGRATED INTO NEW OVERHANG. DEEP CUT HYDRODEMOLITION SHALL BE PERFORMED TO THE DEPTH SHOWN IN THE DETAIL ON DWG. DM-04. NEW OVERHANG BARS SHALL BE LAPPED WITH TOP BARS. SEE DK-xx FOR ADDITIONAL DETAILS.

   EXISTING BARS TO REMAIN SHALL BE CLEANED IN ACCORDANCE WITH SECTION 628.03(E)(7). BARS WITH CORROSION, BROKEN, OR WITH INADEQUATE BOND SHALL BE REPAIRED IN ACCORDANCE WITH SECTION 628.03(E)(7). PAYMENT FOR THIS WORK WILL BE INCIDENTAL TO ITEM 211000 - REMOVAL OF STRUCTURES AND OBSTRUCTIONS.

   ALL EXISTING LONGITUDINAL REINFORCEMENT WITHIN THE LIMITS OF FULL DEPTH REMOVAL SHALL BE REMOVED AND REPLACED. EXISTING LONGITUDINAL REINFORCEMENT NOT SHOWN FOR CLARITY. SEE DK-xx FOR ADDITIONAL DETAILS.
2. EXISTING STUD SHEAR CONNECTORS ON TOP FLANGE OF FASCIA GIRDERS SHALL REMAIN IN PLACE FOLLOWING FULL DEPTH REMOVAL OF THE OVERHANG. EXISTING STUD SHEAR CONNECTORS SHALL BE CLEANED OF ALL LOOSE CONCRETE, DEBRIS, OIL, ETC. PAYMENT FOR CLEANING EXISTING STUD SHEAR CONNECTORS WILL BE INCIDENTAL TO ITEM 211000. EXISTING STUD SHEAR CONNECTORS DAMAGED DURING REMOVAL OPERATIONS SHALL BE REPLACED IN-KIND AT THE CONTRACTOR'S EXPENSE. CONTRACTOR MAY CHOOSE TO REMOVE AND REPLACE IN-KIND ALL STUD SHEAR CONNECTORS ON FASCIA GIRDERS AT NO ADDITIONAL COST TO THE DEPARTMENT.
3. THE CONTRACTOR SHALL PROVIDE A RELATIVELY SMOOTH AND UNIFORM MILLING TRANSITION OF THE EXISTING LATEX-MODIFIED CONCRETE OVERLAY BETWEEN THE FACE OF EXISTING MEDIAN PARAPET (1¼"± THICK LMC) AND THE EXISTING POINT OF ROTATION (2½"± THICK LMC) AS SHOWN. PAYMENT FOR THE MILLING TRANSITION ZONE WILL BE INCIDENTAL TO ITEM 760013 - PAVEMENT MILLING, PORTLAND CEMENT CONCRETE PAVEMENT. SEE DETAIL ON DWG. DM-04 FOR ADDITIONAL INFORMATION.
4. RECALIBRATION OF THE HYDRODEMOLITION EQUIPMENT MAY BE REQUIRED BETWEEN THE ORIGINAL AND WIDENED PORTIONS OF THE STRUCTURE AT EXISTING SLAB CUT LINE.
5. FOR THE PURPOSES OF HYDRODEMOLITION EQUIPMENT CALIBRATION, THE WILMINGTON VIADUCT SHALL BE CONSIDERED THREE SEPARATE BRIDGES: BR 1-748, BR 1-748N, AND BR 1-748S.
6. THICKNESS OF EXISTING LMC OVERLAY VARIES. DECK CORES DEPICTING THE OVERLAY THICKNESS WERE TAKEN IN NOVEMBER/DECEMBER 2014. THE CORING REPORT IS INCLUDED WITH THE CONTRACT DOCUMENTS.
7. TYPICAL SECTION SHOWN IS VALID FOR STATION LIMITS AS NOTED. NORTHBOUND SUPERSTRUCTURE WIDTH VARIES AT OTHER SECTIONS OF THE BRIDGE, BUT PROCEDURES FOR REMOVAL AND REPLACEMENT OF LMC OVERLAY, PARAPET, AND OVERHANG ARE SIMILAR. SEE SEQUENCE OF CONSTRUCTION SECTIONS ON SC-01 THROUGH SC-05 AND MAINTENANCE OF TRAFFIC PLANS FOR ADDITIONAL INFORMATION REGARDING STAGING LIMITS.
8. VEHICLES AND EQUIPMENT SHALL NOT BE PERMITTED ON AREAS OF THE DECK THAT HAVE RECEIVED DEEP CUT HYDRODEMOLITION. VEHICLES AND EQUIPMENT SHOULD BE KEPT OFF OF AREAS OF THE DECK THAT HAVE RECEIVED TOTAL SURFACE HYDRODEMOLITION AS MUCH AS REASONABLY POSSIBLE - ONLY EQUIPMENT NECESSARY TO COMPLETE THE WORK WILL BE ALLOWED ON THOSE AREAS.

NOT FOR CONSTRUCTION

ADDENDA / REVISIONS		SCALE AS NOTED	REHABILITATION OF I-95 FROM I-495 TO NORTH OF BRANDYWINE RIVER BRIDGE	CONTRACT	BRIDGE NO. 1 748 059	DEMOLITION DETAILS – 1	DM-01
				T201407404	DESIGNED BY: DAN		SECTION WRA
				COUNTY NEW CASTLE	CHECKED BY: WAG		SHEET NO. 2-172

N:\31987-001\Contract I-95\CADD\Bridge\BR1-748_DM01.dgn
5/31/2019 12:02:03 PM

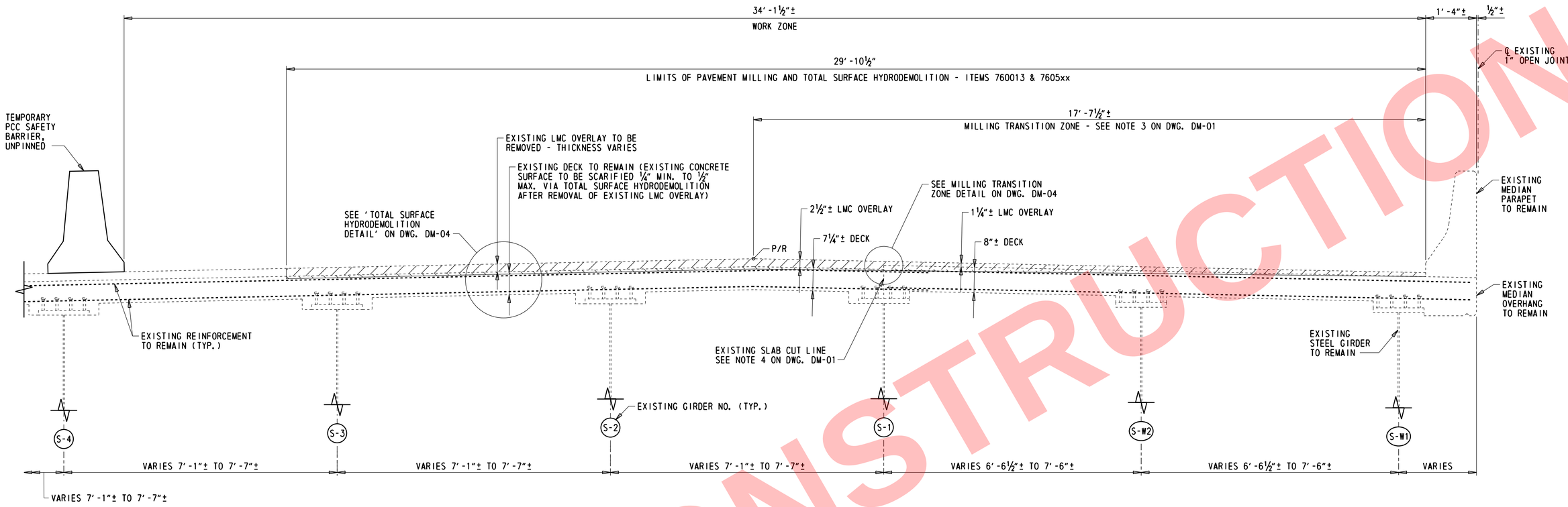

TYPICAL LIMITS OF DEMOLITION - STAGE 3A

(1265+18.61 TO 1289+56.50 I-95 SB)

¾" = 1'-0"

NOTES:

1. FOR ADDITIONAL DEMOLITION NOTES, SEE DWG. DM-01.
2. TYPICAL SECTION SHOWN IS VALID FOR STATION LIMITS AS NOTED. SOUTHBOUND SUPERSTRUCTURE WIDTH VARIES AT OTHER SECTIONS OF THE BRIDGE, BUT PROCEDURES FOR REMOVAL AND REPLACEMENT OF LMC OVERLAY ARE SIMILAR. SEE SEQUENCE OF CONSTRUCTION SECTIONS ON SC-01 THROUGH SC-05 AND MAINTENANCE OF TRAFFIC PLANS FOR ADDITIONAL INFORMATION REGARDING STAGING LIMITS.

LEGEND:

- LIMITS OF REMOVAL, PAVEMENT MILLING (ITEM 760013)
- LIMITS OF REMOVAL, HYDRODEMOLITION (ITEM 7605xx)

NOT FOR CONSTRUCTION

N:\31987-004\Control-I-95\CADD\Bridge\BR1-748_DM02.dgn
5/31/2019 12:20:04 PM

ADDENDA / REVISIONS		SCALE AS NOTED	REHABILITATION OF I-95 FROM I-495 TO NORTH OF BRANDYWINE RIVER BRIDGE	CONTRACT T201407404	BRIDGE NO. 1 748 059	DEMOLITION DETAILS – 2	DM-02
				COUNTY NEW CASTLE	DESIGNED BY: DAN		SECTION WRA
					CHECKED BY: WAG		SHEET NO. 2-173

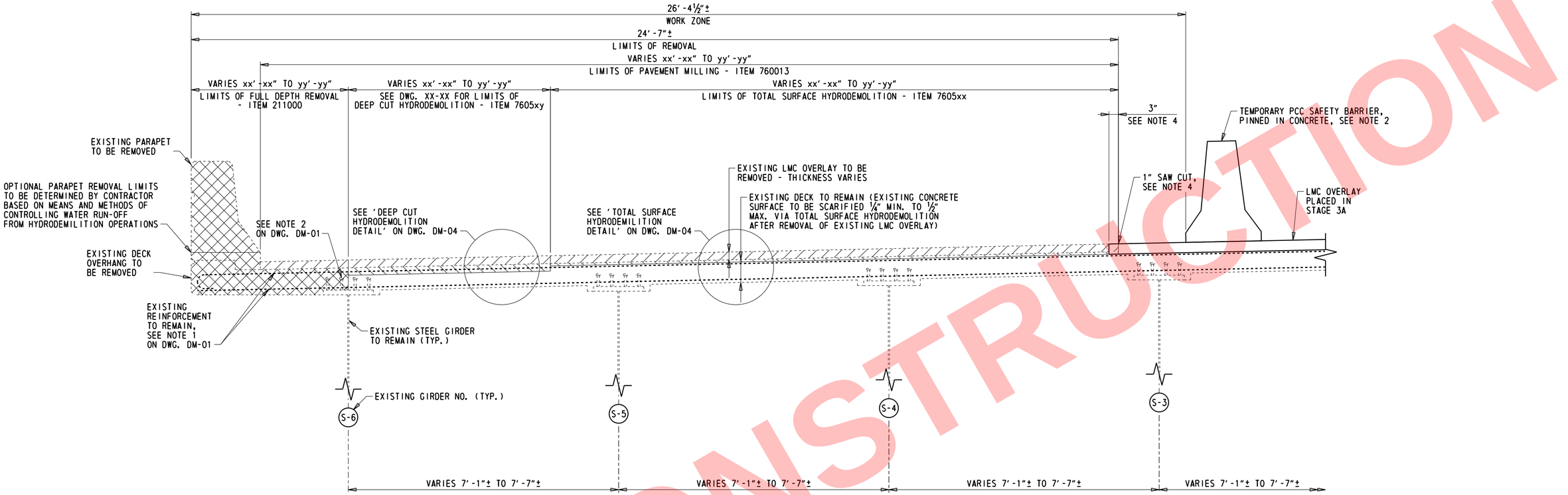

TYPICAL LIMITS OF DEMOLITION - STAGE 3B

(1265+18.61 TO 1289+56.50 I-95 SB)

¾" = 1'-0"

NOTES:

1. FOR ADDITIONAL DEMOLITION NOTES AND SUGGESTED SEQUENCE OF CONSTRUCTION, SEE DWG. DM-01.
2. TEMPORARY PCC SAFETY BARRIER SHALL BE PINNED WHEREVER THE SOUTHBOUND BRIDGE PARAPET IS REMOVED. SEE NOTE 9 ON DWG. PN-01 FOR ADDITIONAL INFORMATION.
3. TYPICAL SECTION SHOWN IS VALID FOR STATION LIMITS AS NOTED. SOUTHBOUND SUPERSTRUCTURE WIDTH VARIES AT OTHER SECTIONS OF THE BRIDGE, BUT PROCEDURES FOR REMOVAL AND REPLACEMENT OF LMC OVERLAY, PARAPET, AND OVERHANG ARE SIMILAR. SEE SEQUENCE OF CONSTRUCTION SECTIONS ON SC-01 THROUGH SC-05 AND MAINTENANCE OF TRAFFIC PLANS FOR ADDITIONAL INFORMATION REGARDING STAGING LIMITS.
4. 1" SAW CUT SHALL BE MADE 3" INTO LMC OVERLAY PLACED IN STAGE 3A TO ENSURE A CLEAN LINE AT THE LONGITUDINAL CONSTRUCTION JOINT. COST OF SAW CUTTING SHALL WILL BE MADE UNDER ITEM 762002 - SAW CUTTING, CONCRETE, VARIABLE DEPTH.

LEGEND:

- LIMITS OF REMOVAL, PAVEMENT MILLING (ITEM 760013)
- LIMITS OF REMOVAL, HYDRODEMOLITION (ITEM 7605xx OR 7605xy)
- LIMITS OF REMOVAL (ITEM 211000)

NOT FOR CONSTRUCTION

N:\31987-004\Contract_I-95\CADD\Bridge\BR1-748_DM03.dgn
5/31/2019 12:20:05 PM

ADDENDA / REVISIONS		SCALE AS NOTED	REHABILITATION OF I-95 FROM I-495 TO NORTH OF BRANDYWINE RIVER BRIDGE	CONTRACT T201407404	BRIDGE NO. 1 748 059	DEMOLITION DETAILS – 3	DM-03 SECTION
				COUNTY NEW CASTLE	DESIGNED BY: DAN		WRA
					CHECKED BY: WAG		SHEET NO. 2-174

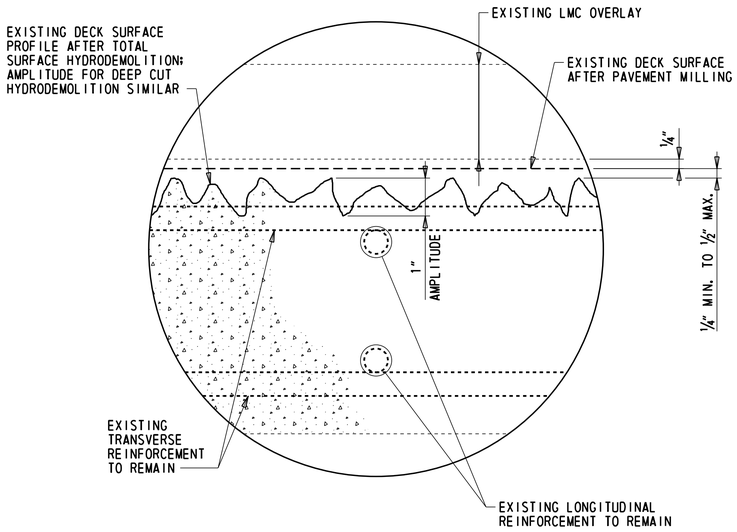

HYDRODEMOLITION AMPLITUDE DETAIL

6" = 1'-0"

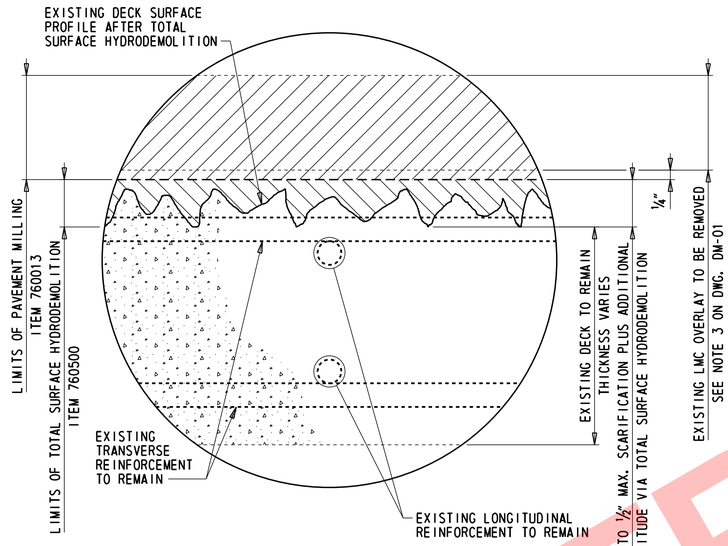

TOTAL SURFACE HYDRODEMOLITION DETAIL

6" = 1'-0"

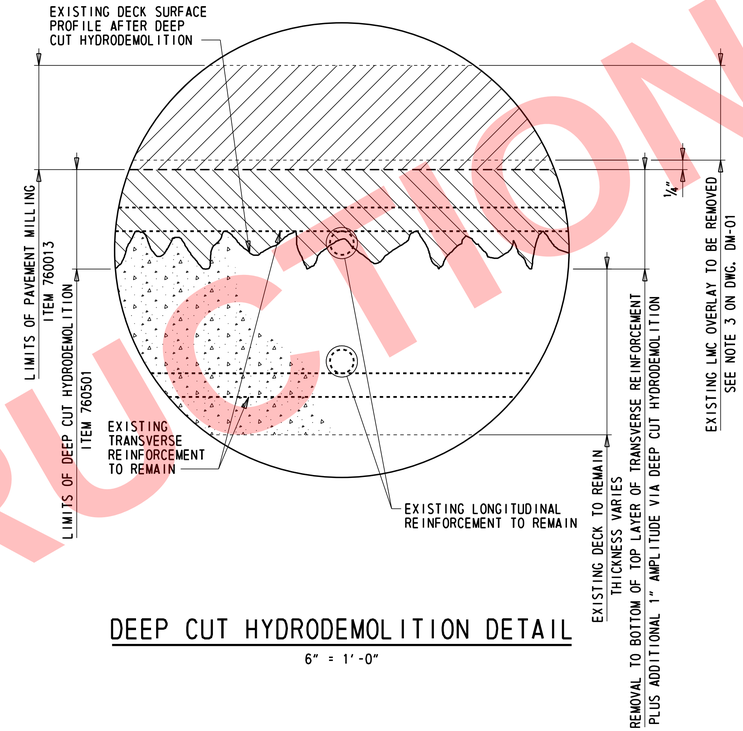

DEEP CUT HYDRODEMOLITION DETAIL

6" = 1'-0"

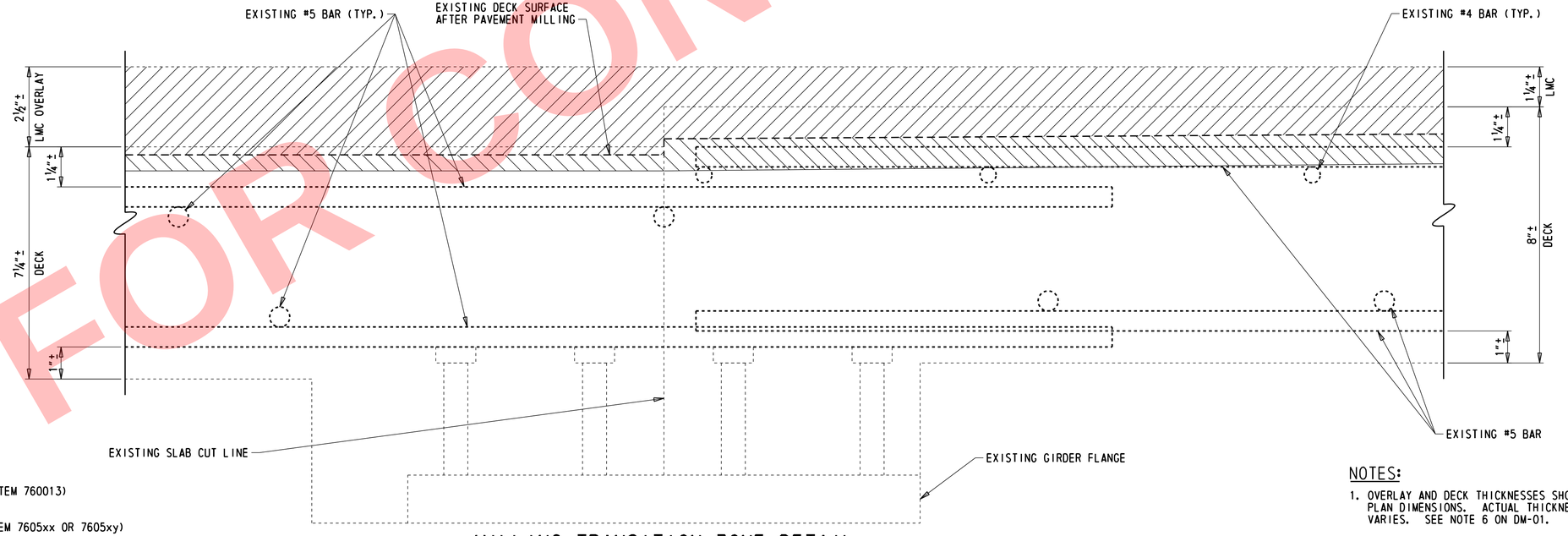

MILLING TRANSITION ZONE DETAIL

6" = 1'-0"

LEGEND:

- LIMITS OF REMOVAL, PAVEMENT MILLING (ITEM 760013)
- LIMITS OF REMOVAL, HYDRODEMOLITION (ITEM 7605xx OR 7605xy)

NOTE:

DETAIL LOCATED AT GIRDER S-1, OTHER LOCATIONS SIMILAR.

NOTES:

1. OVERLAY AND DECK THICKNESSES SHOWN ARE PER THE EXISTING PLAN DIMENSIONS. ACTUAL THICKNESS OF THE LMC OVERLAY VARIES. SEE NOTE 6 ON DM-01.

NOT FOR CONSTRUCTION

ADDENDA / REVISIONS	SCALE AS NOTED	REHABILITATION OF I-95 FROM I-495 TO NORTH OF BRANDYWINE RIVER BRIDGE	CONTRACT T201407404	BRIDGE NO. 1 748 059	DEMOLITION DETAILS – 4	DM-04
			COUNTY NEW CASTLE	DESIGNED BY: DAN		SECTION WRA
				CHECKED BY: WAG		SHEET NO. 2-175

N:\31987-004\Contract_I-95\CADD\Bridge\BR1-748_DM04.dgn
5/31/2019 12:12:05 PM

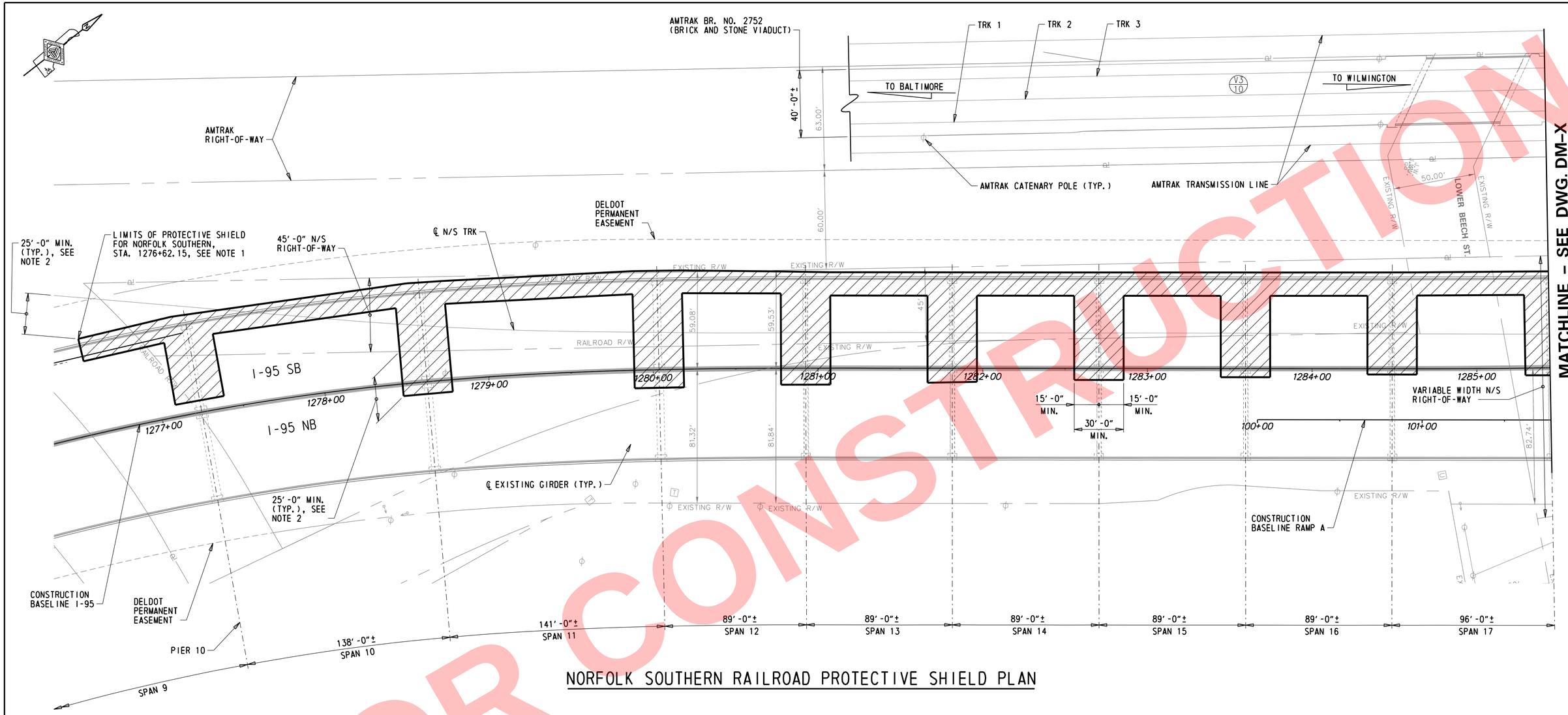

MATCHLINE – SEE DWG. DM-X

NORFOLK SOUTHERN RAILROAD PROTECTIVE SHIELD PLAN

KEY:

(V3/10) AMTRAK VALUATION SECTION & SHEET NUMBER

LEGEND:

NORFOLK SOUTHERN RAILROAD PROTECTIVE SHIELD (ITEM 604001)

NORFOLK SOUTHERN RAILROAD PROTECTIVE SHIELD NOTES:

1. RAILROAD PROTECTIVE SHIELD IS ONLY SHOWN IN AREAS THAT AFFECT NORFOLK SOUTHERN RAILROAD. THE REQUIREMENTS OF SECTION 604 STILL APPLY TO OTHER AREAS WHERE VEHICLES AND PEDESTRIANS REQUIRE PROTECTION.
2. LIMITS OF RAILROAD PROTECTIVE SHIELD SHALL EXTEND 25 FEET BEYOND THE CENTERLINE OF TRACK OR 25 FEET BEYOND THE RAILROAD RIGHT-OF-WAY, WHICHEVER IS GREATER.
3. CONTRACTOR SHALL SUBMIT SHOP DRAWINGS AND CALCULATIONS FOR APPROVAL IN ACCORDANCE WITH SUBSECTION 604.03.1, THE LATEST EDITION OF THE NORFOLK SOUTHERN RAILROAD PUBLIC PROJECTS MANUAL, AND ITEM 801501 - MAINTENANCE OF RAILROAD TRAFFIC NORFOLK SOUTHERN.
4. RAILROAD PROTECTIVE SHIELD SHALL BE IN ACCORDANCE WITH SECTION 604 AND WILL BE PAID FOR UNDER ITEM 604001 - PROTECTIVE SHIELD.

NOT FOR CONSTRUCTION

ADDENDA / REVISIONS	

SCALE
0 30 60 90
FEET

REHABILITATION OF I-95 FROM I-495 TO NORTH OF BRANDYWINE RIVER BRIDGE

CONTRACT	BRIDGE NO. 1 748 059
T201407404	DESIGNED BY: DAN
COUNTY	
NEW CASTLE	CHECKED BY: WAG

RAILROAD PROTECTIVE SHIELD LAYOUT PLAN NORFOLK SOUTHERN – 1

DM-04A

SECTION
WRA
SHEET NO.
2-175A

N:\31987-00A\Contract_I-95\C&D\Bridge\BRI-748_DM05a.dgn
5/31/2019 12:12:09 PM

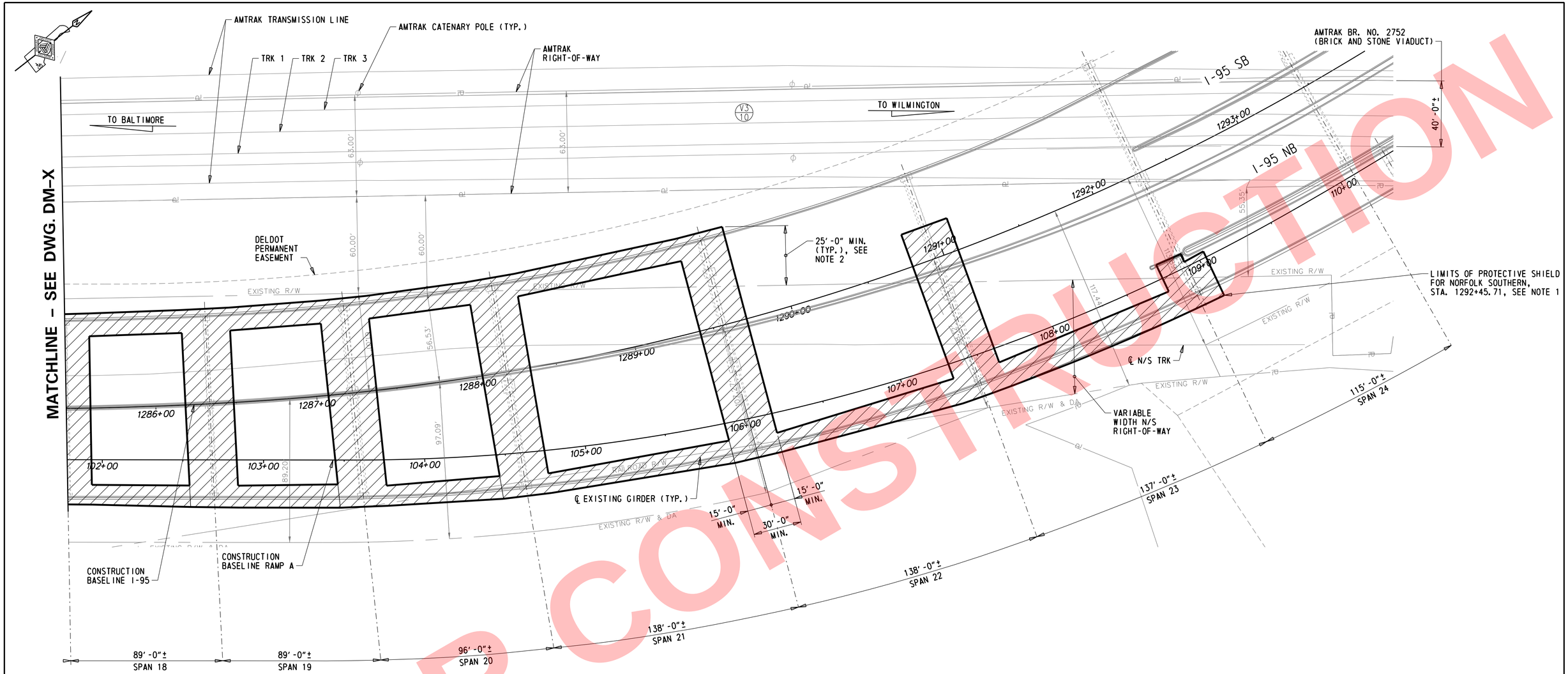

NORFOLK SOUTHERN RAILROAD PROTECTIVE SHIELD PLAN

NOT FOR CONSTRUCTION

KEY:

V3/T0 AMTRAK VALUATION SECTION & SHEET NUMBER

LEGEND:

NORFOLK SOUTHERN RAILROAD PROTECTIVE SHIELD (ITEM 604001)

NORFOLK SOUTHERN RAILROAD PROTECTIVE SHIELD NOTES:

1. RAILROAD PROTECTIVE SHIELD IS ONLY SHOWN IN AREAS THAT AFFECT NORFOLK SOUTHERN RAILROAD. THE REQUIREMENTS OF SECTION 604 STILL APPLY TO OTHER AREAS WHERE VEHICLES AND PEDESTRIANS REQUIRE PROTECTION.
2. LIMITS OF RAILROAD PROTECTIVE SHIELD SHALL EXTEND 25 FEET BEYOND THE CENTERLINE OF TRACK OR 25 FEET BEYOND THE RAILROAD RIGHT-OF-WAY, WHICHEVER IS GREATER.
3. CONTRACTOR SHALL SUBMIT SHOP DRAWINGS AND CALCULATIONS FOR APPROVAL IN ACCORDANCE WITH SUBSECTION 604.03.1, THE LATEST EDITION OF THE NORFOLK SOUTHERN RAILROAD PUBLIC PROJECTS MANUAL, AND ITEM 801501 - MAINTENANCE OF RAILROAD TRAFFIC NORFOLK SOUTHERN.
4. RAILROAD PROTECTIVE SHIELD SHALL BE IN ACCORDANCE WITH SECTION 604 AND WILL BE PAID FOR UNDER ITEM 604001 - PROTECTIVE SHIELD.

N:\31987-004\Contract I-95\CADD\Bridge\BR1-748_DM05b.dgn
5/31/2019 12:12:11 PM

ADDENDA / REVISIONS	

SCALE
0 30 60 90
FEET

REHABILITATION OF I-95 FROM I-495 TO NORTH OF BRANDYWINE RIVER BRIDGE

CONTRACT	BRIDGE NO. 1 748 059
T201407404	DESIGNED BY: DAN
COUNTY	CHECKED BY: WAG
NEW CASTLE	

RAILROAD PROTECTIVE SHIELD LAYOUT PLAN NORFOLK SOUTHERN – 2

DM-04B

SECTION	SHEET NO.
WRA	2-175B

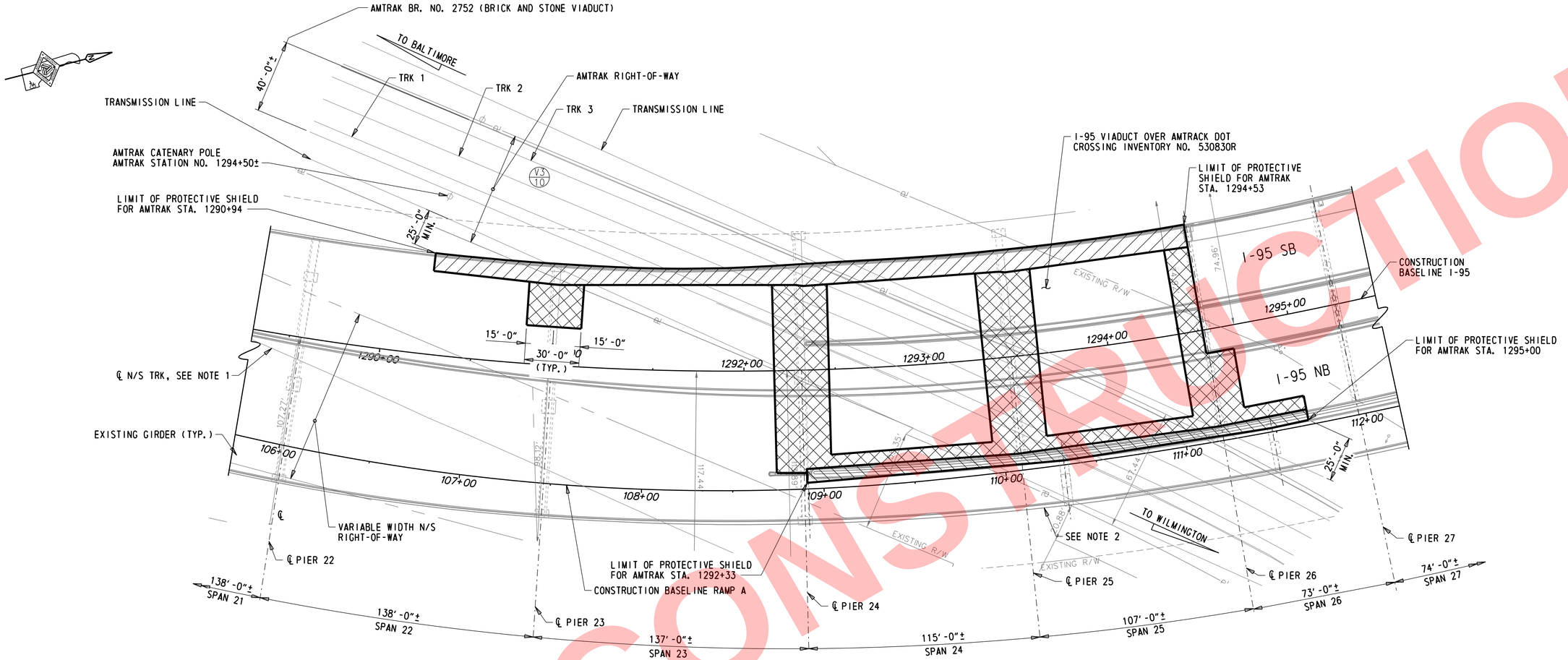

AMTRAK RAILROAD PROTECTIVE SHIELD PLAN

KEY:

(V3/10) AMTRAK VALUATION SECTION & SHEET NUMBER

LEGEND:

- RAILROAD PROTECTIVE SHIELD TYPE I, SEE DWG. DM-XX (ITEM 604001)
- RAILROAD PROTECTIVE SHIELD TYPE II, SEE DWG. DM-XX (ITEM 604001)
- RAILROAD PROTECTIVE SHIELD TYPE III, SEE DWG. DM-XX (ITEM 604001)

AMTRAK RAILROAD PROTECTIVE SHIELD NOTES:

1. THE RAILROAD PROTECTIVE SHIELD SHOWN ON THIS SHEET ONLY APPLIES TO AREAS OVER AMTRAK. FOR LAYOUT OF RAILROAD PROTECTIVE SHIELD OVER NORFOLK SOUTHERN RAILROAD, SEE DWGS. DM-XX AND DM-XX.
2. SEE DWG. I-749 DM-01 FOR ADDITIONAL RAILROAD PROTECTIVE SHIELD LAYOUT PLAN AT RAMP A BR 1-749.
3. AMTRAK APPROVED (PENDING) PROTECTVE SHIELD HAS BEEN DESIGNED AND DETAILED ON DWGS. DM-06 THROUGH DM-09. CONTRACTOR SHALL SUBMIT SHOP DRAWINGS FOR APPROVAL IN ACCORDANCE WITH SUBSECTION 604.03.1 EXCEPT CALCULATIONS WILL NOT BE REQUIRED. IF CONTRACTOR ELECTS TO MAKE CHANGES TO APPROVED DESIGN OR DESIGN AN ALTERNATE SYSTEM, IT SHALL BE DESIGNED IN ACCORDANCE WITH SECTION 604 AND AMTRAK CRITERIA AND SUBMITTED TO THE ENGINEER AND AMTRAK FOR APPROVAL. ANY DELAYS DUE TO APPROVAL OF CHANGES OR ALTERNATE SYSTEM WILL NOT BE GROUNDS FOR TIME EXTENSION ON CONTRACT.
4. PER AMTRAK I&C SPECIFICATION SECTION 01520A, LIVE LOAD FOR TEMPORARY PROTECTION SHIELD IS 100 PSF.
5. AASHTO GUIDE DESIGN SPECIFICATIONS FOR BRIDGE TEMPORARY WORKS ARTICLE 2.2.5 WITH 2008 INTERIMS WAS USED TO DETERMINE THE WIND LOAD. WIND SPEED WAS ASSUMED TO BE 70 MPH AND THE HEIGHT OF THE TEMPORARY SHIELD WAS ASSUMED TO BE LESS THAN 40' ABOVE GROUND.
6. STRUCTURAL STEEL INCLUDING SHIMS SHALL CONFORM TO ASTM A709 GRADE 50.
7. TIMBER SHALL BE SOUTHERN YELLOW PINE NO. 2 OR APPROVED EQUAL.
8. ROOF DECKING SHALL BE FROM THE FOLLOWING MANUFACTURER'S OR APPROVED EQUAL:
   A. DACS INC.
   B. ASC STEEL ROOF DECK
   C. VERCO DECKING INC.
9. METAL SCREWS SHALL BE FROM FOLLOWING MANUFACTURER'S OR APPROVED EQUAL:
   A. SIMPSON STRONG-TIE
   B. HILTI INC.
   C. ITW BUILDEX
10. ALL BOLTS SHALL CONFROM TO ASTM A325.
11. ALL WASHER SHALL CONFORM TO ASTM F436.
12. ALL PLATES SHALL CONFORM TO ASTM A709.
13. ALL NUTS SHALL CONFORM TO ASTM A563.
14. ALL THREADED ROD SHALL CONFORM TO ASTM A307.
15. NO WELDING TO EXISTING STEEL WILL BE PERMITTED.
16. RAILROAD PROTECTIVE SHIELD TYPE I, TYPE II, AND TYPE III SHALL BE IN ACCORDANCE WITH SECTION 604 AND WILL BE PAID FOR UNDER ITEM 604001 - PROTECTIVE SHIELD.

NOT FOR CONSTRUCTION

N:\31887-004\Contract_I-95\CADD\Bridge\BR1-748_DM05.dgn
5/31/2019 12:12:13 PM

ADDENDA / REVISIONS	

SCALE
0 30 60 90
FEET

REHABILITATION OF I-95 FROM I-495 TO NORTH OF BRANDYWINE RIVER BRIDGE

CONTRACT	BRIDGE NO.	1 748 059
T201407404	DESIGNED BY: DAN	
COUNTY	CHECKED BY: WAG	
NEW CASTLE		

RAILROAD PROTECTIVE SHIELD LAYOUT PLAN AMTRAK

DM-05
SECTION WRA
SHEET NO. 2-176

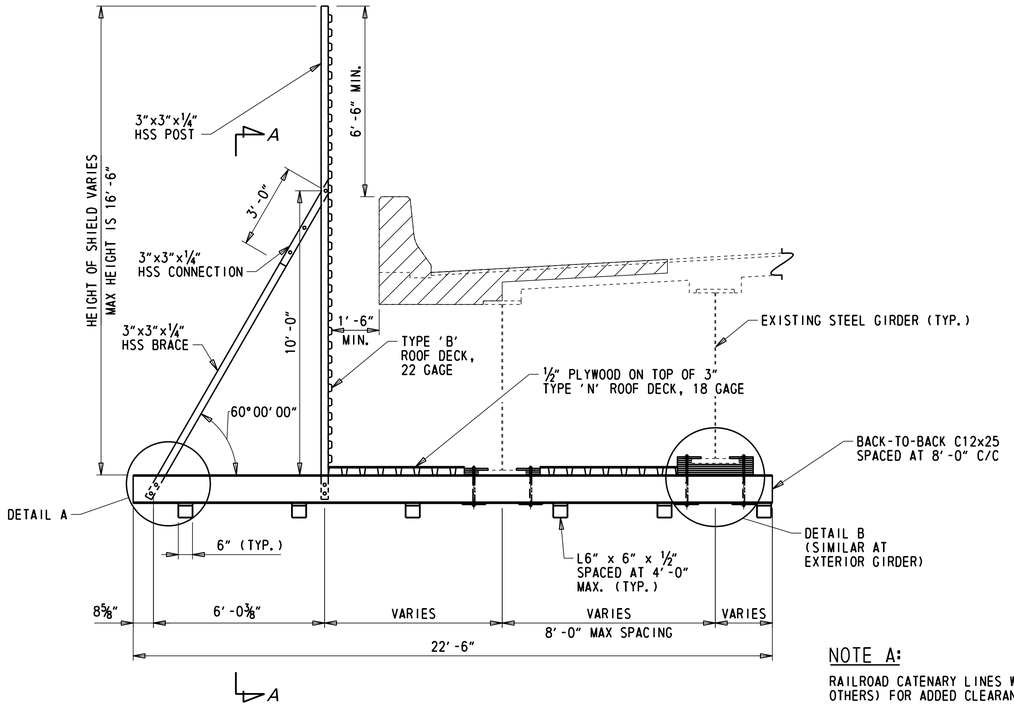

RAILROAD PROTECTIVE SHIELD - TYPE I

⅜" = 1'-0"

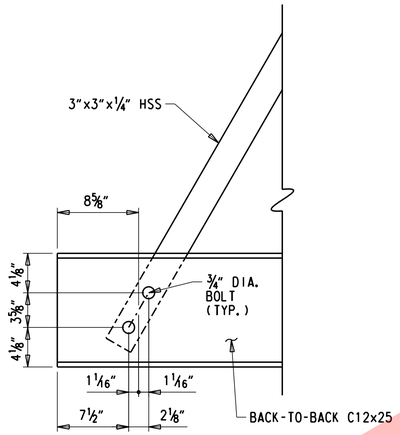

DETAIL A

1½" = 1'-0"

NOTE A:

RAILROAD CATENARY LINES WILL BE REPROFILED (BY OTHERS) FOR ADDED CLEARANCE TO DEMOLITION SHIELD.

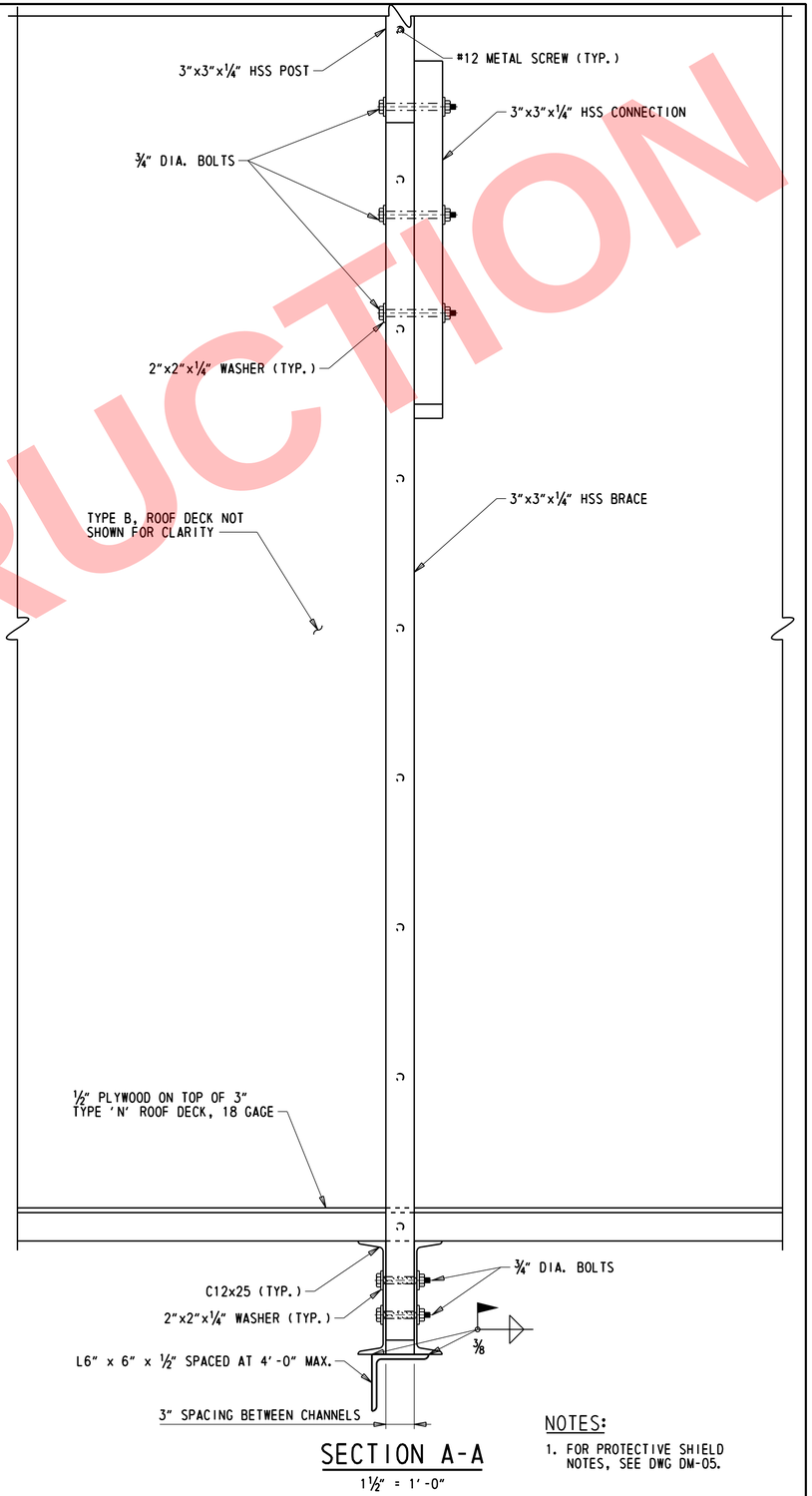

SECTION A-A

1½" = 1'-0"

NOTES:

1. FOR PROTECTIVE SHIELD NOTES, SEE DWG DM-05.

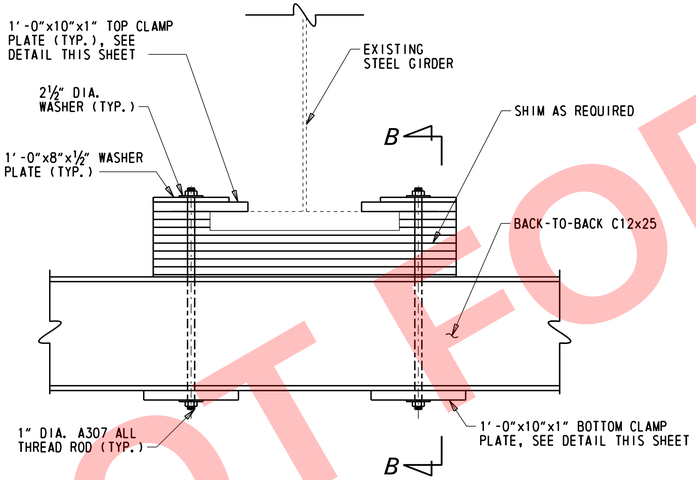

DETAIL B

1½" = 1'-0"

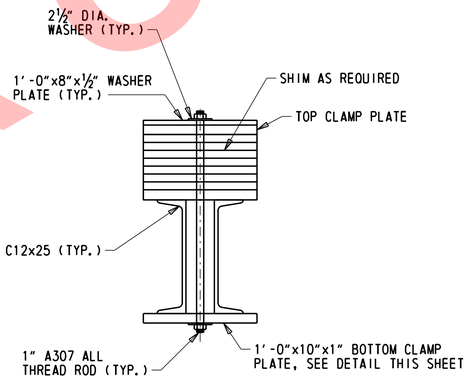

SECTION B-B

1½" = 1'-0"

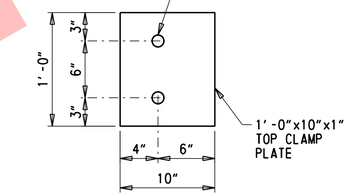

TOP CLAMP PLATE DETAIL

1½" = 1'-0"

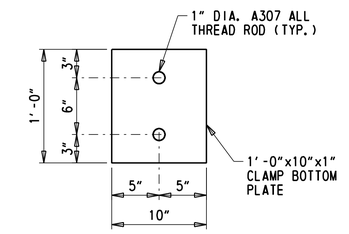

BOTTOM CLAMP PLATE DETAIL

1½" = 1'-0"

NOT FOR CONSTRUCTION

N:\31987-001A\Contract_I-95\CADD\Bridge\BRI-748_DM06.dgn
5/31/2019 12:12:13 PM

ADDENDA / REVISIONS	SCALE AS NOTED	REHABILITATION OF I-95 FROM I-495 TO NORTH OF BRANDYWINE RIVER BRIDGE	CONTRACT T201407404	BRIDGE NO. 1 748 059	RAILROAD PROTECTIVE SHIELD TYPE I	DM-06
			COUNTY NEW CASTLE	DESIGNED BY: DAN		SECTION WRA
				CHECKED BY: WAG		SHEET NO. 2-177

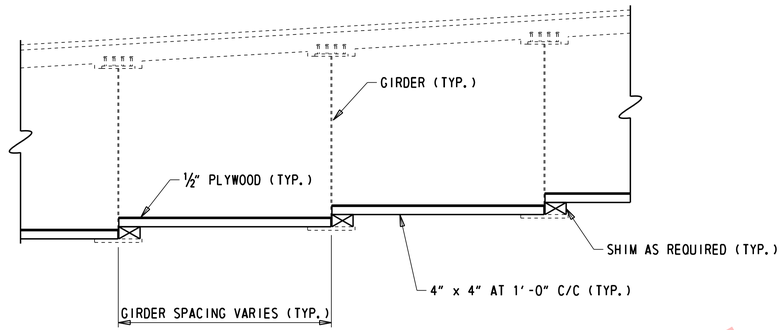

RAILROAD PROTECTIVE SHIELD - TYPE II

⅜" = 1'-0"

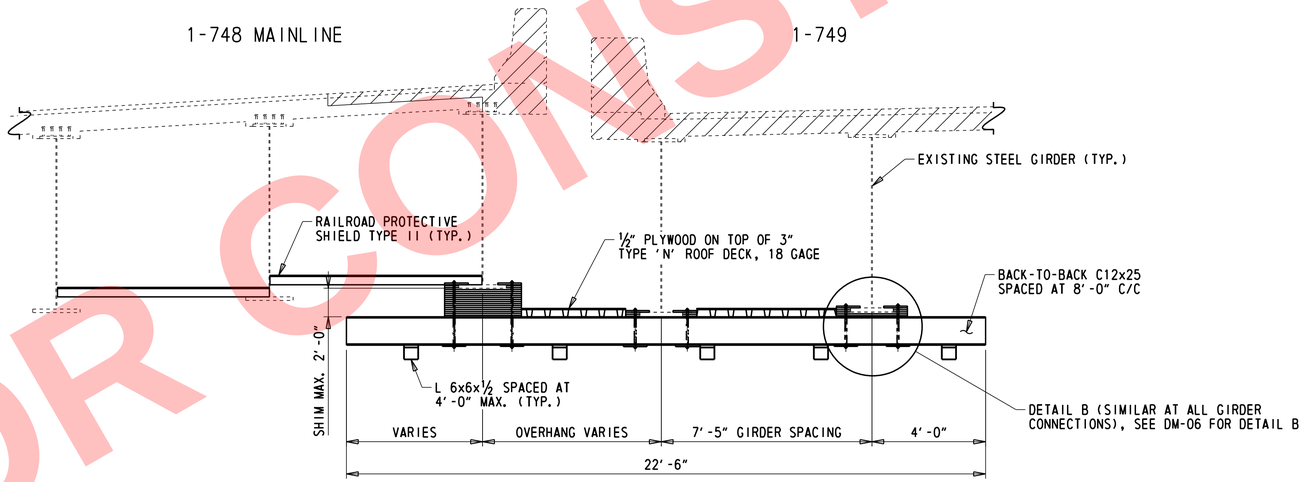

RAILROAD PROTECTIVE SHIELD - TYPE III - STA. 1293+33 TO STA. 1293+65

⅜" = 1'-0"

NOTES:

1. FOR PROTECTIVE SHIELD NOTES, SEE DM-05.

NOT FOR CONSTRUCTION

N:\31987-004\Contract I-95\CADD\Bridge\BR1-748_DM07.dgn
5/31/2019 12:12:14 PM

ADDENDA / REVISIONS		SCALE AS NOTED	REHABILITATION OF I-95 FROM I-495 TO NORTH OF BRANDYWINE RIVER BRIDGE	CONTRACT T201407404	BRIDGE NO. 1 748 059	RAILROAD PROTECTIVE SHIELD TYPES II & III	DM-07 SECTION WRA
				COUNTY NEW CASTLE	DESIGNED BY: DAN		SHEET NO. 2-178
					CHECKED BY: WAG		

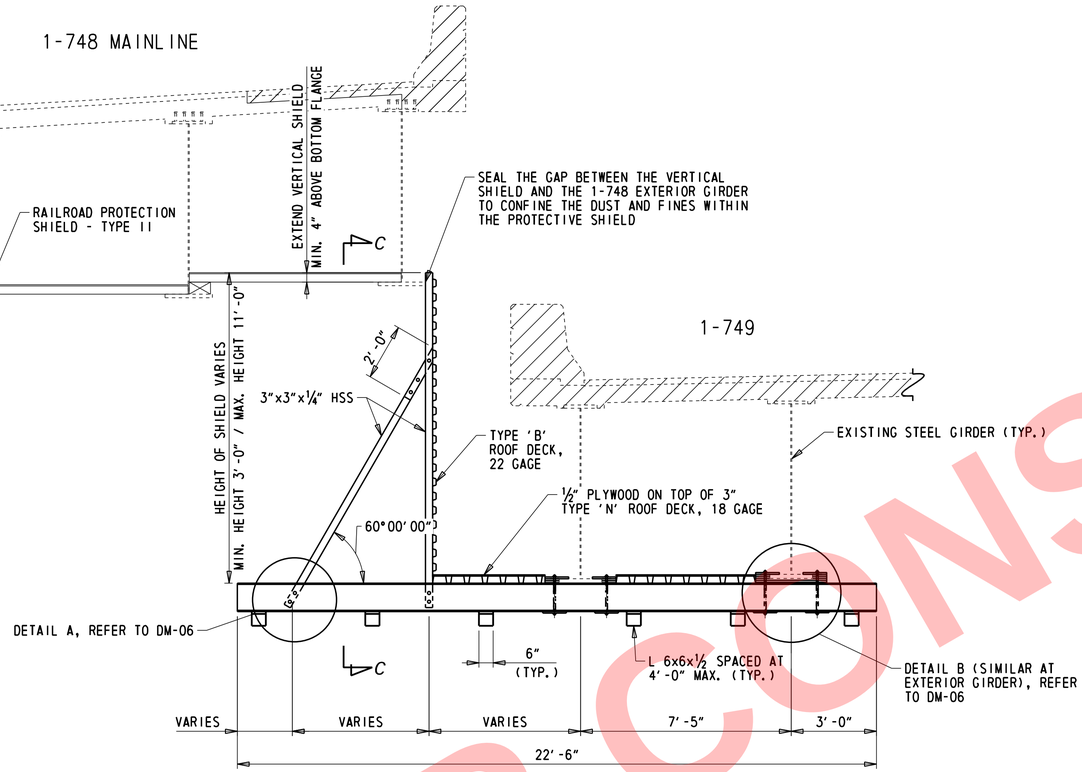

RAILROAD PROTECTIVE SHIELD - TYPE III - STA. 1293+65 TO STA. 1295+23

⅜" = 1'-0"

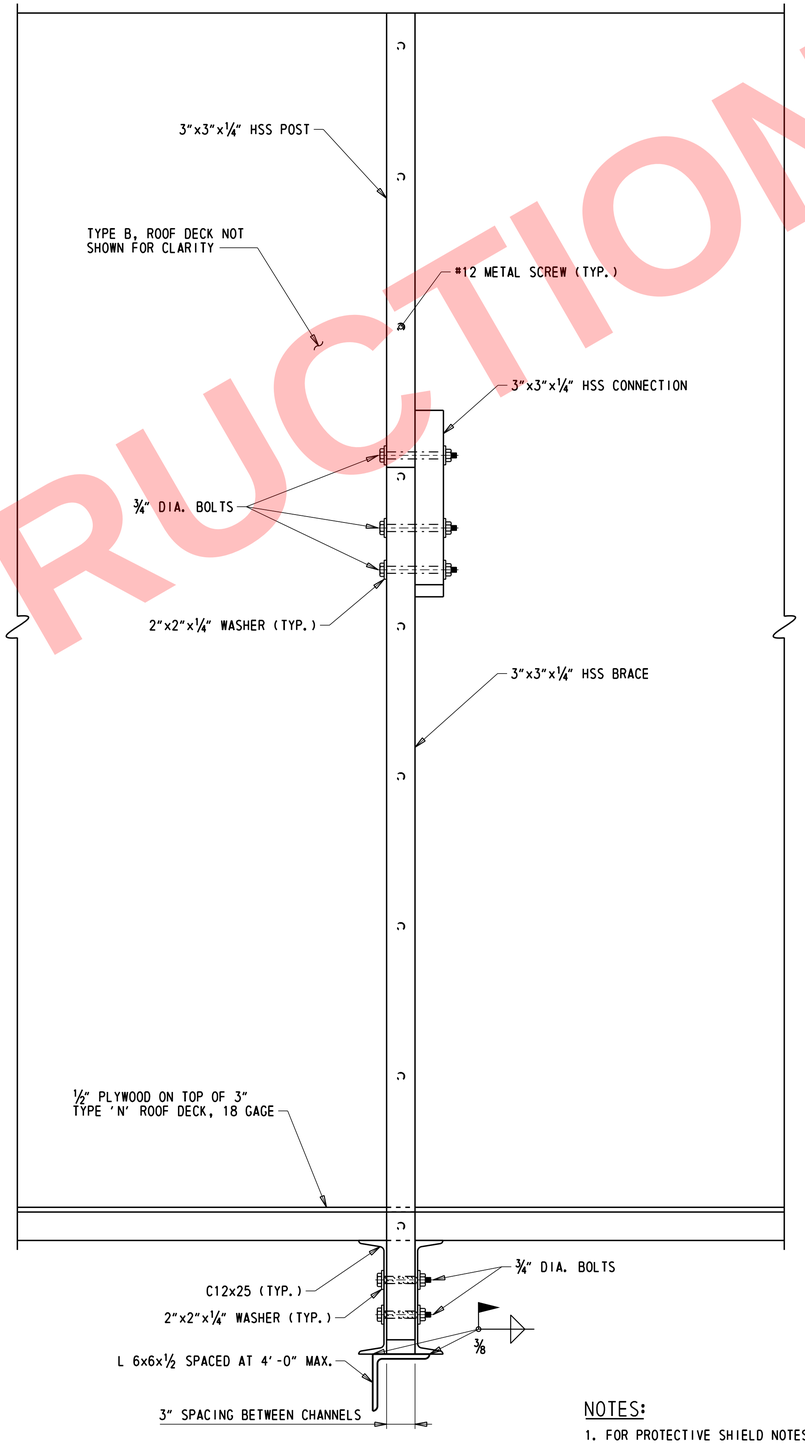

SECTION D-D

1½" = 1'-0"

NOTES:

1. FOR PROTECTIVE SHIELD NOTES, SEE DM-05.

NOT FOR CONSTRUCTION

N:\31987-004\Contract I-95\CADD\Bridge\BR1-748_DM08.dgn
5/31/2019 12:12:16 PM

ADDENDA / REVISIONS		SCALE AS NOTED	REHABILITATION OF I-95 FROM I-495 TO NORTH OF BRANDYWINE RIVER BRIDGE	CONTRACT T201407404	BRIDGE NO. 1 748 059	RAILROAD PROTECTIVE SHIELD TYPE III	DM-08 SECTION WRA
				COUNTY NEW CASTLE	DESIGNED BY: DAN		SHEET NO. 2-179
					CHECKED BY: WAG		

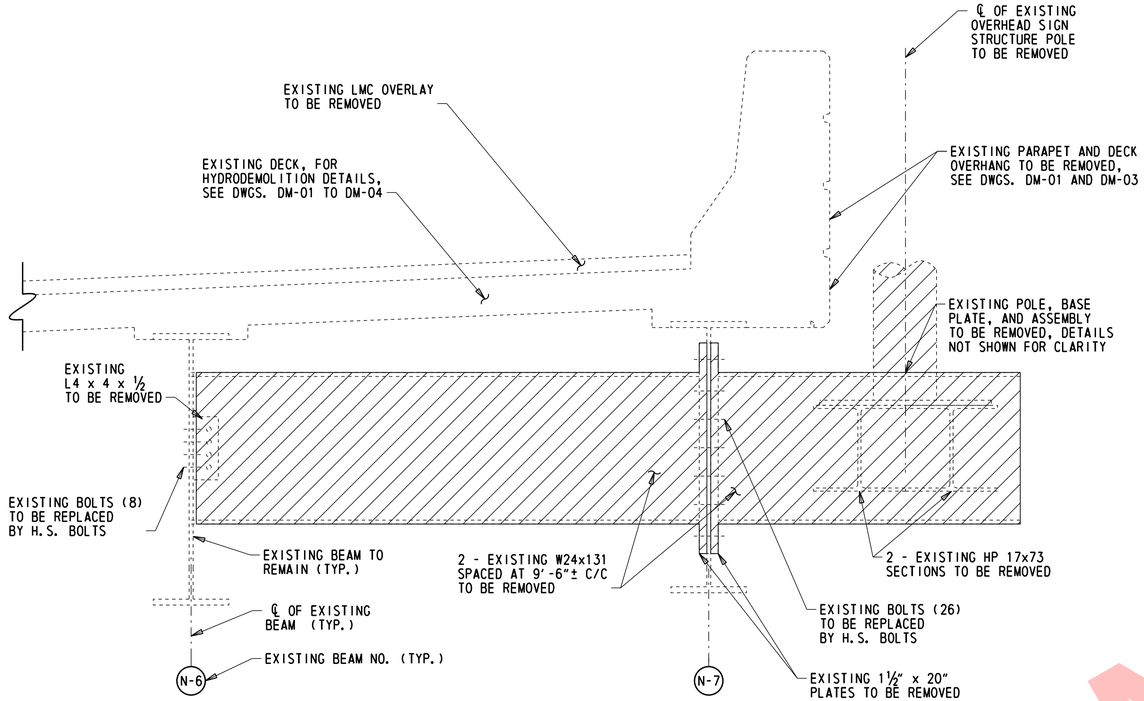

EXISTING BRACKET REMOVAL DETAIL TYPE 1

1" = 1'-0"

(DETAIL SHOWN AS SPAN 18, SPAN 23 SIMILAR)

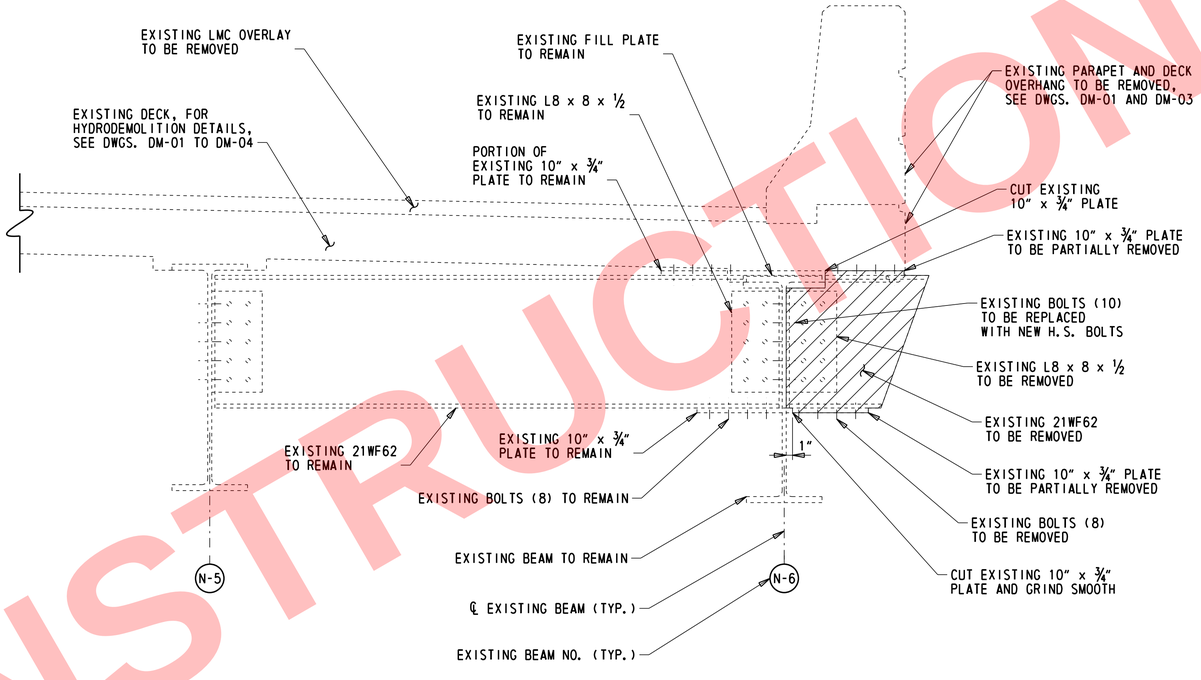

EXISTING BRACKET REMOVAL DETAIL TYPE 2

1" = 1'-0"

(DETAIL SHOWN AS SPAN 34N, OTHER LOCATIONS SIMILAR)

LEGEND:

LIMITS OF EXISTING STRUCTURE TO BE REMOVED

REMOVE STRUCTURAL SIGN SUPPORT BRACKET						
REPAIR	SPAN	GIRDER	EXISTING PLANS CONTRACT NO.	EXISTING PLANS REF. NO.	REMOVAL DETAIL	
28	0	N-6	I-2(12)	AGS-1	TYPE 3	
28	11	N-6	I-2(12)	EDS-1	TYPE 3	
28	18	N-7 & S-6	78-091-01	N/A	TYPE 1	•
21	23	N-10 & S-6	78-091-01	N/A	TYPE 1	
28	24	S-6	64-03-004	R1	TYPE 2	
28	34N	N-6	64-03-004	R-1	TYPE 2	
28	42N	N-6	64-03-004	EDS-2	TYPE 3	•
28	49N	N-6	64-03-004	OS-6	TYPE 2	
21	59N	N-1 & N-10	64-03-004	OS-2	TYPE 3	•

• SIGN STRUCTURES, POLE AND BASE PLATE TO BE REMOVED IN PRIOR CONTRACT BY OTHERS.

NOTES:

1. NEW H.S. BOLTS SHALL BE ASTM F3125 GR. A325, TYPE 1.
2. SEE EXISTING PLANS FOR ADDITIONAL SIGN SUPPORT DETAILS.
3. FOR TYPE 3 AND TYPE 4 REMOVAL DETAILS, SEE DWG. DM-10.
4. AFTER REMOVAL TOUCH-UP PAINT AS IN ACCORDANCE WITH SECTION 616 AND AS DIRECTED BY THE ENGINEER.

NOT FOR CONSTRUCTION

N:\31987-001\Contract_I-95\CADD\Bridge\BR1-748_DM09.dgn
5/31/2019 12:19:16 PM

ADDENDA / REVISIONS		SCALE AS NOTED	REHABILITATION OF I-95 FROM I-495 TO NORTH OF BRANDYWINE RIVER BRIDGE	CONTRACT T201407404	BRIDGE NO. 1 748 059	EXISTING BRACKET REMOVAL DETAILS – 1	DM-09 SECTION WRA
				COUNTY NEW CASTLE	DESIGNED BY: DAN		SHEET NO. 2-180
					CHECKED BY: WAG		

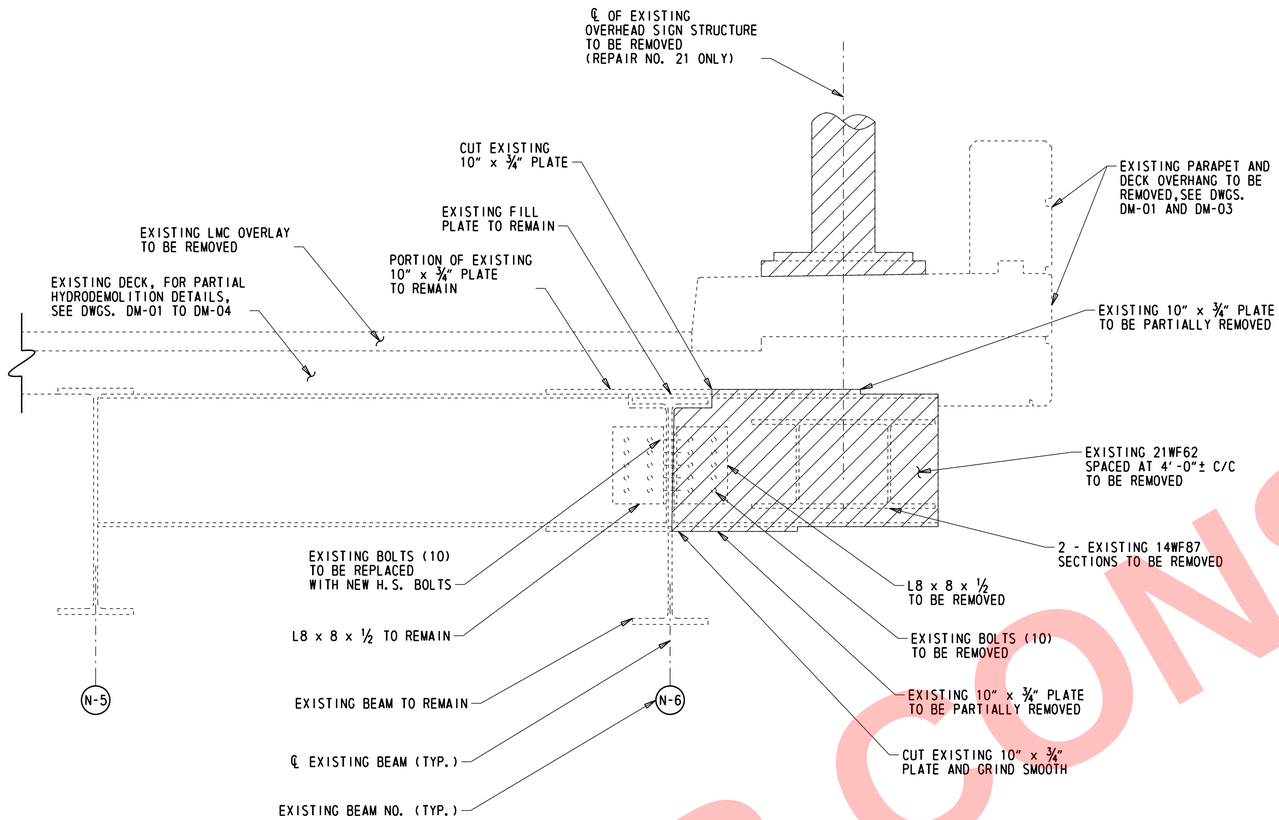

EXISTING BRACKET REMOVAL DETAIL TYPE 3

1" = 1'-0"

LEGEND:

LIMITS OF EXISTING STRUCTURE TO BE REMOVED

NOTES:

1. FOR NOTES SEE DWG. DM-09.

NOT FOR CONSTRUCTION

N:\31987-004\Control-I-95\CADD\Bridge\BR1-748_DM10.dgn
5/31/2019 12:12:17 PM

ADDENDA / REVISIONS		SCALE AS NOTED	REHABILITATION OF I-95 FROM I-495 TO NORTH OF BRANDYWINE RIVER BRIDGE	CONTRACT T201407404	BRIDGE NO. 1 748 059	EXISTING BRACKET REMOVAL DETAILS – 2	DM-10
				COUNTY NEW CASTLE	DESIGNED BY: DAN		SECTION WRA
					CHECKED BY: WAG		SHEET NO. 2-181

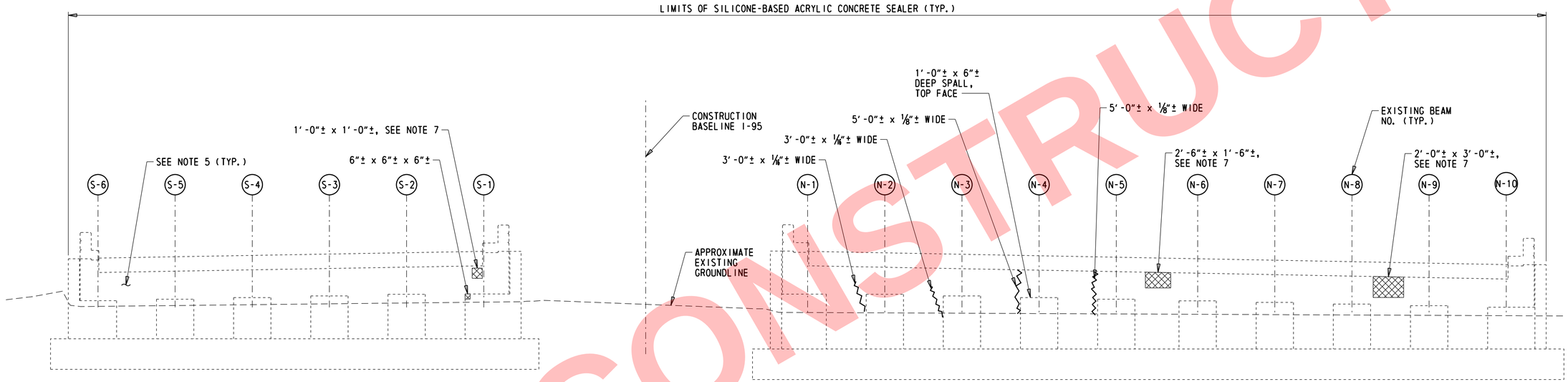

NORTH ABUTMENT ELEVATION

1/8" = 1'-0"

NOTE:
PILES NOT SHOWN FOR CLARITY.

LEGEND:

REPAIR OF CONCRETE STRUCTURES BY EPOXY INJECTION

DEEP SPALL REPAIR

CONCRETE REPAIR QUANTITIES
NORTH ABUTMENT

REPAIR Nº	ITEM Nº	ITEM TITLE	UNIT	QUANTITY
34	628001	REPAIR OF CONCRETE STRUCTURES BY EPOXY INJECTION	LF	16
37	628041	DEEP SPALL REPAIR	CF	4
41	613001	SILICONE-BASED ACRYLIC CONCRETE SEALER	SF	824

NOTE: QUANTITIES SHOWN ARE TOTAL PER ABUTMENT AND DO NOT INCLUDE CONTINGENT PERCENTAGE.

NOTES:

1. THE LOCATION AND QUANTITIES OF THE REPAIRS SHOWN ON THIS DRAWING ARE BASED ON INSPECTION FIELD NOTES (SEE NOTE 14 ON DWG. PN-01). PRIOR TO STARTING EACH REPAIR, THE LIMITS SHALL BE VERIFIED BY THE CONTRACTOR IN THE PRESENCE OF THE ENGINEER.
2. WHERE CRACKS AND SPALLS EXIST CONCURRENTLY, COMPLETE THE SPALL REPAIR COMPLETELY REMOVING THE ASSOCIATED CRACK. IF THE CRACK EXTENDS LESS THAN 1'-0" BEYOND THE LIMITS OF THE SPALL REPAIR, EXTEND THE LIMITS OF THE SPALL REPAIR TO ENCOMPASS THE CRACK. IF THE CRACK EXTENDS DEEPER THAN THE LIMITS OF CONCRETE REMOVAL, THE CONTRACTOR SHALL REMOVE ADDITIONAL CONCRETE UNTIL THE CRACK IS FULLY REMOVED. IF THE DEPTH OF REMOVAL REACHES MORE THAN 6" FROM THE ORIGINAL FACE OF CONCRETE, ALL WORK ON THE REPAIR SHALL STOP AND THE ENGINEER SHALL BE NOTIFIED IMMEDIATELY. IF THE CRACK EXTENDS MORE THAN 1'-0" BEYOND THE LIMITS OF THE SPALL REPAIR INTO SOUND CONCRETE THE CRACK SHALL BE REPAIRED BY EPOXY INJECTION AND PAID FOR UNDER ITEM 628001 BEYOND THE LIMITS OF THE SPALL REPAIR. CRACKS LOCATED WITHIN SPALL REPAIRS WILL NOT BE PAID FOR AND WILL BE CONSIDERED INCIDENTAL TO ITEM 628041.
3. FOR CONCRETE REPAIR DETAILS, SEE DWG. PN-03.
4. CONTRACTOR SHALL TAKE CARE TO PROTECT THE BEARINGS DURING APPLICATION OF THE SILICONE-BASED ACRYLIC CONCRETE SEALER. ANY CLEAN-UP REQUIRED TO REMOVE THE SEALER FROM THE BEARINGS WILL BE AT NO ADDITIONAL COST TO THE DEPARTMENT AND TO THE SATISFACTION OF THE ENGINEER.
5. SILICONE-BASED ACRYLIC CONCRETE SEALER SHALL BE APPLIED TO ALL EXPOSED CONCRETE ABUTMENT SURFACES. PAYMENT WILL BE MADE UNDER ITEM 613001.
6. SILICONE-BASED ACRYLIC CONCRETE SEALER SHALL ONLY BE APPLIED AFTER ALL CONCRETE REPAIRS ARE COMPLETED AT EACH ABUTMENT.
7. REPAIRS TO BACKWALL SHALL BE PERFORMED IN CONJUNCTION WITH BACKWALL RECONSTRUCTION. SEE DETAILS ON DWGS. EX-05 AND EX-06

NOT FOR CONSTRUCTION

ADDENDA / REVISIONS		SCALE AS NOTED	REHABILITATION OF I-95 FROM I-495 TO NORTH OF BRANDYWINE RIVER BRIDGE	CONTRACT T201407404	BRIDGE NO. 1 748 059	NORTH ABUTMENT CONCRETE REPAIR DETAILS	AB-02
				COUNTY NEW CASTLE	DESIGNED BY: DAN		SECTION WRA
					CHECKED BY: WAG		SHEET NO. 2-193

N:\31987-00A\Contract_I-95\CADD\Bridge\BRI-748_AB02.dgn
5/31/2019 12:12:18 PM

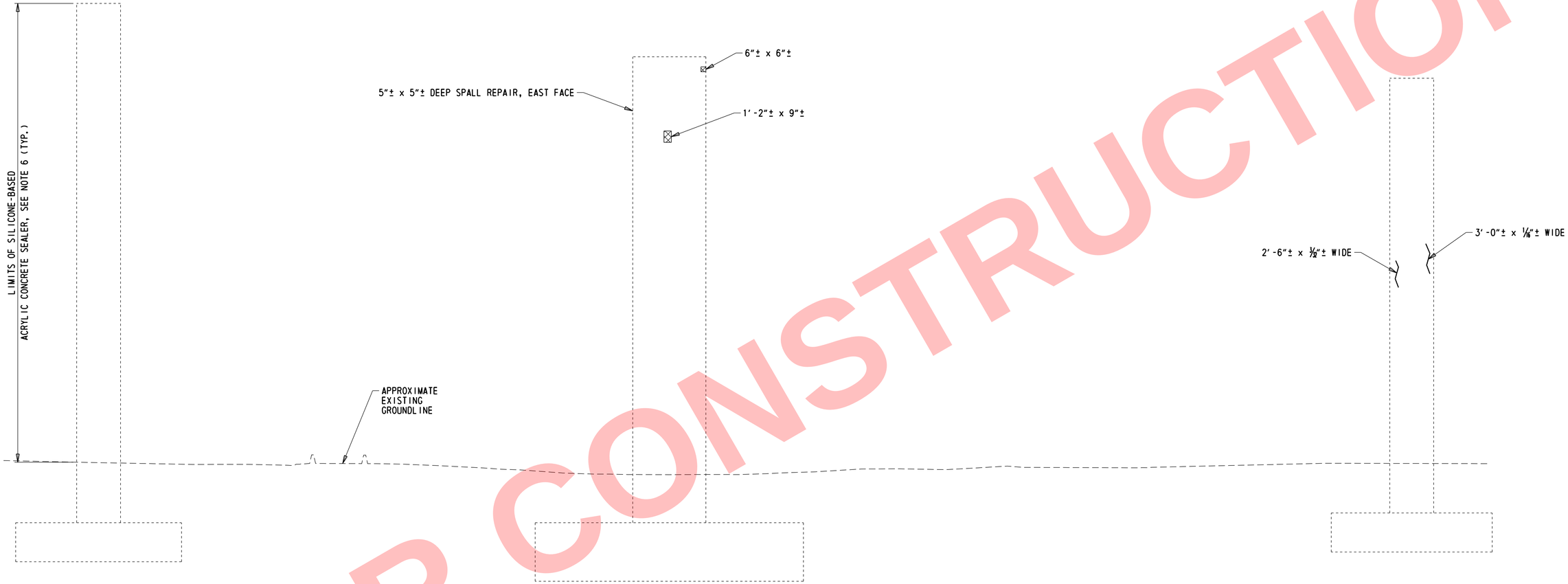

NOTE:
PILES NOT SHOWN FOR CLARITY.

PIER 23 - NORTH ELEVATION

1/16" = 1'-0"

LEGEND:

REPAIR OF CONCRETE STRUCTURES BY EPOXY INJECTION

DEEP SPALL REPAIR

NOTES:

1. THE LOCATION AND QUANTITIES OF THE REPAIRS SHOWN ON THIS DRAWING ARE BASED ON INSPECTION FIELD NOTES (SEE NOTE 14 ON DWG. PN-01). PRIOR TO STARTING EACH REPAIR, THE LIMITS SHALL BE VERIFIED BY THE CONTRACTOR IN THE PRESENCE OF THE ENGINEER.
2. WHERE CRACKS AND SPALLS EXIST CONCURRENTLY, COMPLETE THE SPALL REPAIR COMPLETELY REMOVING THE ASSOCIATED CRACK. IF THE CRACK EXTENDS LESS THAN 1'-0" BEYOND THE LIMITS OF THE SPALL REPAIR, EXTEND THE LIMITS OF THE SPALL REPAIR TO ENCOMPASS THE CRACK. IF THE CRACK EXTENDS DEEPER THAN THE LIMITS OF CONCRETE REMOVAL, THE CONTRACTOR SHALL REMOVE ADDITIONAL CONCRETE UNTIL THE CRACK IS FULLY REMOVED. IF THE DEPTH OF REMOVAL REACHES MORE THAN 6" FROM THE ORIGINAL FACE OF CONCRETE, ALL WORK ON THE REPAIR SHALL STOP AND THE ENGINEER SHALL BE NOTIFIED IMMEDIATELY. IF THE CRACK EXTENDS MORE THAN 1'-0" BEYOND THE LIMITS OF THE SPALL REPAIR INTO SOUND CONCRETE THE CRACK SHALL BE REPAIRED BY EPOXY INJECTION AND PAID FOR UNDER ITEM 628001 BEYOND THE LIMITS OF THE SPALL REPAIR. CRACKS LOCATED WITHIN SPALL REPAIRS WILL NOT BE PAID FOR AND WILL BE CONSIDERED INCIDENTAL TO ITEM 628041 - DEEP SPALL REPAIR.
3. FOR CONCRETE REPAIR DETAILS, SEE DWG. PN-03.
4. EPOXY CONCRETE SEALER SHALL BE APPLIED TO THE BEAM SEATS AND BEARING PEDESTALS. PAYMENT WILL BE MADE UNDER ITEM 613000. CONTRACTOR SHALL REMOVE DEBRIS FROM THE BEAM SEAT PRIOR TO APPLICATION OF EPOXY CONCRETE SEALER. PAYMENT FOR THIS WORK WILL BE INCIDENTAL TO ITEM 613000.
5. CONTRACTOR SHALL TAKE CARE TO PROTECT THE BEARINGS DURING APPLICATION OF THE EPOXY CONCRETE SEALER. ANY CLEAN-UP REQUIRED TO REMOVE THE SEALER FROM THE BEARINGS WILL BE AT NO ADDITIONAL COST TO THE DEPARTMENT AND TO THE SATISFACTION OF THE ENGINEER.
6. SILICONE-BASED ACRYLIC CONCRETE SEALER SHALL BE APPLIED TO ALL EXPOSED CONCRETE PIER SURFACES THAT DO NOT REQUIRE EPOXY SEALER. PAYMENT WILL BE MADE UNDER ITEM 613001.
7. EPOXY CONCRETE SEALER AND SILICONE-BASED ACRYLIC CONCRETE SEALER SHALL ONLY BE APPLIED AFTER ALL CONCRETE REPAIRS ARE COMPLETED AT EACH PIER..
8. FOR PLAN VIEW AND CONCRETE REPAIR QUANTITIES SEE DWG. PR-035.

NOT FOR CONSTRUCTION

N:\31987-004\Contract_I-95\CADD\Bridge\BR1-748_PR036.dgn
5/31/2019 12:12:18 PM

ADDENDA / REVISIONS		SCALE AS NOTED	REHABILITATION OF I-95 FROM I-495 TO NORTH OF BRANDYWINE RIVER BRIDGE	CONTRACT T201407404	BRIDGE NO. 1 748 059	PIER 23 – CONCRETE REPAIR DETAILS (NORTH ELEVATION)	PR-36
				COUNTY NEW CASTLE	DESIGNED BY: DAN		SECTION WRA
					CHECKED BY: WAG		SHEET NO. 2-230

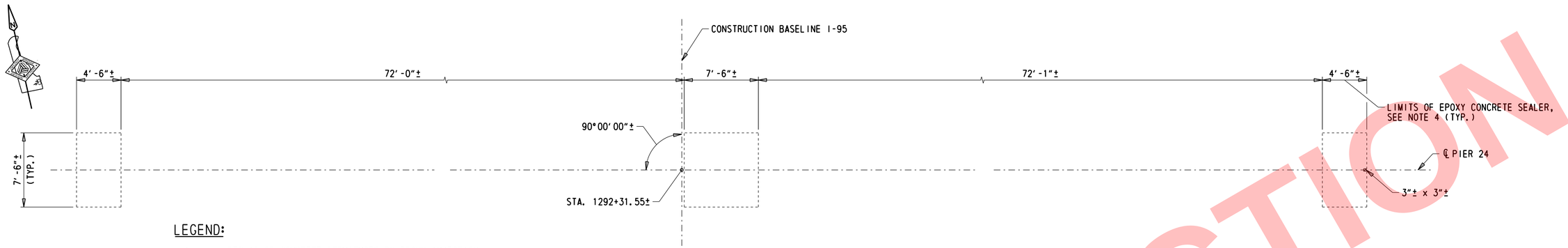

LEGEND:

REPAIR OF CONCRETE STRUCTURES BY EPOXY INJECTION

DEEP SPALL REPAIR

PIER 24 - PLAN VIEW

1/16" = 1'-0"

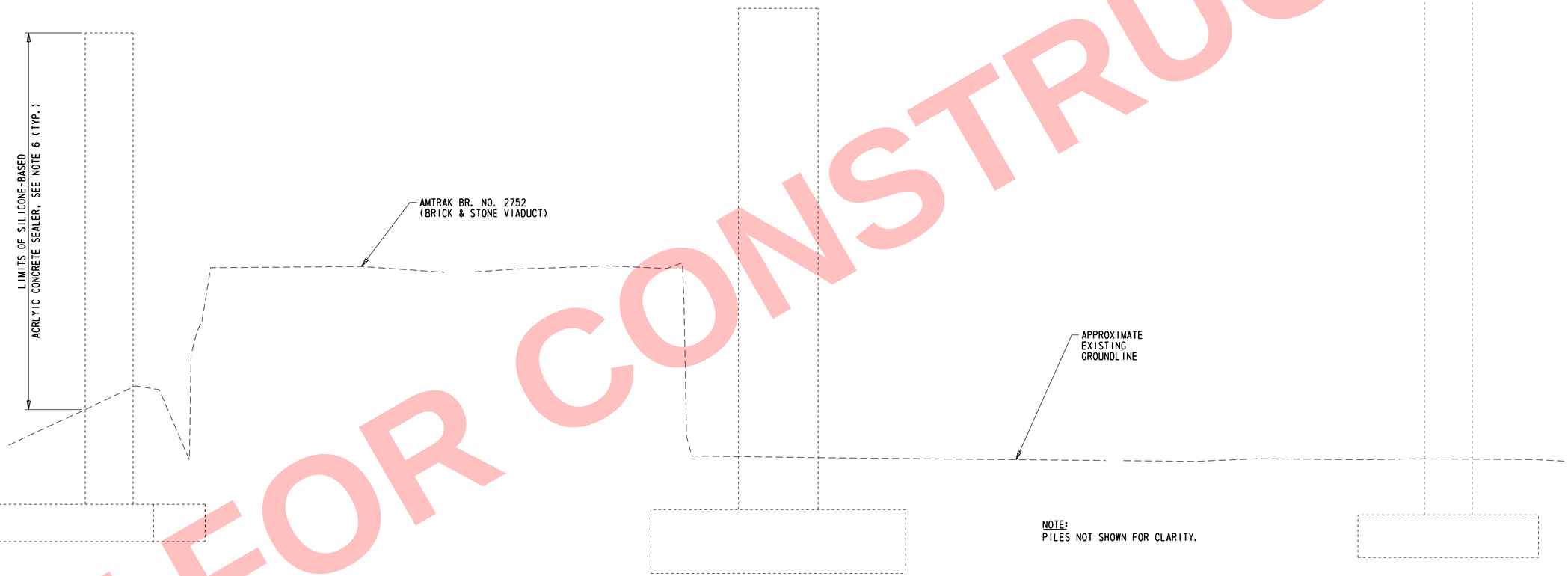

NOTE:
PILES NOT SHOWN FOR CLARITY.

PIER 24 - SOUTH ELEVATION

1/16" = 1'-0"

NOTES:

1. THE LOCATION AND QUANTITIES OF THE REPAIRS SHOWN ON THIS DRAWING ARE BASED ON INSPECTION FIELD NOTES (SEE NOTE 14 ON DWG. PN-01). PRIOR TO STARTING EACH REPAIR, THE LIMITS SHALL BE VERIFIED BY THE CONTRACTOR IN THE PRESENCE OF THE ENGINEER.
2. WHERE CRACKS AND SPALLS EXIST CONCURRENTLY, COMPLETE THE SPALL REPAIR COMPLETELY REMOVING THE ASSOCIATED CRACK. IF THE CRACK EXTENDS LESS THAN 1'-0" BEYOND THE LIMITS OF THE SPALL REPAIR, EXTEND THE LIMITS OF THE SPALL REPAIR TO ENCOMPASS THE CRACK. IF THE CRACK EXTENDS DEEPER THAN THE LIMITS OF CONCRETE REMOVAL, THE CONTRACTOR SHALL REMOVE ADDITIONAL CONCRETE UNTIL THE CRACK IS FULLY REMOVED. IF THE DEPTH OF REMOVAL REACHES MORE THAN 6" FROM THE ORIGINAL FACE OF CONCRETE, ALL WORK ON THE REPAIR SHALL STOP AND THE ENGINEER SHALL BE NOTIFIED IMMEDIATELY. IF THE CRACK EXTENDS MORE THAN 1'-0" BEYOND THE LIMITS OF THE SPALL REPAIR INTO SOUND CONCRETE THE CRACK SHALL BE REPAIRED BY EPOXY INJECTION AND PAID FOR UNDER ITEM 628001 BEYOND THE LIMITS OF THE SPALL REPAIR. CRACKS LOCATED WITHIN SPALL REPAIRS WILL NOT BE PAID FOR AND WILL BE CONSIDERED INCIDENTAL TO ITEM 628041 - DEEP SPALL REPAIR.
3. FOR CONCRETE REPAIR DETAILS, SEE DWG. PN-03.
4. EPOXY CONCRETE SEALER SHALL BE APPLIED TO THE BEAM SEATS AND BEARING PEDESTALS. PAYMENT WILL BE MADE UNDER ITEM 613000. CONTRACTOR SHALL REMOVE DEBRIS FROM THE BEAM SEAT PRIOR TO APPLICATION OF EPOXY CONCRETE SEALER. PAYMENT FOR THIS WORK WILL BE INCIDENTAL TO ITEM 613000.
5. CONTRACTOR SHALL TAKE CARE TO PROTECT THE BEARINGS DURING APPLICATION OF THE EPOXY CONCRETE SEALER. ANY CLEAN-UP REQUIRED TO REMOVE THE SEALER FROM THE BEARINGS WILL BE AT NO ADDITIONAL COST TO THE DEPARTMENT AND TO THE SATISFACTION OF THE ENGINEER.
6. SILICONE-BASED ACRYLIC CONCRETE SEALER SHALL BE APPLIED TO ALL EXPOSED CONCRETE PIER SURFACES THAT DO NOT REQUIRE EPOXY SEALER. PAYMENT WILL BE MADE UNDER ITEM 613001.
7. EPOXY CONCRETE SEALER AND SILICONE-BASED ACRYLIC CONCRETE SEALER SHALL ONLY BE APPLIED AFTER ALL CONCRETE REPAIRS ARE COMPLETED AT EACH PIER.

CONCRETE REPAIR QUANTITIES
PIER 24

REPAIR Nº	ITEM Nº	ITEM TITLE	UNIT	QUANTITY
34	628001	REPAIR OF CONCRETE STRUCTURES BY EPOXY INJECTION	LF	0
37	628041	DEEP SPALL REPAIR	CF	1
41	613000	EPOXY CONCRETE SEALER	SF	78
41	613001	SILICONE-BASED ACRYLIC CONCRETE SEALER	SF	3266

NOTE: QUANTITIES SHOWN ARE TOTAL PER PIER AND DO NOT INCLUDE CONTINGENT PERCENTAGE.

NOT FOR CONSTRUCTION

N:\31987-004\Control I-95\CADD\Bridge\BR1-748_PRO37.dgn
5/31/2019 12:12:19 PM

ADDENDA / REVISIONS	

SCALE AS NOTED

REHABILITATION OF I-95 FROM I-495 TO NORTH OF BRANDYWINE RIVER BRIDGE

CONTRACT	BRIDGE NO. 1 748 059
T201407404	DESIGNED BY: DAN
COUNTY	CHECKED BY: WAG
NEW CASTLE	

PIER 24 – CONCRETE REPAIR DETAILS (SOUTH ELEVATION)

PR-37

SECTION	SHEET NO.
WRA	2-231

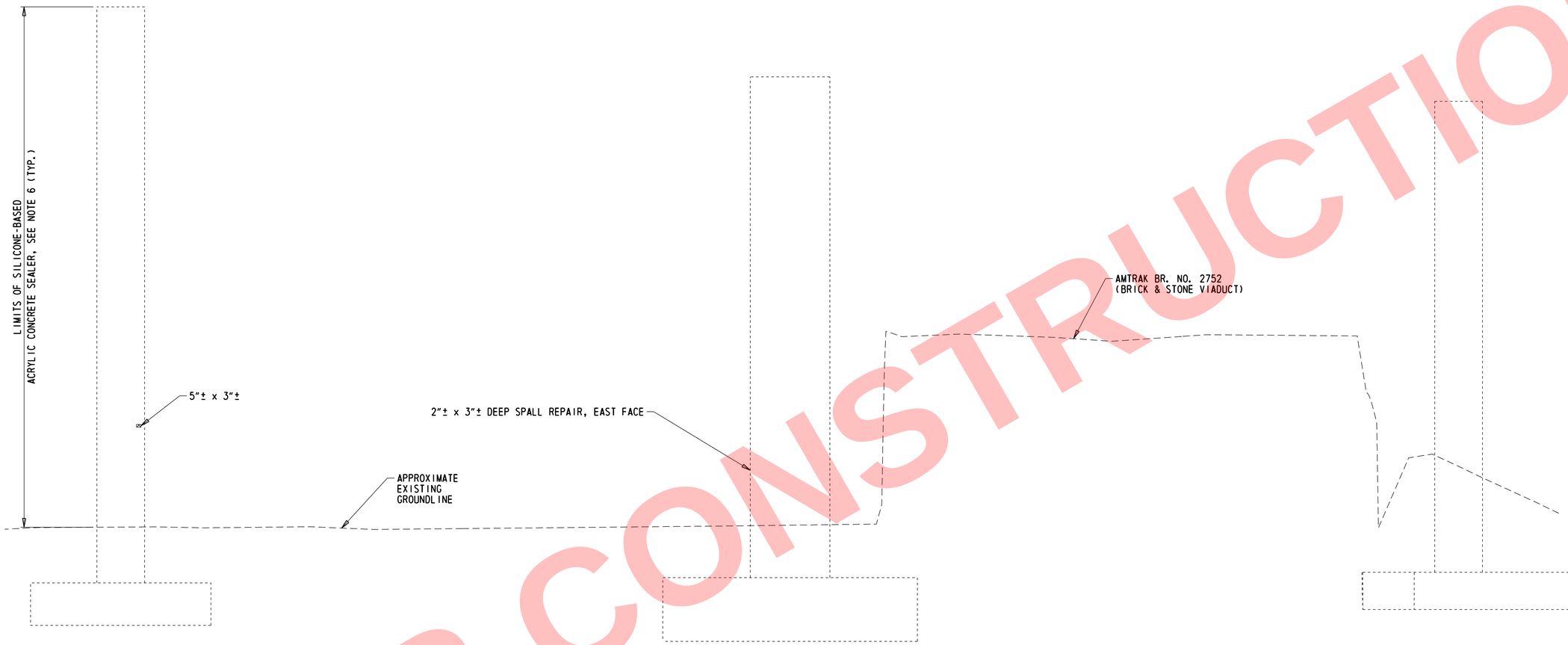

NOTE:
PILES NOT SHOWN FOR CLARITY.

PIER 24 - NORTH ELEVATION

1/16" = 1'-0"

LEGEND:

REPAIR OF CONCRETE STRUCTURES BY EPOXY INJECTION

DEEP SPALL REPAIR

NOTES:

1. THE LOCATION AND QUANTITIES OF THE REPAIRS SHOWN ON THIS DRAWING ARE BASED ON INSPECTION FIELD NOTES (SEE NOTE 14 ON DWG. PN-01). PRIOR TO STARTING EACH REPAIR, THE LIMITS SHALL BE VERIFIED BY THE CONTRACTOR IN THE PRESENCE OF THE ENGINEER.
2. WHERE CRACKS AND SPALLS EXIST CONCURRENTLY, COMPLETE THE SPALL REPAIR COMPLETELY REMOVING THE ASSOCIATED CRACK. IF THE CRACK EXTENDS LESS THAN 1'-0" BEYOND THE LIMITS OF THE SPALL REPAIR, EXTEND THE LIMITS OF THE SPALL REPAIR TO ENCOMPASS THE CRACK. IF THE CRACK EXTENDS DEEPER THAN THE LIMITS OF CONCRETE REMOVAL, THE CONTRACTOR SHALL REMOVE ADDITIONAL CONCRETE UNTIL THE CRACK IS FULLY REMOVED. IF THE DEPTH OF REMOVAL REACHES MORE THAN 6" FROM THE ORIGINAL FACE OF CONCRETE, ALL WORK ON THE REPAIR SHALL STOP AND THE ENGINEER SHALL BE NOTIFIED IMMEDIATELY. IF THE CRACK EXTENDS MORE THAN 1'-0" BEYOND THE LIMITS OF THE SPALL REPAIR INTO SOUND CONCRETE THE CRACK SHALL BE REPAIRED BY EPOXY INJECTION AND PAID FOR UNDER ITEM 628001 BEYOND THE LIMITS OF THE SPALL REPAIR. CRACKS LOCATED WITHIN SPALL REPAIRS WILL NOT BE PAID FOR AND WILL BE CONSIDERED INCIDENTAL TO ITEM 628041 - DEEP SPALL REPAIR.
3. FOR CONCRETE REPAIR DETAILS, SEE DWG. PN-03.
4. EPOXY CONCRETE SEALER SHALL BE APPLIED TO THE BEAM SEATS AND BEARING PEDESTALS. PAYMENT WILL BE MADE UNDER ITEM 613000. CONTRACTOR SHALL REMOVE DEBRIS FROM THE BEAM SEAT PRIOR TO APPLICATION OF EPOXY CONCRETE SEALER. PAYMENT FOR THIS WORK WILL BE INCIDENTAL TO ITEM 613000.
5. CONTRACTOR SHALL TAKE CARE TO PROTECT THE BEARINGS DURING APPLICATION OF THE EPOXY CONCRETE SEALER. ANY CLEAN-UP REQUIRED TO REMOVE THE SEALER FROM THE BEARINGS WILL BE AT NO ADDITIONAL COST TO THE DEPARTMENT AND TO THE SATISFACTION OF THE ENGINEER.
6. SILICONE-BASED ACRYLIC CONCRETE SEALER SHALL BE APPLIED TO ALL EXPOSED CONCRETE PIER SURFACES THAT DO NOT REQUIRE EPOXY SEALER. PAYMENT WILL BE MADE UNDER ITEM 613001.
7. EPOXY CONCRETE SEALER AND SILICONE-BASED ACRYLIC CONCRETE SEALER SHALL ONLY BE APPLIED AFTER ALL CONCRETE REPAIRS ARE COMPLETED AT EACH PIER.
8. FOR PLAN VIEW AND CONCRETE REPAIR QUANTITIES SEE DWG. PR-037.

NOT FOR CONSTRUCTION

ADDENDA / REVISIONS		SCALE AS NOTED	REHABILITATION OF I-95 FROM I-495 TO NORTH OF BRANDYWINE RIVER BRIDGE	CONTRACT T201407404	BRIDGE NO. 1 748 059	PIER 24 – CONCRETE REPAIR DETAILS (NORTH ELEVATION)	PR-38
				COUNTY NEW CASTLE	DESIGNED BY: DAN		SECTION WRA
					CHECKED BY: WAG		SHEET NO. 2-232

N:\39827-004\Contract I-95\CADD\Bridge\BR1-748_PR038.dgn
5/31/2019 12:12:20 PM

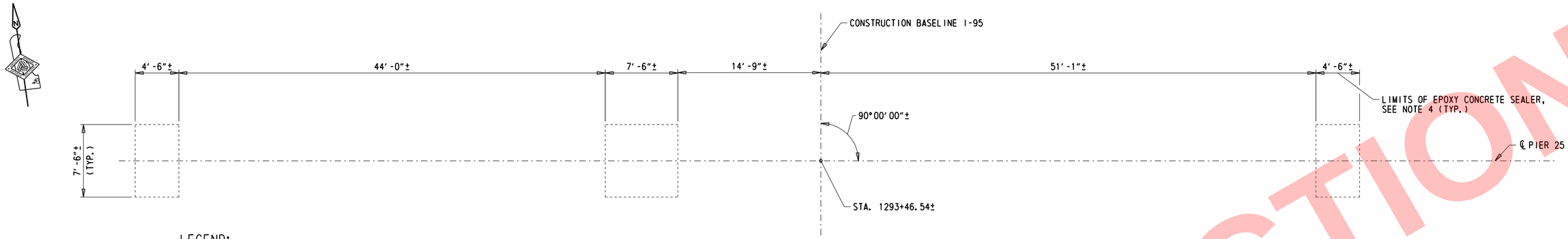

LEGEND:

REPAIR OF CONCRETE STRUCTURES BY EPOXY INJECTION

DEEP SPALL REPAIR

PIER 25 - PLAN VIEW

1/16" = 1'-0"

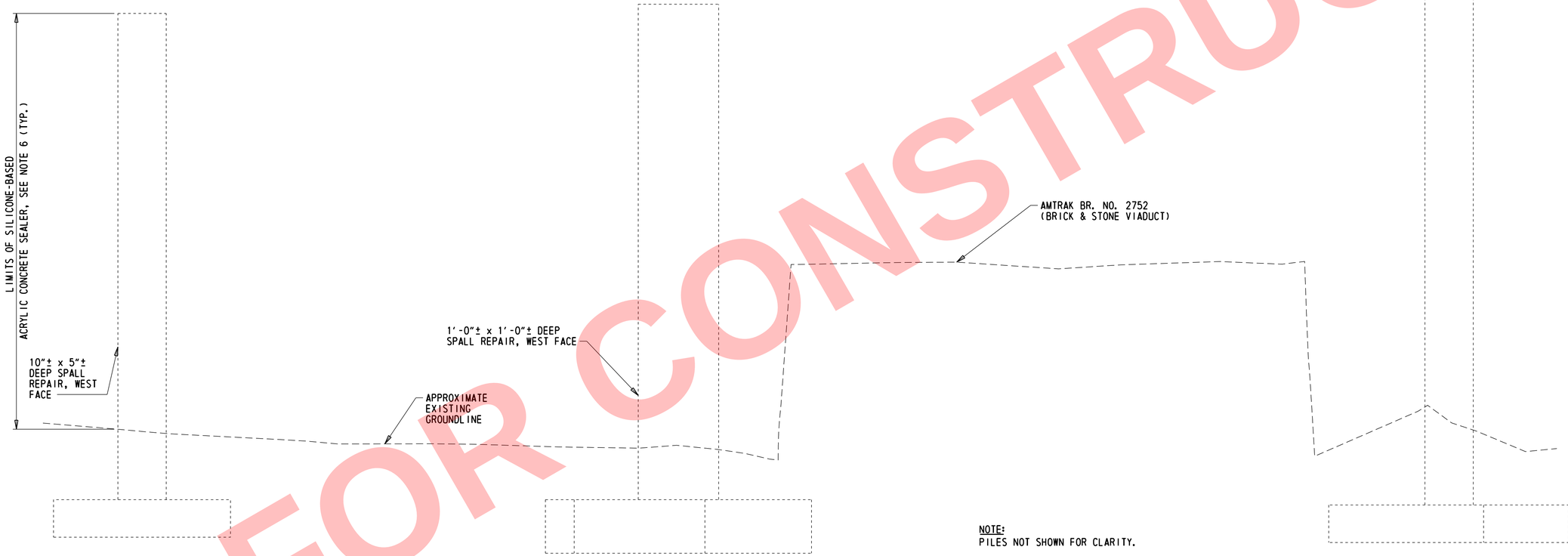

PIER 25 - SOUTH ELEVATION

1/16" = 1'-0"

NOTE:
PILES NOT SHOWN FOR CLARITY.

NOTES:

1. THE LOCATION AND QUANTITIES OF THE REPAIRS SHOWN ON THIS DRAWING ARE BASED ON INSPECTION FIELD NOTES (SEE NOTE 14 ON DWG. PN-01). PRIOR TO STARTING EACH REPAIR, THE LIMITS SHALL BE VERIFIED BY THE CONTRACTOR IN THE PRESENCE OF THE ENGINEER.
2. WHERE CRACKS AND SPALLS EXIST CONCURRENTLY, COMPLETE THE SPALL REPAIR COMPLETELY REMOVING THE ASSOCIATED CRACK. IF THE CRACK EXTENDS LESS THAN 1'-0" BEYOND THE LIMITS OF THE SPALL REPAIR, EXTEND THE LIMITS OF THE SPALL REPAIR TO ENCOMPASS THE CRACK. IF THE CRACK EXTENDS DEEPER THAN THE LIMITS OF CONCRETE REMOVAL, THE CONTRACTOR SHALL REMOVE ADDITIONAL CONCRETE UNTIL THE CRACK IS FULLY REMOVED. IF THE DEPTH OF REMOVAL REACHES MORE THAN 6" FROM THE ORIGINAL FACE OF CONCRETE, ALL WORK ON THE REPAIR SHALL STOP AND THE ENGINEER SHALL BE NOTIFIED IMMEDIATELY. IF THE CRACK EXTENDS MORE THAN 1'-0" BEYOND THE LIMITS OF THE SPALL REPAIR INTO SOUND CONCRETE THE CRACK SHALL BE REPAIRED BY EPOXY INJECTION AND PAID FOR UNDER ITEM 628001 BEYOND THE LIMITS OF THE SPALL REPAIR. CRACKS LOCATED WITHIN SPALL REPAIRS WILL NOT BE PAID FOR AND WILL BE CONSIDERED INCIDENTAL TO ITEM 628041 - DEEP SPALL REPAIR.
3. FOR CONCRETE REPAIR DETAILS, SEE DWG. PN-03.
4. EPOXY CONCRETE SEALER SHALL BE APPLIED TO THE BEAM SEATS AND BEARING PEDESTALS. PAYMENT WILL BE MADE UNDER ITEM 613000. CONTRACTOR SHALL REMOVE DEBRIS FROM THE BEAM SEAT PRIOR TO APPLICATION OF EPOXY CONCRETE SEALER. PAYMENT FOR THIS WORK WILL BE INCIDENTAL TO ITEM 613000.
5. CONTRACTOR SHALL TAKE CARE TO PROTECT THE BEARINGS DURING APPLICATION OF THE EPOXY CONCRETE SEALER. ANY CLEAN-UP REQUIRED TO REMOVE THE SEALER FROM THE BEARINGS WILL BE AT NO ADDITIONAL COST TO THE DEPARTMENT AND TO THE SATISFACTION OF THE ENGINEER.
6. SILICONE-BASED ACRYLIC CONCRETE SEALER SHALL BE APPLIED TO ALL EXPOSED CONCRETE PIER SURFACES THAT DO NOT REQUIRE EPOXY SEALER. PAYMENT WILL BE MADE UNDER ITEM 613001.
7. EPOXY CONCRETE SEALER AND SILICONE-BASED ACRYLIC CONCRETE SEALER SHALL ONLY BE APPLIED AFTER ALL CONCRETE REPAIRS ARE COMPLETED AT EACH PIER.

CONCRETE REPAIR QUANTITIES
PIER 25

REPAIR Nº	ITEM Nº	ITEM TITLE	UNIT	QUANTITY
34	628001	REPAIR OF CONCRETE STRUCTURES BY EPOXY INJECTION	LF	0
37	628041	DEEP SPALL REPAIR	CF	1
41	613000	EPOXY CONCRETE SEALER	SF	78
41	613001	SILICONE-BASED ACRYLIC CONCRETE SEALER	SF	3250

NOTE: QUANTITIES SHOWN ARE TOTAL PER PIER AND DO NOT INCLUDE CONTINGENT PERCENTAGE.

NOT FOR CONSTRUCTION

N:\31987-004\Contract_I-95\CADD\Bridge\BR1-748_PR039.dgn
5/31/2019 12:12:26 PM

ADDENDA / REVISIONS	

SCALE AS NOTED

REHABILITATION OF I-95 FROM I-495 TO NORTH OF BRANDYWINE RIVER BRIDGE

CONTRACT	BRIDGE NO.	1 748 059
T201407404	DESIGNED BY: DAN	
COUNTY	CHECKED BY: WAG	
NEW CASTLE		

PIER 25 – CONCRETE REPAIR DETAILS (SOUTH ELEVATION)

PR-39

SECTION
WRA
SHEET NO.
2-233

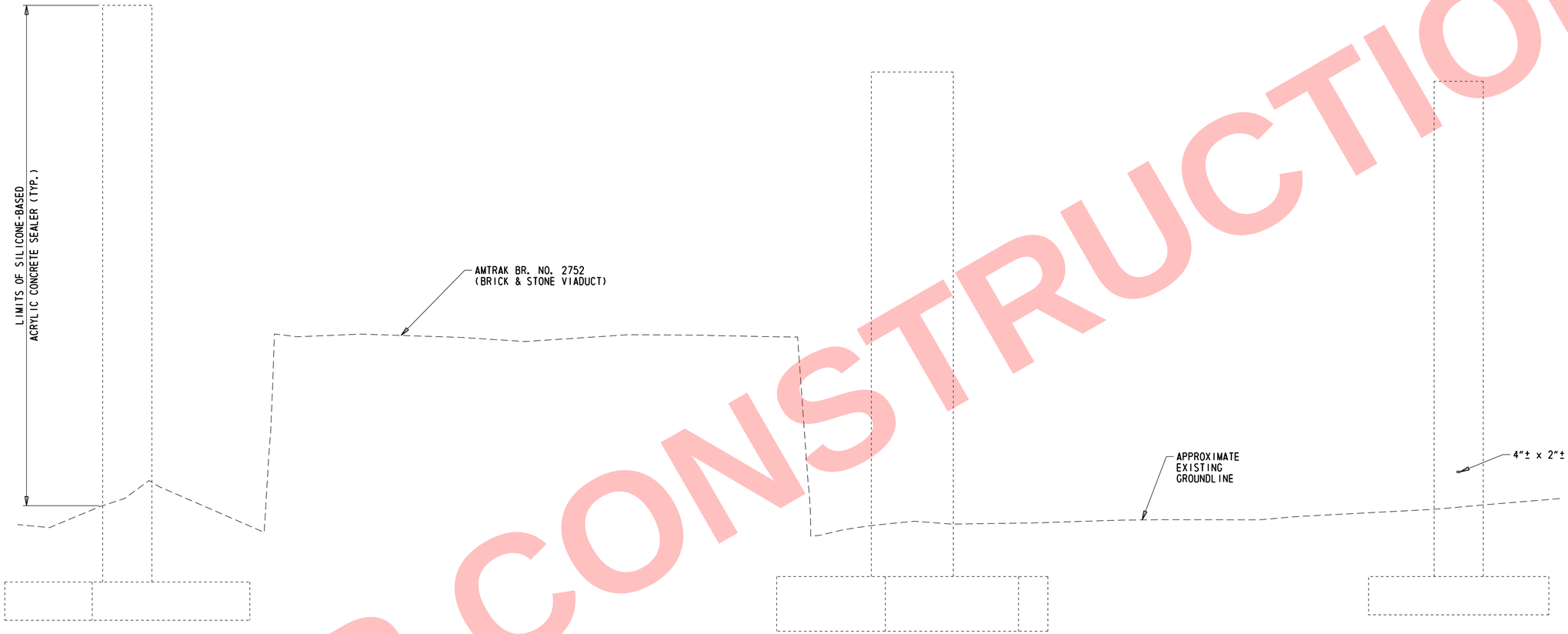

NOTE:
PILES NOT SHOWN FOR CLARITY.

LEGEND:

REPAIR OF CONCRETE STRUCTURES BY EPOXY INJECTION

DEEP SPALL REPAIR

PIER 25 - NORTH ELEVATION

3/16" = 1'-0"

NOTES:

1. THE LOCATION AND QUANTITIES OF THE REPAIRS SHOWN ON THIS DRAWING ARE BASED ON INSPECTION FIELD NOTES (SEE NOTE 14 ON DWG. PN-01). PRIOR TO STARTING EACH REPAIR, THE LIMITS SHALL BE VERIFIED BY THE CONTRACTOR IN THE PRESENCE OF THE ENGINEER.
2. WHERE CRACKS AND SPALLS EXIST CONCURRENTLY, COMPLETE THE SPALL REPAIR COMPLETELY REMOVING THE ASSOCIATED CRACK. IF THE CRACK EXTENDS LESS THAN 1'-0" BEYOND THE LIMITS OF THE SPALL REPAIR, EXTEND THE LIMITS OF THE SPALL REPAIR TO ENCOMPASS THE CRACK. IF THE CRACK EXTENDS DEEPER THAN THE LIMITS OF CONCRETE REMOVAL, THE CONTRACTOR SHALL REMOVE ADDITIONAL CONCRETE UNTIL THE CRACK IS FULLY REMOVED. IF THE DEPTH OF REMOVAL REACHES MORE THAN 6" FROM THE ORIGINAL FACE OF CONCRETE, ALL WORK ON THE REPAIR SHALL STOP AND THE ENGINEER SHALL BE NOTIFIED IMMEDIATELY. IF THE CRACK EXTENDS MORE THAN 1'-0" BEYOND THE LIMITS OF THE SPALL REPAIR INTO SOUND CONCRETE THE CRACK SHALL BE REPAIRED BY EPOXY INJECTION AND PAID FOR UNDER ITEM 628001 BEYOND THE LIMITS OF THE SPALL REPAIR. CRACKS LOCATED WITHIN SPALL REPAIRS WILL NOT BE PAID FOR AND WILL BE CONSIDERED INCIDENTAL TO ITEM 628041 - DEEP SPALL REPAIR.
3. FOR CONCRETE REPAIR DETAILS, SEE DWG. PN-03.
4. EPOXY CONCRETE SEALER SHALL BE APPLIED TO THE BEAM SEATS AND BEARING PEDESTALS. PAYMENT WILL BE MADE UNDER ITEM 613000. CONTRACTOR SHALL REMOVE DEBRIS FROM THE BEAM SEAT PRIOR TO APPLICATION OF EPOXY CONCRETE SEALER. PAYMENT FOR THIS WORK WILL BE INCIDENTAL TO ITEM 613000.
5. CONTRACTOR SHALL TAKE CARE TO PROTECT THE BEARINGS DURING APPLICATION OF THE EPOXY CONCRETE SEALER. ANY CLEAN-UP REQUIRED TO REMOVE THE SEALER FROM THE BEARINGS WILL BE AT NO ADDITIONAL COST TO THE DEPARTMENT AND TO THE SATISFACTION OF THE ENGINEER.
6. SILICONE-BASED ACRYLIC CONCRETE SEALER SHALL BE APPLIED TO ALL EXPOSED CONCRETE PIER SURFACES THAT DO NOT REQUIRE EPOXY SEALER. PAYMENT WILL BE MADE UNDER ITEM 613001.
7. EPOXY CONCRETE SEALER AND SILICONE-BASED ACRYLIC CONCRETE SEALER SHALL ONLY BE APPLIED AFTER ALL CONCRETE REPAIRS ARE COMPLETED AT EACH PIER.
8. FOR PLAN VIEW AND CONCRETE REPAIR QUANTITIES SEE DWG. PR-039.

NOT FOR CONSTRUCTION

ADDENDA / REVISIONS		SCALE AS NOTED	REHABILITATION OF I-95 FROM I-495 TO NORTH OF BRANDYWINE RIVER BRIDGE	CONTRACT T201407404	BRIDGE NO. 1 748 059	PIER 25 – CONCRETE REPAIR DETAILS (NORTH ELEVATION)	PR-40
				COUNTY NEW CASTLE	DESIGNED BY: DAN		SECTION WRA
					CHECKED BY: WAG		SHEET NO. 2-234

N:\31987-004\Contract\I-95\CADD\Bridge\BR1-748_PR040.dgn
5/31/2019 12:12:26 PM

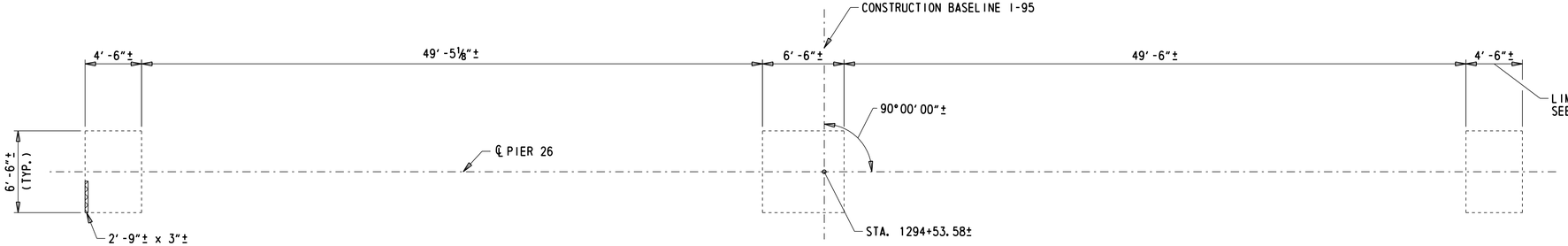

PIER 26 - PLAN VIEW

⅛″ = 1′-0″

NOTES:

1. THE LOCATION AND QUANTITIES OF THE REPAIRS SHOWN ON THIS DRAWING ARE BASED ON INSPECTION FIELD NOTES (SEE NOTE 14 ON DWG. PN-01). PRIOR TO STARTING EACH REPAIR, THE LIMITS SHALL BE VERIFIED BY THE CONTRACTOR IN THE PRESENCE OF THE ENGINEER.
2. WHERE CRACKS AND SPALLS EXIST CONCURRENTLY, COMPLETE THE SPALL REPAIR COMPLETELY REMOVING THE ASSOCIATED CRACK. IF THE CRACK EXTENDS LESS THAN 1′-0″ BEYOND THE LIMITS OF THE SPALL REPAIR, EXTEND THE LIMITS OF THE SPALL REPAIR TO ENCOMPASS THE CRACK. IF THE CRACK EXTENDS DEEPER THAN THE LIMITS OF CONCRETE REMOVAL, THE CONTRACTOR SHALL REMOVE ADDITIONAL CONCRETE UNTIL THE CRACK IS FULLY REMOVED. IF THE DEPTH OF REMOVAL REACHES MORE THAN 6″ FROM THE ORIGINAL FACE OF CONCRETE, ALL WORK ON THE REPAIR SHALL STOP AND THE ENGINEER SHALL BE NOTIFIED IMMEDIATELY. IF THE CRACK EXTENDS MORE THAN 1′-0″ BEYOND THE LIMITS OF THE SPALL REPAIR INTO SOUND CONCRETE THE CRACK SHALL BE REPAIRED BY EPOXY INJECTION AND PAID FOR UNDER ITEM 628001 BEYOND THE LIMITS OF THE SPALL REPAIR. CRACKS LOCATED WITHIN SPALL REPAIRS WILL NOT BE PAID FOR AND WILL BE CONSIDERED INCIDENTAL TO ITEM 628041 - DEEP SPALL REPAIR.
3. FOR CONCRETE REPAIR DETAILS, SEE DWG. PN-03.
4. EPOXY CONCRETE SEALER SHALL BE APPLIED TO THE BEAM SEATS AND BEARING PEDESTALS. PAYMENT WILL BE MADE UNDER ITEM 613000. CONTRACTOR SHALL REMOVE DEBRIS FROM THE BEAM SEAT PRIOR TO APPLICATION OF EPOXY CONCRETE SEALER. PAYMENT FOR THIS WORK WILL BE INCIDENTAL TO ITEM 613000.
5. CONTRACTOR SHALL TAKE CARE TO PROTECT THE BEARINGS DURING APPLICATION OF THE EPOXY CONCRETE SEALER. ANY CLEAN-UP REQUIRED TO REMOVE THE SEALER FROM THE BEARINGS WILL BE AT NO ADDITIONAL COST TO THE DEPARTMENT AND TO THE SATISFACTION OF THE ENGINEER.
6. SILICONE-BASED ACRYLIC CONCRETE SEALER SHALL BE APPLIED TO ALL EXPOSED CONCRETE PIER SURFACES THAT DO NOT REQUIRE EPOXY SEALER. PAYMENT WILL BE MADE UNDER ITEM 613001.
7. EPOXY CONCRETE SEALER AND SILICONE-BASED ACRYLIC CONCRETE SEALER SHALL ONLY BE APPLIED AFTER ALL CONCRETE REPAIRS ARE COMPLETED AT EACH PIER.

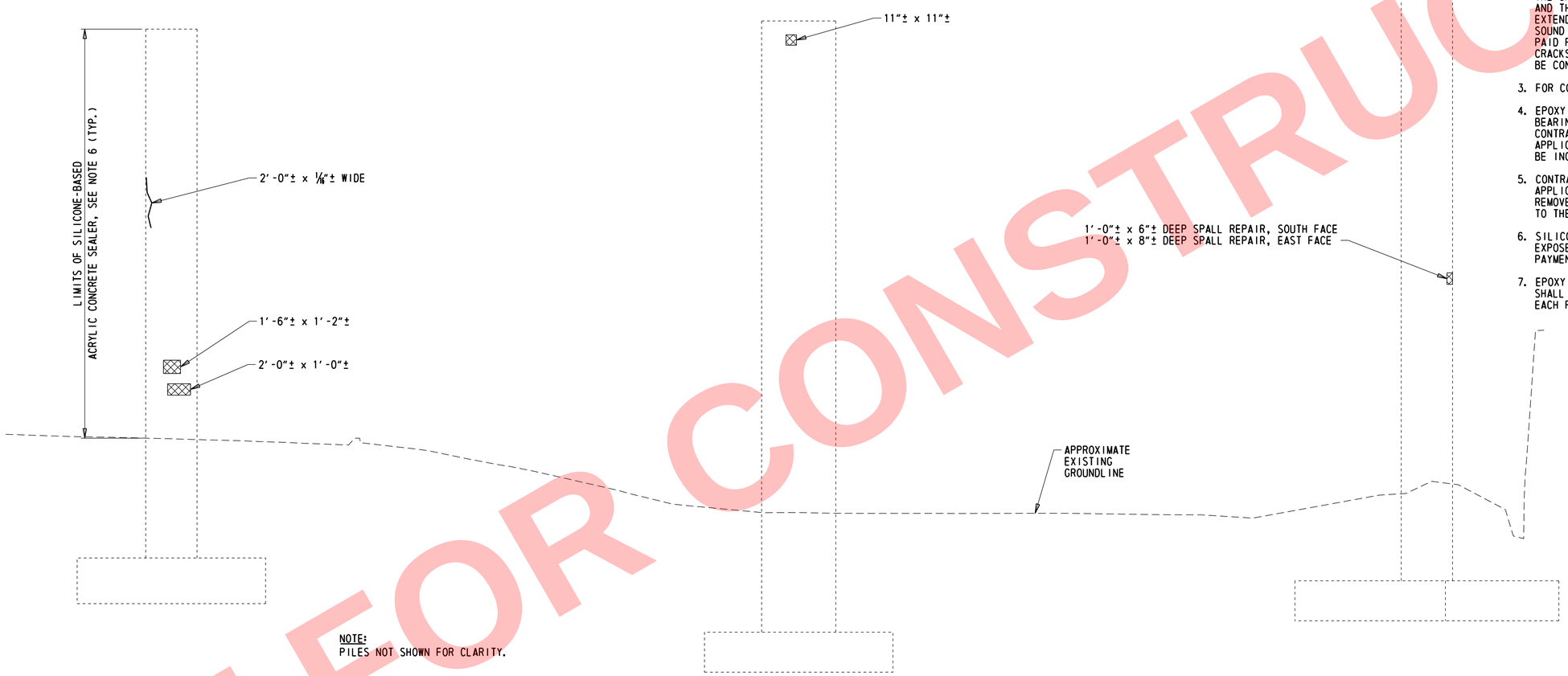

NOTE:
PILES NOT SHOWN FOR CLARITY.

PIER 26 - SOUTH ELEVATION

⅛″ = 1′-0″

LEGEND:

REPAIR OF CONCRETE STRUCTURES BY EPOXY INJECTION

DEEP SPALL REPAIR

CONCRETE REPAIR QUANTITIES
PIER 26

REPAIR Nº	ITEM Nº	ITEM TITLE	UNIT	QUANTITY
34	628001	REPAIR OF CONCRETE STRUCTURES BY EPOXY INJECTION	LF	8
37	628041	DEEP SPALL REPAIR	CF	13
41	613000	EPOXY CONCRETE SEALER	SF	70
41	613001	SILICONE-BASED ACRYLIC CONCRETE SEALER	SF	2972

NOTE: QUANTITIES SHOWN ARE TOTAL PER PIER AND DO NOT INCLUDE CONTINGENT PERCENTAGE.

NOT FOR CONSTRUCTION

N:\31987-004\Control I-95\CADD\Bridge\BR1-748_PR041.dgn
5/31/2019 12:12:27 PM

ADDENDA / REVISIONS		SCALE AS NOTED	REHABILITATION OF I-95 FROM I-495 TO NORTH OF BRANDYWINE RIVER BRIDGE	CONTRACT T201407404	BRIDGE NO. 1 748 059	PIER 26 – CONCRETE REPAIR DETAILS (SOUTH ELEVATION)	PR-41
				COUNTY NEW CASTLE	DESIGNED BY: DAN		SECTION WRA
					CHECKED BY: WAG		SHEET NO. 2-235

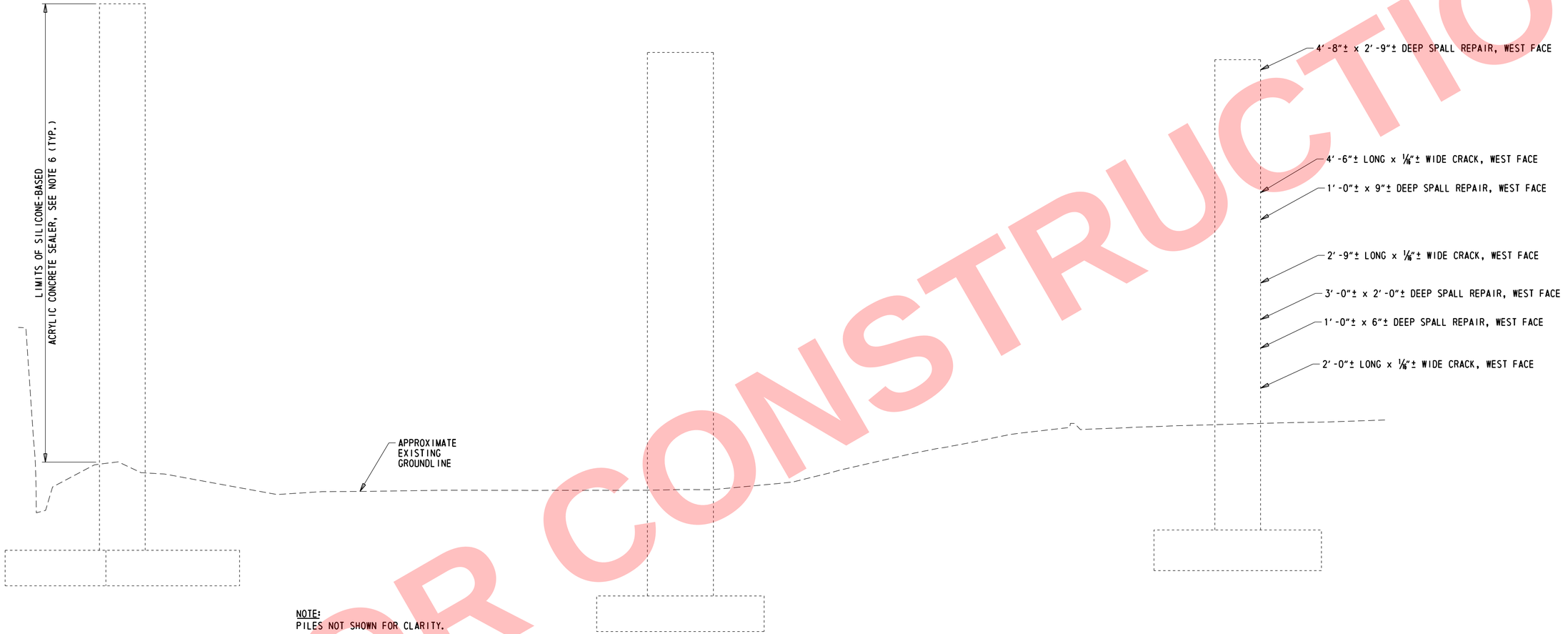

NOTE:
PILES NOT SHOWN FOR CLARITY.

PIER 26 - NORTH ELEVATION

3/16" = 1'-0"

LEGEND:

REPAIR OF CONCRETE STRUCTURES BY EPOXY INJECTION

DEEP SPALL REPAIR

NOTES:

1. THE LOCATION AND QUANTITIES OF THE REPAIRS SHOWN ON THIS DRAWING ARE BASED ON INSPECTION FIELD NOTES (SEE NOTE 14 ON DWG. PN-01). PRIOR TO STARTING EACH REPAIR, THE LIMITS SHALL BE VERIFIED BY THE CONTRACTOR IN THE PRESENCE OF THE ENGINEER.
2. WHERE CRACKS AND SPALLS EXIST CONCURRENTLY, COMPLETE THE SPALL REPAIR COMPLETELY REMOVING THE ASSOCIATED CRACK. IF THE CRACK EXTENDS LESS THAN 1'-0" BEYOND THE LIMITS OF THE SPALL REPAIR, EXTEND THE LIMITS OF THE SPALL REPAIR TO ENCOMPASS THE CRACK. IF THE CRACK EXTENDS DEEPER THAN THE LIMITS OF CONCRETE REMOVAL, THE CONTRACTOR SHALL REMOVE ADDITIONAL CONCRETE UNTIL THE CRACK IS FULLY REMOVED. IF THE DEPTH OF REMOVAL REACHES MORE THAN 6" FROM THE ORIGINAL FACE OF CONCRETE, ALL WORK ON THE REPAIR SHALL STOP AND THE ENGINEER SHALL BE NOTIFIED IMMEDIATELY. IF THE CRACK EXTENDS MORE THAN 1'-0" BEYOND THE LIMITS OF THE SPALL REPAIR INTO SOUND CONCRETE THE CRACK SHALL BE REPAIRED BY EPOXY INJECTION AND PAID FOR UNDER ITEM 628001 BEYOND THE LIMITS OF THE SPALL REPAIR. CRACKS LOCATED WITHIN SPALL REPAIRS WILL NOT BE PAID FOR AND WILL BE CONSIDERED INCIDENTAL TO ITEM 628041 - DEEP SPALL REPAIR.
3. FOR CONCRETE REPAIR DETAILS, SEE DWG. PN-03.
4. EPOXY CONCRETE SEALER SHALL BE APPLIED TO THE BEAM SEATS AND BEARING PEDESTALS. PAYMENT WILL BE MADE UNDER ITEM 613000. CONTRACTOR SHALL REMOVE DEBRIS FROM THE BEAM SEAT PRIOR TO APPLICATION OF EPOXY CONCRETE SEALER. PAYMENT FOR THIS WORK WILL BE INCIDENTAL TO ITEM 613000.
5. CONTRACTOR SHALL TAKE CARE TO PROTECT THE BEARINGS DURING APPLICATION OF THE EPOXY CONCRETE SEALER. ANY CLEAN-UP REQUIRED TO REMOVE THE SEALER FROM THE BEARINGS WILL BE AT NO ADDITIONAL COST TO THE DEPARTMENT AND TO THE SATISFACTION OF THE ENGINEER.
6. SILICONE-BASED ACRYLIC CONCRETE SEALER SHALL BE APPLIED TO ALL EXPOSED CONCRETE PIER SURFACES THAT DO NOT REQUIRE EPOXY SEALER. PAYMENT WILL BE MADE UNDER ITEM 613001.
7. EPOXY CONCRETE SEALER AND SILICONE-BASED ACRYLIC CONCRETE SEALER SHALL ONLY BE APPLIED AFTER ALL CONCRETE REPAIRS ARE COMPLETED AT EACH PIER.
8. FOR PLAN VIEW AND CONCRETE REPAIR QUANTITIES SEE DWG. PR-041.

NOT FOR CONSTRUCTION

ADDENDA / REVISIONS		SCALE AS NOTED	REHABILITATION OF I-95 FROM I-495 TO NORTH OF BRANDYWINE RIVER BRIDGE	CONTRACT T201407404	BRIDGE NO. 1 748 059	PIER 26 – CONCRETE REPAIR DETAILS (NORTH ELEVATION)	PR-42
				COUNTY NEW CASTLE	DESIGNED BY: DAN		SECTION WRA
					CHECKED BY: WAG		SHEET NO. 2-236

N:\31987-004\Contract I-95\CADD\Bridge\BR1-748_PR042.dgn
5/31/2019 12:12:28 PM

BEARING PLAN - SPANS 27 TO 32

BEARING SYMBOL LEGEND:

⊗ - CUT PINTLES AT EXISTING BEARING (REFER TO DWG. BB-14)

NOTES:

1. BEAMS FOR BRIDGE NOS. 1-749 (RAMP A) AND 1-758G (RAMP F) ARE SHOWN SCREENED FOR INFORMATIONAL PURPOSES.

NOT FOR CONSTRUCTION

ADDENDA / REVISIONS	

SCALE: 0 20 40 60 FEET

REHABILITATION OF I-95 FROM I-495 TO NORTH OF BRANDYWINE RIVER BRIDGE

CONTRACT	BRIDGE NO.	1 748 059
T201407405	DESIGNED BY: DAN	
COUNTY	CHECKED BY: WAG	
NEW CASTLE		

BEARING REPLACEMENT PLAN 1 OF 5

BB-01
SECTION
WRA
SHEET NO.
2-307A

N:\31987-00A\Contract_I-95\CADD\Bridge\BR1-748_BB01.dgn
5/31/2019 12:28:28 PM

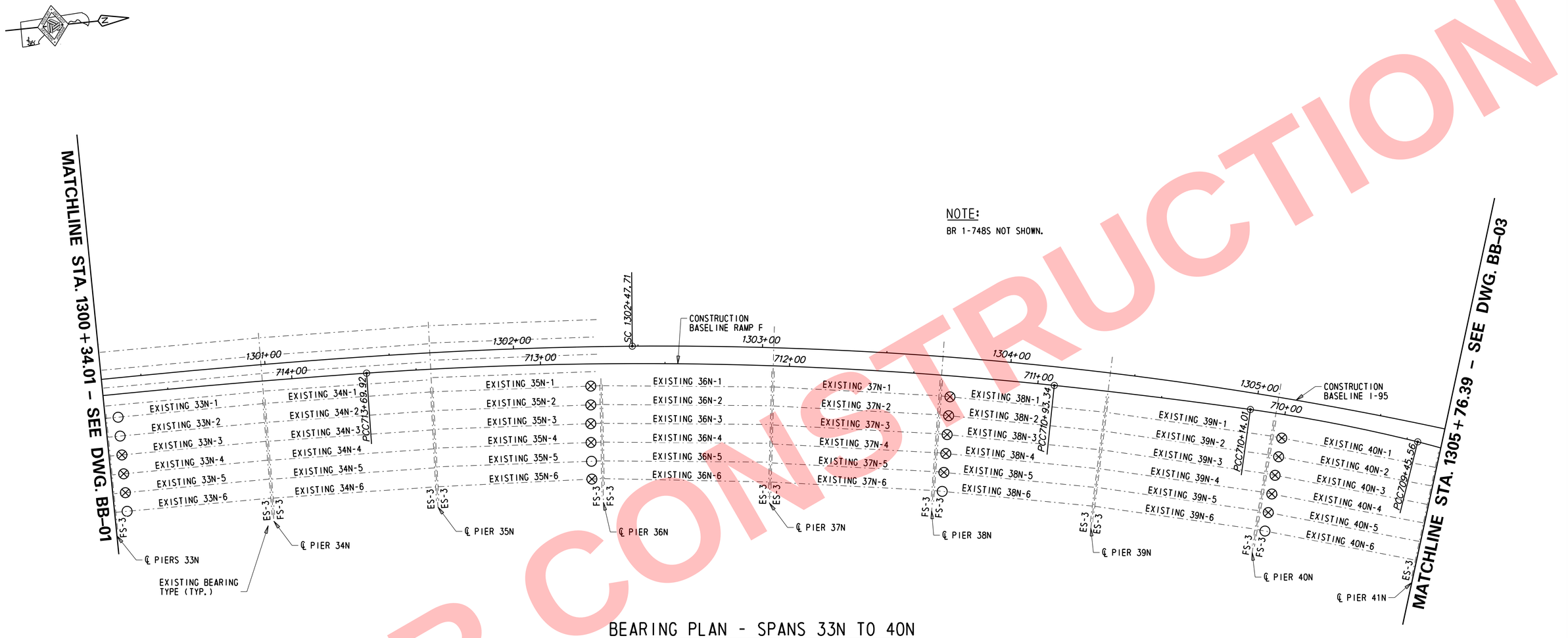

NOTE:
BR 1-748S NOT SHOWN.

BEARING PLAN - SPANS 33N TO 40N

BEARING SYMBOL LEGEND:

- ○ - REPLACE WITH PROPOSED BEARING TYPE FS-3A (REFER TO DWG. BB-07)
- ⊗ - CUT PINTLES AT EXISTING BEARING (REFER TO DWG. BB-14)

NOTES:

1. BEAMS FOR BRIDGE NO. 1-758G (RAMP F) ARE SHOWN SCREENED FOR INFORMATIONAL PURPOSES.

NOT FOR CONSTRUCTION

N:\31987-00A\Contract_I-95\CADD\Bridge\BR1-748_BB02.dgn
5/31/2019 12:12:29 PM

ADDENDA / REVISIONS	

SCALE
0 20 40 60
FEET

REHABILITATION OF I-95 FROM I-495 TO NORTH OF BRANDYWINE RIVER BRIDGE

CONTRACT	BRIDGE NO.	1 748 059
T201407405	DESIGNED BY: DAN	
COUNTY	CHECKED BY: WAG	
NEW CASTLE		

BEARING REPLACEMENT PLAN 2 OF 5

BB-02
SECTION
WRA
SHEET NO.
2-307B

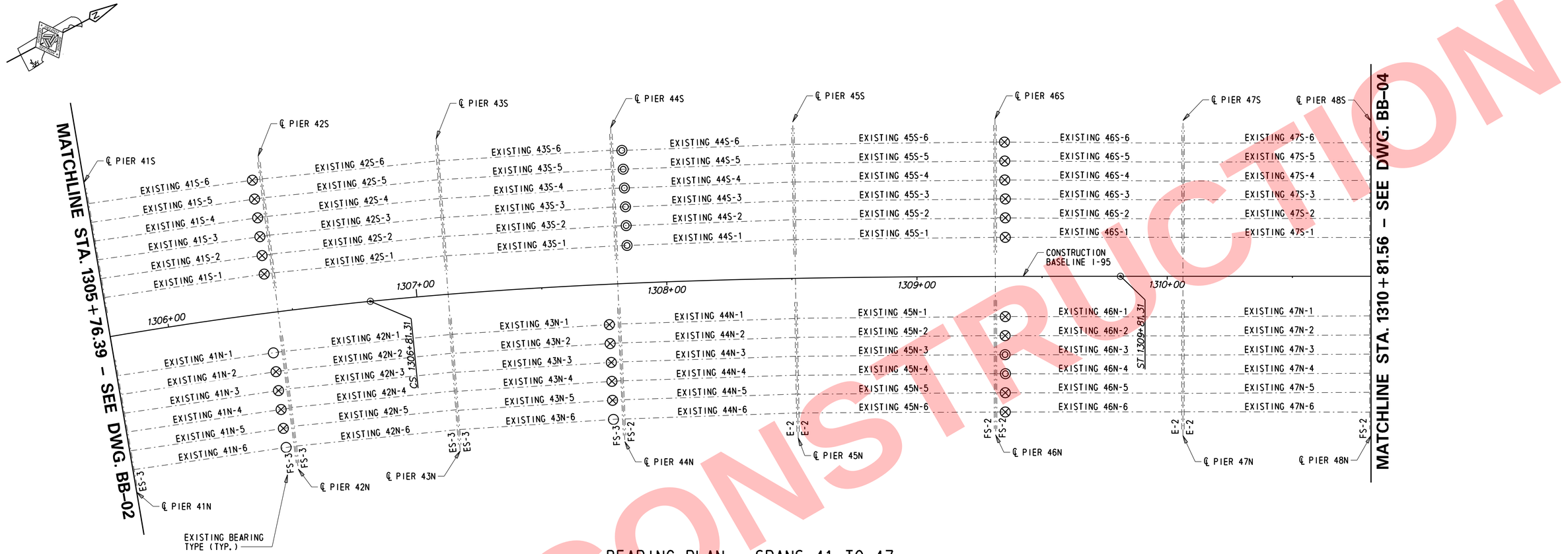

BEARING PLAN - SPANS 41 TO 47

NOT FOR CONSTRUCTION

BEARING SYMBOL LEGEND:

◎ - REPLACE WITH PROPOSED BEARING TYPE FS-2A REFER TO DWG. BB-06

◯ - REPLACE WITH PROPOSED BEARING TYPE FS-3A (REFER TO DWG. BB-07)

⊗ - CUT PINTLES AT EXISTING BEARING (REFER TO DWG. BB-14)

ADDENDA / REVISIONS	

SCALE
0 20 40 60
FEET

REHABILITATION OF I-95 FROM I-495 TO NORTH OF BRANDYWINE RIVER BRIDGE

CONTRACT	BRIDGE NO.	1 748 059
T201407405	DESIGNED BY: DAN	
COUNTY	CHECKED BY: WAG	
NEW CASTLE		

BEARING REPLACEMENT PLAN 3 OF 5

	BB-03
SECTION	WRA
SHEET NO.	2-307C

N:\31987-001A\Contract I-95\CADD\Bridge\BR1-748_BB03.dgn
5/31/2019 12:12:30 PM

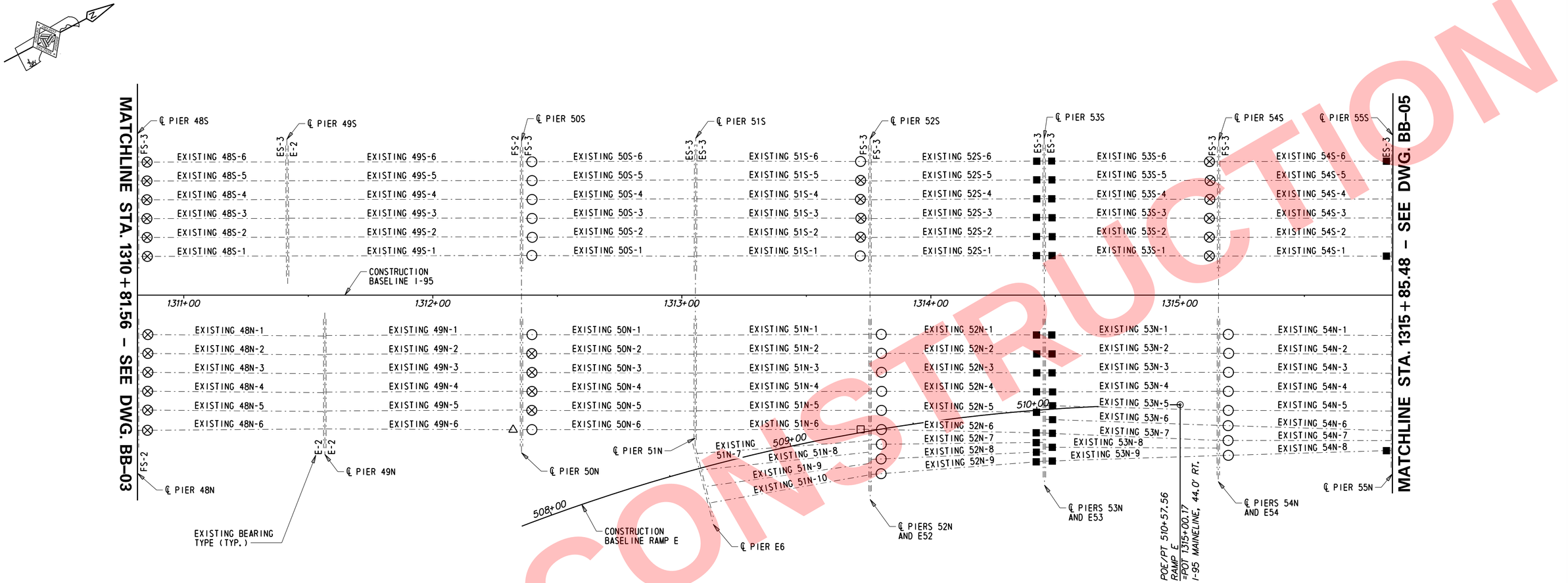

BEARING PLAN - SPANS 48 TO 54

BEARING SYMBOL LEGEND:

△ - REPLACE WITH PROPOSED BEARING TYPE FS-2 (REFER TO DWG. BB-06)

□ - REPLACE WITH PROPOSED BEARING TYPE FS-3 (REFER TO DWG. BB-07)

■ - REPLACE WITH PROPOSED BEARING TYPE ES-3 (REFER TO DWGS. BB-11 AND BB-12)

○ - REPLACE WITH PROPOSED BEARING TYPE FS-3A (REFER TO DWG. BB-07)

⊗ - CUT PINTLES AT EXISTING BEARING (REFER TO DWG. BB-14)

NOT FOR CONSTRUCTION

N:\31987-004\Contract_I-95\CADD\Bridge\BR1-748_BB04.dgn
5/31/2019 12:02:31 PM

ADDENDA / REVISIONS	

SCALE
0 20 40 60
FEET

REHABILITATION OF I-95 FROM I-495 TO NORTH OF BRANDYWINE RIVER BRIDGE

CONTRACT	BRIDGE NO.	1 748 059
T201407405	DESIGNED BY: DAN	
COUNTY	CHECKED BY: WAG	
NEW CASTLE		

BEARING REPLACEMENT PLAN 4 OF 5

BB-04	
SECTION	WRA
SHEET NO.	2-307D

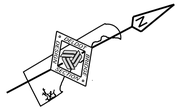

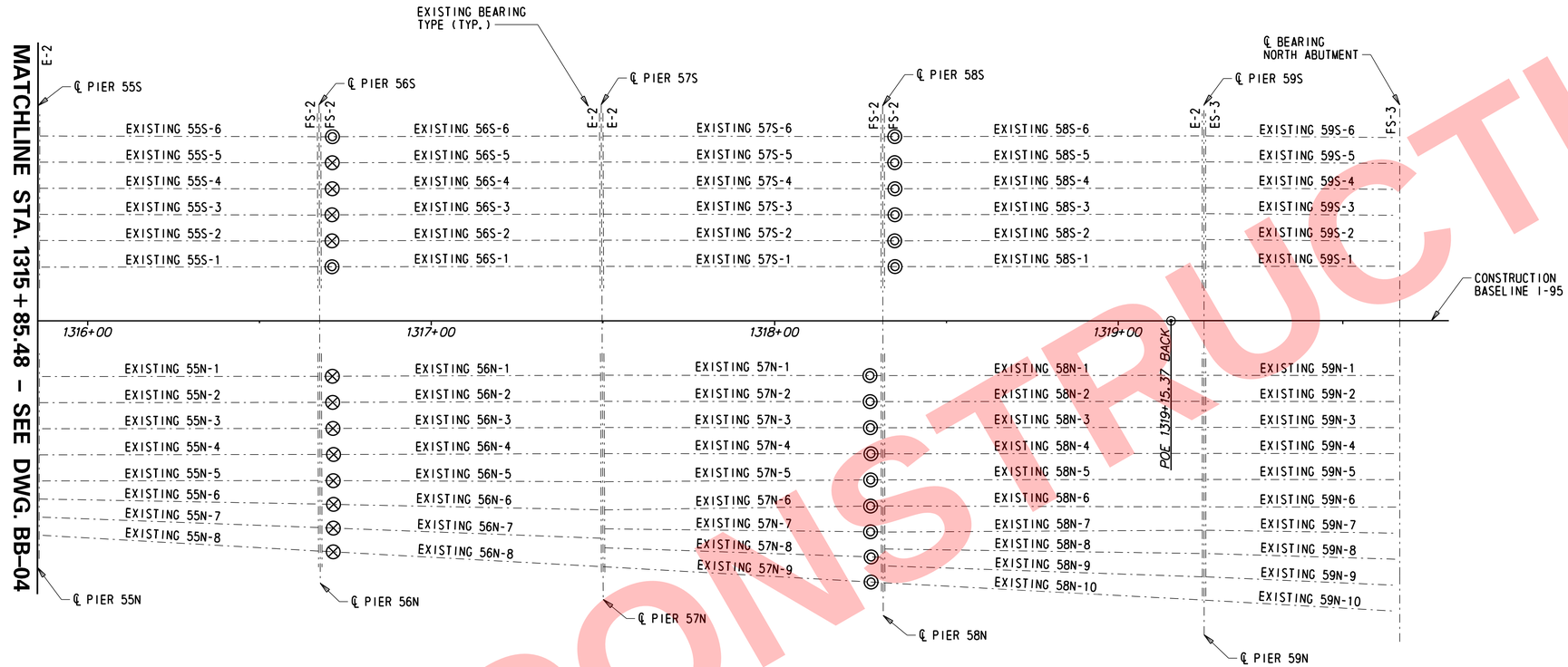

BEARING PLAN - SPANS 55 TO 59

BEARING SYMBOL LEGEND:

◎ - REPLACE WITH PROPOSED BEARING TYPE FS-2A (REFER TO DWG. BB-06)

⊗ - CUT PINTLES AT EXISTING BEARING (REFER TO DWG. BB-14)

NOT FOR CONSTRUCTION

N:\31987-004\Contract_I-95\CADD\Bridge\BR1-748_BB05.dgn
5/31/2019 12:12:32 PM

ADDENDA / REVISIONS		SCALE 0 20 40 60 FEET	REHABILITATION OF I-95 FROM I-495 TO NORTH OF BRANDYWINE RIVER BRIDGE	CONTRACT T201407405	BRIDGE NO. 1 748 059	BEARING REPLACEMENT PLAN 5 OF 5	BB-05
				COUNTY NEW CASTLE	DESIGNED BY: DAN		SECTION WRA
					CHECKED BY: WAG		SHEET NO. 2-307E

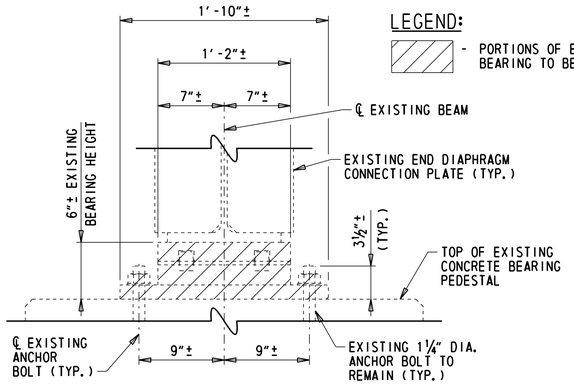

FRONT ELEVATION

LEGEND:

▨ - PORTIONS OF EXISTING BEARING TO BE REMOVED

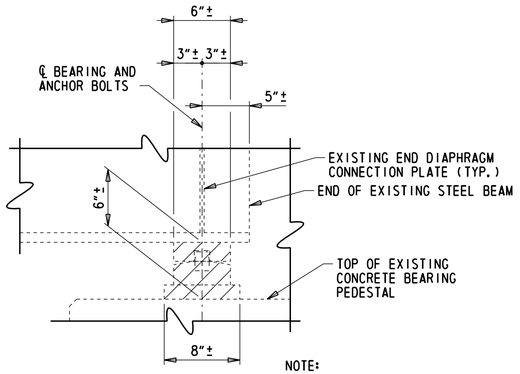

NOTE:
ANCHOR BOLTS NOT SHOWN FOR CLARITY

SIDE ELEVATION

EXISTING BEARING TYPE FS-2

1½" = 1'-0"

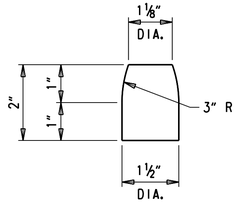

PINTLE DETAIL

6" = 1'-0"

BEARING TABLE				
LOCATION	BEARING DESIGNATION			
	MARK	TOTAL NO. REQUIRED	CAPACITY PER BEARING	
			REACTION ⊗	MOVEMENT ⊠
SPAN 44S, PIER 44S	FS-2A	6		N/A
SPAN 49N, PIER 50N	FS-2	1		N/A
SPAN 56S, PIER 56S	FS-2A	2		N/A
SPAN 57N, PIER 58N	FS-2A	9		N/A
SPAN 58S, PIER 58S	FS-2A	6		N/A
TOTAL - TYPE FS-2A		23		
TOTAL - TYPE FS-2		1		

LEGEND:

⊗ MAX. UN-FACTORED SERVICE 1 REACTION AT LOCATION (W/O DYNAMIC LOAD ALLOWANCE).

⊠ TEMPERATURE MOVEMENT.

• TYPE FS-2A BEARING SIMILAR TO TYPE FS-2 BUT DOES NOT HAVE PINTLES, SEE NOTE 2.

FIXED STEEL PLATE BEARING NOTES:

1. PROVIDE ALL BEARINGS IN ACCORDANCE WITH THE REQUIREMENTS OF SECTION 615 AND IN ACCORDANCE WITH CHAPTER 18 OF THE 2017 AASHTO LRFD BRIDGE CONSTRUCTION SPECIFICATIONS, 4TH EDITION.
2. CONTRACTOR TO VERIFY ALL EXISTING DIMENSIONS PRIOR TO ORDERING OR FABRICATING PROPOSED BEARINGS.
3. THE EXISTING ANCHOR BOLTS ARE TO REMAIN, UNLESS NOTED OTHERWISE. THE CONTRACTOR SHALL TAKE CARE TO NOT DAMAGE THE ANCHOR BOLTS DURING THE REMOVAL OF THE EXISTING BEARING. ANY ANCHOR BOLTS DAMAGED BY THE CONTRACTOR DURING REMOVAL OF THE EXISTING BEARINGS SHALL BE REPAIRED TO THE FULL SATISFACTION OF THE ENGINEER AND SHALL BE AT THE SOLE EXPENSE OF THE CONTRACTOR.
4. AFTER REMOVAL OF THE EXISTING BEARINGS, THE CONTRACTOR SHALL INSPECT THE EXISTING ANCHOR BOLTS TO REMAIN FOR ANY DEFECTS WHICH MAY ADVERSELY AFFECT THEIR PERFORMANCE. IF THE ENTIRE LINE OF ANCHOR BOLTS EXHIBITS DETERIORATION GREATER THAN 25% OF THE TOTAL CROSS-SECTIONAL AREA, THE CONTRACTOR SHALL STOP WORK AND NOTIFY THE ENGINEER IMMEDIATELY. DETERIORATION LESS THAN 25% OF THE TOTAL CROSS-SECTIONAL AREA OF THE ANCHOR BOLTS IS ACCEPTABLE, IN WHICH CASE THE ANCHOR BOLTS SHALL BE CLEANED AND PAINTED IN ACCORDANCE WITH SECTION 616 PRIOR TO INSTALLING NEW BRONZE BEARINGS.
5. STEEL SOLE AND MASONRY PLATES SHALL BE AASHTO M 270 GRADE 50. STEEL PLATES SHALL MEET A FLATNESS REQUIREMENT OF 0.5 PERCENT IN THE DIRECTION BEING MEASURED (WIDTH, LENGTH, AND DIAGONAL) MAXIMUM, BUT NOT TO EXCEED ⅛ INCH. STEEL SURFACES OF THE SOLE AND MASONRY PLATES IN CONTACT WITH OTHER SURFACES SHALL BE MACHINE FINISHED TO AT LEAST 250 MICROINCHES ROOT-MEAN-SQUARE.
6. THE BEARING SHALL BE SHOP ASSEMBLED AND MATCH-MARKED TO ENSURE PROPER FIT.
7. SOLE PLATES SHALL BE BEVELED TO MATCH GRADE WHEN GRADE EXCEEDS 1 PERCENT. THE CONTRACTOR IS RESPONSIBLE FOR MEASURING THE EXISTING GRADE OF THE BRIDGE IN THE FIELD TO DETERMINE THE PROPER BEVEL AT EACH BEARING LOCATION.
8. BEARING SHALL BE PLACED NORMAL TO CENTERLINE OF BEAM. THE SKEW ANGLE BETWEEN THE CENTERLINE OF THE EXISTING BEAMS AND THE CENTERLINE OF BEARING AT THE PIERS VARY BY LOCATION. SEE DWGS. RH-11 TO RH-15 FOR SKEW ANGLES, IDENTIFIED AS ANGLE A OR ANGLE B.
9. THE CONTRACTOR SHALL PREPARE THE EXISTING CONCRETE BEARING AREA TO ENSURE FULL CONTACT OF THE BEARINGS ON THE CONCRETE PEDESTAL. THE CONTRACTOR MAY USE A NON-SHRINK GROUT LEVELING PAD OR OTHER APPROVED METHOD TO PROVIDE A SMOOTH SURFACE FOR PLACING THE BEARING.
10. PORTIONS OF THE BOTTOM FLANGES OF THE EXISTING STEEL BEAMS TO RECEIVE NEW BEARINGS SHALL BE CLEANED PRIOR TO WELDING. CONTRACTOR SHALL REMOVE THE EXISTING PAINT IN ACCORDANCE WITH ITEM 616003 PRIOR TO PERFORMING ANY GRINDING, CUTTING, OR WELDING OF THE EXISTING STRUCTURAL STEEL AS PART OF THIS WORK.
11. ALL FIELD WELDING SHALL BE DONE BY THE SHIELDED METAL-ARC PROCESS. CONTRACTOR SHALL NOT PAINT WELDS PRIOR TO INSPECTION BY THE ENGINEER.
12. ALL PAINT TO BE USED TO TOUCH UP THE EXISTING COATINGS ON THE STRUCTURAL STEEL DAMAGED WHILE WELDING AND REMOVING EXISTING BEARING AND FOR PAINTING NEW BEARING ASSEMBLIES SHALL BE IN ACCORDANCE WITH THE REQUIREMENTS OF SECTION 616. THE COLOR OF THE FINISH COAT SHALL MATCH EXISTING.
13. FILL SLOTS AND HOLES IN STEEL PLATES AROUND ANCHOR BOLTS WITH AN APPROVED NON-HARDENING CAULKING COMPOUND OR ELASTIC JOINT SEALER.
14. PAYMENT FOR STEEL PLATE FIXED BEARINGS WILL BE MADE UNDER ITEM NO. 615001 - STEEL STRUCTURES. PAYMENT WILL INCLUDE REMOVAL OF EXISTING BEARINGS, PREPARATION OF THE CONCRETE BEARING AREA, FABRICATING AND INSTALLING NEW BEARINGS, WELDING, PAINTING, AND ANY OTHER INCIDENTALS NECESSARY TO COMPLETE THE WORK.

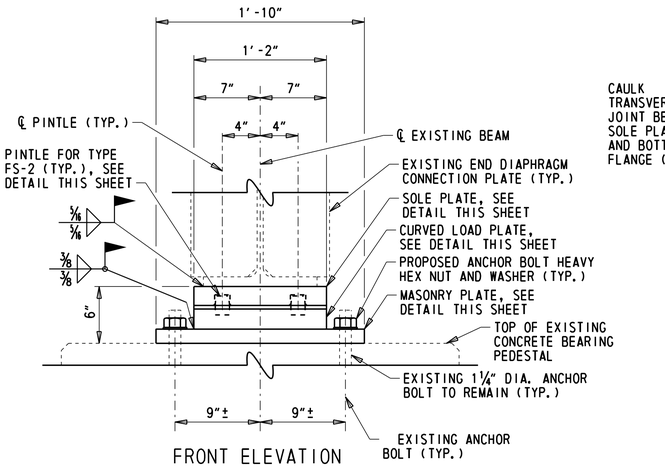

FRONT ELEVATION

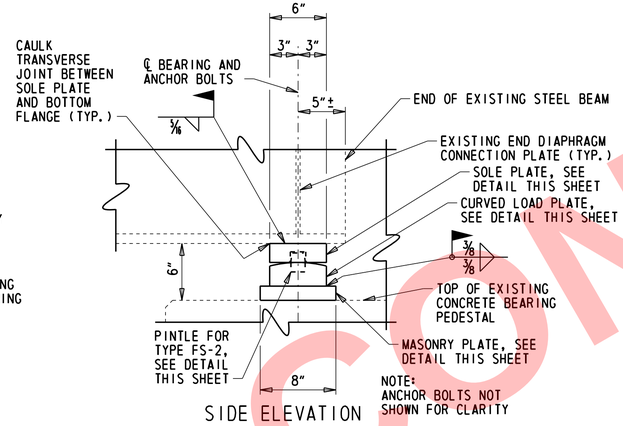

NOTE:
ANCHOR BOLTS NOT SHOWN FOR CLARITY

SIDE ELEVATION

PROPOSED BEARING TYPE FS-2 & FS-2A

1½" = 1'-0"

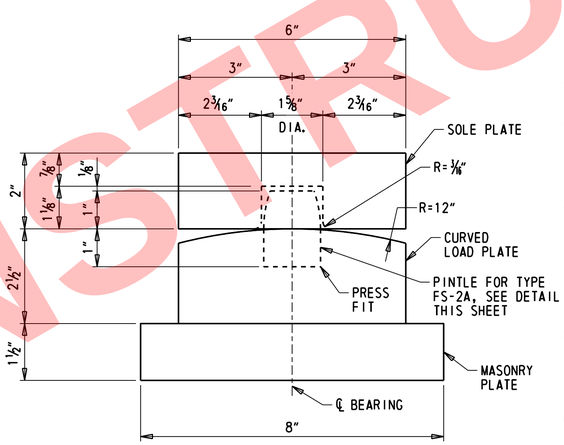

SECTION A-A

6" = 1'-0"

NOTES:

1. FOR THE TYPE FS-2A BEARINGS, USE THE SAME DETAILS FOR THE TYPE FS-2 BEARINGS BUT ELIMINATE THE PINTLES. THE PINTLES HAVE BEEN REMOVED FROM THE TYPE FS-2A BEARING TO FACILITATE THE DESIGN OF THE PROPOSED LINK SLAB.

SUGGESTED SEQUENCE OF INSTALLATION:

1. FOR THE SUGGESTED SEQUENCE OF CONSTRUCTION FOR JACKING THE BRIDGE AND REPLACING THE BEARING, REFER TO DWG. RH-01. THE FOLLOWING IS THE SUGGESTED SEQUENCE OF INSTALLATION FOR BEARING TYPE FS-2 AND FS-2A:
   - A. CLEAN THE EXISTING ANCHOR BOLTS AND MAKE ANY NECESSARY REPAIRS.
   - B. INSTALL THE NEW MASONRY PLATE BY PLACING OVER THE ANCHOR BOLTS AND LOWERING IT ONTO THE CONCRETE BEARING PEDESTAL.
   - C. INSTALL THE NEW ANCHOR BOLT HEAVY HEX NUT AND WASHER TO SECURE THE MASONRY PLATE TO THE CONCRETE BEARING PEDESTAL.
   - D. SET THE SOLE PLATE AND CURVED LOAD PLATE INTO THE PROPER POSITION.
   - E. WELD THE SOLE PLATE TO THE BOTTOM FLANGE OF THE STEEL BEAM.
   - F. WELD THE CURVED LOAD PLATE TO THE MASONRY PLATE.
   - G. CAULK THE TRANSVERSE JOINTS BETWEEN THE SOLE PLATE AND THE BOTTOM FLANGE.
   - H. APPLY PAINT REPAIRS TO THE EXISTING STEEL BEAM AND PAINT ALL STEEL SURFACES OF THE BEARING.
   - I. GREASE THE ENTIRE BEARING ASSEMBLY.

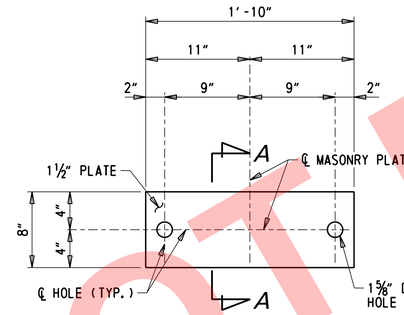

MASONRY PLATE DETAIL

1½" = 1'-0"

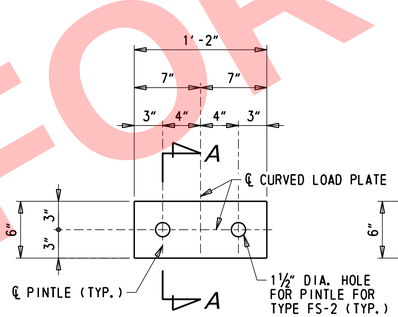

CURVED LOAD PLATE DETAIL

1½" = 1'-0"

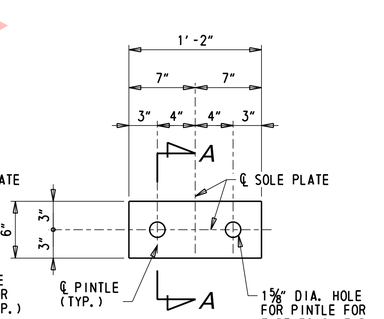

SOLE PLATE DETAIL

1½" = 1'-0"

NOT FOR CONSTRUCTION

N:\31987-00A\Contract_I-95\CADD\Bridge\BR1-748_BB06.dgn
5/31/2019 12:12:33 PM

ADDENDA / REVISIONS		SCALE AS NOTED	REHABILITATION OF I-95 FROM I-495 TO NORTH OF BRANDYWINE RIVER BRIDGE	CONTRACT T201407404	BRIDGE NO. 1 748 059	BEARING DETAILS FIXED TYPE FS-2 & FS-2A	BB-06 SECTION WRA
				COUNTY NEW CASTLE	DESIGNED BY: DAN		SHEET NO. 308
					CHECKED BY: WAG		

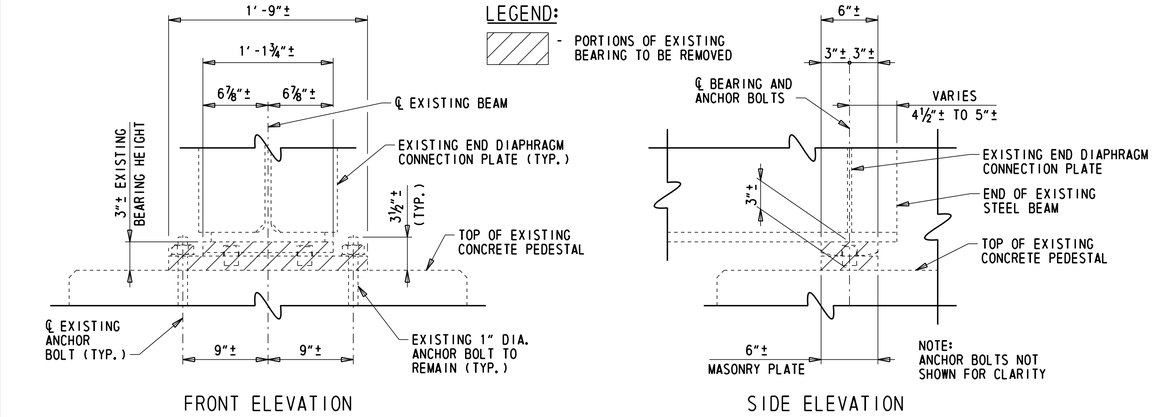

EXISTING BEARING TYPE FS-3

1½" = 1'-0"

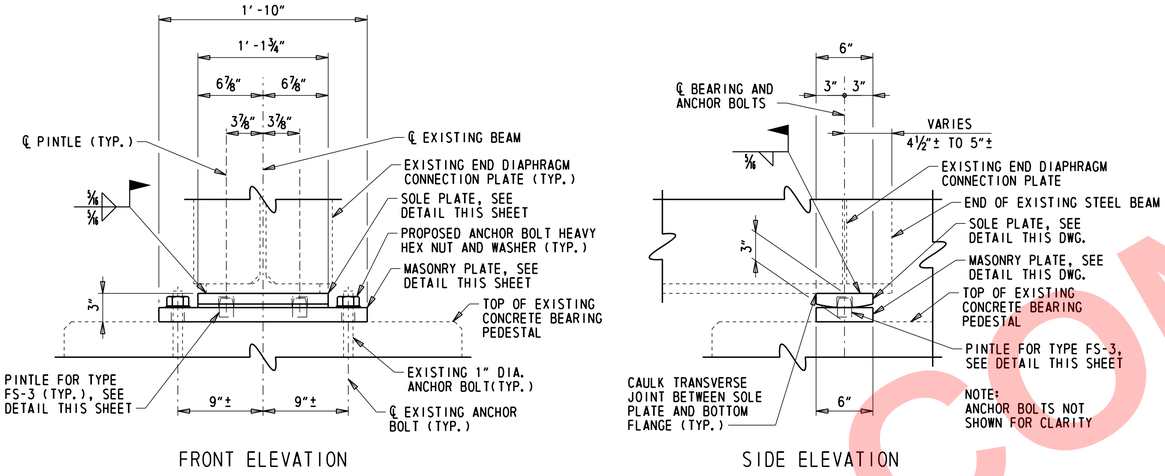

PROPOSED BEARING TYPE FS-3 & FS-3A

1½" = 1'-0"

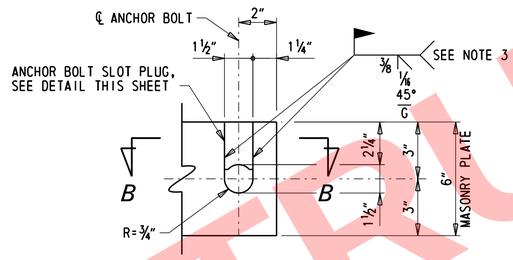

ANCHOR BOLT INSTALLATION SLOT DETAIL

3" = 1'-0"

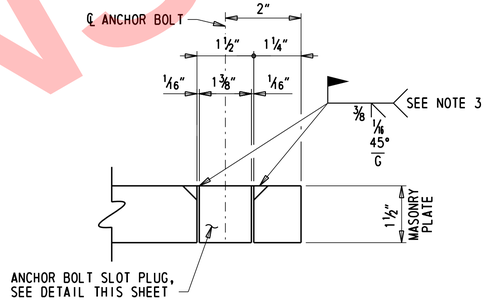

SECTION B-B

6" = 1'-0"

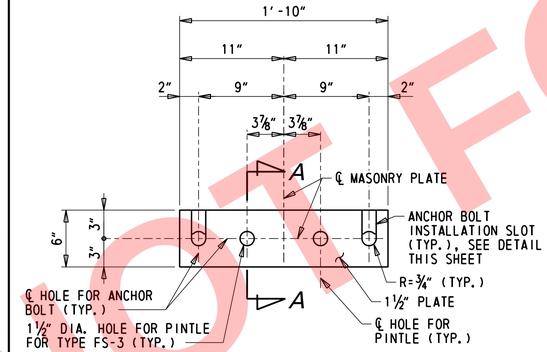

MASONRY PLATE DETAIL

1½" = 1'-0"

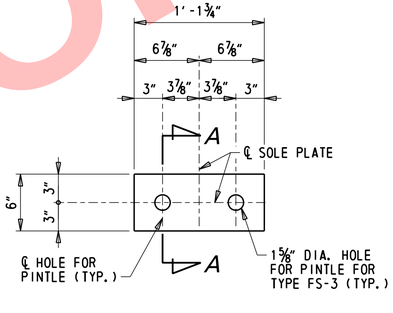

SOLE PLATE DETAIL

1½" = 1'-0"

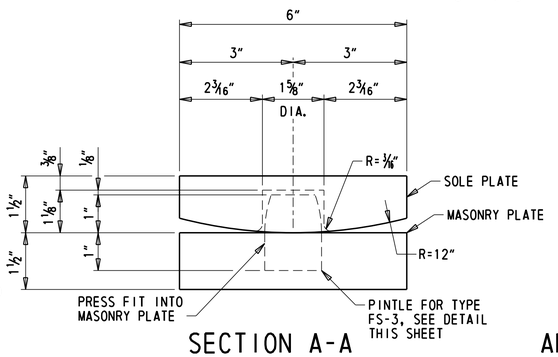

SECTION A-A

6" = 1'-0"

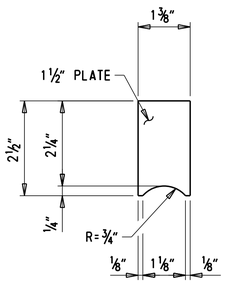

ANCHOR BOLT SLOT PLUG DETAIL

6" = 1'-0"

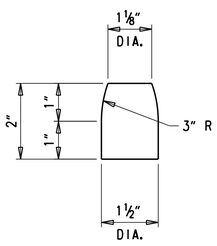

PINTLE DETAIL

6" = 1'-0"

BEARING TABLE

LOCATION	BEARING DESIGNATION			
	MARK	TOTAL NO. REQUIRED	CAPACITY PER BEARING	
			REACTION ⊗	MOVEMENT ⊠
SPAN 33N, PIER 33N	FS-3A•	3		N/A
SPAN 35N, PIER 36N	FS-3A•	1		N/A
SPAN 38N, PIER 38N	FS-3A•	1		N/A
SPAN 40N, PIER 40N	FS-3A•	1		N/A
SPAN 41N, PIER 42N	FS-3A•	2		N/A
SPAN 43N, PIER 44N	FS-3A•	1		N/A
SPAN 50S, PIER 50S	FS-3A•	6		N/A
SPAN 50S, PIER 50S	FS-3A•	6		N/A
SPAN 51S, PIER 52S	FS-3A•	2		N/A
SPAN 51N, PIER 52N	FS-3	1		N/A
SPAN 52N, PIER 52N	FS-3A•	6		N/A
SPAN 52N, PIER E52	FS-3A•	3		N/A
TOTAL - TYPE FS-3		3		
TOTAL - TYPE FS-3A		26		

LEGEND:

⊗ MAX. UN-FACTORED SERVICE 1 REACTION AT LOCATION (W/O DYNAMIC LOAD ALLOWANCE).

⊠ TEMPERATURE MOVEMENT.

• TYPE FS-3A BEARING SIMILAR TO TYPE FS-3 BUT DOES NOT HAVE PINTLES, SEE NOTE 4.

NOTES:

1. FOR ADDITIONAL FIXED STEEL PLATE BEARING NOTES, SEE DWG. BB-06.
2. THE MASONRY PLATE OF THE PROPOSED BEARINGS SHALL BE INSTALLED BY PROVIDING SLOTS IN THE PLATE TO ALLOW IT TO SLIDE INTO POSITION AROUND THE EXISTING ANCHOR BOLTS. THIS IS DUE TO THE EXISTING ANCHOR BOLTS EXTENDING ABOVE THE BOTTOM FLANGE OF THE EXISTING BEAMS. AFTER THE MASONRY PLATE HAS BEEN SET, INSTALL THE ANCHOR BOLT PLUG, WELD IN PLACE, THE GRIND THE WELDS SMOOTH WITH THE TOP OF THE MASONRY PLATE.
3. FOR THE TYPE FS-3A BEARINGS, USE THE SAME DETAILS FOR THE TYPE FS-3 BEARINGS BUT ELIMINATE THE PINTLES. THE PINTLES HAVE BEEN REMOVED FROM THE TYPE FS-3A BEARING TO FACILITATE THE DESIGN OF THE PROPOSED LINK SLAB.

SUGGESTED SEQUENCE OF INSTALLATION:

1. FOR THE SUGGESTED SEQUENCE OF CONSTRUCTION FOR JACKING THE BRIDGE AND REPLACING THE BEARING, REFER TO DWG. RH-01. THE FOLLOWING IS THE SUGGESTED SEQUENCE OF INSTALLATION FOR BEARING TYPES FS-3 AND FS-3A:
   - A. CLEAN THE EXISTING ANCHOR BOLTS AND MAKE ANY NECESSARY REPAIRS.
   - B. INSTALL THE NEW BEARING BY SLIDING THE MASONRY PLATE AROUND THE EXISTING ANCHOR BOLTS AND ONTO THE CONCRETE BEARING PEDESTAL.
   - C. WELD THE ANCHOR BOLT SLOT PLUG AT BOTH ANCHOR BOLTS. GRIND THE WELD FLUSH WITH THE TOP OF THE MASONRY PLATE.
   - D. INSTALL THE NEW ANCHOR BOLT HEAVY HEX NUT AND WASHER TO SECURE THE MASONRY PLATE TO THE CONCRETE BEARING PEDESTAL.
   - E. WELD THE SOLE PLATE TO THE BOTTOM FLANGE OF THE STEEL BEAM.
   - F. CAULK THE TRANSVERSE JOINTS BETWEEN THE SOLE PLATE AND THE BOTTOM FLANGE.
   - G. APPLY PAINT REPAIRS TO THE EXISTING STEEL BEAM AND PAINT ALL STEEL SURFACES OF THE BEARING.
   - H. GREASE THE ENTIRE BEARING ASSEMBLY.

NOT FOR CONSTRUCTION

N:\31987-004\Control_I-95\CADD\Bridge\BR1-748_BB07.dgn
5/31/2019 12:12:33 PM

ADDENDA / REVISIONS		SCALE AS NOTED	REHABILITATION OF I-95 FROM I-495 TO NORTH OF BRANDYWINE RIVER BRIDGE	CONTRACT T201407404	BRIDGE NO. 1 748 059	BEARING DETAILS FIXED TYPE FS-3 & FS-3A	BB-07 SECTION
				COUNTY NEW CASTLE	DESIGNED BY: DAN		WRA
					CHECKED BY: WAG		SHEET NO. 309

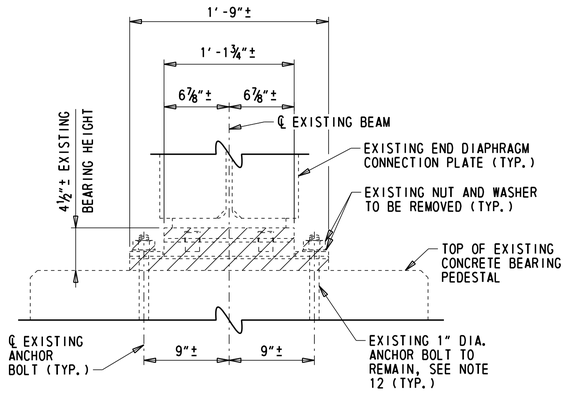

FRONT ELEVATION

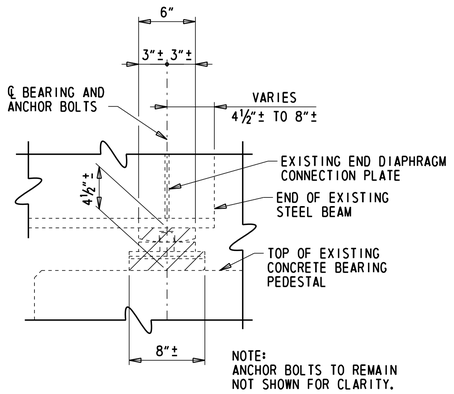

SIDE ELEVATION

EXISTING BEARING REMOVAL DETAIL

1½" = 1'-0"

SUGGESTED SEQUENCE OF REPLACEMENT:

1. FOR THE SUGGESTED SEQUENCE OF CONSTRUCTION FOR JACKING THE BRIDGE AND REPLACING THE BEARING, REFER TO DWG. RH-01. THE FOLLOWING IS THE SUGGESTED SEQUENCE OF INSTALLATION FOR REPLACEMENT BEARINGS FOR BEARING TYPE ES-3:

   A. CLEAN THE EXISTING ANCHOR BOLTS (SEE NOTE 4).
   B. INSTALL THE NEW MASONRY PLATE BY SLIDING IT AROUND THE EXISTING ANCHOR BOLTS AND ONTO THE CONCRETE BEARING PEDESTAL.
   C. WELD THE ANCHOR BOLT SLOT PLUG AT BOTH ANCHOR BOLTS. GRIND THE WELD FLUSH WITH THE TOP OF THE MASONRY PLATE.
   D. INSTALL THE PHOSPHER BRONZE PLATE OVER THE EXISTING ANCHOR BOLTS, ENSURING THE HOLES FOR THE ASTM A307 BOLTS ARE PROPERLY ALIGNED.
   E. PLACE THE GUIDE PLATES IN LOCATION AND ATTACH TO THE MASONRY PLATE AND PHOSPHER BRONZE PLATES WITH ASTM A307 BOLTS. ONCE PLATES ARE ASSEMBLED, INSTALL NEW ANCHOR BOLT HEAVY HEX NUT AND WASHER TO SECURE THE ASSEMBLY TO THE CONCRETE BEARING PEDESTAL.
   F. SET THE SOLE PLATE AND STEEL SLIDING PLATE INTO THE APPROPRIATE LOCATION FOR THE AMBIENT TEMPERATURE. ONCE SET, WELD TO THE BOTTOM FLANGE OF THE STEEL BEAM AS DETAILED.
   G. CAULK THE TRANSVERSE JOINTS BETWEEN THE SOLE PLATE AND THE BOTTOM FLANGE.
   H. APPLY PAINT REPAIRS TO THE EXISTING STEEL BEAM AND PAINT ALL STEEL SURFACES OF THE BEARING WHICH ARE NOT IN CONTACT WITH THE BRONZE SLIDING SURFACE IN ACCORDANCE WITH SECTION 616. DO NOT PAINT THE BRONZE SURFACE.
   I. GREASE THE ENTIRE BEARING ASSEMBLY.

BEARING TABLE

LOCATION	BEARING DESIGNATION MARK	TOTAL NO. REQUIRED	CAPACITY PER BEARING: SERVICE REACTION ⊗	STRENGTH REACTION ⊗	MOVEMENT 0° TO 110°F ⊠
NORTHBOUND SPANS					
SPAN 52N, PIER 53N	ES-3	6	X	X	X
SPAN 52N, PIER E53	ES-3	3	X	X	X
SPAN 53N, PIER 53N	ES-3	7	X	X	X
SPAN 53N, PIER E53	ES-3	2	X	X	X
SPAN 54N, PIER 55N	ES-3	1	X	X	X
SOUTHBOUND SPANS					
SPAN 52S, PIER 53S	ES-3	6	X	X	X
SPAN 53S, PIER 53S	ES-3	6	X	X	X
SPAN 54S, PIER 55S	ES-3	2	X	X	X
TOTAL TYPE ES-3		33			

KEY:

⊗ MAX. UN-FACTORED SERVICE 1 REACTION AT LOCATION (INCLUDING DYNAMIC LOAD ALLOWANCE).

⊗ MAX. FACTORED STRENGTH 1 REACTION AT LOCATION (INCLUDING DYNAMIC LOAD ALLOWANCE).

⊠ TEMPERATURE MOVEMENT.

LEGEND:

▨ PORTIONS OF EXISTING BEARING TO BE REMOVED (ITEM 623500)

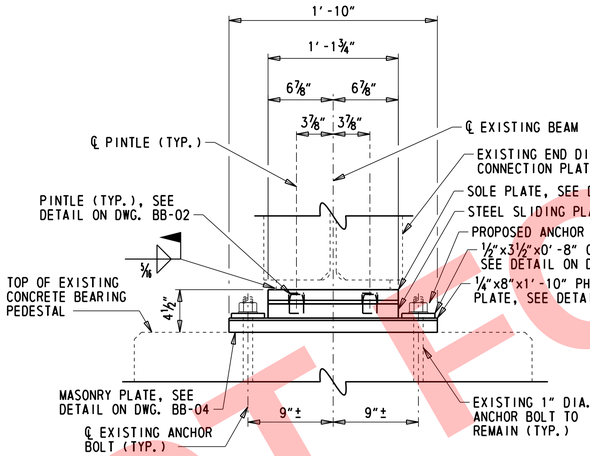

FRONT ELEVATION

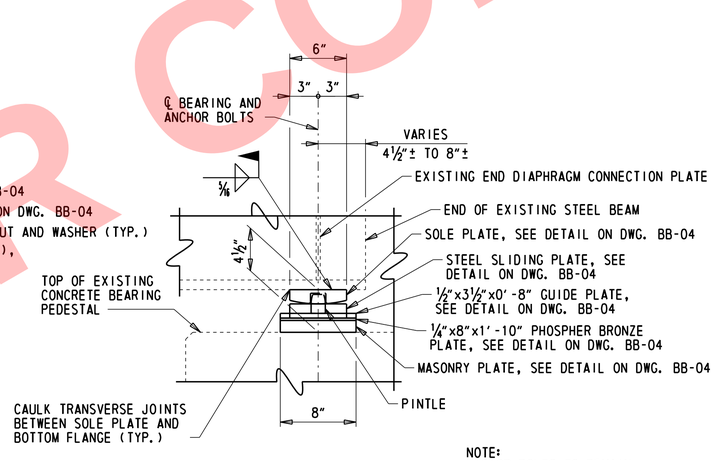

SIDE ELEVATION

NOTE:
ANCHOR BOLTS TO REMAIN
NOT SHOWN FOR CLARITY.

BEARING TYPE ES-3

1½" = 1'-0"

NOTES:

1. PROVIDE ALL BEARINGS IN ACCORDANCE WITH THE REQUIREMENTS OF SECTION 615, SPECIAL PROVISION 623500, AND IN ACCORDANCE WITH CHAPTER 18 OF THE 2017 AASHTO LRFD BRIDGE CONSTRUCTION SPECIFICATIONS, 4TH EDITION.
2. CONTRACTOR TO VERIFY ALL EXISTING DIMENSIONS PRIOR TO ORDERING OR FABRICATING BEARINGS.
3. THE EXISTING ANCHOR BOLTS ARE TO REMAIN, UNLESS OTHERWISE NOTED. THE CONTRACTOR SHALL TAKE CARE TO NOT DAMAGE THE ANCHOR BOLTS DURING THE REMOVAL OF THE EXISTING BEARING. ANY ANCHOR BOLTS DAMAGED BY THE CONTRACTOR DURING REMOVAL OF THE EXISTING BEARINGS SHALL BE REPAIRED TO THE SATISFACTION OF THE ENGINEER AND SHALL BE AT THE SOLE EXPENSE OF THE CONTRACTOR.
4. AFTER REMOVAL OF THE EXISTING BEARINGS, THE CONTRACTOR SHALL INSPECT THE EXISTING ANCHOR BOLTS TO REMAIN FOR ANY DEFECTS WHICH MAY ADVERSELY AFFECT THEIR PERFORMANCE. IF THE ENTIRE LINE OF ANCHOR BOLTS EXHIBITS DETERIORATION GREATER THAN 25% OF THE TOTAL CROSS-SECTIONAL AREA, THE CONTRACTOR SHALL STOP WORK AND NOTIFY THE ENGINEER IMMEDIATELY. DETERIORATION LESS THAN 25% OF THE TOTAL CROSS-SECTIONAL AREA OF THE ANCHOR BOLTS IS ACCEPTABLE, IN WHICH CASE THE ANCHOR BOLTS SHALL BE CLEANED AND PAINTED IN ACCORDANCE WITH SECTION 616 PRIOR TO INSTALLING NEW BRONZE BEARINGS.
5. BEARING SHALL BE PLACED NORMAL TO CENTERLINE OF BEAM. THE SKEW ANGLE BETWEEN THE CENTERLINE OF THE EXISTING BEAMS AND THE CENTERLINE OF BEARING AT THE PIERS VARY BY LOCATION. REFER TO DWG. FR-01, FR-02, AND RH-11 FOR SKEW ANGLES, IDENTIFIED AS ANGLE A OR ANGLE B.
6. THE CONTRACTOR SHALL PREPARE THE EXISTING CONCRETE BEARING AREA TO ENSURE FULL CONTACT OF THE BEARINGS ON THE CONCRETE PEDESTAL. THE CONTRACTOR MAY USE A NON-SHRINK GROUT LEVELING PAD OR OTHER APPROVED METHOD TO PROVIDE A SMOOTH SURFACE FOR PLACING THE BEARING.
7. PORTIONS OF THE BOTTOM FLANGES OF THE EXISTING STEEL BEAMS TO RECEIVE NEW BEARINGS SHALL BE CLEANED PRIOR TO WELDING. CONTRACTOR SHALL REMOVE THE EXISTING PAINT IN ACCORDANCE WITH ITEM 616003 PRIOR TO PERFORMING ANY GRINDING, CUTTING, OR WELDING OF THE EXISTING STRUCTURAL STEEL AS PART OF THIS WORK.
8. ALL FIELD WELDING SHALL BE DONE BY THE SHIELDED METAL-ARC PROCESS. CONTRACTOR SHALL NOT PAINT WELDS PRIOR TO INSPECTION BY THE ENGINEER.
9. ALL PAINT TO BE USED TO TOUCH UP THE EXISTING COATINGS ON THE STRUCTURAL STEEL DAMAGED WHILE WELDING AND REMOVING EXISTING BEARING AND FOR PAINTING NEW BEARING ASSEMBLIES SHALL BE IN ACCORDANCE WITH THE REQUIREMENTS OF SECTION 616. THE COLOR OF THE FINISH COAT SHALL MATCH EXISTING.
10. FILL SLOTS AND HOLES IN STEEL PLATES AROUND ANCHOR BOLTS WITH AN APPROVED NON-HARDENING CAULKING COMPOUND OR ELASTIC JOINT SEALER.
11. PAYMENT FOR BRONZE EXPANSION BEARINGS WILL BE MADE UNDER ITEM 623500 - BRONZE BEARINGS. PAYMENT WILL INCLUDE REMOVAL OF EXISTING BEARINGS, PREPARATION OF THE CONCRETE BEARING AREA, FABRICATING AND INSTALLING NEW BEARINGS, WELDING, ANCHOR BOLTS AT PROPOSED GIRDER LOCATIONS, AND ANY OTHER INCIDENTALS NECESSARY TO COMPLETE THE WORK.
12. AT NEW PIERS 1" DIA. SWEDGED ANCHOR BOLTS SHALL BE SUPPLIED WITH THE BEARINGS. ANCHOR BOLTS SHALL BE GRADE 55 AND SIZED TO PROVIDE A MINIMUM OF 1'-3" EMBEDMENT INTO THE CONCRETE PEDESTAL/CAP.

NOT FOR CONSTRUCTION

N:\31987-00A\Contract_I-95\C&D\Bridge\BR1-748_BB11.dgn
5/31/2019 12:12:34 PM

ADDENDA / REVISIONS		SCALE AS NOTED	REHABILITATION OF I-95 FROM I-495 TO NORTH OF BRANDYWINE RIVER BRIDGE	CONTRACT T201407404	BRIDGE NO. 1 748 059	BEARING DETAILS EXPANSION TYPE ES-3 1 OF 2	BB-11 SECTION WRA
				COUNTY NEW CASTLE	DESIGNED BY: DAN		SHEET NO. 312
					CHECKED BY: WAG		

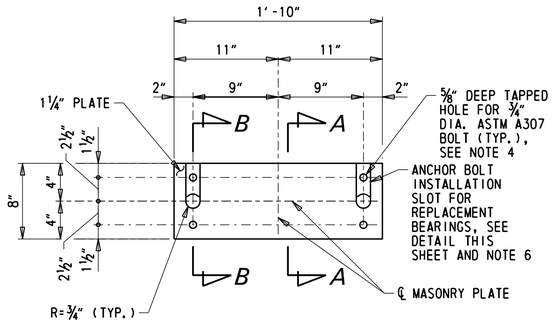

MASONRY PLATE DETAIL

1½″ = 1′-0″

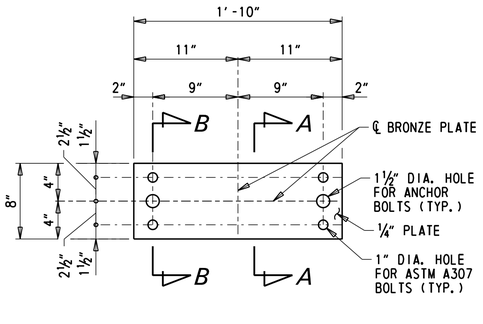

PHOSPHER BRONZE PLATE DETAIL

1½″ = 1′-0″

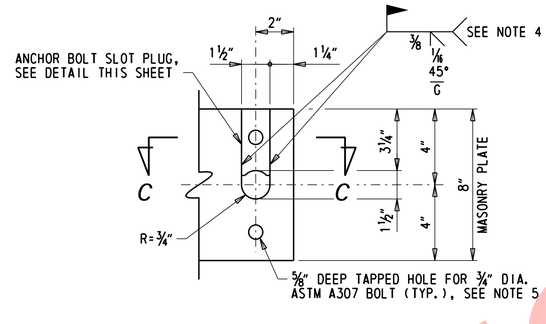

ANCHOR BOLT INSTALLATION SLOT DETAIL

3″ = 1′-0″

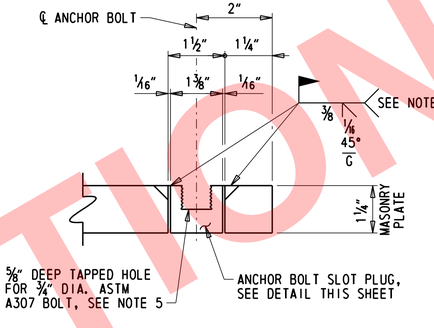

SECTION C-C

6″ = 1′-0″

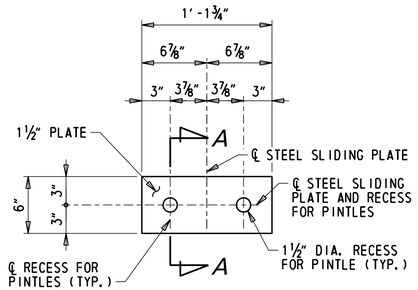

STEEL SLIDING PLATE DETAIL

1½″ = 1′-0″

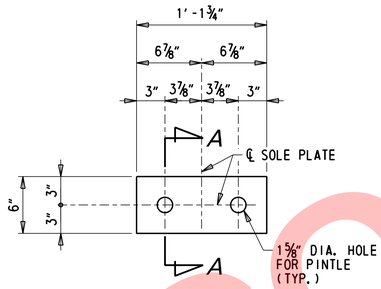

SOLE PLATE DETAIL

1½″ = 1′-0″

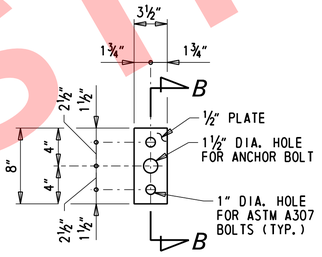

GUIDE PLATE DETAIL

1½″ = 1′-0″

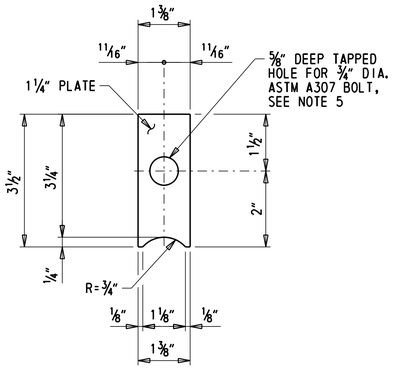

ANCHOR BOLT SLOT PLUG DETAIL

6″ = 1′-0″

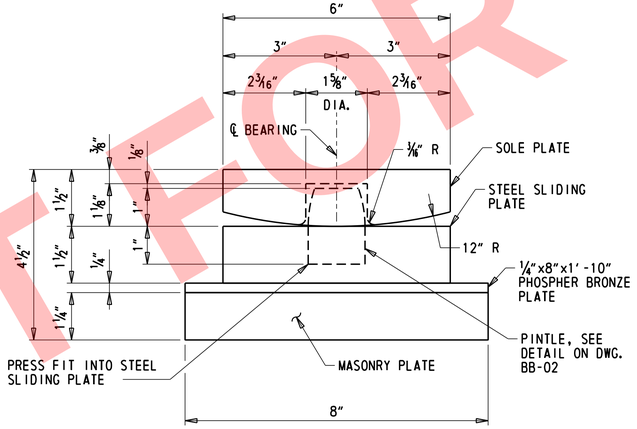

SECTION A-A

6″ = 1′-0″

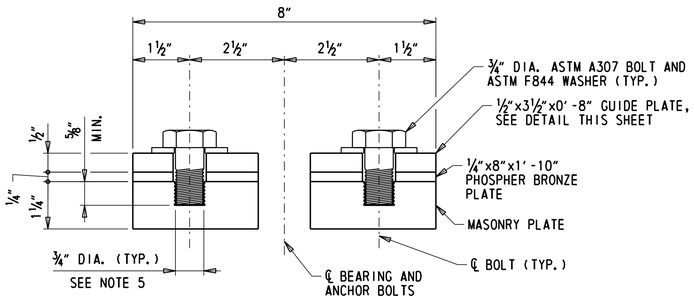

SECTION B-B

6″ = 1′-0″

NOTES:

1. FOR ADDITIONAL BRONZE BEARING NOTES, SEE DWG. BB-03.
2. FOR ADDITIONAL DETAILS ON THE ES-3 BEARING, SEE DWG. BB-03.
3. FOR SUGGESTED SEQUENCE OF REPLACEMENT FOR BEARING TYPE ES-3, SEE DWG. BB-03.
4. THE MASONRY PLATE OF THE PROPOSED BEARINGS SHALL BE INSTALLED BY PROVIDING ANCHOR BOLT SLOTS IN THE PLATE TO ALLOW IT TO SLIDE INTO POSITION AROUND THE EXISTING ANCHOR BOLTS. THIS IS DUE TO THE ANCHOR BOLTS EXTENDING TO NEAR THE BOTTOM FLANGE OF THE EXISTING BEAMS. AFTER THE MASONRY PLATE IS SET AROUND THE ANCHOR BOLTS, INSTALL THE ANCHOR BOLT SLOT PLUG, WELD IN PLACE, THEN GRIND THE WELDS SMOOTH WITH THE TOP OF THE MASONRY PLATE.
5. HOLES IN THE MASONRY PLATE AND ANCHOR BOLT SLOT PLUG SHALL BE TAPPED TO RECEIVE THE ¾″ DIAMETER ASTM A307 BOLTS.
6. ANCHOR BOLT INSTALLATION SLOT SHALL ONLY BE PROVIDED ON REPLACEMENT BEARINGS. BEARINGS FOR NEW GIRDERS AT PIER 34D THROUGH 39D SHALL HAVE A 1½″ DIAMETER HOLE.

NOT FOR CONSTRUCTION

N:\31987-004\Contract_I-95\CADD\Bridge\BR1-748_BB12.dgn
5/31/2019 12:02:35 PM

ADDENDA / REVISIONS	SCALE AS NOTED	REHABILITATION OF I-95 FROM I-495 TO NORTH OF BRANDYWINE RIVER BRIDGE	CONTRACT T201407404	BRIDGE NO. 1 748 059	BEARING DETAILS EXPANSION TYPE ES-3 2 OF 2	BB-12
			COUNTY NEW CASTLE	DESIGNED BY: DAN		SECTION WRA
				CHECKED BY: WAG		SHEET NO. 313

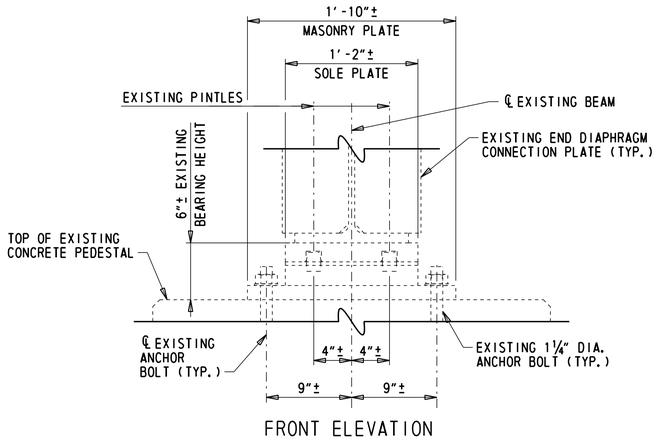

FRONT ELEVATION

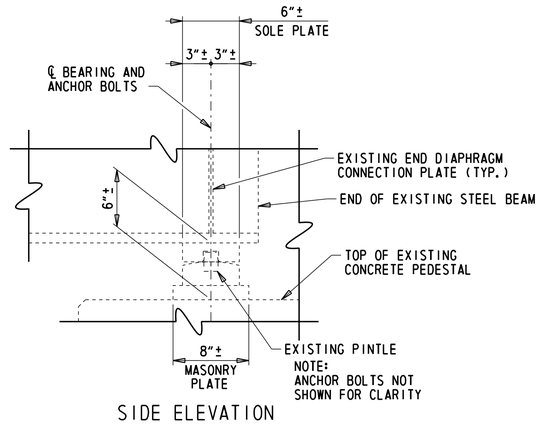

SIDE ELEVATION

EXISTING BEARING TYPE FS-2

1½" = 1'-0"

BEARING MODIFICATION LOCATION TABLE							
SUPPORT	SPAN	EXISTING BEARING TYPE	QTY	SUPPORT	SPAN	EXISTING BEARING TYPE	QTY
PIER 29N	28N	FS-2	6	-	-	-	-
PIER 31N	31N	FS-2	6	-	-	-	-
PIER 33N	33N	FS-3	3	-	-	-	-
PIER 36N	35N	FS-3	4	-	-	-	-
PIER 38N	38N	FS-3	5	-	-	-	-
PIER 40N	40N	FS-3	5	-	-	-	-
PIER 42N	41N	FS-3	4	PIER 42S	41S	FS-3	6
PIER 44N	43N	FS-2	5	-	-	-	-
PIER 46S	46S	FS-2	4	PIER 46S	46S	FS-2	6
PIER 48N	48N	FS-2	6	PIER 48S	48S	FS-2	6
PIER 50N	50N	FS-3	4	-	-	-	-
-	-	-	-	PIER 52S	51S	FS-3	4
-	-	-	-	PIER 54S	53S	FS-3	6
PIER 56N	56N	FS-2	8	PIER 56S	56S	FS-2	4
-	-	-	-	-	-	-	-

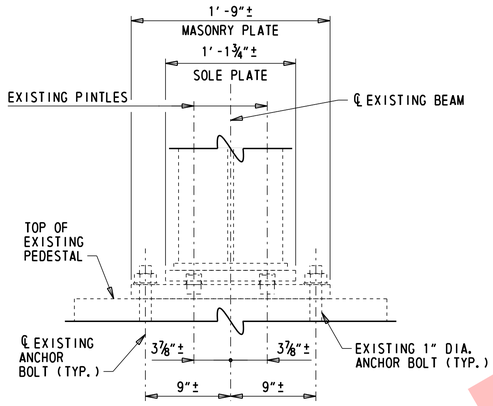

FRONT ELEVATION

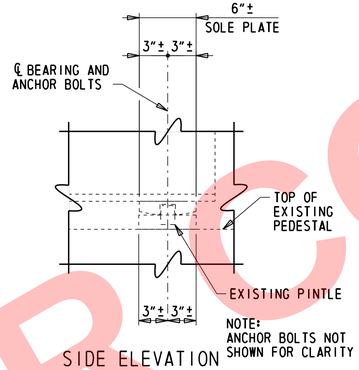

SIDE ELEVATION

EXISTING BEARING TYPE FS-3

1½" = 1'-0"

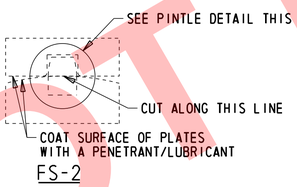

FS-2

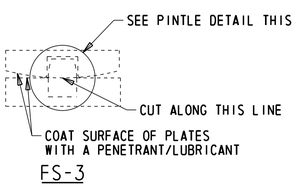

FS-3

BEARING MODIFICATION DETAIL

3" = 1'-0"

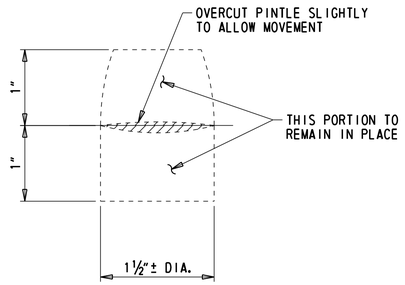

PINTLE DETAIL

N.T.S.

SEQUENCE OF CONSTRUCTION

1. REMOVE THE EXISTING JOINT AS SHOWN ON DWG. EX-23.
2. JACK THE BRIDGE AS SHOWN ON DWG. RH-02.
3. CUT THE PINTLES AS SHOWN.
4. LOWER BRIDGE.
5. PREP AND POUR THE UHPC FOR THE LINK SLAB AS SHOWN ON DWG. EX-23.
6. GREASE BEARINGS IN ACCORDANCE WITH ITEM 623004 - CLEAN AND GREASE BRIDGE BEARINGS.

NOTES:

1. FOR EXISTING FIXED BEARINGS, CUT THE PINTLE ALONG LINE SHOWN. THE PINTLE SHALL BE SLIGHTLY OVERCUT TO ALLOW FOR MOVEMENT.
2. THE SLOTS SHALL BE DRILLED OR BURNED TO THE SIZE SHOWN, OR AS DIRECTED BY THE ENGINEER.
3. CARE SHALL BE TAKEN NOT TO DAMAGE EXISTING BEAM FLANGES, BEARING ASSEMBLIES, AND ANCHOR BOLTS.
4. PAYMENT FOR CUTTING THE PINTLES AND LUBRICATING PLATES WILL BE INCIDENTAL TO ITEM 604000 - JACKING BRIDGE.
5. LINK SLAB SHALL BE POURED WITHIN 24 HOURS OF THE CUTTING OF THE PINTLES.
6. OVERCUT OF PINTLE SHOULD BE LIMITED TO THE WIDTH OF THE CUTTING ELEMENT AND TO ENSURE THE TWO HALVES OF THE PINTLE CAN MOVE FREELY.

NOT FOR CONSTRUCTION

N:\31987-004\Cad\civil_I-95\CADD\Bridge\BR1-748_BB14.dgn
5/31/2019 12:12:36 PM

ADDENDA / REVISIONS		SCALE AS NOTED	REHABILITATION OF I-95 FROM I-495 TO NORTH OF BRANDYWINE RIVER BRIDGE	CONTRACT T201407404	BRIDGE NO. 1 748 059	BEARING MODIFICATION DETAILS	BB-14 SECTION WRA
				COUNTY NEW CASTLE	DESIGNED BY: DAN		SHEET NO. 314
					CHECKED BY: WAG		

BRIDGE JACKING NOTES:

1. CONTRACTOR SHALL VERIFY COMPATIBILITY OF THE JACKING ASSEMBLY WITH THE HYDRAULIC JACK (SEE NOTE 15) PRIOR TO FABRICATION. ALTERNATE JACKING SCHEMES OR ASSEMBLIES MAY BE SUBMITTED TO THE ENGINEER FOR APPROVAL. SUBMISSION SHALL INCLUDE DETAILED SHOP DRAWINGS AND CALCULATIONS SEALED BY A PROFESSIONAL ENGINEER REGISTERED IN THE STATE OF DELAWARE. ANY ALTERNATE DESIGN SHALL BE STRUCTURALLY EQUIVALENT AND MAY BE REJECTED BY THE ENGINEER FOR ANY REASON INCLUDING REASONS NOT RELATED TO STRUCTURAL EQUIVALENCY. NO ADDITIONAL PAYMENT WILL BE MADE FOR ALTERNATE JACKING SCHEMES OR ASSEMBLIES.

2. THE CONTRACTOR SHALL VERIFY ALL EXISTING FIELD DIMENSIONS PRIOR TO ORDERING OR FABRICATING THE JACKING DIAPHRAGM, TEMPORARY BEARING STIFFENERS, AND JACKING ASSEMBLY, AND PRIOR TO DRILLING HOLES IN EXISTING STEEL BEAMS.

3. ALL STEEL PLATES AND STEEL ROLLED SHAPES SHALL BE AASHTO M 270, GRADE 50 MATERIAL.

4. UNLESS OTHERWISE NOTED, ALL BOLTS SHALL BE ASTM F3125 GR. A325. ALL BOLTS ARE DESIGNED WITH THE THREADS INCLUDED IN THE SHEAR PLANE. ALL HOLES FOR BOLTS SHALL BE 1/8" DIAMETER LARGER THAN THE DIAMETER OF THE BOLT. REFER TO THE PERTINENT PLAN SHEETS FOR BOLT SIZES.

5. ALL METAL WORK AND ALL WELDING SHALL BE PERFORMED IN ACCORDANCE WITH THE STANDARD SPECIFICATIONS, SECTION 615.

6. JACKING ASSEMBLY, JACKING STIFFENERS, AND TEMPORARY BEARING STIFFENERS SHALL BE SET PLUMB TO VERTICAL.

7. WORK SHALL CONSIST OF JACKING THE EXISTING BEAMS, REMOVING THE EXISTING BEARINGS, AND INSTALLING NEW STEEL PLATE FIXED BEARINGS AND BRONZE PLATE EXPANSION BEARINGS. FOR LOCATIONS OF BEARING REPLACEMENTS, SEE DWG. BB-01. ADDITIONAL CONCRETE REPAIR WORK THAT MAY BE REQUIRED PRIOR TO PERFORMING JACKING OPERATIONS IS DETAILED ON DWGS. PR-01 TO PR-06.

8. THE ENGINEER SHALL BE PRESENT DURING ALL JACKING OPERATIONS TO ENSURE CONFORMANCE WITH ALL PERTINENT CONTRACT PROVISIONS.

9. IN THE PRESENCE OF THE ENGINEER, THE CONTRACTOR SHALL INSPECT THE CONDITION OF THE EXISTING STEEL BEAMS FOR ANY DEFECTS WHICH MAY IMPACT THE LOAD CARRYING CAPACITY OF THE BEAM DURING JACKING. IF ANY DEFECTS ARE FOUND THE CONTRACTOR SHALL STOP WORK AT THAT LOCATION AND NOTIFY THE ENGINEER IMMEDIATELY.

   WHERE CONCRETE REPAIRS TO THE PIER CAPS AND PEDESTALS OVERLAP WITH THE JACKING OPERATIONS, THE CONCRETE SHALL BE REPAIRED PRIOR TO THE JACKING OPERATIONS. ALL CONCRETE REPAIRS SHALL BE PERFORMED AND WILL BE PAID FOR AS SHOWN ON DWG. PN-04. JACKING OPERATIONS SHALL NOT BE PERFORMED UNTIL THE REPAIRED AREAS HAVE REACHED A COMPRESSIVE STRENGTH OF 3,000 PSI.

10. THE CONTRACTOR SHALL HAVE THE PROPOSED BEARING ASSEMBLIES FOR THE BEARING LINE BEING REPLACED ON SITE PRIOR TO COMMENCING WITH JACKING OPERATIONS. THE PROPOSED BEARING ASSEMBLIES MUST BE ACCEPTED BY THE ENGINEER BEFORE PROCEEDING WITH THE WORK.

11. WHEN MULTIPLE HYDRAULIC JACKS ARE USED FOR THE JACKING OPERATION, THEY SHALL BE OPERATED CONCURRENTLY (MANIFOLDED) TO PROVIDE AN EQUAL AND BALANCED LIFTING FORCE.

    THE MAXIMUM DIFFERENTIAL DISPLACEMENT BETWEEN ANY TWO ADJACENT BEAMS IS NOT TO EXCEED 1/8" AT ANY TIME.

    THE MAXIMUM VERTICAL DISPLACEMENT OF ANY BEAM FROM THE EXISTING LOCATION IS NOT TO EXCEED 1/4" AT ANY TIME.

12. THE CONTRACTOR SHALL USE ONLY THOSE JACKS WITH LOCK-NUTS CAPABLE OF SUPPORTING A LOAD EQUAL TO THE RATED CAPACITY OF THE JACK IN THE EVENT THE JACK LOSES HYDRAULIC PRESSURE. THE CONTRACTOR SHALL ADVANCE THE LOCK-NUTS ON ALL JACKS SUCH THAT THE MAXIMUM DISTANCE BETWEEN THE TOP OF A JACK AND THE LOCK-NUT SHALL NOT EXCEED 1/8" AT ANY TIME DURING THE JACKING PROCEDURE.

13. NO REPAIR WORK SHALL BE PERFORMED UNTIL THE JACKING OPERATION IS COMPLETE AND THE BRIDGE IS FULLY SUPPORTED BY THE JACKING ASSEMBLY (JACKING DIAPHRAGM, LOCK-NUT JACK, SPACER COLUMN, ETC.).

14. LIVE LOAD SHALL BE TEMPORARILY REMOVED FROM THE BRIDGE DURING JACKING UNTIL THE BRIDGE IS FULLY SUPPORTED BY THE JACKING ASSEMBLIES.

15. THE HYDRAULIC JACKS FOR THE TYPICAL JACKING SCHEME SHALL HAVE A MINIMUM CAPACITY OF 200 TONS. THE MAXIMUM FACTORED LOADS OF ALL SPANS WERE USED TO SIZE THE HYDRAULIC JACK.

16. THE FACTORED LOADS FOR JACKING USE A DEAD LOAD FACTOR OF 1.30 AND A LIVE LOAD FACTOR OF 1.75. THE FACTORED LOADS SHOWN IN THE TABLE ON THIS SHEET WERE USED FOR THE DESIGN OF THE JACKING DIAPHRAGMS AND JACKING ASSEMBLIES, EXCLUDING THE HYDRAULIC JACK.

17. CONTRACTOR TO PROVIDE DETAIL FOR APPROVAL BY THE ENGINEER THAT ALLOWS FOR MOVEMENT OF THE JACKING SYSTEM UNDER NORMAL THERMAL CONDITIONS AS NOTED IN THE DETAIL ON DWG. RH-03 PRIOR TO FABRICATION.

18. THE HYDRAULIC JACKS FOR THE SPECIAL JACKING SCHEMES SHOWN ON DWG. RH-03 TO RH-08 SHALL HAVE A MINIMUM CAPACITY OF 150 TONS. THE MAXIMUM FACTORED LOADS OF ALL SPANS WERE USED TO SIZE THE HYDRAULIC JACK.

19. THE JACKING ASSEMBLIES HAVE BEEN DESIGNED ASSUMING NO LONGITUDINAL FORCES DURING STAGE 2 CONSTRUCTION OF THE NORTHBOUND BRIDGE AND ASSUMING ONE (1) LANE OF LIVE LOADING EFFECT DURING STAGE 3 CONSTRUCTION OF THE SOUTHBOUND BRIDGE. ANY ALTERNATE LIVE LOADING ON EITHER BRIDGE SHALL REQUIRE THE CONTRACTOR TO VERIFY THE CAPACITY OF THE NOTED JACKING COMPONENTS.

SUGGESTED SEQUENCE OF CONSTRUCTION:

IN EACH SPAN, EXISTING BEARING REPLACEMENTS SHALL BE COMPLETED PRIOR TO INSTALLING THE STEEL INTERMEDIATE AND END DIAPHRAGMS AND POURING THE CLOSURE POUR BETWEEN EXISTING GIRDER S-6 AND PROPOSED GIRDER S-7.

THE FOLLOWING IS A SUGGESTED SEQUENCE OF CONSTRUCTION FOR THE JACKING OPERATIONS.

1. INSTALL ALL NECESSARY TEMPORARY WORK PLATFORMS AND/OR RIGGING. CARE SHALL BE TAKEN NOT TO INTERFERE WITH PROPOSED LOCATIONS OF BEARING DEVICES, JACKING DIAPHRAGMS, AND JACKING ASSEMBLIES.
2. INSTALL ALL TEMPORARY OR PERMANENT JACKING DIAPHRAGMS AS NECESSARY.
3. PLACE NON-SHRINK GROUT LEVELING PADS AS REQUIRED AND CURE TO SPECIFIED STRENGTH.
4. INSTALL ALL JACKING ASSEMBLIES AS NECESSARY.
5. REMOVE NUTS AND WASHERS OF THE EXISTING ANCHOR BOLTS.
6. TEMPORARILY DRAG/STOP I-95 SB TRAFFIC AND JACK BEAM(S) OFF THEIR RESPECTIVE BEARINGS.
7. SECURE JACKING DIAPHRAGMS IN PLACE WITH LOCK-NUTS OF THE HYDRAULIC JACKS AT LOCATIONS AS SHOWN IN THE JACKING SCHEMES ON DWG. RH-02 TO RH-08. PROVIDE FOR SUPERSTRUCTURE EXPANSION WHERE NECESSARY.
8. RELEASE LOAD IN JACK TO TRANSFER ALL LOAD TO THE JACKING ASSEMBLY AND LOCK-NUT.
9. REMOVE EXISTING WELDS BETWEEN THE SOLE PLATE AND THE BOTTOM FLANGE OF THE EXISTING BEAM. CARE SHALL BE TAKEN NOT TO DAMAGE THE EXISTING BEAM. ANY DAMAGE TO THE EXISTING BEAM CAUSED BY THE CONTRACTOR'S REMOVAL METHODS SHALL BE REPAIRED AT THE CONTRACTOR'S EXPENSE AS DIRECTED BY THE ENGINEER.
10. EXISTING ANCHOR BOLTS ARE TO REMAIN IN PLACE FOR PROPOSED BEARINGS UNLESS OTHERWISE NOTED. CARE SHALL BE TAKEN NOT TO DAMAGE THE EXISTING ANCHOR BOLTS. ANY DAMAGE TO THE EXISTING ANCHOR BOLTS CAUSED BY THE CONTRACTOR'S REMOVAL METHODS SHALL BE REPAIRED AT THE CONTRACTOR'S EXPENSE AS DIRECTED BY THE ENGINEER.
11. REMOVE EXISTING BEARING ASSEMBLY. TO REMOVE THE BEARING ASSEMBLY, IT MAY BE NECESSARY TO CUT OR REMOVE THE PINTLES BETWEEN THE MASONRY PLATE, SLIDING (BRONZE) PLATE, AND/OR THE SOLE PLATE. IT MAY ALSO BE NECESSARY TO CUT THE MASONRY PLATE TO REMOVE FROM THE ANCHOR BOLTS. CARE SHALL BE TAKEN NOT TO DAMAGE THE EXISTING STEEL BEAM OR ANCHOR BOLTS TO REMAIN DURING ANY CUTTING OF THE EXISTING BEARING.
12. CLEAN THE BOTTOM SURFACE OF THE EXISTING BEAM AND APPLY PRIMER IN ACCORDANCE WITH SECTION 616. PAYMENT FOR CLEANING AND PAINTING WILL BE INCIDENTAL TO ITEM 604000 - JACKING BRIDGE.
13. THE TOP OF THE EXISTING BEARING PEDESTAL SHALL BE LEVEL AND FREE OF DEBRIS. IF REQUIRED, NON-SHRINK GROUT SHALL BE USED TO LEVEL AND PROVIDE A SMOOTH BEARING SURFACE FOR THE PROPOSED BEARING. PAYMENT FOR THIS WORK WILL BE INCIDENTAL TO ITEM 604000 - JACKING BRIDGE.
14. INSTALL PROPOSED BEARINGS. FOR THE SUGGESTED SEQUENCE OF REPLACEMENT FOR BEARING TYPE ES-3, SEE DWG. BB-03 AND BB-04.
15. TEMPORARILY DRAG/STOP I-95 SB TRAFFIC AND JACK BEAM(S) OFF OF THE JACKING ASSEMBLY AND LOCK-NUTS. LOWER JACKS TO TRANSFER BEAM LOADS TO THE PROPOSED BEARINGS.
16. REMOVE ALL TEMPORARY BEARING STIFFENERS, TEMPORARY JACKING DIAPHRAGMS, AND JACKING ASSEMBLIES. FILL DRILLED HOLES IN EXISTING BEAMS WITH NEW HIGH-STRENGTH BOLTS CONFORMING TO ASTM F3125 GRADE A325. NON-SHRINK GROUT LEVELING PADS USED UNDER JACKING ASSEMBLIES MAY BE LEFT IN PLACE WITH APPROVAL OF THE ENGINEER.

LOADS FOR JACKING

SPAN NO.	SUBSTRUCTURE UNIT	BEAM NO.	BEAM SPACING ALONG ℄ OF BEARING	BEAM MEMBER	ANGLE A•	UNFACTORED** DL +15%	UNFACTORED** DL +LL +IMP	FACTORED** DL +15%	FACTORED** DL +LL +IMP
SPAN 28N	PIER 29N	28N-1	8'-0"±	36 WF 160	89°-39'-34"±	XX KIP	XXX KIP	XX KIP	XXX KIP
		28N-2 TO 28N-4	7'-7"±	36 WF 160	89°-39'-34"±				
		28N-5	7'-7"±	36 WF 160	89°-39'-33"±				
		28N-6	7'-7"±	36 WF 160	89°-39'-33"±				
SPAN 31N	PIER 31N	31N-1	7'-7"±	36 WF 160	90°-00'-00"±				
		31N-2 TO 31N-5	7'-7"±	36 WF 160	90°-00'-00"±				
		31N-6	7'-7"±	36 WF 160	90°-00'-00"±				
SPAN 33N	PIER 33N	33N-1	7'-7"±	36 WF 150	90°-27'-03"±				
		33N-2 TO 33N-5	7'-7"±	36 WF 150	90°-27'-03"±				
		33N-6	7'-7"±	36 WF 150	90°-27'-03"±				
SPAN 35N	PIER 36N	35N-1	7'-7"±	36 WF 150	91°-09'-13"±				
		35N-2 TO 35N-5	7'-7"±	36 WF 150	91°-09'-13"±				
		35N-6	7'-7"±	36 WF 150	91°-09'-13"±				
SPAN 38N	PIER 38N	38N-1	7'-7"±	36 WF 150	91°-17'-55"±				
		38N-2 TO 38N-5	7'-7"±	36 WF 150	91°-17'-55"±				
		38N-6	7'-7"±	36 WF 150	91°-17'-55"±				
SPAN 40N	PIER 40N	40N-1	7'-7"±	36 WF 150	91°-17'-55"±				
		40N-2 TO 40N-5	7'-7"±	36 WF 150	91°-17'-55"±				
		40N-6	7'-7"±	36 WF 150	91°-17'-55"±				
SPAN 41N	PIER 42N	41N-1	7'-7"±	36 WF 150	91°-17'-55"±				
		41N-2 TO 41N-5	7'-7"±	36 WF 150	91°-17'-55"±				
		41N-6	7'-8"±	36 WF 150	91°-13'-33"±				
SPAN 41S	PIER 42S	41S-1	7'-7"±	36 WF 150	91°-17'-55"±				
		41S-2 TO 41S-5	7'-7"±	36 WF 150	91°-17'-55"±				
		41S-6	7'-7"±	36 WF 150	91°-17'-55"±				
SPAN 43N	PIER 44N	43N-1	7'-7"±	36 WF 150	90°-57'-49"±				
		43N-2 TO 43N-5	7'-7"±	36 WF 150	90°-57'-49"±				
		43N-6	7'-8"±	36 WF 150	90°-57'-49"±				
SPAN 44S	PIER 44S	44S-1	8'-0"±	36 WF 150	90°-47'-49"±				
		44S-2 TO 44S-5	7'-7"±	36 WF 150	90°-47'-49"±				
		44S-6	7'-7"±	36 WF 150	90°-47'-49"±				
SPAN 46N	PIER 46N	46N-1	7'-7"±	36 WF 160	90°-07'-12"±				
		46N-2 TO 46N-5	7'-7"±	36 WF 160	90°-07'-12"±				
		46N-6	7'-7"±	36 WF 160	90°-07'-12"±				
SPAN 46S	PIER 46S	46S-1	7'-7"±	36 WF 160	90°-07'-12"±				
		46S-2 TO 46S-5	7'-7"±	36 WF 160	90°-07'-12"±				
		46S-6	7'-7"±	36 WF 160	90°-07'-12"±				
SPAN 48N	PIER 48N	48N-1	7'-7"±	36 WF 160	90°-00'-00"±				
		48N-2 TO 48N-5	7'-7"±	36 WF 160	90°-00'-00"±				
		48N-6	7'-7"±	36 WF 160	90°-00'-00"±				
SPAN 48S	PIER 48S	48S-1	7'-7"±	36 WF 150	90°-00'-00"±				
		48S-2 TO 48S-5	7'-7"±	36 WF 150	90°-00'-00"±				
		48S-6	7'-7"±	36 WF 150	90°-00'-00"±				
SPAN 49N	PIER 50N	49N-6	7'-7"±	36 WF 194	90°-00'-00"±				
SPAN 50N	PIER 50N	50N-1	7'-7"±	36 WF 150	90°-00'-00"±				
		50N-2 TO 50N-5	7'-7"±	36 WF 150	90°-00'-00"±				
		50N-6	7'-7"±	36 WF 150	90°-00'-00"±				
SPAN 50S	PIER 50S	50S-1	7'-7"±	36 WF 150	90°-00'-00"±				
		50S-2 TO 50S-5	7'-7"±	36 WF 150	90°-00'-00"±				
		50S-6	7'-7"±	36 WF 150	90°-00'-00"±				
SPAN 51N	PIER 52N	51N-1	7'-7"±	36 WF 150	90°-00'-00"±				
		51N-2 TO 51N-5	7'-7"±	36 WF 150	90°-00'-00"±				
		51N-6	7'-7 7/8"±	36 WF 150	89°-56'-25"±				
SPAN 51S	PIER 52S	51S-1	7'-7"±	36 WF 150	90°-00'-00"±				
		51S-2 TO 51S-5	7'-7"±	36 WF 150	90°-00'-00"±				
		51S-6	7'-7"±	36 WF 150	90°-00'-00"±				

•FOR LOCATION OF ANGLE A, SEE DWG. RH-02.
••EXISTING LOADS FOR JACKING ARE TAKEN FROM LOAD RATINGS PROVIDED BY DELDOT AND PERFORMED BY OTHERS.

NOT FOR CONSTRUCTION

N:\31987-004\Control-I-95\CADD\Bridge\BR1-748_RH02.dgn
5/31/2019 12:02:37 PM

ADDENDA / REVISIONS	

SCALE AS NOTED

REHABILITATION OF I-95 FROM I-495 TO NORTH OF BRANDYWINE RIVER BRIDGE

CONTRACT	BRIDGE NO. 1 748 059
T201407404	DESIGNED BY: DAN
COUNTY	CHECKED BY: WAG
NEW CASTLE	

JACKING NOTES AND LOADS FOR JACKING

RH-01

SECTION	SHEET NO.
WRA	315

LOADS FOR JACKING						UNFACTORED**		FACTORED**	
SPAN NO.	SUBSTRUCTURE UNIT	BEAM NO.	BEAM SPACING ALONG ℄ OF BEARING	BEAM MEMBER	ANGLE A*	DL +15%	DL +LL +IMP	DL +15%	DL +LL +IMP
SPAN 52N	PIER 52N	52N-1	7′-7″±	36 WF 150	90°-02′-18″±	XX KIP	XXX KIP	XX KIP	XXX KIP
		52N-2 TO 52N-4	7′-7″±	36 WF 150	90°-02′-18″±				
		52N-5	7′-7″±	36 WF 150	90°-35′-02″±				
		52N-6	7′-7⅞″±	36 WF 150	91°-04′-11″±				
SPAN 52N	PIER E52	52N-7	6′-1⁄16″±	W 36x135	90°-47′-41″±				
		52N-8	6′-1⁄8″±	W 36x135	92°-39′-25″±				
		52N-9	6′-1⁄8″±	W 36x135	94°-30′-49″±				
SPAN 52N	PIER 53N	52N-1	7′-7″±	36 WF 150	89°-57′-42″±				
		52N-2 TO 52N-4	7′-7″±	36 WF 150	89°-57′-42″±				
		52N-5	8′-3″±	36 WF 150	89°-24′-58″±				
		52N-6	8′-3″±	36 WF 150	88°-55′-49″±				
SPAN 52N	PIER E53	52N-7	3′-9⅛″±	W 36x135	89°-12′-19″±				
		52N-8	7′-6⅜″±	W 36x135	87°-20′-35″±				
		52N-9	7′-6⅜″±	W 36x135	85°-29′-11″±				
SPAN 52S	PIER 53S	52S-1	7′-7″±	36 WF 150	90°-00′-00″±				
		52S-2 TO 52S-5	7′-7″±	36 WF 150	90°-00′-00″±				
		52S-6	7′-7″±	36 WF 150	90°-00′-00″±				
SPAN 53N	PIER 53N	53N-1	7′-7″±	36 WF 150	89°-53′-06″±				
		53N-2 TO 53N-4	7′-7″±	36 WF 150	89°-53′-06″±				
		53N-5	5′-6″±	36 WF 150	91°-35′-23″±				
		53N-6	5′-6″±	36 WF 150	91°-59′-55″±				
		53N-7	5′-6″±	36 WF 150	92°-24′-36″±				
SPAN 53N	PIER E53	53N-8	5′-7⅛″±	W 36x135	89°-42′-37″±				
		53N-9	5′-7⅛″±	W 36x135	91°-49′-43″±				
SPAN 53S	PIER 53S	53S-1	7′-7″±	36 WF 150	90°-00′-00″±				
		53S-2 TO 53S-5	7′-7″±	36 WF 150	90°-00′-00″±				
		53S-6	7′-7″±	36 WF 150	90°-00′-00″±				
SPAN 53S	PIER 54S	53S-1	7′-7″±	36 WF 150	90°-00′-00″±				
		53S-2 TO 53S-5	7′-7″±	36 WF 150	90°-00′-00″±				
		53S-6	7′-7″±	36 WF 150	90°-00′-00″±				
SPAN 54N	PIER 54N	54N-1	7′-7″±	36 WF 150	90°-10′-29″±				
		54N-2 TO 54N-5	7′-7″±	36 WF 150	90°-10′-29″±				
		54N-6	6′-0″±	36 WF 150	91°-42′-33″±				
SPAN 54N	PIER E54	54N-7	7′-7″±	36 WF 150	90°-02′-20″±				
		54N-8	6′-10⅜″±	W 36x135	91°-47′-56″±				
SPAN 54N	PIER 55N	54N-8	3′-10⅞″±	36 WF 135	88°-12′-04″±				
SPAN 54S	PIER 55S	54S-1	7′-7″±	36 WF 150	90°-00′-00″±				
		54S-2 TO 54S-5	7′-7″±	36 WF 150	90°-00′-00″±				
		54S-6	7′-7″±	36 WF 150	90°-00′-00″±				
SPAN 56N	PIER 56N	56N-1	7′-7″±	36 WF 230	90°-00′-00″±				
		56N-2 TO 56N-4	7′-7″±	36 WF 230	90°-00′-00″±				
		56N-5	7′-7″±	36 WF 230	90°-24′-27″±				
		56N-6	6′-10⅞″±	36 WF 230	91°-19′-54″±				
		56N-7	6′-10⅞″±	36 WF 230	92°-18′-48″±				
		56N-8	6′-10⅞″±	36 WF 230	93°-17′-36″±				
SPAN 56S	PIER 56S	56S-1	7′-7″±	36 WF 230	90°-00′-00″±				
		56S-2 TO 56S-5	7′-7″±	36 WF 230	90°-00′-00″±				
		56S-6	7′-7″±	36 WF 230	90°-00′-00″±				
SPAN 57N	PIER 58N	57N-1	7′-7″±	36 WF 230	90°-00′-00″±				
		57N-2 TO 57N-4	7′-7″±	36 WF 230	90°-00′-00″±				
		57N-5	7′-7″±	36 WF 230	90°-24′-27″±				
		57N-6	7′-7″±	36 WF 230	90°-48′-55″±				
		57N-7	7′-7″±	36 WF 230	89°-21′-95″±				
		57N-8	7′-4½″±	36 WF 230	88°-03′-01″±				
		57N-9	7′-4½″±	36 WF 230	86°-44′-34″±				
SPAN 58S	PIER 58S	58S-1	7′-7″±	36 WF 300	90°-00′-00″±				
		58S-2 TO 58S-5	7′-7″±	36 WF 300	90°-00′-00″±				
		58S-6	7′-7″±	36 WF 300	89°-56′-25″±				

*FOR LOCATION OF ANGLE A, SEE DWG. RH-02.
**EXISTING LOADS FOR JACKING ARE TAKEN FROM LOAD RATINGS PROVIDED BY DELDOT AND PERFORMED BY OTHERS.

NOT FOR CONSTRUCTION

N:\31987-004\Control_I-95\CADD\Bridge\BRI-748_RH01A.dgn
5/31/2019 12:12:37 PM

7′-7″±

ADDENDA / REVISIONS		SCALE AS NOTED	REHABILITATION OF I-95 FROM I-495 TO NORTH OF BRANDYWINE RIVER BRIDGE	CONTRACT T201407404	BRIDGE NO. 1 748 059	LOADS FOR JACKING (CONTINUED)	RH-01A SECTION WRA
				COUNTY NEW CASTLE	DESIGNED BY: DAN		SHEET NO. 2-315A
					CHECKED BY: WAG		

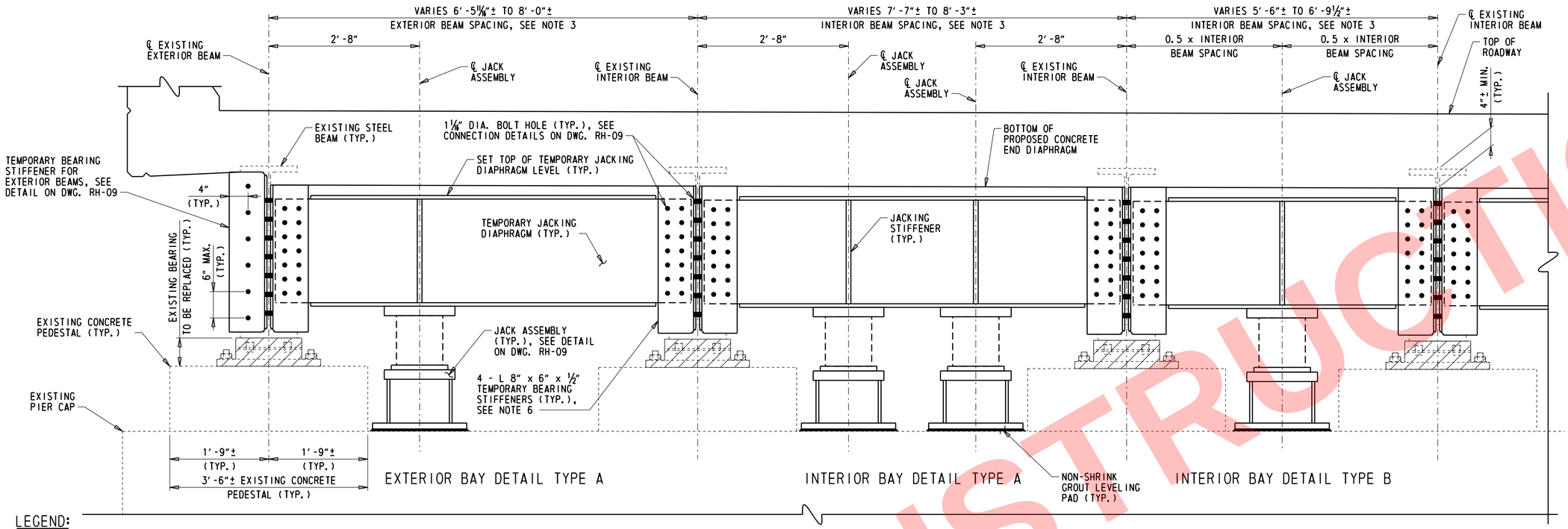

TYPICAL JACKING SCHEME - ELEVATION

1" = 1'-0"

LEGEND:

- ● - PROPOSED 1" DIA. BOLT IN 1 1/16" DIA. HOLE IN TEMPORARY JACKING DIAPHRAGM, TEMPORARY BEARING STIFFENER, OR EXISTING STEEL BEAM WEB
- ▨ - EXISTING BEARING TO REMOVED

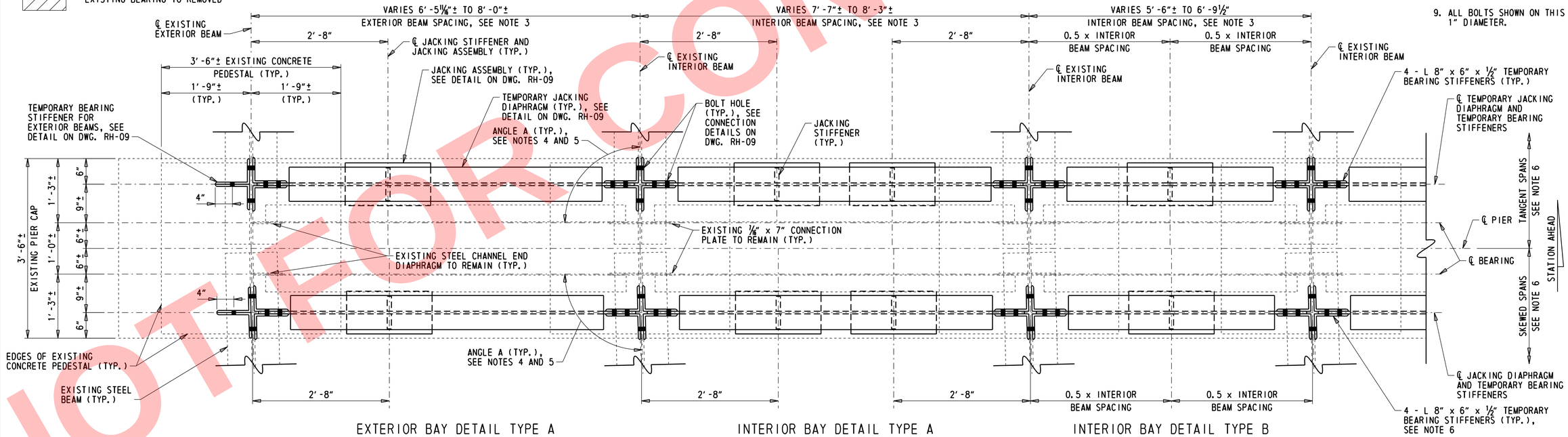

TYPICAL JACKING SCHEME - PLAN

1" = 1'-0"

NOTES:

1. FOR JACKING NOTES, REFER TO DWG. RH-01.
2. FOR JACKING DETAILS, REFER TO DWG. RH-09.
3. BEAM SPACING RANGES SHOWN FOR THE EXTERIOR BAY DETAIL AND THE INTERIOR BAY DETAIL TYPES A AND B ARE TYPICAL THROUGHOUT THE BRIDGE. REFER TO DWG. RH-03 THRU DWG. RH-08 FOR SPECIAL JACKING LOCATIONS.
4. ANGLE A FOR ALL SPANS IS TAKEN ON THE LEFT SIDE OF THE BEAM WHEN LOOKING STATION AHEAD.
5. FOR ANGLE A, EXISTING STEEL BEAM SIZES, AND LOADS FOR JACKING, REFER TO DWG. RH-12 THRU DWG. RH-16.
6. FOR TEMPORARY BEARING STIFFENERS ON SKEWED SPANS, CONTRACTOR SHALL FIELD ADJUST THE STEEL ANGLE TO ACCOUNT FOR THE SKEW. CONTRACTOR MAY PRESENT ALTERNATE STEEL MEMBERS FOR TEMPORARY BEARING STIFFENERS ON SKEWED SPANS, HOWEVER THERE IS NO GUARANTEE THE SECTION WILL BE ACCEPTED. THE ENGINEER MAY REJECT ANY ALTERNATE MEMBER FOR ANY REASON.
7. PLACE A NON-SHRINK GROUT PAD BENEATH THE JACKING ASSEMBLY BASE PLATE AND THE EXISTING BEAM SEAT TO ENSURE FULL AND LEVEL BEARING. NON-SHRINK GROUT SHALL BE IN ACCORDANCE WITH THE STANDARD SPECIFICATIONS, SECTION 1047.02. PAYMENT FOR NON-SHRINK GROUT WILL BE UNDER ITEM 604000 - JACKING BRIDGE.
8. THE JACKING SCHEME - ELEVATION SHOWS THE FINAL DECK CONFIGURATION. THE TEMPORARY JACKING DIAPHRAGM AND JACKING ASSEMBLY HAVE BEEN DESIGNED USING THE BEAM REACTIONS FOR THE FINAL DECK CONFIGURATION, UNLESS OTHERWISE NOTED IN THE LOADS FOR JACKING. IF THE CONTRACTOR ELECTS TO PERFORM THE JACKING OPERATION PRIOR TO CONSTRUCTION OF THE FINAL DECK CONFIGURATION, THE CONTRACTOR WILL BE RESPONSIBLE FOR PROVIDING CALCULATIONS WHICH SHOW THE DETAILS SHOWN ARE SUFFICIENT FOR THE LOADING AT THE TIME OF JACKING.
9. ALL BOLTS SHOWN ON THIS SHEET SHALL BE 1" DIAMETER.

NOT FOR CONSTRUCTION

N:\31987-004A\Control-I-95\C400\Bridge\BR1-748_RH03.dgn
5/31/2019 12:20:38 PM

ADDENDA / REVISIONS	SCALE AS NOTED	REHABILITATION OF I-95 FROM I-495 TO NORTH OF BRANDYWINE RIVER BRIDGE	CONTRACT T201407404	BRIDGE NO. 1 748 059	JACKING SCHEME TYPICAL	RH-02
			COUNTY NEW CASTLE	DESIGNED BY: DAN		SECTION WRA
				CHECKED BY: WAG		SHEET NO. 316

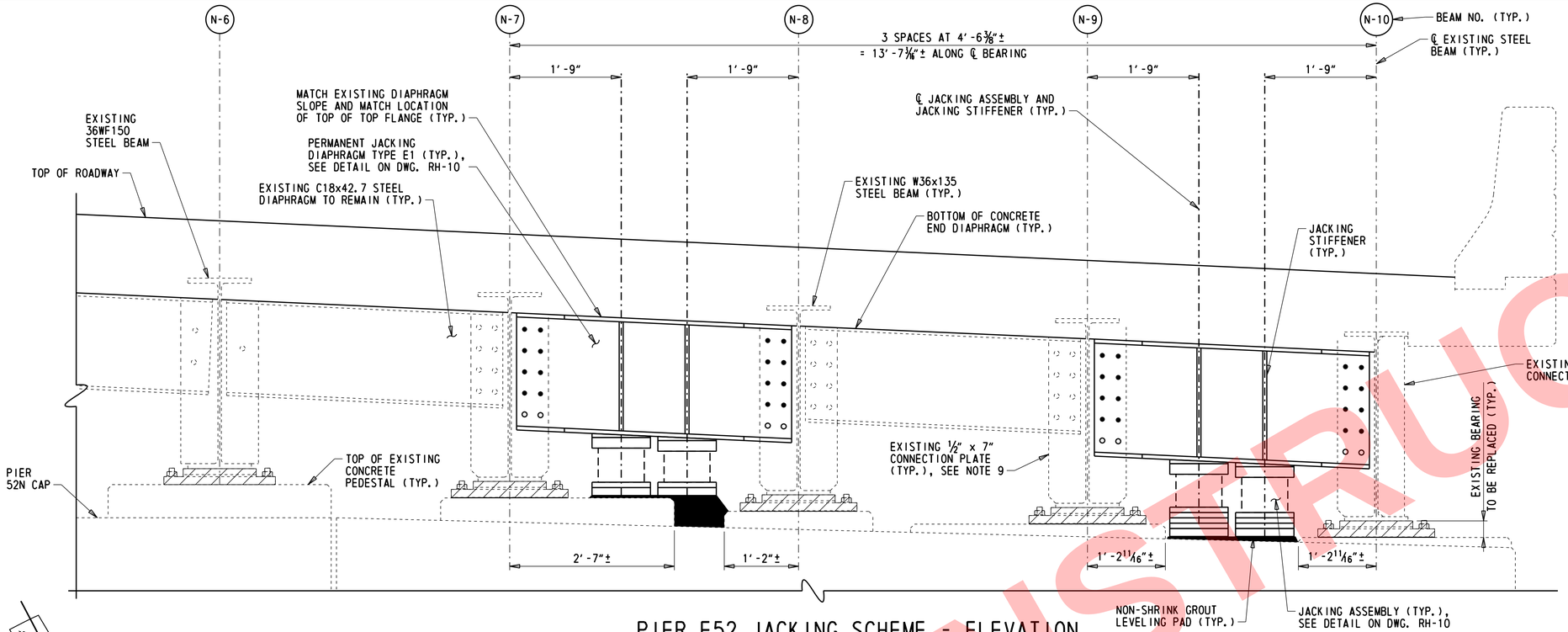

PIER E52 JACKING SCHEME - ELEVATION

(SPAN 51N SHOWN LOOKING NORTH)

1" = 1'-0"

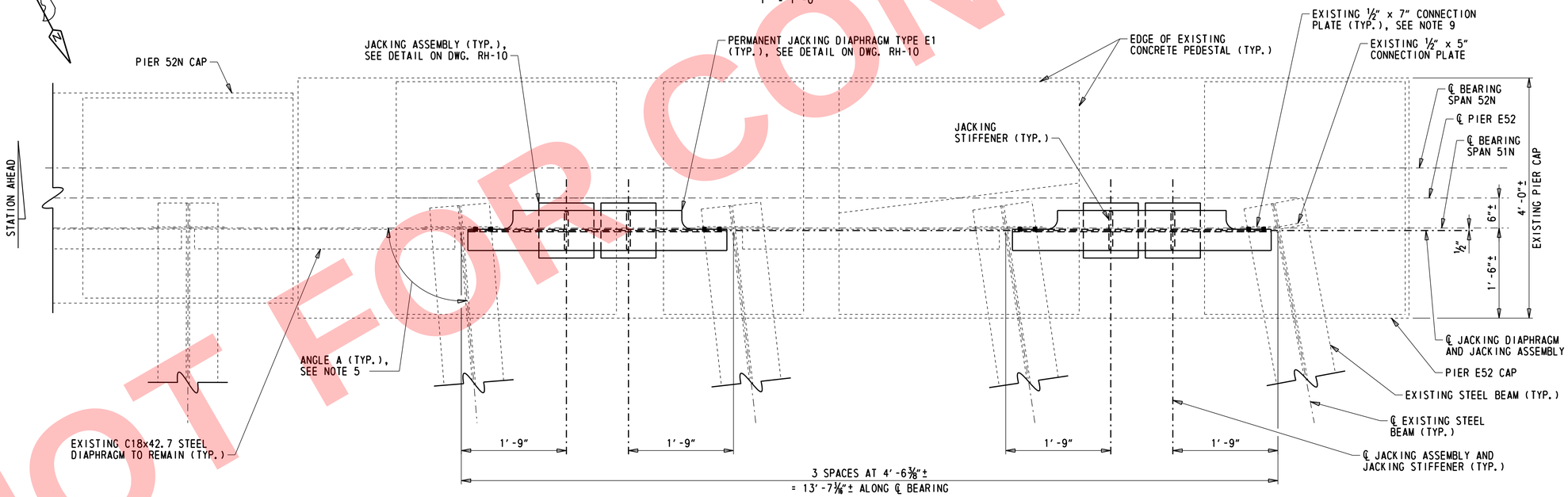

PIER E52 JACKING SCHEME - PLAN

(SPAN 51N SHOWN)

1" = 1'-0"

NOTE:
SPAN 52N BEAMS AND END DIAPHRAGMS NOT SHOWN FOR CLARITY. REFER TO DWG. RH-05 FOR DETAILS.

LEGEND:

- ● EXISTING ⅞" DIA. BOLT TO BE REMOVED AND NEW 15/16" DIA. HOLE TO BE DRILLED IN EXISTING CONNECTION PLATE AND JACKING DIAPHRAGM
- ○ NEW 15/16" DIA. HOLE TO BE DRILLED IN EXISTING CONNECTION PLATE AND JACKING DIAPHRAGM
- ◌ EXISTING BOLT TO REMAIN
- EXISTING BEARING TO BE REMOVED
- NON SHRINK GROUT

NOTES:

1. FOR BRIDGE JACKING NOTES, REFER TO DWG. RH-01.
2. FOR LOADS FOR JACKING FOR SPAN 51N AT PIER E52, REFER TO DWG. RH-12.
3. FOR JACKING DETAILS, REFER TO DWG. RH-10.
4. AFTER THE BRIDGE IS SET ON THE NEW BEARINGS, THE PERMANENT JACKING DIAPHRAGMS ARE TO REMAIN IN PLACE AS PART OF THE COMPLETED STRUCTURE.
5. ANGLE A IS TAKEN ON THE LEFT SIDE OF THE GIRDER WHEN LOOKING STATION AHEAD. FOR ANGLE A, REFER TO DWG. RH-13.
6. THE CONTRACTOR SHALL VERIFY ALL EXISTING FIELD DIMENSIONS PRIOR TO ORDERING OR FABRICATING THE PERMANENT JACKING DIAPHRAGM.
7. REMOVE THE EXISTING C18x42.7 STEEL DIAPHRAGMS AT THE LOCATIONS OF THE PERMANENT JACKING DIAPHRAGMS. PAYMENT FOR REMOVAL WILL BE UNDER ITEM 211000 - REMOVAL OF STRUCTURES AND OBSTRUCTIONS.
8. ALL BOLTS AT THIS LOCATION SHALL BE ⅞" DIA. ASTM F3125 GR. A325. ALL BOLTS ARE DESIGNED WITH THE THREADS EXCLUDED FROM THE SHEAR PLANE. ALL HOLES FOR BOLTS SHALL BE 15/16" DIAMETER.
9. EXISTING STEEL CONNECTION PLATES AT LOCATIONS TO BE IN CONTACT WITH PERMANENT JACKING DIAPHRAGMS SHALL BE CLEANED THROUGHLY AND A PRIME COAT APPLIED IN CONFORMANCE WITH SECTION 616 PRIOR TO INSTALLING THE PERMANENT JACKING DIAPHRAGM. THE FULL AREA OF THE PERMANENT JACKING DIAPHRAGM TO BE IN CONTACT WITH THE EXISTING CONNECTION PLATES SHALL ALSO BE CLEANED THROUGHLY AND A PRIME COAT APPLIED IN CONFORMANCE WITH SECTION 616. THE REMAINDER OF THE PERMANENT JACKING DIAPHRAGM SHALL BE FULLY PRIMED AND PAINTED IN CONFORMANCE WITH SECTION 616.
10. PLACE A NON-SHRINK GROUT PAD BENEATH THE JACKING ASSEMBLY BASE PLATE AND THE EXISTING BEAM SEAT TO ENSURE FULL AND LEVEL BEARING. NON-SHRINK GROUT SHALL BE IN ACCORDANCE WITH THE STANDARD SPECIFICATIONS, SECTION 1047.02. PAYMENT FOR NON-SHRINK GROUT WILL BE UNDER ITEM 604000 - JACKING BRIDGE.
11. THE JACKING OF BEAMS 52N-7 TO 52N-9 SHALL NOT OCCUR SIMULTANEOUSLY WITH THE JACKING OF BEAMS 52N-1 TO 52N-6 AT PIER 53N.

NOT FOR CONSTRUCTION

ADDENDA / REVISIONS	SCALE AS NOTED	REHABILITATION OF I-95 FROM I-495 TO NORTH OF BRANDYWINE RIVER BRIDGE	CONTRACT T201407404	BRIDGE NO. 1 748 059	JACKING SCHEME – SPAN 51N AT PIER E52	RH-04
			COUNTY NEW CASTLE	DESIGNED BY: DAN		SECTION WRA
				CHECKED BY: WAG		SHEET NO. 318

N:\31987-004\Cntrct\I-95\CADD\Bridge\BRI-748_RH05.dgn
5/31/2019 12:12:39 PM

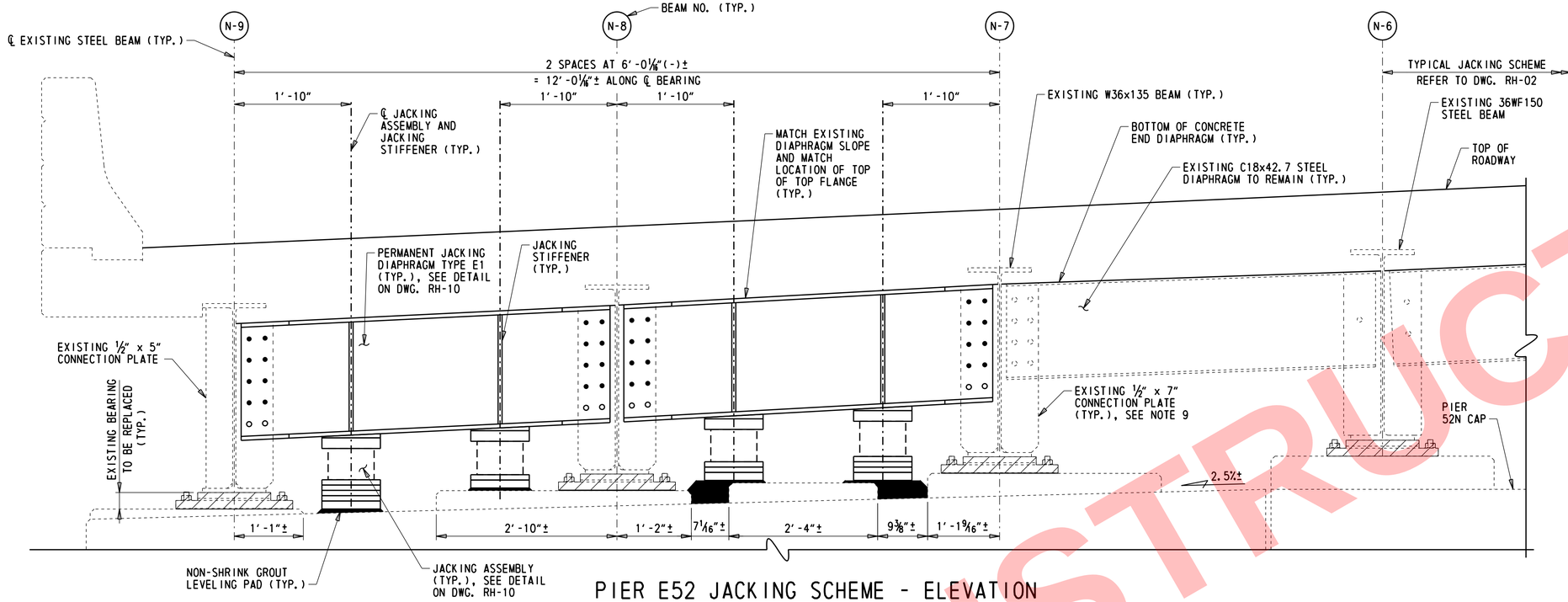

PIER E52 JACKING SCHEME - ELEVATION

(SPAN 52N SHOWN LOOKING SOUTH)

1" = 1'-0"

LEGEND:

- ● EXISTING ⅞" DIA. BOLT TO BE REMOVED AND NEW 15/16" DIA. HOLE TO BE DRILLED IN EXISTING CONNECTION PLATE AND JACKING DIAPHRAGM
- ○ NEW 15/16" DIA. HOLE TO BE DRILLED IN EXISTING CONNECTION PLATE AND JACKING DIAPHRAGM
- ⊕ EXISTING BOLT TO REMAIN
- ▨ - EXISTING BEARING TO BE REMOVED
- ■ - NON SHRINK GROUT

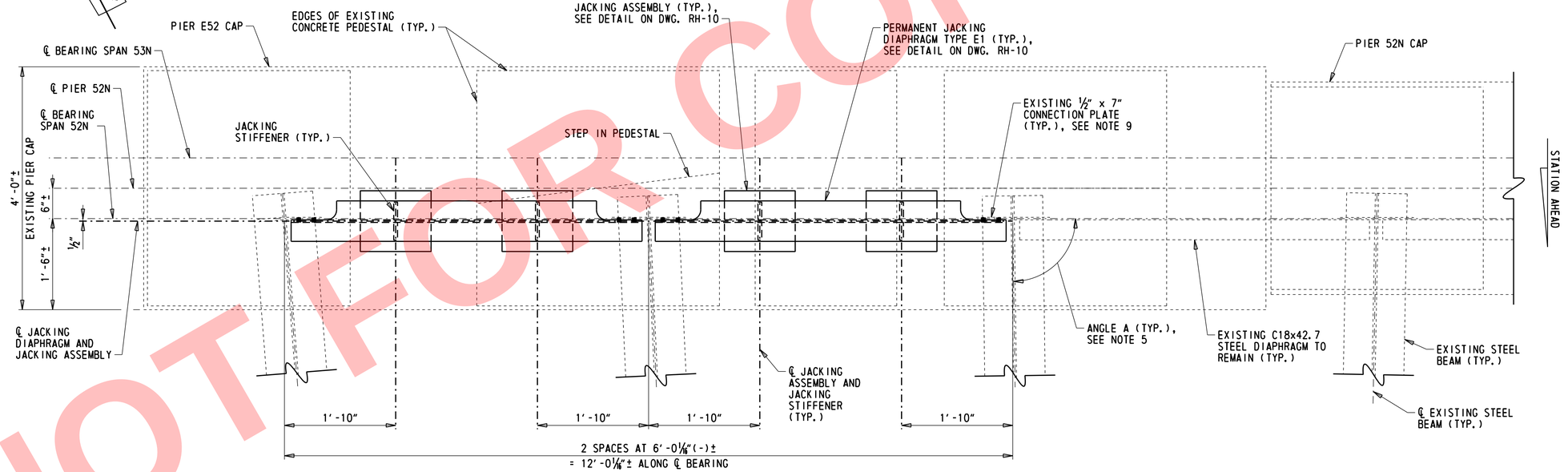

PIER E52 JACKING SCHEME - PLAN

(SPAN 52N SHOWN)

1" = 1'-0"

NOTE:
SPAN 52N BEAMS AND END DIAPHRAGMS NOT SHOWN FOR CLARITY. REFER TO DWG. RH-04 FOR DETAILS.

NOTES:

1. FOR BRIDGE JACKING NOTES, REFER TO DWG. RH-01.
2. FOR LOADS FOR JACKING FOR SPAN 52N AT PIER E52, REFER TO DWG. RH-12.
3. FOR JACKING DETAILS AT THIS LOCATION, REFER TO DWG. RH-10.
4. AFTER THE BRIDGE IS SET ON THE NEW BEARINGS, THE PERMANENT JACKING DIAPHRAGMS ARE TO REMAIN IN PLACE AS PART OF THE COMPLETED STRUCTURE.
5. ANGLE A IS TAKEN ON THE LEFT SIDE OF THE GIRDER WHEN LOOKING STATION AHEAD. FOR ANGLE A, REFER TO DWG. RH-12.
6. THE CONTRACTOR SHALL VERIFY ALL EXISTING FIELD DIMENSIONS PRIOR TO ORDERING OR FABRICATING THE PERMANENT JACKING DIAPHRAGM.
7. REMOVE THE EXISTING C18x42.7 STEEL DIAPHRAGMS AT THE LOCATIONS OF THE PERMANENT JACKING DIAPHRAGMS. PAYMENT FOR REMOVAL WILL BE UNDER ITEM 211000 - REMOVAL OF STRUCTURES AND OBSTRUCTIONS.
8. ALL BOLTS AT THIS LOCATION SHALL BE ⅞" DIA. ASTM F3125 GR. A325. ALL BOLTS ARE DESIGNED WITH THE THREADS EXCLUDED FROM THE SHEAR PLANE. ALL HOLES FOR BOLTS SHALL BE 15/16" DIAMETER.
9. EXISTING STEEL CONNECTION PLATES AT LOCATIONS TO BE IN CONTACT WITH PERMANENT JACKING DIAPHRAGMS SHALL BE CLEANED THROUGHLY AND A PRIME COAT APPLIED IN CONFORMANCE WITH SECTION 616 PRIOR TO INSTALLING THE PERMANENT JACKING DIAPHRAGM. THE FULL AREA OF THE PERMANENT JACKING DIAPHRAGM TO BE IN CONTACT WITH THE EXISTING CONNECTION PLATES SHALL ALSO BE CLEANED THROUGHLY AND A PRIME COAT APPLIED IN CONFORMANCE WITH SECTION 616. THE REMAINDER OF THE PERMANENT JACKING DIAPHRAGM SHALL BE FULLY PRIMED AND PAINTED IN CONFORMANCE WITH SECTION 616.
10. PLACE A NON-SHRINK GROUT PAD BENEATH THE JACKING ASSEMBLY BASE PLATE AND THE EXISTING BEAM SEAT TO ENSURE FULL AND LEVEL BEARING. NON-SHRINK GROUT SHALL BE IN ACCORDANCE WITH THE STANDARD SPECIFICATIONS, SECTION 1047.02. PAYMENT FOR NON-SHRINK GROUT WILL BE UNDER ITEM 604000 - JACKING BRIDGE.
11. THE JACKING OF BEAMS 52N-7 TO 52N-9 SHALL NOT OCCUR SIMULTANEOUSLY WITH THE JACKING OF BEAMS 52N-1 TO 52N-6 AT PIER 52N.

NOT FOR CONSTRUCTION

ADDENDA / REVISIONS	SCALE AS NOTED	REHABILITATION OF I-95 FROM I-495 TO NORTH OF BRANDYWINE RIVER BRIDGE	CONTRACT T201407404	BRIDGE NO. 1 748 059	JACKING SCHEME – SPAN 52N AT PIER E52	RH-05
			COUNTY NEW CASTLE	DESIGNED BY: DAN		SECTION WRA
				CHECKED BY: WAG		SHEET NO. 319

N:\31987-00A\Contract_I-95\C&D\Bridge\BRI-748_RH06.dgn
5/31/2019 12:12:40 PM

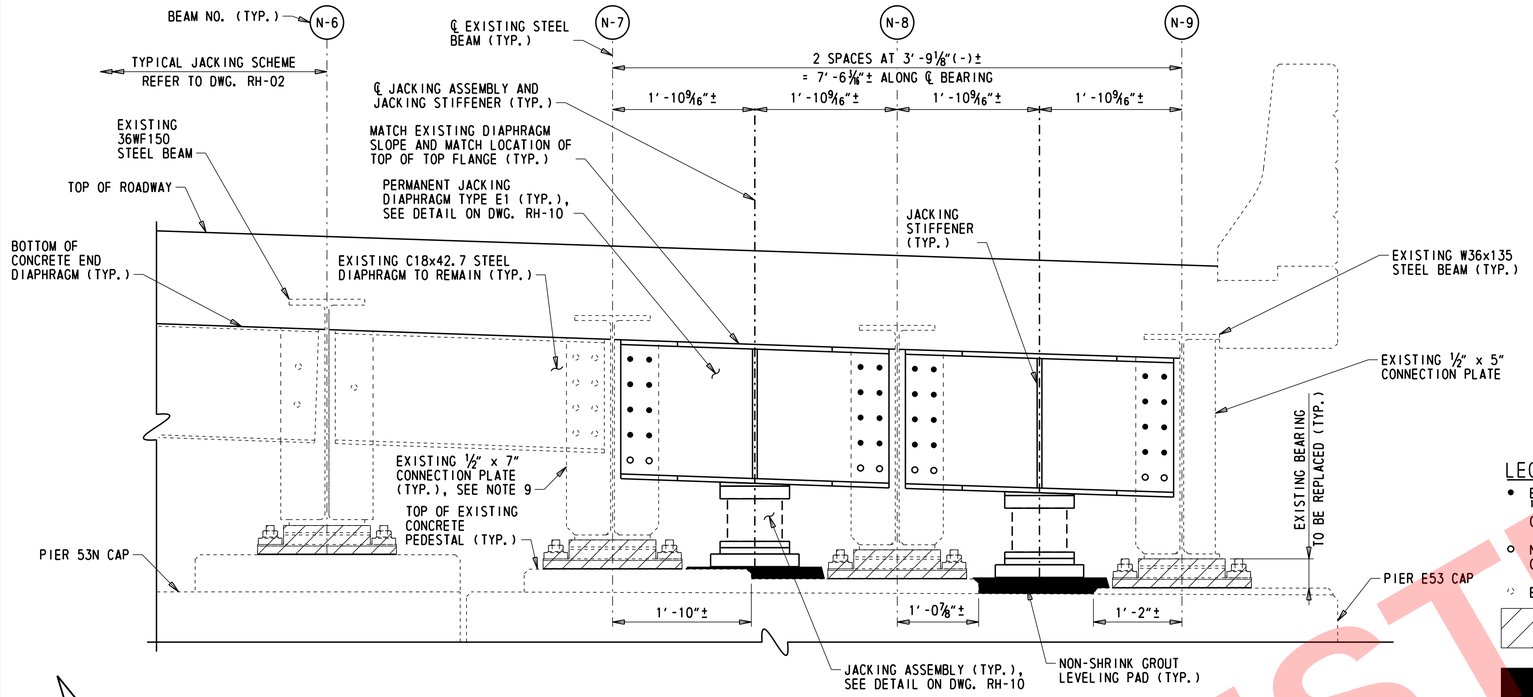

PIER E53 JACKING SCHEME - ELEVATION

(SPAN 52N SHOWN LOOKING NORTH)

1" = 1'-0"

LEGEND:

- • EXISTING ⅞" DIA. BOLT TO BE REMOVED AND NEW ⅞" DIA. HOLE TO BE DRILLED IN EXISTING CONNECTION PLATE AND JACKING DIAPHRAGM
- ○ NEW ⅞" DIA. HOLE TO BE DRILLED IN EXISTING CONNECTION PLATE AND JACKING DIAPHRAGM
- EXISTING BOLT TO REMAIN
- - EXISTING BEARING TO BE REMOVED
- - NON-SHRINK GROUT

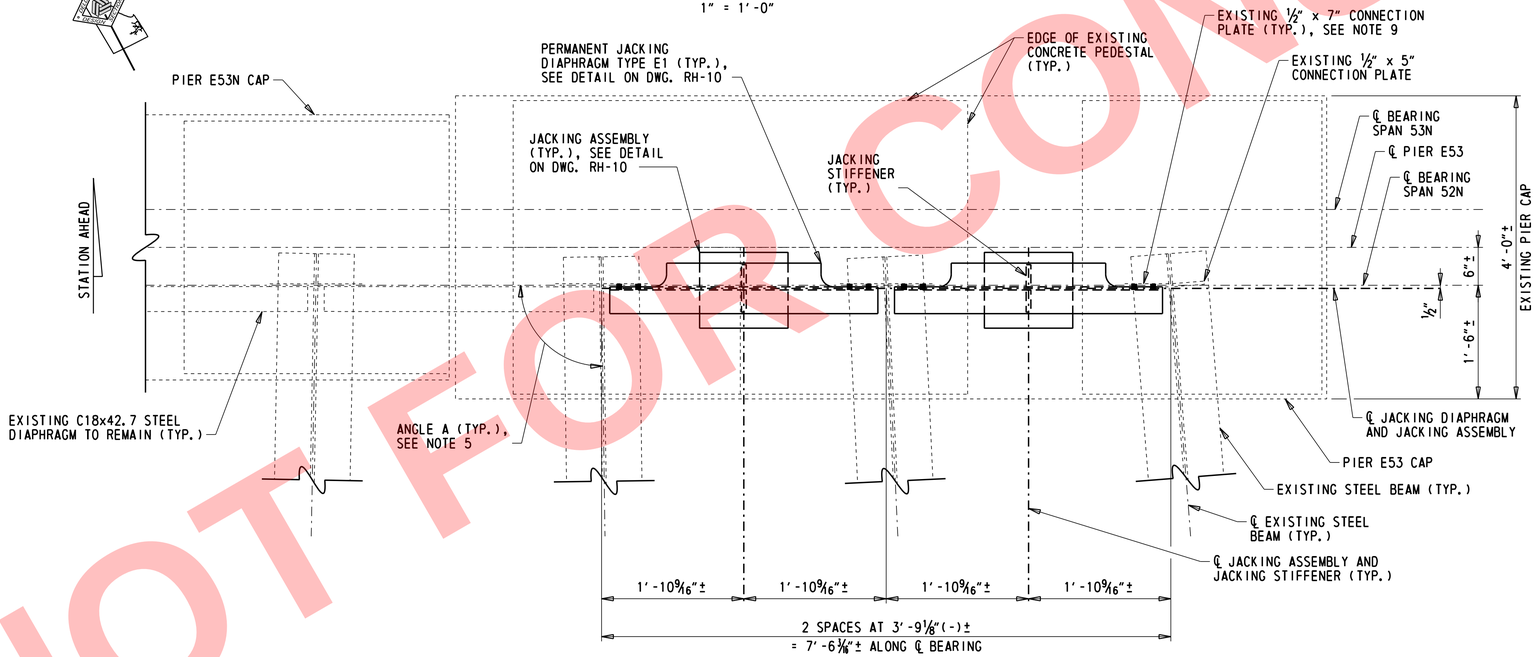

PIER E53 JACKING SCHEME - PLAN

(SPAN 52N SHOWN)

1" = 1'-0"

NOTE:
SPAN 53N BEAMS AND END DIAPHRAGMS NOT SHOWN FOR CLARITY. REFER TO DWG. RH-07 FOR DETAILS.

NOTES:

1. FOR BRIDGE JACKING NOTES, REFER TO DWG. RH-01.
2. FOR LOADS FOR JACKING FOR SPAN 52N AT PIER E53, REFER TO DWG. RH-12.
3. FOR JACKING DETAILS, REFER TO DWG. RH-10.
4. AFTER THE BRIDGE IS SET ON THE NEW BEARINGS, THE PERMANENT JACKING DIAPHRAGMS ARE TO REMAIN IN PLACE AS PART OF THE COMPLETED STRUCTURE.
5. ANGLE A IS TAKEN ON THE LEFT SIDE OF THE GIRDER WHEN LOOKING STATION AHEAD. FOR ANGLE A, REFER TO DWG. RH-12.
6. THE CONTRACTOR SHALL VERIFY ALL EXISTING FIELD DIMENSIONS PRIOR TO ORDERING OR FABRICATING THE PERMANENT JACKING DIAPHRAGM.
7. REMOVE THE EXISTING C18x42.7 STEEL DIAPHRAGMS AT THE LOCATIONS OF THE PERMANENT JACKING DIAPHRAGMS. PAYMENT FOR REMOVAL WILL BE UNDER ITEM 211000 - REMOVAL OF STRUCTURES AND OBSTRUCTIONS.
8. ALL BOLTS AT THIS LOCATION SHALL BE ⅞" DIA. ASTM F3125 GR. A325. ALL BOLTS ARE DESIGNED WITH THE THREADS EXCLUDED FROM THE SHEAR PLANE. ALL HOLES FOR BOLTS SHALL BE ⅞" DIAMETER.
9. EXISTING STEEL CONNECTION PLATES AT LOCATIONS TO BE IN CONTACT WITH PERMANENT JACKING DIAPHRAGMS SHALL BE CLEANED THROUGHLY AND A PRIME COAT APPLIED IN CONFORMANCE WITH SECTION 616 PRIOR TO INSTALLING THE PERMANENT JACKING DIAPHRAGM. THE FULL AREA OF THE PERMANENT JACKING DIAPHRAGM TO BE IN CONTACT WITH THE EXISTING CONNECTION PLATES SHALL ALSO BE CLEANED THROUGHLY AND A PRIME COAT APPLIED IN CONFORMANCE WITH SECTION 616. THE REMAINDER OF THE PERMANENT JACKING DIAPHRAGM SHALL BE FULLY PRIMED AND PAINTED IN CONFORMANCE WITH SECTION 616.
10. PLACE A NON-SHRINK GROUT PAD BENEATH THE JACKING ASSEMBLY BASE PLATE AND THE EXISTING BEAM SEAT TO ENSURE FULL AND LEVEL BEARING. NON-SHRINK GROUT SHALL BE IN ACCORDANCE WITH THE STANDARD SPECIFICATIONS, SECTION 1047.02. PAYMENT FOR NON-SHRINK GROUT WILL BE UNDER ITEM 604000 - JACKING BRIDGE.
11. THE JACKING OF BEAMS 52N-7 TO 52N-9 SHALL NOT OCCUR SIMULTANEOUSLY WITH THE JACKING OF BEAMS 52N-1 TO 52N-6 AT PIER 53N.

NOT FOR CONSTRUCTION

ADDENDA / REVISIONS	SCALE AS NOTED	REHABILITATION OF I-95 FROM I-495 TO NORTH OF BRANDYWINE RIVER BRIDGE	CONTRACT T201407404	BRIDGE NO. 1 748 059	JACKING SCHEME - SPAN 52N AT PIER E53	RH-06
			COUNTY NEW CASTLE	DESIGNED BY: DAN		SECTION WRA
				CHECKED BY: WAG		SHEET NO. 320

N:\31987-0043-Cont\cscl_I-95\C4DD\Bridge\BRI-748_RH07.dgn
5/31/2019 12:12:40 PM

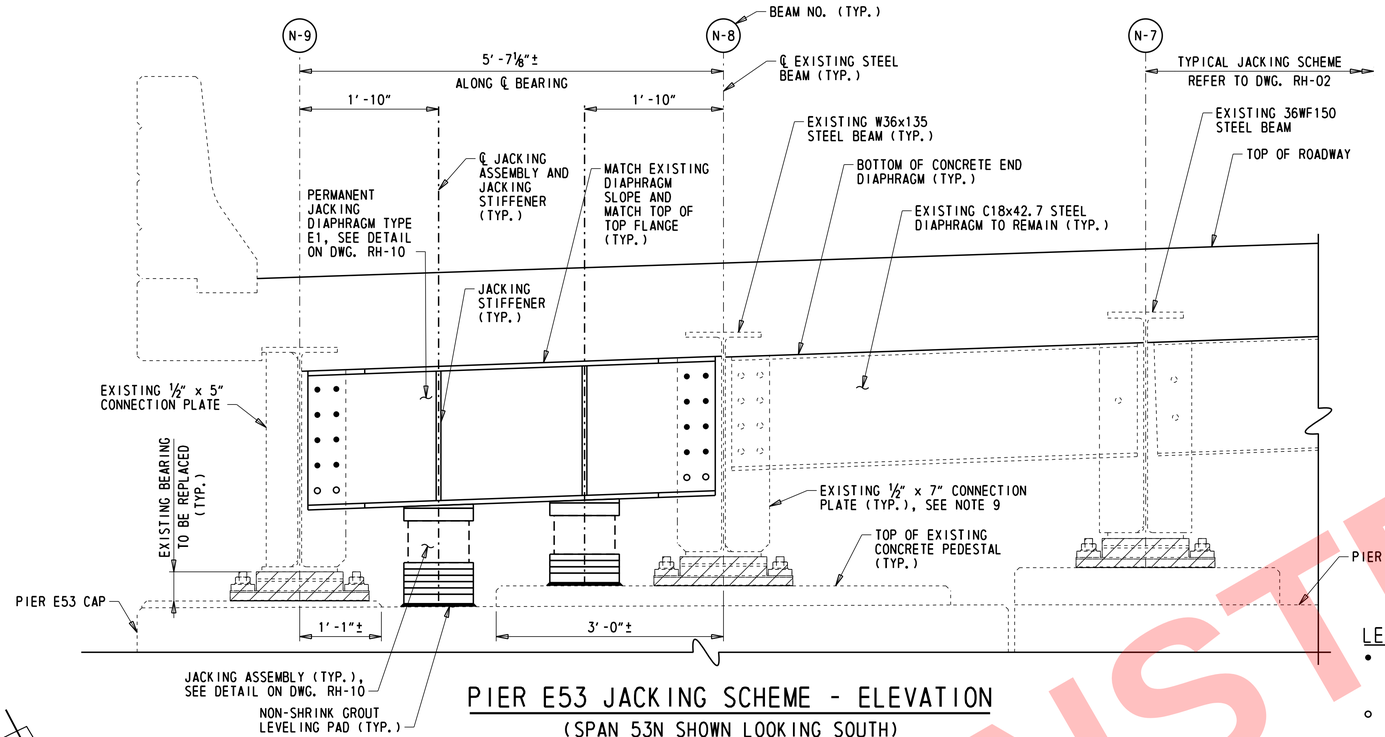

PIER E53 JACKING SCHEME - ELEVATION

(SPAN 53N SHOWN LOOKING SOUTH)

1" = 1'-0"

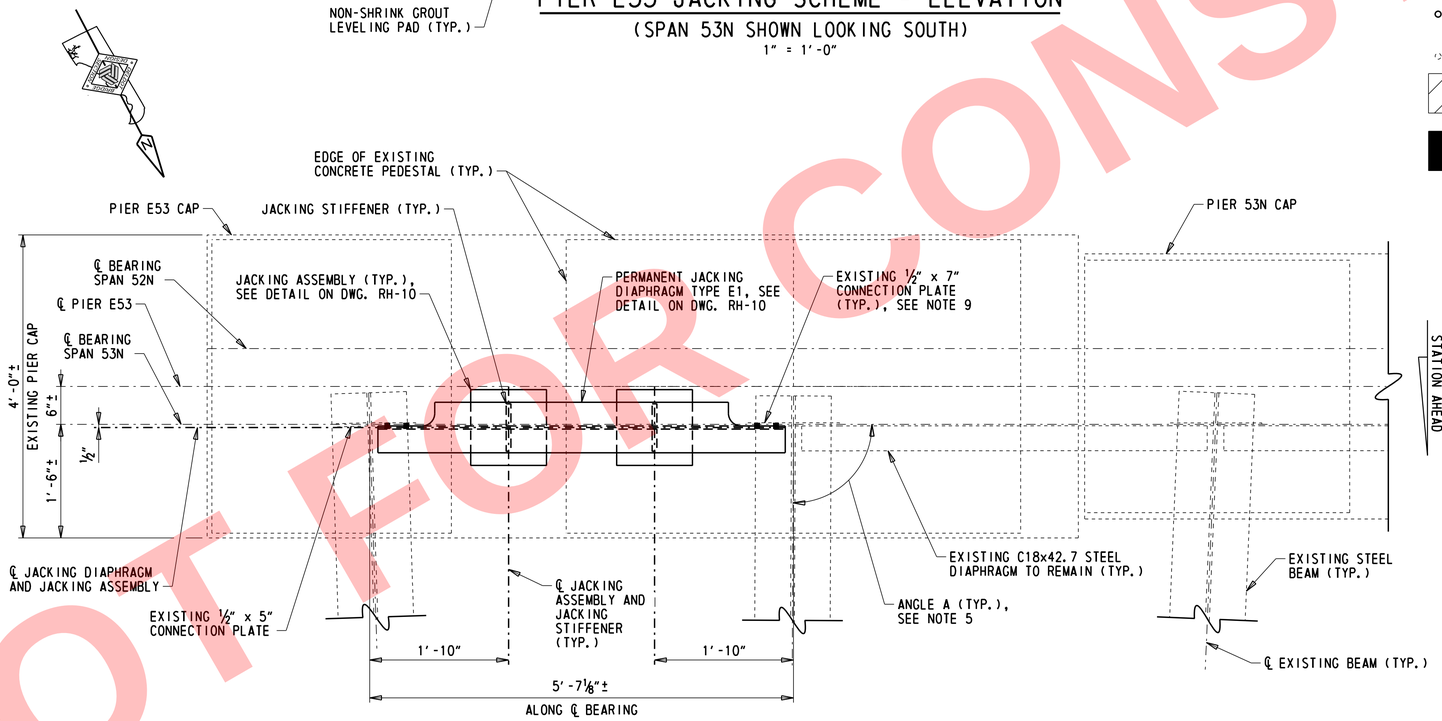

PIER E53 JACKING SCHEME - ELEVATION

(SPAN 53N SHOWN)

1" = 1'-0"

NOTE:
SPAN 52N BEAMS AND END DIAPHRAGMS NOT SHOWN FOR CLARITY. REFER TO DWG. RH-06 FOR DETAILS.

LEGEND:

- ● EXISTING ⅞" DIA. BOLT TO BE REMOVED AND NEW 15/16" DIA. HOLE TO BE DRILLED IN EXISTING CONNECTION PLATE AND JACKING DIAPHRAGM
- ○ NEW 15/16" DIA. HOLE TO BE DRILLED IN EXISTING CONNECTION PLATE AND JACKING DIAPHRAGM
- EXISTING BOLT TO REMAIN
- EXISTING BEARING TO BE REMOVED
- NON-SHRINK GROUT

NOTES:

1. FOR BRIDGE JACKING NOTES, REFER TO DWG. RH-01.
2. FOR LOADS FOR JACKING FOR SPAN 53N AT PIER E53, REFER TO DWG. RH-13.
3. FOR JACKING DETAILS, REFER TO DWG. RH-10.
4. AFTER THE BRIDGE IS SET ON THE NEW BEARINGS, THE PERMANENT JACKING DIAPHRAGMS ARE TO REMAIN IN PLACE AS PART OF THE COMPLETED STRUCTURE.
5. ANGLE A IS TAKEN ON THE LEFT SIDE OF THE GIRDER WHEN LOOKING STATION AHEAD. FOR ANGLE A, REFER TO DWG. RH-13.
6. THE CONTRACTOR SHALL VERIFY ALL EXISTING FIELD DIMENSIONS PRIOR TO ORDERING OR FABRICATING THE JACKING DIAPHRAGM.
7. REMOVE THE EXISTING C18x42.7 STEEL DIAPHRAGMS AT THE LOCATIONS OF PERMANENT JACKING DIAPHRAGMS. PAYMENT FOR REMOVAL WILL BE UNDER ITEM 211000 - REMOVAL OF STRUCTURES AND OBSTRUCTIONS.
8. ALL BOLTS AT THIS LOCATION SHALL BE ⅞" DIA. ASTM F3125 GR. A325. ALL BOLTS ARE DESIGNED WITH THE THREADS EXCLUDED FROM THE SHEAR PLANE. ALL HOLES FOR BOLTS SHALL BE 15/16" DIAMETER.
9. EXISTING STEEL CONNECTION PLATES AT LOCATIONS TO BE IN CONTACT WITH PERMANENT JACKING DIAPHRAGMS SHALL BE CLEANED THROUGHLY AND A PRIME COAT APPLIED IN CONFORMANCE WITH SECTION 616 PRIOR TO INSTALLING THE PERMANENT JACKING DIAPHRAGM. THE FULL AREA OF THE PERMANENT JACKING DIAPHRAGM TO BE IN CONTACT WITH THE EXISTING CONNECTION PLATES SHALL ALSO BE CLEANED THROUGHLY AND A PRIME COAT APPLIED IN CONFORMANCE WITH SECTION 616. THE REMAINDER OF THE PERMANENT JACKING DIAPHRAGM SHALL BE FULLY PRIMED AND PAINTED IN CONFORMANCE WITH SECTION 616.
10. PLACE A NON-SHRINK GROUT PAD BENEATH THE JACKING ASSEMBLY BASE PLATE AND THE EXISTING BEAM SEAT TO ENSURE FULL AND LEVEL BEARING. NON-SHRINK GROUT SHALL BE IN ACCORDANCE WITH THE STANDARD SPECIFICATIONS, SECTION 1047.02. PAYMENT FOR NON-SHRINK GROUT WILL BE MADE UNDER ITEM 604000 - JACKING BRIDGE.
11. THE JACKING OF BEAMS 53N-8 TO 53N-9 SHALL NOT occur SIMULTANEOUSLY WITH THE JACKING OF BEAMS 53N-1 TO 53N-7 AT PIER 53N.

NOT FOR CONSTRUCTION

ADDENDA / REVISIONS	SCALE AS NOTED	REHABILITATION OF I-95 FROM I-495 TO NORTH OF BRANDYWINE RIVER BRIDGE	CONTRACT T201407404	BRIDGE NO. 1 748 059	JACKING SCHEME – SPAN 53N AT PIER E53	RH-07
			COUNTY NEW CASTLE	DESIGNED BY: DAN		SECTION WRA
				CHECKED BY: WAG		SHEET NO. 321

N:\31987-004\Control_I-95\CADD\Bridge\BR1-748_RH08.dgn
5/31/2019 12:12:41 PM

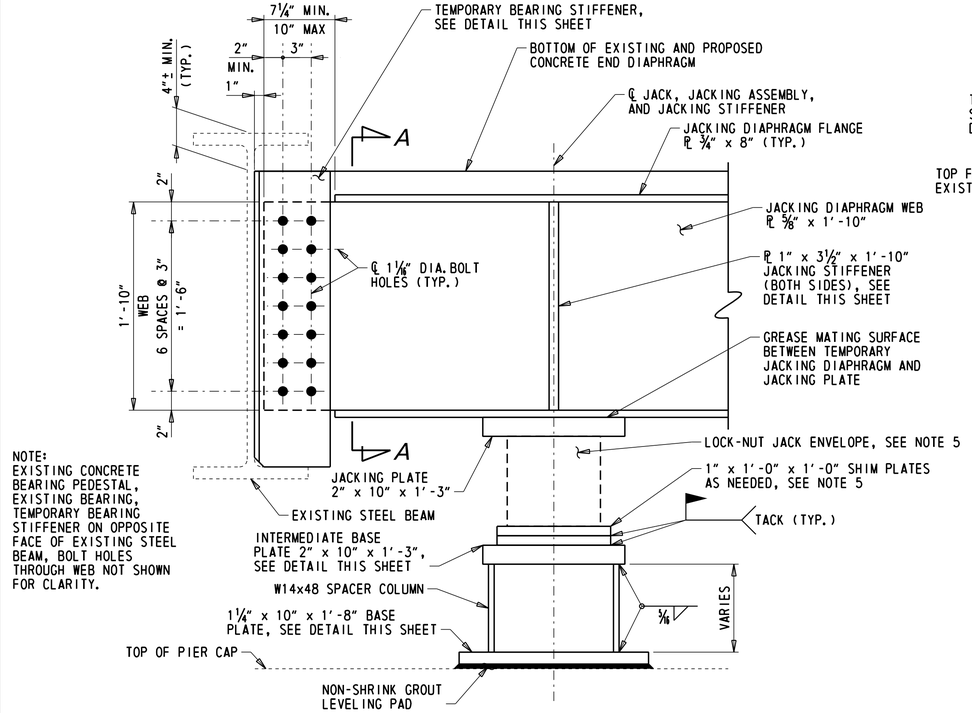

NOTE:
EXISTING CONCRETE BEARING PEDESTAL, EXISTING BEARING, TEMPORARY BEARING STIFFENER ON OPPOSITE FACE OF EXISTING STEEL BEAM, BOLT HOLES THROUGH WEB NOT SHOWN FOR CLARITY.

JACKING DIAPHRAGM AND JACKING ASSEMBLY

1½" = 1'-0"

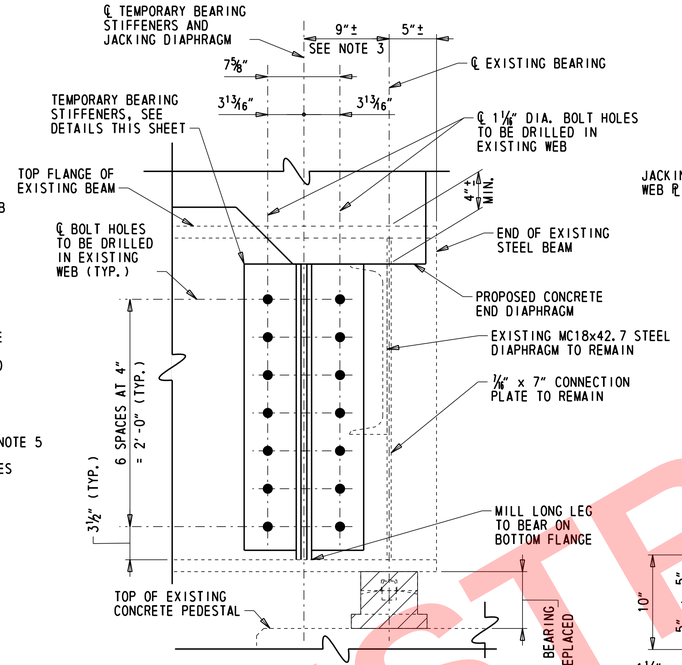

JACKING STIFFENER - ELEVATION

1½" = 1'-0"

LEGEND:

- EXISTING BEARING TO REMOVED

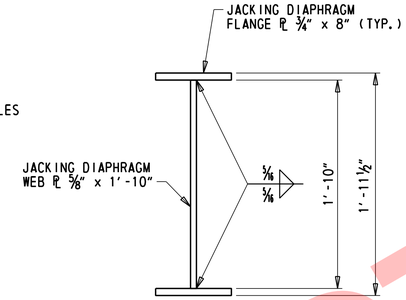

SECTION A-A

1½" = 1'-0"

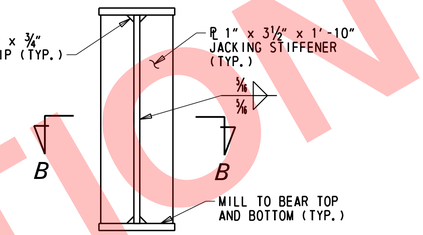

JACKING STIFFENER DETAIL

1½" = 1'-0"

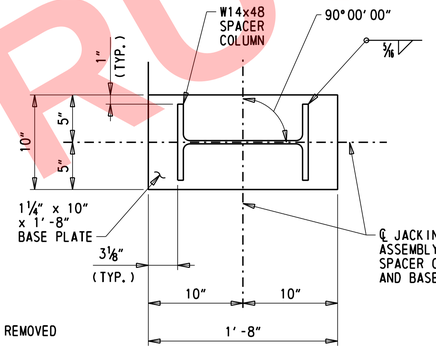

BASE PLATE DETAIL

1½" = 1'-0"

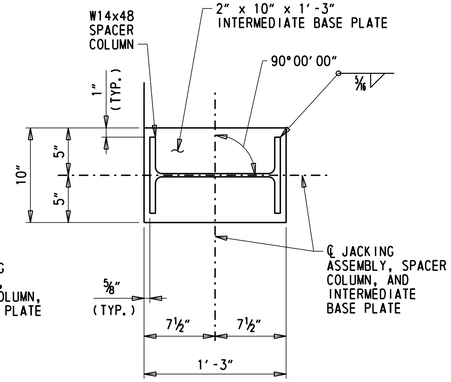

INTERMEDIATE BASE PLATE DETAIL

1½" = 1'-0"

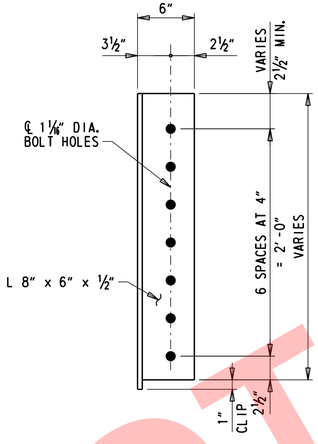

SHORT LEG ELEVATION

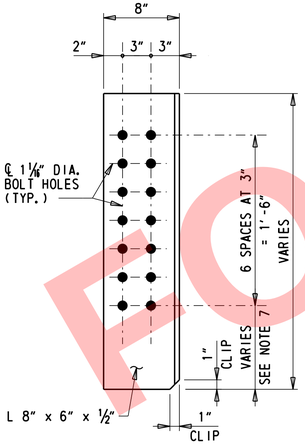

LONG LEG ELEVATION

TEMPORARY BEARING STIFFENER DETAIL

1½" = 1'-0"

NOTE:
TEMPORARY BEARING STIFFENER ON OPPOSITE FACE SIMILAR BUT OPPOSITE HAND

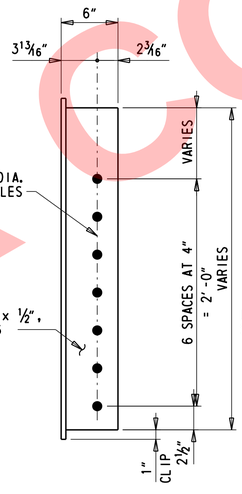

SHORT LEG ELEVATION

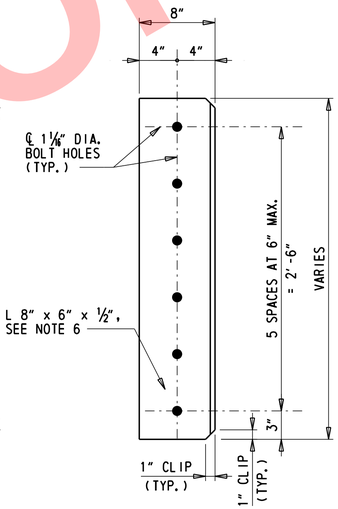

LONG LEG ELEVATION

TEMPORARY BEARING STIFFENER DETAIL FOR EXTERIOR BEAMS

1½" = 1'-0"

NOTE:
TEMPORARY BEARING STIFFENER ON OPPOSITE FACE SIMILAR BUT OPPOSITE HAND

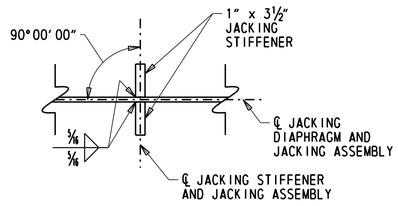

SECTION B-B

1½" = 1'-0"

NOTES:

1. JACKING DETAILS SHOWN ON THIS SHEET ARE TO ONLY BE USED FOR THE TYPICAL JACKING SCHEME AS SHOWN ON DWG. RH-02. FOR JACKING DETAILS FOR JACKING SCHEMES AS SHOWN ON DWG. RH-03 TO RH-08, REFER TO DWG. RH-10.
2. REFER TO DWG. RH-01 FOR BRIDGE JACKING NOTES.
3. DIMENSION SHOWN IS MEASURED PERPENDICULAR TO THE CENTERLINE OF BEARING FOR BOTH TANGENT AND SKEWED SPANS. ON SKEWED SPANS, THE LOCATION OF THE DRILLED HOLES ALONG THE STRINGER WEB WILL VARY BASED ON SKEW ANGLE.
4. CONTRACTOR MAY PROPOSE ALTERNATE TEMPORARY BEARING STIFFENER MEMBERS FOR SKEWED SPANS. ANY ALTERNATE SECTION SHALL HAVE SIMILAR OR BETTER STRUCTURAL PROPERTIES AS THE DETAIL SHOWN. ALTERNATE DESIGNS SHALL BE PREPARED, SIGNED, AND SEALED BY A PROFESSIONAL ENGINEER REGISTERED IN DELAWARE. ALTERNATE DESIGNS MUST BE SUBMITTED FOR REVIEW AND APPROVAL. THERE IS NO GUARANTEE THAT ALTERNATE DETAILS WILL BE APPROVED AND THE ENGINEER RESERVES THE RIGHT TO REJECT ANY ALTERNATE SECTION FOR ANY REASON.
5. JACK ENVELOPE WILL VARY BASED ON CONTRACTOR'S SELECTED HYDRAULIC LOCK-NUT JACK. CONTRACTOR SHALL VERIFY PRIOR TO ORDERING JACKS THAT THE JACKING ASSEMBLY HAS SUFFICIENT AREA TO SUPPORT THE SELECTED JACK. ADJUST SHIM PLATE PLAN AREA AS NEEDED TO SUPPORT SELECTED JACK. SHIM PLATES WILL BE LIMITED TO A MAXIMUM HEIGHT OF 1'-0", ADJUST SPACER COLUMN AS NECESSARY.
6. TEMPORARY BEARING STIFFENER DETAIL FOR EXTERIOR BEAMS SHALL BE USED ONLY ON THE EXTERIOR FACE OF EXTERIOR BEAMS OR IN BAYS WHICH WILL NOT HAVE JACKING DIAPHRAGMS AS INDICATED ON DWG. RH-01. ALL BAYS TO RECEIVE JACKING DIAPHRAGMS SHALL UTILIZE THE TEMPORARY BEARING STIFFENER DETAIL AS SHOWN ON THIS SHEET.
7. BOLT HOLES IN THE LONG LEG OF THE TEMPORARY BEARING STIFFENER SHALL BE POSITIONED VERTICALLY AS NEEDED TO ALLOW JACKING DIAPHRAGM TO BE INSTALLED LEVEL BETWEEN EXISTING BEAMS.
8. NON-SHRINK GROUT SHALL BE IN ACCORDANCE WITH THE STANDARD SPECIFICATIONS, SECTION 1047.02. PAYMENT FOR NON-SHRINK GROUT WILL BE UNDER ITEM 604000 - JACKING BRIDGE.

NOT FOR CONSTRUCTION

N:\31987-004\Cnst\cst_I-95\COD\Bridge\BRI-748_RH10.dgn
5/31/2019 12:12:42 PM

ADDENDA / REVISIONS		SCALE AS NOTED	REHABILITATION OF I-95 FROM I-495 TO NORTH OF BRANDYWINE RIVER BRIDGE	CONTRACT T201407404	BRIDGE NO. 1 748 059	JACKING DETAILS 1 OF 2	RH-09
				COUNTY NEW CASTLE	DESIGNED BY: DAN		SECTION WRA
					CHECKED BY: WAG		SHEET NO. 323

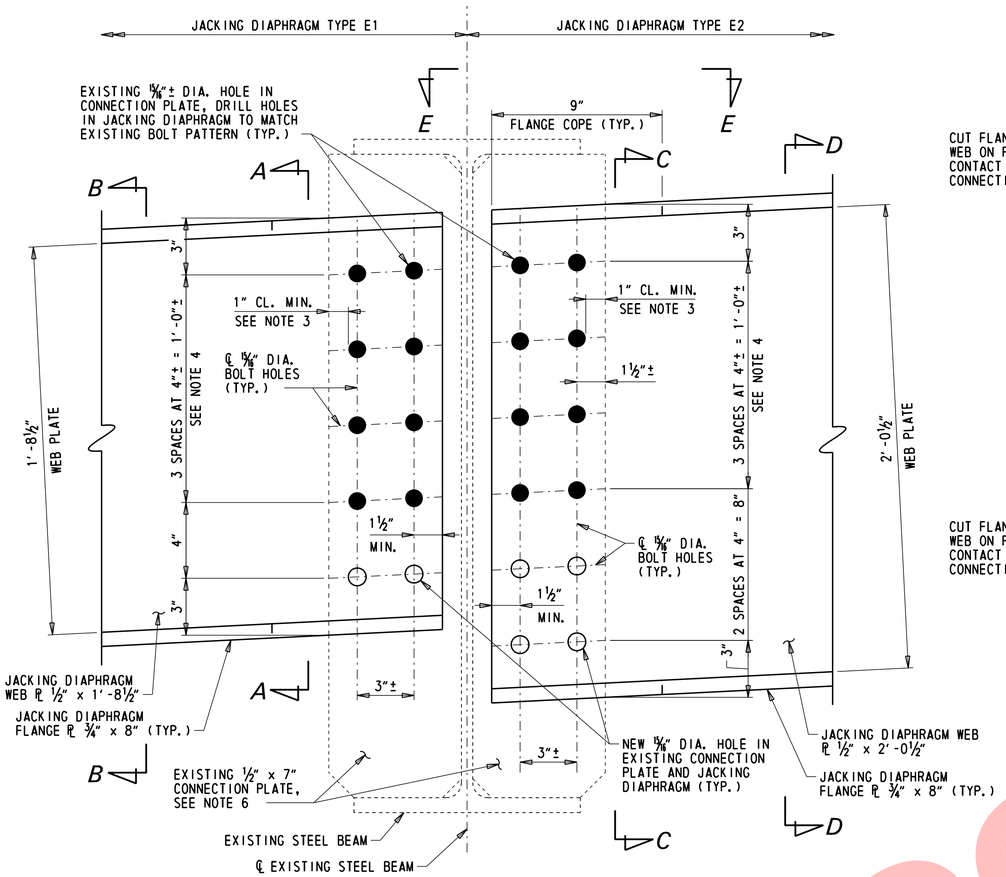

JACKING DIAPHRAGM DETAILS

3" = 1'-0"

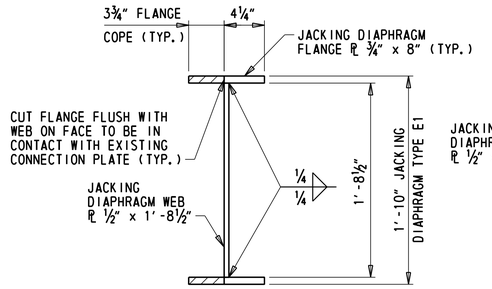

SECTION A-A

1½" = 1'-0"

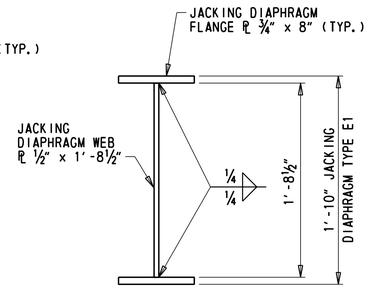

SECTION B-B

1½" = 1'-0"

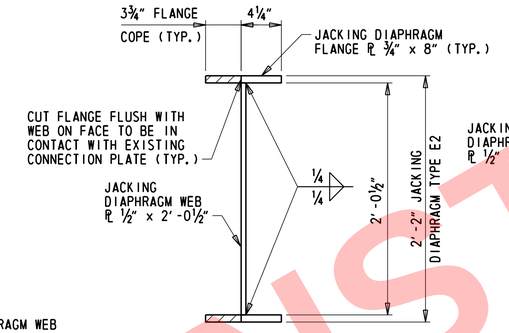

SECTION C-C

1½" = 1'-0"

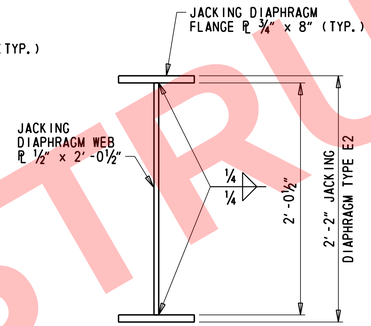

SECTION D-D

1½" = 1'-0"

LEGEND:

▨ - PORTION OF FLANGE TO BE COPED

NOTES:

1. JACKING DETAILS SHOWN ON THIS SHEET ARE TO ONLY BE USED FOR JACKING SCHEMES SHOWN ON DWG. RH-03 TO DWG. RH-08. FOR JACKING DETAILS FOR THE TYPICAL JACKING SCHEME AS SHOWN ON DWG. RH-02, REFER TO DWG. RH-09.
2. REFER TO DWG. RH-01 FOR BRIDGE JACKING NOTES.
3. CONTRACTOR SHALL VERIFY THE EXISTING BOLT CLEARANCE PRIOR TO ORDERING OR FABRICATING MATERIAL. THE MINIMUM CLEARANCE BETWEEN THE EDGE OF THE BOLT HOLE AND THE EDGE OF THE EXISTING CONNECTION PLATE IS 1". IF THE EXISTING CLEARANCE OR THE CLEARANCE AFTER DRILLING THE HOLE TO SIZE WILL RESULT IN LESS THAN 1" CLEARANCE, NOTIFY THE ENGINEER IMMEDIATELY.
4. CONTRACTOR SHALL VERIFY THE EXISTING BOLT SPACING PRIOR TO ORDERING OR FABRICATING MATERIAL. IF VERTICAL OR HORIZONTAL SPACING VARIES FROM THOSE SHOWN ON THESE PLANS, NOTIFY THE ENGINEER IMMEDIATELY.
5. JACK ENVELOPE WILL BE BASED ON CONTRACTOR'S SELECTED JACK. CONTRACTOR SHALL VERIFY PRIOR TO ORDERING JACKS THAT THE JACKING ASSEMBLY HAS SUFFICIENT AREA TO SUPPOR THE SELECTED JACK. ADJUST SHIM PLATE PLAN AREA AS NEEDED TO SUPPORT SELECTED JACK. SHIM PLATES WILL BE LIMITED TO A MAXIMUM HEIGHT OF 1'-0".
6. IN THE PRESENCE OF THE ENGINEER, THE CONTRACTOR SHALL INSPECT THE CONDITION OF THE EXISTING STEEL CONNECTION PLATE, WELD BETWEEN THE CONNECTION PLATE AND EXISTING STEEL BEAM, AND THE WEB OF THE EXISTING STEEL BEAM. INSPECT FOR ANY DEFECTS WHICH MAY IMPACT THE LOAD CARRYING CAPACITY DURING JACKING. ANY OBSERVED DEFECTS SHALL BE REPAIRED TO THE FULL SATISFACTION OF THE ENGINEER PRIOR TO COMMENCING WITH JACKING OPERATIONS. PAYMENT FOR ANY REQUIRED REPAIRS OF THE STRUCTURAL STEEL AND/OR REPAIRS TO THE EXISTING WELDS WILL BE UNDER ITEM 615005 - STEEL STRUCTURE REPAIR AND 615007 - WELDING REPAIR, RESPECTIVELY.
7. AFTER THE BRIDGE IS SET ON THE NEW BEARINGS, THE JACKING DIAPHRAGMS ARE TO REMAIN IN PLACE AS PART OF THE COMPLETED STRUCTURE.
8. NON-SHRINK GROUT SHALL BE IN ACCORDANCE WITH THE STANDARD SPECIFICATIONS, SECTION 1047.02. PAYMENT FOR NON-SHRINK GROUT WILL BE UNDER ITEM 604000 - JACKING BRIDGE.

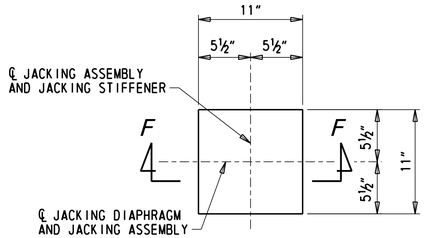

BEVELED SHIM PLATE DETAIL

1½" = 1'-0"

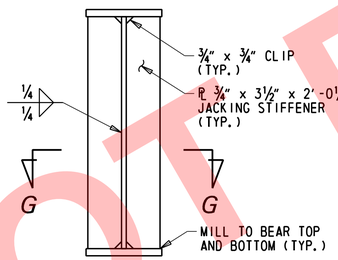

JACKING STIFFENER DETAIL

1½" = 1'-0"

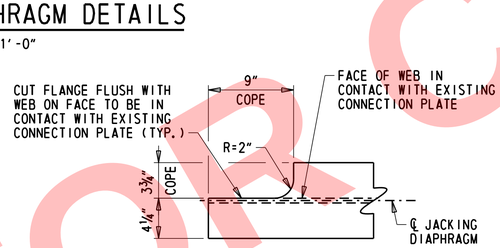

SECTION E-E

1½" = 1'-0"

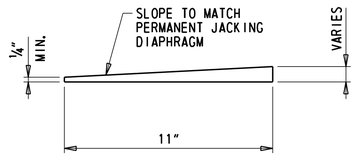

SECTION F-F

3" = 1'-0"

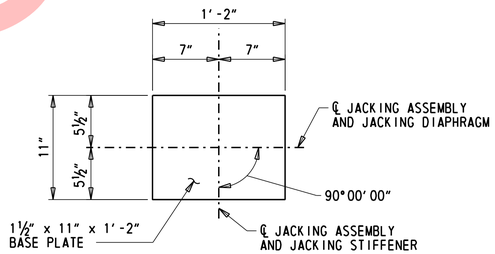

BASE PLATE FOR SPAN 52N AT PIER E53 DETAIL

1½" = 1'-0"

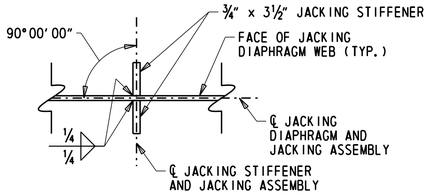

SECTION G-G

1½" = 1'-0"

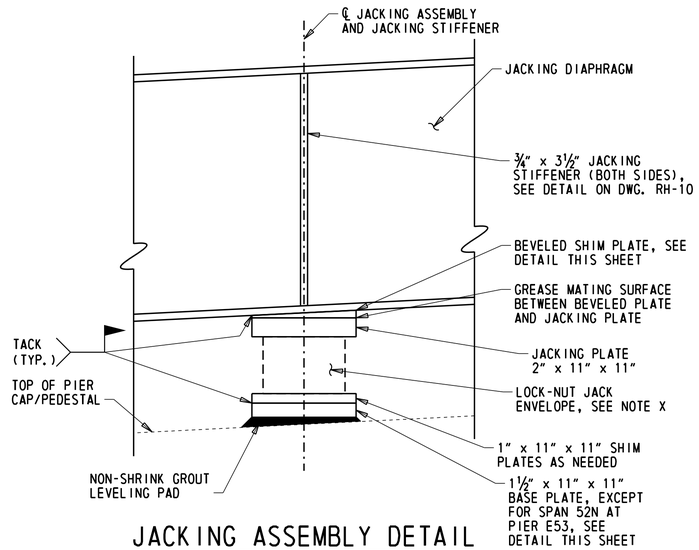

JACKING ASSEMBLY DETAIL

1½" = 1'-0"

NOT FOR CONSTRUCTION

ADDENDA / REVISIONS		SCALE AS NOTED	REHABILITATION OF I-95 FROM I-495 TO NORTH OF BRANDYWINE RIVER BRIDGE	CONTRACT	BRIDGE NO. 1 748 059	JACKING DETAILS 2 OF 2	RH-10
				T201407404	DESIGNED BY: DAN		SECTION WRA
				COUNTY NEW CASTLE	CHECKED BY: WAG		SHEET NO. 324

N:\31987-004\Control_I-95\CADD\Bridge\BRI-748_RH11.dgn
5/31/2019 12:12:43 PM

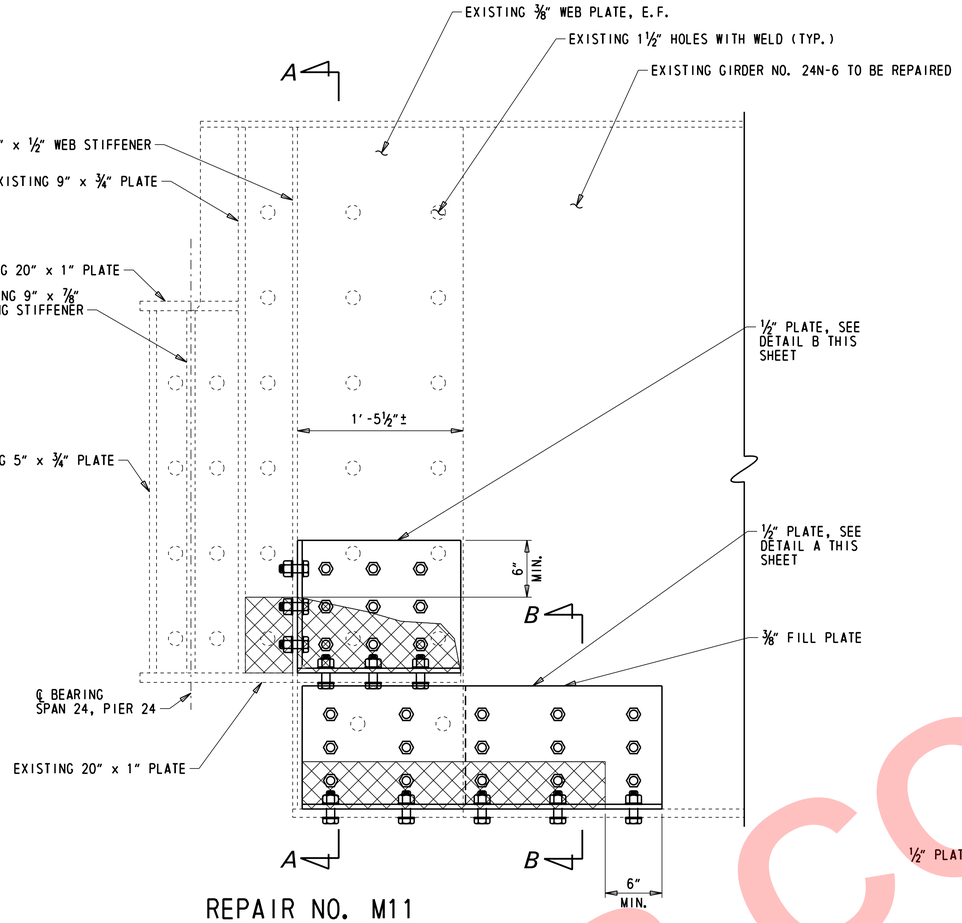

REPAIR NO. M11

1 1/2" = 1'-0"

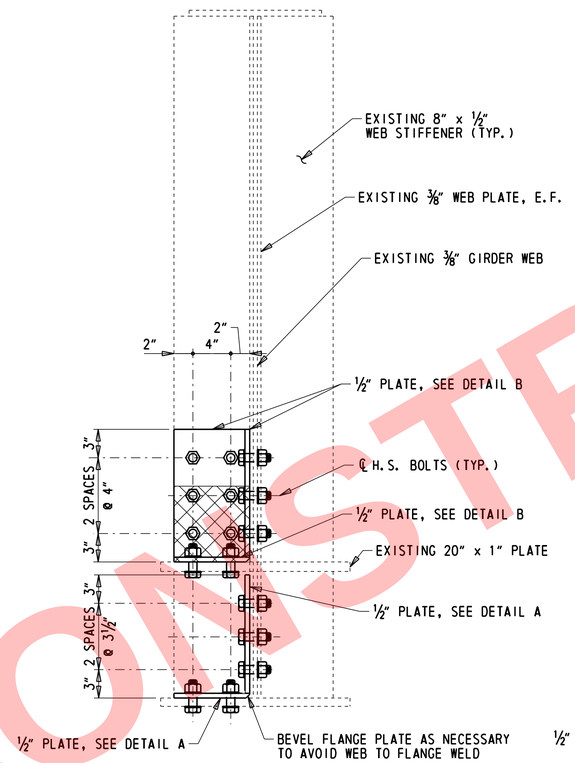

SECTION A-A

1 1/2" = 1'-0"

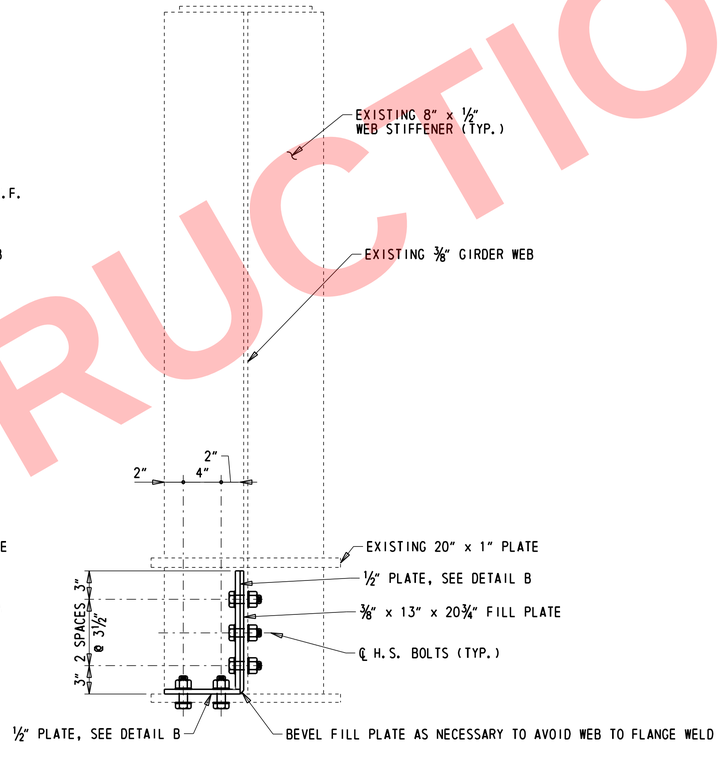

SECTION B-B

1 1/2" = 1'-0"

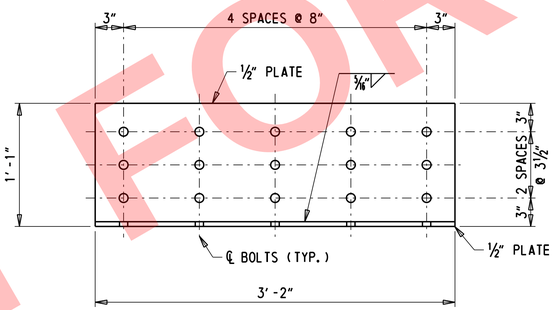

DETAIL A

1 1/2" = 1'-0"

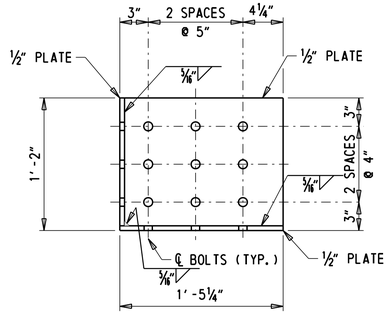

DETAIL B

1 1/2" = 1'-0"

LEGEND:

APPROXIMATE AREA OF EXISTING SECTION LOSS

NOTES:

1. THE CONTRACTOR SHALL FIELD VERIFY ALL DIMENSIONS INCLUDING THE SIZE AND LIMITS OF ALL PROPOSED REPAIR PLATES IN THE PRESENCE OF THE ENGINEER PRIOR TO ORDERING AND/OR FABRICATION OF ALL MATERIALS.
2. UNLESS SHOWN OTHERWISE, THE MINIMUM ACCEPTABLE EDGE DISTANCE FOR 7/8" DIAMTER BOLTS SHALL BE 1 1/2" MEASURED TO THE CENTERLINE OF BOLT.
3. UNLESS SHOWN OTHERWISE, THE MINIMUM ACCEPTABLE CENTER-TO-CENTER BOLT SPACING FOR 7/8" DIAMETER BOLTS SHALL BE 3".
4. HIGH STRENGTH BOLTS SHALL CONFORM TO ASTM A 325, TYPE 1.
5. HEAVY HEX NUTS SHALL CONFORM TO ASTM A 563, GRADE DH.
6. HARDENED WASHER SHALL CONFORM TO ASTM F 436.
7. AREAS OF SECTION LOSS SHALL BE COATED WITH A METAL REINFORCING EPOXY FILLER PRIOR TO INSTALLING NEW PLATES. METAL EPOXY FILLER SHALL CONFORM TO THE SPECIAL PROVISIONS.
8. AFTER REPAIRS ARE COMPLETE, PAINT AREA IN CONFORMANCE WITH SECTION 616. PAINT COLOR SHOULD MATCH THE COLOR OF THE EXISTING GIRDER. CAULK AROUND PERIMETER OF REPAIR PLATES IN CONFORMANCE WITH SECTION 616.

NOT FOR CONSTRUCTION

ADDENDA / REVISIONS	SCALE AS NOTED	REHABILITATION OF I-95 FROM I-495 TO NORTH OF BRANDYWINE RIVER BRIDGE	CONTRACT T201407404	BRIDGE NO. 1 748 059	REPAIR NO. M11 DETAILS	RH-16
			COUNTY NEW CASTLE	DESIGNED BY: DAN		SECTION WRA
				CHECKED BY: WAG		SHEET NO. 331

N:\31987-004\Contract_I-95\CADD\Bridge\BR1-748_RH17.dgn
5/31/2019 12:12:43 PM

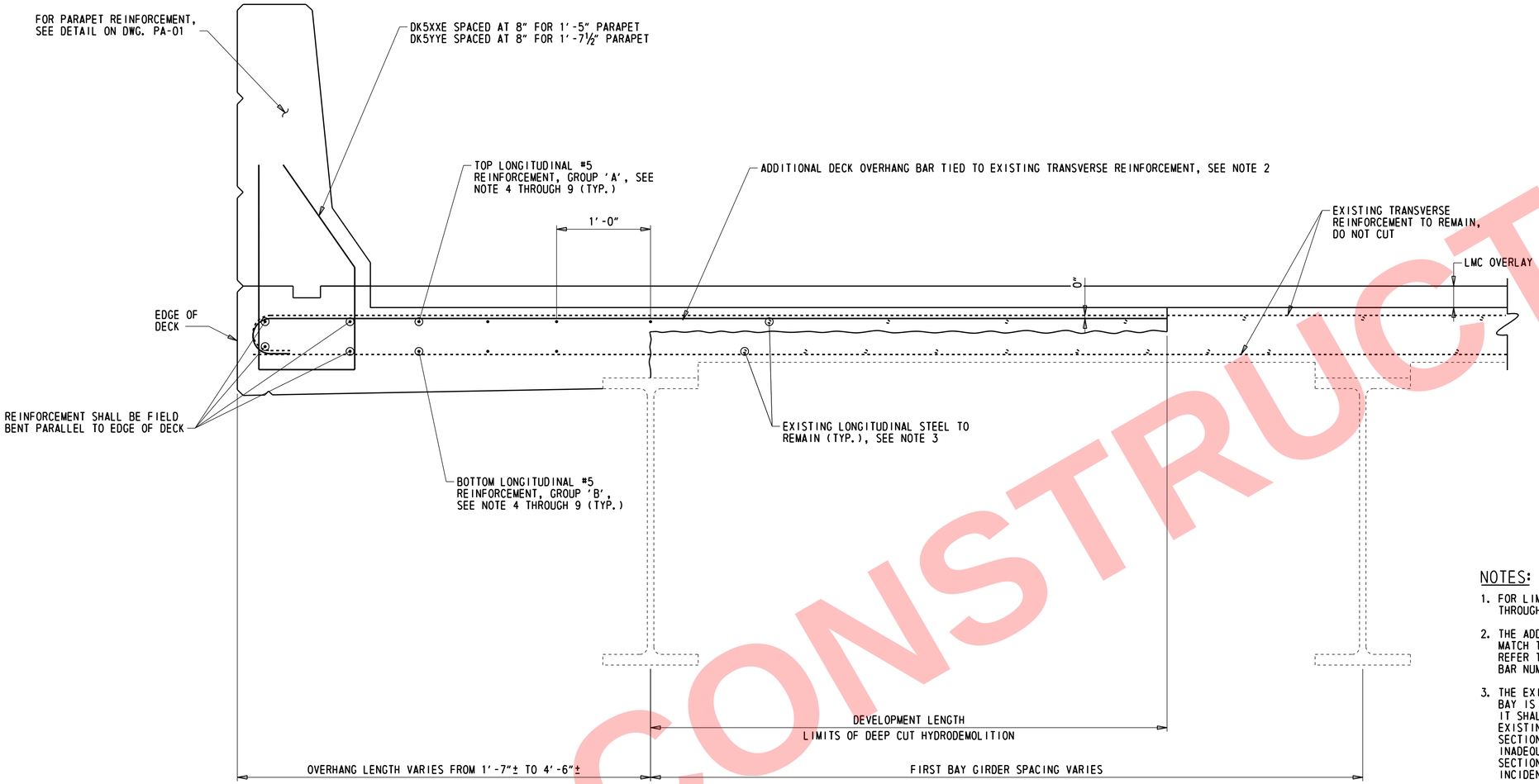

OVERHANG REINFORCEMENT DETAIL

1½" = 1'-0"

NUMBER OF LONGITUDINAL #5 REINFORCEMENT BARS REQUIRED IN OVERHANG				
	OVERHANG > OR = 4'-2"	OVERHANG > OR = 3'-2" AND < 4'-2"	OVERHANG > OR = 2'-2" AND < 3'-2"	OVERHANG < 2'-2"
GROUP 'A'	6	5	4	3
GROUP 'B'	5	4	3	2

NOTES:

1. FOR LIMITS OF DEEP CUT HYDRODEMOLITION, REFER TO DWG. DK-02 THROUGH DK-04.
2. THE ADDITIONAL DECK OVERHANG REINFORCEMENT SHALL BE CUT TO MATCH THE DEVELOPMENT LENGTH PLUS OVERHANG LENGTH MINUS 4"±. REFER TO DK-02 THROUGH DK-03 FOR ADDTIONAL DECK OVERHANG BAR NUMBER.
3. THE EXISTING LONGITUDINAL REINFORCEMENT WITHIN THE FIRST BAY IS TO REMAIN. IF THE TOP MAT OF REINFORCEMENT IS LOOSE, IT SHALL BE RETIED TO THE TRANSVERSE REINFORCEMENT. EXISTING BARS TO REMAIN SHALL BE CLEANED IN ACCORDANCE WITH SECTION 628.03(E)7. BARS WITH CORROSION, BROKEN, OR WITH INADEQUATE BOND SHALL BE REPAIRED IN ACCORDANCE WITH SECTION 628.03(E)7. PAYMENT FOR THIS WORK WILL BE INCIDENTAL TO ITEM 611000 - BAR REINFORCEMENT.
4. THE MINIMUM CLEAR DISTANCE BETWEEN LONGITUDINAL REINFORCEMENT FURNISHED AND PLACED IN GROUP 'A' AND GROUP 'B' SHALL BE 1½" AND THE MAXIMUM CENTER-TO-CENTER SPACING SHALL BE 1'-0".
5. THE NUMBER OF LONGITUDINAL REINFORCEMENT IN GROUP 'A' AND GROUP 'B' FURNISHED AND PLACED SHALL BE IN ACCORDANCE WITH THE TABLE AS SHOWN ON THIS SHEET.
6. THE MINIMUM LAP LENGTH FOR LONGITUDINAL REINFORCEMENT IN GROUP 'A' AND GROUP 'B' SHALL BE 1'-11".
7. THE LENGTH OF LONGITUDINAL REINFORCEMENT FURNISHED AND PLACED IN GROUP 'A' AND GROUP 'B' SHALL BE AT THE CONTRACTION'S DISCRETION BUT SHALL MEET THE REQUIREMENTS AS SHOWN HEREON AND IN NOTES 4 THROUGH 6.
8. ALL LONGITUDINAL REINFORCEMENT SHALL BE BLACK UNCOATED REINFORCING STEEL. FIELD CUTTING OF THE LONGITUDINAL REINFORCEMENT IS PERMITTED. COST TO FIELD CUT WILL BE INCIDENTAL TO ITEM 61100 - BAR REINFORCEMENT.
9. A TOTAL OF XX,XXX POUNDS OF LONGITUDINAL BARS IN GROUP 'A' AND 'B' HAS BEEN ALLOTTED IN THE TOTAL CONTRACT QUANTITY OF ITEM 611000 - BAR REINFORCEMENT. THE CONTRACTOR WILL BE PAID FOR THE POUNDS FURNISHED, PLACED, AND ACCEPTED UP TO AND EQUAL TO XX,XXX POUNDS. ANY AMOUNT OF LONGITUDINAL REINFORCING STEEL BARS PLACED, AS PART OF THE GROUP 'A' AND GROUP 'B' BARS, ABOVE AND BEYOND THIS QUANTITY WILL NOT BE MEASURED AND WILL BE INCIDENTAL TO ITEM 611000 - BAR REINFORCEMENT.

NOT FOR CONSTRUCTION

N:\31987-004\Control_I-95\CADD\Bridge\BR1-748_DK01.dgn
5/31/2019 12:12:44 PM

ADDENDA / REVISIONS		SCALE AS NOTED	REHABILITATION OF I-95 FROM I-495 TO NORTH OF BRANDYWINE RIVER BRIDGE	CONTRACT T201407404	BRIDGE NO. 1 748 059	OVERHANG REINFORCEMENT DETAILS – 1	DK-01
				COUNTY NEW CASTLE	DESIGNED BY: DAN		SECTION WRA
					CHECKED BY: WAG		SHEET NO. 336

SPAN NO.	DIRECTION OF TRAFFIC	OVERHANG LOCATION	SPAN LENGTH MEASURED ALONG FLOWLINE	PARAPET WIDTH	MAX. OVERHANG	MIN. OVERHANG	ESTIMATED NO. OF LONGITDUNAL LAPS PER BAR	DEVELOPMENT LENGTH	ADDITIONAL OVERHANG BAR NO.	NO. OF ADDITIONAL OVERHANG BARS
0	SOUTHBOUND	EXTERIOR	117'-2 7/8"	1'-5"	4.4	3.4	2	5.25	DK6XX	235
0	NORTHBOUND	EXTERIOR	123'-11 1/8"	1'-5"	2.7	1.8	3	5.25	DK6XX	249
1	SOUTHBOUND	EXTERIOR	114'-7 3/8"	1'-5"	4.4	3.4	2	5.25	DK6XX	230
1	NORTHBOUND	EXTERIOR	120'-10 7/8"	1'-5"	2.8	1.9	3	5.25	DK6XX	243
2	SOUTHBOUND	EXTERIOR	115'-6 3/8"	1'-5"	4.2	3.6	2	5.25	DK6XX	232
2	NORTHBOUND	EXTERIOR	119'-5"	1'-5"	2.6	2.1	2	5.25	DK6XX	240
3	SOUTHBOUND	EXTERIOR	116'-11 1/8"	1'-5"	4.4	4.2	2	5.25	DK6XX	235
3	NORTHBOUND	EXTERIOR	118'-2 3/8"	1'-5"	4.0	2.1	2	5.25	DK6XX	237
4	SOUTHBOUND	EXTERIOR	117'-7 5/8"	1'-5"	4.4	4.4	2	5.25	DK6XX	236
4	NORTHBOUND	EXTERIOR	117'-7 5/8"	1'-5"	4.1	4.0	2	5.25	DK6XX	236
5	SOUTHBOUND	EXTERIOR	117'-6 3/8"	1'-5"	4.5	4.5	2	5.25	DK6XX	236
5	NORTHBOUND	EXTERIOR	117'-3"	1'-5"	4.2	4.0	2	5.25	DK6XX	235
6	SOUTHBOUND	EXTERIOR	117'-1/8"	1'-5"	4.5	2.1	2	5.25	DK6XX	235
6	NORTHBOUND	EXTERIOR	114'-2 4/8"	1'-5"	4.2	3.7	2	5.25	DK6XX	229
7	SOUTHBOUND	EXTERIOR	119'-1 6/8"	1'-5"	2.9	2.1	2	5.25	DK6XX	239
7	NORTHBOUND	EXTERIOR	112'-9 4/8"	1'-5"	4.3	3.3	2	5.25	DK6XX	226
8	SOUTHBOUND	EXTERIOR	119'-9"	1'-5"	3.2	2.1	2	5.25	DK6XX	240
8	NORTHBOUND	EXTERIOR	111'-2 7/8"	1'-5"	4.4	3.4	2	5.25	DK6XX	223
9	SOUTHBOUND	EXTERIOR	151'-11 7/8"	1'-5"	4.3	2.1	3	5.25	DK6XX	305
9	NORTHBOUND	EXTERIOR	141'-7/8"	1'-5"	4.0	2.2	3	5.25	DK6XX	283
10	SOUTHBOUND	EXTERIOR	138'-2 3/8"	1'-5"	3.6	1.8	3	5.25	DK6XX	277
10	NORTHBOUND	EXTERIOR	128'-5 2/8"	1'-5"	4.1	2.4	3	5.25	DK6XX	258
11	SOUTHBOUND	EXTERIOR	139'-8 5/8"	1'-5"	3.2	1.8	3	5.25	DK6XX	280
11	NORTHBOUND	EXTERIOR	132'-6 6/8"	1'-5"	4.2	3.1	3	5.25	DK6XX	266
12	SOUTHBOUND	EXTERIOR	86'-3 5/8"	1'-5"	4.4	2.2	2	5.25	DK6XX	173
12	NORTHBOUND	EXTERIOR	84'-2 3/8"	1'-5"	4.3	4.0	2	5.25	DK6XX	169
13	SOUTHBOUND	EXTERIOR	86'-2 6/8"	1'-5"	4.5	4.4	2	5.25	DK6XX	173
13	NORTHBOUND	EXTERIOR	85'-11 1/8"	1'-5"	4.3	4.3	2	5.25	DK6XX	173
14	SOUTHBOUND	EXTERIOR	86'-2 3/8"	1'-5"	4.5	4.4	2	5.25	DK6XX	173
14	NORTHBOUND	EXTERIOR	86'-2 3/8"	1'-5"	4.3	4.3	2	5.25	DK6XX	173
15	SOUTHBOUND	EXTERIOR	86'-1 3/8"	1'-5"	4.5	4.4	2	5.25	DK6XX	173
15	NORTHBOUND	EXTERIOR	86'-1 6/8"	1'-5"	4.3	4.3	2	5.25	DK6XX	173
16	SOUTHBOUND	EXTERIOR	86'-3 4/8"	1'-5"	4.4	4.2	2	5.25	DK6XX	173
16	NORTHBOUND	EXTERIOR	86'-7/8"	1'-5"	4.3	4.0	2	5.25	DK6XX	173
17	SOUTHBOUND	EXTERIOR	91'-11 5/8"	1'-5"	4.3	4.1	2	5.25	DK6XX	185
17	NORTHBOUND	EXTERIOR	94'-5/8"	1'-5"	4.0	4.0	2	5.25	DK6XX	189
18	SOUTHBOUND	EXTERIOR	84'-3 3/8"	1'-5"	4.3	3.9	2	5.25	DK6XX	169
18	NORTHBOUND	EXTERIOR	87'-11 7/8"	1'-5"	4.0	1.9	2	5.25	DK6XX	177
19	SOUTHBOUND	EXTERIOR	82'-1 1/8"	1'-5"	4.2	3.6	2	5.25	DK6XX	165
19	NORTHBOUND	EXTERIOR	88'-7 5/8"	1'-5"	2.0	1.7	2	5.25	DK6XX	178
20	SOUTHBOUND	EXTERIOR	88'-0"	1'-5"	4.2	3.4	2	5.25	DK6XX	177
20	NORTHBOUND	EXTERIOR	96'-2 5/8"	1'-5"	3.0	1.7	2	5.25	DK6XX	193
21	SOUTHBOUND	EXTERIOR	127'-9 2/8"	1'-5"	4.3	2.7	3	5.25	DK6XX	256
21	NORTHBOUND	EXTERIOR	128'-1/8"	1'-5"	4.2	1.7	3	5.25	DK6XX	257
22	SOUTHBOUND	EXTERIOR	128'-5 5/8"	1'-7 1/2"	4.3	2.7	3	5.5	DK6XX	258
22	NORTHBOUND	EXTERIOR	140'-5 4/8"	1'-5"	4.2	1.9	3	5.25	DK6XX	282
23	SOUTHBOUND	EXTERIOR	127'-2"	1'-7 1/2"	4.3	2.8	3	5.5	DK6XX	255
23	NORTHBOUND	EXTERIOR	139'-11 6/8"	1'-5"	3.7	1.9	3	5.25	DK6XX	281
24	SOUTHBOUND	EXTERIOR	105'-9 1/8"	1'-7 1/2"	4.4	3.3	2	5.5	DK6XX	212
24	NORTHBOUND	EXTERIOR	113'-6/8"	1'-7 1/2"	3.1	1.7	2	5.5	DK6XX	227
25	SOUTHBOUND	EXTERIOR	98'-7 3/8"	1'-7 1/2"	4.5	3.5	2	5.5	DK6XX	198
25	NORTHBOUND	EXTERIOR	106'-5 3/8"	1'-7 1/2"	3.4	2.3	2	5.5	DK6XX	214
26	SOUTHBOUND	INTERIOR	70'-3"	1'-5"	3.1	2.7	1	5.25	DK6XX	141
26	NORTHBOUND	INTERIOR	71'-4 3/8"	1'-5"	2.4	1.9	1	5.25	DK6XX	144
26	NORTHBOUND	EXTERIOR	72'-10 5/8"	1'-7 1/2"	2.6	2.2	1	5.5	DK6XX	147
27	SOUTHBOUND	INTERIOR	73'-1 5/8"	1'-5"	2.9	2.6	1	5.25	DK6XX	147
27	NORTHBOUND	INTERIOR	73'-12"	1'-5"	2.1	1.8	1	5.5	DK6XX	149
27	NORTHBOUND	EXTERIOR	75'-1 5/8"	1'-7 1/2"	2.2	1.6	1	5.5	DK6XX	151

NOT FOR CONSTRUCTION

N:\31987-004\Contract_I-95\CADD\Bridge\BR1-748_DK02.dgn
5/31/2019 12:45 PM

ADDENDA / REVISIONS		SCALE AS NOTED	REHABILITATION OF I-95 FROM I-495 TO NORTH OF BRANDYWINE RIVER BRIDGE	CONTRACT T201407404	BRIDGE NO. 1 748 059	OVERHANG REINFORCEMENT DETAILS – 2	DK-02
				COUNTY NEW CASTLE	DESIGNED BY: DAN		SECTION WRA
					CHECKED BY: WAG		SHEET NO. 337

SPAN NO.	DIRECTION OF TRAFFIC	OVERHANG LOCATION	SPAN LENGTH MEASURED ALONG FLOWLINE	PARAPET WIDTH	MAX. OVERHANG	MIN. OVERHANG	ESTIMATED NO. OF LONGITDUNAL LAPS PER BAR	DEVELOPMENT LENGTH	ADDITIONAL OVERHANG BAR NO.	NO. OF ADDITIONAL OVERHANG BARS
28	SOUTHBOUND	INTERIOR	73'-7 4/8"	1'-5"	2.7	2.5	1	5.25	DK6XX	148
28	NORTHBOUND	INTERIOR	73'-11 1/8"	1'-5"	2.1	1.9	1	5.5	DK6XX	149
28	NORTHBOUND	EXTERIOR	74'-3 6/8"	1'-7 1/2"	1.9	1.6	1	5.5	DK6XX	149
29	SOUTHBOUND	INTERIOR	73'-7 6/8"	1'-5"	2.6	2.5	1	5.25	DK6XX	148
29	NORTHBOUND	INTERIOR	73'-8 3/8"	1'-5"	2.4	2	1	5.5	DK6XX	148
29	NORTHBOUND	EXTERIOR	74'-3 6/8"	1'-7 1/2"	1.9	1.8	1	5.5	DK6XX	149
30	SOUTHBOUND	INTERIOR	73'-8 4/8"	1'-5"	2.6	2.6	1	5.25	DK6XX	148
30	NORTHBOUND	INTERIOR	73'-9"	1'-5"	2.5	2.4	1	5.25	DK6XX	148
30	NORTHBOUND	EXTERIOR	73'-9 6/8"	1'-7 1/2"	1.9	1.8	1	5.5	DK6XX	148
31	SOUTHBOUND	INTERIOR	73'-9 2/8"	1'-5"	2.8	2.6	1	5.25	DK6XX	148
31	NORTHBOUND	INTERIOR	73'-9 3/8"	1'-5"	2.5	2.5	1	5.25	DK6XX	148
31	NORTHBOUND	EXTERIOR	73'-9 3/8"	1'-7 1/2"	1.8	1.8	1	5.5	DK6XX	148
32	SOUTHBOUND	INTERIOR	137'-5 4/8"	1'-5"	2.7	2.5	3	5.25	DK6XX	276
32	NORTHBOUND	INTERIOR	137'-2 1/8"	1'-5"	2.5	2.4	3	5.25	DK6XX	275
32	NORTHBOUND	EXTERIOR	136'-9 4/8"	1'-7 1/2"	2	1.8	3	5.5	DK6XX	274
33	SOUTHBOUND	INTERIOR	64'-4 7/8"	1'-5"	2.7	2.5	1	5.25	DK6XX	130
33	NORTHBOUND	INTERIOR	63'-10 6/8"	1'-5"	2.5	2.3	1	5.25	DK6XX	129
33	NORTHBOUND	EXTERIOR	63'-2 5/8"	1'-7 1/2"	2	1.8	1	5.5	DK6XX	127
34	SOUTHBOUND	INTERIOR	68'-5/8"	1'-5"	2.7	2.4	1	5.25	DK6XX	137
34	NORTHBOUND	INTERIOR	67'-2"	1'-5"	2.5	2.3	1	5.25	DK6XX	135
34	NORTHBOUND	EXTERIOR	65'-12"	1'-7 1/2"	1.9	1.6	1	5.5	DK6XX	133
35	SOUTHBOUND	INTERIOR	68'-8 4/8"	1'-5"	2.7	2.4	1	5.25	DK6XX	138
35	NORTHBOUND	INTERIOR	67'-9 2/8"	1'-5"	2.6	2.3	1	5.25	DK6XX	136
35	NORTHBOUND	EXTERIOR	66'-6 2/8"	1'-7 1/2"	2.6	1.8	1	5.5	DK6XX	134
36	SOUTHBOUND	INTERIOR	70'-1 6/8"	1'-5"	2.6	2.2	1	5.25	DK6XX	141
36	NORTHBOUND	INTERIOR	68'-9 7/8"	1'-5"	2.8	2.4	1	5.25	DK6XX	138
36	NORTHBOUND	EXTERIOR	66'-10 7/8"	1'-7 1/2"	2.6	1.7	1	5.5	DK6XX	135
37	SOUTHBOUND	INTERIOR	68'-6 2/8"	1'-5"	2.8	2.4	1	5.25	DK6XX	138
37	NORTHBOUND	INTERIOR	67'-2"	1'-5"	2.8	2.4	1	5.25	DK6XX	135
37	NORTHBOUND	EXTERIOR	65'-5 2/8"	1'-7 1/2"	2.5	2.1	1	5.5	DK6XX	132
38	SOUTHBOUND	INTERIOR	68'-1"	1'-5"	2.6	2.2	1	5.25	DK6XX	137
38	NORTHBOUND	INTERIOR	66'-6 4/8"	1'-5"	2.8	2.4	1	5.25	DK6XX	134
38	NORTHBOUND	EXTERIOR	64'-5 4/8"	1'-7 1/2"	2.5	2.1	1	5.5	DK6XX	130
39	SOUTHBOUND	INTERIOR	68'-8 4/8"	1'-5"	2.6	2.2	1	5.25	DK6XX	138
39	NORTHBOUND	INTERIOR	67'-5"	1'-5"	2.9	2.5	1	5.25	DK6XX	136
39	NORTHBOUND	EXTERIOR	65'-8 1/8"	1'-7 1/2"	2.6	2.2	1	5.5	DK6XX	132
40	SOUTHBOUND	EXTERIOR	70'-4/8"	1'-7 1/2"	2.1	1.7	1	5.5	DK6XX	141
40	SOUTHBOUND	INTERIOR	68'-4 2/8"	1'-5"	2.5	2.1	1	5.25	DK6XX	138
40	NORTHBOUND	INTERIOR	67'-1"	1'-5"	2.9	2.5	1	5.25	DK6XX	135
40	NORTHBOUND	EXTERIOR	65'-4 3/8"	1'-7 1/2"	2.6	2.2	1	5.5	DK6XX	132
41	SOUTHBOUND	EXTERIOR	68'-10"	1'-7 1/2"	2.3	1.8	1	5.5	DK6XX	138
41	SOUTHBOUND	INTERIOR	68'-2 5/8"	1'-5"	2.4	2	1	5.25	DK6XX	137
41	NORTHBOUND	INTERIOR	66'-11 7/8"	1'-5"	3	2.5	1	5.25	DK6XX	135
41	NORTHBOUND	EXTERIOR	65'-4 2/8"	1'-7 1/2"	2.4	1.9	1	5.5	DK6XX	132
42	SOUTHBOUND	EXTERIOR	70'-9 5/8"	1'-7 1/2"	2.5	2.1	1	5.5	DK6XX	142
42	SOUTHBOUND	INTERIOR	68'-9 1/8"	1'-5"	2.3	1.8	1	5.5	DK6XX	138
42	NORTHBOUND	INTERIOR	67'-3 6/8"	1'-5"	3	2.6	1	5.25	DK6XX	135
42	NORTHBOUND	EXTERIOR	65'-5 7/8"	1'-7 1/2"	2.2	1.8	1	5.5	DK6XX	132
43	SOUTHBOUND	EXTERIOR	69'-4 3/8"	1'-7 1/2"	2.5	2.2	1	5.5	DK6XX	140
43	SOUTHBOUND	INTERIOR	68'-1 5/8"	1'-5"	2.1	1.6	1	5.5	DK6XX	137
43	NORTHBOUND	INTERIOR	67'-2 3/8"	1'-5"	3	2.7	1	5.25	DK6XX	135
43	NORTHBOUND	EXTERIOR	65'-11 2/8"	1'-7 1/2"	2.4	2	1	5.5	DK6XX	133
44	SOUTHBOUND	EXTERIOR	72'-3 7/8"	1'-7 1/2"	2.5	2.1	1	5.5	DK6XX	145
44	SOUTHBOUND	INTERIOR	71'-2 6/8"	1'-5"	2.1	1.7	1	5.5	DK6XX	143
44	NORTHBOUND	INTERIOR	70'-4 7/8"	1'-5"	2.9	2.7	1	5.25	DK6XX	142

NOT FOR CONSTRUCTION

N:\31987-004\Contract I-95\CADD\Bridge\BR1-748_DK03.dgn
5/31/2019 12:12:46 PM

ADDENDA / REVISIONS		SCALE AS NOTED	REHABILITATION OF I-95 FROM I-495 TO NORTH OF BRANDYWINE RIVER BRIDGE	CONTRACT T201407404	BRIDGE NO. 1 748 059	OVERHANG REINFORCEMENT DETAILS – 3	DK-03
				COUNTY NEW CASTLE	DESIGNED BY: DAN		SECTION WRA
					CHECKED BY: WAG		SHEET NO. 338

SPAN NO.	DIRECTION OF TRAFFIC	OVERHANG LOCATION	SPAN LENGTH MEASURED ALONG FLOWLINE	PARAPET WIDTH	MAX. OVERHANG	MIN. OVERHANG	ESTIMATED NO. OF LONGITDUNAL LAPS PER BAR	DEVELOPMENT LENGTH	ADDITIONAL OVERHANG BAR NO.	NO. OF ADDITIONAL OVERHANG BARS
44	NORTHBOUND	EXTERIOR	69'-3 4/8"	1'-7 1/2"	2.6	2.2	1	5.5	DK6XX	139
45	SOUTHBOUND	EXTERIOR	80'-5 4/8"	1'-7 1/2"	2.1	1.9	1	5.5	DK6XX	162
45	SOUTHBOUND	INTERIOR	79'-10 3/8"	1'-5"	2.1	2.0	1	5.5	DK6XX	161
45	NORTHBOUND	INTERIOR	79'-5"	1'-5"	2.8	2.6	1	5.25	DK6XX	160
45	NORTHBOUND	EXTERIOR	78'-9 6/8"	1'-7 1/2"	2.6	2.2	1	5.5	DK6XX	158
46	SOUTHBOUND	EXTERIOR	74'-10 5/8"	1'-7 1/2"	2.4	1.9	1	5.5	DK6XX	151
46	SOUTHBOUND	INTERIOR	74'-9 3/8"	1'-5"	2.3	2.2	1	5.25	DK6XX	150
46	NORTHBOUND	INTERIOR	74'-8 4/8"	1'-5"	2.9	2.7	1	5.25	DK6XX	150
46	NORTHBOUND	EXTERIOR	74'-7 2/8"	1'-7 1/2"	2.2	2.2	1	5.5	DK6XX	150
47	SOUTHBOUND	EXTERIOR	74'-10 3/8"	1'-7 1/2"	2.4	2.2	1	5.5	DK6XX	151
47	SOUTHBOUND	INTERIOR	74'-10 5/8"	1'-5"	2.2	2.2	1	5.25	DK6XX	151
47	NORTHBOUND	INTERIOR	74'-10 6/8"	1'-5"	2.9	2.5	1	5.25	DK6XX	151
47	NORTHBOUND	EXTERIOR	74'-11"	1'-7 1/2"	2.2	2.1	1	5.5	DK6XX	151
48	SOUTHBOUND	EXTERIOR	59'-9 6/8"	1'-7 1/2"	2.2	2.1	1	5.5	DK6XX	120
48	SOUTHBOUND	INTERIOR	60'-3/8"	1'-5"	2.4	2.2	1	5.25	DK6XX	121
48	NORTHBOUND	INTERIOR	74'-11 7/8"	1'-5"	3.0	2.5	1	5.25	DK6XX	151
48	NORTHBOUND	EXTERIOR	74'-12"	1'-7 1/2"	2.6	2.1	1	5.5	DK6XX	151
49	SOUTHBOUND	EXTERIOR	93'-11 4/8"	1'-7 1/2"	2.1	2.1	2	5.5	DK6XX	189
49	SOUTHBOUND	INTERIOR	93'-8 5/8"	1'-5"	2.6	2.4	2	5.25	DK6XX	188
49	NORTHBOUND	INTERIOR	78'-9"	1'-5"	2.8	2.5	1	5.25	DK6XX	158
49	NORTHBOUND	EXTERIOR	78'-8 6/8"	1'-7 1/2"	2.6	2.3	1	5.5	DK6XX	158
50	SOUTHBOUND	EXTERIOR	69'-8 5/8"	1'-7 1/2"	2.1	1.8	1	5.5	DK6XX	140
50	SOUTHBOUND	INTERIOR	69'-7 6/8"	1'-5"	2.6	2.2	1	5.25	DK6XX	140
50	NORTHBOUND	INTERIOR	69'-7 1/8"	1'-5"	2.7	2.5	1	5.25	DK6XX	140
50	NORTHBOUND	EXTERIOR	69'-6 7/8"	1'-7 1/2"	2.4	2.4	1	5.5	DK6XX	140
51	SOUTHBOUND	EXTERIOR	69'-9 1/8"	1'-7 1/2"	2.0	1.8	1	5.5	DK6XX	140
51	SOUTHBOUND	INTERIOR	69'-10 3/8"	1'-5"	2.4	2.4	1	5.25	DK6XX	141
51	NORTHBOUND	INTERIOR	69'-11 2/8"	1'-5"	2.7	2.4	1	5.25	DK6XX	141
52	SOUTHBOUND	EXTERIOR	69'-8 5/8"	1'-7 1/2"	2.2	1.8	1	5.5	DK6XX	140
52	SOUTHBOUND	INTERIOR	69'-8 7/8"	1'-5"	2.5	2.4	1	5.25	DK6XX	140
52	NORTHBOUND	INTERIOR	69'-9"	1'-5"	2.6	2.4	1	5.25	DK6XX	140
53	SOUTHBOUND	EXTERIOR	69'-10 4/8"	1'-7 1/2"	2.0	1.8	1	5.5	DK6XX	141
53	SOUTHBOUND	INTERIOR	69'-9 3/8"	1'-5"	2.5	2.3	1	5.25	DK6XX	140
53	NORTHBOUND	INTERIOR	69'-8 4/8"	1'-5"	2.6	2.4	1	5.25	DK6XX	140
54	SOUTHBOUND	EXTERIOR	69'-8 3/8"	1'-7 1/2"	2.0	1.8	1	5.5	DK6XX	140
54	SOUTHBOUND	INTERIOR	69'-8 3/8"	1'-5"	2.3	2.3	1	5.25	DK6XX	140
54	NORTHBOUND	INTERIOR	69'-8 4/8"	1'-5"	2.9	2.4	1	5.25	DK6XX	140
55	SOUTHBOUND	EXTERIOR	81'-7 4/8"	1'-7 1/2"	2.0	1.8	1	5.5	DK6XX	164
55	SOUTHBOUND	INTERIOR	81'-9 3/8"	1'-5"	2.4	2.3	1	5.25	DK6XX	164
55	NORTHBOUND	INTERIOR	81'-10 6/8"	1'-5"	2.9	2.8	1	5.25	DK6XX	165
56	SOUTHBOUND	EXTERIOR	81'-11"	1'-7 1/2"	2.0	1.8	1	5.5	DK6XX	165
56	SOUTHBOUND	INTERIOR	81'-11 6/8"	1'-5"	2.5	2.4	1	5.25	DK6XX	165
56	NORTHBOUND	INTERIOR	82'-2/8"	1'-5"	2.8	2.5	1	5.25	DK6XX	165
57	SOUTHBOUND	EXTERIOR	81'-8"	1'-7 1/2"	2.0	1.8	1	5.5	DK6XX	164
57	SOUTHBOUND	INTERIOR	81'-6 6/8"	1'-5"	2.5	2.4	1	5.25	DK6XX	164
57	NORTHBOUND	INTERIOR	81'-5 5/8"	1'-5"	2.6	2.5	1	5.25	DK6XX	164
58	SOUTHBOUND	EXTERIOR	93'-3 6/8"	1'-7 1/2"	2.0	1.8	2	5.5	DK6XX	187
58	SOUTHBOUND	INTERIOR	93'-3 3/8"	1'-5"	2.5	2.4	2	5.25	DK6XX	187
58	NORTHBOUND	INTERIOR	93'-3 1/8"	1'-5"	2.6	2.5	2	5.25	DK6XX	187
59	SOUTHBOUND	EXTERIOR	58'-10 1/8"	1'-7 1/2"	2.2	1.8	1	5.5	DK6XX	119
59	SOUTHBOUND	INTERIOR	58'-9 7/8"	1'-5"	2.6	2.5	1	5.25	DK6XX	118
59	NORTHBOUND	INTERIOR	58'-9 6/8"	1'-5"	2.6	2.5	1	5.25	DK6XX	118

NOT FOR CONSTRUCTION

N:\31987-004\Control\I-95\CADD\Bridge\BR1-748_DK04.dgn
5/13/2019 12:47:12 PM

ADDENDA / REVISIONS		SCALE AS NOTED	REHABILITATION OF I-95 FROM I-495 TO NORTH OF BRANDYWINE RIVER BRIDGE	CONTRACT T201407404	BRIDGE NO. 1 748 059	OVERHANG REINFORCEMENT DETAILS – 4	DK-04
				COUNTY NEW CASTLE	DESIGNED BY: DAN		SECTION WRA
					CHECKED BY: WAG		SHEET NO. 339

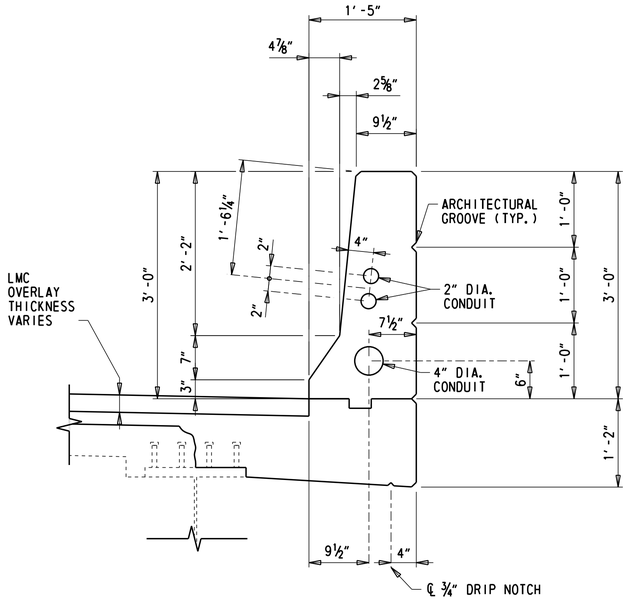

1'-5" WIDE PARAPET DETAIL

1" = 1'-0"

NOTE:
1'-5" WIDE PARAPET DETAILS TO BE USED IN THE FOLLOWING SPANS:
NB EXTERIOR PARAPET SPANS 0 TO 23
SB EXTERIOR PARAPET SPANS 0 TO 21
NB & SB INTERIOR PARAPET SPANS 26 TO 59

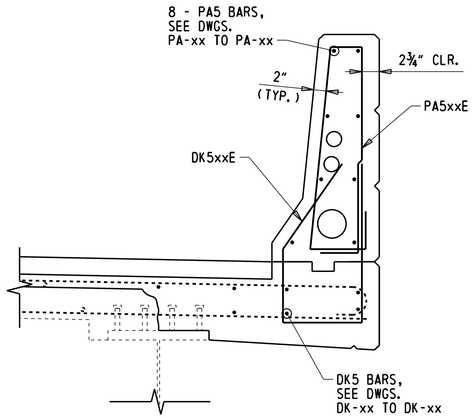

1'-5" WIDE PARAPET REINFORCEMENT

1" = 1'-0"

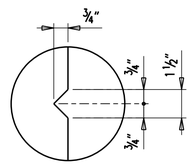

ARCHITECTURAL GROOVE DETAIL

3" = 1'-0"

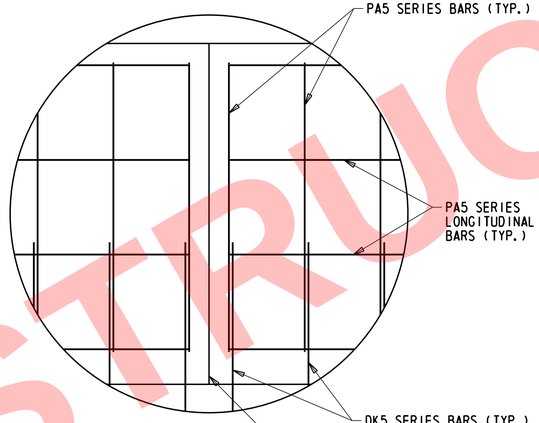

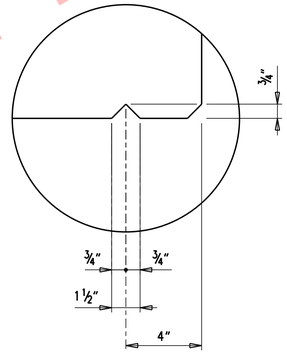

DRIP NOTCH DETAIL

3" = 1'-0"

PARAPET CONTRACTION JOINT DETAIL

1½" = 1'-0"

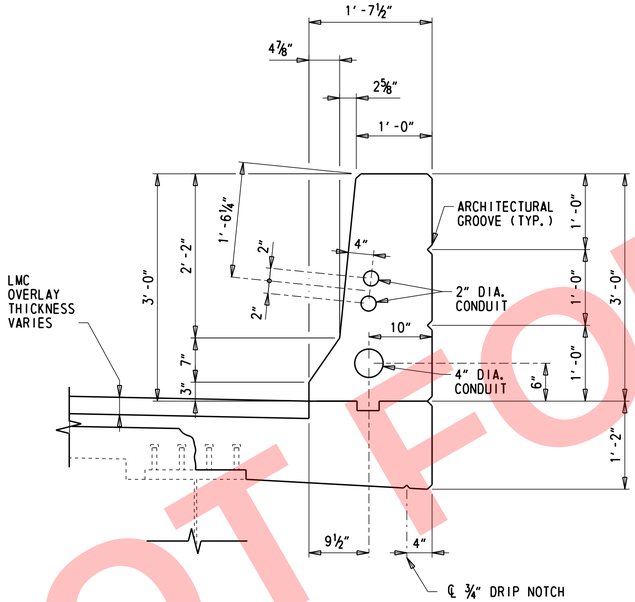

1'-7½" WIDE PARAPET DETAIL

1" = 1'-0"

NOTE:
1'-7½" WIDE PARAPET DETAIL TO BE USED IN THE FOLLOWING SPANS:
NB EXTERIOR PARAPET SPANS 24 TO 50
SB EXTERIOR PARAPET SPANS 22 TO 25 AND SPANS 40 TO 59

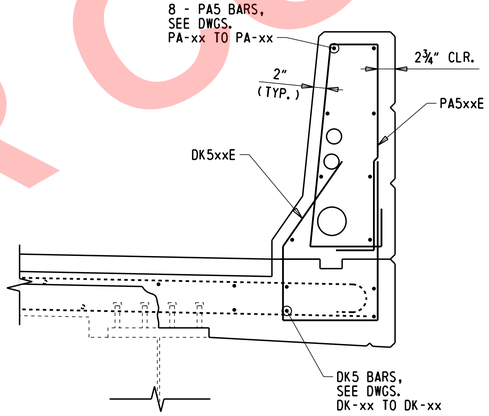

1'-7½" WIDE PARAPET REINFORCEMENT

1" = 1'-0"

NOTE: FENCE AND BARRIER NOT SHOWN.

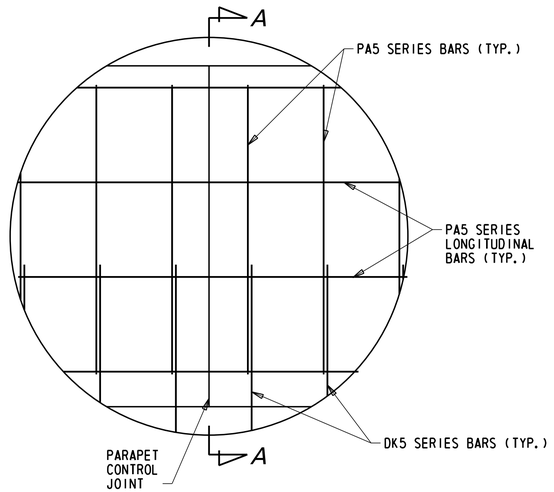

PARAPET CONTROL JOINT DETAIL

1½" = 1'-0"

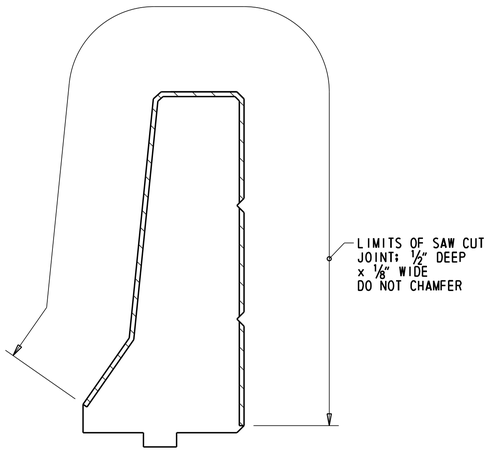

SECTION A-A

1½" = 1'-0"

REINFORCEMENT NOT SHOWN FOR CLARITY.

NOT FOR CONSTRUCTION

N:\31987-00A\Contract-95\C400\Bridge\BR1-748_PA01.dgn
5/31/2019 12:48:18 PM

ADDENDA / REVISIONS		SCALE AS NOTED	REHABILITATION OF I-95 FROM I-495 TO NORTH OF BRANDYWINE RIVER BRIDGE	CONTRACT T201407404	BRIDGE NO. 1 748 059	PARAPET DETAILS – 1	PA-01 SECTION WRA
				COUNTY NEW CASTLE	DESIGNED BY: DAN		SHEET NO. 354
					CHECKED BY: WAG		

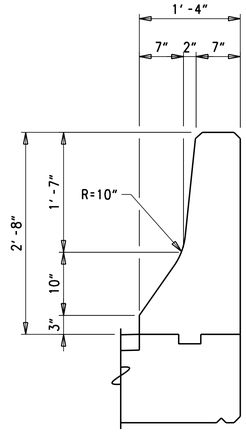

MEDIAN PARAPET DETAIL

1" = 1'-0"

NOTE:

MEDIAN PARAPET DETAIL APPLIES TO NB AND SB MEDIAN PARAPET IN SPANS 0 TO 21.

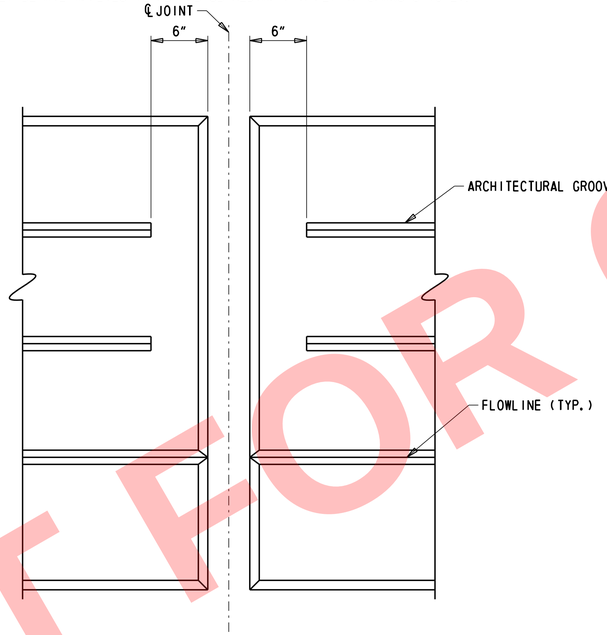

ARCHITECTURAL GROOVE TERMINATION DETAIL

1½" = 1'-0"

NOTE:

ARCHITECTURAL GROOVE TERMINATION DETAIL SHOWN AT EXPANSION JOINT; DETAIL AT LINK SLAB AND DECKOVER SIMILAR.

NOTE:

DECORATIVE BARRIER NOT SHOWN FOR CLARITY.

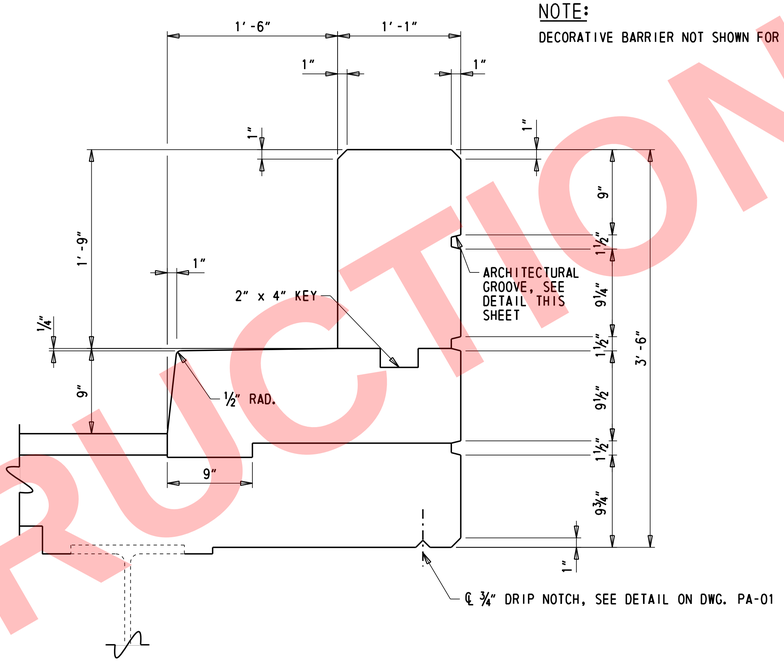

RECTANGULAR PARAPET DETAIL

1½" = 1'-0"

NOTE:

RECTANGULAR PARAPET DETAIL APPLIES TO NB EXTERIOR PARAPET IN SPANS 56N TO 59N.

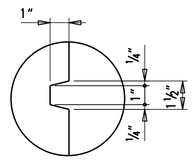

ARCHITECTURAL GROOVE DETAIL

3" = 1'-0"

NOTES:

1. DETAILS SHOWN ON THIS SHEET APPLY TO SECTIONS OF PARAPETS THAT ARE NOT BEING REPLACED AND REQUIRE RECONSTRUCTION AT THE DECK JOINTS DURING DECK JOINT REPLACEMENT. SEE EX-01 THROUGH EX-23.

NOT FOR CONSTRUCTION

N:\31987-004\Contract I-95\CADD\Bridge\BR1-748_PA02.dgn
5/31/2019 12:12:49 PM

ADDENDA / REVISIONS		SCALE AS NOTED	REHABILITATION OF I-95 FROM I-495 TO NORTH OF BRANDYWINE RIVER BRIDGE	CONTRACT T201407404	BRIDGE NO. 1 748 059	PARAPET DETAILS – 2	PA-02 SECTION WRA
				COUNTY NEW CASTLE	DESIGNED BY: DAN		SHEET NO. 355
					CHECKED BY: WAG		

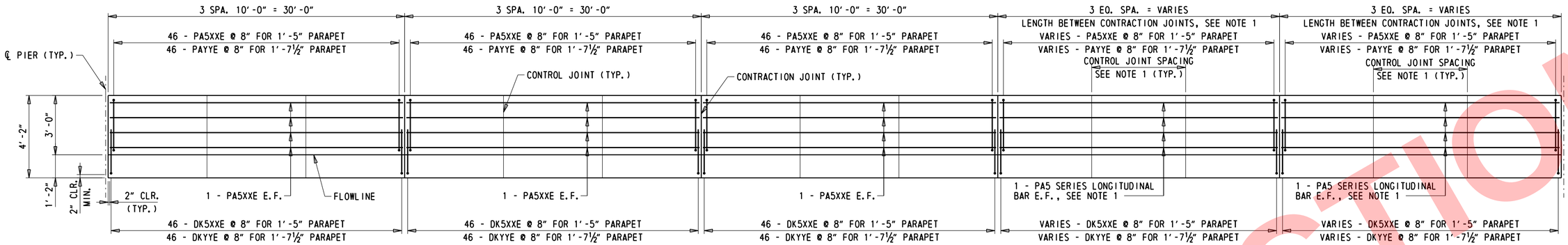

PARAPET REINFORCEMENT DEVELOPED ELEVATION - CASE NO. 1

HORIZONTAL - 1/16" = 1'-0"
VERTICAL - 3/8" = 1'-0"

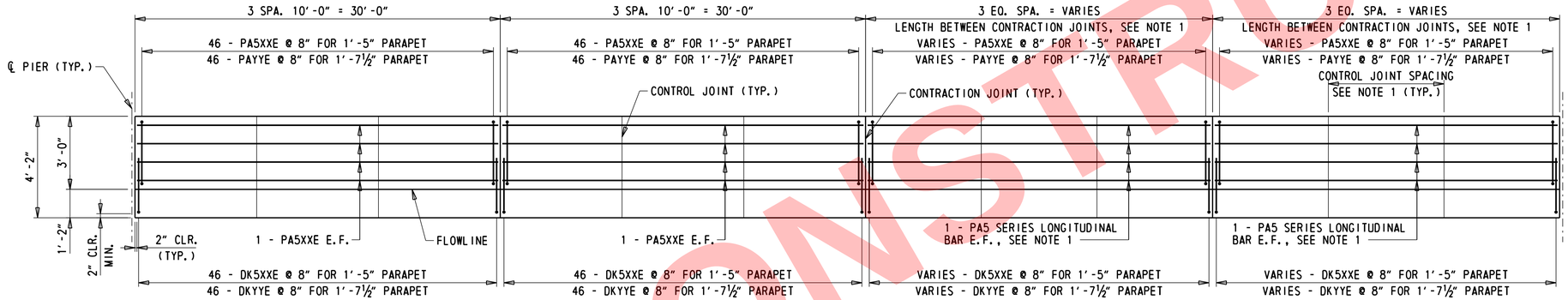

PARAPET REINFORCEMENT DEVELOPED ELEVATION - CASE NO. 2

HORIZONTAL - 1/16" = 1'-0"
VERTICAL - 3/8" = 1'-0"

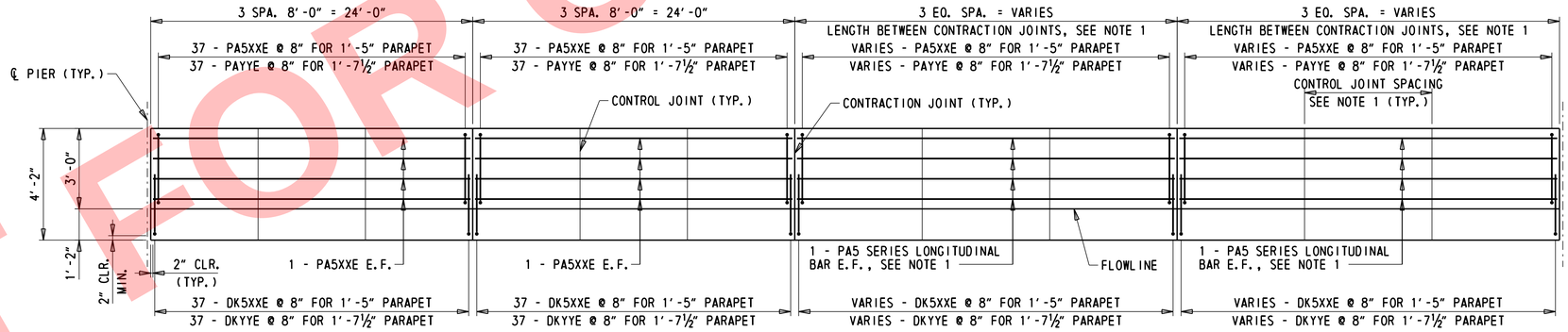

PARAPET REINFORCEMENT DEVELOPED ELEVATION - CASE NO. 3

HORIZONTAL - 1/16" = 1'-0"
VERTICAL - 3/8" = 1'-0"

NOTES:

1. FOR PARAPET REINFORCEMENT TABLES, REFER TO DWG. NO. PA-06 THROUGH PA-08.
2. FOR DECK REINFORCEMENT, REFER TO DWG. NO. DK-01 THROUGH DK-04.
3. FENCE, RAILROAD PROTECTIVE BARRIER, AND DECORATIVE BARRIER NOT SHOWN FOR CLARITY, REFER TO RA-01 THROUGH RA-08 FOR LOCATIONS.
4. CASE NO. 1: LENGTH OF PARAPET MEASURED ALONG THE FLOWLINE IS ≥ 132'-0" AND < 150'-0".
5. CASE NO. 2: LENGTH OF PARAPET MEASURED ALONG THE FLOWLINE IS ≥ 108'-0" AND < 132'-0".
6. CASE NO. 3: LENGTH OF PARAPET MEASURED ALONG THE FLOWLINE IS ≥ 92'-0" AND < 108'-0".
7. CASE NO. 4: LENGTH OF PARAPET MEASURED ALONG THE FLOWLINE IS ≥ 81'-0" AND < 92'-0".
8. CASE NO. 5: LENGTH OF PARAPET MEASURED ALONG THE FLOWLINE IS ≥ 70'-0" AND < 81'-0".
9. CASE NO. 6: LENGTH OF PARAPET MEASURED ALONG THE FLOWLINE IS ≥60'-0" AND < 70'-0".
10. CASE NO. 7: LENGTH OF PARAPET MEASURED ALONG THE FLOWLINE IS < 60'-0".

NOT FOR CONSTRUCTION

N:\31987-004\Control-195\CADD\Bridge\BR1-748_PA03.dgn
5/31/2019 12:12:46 PM

ADDENDA / REVISIONS		SCALE AS NOTED	REHABILITATION OF I-95 FROM I-495 TO NORTH OF BRANDYWINE RIVER BRIDGE	CONTRACT T201407404	BRIDGE NO. 1 748 059	PARAPET DETAILS – 3	PA-03 SECTION WRA
				COUNTY NEW CASTLE	DESIGNED BY: DAN		SHEET NO. 356
					CHECKED BY: WAG		

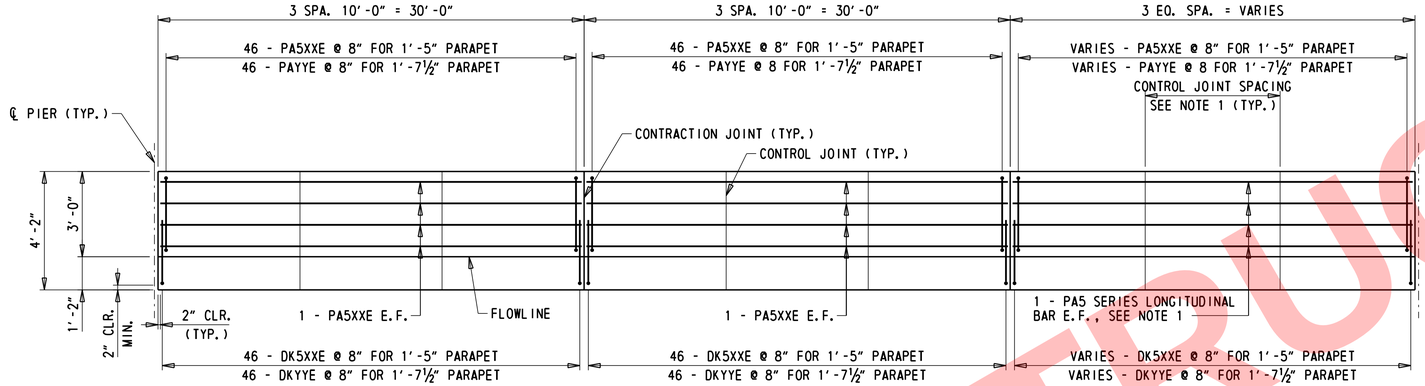

PARAPET REINFORCEMENT DEVELOPED ELEVATION - CASE NO. 4

HORIZONTAL - 3/16" = 1'-0"
VERTICAL - 3/8" = 1'-0"

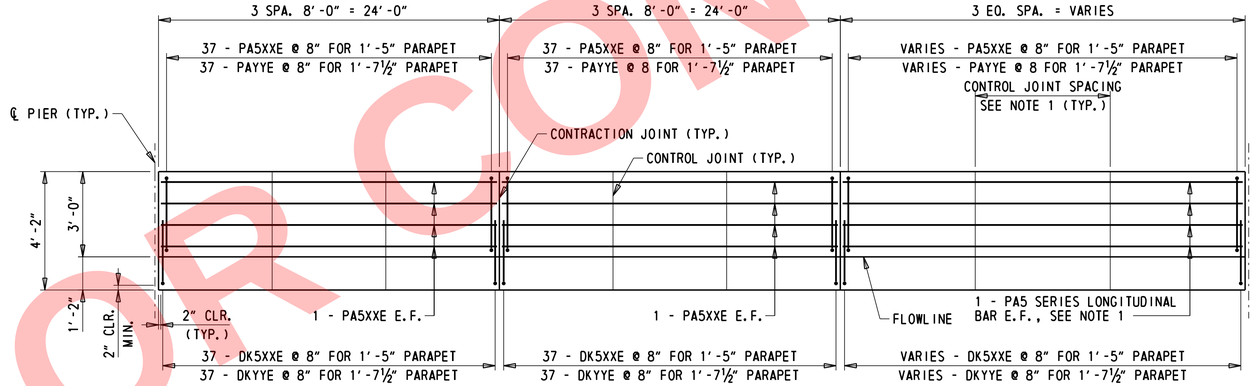

PARAPET REINFORCEMENT DEVELOPED ELEVATION - CASE NO. 5

HORIZONTAL - 3/16" = 1'-0"
VERTICAL - 3/8" = 1'-0"

NOTES:

1. FOR PARAPET REINFORCEMENT TABLES, REFER TO DWG. NO. PA-06 THROUGH PA-08.
2. FOR DECK REINFORCEMENT, REFER TO DWG. NO. DK-01 THROUGH DK-04.
3. FENCE, RAILROAD PROTECTIVE BARRIER, AND DECORATIVE BARRIER NOT SHOWN FOR CLARITY, REFER TO RA-01 THROUGH RA-08 FOR LOCATIONS.
4. CASE NO. 1: LENGTH OF PARAPET MEASURED ALONG THE FLOWLINE IS ≥ 132'-0" AND < 150'-0".
5. CASE NO. 2: LENGTH OF PARAPET MEASURED ALONG THE FLOWLINE IS ≥ 108'-0" AND < 132'-0".
6. CASE NO. 3: LENGTH OF PARAPET MEASURED ALONG THE FLOWLINE IS ≥ 92'-0" AND < 108'-0".
7. CASE NO. 4: LENGTH OF PARAPET MEASURED ALONG THE FLOWLINE IS ≥ 81'-0" AND < 92'-0".
8. CASE NO. 5: LENGTH OF PARAPET MEASURED ALONG THE FLOWLINE IS ≥ 70'-0" AND < 81'-0".
9. CASE NO. 6: LENGTH OF PARAPET MEASURED ALONG THE FLOWLINE IS ≥60'-0" AND < 70'-0".
10. CASE NO. 7: LENGTH OF PARAPET MEASURED ALONG THE FLOWLINE IS < 60'-0".

NOT FOR CONSTRUCTION

N:\31987-004\Contract I-95\CADD\Bridge\BR1-748_PA04.dgn
5/31/2019 12:02:50 PM

ADDENDA / REVISIONS	SCALE AS NOTED	REHABILITATION OF I-95 FROM I-495 TO NORTH OF BRANDYWINE RIVER BRIDGE	CONTRACT T201407404	BRIDGE NO. 1 748 059	PARAPET DETAILS – 4	PA-04
			COUNTY NEW CASTLE	DESIGNED BY: DAN		SECTION WRA
				CHECKED BY: WAG		SHEET NO. 357

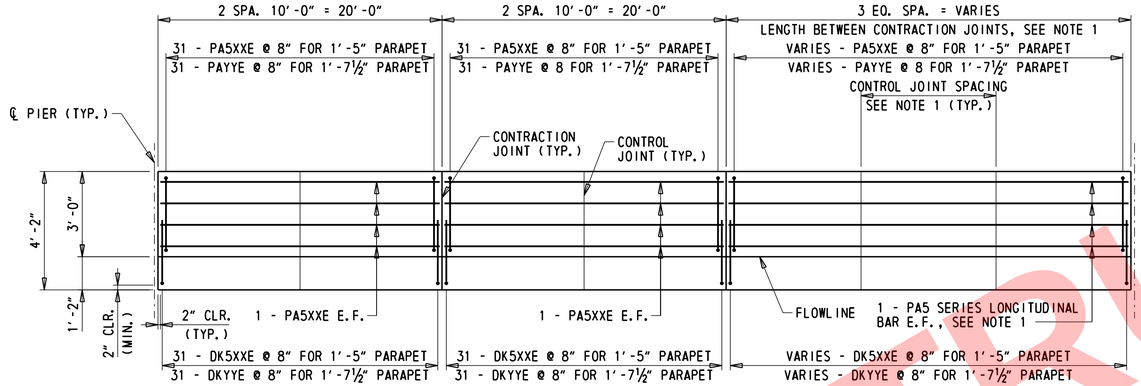

PARAPET REINFORCEMENT DEVELOPED ELEVATION - CASE NO. 6

HORIZONTAL - 3/16" = 1'-0"
VERTICAL - 3/8" = 1'-0"

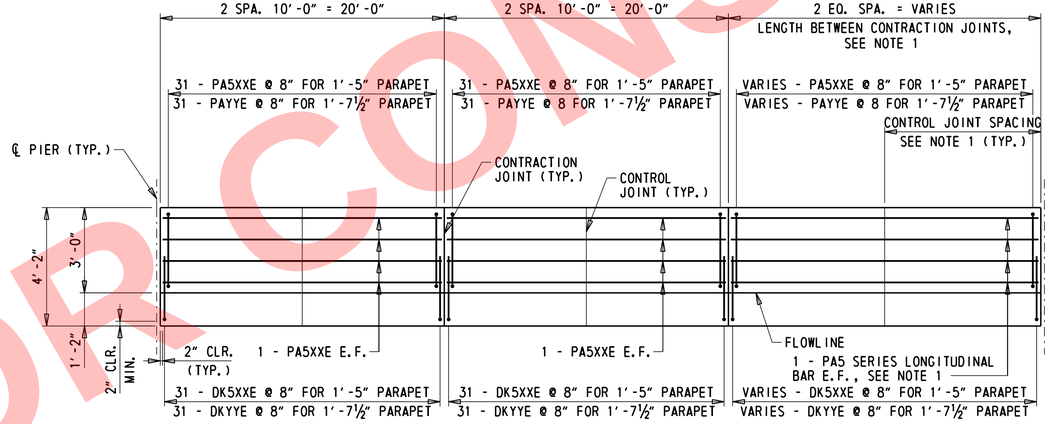

PARAPET REINFORCEMENT DEVELOPED ELEVATION - CASE NO. 7

HORIZONTAL - 1/8" = 1'-0"
VERTICAL - 3/8" = 1'-0"

NOTES:

1. FOR PARAPET REINFORCEMENT TABLES, REFER TO DWG. NO. PA-06 THROUGH PA-08.
2. FOR DECK REINFORCEMENT, REFER TO DWG. NO. DK-01 THROUGH DK-04.
3. FENCE, RAILROAD PROTECTIVE BARRIER, AND DECORATIVE BARRIER NOT SHOWN FOR CLARITY, REFER TO RA-01 THROUGH RA-08 FOR LOCATIONS.
4. CASE NO. 1: LENGTH OF PARAPET MEASURED ALONG THE FLOWLINE IS ≥ 132'-0" AND < 150'-0".
5. CASE NO. 2: LENGTH OF PARAPET MEASURED ALONG THE FLOWLINE IS ≥ 108'-0" AND < 132'-0".
6. CASE NO. 3: LENGTH OF PARAPET MEASURED ALONG THE FLOWLINE IS ≥ 92'-0" AND < 108'-0".
7. CASE NO. 4: LENGTH OF PARAPET MEASURED ALONG THE FLOWLINE IS ≥ 81'-0" AND < 92'-0".
8. CASE NO. 5: LENGTH OF PARAPET MEASURED ALONG THE FLOWLINE IS ≥ 70'-0" AND < 81'-0".
9. CASE NO. 6: LENGTH OF PARAPET MEASURED ALONG THE FLOWLINE IS ≥60'-0" AND < 70'-0".
10. CASE NO. 7: LENGTH OF PARAPET MEASURED ALONG THE FLOWLINE IS < 60'-0".

NOT FOR CONSTRUCTION

ADDENDA / REVISIONS	SCALE AS NOTED	REHABILITATION OF I-95 FROM I-495 TO NORTH OF BRANDYWINE RIVER BRIDGE	CONTRACT T201407404	BRIDGE NO. 1 748 059	PARAPET DETAILS – 5	PA-05 SECTION WRA
			COUNTY NEW CASTLE	DESIGNED BY: DAN		SHEET NO. 358
				CHECKED BY: WAG		

N:\31987-001A\Contract_I-95\C4DD\Bridge\BRI-748_PA05.dgn
5/31/2019 12:12:51 PM

SPAN NO.	DIRECTION OF TRAFFIC	PARAPET LOCATION	PARAPET LENGTH MEASURED ALONG FLOWLINE	PARAPET WIDTH	CASE NO.	LENGTH BETWEEN CONTRACTION JOINTS VARIES	CONTROL JOINT SPACING VARIES	PA5 SERIES LONGITUDINAL BAR	NO. OF PARAPET AND DECK BARS BETWEEN CONTRACTION JOINTS
0	SOUTHBOUND	EXTERIOR	117'-2 7/8"	1'-5"	Case No. 2	28'-7 1/2"	9'-6 1/2"	PA5YXE	44
0	NORTHBOUND	EXTERIOR	123'-11 1/8"	1'-5"	Case No. 2	31'-11 5/8"	10'-7 7/8"	PA5YXE	49
1	SOUTHBOUND	EXTERIOR	114'-7 3/8"	1'-5"	Case No. 2	27'-3 3/4"	9'-1 2/8"	PA5YXE	42
1	NORTHBOUND	EXTERIOR	120'-10 7/8"	1'-5"	Case No. 2	30'-5 1/2"	10'-1 6/8"	PA5YXE	47
2	SOUTHBOUND	EXTERIOR	115'-6 3/8"	1'-5"	Case No. 2	27'-9 1/4"	9'-3 1/8"	PA5YXE	43
2	NORTHBOUND	EXTERIOR	119'-5"	1'-5"	Case No. 2	29'-8 1/2"	9'-10 7/8"	PA5YXE	46
3	SOUTHBOUND	EXTERIOR	116'-11 1/8"	1'-5"	Case No. 2	28'-5 5/8"	9'-5 7/8"	PA5YXE	44
3	NORTHBOUND	EXTERIOR	118'-2 3/8"	1'-5"	Case No. 2	29'-1 2/8"	9'-8 3/8"	PA5YXE	45
4	SOUTHBOUND	EXTERIOR	117'-7 5/8"	1'-5"	Case No. 2	28'-9 7/8"	9'-7 2/8"	PA5YXE	44
4	NORTHBOUND	EXTERIOR	117'-7 5/8"	1'-5"	Case No. 2	28'-9 7/8"	9'-7 2/8"	PA5YXE	44
5	SOUTHBOUND	EXTERIOR	117'-6 3/8"	1'-5"	Case No. 2	28'-9 1/8"	9'-7"	PA5YXE	44
5	NORTHBOUND	EXTERIOR	117'-3"	1'-5"	Case No. 2	28'-7 4/8"	9'-6 4/8"	PA5YXE	44
6	SOUTHBOUND	EXTERIOR	117'-1/8"	1'-5"	Case No. 2	28'-6"	9'-6"	PA5YXE	44
6	NORTHBOUND	EXTERIOR	114'-2 4/8"	1'-5"	Case No. 2	27'-1 2/8"	9'-3/8"	PA5YXE	42
7	SOUTHBOUND	EXTERIOR	119'-1 6/8"	1'-5"	Case No. 2	29'-6 7/8"	9'-10 2/8"	PA5YXE	45
7	NORTHBOUND	EXTERIOR	112'-9 4/8"	1'-5"	Case No. 2	26'-4 6/8"	8'-9 5/8"	PA5YXE	41
8	SOUTHBOUND	EXTERIOR	119'-9"	1'-5"	Case No. 2	29'-10 4/8"	9'-11 4/8"	PA5YXE	46
8	NORTHBOUND	EXTERIOR	111'-2 7/8"	1'-5"	Case No. 2	25'-7 4/8"	8'-6 4/8"	PA5YXE	39
9	SOUTHBOUND	EXTERIOR	151'-11 7/8"	1'-5"	Case No. 1	30'-11 7/8"	10'-4"	PA5YXE	47
9	NORTHBOUND	EXTERIOR	141'-7/8"	1'-5"	Case No. 1	25'-6 4/8"	8'-6 1/8"	PA5YXE	39
10	SOUTHBOUND	EXTERIOR	138'-2 3/8"	1'-5"	Case No. 1	24'-1 2/8"	8'-3/8"	PA5YXE	37
10	NORTHBOUND	EXTERIOR	128'-5 2/8"	1'-5"	Case No. 2	34'-2 5/8"	11'-4 7/8"	PA5YXE	52
11	SOUTHBOUND	EXTERIOR	139'-8 5/8"	1'-5"	Case No. 1	24'-10 3/8"	8'-3 4/8"	PA5YXE	38
11	NORTHBOUND	EXTERIOR	132'-6 6/8"	1'-5"	Case No. 1	21'-3 3/8"	7'-1 1/8"	PA5YXE	33
12	SOUTHBOUND	EXTERIOR	86'-3 5/8"	1'-5"	Case No. 4	26'-3 5/8"	8'-9 2/8"	PA5YXE	40
12	NORTHBOUND	EXTERIOR	84'-2 3/8"	1'-5"	Case No. 4	24'-2 3/8"	8'-6/8"	PA5YXE	37
13	SOUTHBOUND	EXTERIOR	86'-2 6/8"	1'-5"	Case No. 4	26'-2 6/8"	8'-8 7/8"	PA5YXE	40
13	NORTHBOUND	EXTERIOR	85'-11 1/8"	1'-5"	Case No. 4	25'-11 1/8"	8'-7 6/8"	PA5YXE	40
14	SOUTHBOUND	EXTERIOR	86'-2 3/8"	1'-5"	Case No. 4	26'-2 3/8"	8'-8 6/8"	PA5YXE	40
14	NORTHBOUND	EXTERIOR	86'-2 3/8"	1'-5"	Case No. 4	26'-2 3/8"	8'-8 6/8"	PA5YXE	40
15	SOUTHBOUND	EXTERIOR	86'-1 3/8"	1'-5"	Case No. 4	26'-1 3/8"	8'-8 4/8"	PA5YXE	40
15	NORTHBOUND	EXTERIOR	86'-1 6/8"	1'-5"	Case No. 4	26'-1 6/8"	8'-8 5/8"	PA5YXE	40
16	SOUTHBOUND	EXTERIOR	86'-3 4/8"	1'-5"	Case No. 4	26'-3 4/8"	8'-9 1/8"	PA5YXE	40
16	NORTHBOUND	EXTERIOR	86'-7/8"	1'-5"	Case No. 4	26'-7/8"	8'-8 2/8"	PA5YXE	40
17	SOUTHBOUND	EXTERIOR	91'-11 5/8"	1'-5"	Case No. 4	31'-11 5/8"	10'-7 7/8"	PA5YXE	49
17	NORTHBOUND	EXTERIOR	94'-4/8"	1'-5"	Case No. 4	34'-4/8"	11'-4 1/8"	PA5YXE	52
18	SOUTHBOUND	EXTERIOR	84'-3 3/8"	1'-5"	Case No. 4	24'-3 3/8"	8'-1 1/8"	PA5YXE	37
18	NORTHBOUND	EXTERIOR	87'-11 7/8"	1'-5"	Case No. 4	27'-11 7/8"	9'-4"	PA5YXE	43
19	SOUTHBOUND	EXTERIOR	82'-1 1/8"	1'-5"	Case No. 5	34'-1 1/8"	11'-4 3/8"	PA5YXE	52
19	NORTHBOUND	EXTERIOR	86'-7 5/8"	1'-5"	Case No. 4	26'-7 5/8"	8'-10 4/8"	PA5YXE	41
20	SOUTHBOUND	EXTERIOR	88'-0"	1'-5"	Case No. 4	28'-0"	9'-4"	PA5YXE	43
20	NORTHBOUND	EXTERIOR	96'-2 5/8"	1'-5"	Case No. 3	24'-1 3/8"	8'-4/8"	PA5YXE	37
21	SOUTHBOUND	EXTERIOR	128'-1/8"	1'-5"	Case No. 2	34'-0"	11'-4"	PA5YXE	52
22	SOUTHBOUND	EXTERIOR	128'-5 5/8"	1'-7 1/2"	Case No. 2	34'-2 7/8"	11'-5"	PA5YXE	52
22	NORTHBOUND	EXTERIOR	140'-5 4/8"	1'-5"	Case No. 1	25'-2 6/8"	8'-4 7/8"	PA5YXE	39
23	SOUTHBOUND	EXTERIOR	127'-2"	1'-7 1/2"	Case No. 2	33'-7"	11'-2 3/8"	PA5YXE	51
23	NORTHBOUND	EXTERIOR	139'-11 6/8"	1'-5"	Case No. 1	24'-11 7/8"	8'-4"	PA5YXE	38
24	SOUTHBOUND	EXTERIOR	105'-9 1/8"	1'-7 1/2"	Case No. 3	28'-10 5/8"	9'-7 4/8"	PA5YXE	44
25	SOUTHBOUND	EXTERIOR	98'-7 3/8"	1'-7 1/2"	Case No. 3	25'-3 5/8"	8'-5 2/8"	PA5YXE	39
25	NORTHBOUND	EXTERIOR	106'-5 3/8"	1'-7 1/2"	Case No. 3	29'-2 5/8"	9'-8 7/8"	PA5YXE	45
26	NORTHBOUND	EXTERIOR	72'-10 5/8"	1'-7 1/2"	Case No. 5	24'-10 5/8"	8'-3 4/8"	PA5YXE	38
27	SOUTHBOUND	INTERIOR	73'-1 5/8"	1'-5"	Case No. 5	25'-1 5/8"	8'-4 4/8"	PA5YXE	39
27	NORTHBOUND	INTERIOR	73'-12"	1'-5"	Case No. 5	25'-12"	8'-8"	PA5YXE	40
27	NORTHBOUND	EXTERIOR	75'-1 5/8"	1'-7 1/2"	Case No. 5	27'-1 5/8"	9'-4/8"	PA5YXE	42
28	SOUTHBOUND	INTERIOR	73'-7 4/8"	1'-5"	Case No. 5	25'-7 4/8"	8'-6 4/8"	PA5YXE	39
28	NORTHBOUND	INTERIOR	73'-11 1/8"	1'-5"	Case No. 5	25'-11 1/8"	8'-7 6/8"	PA5YXE	40
28	NORTHBOUND	EXTERIOR	74'-1 2/8"	1'-7 1/2"	Case No. 5	26'-1 2/8"	8'-8 3/8"	PA5YXE	40

NOT FOR CONSTRUCTION

NOTES:

1. FOR CASE NO., REFER TO DWGS. PA-03 THROUGH PA-05.

SPAN NO.	DIRECTION OF TRAFFIC	PARAPET LOCATION	PARAPET LENGTH MEASURED ALONG FLOWLINE	PARAPET WIDTH	CASE NO.	LENGTH BETWEEN CONTRACTION JOINTS VARIES	CONTROL JOINT SPACING VARIES	PA5 SERIES LONGITUDINAL BAR	NO. OF PARAPET AND DECK BARS BETWEEN CONTRACTION JOINTS
29	SOUTHBOUND	INTERIOR	73′-7 6/8″	1′-5″	Case No. 5	25′-7 6/8″	8′-6 5/8″	PA5YXE	39
29	NORTHBOUND	INTERIOR	73′-8 3/8″	1′-5″	Case No. 5	25′-8 3/8″	8′-6 6/8″	PA5YXE	40
29	NORTHBOUND	EXTERIOR	74′-3 6/8″	1′-7 1/2″	Case No. 5	26′-3 6/8″	8′-9 2/8″	PA5YXE	40
30	SOUTHBOUND	INTERIOR	73′-8 4/8″	1′-5″	Case No. 5	25′-8 4/8″	8′-6 7/8″	PA5YXE	40
30	NORTHBOUND	INTERIOR	73′-9″	1′-5″	Case No. 5	25′-9″	8′-7″	PA5YXE	40
30	NORTHBOUND	EXTERIOR	73′-9 6/8″	1′-7 1/2″	Case No. 5	25′-9 6/8″	8′-7 2/8″	PA5YXE	40
31	SOUTHBOUND	INTERIOR	73′-9 2/8″	1′-5″	Case No. 5	25′-9 2/8″	8′-7 1/8″	PA5YXE	40
31	NORTHBOUND	INTERIOR	73′-9 3/8″	1′-5″	Case No. 5	25′-9 3/8″	8′-7 1/8″	PA5YXE	40
31	NORTHBOUND	EXTERIOR	73′-9 3/8″	1′-7 1/2″	Case No. 5	25′-9 3/8″	8′-7 1/8″	PA5YXE	40
32	SOUTHBOUND	INTERIOR	137′-5 4/8″	1′-5″	Case No. 1	23′-8 6/8″	7′-10 7/8″	PA5YXE	37
32	NORTHBOUND	INTERIOR	137′-2 1/8″	1′-5″	Case No. 1	23′-7″	7′-10 3/8″	PA5YXE	36
32	NORTHBOUND	EXTERIOR	136′-9 4/8″	1′-7 1/2″	Case No. 1	23′-4 6/8″	7′-9 5/8″	PA5YXE	36
33	SOUTHBOUND	INTERIOR	64′-4 7/8″	1′-5″	Case No. 6	24′-4 7/8″	8′-1 5/8″	PA5YXE	38
33	NORTHBOUND	INTERIOR	63′-10 6/8″	1′-5″	Case No. 6	23′-10 6/8″	7′-11 5/8″	PA5YXE	37
33	NORTHBOUND	EXTERIOR	63′-2 5/8″	1′-7 1/2″	Case No. 6	23′-2 5/8″	7′-8 7/8″	PA5YXE	36
34	SOUTHBOUND	INTERIOR	68′-5/8″	1′-5″	Case No. 6	28′-5/8″	9′-4 2/8″	PA5YXE	43
34	NORTHBOUND	INTERIOR	67′-2″	1′-5″	Case No. 6	27′-2″	9′-5/8″	PA5YXE	42
34	NORTHBOUND	EXTERIOR	65′-12″	1′-7 1/2″	Case No. 6	25′-12″	8′-8″	PA5YXE	40
35	SOUTHBOUND	INTERIOR	68′-8 4/8″	1′-5″	Case No. 6	28′-8 4/8″	9′-6 7/8″	PA5YXE	44
35	NORTHBOUND	INTERIOR	67′-9 2/8″	1′-5″	Case No. 6	27′-9 2/8″	9′-3 1/8″	PA5YXE	43
35	NORTHBOUND	EXTERIOR	66′-6 2/8″	1′-7 1/2″	Case No. 6	26′-6 2/8″	8′-10 1/8″	PA5YXE	41
36	SOUTHBOUND	INTERIOR	70′-1 6/8″	1′-5″	Case No. 6	30′-1 6/8″	10′-5/8″	PA5YXE	46
36	NORTHBOUND	INTERIOR	68′-9 7/8″	1′-5″	Case No. 6	28′-9 7/8″	9′-7 2/8″	PA5YXE	44
36	NORTHBOUND	EXTERIOR	66′-10 7/8″	1′-7 1/2″	Case No. 6	26′-10 7/8″	8′-11 5/8″	PA5YXE	41
37	SOUTHBOUND	INTERIOR	68′-6 2/8″	1′-5″	Case No. 6	28′-6 2/8″	9′-6 1/8″	PA5YXE	44
37	NORTHBOUND	INTERIOR	67′-2″	1′-5″	Case No. 6	27′-2″	9′-5/8″	PA5YXE	42
38	SOUTHBOUND	INTERIOR	68′-1″	1′-5″	Case No. 6	28′-1″	9′-4 3/8″	PA5YXE	43
38	NORTHBOUND	INTERIOR	66′-6 4/8″	1′-5″	Case No. 6	26′-6 4/8″	8′-10 1/8″	PA5YXE	41
38	NORTHBOUND	EXTERIOR	64′-5 4/8″	1′-7 1/2″	Case No. 6	24′-5 4/8″	8′-1 7/8″	PA5YXE	38
39	SOUTHBOUND	INTERIOR	68′-8 4/8″	1′-5″	Case No. 6	28′-8 4/8″	9′-6 7/8″	PA5YXE	44
39	NORTHBOUND	INTERIOR	67′-5″	1′-5″	Case No. 6	27′-5″	9′-1 5/8″	PA5YXE	42
39	NORTHBOUND	EXTERIOR	65′-8 1/8″	1′-7 1/2″	Case No. 6	25′-8 1/8″	8′-6 6/8″	PA5YXE	40
40	SOUTHBOUND	EXTERIOR	70′-4/8″	1′-7 1/2″	Case No. 6	30′-4/8″	10′-1/8″	PA5YXE	46
40	SOUTHBOUND	INTERIOR	68′-4 2/8″	1′-5″	Case No. 6	28′-4 2/8″	9′-5 3/8″	PA5YXE	44
40	NORTHBOUND	INTERIOR	67′-1″	1′-5″	Case No. 6	27′-1″	9′-3/8″	PA5YXE	42
40	NORTHBOUND	EXTERIOR	65′-4 3/8″	1′-7 1/2″	Case No. 6	25′-4 3/8″	8′-5 4/8″	PA5YXE	39
41	SOUTHBOUND	EXTERIOR	68′-10″	1′-7 1/2″	Case No. 6	28′-10″	9′-7 3/8″	PA5YXE	44
41	SOUTHBOUND	INTERIOR	68′-2 5/8″	1′-5″	Case No. 6	28′-2 5/8″	9′-4 7/8″	PA5YXE	43
41	NORTHBOUND	INTERIOR	66′-11 7/8″	1′-5″	Case No. 6	26′-11 7/8″	8′-12″	PA5YXE	41
41	NORTHBOUND	EXTERIOR	65′-4 2/8″	1′-7 1/2″	Case No. 6	25′-4 2/8″	8′-5 3/8″	PA5YXE	39
42	SOUTHBOUND	EXTERIOR	70′-9 5/8″	1′-7 1/2″	Case No. 6	30′-9 5/8″	10′-3 2/8″	PA5YXE	47
42	SOUTHBOUND	INTERIOR	68′-9 1/8″	1′-5″	Case No. 6	28′-9 1/8″	9′-7″	PA5YXE	44
42	NORTHBOUND	INTERIOR	67′-3 6/8″	1′-5″	Case No. 6	27′-3 6/8″	9′-1 2/8″	PA5YXE	42
42	NORTHBOUND	EXTERIOR	65′-5 7/8″	1′-7 1/2″	Case No. 6	25′-5 7/8″	8′-6″	PA5YXE	39
43	SOUTHBOUND	EXTERIOR	69′-4 3/8″	1′-7 1/2″	Case No. 6	29′-4 3/8″	9′-9 4/8″	PA5YXE	45
43	SOUTHBOUND	INTERIOR	68′-1 5/8″	1′-5″	Case No. 6	28′-1 5/8″	9′-4 4/8″	PA5YXE	43
43	NORTHBOUND	INTERIOR	67′-2 3/8″	1′-5″	Case No. 6	27′-2 3/8″	9′-6/8″	PA5YXE	42
43	NORTHBOUND	EXTERIOR	65′-11 2/8″	1′-7 1/2″	Case No. 6	25′-11 2/8″	8′-7 6/8″	PA5YXE	40
44	SOUTHBOUND	EXTERIOR	72′-3 7/8″	1′-7 1/2″	Case No. 5	24′-3 7/8″	8′-1 2/8″	PA5YXE	37
44	SOUTHBOUND	INTERIOR	71′-2 6/8″	1′-5″	Case No. 6	31′-2 6/8″	10′-4 7/8″	PA5YXE	48
44	NORTHBOUND	INTERIOR	70′-4 7/8″	1′-5″	Case No. 6	30′-4 7/8″	10′-1 5/8″	PA5YXE	47
44	NORTHBOUND	EXTERIOR	69′-3 4/8″	1′-7 1/2″	Case No. 6	29′-3 4/8″	9′-9 1/8″	PA5YXE	45
45	SOUTHBOUND	EXTERIOR	80′-5 4/8″	1′-7 1/2″	Case No. 5	32′-5 4/8″	10′-9 7/8″	PA5YXE	50
45	SOUTHBOUND	INTERIOR	79′-10 3/8″	1′-5″	Case No. 5	31′-10 3/8″	10′-7 4/8″	PA5YXE	49
45	NORTHBOUND	INTERIOR	79′-5″	1′-5″	Case No. 5	31′-5″	10′-5 5/8″	PA5YXE	48
45	NORTHBOUND	EXTERIOR	78′-9 6/8″	1′-7 1/2″	Case No. 5	30′-9 6/8″	10′-3 2/8″	PA5YXE	47
46	SOUTHBOUND	EXTERIOR	74′-10 5/8″	1′-7 1/2″	Case No. 5	26′-10 5/8″	8′-11 4/8″	PA5YXE	41

NOTES:

1. FOR CASE NO., REFER TO DWGS. PA-03 THROUGH PA-05.

NOT FOR CONSTRUCTION

ADDENDA / REVISIONS		SCALE AS NOTED	REHABILITATION OF I-95 FROM I-495 TO NORTH OF BRANDYWINE RIVER BRIDGE	CONTRACT T201407404	BRIDGE NO. 1 748 059	PARAPET DETAILS – 7	PA-07 SECTION WRA
				COUNTY NEW CASTLE	DESIGNED BY: DAN		SHEET NO. 360
					CHECKED BY: WAG		

N:\31987-004\Contract I-95\CADD\Bridge\BRI-748_PA07.dgn 5/6/2016 12:52:12 PM

SPAN NO.	DIRECTION OF TRAFFIC	PARAPET LOCATION	PARAPET LENGTH MEASURED ALONG FLOWLINE	PARAPET WIDTH	CASE NO.	LENGTH BETWEEN CONTRACTION JOINTS VARYIES	CONTROL JOINT SPACING VARIES	PA5 SERIES LONGITUDINAL BAR	NO. OF PARAPET AND DECK BARS BETWEEN CONTRACTION JOINTS
46	SOUTHBOUND	INTERIOR	74'-9 3/8"	1'-5"	Case No. 5	26'-9 3/8"	8'-11 1/8"	PA5YXE	41
46	NORTHBOUND	INTERIOR	74'-8 4/8"	1'-5"	Case No. 5	26'-8 4/8"	8'-10 7/8"	PA5YXE	41
46	NORTHBOUND	EXTERIOR	74'-7 2/8"	1'-7 1/2"	Case No. 5	26'-7 2/8"	8'-10 3/8"	PA5YXE	41
47	SOUTHBOUND	EXTERIOR	74'-10 3/8"	1'-7 1/2"	Case No. 5	26'-10 3/8"	8'-11 4/8"	PA5YXE	41
47	SOUTHBOUND	INTERIOR	74'-10 5/8"	1'-5"	Case No. 5	26'-10 5/8"	8'-11 4/8"	PA5YXE	41
47	NORTHBOUND	INTERIOR	74'-10 6/8"	1'-5"	Case No. 5	26'-10 6/8"	8'-11 5/8"	PA5YXE	41
47	NORTHBOUND	EXTERIOR	74'-11"	1'-7 1/2"	Case No. 5	26'-11"	8'-11 5/8"	PA5YXE	41
48	SOUTHBOUND	EXTERIOR	59'-9 6/8"	1'-7 1/2"	Case No. 7	19'-9 6/8"	9'-10 7/8"	PA5YXE	31
48	SOUTHBOUND	INTERIOR	60'-3/8"	1'-5"	Case No. 6	20'-3/8"	6'-8 1/8"	PA5YXE	31
48	NORTHBOUND	INTERIOR	74'-11 7/8"	1'-5"	Case No. 5	26'-11 7/8"	8'-12"	PA5YXE	41
48	NORTHBOUND	EXTERIOR	74'-12"	1'-7 1/2"	Case No. 5	26'-12"	8'-12"	PA5YXE	41
49	SOUTHBOUND	EXTERIOR	93'-11 4/8"	1'-7 1/2"	Case No. 4	33'-11 4/8"	11'-3 7/8"	PA5YXE	52
49	SOUTHBOUND	INTERIOR	93'-8 5/8"	1'-5"	Case No. 4	33'-8 5/8"	11'-2 7/8"	PA5YXE	52
49	NORTHBOUND	INTERIOR	78'-9"	1'-5"	Case No. 5	30'-9"	10'-3"	PA5YXE	47
49	NORTHBOUND	EXTERIOR	78'-8 6/8"	1'-7 1/2"	Case No. 5	30'-8 6/8"	10'-2 7/8"	PA5YXE	47
50	SOUTHBOUND	EXTERIOR	69'-8 5/8"	1'-7 1/2"	Case No. 6	29'-8 5/8"	9'-10 7/8"	PA5YXE	46
50	SOUTHBOUND	INTERIOR	69'-7 6/8"	1'-5"	Case No. 6	29'-7 6/8"	9'-10 5/8"	PA5YXE	45
50	NORTHBOUND	INTERIOR	69'-7 1/8"	1'-5"	Case No. 6	29'-7 1/8"	9'-10 3/8"	PA5YXE	45
50	NORTHBOUND	EXTERIOR	69'-6 7/8"	1'-7 1/2"	Case No. 6	29'-6 7/8"	9'-10 2/8"	PA5YXE	45
51	SOUTHBOUND	EXTERIOR	69'-9 1/8"	1'-7 1/2"	Case No. 6	29'-9 1/8"	9'-11"	PA5YXE	46
51	SOUTHBOUND	INTERIOR	69'-10 3/8"	1'-5"	Case No. 6	29'-10 3/8"	9'-11 4/8"	PA5YXE	46
51	NORTHBOUND	INTERIOR	69'-11 2/8"	1'-5"	Case No. 6	29'-11 2/8"	9'-11 6/8"	PA5YXE	46
52	SOUTHBOUND	EXTERIOR	69'-8 5/8"	1'-7 1/2"	Case No. 6	29'-8 5/8"	9'-10 7/8"	PA5YXE	46
52	SOUTHBOUND	INTERIOR	69'-8 7/8"	1'-5"	Case No. 6	29'-8 7/8"	9'-11"	PA5YXE	46
52	NORTHBOUND	INTERIOR	69'-9"	1'-5"	Case No. 6	29'-9"	9'-11"	PA5YXE	46
53	SOUTHBOUND	EXTERIOR	69'-10 4/8"	1'-7 1/2"	Case No. 6	29'-10 4/8"	9'-11 4/8"	PA5YXE	46
53	SOUTHBOUND	INTERIOR	69'-9 3/8"	1'-5"	Case No. 6	29'-9 3/8"	9'-11 1/8"	PA5YXE	46
53	NORTHBOUND	INTERIOR	69'-8 4/8"	1'-5"	Case No. 6	29'-8 4/8"	9'-10 7/8"	PA5YXE	46
54	SOUTHBOUND	EXTERIOR	69'-8 3/8"	1'-7 1/2"	Case No. 6	29'-8 3/8"	9'-10 6/8"	PA5YXE	46
54	SOUTHBOUND	INTERIOR	69'-8 3/8"	1'-5"	Case No. 6	29'-8 3/8"	9'-10 6/8"	PA5YXE	46
54	NORTHBOUND	INTERIOR	69'-8 4/8"	1'-5"	Case No. 6	29'-8 4/8"	9'-10 7/8"	PA5YXE	46
55	SOUTHBOUND	EXTERIOR	81'-7 4/8"	1'-7 1/2"	Case No. 5	33'-7 4/8"	11'-2 4/8"	PA5YXE	51
55	SOUTHBOUND	INTERIOR	81'-9 3/8"	1'-5"	Case No. 5	33'-9 3/8"	11'-3 1/8"	PA5YXE	52
55	NORTHBOUND	INTERIOR	81'-10 6/8"	1'-5"	Case No. 5	33'-10 6/8"	11'-3 5/8"	PA5YXE	52
56	SOUTHBOUND	EXTERIOR	81'-11"	1'-7 1/2"	Case No. 5	33'-11"	11'-3 5/8"	PA5YXE	52
56	SOUTHBOUND	INTERIOR	81'-11 6/8"	1'-5"	Case No. 5	33'-11 6/8"	11'-3 7/8"	PA5YXE	52
56	NORTHBOUND	INTERIOR	82'-2/8"	1'-5"	Case No. 5	34'-2/8"	11'-4 1/8"	PA5YXE	52
57	SOUTHBOUND	EXTERIOR	81'-8"	1'-7 1/2"	Case No. 5	33'-8"	11'-2 5/8"	PA5YXE	52
57	SOUTHBOUND	INTERIOR	81'-6 6/8"	1'-5"	Case No. 5	33'-6 6/8"	11'-2 2/8"	PA5YXE	51
57	NORTHBOUND	INTERIOR	81'-5 5/8"	1'-5"	Case No. 5	33'-5 5/8"	11'-1 7/8"	PA5YXE	51
58	SOUTHBOUND	EXTERIOR	93'-3 6/8"	1'-7 1/2"	Case No. 4	33'-3 6/8"	11'-1 2/8"	PA5YXE	51
58	SOUTHBOUND	INTERIOR	93'-3 3/8"	1'-5"	Case No. 4	33'-3 3/8"	11'-1 1/8"	PA5YXE	51
58	NORTHBOUND	INTERIOR	93'-3 1/8"	1'-5"	Case No. 4	33'-3 1/8"	11'-1"	PA5YXE	51
59	SOUTHBOUND	EXTERIOR	58'-10 1/8"	1'-7 1/2"	Case No. 7	18'-10 1/8"	9'-5"	PA5YXE	29
59	SOUTHBOUND	INTERIOR	58'-9 7/8"	1'-5"	Case No. 7	18'-9 7/8"	9'-4 7/8"	PA5YXE	29
59	NORTHBOUND	INTERIOR	58'-9 6/8"	1'-5"	Case No. 7	18'-9 6/8"	9'-4 7/8"	PA5YXE	29

NOT FOR CONSTRUCTION

NOTES:

1. FOR CASE NO., REFER TO DWGS. PA-03 THROUGH PA-05.

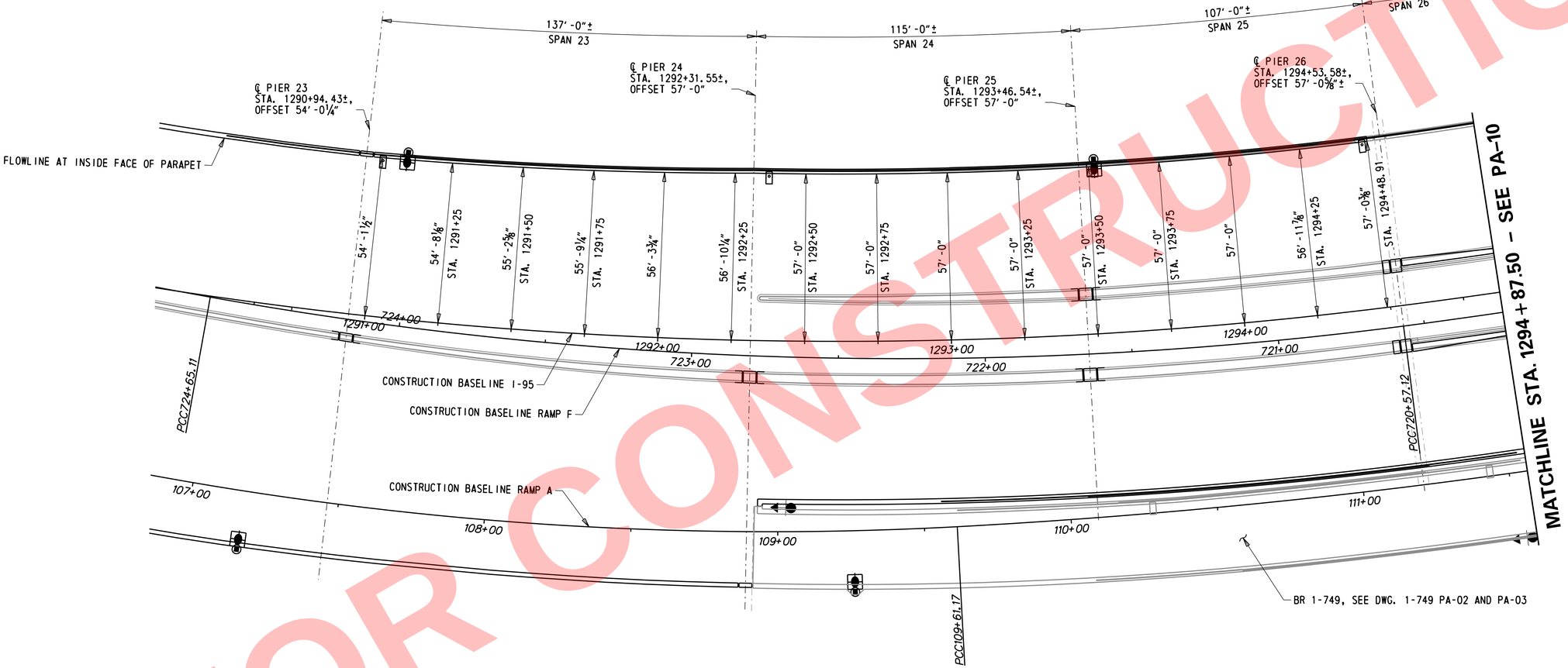

NOTES:

1. OFFSET DIMENSIONS BY STATION ARE MEASURED FROM CONSTRUCTION BASELINE I-95 TO FLOW LINE AT BASE OF PARAPET. MEASUREMENTS TAKEN PERPENDICULAR TO LOCAL TANGENT AT NOTED STATION.
2. FENCE, RAILROAD PROTECTIVE BARRIER, DECORATIVE BARRIER, LIG HTING, ETC. ON PARAPETS ARE NOT SHOWN FOR CLARITY.

PLAN - I-95 SB PARAPET LAYOUT, SPANS 21 TO 26

NOT FOR CONSTRUCTION

ADDENDA / REVISIONS		SCALE 0 20 40 60 FEET	REHABILITATION OF I-95 FROM I-495 TO NORTH OF BRANDYWINE RIVER BRIDGE	CONTRACT T201407404	BRIDGE NO. 1 748 059	I-95 SOUTHBOUND PARAPET LAYOUT SPANS 23 TO 25	PA-09
				COUNTY NEW CASTLE	DESIGNED BY: DAN		SECTION WRA
					CHECKED BY: WAG		SHEET NO. 362

N:\31987-00A\Contract_I-95\C&D\Bridge\BR1-748_PA09.dgn
5/31/2019 12:12:36 PM

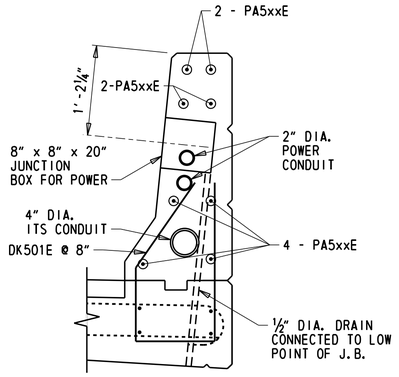

SECTION AT 2" POWER UPPER J.B.

1" = 1'-0"

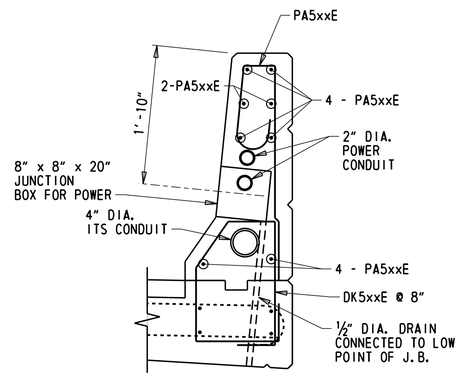

SECTION AT 2" POWER LOWER J.B.

1" = 1'-0"

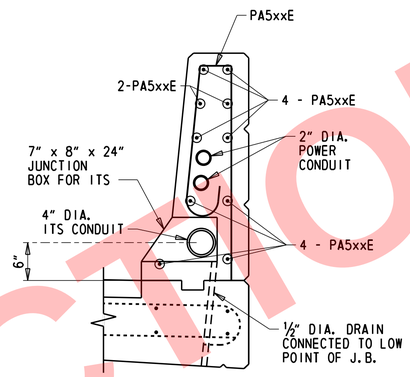

SECTION AT 4" ITS J.B.

1" = 1'-0"

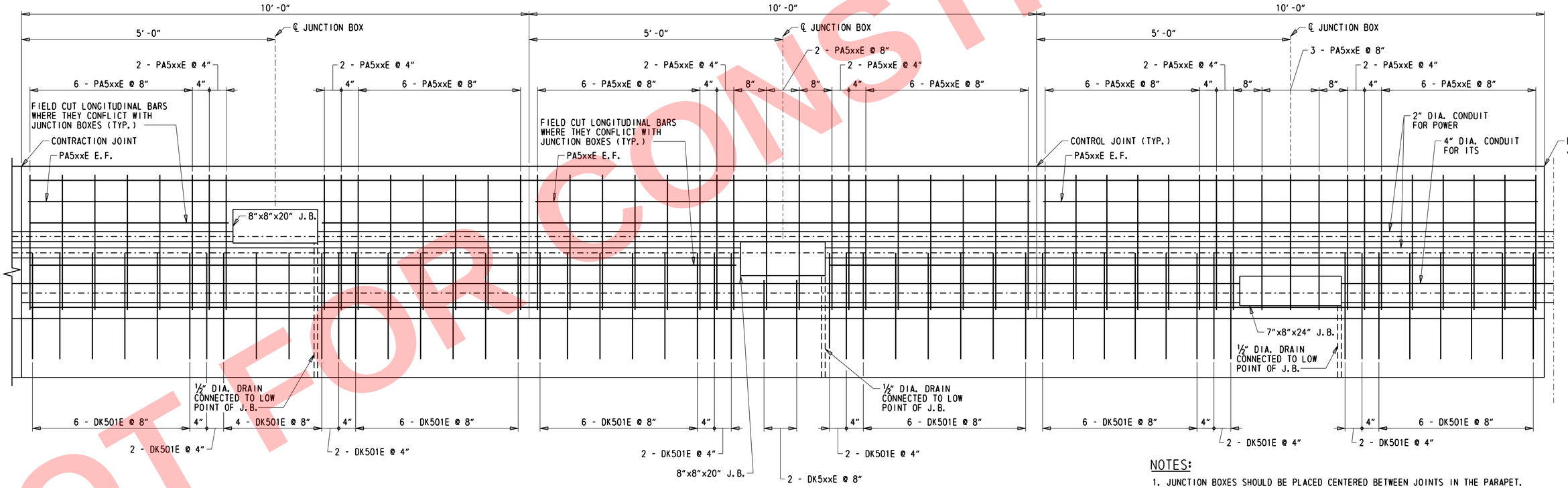

ELEVATION - PARAPET W/ J.B.'S ON BRIDGE

1" = 1'-0"

NOTES:

1. JUNCTION BOXES SHOULD BE PLACED CENTERED BETWEEN JOINTS IN THE PARAPET.
2. EXPANSION, CONTRACTION, AND CONTROL JOINTS ARE SHOWN FOR GRAPHICAL PURPOSES ONLY. JUNCTION BOXES MAY BE LOCATED BETWEEN ANY COMBINATION OF THE TWO.
3. FOR ADDITIONAL PARAPET AND REINFORCEMENT DETAILS, SEE DWG. PA-01.
4. COST OF JUNCTION BOXES, CONDUITS, AND DRAINS EMBEDDED IN PARAPETS AND DECK SHALL BE INCIDENTAL TO ITEM 610008 - PORTLAND CEMENT CONCRETE MASONRY, PARAPET, CLASS A.

NOT FOR CONSTRUCTION

ADDENDA / REVISIONS	SCALE AS NOTED	REHABILITATION OF I-95 FROM I-495 TO NORTH OF BRANDYWINE RIVER BRIDGE	CONTRACT T201407404	BRIDGE NO. 1 748 059	PARAPET CONDUIT AND JUNCTION BOX DETAILS	PA-11
			COUNTY NEW CASTLE	DESIGNED BY: DAN		SECTION WRA
				CHECKED BY: WAG		SHEET NO. 2-363A

N:\31987-004\Contract_I-95\CADD\Bridge\BRI-748_PA01a.dgn
5/31/2019 12:12:56 PM

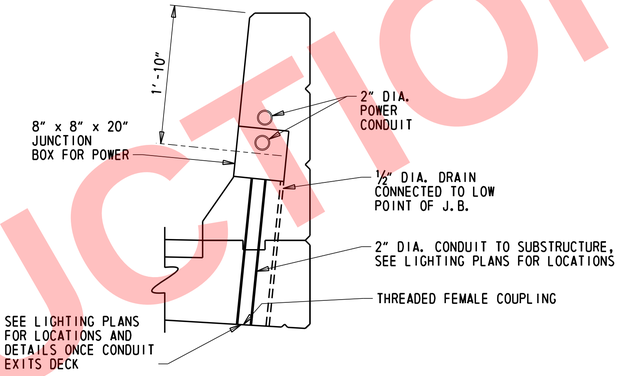

J.B. CONNECTION TO SUBSTRUCTURE POWER FEED AND LIGHTING

1" = 1'-0"

NOT FOR CONSTRUCTION

NOTES:

1. JUNCTION BOXES SHOULD BE PLACED CENTERED BETWEEN JOINTS IN THE PARAPET.
2. CONTRACTION, CONTROL, AND EXPANSION (NOT SHOWN) JOINTS ARE SHOWN FOR GRAPHICAL PURPOSES ONLY. JUNCTION BOXES MAY BE LOCATED BETWEEN ANY COMBINATION OF TWO.
3. FOR ADDITIONAL PARAPET AND REINFORCEMENT DETAILS, SEE DWG. PA-01.
4.
5. COST OF JUNCTION BOXES, CONDUITS, AND DRAINS EMBEDDED IN PARAPETS AND DECK SHALL BE INCIDENTAL TO ITEM 610008 - PORTLAND CEMENT CONCRETE MASONRY, PARAPET, CLASS A.

N:\31987-004\Contract_I-95\CADD\Bridge\BR1-748_PA01b.dgn
5/31/2019 12:12:57 PM

ADDENDA / REVISIONS		SCALE AS NOTED	REHABILITATION OF I-95 FROM I-495 TO NORTH OF BRANDYWINE RIVER BRIDGE	CONTRACT T201407404	BRIDGE NO. 1 748 059	JUNCITON BOX CONNECTION TO SUBSTRUCTURE POWER FEED AND LIGHTING	PA-11A
				COUNTY NEW CASTLE	DESIGNED BY: DAN		SECTION WRA
					CHECKED BY: WAG		SHEET NO. 2-363B

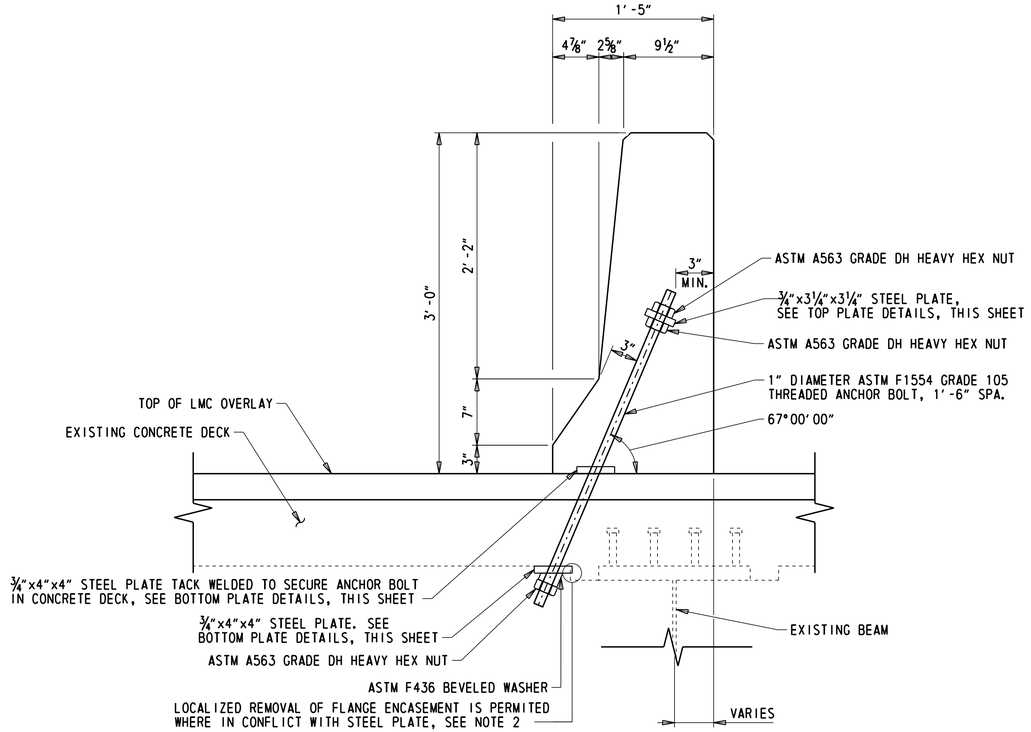

CIP BOLT DOWN PARAPET DETAIL

1½" = 1'-0"

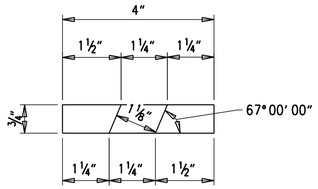

SECTION A-A

6" = 1'-0"

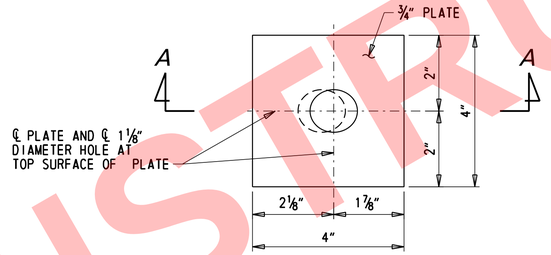

BOTTOM PLATE DETAILS

6" = 1'-0"

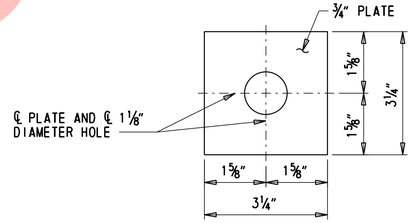

TOP PLATE DETAILS

6" = 1'-0"

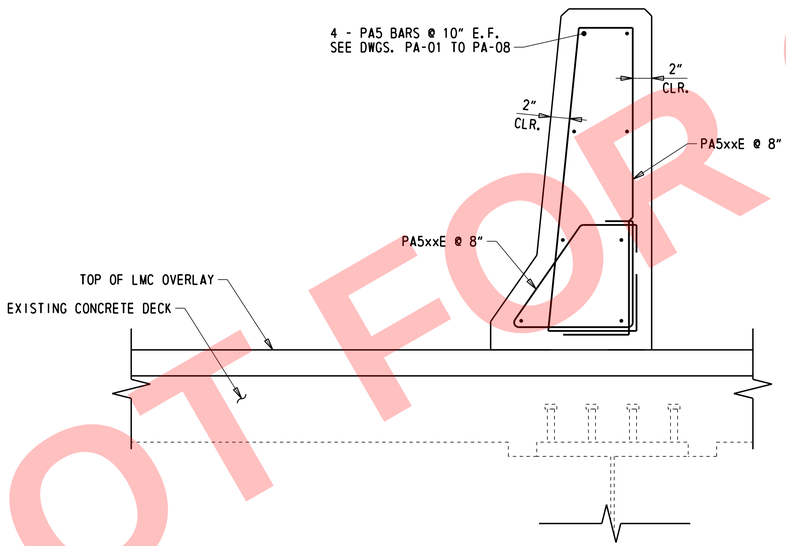

CIP BOLT DOWN PARAPET REINFORCEMENT

1½" = 1'-0"

NOTES:

1. ANCHOR BOLTS AND HARDWARE SHALL BE HOT-DIP GALVANIZED.
2. LOCALIZED REMOVAL OF FLANGE ENCASEMENT IS PERMITTED WHERE IN CONFLICT WITH STEEL PLATE. PAYMENT FOR LOCALIZED REMOVAL WILL BE INCIDENTAL TO ITEM 610008 - PORTLAND CEMENT CONCRERE MASONRY, PARAPET, CLASS A.
3. PAYMENT FOR DRILLING HOLES THROUGH DECK, ANCHOR BOLTS, AND ALL HARDWARE WILL BE INCIDENTAL TO ITEM 610008 - PORTLAND CEMENT CONCRETE MASONRY, PARAPET, CLASS A.

NOT FOR CONSTRUCTION

ADDENDA / REVISIONS		SCALE AS NOTED	REHABILITATION OF I-95 FROM I-495 TO NORTH OF BRANDYWINE RIVER BRIDGE	CONTRACT T201407404	BRIDGE NO. 1 748 059	CIP BOLT DOWN PARAPET DETAILS – 1	PA–12 SECTION
				COUNTY NEW CASTLE	DESIGNED BY: DAN		WRA
					CHECKED BY: WAG		SHEET NO. 2-363C

N:\31987-00A\Contract_I-95\CADD\Bridge\BR1-748_PA11.dgn
5/31/2019 12:12:58 PM

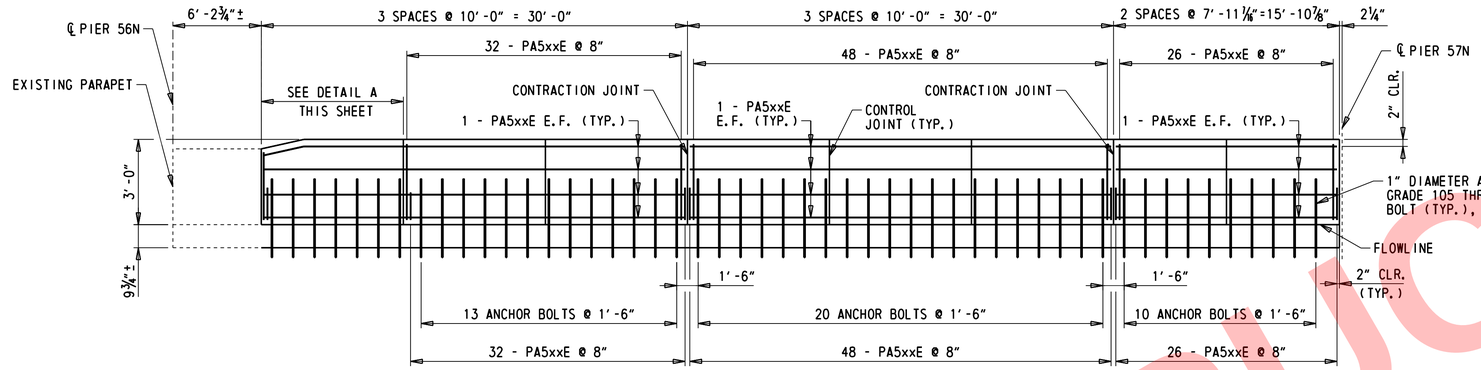

CIP BOLT DOWN PARAPET ELEVATION - SPAN 56N (LOOKING WEST)

HORIZONTAL - ¼″ = 1′-0″
VERTICAL - ⅜″ = 1′-0″

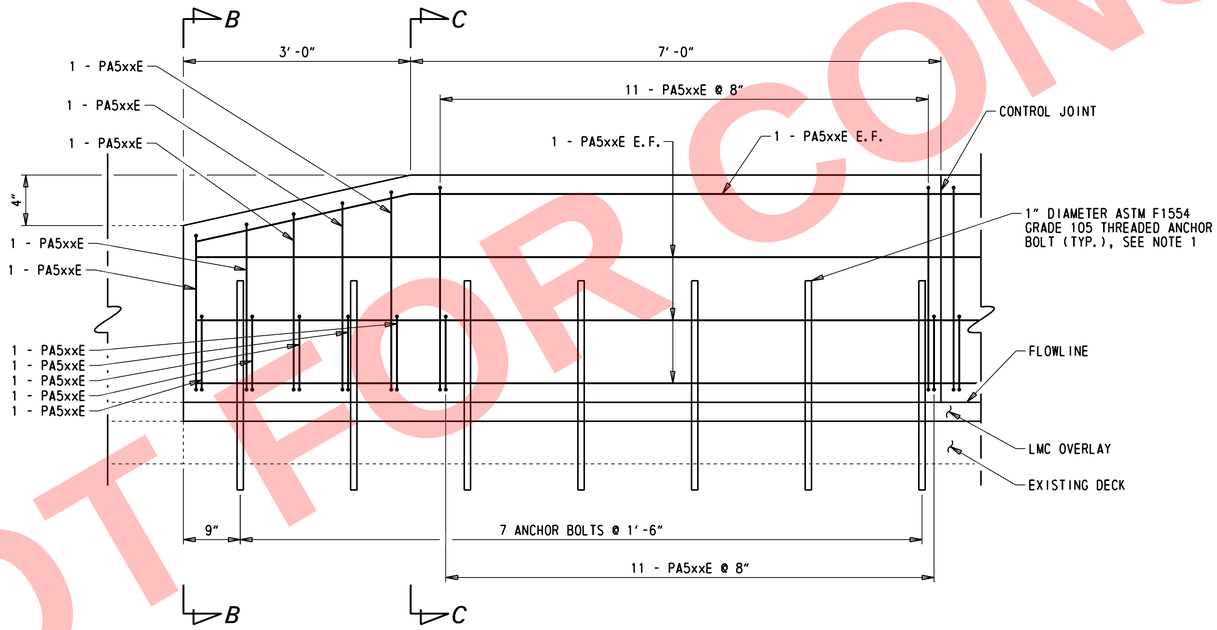

DETAIL A - CIP BOLT DOWN PARAPET TRANSITION

1″ = 1′-0″

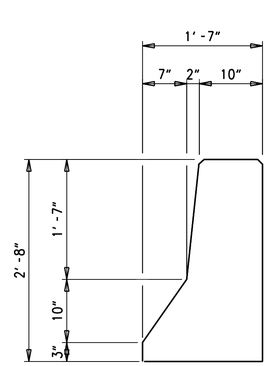

SECTION B-B

1″ = 1′-0″

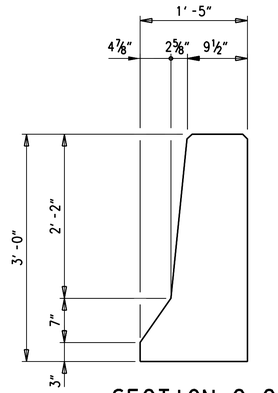

SECTION C-C

1″ = 1′-0″

NOTES:

1. FOR ANCHOR BOLT DETAILS, SEE DWG PA-xx.

NOT FOR CONSTRUCTION

N:\31987-00A\Contract_I-95\C4OD\Bridge\BRI-748_PA12.dgn
5/31/2019 12:12:59 PM

ADDENDA / REVISIONS	SCALE AS NOTED	REHABILITATION OF I-95 FROM I-495 TO NORTH OF BRANDYWINE RIVER BRIDGE	CONTRACT T201407404	BRIDGE NO. 1 748 059	CIP BOLT DOWN PARAPET DETAILS – 2	PA–13
			COUNTY NEW CASTLE	DESIGNED BY: DAN		SECTION WRA
				CHECKED BY: WAG		SHEET NO. 2-363D

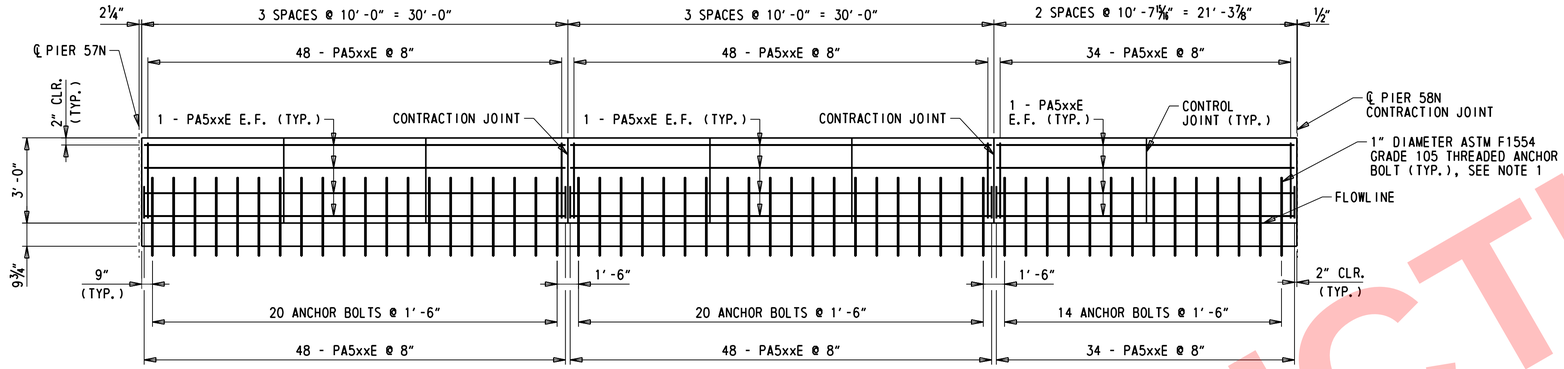

CIP BOLT DOWN PARAPET ELEVATION - SPAN 57N (LOOKING WEST)

HORIZONTAL - 3/16" = 1'-0"
VERTICAL - ⅜" = 1'-0"

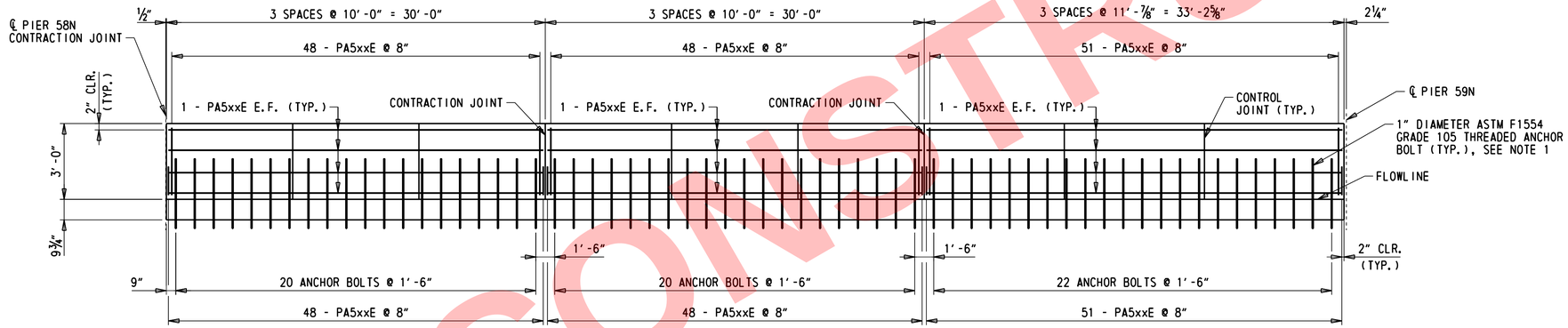

CIP BOLT DOWN PARAPET ELEVATION - SPAN 58N (LOOKING WEST)

HORIZONTAL - 3/16" = 1'-0"
VERTICAL - ⅜" = 1'-0"

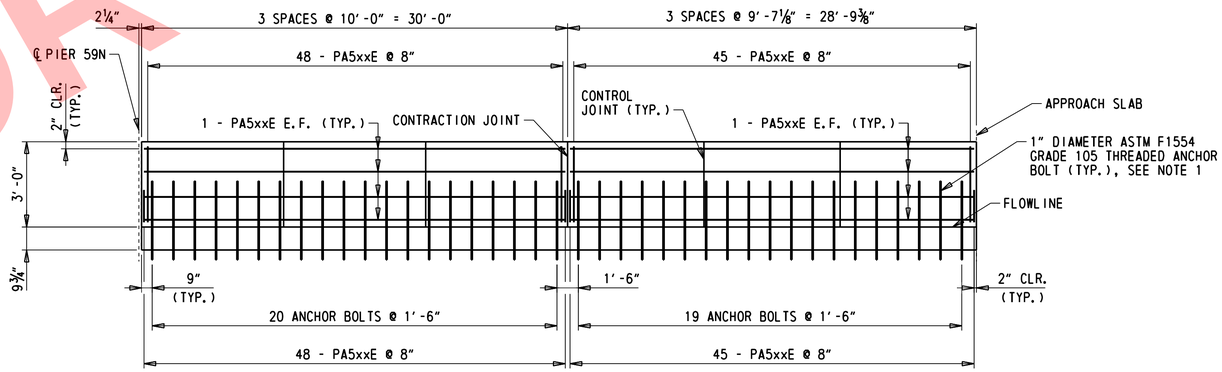

CIP BOLT DOWN PARAPET ELEVATION - SPAN 59N (LOOKING WEST)

HORIZONTAL - 3/16" = 1'-0"
VERTICAL - ⅜" = 1'-0"

NOTES:

1. FOR ANCHOR BOLT DETAILS, SEE DWG PA-xx.

NOT FOR CONSTRUCTION

N:\31987-004\Contract_I-95\CADD\Bridge\BR1-748_PA13.dgn
5/31/2019 12:12:59 PM

ADDENDA / REVISIONS	SCALE AS NOTED	REHABILITATION OF I-95 FROM I-495 TO NORTH OF BRANDYWINE RIVER BRIDGE	CONTRACT T201407404	BRIDGE NO. 1 748 059	CIP BOLT DOWN PARAPET DETAILS – 3	PA-14
			COUNTY NEW CASTLE	DESIGNED BY: DAN		SECTION WRA
				CHECKED BY: WAG		SHEET NO. 2-363E

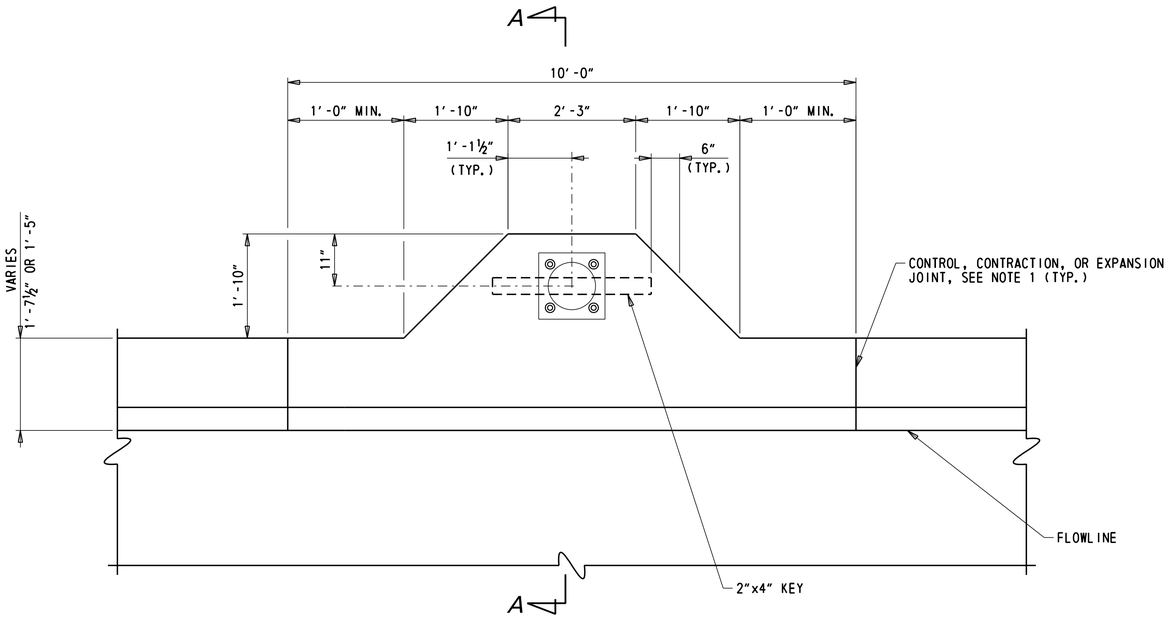

LIGHT BRACKET - PLAN

¾" = 1'-0"

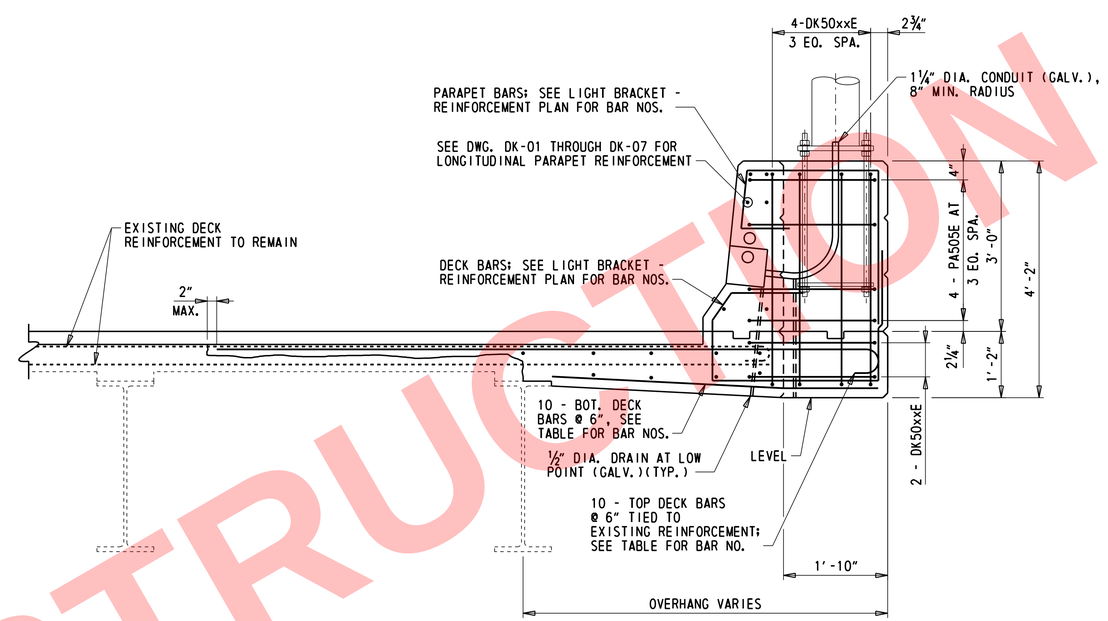

SECTION A-A

¾" = 1'-0"

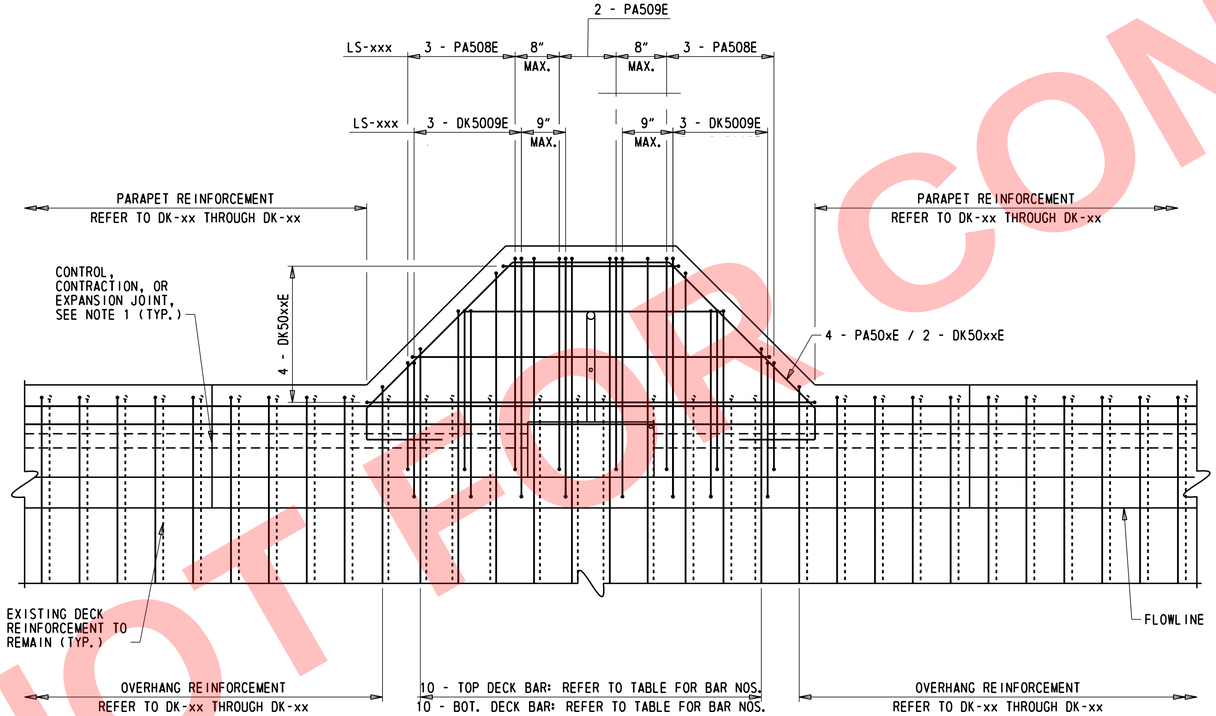

LIGHT BRACKET - REINFORCEMENT PLAN

1" = 1'-0"

LIGHT BRACKET TABLE

SPAN NO.	LIGHT STANDARD NO.	STATION	OFFSET	MAX. BRACKET OVERHANG LENGTH	TOP DECK BAR	BOT. DECK BAR
X	LS-XXX	X	X	X	DK50xx	DK50xx
X	LS-XXX	X	X	X	DK50xx	DK50xx

NOTES:

1. ADDITIONAL OVERHANG REINFORCEMENT TO BE FIELD CUT TO MATCH THE DEVELOPMENT LENGTH.
2. REFER TO TABLE ON DWG. DT-02 FOR TOP AND BOTTOM DECK BAR NUMBERS AND PARAPET BAR NUMBERS.
3. REFER TO TABLE ON DWG. DT-02 FOR DEVELOPMENT LENGTH.
4. DETAIL SHOWN WITH CONTROL JOINT CONTINUOUS REINFORCEMENT.

NOT FOR CONSTRUCTION

N:\31987-004\Cntrct\I-95\CADD\Bridge\BRI-748_DT01.dgn
5/31/2019 12:15:00 PM

ADDENDA / REVISIONS		SCALE AS NOTED	REHABILITATION OF I-95 FROM I-495 TO NORTH OF BRANDYWINE RIVER BRIDGE	CONTRACT T201407404	BRIDGE NO. 1 748 059	BRIDGE MOUNTED LIGHT BRACKET DETAILS – 1	PA-15 SECTION WRA
				COUNTY NEW CASTLE	DESIGNED BY: DAN		SHEET NO. 2-363F
					CHECKED BY: WAG		

SPAN NO.	DIRECTION OF TRAFFIC	LIGHT STANDARD NO.	LIGHT POLE STATION	LIGHT POLE OFFSET	OVERHANG LENGTH	DEVELOPMENT LENGTH
9	NORTHBOUND	LS-1	1276+2.7	56.5' LT.	4.78'	5.75'
9	SOUTHBOUND	LS-126	1277+18.4	56.5' RT.	5.94'	5.75'
10	NORTHBOUND	LS-2	1278+57.3	56.5' RT.	5.71'	5.75'
11	SOUTHBOUND	LS-125	1279+85.6	56.5' LT.	4.44'	5.75'
13	NORTHBOUND	LS-3	1281+13.9	56.6' RT.	6.11'	5.75'
14	SOUTHBOUND	LS-124	1282+49.8	56.6' LT.	6.25'	5.75'
16	NORTHBOUND	LS-4	100+2.3	26.7' RT.	6.09'	5.75'
17	SOUTHBOUND	LS-123	1284+95.1	56.6' LT.	5.84'	5.75'
18	NORTHBOUND	LS-5	102+46.5	26.6' RT.	4.28'	5.75'
20	SOUTHBOUND	LS-122	1287+26.6	56.6' LT.	5.83'	5.75'
21	NORTHBOUND	LS-6	104+83.4	23.9' RT.	4.82'	5.75'
21	SOUTHBOUND	LS-121	1289+29.0	56.5' LT.	5.07'	5.75'
22	NORTHBOUND	LS-7	107+18.2	20.3' RT.	5.12'	5.75'
23	SOUTHBOUND	LS-120	1291+9.1	56.9' LT.	5.51'	5.75'
25	SOUTHBOUND	LS-119	1293+52.0	59.5' LT.	6.02'	5.75'
29	NORTHBOUND	LS-14	1297+25.6	56.5' RT.	3.64'	5.75'
32	NORTHBOUND	LS-15	1300+3.9	56.6' RT.	3.66'	5.75'
36	NORTHBOUND	LS-16	1305+42.7	56.5' RT.	4.17'	5.75'
38	NORTHBOUND	LS-37	1303+89.5	5.0' LT.	4.50'	5.75'
39	NORTHBOUND	LS-17	1304+80.0	57.3' RT.	4.00'	5.75'
40	NORTHBOUND	LS-36	1305+71.4	5.0' LT.	4.39'	5.75'
41	SOUTHBOUND	LS-111	1305+95.6	56.5' LT.	3.96'	5.75'
43	NORTHBOUND	LS-18	1307+35.0	57.3' RT.	3.72'	5.75'
44	SOUTHBOUND	LS-110	1308+18.2	56.5' LT.	4.23'	5.75'
46	NORTHBOUND	LS-19	1309+91.2	57.3' RT.	3.95'	5.75'
47	SOUTHBOUND	LS-109	1310+69.8	56.5' LT.	4.02'	5.75'
50	NORTHBOUND	LS-20	1312+53.6	57.3' RT.	4.15'	5.75'
50	SOUTHBOUND	LS-108	1312+96.7	56.5' LT.	3.58'	5.75'
54	SOUTHBOUND	LS-107	1319+60.1	56.5' LT.	3.77'	5.75'
56	SOUTHBOUND	LS-106	1317+46.3	56.5' LT.	3.57'	5.75'
59	SOUTHBOUND	LS-105	1315+22.6	56.5' LT.	3.98'	5.75'

NOT FOR CONSTRUCTION

NOTES:

1. FOR LIGHT BRACKET DETAILS, REFER TO DT-01.

N:\31987-004\Contract_I-95\CADD\Bridge\BR1-748_DT02.dgn
5/31/2019 12:05:01 PM

ADDENDA / REVISIONS		SCALE AS NOTED	REHABILITATION OF I-96 FROM I-495 TO NORTH OF BRANDYWINE RIVER BRIDGE	CONTRACT T201407405	BRIDGE NO. 1 748 059	BRIDGE MOUNTED LIGHT BRACKET DETAILS - 2	PA-16
				COUNTY NEW CASTLE	DESIGNED BY: DAN		SECTION WRA
					CHECKED BY: WAG		SHEET NO. 2-363G

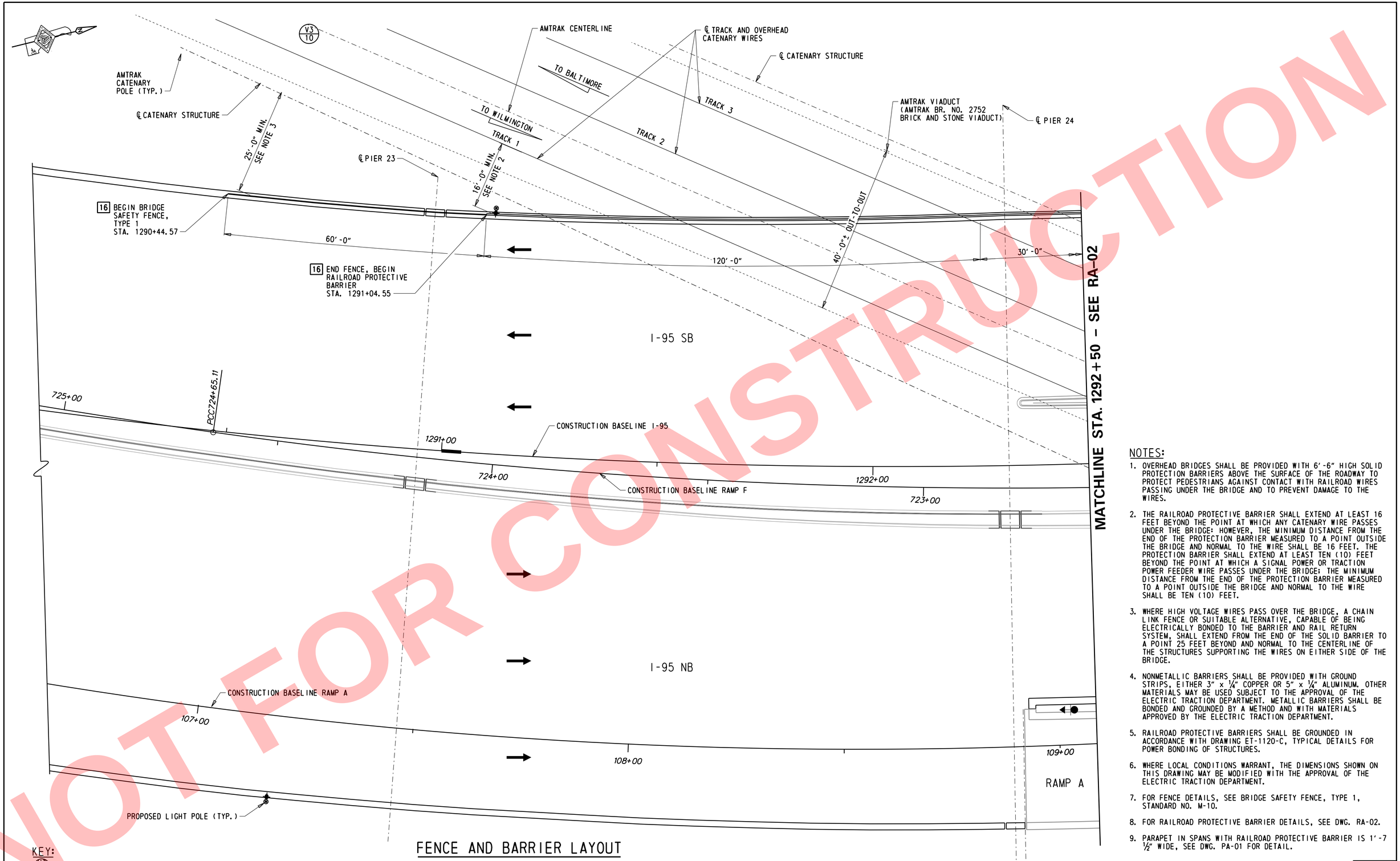

FENCE AND BARRIER LAYOUT

KEY:
V3/10 AMTRAK VALUATION & SECTION SHEET NUMBER

NOTES:

1. OVERHEAD BRIDGES SHALL BE PROVIDED WITH 6'-6" HIGH SOLID PROTECTION BARRIERS ABOVE THE SURFACE OF THE ROADWAY TO PROTECT PEDESTRIANS AGAINST CONTACT WITH RAILROAD WIRES PASSING UNDER THE BRIDGE AND TO PREVENT DAMAGE TO THE WIRES.
2. THE RAILROAD PROTECTIVE BARRIER SHALL EXTEND AT LEAST 16 FEET BEYOND THE POINT AT WHICH ANY CATENARY WIRE PASSES UNDER THE BRIDGE: HOWEVER, THE MINIMUM DISTANCE FROM THE END OF THE PROTECTION BARRIER MEASURED TO A POINT OUTSIDE THE BRIDGE AND NORMAL TO THE WIRE SHALL BE 16 FEET. THE PROTECTION BARRIER SHALL EXTEND AT LEAST TEN (10) FEET BEYOND THE POINT AT WHICH A SIGNAL POWER OR TRACTION POWER FEEDER WIRE PASSES UNDER THE BRIDGE: THE MINIMUM DISTANCE FROM THE END OF THE PROTECTION BARRIER MEASURED TO A POINT OUTSIDE THE BRIDGE AND NORMAL TO THE WIRE SHALL BE TEN (10) FEET.
3. WHERE HIGH VOLTAGE WIRES PASS OVER THE BRIDGE, A CHAIN LINK FENCE OR SUITABLE ALTERNATIVE, CAPABLE OF BEING ELECTRICALLY BONDED TO THE BARRIER AND RAIL RETURN SYSTEM, SHALL EXTEND FROM THE END OF THE SOLID BARRIER TO A POINT 25 FEET BEYOND AND NORMAL TO THE CENTERLINE OF THE STRUCTURES SUPPORTING THE WIRES ON EITHER SIDE OF THE BRIDGE.
4. NONMETALLIC BARRIERS SHALL BE PROVIDED WITH GROUND STRIPS, EITHER 3" x ¼" COPPER OR 5" x ¼" ALUMINUM. OTHER MATERIALS MAY BE USED SUBJECT TO THE APPROVAL OF THE ELECTRIC TRACTION DEPARTMENT. METALLIC BARRIERS SHALL BE BONDED AND GROUNDED BY A METHOD AND WITH MATERIALS APPROVED BY THE ELECTRIC TRACTION DEPARTMENT.
5. RAILROAD PROTECTIVE BARRIERS SHALL BE GROUNDED IN ACCORDANCE WITH DRAWING ET-1120-C, TYPICAL DETAILS FOR POWER BONDING OF STRUCTURES.
6. WHERE LOCAL CONDITIONS WARRANT, THE DIMENSIONS SHOWN ON THIS DRAWING MAY BE MODIFIED WITH THE APPROVAL OF THE ELECTRIC TRACTION DEPARTMENT.
7. FOR FENCE DETAILS, SEE BRIDGE SAFETY FENCE, TYPE 1, STANDARD NO. M-10.
8. FOR RAILROAD PROTECTIVE BARRIER DETAILS, SEE DWG. RA-02.
9. PARAPET IN SPANS WITH RAILROAD PROTECTIVE BARRIER IS 1'-7 ½" WIDE, SEE DWG. PA-01 FOR DETAIL.

NOT FOR CONSTRUCTION

ADDENDA / REVISIONS		SCALE 0 10 20 30 FEET	REHABILITATION OF I-95 FROM I-495 TO NORTH OF BRANDYWINE RIVER BRIDGE	CONTRACT T201407404	BRIDGE NO. 1 748 059	FENCE AND BARRIER LAYOUT 1 OF 9	RA-01
				COUNTY NEW CASTLE	DESIGNED BY: DAN		SECTION WRA
					CHECKED BY: WAG		SHEET NO. 364

N:\31987-004\Contract\I-95\CADD\Bridge\BR1-748_RA01.dgn
5/31/2019 12:05:02 PM

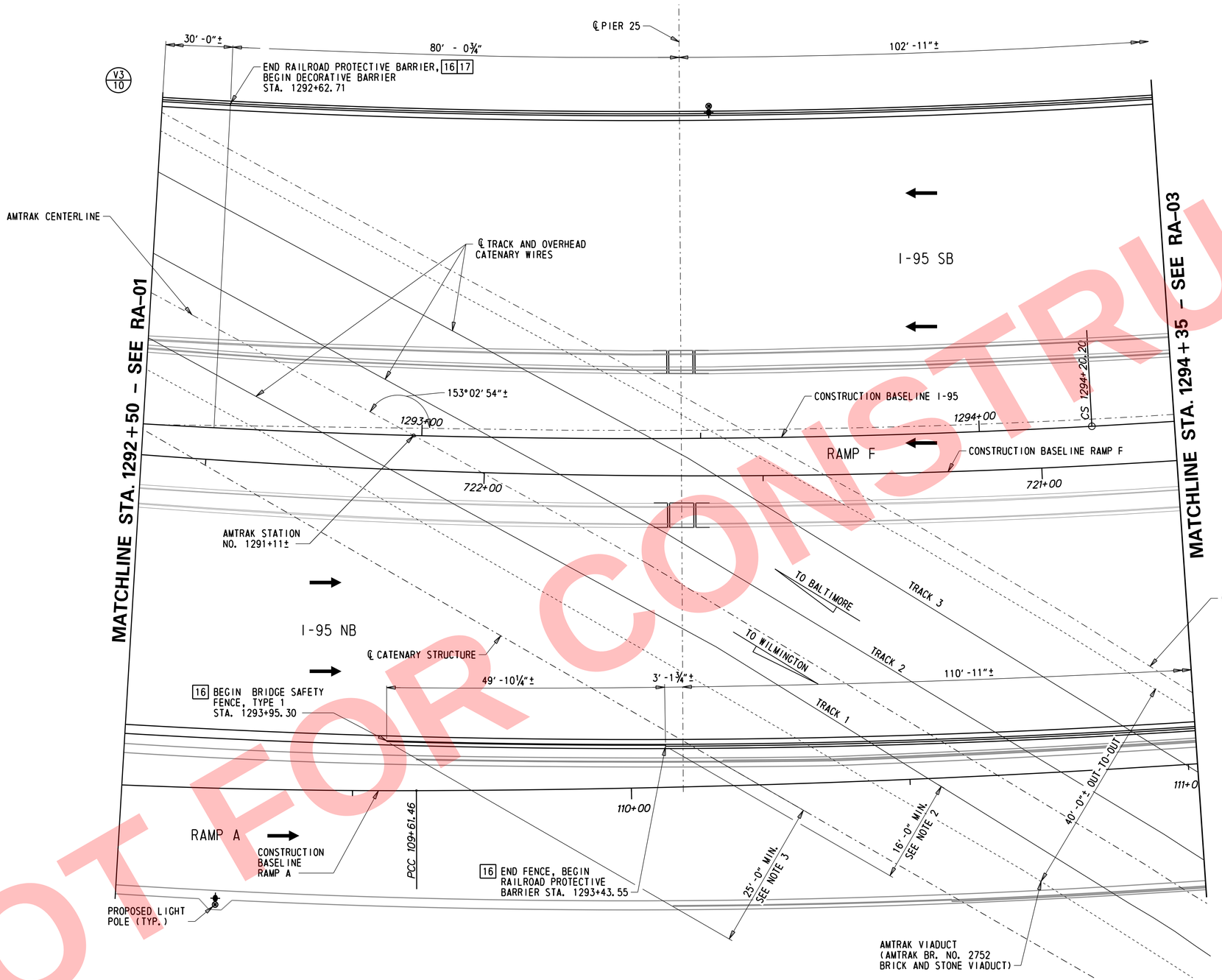

KEY:
V3/10 AMTRAK VALUATION & SECTION SHEET NUMBER

FENCE AND BARRIER LAYOUT

NOTES:

1. OVERHEAD BRIDGES SHALL BE PROVIDED WITH 6'-6" HIGH SOLID PROTECTION BARRIERS ABOVE THE SURFACE OF THE ROADWAY TO PROTECT PEDESTRIANS AGAINST CONTACT WITH RAILROAD WIRES PASSING UNDER THE BRIDGE AND TO PREVENT DAMAGE TO THE WIRES.
2. THE RAILROAD PROTECTIVE BARRIER SHALL EXTEND AT LEAST 16 FEET BEYOND THE POINT AT WHICH ANY CATENARY WIRE PASSES UNDER THE BRIDGE: HOWEVER, THE MINIMUM DISTANCE FROM THE END OF THE PROTECTION BARRIER MEASURED TO A POINT OUTSIDE THE BRIDGE AND NORMAL TO THE WIRE SHALL BE 16 FEET. THE PROTECTION BARRIER SHALL EXTEND AT LEAST TEN (10) FEET BEYOND THE POINT AT WHICH A SIGNAL POWER OR TRACTION POWER FEEDER WIRE PASSES UNDER THE BRIDGE; THE MINIMUM DISTANCE FROM THE END OF THE PROTECTION BARRIER MEASURED TO A POINT OUTSIDE THE BRIDGE AND NORMAL TO THE WIRE SHALL BE TEN (10) FEET.
3. WHERE HIGH VOLTAGE WIRES PASS OVER THE BRIDGE, A CHAIN LINK FENCE OR SUITABLE ALTERNATIVE, CAPABLE OF BEING ELECTRICALLY BONDED TO THE BARRIER AND RAIL RETURN SYSTEM, SHALL EXTEND FROM THE END OF THE SOLID BARRIER TO A POINT 25 FEET BEYOND AND NORMAL TO THE CENTERLINE OF THE STRUCTURES SUPPORTING THE WIRES ON EITHER SIDE OF THE BRIDGE.
4. NONMETALLIC BARRIERS SHALL BE PROVIDED WITH GROUND STRIPS, EITHER 3" x¼" COPPER OR 5" x ¼" ALUMINUM. OTHER MATERIALS MAY BE USED SUBJECT TO THE APPROVAL OF THE ELECTRIC TRACTION DEPARTMENT. METALLIC BARRIERS SHALL BE BONDED AND GROUNDED BY A METHOD AND WITH MATERIALS APPROVED BY THE ELECTRIC TRACTION DEPARTMENT.
5. RAILROAD PROTECTIVE BARRIERS SHALL BE GROUNDED IN ACCORDANCE WITH DRAWING ET-1120-C, TYPICAL DETAILS FOR POWER BONDING OF STRUCTURES.
6. WHERE LOCAL CONDITIONS WARRANT, THE DIMENSIONS SHOWN ON THIS DRAWING MAY BE MODIFIED WITH THE APPROVAL OF THE ELECTRIC TRACTION DEPARTMENT.
7. FOR FENCE DETAILS, SEE BRIDGE SAFETY FENCE, TYPE 1, STANDARD NO. M-10.
8. FOR RAILROAD PROTECTIVE BARRIER DETAILS, SEE DWG. RA-02.
9. PARAPET IN SPANS WITH RAILROAD PROTECTIVE BARRIER OR DECORATIVE BARRIER IS 1'-7½" WIDE, SEE DWG. PA-01 FOR DETAIL.

NOT FOR CONSTRUCTION

ADDENDA / REVISIONS		SCALE 0 10 20 30 FEET	REHABILITATION OF I-95 FROM I-495 TO NORTH OF BRANDYWINE RIVER BRIDGE	CONTRACT T201407404	BRIDGE NO. 1 748 059	FENCE AND BARRIER LAYOUT 2 OF 9	RA-02
				COUNTY NEW CASTLE	DESIGNED BY: DAN		SECTION WRA
					CHECKED BY: WAG		SHEET NO. 365

N:\31987-004\Contract_I-95\CADD\Bridge\BR1-748_RA02.dgn
5/31/2019 12:13:13 PM

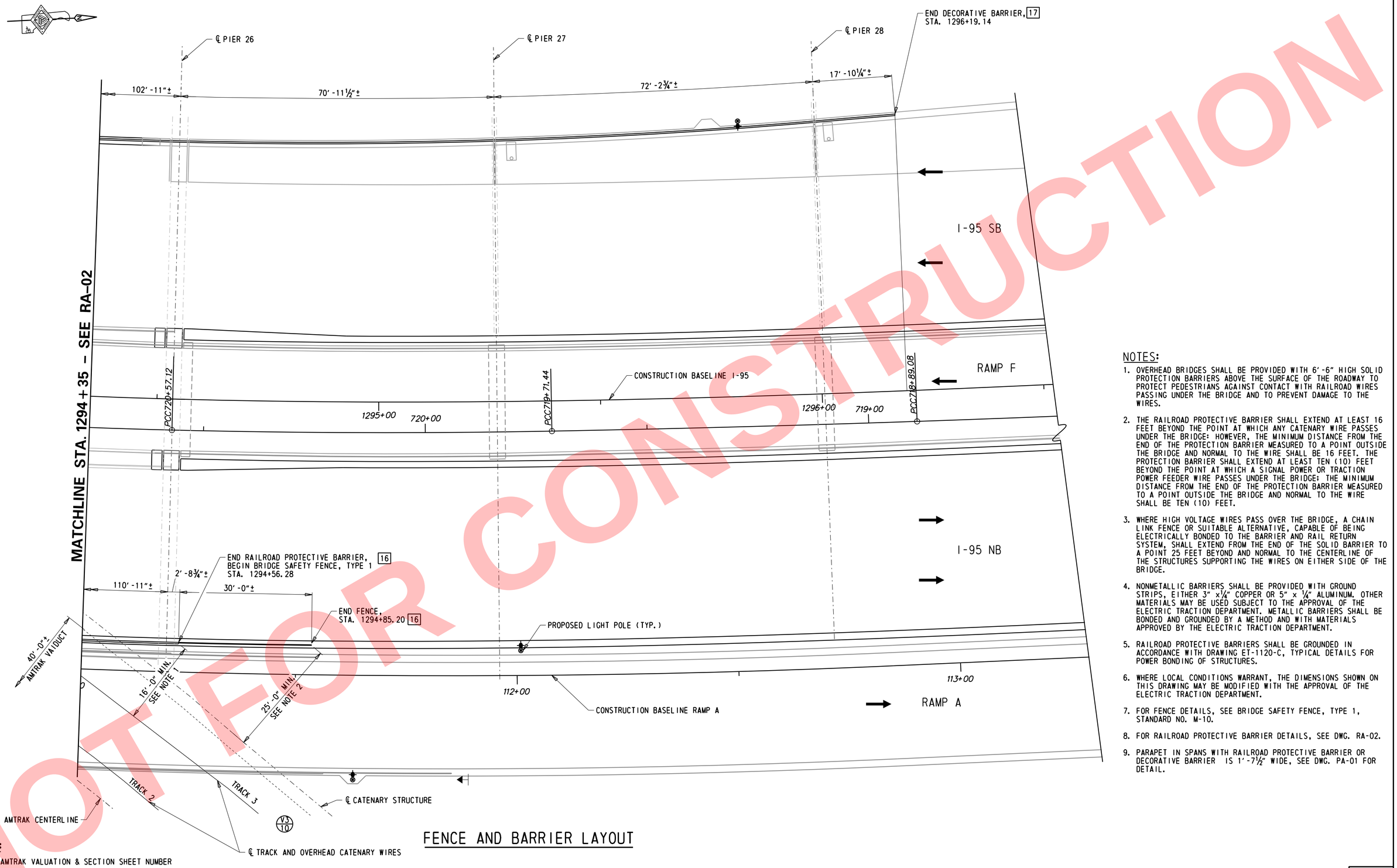

FENCE AND BARRIER LAYOUT

KEY:
V3/10 AMTRAK VALUATION & SECTION SHEET NUMBER

NOTES:

1. OVERHEAD BRIDGES SHALL BE PROVIDED WITH 6′-6″ HIGH SOLID PROTECTION BARRIERS ABOVE THE SURFACE OF THE ROADWAY TO PROTECT PEDESTRIANS AGAINST CONTACT WITH RAILROAD WIRES PASSING UNDER THE BRIDGE AND TO PREVENT DAMAGE TO THE WIRES.
2. THE RAILROAD PROTECTIVE BARRIER SHALL EXTEND AT LEAST 16 FEET BEYOND THE POINT AT WHICH ANY CATENARY WIRE PASSES UNDER THE BRIDGE: HOWEVER, THE MINIMUM DISTANCE FROM THE END OF THE PROTECTION BARRIER MEASURED TO A POINT OUTSIDE THE BRIDGE AND NORMAL TO THE WIRE SHALL BE 16 FEET. THE PROTECTION BARRIER SHALL EXTEND AT LEAST TEN (10) FEET BEYOND THE POINT AT WHICH A SIGNAL POWER OR TRACTION POWER FEEDER WIRE PASSES UNDER THE BRIDGE: THE MINIMUM DISTANCE FROM THE END OF THE PROTECTION BARRIER MEASURED TO A POINT OUTSIDE THE BRIDGE AND NORMAL TO THE WIRE SHALL BE TEN (10) FEET.
3. WHERE HIGH VOLTAGE WIRES PASS OVER THE BRIDGE, A CHAIN LINK FENCE OR SUITABLE ALTERNATIVE, CAPABLE OF BEING ELECTRICALLY BONDED TO THE BARRIER AND RAIL RETURN SYSTEM, SHALL EXTEND FROM THE END OF THE SOLID BARRIER TO A POINT 25 FEET BEYOND AND NORMAL TO THE CENTERLINE OF THE STRUCTURES SUPPORTING THE WIRES ON EITHER SIDE OF THE BRIDGE.
4. NONMETALLIC BARRIERS SHALL BE PROVIDED WITH GROUND STRIPS, EITHER 3″ x¼″ COPPER OR 5″ x ¼″ ALUMINUM. OTHER MATERIALS MAY BE USED SUBJECT TO THE APPROVAL OF THE ELECTRIC TRACTION DEPARTMENT. METALLIC BARRIERS SHALL BE BONDED AND GROUNDED BY A METHOD AND WITH MATERIALS APPROVED BY THE ELECTRIC TRACTION DEPARTMENT.
5. RAILROAD PROTECTIVE BARRIERS SHALL BE GROUNDED IN ACCORDANCE WITH DRAWING ET-1120-C, TYPICAL DETAILS FOR POWER BONDING OF STRUCTURES.
6. WHERE LOCAL CONDITIONS WARRANT, THE DIMENSIONS SHOWN ON THIS DRAWING MAY BE MODIFIED WITH THE APPROVAL OF THE ELECTRIC TRACTION DEPARTMENT.
7. FOR FENCE DETAILS, SEE BRIDGE SAFETY FENCE, TYPE 1, STANDARD NO. M-10.
8. FOR RAILROAD PROTECTIVE BARRIER DETAILS, SEE DWG. RA-02.
9. PARAPET IN SPANS WITH RAILROAD PROTECTIVE BARRIER OR DECORATIVE BARRIER IS 1′-7½″ WIDE, SEE DWG. PA-01 FOR DETAIL.

NOT FOR CONSTRUCTION

ADDENDA / REVISIONS

SCALE 0 10 20 30 FEET

REHABILITATION OF I-95 FROM I-495 TO NORTH OF BRANDYWINE RIVER BRIDGE

CONTRACT	BRIDGE NO.	1 748 059
T201407404	DESIGNED BY: DAN	
COUNTY	CHECKED BY: WAG	
NEW CASTLE		

FENCE AND BARRIER LAYOUT 3 OF 9

RA-03

SECTION	SHEET NO.
WRA	366

N:\31987-00A\Contract_I-95\C&D\Bridge\BR1-748_RA03.dgn
5/31/2019 12:13:15 PM

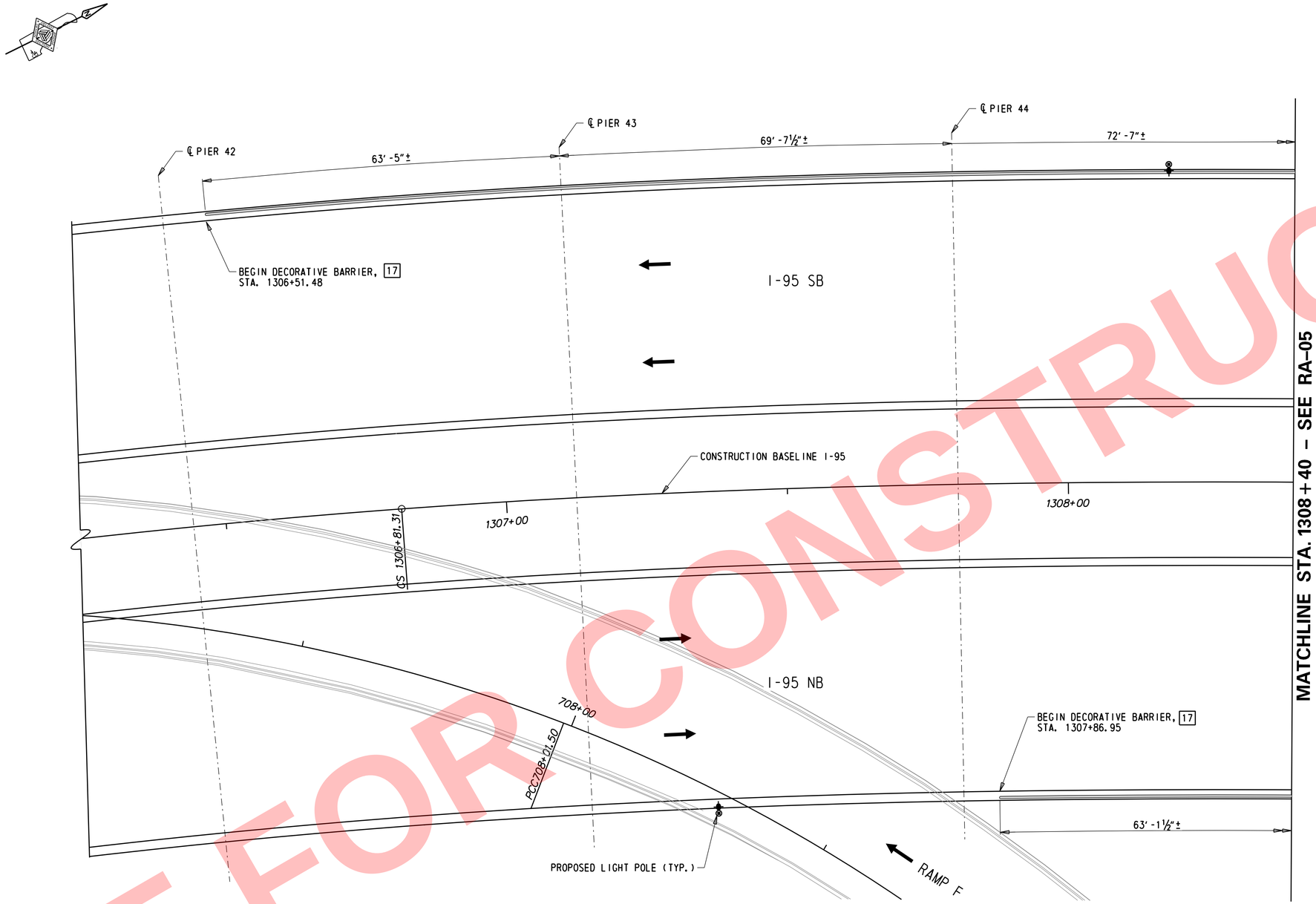

NOTES:

1. FOR DECORATIVE BARRIER DETAILS, SEE DWG. RA-10.
2. PARAPET IN SPANS WITH DECORATIVE BARRIER IS 1'-7½" WIDE, SEE DWG. PA-01.

FENCE AND BARRIER LAYOUT

NOT FOR CONSTRUCTION

N:\31987-004\Contract I-95\CADD\Bridge\BR1-748_RA04.dgn
5/31/2019 12:13:16 PM

ADDENDA / REVISIONS		SCALE	REHABILITATION OF I-95 FROM I-495 TO NORTH OF BRANDYWINE RIVER BRIDGE	CONTRACT	BRIDGE NO. 1 748 059	FENCE AND BARRIER LAYOUT 4 OF 9	RA-04
		0 10 20 30 FEET		T201407404	DESIGNED BY: DAN		SECTION WRA
				COUNTY NEW CASTLE	CHECKED BY: WAG		SHEET NO. 367

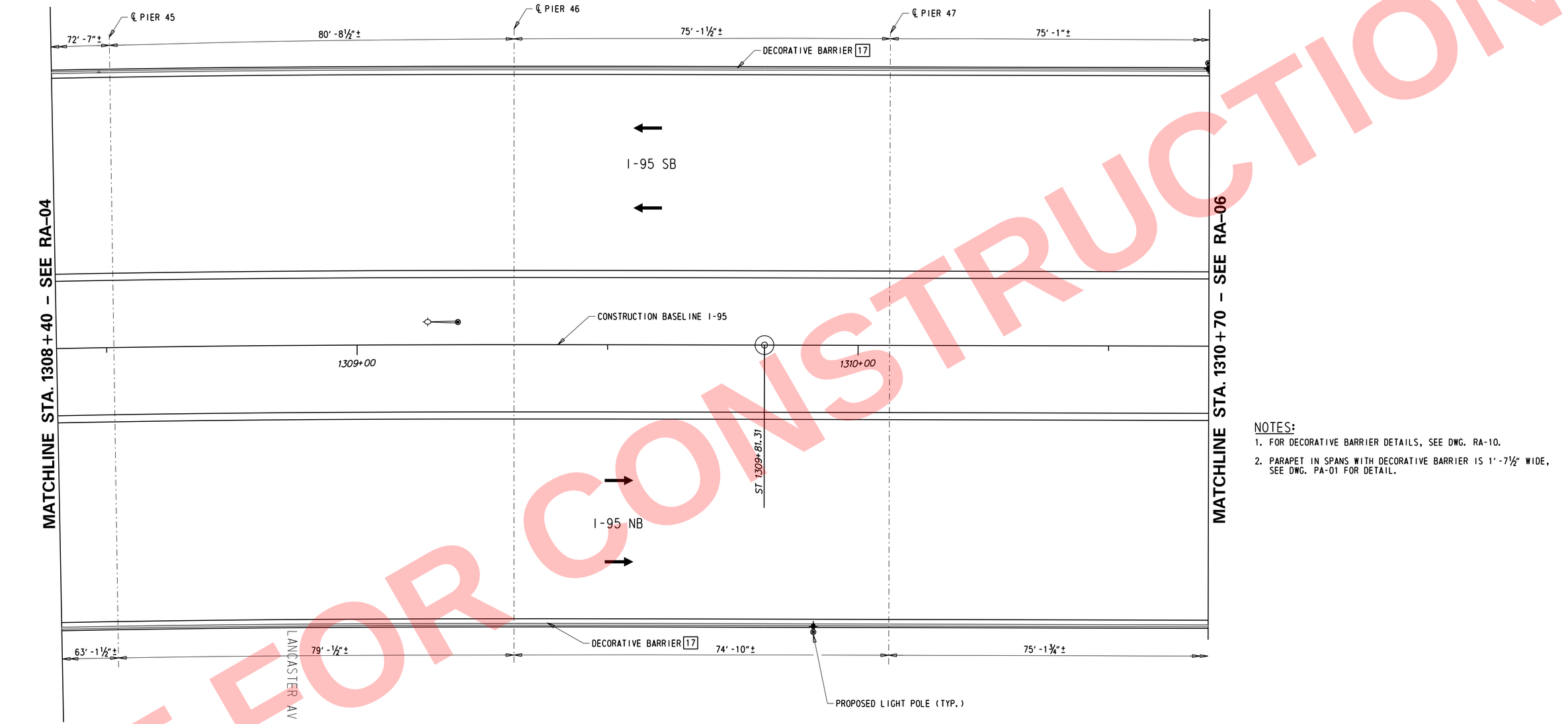

FENCE AND BARRIER LAYOUT

NOTES:

1. FOR DECORATIVE BARRIER DETAILS, SEE DWG. RA-10.
2. PARAPET IN SPANS WITH DECORATIVE BARRIER IS 1′-7½″ WIDE, SEE DWG. PA-01 FOR DETAIL.

NOT FOR CONSTRUCTION

N:\31987-001\Corr\I-95\CADD\Bridge\BRI-748_RA05.dgn
5/13/2019 12:51:21 PM

ADDENDA / REVISIONS	SCALE	REHABILITATION OF I-95 FROM I-495 TO NORTH OF BRANDYWINE RIVER BRIDGE	CONTRACT	BRIDGE NO. 1 748 059	FENCE AND BARRIER LAYOUT 5 OF 9	RA-05
	0 10 20 30 FEET		T201407404			SECTION WRA
			COUNTY NEW CASTLE	DESIGNED BY: DAN		SHEET NO. 368
				CHECKED BY: WAG		

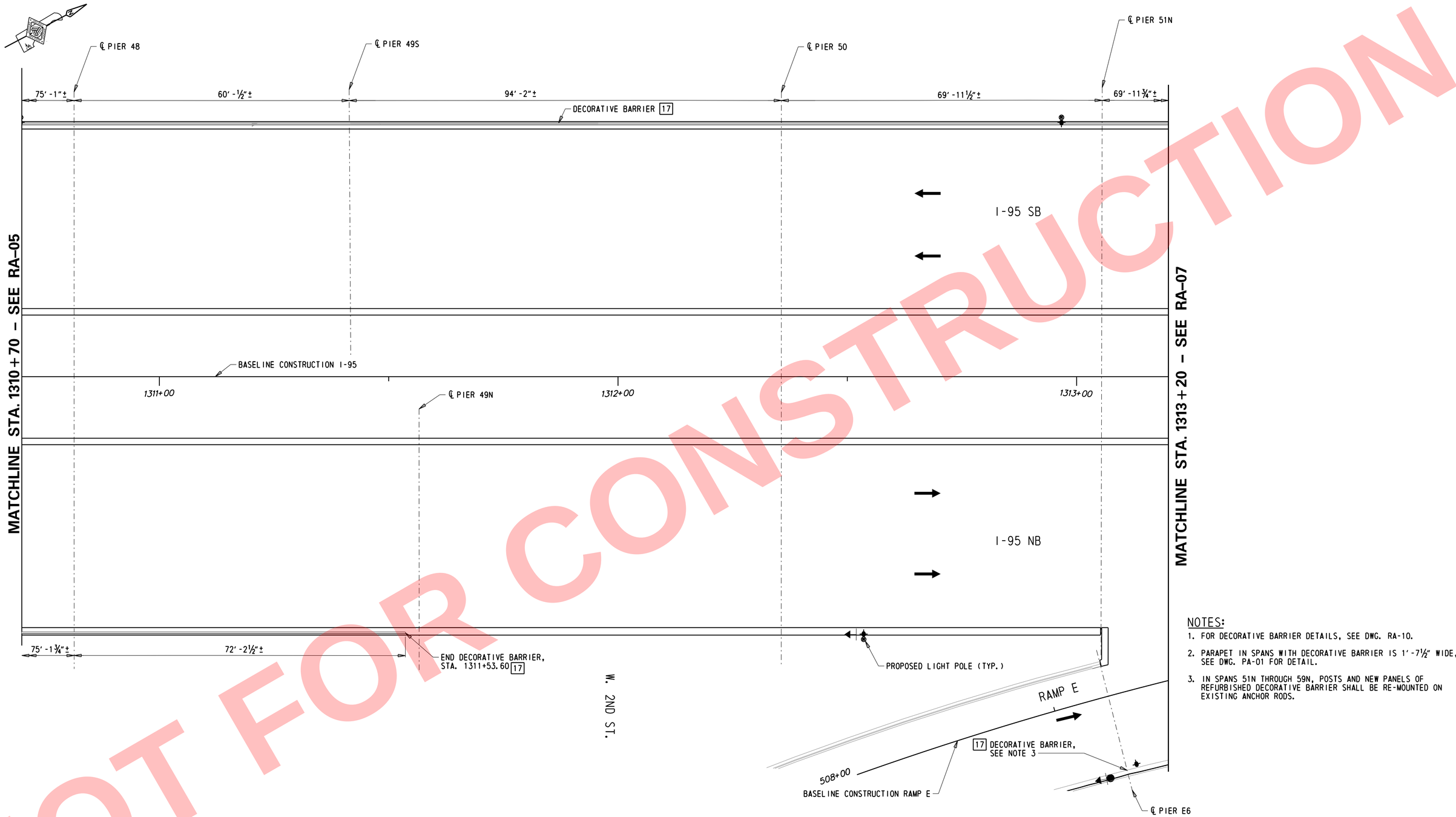

FENCE AND BARRIER LAYOUT

NOTES:

1. FOR DECORATIVE BARRIER DETAILS, SEE DWG. RA-10.
2. PARAPET IN SPANS WITH DECORATIVE BARRIER IS 1′-7½″ WIDE, SEE DWG. PA-01 FOR DETAIL.
3. IN SPANS 51N THROUGH 59N, POSTS AND NEW PANELS OF REFURBISHED DECORATIVE BARRIER SHALL BE RE-MOUNTED ON EXISTING ANCHOR RODS.

NOT FOR CONSTRUCTION

N:\31987-004\Control\I-95\CADD\Bridge\BR1-748_RA06.dgn
5/31/2019 12:51:17 PM

ADDENDA / REVISIONS	

SCALE
0 10 20 30
FEET

REHABILITATION OF I-95 FROM I-495 TO NORTH OF BRANDYWINE RIVER BRIDGE

CONTRACT	BRIDGE NO.	1 748 059
T201407404	DESIGNED BY: DAN	
COUNTY	CHECKED BY: WAG	
NEW CASTLE		

FENCE AND BARRIER LAYOUT 6 OF 9

RA-06
SECTION
WRA
SHEET NO.
369

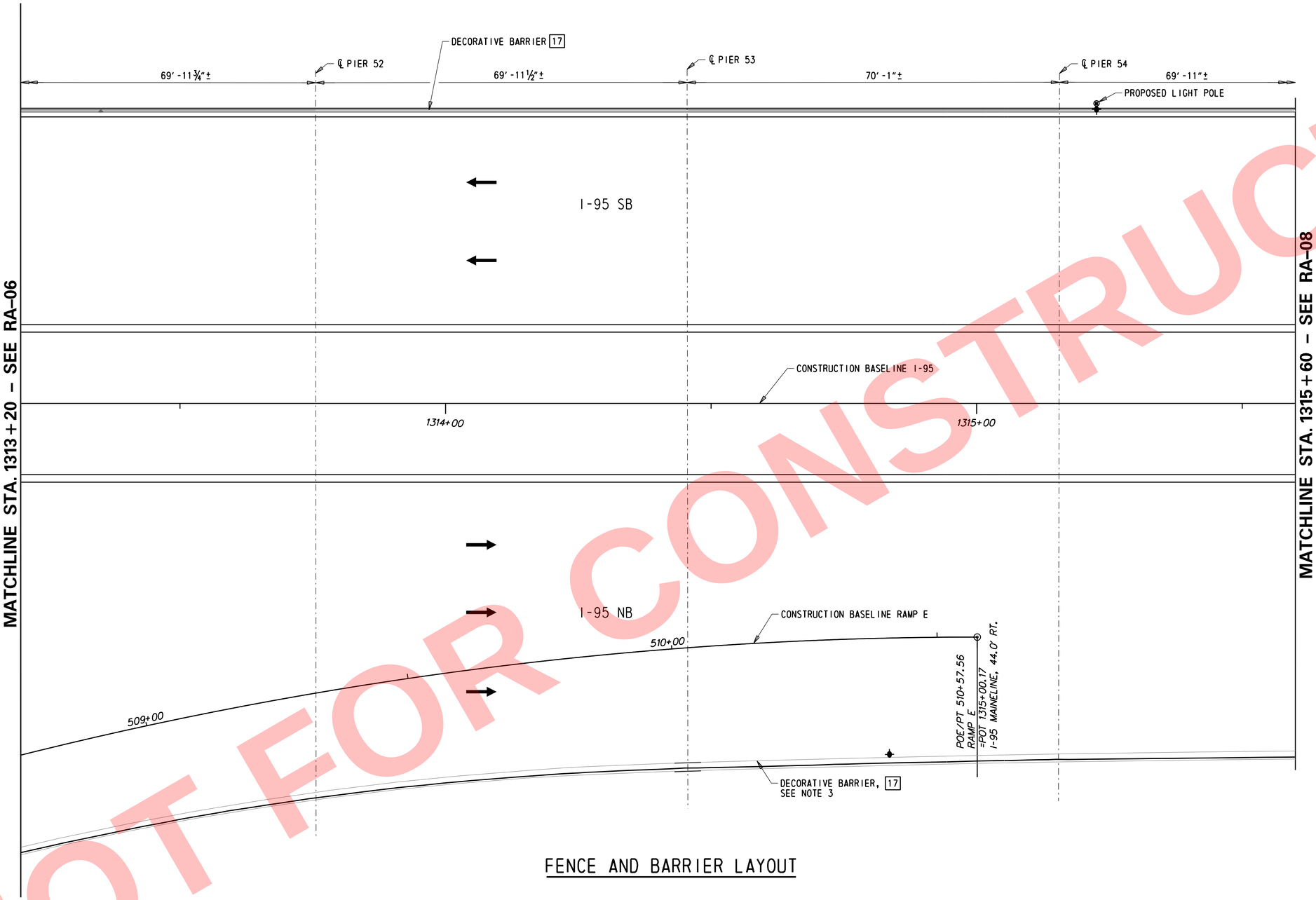

FENCE AND BARRIER LAYOUT

NOTES:

1. FOR DECORATIVE BARRIER DETAILS, SEE DWG. RA-10.
2. PARAPET IN SPANS WITH DECORATIVE BARRIER IS 1′-7½″ WIDE, SEE DWG. PA-01 FOR DETAIL.
3. IN SPANS 51N THROUGH 59N, POSTS AND NEW PANELS OF REFURBISHED DECORATIVE BARRIER SHALL BE RE-MOUNTED ON EXISTING ANCHOR RODS.

NOT FOR CONSTRUCTION

N:\31987-004\Contract I-95\CADD\Bridge\BR1-748_RA07.dgn
5/31/2019 12:13:18 PM

ADDENDA / REVISIONS	

SCALE
0 10 20 30
FEET

REHABILITATION OF I-95 FROM I-495 TO NORTH OF BRANDYWINE RIVER BRIDGE

CONTRACT	BRIDGE NO. 1 748 059
T201407404	DESIGNED BY: DAN
COUNTY	CHECKED BY: WAG
NEW CASTLE	

FENCE AND BARRIER LAYOUT 7 OF 9

RA-07	
SECTION	WRA
SHEET NO.	370

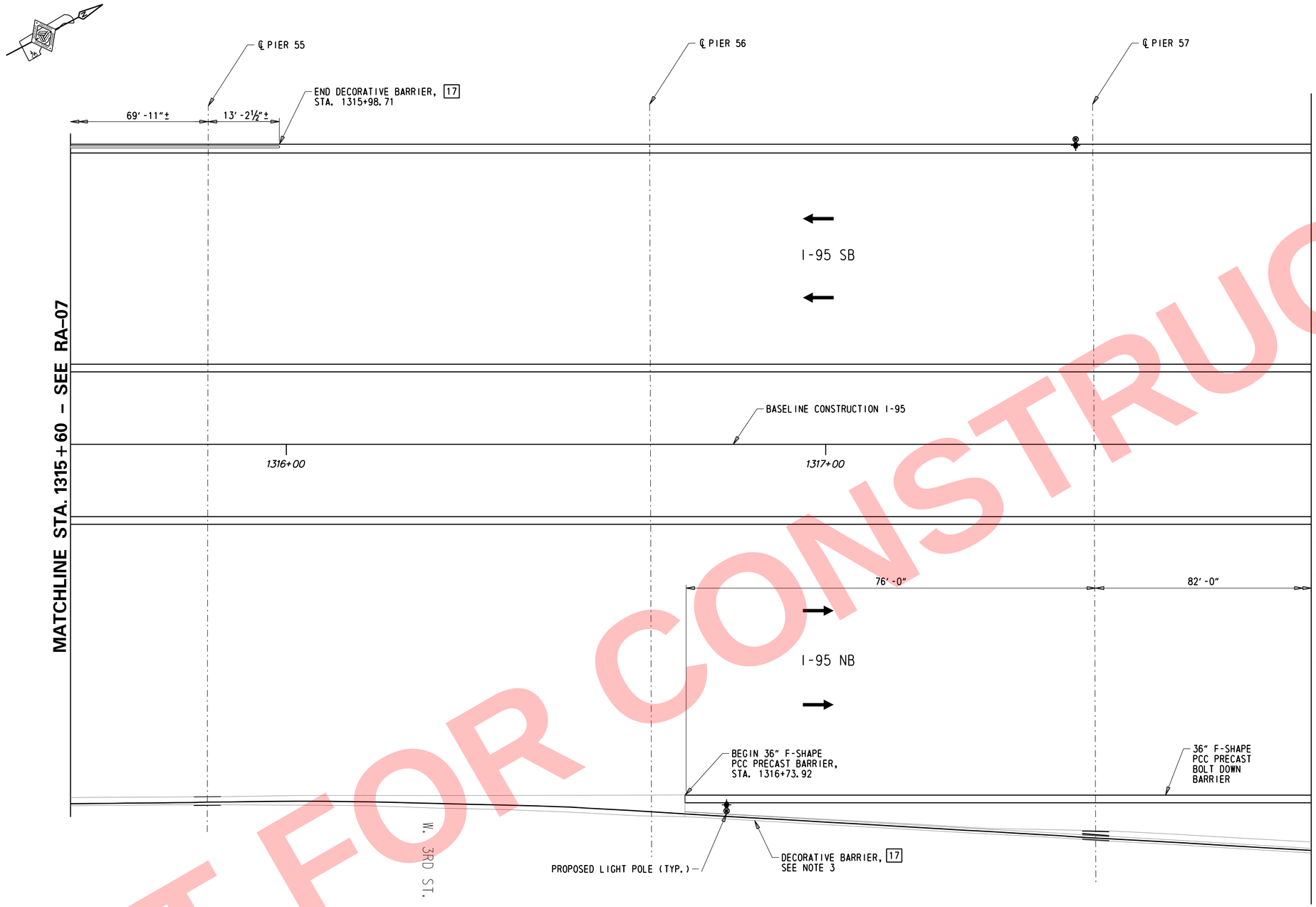

FENCE AND BARRIER LAYOUT

NOTES:

1. FOR DECORATIVE BARRIER DETAILS, SEE DWG. RA-10.
2. PARAPET IN SPANS WITH DECORATIVE BARRIER IS 1'-7½" WIDE, SEE DWG. PA-01 FOR DETAIL.
3. IN SPANS 51N THROUGH 59N, POSTS AND NEW PANELS OF REFURBISHED DECORATIVE BARRIER SHALL BE RE-MOUNTED ON EXISTING ANCHOR RODS.

NOT FOR CONSTRUCTION

N:\31987-004\Contract_I-95\CADD\Bridge\BR1-748_RA08.dgn
5/31/2019 12:13:19 PM

ADDENDA / REVISIONS	SCALE 0 10 20 30 FEET	REHABILITATION OF I-95 FROM I-495 TO NORTH OF BRANDYWINE RIVER BRIDGE	CONTRACT T201407404	BRIDGE NO. 1 748 059	FENCE AND BARRIER LAYOUT 8 FO 9	RA-08
			COUNTY NEW CASTLE	DESIGNED BY: DAN		SECTION WRA
				CHECKED BY: WAG		SHEET NO. 371

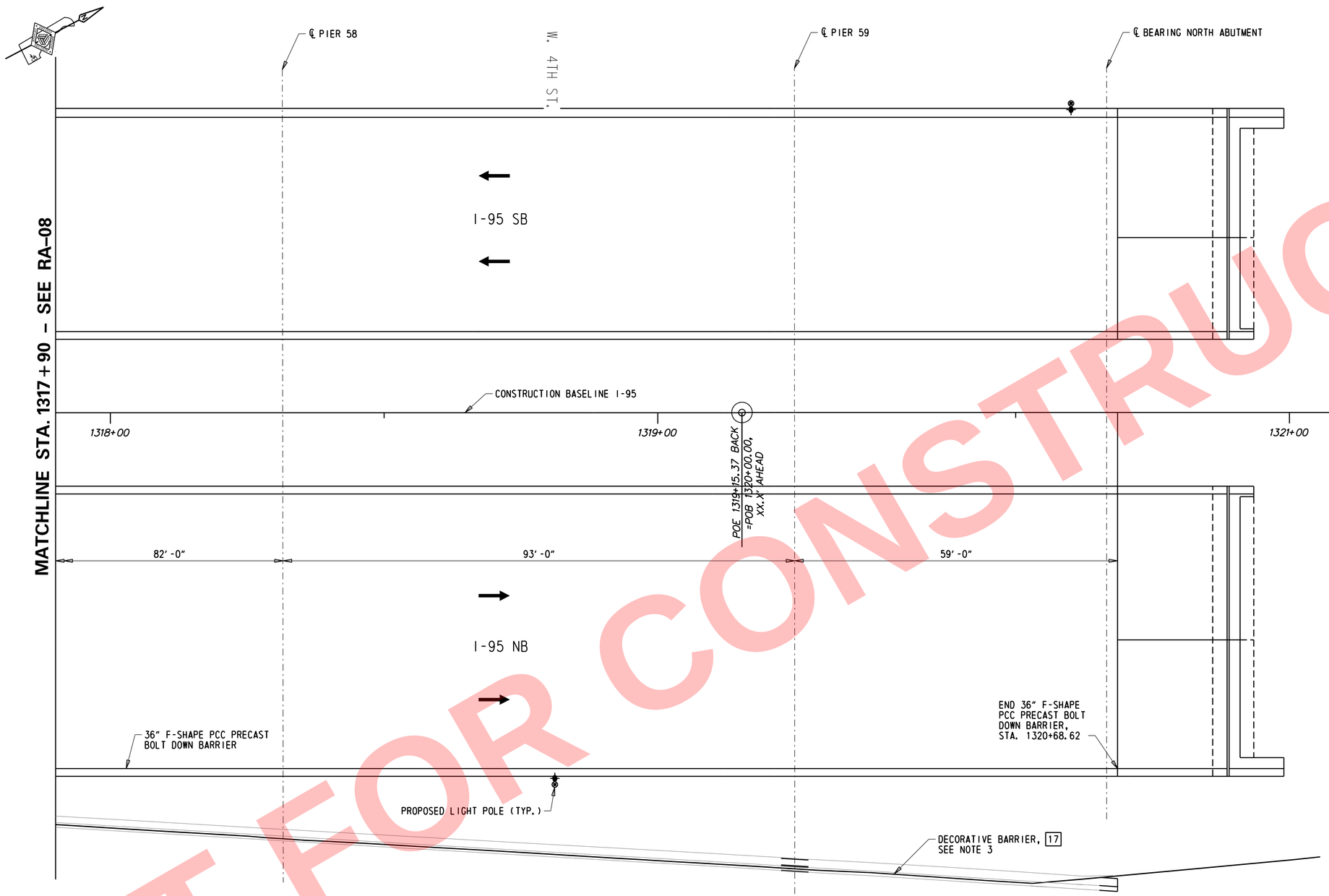

FENCE AND BARRIER LAYOUT

NOTES:

1. FOR DECORATIVE BARRIER DETAILS, SEE DWG. RA-10.
2. PARAPET IN SPANS WITH DECORATIVE BARRIER IS 1'-7½" WIDE, SEE DWG. PA-01 FOR DETAIL.
3. IN SPANS 51N THROUGH 59N, POSTS AND NEW PANELS OF REFURBISHED DECORATIVE BARRIER SHALL BE RE-MOUNTED ON EXISTING ANCHOR RODS.

NOT FOR CONSTRUCTION

ADDENDA / REVISIONS		SCALE 0 10 20 30 FEET	REHABILITATION OF I-95 FROM I-495 TO NORTH OF BRANDYWINE RIVER BRIDGE	CONTRACT T201407404	BRIDGE NO. 1 748 059	FENCE AND BARRIER LAYOUT 9 OF 9	RA-09
				COUNTY NEW CASTLE	DESIGNED BY: DAN		SECTION WRA
					CHECKED BY: WAG		SHEET NO. 372

N:\31987-00A\Contract_I-95\C&D\Bridge\BRT-748_RA09.dgn
5/31/2019 12:13:19 PM

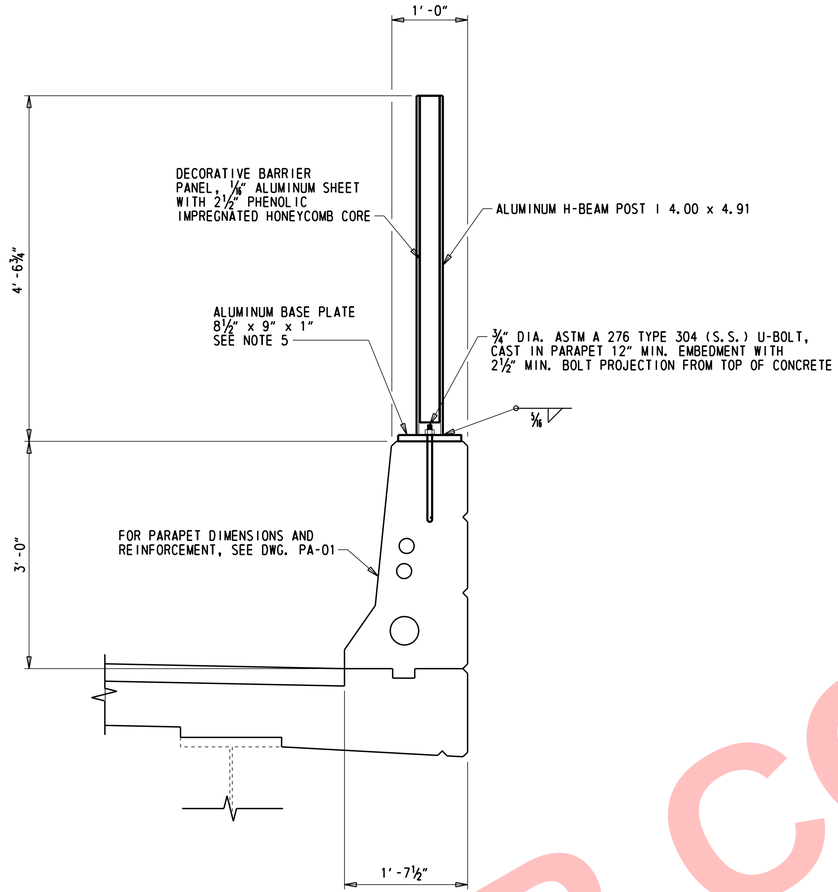

RAILROAD PROTECTIVE BARRIER

1" = 1'-0"

RAILROAD PROTECTIVE BARRIER NOTES:

1. COST TO REMOVE THE EXISTING RAILROAD PROTECTIVE BARRIER WILL BE INCIDENTAL TO ITEM 211000 - REMOVAL OF STRUCTURES AND OBSTRUCTIONS.
2. ALUMINUM PANELS, POSTS, AND BASE PLATES SHALL BE IN ACCORDANCE WITH SECTION 1044. PAYMENT WILL BE MADE UNDER ITEM 7275xx - RAILROAD PROTECTIVE BARRIER.
3. EXISTING DECORATIVE W'S ON THE EXISTING BARRIER SHALL BE SALVAGED, CLEANED AND PAINTED IN ACCORDANCE WITH THE PERTINENT ITEM. PAYMENT WILL BE INCIDENTAL TO ITEM 7275xx - RAILROAD PROTECTIVE BARRIER.
4. NUTS AND WASHERS SHALL BE IN CONFORMANCE WITH ASTM A 320 TYPE 304 (S.S.). WASHERS SHALL BE OVERSIZED TO COVER 1 1/8" DIA. HOLES IN BASE PLATE. PAYMENT FOR ALL HARDWARE INCLUDING U-BOLTS WILL BE INCIDENTAL TO ITEM 7275xx - RAILROAD PROTECTIVE BARRIER.
5. ALUMINUM SURFACES IN CONTACT WITH CONCRETE SHALL BE IN ACCORDANCE WITH SUBSECTION 626.03.C.8.

NOT FOR CONSTRUCTION

N:\31987-00A\Control\I-95\CADD\Bridge\BR1-748_RA10.dgn
5/31/2019 12:15:20 PM

ADDENDA / REVISIONS		SCALE AS NOTED	REHABILITATION OF I-95 FROM I-495 TO NORTH OF BRANDYWINE RIVER BRIDGE	CONTRACT T201407404	BRIDGE NO. 1 748 059	RAILROAD PROTECTIVE BARRIER DETAILS	RA-10
				COUNTY NEW CASTLE	DESIGNED BY: DAN		SECTION WRA
					CHECKED BY: WAG		SHEET NO. 373

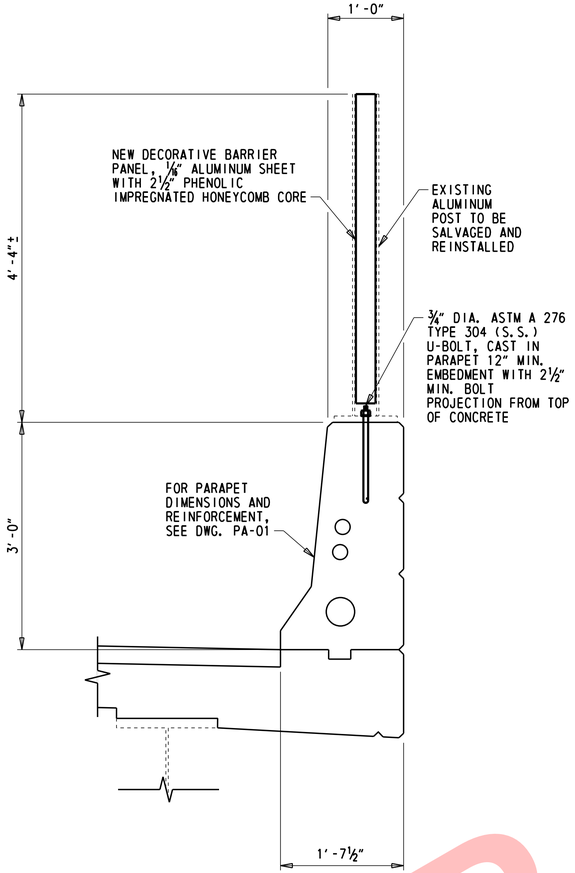

DECORATIVE BARRIER AT NEW 36" F-SHAPE PARAPETS

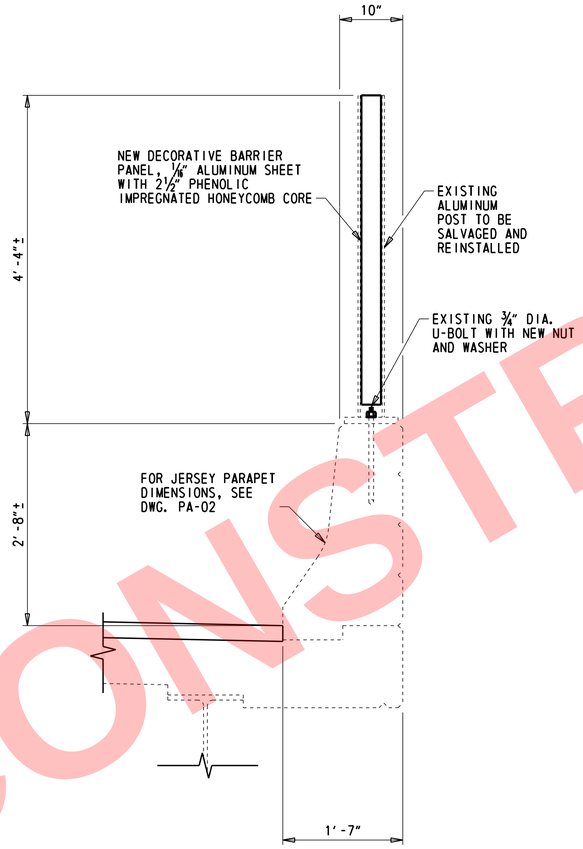

DECORATIVE BARRIER AT EXISTING 34" JERSEY PARAPET

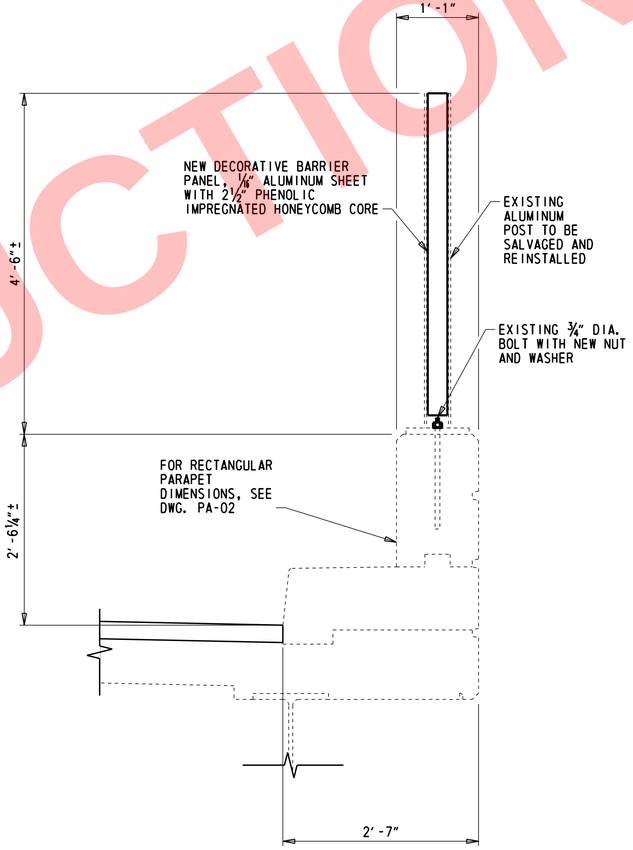

DECORATIVE BARRIER AT EXISTING RECTANGULAR PARAPETS

DECORATIVE BARRIER

1" = 1'-0"

DECORATIVE BARRIER NOTES:

1. COST TO REMOVE AND SALVAGE THE EXISTING DECORATIVE BARRIER WILL BE INCIDENTAL TO ITEM 211000 - REMOVAL OF STRUCTURES AND OBSTRUCTIONS.
2. ALUMINUM PANELS SHALL BE IN ACCORDANCE WITH SECTION 1044. PAYMENT FOR NEW ALUMINUM PANELS WILL BE MADE UNDER ITEM 7275xx - REINSTALL DECORATIVE BARRIER.
3. EXISTING ALUMINUM POSTS TO BE SALVAGED SHALL BE REFURBISHED IN ACCORDANCE WITH ITEM 7275xx - REINSTALL DECORATIVE BARRIER.
4. EXISTING DECORATIVE W'S ON THE EXISTING PANELS SHALL BE SALVAGED, CLEANED AND PAINTED IN ACCORDANCE WITH THE PERTINENT ITEM. PAYMENT WILL BE INCIDENTAL TO ITEM 7275xx - REINSTALL DECORATIVE BARRIER.
5. NUTS AND WASHERS SHALL BE IN CONFORMANCE WITH ASTM A 320 TYPE 304 (S.S.). WASHERS SHALL BE OVERSIZED TO COVER 1 1/8" DIA. OVERSIZED HOLES IN BASE PLATE. PAYMENT FOR ALL HARDWARE INCLUDING U-BOLTS WILL BE INCIDENTAL TO ITEM 7275xx - REINSTALL DECORATIVE BARRIER.
6. ALUMINUM SURFACES IN CONTACT WITH CONCRETE SHALL BE IN ACCORDANCE WITH SUBSECTION 626.03.C.8.

NOT FOR CONSTRUCTION

N:\31987-00A\Contract_I-95\ADD\Bridge\BRI-748_RA11.dgn
5/31/2019 12:15:21 PM

ADDENDA / REVISIONS		SCALE AS NOTED	REHABILITATION OF I-95 FROM I-495 TO NORTH OF BRANDYWINE RIVER BRIDGE	CONTRACT T201407404	BRIDGE NO. 1 748 059	DECORATIVE BARRIER DETAILS	RA-11
				COUNTY NEW CASTLE	DESIGNED BY: DAN		SECTION WRA
					CHECKED BY: WAG		SHEET NO. 2-373A

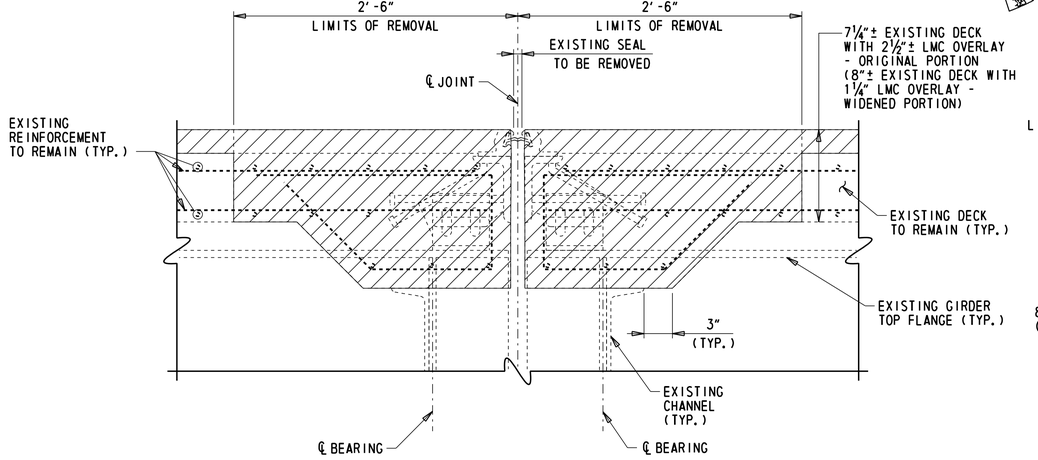

SECTION A-A REMOVAL

1½" = 1'-0"

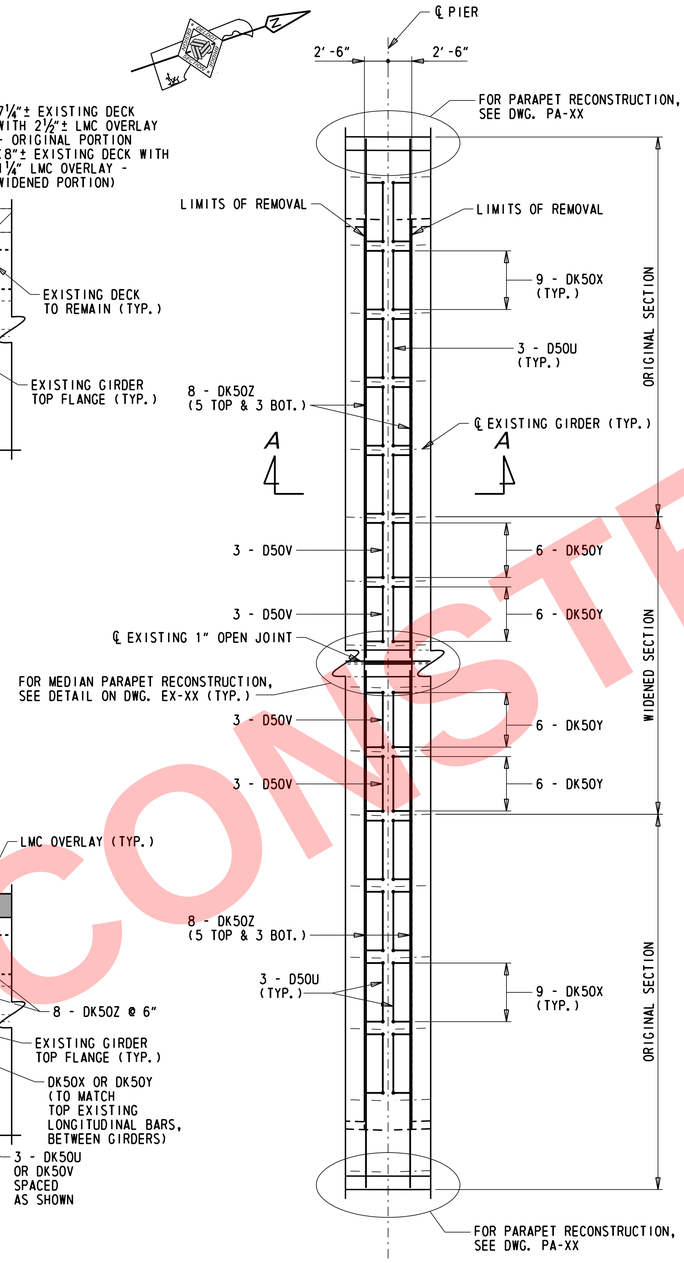

PIERS 1 THROUGH 9

⅛" = 1'-0"

NOTE: PIER 1 SHOWN, OTHER PIERS SIMILAR

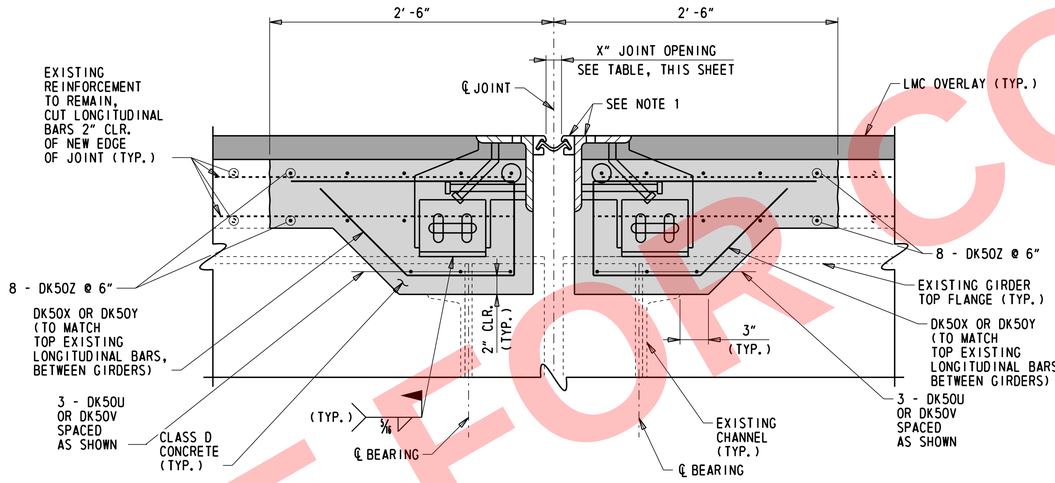

SECTION A-A RECONSTRUCTION

1½" = 1'-0"

LEGEND:

- REMOVAL LIMITS
- CLASS D CONCRETE
- LMC OVERLAY

NOTES:

1. FOR JOINT ASSEMBLY AND STEEL EXTRUSION DETAILS AND STRIP SEAL EXPANSION JOINT NOTES, SEE DWG. EX-17.

JOINT RECONSTRUCTION NOTES:

1. NEW STRIP SEAL ASSEMBLY SHOWN FOR GRAPHICAL PURPOSES ONLY. DETAILS MAY VARY BY MANUFACTURER. STRIP SEAL AND ASSEMBLY SHALL BE IN ACCORDANCE WITH ITEM 624000 - PREFABRICATED EXPANSION JOINT SYSTEM, 3".
2. CLASS D CONCRETE SHALL BE IN ACCORDANCE WTIH ITEM 610017 - PORTLAND CEMENT CONCRETE MASONRY, SUPERSTRUCTURE, CLASS D. CLEAN AND APPLY EPOXY BONDING COMPOUND TO ALL REMOVAL AND ROUGHENED SURFACES PRIOR TO PLACING CONCRETE. COST FOR THIS WORK SHALL BE INCIDENTAL TO ITEM 610017.
3. EXISTING BARS TO REMAIN SHALL BE CLEANED IN ACCORDANCE WITH SECTION 628.03(E)7. BARS WITH CORROSION, BROKEN, OR WITH INADEQUATE BOND SHALL BE REPAIRED IN ACCORDANCE WITH SECTION 628.03(E)7. PAYMENT FOR CLEANING WILL BE INCIDENTAL TO ITEM 624000 - PREFABRICATED EXPANSION JOINT SYSTEM, 3".
4. ALL NEW REINFORCING STEEL REQUIRED TO COMPLETE THE JOINT HEADER REPAIRS SHALL HAVE 2" MIN. CONCRETE COVER UNLESS SHOWN OTHERWISE. PAYMENT FOR ALL NEW REINFORCING STEEL SHALL BE UNDER ITEM 611000 - BAR REINFORCEMENT.
5. THE CONTRACTOR SHALL USE CARE DURING THE REMOVAL OF THE EXISTING CONCRETE AND PORTIONS OF THE JOINT SYSTEM TO AVOID DAMAGE TO THE EXISTING PORTIONS OF THE STRUCTURE THAT ARE TO REMAIN IN PLACE. ANY DAMAGE INCURRED TO EXISTING PORTIONS OF THE STRUCTURE TO REMAIN SHALL BE REPAIRED BY THE CONTRACTOR TO THE COMPLETE SATISFACTION OF THE ENGINEER AT NO ADDITIONAL COST TO THE DEPARTMENT.
6. PRIOR TO REMOVAL OF THE EXISTING ROADWAY JOINT AND FABRICATION OF THE PROPOSED JOINT MATERIALS, THE CONTRACTOR SHALL FIELD VERIFY THE CROSS SLOPE OF THE ROADWAY AT EACH INDIVIDUAL JOINT LOCATION. AT A MINIMUM, POINTS SHALL BE TAKEN AT THE FLOWLINES AND ALL GRADE BREAKS.

DECK JOINT OPENINGS, X

LOCATION	TEMPERATURE (°F)									MOVEMENT CLASSIFICATION
	20°	30°	40°	50°	60°	68°	70°	80°	90°	100°	
PIER 1S	2⅛"	2"	1⅞"	1⅞"	1¾"	1⅞"	1⅞"	1⅝"	1½"	1⅜"	3"
PIER 1N	2⅛"	2"	1⅞"	1⅞"	1¾"	1⅞"	1⅞"	1¾"	1½"	1⅜"	3"
PIER 2S	2½"	2⅛"	2⅛"	1⅞"	1¾"	1⅝"	1⅞"	1⅞"	1⅜"	1"	3"
PIER 2N	2½"	2¼"	2⅛"	1⅞"	1¾"	1⅝"	1⅞"	1⅞"	1¾"	1"	3"
PIER 3S	1¾"	1¾"	1¾"	1¾"	1¾"	1¾"	1¾"	1¾"	1¾"	1¾"	3"
PIER 3N	1¾"	1¾"	1¾"	1¾"	1¾"	1¾"	1¾"	1¾"	1¾"	1¾"	3"
PIER 4S	2½"	2⅛"	2⅛"	1⅞"	1¾"	1⅝"	1⅞"	1⅝"	1¾"	1"	3"
PIER 4N	2½"	2⅛"	2⅛"	1⅞"	1¾"	1⅝"	1⅞"	1⅝"	1⅞"	1"	3"
PIER 5S	1¾"	1¾"	1¾"	1¾"	1¾"	1¾"	1¾"	1¾"	1¾"	1¾"	3"
PIER 5N	1¾"	1¾"	1¾"	1¾"	1¾"	1¾"	1¾"	1¾"	1¾"	1¾"	3"
PIER 6S	2½"	2⅛"	2⅛"	1⅞"	1¾"	1⅝"	1⅞"	1⅝"	1⅞"	1"	3"
PIER 6N	2⅛"	2⅛"	2⅛"	1⅞"	1¾"	1⅝"	1⅞"	1⅝"	1⅞"	1⅛"	3"
PIER 7S	1¾"	1¾"	1¾"	1¾"	1¾"	1¾"	1¾"	1¾"	1¾"	1¾"	3"
PIER 7N	1¾"	1¾"	1¾"	1¾"	1¾"	1¾"	1¾"	1¾"	1¾"	1¾"	3"
PIER 8S	2½"	2⅛"	2⅛"	1⅞"	1¾"	1⅝"	1⅞"	1⅝"	1¾"	1"	3"
PIER 8N	2⅛"	2¼"	2⅛"	1⅞"	1¾"	1⅝"	1⅞"	1⅝"	1¼"	1⅛"	3"
PIER 9S	2⅛"	2⅛"	2"	1⅞"	1¾"	1⅝"	1⅞"	1½"	1⅜"	1⅛"	3"
PIER 9N	2⅛"	2⅛"	2"	1⅞"	1¾"	1⅝"	1⅞"	1½"	1⅜"	1⅛"	3"
PIER 27S	1⅝"	1⅝"	1⅞"	1⅛"	1¾"	1⅛"	1⅛"	1⅝"	1⅛"	1⅛"	3"
PIER 27N	2"	1⅝"	1⅞"	1⅛"	1¾"	1⅛"	1⅛"	1⅝"	1⅛"	1½"	3"
PIER 28S	2⅛"	2⅛"	2"	1⅞"	1¾"	1⅛"	1⅞"	1½"	1⅛"	1⅛"	3"
PIER 28N	2⅛"	2⅛"	2"	1⅞"	1¾"	1⅛"	1⅝"	1½"	1⅜"	1⅛"	3"
PIER 30S	2⅛"	2⅛"	2"	1⅞"	1¾"	1⅛"	1⅝"	1½"	1⅛"	1⅛"	3"
PIER 30N	2⅛"	2⅛"	2"	1⅞"	1¾"	1⅛"	1⅝"	1½"	1⅛"	1⅛"	3"
PIER 32S	2⅜"	2¼"	2⅛"	1⅛"	1¾"	1⅝"	1⅛"	1¼"	1¼"	1⅛"	3"
PIER 32N	2⅜"	2¼"	2⅛"	1⅛"	1¾"	1⅝"	1⅛"	1⅛"	1¼"	1⅛"	3"
PIER 34S	1⅝"	1⅞"	1⅞"	1⅛"	1¾"	1⅛"	1⅛"	1⅝"	1⅝"	1⅛"	3"
PIER 34N	1⅝"	1⅞"	1⅞"	1⅛"	1¾"	1⅛"	1⅛"	1⅞"	1⅝"	1⅛"	3"
PIER 35S	2⅛"	2⅛"	1⅝"	1⅞"	1¾"	1⅛"	1⅝"	1⅛"	1¼"	1⅛"	3"
PIER 35N	2⅛"	2⅛"	1⅝"	1⅞"	1¾"	1⅛"	1⅝"	1⅛"	1⅛"	1⅛"	3"
PIER 37S	2⅛"	2⅛"	1⅝"	1⅞"	1¾"	1⅛"	1⅞"	1¼"	1⅛"	1⅛"	3"
PIER 37N	2⅛"	2⅛"	1⅝"	1⅞"	1¾"	1⅛"	1⅝"	1⅛"	1¼"	1⅛"	3"
PIER 39S	2⅛"	2⅛"	1⅝"	1⅞"	1¾"	1⅛"	1⅝"	1⅛"	1⅛"	1⅛"	3"
PIER 39N	2⅛"	2⅛"	1⅝"	1⅞"	1¾"	1⅛"	1⅝"	1⅛"	1⅛"	1⅛"	3"
PIER 41S	2⅛"	2⅛"	1⅝"	1⅞"	1¾"	1⅛"	1⅝"	1⅛"	1⅛"	1⅛"	3"
PIER 41N	2⅛"	2⅛"	1⅝"	1⅞"	1¾"	1⅛"	1⅝"	1⅛"	1⅛"	1⅛"	3"
PIER 43S	2⅛"	2⅛"	1⅝"	1⅞"	1¾"	1⅛"	1⅝"	1⅛"	1⅛"	1⅛"	3"
PIER 43N	2⅛"	2⅛"	1⅝"	1⅞"	1¾"	1⅛"	1⅝"	1⅛"	1⅛"	1⅛"	3"
PIER 45S	2¼"	2⅛"	2"	1⅞"	1¾"	1⅝"	1⅝"	1½"	1⅜"	1¼"	3"
PIER 45N	2⅛"	2⅛"	2"	1⅞"	1¾"	1⅛"	1⅝"	1½"	1⅜"	1⅛"	3"
PIER 47S	2⅛"	2⅛"	2"	1⅞"	1¾"	1⅛"	1⅞"	1½"	1⅜"	1⅛"	3"
PIER 47N	2⅛"	2⅛"	2"	1⅞"	1¾"	1⅛"	1⅝"	1½"	1⅜"	1⅛"	3"
PIER 49S	2¼"	2⅛"	2"	1⅞"	1¾"	1⅝"	1⅝"	1½"	1⅜"	1¼"	3"
PIER 49N	2¼"	2⅛"	2"	1⅞"	1¾"	1⅝"	1⅞"	1½"	1⅜"	1¼"	3"
PIER 51S	2⅛"	2⅛"	1⅝"	1⅞"	1¾"	1⅛"	1⅝"	1⅛"	1⅛"	1⅛"	3"
PIER 51N	2⅛"	2⅛"	1⅝"	1⅞"	1¾"	1⅛"	1⅝"	1⅛"	1⅛"	1⅛"	3"
PIER 53S	2⅛"	2⅛"	1⅝"	1⅞"	1¾"	1⅛"	1⅝"	1⅛"	1⅛"	1⅛"	3"
PIER 53N	2⅛"	2⅛"	1⅝"	1⅞"	1¾"	1⅛"	1⅝"	1⅛"	1⅛"	1⅛"	3"
PIER 55S	2⅛"	2⅛"	2"	1⅞"	1¾"	1⅛"	1⅝"	1½"	1⅜"	1⅛"	3"
PIER 55N	2⅛"	2⅛"	2"	1⅞"	1¾"	1⅛"	1⅝"	1½"	1⅜"	1⅛"	3"
PIER 57S	2¼"	2⅛"	2"	1⅞"	1¾"	1⅝"	1⅞"	1½"	1⅜"	1¼"	3"
PIER 57N	2¼"	2⅛"	2"	1⅞"	1¾"	1⅝"	1⅝"	1½"	1⅜"	1¼"	3"
PIER 59S	2⅛"	2⅛"	2"	1⅞"	1¾"	1⅛"	1⅝"	1½"	1⅜"	1⅛"	3"
PIER 59N	2⅛"	2⅛"	2"	1⅞"	1¾"	1⅛"	1⅝"	1½"	1⅜"	1⅛"	3"

NOT FOR CONSTRUCTION

N:\31887-004\Control-I-95\CADD\Bridge\BR1-748_EX01.dgn
5/31/2019 12:13:22 PM

ADDENDA / REVISIONS		SCALE AS NOTED	REHABILITATION OF I-95 FROM I-495 TO NORTH OF BRANDYWINE RIVER BRIDGE	CONTRACT T201407404	BRIDGE NO. 1 748 059	EXPANSION JOINT DETAILS - 1	EX-01 SECTION WRA
				COUNTY NEW CASTLE	DESIGNED BY: DAN		SHEET NO. 381
					CHECKED BY: WAG		

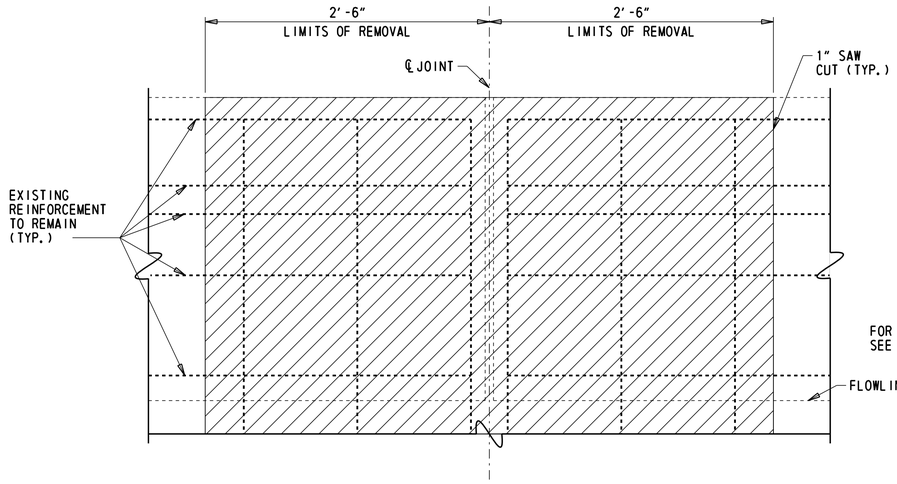

EXISTING MEDIAN PARAPET REMOVAL AT EXPANSION JOINTS

(PIERS 1 THROUGH 9)

1½" = 1'-0"

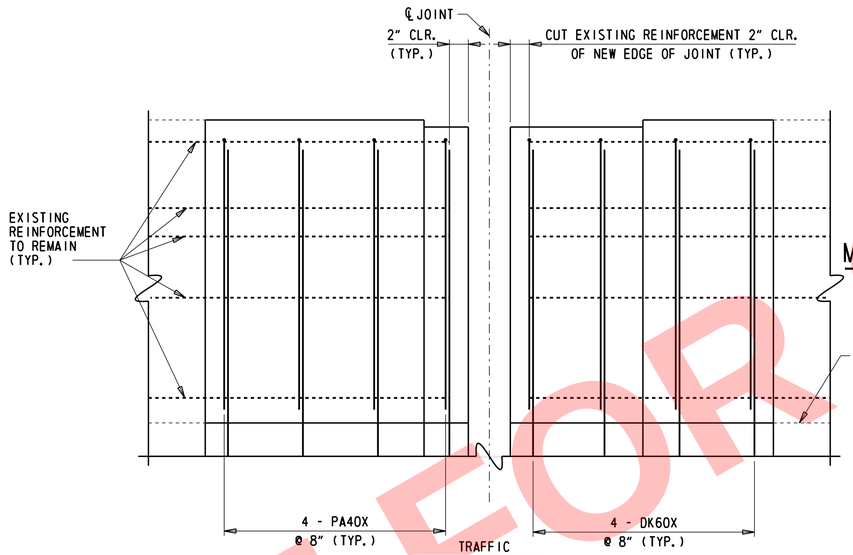

MEDIAN PARAPET RECONSTRUCTION - REINFORCEMENT

(PIERS 1 THROUGH 9)

1½" = 1'-0"

LEGEND:

- REMOVAL LIMITS
- RECESS IN PARAPET

PARAPET JOINT PLATE NOTES:

1. FORM CONCRETE RECESS AREA IN PARAPET AND GRIND TO PROVIDE SMOOTH SURFACE. APPLY ONE COAT OF ASPHALT CEMENT TO FREE SIDE OF JOINT IN ACCORDANCE WITH SECTION 1012 OF THE STANDARD SPECIFICATIONS TO ALLOW BENT SLIDING PLATE TO MOVE FREELY WITHOUT FRICTION. PAYMENT WILL BE INCIDENTAL TO ITEM NO. 610008 - PORTLAND CEMENT CONCRETE MASONRY, PARAPET, CLASS A.
2. PLACE PARAPET CONCRETE WITH STEEL BENT PLATES, INSERTS, AND BOLTS IN PLACE TO ENSURE PROPER ALIGNMENT OF INSERTS AND HOLES IN THE STEEL PLATE. REMOVE PLATES TO INSTALL SEAL. APPLY APPROVED BONDBREAKER TO SLIDING PLATES PRIOR TO INSTALLATION.
3. GRIND ALL STEEL EDGES EXPOSED TO TRAFFIC TO ⅛" MIN. RADIUS.
4. BOLTS SHALL BE ASTM A 304 STAINLESS STEEL COUNTERSUNK SCREW WITH ASTM A108 CONCRETE THREADED ANCHOR OR THREADED INSERT. HEAD OF BOLTS SHALL BE FLUSH WITH FACE OF STEEL PLATE.
5. THE CONTRACTOR SHALL SUBMIT WORKING DRAWINGS OF TRAFFIC BARRIER PLATES FOR APPROVAL.
6. FOR ADDITIONAL NOTES AND DETAILS, SEE DWG. EX-XX TROUGH EX-XX.
7. ⅜" PARAPET PLATE SHALL BE UNPAINTED GALVANIZED STEEL. PAYMENT FOR PARAPET JOINT PLATES AND PARTIAL REMOVAL OF PARAPET FOR JOINT RECONSTRUCTION WILL BE INCIDENTAL TO ITEM 624000 - PREFABRICATED JOINT SYSTEM, 3".

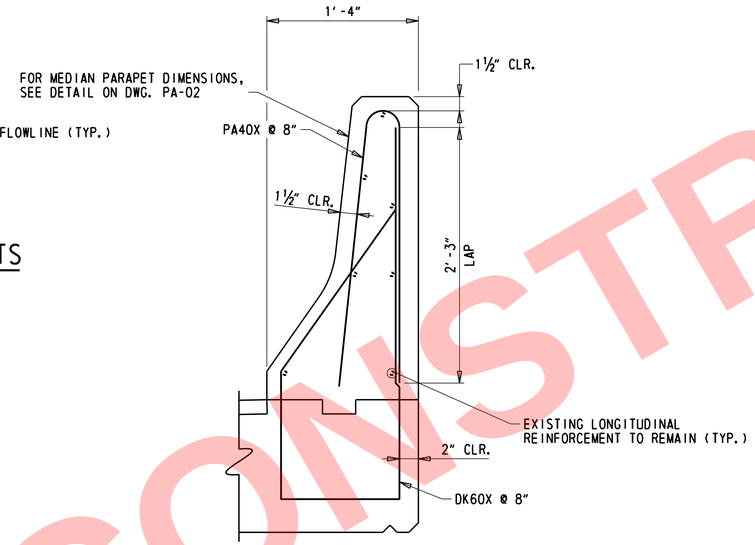

MEDIAN PARAPET REINFORCEMENT AT EXPANSION JOINTS

1½" = 1'-0"

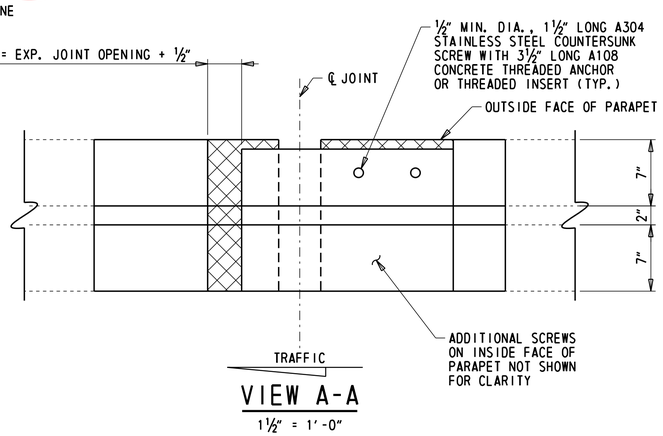

VIEW A-A

1½" = 1'-0"

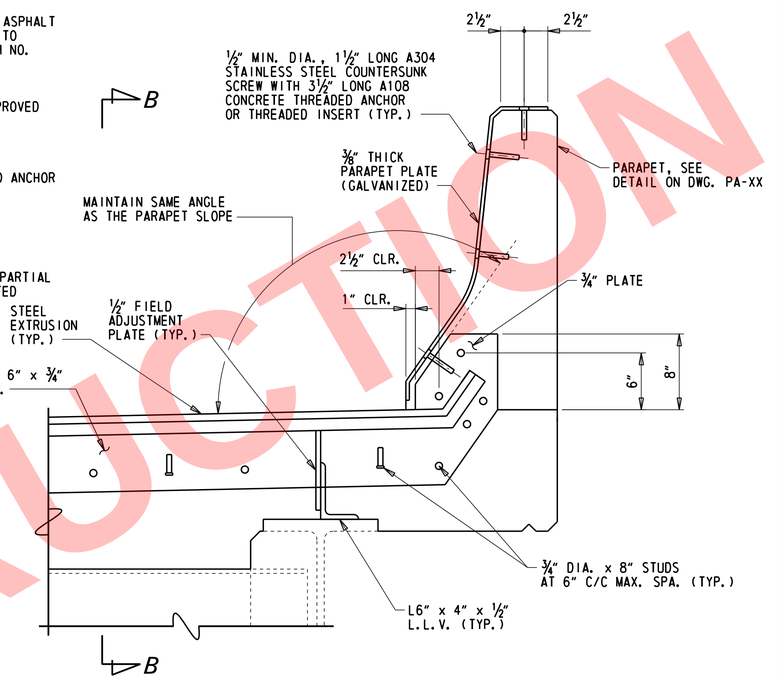

TYPICAL SECTION AT JOINT

1½" = 1'-0"

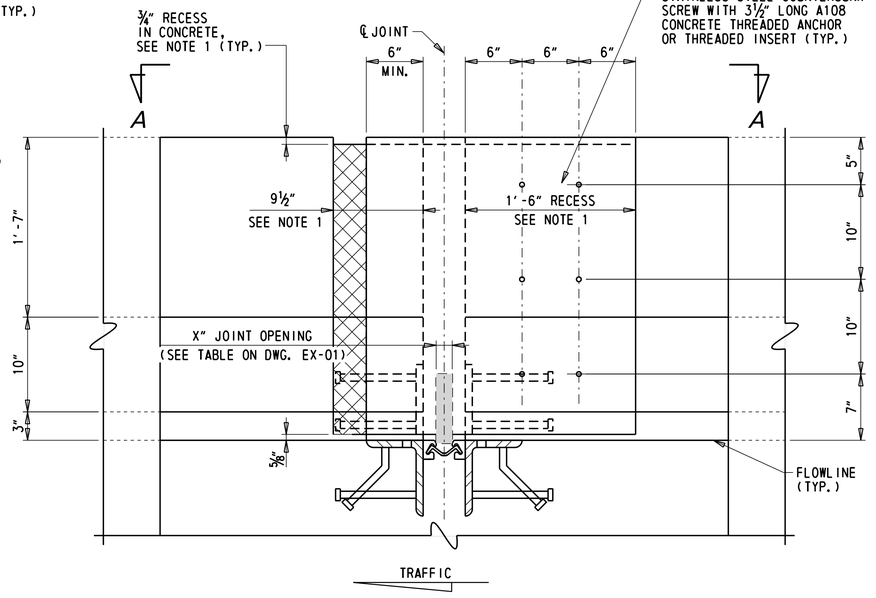

VIEW B-B

1½" = 1'-0"

NOTES:

1. DETAILS SHOWN FOR A 32" MEDIAN PARAPET, 36" PARAPET AND RECTANGULAR SIMILAR.

NOT FOR CONSTRUCTION

N:\31987-004\Control-I-95\CADD\Bridge\BR1-748_EX02.dgn
5/31/2019 12:39:22 PM

ADDENDA / REVISIONS	SCALE AS NOTED	REHABILITATION OF I-95 FROM I-495 TO NORTH OF BRANDYWINE RIVER BRIDGE	CONTRACT T201407404	BRIDGE NO. 1 748 059	EXPANSION JOINT DETAILS – 2	EX-02 SECTION WRA
			COUNTY NEW CASTLE	DESIGNED BY: DAN		SHEET NO. 382
				CHECKED BY: WAG		

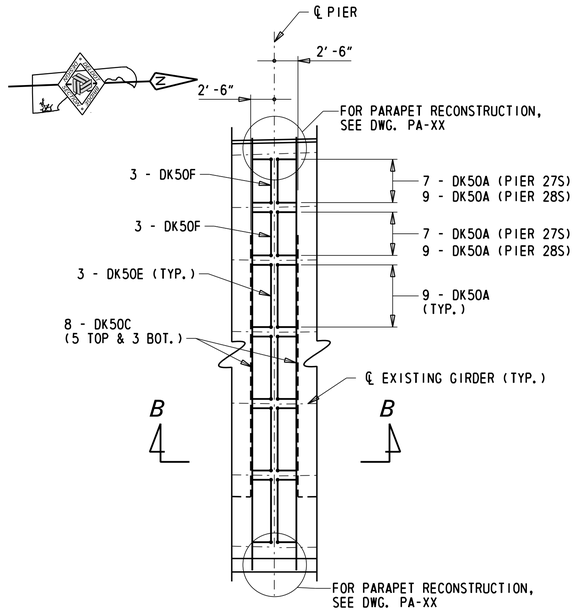

PLAN - PIERS 27S & 28S

1/8" = 1'-0"

NOTE: PIER 27S SHOWN, OTHER PIERS SIMILAR

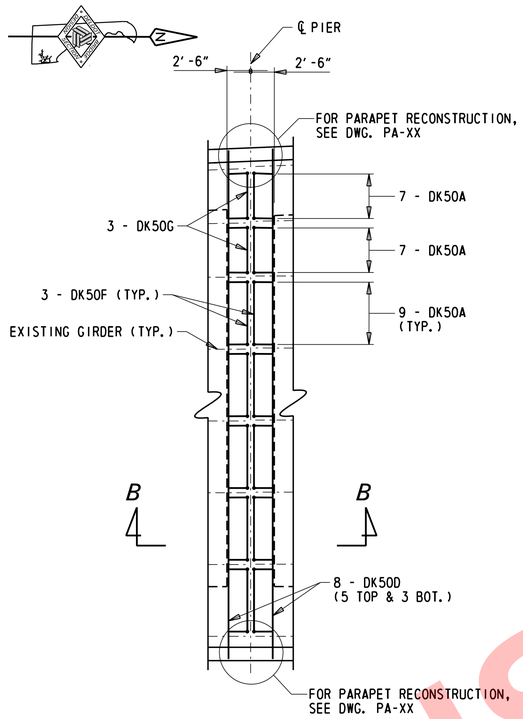

PLAN - PIER 30S

1/8" = 1'-0"

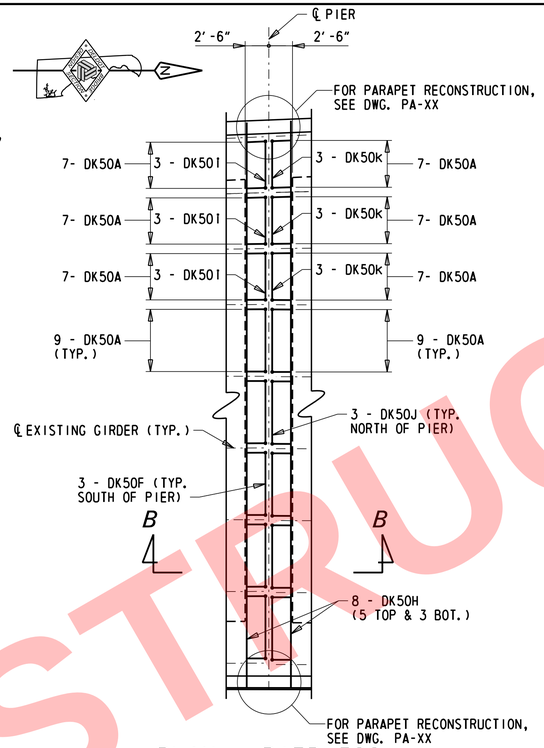

PLAN - PIER 32S

1/8" = 1'-0"

NOTES:

1. FOR JOINT RECONSTRUCTION NOTES, SEE DWG. EX-01.
2. FOR SECTION B-B AND C-C, SEE EX-XX.

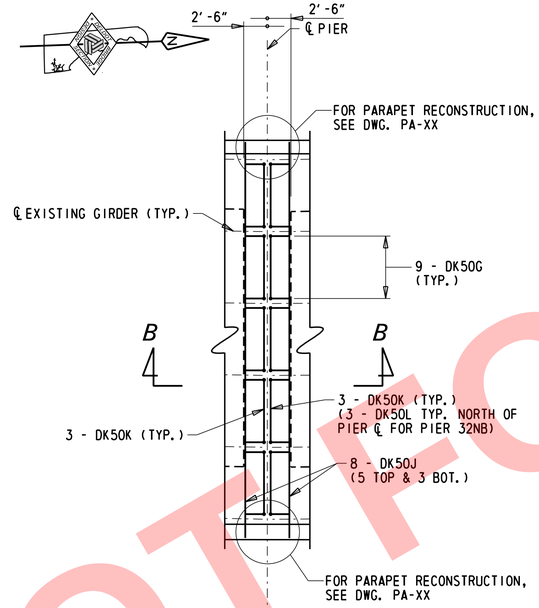

PLAN - PIERS 27N, 30N, 32N, 34N, 35N, 37N, 39N, 41N, 43N, 45N, 47N, 49N

1/8" = 1'-0"

NOTE: PIER 27N SHOWN, OTHER PIERS SIMILAR

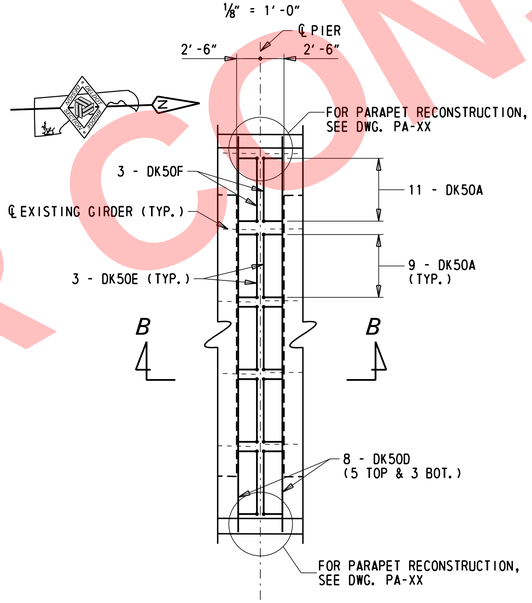

PLAN - PIER 28N

1/8" = 1'-0"

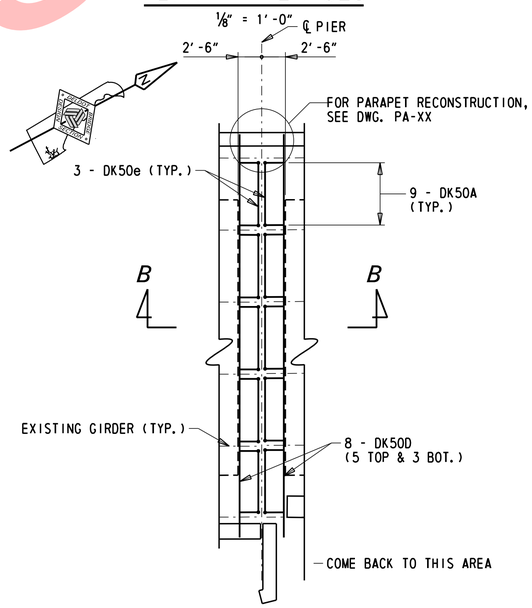

PLAN - PIER 51N

1/8" = 1'-0"

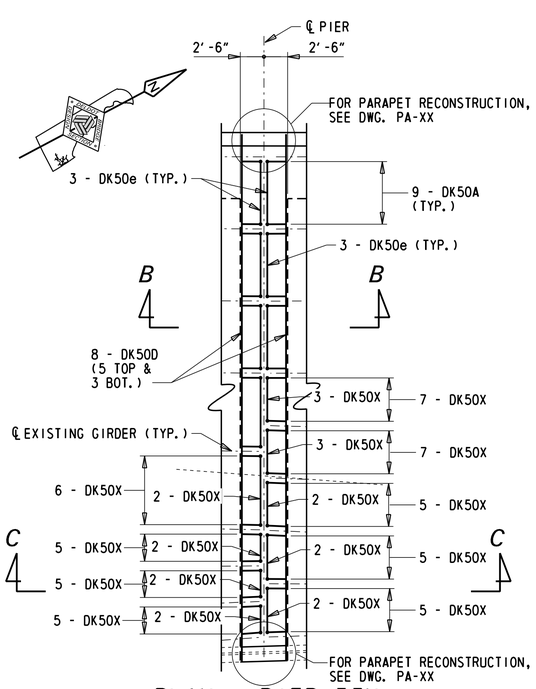

PLAN - PIER 53N

1/8" = 1'-0"

NOT FOR CONSTRUCTION

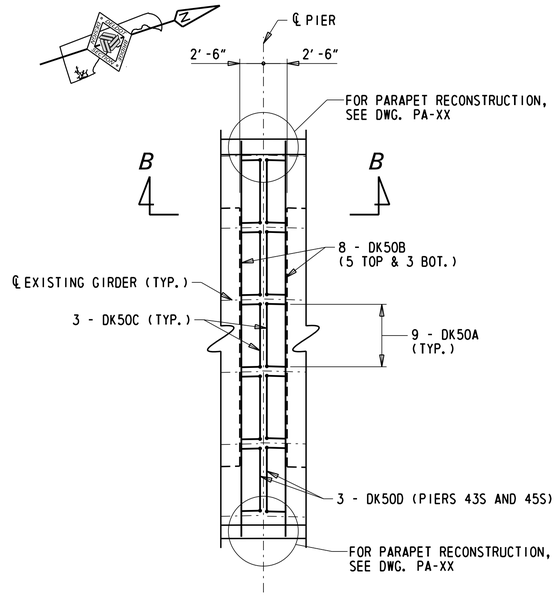

PLAN - PIERS 34S, 35S, 37S, 39S, 41S
43S, 45S, 47S, 49S, 51S, 53S, 55S, 57S, 59S

1/8" = 1'-0"

NOTE: PIER 41SB SHOWN, OTHER PIERS SIMILAR

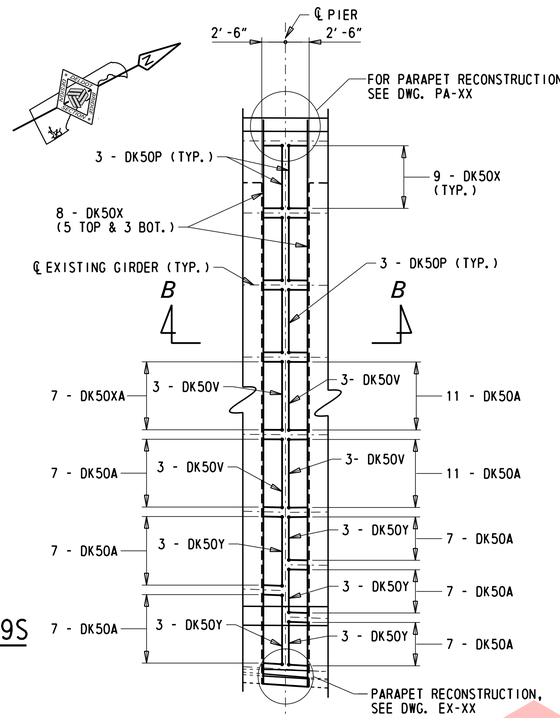

PLAN - PIER 57N

1/8" = 1'-0"

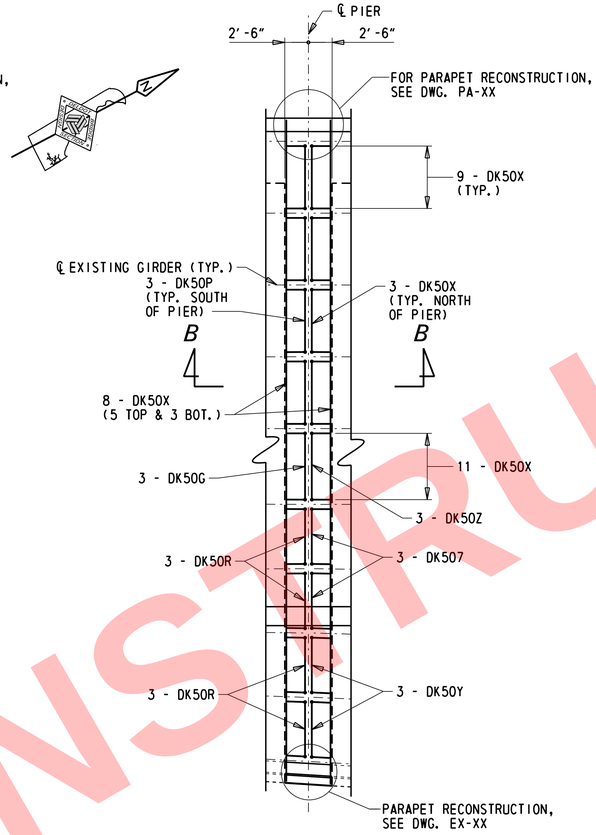

PLAN - PIER 59N

1/8" = 1'-0"

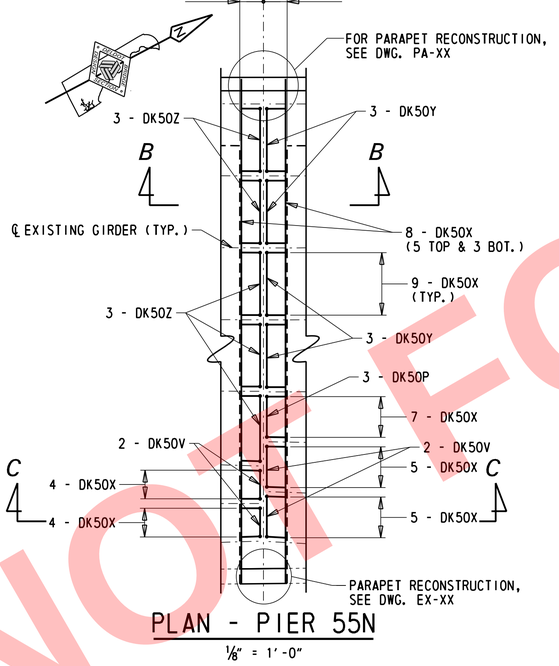

PLAN - PIER 55N

1/8" = 1'-0"

NOTES:

1. FOR SECTION B-B AND C-C, SEE DWG. EX-XX.

NOT FOR CONSTRUCTION

N:\31987-004\Control_I-95\CADD\Bridge\BR1-748_EX04.dgn
5/31/2019 12:13:24 PM

ADDENDA / REVISIONS		SCALE AS NOTED	REHABILITATION OF I-95 FROM I-495 TO NORTH OF BRANDYWINE RIVER BRIDGE	CONTRACT T201407404	BRIDGE NO. 1 748 059	EXPANSION JOINT DETAILS - 4	EX-04 SECTION WRA
				COUNTY NEW CASTLE	DESIGNED BY: DAN		SHEET NO. 384
					CHECKED BY: WAG		

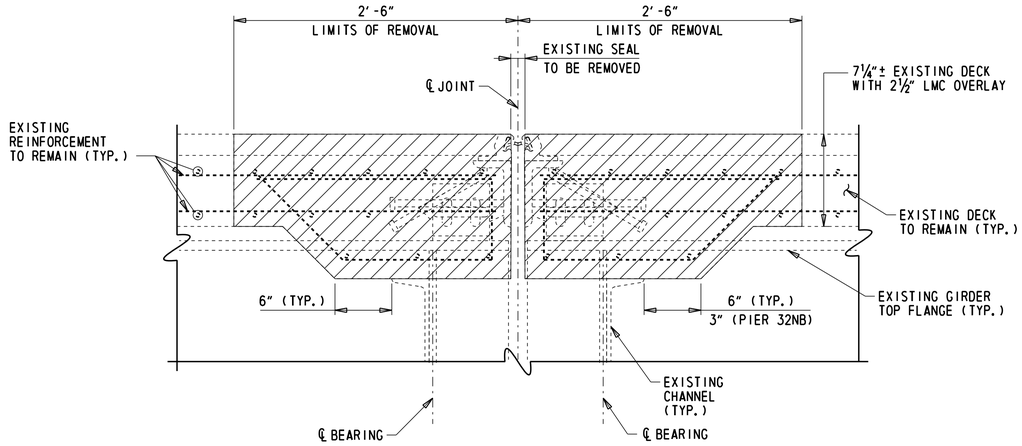

SECTION B-B REMOVAL

1½″ = 1′-0″

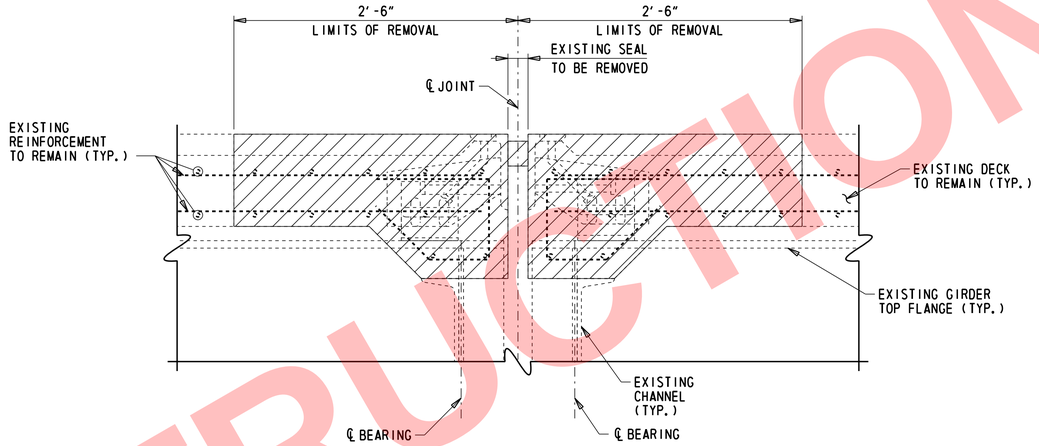

SECTION C-C REMOVAL

1½″ = 1′-0″

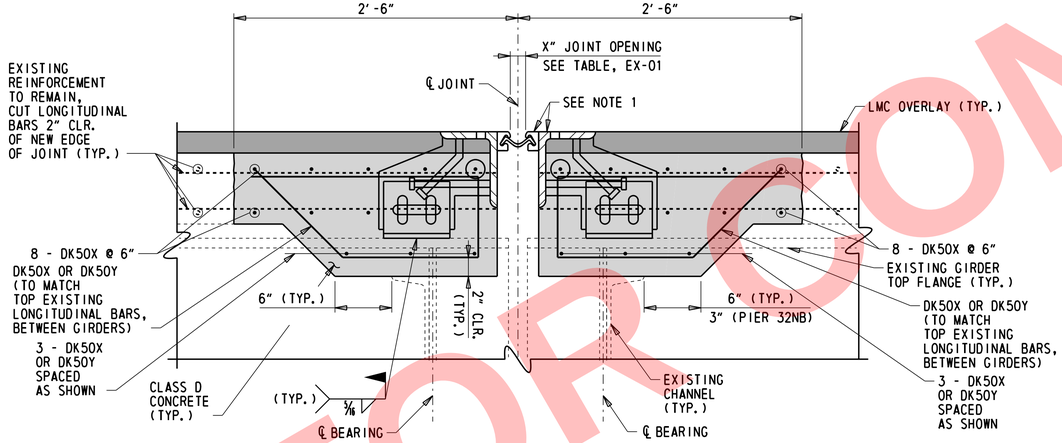

SECTION B-B RECONSTRUCTION

1½″ = 1′-0″

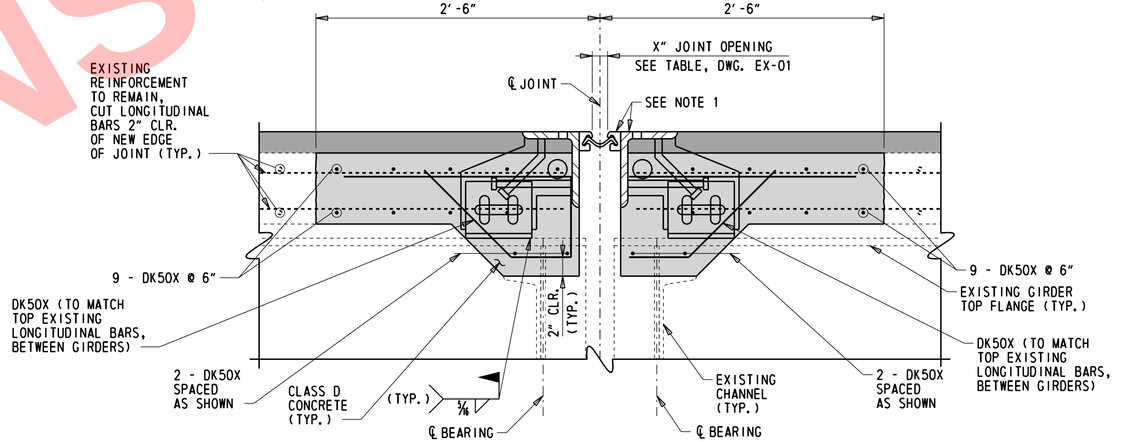

SECTION C-C RECONSTRUCTION

1½″ = 1′-0″

LEGEND:

- REMOVAL LIMITS
- CLASS D CONCRETE
- LMC OVERLAY

NOTES:

1. FOR JOINT ASSEMBLY AND STEEL EXTRUSION DETAILS AND STRIP SEAL EXPANSION JOINT NOTES, SEE DWG. EX-17.
2. FOR JOINT RECONSTRUCTION NOTES, SEE DWG. EX-01.

NOT FOR CONSTRUCTION

N:\31987-004\Contract_I-95\CADD\Bridge\BRI-748_EX05.dgn
5/31/2019 12:13:25 PM

ADDENDA / REVISIONS	

SCALE AS NOTED

REHABILITATION OF I-95 FROM I-495 TO NORTH OF BRANDYWINE RIVER BRIDGE

CONTRACT T201407404	BRIDGE NO. 1 748 059	
COUNTY NEW CASTLE	DESIGNED BY: DAN	**EXPANSION JOINT DETAILS – 5**
	CHECKED BY: WAG	

EX-05
SECTION
WRA
SHEET NO.
385

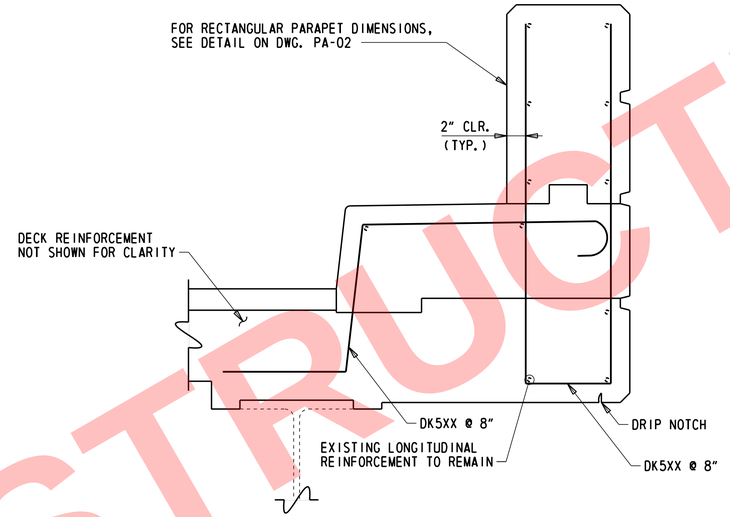

RECTANGULAR PARAPET REINFORCEMENT AT EXPANSION JOINTS

1½" = 1'-0"

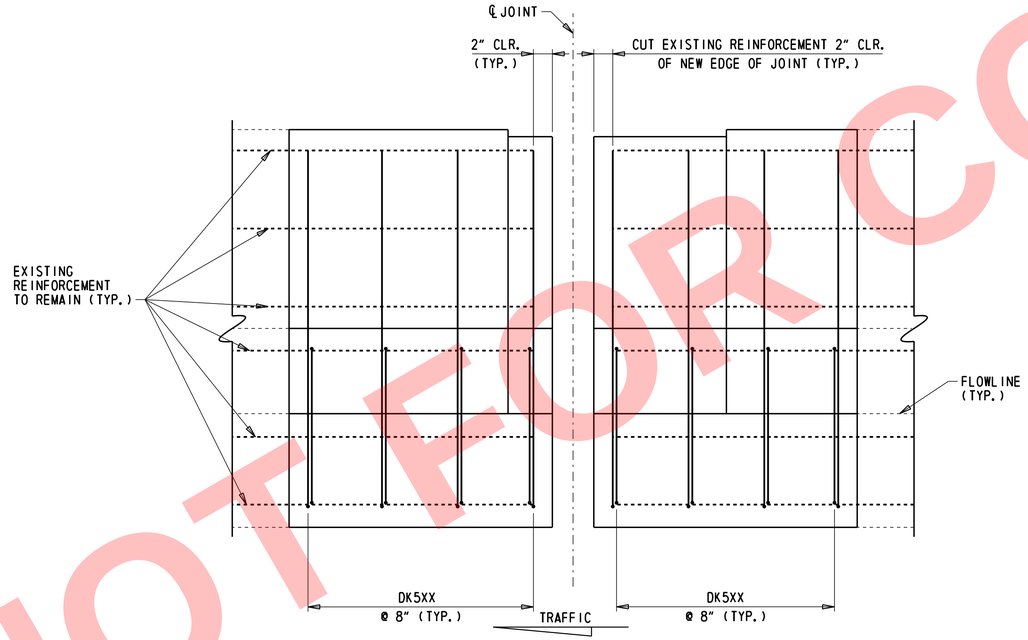

RECTANGULAR PARAPET RECONSTRUCTION - REINFORCEMENT

(PIERS 55N, 57N, 59N)

1½" = 1'-0"

NOTES:

1. RECTANGULAR PARAPET REMOVAL SIMILAR TO MEDIAN PARAPET REMOVAL, SEE DETAIL ON DWG. EX-02.
2. FOR PARAPET JOINT PLATE DETAILS AND PARAPET JOINT PLATE NOTES, SEE DWG. EX-02.

NOT FOR CONSTRUCTION

N:\31987-004\Contract_I-95\CADD\Bridge\BR1-748_EX06.dgn
5/31/2019 12:15:26 PM

ADDENDA / REVISIONS	SCALE AS NOTED	REHABILITATION OF I-95 FROM I-495 TO NORTH OF BRANDYWINE RIVER BRIDGE	CONTRACT T201407404	BRIDGE NO. 1 748 059	EXPANSION JOINT DETAILS – 6	EX-06
			COUNTY NEW CASTLE	DESIGNED BY: DAN		SECTION WRA
				CHECKED BY: WAG		SHEET NO. 386

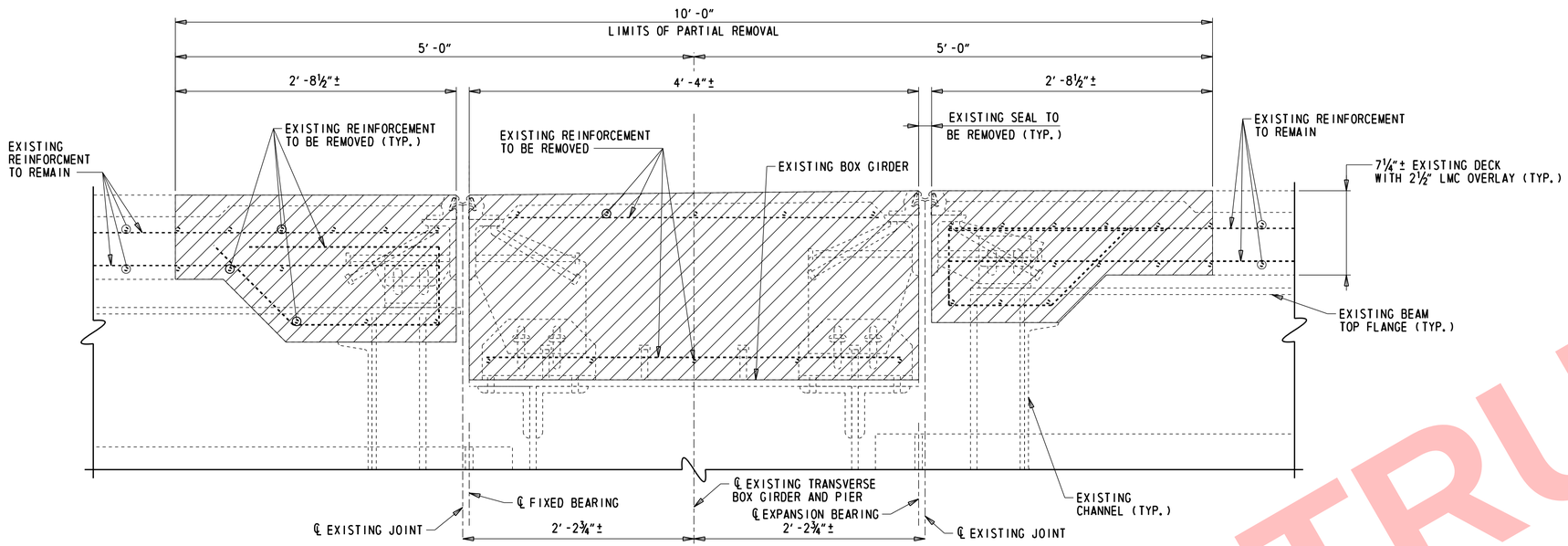

REMOVAL DETAIL - PIERS 10 THROUGH 12 & 20 THROUGH 25

1½" = 1'-0"

NOTE: PIER 23 SHOWN, OTHER LOCATION SIMILAR.

LEGEND:

- REMOVAL LIMITS
- CLASS D CONCRETE
- LMC OVERLAY

JOINT DETAIL - PIERS 10 THROUGH 12 & 20 THROUGH 25

1½" = 1'-0"

NOTE: PIER 23 SHOWN, OTHER LOCATIONS SIMILAR.

DECK JOINT OPENINGS, X

LOCATION		TEMPERATURE (°F)									MOVEMENT CLASSIFICATION
		20°	30°	40°	50°	60°	68°	70°	80°	90°	100°	
PIER 10	EXPANSION	2 3/16"	2 1/16"	1 15/16"	1 7/8"	1 3/4"	1 11/16"	1 5/8"	1 9/16"	1 1/16"	1 1/16"	3"
PIER 11	EXPANSION	2 3/16"	2 1/16"	1 15/16"	1 7/8"	1 3/4"	1 11/16"	1 5/8"	1 9/16"	1 1/16"	1 1/16"	3"
PIER 12	EXPANSION	2"	1 15/16"	1 7/8"	1 13/16"	1 3/4"	1 11/16"	1 11/16"	1 5/8"	1 15/16"	1 1/2"	3"
PIER 20	EXPANSION	2 1/16"	1 15/16"	1 7/8"	1 13/16"	1 3/4"	1 11/16"	1 11/16"	1 5/8"	1 15/16"	1 1/16"	3"
PIER 21	EXPANSION	2 3/16"	2 1/16"	1 15/16"	1 7/8"	1 3/4"	1 11/16"	1 5/8"	1 9/16"	1 1/16"	1 1/16"	3"
PIER 22	EXPANSION	2 3/16"	2 1/16"	1 15/16"	1 7/8"	1 3/4"	1 11/16"	1 5/8"	1 9/16"	1 1/16"	1 1/16"	3"
PIER 23	EXPANSION	2 3/16"	2 1/16"	1 15/16"	1 7/8"	1 3/4"	1 11/16"	1 5/8"	1 9/16"	1 1/16"	1 1/16"	3"
PIER 24	EXPANSION	2 1/16"	2"	1 15/16"	1 13/16"	1 3/4"	1 11/16"	1 11/16"	1 9/16"	1 1/16"	1 1/2"	3"
PIER 25	EXPANSION	2 1/16"	2"	1 15/16"	1 13/16"	1 3/4"	1 11/16"	1 11/16"	1 9/16"	1 1/2"	1 1/16"	3"

NOTES:

1. FOR JOINT ASSEMBLY AND STEEL EXTRUSION DETAILS AND STRIP SEAL EXPANSION NOTES, SEE DWG. EX-17.
2. FOR JOINT RECONSTRUCTION NOTES, SEE DWG. EX-01.
3. AT PIER 24 ON RAMP A SEE BR 1-749 PLANS FOR JOINTIN SPAN OA SIDE OF JOINT.

NOT FOR CONSTRUCTION

N:\31987-004\Contract I-95\CADD\Bridge\BR1-748_EX07.dgn
5/31/2019 12:19:26 PM

ADDENDA / REVISIONS		SCALE AS NOTED	REHABILITATION OF I-95 FROM I-495 TO NORTH OF BRANDYWINE RIVER BRIDGE	CONTRACT T201407404	BRIDGE NO. 1 748 059	EXPANSION JOINT DETAILS – 7	EX-07
				COUNTY NEW CASTLE	DESIGNED BY: DAN		SECTION WRA
					CHECKED BY: WAG		SHEET NO. 387

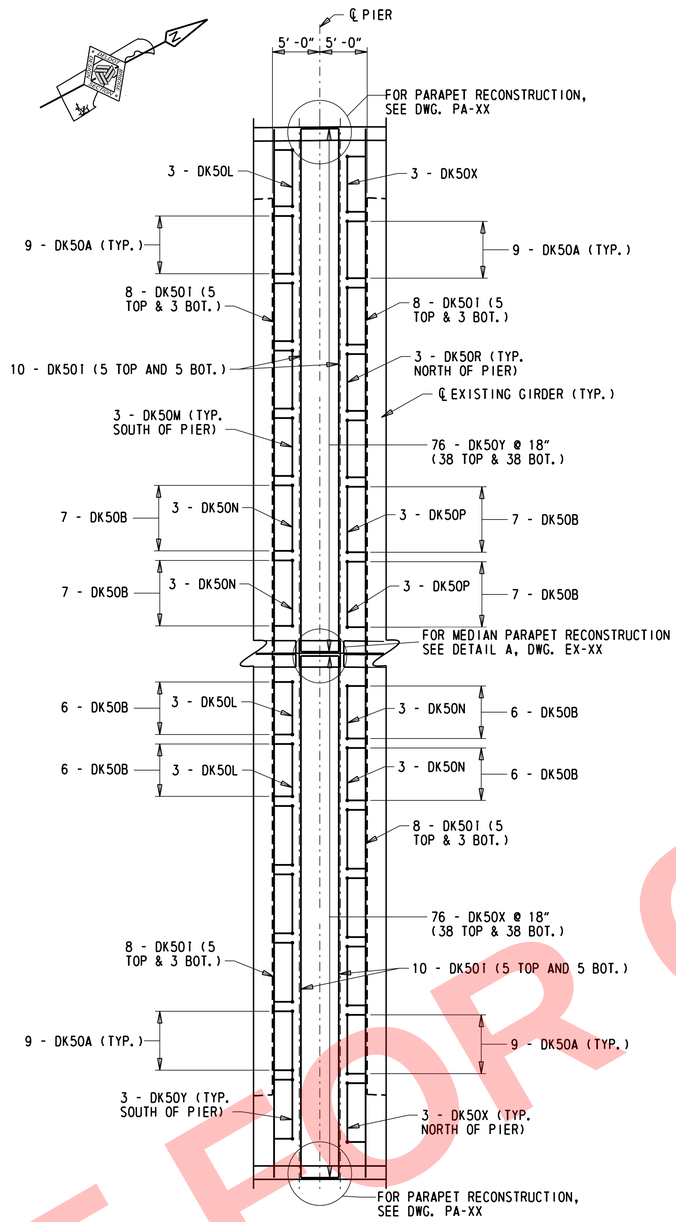

PLAN - PIERS 10 THROUGH 12

⅛" = 1'-0"

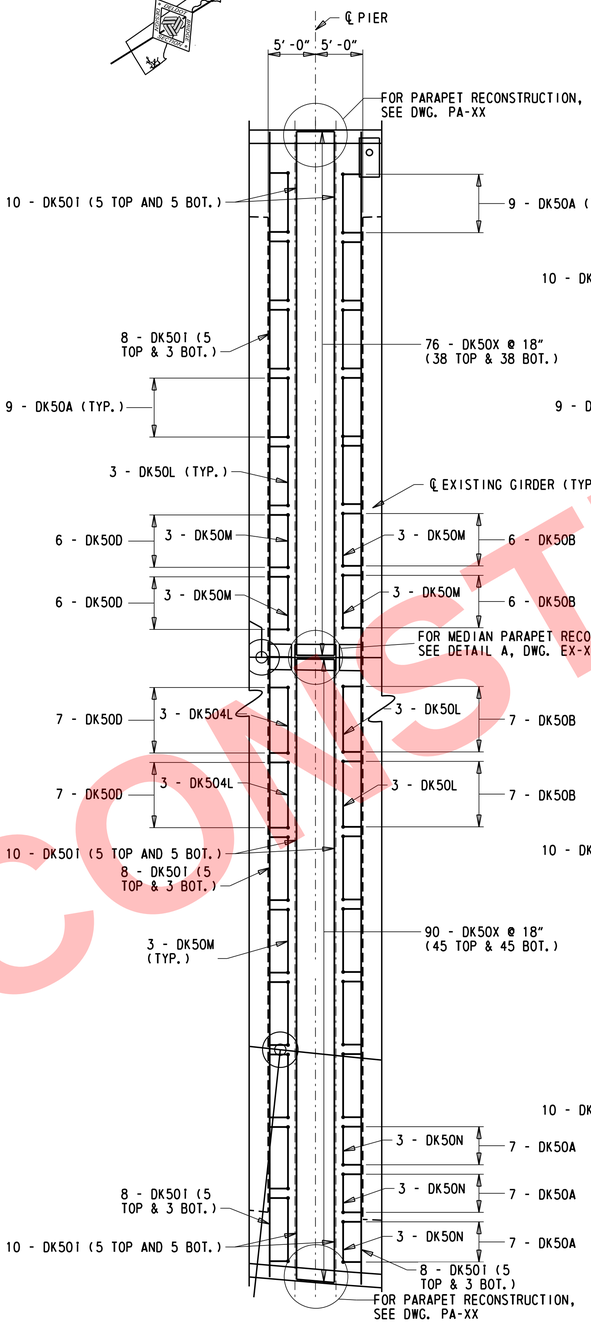

PLAN - PIER 20

⅛" = 1'-0"

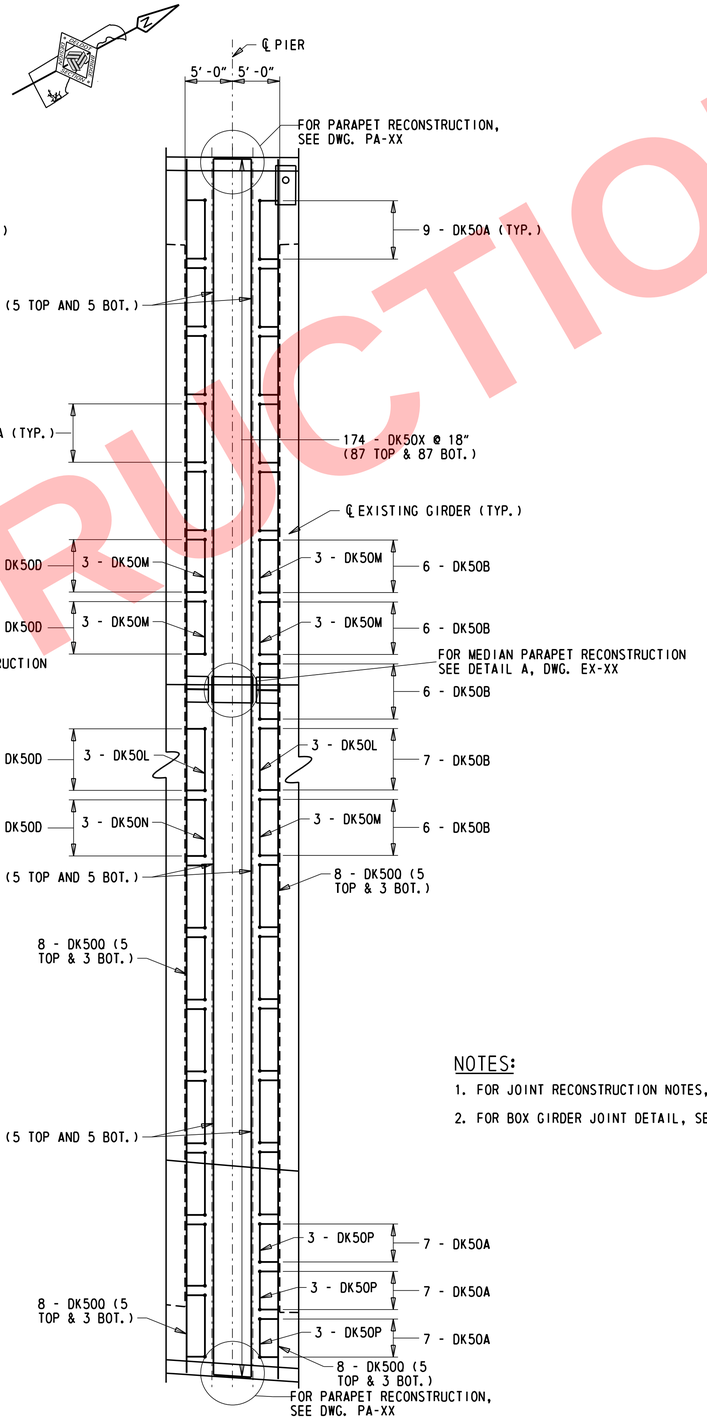

PLAN - PIER 21

⅛" = 1'-0"

NOTES:

1. FOR JOINT RECONSTRUCTION NOTES, SEE EX-01.
2. FOR BOX GIRDER JOINT DETAIL, SEE EX-XX.

NOT FOR CONSTRUCTION

ADDENDA / REVISIONS	SCALE AS NOTED	REHABILITATION OF I-95 FROM I-495 TO NORTH OF BRANDYWINE RIVER BRIDGE	CONTRACT T201407404	BRIDGE NO. 1 748 059	EXPANSION JOINT DETAILS – 8	EX-08 SECTION
			COUNTY NEW CASTLE	DESIGNED BY: DAN		WRA
				CHECKED BY: WAG		SHEET NO. 388

N:\31687-004\Control\I-95\C400\Bridge\BR1-748_EX08.dgn
5/31/2019 12:15:30 PM

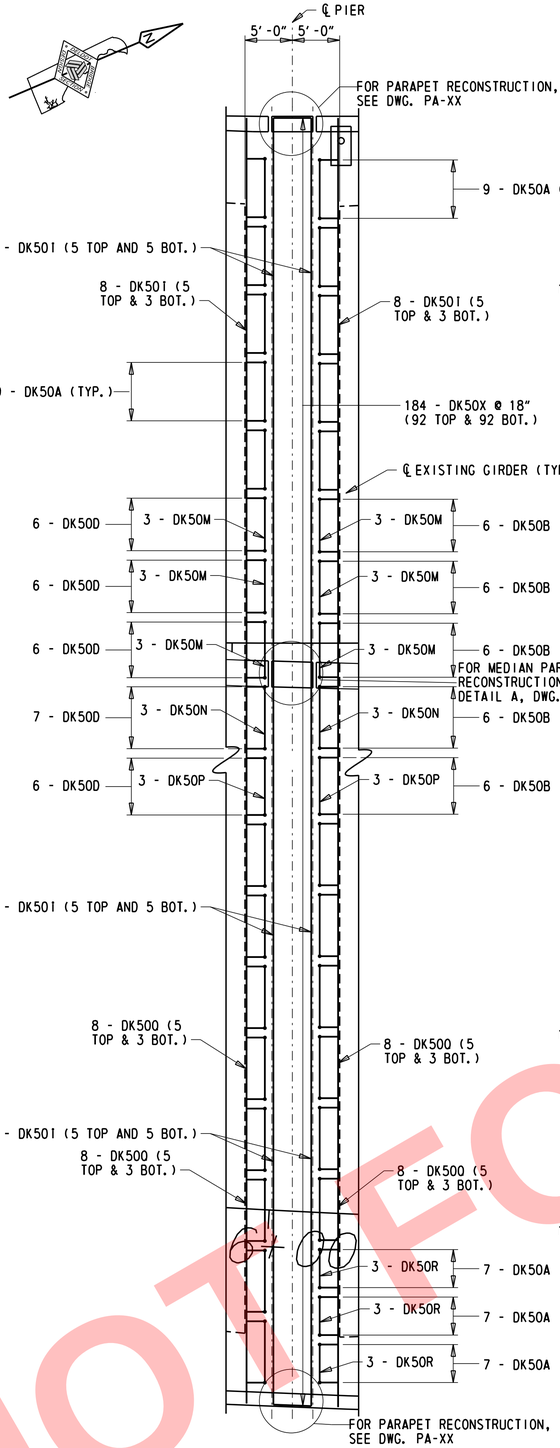

PLAN - PIER 22

1/8" = 1'-0"

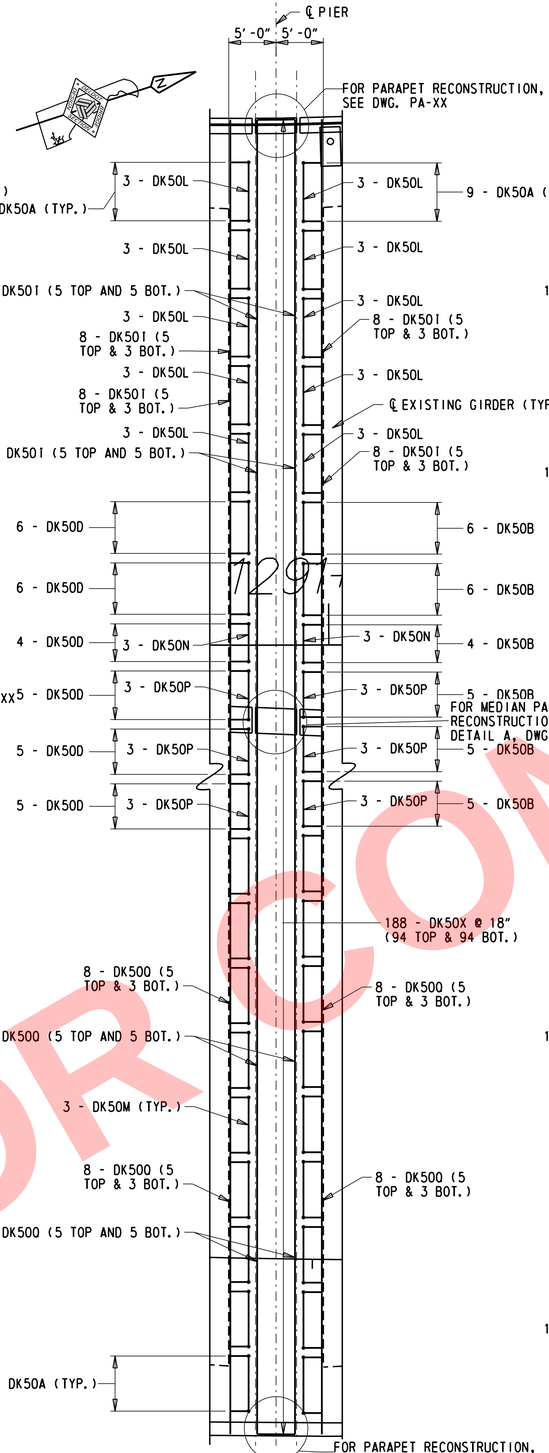

PLAN - PIER 23

1/8" = 1'-0"

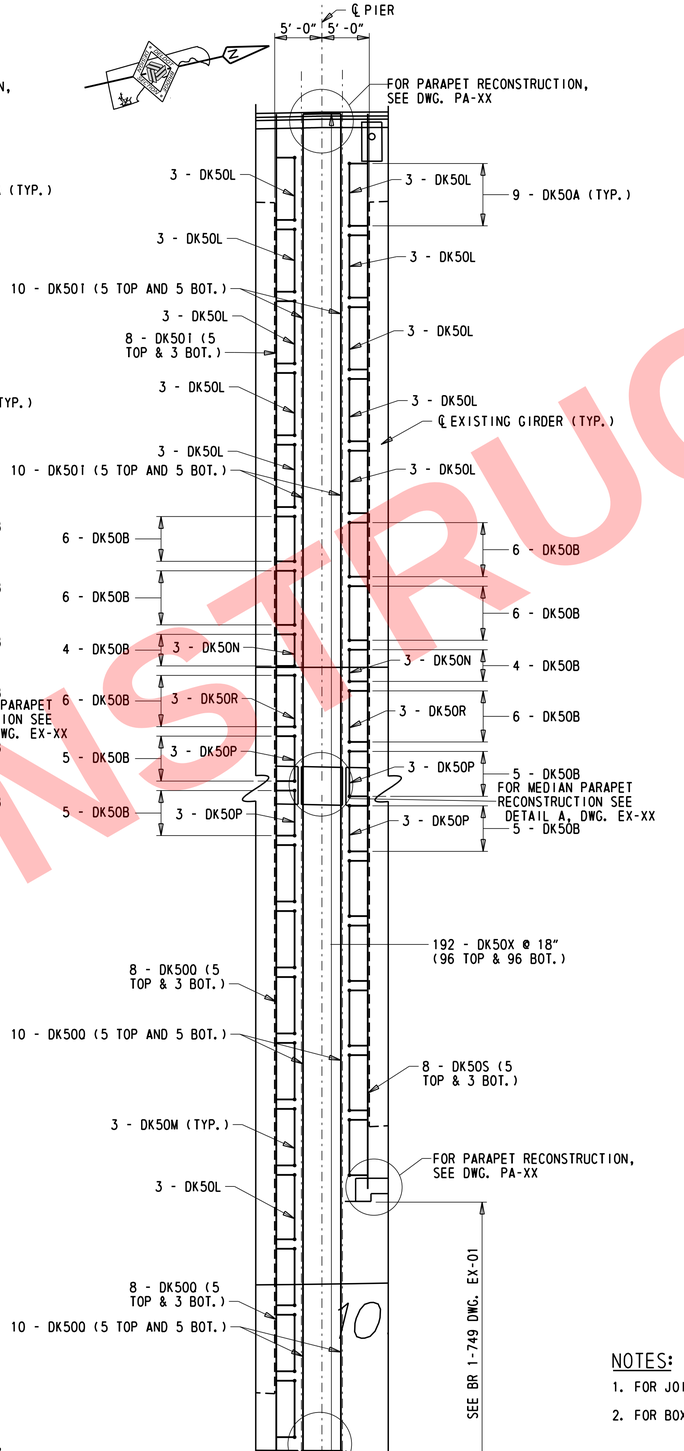

PLAN - PIER 24

1/8" = 1'-0"

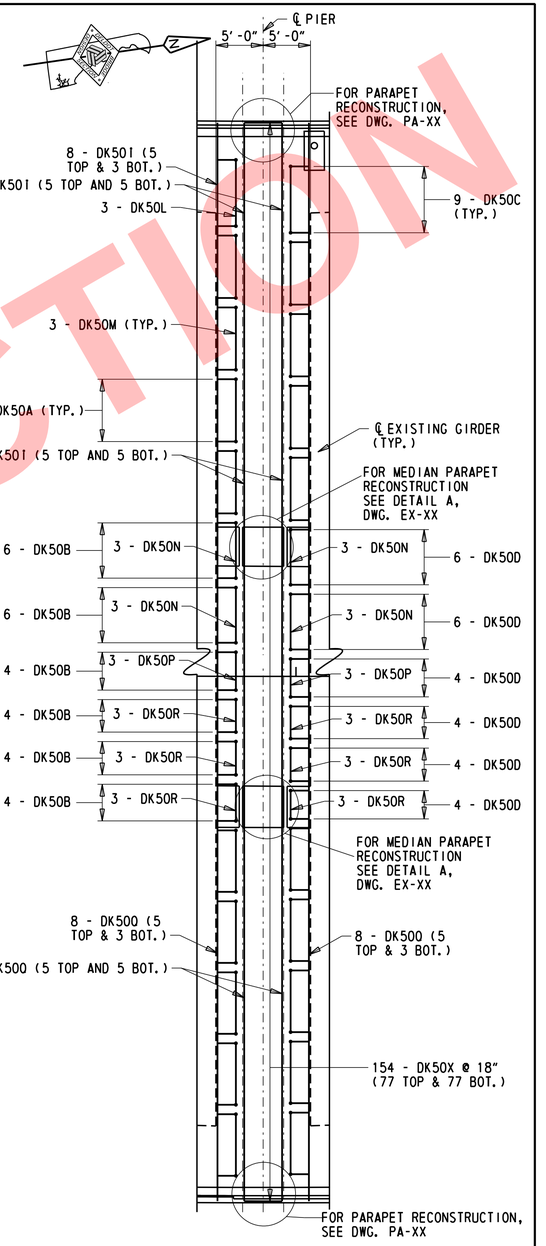

PLAN - PIER 25

1/8" = 1'-0"

NOTES:

1. FOR JOINT RECONSTRUCTION NOTES, SEE EX-01.
2. FOR BOX GIRDER JOINT DETAIL, SEE EX-XX.

NOT FOR CONSTRUCTION

N:\31887-004\Control-I-95\C&D\Bridge\BR1-748_EX09.dgn
5/31/2019 12:13:32 PM

ADDENDA / REVISIONS		SCALE AS NOTED	REHABILITATION OF I-95 FROM I-495 TO NORTH OF BRANDYWINE RIVER BRIDGE	CONTRACT T201407404	BRIDGE NO. 1 748 059	EXPANSION JOINT DETAILS - 9	EX-09
				COUNTY NEW CASTLE	DESIGNED BY: DAN		SECTION WRA
					CHECKED BY: WAG		SHEET NO. 389

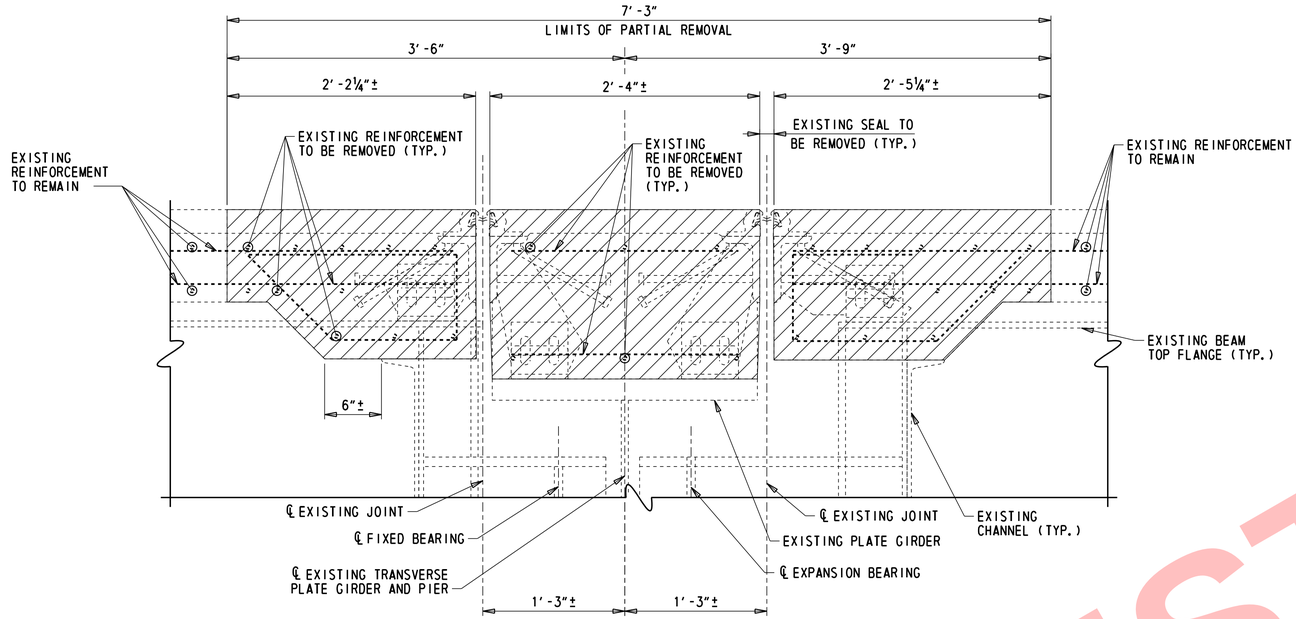

REMOVAL DETAIL - PIERS 13 THROUGH 19

1½″ = 1′-0″

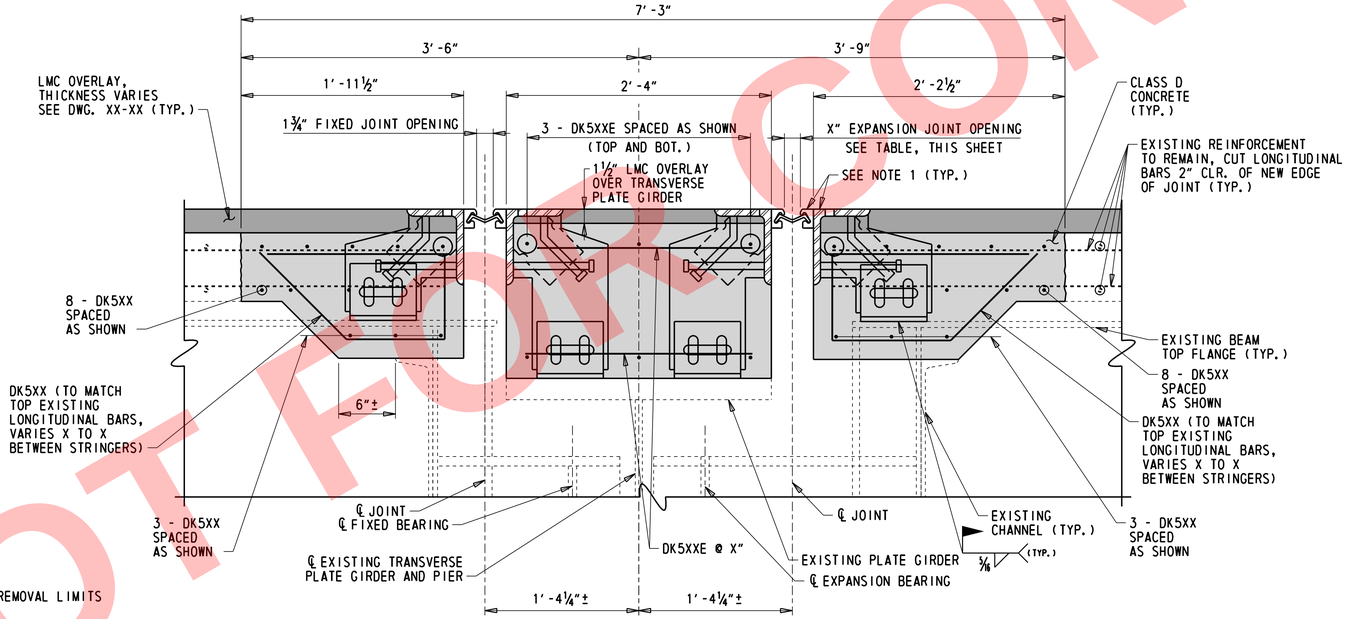

JOINT DETAIL - PIERS 13 THROUGH 19

1½″ = 1′-0″

LEGEND:

- REMOVAL LIMITS
- CLASS D CONCRETE
- LMC OVERLAY

DECK JOINT OPENINGS, X

LOCATION		TEMPERATURE (°F)									MOVEMENT
		20°	30°	40°	50°	60°	68°	70°	80°	90°	100°	CLASSIFICATION
PIER 13	EXPANSION	2″	1 5/16″	1 7/8″	1 13/16″	1 3/4″	1 11/16″	1 11/16″	1 5/8″	1 1/16″	1 1/2″	3″
PIER 14	EXPANSION	2″	1 5/16″	1 7/8″	1 13/16″	1 3/4″	1 11/16″	1 11/16″	1 5/8″	1 1/16″	1 1/2″	3″
PIER 15	EXPANSION	2″	1 5/16″	1 7/8″	1 13/16″	1 3/4″	1 11/16″	1 11/16″	1 5/8″	1 1/16″	1 1/2″	3″
PIER 16	EXPANSION	2″	1 5/16″	1 7/8″	1 13/16″	1 3/4″	1 11/16″	1 11/16″	1 5/8″	1 1/16″	1 1/2″	3″
PIER 17	EXPANSION	2 1/16″	2″	1 7/8″	1 13/16″	1 3/4″	1 11/16″	1 11/16″	1 5/8″	1 1/2″	1 1/16″	3″
PIER 18	EXPANSION	2″	1 5/16″	1 7/8″	1 13/16″	1 3/4″	1 11/16″	1 11/16″	1 5/8″	1 1/16″	1 1/2″	3″
PIER 19	EXPANSION	2″	1 5/16″	1 7/8″	1 13/16″	1 3/4″	1 11/16″	1 11/16″	1 5/8″	1 1/16″	1 1/2″	3″

NOTES:

1. FOR JOINT ASSEMBLY AND STEEL EXTRUSION DETAILS AND STRIP SEAL EXPANSION NOTES, SEE DWG. EX-17.
2. FOR JOINT RECONSTRUCTION NOTES, SEE DWG. EX-01.

NOT FOR CONSTRUCTION

N:\31987-004\Control\I-95\CADD\Bridge\BR1-748_EX10.dgn
5/31/2019 12:15:33 PM

ADDENDA / REVISIONS	SCALE AS NOTED	REHABILITATION OF I-95 FROM I-495 TO NORTH OF BRANDYWINE RIVER BRIDGE	CONTRACT T201407404	BRIDGE NO. 1 748 059	EXPANSION JOINT DETAILS – 10	EX-10 SECTION WRA
			COUNTY NEW CASTLE	DESIGNED BY: DAN		SHEET NO. 390
				CHECKED BY: WAG		

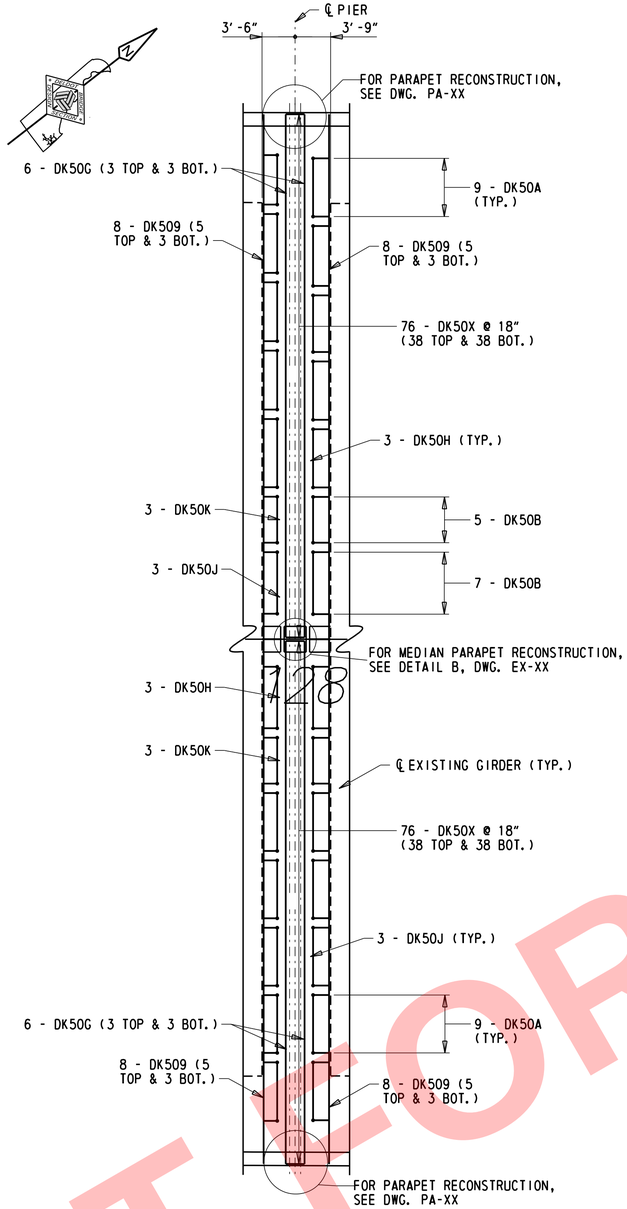

PLAN - PIERS 13 THROUGH 17

⅛″ = 1′-0″

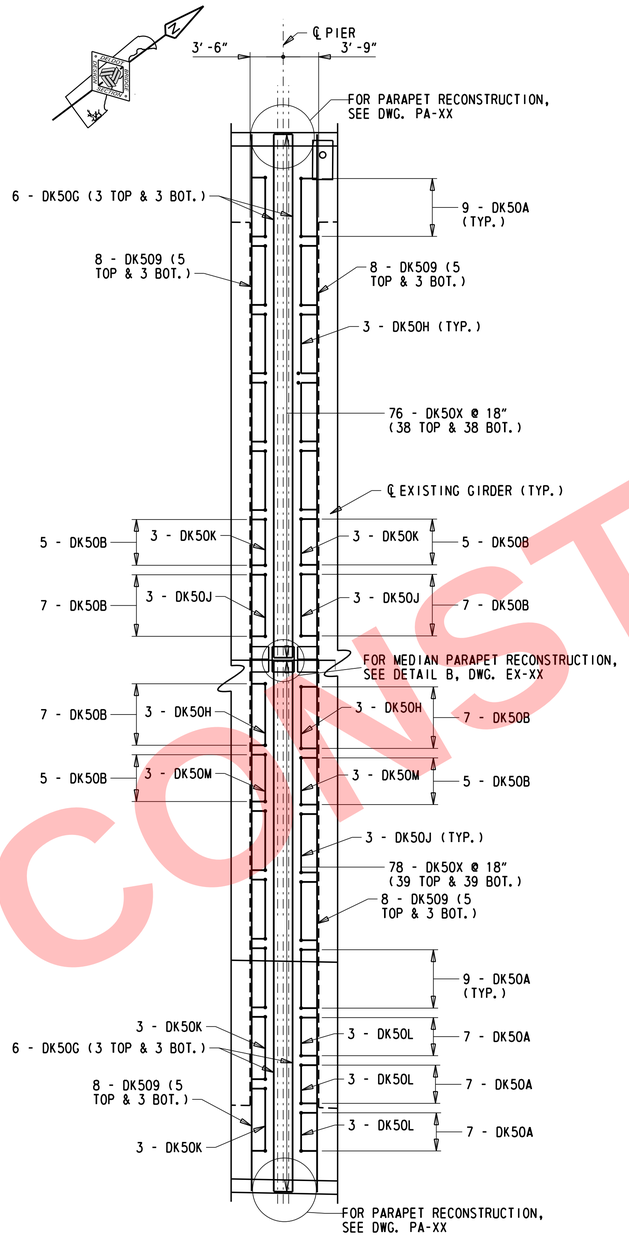

PLAN - PIER 18

⅛″ = 1′-0″

NOTES:

1. FOR JOINT RECONSTRUCTION NOTES, SEE EX-01.
2. FOR SECTION, SEE EX-XX.

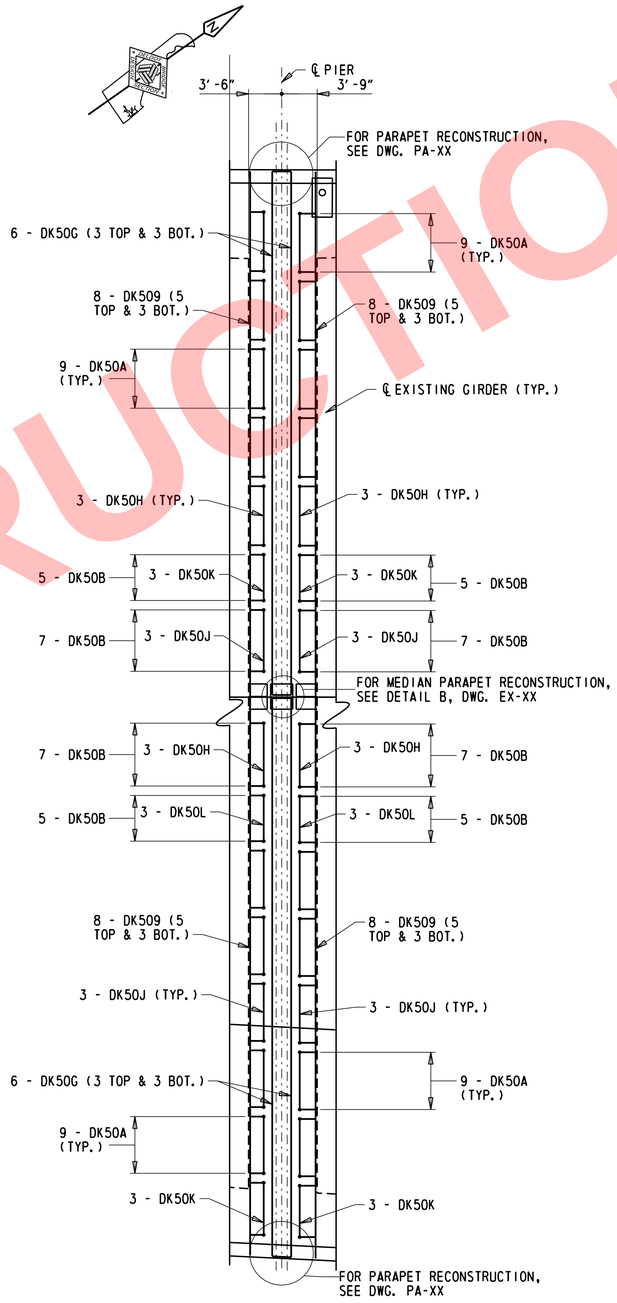

PLAN - PIER 19

⅛″ = 1′-0″

NOT FOR CONSTRUCTION

N:\31987-00A\Contract_I-95\C4DD\Bridge\BR1-748_EX11.dgn
5/31/2019 12:13:34 PM

ADDENDA / REVISIONS	SCALE AS NOTED	REHABILITATION OF I-95 FROM I-495 TO NORTH OF BRANDYWINE RIVER BRIDGE	CONTRACT T201407404	BRIDGE NO. 1 748 059	EXPANSION JOINT DETAILS – 11	EX-11 SECTION WRA
			COUNTY NEW CASTLE	DESIGNED BY: DAN		SHEET NO. 391
				CHECKED BY: WAG		

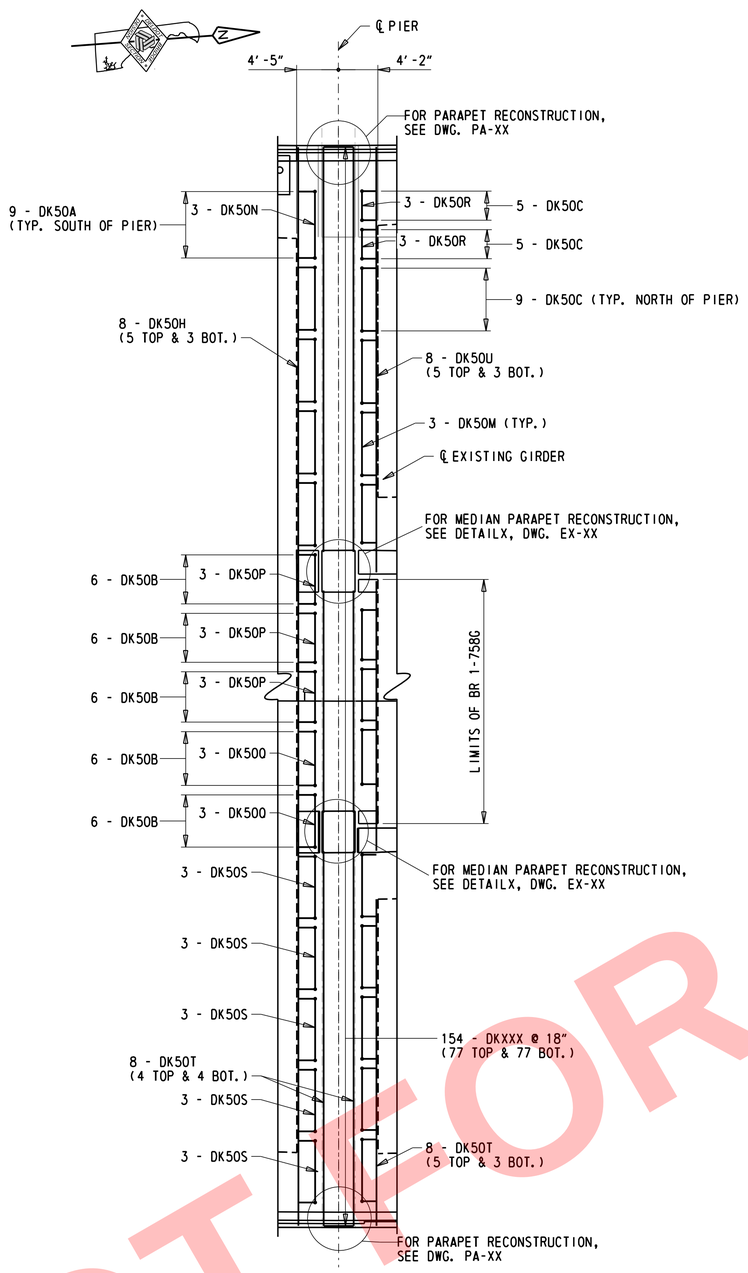

PLAN - PIER 26

1/8″ = 1′-0″

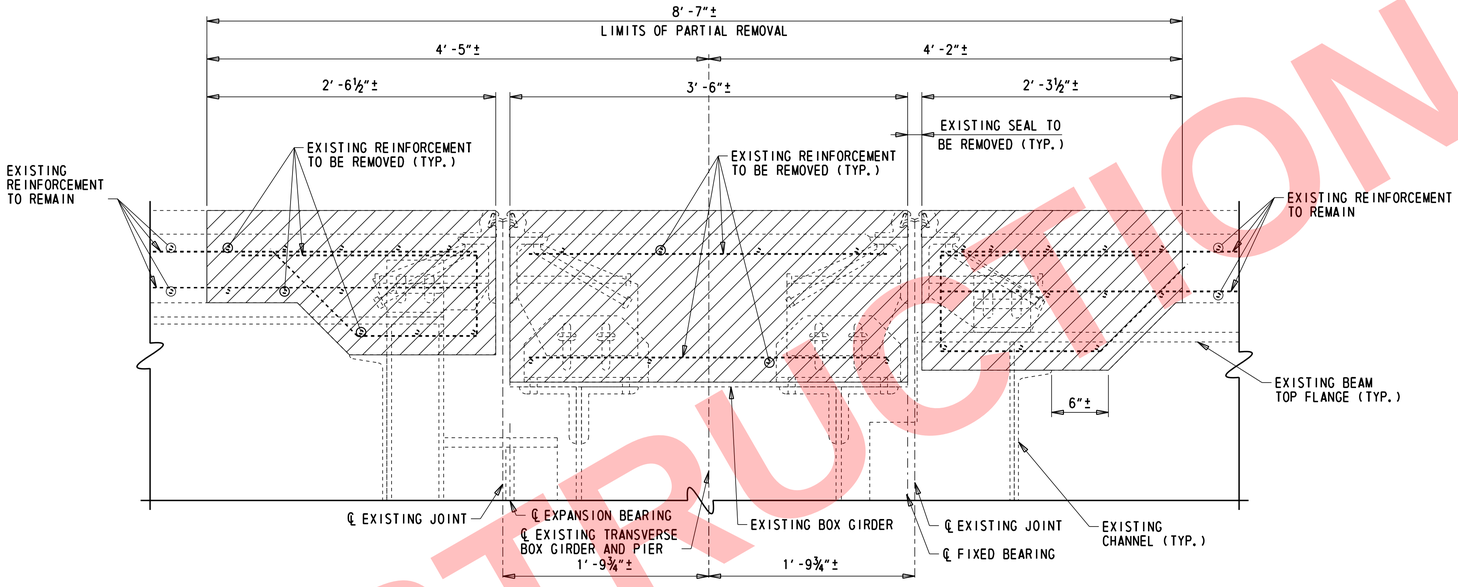

REMOVAL DETAIL - PIER 26

1½″ = 1′-0″

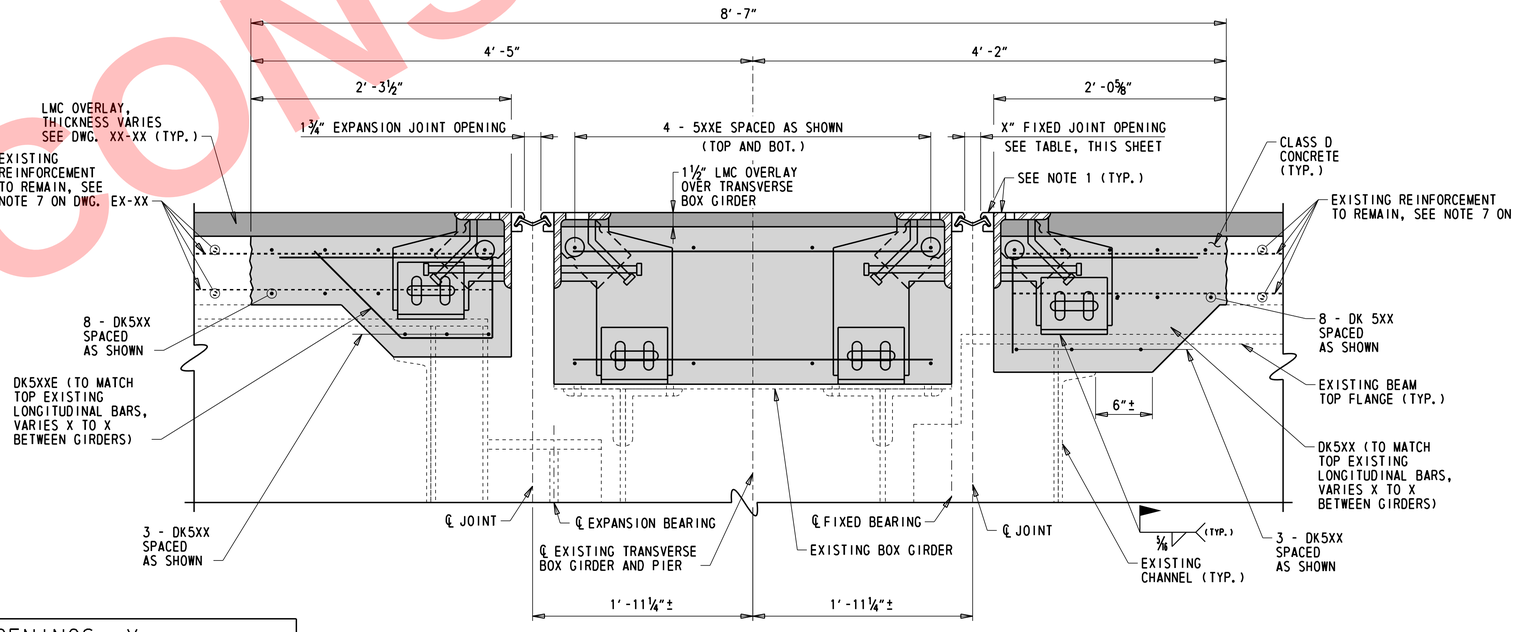

JOINT DETAIL - PIER 26

1½″ = 1′-0″

LEGEND:

- REMOVAL LIMITS
- CLASS D CONCRETE
- LMC OVERLAY

DECK JOINT OPENINGS, X

LOCATION		TEMPERATURE (°F)										MOVEMENT CLASSIFICATION
		20°	30°	40°	50°	60°	68°	70°	80°	90°	100°	
PIER 26	EXPANSION	2″	1 15/16″	1 7/8″	1 13/16″	1¾″	1 11/16″	1 11/16″	1 5/8″	1 9/16″	1½″	3″

NOTES:

1. FOR JOINT ASSEMBLY AND STEEL EXTRUSION DETAILS AND STRIP SEAL EXPANSION NOTES, SEE DWG. EX-17.
2. FOR JOINT RECONSTRUCTION NOTES, SEE DWG. EX-01.

NOT FOR CONSTRUCTION

N:\31987-004\Control_I-95\CADD\Bridge\BR1-748_EX12.dgn
5/31/2019 12:19:35 PM

ADDENDA / REVISIONS		SCALE AS NOTED	REHABILITATION OF I-95 FROM I-495 TO NORTH OF BRANDYWINE RIVER BRIDGE	CONTRACT T201407404	BRIDGE NO. 1 748 059	EXPANSION JOINT DETAILS – 12	EX-12 SECTION WRA
				COUNTY NEW CASTLE	DESIGNED BY: DAN		SHEET NO. 392
					CHECKED BY: WAG		

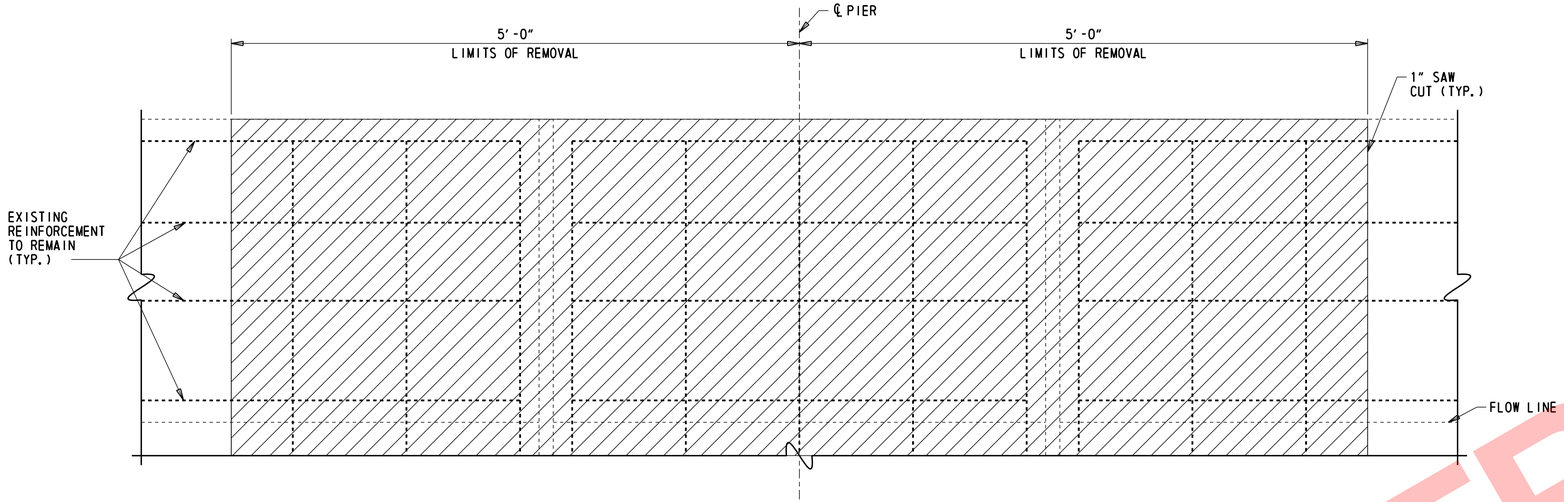

EXISTING MEDIAN PARAPET REMOVAL AT EXPANSION JOINTS

(PIERS 10 THROUGH 12 & 20 THROUGH 25)

1½" = 1'-0"

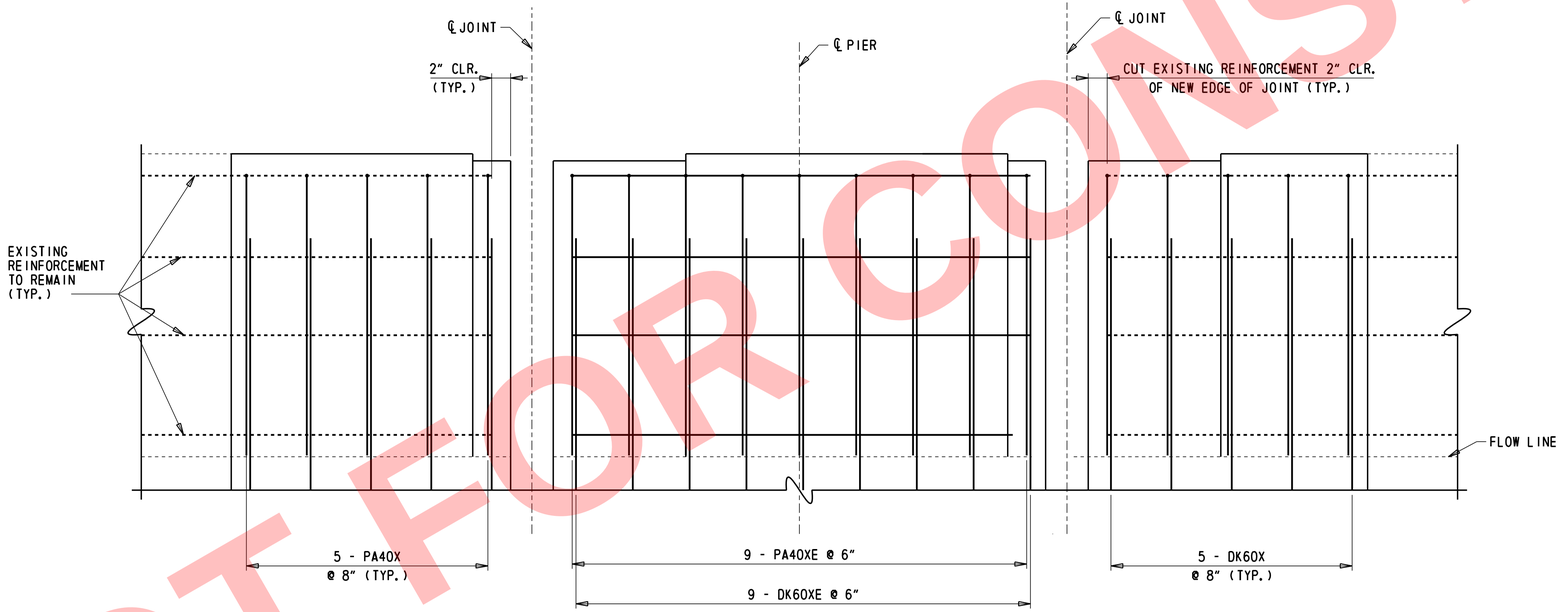

MEDIAN PARAPET RECONSTRUCTION - REINFORCEMENT

(PIERS 10 THROUGH 12 & 20 THROUGH 25)

1½" = 1'-0"

NOTES:

1. FOR PARAPET JOINT PLATE DETAILS, SEE EX-14.

LEGEND:

REMOVAL LIMITS

RECESS IN PARAPET

NOT FOR CONSTRUCTION

N:\31987-004\Contract_I-95\CADD\Bridge\BR1-748_EX13.dgn
5/31/2019 12:13:35 PM

ADDENDA / REVISIONS	SCALE AS NOTED	REHABILITATION OF I-95 FROM I-495 TO NORTH OF BRANDYWINE RIVER BRIDGE	CONTRACT T201407404	BRIDGE NO. 1 748 059	EXPANSION JOINT DETAILS – 13	EX-13
			COUNTY NEW CASTLE	DESIGNED BY: DAN		SECTION WRA
				CHECKED BY: WAG		SHEET NO. 393

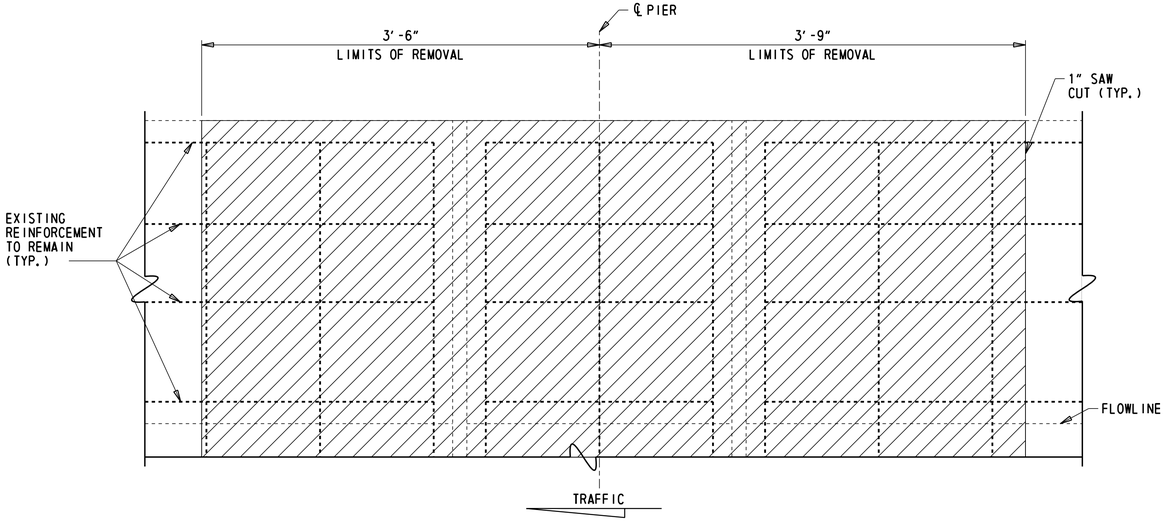

EXISTING MEDIAN PARAPET REMOVAL AT EXPANSION JOINTS

(PIERS 13 THROUGH 19)

1½" = 1'-0"

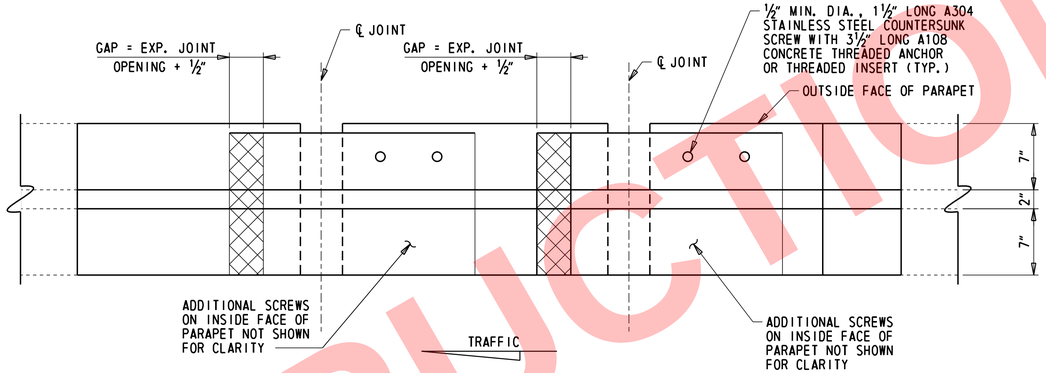

VIEW A-A

1½" = 1'-0"

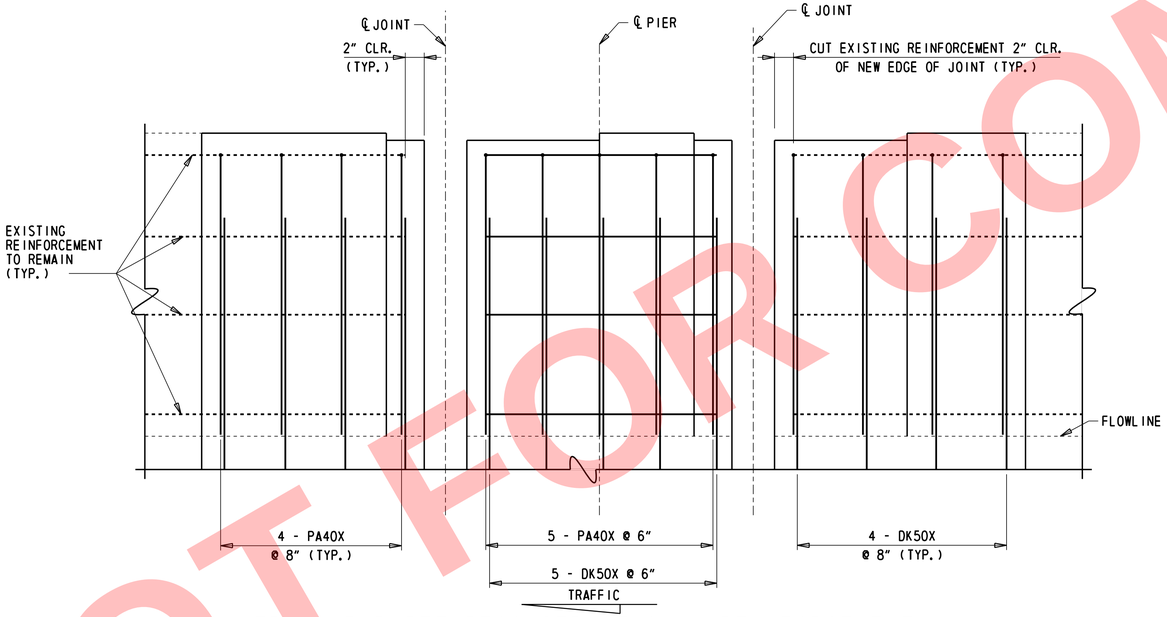

MEDIAN PARAPET RECONSTRUCTION - REINFORCEMENT

(PIERS 13 THROUGH 19)

1½" = 1'-0"

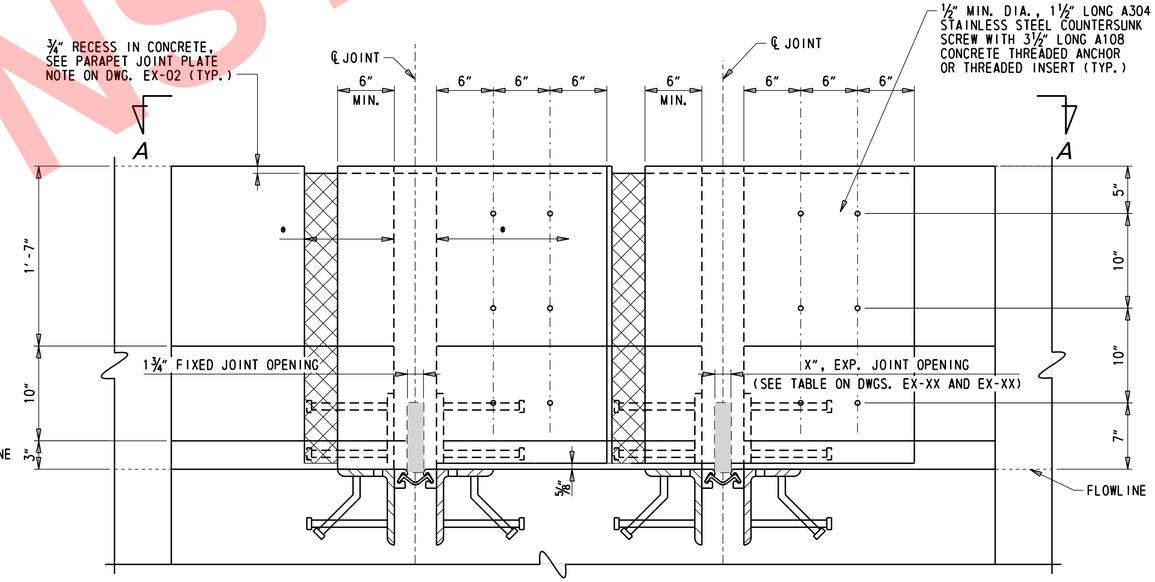

* SEE PARAPET JOINT PLATE NOTE 1 ON DWG. EX-02

VIEW B-B

1½" = 1'-0"

NOTES:

1. DETAILS SHOWN FOR 32" MEDIAN PARAPET, 36" PARAPET SIMILAR.
2. FOR ORIENTATION OF VIEW B-B, TYPICAL SECTION AT JOINT, AND PARAPET JOINT PLATE NOTES SEE DWG. EX-02.

LEGEND:

REMOVAL LIMITS

RECESS IN PARAPET

NOT FOR CONSTRUCTION

N:\31987-004\Contract_I-95\CADD\Bridge\BR1-748_EX14.dgn
5/31/2019 12:15:36 PM

ADDENDA / REVISIONS	SCALE AS NOTED	REHABILITATION OF I-95 FROM I-495 TO NORTH OF BRANDYWINE RIVER BRIDGE	CONTRACT T201407404	BRIDGE NO. 1 748 059	EXPANSION JOINT DETAILS – 14	EX-14
			COUNTY NEW CASTLE	DESIGNED BY: DAN		SECTION WRA
				CHECKED BY: WAG		SHEET NO. 394

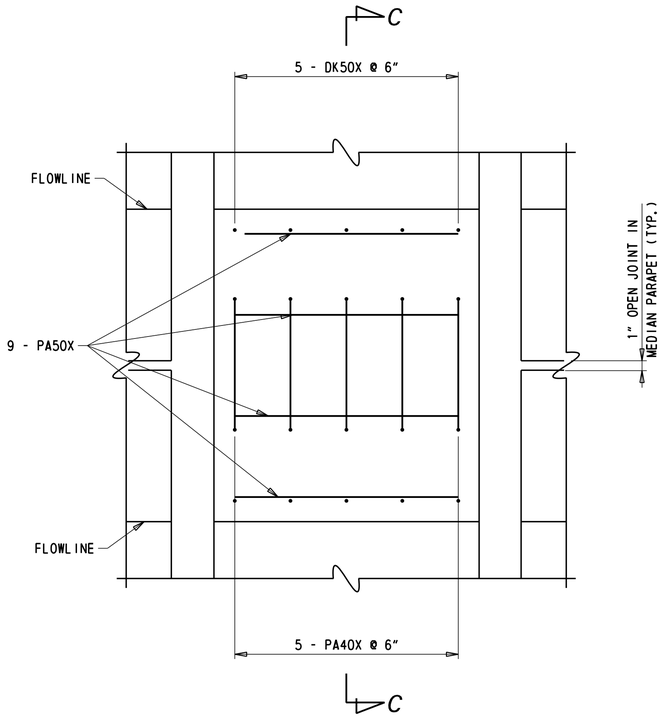

DETAIL B
(PIERS 13 THROUGH 19)
1½" = 1'-0"

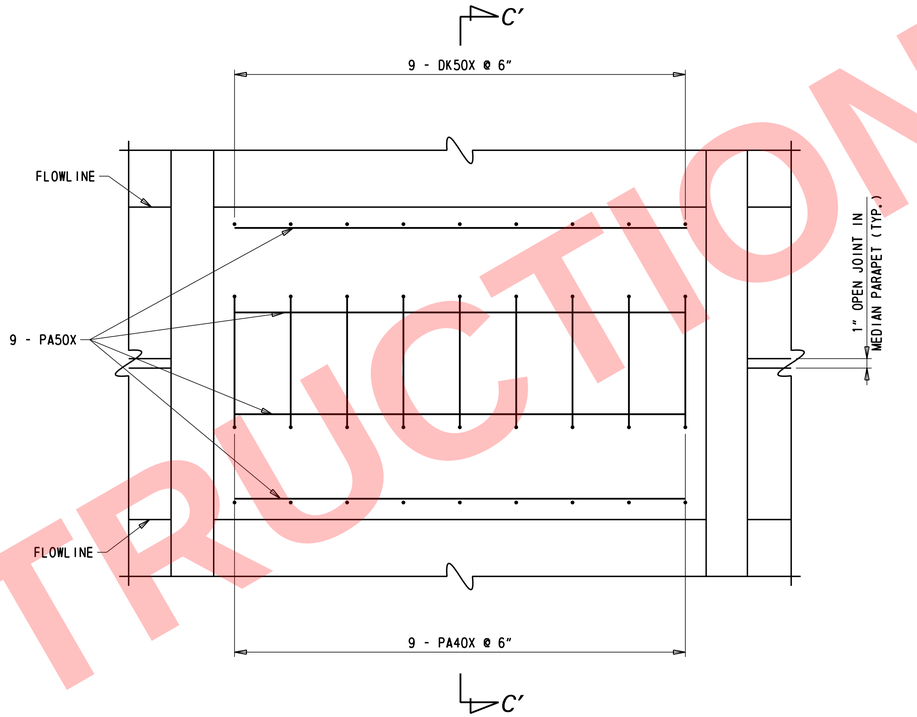

DETAIL D
(PIERS 10, 11, 12, & 20)
1½" = 1'-0"

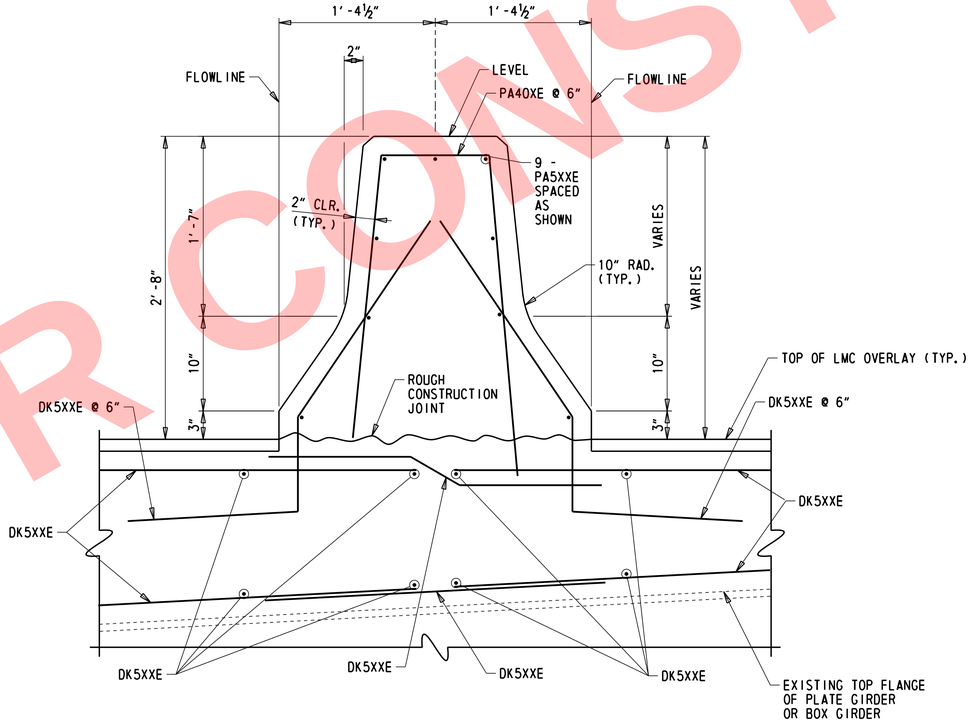

SECTION C-C
(SECTION C'-C' SIMILAR)
1½" = 1'-0"

NOT FOR CONSTRUCTION

N:\31987-004\Control-I-95\CADD\Bridge\BR1-748_EX15.dgn
5/31/2019 12:53:37 PM

ADDENDA / REVISIONS	SCALE AS NOTED	REHABILITATION OF I-95 FROM I-495 TO NORTH OF BRANDYWINE RIVER BRIDGE	CONTRACT T201407404	BRIDGE NO. 1 748 059	EXPANSION JOINT DETAILS – 15	EX-15
			COUNTY NEW CASTLE	DESIGNED BY: DAN		SECTION WRA
				CHECKED BY: WAG		SHEET NO. 395

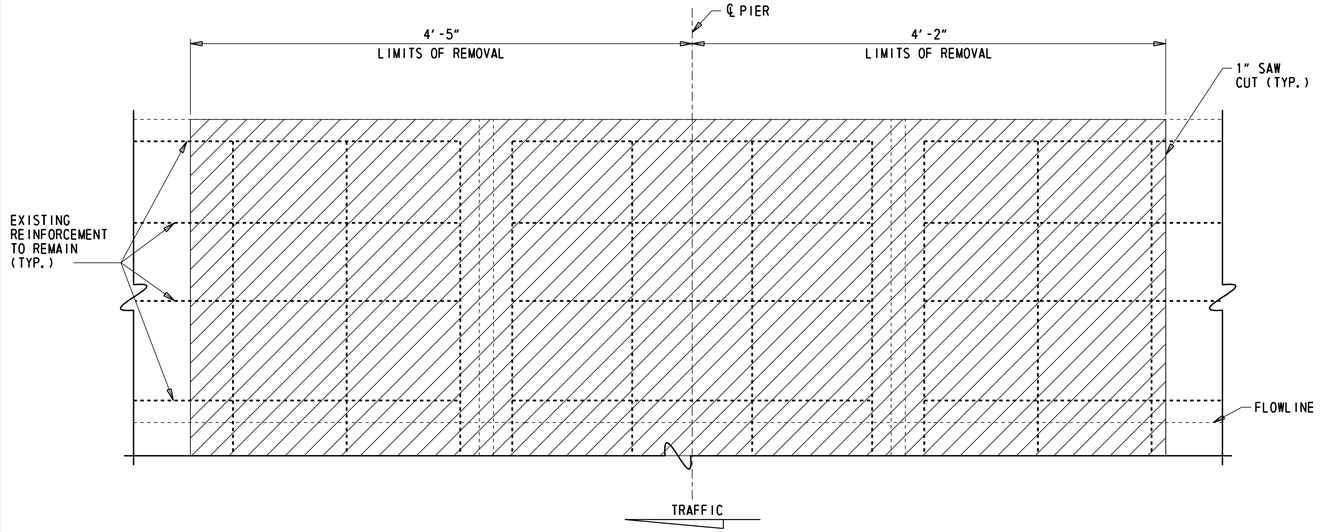

PIER 26 EXISTING MEDIAN PARAPET REMOVAL AT EXPANSION JOINT

1½″ = 1′-0″

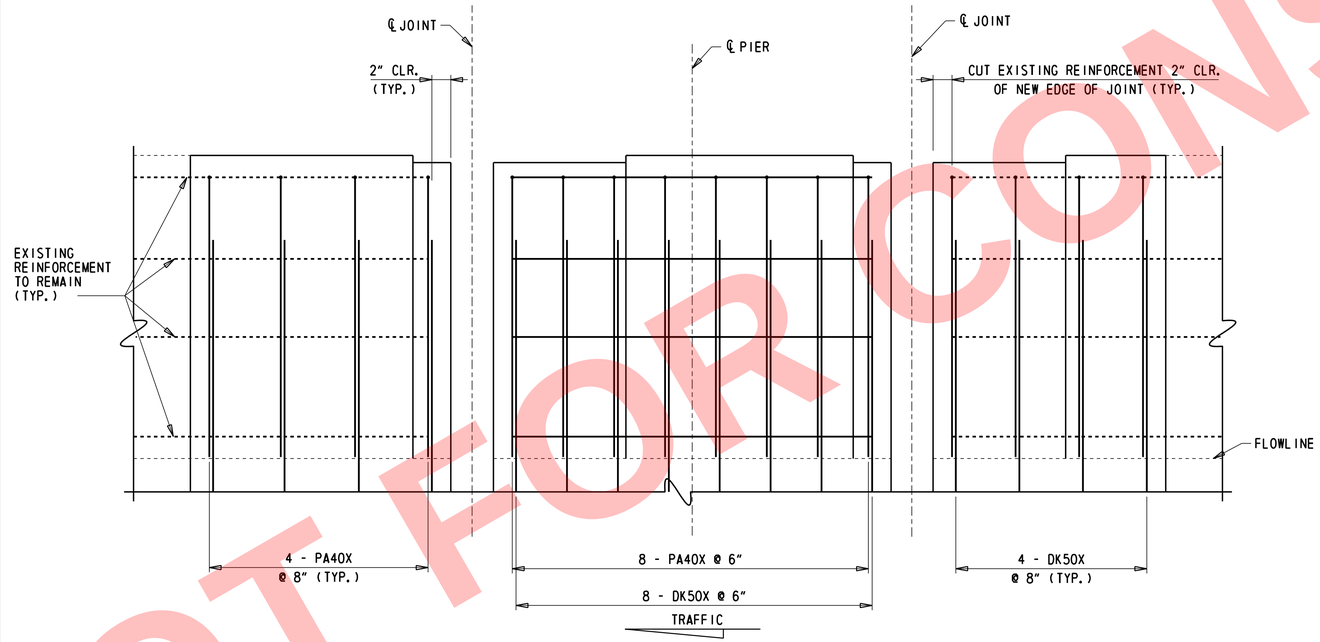

PIER 26 MEDIAN PARAPET RECONSTRUCTION - REINFORCEMENT

1½″ = 1′-0″

LEGEND:

- REMOVAL LIMITS
- RECESS IN PARAPET

NOTES:

1. FOR PARAPET JOINT PLATE DETAILS, SEE EX-14 AND EX-02.

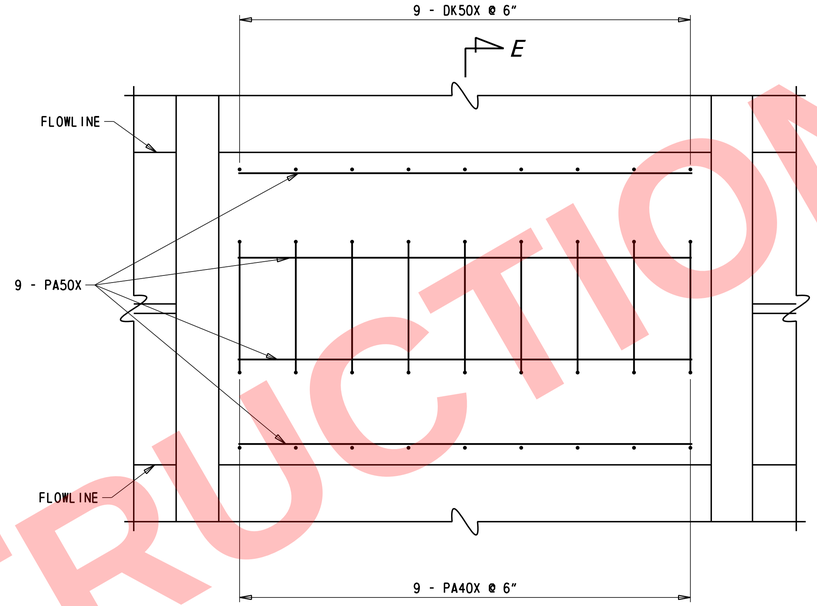

DETAIL A

(PIERS 21 THROUGH 25)

1½″ = 1′-0″

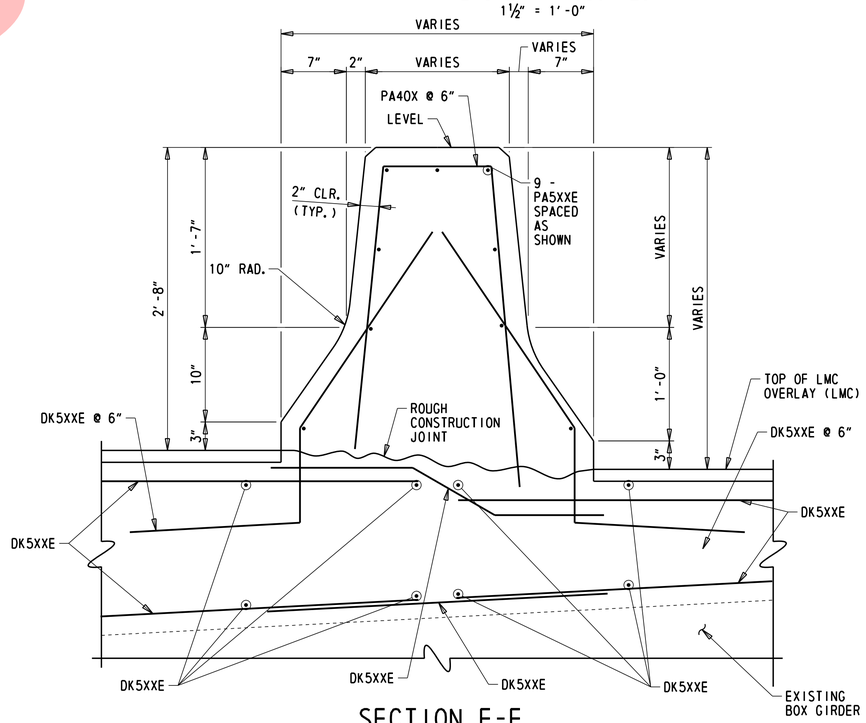

SECTION E-E

1½″ = 1′-0″

NOT FOR CONSTRUCTION

N:\31987-004\Control-I-95\CADD\Bridge\BR1-748_EX16.dgn
5/31/2019 12:19:37 PM

ADDENDA / REVISIONS		SCALE AS NOTED	REHABILITATION OF I-95 FROM I-495 TO NORTH OF BRANDYWINE RIVER BRIDGE	CONTRACT T201407404	BRIDGE NO. 1 748 059	EXPANSION JOINT DETAILS – 16	EX-16 SECTION WRA
				COUNTY NEW CASTLE	DESIGNED BY: DAN		SHEET NO. 396
					CHECKED BY: WAG		

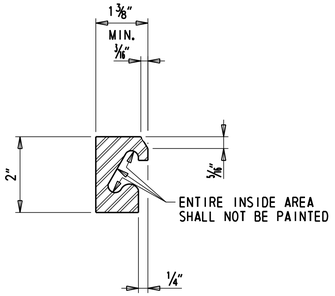

STEEL EXTRUSION DETAIL

6" = 1'-0"

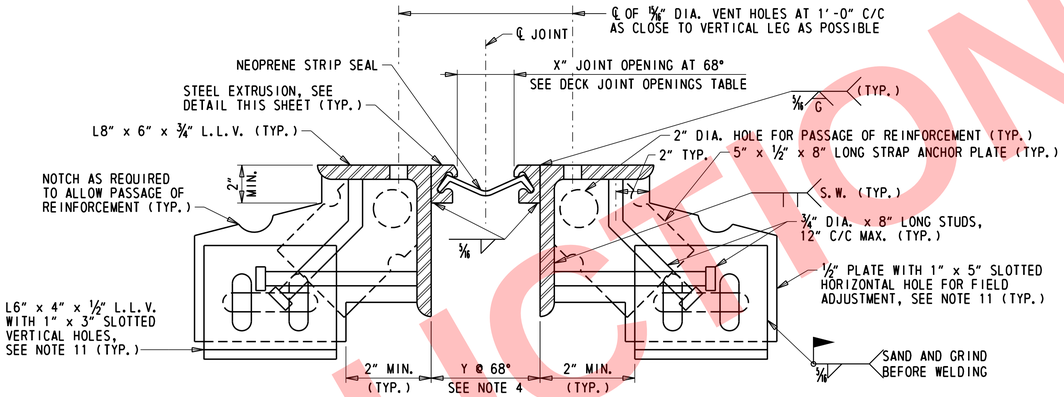

JOINT ASSEMBLY DETAIL

3" = 1'-0"

STRIP SEAL EXPANSION JOINT NOTES:

1. STEEL FOR DECK JOINTS AND STEEL EXTRUSIONS SHALL BE AASHTO M270, GR. 36 (ASTM A36) AT MINIMIM.
2. NEOPRENE EXTRUSION TO MEET ASTM D-2628-81 MODIFIED, (RECOVERY TEST EXCLUDED).
3. THE EXPANSION JOINT SHALL BE CAPABLE OF SEALING THE DECK TO PREVENT MOISTURE AND OTHER CONTAMINANTS FROM DESCENDING THROUGH THE JOINT.
4. THE CONTRACTOR SHALL ADJUST THE OPEN JOINT (Y) AS REQUIRED BY THE WIDTH OF THE STEEL EXTRUSION USED SO AS TO PROVIDE A X" JOINT OPENING AT 68°F.
5. THE STRIP SEAL SHALL BE INSTALLED IN ONE PIECE ACROSS THE BRIDGE WIDTH. SPLICING OF THE STRIP SEAL IS NOT PERMITTED.
6. THE EXPANSION JOINT SYSTEM IS PAID FOR UNDER ITEM 624000 - PREFABRICATED EXPANSION JOINT SYSTEM, 3".
7. STEEL EXTRUSIONS SHALL BE HOT DIPPED GALVANIZED. ENTIRE JOINT ASSEMBLY AND EXTRUSION SHALL BE PAINTED AFTER FABRICATION USING URETHANE SYSTEM IN CONFORMANCE WITH SECTION 616 AND ASTM D 6386. PAYMENT FOR GALVANIZING AND PAINTING WILL BE INCIDENTAL TO ITEM 624000 - PREFABRICATED EXPANSION JOINT SYSTEM, 3". PAINT COLOR SHALL MATCH THE EXISTING BEAMS/GIRDERS.
8. LUBRICANT-ADHESIVE FOR USE IN INSTALLING AND BONDING NEOPRENE SEAL ELEMENTS TO STEEL JOINT COMPONENTS SHALL BE A ONE QUART MOISTURE-CURING POLYURETHANE AND HYDROCARBON SOLVENT MIXTURE HAVING THE FOLLOWING PHYSICAL PROPERTIES:

AVERAGE WEIGHT, POUNDS PER GALLON	8±10%
SOLIDS CONTENT	65%
ADHESIVE SHALL REMAIN LIQUID FROM	5°F TO 120°F
FILM STRENGTH, AS PER ASTM D-412	2,000 PSI
ELONGATION	250%

9. HOLES SHALL BE PLACED IN THE RIB PLATES AND STRAP ANCHOR PLATES FOR BAR REINFORCEMENT. IF THIS IS DONE IN FIELD AN APPROVED EPOXY-BONDED PAINT SHALL BE USED TO TOUCH-UP THE HOLES. PAYMENT INCIDENTAL TO ITEM 624000 - PREFABRICATED EXPANSION JOINT SYSTEM, 3".
10. ANCHOR PLATE AND STEEL EXTRUSION SHALL BE WELDED TO BE WATERTIGHT AT CONSTRUCTION JOINTS. PAYMENT INCIDENTAL TO ITEM 624000 - PREFABRICATED EXPANSION JOINT SYSTEM, 3". AT AREAS WHERE STEEL MEMBERS ARE TO BE SPLICED, USE OF COMPLETE JOINT PENETRATION (CJP) AND PARTIAL JOINT PENETRATION (PJP) WELD ARE BOTH PERMITTED. THE THICKNESS OF PJP WELD MUST BE MINIMUM HALF OF THE STEEL MEMBER THICKNESS.
11. IF WELD OPTION IS PROPOSED, SLOTTED HOLES IN ½" PLATE AND L6" x 4" x ½" MAY BE OMITTED.
12. THE CONTRACTOR SHALL SUBMIT A WORKING PLAN FOR PLACEMENT OF STRIP SEAL DUE TO STAGED CONSTRUCTION IN THE SOUTHBOUND LANES.
13. PARAPET JOINT PLATES ARE REQUIRED. SEE SECTION B-B ON DWG. EX-02.

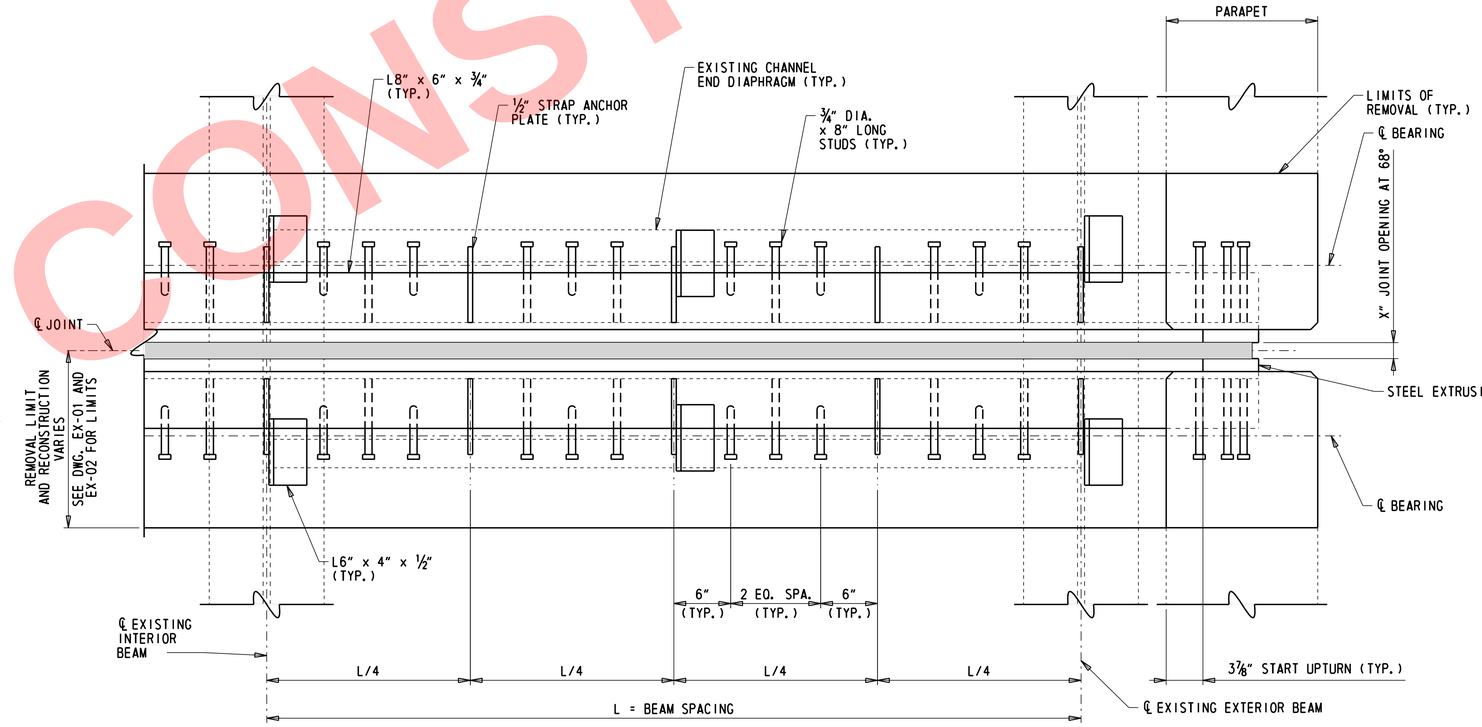

TYPICAL JOINT PLAN

1½" = 1'-0"

NOT FOR CONSTRUCTION

N:\31987-00A\Contract\I-95\CADD\Bridge\BRI-748_EX23.dgn
5/31/2019 12:15:38 PM

ADDENDA / REVISIONS		SCALE AS NOTED	REHABILITATION OF I-95 FROM I-495 TO NORTH OF BRANDYWINE RIVER BRIDGE	CONTRACT T201407404	BRIDGE NO. 1 748 059	EXPANSION JOINT DETAILS – 17	EX-17
				COUNTY NEW CASTLE	DESIGNED BY: DAN		SECTION WRA
					CHECKED BY: WAG		SHEET NO. 397

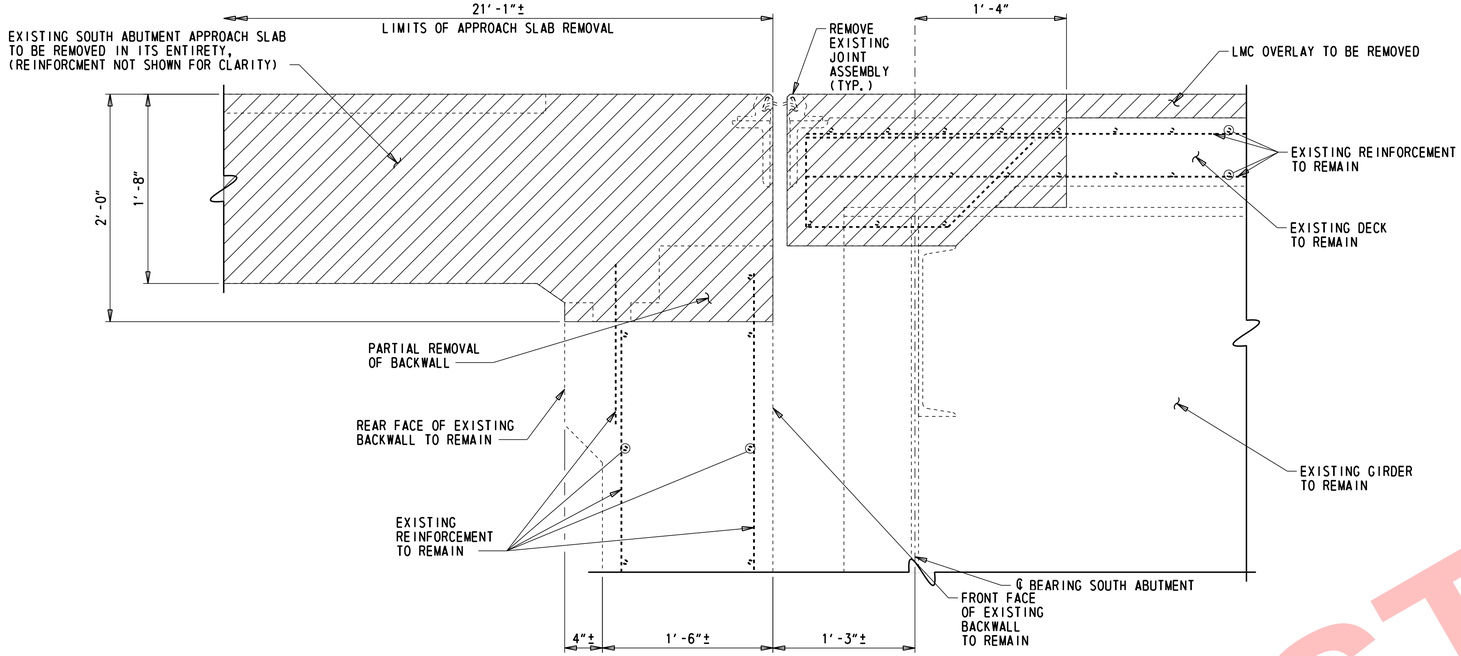

SECTION A-A REMOVAL

1½" = 1'-0"

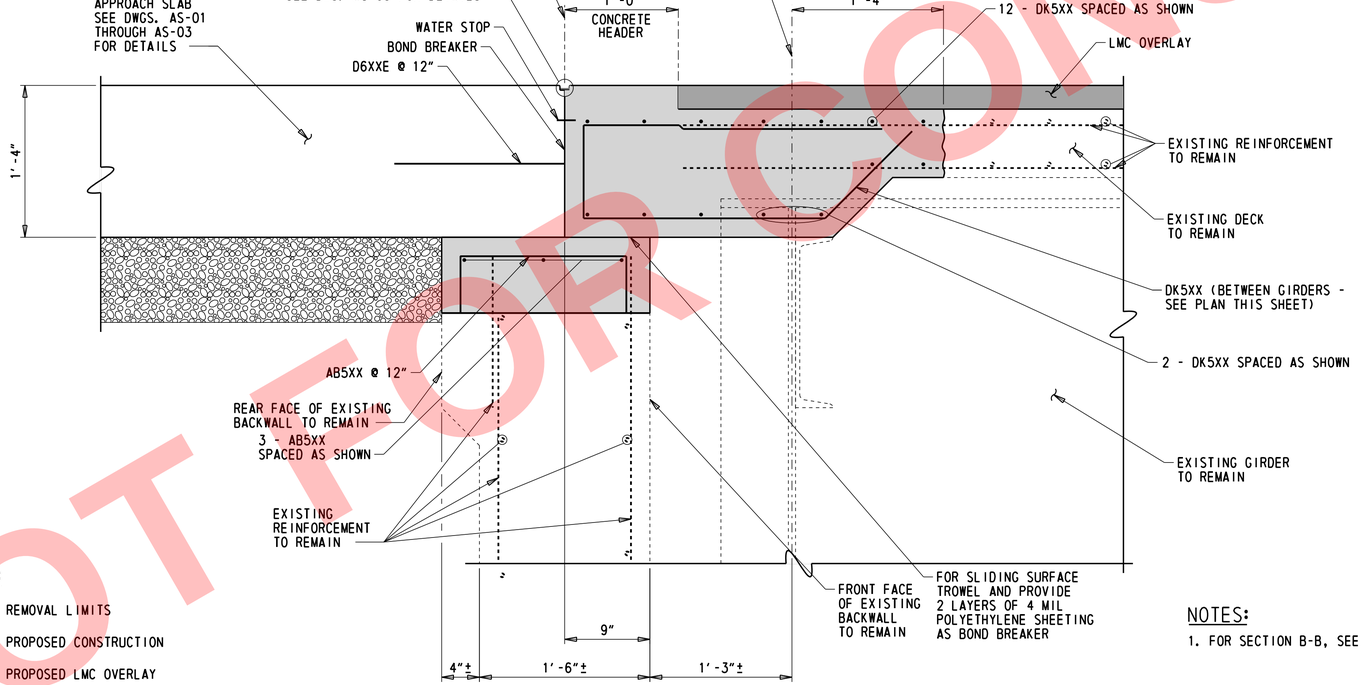

SECTION A-A DECK OVER DETAIL

1½" = 1'-0"

LEGEND:

- REMOVAL LIMITS
- PROPOSED CONSTRUCTION
- PROPOSED LMC OVERLAY

NOTES:

1. FOR SECTION B-B, SEE DWG. EX-XX.

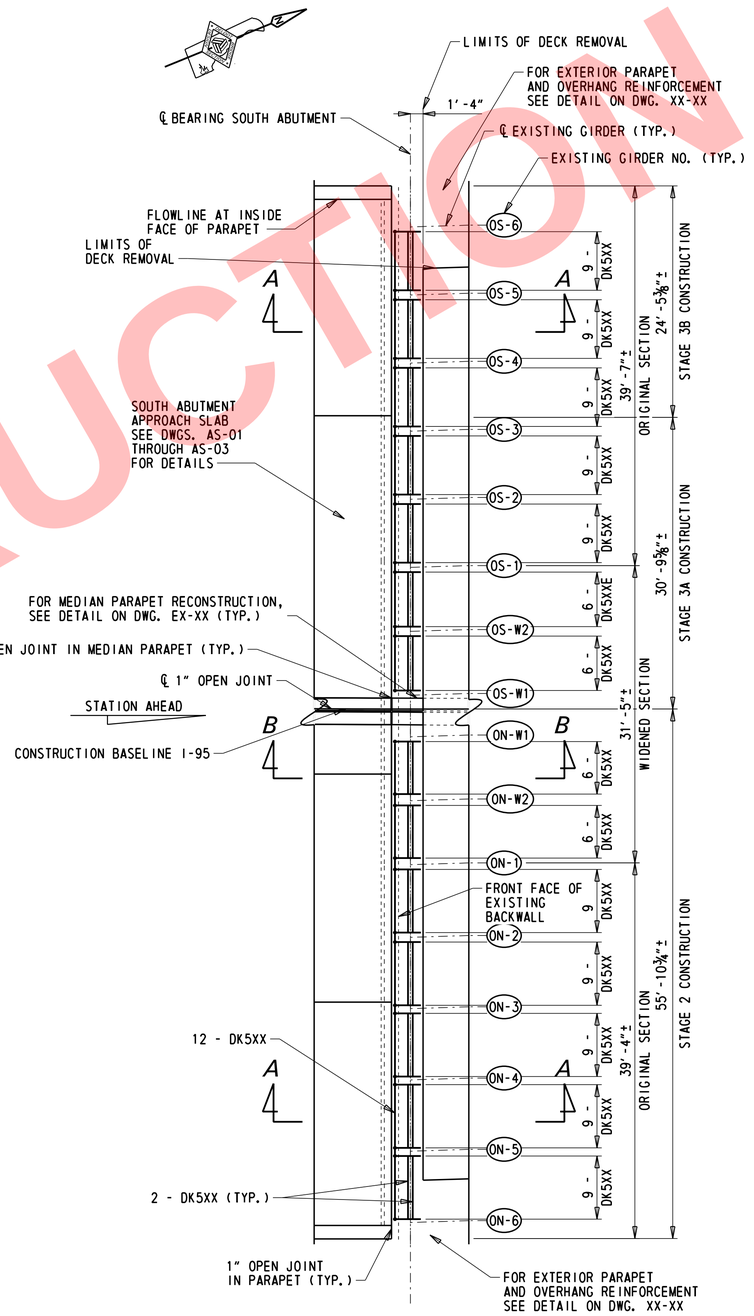

PLAN - DECK OVER AT SOUTH ABUTMENT

⅛" = 1'-0"

NOT FOR CONSTRUCTION

ADDENDA / REVISIONS	SCALE AS NOTED	REHABILITATION OF I-95 FROM I-495 TO NORTH OF BRANDYWINE RIVER BRIDGE	CONTRACT T201407404	BRIDGE NO. 1 748 059	SOUTH ABUTMENT DECKOVER DETAILS – 1	EX-18
			COUNTY NEW CASTLE	DESIGNED BY: DAN		SECTION WRA
				CHECKED BY: WAG		SHEET NO. 398

N:\31987-004\Control_I-95\CADD\Bridge\BR1-748_EX17.dgn
5/31/2019 12:13:39 PM

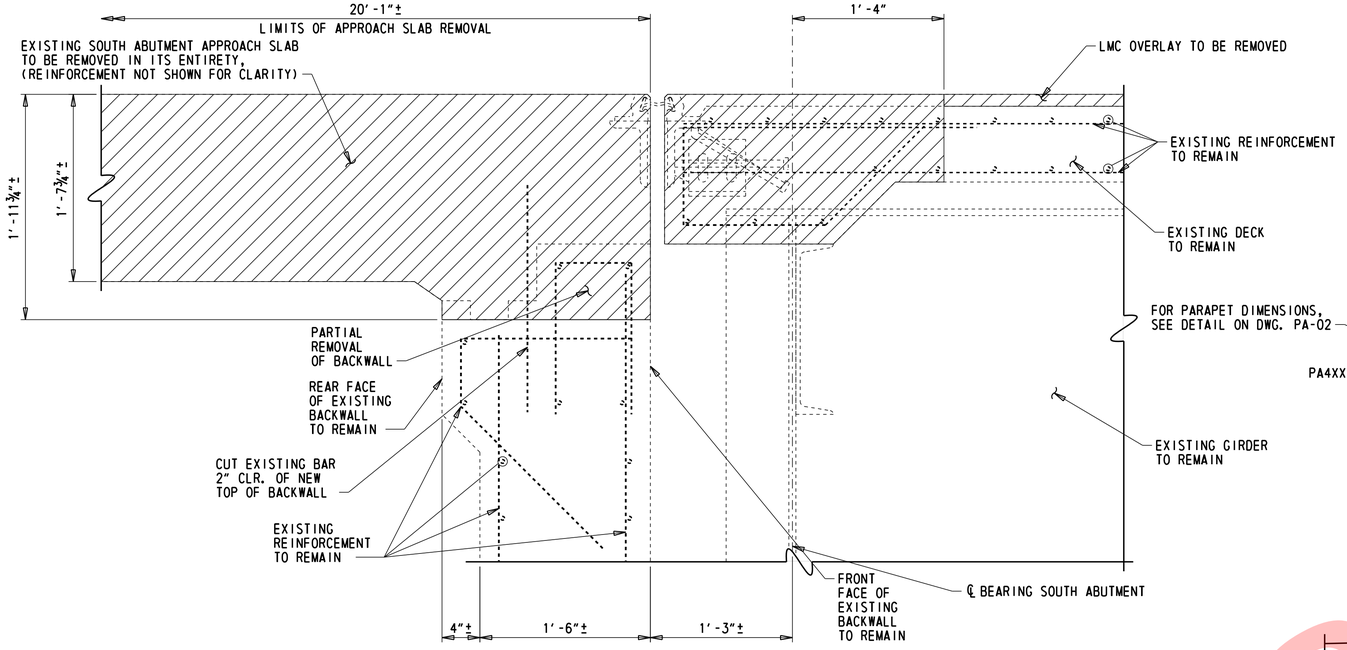

SECTION B-B REMOVAL

1½" = 1'-0"

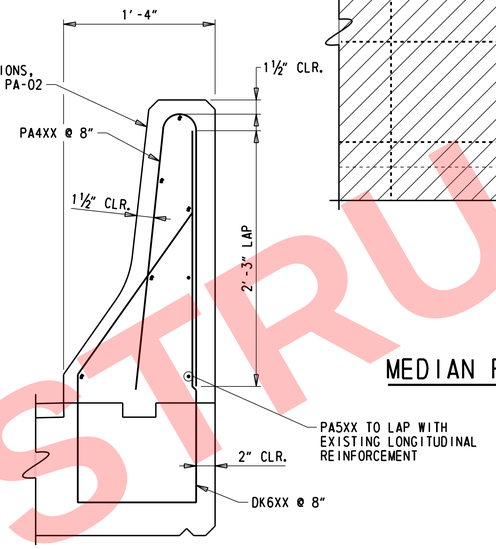

MEDIA PARAPET REINFORCEMENT AT DECKOVER

1½" = 1'-0"

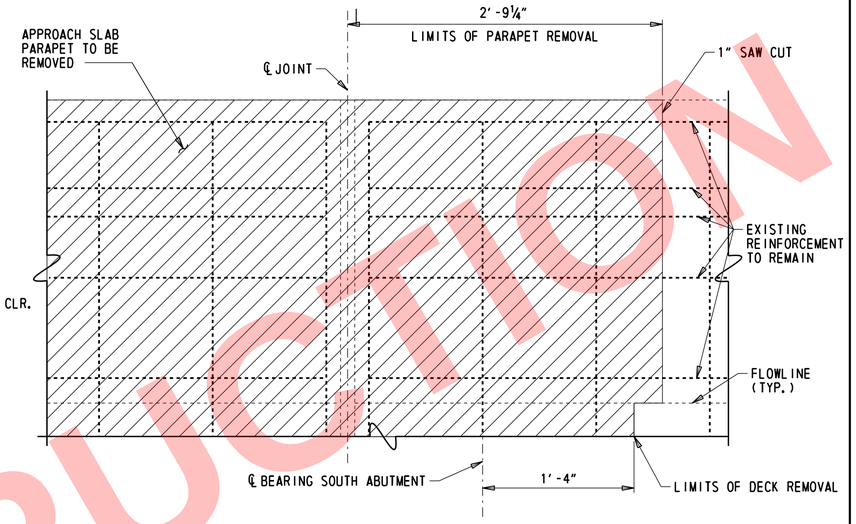

MEDIAN PARAPET REMOVAL AT DECK OVER

1½" = 1'-0"

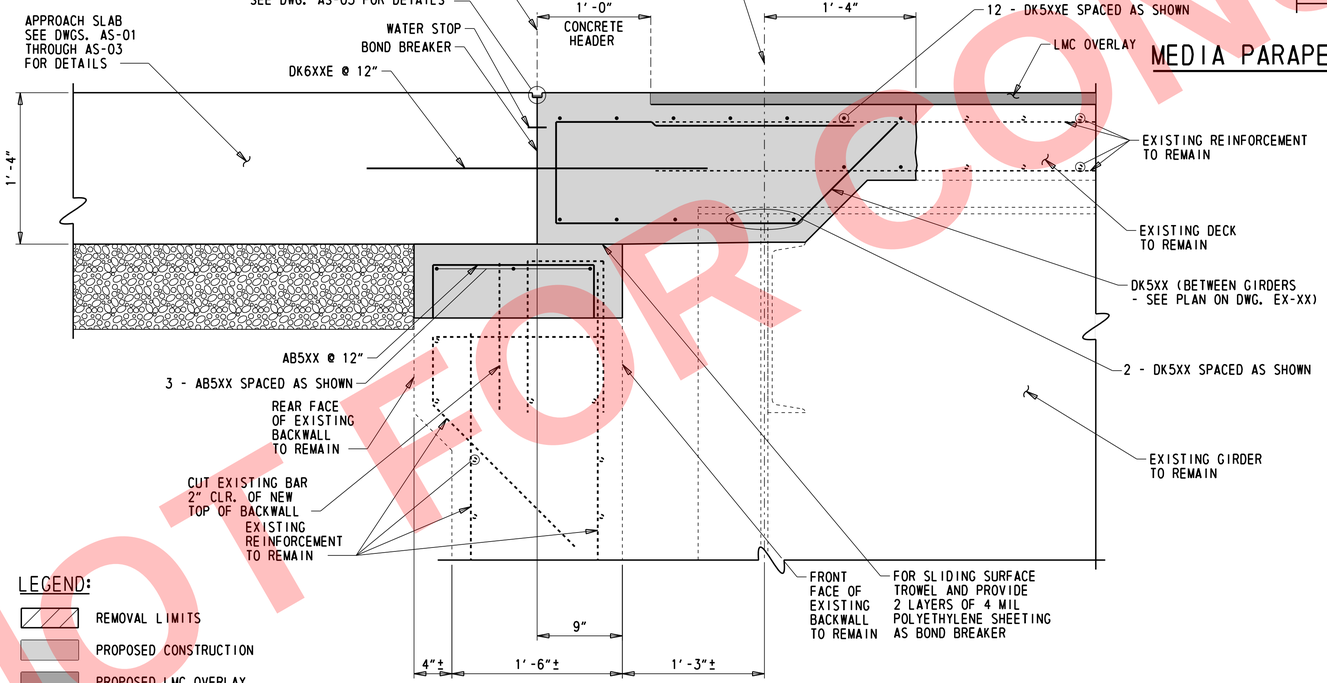

LEGEND:

- REMOVAL LIMITS
- PROPOSED CONSTRUCTION
- PROPOSED LMC OVERLAY

SECTION B-B DECK OVER DETAIL

1½" = 1'-0"

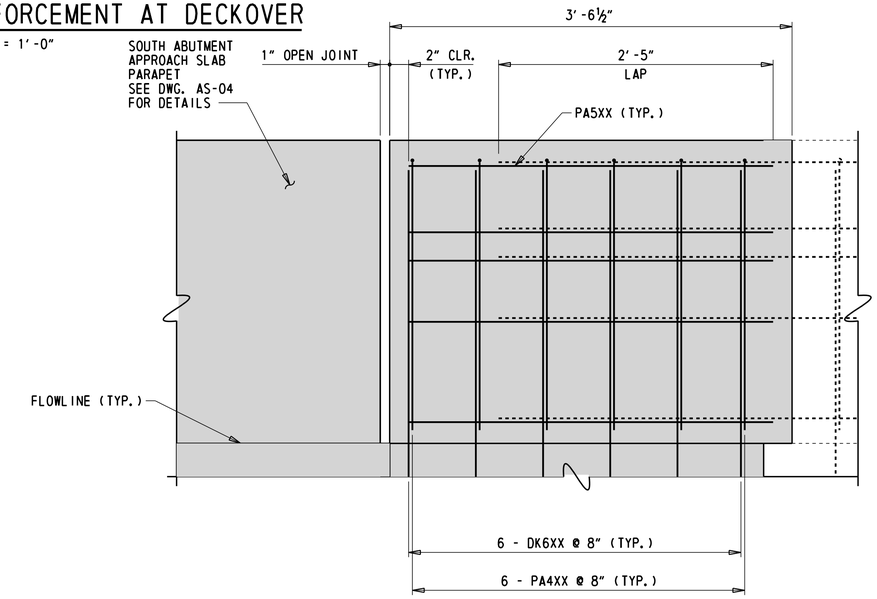

MEDIAN PARAPET RECONSTRUCTION AT DECK OVER

1½" = 1'-0"

NOT FOR CONSTRUCTION

N:\31987-004\Control\I-95\CADD\Bridges\BR1-748_EX18.dgn
5/31/2019 12:13:40 PM

ADDENDA / REVISIONS	SCALE AS NOTED	REHABILITATION OF I-95 FROM I-495 TO NORTH OF BRANDYWINE RIVER BRIDGE	CONTRACT T201407404	BRIDGE NO. 1 748 059	SOUTH ABUTMENT DECKOVER DETAILS – 2	EX-19
			COUNTY NEW CASTLE	DESIGNED BY: DAN		SECTION WRA
				CHECKED BY: WAG		SHEET NO. 399

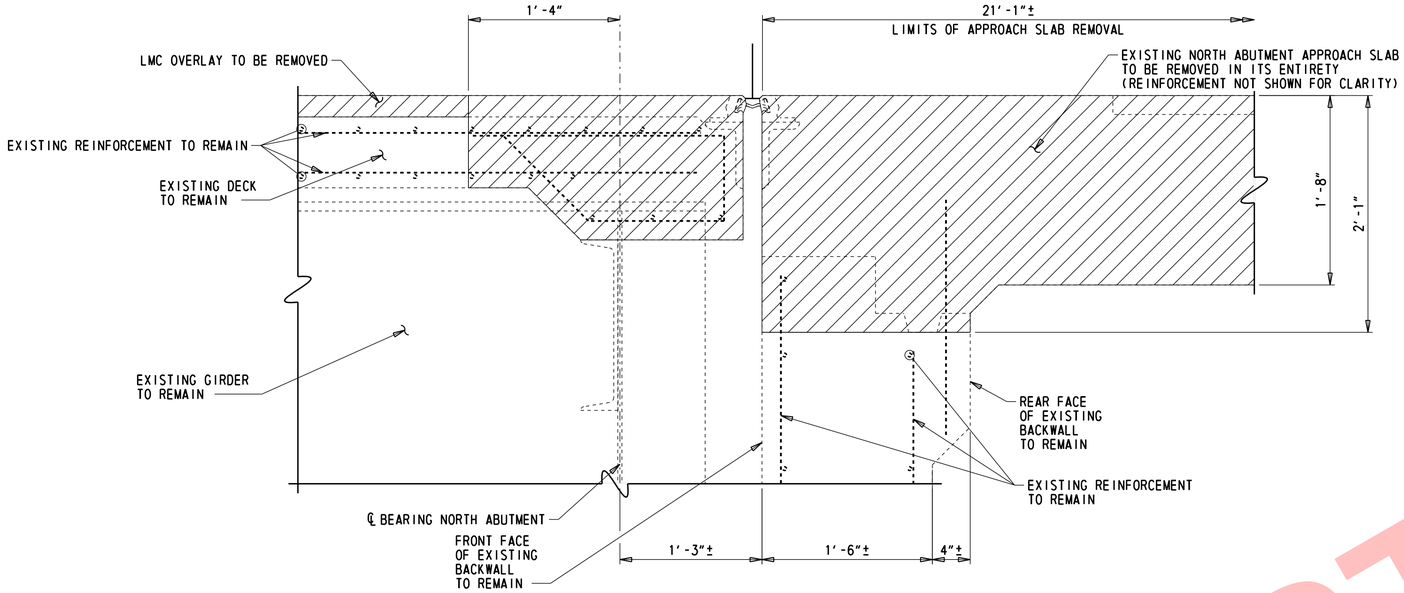

SECTIONS C-C AND D-D REMOVAL

1½" = 1'-0"

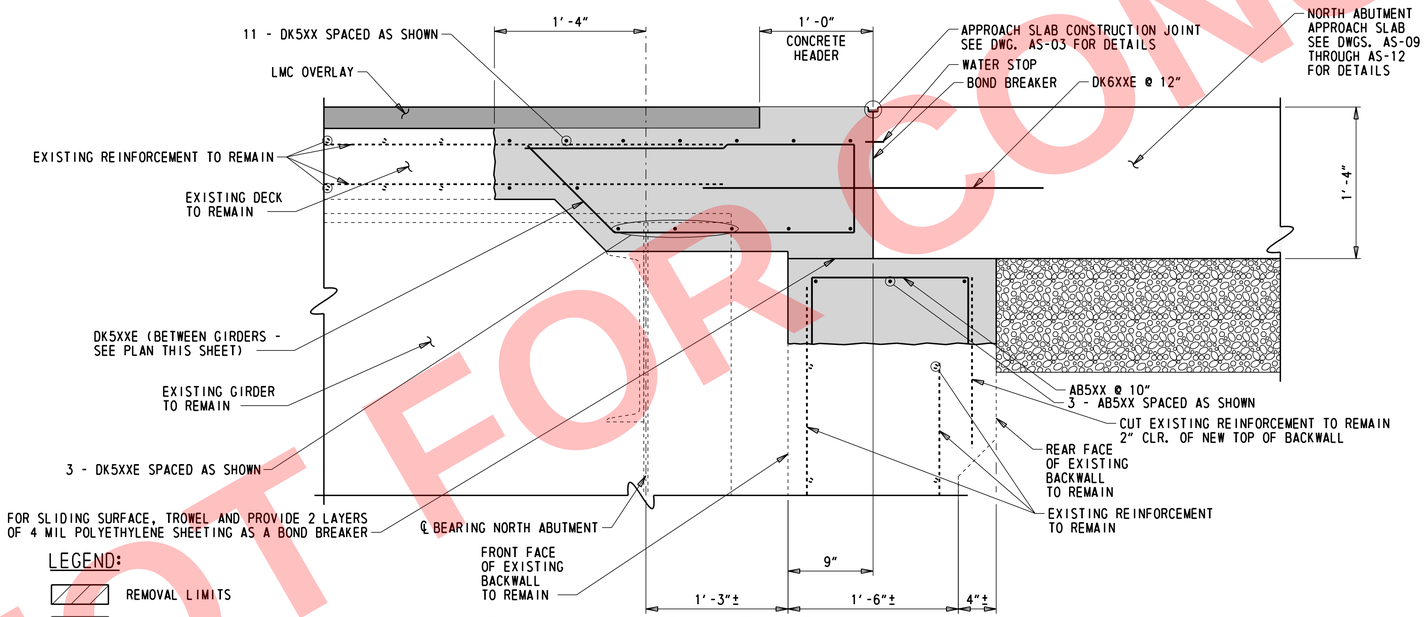

SECTION C-C DECKOVER DETAIL

1½" = 1'-0"

LEGEND:

- REMOVAL LIMITS
- PROPOSED CONSTRUCTION
- PROPOSED LMC OVERLAY

NOTES:

1. FOR SECTION B-B, SEE DWG. EX-XX.

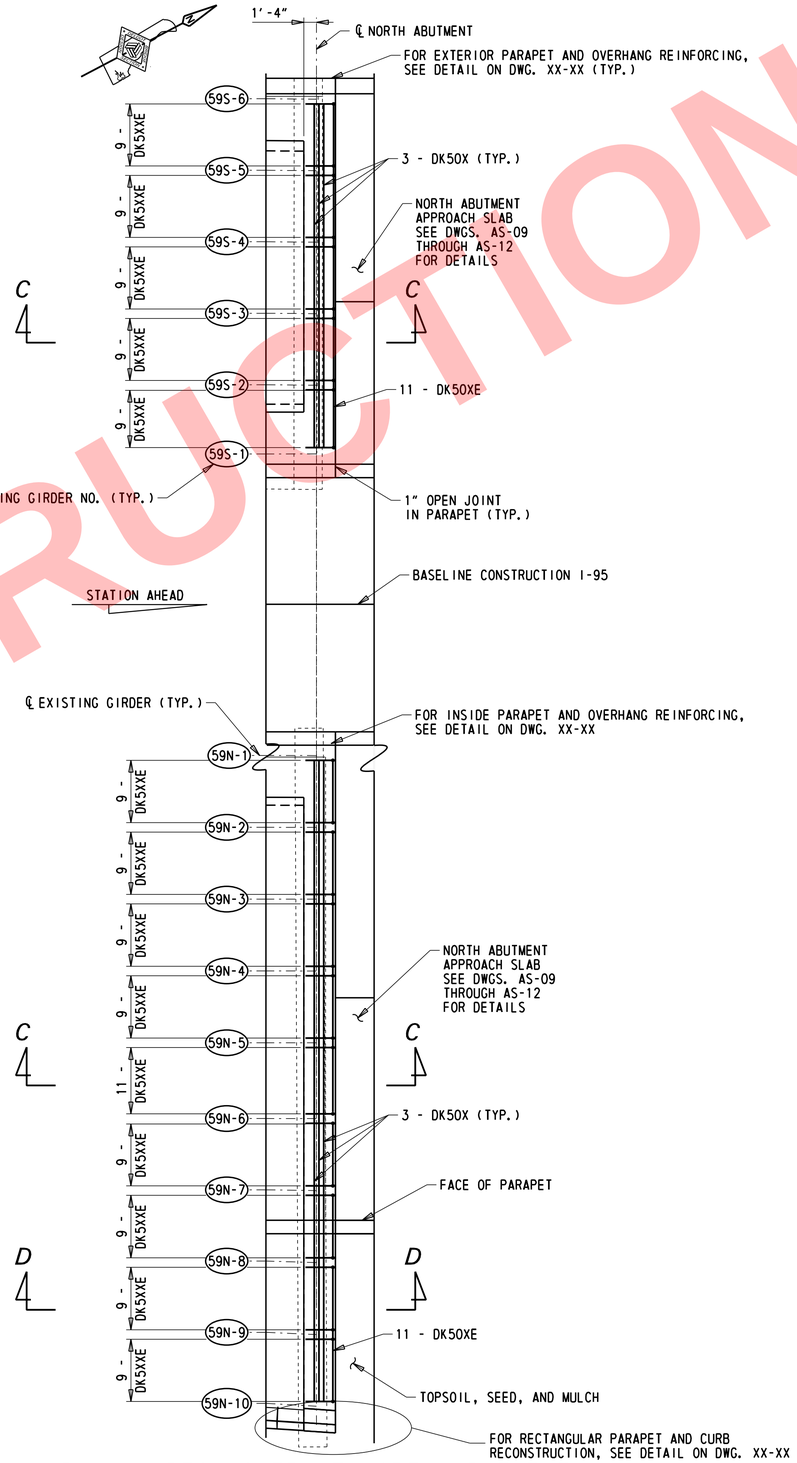

PLAN - DECK OVER AT NORTH ABUTMENT

⅛" = 1'-0"

NOT FOR CONSTRUCTION

N:\31987-004\Contract_I-95\C4DD\Bridge\BRI-748_EX19.dgn
5/31/2019 12:15:41 PM

ADDENDA / REVISIONS		SCALE AS NOTED	REHABILITATION OF I-95 FROM I-495 TO NORTH OF BRANDYWINE RIVER BRIDGE	CONTRACT T201407404	BRIDGE NO. 1 748 059	NORTH ABUTMENT DECKOVER DETAILS – 1	EX-20
				COUNTY NEW CASTLE	DESIGNED BY: DAN		SECTION WRA
					CHECKED BY: WAG		SHEET NO. 400

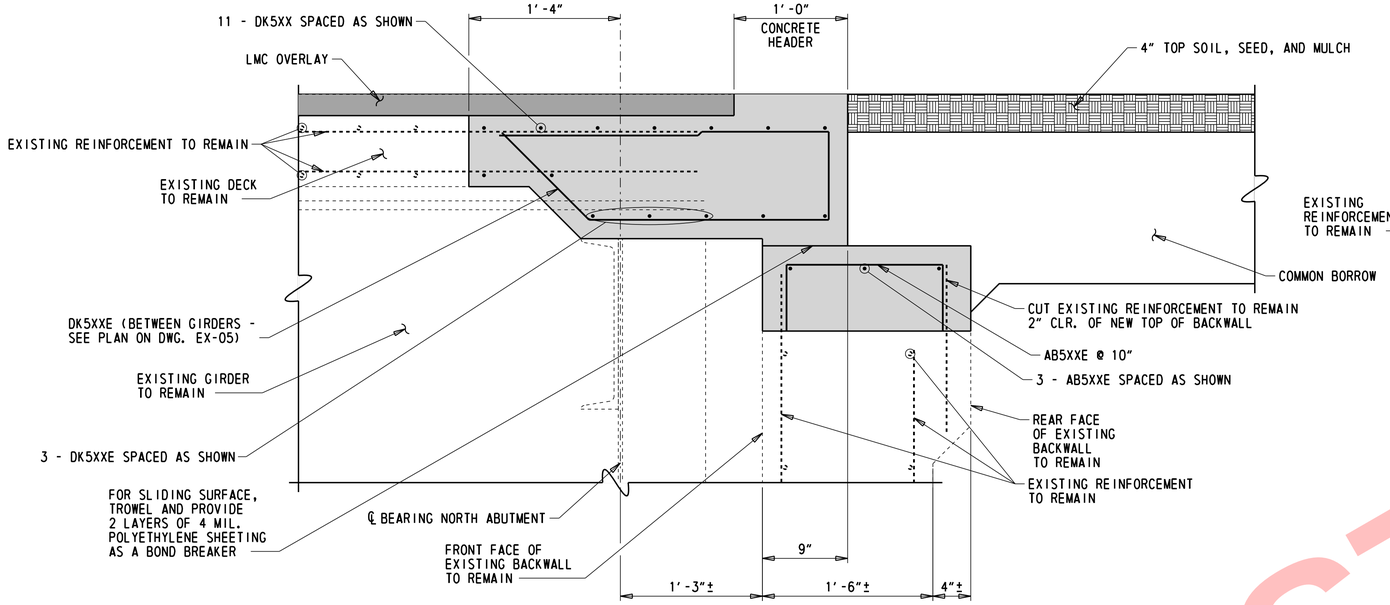

SECTION D-D DECKOVER DETAIL

1½" = 1'-0"

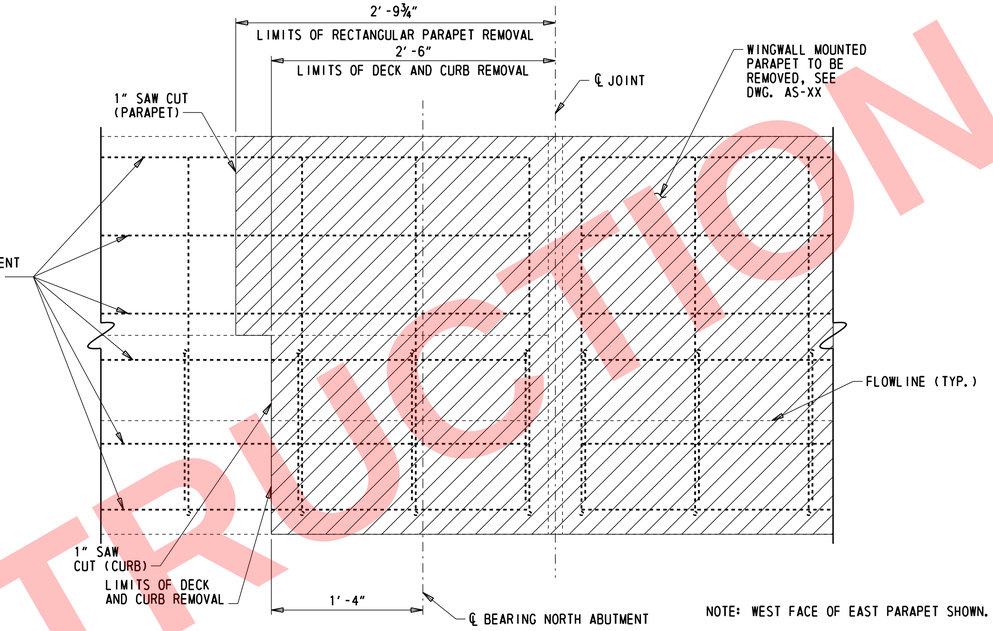

RECTANGULAR PARAPET AND CURB REMOVAL

1½" = 1'-0"

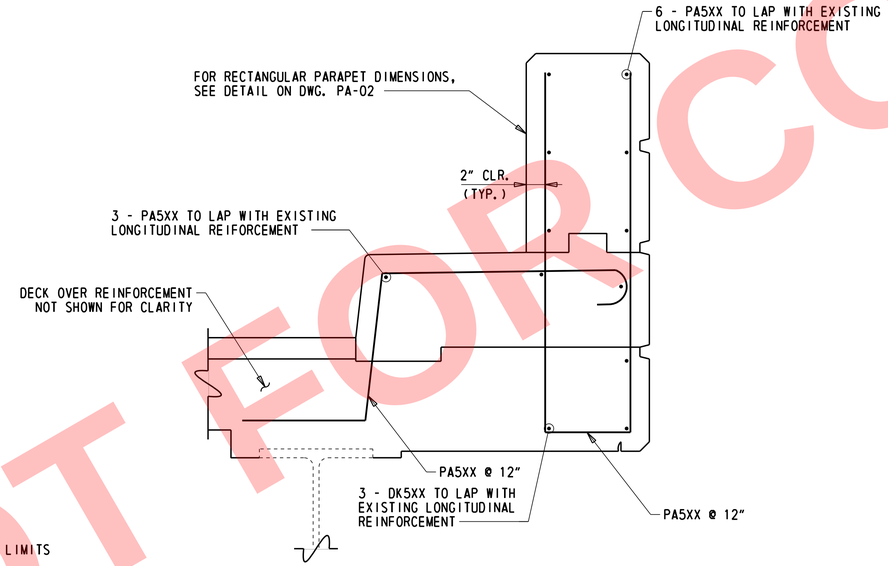

SECTION C-C

1½" = 1'-0"

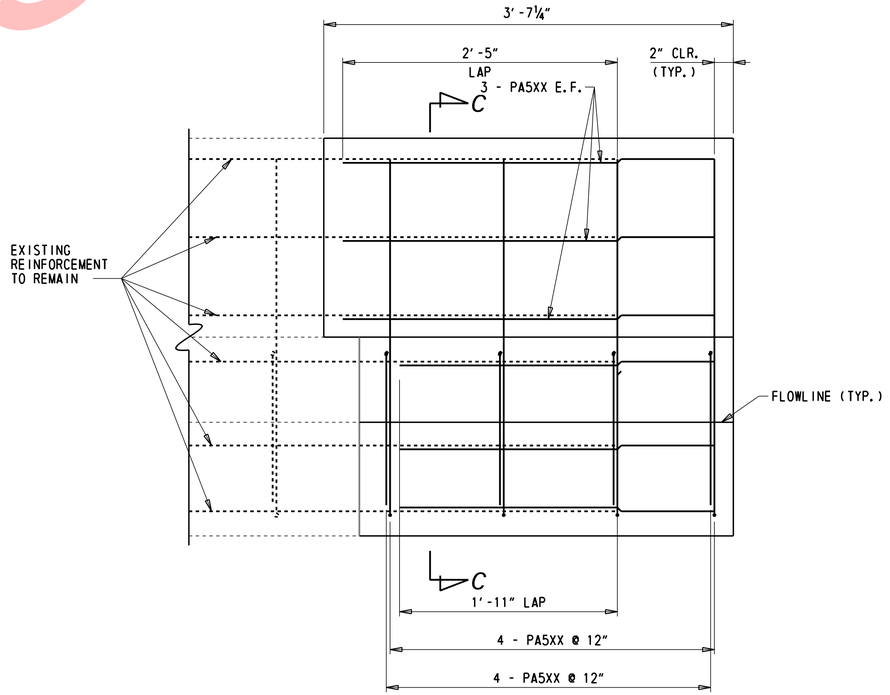

RECTANGULAR PARAPET AND CURB RECONSTRUCTION

1½" = 1'-0"

LEGEND:

- REMOVAL LIMITS
- PROPOSED CONSTRUCTION
- PROPOSED LMC OVERLAY

NOT FOR CONSTRUCTION

N:\31987-004\Contract_I-95\CADD\Bridge\BRI-748_EX20.dgn
5/31/2019 12:13:42 PM

ADDENDA / REVISIONS	SCALE AS NOTED	REHABILITATION OF I-95 FROM I-495 TO NORTH OF BRANDYWINE RIVER BRIDGE	CONTRACT T201407404	BRIDGE NO. 1 748 059	NORTH ABUTMENT DECKOVER DETAILS – 2	EX-21
			COUNTY NEW CASTLE	DESIGNED BY: DAN		SECTION WRA
				CHECKED BY: WAG		SHEET NO. 401

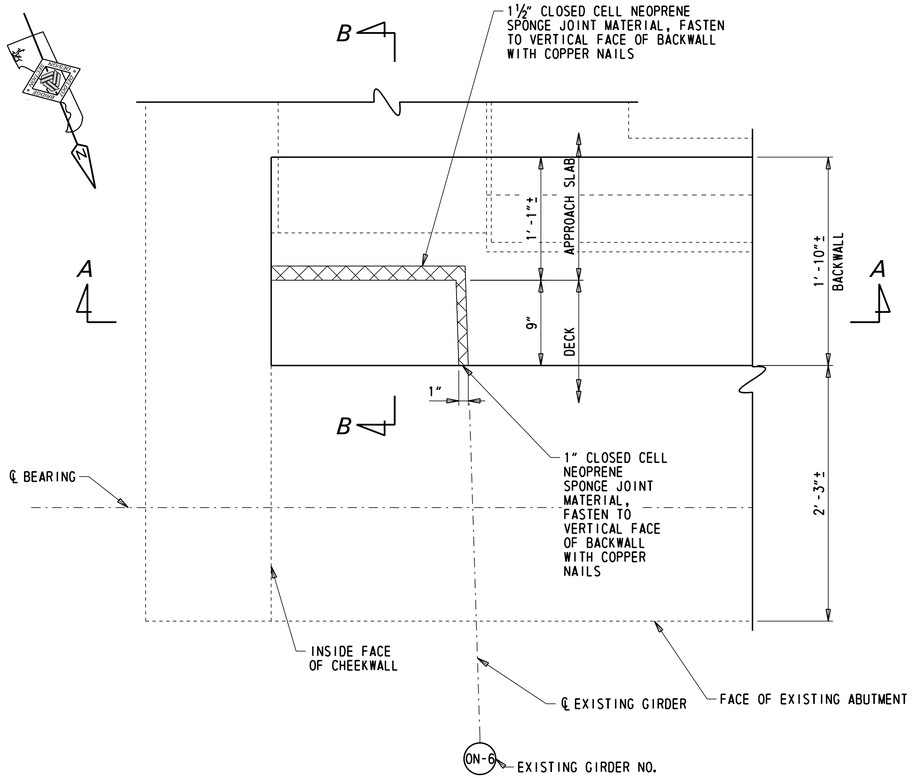

PLAN - TYPICAL DECKOVER DETAIL AT OVERHANG

(SOUTH ABUTMENT, EAST END SHOWN, OTHER LOCATIONS SIMILAR)

1½" = 1'-0"

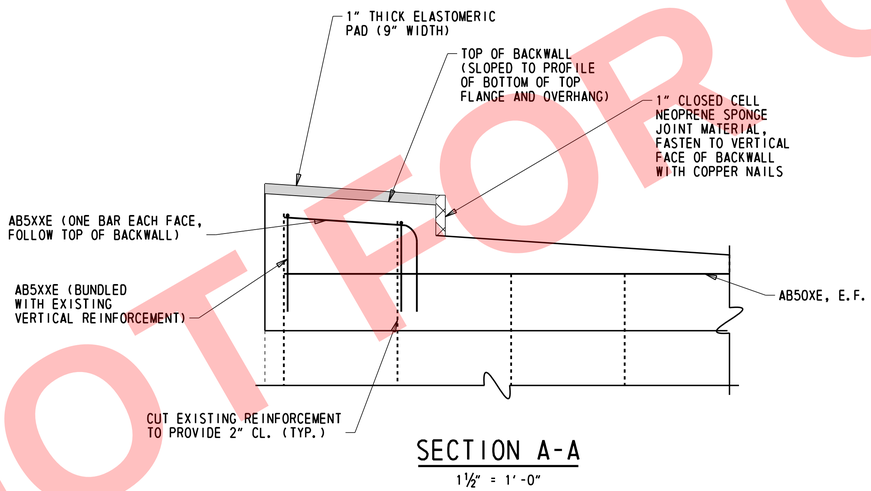

SECTION A-A

1½" = 1'-0"

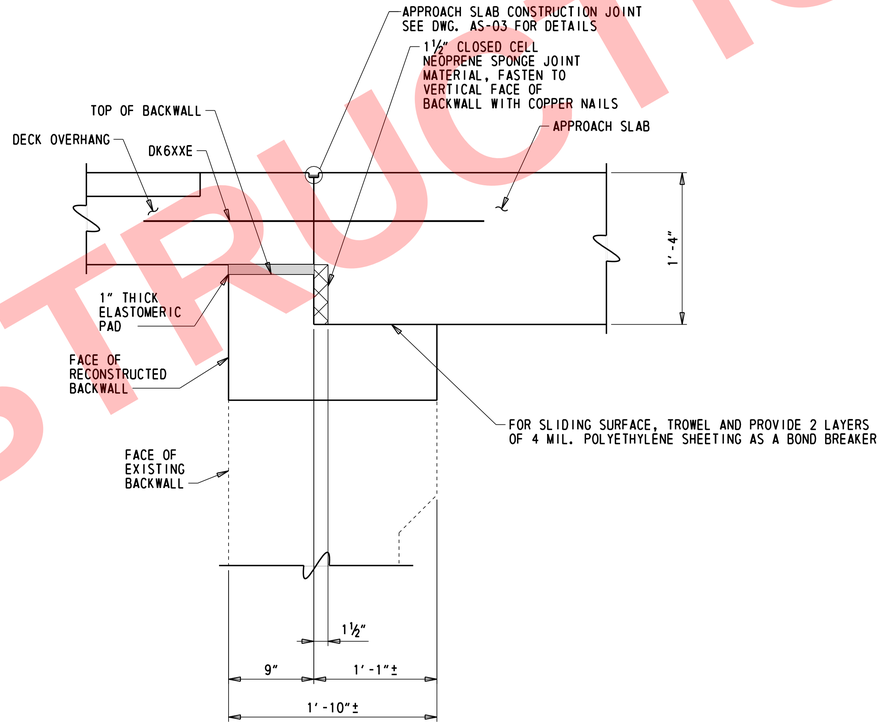

SECTION B-B

1½" = 1'-0"

NOT FOR CONSTRUCTION

N:\31987-004\Cntrct\I-95\COD\Bridge\BRI-748_EX21.dgn
5/31/2019 12:13:42 PM

ADDENDA / REVISIONS		SCALE AS NOTED	REHABILITATION OF I-95 FROM I-495 TO NORTH OF BRANDYWINE RIVER BRIDGE	CONTRACT T201407404	BRIDGE NO. 1 748 059	DECKOVER DETAILS	EX-22
				COUNTY NEW CASTLE	DESIGNED BY: DAN		SECTION WRA
					CHECKED BY: WAG		SHEET NO. 402

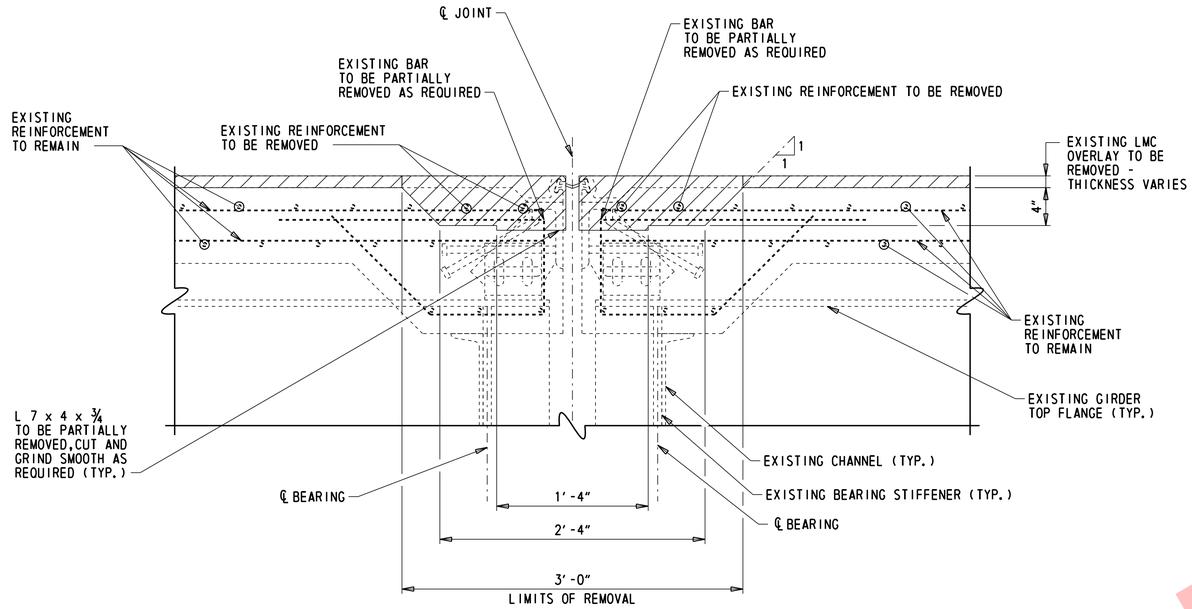

LINK SLAB REMOVAL DETAIL

1½" = 1'-0"

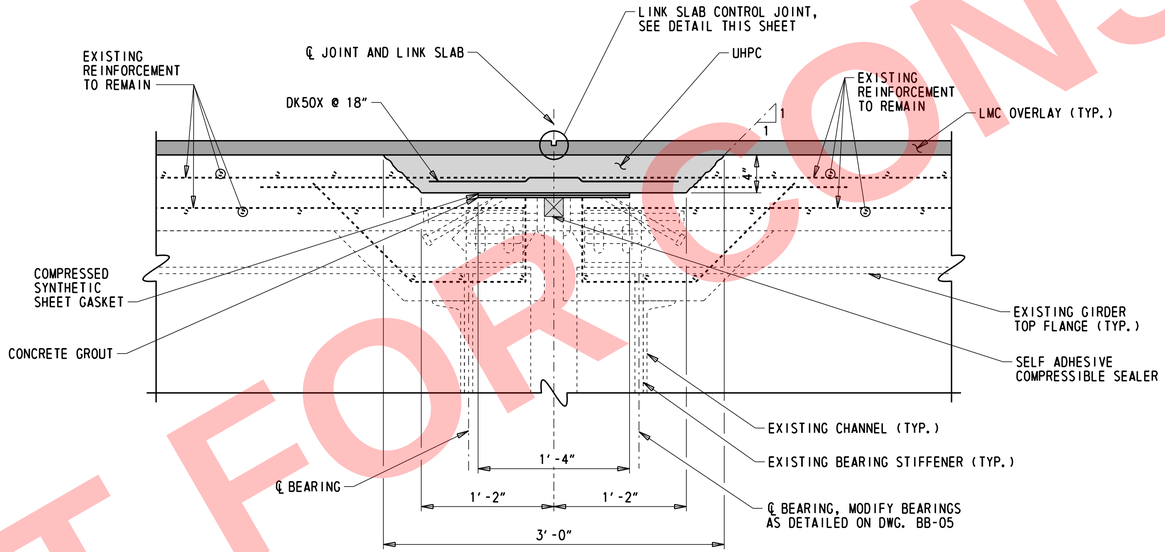

LINK SLAB DETAIL

1½" = 1'-0"

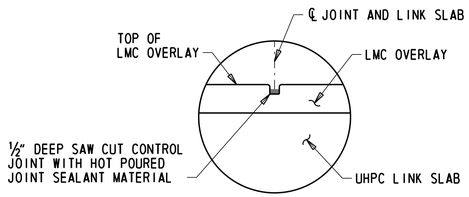

LINK SLAB CONTROL JOINT

3" = 1'-0"

NOTES:

1. PAYMENT FOR REMOVAL OF CONCRETE HEADER AND PARTIAL REMOVAL OF JOINT ANGLES AS REQUIRED WILL BE INCIDENTAL TO ITEM 211000 - REMOVAL OF STRUCTURES AND OBSTRUCTIONS.
2. PAYMENT FOR ½" DEEP SAW CUT CONTROL JOINT AND HOT POURED JOINT SEALANT WILL BE INCIDENTAL TO ITEM 625000 - LATEX-MODIFIED CONCRETE OVERLAY INSTALLATION.
3. FOR SEQUENCE OF CONSTRUCTION NOTES, SEE DWG. BB-07.

LEGEND:

- REMOVAL LIMITS
- PROPOSED UHPC
- PROPOSED LMC OVERLAY

NOT FOR CONSTRUCTION

N:\31987-004\Contract_I-95\CADD\Bridge\BR1-748_EX22.dgn
5/31/2019 12:13:43 PM

ADDENDA / REVISIONS	SCALE AS NOTED	REHABILITATION OF I-95 FROM I-495 TO NORTH OF BRANDYWINE RIVER BRIDGE	CONTRACT T201407404	BRIDGE NO. 1 748 059	LINK SLAB DETAILS	EX-23
			COUNTY NEW CASTLE	DESIGNED BY: DAN		SECTION WRA
				CHECKED BY: WAG		SHEET NO. 403

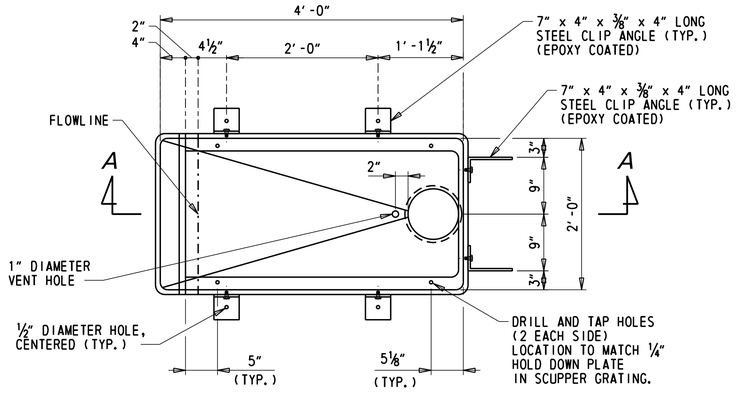

TYPE I PLAN VIEW

1″ = 1′-0″

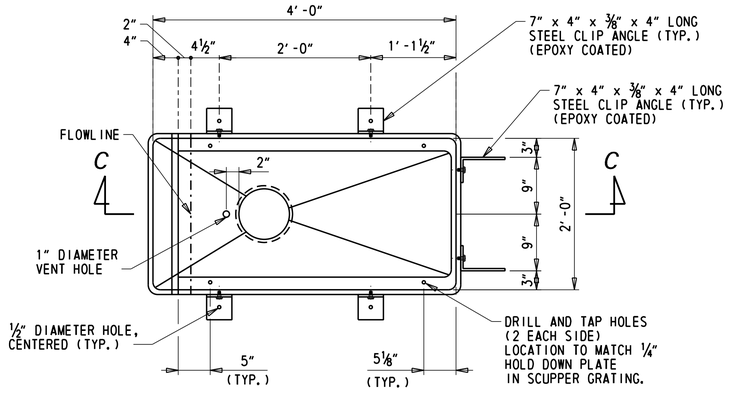

TYPE II PLAN VIEW

1″ = 1′-0″

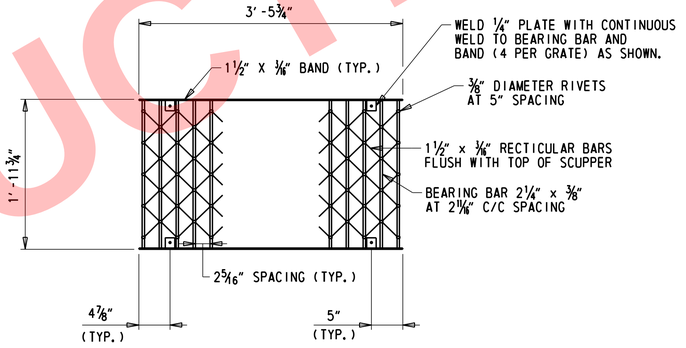

SCUPPER GRATING PLAN VIEW

1″ = 1′-0″

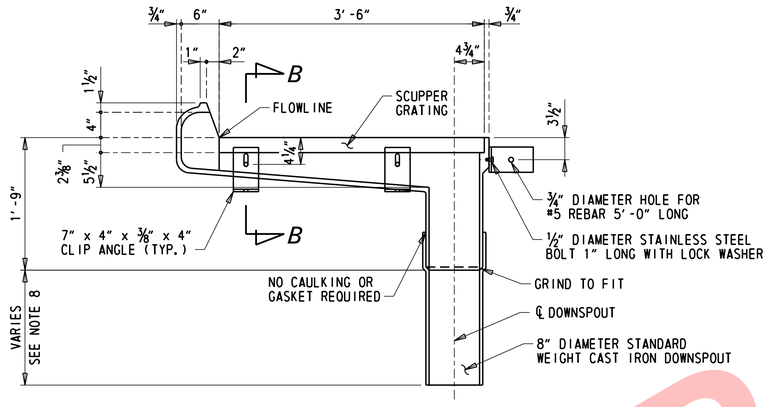

SECTION A-A

1″ = 1′-0″

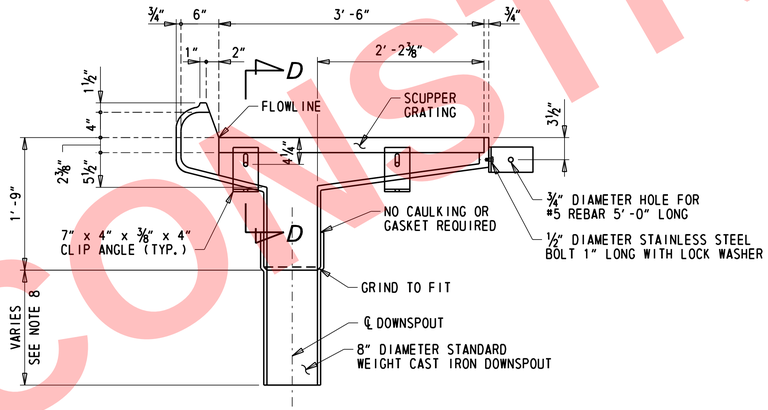

SECTION C-C

1″ = 1′-0″

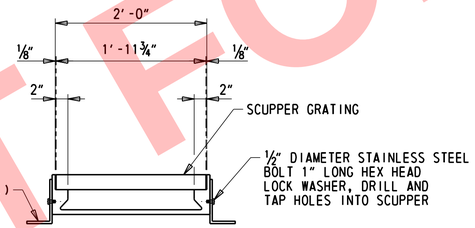

SECTION B-B

1″ = 1′-0″

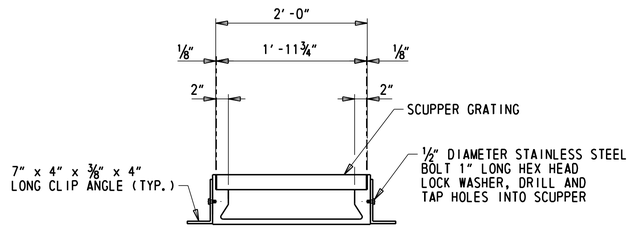

SECTION D-D

1″ = 1′-0″

NOTES:

1. SCUPPERS SHALL BE GRAY CAST IRON, CONFORMING TO ASTM M 105 CLASS 30.
2. GRATINGS SHALL BE STRUCTURAL STEEL CONFORMING TO ASTM A 709 GRADE 36 AND EPOXY COATED.
3. STAINLESS STEEL BOLTS SHALL CONFORM TO ASTM A 193, IDENTIFICATION SYMBOL B 8 TYPE 304.
4. SCUPPERS SHALL BE PAINTED IN CONFORMANCE WITH SECTION 616.02 OF THE STANDARD SPECIFICATIONS. OUTSIDE OF SCUPPERS EXPOSED TO ATMOSPHERE BELOW THE CONCRETE DECK SLAB SHALL RECEIVE THE FIELD PAINT REQUIRED FOR STRUCTURAL STEEL AND SHALL MATCH THE COLOR OF EXISTING BEAM.
5. THE FURNISHING, FABRICATING, ERECTING, ETC. OF ALL SCUPPERS FOR THE BRIDGE, COMPLETE IN PLACE, WILL NOT BE MEASURED BUT WILL BE PAID FOR UNDER ITEM 615001 - STEEL STRUCTURES (LS).
6. THERE MUST BE A MINIMUM OF 5″ OF CONCRETE UNDER ENTIRE SCUPPER AREA, WITH A MAT OF REBARS EQUIVALENT IN SIZE AND SPACING TO NORMAL BOTTOM MAT PATTERN OF DECK. THIS MAY REQUIRE THE LOWERING OF THE DECK IN THIS AREA.
7. GRATE AND SCUPPER SHALL BE SHIPPED AS UNIT WITH GRATE HOLD DOWN BOLTS IN PLACE (NOT WELDED).
8. EXTEND DOWNSPOUT TO A MINIMUM OF 8″ BELOW THE BOTTOM FLANGE OF THE NEAREST STRUCTURAL STEEL SUPERSTRUCTURE MEMBER OR TRANSVERSE STRUCTURAL STEEL SUBSTRUCTURE MEMBER. DOWNSPOUT TERMINATION SHALL NOT REDUCE THE EXISTING CLEARANCES OVER ROADWAY(S) OR RAILROAD TRACK(S).
9. FOR SCUPPER TYPE LOCATION TABLE, SEE DWG. DT-09.

NOT FOR CONSTRUCTION

N:\31987-00A\Contract\I-95\CADD\Bridge\BRI-748_SCUPPER1.dgn
5/31/2019 12:13:44 PM

ADDENDA / REVISIONS	SCALE AS NOTED	REHABILITATION OF I-95 FROM I-495 TO NORTH OF BRANDYWINE RIVER BRIDGE	CONTRACT T201407404	BRIDGE NO. 1 748 059	SCUPPER DETAILS 1 OF 2	DT-05
			COUNTY NEW CASTLE	DESIGNED BY: DAN		SECTION WRA
				CHECKED BY: WAG		SHEET NO. 408

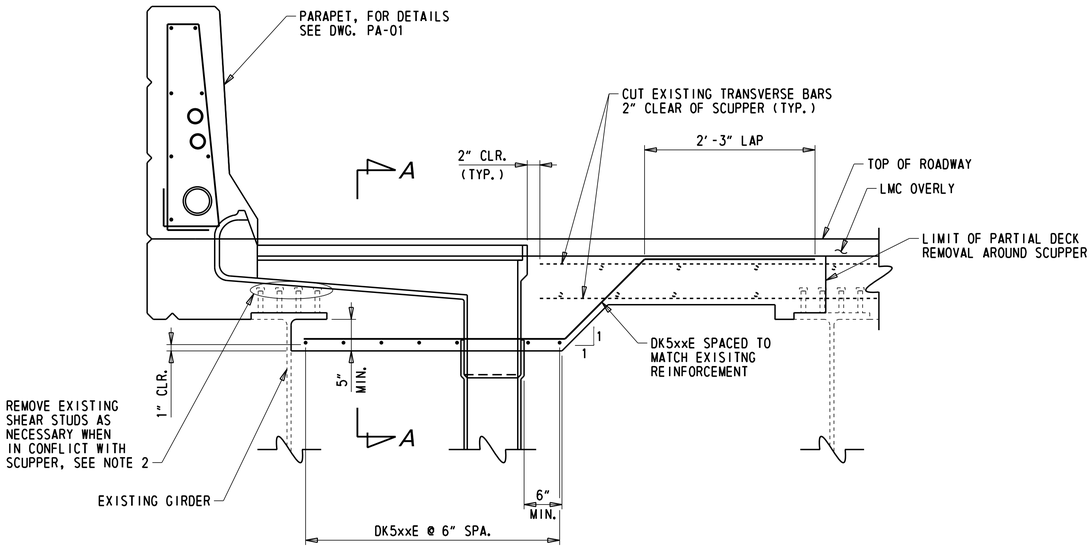

ADDITIONAL REINFORCEMENT - TYPE I ELEVATION

1" = 1'-0"

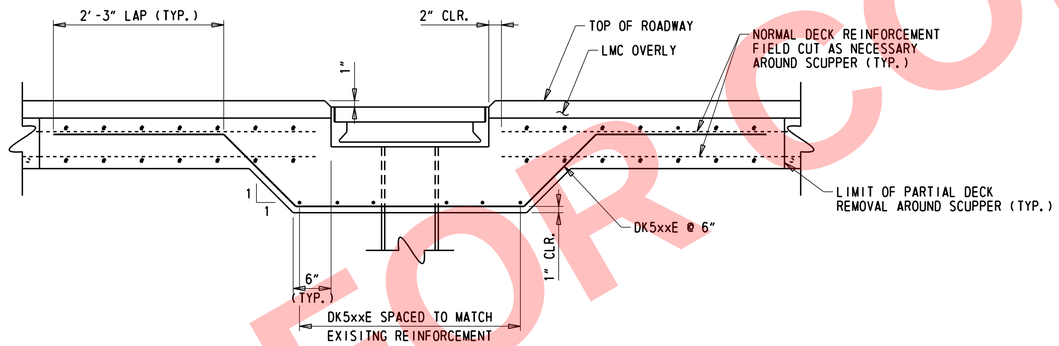

SECTION A-A

1" = 1'-0"

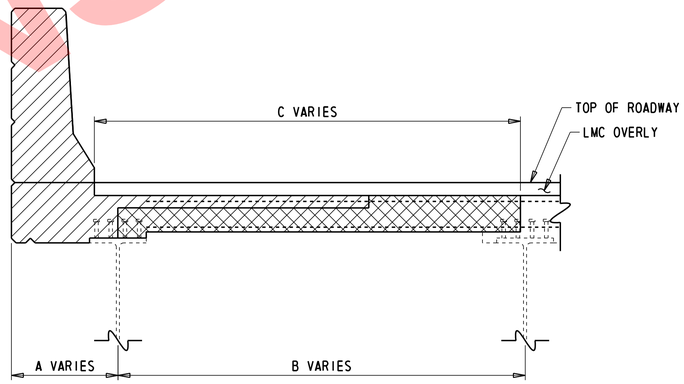

SCUPPER REINFORCEMENT CONCRETE REMOVAL DETAIL

¾" = 1'-0"

LEGEND:

- APPROXIMATE LIMITS OF PARTIAL DECK AND OVERHANG REMOVAL.
- APPROXIMATE LIMITS OF ADDITIONAL PARTIAL DECK REMOVAL AROUND SCUPPERS.

NOTES:

1. FOR SCUPPER DETAILS, SEE DWG. DT-05.
2. FOR EACH SHEAR STUD REMOVED, A NEW SHEAR STUD SHALL BE INSTALLED ADJACENT TO THE SCUPPER. PAYMENT FOR REMOVAL OF EXISTING SHEAR STUDS AND INSTALLATION OF NEW SHEAR STUDS WILL BE INCIDENTAL TO ITEM 615000 - STEEL STRUCTURES.
3. SCUPPER CLIP ANGLES NOT SHOWN FOR CLARITY.
4. COST OF ADDITIONAL CONCRETE REMOVAL SHALL BE INCIDENTAL TO ITEM 211000 - REMOVAL OF STRUCTURES AND OBSTRUCTIONS.

NOT FOR CONSTRUCTION

N:\31987-004\Control-I-95\CADD\Bridge\BR1-748_SCUPPER2.dgn
5/31/2019 12:13:45 PM

ADDENDA / REVISIONS		SCALE AS NOTED	REHABILITATION OF I-95 FROM I-495 TO NORTH OF BRANDYWINE RIVER BRIDGE	CONTRACT T201407404	BRIDGE NO. 1 748 059	SCUPPER DETAILS 2 OF 2	DT-06
				COUNTY NEW CASTLE	DESIGNED BY: DAN		SECTION WRA
					CHECKED BY: WAG		SHEET NO. 409

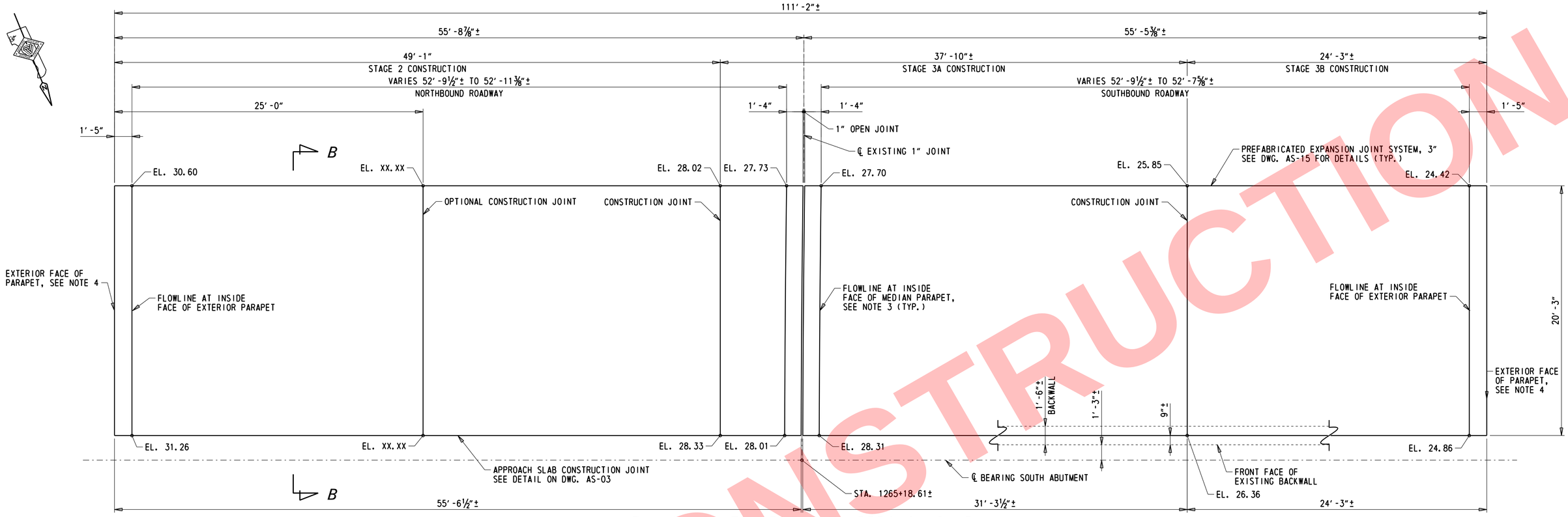

PLAN - SOUTH ABUTMENT APPROACH SLAB

¼″ = 1′-0″

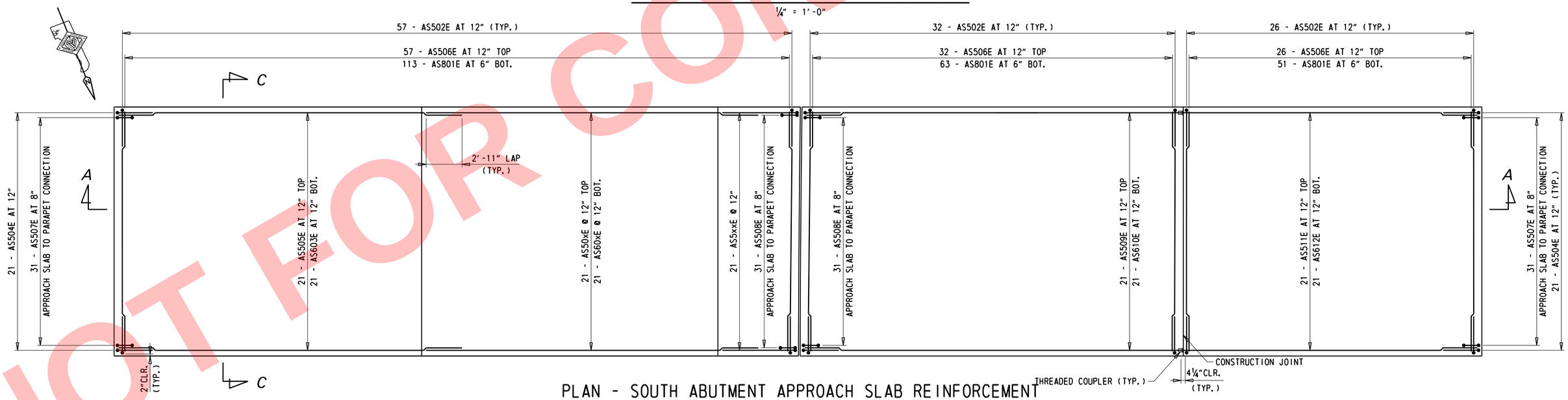

PLAN - SOUTH ABUTMENT APPROACH SLAB REINFORCEMENT

¼″ = 1′-0″

NOTES:

1. FOR SECTION A-A, SEE DWG. AS-02.
2. FOR SECTIONS B-B AND C-C, SEE DWG. AS-03.
3. FLOWLINE AT MEDIAN PARAPET SHALL MATCH FLOWLINE OF EXISTING MEDIAN PARAPET ON BRIDGE.
4. OUTSIDE FACE OF PARAPET SHALL BE CONSTRUCTED FLUSH WITH FRONT FACE OF EXISTING WINGWALL.

NOT FOR CONSTRUCTION

N:\31987-004\Control-I-95\CADD\Bridge\BR1-748_AS01.dgn
5/31/2019 12:53:46 PM

ADDENDA / REVISIONS	SCALE AS NOTED	REHABILITATION OF I-95 FROM I-495 TO NORTH OF BRANDYWINE RIVER BRIDGE	CONTRACT T201407404	BRIDGE NO. 1 748 059	SOUTH ABUTMENT APPROACH SLAB PLAN	AS-01
			COUNTY NEW CASTLE	DESIGNED BY: DAN		SECTION WRA
				CHECKED BY: WAG		SHEET NO. 410

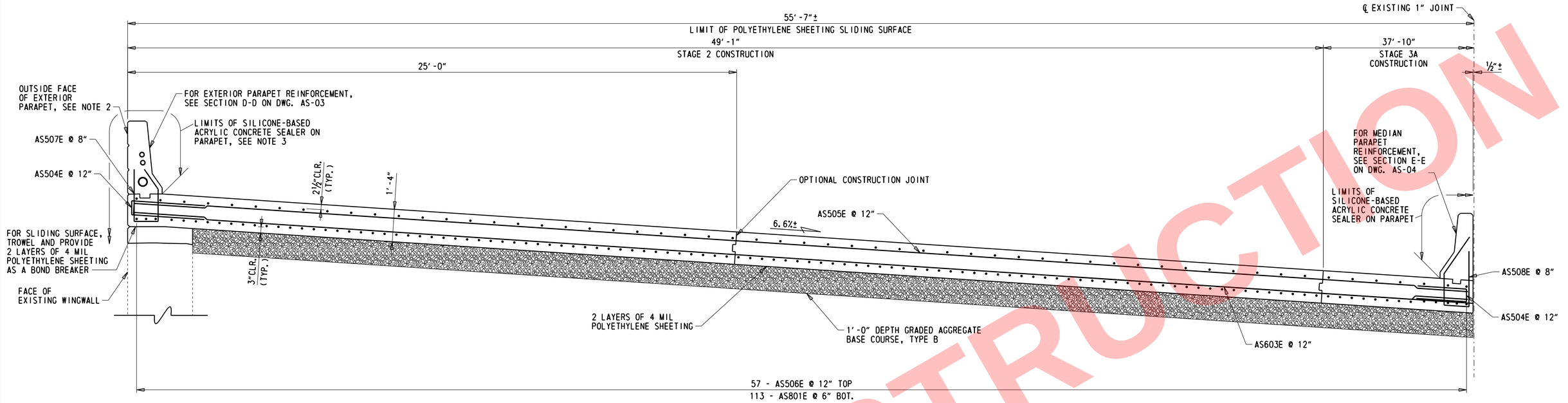

SECTION A-A - NORTHBOUND APPROACH SLAB

½" = 1'-0"

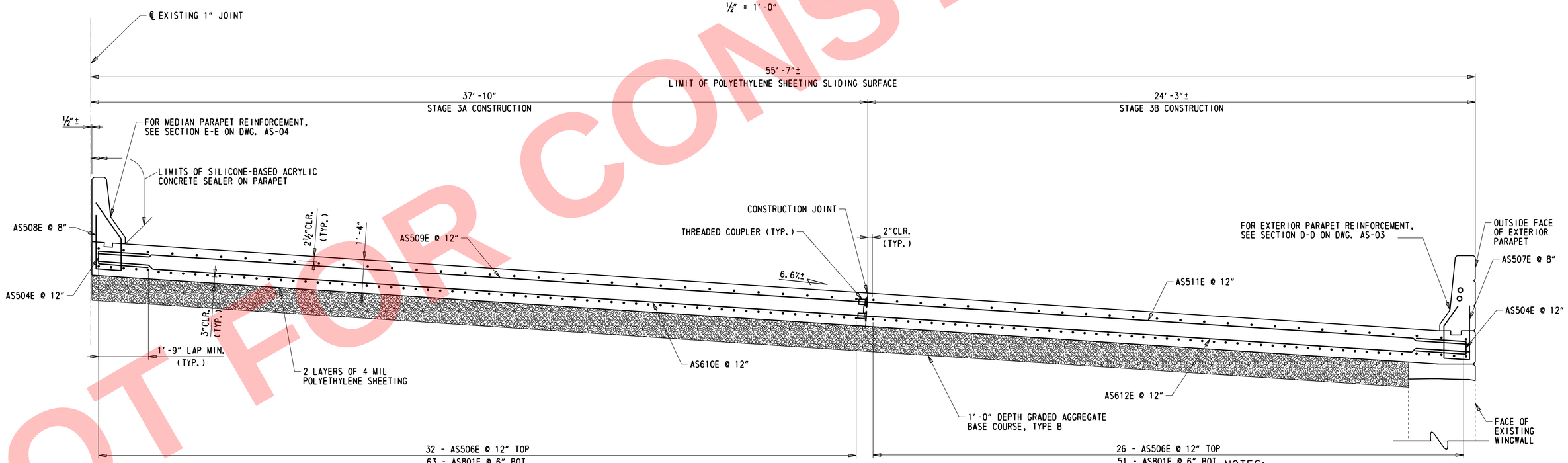

SECTION A-A - SOUTHBOUND APPROACH SLAB

½" = 1'-0"

NOTES:

1. FOR APPROACH SLAB A PLAN, SEE DWG. AS-01.
2. OUTSIDE FACE OF PARAPETS SHALL BE CONSTRUCTED FLUSH WITH FRONT FACE OF EXISTING WINGWALLS.
3. LIMITS OF SILICONE ACRYLIC CONCRETE SEALERS SHALL EXTEND FROM INSIDE FACE OF PARAPET TO EXISTING GROUNDLINE.

NOT FOR CONSTRUCTION

N:\31987-004\Control-I-95\CADD\Bridge\BR1-748_AS02.dgn
5/31/2019 12:13:47 PM

ADDENDA / REVISIONS		SCALE AS NOTED	REHABILITATION OF I-95 FROM I-495 TO NORTH OF BRANDYWINE RIVER BRIDGE	CONTRACT T201407404	BRIDGE NO. 1 748 059	SOUTH ABUTMENT APPROACH SLAB TYPICAL SECTION	AS-02
				COUNTY NEW CASTLE	DESIGNED BY: DAN		SECTION WRA
					CHECKED BY: WAG		SHEET NO. 411

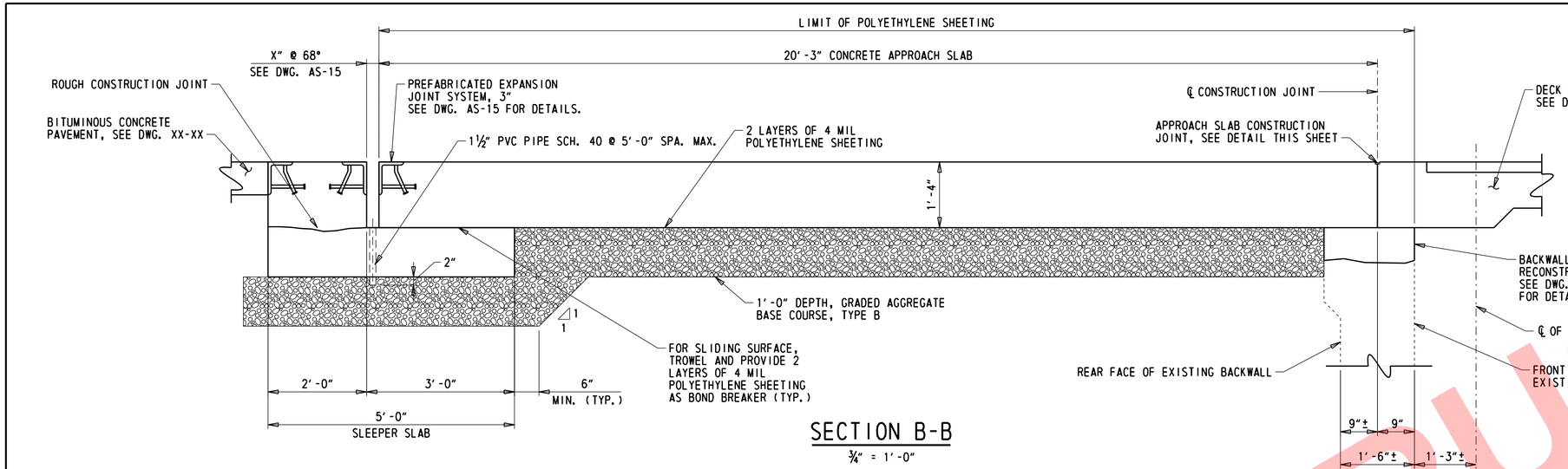

SECTION B-B

¾" = 1'-0"

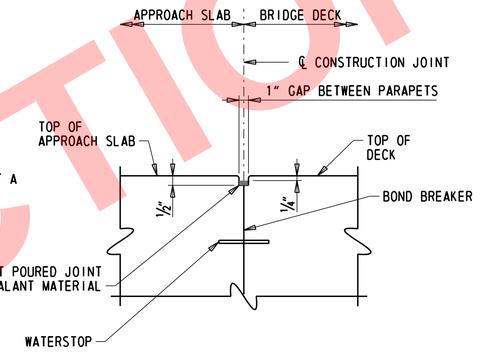

APPROACH SLAB CONSTRUCTION JOINT

NOT TO SCALE

NOTE A:

TRANSVERSE REINFORCEMENT DIFFERS ACROSS APPROACH SLAB WIDTH. BAR NUMBERS SHOWN FOR STAGE 2, SEE DWGS. AS-01 AND AS-02 FOR ADDITIONAL DETAILS.

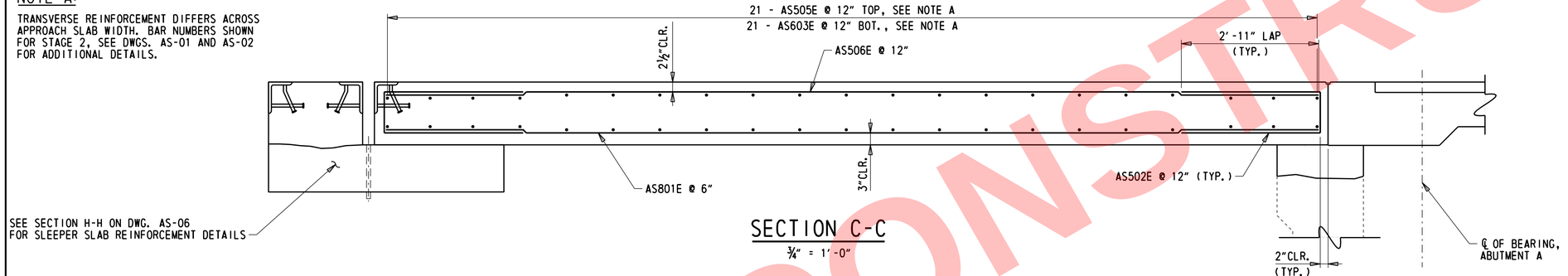

SECTION C-C

¾" = 1'-0"

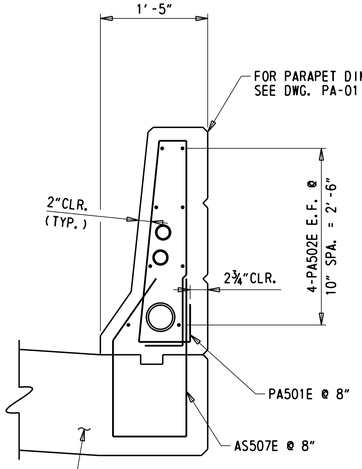

SECTION D-D

1" = 1'-0"

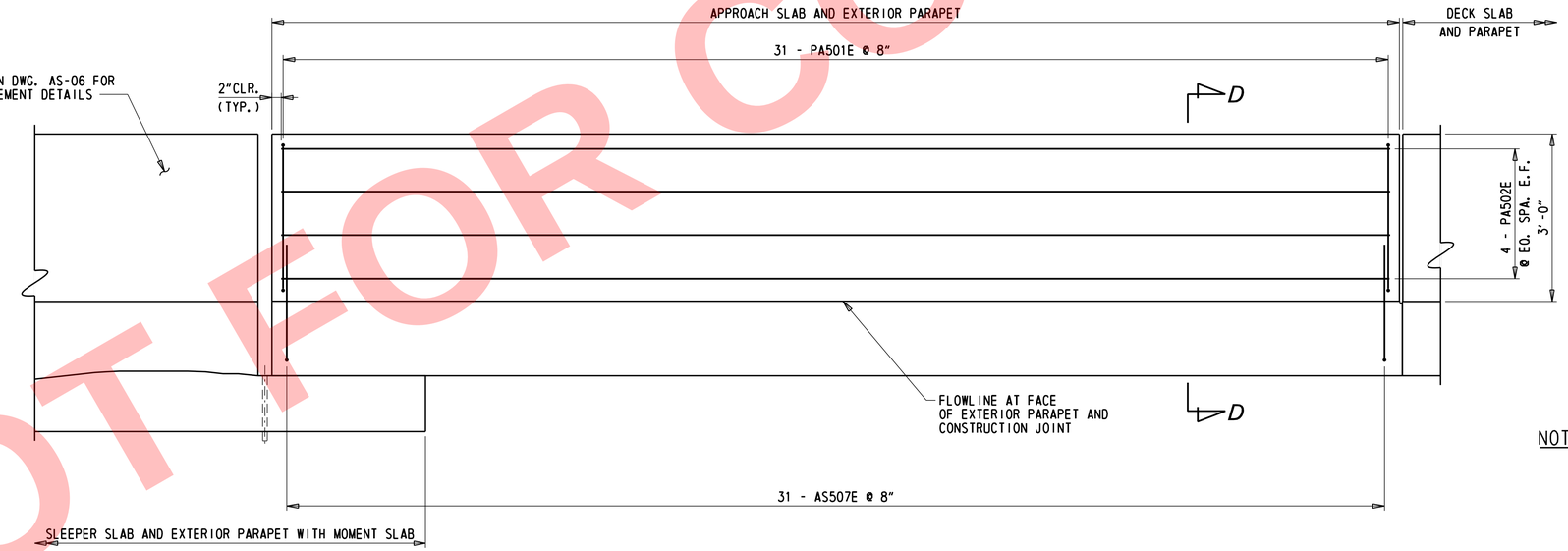

APPROACH SLAB EXTERIOR PARAPET REINFORCEMENT ELEVATION

¾" = 1'-0"

NOTES:

1. FOR ARMORED STRIP SEAL EXPANSION JOINT DETAILS, SEE DWG. AS-15.
2. FOR ADDITIONAL APPROACH SLAB A REINFORCEMENT DETAILS SEE DWGS. AS-01 AND AS-02.
3. PAYMENT FOR POLYETHELENE SHEETING, BOND BREAKER, WATERSTOP, ½" DEEP SAW CUT, PVC PIPE, HOT POURED JOINT SEALANT WILL BE INCIDENTAL TO ITEM 610018 - PORTLAND CEMENT CONCRETE, APPROACH SLAB, CLASS D.
4. FOR ADDITIONAL ROADWAY PAVEMENT DETAILS, SEE DELDOT STANDARD P-1. PAYMENT FOR ROADWAY JOINTS SHALL BE INCIDENTAL TO ROADWAY PAVEMENT ITEM.

NOT FOR CONSTRUCTION

ADDENDA / REVISIONS	SCALE AS NOTED	REHABILITATION OF I-95 FROM I-495 TO NORTH OF BRANDYWINE RIVER BRIDGE	CONTRACT T201407404	BRIDGE NO. 1 748 059	SOUTH ABUTMENT APPROACH SLAB DETAILS 1 OF 2	AS-03
			COUNTY NEW CASTLE	DESIGNED BY: DAN		SECTION WRA
				CHECKED BY: WAG		SHEET NO. 412

N:\31987-00A\Contract I-95\C400\Bridge\BR1-748_AS03.dgn
5/31/2019 12:10:48 PM

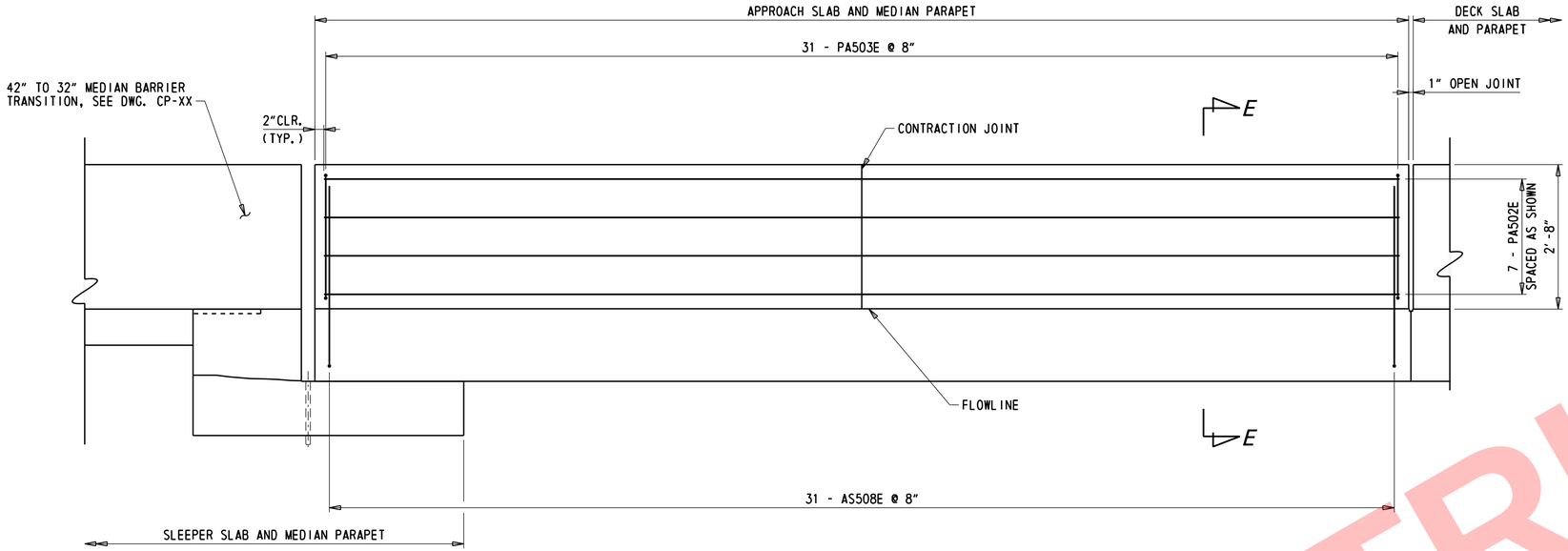

APPROACH SLAB MEDIAN PARAPET REINFORCEMENT ELEVATION

3/4" = 1'-0"

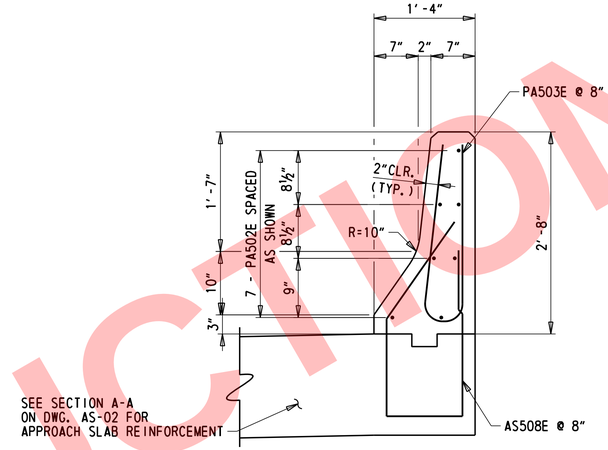

SECTION E-E

1" = 1'-0"

NOTE:

REINFORCEMENT NOT SHOWN IN SLEEPER SLAB AND APPROACH SLAB FOR CLARITY.

NOTES:

1. FOR ADDITIONAL APPROACH SLAB A REINFORCEMENT DETAILS SEE DWGS. AS-01 THROUGH AS-03.

NOT FOR CONSTRUCTION

N:\31987-004\Contract_I-95\CADD\Bridge\BR1-748_AS04.dgn
5/31/2019 12:15:49 PM

ADDENDA / REVISIONS		SCALE AS NOTED	REHABILITATION OF I-95 FROM I-495 TO NORTH OF BRANDYWINE RIVER BRIDGE	CONTRACT T201407404	BRIDGE NO. 1 748 059	SOUTH ABUTMENT APPROACH SLAB DETAILS 2 OF 2	AS-04 SECTION
				COUNTY NEW CASTLE	DESIGNED BY: DAN		WRA
					CHECKED BY: WAG		SHEET NO. 413

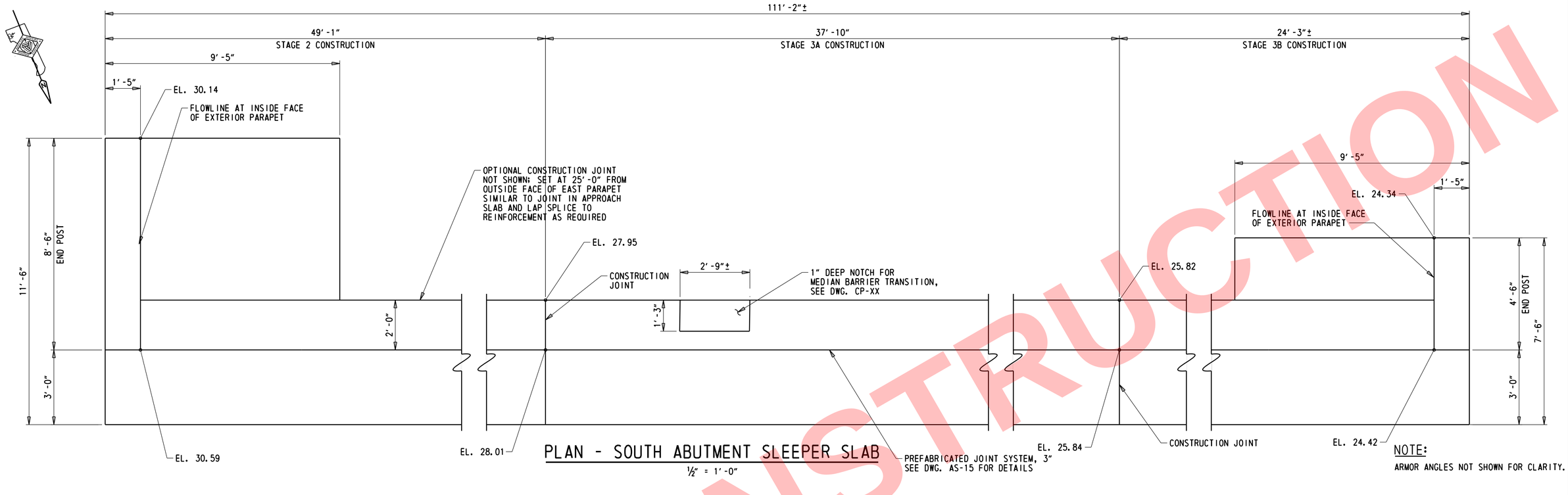

PLAN - SOUTH ABUTMENT SLEEPER SLAB

½" = 1'-0"

NOTE:
ARMOR ANGLES NOT SHOWN FOR CLARITY.

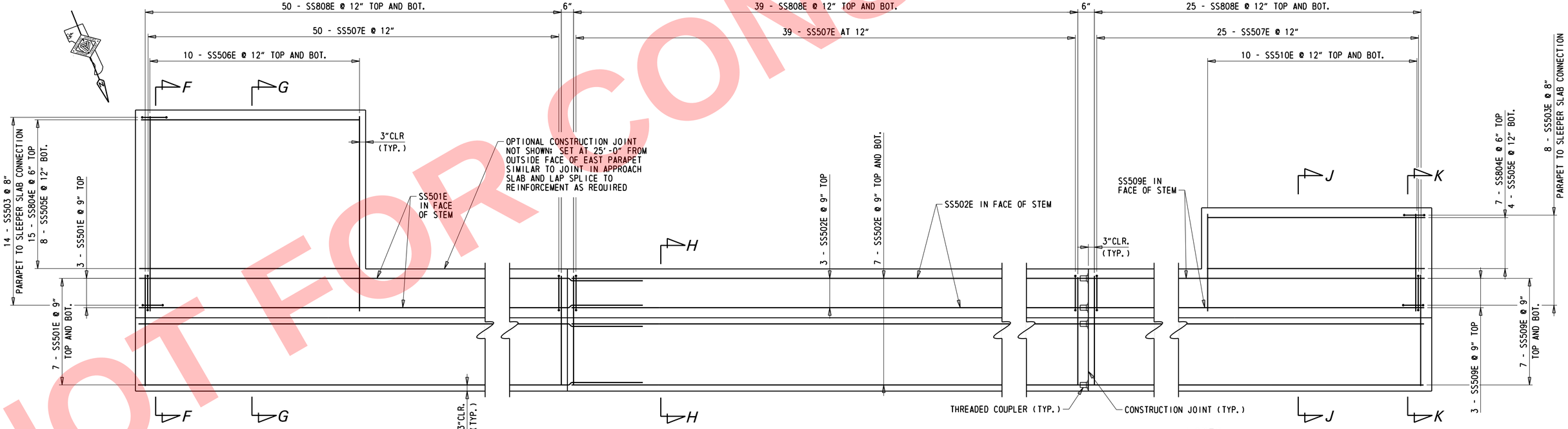

PLAN - SOUTH ABUTMENT SLEEPER SLAB REINFORCEMENT

½" = 1'-0"

NOTES:
1. FOR APPROACH SLAB A PLAN AND DETAILS, SEE DWGS. AS-01 THROUGH AS-04.
2. FOR SECTIONS F-F, G-G, AND H-H, SEE DWG. AS-06.
3. FOR SECTIONS J-J AND K-K, SEE DWG. AS-07.

NOT FOR CONSTRUCTION

N:\31987-001\Contract\I-95\CADD\Bridge\BRI-748_AS05.dgn
5/31/2019 12:13:50 PM

ADDENDA / REVISIONS	SCALE AS NOTED	REHABILITATION OF I-95 FROM I-495 TO NORTH OF BRANDYWINE RIVER BRIDGE	CONTRACT T201407404	BRIDGE NO. 1 748 059	SOUTH ABUTMENT SLEEPER SLAB PLAN	AS-05
			COUNTY NEW CASTLE	DESIGNED BY: DAN		SECTION WRA
				CHECKED BY: WAG		SHEET NO. 414

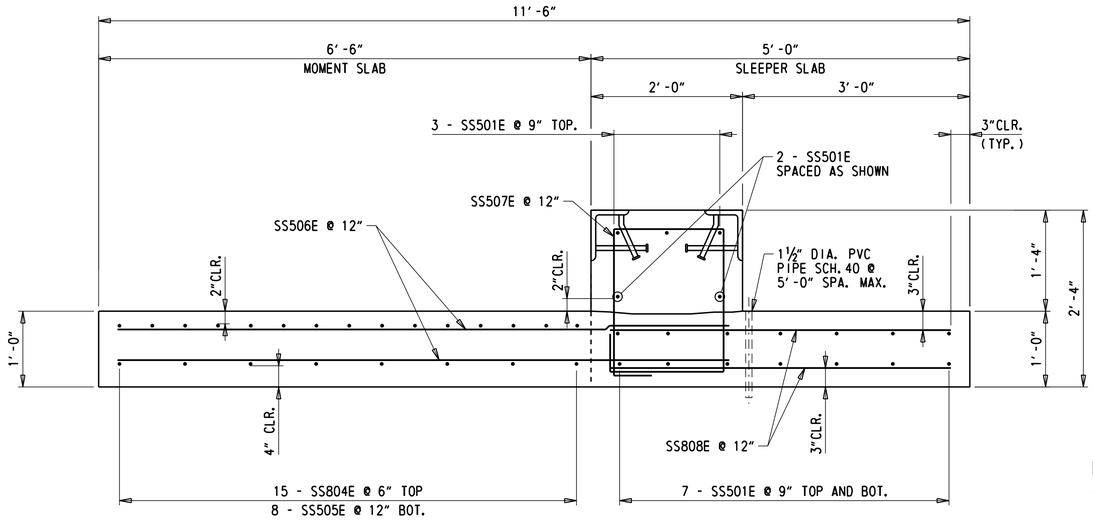

SECTION G-G

1″ = 1′-0″

NOTE:

APPROACH SLAB NOT SHOWN FOR CLARITY

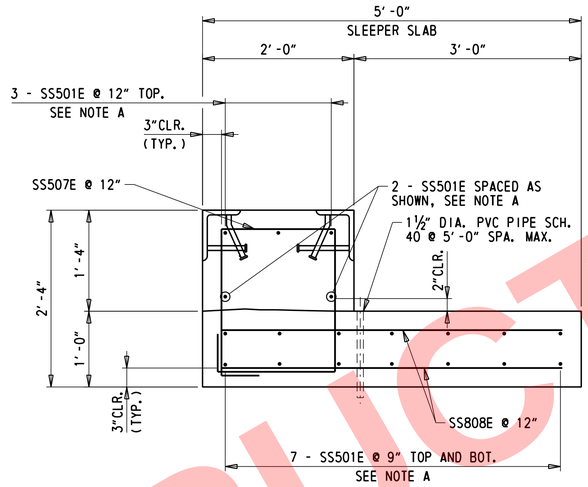

SECTION H-H

1″ = 1′-0″

NOTE A:

TRANSVERSE REINFORCEMENT DIFFERS ACROSS SLEEPER SLAB WIDTH. BAR NUMBERS SHOWN FOR STAGE 2, SEE DWG. AS-05 FOR ADDITIONAL DETAILS.

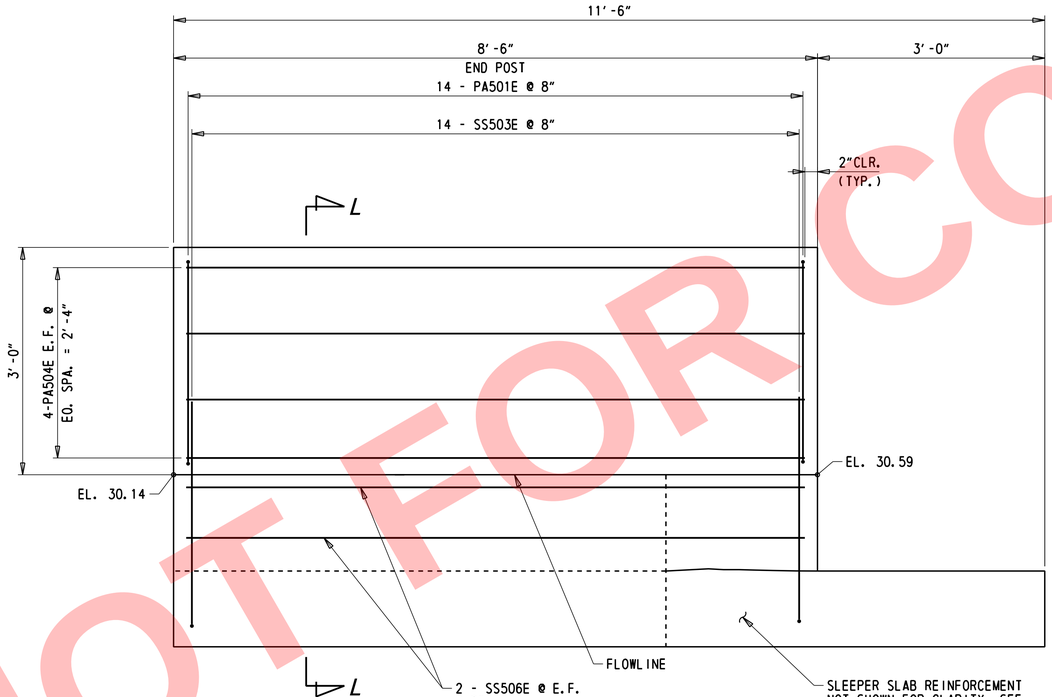

SECTION F-F

1″ = 1′-0″

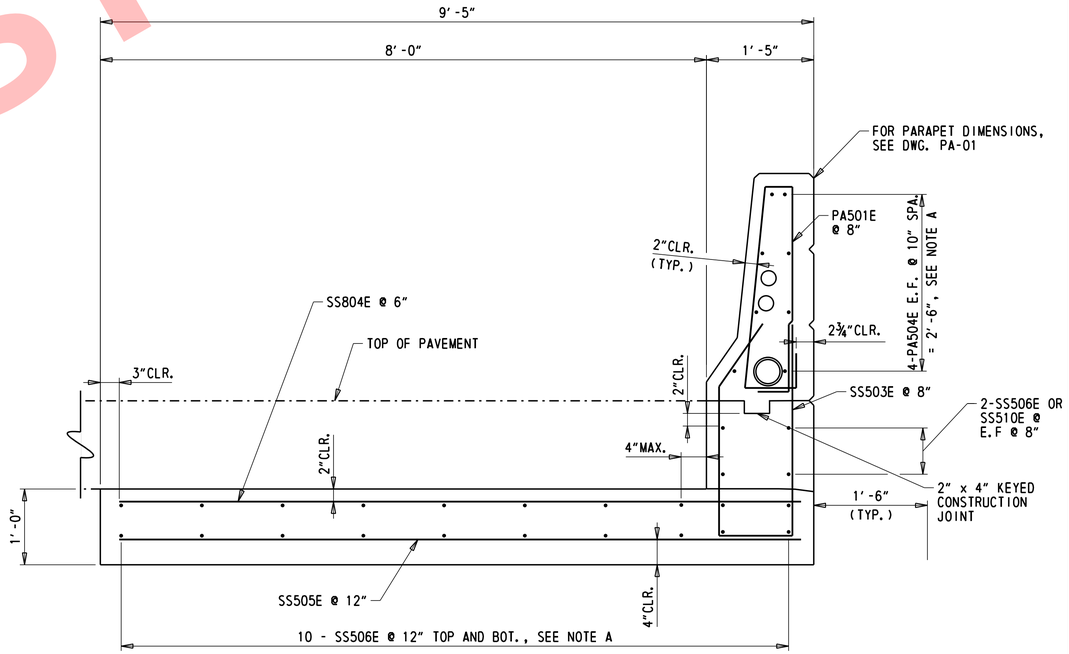

SECTION L-L

1″ = 1′-0″

NOTES:

1. FOR APPROACH SLAB A PLAN AND DETAILS, SEE DWGS. AS-01 THROUGH AS-04.
2. FOR SLEEPER SLAB A PLAN AND REINFORCEMENT PLAN, SEE DWG. AS-05.

NOT FOR CONSTRUCTION

N:\31987-004\Contract_I-95\C4DD\Bridge\BRI-748_AS06.dgn
5/31/2019 12:13:50 PM

ADDENDA / REVISIONS		SCALE AS NOTED	REHABILITATION OF I-95 FROM I-495 TO NORTH OF BRANDYWINE RIVER BRIDGE	CONTRACT T201407404	BRIDGE NO. 1 748 059	SOUTH ABUTMENT SLEEPER SLAB DETAILS 1 OF 2	AS-06
				COUNTY NEW CASTLE	DESIGNED BY: DAN		SECTION WRA
					CHECKED BY: WAG		SHEET NO. 415

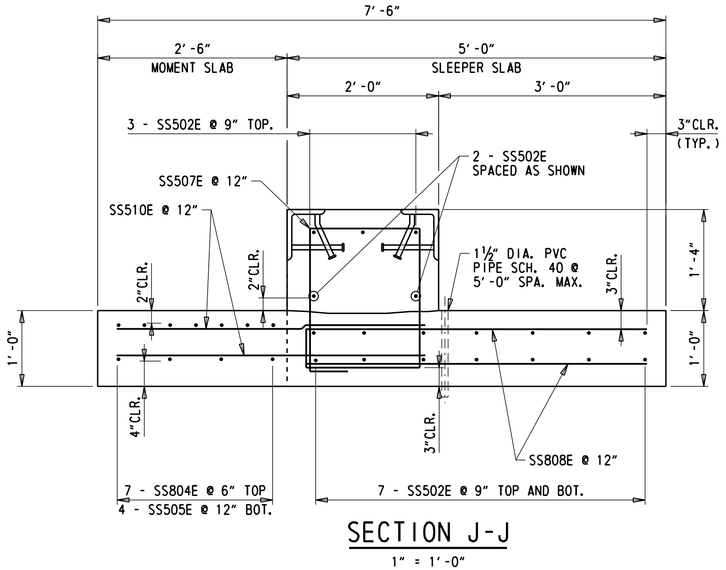

SECTION J-J

1" = 1'-0"

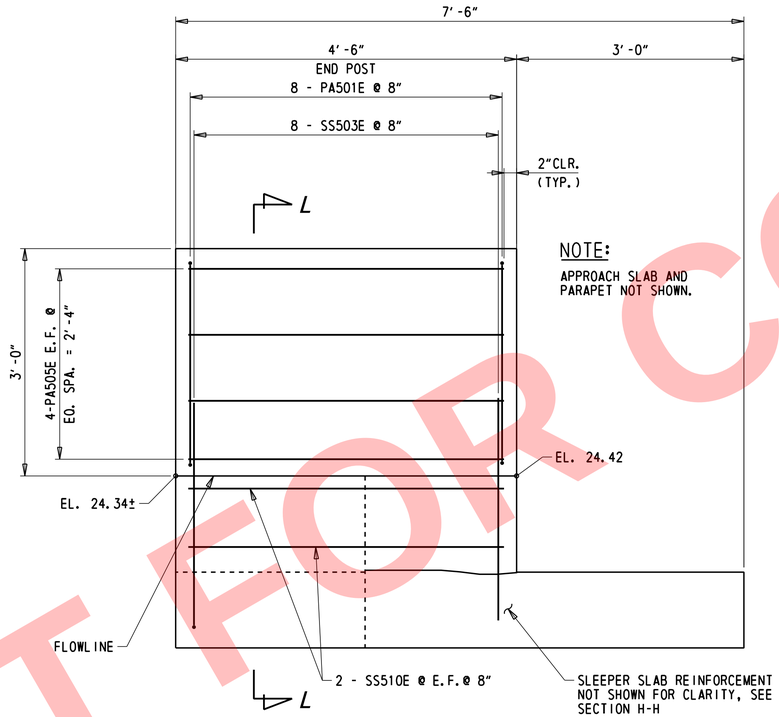

SECTION K-K

1" = 1'-0"

NOTES:

1. FOR APPROACH SLAB A PLAN AND DETAILS, SEE DWGS. AS-01 THROUGH AS-04.
2. FOR SLEEPER SLAB A PLAN, SEE DWG. AS-05.
3. FOR SECTION L-L, SEE DWG. AS-06.

NOT FOR CONSTRUCTION

N:\31987-004\Contract_I-95\CADD\Bridge\BRI-748_AS07.dgn
5/31/2019 12:13:51 PM

ADDENDA / REVISIONS		SCALE AS NOTED	REHABILITATION OF I-95 FROM I-495 TO NORTH OF BRANDYWINE RIVER BRIDGE	CONTRACT T201407404	BRIDGE NO. 1 748 059	SOUTH ABUTMENT SLEEPER SLAB DETAILS 2 OF 2	AS-07
				COUNTY NEW CASTLE	DESIGNED BY: DAN		SECTION WRA
					CHECKED BY: WAG		SHEET NO. 416

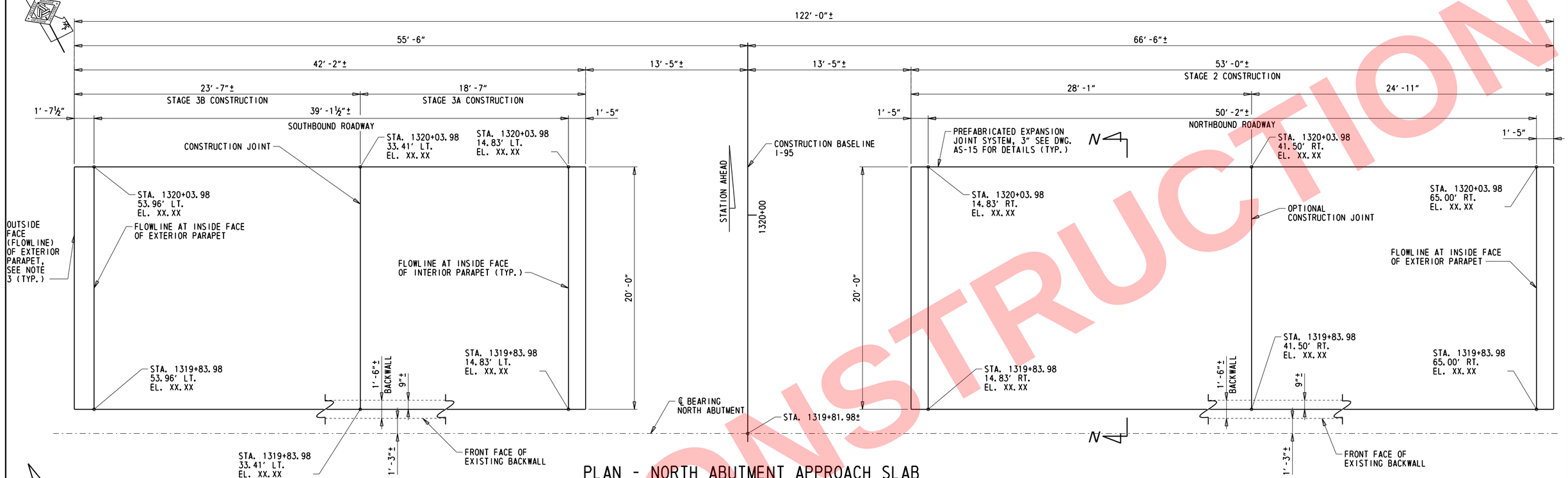

PLAN - NORTH ABUTMENT APPROACH SLAB

¼″ = 1′-0″

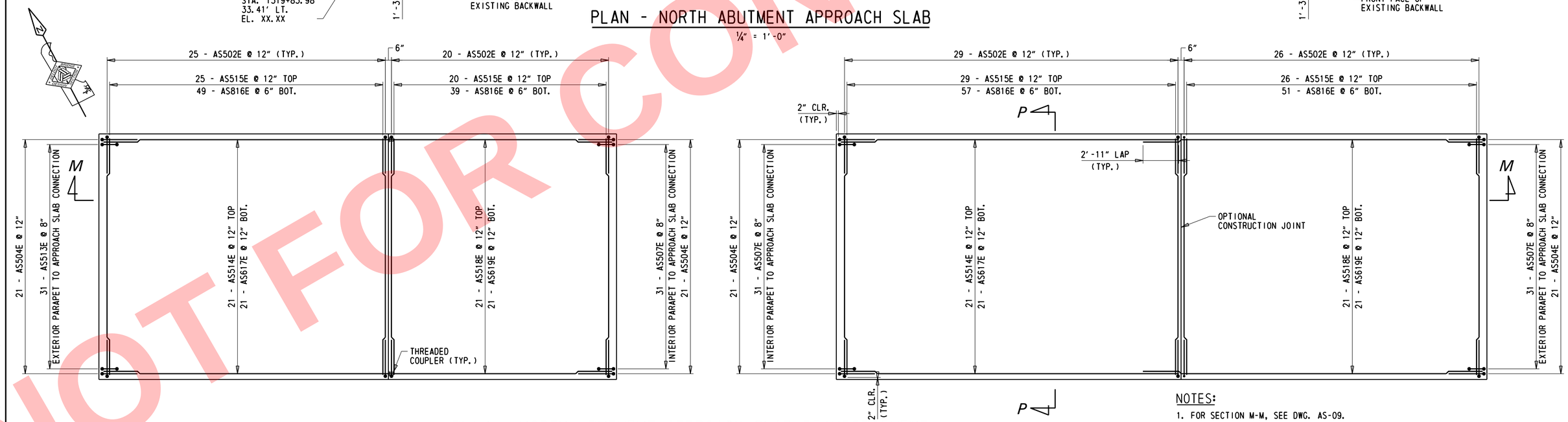

PLAN - NORTH ABUTMENT APPROACH SLAB REINFORCEMENT

¼″ = 1′-0″

NOTES:

1. FOR SECTION M-M, SEE DWG. AS-09.
2. FOR SECTIONS N-N AND P-P, SEE DWG. AS-10.
3. OUTSIDE FACE OF EXTERIOR PARAPET SHALL BE CONSTRUCTED FLUSH WITH FRONT FACE OF EXISTING WINGWALL.

NOT FOR CONSTRUCTION

N:\31987-004\Control_I-95\CADD\Bridge\BR1-748_AS08.dgn
5/31/2019 12:59:52 PM

ADDENDA / REVISIONS	SCALE AS NOTED	REHABILITATION OF I-95 FROM I-495 TO NORTH OF BRANDYWINE RIVER BRIDGE	CONTRACT T201407404	BRIDGE NO. 1 748 059	NORTH ABUTMENT APPROACH SLAB PLAN	AS-08
			COUNTY NEW CASTLE	DESIGNED BY: DAN		SECTION WRA
				CHECKED BY: WAG		SHEET NO. 417

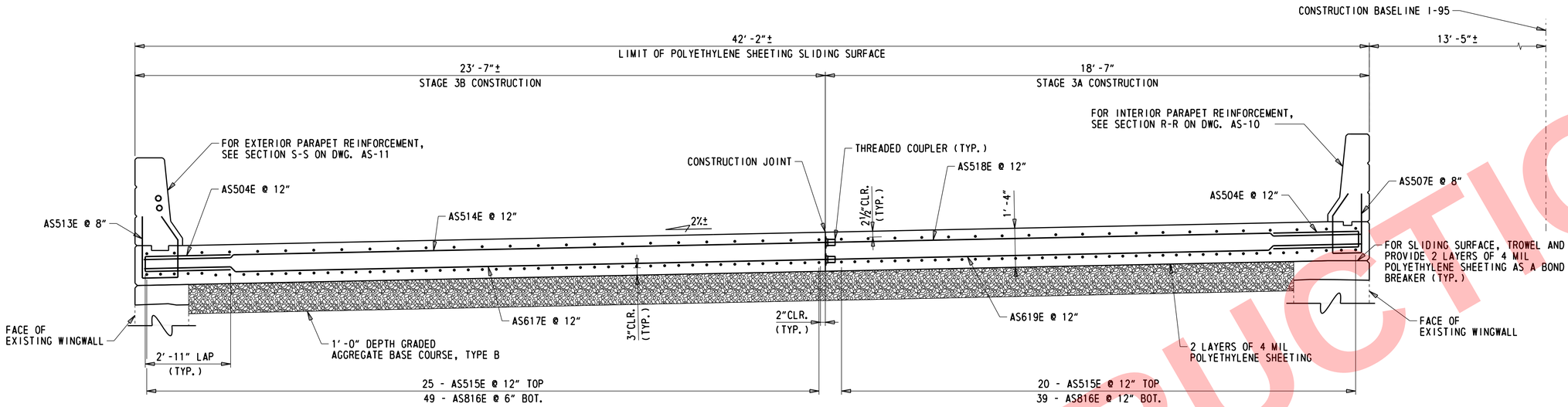

SECTION M-M - SOUTHBOUND APPROACH SLAB

½″ = 1′-0″

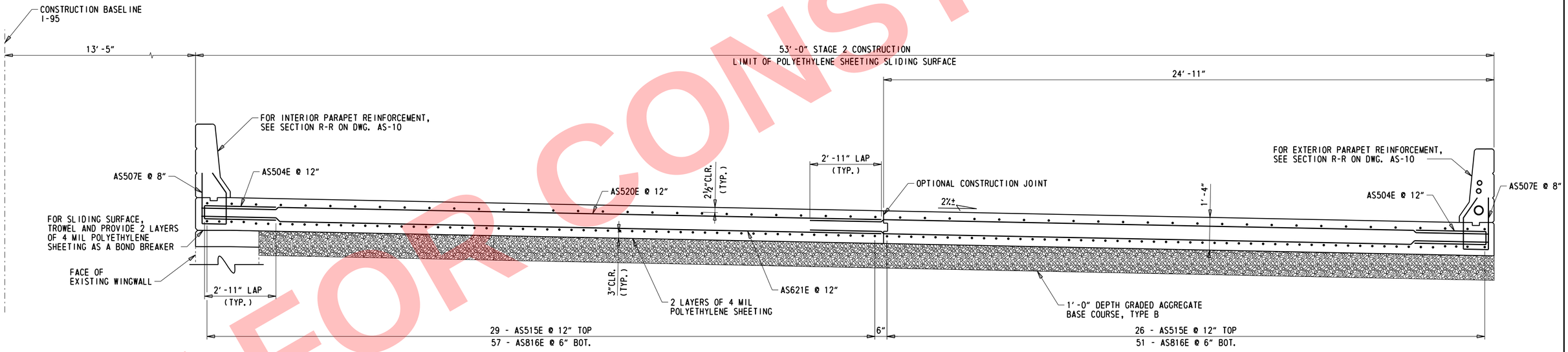

SECTION M-M - NORTHBOUND APPROACH SLAB

½″ = 1′-0″

NOTES:

1. FOR APPROACH SLAB B PLAN, SEE DWG. AS-08.

NOT FOR CONSTRUCTION

N:\31987-00A\Cad\dgn\I-95\CADD\Bridge\BRI-748_AS09.dgn
5/31/2019 12:15:55 PM

ADDENDA / REVISIONS		SCALE AS NOTED	REHABILITATION OF I-95 FROM I-495 TO NORTH OF BRANDYWINE RIVER BRIDGE	CONTRACT T201407404	BRIDGE NO. 1 748 059	NORTH ABUTMENT APPROACH SLAB TYPICAL SECTION	AS-09
				COUNTY NEW CASTLE	DESIGNED BY: DAN		SECTION WRA
					CHECKED BY: WAG		SHEET NO. 418

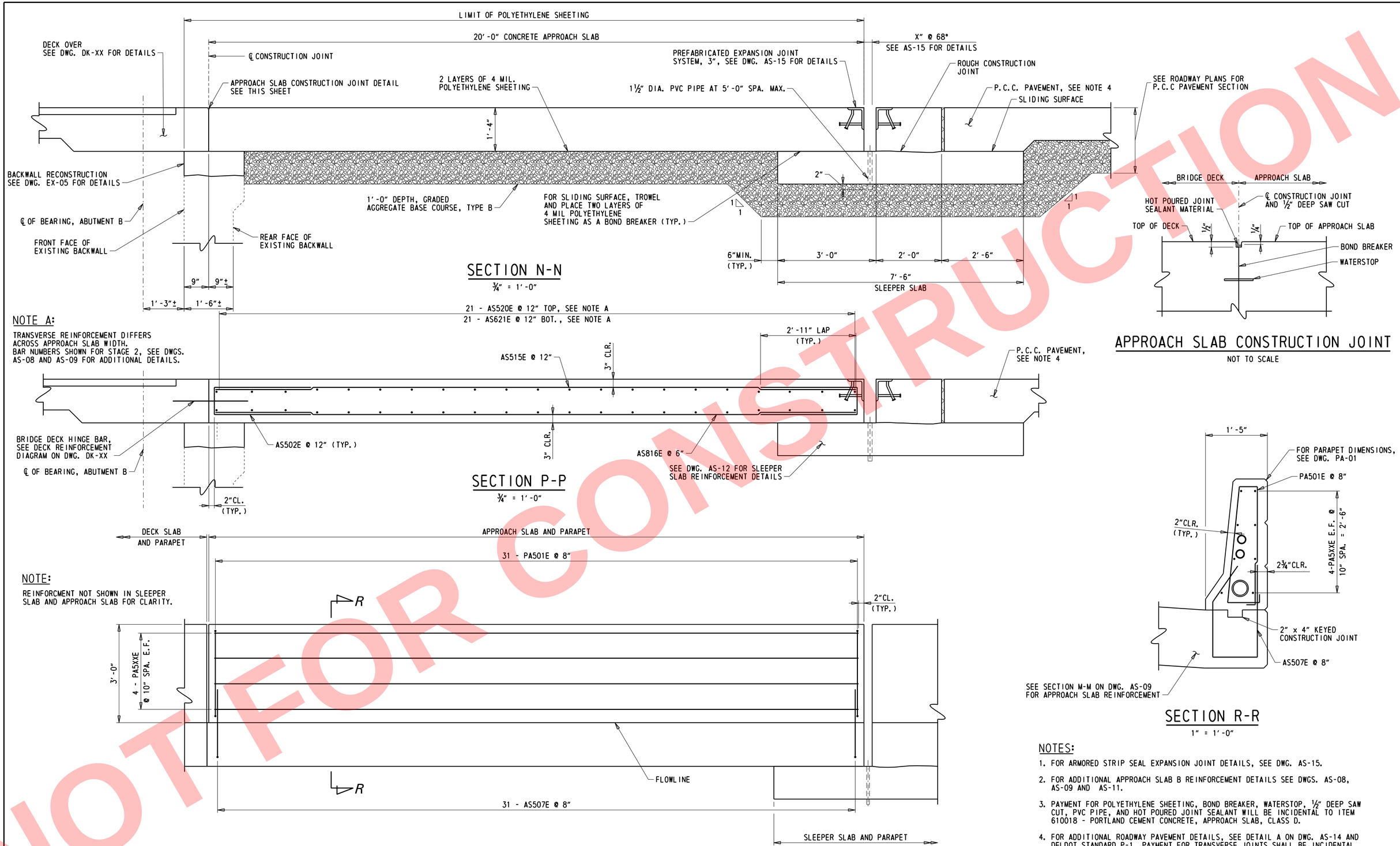

NOTES:

1. FOR ARMORED STRIP SEAL EXPANSION JOINT DETAILS, SEE DWG. AS-15.
2. FOR ADDITIONAL APPROACH SLAB B REINFORCEMENT DETAILS SEE DWGS. AS-08, AS-09 AND AS-11.
3. PAYMENT FOR POLYETHYLENE SHEETING, BOND BREAKER, WATERSTOP, ½" DEEP SAW CUT, PVC PIPE, AND HOT POURED JOINT SEALANT WILL BE INCIDENTAL TO ITEM 610018 - PORTLAND CEMENT CONCRETE, APPROACH SLAB, CLASS D.
4. FOR ADDITIONAL ROADWAY PAVEMENT DETAILS, SEE DETAIL A ON DWG. AS-14 AND DELDOT STANDARD P-1. PAYMENT FOR TRANSVERSE JOINTS SHALL BE INCIDENTAL TO THE ROADWAY PAVEMENT ITEM.

NOT FOR CONSTRUCTION

N:\31987-004\Contract I-95\CADD\Bridge\BR1-748_AS10.dgn
5/31/2019 12:35:54 PM

ADDENDA / REVISIONS	SCALE AS NOTED	REHABILITATION OF I-95 FROM I-495 TO NORTH OF BRANDYWINE RIVER BRIDGE	CONTRACT T201407404	BRIDGE NO. 1 748 059	NORTH ABUTMENT APPROACH SLAB DETAILS 1 OF 2	AS-10
			COUNTY NEW CASTLE	DESIGNED BY: DAN		SECTION WRA
				CHECKED BY: WAG		SHEET NO. 419

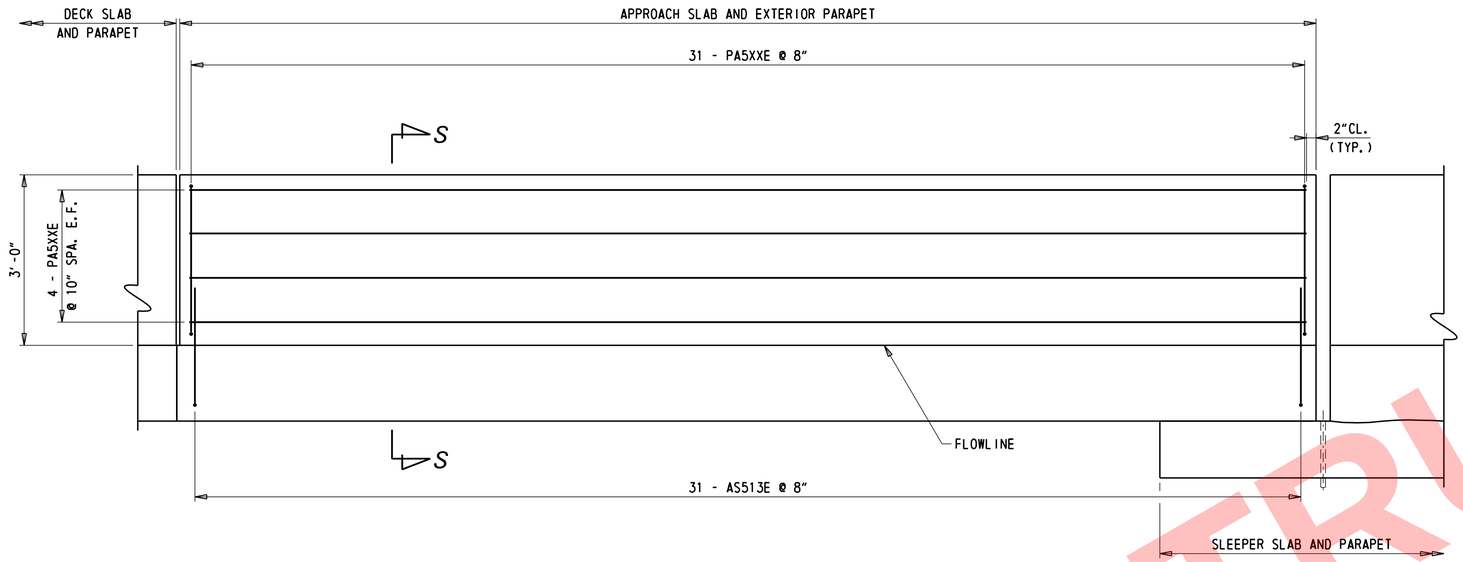

APPROACH SLAB PARAPET REINFORCEMENT ELEVATION - SOUTHBOUND EXTERIOR PARAPET

¾" = 1'-0"

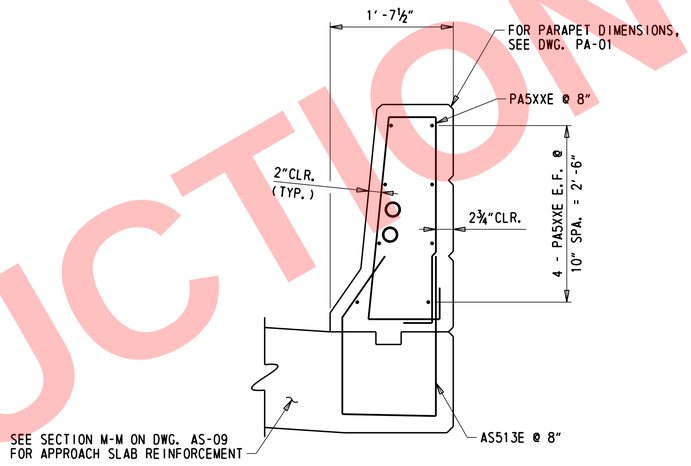

SECTION S-S

1" = 1'-0"

NOTE:

REINFORCMENT NOT SHOWN IN SLEEPER SLAB AND APPROACH SLAB FOR CLARITY.

NOTES:

1. FOR ADDITIONAL APPROACH SLAB B REINFORCEMENT DETAILS SEE DWGS. AS-08 THROUGH AS-10.

NOT FOR CONSTRUCTION

N:\31987-004\Contract_I-95\CADD\Bridge\BR1-748_AS11.dgn
5/31/2019 12:19:55 PM

ADDENDA / REVISIONS		SCALE AS NOTED	REHABILITATION OF I-95 FROM I-495 TO NORTH OF BRANDYWINE RIVER BRIDGE	CONTRACT T201407404	BRIDGE NO. 1 748 059	NORTH ABUTMENT APPROACH SLAB DETAILS 2 OF 2	AS-11
				COUNTY NEW CASTLE	DESIGNED BY: DAN		SECTION WRA
					CHECKED BY: WAG		SHEET NO. 420

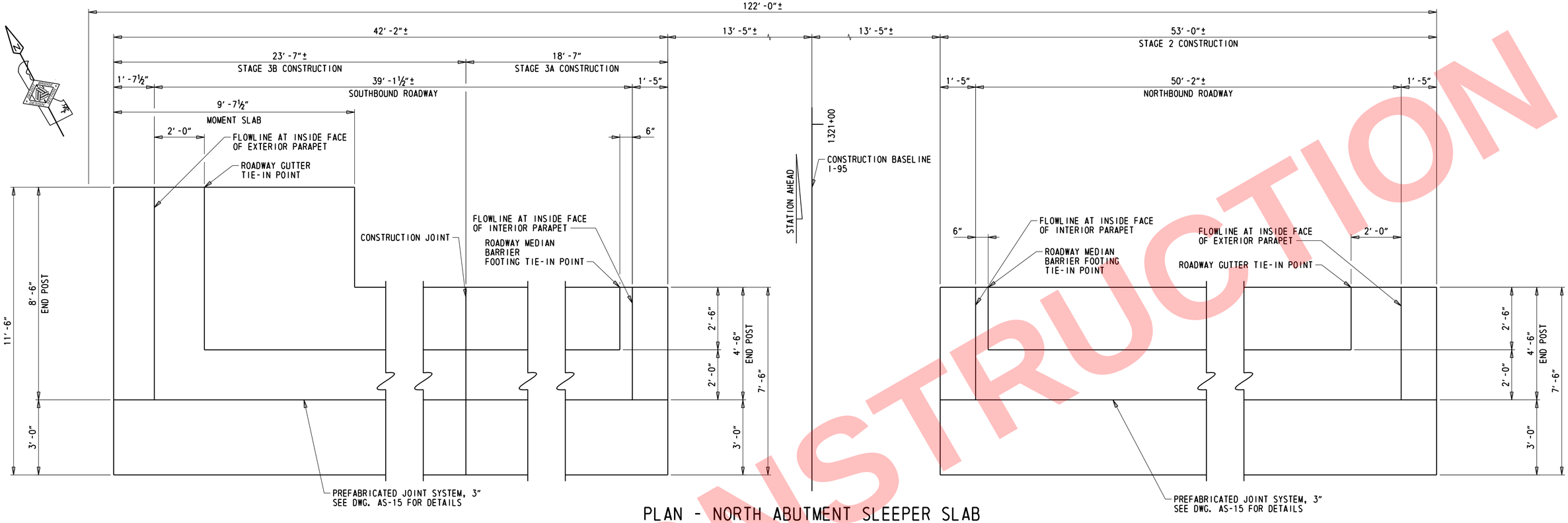

PLAN - NORTH ABUTMENT SLEEPER SLAB

½" = 1'-0"

NOTES:

1. FOR APPROACH SLAB B PLAN AND DETAILS, SEE DWG. AS-08 THROUGH AS-11.
2. FOR SECTIONS T-T, U-U, AND V-V, SEE DWG. AS-13.
3. FOR SECTIONS W-W AND X-X, SEE DWG. AS-14.

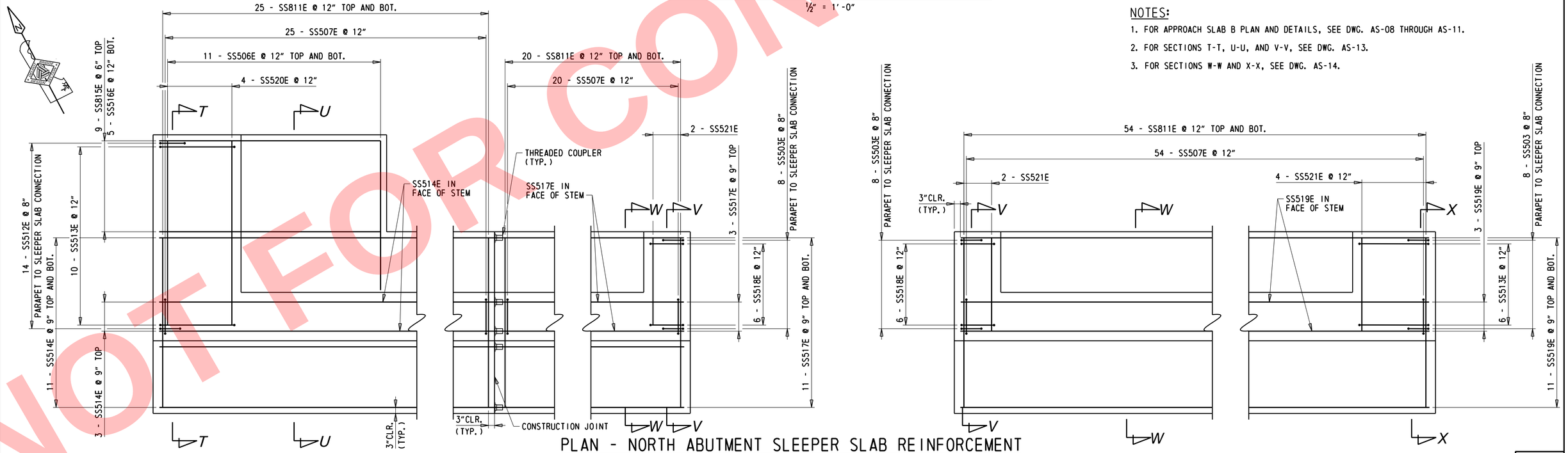

PLAN - NORTH ABUTMENT SLEEPER SLAB REINFORCEMENT

½" = 1'-0"

NOT FOR CONSTRUCTION

N:\31987-004\Contract I-95\CADD\Bridge\BR1-748_AS12.dgn
5/31/2019 12:13:55 PM

ADDENDA / REVISIONS	SCALE AS NOTED	REHABILITATION OF I-95 FROM I-495 TO NORTH OF BRANDYWINE RIVER BRIDGE	CONTRACT T201407404	BRIDGE NO. 1 748 059	NORTH ABUTMENT SLEEPER SLAB PLAN	AS-12
			COUNTY NEW CASTLE	DESIGNED BY: DAN		SECTION WRA
				CHECKED BY: WAG		SHEET NO. 421

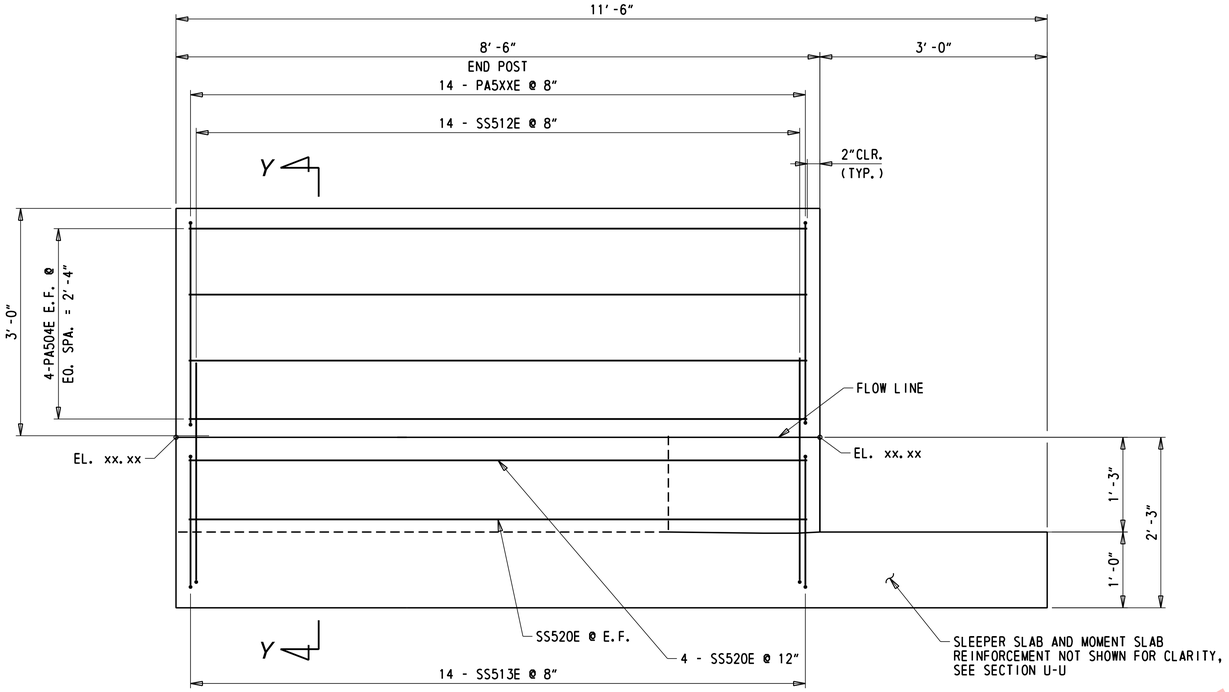

SECTION T-T

1″ = 1′-0″

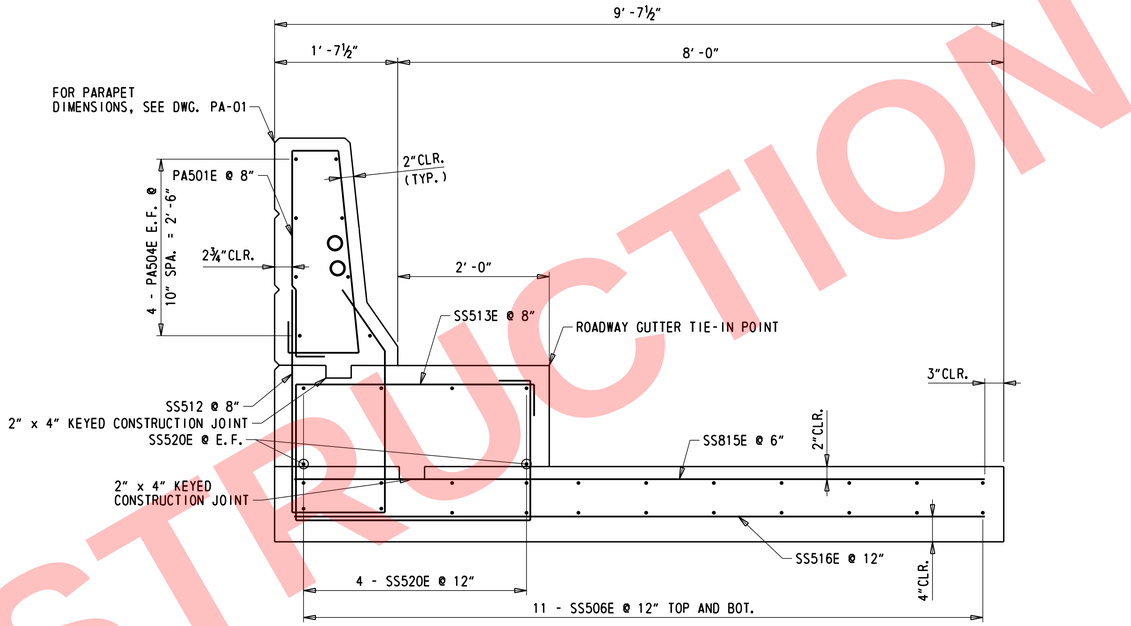

SECTION Y-Y

1″ = 1′-0″

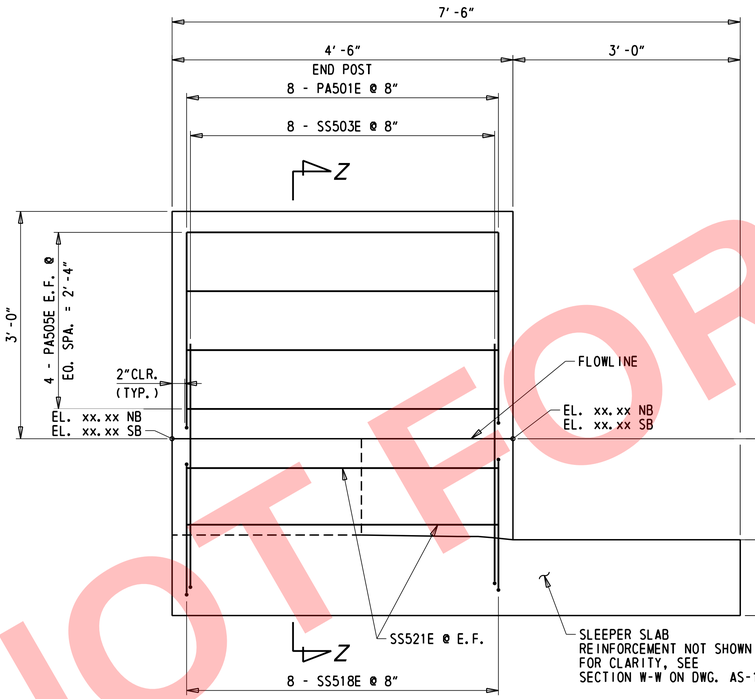

SECTION V-V

1″ = 1′-0″

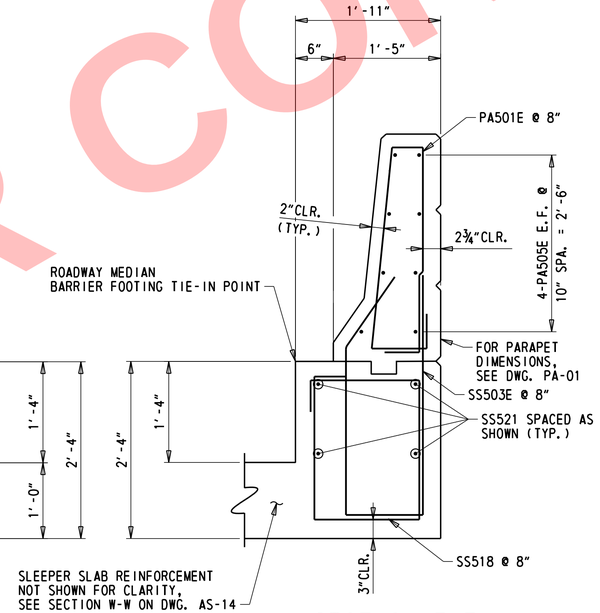

SECTION Z-Z

(SECTION CUT AT NBR, SBR OPPOSITE HAND)

1″ = 1′-0″

NOTES:

1. FOR APPROACH SLAB B PLAN AND DETAILS, SEE DWGS. AS-08 THROUGH AS-11.
2. FOR SLEEPER SLAB PLAN B, SEE DWG. AS-12.

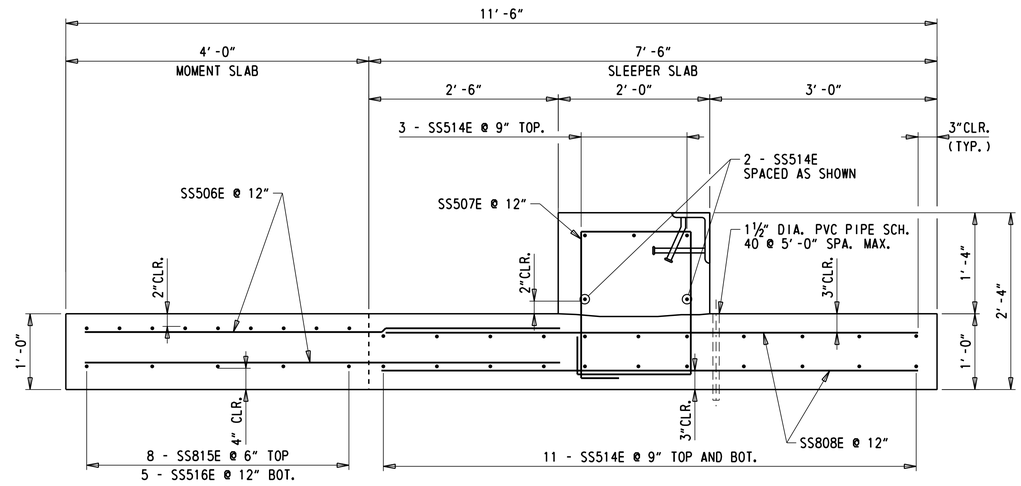

SECTION U-U

NOT FOR CONSTRUCTION

N:\31987-00A\Contract_I-95\CADD\Bridge\BRI-748_AS13.dgn
5/31/2019 12:13:56 PM

ADDENDA / REVISIONS	SCALE AS NOTED	REHABILITATION OF I-95 FROM I-495 TO NORTH OF BRANDYWINE RIVER BRIDGE	CONTRACT T201407404	BRIDGE NO. = 1′-0″ 748 059	NORTH ABUTMENT SLEEPER SLAB DETAILS 1 OF 2	AS-13
			COUNTY NEW CASTLE	DESIGNED BY: DAN		SECTION WRA
				CHECKED BY: WAG		SHEET NO. 422

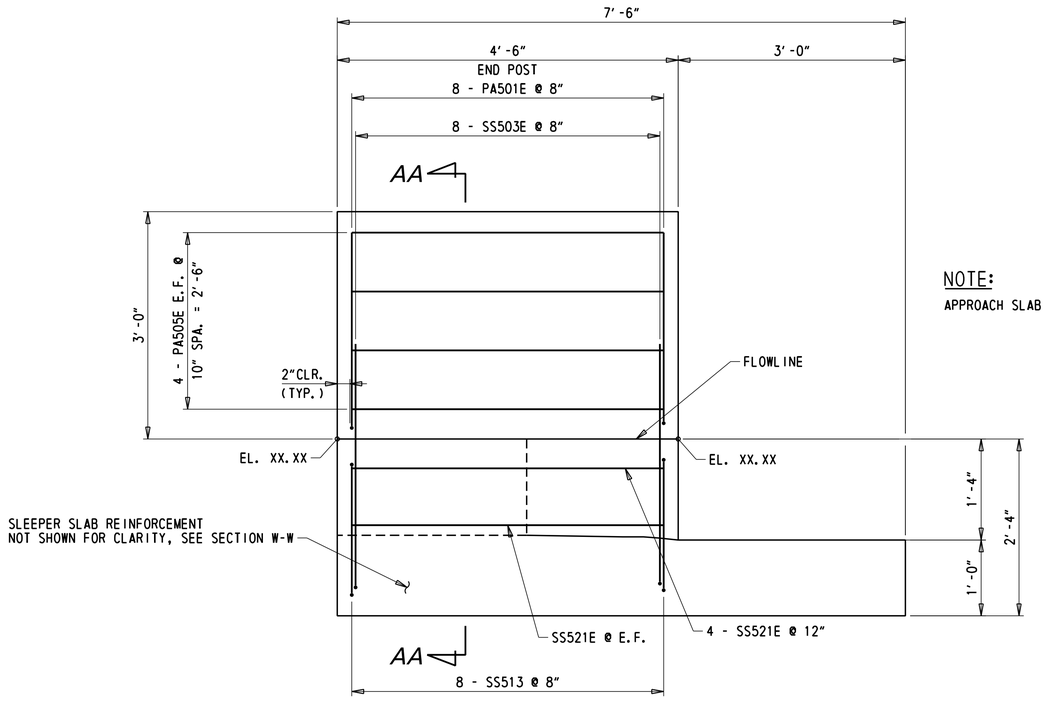

SECTION X-X

1" = 1'-0"

NOTE:

APPROACH SLAB AND PARAPET NOT SHOWN.

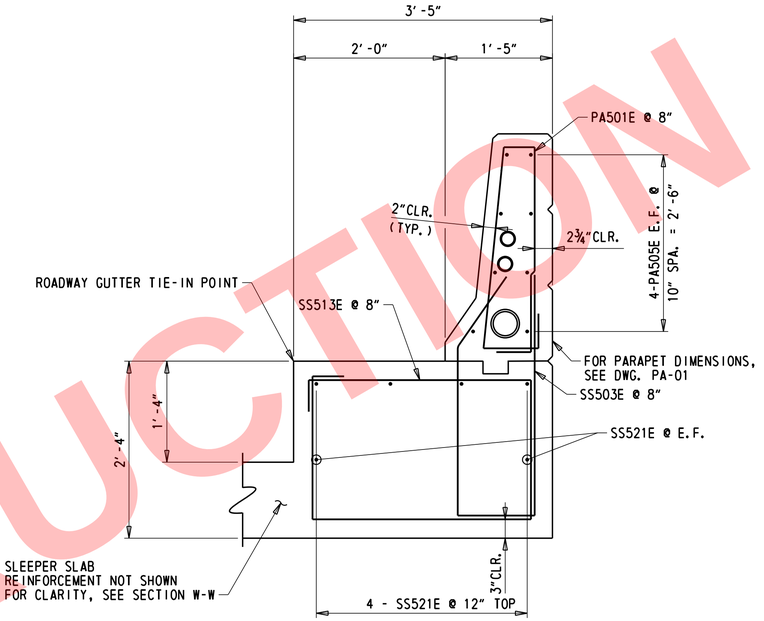

SECTION AA-AA

1" = 1'-0"

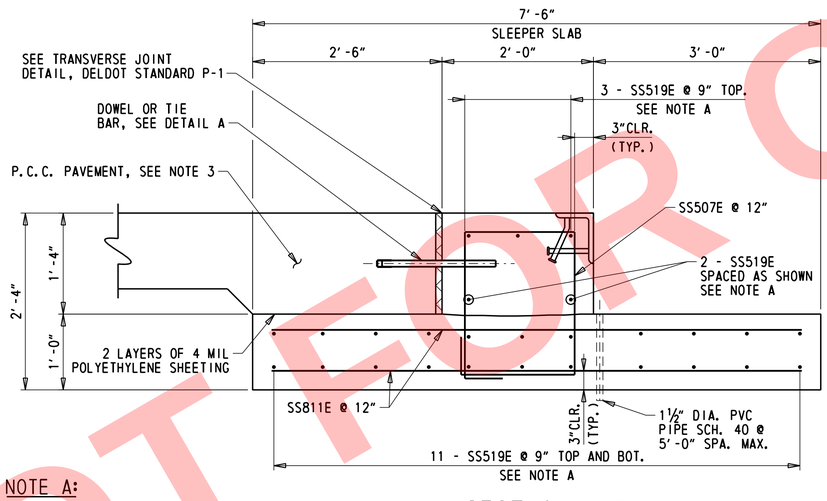

SECTION W-W

1" = 1'-0"

NOTE A:

TRANSVERSE REINFORCEMENT DIFFERS ACROSS SLEEPER SLAB WIDTH. BAR NUMBERS SHOWN FOR STAGE 2, SEE DWG. AS-12 FOR ADDITIONAL DETAILS.

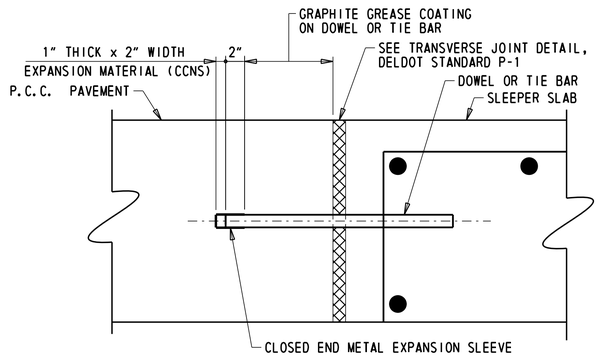

DETAIL A

N.T.S

CCNS = CLOSED CELL NEOPRENE SPONGE

NOTES:

1. FOR APPROACH SLAB B PLAN AND DETAILS, SEE DWGS. AS-08 THROUGH AS-11.
2. FOR SLEEPER SLAB B PLANS AND DETAILS, SEE DWGS AS-12 AND AS-13.
3. FOR ADDITIONAL ROADWAY PAVEMENT DETAILS, SEE DELDOT STANDARD P-1. PAYMENT FOR ROADWAY JOINTS SHALL BE INCIDENTAL TO ROADWAY PAVEMENT ITEM.

NOT FOR CONSTRUCTION

N:\31987-004\Contract_I-95\CADD\Bridge\BR1-748_AS14.dgn
5/31/2019 12:13:57 PM

ADDENDA / REVISIONS	SCALE AS NOTED	REHABILITATION OF I-95 FROM I-495 TO NORTH OF BRANDYWINE RIVER BRIDGE	CONTRACT T201407404	BRIDGE NO. 1 748 059	NORTH ABUTMENT SLEEPER SLAB DETAILS 2 OF 2	AS-14
			COUNTY NEW CASTLE	DESIGNED BY: DAN		SECTION WRA
				CHECKED BY: WAG		SHEET NO. 423

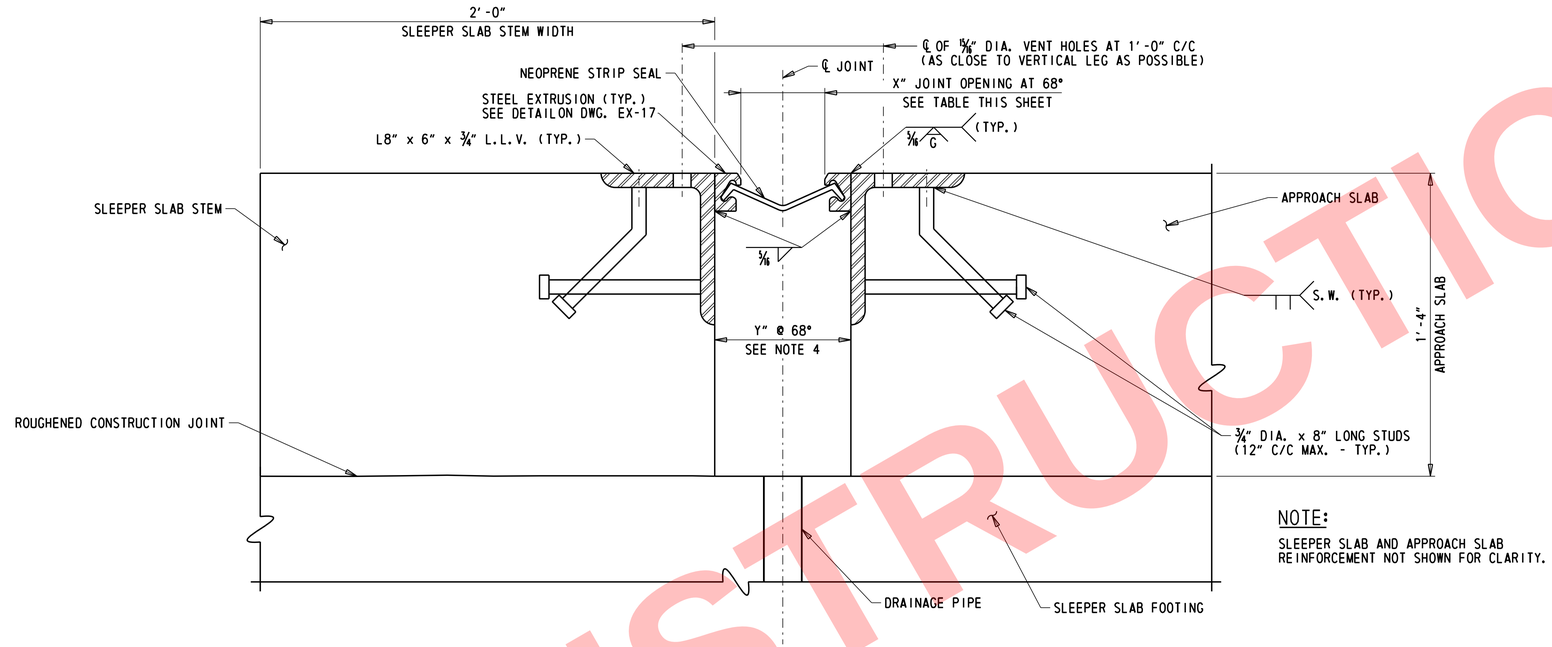

NOTE:

SLEEPER SLAB AND APPROACH SLAB REINFORCEMENT NOT SHOWN FOR CLARITY.

APPROACH SLAB JOINT ASSEMBLY DETAIL

3" = 1'-0"

STRIP SEAL EXPANSION JOINT NOTES:

1. STEEL FOR JOINTS AND STEEL EXTRUSIONS SHALL BE AASHTO M 270, GR. 36 (ASTM A36) AT MINIMIM.
2. NEOPRENE EXTRUSION TO MEET ASTM D2628 MODIFIED, (RECOVERY TEST EXCLUDED).
3. THE EXPANSION JOINT SHALL BE CAPABLE OF SEALING THE APPROACH SLAB TO SLEEPER SLAB JOINT TO PREVENT MOISTURE AND OTHER CONTAMINANTS FROM DESCENDING THROUGH THE JOINT.
4. THE CONTRACTOR SHALL ADJUST THE OPEN JOINT (Y) AS REQUIRED BY THE WIDTH OF THE STEEL EXTRUSION USED SO AS TO PROVIDE A X" JOINT OPENING AT 68°F.
5. THE STRIP SEAL SHALL BE INSTALLED IN ONE PIECE ACROSS THE APPROACH SLAB WIDTH. SPLICING OF THE STRIP SEAL IS NOT PERMITTED.
6. THE EXPANSION JOINT SYSTEM IS PAID FOR UNDER ITEM 624000 - PREFABRICATED EXPANSION JOINT SYSTEM, 3".
7. STEEL EXTRUSIONS SHALL BE HOT DIPPED GALVANIZED. ENTIRE JOINT ASSEMBLY AND EXTRUSION SHALL BE PAINTED AFTER FABRICATION USING URETHANE SYSTEM IN CONFORMANCE WITH SECTION 616 AND ASTM D6386. PAYMENT FOR GALVANIZING AND PAINTING WILL BE INCIDENTAL TO ITEM 624000 - PREFABRICATED EXPANSION JOINT SYSTEM, 3". PAINT COLOR SHALL MATCH THE EXISTING BEAMS/GIRDERS.
8. LUBRICANT-ADHESIVE FOR USE IN INSTALLING AND BONDING NEOPRENE SEAL ELEMENTS TO STEEL JOINT COMPONENTS SHALL BE A ONE QUART MOISTURE-CURING POLYURETHANE AND HYDROCARBON SOLVENT MIXTURE HAVING THE FOLLOWING PHYSICAL PROPERTIES:

AVERAGE WEIGHT, POUNDS PER GALLON	8±10%
SOLIDS CONTENT	65%
ADHESIVE SHALL REMAIN LIQUID FROM	5°F TO 120°F
FILM STRENGTH, AS PER ASTM D412	2,000 PSI
ELONGATION	250%

9. THE CONTRACTOR SHALL SUBMIT A WORKING PLAN FOR PLACEMENT OF STRIP SEAL DUE TO STAGED CONSTRUCTION IN THE SOUTHBOUND LANES.
10. PARAPET JOINT PLATES ARE REQUIRED. SEE SECTION B-B ON DWG. EX-02.

APPROACH SLAB JOINT OPENINGS, X

TEMPERATURE °F	20°	30°	40°	50°	60°	68°	70°	80°	90°	100°	MOVEMENT CLASSIFICATION
SOUTH ABUTMENT	2 1/16"	2"	1 7/8"	1 13/16"	1 3/4"	1 11/16" ±	1 11/16" ±	1 5/8"	1 1/2"	1 1/16"	3"
NORTH ABUTMENT	2 1/16"	2"	1 7/8"	1 13/16"	1 3/4"	1 11/16" ±	1 11/16" ±	1 5/8"	1 1/2"	1 1/16"	3"

NOTES:

1. FOR APPROACH SLAB A PLAN AND DETAILS, SEE DWGS. AS-01 THROUGH AS-04.
2. FOR SLEEPER SLAB A PLAN AND SECTIONS, SEE DWGS. AS-05 THROUGH AS-07.
3. FOR APPROACH SLAB B PLAN AND DETAILS, SEE DWGS. AS-08 THROUGH AS-11.
4. FOR SLEEPER SLAB B PLAN AND DETAILS, SEE DWGS. AS-12 THROUGH AS-14.

NOT FOR CONSTRUCTION

N:\31987-00A\Contract I-95\CADD\Bridge\BR1-748_AS15.dgn
5/31/2019 12:10:58 PM

ADDENDA / REVISIONS	

SCALE AS NOTED

REHABILITATION OF I-95 FROM I-495 TO NORTH OF BRANDYWINE RIVER BRIDGE

CONTRACT	T201407404
COUNTY	NEW CASTLE
BRIDGE NO.	1 748 059
DESIGNED BY:	DAN
CHECKED BY:	WAG

APPROACH SLAB JOINT DETAILS

AS-15

SECTION	SHEET NO.
WRA	424

SECTION 200

1. REMOVAL OF STRUCTURES AND OBSTRUCTIONS:
   ITEMS TO BE REMOVED UNDER ITEM #211000 - REMOVAL OF STRUCTURES AND OBSTRUCTIONS ASSOCIATED WITH BRIDGE 1-749 SHALL INCLUDE, BUT NOT BE LIMITED TO, THE FOLLOWING:
   - CONCRETE DECK
   - SHEAR STUDS
   - DECK JOINTS
   - CONCRETE PARAPETS
   - TRAFFIC SIGNS
   - LIGHTING
   - RAILROAD PROTECTIVE BARRIER (TO BE SALVAGED)
   - CONCRETE APPROACH SLAB

SECTION 600

2. PORTLAND CEMENT CONCRETE:
   USE PORTLAND CEMENT CONCRETE FOR CAST-IN-PLACE ELEMENTS AS FOLLOWS:
   (f'c = 28-DAY COMPRESSIVE STRENGTH)
   CLASS A - PARAPETS, PIERS, ABUTMENTS (f'c = 4.5 ksi)
   CLASS D - DECK, APPROACH SLAB, SLEEPER SLAB (f'c = 4.5 ksi)
   A HIGHER CLASS CONCRETE MAY BE SUBSTITUTED FOR A LOWER CLASS CONCRETE AT NO ADDITIONAL COST TO THE DEPARTMENT WITH APPROVAL OF THE ENGINEER.
   -CHAMFER ALL EXPOSED EDGES ¾" X ¾" UNLESS OTHERWISE NOTED.
   -DO NOT SLIP-FORM BARRIERS, UNLESS OTHERWISE APPROVED BY THE DEPARTMENT.
   -CONTRACTOR SHALL SUPPLY CONCRETE FOR THE PARAPETS, BRIDGE DECK, AND APPROACH SLABS THAT INCLUDES A SHRINKAGE-REDUCING/COMPENSATING ADMIXTURE. PAYMENT FOR ADMIXTURE WILL BE INCIDENTAL TO ITS RESPECTIVE CONCRETE ITEM (ITEMS 610008, 610017, AND 610018). THE ADMIXTURE MAY BE SUPPLIED BY ONE PRODUCT THAT PROVIDES BOTH EXPANSION AND PORE WATER SURFACE TENSION OR TWO SEPARATE PRODUCTS EACH ADDED AT DOSAGE RECOMMENDED BY MANUFACTURER'S TECHNICAL DATA SHEETS AND HAVING THE FOLLOWING CHARACTERISTICS:
   (A) DESIGNED TO PROVIDE BOTH THE FOLLOWING CHARACTERISTICS:
   I. EXPANDS AT A RATE THAT CLOSELY COMPENSATES FOR SHRINKAGE OF THE CONCRETE MIX.
   II. REDUCES THE CAPILLARY SURFACE TENSION OF THE CONCRETE PORE WATER.
   (B) PROVIDES AT LEAST 80% SHRINKAGE REDUCTION AS MEASURED AND DOCUMENTED BY FIELD PERFORMANCE.
   (C) FORMULATED FOR USE IN FREEZING AND THAWING WEATHER.

3. BAR REINFORCEMENT:
   -REINFORCING STEEL SHALL CONFORM TO AASHTO M31 (ASTM A615), GRADE 60.
   -REINFORCING STEEL SHALL HAVE A 3" CLEAR COVER IF CAST AGAINST EARTH OR A 2" CLEAR COVER ELSEWHERE, UNLESS OTHERWISE SPECIFIED ON THE PLANS.
   -ALL REINFORCING STEEL SHALL BE PROTECTED WITH FUSION BONDED EPOXY. EPOXY COATED REINFORCING STEEL SHALL CONFORM TO ASTM A775.
   -ANY FIELD CUTTING OR FIELD BENDING MUST BE APPROVED BY THE ENGINEER. PAYMENT SHALL BE INCIDENTAL TO THE BAR REINFORCEMENT ITEM.
   -GALVANIZED REINFORCING STEEL WAY BE SUBSTITUTED FOR EPOXY-COATED REINFORCING STEEL AT NO ADDITIONAL COST TO THE DEPARTMENT WITH APPROVAL OF THE ENGINEER.
   -WELDING OF REINFORCEMENT DURING FABRICATION OR CONSTRUCTION IS NOT PERMITTED UNLESS SPECIFIED.

4. CONCRETE SEALER:
   REFER TO DIAGRAMS CONTAINING SILICONE-BASED ACRYLIC CONCRETE SEALER LIMITS ON DWG. AB-01, PR-01 TO PR-05, AND TS-01 TO TS-05. EPOXY CONCRETE SEALER SHALL BE APPLIED TO THE BEAM SEATS AND BEARING PEDESTALS AT EACH PIER. SILICONE-BASED ACRYLIC CONCRETE SEALER SHALL BE APPLIED TO THE REMAINING EXPOSED CONCRETE SURFACES AT THE PIERS AND THE ENTIRE AREA OF EXPOSED CONCRETE AT THE ABUTMENTS.

5. STRUCTURAL STEEL:
   PROVIDE STRUCTURAL STEEL CONFORMING TO AASHTO M270, GRADE 50 (ASTM A709, GRADE 50) DESIGNATION, EXCEPT WHEN NOTED OTHERWISE. THE ADDITIONAL REQUIREMENTS FOR CHARPY V-NOTCH TESTING (DENOTED AS 'CVN' ON PLANS) OF AASHTO M270 FOR PRIMARY LOAD CARRYING MEMBERS SHALL BE INCLUDED.

   PROVIDE MATERIALS AND PERFORM WORK IN ACCORDANCE WITH AASHTO/AWS D1.5M/1.5:2015 BRIDGE WELDING CODE, AND CONTRACT DOCUMENTS. MAKE TACK WELDS WITH THE SAME TYPE OF ELECTRODE AND INCORPORATE IN THE FINAL WELD. NO OTHER TACK WELDING WILL BE PERMITTED, EXCEPT AS NOTED ON THE PLANS.

   DO NOT USE FORM SUPPORT SYSTEMS THAT WILL CAUSE UNACCEPTABLE OVERSTRESS OR DEFORMATION TO PERMANENT BRIDGE MEMBERS.

6. DESIGN SPECIFICATIONS:
   (A) 2016 DELDOT BRIDGE DESIGN MANUAL.
   (B) 2014 AASHTO LRFD BRIDGE DESIGN SPECIFICATIONS, 7TH EDITION, U.S. CUSTOMARY UNITS INCLUDING 2015 AND 2016 INTERIM REVISIONS.
   (C) PROVIDE MATERIALS AND PERFORM WORK IN ACCORDANCE WITH THE 2016 DELDOT STANDARD SPECIFICATIONS AND 2018 SUPPLEMENTAL SPECIFICATIONS.

MISCELLANEOUS

7. LOADING:
   -DEAD LOADS INCLUDE 25 PSF FOR FUTURE WEARING SURFACE ON DECK SLAB AND 15 PSF FOR STAY-IN-PLACE FORMS (INCLUDES CONCRETE IN FORM CORRUGATIONS). PARAPET LOADS ARE DISTRIBUTED 75% TO THE EXTERIOR AND 25% TO THE FIRST INTERIOR BEAM.
   -DESIGN LIVE LOADS INCLUDE HL-93 LOADING.
   -FATIGUE DESIGN IS BASED ON THE FOLLOWING ONE DIRECTIONAL TRAFFIC VOLUMES: ADTT = 650 IN YEAR 2040.
   -LIVE LOAD DISTRIBUTION TO THE GIRDERS IS BASED ON THE AASHTO SIMPLIFIED METHOD.
   -THERMAL LOADS AND MOVEMENTS ARE BASED ON THE MODERATE TEMPERATURE RANGE AS STIPULATED IN THE AASHTO LRFD DESIGN SPECIFICATIONS AS 0° TO 120°F. THE NORMAL TEMPERATURE SHALL BE CONSIDERED TO BE 68° F.
   -LIVE LOAD DEFLECTION SHALL BE LIMITED TO L/800.
   -FOR REINFORCEMENT DISTRIBUTION REQUIREMENTS, CONSIDER CLASS I EXPOSURE CRITERIA FOR DECKS.
   -PARAPETS HAVE BEEN DESIGNED FOR MASH TEST LEVEL 4 (TL-4).

8. EXISTING CONDITIONS:
   -ALL EXISTING DIMENSIONS AND ELEVATIONS SHOWN ARE BASED ON THE BEST AVAILABLE INFORMATION AND ARE APPROXIMATE ONLY. THE CONTRACTOR SHALL FIELD VERIFY ALL EXISTING DIMENSIONS, GEOMETRY, AND ELEVATIONS AS NECESSARY PRIOR TO ORDERING ANY MATERIALS AND COMMENCING CONSTRUCTION TO ENSURE PROPER FIT OF THE PROPOSED CONSTRUCTION. PAYMENT SHALL BE INCIDENTAL TO ITEM #763501 - CONSTRUCTION ENGINEERING.

9. ROADWAY CLEARANCES:
   A MINIMUM OF 14'-6" SHALL BE MAINTAINED ABOVE LIBERTY ST. A MINIMUM OF 23'-0" SHALL BE MAINTAINED ABOVE ALL RAILROADS.

10. CONTINGENT QUANTITIES:
    THESE CONTRACT DRAWINGS HAVE BEEN PREPARED BASED ON ORIGINAL CONTRACT PLANS, SHOP DRAWINGS, AND FIELD INSPECTION NOTES TAKEN FROM NOVEMBER 16, 2014 THROUGH FEBRUARY 5, 2015. ADDITIONAL REPAIRS HAVE BEEN ADDED BASED ON THE MARCH 2017 BIENNIAL BRIDGE INSPECTION REPORT. ACTUAL CONDITIONS MAY REQUIRE MODIFICATION IN CONSTRUCTION DETAILS AND WORK QUANTITIES. ALL DIMENSIONS AND DETAILS SHOWN ON THE PLANS SHALL BE VERIFIED BY THE CONTRACTOR PRIOR TO ORDERING ANY MATERIALS. SEE DWG. PN-04 FOR PAY ITEM CONTINGENCY PERCENTAGES.

11. UTILITIES:
    SEE UTILITY STATEMENT AND UTILITY RELOCATION PLAN SHEETS FOR FURTHER INFORMATION ON UTILITY COORDINATION.

12. ENVIRONMENTAL COMPLIANCE:
    REFER TO THE ENVIRONMENTAL COMPLIANCE PLAN FOR RESTRICTIONS AND ADDITIONAL GUIDANCE THAT MAY BE ASSOCIATED TO THIS PROJECT.

13. COORDINATION WITH THE CITY OF WILMINGTON:
    THE CONTRACTOR SHALL COORDINATE ALL WORK WITH THE CITY OF WILMINGTON, ESPECIALLY WORK WHICH IMPACTS CITY STREETS. THE CONTRACTOR SHALL NOTIFY BRIAN MITCHELL AT (302) 576-3089 AT LEAST TWO (2) WEEKS PRIOR TO ANY COORDINATION REQUIREMENTS AND/OR CHANGES IN TRAFFIC PATTERNS.

14. CONTRACTOR SUBMISSIONS:
    ALL SHOP DRAWINGS FOR ITEMS OF WORK THAT ARE TO BE REVIEWED BY A RAILROAD SHOULD BE SUBMITTED AS SOON AS POSSIBLE. THE CONTRACTOR SHOULD CONSIDER THE LENGHT OF TIME REQUIRED FOR EACH RAILROAD TO REVIEW SHOP DRAWINGS IN HIS SCHEDULE OF WORK.

    PRIOR TO OR WITH THE SHOP DRAWINGS, THE CONTRACTOR SHALL SUBMIT THE FIELD VERIFICATION NOTES ON MEMBER SIZES AND DIMENSIONS NECESSARY TO REVIEW THE SHOP DRAWINGS.

15. CONSTRUCTION SAFETY FENCE:
    CONSTRUCTION SAFETY FENCE IS REQUIRED AROUND THE PERIMETER OF ALL BELOW-DECK WORK AREAS AND AT LOCATIONS DIRECTED BY THE ENGINEER.

16. CLEARING AND GRUBBING:
    ALL VEGETATIVE GROWTH SHALL BE REMOVED FROM THE PIERS, ABUTMENTS, AND SUPERSTRUCTURE ELEMENTS AS DIRECTED BY THE ENGINEER.

    AT THE DIRECTION OF THE ENGINEER, THE CONTRACTOR SHALL REMOVE ALL EXISTING DEBRIS FROM BENEATH RAMP A (BR 1-749) INCLUDING DEBRIS IN THE VICINITY OF THE AMTRAK BRICK AND STONE VIADUCT. THE CONTRACTOR SHALL NOT DAMAGE OR REMOVE ABANDONED TRACKS WITHOUT PRIOR APPROVAL OF THE APPROPRIATE RAILROAD. REFER TO THE SPECIFICAITONS FOR ADDITIONAL INFORMATION.

MISCELLANEOUS (CONTINUED)

17. CONTRACT RESTRICTIONS: T.B.D.

18. ABBREVIATIONS:

BOT. = BOTTOM	MIN. = MINIMUM
C/C = CENTER-TO-CENTER	NO. = NUMBER
℄ = CENTERLINE	N/S = NORFOLK SOUTHERN
CLR. = CLEAR	N.T.S. = NOT TO SCALE
DIA. = DIAMETER	OH = OVERHEAD
DWG. = DRAWING	P.C.C. = PORTLAND CEMENT CONCRETE
E.F. = EACH FACE	P.G.A. = POINT OF GRADE APPLICATION
EL. = ELEVATION	P.G.L. = PROFILE GRADE LINE
EXP. = EXPANSION	R = RADIUS
EQ = ENTIRE QUANTITY	RT = RIGHT
FIX. = FIXED	S.W. = SHOP WELD
ITS = INTELLIGENT TRANSPORTATION SYSTEM	SCH. = SCHEDULE
J.B. = JUNCTION BOX	SHLD. = SHOULDER
L.L.V. = LONG LEG VERTICAL	STA. = STATION
LMC = LATEX MODIFIED CONCRETE	TRK = TRACK
LT = LEFT	TYP. = TYPICAL
MAX. = MAXIMUM	UG = UNDERGROUND

NOT FOR CONSTRUCTION

N:\31087-00A\Contract\I-95\CADD\Bridge\BRI-749_PN01.dgn
5/31/2019 12:15:58 PM

ADDENDA / REVISIONS		NOT TO SCALE	REHABILITATION OF I-95 FROM I-495 TO NORTH OF BRANDYWINE RIVER BRIDGE	CONTRACT T201407404	BRIDGE NO. 1 749 6142	BRIDGE PROJECT NOTES 1 OF 2	PN-01
				COUNTY NEW CASTLE	DESIGNED BY: DAN		SECTION WRA
					CHECKED BY: WAG		SHEET NO. 2-428

RAILROAD COORDINATION - NORFOLK SOUTHERN

14. ALL WORK ON, OVER, UNDER, OR ADJACENT TO NORFOLK SOUTHERN (NS) RIGHT-OF-WAY SHALL BE PERFORMED IN ACCORDANCE WITH ITEM 801501 - MAINTENANCE OF RAILROAD TRAFFIC NORFOLK SOUTHERN.

15. NORFOLK SOUTHERN CONTACT INFORMATION:
NORFOLK SOUTHERN CORPORATION
BRIDGES AND STRUCTURES DEPARTMENT
ATTN. MR. S.A. OVERBEY, ENGINEER PUBLIC IMPROVEMENTS
1200 PEACHTREE STREET NE
ATLANTA, GA 30309
PHONE: (404) 582-5588
EMAIL: SCOTT.OVERBEY@NSCORP.COM

16. "ONE CALL" SERVICES DO NOT LOCATE BURIED RAILROAD SIGNAL AND COMMUNICATIONS LINES. THE CONTRACTOR SHALL CONTACT THE RAILROAD'S REPRESENTATIVE TWO (2) DAYS IN ADVANCE OF THOSE PLACES WHERE EXCAVATION, PILE DRIVING, OR HEAVY LOADS MAY DAMAGE RAILROAD UNDERGROUND LINES ON RAILROAD PROPERTY. UPON REQUEST FROM THE CONTRACTOR OR AGENCY, RAILROAD SIGNAL FORCES WILL LOCATE AND PAINT MARK OR FLAG RAILROAD UNDERGROUND SIGNAL, COMMUNICATION, AND POWER LINES IN THE AREA TO BE DISTURBED FOR THE CONTRACTOR. THE CONTRACTOR SHALL AVOID EXCAVATION OR OTHER DISTURBANCE OF THESE LINES WHICH ARE CRITICAL TO THE SAFETY OF THE RAILROAD AND THE PUBLIC. IF DISTURBANCE OR EXCAVATION IS REQUIRED NEAR A BURIED RAILROAD SIGNAL, COMMUNICATION, OR POWER LINE, THE LINE SHALL BE POTHOLED MANUALLY WITH CAREFUL HAND EXCAVATION BY THE CONTRACTOR AND PROTECTED BY THE CONTRACTOR DURING THE COURSE OF THE DISTURBANCE UNDER THE SUPERVISION AND DIRECTION OF A RAILROAD SIGNAL REPRESENTATIVE.

17. ALL UTILITY INSTALLATIONS OR RELOCATIONS ON NORFOLK SOUTHERN RIGHT-OF-WAY THAT ARE REQUIRED IN CONJUNCTION WITH THIS PROJECT CAN BE INSTALLED OR RELOCATED AS PART OF THE PROJECT PROVIDED THE CONSTRUCTION IS PERFORMED BY THE PROJECT CONTRACTOR OR PROJECT CONTRACTOR'S SUB-CONTRACTOR. HOWEVER, THE UTILITY MUST SUBMIT AN APPLICATION FOR THE INSTALLATION OR RELOCATION TO AECOM FOR APPROPRIATE HANDLING FOR LICENSE AGREEMENT AND APPLICABLE FEES. FOR UTILITY APPLICATIONS GO TO: WWW.NSCORP.COM >REAL ESTATE >NS SERVICES > WIRE, PIPELINE, AND FIBER OPTICS PROJECTS. NOTE: LICENSE AGREEMENT MUST BE EXECUTED PRIOR TO UTILITY BEING INSTALLED OR RELOCATED.

18. FOR PROJECTS EXCEEDING 30 DAYS OF CONSTRUCTION, CONTRACTOR SHALL PROVIDE THE FLAGMAN A SMALL WORK AREA WITH A DESK/COUNTER AND CHAIR WITHIN THE FIELD/SITE TRAILER, INCLUDING THE USE OF BATHROOM FACILITIES, WHERE THE FLAGMAN CAN CHECK IN/OUT WITH THE PROJECT, AS WELL AS TO THE FLAGMAN'S HOME TERMINAL. THE WORK AREA SHOULD PROVIDE ACCESS TO TWO (2) ELECTRICAL OUTLETS FOR RECHARGING RADIO(S), AND A LAPTOP COMPUTER; AND HAVE THE ABILITY TO PRINT OFF NEEDED DOCUMENTATION AND ORDERS AS NEEDED AT THE FIELD/SITE TRAILER. THIS SHOULD AID IN MAXIMIZING THE FLAGMAN'S TIME AND EFFICIENCY ON THE PROJECT.

19. NORFOLK SOUTHERN WILL BE PROVIDED AS-BUILT DRAWINGS OF THE BRIDGES SHOWING THE ACTUAL CLEARANCES AS CONSTRUCTED. DEPTH, SIZE, AND LOCATION OF ALL FOUNDATION COMPONENTS SHALL BE SHOWN ON THE DRAWINGS.

20. RAILROAD SAFETY TRAINING:
ALL PERSONELL SHALL RECIEVE NORFOLK SOUTHERN SAFETY TRAINING PRIOR TO ENTERING NORFOLK SOUTHERN RAILROAD COMPANY PROPERTY. NORFOLK SOUTHERN SAFETY TRAINING EXPIERS AFTER ONE (1) YEAR. AS SUCH, PERSONNEL MAY NEED TO REPEAT THE TRAINING COURSE. IN ADDITION, THE CONTRACTOR SHALL COMPLY WITH ALL OSHA REGULATIONS. REFER TO THE SPECIFICATIONS AND ITEM 801501 - MAINTENANCE OF RAILROAD TRAFFIC (NORFOLK SOUTHERN) FOR ADDITIONAL INFORMATION.

RAILROAD COORDINATION - AMTRAK

29. PROTECTION OF RAILROAD FACILITIES:
REFER TO ITEM 801519 - MAINTENANCE OF RAILROAD TRAFFIC (AMTRAK) FOR WORK OVER THE RAILROAD. HIGH VOLTAGE ELECTRICAL LINES (CATENARY WIRES) CROSS UNDER THE VIADUCT AND ARE ATTACHED TO THE UNDERSIDE OF THE SUPERSTRUCTURE OF BR I-748. THE CONTRACTOR SHALL FURNISH, INSTALL, AND REMOVE RAILROAD PROTECTIVE SHIELDS IN ACCORDANCE WITH THE SPECIAL PROVISIONS AND THE PRE-APPROVED DETAILS SHOWN ON THE PLANS.

ALL TEMPORARY AND PERMANENT PROTECTIVE SHIELDS IN THE VICINITY OF AMTRAK'S CATENARY WIRES SHALL BE BONDED AND GROUNDED AS INDICATED IN THE SPECIAL PROVISIONS. THE DESIGN OF BONDING AND GROUNDING DETAILS MAY BE PERFORMED BY AMTRAK OR AN AMTRAK APPROVED CONSULTANT. THE CONTRACOTOR SHALL CONTACT AMTRAK FOR A CURRENT LIST OF APPROVED CONSULTANS. THE CONTRACTOR WILL BE REIMBURSED FOR THE COST OF THE DESIGN OF THE BONDING AND GROUNDING DETAILS UNDER ITEM 801519. THE CONTRACTOR SHALL CONSIDER THE TIME REQUIED TO PREPARE BONDING AND GROUNDING DETAILS IN HIS SCHEDULE OF WORK.

THE MINIMUM CLEARNACE BETWEEN THE CATENARY WIRES AND ANY TEMPORARY OR PERMANENT WORKS SHALL BE 9" AT THE CATENARY WIRE SUPPORTS AND 18" AWAY FROM THE SUPPORTS.

30. ALL PERSONNEL SHALL RECIEVE AMTRAK SAFETY TRAINING PRIOR TO ENTERING MATRAK PROPERTY. AMTRAK SAFETY TRAINING EXPIRES AFTER ONE (1) YEAR. AS SUCH, PERSONELL MAY NEED TO REPEAT THE TRAINING COURSE DURING THE COURSE OF THE CONTRACT. IN ADDITION, THE CONTRACTOR SHALL COMPLY WITH ALL OSHA REGULATIONS. REFER TO THE SPECIFICATIONS AND ITEM 801519 - MAINTENANCE OF RAILROAD TRAFFIC (AMTRAK) FOR ADDITIONAL INFORMATION.

INDEX OF BRIDGE 1-749 SHEETS

BR. SHEET Nº	BR. DWG. Nº	TABLE OF CONTENTS
2-428	PN-01 TO PN-02	BRIDGE PROJECT NOTES
2-429	PN-03	CONCRETE REPAIR DETAILS
2-430	PN-04	QUANTITIES AND LOAD RATINGS
2-431	PN-05	SUMMARY OF PROPOSED REPAIR AND RECONSTRUCTION ITEMS
2-432	PE-01	GENERAL PLAN AND ELEVATION
2-433 TO 2-437	TS-01 TO TS-05	BRIDGE TYPICAL SECTIONS
2-438 TO 2-439	AB-01 TO AB-02	ABUTMENT REPAIR DETAILS
2-440 TO 2-441	PR-01 TO PR-02	PIER REPAIR DETAILS
2-445 TO 2-448	DM-01 TO DM-04	RAILROAD PROTECTIVE SHIELD DETAILS
2-449	DM-05	EXISTING BRACKET REMOVAL DETAILS
2-450	BB-01	BEARING MODIFICATION DETAILS
2-451	RH-01	JACKING DETAILS
2-451A TO 2-451C	FR-01 TO FR-03	FRAMING PLAN
2-452 TO 2-452G	BM-01 TO BM-08	GIRDER DETAILS
2-453 TO 2-460	DK-01 TO DK-08	DECK SLAB AND PARAPET REINFORCEMENT
2-461	SD-01	SUPERSTRUCTURE DETAILS
2-462 TO 2-462B	PA-01 TO PA-03	PARAPET DETAILS
2-463	RA-01	FENCE AND BARRIER LAYOUT
2-464	RA-02	RAILROAD PROTECTIVE BARRIER DETAILS
2-465 TO 2-470	FD-01 TO FD-06	FINISHED BRIDGE DECK ELEVATIONS
2-471 TO 2-473	EX-01 TO EX-03	EXPANSION JOINT DETAILS
2-474 TO 2-476	EX-04 TO EX-06	DECK OVER DETAILS
2-477	DT-01	SCUPPER DETAILS
2-478	DT-02	BRIDGE MOUNTED LIGHT SUPPORT DETAILS
2-479 TO 2-483B	AS-01 TO AS-07	APPROACH SLAB DETAILS
2-484	BR-01	REINFORCEMENT SCHEDULE
TOTAL BRIDGE SHEETS: 69		

NOT FOR CONSTRUCTION

ADDENDA / REVISIONS		NOT TO SCALE	REHABILITATION OF I-95 FROM I-495 TO NORTH OF BRANDYWINE RIVER BRIDGE	CONTRACT T201407404	BRIDGE NO. 1 749 6142	BRIDGE PROJECT NOTES 2 OF 2	PN-02
				COUNTY NEW CASTLE	DESIGNED BY: DAN		SECTION WRA
					CHECKED BY: WAG		SHEET NO. 2-428A

N:\31987-001\Gen\ec\I-95\CADD\Bridge\BR1-749_PN05.dgn
5/31/2019 12:15:59 PM

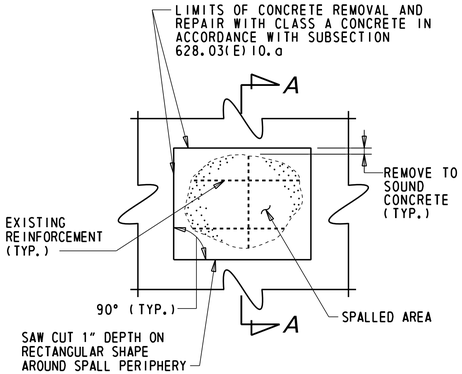

PLAN

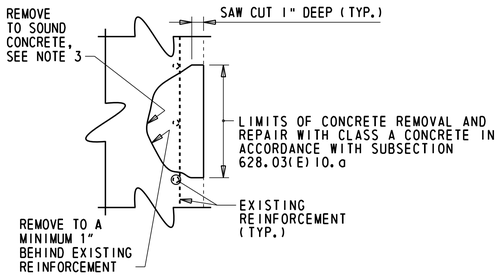

SECTION A-A

DEEP SPALL REPAIR

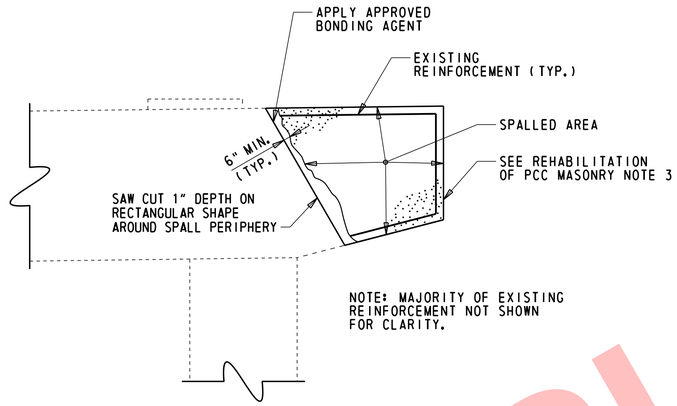

REHABILITATION OF PCC MASONRY

DEEP SPALL REPAIR NOTES

1. DEEP SPALL REPAIRS ARE DEFINED AS PATCHES THAT EXTEND BELOW THE TOP MAT OF REINFORCEMENT. DELAMINATED CONCRETE HAS BEEN ASSUMED AS DEEP SPALL REPAIRS.
2. ALL WORK INVOLVING METHODS OF CONCRETE REMOVAL; CLEANING OF CONCRETE SURFACE AND EXISTING REINFORCEMENT; REPAIRING OR REPLACING DAMAGED REINFORCEMENT AS RESULT OF CONSTRUCTION ACTIVITIES OR SECTION LOSS; PRESENCE OF CONTRACTION OR EXPANSION JOINTS; SURFACE PREPARATION; AND CONCRETE PLACEMENT SHALL BE PERFORMED IN ACCORDANCE WITH SUBSECTION 628.03(E) OF THE STANDARD SPECIFICATIONS. PAYMENT INCIDENTAL TO 628041 - DEEP SPALL REPAIR.
3. IF DEPTH OF REPAIR EXTENDS MORE THAN 6" BEYOND SURFACE OF CONCRETE, CONTRACTOR SHALL STOP WORK AND NOTIFY THE ENGINEER IMMEDIATELY.

REHABILITATION OF PCC MASONRY NOTES

1. REHABILITATION OF PCC MASONRY IS DEFINED AS DEEP SPALL PATCHES THAT EXCEED THE 0.5 C.Y. THRESHOLD IN A SINGLE AREA.
2. ALL WORK INVOLVING METHODS OF CONCRETE REMOVAL; CLEANING OF CONCRETE SURFACE AND EXISTING REINFORCEMENT; REPAIRING OR REPLACING DAMAGED REINFORCEMENT AS RESULT OF CONSTRUCTION ACTIVITIES OR SECTION LOSS; PRESENCE OF CONTRACTION OR EXPANSION JOINTS; SURFACE PREPARATION; AND CONCRETE PLACEMENT SHALL BE PERFORMED IN ACCORDANCE WITH SUBSECTION 628.03(E) OF THE STANDARD SPECIFICATIONS. PAYMENT INCIDENTAL TO 628042 - REHABILITATION OF PCC MASONRY.
3. DETAIL SHOWN FOR "REHABILITATION OF EXISTING PCC MASONRY" UTILIZES A GENERIC EXAMPLE USING PARTIAL RECONSTRUCTION OF AN EXISTING PIER CAP. SEE ABUTMENT AND PIER REHABILITATION SHEETS FOR SIZE AND LOCATION OF REPAIRS AT EACH SUBSTRUCTURE UNIT.
4. IF DEPTH OF REPAIR EXTENDS MORE THAN 6" BEYOND SURFACE OF CONCRETE, CONTRACTOR SHALL STOP WORK AND NOTIFY THE ENGINEER IMMEDIATELY.

NOT FOR CONSTRUCTION

N:\31987-001\Cad\151\C-ADD\Bridge\BR1-749_PN04.dgn
5/17/2019 12:04:00 PM

ADDENDA / REVISIONS		NOT TO SCALE	REHABILITATION OF I-95 FROM I-495 TO NORTH OF BRANDYWINE RIVER BRIDGE	CONTRACT T201407404	BRIDGE NO. 1 749 6142	CONCRETE REPAIR DETAILS	PN-03
				COUNTY NEW CASTLE	DESIGNED BY: DAN		SECTION WRA
					CHECKED BY: WAG		SHEET NO. 429

QUANTITIES

ITEM Nº	ITEM TITLE	UNIT	QUANTITY
207000	STRUCTURAL EXCAVATION	CY	53
211000	REMOVAL OF STRUCTURES AND OBSTRUCTIONS	LS	1
301001	GRADED AGGREGATE BASE COURSE, TYPE B	CY	34
302002	DELAWARE NO. 3 STONE	TON	17
604000	JACKING BRIDGE	LS	1
604001	PROTECTIVE SHIELD	LS	1
6045XX	RAILROAD PROTECTIVE SHIELD	LS	1
610002	PORTLAND CEMENT CONCRETE MASONRY, ABUTMENT ABOVE FOOTING, CLASS A	CY	4
610008	PORTLAND CEMENT CONCRETE MASONRY, PARAPET, CLASS A	CY	172
610017	PORTLAND CEMENT CONCRETE MASONRY, SUPERSTRUCTURE, CLASS D	CY	1158
610018	PORTLAND CEMENT CONCRETE MASONRY, APPROACH SLAB, CLASS D	CY	54
610500	ULTRA HIGH PERFORMANCE CONCRETE	CY	1
611000	BAR REINFORCEMENT	LB	811
611001	BAR REINFORCEMENT, EPOXY COATED	LB	199640
613000	EPOXY CONCRETE SEALER	SF	626
613001	SILICONE BASED ACRYLIC CONCRETE SEALER	SF	20417
615001	STEEL STRUCTURES	LS	1
615005	STEEL STRUCTURE REPAIR	LB	250
615007	WELDING REPAIR	LF	5
624000	PREFABRICATED EXPANSION JOINT SYSTEM, 3"	LF	205
625000	LATEX-MODIFIED CONCRETE OVERLAY INSTALLATION	SY-IN	2559
625001	FURNISHING LATEX-MODIFIED CONCRETE OVERLAY	CY	90
628001	REPAIR OF CONCRETE STRUCTURES BY EPOXY INJECTION	LF	33
628041	DEEP SPALL REPAIR	CF	38
628042	REHABILITATION OF P.C.C. MASONRY	CY	2
707016	RIPRAP, R-5	TON	45
708003	GEOTEXTILES, RIPRAP	SY	103
727007	BRIDGE SAFETY FENCE, TYPE 1	LF	167
7275XX	REINSTALL RAILROAD PROTECTIVE BARRIER	LF	207
801501	MAINTENANCE OF RAILROAD TRAFFIC (NORFOLK SOUTHERN)	LS	1
801519	MAINTENANCE OF RAILROAD TRAFFIC (AMTRAK)	LS	1

NOTE: QUANTITIES INCLUDE CONTINGENT PERCENTAGES AS NOTED IN NOTE 11 ON DWG. PN-01 AND AS SHOWN IN THE REPAIR TABLE ON DWG. PN-04.

LOAD RATING SUMMARY

DESIGN VEHICLE	*RATING FACTOR*	*RATING WEIGHT (TON)*	*CONTROLLING MEMBER*	*CONTROLLING POINT*	*LOAD EFFECT*
HL-93 TRUCK (INVENTORY)	*1.05*	*37.80*	*SPAN 3A INTERIOR*	*110*	*STRENGTH I*
HL-93 TANDEM (INVENTORY)	*1.27*	*31.75*	*SPAN 3A INTERIOR*	*110*	*STRENGTH I*
HL-93 TRUCK TRAIN (INVENTORY)	*N/A*	*N/A*	*N/A*	*N/A*	*N/A*
HS-20 (INVENTORY)	*1.35*	*48.60*	*SPAN 3A INTERIOR*	*110*	*STRENGTH I*
HL-93 TRUCK (OPERATING)	*1.36*	*48.96*	*SPAN 3A INTERIOR*	*110*	*STRENGTH I*
HL-93 TANDEM (OPERATING)	*1.65*	*41.25*	*SPAN 3A INTERIOR*	*110*	*STRENGTH I*
HL-93 TRUCK TRAIN (OPERATING)	*N/A*	*N/A*	*N/A*	*N/A*	*N/A*
HS-20 (OPERATING)	*1.75*	*63.00*	*SPAN 3A INTERIOR*	*110*	*STRENGTH I*
DE S220 & LEGAL-LANE (LEGAL)	*2.52*	*50.40*	*SPAN 4A EXTERIOR*	*105*	*SERVICE II*
DE S335 & LEGAL-LANE (LEGAL)	*1.40*	*49.00*	*SPAN 4A EXTERIOR*	*105*	*SERVICE II*
DE S437 & LEGAL-LANE (LEGAL)	*1.33*	*48.73*	*SPAN 4A EXTERIOR*	*105*	*SERVICE II*
DE S330 & LEGAL-LANE (LEGAL)	*2.02*	*60.60*	*SPAN 4A EXTERIOR*	*105*	*SERVICE II*
DE S435 & LEGAL-LANE (LEGAL)	*1.78*	*62.30*	*SPAN 4A EXTERIOR*	*105*	*SERVICE II*
DE S540 & LEGAL-LANE (LEGAL)	*1.58*	*63.20*	*SPAN 4A EXTERIOR*	*105*	*SERVICE II*

NOTE: LOAD RATING INCLUDES FUTURE WEARING SURFACE AS NOTED IN THE PLANS.

NOT FOR CONSTRUCTION

N:\31987-001\Control\I-95\CADD\Bridge\BRI-749_PN03.dgn
5/31/2019 12:04:00 PM

ADDENDA / REVISIONS		NOT TO SCALE	REHABILITATION OF I-95 FROM I-495 TO NORTH OF BRANDYWINE RIVER BRIDGE	CONTRACT T201407404	BRIDGE NO. 1 749 6142	QUANTITIES AND LOAD RATINGS	PN-04
				COUNTY NEW CASTLE	DESIGNED BY: DAN		SECTION WRA
					CHECKED BY: WAG		SHEET NO. 430

REPAIR NO.	REPAIR DESCRIPTION	LOCATION	REMARKS	DWG. NO.	ITEM NO.	ITEM DESCRIPTION	UNIT	QTY.	CONTINGENT %	TOTAL QTY.
5	FURNISH AND INSTALL LMC OVERLAY	ENTIRE BRIDGE	SEE LMC OVERLAY NOTES BELOW		625000	LATEX-MODIFIED CONCRETE OVERLAY INSTALLATION	SY-IN	2559	0	2559
					625001	FURNISHING LATEX-MODIFIED CONCRETE OVERLAY	CY	72	25	90
7	DECK REPLACEMENT	ENTIRE BRIDGE	INCLUDES NEW JOINTS AT PIERS 1A, 2A, 3A, 5A, LINK SLAB AT PIER 4A, DECKOVER AT NORTH ABUTMENT, AND NEW PARAPETS	DK-01 TO DK-08, SD-01, BM-01, PA-01,	211000	REMOVAL OF STRUCTURES AND OBSTRUCTIONS	LS	1	0	1
					604000	JACKING BRIDGE	LS	1	0	1
					604001	PROTECTIVE SHIELD	LS	1	0	1
					6045XX	RAILROAD PROTECTIVE SHIELD	LS	1	0	1
					610002	PORTLAND CEMENT CONCRETE MASONRY, ABUTMENT ABOVE FOOTING, CLASS A	CY	3	0	3
			SEE DEMOLITION NOTES BELOW.	EX-01 TO EX-05	610008	PORTLAND CEMENT CONCRETE MASONRY, PARAPET, CLASS A	CY	166	0	166
					610017	PORTLAND CEMENT CONCRETE MASONRY, SUPERSTRUCTURE, CLASS D	CY	1158	0	1158
					610500	ULTRA HIGH PERFORMANCE CONCRETE	CY	1	0	1
				RH-01, RH-02	611000	BAR REINFORCEMENT	LB	811	0	811
					611001	BAR REINFORCEMENT, EPOXY COATED	LB	187715	0	187715
					615001	STEEL STRUCTURES	LS	1	0	1
					615005	STEEL STRUCTURE REPAIR	LB	0	EQ	250
					615007	WELDING REPAIR	LF	0	EQ	5
					624000	PREFABRICATED EXPANSION JOINT SYSTEMS, 3"	LF	166	0	166
9	REMOVE AND REPLACE CONCRETE APPROACH SLAB	NORTH APPROACH AT RAMP A ABUTMENT		AS-01 TO AS-05	207000	STRUCTURAL EXCAVATION	CY	53	0	53
					211000	REMOVAL OF STRUCTURES AND OBSTRUCTIONS	LS	1	0	1
					301001	GRADED AGGREGATE BASE COURSE, TYPE B	CY	34	0	34
					610002	PORTLAND CEMENT CONCRETE MASONRY, ABUTMENT ABOVE FOOTING, CLASS A	CY	1	0	1
					610008	PORTLAND CEMENT CONCRETE MASONRY, PARAPET, CLASS A	CY	6	0	6
					610018	PORTLAND CEMENT CONCRETE MASONRY, APPROACH SLAB, CLASS D	CY	54	0	54
					611001	BAR REINFORCEMENT, EPOXY COATED	LB	11925	0	11925
					624000	PREFABRICATED EXPANSION JOINT SYSTEMS, 3"	LF	39	0	39
16	RAILROAD PROTECTIVE BARRIER			DM-01 TO DM-04	211000	REMOVAL OF STRUCTURES AND OBSTRUCTIONS	LS	1	0	1
					727007	BRIDGE SAFETY FENCE, TYPE 1	LF	167	0	167
					7275XX	REINSTALL RAILROAD PROTECTIVE BARRIER	LF	207	0	207
19	REPLACE BRIDGE LIGHTING	ENTIRE BRIDGE	SEE LIGHTING PLANS FOR ITEMS AND PAYMENT							
28	REMOVE STEEL SIGN SUPPORT BRACKETS	SPAN OA		DM-05	211000	REMOVAL OF STRUCTURES AND OBSTRUCTIONS	LS	1	0	1
29	INSTALL IMPACT ATTENUATOR				724004	PERMANENT IMPACT ATTENUATOR, TYPE 4	EA	1	0	1
34	SEAL CRACKS IN CONCRETE SUBSTRUCTURE	PIERS 1A & 2A		AB-01 PR-01 TO PR-05	628001	REPAIR OF CONCRETE STRUCTURES BY EPOXY INJECTION	LF	26	25	33
37	REPAIR DEEP SPALLS IN CONCRETE SUBSTRUCTURE	PIERS 1A & 2A, RAMP A ABUTMENT		AB-01 PR-01	628041	DEEP SPALL REPAIR	CF	30	25	38
				TO PR-05	628042	REHABILITATION OF PCC MASONRY	CY	1	25	2
41	COATING CONCRETE SURFACES	PIERS 1A & 2A, RAMP A ABUTMENT	INCLUDES CLEANING DIRT AND DEBRIS FROM TOPS OF SUBSTRUCTURE UNITS	AB-01 PR-01	613000	EPOXY CONCRETE SEALER	SF	626	0	626
				TO PR-05	613001	SILICONE-BASED ACRYLIC CONCRETE SEALER	SF	20417	0	20417
43	REPAIR PROTECTED SLOPE	RAMP A ABUTMENT		AB-02	302002	DELAWARE NO. 3 STONE	TON	13	25	17
					707016	RIPRAP, R-5	TON	36	25	45
					708003	GEOTEXTILES, RIPRAP	SY	82	25	103

DEMOLITION NOTES:

1. DEMOLITION OF DECK SHALL INCLUDE REMOVAL OF SHEAR STUDS. CARE SHALL BE TAKEN TO AVOID DAMAGE TO THE EXISTING STRUCTURE TO REMAIN. ANY DAMAGE TO THE EXISTING STRUCTURE TO REMAIN SHALL BE REPAIRED AT THE CONTRACTOR'S EXPENSE TO THE SATISFACTION OF THE ENGINEER.

LMC OVERLAY NOTES:

1. LONGITUDINAL CONSTRUCTION JOINTS IN THE LMC OVERLAY WILL NOT BE PERMITTED ON BR 1-749. THE OVERLAY SHALL BE PLACED FULL WIDTH OF THE BRIDGE DECK FROM FLOWLINE TO FLOWLINE.

NOT FOR CONSTRUCTION

N:\31987-004\Contract I-95\CADD\Bridge\BR1-749_PN02.dgn
5/31/2019 12:14:01 PM

ADDENDA / REVISIONS		NOT TO SCALE	REHABILITATION OF I-95 FROM I-495 TO NORTH OF BRANDYWINE RIVER BRIDGE	CONTRACT T201407404	BRIDGE NO. 1 749 6142	SUMMARY OF PROPOSED REPAIR AND RECONSTRUCTION ITEMS	PN-05 SECTION WRA SHEET NO. 4 OF 31
				COUNTY NEW CASTLE	DESIGNED BY: DAN		
					CHECKED BY: WAG		

NOTES:

1. MINIMUM VERTICAL CLEARANCE (MVC) IS BASED ON 2013 NBIS INSPECTION REPORT.

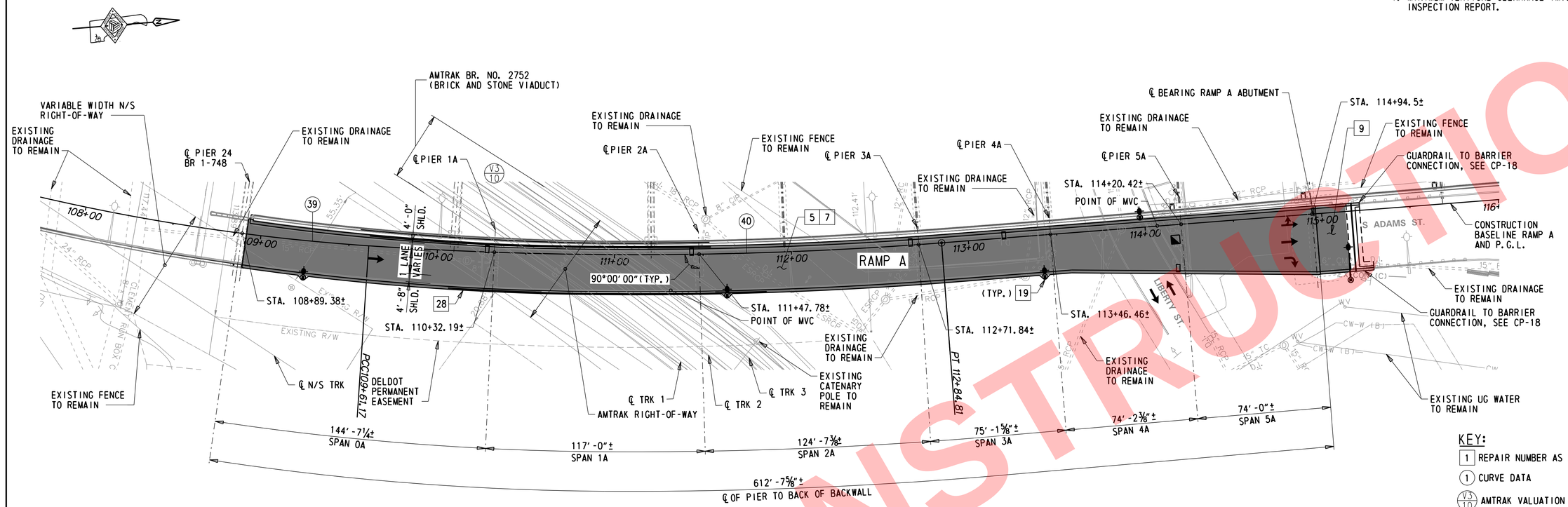

PLAN

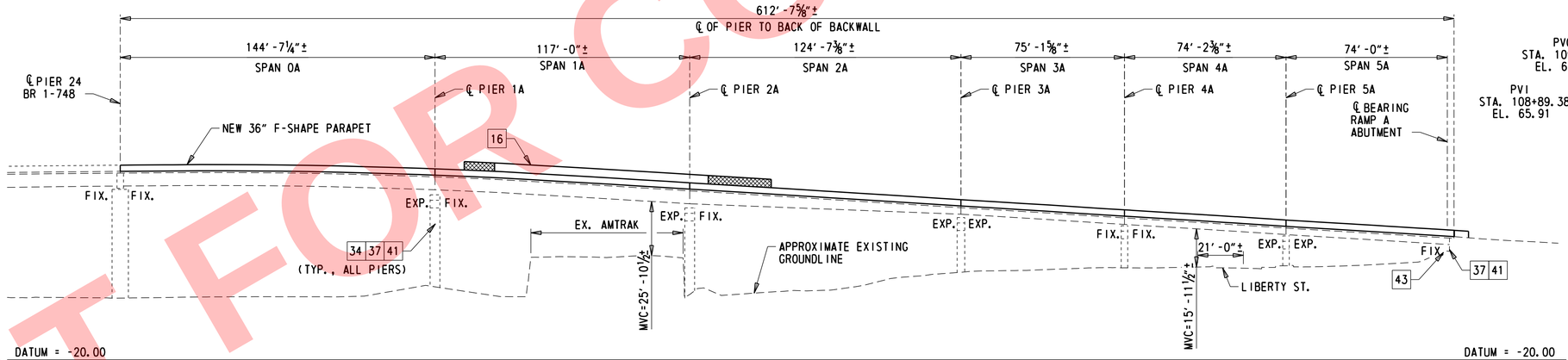

DEVELOPED SECTION ALONG CONSTRUCTION BASELINE RAMP A

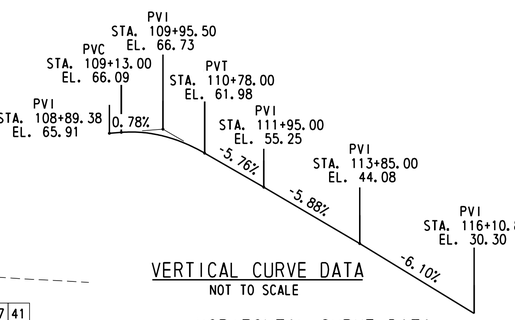

VERTICAL CURVE DATA

NOT TO SCALE

HORIZONTAL CURVE DATA

CURVE (39)

P.I. STA. 106+67.96
DELTA = 29°-40'-32.6727"
Dc = 4°-56'-21.4488"
R = 1160.00'
T = 307.31'
L = 600.81'
E = 40.02'
P.C. STA. = 103+60.65
P.T. STA. = 109+61.46

CURVE (40)

P.I. STA. 111+23.41
DELTA = 8°-16'-27.6435"
Dc = 2°-33'-32.3629"
R = 2239.00'
T = 161.95'
L = 323.34'
E = 5.85'
P.C. STA. = 109+61.46
P.T. STA. = 111+23.41

KEY:

- [1] REPAIR NUMBER AS SHOWN ON DWG. NO. PN-04
- (1) CURVE DATA
- V3/10 AMTRAK VALUATION SECTION & SHEET NUMBER
- PROPOSED BRIDGE MOUNTED LIGHT POLE
- PROPOSED UNDER BRIDGE LIGHT FIXTURE

LEGEND:

- REMOVE EXISTING AND CONSTRUCT NEW CONCRETE DECK AND APPROACH SLAB

NOT FOR CONSTRUCTION

N:\31987-004\Cogo\rsc\I-95\CADD\Bridge\BR1-749_PE01.dgn 5/3/2019 12:04:05 PM

ADDENDA / REVISIONS	SCALE	REHABILITATION OF I-95 FROM I-495 TO NORTH OF BRANDYWINE RIVER BRIDGE	CONTRACT T201407404	BRIDGE NO. 1 749 6142	GENERAL PLAN AND ELEVATION	PE-01
	0 30 60 90 FEET		COUNTY NEW CASTLE	DESIGNED BY: DAN CHECKED BY: WAG		SECTION WRA SHEET NO. 432

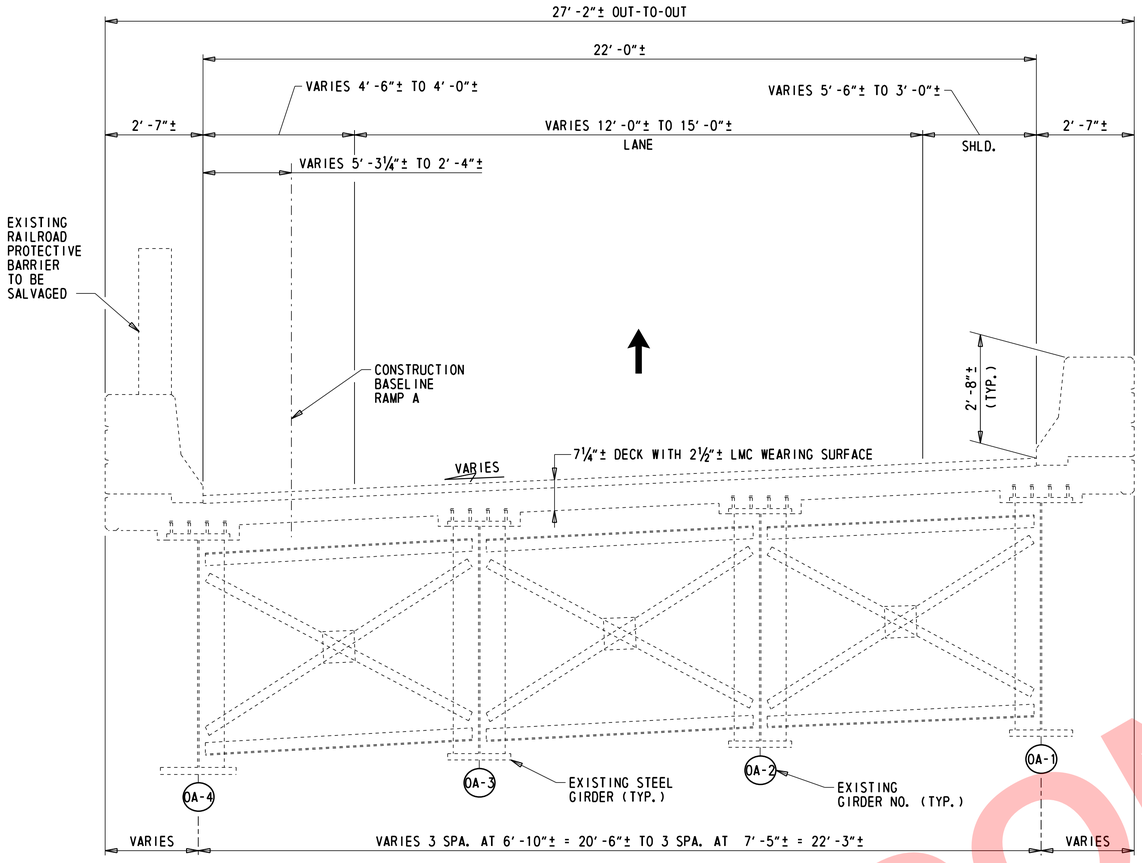

EXISTING TYPICAL SECTION

(STA. 108+89.38 TO 110+32.19)

½" = 1'-0"

'D' AT ℄ BEARING		
GIRDER NO.	PIER 24	PIER 1A
OA-1	1'-1"	1'-1⅜"
OA-2	1'-0⅜"	1'-1⅝"
OA-3	1'-1½"	1'-1½"
OA-4	1'-0"	1'-1¾"

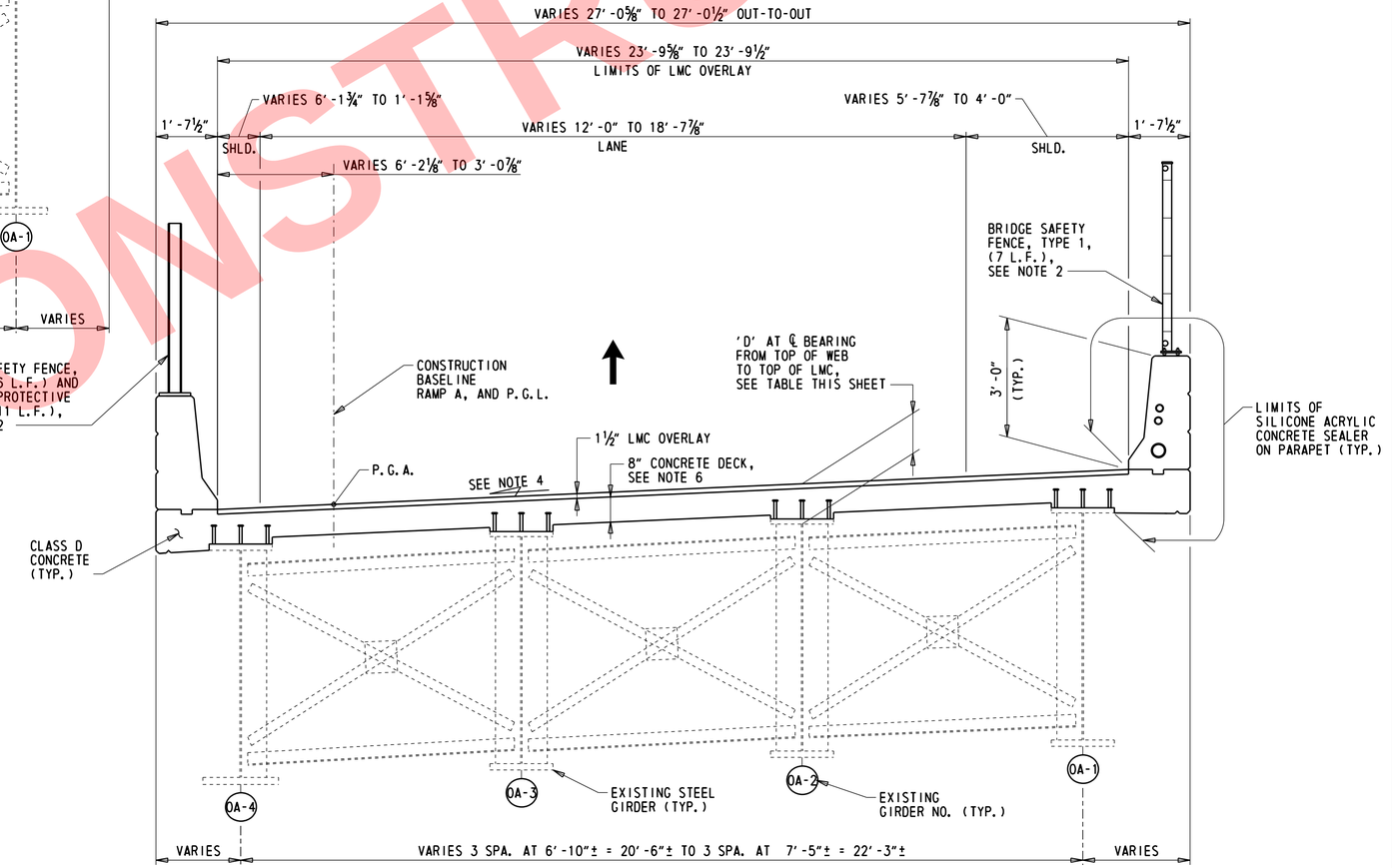

PROPOSED TYPICAL SECTION

(STA. 108+89.38 TO 110+32.19)

½" = 1'-0"

NOTES:

1. FOR PARAPET DETAILS, DRIP NOTCH DETAIL, AND ARCHITECTURAL GROOVE DETAIL SEE DWG. PA-01.
2. FOR LIMITS OF BRIDGE SAFETY FENCE AND RAILROAD PROTECTIVE BARRIER, SEE FENCE AND BARRIER LAYOUT ON DWG. RA-01. FOR DETAILS, SEE STANDARD NO. M-10 BRIDGE SAFETY FENCE AND DWG. RA-02. APPLY SILICONE-BASED ACRYLIC CONCRETE SEALER ON PARAPET PRIOR TO INSTALLATION OF BRIDGE SAFETY FENCE AND RAILROAD PROTECTIVE BARRIER.
3. EXISTING BRIDGE I-748N ADJACENT TO BRIDGE I-749 NOT SHOWN FOR CLARITY.
4. SEE TABLE ON DWG. FD-01 FOR CROSS SLOPE TRANSITIONS.
5. ALL WORK ON BR 1-749 TO BE PERFORMED IN STAGE 2 DURING CLOSURE OF RAMP A.
6. THE TOP SURFACE OF THE CLASS D CONCRETE DECK SHALL BE ROUGH FINISHED TO A FULL AMPLITUDE OF ¼". THE CONCRETE SHALL BE SCRUBBED TRANSVERSELY WITH A COARSE WIRE BRUSH TO REMOVE ALL LAITANCE AND TO PRODUCE A ROUGHENED SURFACE FOR BONDING WITH THE LMC OVERLAY.

NOT FOR CONSTRUCTION

N:\31987-004\Contract_I-95\CADD\Bridge\BR1-749_TS01.dgn
5/31/2019 12:14:06 PM

ADDENDA / REVISIONS	SCALE AS NOTED	REHABILITATION OF I-95 FROM I-495 TO NORTH OF BRANDYWINE RIVER BRIDGE	CONTRACT T201407404	BRIDGE NO. 1 749 6142	BRIDGE TYPICAL SECTIONS STA. 108+89 TO 110+32	TS-01
			COUNTY NEW CASTLE	DESIGNED BY: DAN		SECTION WRA
				CHECKED BY: WAG		SHEET NO. 433

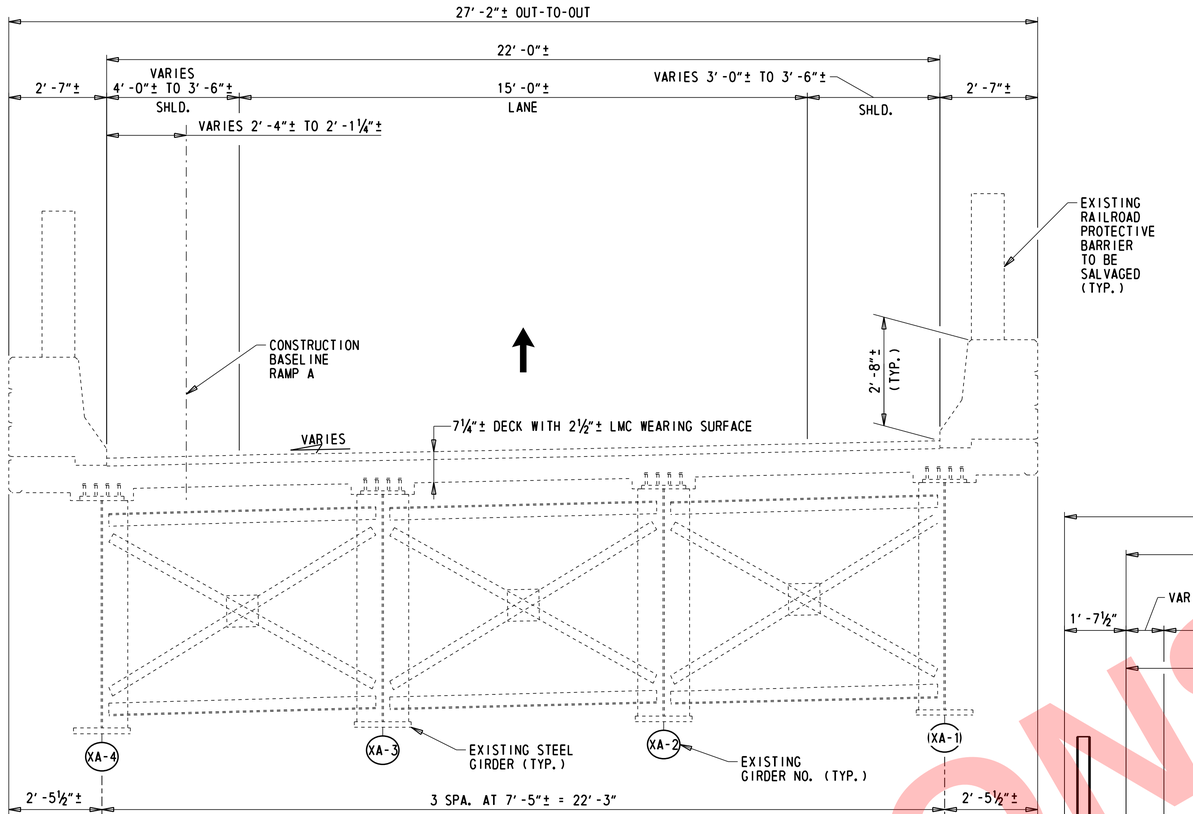

EXISTING TYPICAL SECTION

(STA. 110+32.19 TO 112+71.84)

½" = 1'-0"

'D' AT ℄ BEARING		
GIRDER NO.	PIER 1A	PIER 2A
1A-1	1'-1⅛"	1'-1¾"
1A-2	1'-1⅛"	1'-0¼"
1A-3	1'-1⅛"	1'-0⅝"
1A-4	1'-1⅛"	1'-2¼"

'D' AT ℄ BEARING		
GIRDER NO.	PIER 2A	PIER 3A
2A-1	1'-0½"	1'-1½"
2A-2	1'-0¾"	1'-1⅞"
2A-3	1'-1⅛"	1'-1⅝"
2A-4	1'-0⅞"	1'-1¼"

LEGEND:

(XA-1) — X = SPAN NUMBER

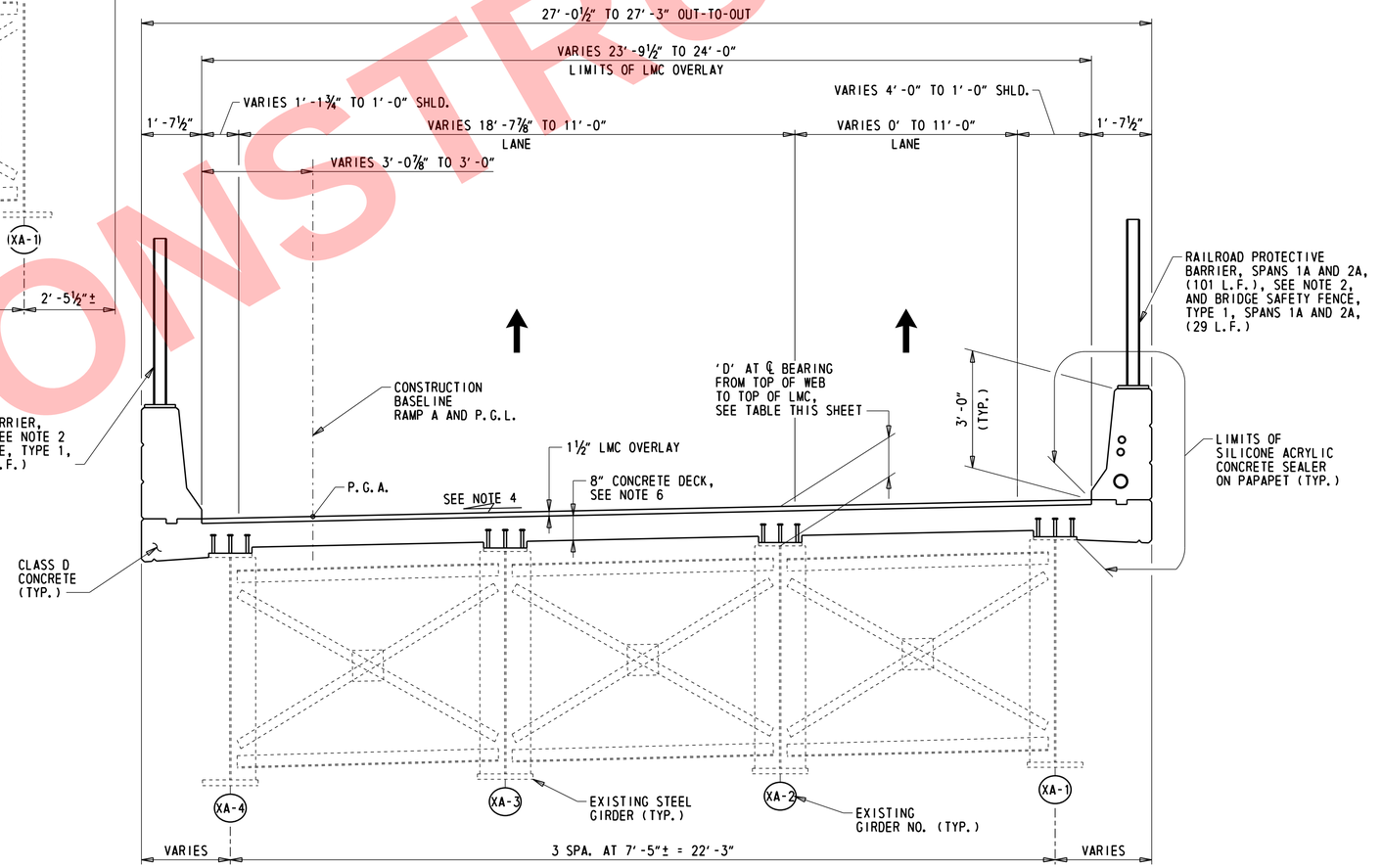

PROPOSED TYPICAL SECTION

(STA. 110+32.19 TO 112+71.84)

½" = 1'-0"

NOTES:

1. FOR PARAPET DETAIL, DRIP NOTCH DETAIL, AND ARCHITECTURAL GROOVE DETAIL SEE DWG. PA-01.
2. FOR LIMITS OF BRIDGE SAFETY FENCE AND RAILROAD PROTECTIVE BARRIER, SEE FENCE AND BARRIER LAYOUT ON DWG. RA-01. FOR DETAILS, SEE STANDARD NO. M-10 BRIDGE SAFETY FENCE AND DWG. RA-02. APPLY SILICONE-BASED ACRYLIC SEALER ON PARAPET PRIOR TO INSTALLATION OF BRIDGE SAFETY FENCE AND RAILROAD PROTECTIVE BARRIER.
3. EXISTING BRIDGE 1-748N ADJACENT TO BRIDGE 1-749 NOT SHOWN FOR CLARITY.
4. SEE TABLE ON DWG. FD-01 FOR CROSS SLOPE TRANSITIONS.
5. ALL WORK ON BR 1-749 TO BE PERFORMED IN STAGE 2.
6. THE TOP SURFACE OF THE CLASS D CONCRETE DECK SHALL BE ROUGH FINISHED TO A FULL AMPLITUDE OF ¼". THE CONCRETE SHALL BE SCRUBBED TRANSVERSELY WITH A COARSE WIRE BRUSH TO REMOVE ALL LAITANCE AND TO PRODUCE A ROUGHENED SURFACE FOR BONDING WITH THE LMC OVERLAY.

NOT FOR CONSTRUCTION

N:\31987-004\Const\csd_I-95\COD\Bridge\BR1-749_TS02.dgn
5/31/2019 12:14:06 PM

ADDENDA / REVISIONS	

SCALE AS NOTED

REHABILITATION OF I-95 FROM I-495 TO NORTH OF BRANDYWINE RIVER BRIDGE

CONTRACT	BRIDGE NO.	1 749 6142
T201407404	DESIGNED BY: DAN	
COUNTY	CHECKED BY: WAG	
NEW CASTLE		

BRIDGE TYPICAL SECTIONS STA. 110+32 TO 112+71

TS-02
SECTION
WRA
SHEET NO.
434

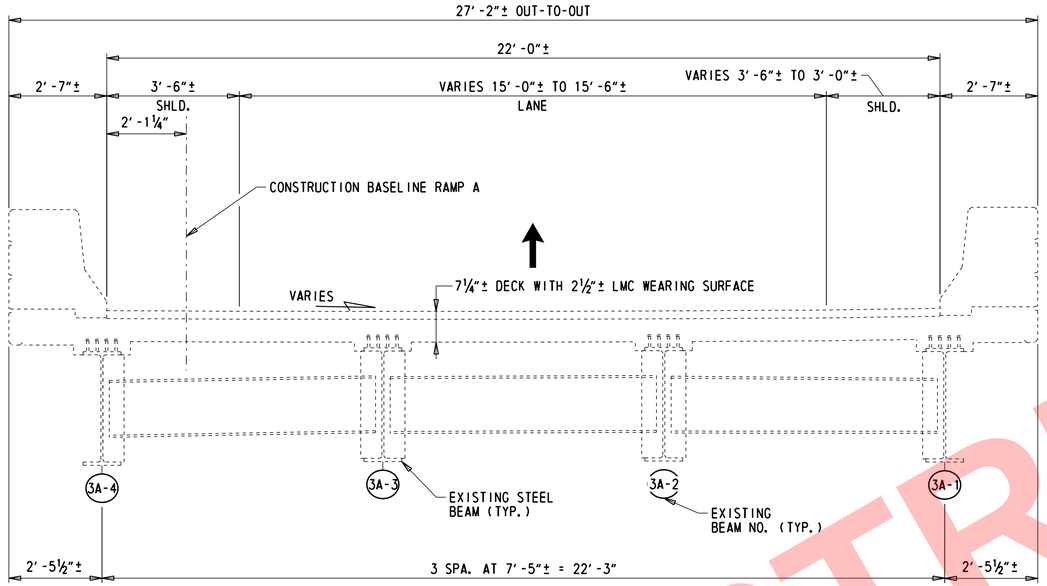

EXISTING TYPICAL SECTION

(STA. 112+71.84 TO 113+46.46)

½" = 1'-0"

'D' AT ℄ BEARING		
GIRDER NO.	PIER 3A	PIER 4A
3A-1	1'-1½"	1'-0¼"
3A-2	1'-0⅛"	1'-0¼"
3A-3	1'-0"	1'-0"
3A-4	1'-1⅜"	0'-11⅞"

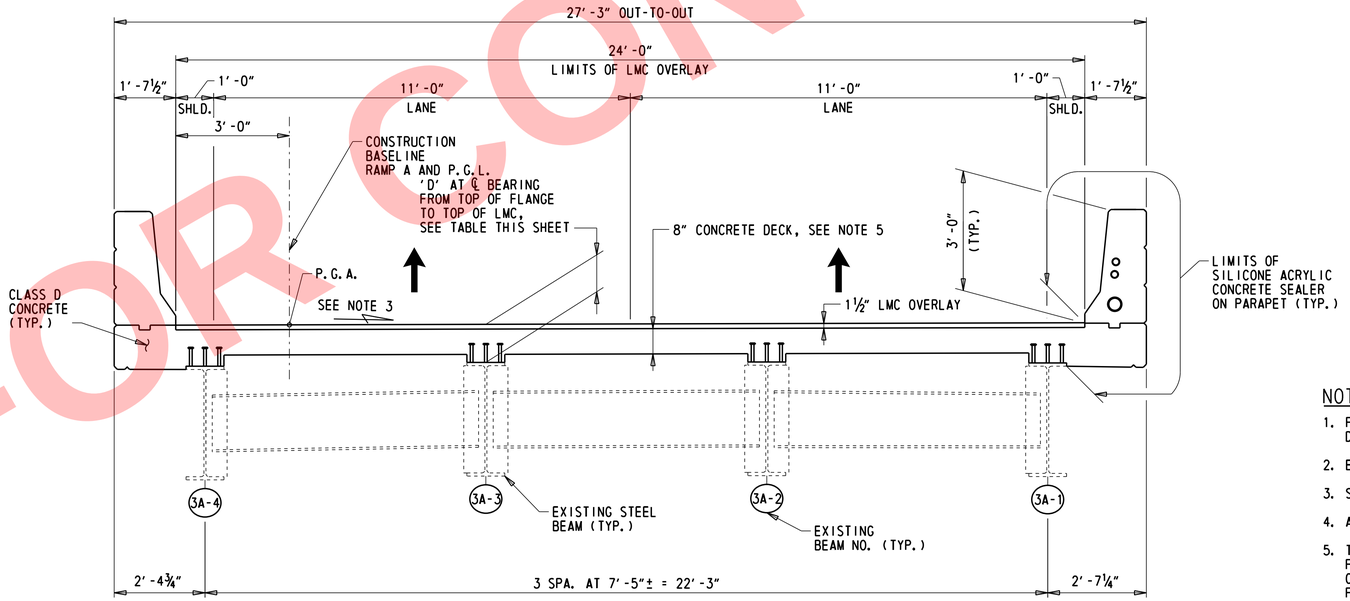

PROPOSED TYPICAL SECTION

(STA. 112+71.84 TO 113+46.46)

½" = 1'-0"

NOTES:

1. FOR PARAPET DETAIL, DRIP NOTCH DETAIL, AND ARCHITECTURAL GROOVE DETAIL SEE DWG. PA-01.
2. EXISTING BRIDGE I-748N ADJACENT TO BRIDGE I-749 NOT SHOWN FOR CLARITY.
3. SEE TABLE ON DWG. FD-01 FOR CROSS SLOPE TRANSITIONS.
4. ALL WORK ON BR 1-749 TO BE PERFORMED IN STAGE 2.
5. THE TOP SURFACE OF THE CLASS D CONCRETE DECK SHALL BE ROUGH FINISHED TO A FULL AMPLITUDE OF ¼". THE CONCRETE SHALL BE SCRUBBED TRANSVERSELY WITH A COARSE WIRE BRUSH TO REMOVE ALL LAITANCE AND TO PRODUCE A ROUGHENED SURFACE FOR BONDING WITH THE LMC OVERLAY.

NOT FOR CONSTRUCTION

N:\31987-004\Contract_I-95\CADD\Bridge\BR1-749_TS03.dgn
5/31/2019 12:14:07 PM

ADDENDA / REVISIONS	SCALE AS NOTED	REHABILITATION OF I-95 FROM I-495 TO NORTH OF BRANDYWINE RIVER BRIDGE	CONTRACT T201407404	BRIDGE NO. 1 749 6142	BRIDGE TYPICAL SECTIONS STA. 112+71 TO 113+46	TS-03
			COUNTY NEW CASTLE	DESIGNED BY: DAN		SECTION WRA
				CHECKED BY: WAG		SHEET NO. 435

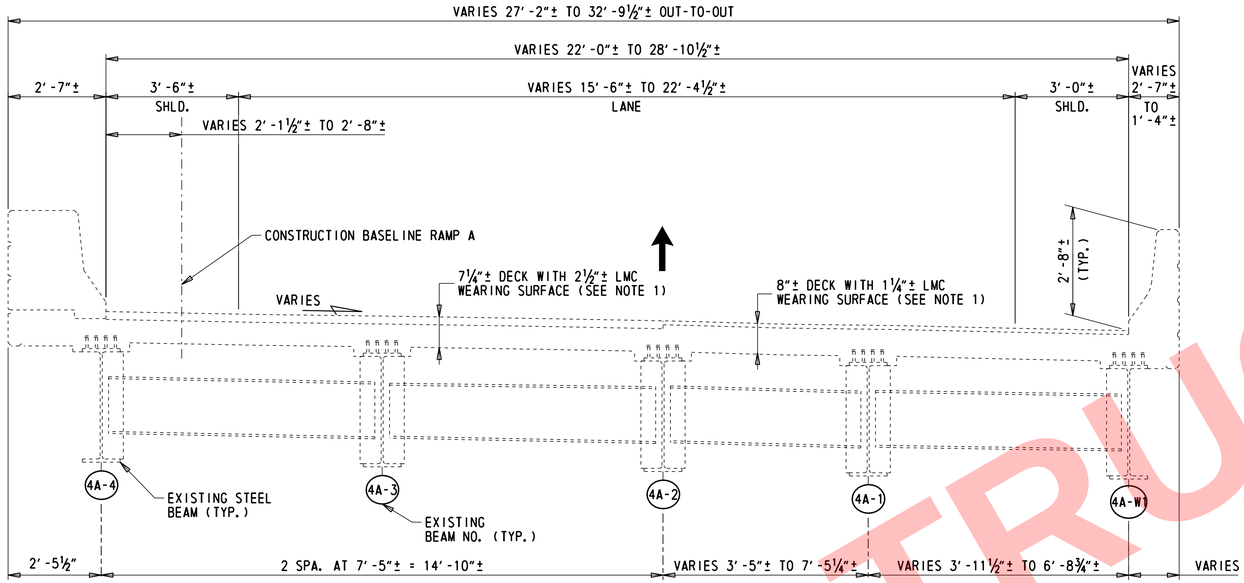

EXISTING TYPICAL SECTION

(STA. 113+46.46 TO 114+20.42)

½" = 1'-0"

'D' AT ℄ BEARING		
GIRDER NO.	PIER 4A	PIER 5A
4A-W1	1'-0¼"	0'-10⅝"
4A-1	0'-10⅞"	0'-11⅞"
4A-2	0'-11½"	1'-0¼"
4A-3	0'-11¼"	1'-0¼"
4A-4	0'-11¼"	1'-0⅛"

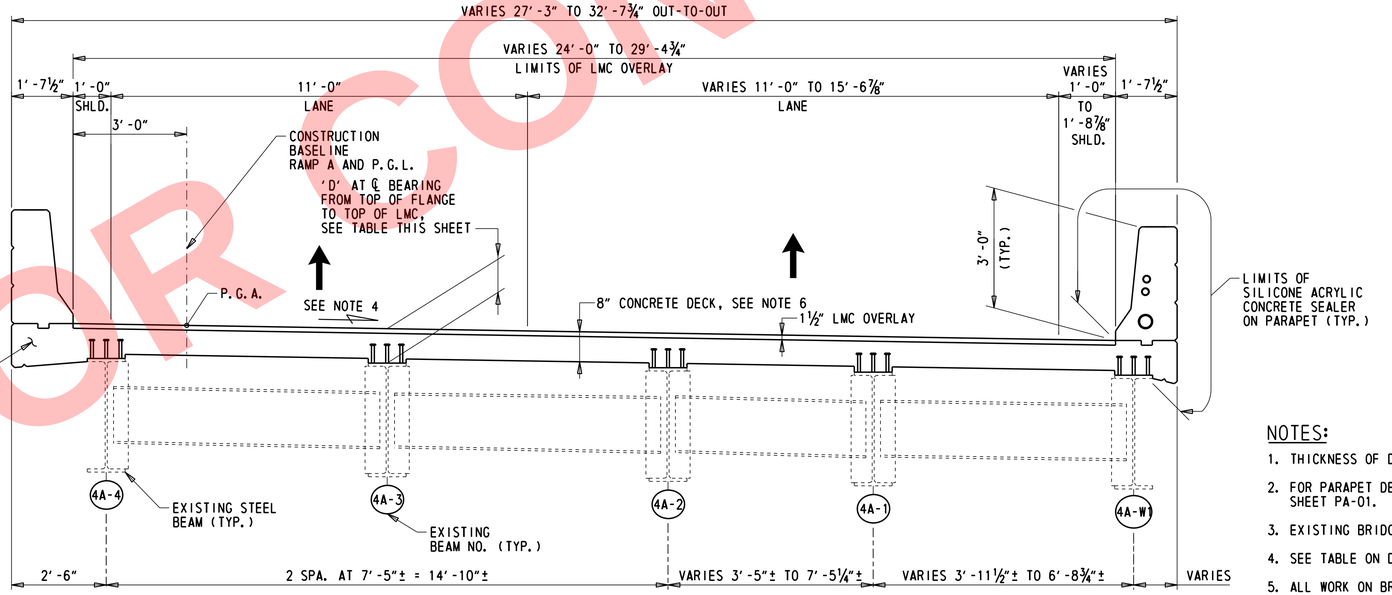

PROPOSED TYPICAL SECTION

(STA. 113+46.46 TO 114+20.42)

½" = 1'-0"

NOTES:

1. THICKNESS OF DECK AND WEARING SURFACE VARY AT WIDENED PORTION OF BRIDGE.
2. FOR PARAPET DETAIL, DRIP NOTCH DETAIL, AND ARCHITECTURAL GROOVE DETAIL SEE SHEET PA-01.
3. EXISTING BRIDGE 1-748N ADJACENT TO BRIDGE 1-749 NOT SHOWN FOR CLARITY.
4. SEE TABLE ON DWG. FD-01 FOR CROSS SLOPE TRANSITIONS.
5. ALL WORK ON BR 1-749 TO BE PERFORMED IN STAGE 2.
6. THE TOP SURFACE OF THE CLASS D CONCRETE DECK SHALL BE ROUGH FINISHED TO A FULL AMPLITUDE OF ¼". THE CONCRETE SHALL BE SCRUBBED TRANSVERSELY WITH A COARSE WIRE BRUSH TO REMOVE ALL LAITANCE AND TO PRODUCE A ROUGHENED SURFACE FOR BONDING WITH THE LMC OVERLAY.

NOT FOR CONSTRUCTION

N:\31987-00A\Contract_I-95\CADD\Bridge\BR1-749_TS04.dgn
5/31/2019 12:14:08 PM

ADDENDA / REVISIONS		SCALE AS NOTED	REHABILITATION OF I-95 FROM I-495 TO NORTH OF BRANDYWINE RIVER BRIDGE	CONTRACT T201407404	BRIDGE NO. 1 749 6142	BRIDGE TYPICAL SECTIONS STA. 113+46 TO 114+20	TS-04 SECTION
				COUNTY NEW CASTLE	DESIGNED BY: DAN		WRA SHEET NO.
					CHECKED BY: WAG		4 of 6

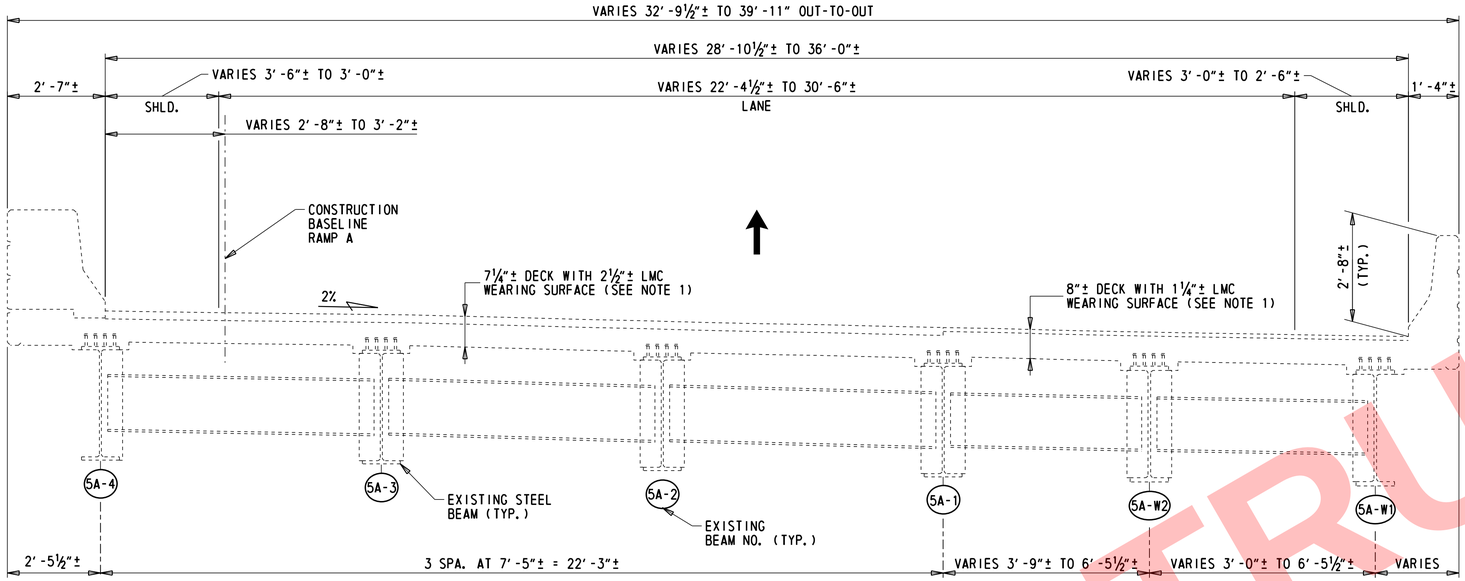

EXISTING TYPICAL SECTION

(STA. 114+20.42 TO 114+94.50)

½" = 1'-0"

'D' AT ℄ BEARING		
GIRDER NO.	PIER 5A	ABT.
5A-W1	0'-11½"	0'-9½"
5A-W2	0'-9¾"	1'-0½"
5A-1	0'-11¼"	0'-11⅜"
5A-2	0'-11⅝"	0'-11½"
5A-3	0'-11½"	0'-11⅝"
5A-4	0'-11⅜"	0'-11⅞"

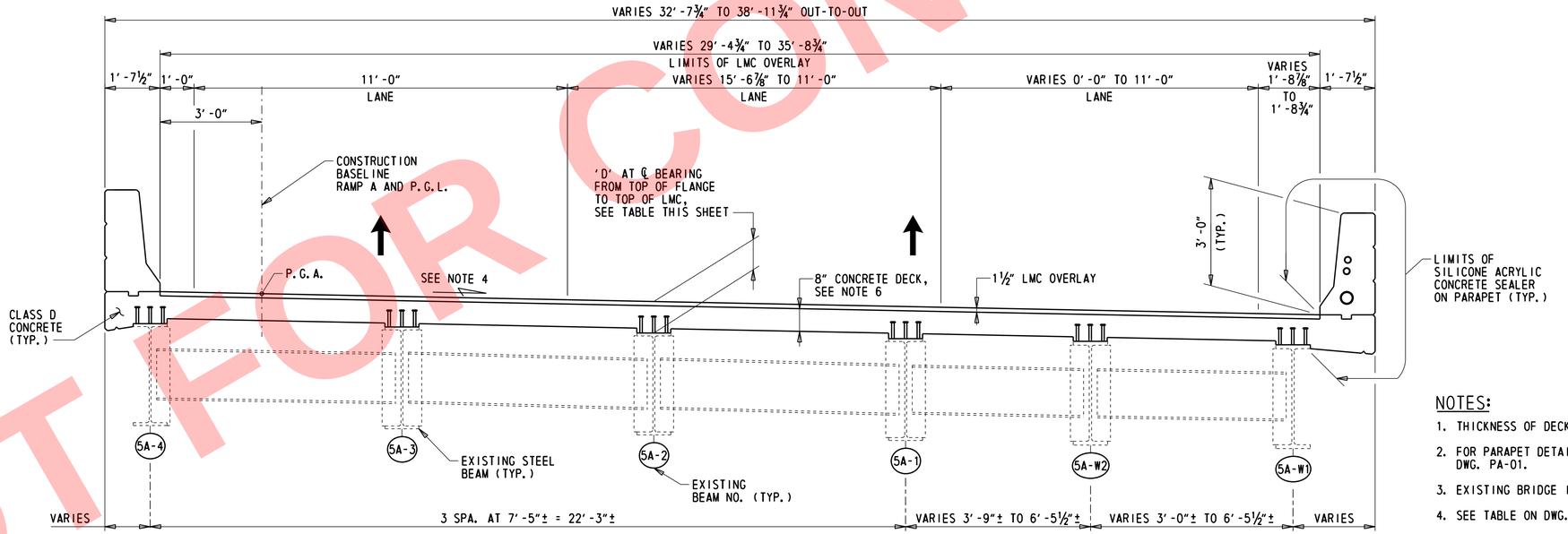

PROPOSED TYPICAL SECTION

(STA. 114+20.42 TO 114+94.50)

½" = 1'-0"

NOTES:

1. THICKNESS OF DECK AND WEARING SURFACE VARY AT WIDENED PORTION OF BRIDGE.
2. FOR PARAPET DETAIL, DRIP NOTCH DETAIL, AND ARCHITECTURAL GROOVE DETAIL SEE DWG. PA-01.
3. EXISTING BRIDGE I-748N ADJACENT TO BRIDGE I-749 NOT SHOWN FOR CLARITY.
4. SEE TABLE ON DWG. FD-01 FOR CROSS SLOPE TRANSITIONS.
5. ALL WORK ON BR 1-749 TO BE PERFORMED IN STAGE 2.
6. THE TOP SURFACE OF THE CLASS D CONCRETE DECK SHALL BE ROUGH FINISHED TO A FULL AMPLITUDE OF ¼". THE CONCRETE SHALL BE SCRUBBED TRANSVERSELY WITH A COARSE WIRE BRUSH TO REMOVE ALL LAITANCE AND TO PRODUCE A ROUGHENED SURFACE FOR BONDING WITH THE LMC OVERLAY.

NOT FOR CONSTRUCTION

ADDENDA / REVISIONS		SCALE AS NOTED	REHABILITATION OF I-95 FROM I-495 TO NORTH OF BRANDYWINE RIVER BRIDGE	CONTRACT	BRIDGE NO. 1 749 6142	BRIDGE TYPICAL SECTIONS STA. 114+20 TO 114+94	TS-05
				T201407404	DESIGNED BY: DAN		SECTION WRA
				COUNTY NEW CASTLE	CHECKED BY: WAG		SHEET NO. 437

N:\31987-004\Cntrct\I-95\CADD\Bridge\BR1-749_TS05.dgn
5/31/2019 12:14:13 PM

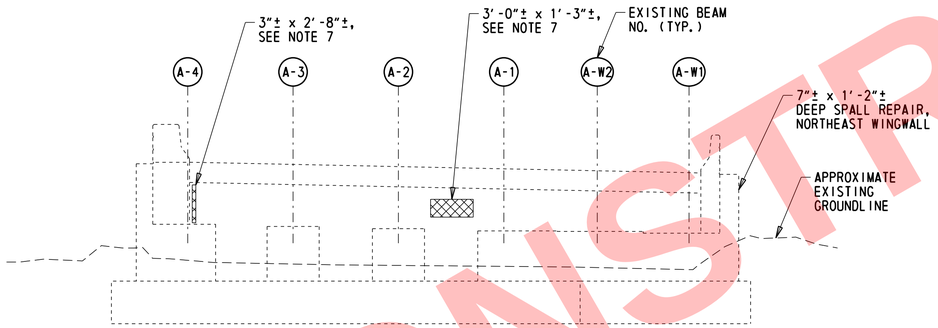

NOTE:
PILES NOT SHOWN FOR CLARITY.

RAMP A ABUTMENT ELEVATION

1/8" = 1'-0"

LEGEND:

REPAIR OF CONCRETE STRUCTURES BY EPOXY INJECTION - ITEM 628001

DEEP SPALL REPAIR - ITEM 628041

CONCRETE REPAIR QUANTITIES
RAMP A ABUTMENT

REPAIR Nº	ITEM Nº	ITEM TITLE	UNIT	QUANTITY
34	628001	REPAIR OF CONCRETE STRUCTURES BY EPOXY INJECTION	LF	0
37	628041	DEEP SPALL REPAIR	CF	2
41	613001	SILICONE-BASED ACRYLIC CONCRETE SEALER	SF	367

NOTE: QUANTITIES SHOWN ARE TOTAL PER ABUTMENT AND DO NOT INCLUDE CONTINGENT PERCENTAGE.

NOTES:

1. THE LOCATION AND QUANTITIES OF THE REPAIRS SHOWN ON THIS DRAWING ARE BASED ON INSPECTION FIELD NOTES (SEE NOTE 10 ON DWG. PN-01) AND ARE APPROXIMATE AND DO REQUIRE VERIFICATION. PRIOR TO STARTING EACH REPAIR, THE LIMITS SHALL BE VERIFIED BY THE CONTRACTOR IN THE PRESENCE OF THE ENGINEER.
2. WHERE CRACKS AND SPALLS ARE SHOWN CONCURRENTLY, COMPLETE THE SPALL REPAIR COMPLETELY REMOVING THE ASSOCIATED CRACK. IF THE CRACK EXTENDS LESS THAN 1'-0" BEYOND THE LIMITS OF THE SPALL REPAIR, EXTEND THE LIMITS OF THE SPALL REPAIR TO ENCOMPASS THE CRACK. IF THE CRACK EXTENDS DEEPER THAN THE LIMITS OF CONCRETE REMOVAL, THE CONTRACTOR SHALL REMOVE ADDITIONAL CONCRETE UNTIL THE CRACK IS FULLY REMOVED. IF THE DEPTH OF REMOVAL REACHES MORE THAN 6" FROM THE ORIGINAL FACE OF CONCRETE, ALL WORK ON THE REPAIR SHALL STOP AND THE ENGINEER SHALL BE NOTIFIED IMMEDIATELY. IF THE CRACK EXTENDS MORE THAN 1'-0" BEYOND THE LIMITS OF THE SPALL REPAIR INTO SOUND CONCRETE THE CRACK SHALL BE REPAIRED BY EPOXY INJECTION AND PAID FOR UNDER ITEM 628001 BEYOND THE LIMITS OF THE SPALL REPAIR. CRACKS LOCATED WITHIN SPALL REPAIRS WILL NOT BE PAID FOR AND WILL BE CONSIDERED INCIDENTAL TO ITEM 628041.
3. FOR CONCRETE REPAIR DETAILS, SEE DWG. PN-02.
4. CONTRACTOR SHALL TAKE CARE TO PROTECT THE BEARINGS DURING APPLICATION OF THE SILICONE-BASED ACRYLIC CONCRETE SEALER. ANY CLEAN-UP REQUIRED TO REMOVE THE SEALER FROM THE BEARINGS WILL BE AT NO ADDITIONAL COST TO THE DEPARTMENT AND TO THE SATISFACTION OF THE ENGINEER.
5. SILICONE-BASED ACRYLIC CONCRETE SEALER SHALL BE APPLIED TO ALL EXPOSED CONCRETE ABUTMENT SURFACES. PAYMENT WILL BE MADE UNDER ITEM 613001.
6. SILICONE-BASED ACRYLIC CONCRETE SEALER SHALL ONLY BE APPLIED AFTER ALL CONCRETE REPAIRS ARE COMPLETED AT EACH ABUTMENT.
7. REPAIRS TO BACKWALL SHALL BE PERFORMED IN CONJUNCTION WITH BACKWALL RECONSTRUCTION (NOT SHOWN IN ELEVATION). SEE DETAILS ON DWGS. EX-03 THROUGH EX-05.
8. PROTECTED SLOPE REPAIRS AT NORTH ABUTMENT NOT SHOWN. SEE DETAILS ON DWG. AB-02.

NOT FOR CONSTRUCTION

ADDENDA / REVISIONS		SCALE AS NOTED	REHABILITATION OF I-95 FROM I-495 TO NORTH OF BRANDYWINE RIVER BRIDGE	CONTRACT T201407404	BRIDGE NO. 1 749 6142	RAMP A ABUTMENT CONCRETE REPAIR DETAILS (ELEVATION)	AB-01
				COUNTY NEW CASTLE	DESIGNED BY: DAN		SECTION WRA
					CHECKED BY: WAG		SHEET NO. 438

N:\31987-001\Construct_I-95\C400\Bridge\BR1-749_AB01.dgn 5/30/2019 12:11:11 PM

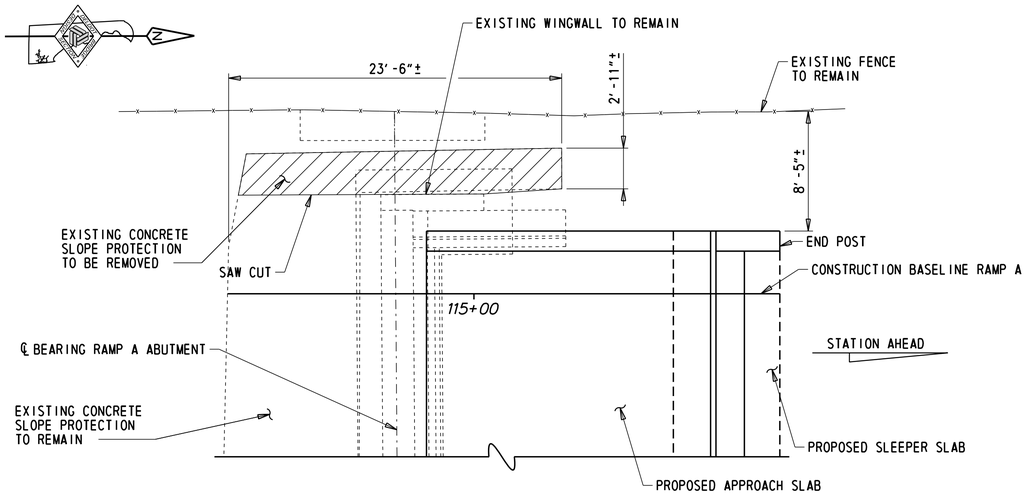

PLAN - REMOVAL

1/8" = 1'-0"

NOTE:
DETAIL SHOWN WITH PROPOSED APPROACH SLAB AND SLEEPER SLAB CONSTRUCTION COMPLETE.

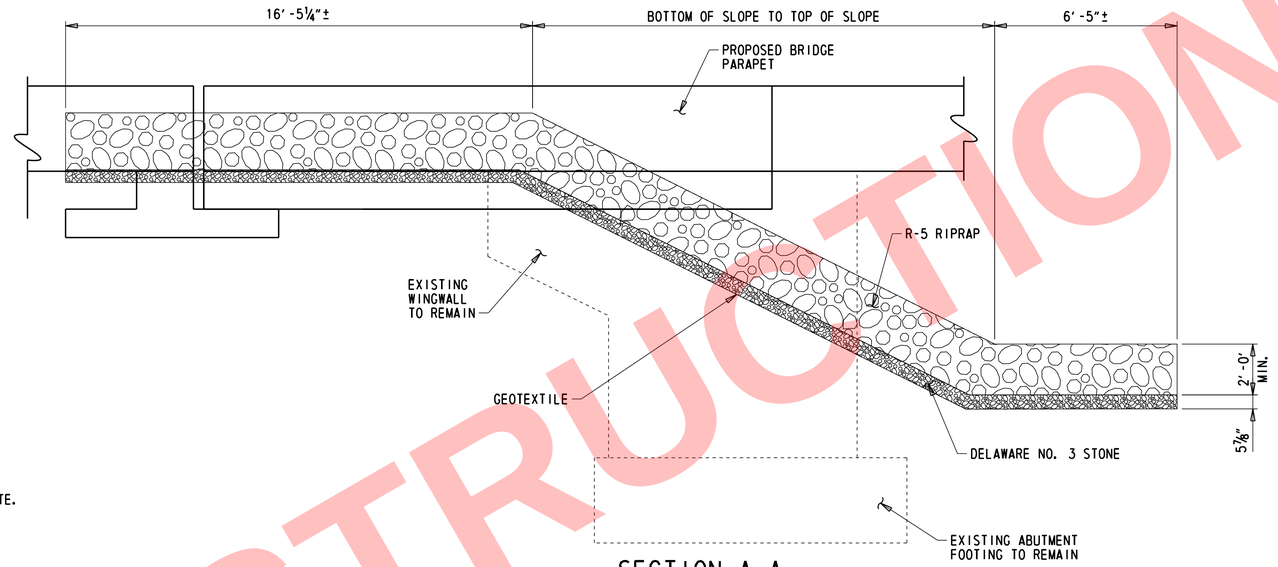

SECTION A-A

3/8" = 1'-0"

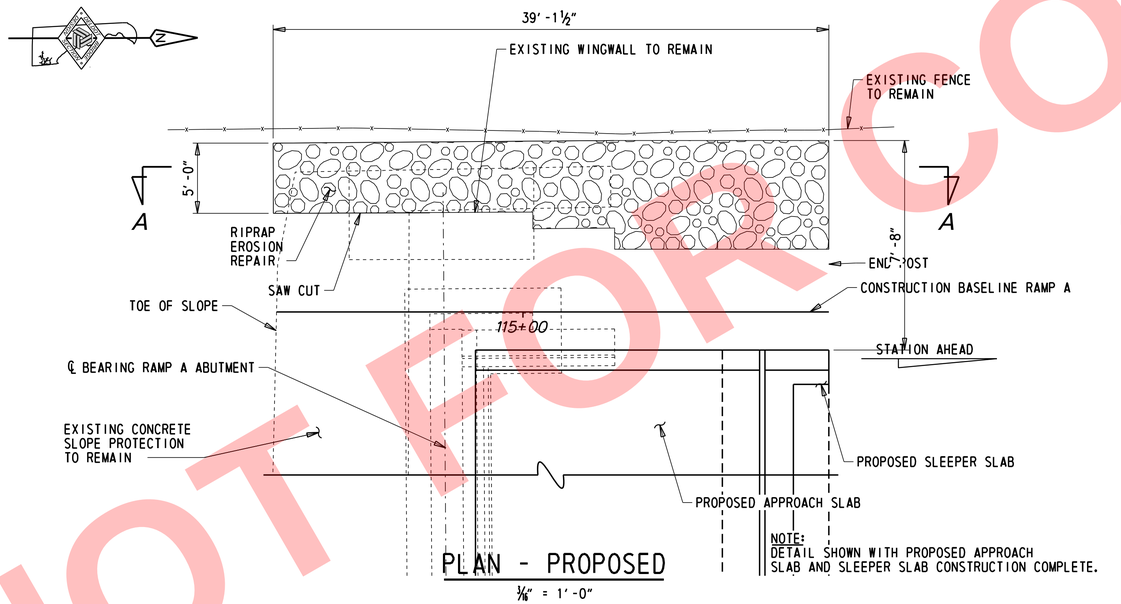

PLAN - PROPOSED

1/8" = 1'-0"

NOTE:
DETAIL SHOWN WITH PROPOSED APPROACH SLAB AND SLEEPER SLAB CONSTRUCTION COMPLETE.

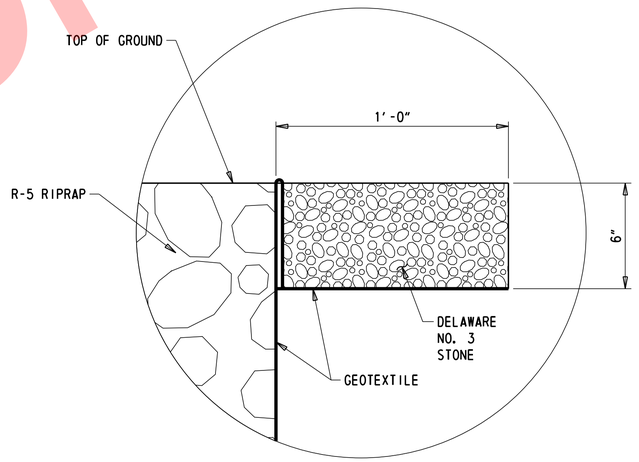

GEOTEXTILE LAPPING DETAIL

NOT TO SCALE

NOTES:

1. REMOVE ALL VEGETATION AND BREAK UP AND REMOVE EXISTING CONCRETE BLOCK SLOPE WITHIN THE LIMITS R-5 RIPRAP. SAW CUT ALONG THE EDGE OF EXISTING BLOCK SLOPE TO PROVIDE A CLEAN EDGE. SAW CUT WILL BE INCIDENTAL TO ITEM 211000 - REMOVAL OF STRUCTURES AND OBSTRUCTIONS.
2. PLACE GEOTEXTILE AND CONSTRUCT LAPS AT EACH EDGE OF EROSION REPAIR AS SHOWN.
3. PLACE 6" DEPTH OF DELAWARE NO. 3 STONE AS SHOWN.
4. FILL REMAINING DEPTH WITH R-5 RIPRAP AS SHOWN.
5. REPAIR AREAS SHOWN ARE APPROXIMATE, EROSION AREAS TO BE REPAIRED AS DIRECTED BY THE ENGINEER.

NOT FOR CONSTRUCTION

N:\31987-001\Construction\I-95\C400\Bridge\BR1-749_AB02.dgn
5/31/2019 12:11:15 PM

ADDENDA / REVISIONS	SCALE AS NOTED	REHABILITATION OF I-95 FROM I-495 TO NORTH OF BRANDYWINE RIVER BRIDGE	CONTRACT T201407404	BRIDGE NO. 1 749 6142	ABUTMENT EROSION REPAIR DETAILS	AB-02
			COUNTY NEW CASTLE	DESIGNED BY: DAN		SECTION WRA
				CHECKED BY: WAG		SHEET NO. 439

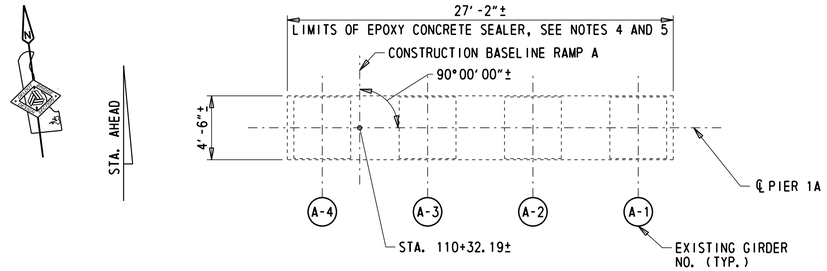

PIER 1A - PLAN VIEW

1/16" = 1'-0"

CONCRETE REPAIR QUANTITIES PIER 1A				
REPAIR Nº	ITEM Nº	ITEM TITLE	UNIT	QUANTITY
34	628001	REPAIR OF CONCRETE STRUCTURES BY EPOXY INJECTION	LF	4
37	628041	DEEP SPALL REPAIR	CF	3
41	613000	EPOXY CONCRETE SEALER	SF	144
41	613001	SILICONE-BASED ACRYLIC CONCRETE SEALER	SF	1345

NOTE: QUANTITIES SHOWN ARE TOTAL PER PIER AND DO NOT INCLUDE CONTINGENT PERCENTAGE.

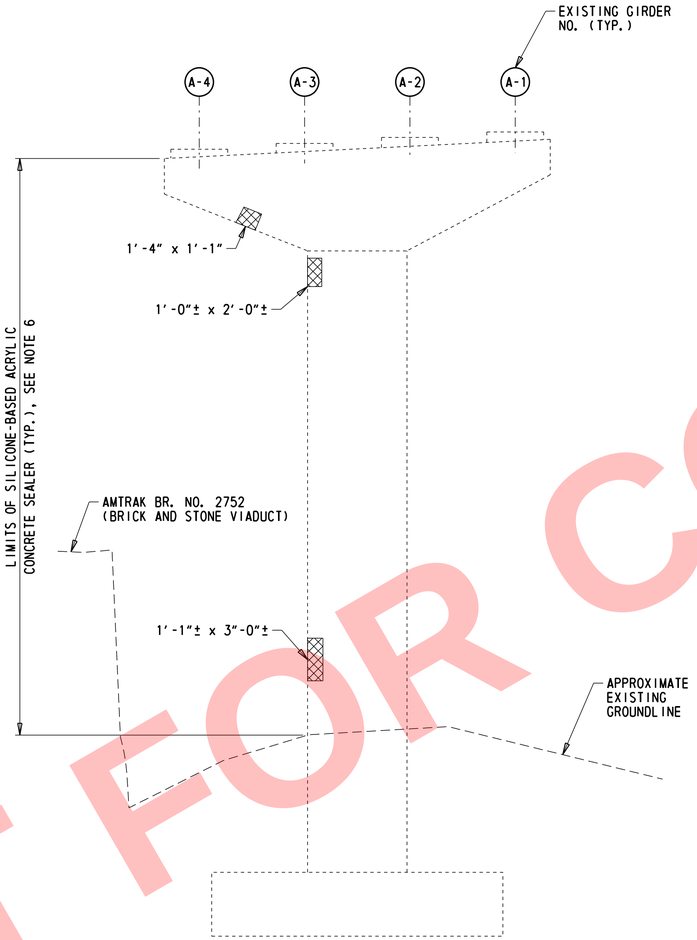

NOTE:
PILES NOT SHOWN FOR CLARITY.

PIER 1A - SOUTH ELEVATION

1/16" = 1'-0"

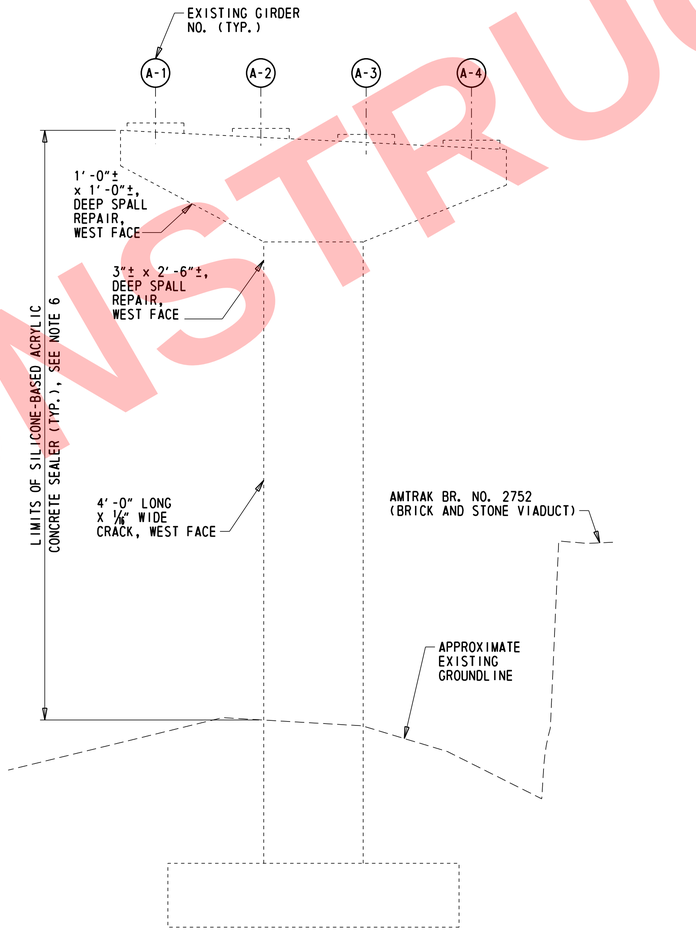

NOTE:
PILES NOT SHOWN FOR CLARITY.

PIER 1A - NORTH ELEVATION

1/16" = 1'-0"

LEGEND:

- REPAIR OF CONCRETE STRUCTURES BY EPOXY INJECTION - ITEM 628001
- DEEP SPALL REPAIR - ITEM 628041

NOTES:

1. THE LOCATION AND QUANTITIES OF THE REPAIRS SHOWN ON THIS DRAWING ARE BASED ON INSPECTION FIELD NOTES (SEE NOTE 10 ON DWG. PN-01) AND ARE APPROXIMATE AND DO REQUIRE VERIFICATION. PRIOR TO STARTING EACH REPAIR, THE LIMITS SHALL BE VERIFIED BY THE CONTRACTOR IN THE PRESENCE OF THE ENGINEER.
2. WHERE CRACKS AND SPALLS ARE SHOWN CONCURRENTLY, COMPLETE THE SPALL REPAIR COMPLETELY REMOVING THE ASSOCIATED CRACK. IF THE CRACK EXTENDS LESS THAN 1'-0" BEYOND THE LIMITS OF THE SPALL REPAIR, EXTEND THE LIMITS OF THE SPALL REPAIR TO ENCOMPASS THE CRACK. IF THE CRACK EXTENDS DEEPER THAN THE LIMITS OF CONCRETE REMOVAL, THE CONTRACTOR SHALL REMOVE ADDITIONAL CONCRETE UNTIL THE CRACK IS FULLY REMOVED. IF THE DEPTH OF REMOVAL REACHES MORE THAN 6" FROM THE ORIGINAL FACE OF CONCRETE, ALL WORK ON THE REPAIR SHALL STOP AND THE ENGINEER SHALL BE NOTIFIED IMMEDIATELY. IF THE CRACK EXTENDS MORE THAN 1'-0" BEYOND THE LIMITS OF THE SPALL REPAIR INTO SOUND CONCRETE THE CRACK SHALL BE REPAIRED BY EPOXY INJECTION AND PAID FOR UNDER ITEM 628001 BEYOND THE LIMITS OF THE SPALL REPAIR. CRACKS LOCATED WITHIN SPALL REPAIRS WILL NOT BE PAID FOR AND WILL BE CONSIDERED INCIDENTAL TO ITEM 628041.
3. FOR CONCRETE REPAIR DETAILS, SEE DWG. PN-02.
4. EPOXY CONCRETE SEALER SHALL BE APPLIED TO THE BEAM SEATS AND BEARING PEDESTALS. PAYMENT WILL BE MADE UNDER ITEM 613000. CONTRACTOR SHALL REMOVE DEBRIS FROM THE BEAM SEAT PRIOR TO APPLICATION OF EPOXY CONCRETE SEALER. PAYMENT FOR THIS WORK WILL BE INCIDENTAL TO ITEM 613000.
5. CONTRACTOR SHALL TAKE CARE TO PROTECT THE BEARINGS DURING APPLICATION OF THE EPOXY CONCRETE SEALER. ANY CLEAN-UP REQUIRED TO REMOVE THE SEALER FROM THE BEARINGS WILL BE AT NO ADDITIONAL COST TO THE DEPARTMENT AND TO THE SATISFACTION OF THE ENGINEER.
6. SILICONE-BASED ACRYLIC CONCRETE SEALER SHALL BE APPLIED TO ALL EXPOSED CONCRETE PIER SURFACES THAT DO NOT REQUIRE EPOXY SEALER. PAYMENT WILL BE MADE UNDER ITEM 613001.
7. EPOXY CONCRETE SEALER AND SILICONE-BASED ACRYLIC CONCRETE SEALER SHALL ONLY BE APPLIED AFTER ALL CONCRETE REPAIRS ARE COMPLETED AT EACH PIER.

NOT FOR CONSTRUCTION

N:\31987-004\Contract_I-95\CADD\Bridge\BRI-749_PR01.dgn
5/31/2019 12:14:16 PM

ADDENDA / REVISIONS		SCALE AS NOTED	REHABILITATION OF I-95 FROM I-495 TO NORTH OF BRANDYWINE RIVER BRIDGE	CONTRACT T201407404	BRIDGE NO. 1 749 6142	PIER 1A – CONCRETE REPAIR DETAILS	PR-01 SECTION WRA
				COUNTY NEW CASTLE	DESIGNED BY: DAN		SHEET NO. 440
					CHECKED BY: WAG		

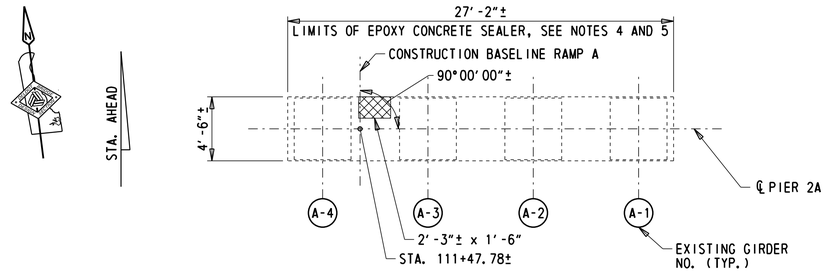

PIER 2A - PLAN VIEW

1/16″ = 1′-0″

CONCRETE REPAIR QUANTITIES				
PIER 2A				
REPAIR Nº	ITEM Nº	ITEM TITLE	UNIT	QUANTITY
34	628001	REPAIR OF CONCRETE STRUCTURES BY EPOXY INJECTION	LF	4
37	628041	DEEP SPALL REPAIR	CF	8
41	613000	EPOXY CONCRETE SEALER	SF	150
41	613001	SILICONE-BASED ACRYLIC CONCRETE SEALER	SF	1187

NOTE: QUANTITIES SHOWN ARE TOTAL PER PIER AND DO NOT INCLUDE CONTINGENT PERCENTAGE.

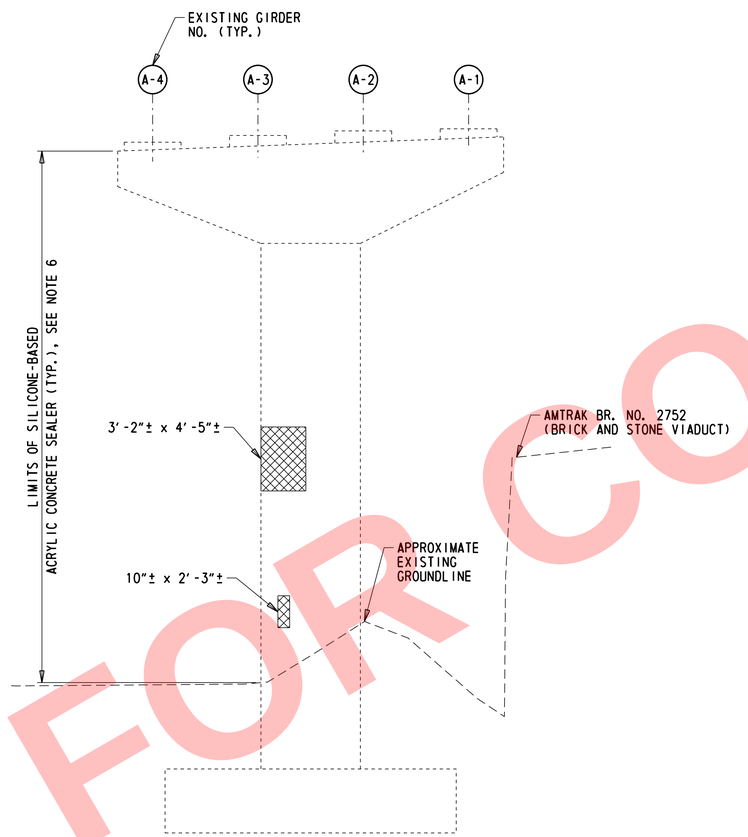

NOTE:
PILES NOT SHOWN FOR CLARITY.

PIER 2A - SOUTH ELEVATION

1/16″ = 1′-0″

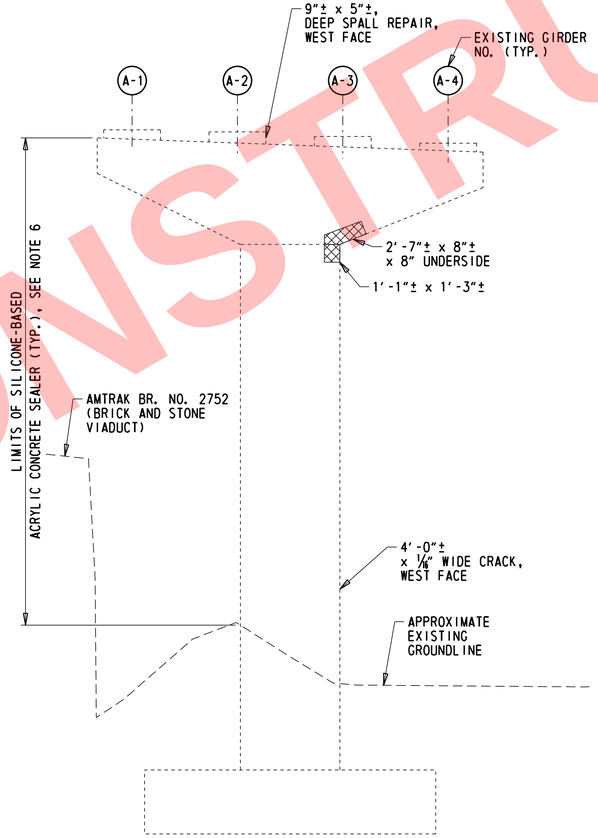

NOTE:
PILES NOT SHOWN FOR CLARITY.

PIER 2A - NORTH ELEVATION

1/16″ = 1′-0″

LEGEND:

- REPAIR OF CONCRETE STRUCTURES BY EPOXY INJECTION - ITEM 628001
- DEEP SPALL REPAIR - ITEM 628041

NOTES:

1. THE LOCATION AND QUANTITIES OF THE REPAIRS SHOWN ON THIS DRAWING ARE BASED ON INSPECTION FIELD NOTES (SEE NOTE 10 ON DWG. PN-01) AND ARE APPROXIMATE AND DO REQUIRE VERIFICATION. PRIOR TO STARTING EACH REPAIR, THE LIMITS SHALL BE VERIFIED BY THE CONTRACTOR IN THE PRESENCE OF THE ENGINEER.
2. WHERE CRACKS AND SPALLS ARE SHOWN CONCURRENTLY, COMPLETE THE SPALL REPAIR COMPLETELY REMOVING THE ASSOCIATED CRACK. IF THE CRACK EXTEND LESS THAN 1′-0″ BEYOND THE LIMITS OF THE SPALL REPAIR, EXTENDS THE LIMITS OF THE SPALL REPAIR TO ENCOMPASS THE CRACK. IF THE CRACK EXTENDS DEEPER THAN THE LIMITS OF CONCRETE REMOVAL, THE CONTRACTOR SHALL REMOVE ADDITIONAL CONCRETE UNTIL THE CRACK IS FULLY REMOVED. IF THE DEPTH OF REMOVAL REACHES MORE THAN 6″ FROM THE ORIGINAL FACE OF CONCRETE, ALL WORK ON THE REPAIR SHALL STOP AND THE ENGINEER SHALL BE NOTIFIED IMMEDIATELY. IF THE CRACK EXTENDS MORE THAN 1′-0″ BEYOND THE LIMITS OF THE SPALL REPAIR INTO SOUND CONCRETE THE CRACK SHALL BE REPAIRED BY EPOXY INJECTION AND PAID FOR UNDER ITEM 628001 BEYOND THE LIMITS OF THE SPALL REPAIR. CRACKS LOCATED WITHIN SPALL REPAIRS WILL NOT BE PAID FOR AND WILL BE CONSIDERED INCIDENTAL TO ITEM 628041.
3. FOR CONCRETE REPAIR DETAILS, SEE DWG. PN-02.
4. EPOXY CONCRETE SEALER SHALL BE APPLIED TO THE BEAM SEATS AND BEARING PEDESTALS. PAYMENT WILL BE MADE UNDER ITEM 613000. CONTRACTOR SHALL REMOVE DEBRIS FROM THE BEAM SEAT PRIOR TO APPLICATION OF EPOXY CONCRETE SEALER. PAYMENT FOR THIS WORK WILL BE INCIDENTAL TO ITEM 613000.
5. CONTRACTOR SHALL TAKE CARE TO PROTECT THE BEARINGS DURING APPLICATION OF THE EPOXY CONCRETE SEALER. ANY CLEAN-UP REQUIRED TO REMOVE THE SEALER FROM THE BEARINGS WILL BE AT NO ADDITIONAL COST TO THE DEPARTMENT AND TO THE SATISFACTION OF THE ENGINEER.
6. SILICONE-BASED ACRYLIC CONCRETE SEALER SHALL BE APPLIED TO ALL EXPOSED CONCRETE PIER SURFACES THAT DO NOT REQUIRE EPOXY SEALER. PAYMENT WILL BE MADE UNDER ITEM 613001.
7. EPOXY CONCRETE SEALER AND SILICONE-BASED ACRYLIC CONCRETE SEALER SHALL ONLY BE APPLIED AFTER ALL CONCRETE REPAIRS ARE COMPLETED AT EACH PIER.

NOT FOR CONSTRUCTION

N:\31987-00A\Control_I-95\CADD\Bridge\BR1-749_PR02.dgn
5/31/2019 12:14:17 PM

ADDENDA / REVISIONS		SCALE AS NOTED	REHABILITATION OF I-95 FROM I-495 TO NORTH OF BRANDYWINE RIVER BRIDGE	CONTRACT	BRIDGE NO. 1 749 6142	PIER 2A – CONCRETE REPAIR DETAILS	PR-02
				T201407404	DESIGNED BY: DAN		SECTION WRA
				COUNTY NEW CASTLE	CHECKED BY: WAG		SHEET NO. 441

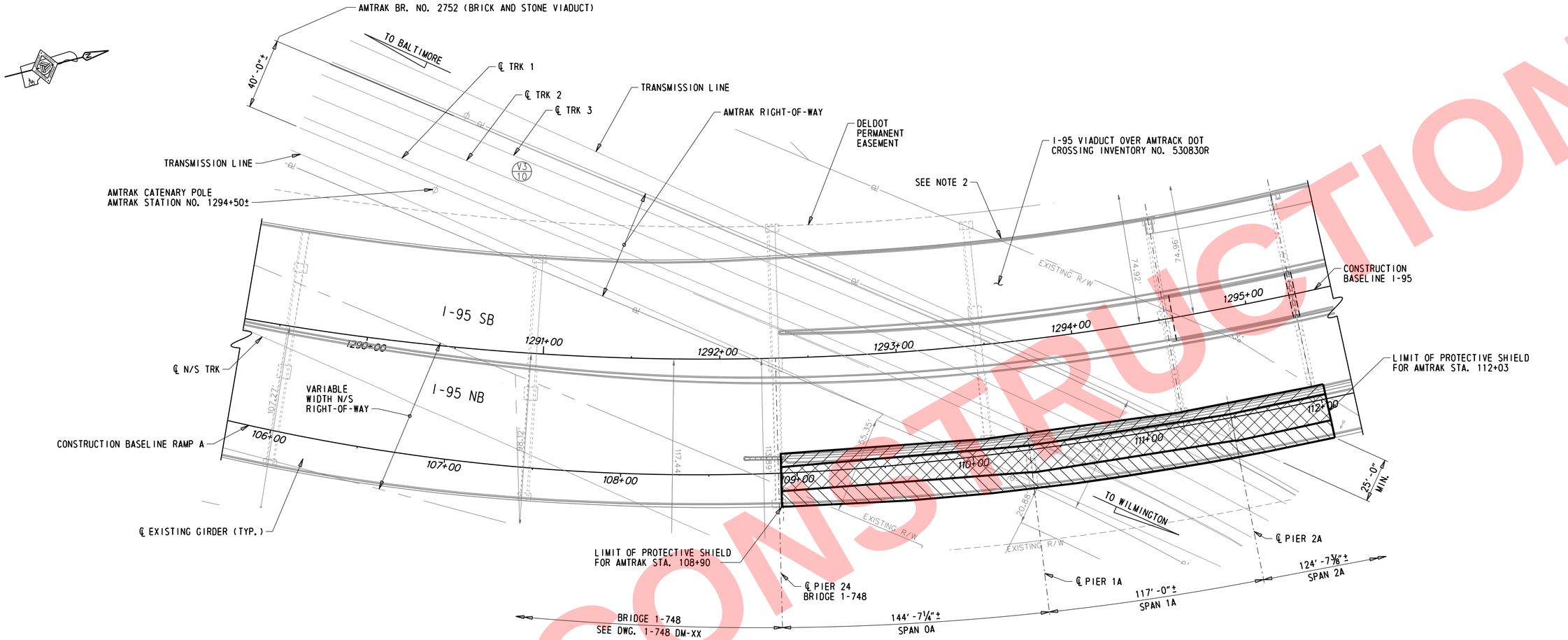

AMTRAK RAILROAD PROTECTIVE SHIELD PLAN

KEY:

V3/10 AMTRAK VALUATION SECTION & SHEET NUMBER

LEGEND:

- RAILROAD PROTECTIVE SHIELD TYPE I, SEE DWG. DM-XX (ITEM 604001)
- RAILROAD PROTECTIVE SHIELD TYPE II, SEE DWG. DM-XX (ITEM 604001)
- RAILROAD PROTECTIVE SHIELD TYPE III, SEE DWG. DM-XX (ITEM 604001)

AMTRAK RAILROAD PROTECTIVE SHIELD NOTES:

1. THE RAILROAD PROTECTIVE SHIELD IS ONLY SHOWN IN AREAS THAT AFFECT AMTRAK. FOR LAYOUT OF RAILROAD PROTECTIVE SHIELD OVER NORFOLK SOUTHER RAILROAD, SEE DWGS. 1-748 DM-XX AND DM-XX.
2. SEE DWG. I-748 DM-05 FOR ADDITIONAL RAILROAD PROTECTIVE SHIELD LAYOUT PLAN AT BR 1-748.
3. AMTRAK APPROVED (PENDING) PROTECTVE SHIELD HAS BEEN DESIGNED AND DETAILED ON DWGS. DM-02 THROUGH DM-04. CONTRACTOR SHALL SUBMIT SHOP DRAWINGS FOR APPROVAL IN ACCORDANCE WITH SUBSECTION 604.03.1 EXCEPT CALCULATIONS WILL NOT BE REQUIRED. IF CONTRACTOR ELECTS TO MAKE CHANGES TO APPROVED DESIGN OR DESIGN AN ALTERNATE SYSTEM, IT SHALL BE DESIGNED IN ACCORDANCE WITH SECTION 604 AND AMTRAK CRITERIA AND SUBMITTED TO THE ENGINEER AND AMTRAK FOR APPROVAL. ANY DELAYS DUE TO CHANGES OR APPROVAL OF ALTERNATE SYSTEM WILL NOT BE GROUNDS FOR TIME EXTENSION ON CONTRACT.
4. PER AMTRAK I&C SPECIFICATION SECTION 01520A, LIVE LOAD FOR TEMPORARY PROTECTION SHIELD IS 100 PSF.
5. AASHTO GUIDE DESIGN SPECIFICATIONS FOR BRIDGE TEMPORARY WORKS ARTICLE 2.2.5 WITH 2008 INTERIMS WAS USED TO DETERMINE THE WIND LOAD. WIND SPEED WAS ASSUMED TO BE 70 MPH AND THE HEIGHT OF THE TEMPORARY SHIELD WAS ASSUMED TO BE LESS THAN 40' ABOVE GROUND.
6. STRUCTURAL STEEL INCLUDING SHIMS SHALL CONFORM TO ASTM A709 GRADE 50.
7. TIMBER SHALL BE SOUTHERN YELLOW PINE NO. 2 OR APPROVED EQUAL.
8. ROOF DECKING SHALL BE FROM THE FOLLOWING MANUFACTURER'S OR APPROVED EQUAL:
   A. DACS INC.
   B. ASC STEEL ROOF DECK
   C. VERCO DECKING INC.
9. METAL SCREWS SHALL BE FROM FOLLOWING MANUFACTURER'S OR APPROVED EQUAL:
   A. SIMPSON STRONG-TIE
   B. HILTI INC.
   C. ITW BUILDEX
10. ALL BOLTS SHALL CONFROM TO ASTM A325.
11. ALL WASHER SHALL CONFORM TO ASTM F436.
12. ALL PLATES SHALL CONFORM TO ASTM A709.
13. ALL NUTS SHALL CONFORM TO ASTM A563.
14. ALL THREADED ROD SHALL CONFORM TO ASTM A307.
15. NO WELDING TO EXISTING STEEL WILL BE PERMITTED.
16. RAILROAD PROTECTIVE SHIELD TYPE I, TYPE II, AND TYPE III SHALL BE IN ACCORDANCE WITH SECTION 604 AND WILL BE PAID FOR UNDER ITEM 604001 - PROTECTIVE SHIELD.

NOT FOR CONSTRUCTION

ADDENDA / REVISIONS		SCALE 0 30 60 90 FEET	REHABILITATION OF I-95 FROM I-495 TO NORTH OF BRANDYWINE RIVER BRIDGE	CONTRACT T201407404	BRIDGE NO. 1 749 6142	RAILROAD PROTECTIVE SHIELD LAYOUT PLAN	DM-01
				COUNTY NEW CASTLE	DESIGNED BY: DAN		SECTION WRA
					CHECKED BY: WAG		SHEET NO. 445

N:\31987-004\Contract_I-95\C4DD\Bridge\BR1-749_DM01.dgn
5/31/2019 12:14:22 PM

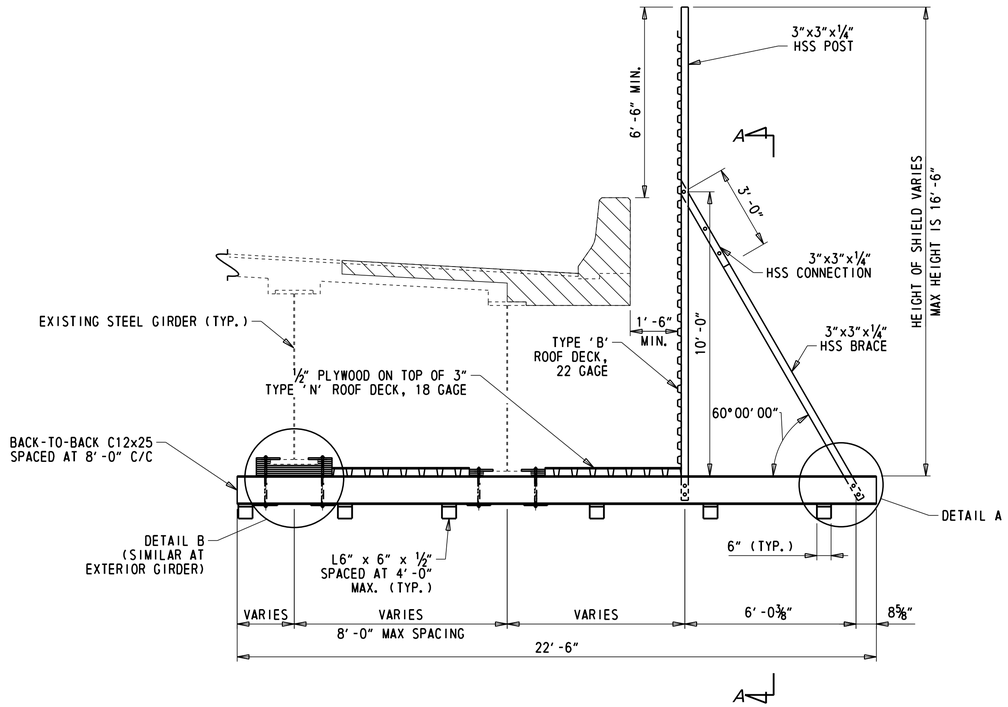

RAILROAD PROTECTIVE SHIELD - TYPE I

⅜" = 1'-0"

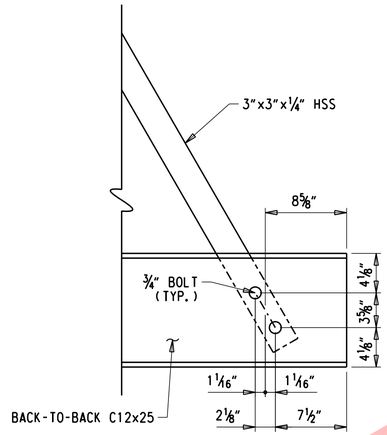

DETAIL A

1½" = 1'-0"

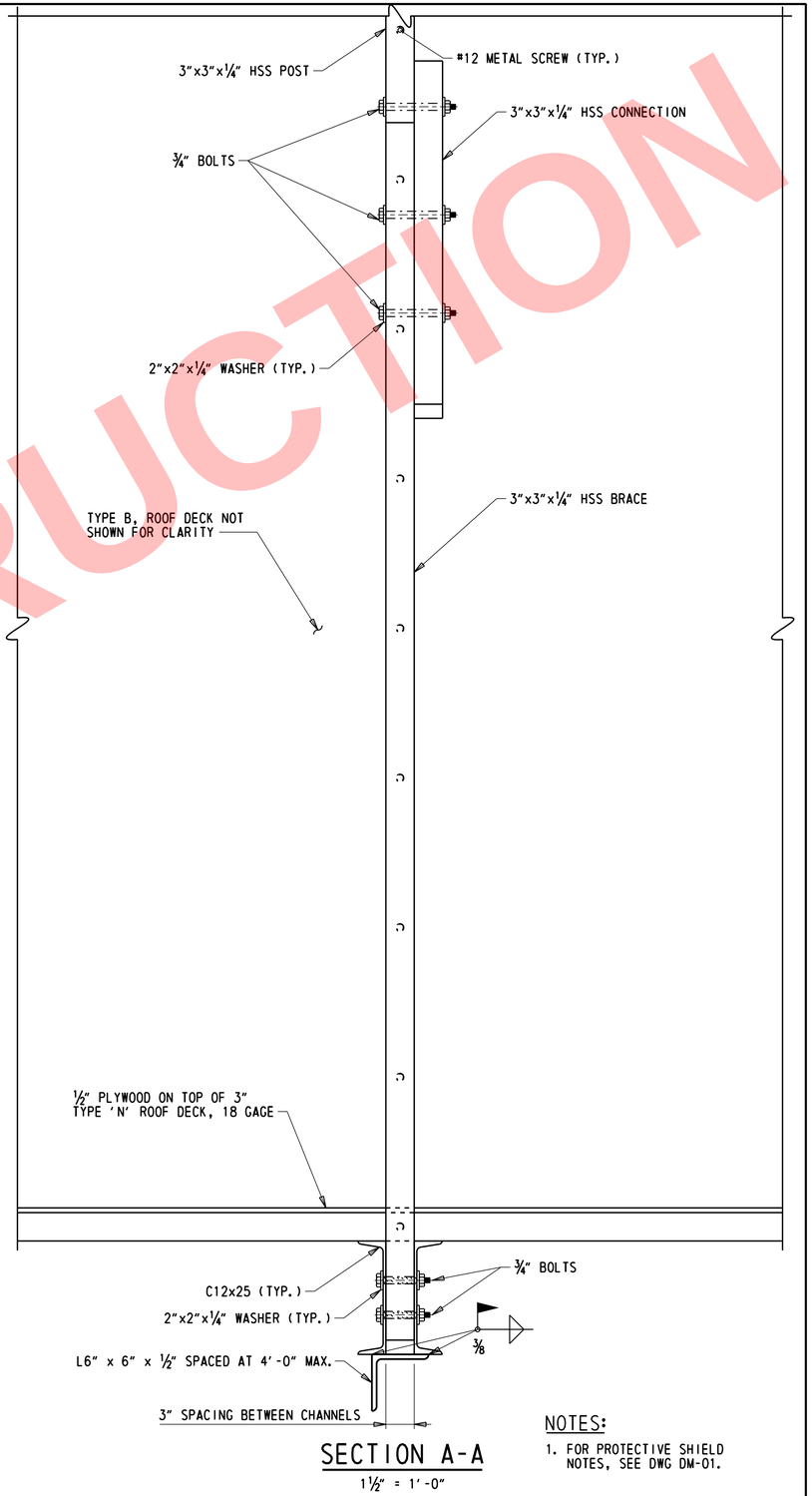

SECTION A-A

1½" = 1'-0"

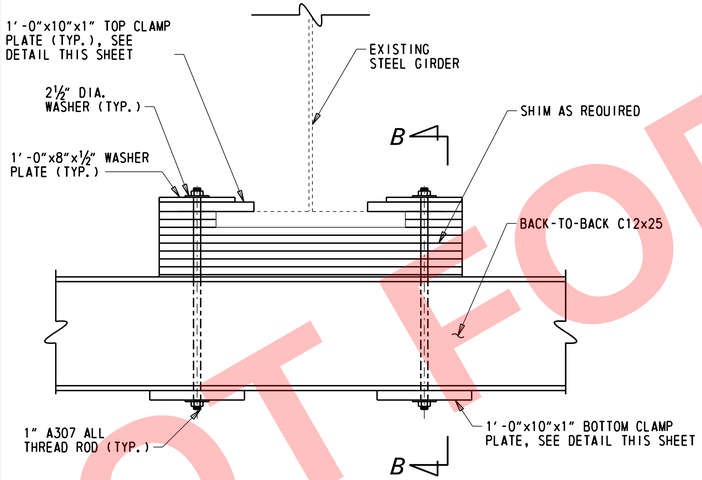

DETAIL B

1½" = 1'-0"

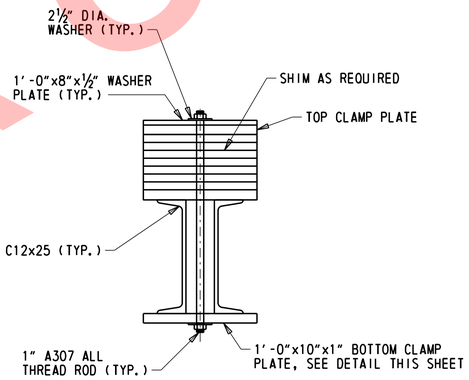

SECTION B-B

1½" = 1'-0"

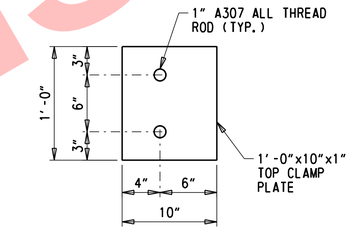

TOP CLAMP PLATE DETAIL

1½" = 1'-0"

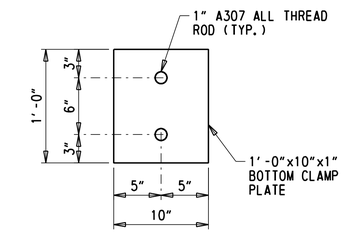

BOTTOM CLAMP PLATE DETAIL

1½" = 1'-0"

NOTES:

1. FOR PROTECTIVE SHIELD NOTES, SEE DWG DM-01.

NOT FOR CONSTRUCTION

N:\31987-00A\Contract_I-95\CADD\Bridge\BRI-749_DM02.dgn
5/31/2019 12:14:23 PM

DM-02

ADDENDA / REVISIONS	SCALE AS NOTED	REHABILITATION OF I-95 FROM I-495 TO NORTH OF BRANDYWINE RIVER BRIDGE	CONTRACT T201407404	BRIDGE NO. 1 749 6142	RAILROAD PROTECTIVE SHIELD TYPE I	SECTION WRA
			COUNTY NEW CASTLE	DESIGNED BY: DAN		SHEET NO. 446
				CHECKED BY: WAG		

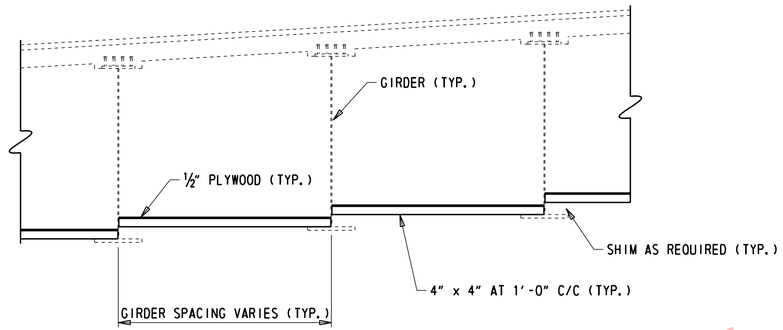

RAILROAD PROTECTIVE SHIELD - TYPE II

⅜" = 1'-0"

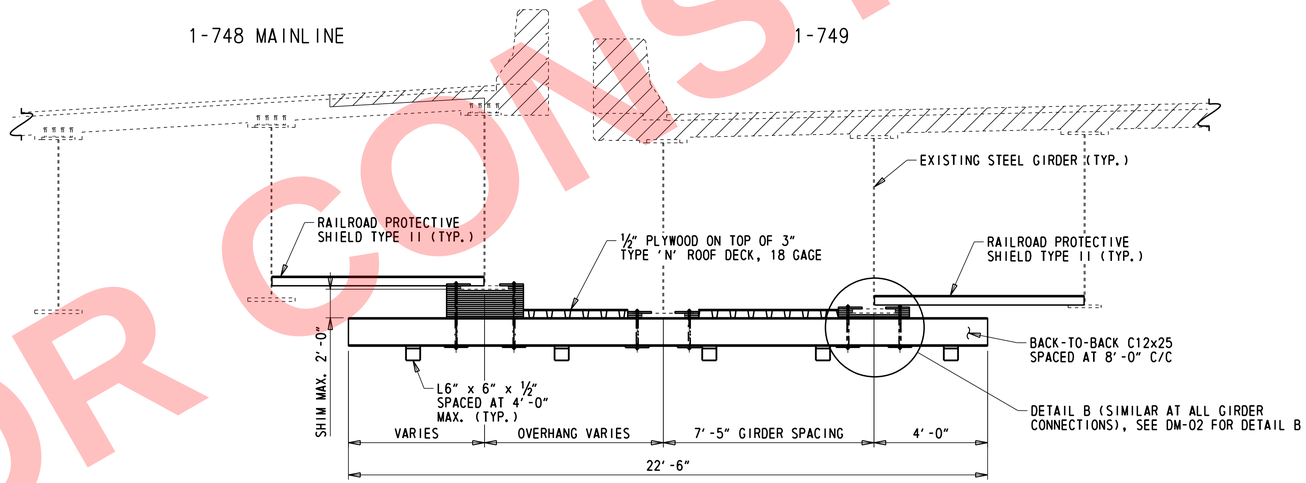

RAILROAD PROTECTIVE SHIELD - TYPE III - STA. 108+90 TO STA. 110+30

⅜" = 1'-0"

NOTES:

1. FOR PROTECTIVE SHIELD NOTES, SEE DM-01.

NOT FOR CONSTRUCTION

N:\31987-004\Control-I-95\CADD\Bridge\BR1-749_DM03.dgn
5/31/2019 12:14:26 PM

ADDENDA / REVISIONS		SCALE AS NOTED	REHABILITATION OF I-95 FROM I-495 TO NORTH OF BRANDYWINE RIVER BRIDGE	CONTRACT T201407404	BRIDGE NO. 1 749 6142	RAILROAD PROTECTIVE SHIELD TYPES II & III	DM-03
				COUNTY NEW CASTLE	DESIGNED BY: DAN		SECTION WRA
					CHECKED BY: WAG		SHEET NO. 447

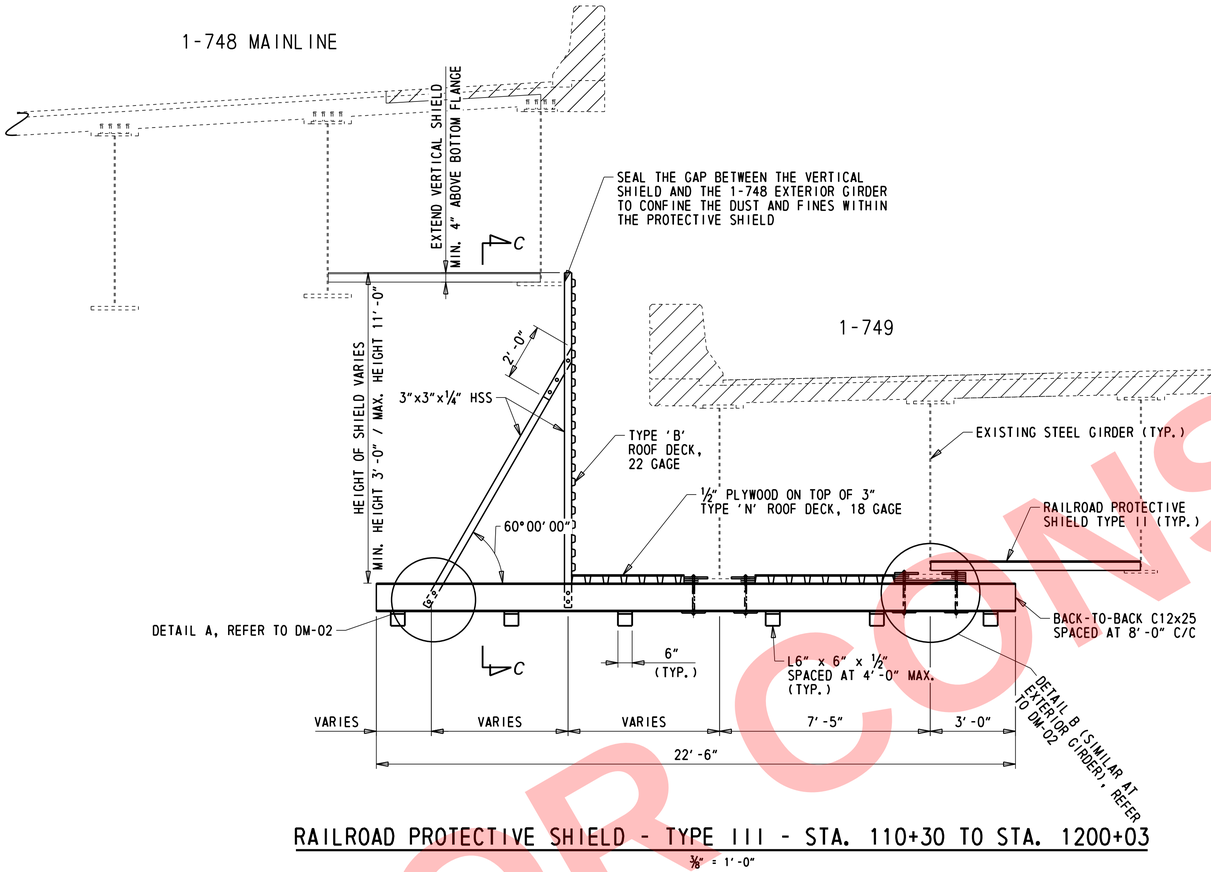

RAILROAD PROTECTIVE SHIELD - TYPE III - STA. 110+30 TO STA. 1200+03

⅜" = 1'-0"

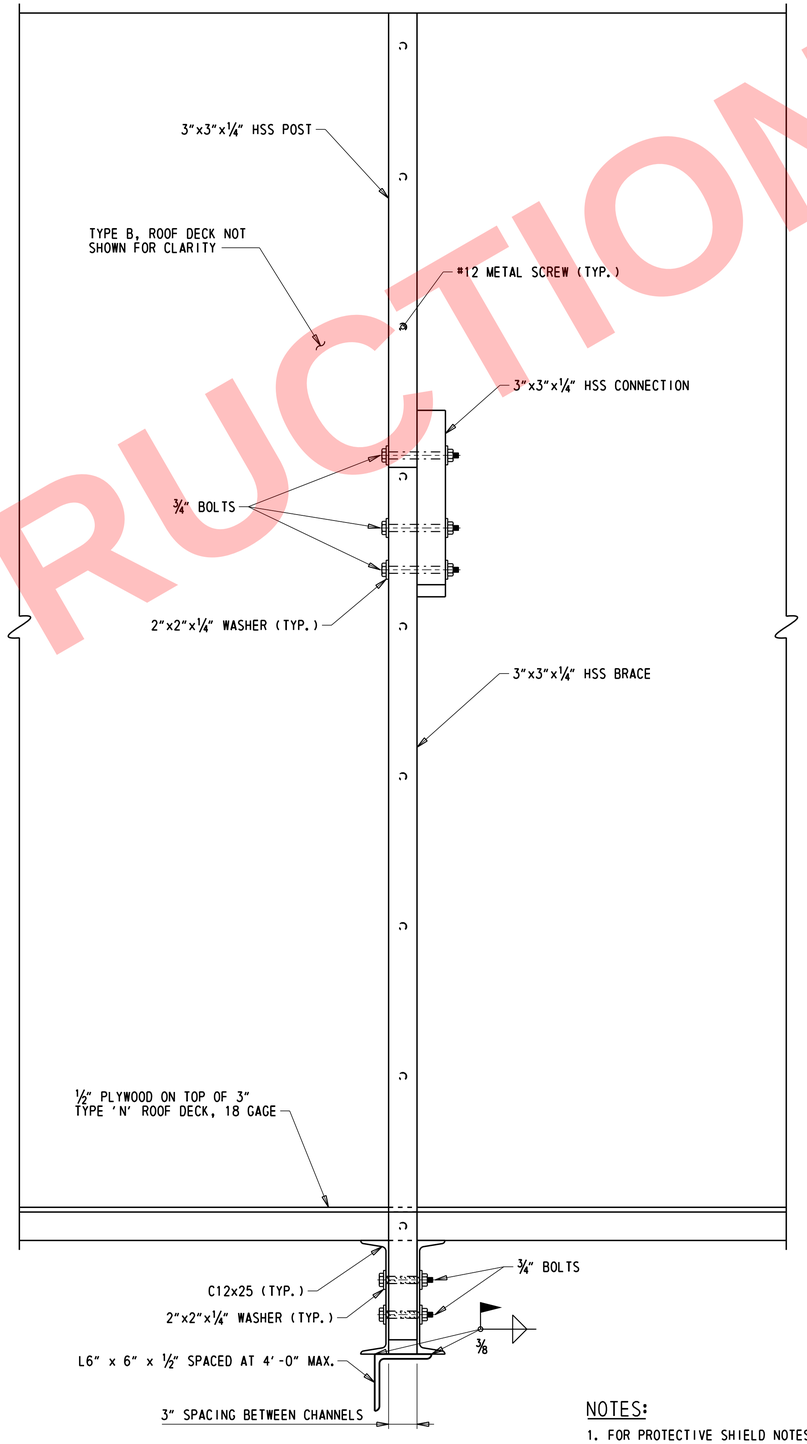

SECTION C-C

1½" = 1'-0"

NOTES:

1. FOR PROTECTIVE SHIELD NOTES, SEE DM-01.

NOT FOR CONSTRUCTION

N:\31987-004\Contract I-95\CADD\Bridge\BR1-749_DM04.dgn
5/31/2019 12:14:25 PM

ADDENDA / REVISIONS		SCALE AS NOTED	REHABILITATION OF I-95 FROM I-495 TO NORTH OF BRANDYWINE RIVER BRIDGE	CONTRACT T201407404	BRIDGE NO. 1 749 6142	RAILROAD PROTECTIVE SHIELD TYPE III	DM-04
				COUNTY NEW CASTLE	DESIGNED BY: DAN		SECTION WRA
					CHECKED BY: WAG		SHEET NO. 448

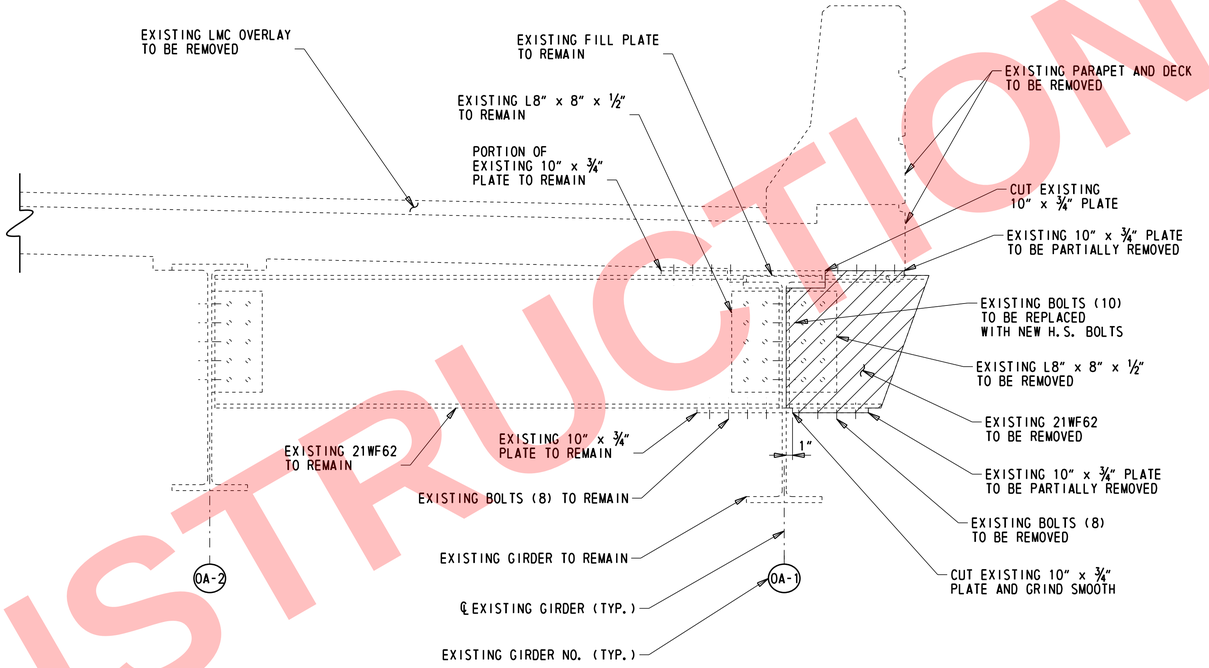

EXISTING BRACKET REMOVAL DETAIL

½" = 1'-0"

REMOVE STRUCTURAL SIGN SUPPORT BRACKET				
REPAIR	SPAN	GIRDER	EXISTING PLANS CONTRACT NO.	EXISTING PLANS REF. NO.
28	OA	OA-1	64-03-004	R2

LEGEND:

LIMITS OF EXISTING STEEL BRACKET TO BE REMOVED

NOTES:

1. NEW H.S. BOLTS SHALL BE ASTM F3125, GR. A325, TYPE 1.
2. SEE EXISTING PLANS FOR ADDITIONAL SIGN SUPPORT DETAILS.
3. AFTER REMOVAL ROUGH UP PAINT AS REQUIRED IN ACCORDANCE WITH SECTION 616 AMD AS DIRECTED BY THE ENGINEER.

NOT FOR CONSTRUCTION

N:\31987-004\Contract_I-95\CADD\Bridge\BR1-749_DM05.dgn
5/31/2019 12:14:26 PM

ADDENDA / REVISIONS	SCALE AS NOTED	REHABILITATION OF I-95 FROM I-495 TO NORTH OF BRANDYWINE RIVER BRIDGE	CONTRACT T201407404	BRIDGE NO. 1 749 6142	EXISTING BRACKET REMOVAL DETAILS	DM-05 SECTION WRA
			COUNTY NEW CASTLE	DESIGNED BY: DAN		SHEET NO. 449
				CHECKED BY: WAG		

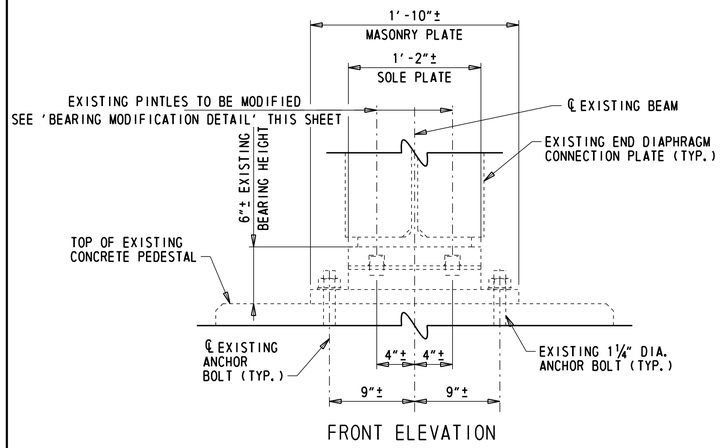

FRONT ELEVATION

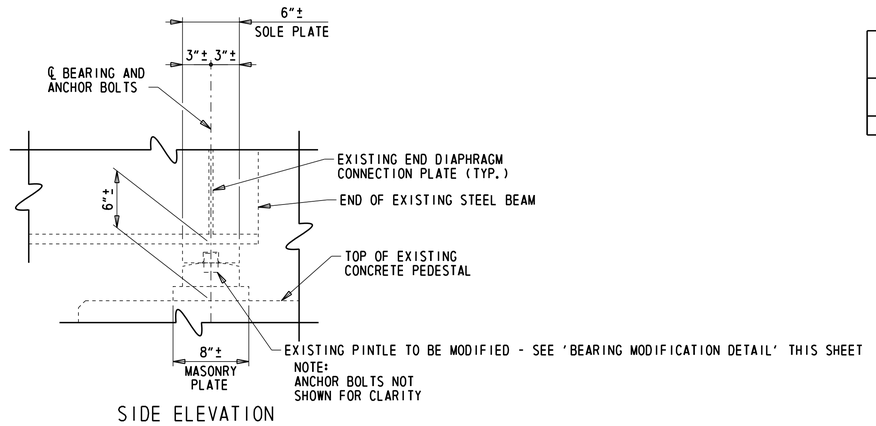

SIDE ELEVATION

EXISTING BEARING TYPE FS-2

1½" = 1'-0"

BEARING MODIFICATION LOCATION TABLE		
SUPPORT	SPAN	EXISTING BEARING TYPE
PIER 4A	3A	FS-2

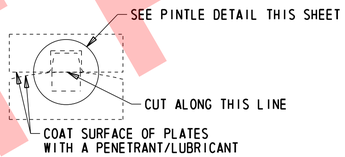

FS-2

BEARING MODIFICATION DETAIL

3" = 1'-0"

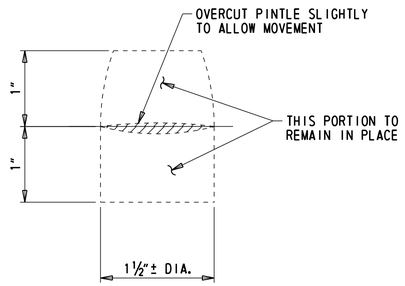

PINTLE DETAIL

N.T.S.

LINK SLAB SEQUENCE OF CONSTRUCTION

1. REMOVE THE EXISTING DECK.
2. JACK THE BRIDGE AS SHOWN ON DWG. RH-01.
3. CUT THE PINTLES AS SHOWN IN THE DETAILS ON THIS SHEET.
4. LOWER BRIDGE AND REMOVE JACKS.
5. CONSTRUCT NEW DECK.
6. PREP AND POUR THE UHPC FOR THE LINK SLAB AS SHOWN ON DWG. EX-02.
7. CONSTRUCT LMC OVERLAY.
8. GREASE BEARINGS IN ACCORDANCE WITH ITEM 623004 - CLEAN AND GREASE BRIDGE BEARINGS.

NOTES:

1. FOR EXISTING FIXED BEARINGS, CUT THE PINTLE ALONG LINE SHOWN. THE PINTLE SHALL BE SLIGHTLY OVERCUT TO ALLOW FOR MOVEMENT.
2. THE SLOTS SHALL BE DRILLED OR BURNED TO THE SIZE SHOWN, OR AS DIRECTED BY THE ENGINEER.
3. CARE SHALL BE TAKEN NOT TO DAMAGE EXISTING BEAM FLANGES, BEARING ASSEMBLIES, AND ANCHOR BOLTS.
4. PAYMENT FOR CUTTING THE PINTLES AND LUBRICATING PLATES SHALL BE INCIDENTAL TO ITEM 604000 - JACKING BRIDGE.
5. AFTER THE PINTLES ARE CUT, VEHICLES AND EQUIPMENT SHOULD BE KEPT OFF OF SPAN 3A AS MUCH AS REASONABLY POSSIBLE UNTIL THE LINK SLAB IS POURED. ONLY EQUIPMENT NECESSARY TO COMPLETE WORK WILL BE ALLOWED ON SPAN 3A.
6. OVERCUT OF PINTLE SHOULD BE LIMITED TO THE WIDTH OF THE CUTTING ELEMENT AND TO ENSURE THE TWO HALVES OF THE PINTLE CAN MOVE FREELY.

NOT FOR CONSTRUCTION

N:\31987-004\Contract_I-95\CADD\Bridge\BR1-749_BB01.dgn
5/31/2019 12:14:26 PM

ADDENDA / REVISIONS							
		SCALE AS NOTED	REHABILITATION OF I-95 FROM I-495 TO NORTH OF BRANDYWINE RIVER BRIDGE	CONTRACT T201407404	BRIDGE NO. 1 749 6142	BEARING MODIFICATION DETAILS	BB-01
				COUNTY NEW CASTLE	DESIGNED BY: DAN		SECTION WRA
					CHECKED BY: WAG		SHEET NO. 450

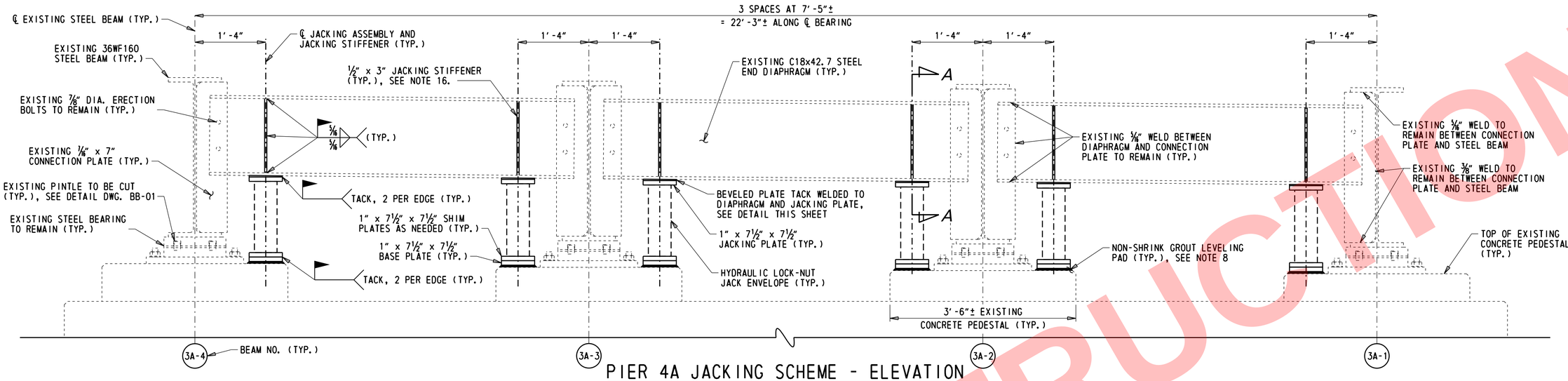

PIER 4A JACKING SCHEME - ELEVATION

(SPAN 3A SHOWN LOOKING NORTH)

1" = 1'-0"

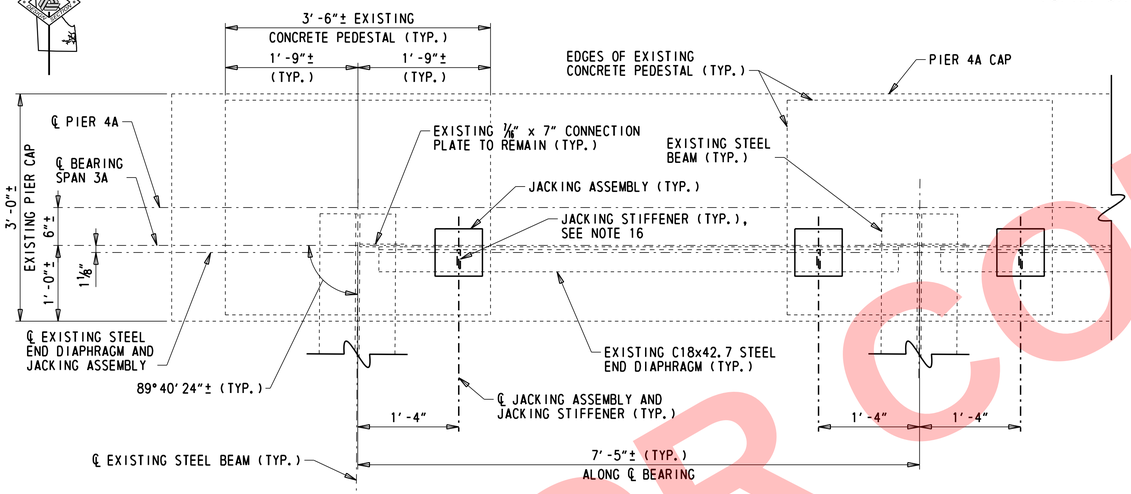

PIER 4A JACKING SCHEME - PARTIAL PLAN

(BEAMS 3A-3 AND 3A-4 SHOWN, 3A-1 AND 3A-2 SIMILAR BUT OPPOSITE HAND)

1" = 1'-0"

NOTE:
SPAN 4A BEAMS AND END DIAPHRAGMS NOT SHOWN FOR CLARITY.

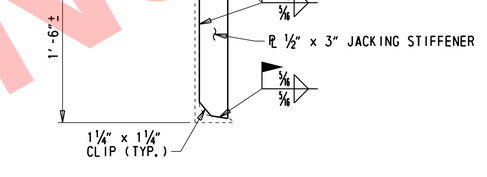

SECTION A-A

1½" = 1'-0"

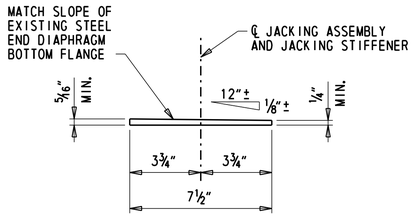

BEVELED PLATE DETAIL

3" = 1'-0"

UNFACTORED LOADS FOR JACKING

SUBSTRUCTURE UNIT	BEAM	DL+15% (SEE NOTE 15)	DL+LL+IMP
PIER 4A	3A-1	10.2 KIP	-
	3A-2	10.1 KIP	-
	3A-3	10.5 KIP	-
	3A-4	10.5 KIP	-

FACTORED LOADS FOR JACKING

SUBSTRUCTURE UNIT	BEAM	DL+15% (SEE NOTE 15)	DL+LL+IMP
PIER 4A	3A-1	13.3 KIP	-
	3A-2	13.1 KIP	-
	3A-3	13.6 KIP	-
	3A-4	13.6 KIP	-

BRIDGE JACKING NOTES:

1. CONTRACTOR SHALL VERIFY COMPATIBILITY OF THE JACKING ASSEMBLY WITH HYDRAULIC JACK PRIOR TO FABRICATION. ALTERNATE JACKING SCHEMES OR ASSEMBLIES MAY BE SUBMITTED TO THE ENGINEER FOR APPROVAL. ANY ALTERNATIVE DESIGN SHALL BE STRUCTURALLY EQUIVALENT AND MAY BE REJECTED BY THE ENGINEER FOR ANY REASON INCLUDING REASONS NOT RELATED TO STRUCTURAL EQUIVALENCY.
2. THE CONTRACTOR SHALL VERIFY ALL EXISTING FIELD DIMENSIONS PRIOR TO ORDERING OR FABRICATING THE JACKING STIFFENERS AND JACKING ASSEMBLY.
3. ALL STEEL PLATES AND STEEL ROLLED SHAPES SHALL BE AASHTO M270 GRADE 50 MATERIAL.
4. IN THE PRESENCE OF THE ENGINEER, THE CONTRACTOR SHALL INSPECT THE CONDITION OF THE EXISTING STEEL END DIAPHRAGM, WELD BETWEEN THE DIAPHRAGM AND CONNECTION PLATE, CONNECTION PLATE, AND WELD BETWEEN THE CONNECTION PLATE AND THE EXISTING STEEL BEAM. INSPECT FOR ANY DEFECTS WHICH MAY IMPACT THE LOAD CARRYING CAPACITY DURING JACKING. ANY OBSERVED DEFECTS SHALL BE REPAIRED TO THE FULL SATISFACTION OF THE ENGINEER PRIOR TO COMMENCING WITH JACKING OPERATIONS. PAYMENT FOR ANY REQUIRED REPAIRS OF THE STRUCTURAL STEEL AND/OR REPAIRS TO EXISTING WELDS WILL BE UNDER ITEMS 615005 - STEEL STRUCTURE REPAIR AND 615007 - WELDING REPAIR, RESPECTIVELY.
5. ALL METAL WORK AND ALL WELDING SHALL BE PERFORMED IN ACCORDANCE WITH THE STANDARD SPECIFICATIONS, SECTION 615.
6. JACKING ASSEMBLY AND JACKING STIFFENERS SHALL BE SET PLUMB TO VERTICAL.
7. NON-SHRINK GROUT SHALL BE IN ACCORDANCE WITH THE STANDARD SPECIFICATIONS, SECTION 1047.02.
8. PLACE A NON-SHRINK GROUT PAD BENEATH THE JACKING ASSEMBLY AND THE EXISTING SUPPORTING CONCRETE SURFACE TO ENSURE FULL AND LEVEL BEARING.
9. THE WORK SHALL CONSIST OF JACKING THE EXISTING STEEL BEAMS FOR SPAN 3A AT PIER 4A AND CUTTING THE EXISTING STEEL PINTLES AT ALL BEARING LOCATIONS.
10. THE ENGINEER SHALL BE PRESENT DURING ALL JACKING OPERATIONS TO ENSURE CONFORMANCE WITH ALL PERTINENT CONTRACT PROVISIONS PRIOR TO COMMENCING THE JACKING OPERATION.
11. JACKING AND PINTLE CUTTING SHALL ONLY BE PERFORMED AFTER REMOVAL OF THE EXISTING CONCRETE DECK AND PRIOR TO PLACING OF FORMWORK FOR THE PROPOSED CONCRETE DECK FOR SPAN 3A.
12. THE HYDRAULIC JACKS ON THE BEARING LINE REQUIRED TO LIFT THE EXISTING BEAMS SHALL BE OPERATED IN SEPARATE LIFTS. ONLY ONE (1) EXISTING BEAM MAY BE LIFTED AT ANY GIVEN TIME. EXTERIOR BEAMS 3A-1 AND 3A-4 ARE TO BE LIFTED USING ONE (1) HYDRAULIC JACK AND INTERIOR BEAMS 3A-2 AND 3A-3 ARE TO BE LIFTED USING TWO (2) HYDRAULIC JACKS, AS SHOWN IN THE DETAILS ON THIS SHEET.

    THE MAXIMUM VERTICAL DISPLACEMENT OF ANY BEAM FROM THE EXISTING LOCATION SHALL NOT EXCEED ¼" AT ANY TIME.
13. THE CONTRACTOR SHALL USE ONLY THOSE JACKS WITH LOCK-NUTS CAPABLE OF SUPPORTING A LOAD EQUAL TO THE RATED CAPACITY OF THE JACK IN THE EVENT THE JACK LOSES HYDRAULIC PRESSURE. THE CONTRACTOR SHALL ADVANCE THE LOCK-NUTS ON ALL JACKS SUCH THAT THE MAXIMUM DISTANCE BETWEEN THE TOP OF A JACK AND THE LOCK-NUT SHALL NOT EXCEED ⅛" AT ANY TIME DURING THE JACKING PROCEDURE.
14. THE HYDRAULIC JACKS SHALL HAVE A MINIMUM CAPACITY OF 25 TONS. THE FACTORED DEAD LOADS FOR JACKING WERE USED TO SIZE THE JACKING ASSEMBLY AND HYDRAULIC JACK.
15. THE FACTORED LOADS FOR JACKING USE A DEAD LOAD FACTOR OF 1.30 AND NO LIVE LOAD. THE DEAD LOAD SHOWN IS FOR THE STRUCTURAL STEEL BEAMS AND FRAMING ONLY. IF THE CONTRACTOR ELECTS TO PERFORM JACKING WITH THE CONCRETE DECK IN PLACE OR WITH LIVE LOAD, THEY WILL BE RESPONSIBLE FOR DESIGNING A JACKING SYSTEM TO SUPPORT THOSE LOADS AT NO ADDITIONAL COST TO THE DEPARTMENT FOR THE DESIGN AND/OR ADDITIONAL MATERIALS.
16. AT THE CONCLUSION OF THE WORK, PAINT THE JACKING STIFFENERS AND REPAIR ANY DAMAGED PAINT ON THE STEEL END DIAPHRAGM IN ACCORDANCE WITH SECTION 616.

NOT FOR CONSTRUCTION

ADDENDA / REVISIONS	SCALE AS NOTED	REHABILITATION OF I-95 FROM I-495 TO NORTH OF BRANDYWINE RIVER BRIDGE	CONTRACT T201407404	BRIDGE NO. 1 749 6142	JACKING DETAILS SPAN 3A AT PIER 4A	RH-01 SECTION WRA
			COUNTY NEW CASTLE	DESIGNED BY: DAN		SHEET NO. 451
				CHECKED BY: WAG		

M:\2018\5-28-2018\121407\ROADWAY\Bridges\BR1-749_RH01.dgn 5/31/2018 12:42:27 PM

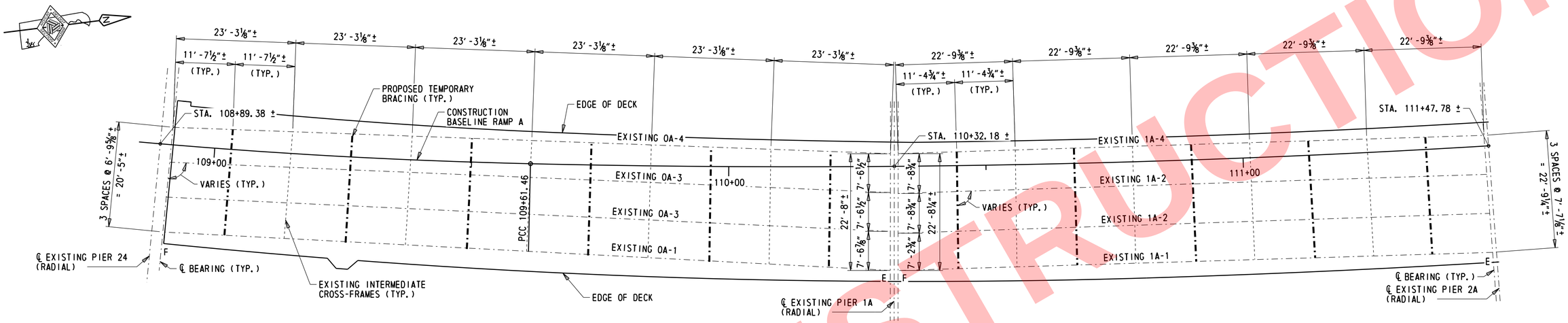

FRAMING PLAN - SPANS 0A TO SPAN 1A

NOTES:

1. DIMENSIONS FOR CROSS FRAME SPACING ARE MEASURED ALONG PROPOSED EXTERIOR FASCIA STRINGER.
2. CONTRACTOR TO VERIFY EXISTING STRINGER SPACING ALONG THE TRANSVERSE GIRDER AND THE EXISTING CROSS FRAME SPACING PRIOR TO ORDERING OR FABRICATING ANY MATERIALS.
3. EXISTING INTERMEDIATE CROSS-FRAMES ARE NORMAL TO THE EXISTING GIRDER CENTERLINES AT ALL LOCATIONS, UNLESS OTHERWISE NOTED.

NOT FOR CONSTRUCTION

ADDENDA / REVISIONS	

SCALE: 0 10 20 30 FEET

REHABILITATION OF I-95 FROM I-495 TO NORTH OF BRANDYWINE RIVER BRIDGE

CONTRACT	BRIDGE NO.	1 749 6142
T201407404	DESIGNED BY: DAN	
COUNTY	CHECKED BY: WAG	
NEW CASTLE		

FRAMING PLAN SPANS 0A TO 1A

FR-01
SECTION: WRA
SHEET NO.: 2-451A

N:\31987-00A\Contract_I-95\CADD\Bridge\BR1-749_FR01.dgn
5/31/2019 12:14:28 PM

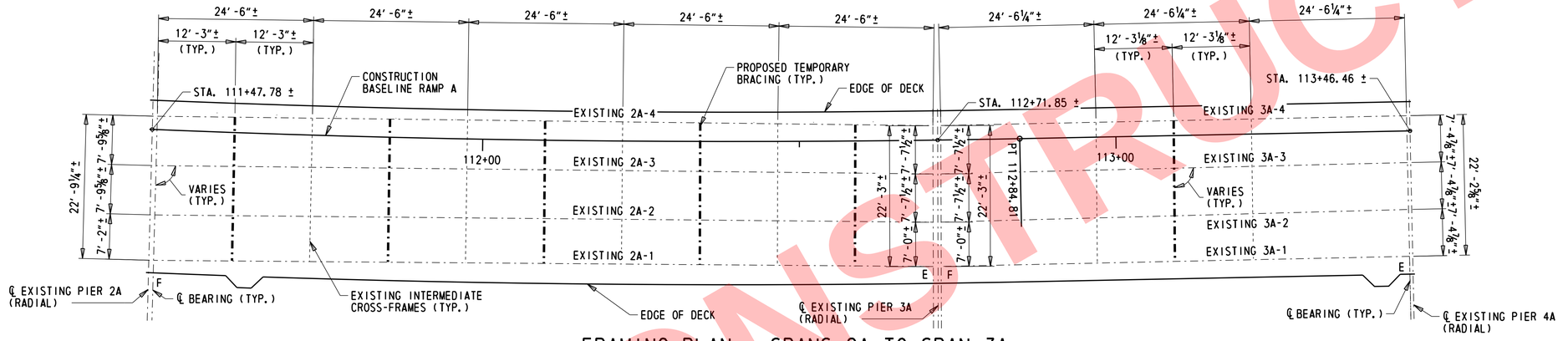

FRAMING PLAN - SPANS 2A TO SPAN 3A

NOTES:

1. DIMENSIONS FOR CROSS FRAME SPACING ARE MEASURED ALONG PROPOSED EXTERIOR FASCIA STRINGER.
2. CONTRACTOR TO VERIFY EXISTING STRINGER SPACING ALONG THE TRANSVERSE GIRDER AND THE EXISTING CROSS FRAME SPACING PRIOR TO ORDERING OR FABRICATING ANY MATERIALS.
3. EXISTING INTERMEDIATE CROSS-FRAMES ARE NORMAL TO THE EXISTING GIRDER CENTERLINES AT ALL LOCATIONS, UNLESS OTHERWISE NOTED.

NOT FOR CONSTRUCTION

N:\31987-004\Contract I-95\CADD\Bridge\BRI-749_FR02.dgn
5/31/2019 12:14:29 PM

ADDENDA / REVISIONS	

SCALE
0 10 20 30
FEET

REHABILITATION OF I-95 FROM I-495 TO NORTH OF BRANDYWINE RIVER BRIDGE

CONTRACT	BRIDGE NO.	1 749 6142
T201407404	DESIGNED BY: DAN	
COUNTY	CHECKED BY: WAG	
NEW CASTLE		

FRAMING PLAN SPANS 2A TO 3A

	FR-02
SECTION	WRA
SHEET NO.	2-451B

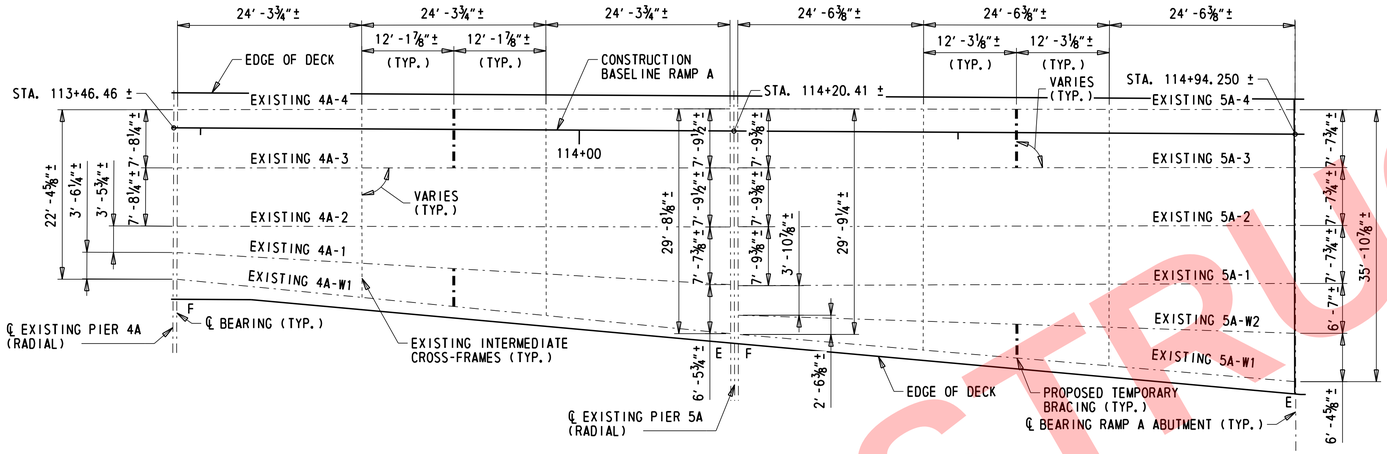

FRAMING PLAN - SPANS 4A TO SPAN 5A

NOTES:

1. DIMENSIONS FOR CROSS FRAME SPACING ARE MEASURED ALONG PROPOSED EXTERIOR FASCIA STRINGER.
2. CONTRACTOR TO VERIFY EXISTING STRINGER SPACING ALONG THE TRANSVERSE GIRDER AND THE EXISTING CROSS FRAME SPACING PRIOR TO ORDERING OR FABRICATING ANY MATERIALS.
3. EXISTING INTERMEDIATE CROSS-FRAMES ARE NORMAL TO THE EXISTING GIRDER CENTERLINES AT ALL LOCATIONS, UNLESS OTHERWISE NOTED.

NOT FOR CONSTRUCTION

N:\31987-00A\Contract_I-95\C4D\Bridge\BR1-749_FR03.dgn
5/31/2019 12:14:29 PM

ADDENDA / REVISIONS	

SCALE
0 10 20 30
FEET

REHABILITATION OF I-95 FROM I-495 TO NORTH OF BRANDYWINE RIVER BRIDGE

CONTRACT	BRIDGE NO.	1 749 6142
T201407404	DESIGNED BY: DAN	
COUNTY	CHECKED BY: WAG	
NEW CASTLE		

FRAMING PLAN SPANS 4A TO 5A

FR-03	
SECTION	WRA
SHEET NO.	2-451C

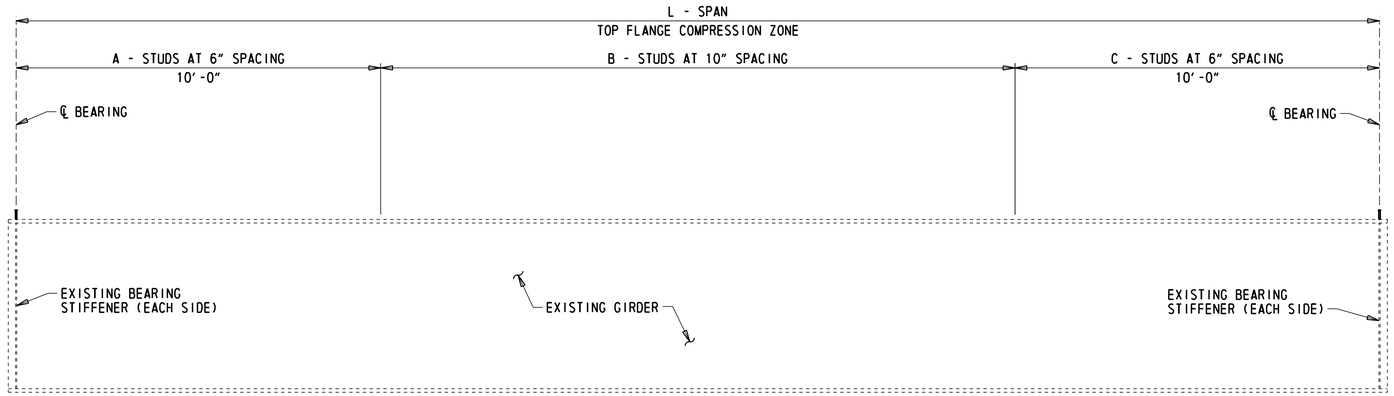

EXISTING GIRDER ELEVATION

NOT TO SCALE

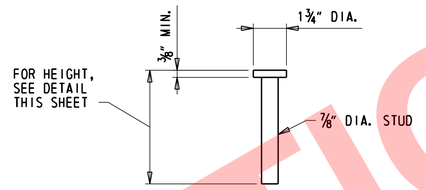

STUD DETAIL

3" = 1'-0"

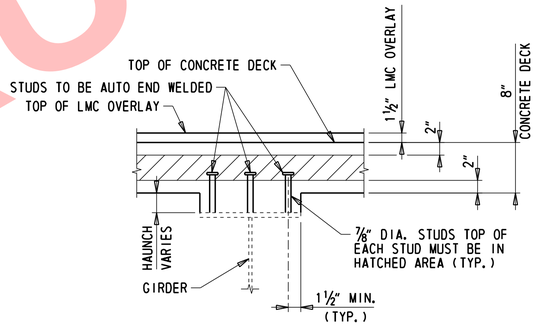

SHEAR STUD DETAIL

1" = 1'-0"

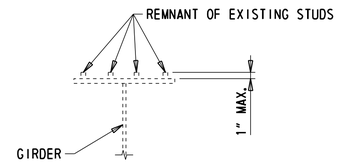

EXISTING STUD REMOVAL DETAIL

1" = 1'-0"

GIRDER SUMMARY

GIRDER	L - SPAN	A	B	C
0A-1	142'-2⅞"±	21	145	21
0A-2	141'-7⅛"±	21	144	21
0A-3	140'-11⅜"±	21	144	21
0A-4	140'-3¾"±	21	143	21
1A-1	115'-5⅞"±	21	113	21
1A-2	114'-11½"±	21	112	21
1A-3	114'-5⅛"±	21	112	21
1A-4	113'-10⅞"±	21	111	21
2A-1	123'-1⅜"±	21	122	21
2A-2	122'-9"±	21	122	21
2A-3	122'-4⅝"±	21	121	21
2A-4	122'-0½"±	21	121	21
3A-1	74'-1⅝"±	21	63	21
3A-2	74'-0⅜"±	21	63	21
3A-3	73'-11⅛"±	21	63	21
3A-4	73'-10"±	21	63	21
4A-1	73'-2⅞"±	21	62	21
4A-2	73'-2¼"±	21	62	21
4A-3	73'-2⅛"±	21	62	21
4A-4	73'-1⅞"±	21	62	21
4AW-1	73'-6⅛"±	21	63	21
5A-1	73'-6"±	21	64	21
5A-2	73'-6"±	21	64	21
5A-3	73'-6"±	21	64	21
5A-4	73'-6"±	21	64	21
5A-W2	73'-6⅜"±	21	63	21
5A-W1	73'-9⅛"±	21	63	21

NOTES:

1. NEW SHEAR STUDS MAY BE ADJUSTED TO AVOID REMNANTS OF EXISTING STUDS WITHIN 6" OF PROPOSED LAYOUT. SHEAR STUDS WILL BE PAID FOR UNDER ITEM 615001 - STEEL STRUCTURES (LS)
2. REMNANTS OF EXISTING STUDS MAY BE UP TO 1" HIGH.

NOT FOR CONSTRUCTION

N:\31887-004\Contract_I-95\CADD\Bridge\BR1-749_BM01.dgn
5/31/2019 12:14:30 PM

ADDENDA / REVISIONS		SCALE AS NOTED	REHABILITATION OF I-95 FROM I-495 TO NORTH OF BRANDYWINE RIVER BRIDGE	CONTRACT T201407404	BRIDGE NO. 1 749 6142	GIRDER DETAILS	BM-01
				COUNTY NEW CASTLE	DESIGNED BY: DAN		SECTION WRA
					CHECKED BY: WAG		SHEET NO. 452

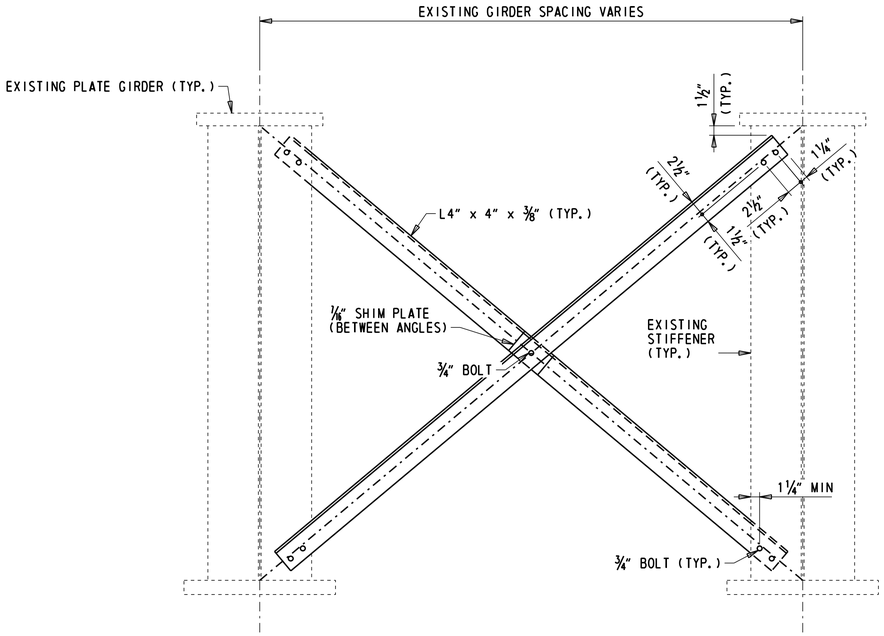

TEMPORARY BRACING DETAIL

(SPAN 0A, 1A & 2A)
1" = 1'-0"

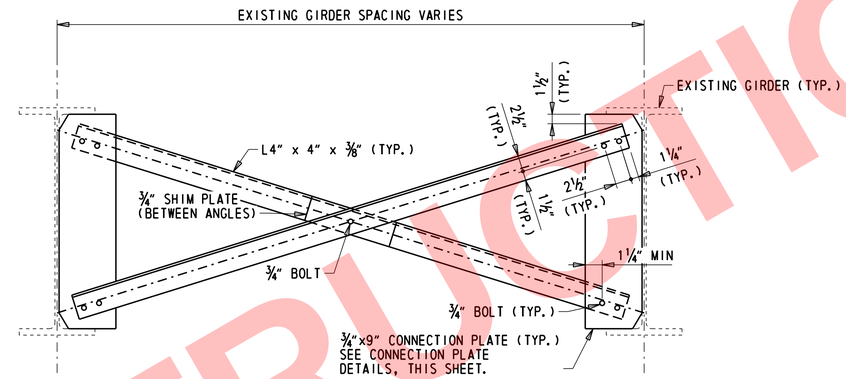

TEMPORARY BRACING DETAIL

(SPAN 3A, 4A & 5A)
1" = 1'-0"

NOTES:

1. FOR LOCATION OF TEMPORARY BRACING, SEE FRAMING PLAN, DWG. FR-01, FR-02 & FR-03.
2. ALL BOLTS IN TEMPORARY BRACING CONNECTIONS SHALL BE ¾" DIA. HIGH STRENGTH BOLTS IN CONFORMANCE WITH ASTM F 3125, GR. A 325, TYPE 1.
3. ALL BOLT HOLES IN TEMPORARY BRACING, EXISTING CONNECTION PLATES, AND NEW CONNECTION PLATES SHALL BE 15/16".
4. THE MINIMUM ACCEPTABLE EDGE DISTANCE FOR ANY 15/16" DIA. HOLE SHALL BE 1¼".
5. STUD SHEAR CONNECTORS NOT SHOWN FOR CLARITY.
6. ALL TEMPORARY BRACING MUST BE COMPLETELY CONNECTED TO GIRDERS, WITH BOLTS FULLY PRE-TENSIONED, PRIOR TO PLACING DECK SLAB. TIGHTEN BOLTS IN ACCORDANCE WITH SECTION 615.03 D.6.
7. TEMPORARY BRACING SHALL REMAIN IN PLACE FOR A MINIMUM OF 7 DAYS AFTER BRIDGE DECK HAS BEEN POURED. REMOVE TEMPORARY BRACING PRIOR TO CONSTRUCTION OF PARAPET.
8. PAYMENT FOR TEMPORARY BRACING, INCLUDING CONNECTION PLATES, BRACING ANGLES, BOLTS, WELDING AND PAINTING WILL BE INCIDENTAL TO ITEM 615001 - STEEL STRUCTURES.

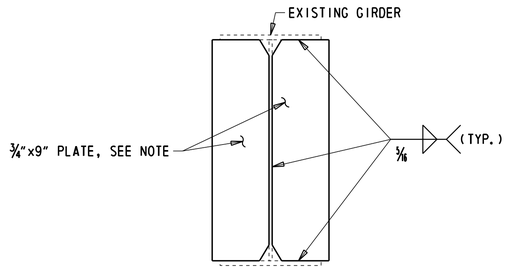

CONNECTION PLATE DETAIL FOR TEMPORARY BRACING

(SPAN 3A, 4A & 5A)
1" = 1'-0"

NOTES: CONNECTION PLATES SHALL BE LEFT IN PLACE AFTER BRIDGE CONSTRUCTION IS COMPLETED.

APPLY PRIMER COAT TO ALL CONNECTION PLATES TO REMAIN IN ACCORDANCE WITH SECTION 616.

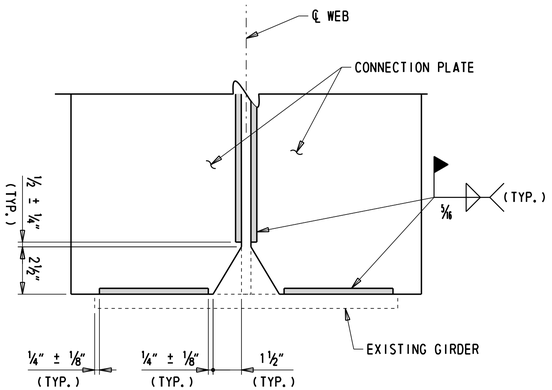

WELD TERMINATION AND CORNER CHAMFER DETAILS

(SPAN 3A, 4A & 5A)
3" = 1'-0"

NOT FOR CONSTRUCTION

ADDENDA / REVISIONS	SCALE AS NOTED	REHABILITATION OF I-95 FROM I-495 TO NORTH OF BRANDYWINE RIVER BRIDGE	CONTRACT T201407404	BRIDGE NO. 1 749 6142	TEMPORARY BRACING DETAILS	BM-02
			COUNTY NEW CASTLE	DESIGNED BY: DAN		SECTION WRA
				CHECKED BY: WAG		SHEET NO. 2-452A

N:\31987-004\Contract_I-95\CADD\Bridge\BR1-749_FR04.dgn
5/31/2019 12:14:31 PM

STEEL GIRDER CAMBER NOTES:

1. ALL GIRDERS SHALL BE CAMBERED FOR DEAD LOAD ORDINATES TO THE DIMENSIONS SHOWN ON THESE PLANS. THE CAMBER TOLERANCE IS ZERO UNDER TO ¾ INCH OVER.
2. BEFORE THE DECK IS REMOVED, THE CONTRACTOR SHALL OBTAIN TOP OF DECK ELEVATIONS AT FIFTEENTH POINTS SHOWN OF ALL GIRDERS. AFTER THE DECK HAS BEEN REMOVED, THE CONTRACTOR SHALL OBTAIN ELEVATIONS AT TENTH POINTS SHOWN ON THE TOP FLANGES OF ALL GIRDERS TO DETERMINE THE GIRDER REBOUND AND REQUIRED HAUNCH THICKNESS. ALL THE DATA SHALL BE SUBMITTED WITH DETAILS OF STAY-IN-PLACE FORMS FOR REVIEW AND APPROVAL BY THE ENGINEER IN THE FIELD.
3. VARY THICKNESS OF HAUNCH TO ACCOUNT FOR ANY INACCURACIES IN CAMBER.
4. POSITIVE CAMBER VALUES IN THE TABLE INDICATE THE UPWARD DIRECTION.

LEGEND:

DSL = DENOTES DEFLECTION DUE TO STRUCTURAL STEEL

DLC = DENOTES DEFLECTION DUE TO CONCRETE SLAB, HAUNCH, & S.I.P. FORMS

SDL = DENOTES DEFLECTION DUE TO PARAPET, LMC OVERLAY & FUTURE WEARING SURFACE

TD&C= DENOTES TOTAL DEAD LOAD DEFLECTION & CAMBER

VCO = DENOTES CAMBER FOR VERTICAL CURVE ORDINATE DUE TO ROADWAY PROFILE

NOTES:

1. THE GIRDERS SHALL BE PLUMB UNDER FULL DEAD LOAD.
2. THERE SHALL BE NO FIELD WELDING TO THE TOP FLANGE, EXCEPT FOR SHEAR STUDS.

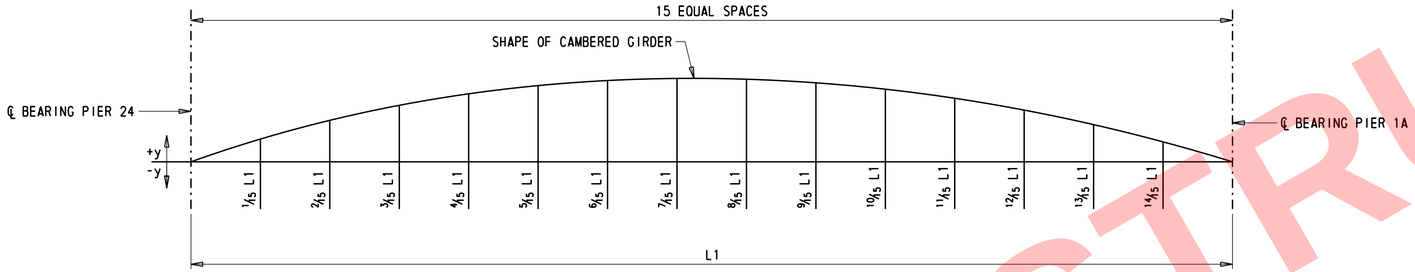

DEFLECTION AND TOTAL CAMBER (INCHES)

EXISTING GIRDERS		CL BRG. PIER 24	1/15 L1	2/15 L1	3/15 L1	4/15 L1	5/15 L1	6/15 L1	7/15 L1	8/15 L1	9/15 L1	10/15 L1	11/15 L1	12/15 L1	13/15 L1	14/15 L1	CL BRG. PIER 1A
GIRDER OA-1	DSL	0	3/16	7/16	5/8	3/4	13/16	15/16	15/16	15/16	15/16	7/8	3/4	5/8	7/16	3/16	0
	DLC	0	1/2	1	1 3/8	1 11/16	2	2 3/16	2 1/4	2 1/4	2 3/16	2	1 3/4	1 7/16	1	1/2	0
	SDL	0	3/16	5/16	1/2	9/16	11/16	3/4	3/4	3/4	3/4	11/16	9/16	7/16	5/16	3/16	0
	TD&C	0	7/8	1 3/4	2 1/2	3	3 1/2	3 7/8	3 15/16	3 15/16	3 7/8	3 9/16	3 1/16	2 1/2	1 3/4	7/8	0
	VCO	0	1 13/16	3 5/8	5 3/8	6 7/8	8	8 3/8	9 1/16	9 5/16	9 3/16	8 5/8	7 11/16	6 3/8	4 5/8	2 1/2	0
	TD&C + VCO	0	2 11/16	5 3/8	7 7/8	9 7/8	11 1/2	12 1/4	13	13 1/4	13 1/16	12 3/16	10 3/4	8 7/8	6 3/8	3 3/8	0
GIRDER OA-2	DSL	0	3/16	7/16	9/16	3/4	13/16	15/16	15/16	15/16	15/16	13/16	3/4	5/8	7/16	3/16	0
	DLC	0	1/2	15/16	1 5/16	1 5/8	1 7/8	2 1/16	2 1/8	2 1/8	2 1/16	1 7/8	1 5/8	1 5/16	15/16	1/2	0
	SDL	0	3/16	5/16	7/16	9/16	5/8	11/16	11/16	11/16	11/16	5/8	9/16	7/16	5/16	3/16	0
	TD&C	0	7/8	1 11/16	2 5/16	2 15/16	3 5/16	3 11/16	3 3/4	3 3/4	3 11/16	3 5/16	2 15/16	2 3/8	1 11/16	7/8	0
	VCO	0	1 7/8	3 3/4	5 9/16	7 1/8	8 1/4	9 1/16	9 1/2	9 11/16	9 1/2	8 7/8	7 7/8	6 1/2	4 3/4	2 9/16	0
	TD&C + VCO	0	2 3/4	5 7/16	7 7/8	10 1/16	11 9/16	12 3/4	13 1/4	13 7/16	13 3/16	12 3/16	10 13/16	8 7/8	6 7/16	3 7/16	0
GIRDER OA-3	DSL	0	3/16	7/16	9/16	3/4	13/16	15/16	15/16	15/16	15/16	13/16	3/4	9/16	7/16	3/16	0
	DLC	0	7/16	7/8	1 1/4	1 1/2	1 3/4	1 15/16	2	2	1 15/16	1 3/4	1 1/2	1 1/4	7/8	7/16	0
	SDL	0	3/16	5/16	7/16	9/16	5/8	11/16	11/16	11/16	11/16	5/8	9/16	7/16	5/16	3/16	0
	TD&C	0	13/16	1 5/8	2 1/4	2 13/16	3 3/16	3 9/16	3 5/8	3 5/8	3 9/16	3 3/16	2 13/16	2 1/4	1 5/8	13/16	0
	VCO	0	1 15/16	3 7/8	5 3/4	8 9/16	7 3/8	9 7/16	9 15/16	10 1/16	9 13/16	9 1/8	8 1/8	6 5/8	4 13/16	2 5/8	0
	TD&C + VCO	0	2 3/4	5 1/2	8	11 3/4	10 3/16	13	13 9/16	13 11/16	13 3/8	12 5/16	10 15/16	8 7/8	6 7/16	3 7/16	0
GIRDER OA-4	DSL	0	3/16	3/8	9/16	11/16	13/16	15/16	15/16	15/16	15/16	13/16	3/4	9/16	7/16	3/16	0
	DLC	0	7/16	13/16	1 3/16	1 7/16	1 5/8	1 13/16	1 7/8	1 7/8	1 13/16	1 5/8	1 7/16	1 1/8	13/16	7/16	0
	SDL	0	3/16	5/16	7/16	9/16	11/16	3/4	3/4	3/4	3/4	11/16	9/16	1/2	5/16	3/16	0
	TD&C	0	13/16	1 1/2	2 3/16	2 11/16	3 1/8	3 1/2	3 9/16	3 9/16	3 1/2	3 1/8	2 3/4	2 3/16	1 9/16	13/16	0
	VCO	0	2	4	5 15/16	7 5/8	8 7/8	9 13/16	10 5/16	10 7/16	10 1/8	9 3/8	8 5/16	6 13/16	4 15/16	2 5/8	0
	TD&C + VCO	0	2 13/16	5 1/2	8 1/8	10 5/16	12	13 5/16	13 7/8	14	13 5/8	12 1/2	11 1/16	9	6 1/2	3 7/16	0

NOT FOR CONSTRUCTION

N:\31987-004\Control-I-95\CADD\Bridge\BR1-749_BM03.dgn
5/31/2019 12:14:32 PM

ADDENDA / REVISIONS		NO SCALE	REHABILITATION OF I-95 FROM I-495 TO NORTH OF BRANDYWINE RIVER BRIDGE	CONTRACT T201407404	BRIDGE NO. 1 749 6142	CAMBER DETAILS SPAN 0A	BM-03
				COUNTY NEW CASTLE	DESIGNED BY: DAN		SECTION WRA
					CHECKED BY: WAG		SHEET NO. 2-452B

STEEL GIRDER CAMBER NOTES:

1. ALL GIRDERS SHALL BE CAMBERED FOR DEAD LOAD ORDINATES TO THE DIMENSIONS SHOWN ON THESE PLANS. THE CAMBER TOLERANCE IS ZERO UNDER TO ¾ INCH OVER.
2. BEFORE THE DECK IS REMOVED, THE CONTRACTOR SHALL OBTAIN TOP OF DECK ELEVATIONS AT TWELFTH POINTS SHOWN OF ALL GIRDERS. AFTER THE DECK HAS BEEN REMOVED, THE CONTRACTOR SHALL OBTAIN ELEVATIONS AT TENTH POINTS SHOWN ON THE TOP FLANGES OF ALL GIRDERS TO DETERMINE THE GIRDER REBOUND AND REQUIRED HAUNCH THICKNESS. ALL THE DATA SHALL BE SUBMITTED WITH DETAILS OF STAY-IN-PLACE FORMS FOR REVIEW AND APPROVAL BY THE ENGINEER IN THE FIELD.
3. VARY THICKNESS OF HAUNCH TO ACCOUNT FOR ANY INACCURACIES IN CAMBER.
4. POSITIVE CAMBER VALUES IN THE TABLE INDICATE THE UPWARD DIRECTION.

LEGEND:

DSL = DENOTES DEFLECTION DUE TO STRUCTURAL STEEL

DLC = DENOTES DEFLECTION DUE TO CONCRETE SLAB, HAUNCH, & S.I.P. FORMS

SDL = DENOTES DEFLECTION DUE TO PARAPET, LMC OVERLAY & FUTURE WEARING SURFACE

TD&C= DENOTES TOTAL DEAD LOAD DEFLECTION & CAMBER

VCO = DENOTES CAMBER FOR VERTICAL CURVE ORDINATE DUE TO ROADWAY PROFILE

NOTES:

1. THE GIRDERS SHALL BE PLUMB UNDER FULL DEAD LOAD.
2. THERE SHALL BE NO FIELD WELDING TO THE TOP FLANGE, EXCEPT FOR SHEAR STUDS.

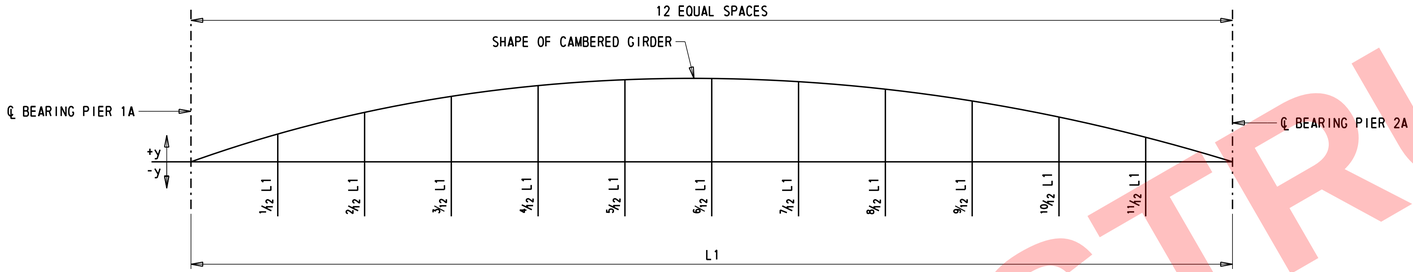

DEFLECTION AND TOTAL CAMBER (INCHES)

EXISTING GIRDERS		CL BRG. PIER 1A	1/12 L1	2/12 L1	3/12 L1	4/12 L1	5/12 L1	6/12 L1	7/12 L1	8/12 L1	9/12 L1	10/12 L1	11/12 L1	CL BRG. PIER 2A
GIRDER 1A-1	DSL	0	1/8	1/4	3/8	7/16	1/2	1/2	1/2	7/16	3/8	1/4	1/8	0
	DLC	0	7/16	13/16	1 1/8	1 3/8	1 1/2	1 9/16	1 1/2	1 3/8	1 1/8	13/16	7/16	0
	SDL	0	1/8	1/4	5/16	3/8	7/16	1/2	7/16	3/8	5/16	1/4	1/8	0
	TD&C	0	11/16	1 5/16	1 13/16	2 3/16	2 7/16	2 9/16	2 7/16	2 3/16	1 13/16	1 5/16	11/16	0
	VCO	0	1 9/16	2 3/4	3 1/2	3 13/16	3 3/4	3 3/16	2 5/8	2 1/16	1 1/2	1	1/2	0
	TD&C + VCO	0	2 1/4	4 1/16	5 5/16	6	6 3/16	5 3/4	5 1/16	4 1/4	3 5/16	2 5/16	1 3/16	0
GIRDER 1A-2	DSL	0	1/8	1/4	3/8	7/16	1/2	1/2	1/2	7/16	3/8	1/4	1/8	0
	DLC	0	7/16	13/16	1 1/8	1 3/8	1 1/2	1 9/16	1 1/2	1 3/8	1 1/8	13/16	7/16	0
	SDL	0	1/8	1/4	5/16	3/8	7/16	7/16	7/16	3/8	5/16	1/4	1/8	0
	TD&C	0	11/16	1 5/16	1 13/16	2 3/16	2 7/16	2 1/2	2 7/16	2 3/16	1 13/16	1 5/16	11/16	0
	VCO	0	1 1/2	2 9/16	3 3/16	3 7/16	3 1/4	2 3/4	2 1/4	1 3/4	1 5/16	7/8	7/16	0
	TD&C + VCO	0	2 3/16	3 7/8	5	5 5/8	5 11/16	5 1/4	4 11/16	3 15/16	3 1/8	2 3/16	1 1/8	0
GIRDER 1A-3	DSL	0	1/8	1/4	3/8	7/16	1/2	1/2	1/2	7/16	3/8	1/4	1/8	0
	DLC	0	7/16	13/16	1 1/8	1 5/16	1 1/2	1 9/16	1 1/2	1 3/8	1 1/8	13/16	7/16	0
	SDL	0	1/8	1/4	5/16	3/8	7/16	7/16	7/16	3/8	5/16	1/4	1/8	0
	TD&C	0	11/16	1 5/16	1 13/16	2 1/8	2 7/16	2 1/2	2 7/16	2 3/16	1 13/16	1 5/16	11/16	0
	VCO	0	1 3/8	2 3/8	2 7/8	3 1/16	2 13/16	2 5/16	1 15/16	1 1/2	1 1/8	3/4	3/8	0
	TD&C + VCO	0	2 1/16	3 11/16	4 11/16	5 3/16	5 1/4	4 13/16	4 3/8	3 11/16	2 15/16	2 1/16	1 1/16	0
GIRDER 1A-4	DSL	0	1/8	1/4	3/8	7/16	1/2	1/2	1/2	7/16	3/8	1/4	1/8	0
	DLC	0	7/16	13/16	1 1/16	1 5/16	1 7/16	1 1/2	1 7/16	1 5/16	1 1/16	13/16	7/16	0
	SDL	0	1/8	1/4	3/8	7/16	1/2	1/2	1/2	7/16	3/8	1/4	1/8	0
	TD&C	0	11/16	1 5/16	1 13/16	2 3/16	2 7/16	2 1/2	2 7/16	2 3/16	1 13/16	1 5/16	11/16	0
	VCO	0	1 1/4	2 1/8	2 5/8	2 5/8	2 5/16	1 15/16	1 9/16	1 1/4	15/16	5/8	5/16	0
	TD&C + VCO	0	1 15/16	3 7/16	4 7/16	4 13/16	4 3/4	4 7/16	4	3 7/16	2 3/4	1 15/16	1	0

NOT FOR CONSTRUCTION

N:\31987-004\Control-I-95\CADD\Bridge\BR1-749_BM04.dgn
5/31/2019 12:14:33 PM

ADDENDA / REVISIONS		NO SCALE	REHABILITATION OF I-95 FROM I-495 TO NORTH OF BRANDYWINE RIVER BRIDGE	CONTRACT T201407404	BRIDGE NO. 1 749 6142	CAMBER DETAILS SPAN 1A	BM-04
				COUNTY NEW CASTLE	DESIGNED BY: DAN		SECTION WRA
					CHECKED BY: WAG		SHEET NO. 2-452C

STEEL GIRDER CAMBER NOTES:

1. ALL GIRDERS SHALL BE CAMBERED FOR DEAD LOAD ORDINATES TO THE DIMENSIONS SHOWN ON THESE PLANS. THE CAMBER TOLERANCE IS ZERO UNDER TO ¾ INCH OVER.
2. BEFORE THE DECK IS REMOVED, THE CONTRACTOR SHALL OBTAIN TOP OF DECK ELEVATIONS AT TENTH POINTS SHOWN OF ALL GIRDERS. AFTER THE DECK HAS BEEN REMOVED, THE CONTRACTOR SHALL OBTAIN ELEVATIONS AT THIRTEENTH POINTS SHOWN ON THE TOP FLANGES OF ALL GIRDERS TO DETERMINE THE GIRDER REBOUND AND REQUIRED HAUNCH THICKNESS. ALL THE DATA SHALL BE SUBMITTED WITH DETAILS OF STAY-IN-PLACE FORMS FOR REVIEW AND APPROVAL BY THE ENGINEER IN THE FIELD.
3. VARY THICKNESS OF HAUNCH TO ACCOUNT FOR ANY INACCURACIES IN CAMBER.
4. POSITIVE CAMBER VALUES IN THE TABLE INDICATE THE UPWARD DIRECTION.

LEGEND:

DSL = DENOTES DEFLECTION DUE TO STRUCTURAL STEEL

DLC = DENOTES DEFLECTION DUE TO CONCRETE SLAB, HAUNCH, & S.I.P. FORMS

SDL = DENOTES DEFLECTION DUE TO PARAPET, LMC OVERLAY & FUTURE WEARING SURFACE

TD&C= DENOTES TOTAL DEAD LOAD DEFLECTION & CAMBER

VCO = DENOTES CAMBER FOR VERTICAL CURVE ORDINATE DUE TO ROADWAY PROFILE

NOTES:

1. THE GIRDERS SHALL BE PLUMB UNDER FULL DEAD LOAD.
2. THERE SHALL BE NO FIELD WELDING TO THE TOP FLANGE, EXCEPT FOR SHEAR STUDS.

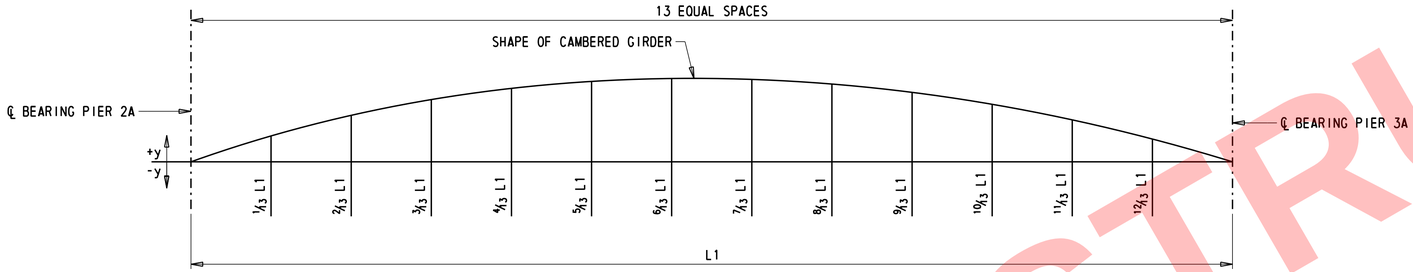

DEFLECTION AND TOTAL CAMBER (INCHES)

EXISTING GIRDERS		CL BRG. PIER 2A	1/13 L1	2/13 L1	3/13 L1	4/13 L1	5/13 L1	6/13 L1	7/13 L1	8/13 L1	9/13 L1	10/13 L1	11/13 L1	12/13 L1	CL BRG. PIER 3A
GIRDER 2A-1	DSL	0	1/4	7/16	5/8	3/4	7/8	15/16	1	15/16	7/8	11/16	1/2	5/16	0
	DLC	0	9/16	1 1/16	1 1/2	1 7/8	2 1/8	2 5/16	2 3/8	2 5/16	2 1/8	1 3/4	1 1/4	11/16	0
	SDL	0	3/16	3/8	9/16	11/16	13/16	7/8	7/8	7/8	13/16	11/16	1/2	1/4	0
	TD&C	0	1	1 7/8	2 11/16	3 5/16	3 13/16	4 1/8	4 1/4	4 1/8	3 13/16	3 1/8	2 1/4	1 1/4	0
	VCO	0	0	0	0	1/16	1/4	3/16	1/8	1/16	1/16	1/16	1/16	0	0
	TD&C + VCO	0	1	1 7/8	2 11/16	3 3/8	4 1/16	4 5/16	4 3/8	4 3/16	3 7/8	3 3/16	2 5/16	1 1/4	0
GIRDER 2A-2	DSL	0	1/4	7/16	5/8	3/4	7/8	15/16	1	15/16	7/8	11/16	1/2	5/16	0
	DLC	0	9/16	1	1 7/16	1 13/16	2 1/16	2 1/4	2 1/4	2 3/16	2	1 11/16	1 1/4	11/16	0
	SDL	0	3/16	5/16	7/16	9/16	5/8	11/16	11/16	11/16	5/8	1/2	3/8	3/16	0
	TD&C	0	1	1 3/4	2 1/2	3 1/8	3 9/16	3 7/8	3 15/16	3 13/16	3 1/2	2 7/8	2 1/8	1 3/16	0
	VCO	0	0	0	0	1/16	1/4	3/16	1/8	1/8	1/16	1/16	1/16	0	0
	TD&C + VCO	0	1	1 3/4	2 1/2	3 3/16	3 13/16	4 1/16	4 1/16	3 15/16	3 9/16	2 15/16	2 3/16	1 3/16	0
GIRDER 2A-3	DSL	0	1/4	7/16	5/8	3/4	7/8	15/16	1	15/16	7/8	3/4	1/2	5/16	0
	DLC	0	1/2	1	1 3/8	1 3/4	2	2 1/8	2 3/16	2 1/8	1 15/16	1 5/8	1 3/16	5/8	0
	SDL	0	3/16	5/16	7/16	9/16	5/8	11/16	11/16	11/16	5/8	1/2	3/8	3/16	0
	TD&C	0	15/16	1 3/4	2 7/16	3 1/16	3 1/2	3 3/4	3 7/8	3 3/4	3 7/16	2 7/8	2 1/16	1 1/8	0
	VCO	0	0	0	1/16	1/16	1/4	3/16	1/8	1/8	1/16	1/16	1/16	0	0
	TD&C + VCO	0	15/16	1 3/4	2 1/2	3 1/8	3 3/4	3 15/16	4	3 7/8	3 1/2	2 15/16	2 1/8	1 1/8	0
GIRDER 2A-4	DSL	0	1/4	7/16	5/8	3/4	7/8	15/16	1	15/16	7/8	3/4	1/2	5/16	0
	DLC	0	1/2	15/16	1 5/16	1 5/8	1 7/8	2 1/16	2 1/8	2 1/16	1 7/8	1 9/16	1 1/8	5/8	0
	SDL	0	1/4	7/16	9/16	3/4	7/8	15/16	15/16	15/16	13/16	11/16	1/2	1/4	0
	TD&C	0	1	1 13/16	2 1/2	3 1/8	3 5/8	3 15/16	4 1/16	3 15/16	3 9/16	3	2 1/8	1 3/16	0
	VCO	0	0	0	1/16	1/8	1/4	3/16	3/16	1/8	1/8	1/16	1/16	0	0
	TD&C + VCO	0	1	1 13/16	2 9/16	3 1/4	3 7/8	4 1/8	4 1/4	4 1/16	3 11/16	3 1/16	2 3/16	1 3/16	0

NOT FOR CONSTRUCTION

N:\31987-004\Contract I-95\CADD\Bridge\BR1-749_BM05.dgn
5/31/2019 12:14:33 PM

ADDENDA / REVISIONS		NO SCALE	REHABILITATION OF I-95 FROM I-495 TO NORTH OF BRANDYWINE RIVER BRIDGE	CONTRACT T201407404	BRIDGE NO. 1 749 6142	CAMBER DETAILS SPAN 2A	BM-05
				COUNTY NEW CASTLE	DESIGNED BY: DAN		SECTION WRA
					CHECKED BY: WAG		SHEET NO. 2-452D

STEEL GIRDER CAMBER NOTES:

1. ALL GIRDERS SHALL BE CAMBERED FOR DEAD LOAD ORDINATES TO THE DIMENSIONS SHOWN ON THESE PLANS. THE CAMBER TOLERANCE IS ZERO UNDER TO ¾ INCH OVER.
2. BEFORE THE DECK IS REMOVED, THE CONTRACTOR SHALL OBTAIN TOP OF DECK ELEVATIONS AT TENTH POINTS SHOWN OF ALL GIRDERS. AFTER THE DECK HAS BEEN REMOVED, THE CONTRACTOR SHALL OBTAIN ELEVATIONS AT TENTH POINTS SHOWN ON THE TOP FLANGES OF ALL GIRDERS TO DETERMINE THE GIRDER REBOUND AND REQUIRED HAUNCH THICKNESS. ALL THE DATA SHALL BE SUBMITTED WITH DETAILS OF STAY-IN-PLACE FORMS FOR REVIEW AND APPROVAL BY THE ENGINEER IN THE FIELD.
3. VARY THICKNESS OF HAUNCH TO ACCOUNT FOR ANY INACCURACIES IN CAMBER.
4. POSITIVE CAMBER VALUES IN THE TABLE INDICATE THE UPWARD DIRECTION.

LEGEND:

DSL = DENOTES DEFLECTION DUE TO STRUCTURAL STEEL

DLC = DENOTES DEFLECTION DUE TO CONCRETE SLAB, HAUNCH, & S.I.P. FORMS

SDL = DENOTES DEFLECTION DUE TO PARAPET, LMC OVERLAY & FUTURE WEARING SURFACE

TD&C= DENOTES TOTAL DEAD LOAD DEFLECTION & CAMBER

VCO = DENOTES CAMBER FOR VERTICAL CURVE ORDINATE DUE TO ROADWAY PROFILE

NOTES:

1. THE GIRDERS SHALL BE PLUMB UNDER FULL DEAD LOAD.
2. THERE SHALL BE NO FIELD WELDING TO THE TOP FLANGE, EXCEPT FOR SHEAR STUDS.

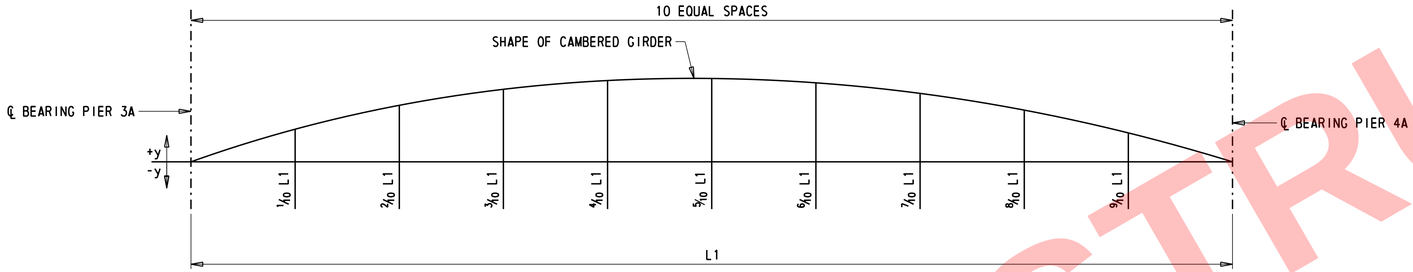

DEFLECTION AND TOTAL CAMBER (INCHES)

EXISTING GIRDERS		CL BRG. PIER 3A	1/10 L1	2/10 L1	3/10 L1	4/10 L1	5/10 L1	6/10 L1	7/10 L1	8/10 L1	9/10 L1	CL BRG. PIER 4A
GIRDER 3A-1	DSL	0	1/8	1/4	5/16	3/8	3/8	3/8	5/16	1/4	1/8	0
	DLC	0	1/2	7/8	1 3/16	1 5/16	1 3/8	1 5/16	1 3/16	7/8	1/2	0
	SDL	0	1/8	3/16	1/4	5/16	5/16	5/16	1/4	3/16	1/8	0
	TD&C	0	3/4	1 5/16	1 3/4	2	2 1/16	2	1 3/4	1 5/16	3/4	0
	VCO	0	1/16	1/16	1/16	1/16	1/16	1/16	0	0	0	0
	TD&C + VCO	0	13/16	1 3/8	1 13/16	2 1/16	2 1/8	2 1/16	1 3/4	1 5/16	3/4	0
GIRDER 3A-2	DSL	0	1/8	1/4	5/16	3/8	3/8	3/8	5/16	1/4	1/8	0
	DLC	0	1/2	7/8	1 1/8	1 5/16	1 3/8	1 5/16	1 1/8	7/8	1/2	0
	SDL	0	1/16	1/8	3/16	1/4	1/4	1/4	3/16	1/8	1/16	0
	TD&C	0	11/16	1 1/4	1 5/8	1 15/16	2	1 15/16	1 5/8	1 1/4	11/16	0
	VCO	0	0	0	0	0	0	0	0	0	0	0
	TD&C + VCO	0	11/16	1 1/4	1 5/8	1 15/16	2	1 15/16	1 5/8	1 1/4	11/16	0
GIRDER 3A-3	DSL	0	1/8	1/4	5/16	3/8	3/8	3/8	5/16	1/4	1/8	0
	DLC	0	1/2	7/8	1 1/8	1 1/4	1 5/16	1 1/4	1 1/8	7/8	1/2	0
	SDL	0	1/16	1/8	3/16	1/4	1/4	1/4	3/16	1/8	1/16	0
	TD&C	0	11/16	1 1/4	1 5/8	1 7/8	1 15/16	1 7/8	1 5/8	1 1/4	11/16	0
	VCO	0	0	0	0	0	0	0	0	0	0	0
	TD&C + VCO	0	11/16	1 1/4	1 5/8	1 7/8	1 15/16	1 7/8	1 5/8	1 1/4	11/16	0
GIRDER 3A-4	DSL	0	1/8	1/4	5/16	3/8	3/8	3/8	5/16	1/4	1/8	0
	DLC	0	7/16	13/16	1 1/16	1 3/16	1 1/4	1 3/16	1 1/16	13/16	7/16	0
	SDL	0	1/8	3/16	1/4	5/16	5/16	5/16	1/4	3/16	1/8	0
	TD&C	0	11/16	1 1/4	1 5/8	1 7/8	1 15/16	1 7/8	1 5/8	1 1/4	11/16	0
	VCO	0	0	0	0	0	0	0	0	0	0	0
	TD&C + VCO	0	11/16	1 1/4	1 5/8	1 7/8	1 15/16	1 7/8	1 5/8	1 1/4	11/16	0

NOT FOR CONSTRUCTION

N:\31987-004\Control_I-95\CADD\Bridge\BR1-749_BM02.dgn
5/31/2019 12:14:34 PM

ADDENDA / REVISIONS		NO SCALE	REHABILITATION OF I-95 FROM I-495 TO NORTH OF BRANDYWINE RIVER BRIDGE	CONTRACT T201407404	BRIDGE NO. 1 749 6142	CAMBER DETAILS SPAN 3A	BM-06
				COUNTY NEW CASTLE	DESIGNED BY: DAN		SECTION WRA
					CHECKED BY: WAG		SHEET NO. 2-452E

STEEL GIRDER CAMBER NOTES:

1. ALL GIRDERS SHALL BE CAMBERED FOR DEAD LOAD ORDINATES TO THE DIMENSIONS SHOWN ON THESE PLANS. THE CAMBER TOLERANCE IS ZERO UNDER TO ¾ INCH OVER.
2. BEFORE THE DECK IS REMOVED, THE CONTRACTOR SHALL OBTAIN TOP OF DECK ELEVATIONS AT TENTH POINTS SHOWN OF ALL GIRDERS. AFTER THE DECK HAS BEEN REMOVED, THE CONTRACTOR SHALL OBTAIN ELEVATIONS AT TENTH POINTS SHOWN ON THE TOP FLANGES OF ALL GIRDERS TO DETERMINE THE GIRDER REBOUND AND REQUIRED HAUNCH THICKNESS. ALL THE DATA SHALL BE SUBMITTED WITH DETAILS OF STAY-IN-PLACE FORMS FOR REVIEW AND APPROVAL BY THE ENGINEER IN THE FIELD.
3. VARY THICKNESS OF HAUNCH TO ACCOUNT FOR ANY INACCURACIES IN CAMBER.
4. POSITIVE CAMBER VALUES IN THE TABLE INDICATE THE UPWARD DIRECTION.

LEGEND:

DSL = DENOTES DEFLECTION DUE TO STRUCTURAL STEEL

DLC = DENOTES DEFLECTION DUE TO CONCRETE SLAB, HAUNCH, & S.I.P. FORMS

SDL = DENOTES DEFLECTION DUE TO PARAPET, LMC OVERLAY & FUTURE WEARING SURFACE

TD&C= DENOTES TOTAL DEAD LOAD DEFLECTION & CAMBER

VCO = DENOTES CAMBER FOR VERTICAL CURVE ORDINATE DUE TO ROADWAY PROFILE

NOTES:

1. THE GIRDERS SHALL BE PLUMB UNDER FULL DEAD LOAD.
2. THERE SHALL BE NO FIELD WELDING TO THE TOP FLANGE, EXCEPT FOR SHEAR STUDS.

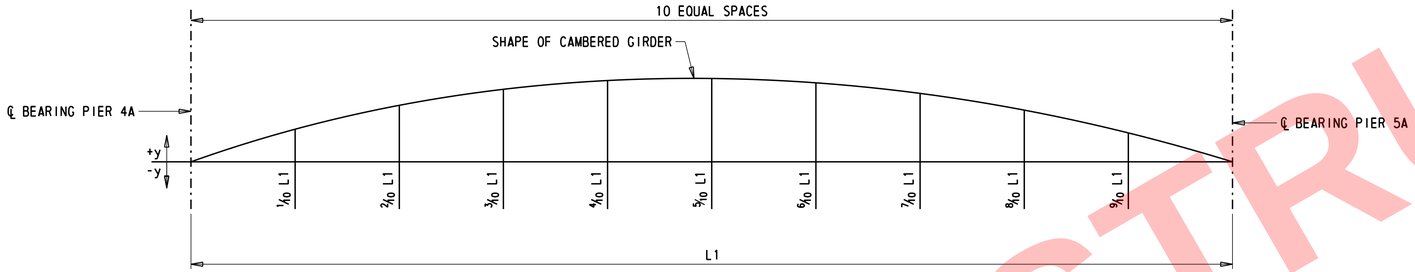

DEFLECTION AND TOTAL CAMBER (INCHES)

EXISTING GIRDERS		CL BRG. PIER 4A	1/10 L1	2/10 L1	3/10 L1	4/10 L1	5/10 L1	6/10 L1	7/10 L1	8/10 L1	9/10 L1	CL BRG. PIER 5A
GIRDER 4A-W1	DSL	0	1/8	1/4	5/16	5/16	3/8	5/16	5/16	1/4	1/8	0
	DLC	0	5/16	9/16	3/4	7/8	7/8	7/8	3/4	9/16	5/16	0
	SDL	0	1/8	1/4	5/16	3/8	3/8	3/8	5/16	1/4	1/8	0
	TD&C	0	9/16	1 1/16	1 3/8	1 9/16	1 5/8	1 9/16	1 3/8	1 1/16	9/16	0
	VCO	0	3/16	3/8	1/2	5/8	3/4	11/16	9/16	3/8	3/16	0
	TD&C + VCO	0	3/4	1 7/16	1 7/8	2 3/16	2 3/8	2 1/4	1 15/16	1 7/16	3/4	0
GIRDER 4A-1	DSL	0	1/8	1/4	5/16	5/16	3/8	5/16	5/16	1/4	1/8	0
	DLC	0	3/8	5/8	13/16	15/16	1	15/16	13/16	5/8	3/8	0
	SDL	0	1/8	3/16	1/4	1/4	1/4	1/4	1/4	3/16	1/8	0
	TD&C	0	5/8	1 1/16	1 3/8	1 1/2	1 5/8	1 1/2	1 3/8	1 1/16	5/8	0
	VCO	0	1/8	5/16	3/8	1/2	5/8	9/16	7/16	5/16	3/16	0
	TD&C + VCO	0	3/4	1 3/8	1 3/4	2	2 1/4	2 1/16	1 13/16	1 3/8	13/16	0
GIRDER 4A-2	DSL	0	1/8	1/4	5/16	5/16	3/8	5/16	5/16	1/4	1/8	0
	DLC	0	3/8	11/16	7/8	1	1 1/16	1 1/16	15/16	11/16	3/8	0
	SDL	0	1/16	1/8	3/16	3/16	3/16	3/16	1/8	1/8	1/16	0
	TD&C	0	9/16	1 1/16	1 3/8	1 1/2	1 5/8	1 9/16	1 3/8	1 1/16	9/16	0
	VCO	0	1/16	3/16	1/4	3/8	7/16	3/8	5/16	3/16	1/8	0
	TD&C + VCO	0	5/8	1 1/4	1 5/8	1 7/8	2 1/16	1 15/16	1 11/16	1 1/4	11/16	0
GIRDER 4A-3	DSL	0	1/8	1/4	5/16	5/16	3/8	5/16	5/16	1/4	1/8	0
	DLC	0	7/16	3/4	1	1 1/8	1 3/16	1 1/8	1	3/4	7/16	0
	SDL	0	1/16	1/8	3/16	3/16	3/16	3/16	3/16	1/8	1/16	0
	TD&C	0	5/8	1 1/8	1 1/2	1 5/8	1 3/4	1 5/8	1 1/2	1 1/8	5/8	0
	VCO	0	1/16	3/16	1/4	5/16	7/16	3/8	5/16	3/16	1/8	0
	TD&C + VCO	0	11/16	1 5/16	1 3/4	1 15/16	2 3/16	2	1 13/16	1 5/16	3/4	0
GIRDER 4A-4	DSL	0	1/8	1/4	5/16	5/16	5/16	5/16	5/16	3/16	1/8	0
	DLC	0	7/16	3/4	1	1 1/8	1 3/16	1 1/8	1	3/4	7/16	0
	SDL	0	1/8	3/16	5/16	5/16	5/16	5/16	5/16	3/16	1/8	0
	TD&C	0	11/16	1 3/16	1 5/8	1 3/4	1 13/16	1 3/4	1 5/8	1 1/8	11/16	0
	VCO	0	1/16	3/16	1/4	5/16	7/16	3/8	5/16	3/16	1/8	0
	TD&C + VCO	0	3/4	1 3/8	1 7/8	2 1/16	2 1/4	2 1/8	1 15/16	1 5/16	13/16	0

NOT FOR CONSTRUCTION

N:\31987-004\Contract I-95\CADD\Bridge\BR1-749_BM06.dgn
5/31/2019 12:14:35 PM

ADDENDA / REVISIONS	

NO SCALE

REHABILITATION OF I-95 FROM I-495 TO NORTH OF BRANDYWINE RIVER BRIDGE

CONTRACT	BRIDGE NO. 1 749 6142
T201407404	DESIGNED BY: DAN
COUNTY: NEW CASTLE	CHECKED BY: WAG

CAMBER DETAILS SPAN 4A

BM-07

SECTION	SHEET NO.
WRA	2-452F

STEEL GIRDER CAMBER NOTES:

1. ALL GIRDERS SHALL BE CAMBERED FOR DEAD LOAD ORDINATES TO THE DIMENSIONS SHOWN ON THESE PLANS. THE CAMBER TOLERANCE IS ZERO UNDER TO ¾ INCH OVER.
2. BEFORE THE DECK IS REMOVED, THE CONTRACTOR SHALL OBTAIN TOP OF DECK ELEVATIONS AT TENTH POINTS SHOWN OF ALL GIRDERS. AFTER THE DECK HAS BEEN REMOVED, THE CONTRACTOR SHALL OBTAIN ELEVATIONS AT TENTH POINTS SHOWN ON THE TOP FLANGES OF ALL GIRDERS TO DETERMINE THE GIRDER REBOUND AND REQUIRED HAUNCH THICKNESS. ALL THE DATA SHALL BE SUBMITTED WITH DETAILS OF STAY-IN-PLACE FORMS FOR REVIEW AND APPROVAL BY THE ENGINEER IN THE FIELD.
3. VARY THICKNESS OF HAUNCH TO ACCOUNT FOR ANY INACCURACIES IN CAMBER.
4. POSITIVE CAMBER VALUES IN THE TABLE INDICATE THE UPWARD DIRECTION.

LEGEND:

DSL = DENOTES DEFLECTION DUE TO STRUCTURAL STEEL

DLC = DENOTES DEFLECTION DUE TO CONCRETE SLAB, HAUNCH, & S.I.P. FORMS

SDL = DENOTES DEFLECTION DUE TO PARAPET, LMC OVERLAY & FUTURE WEARING SURFACE

TD&C= DENOTES TOTAL DEAD LOAD DEFLECTION & CAMBER

VCO = DENOTES CAMBER FOR VERTICAL CURVE ORDINATE DUE TO ROADWAY PROFILE

NOTES:

1. THE GIRDERS SHALL BE PLUMB UNDER FULL DEAD LOAD.
2. THERE SHALL BE NO FIELD WELDING TO THE TOP FLANGE, EXCEPT FOR SHEAR STUDS.

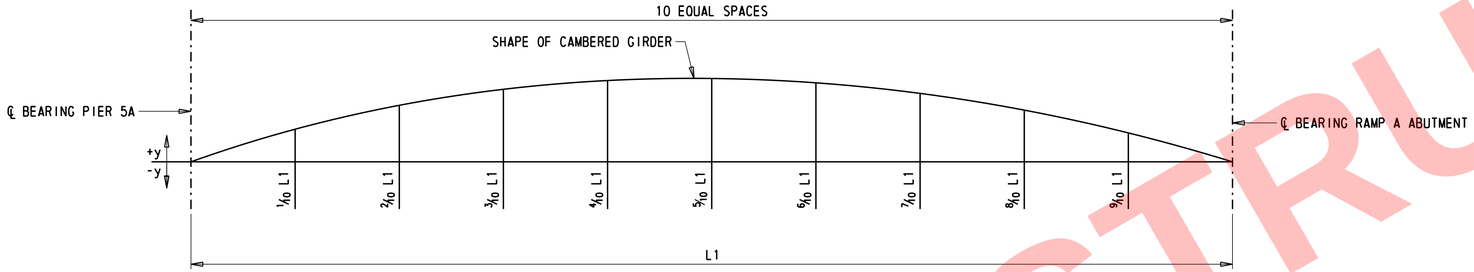

DEFLECTION AND TOTAL CAMBER (INCHES)

EXISTING GIRDERS		CL BRG. PIER 5A	1/10 L1	2/10 L1	3/10 L1	4/10 L1	5/10 L1	6/10 L1	7/10 L1	8/10 L1	9/10 L1	CL BRG. RAMP A ABT.
GIRDER 5A-W1	DSL	0	1/8	1/4	5/16	5/16	3/8	5/16	5/16	1/4	1/8	0
	DLC	0	5/16	9/16	3/4	13/16	7/8	7/8	3/4	9/16	5/16	0
	SDL	0	3/16	1/4	3/8	7/16	7/16	7/16	3/8	5/16	3/16	0
	TD&C	0	5/8	1 1/16	1 7/16	1 9/16	1 11/16	1 5/8	1 7/16	1 1/8	5/8	0
	VCO	0	0	0	0	0	0	0	0	0	0	0
	TD&C + VCO	0	5/8	1 1/16	1 7/16	1 9/16	1 11/16	1 5/8	1 7/16	1 1/8	5/8	0
GIRDER 5A-W2	DSL	0	1/8	1/4	5/16	5/16	3/8	5/16	5/16	1/4	1/8	0
	DLC	0	3/8	5/8	13/16	15/16	1	15/16	7/8	5/8	3/8	0
	SDL	0	1/8	3/16	1/4	5/16	5/16	5/16	1/4	3/16	1/8	0
	TD&C	0	5/8	1 1/16	1 3/8	1 9/16	1 11/16	1 9/16	1 7/16	1 1/16	5/8	0
	VCO	0	0	0	0	0	0	0	0	0	0	0
	TD&C + VCO	0	5/8	1 1/16	1 3/8	1 9/16	1 11/16	1 9/16	1 7/16	1 1/16	5/8	0
GIRDER 5A-1	DSL	0	1/8	1/4	5/16	5/16	3/8	5/16	5/16	1/4	1/8	0
	DLC	0	3/8	11/16	15/16	1 1/16	1 1/8	1 1/16	15/16	3/4	7/16	0
	SDL	0	1/16	1/8	1/8	3/16	3/16	3/16	1/8	1/8	1/16	0
	TD&C	0	9/16	1 1/16	1 3/8	1 9/16	1 11/16	1 9/16	1 3/8	1 1/8	5/8	0
	VCO	0	0	0	0	0	0	0	0	0	0	0
	TD&C + VCO	0	9/16	1 1/16	1 3/8	1 9/16	1 11/16	1 9/16	1 3/8	1 1/8	5/8	0
GIRDER 5A-2	DSL	0	1/8	1/4	5/16	5/16	3/8	5/16	5/16	1/4	1/8	0
	DLC	0	7/16	13/16	1 1/16	1 3/16	1 1/4	1 3/16	1 1/16	13/16	7/16	0
	SDL	0	1/16	1/16	1/8	1/8	1/8	1/8	1/8	1/16	1/16	0
	TD&C	0	5/8	1 1/8	1 1/2	1 5/8	1 3/4	1 5/8	1 1/2	1 1/8	5/8	0
	VCO	0	0	0	0	0	0	0	0	0	0	0
	TD&C + VCO	0	5/8	1 1/8	1 1/2	1 5/8	1 3/4	1 5/8	1 1/2	1 1/8	5/8	0
GIRDER 5A-3	DSL	0	1/8	1/4	5/16	5/16	3/8	5/16	5/16	1/4	1/8	0
	DLC	0	7/16	13/16	1 1/16	1 3/16	1 1/4	1 3/16	1 1/16	13/16	7/16	0
	SDL	0	1/16	1/8	3/16	3/16	3/16	3/16	3/16	1/8	1/16	0
	TD&C	0	5/8	1 3/16	1 9/16	1 11/16	1 13/16	1 11/16	1 9/16	1 3/16	5/8	0
	VCO	0	0	0	0	0	0	0	0	0	0	0
	TD&C + VCO	0	5/8	1 3/16	1 9/16	1 11/16	1 13/16	1 11/16	1 9/16	1 3/16	5/8	0
GIRDER 5A-4	DSL	0	1/8	1/4	5/16	5/16	3/8	5/16	5/16	1/4	1/8	0
	DLC	0	7/16	3/4	1	1 1/8	1 3/16	1 1/8	1	3/4	7/16	0
	SDL	0	1/8	1/4	5/16	3/8	3/8	3/8	5/16	1/4	1/8	0
	TD&C	0	11/16	1 1/4	1 5/16	1 13/16	1 15/16	1 13/16	1 5/8	1 1/4	11/16	0
	VCO	0	0	0	0	0	0	0	0	0	0	0
	TD&C + VCO	0	11/16	1 1/4	1 5/16	1 13/16	1 15/16	1 13/16	1 5/8	1 1/4	11/16	0

NOT FOR CONSTRUCTION

N:\31987-004\Control-I-95\CADD\Bridge\BR1-749_BM07.dgn
5/31/2019 12:14:36 PM

ADDENDA / REVISIONS		NO SCALE	REHABILITATION OF I-95 FROM I-495 TO NORTH OF BRANDYWINE RIVER BRIDGE	CONTRACT T201407404	BRIDGE NO. 1 749 6142	CAMBER DETAILS SPAN 5A	BM-08 SECTION WRA
				COUNTY NEW CASTLE	DESIGNED BY: DAN		SHEET NO. 2-452G
					CHECKED BY: WAG		

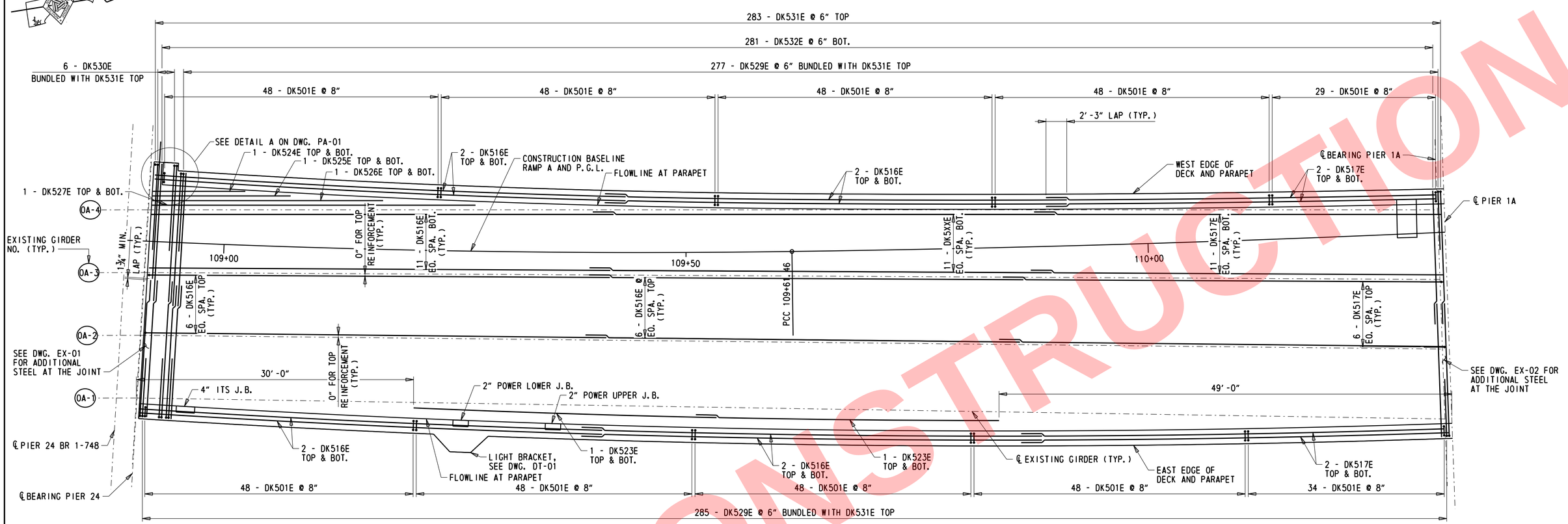

DECK SLAB REINFORCEMENT PLAN - SPAN 0A

1/16" = 1'-0"

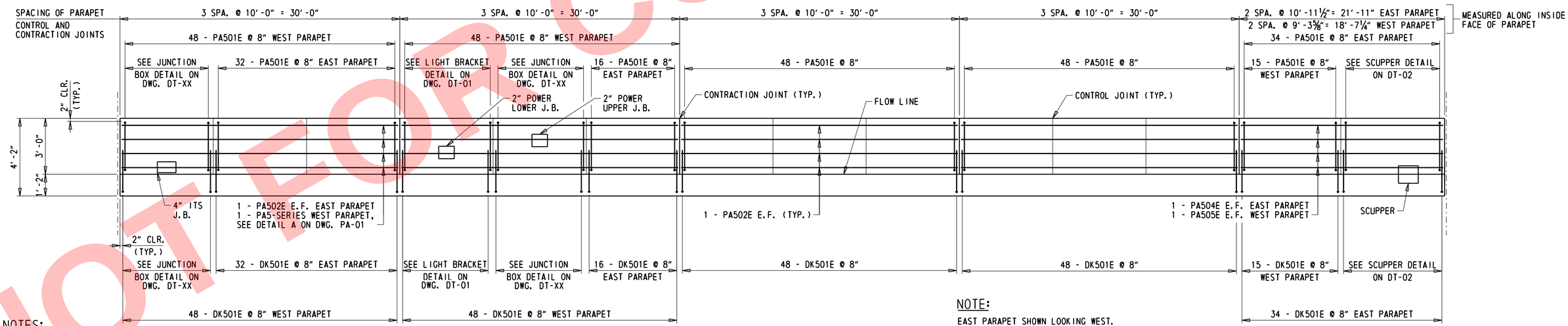

PARAPET REINFORCEMENT DEVELOPED ELEVATION - SPAN 0A

HORIZONTAL - 1/16" = 1'-0"
VERTICAL - 3/8" = 1'-0"

NOTE:
EAST PARAPET SHOWN LOOKING WEST.
WEST PARAPET SIMILAR.

NOTES:
1. FOR ADDITIONAL DECK SLAB AND PARAPET REINFORCEMENT DETAILS, SEE TYPICAL SECTION DWG. NO. DK-07.
2. FOR JOINT REINFORCEMENT DETAILS, SEE DWGS. EX-01 AND EX-02.

NOT FOR CONSTRUCTION

ADDENDA / REVISIONS	SCALE AS NOTED	REHABILITATION OF I-95 FROM I-495 TO NORTH OF BRANDYWINE RIVER BRIDGE	CONTRACT T201407404	BRIDGE NO. 1 749 6142	DECK SLAB AND PARAPET REINFORCEMENT SPAN 0A	DK-01
			COUNTY NEW CASTLE	DESIGNED BY: DAN		SECTION WRA
				CHECKED BY: WAG		SHEET NO. 453

N:\31987-00A\Cont\cst_I-95\CADD\Bridge\BR1-749_DK01.dgn
5/31/2019 12:14:37 PM

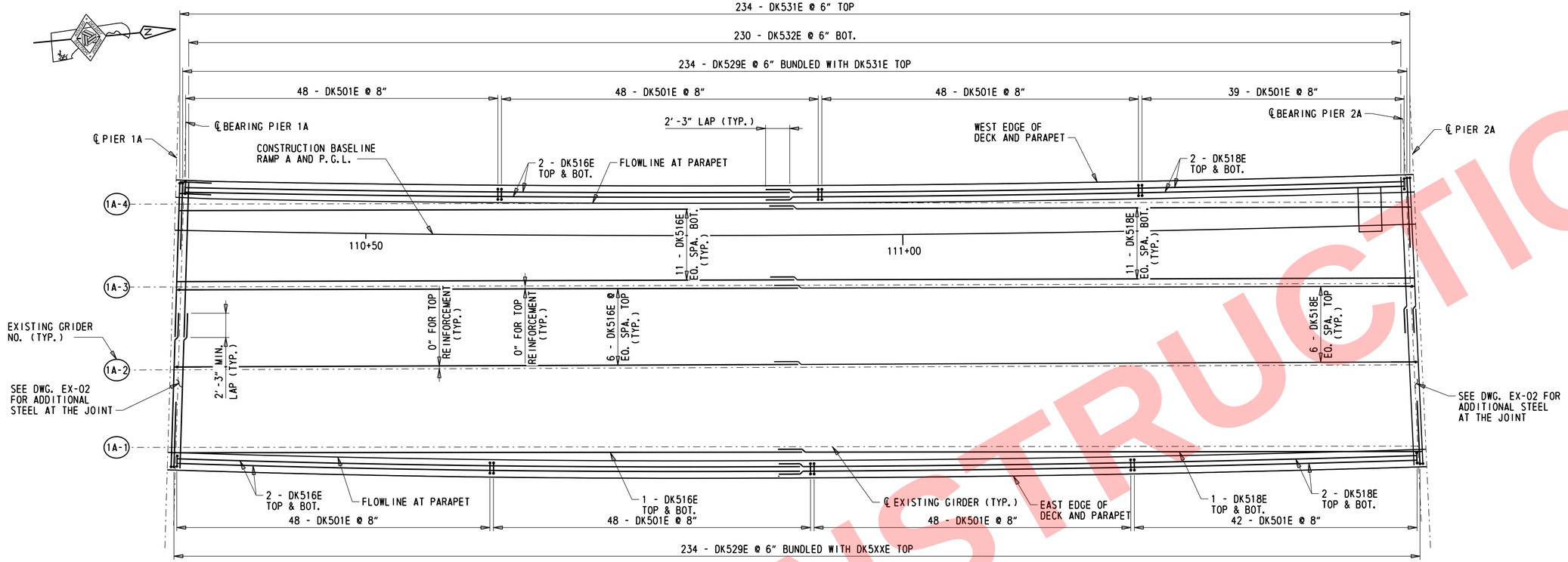

DECK SLAB REINFORCEMENT PLAN - SPAN 1A

1/16" = 1'-0"

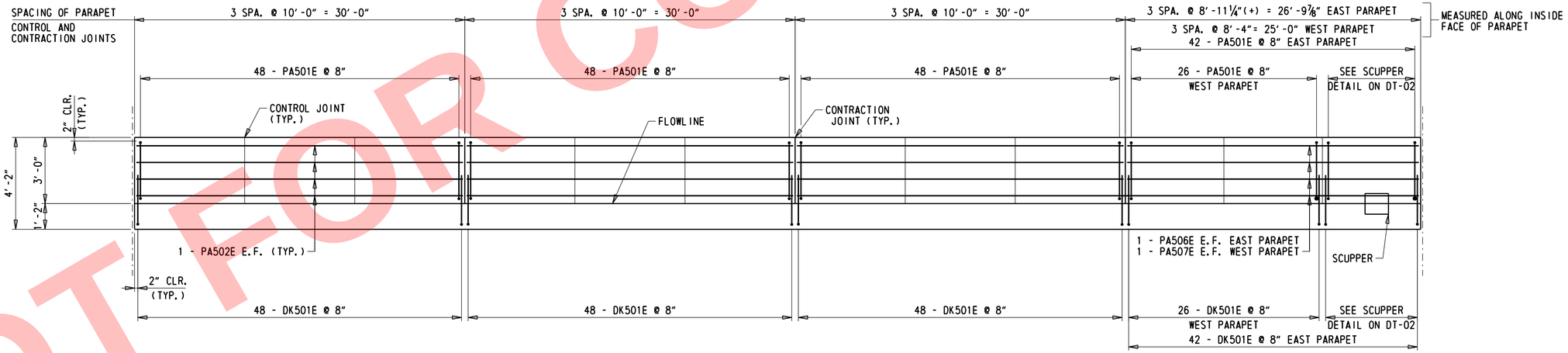

PARAPET REINFORCEMENT DEVELOPED ELEVATION - SPAN 1A

HORIZONTAL - 1/16" = 1'-0"
VERTICAL - 3/8" = 1'-0"

NOTES:

1. FOR ADDITIONAL DECK SLAB AND PARAPET REINFORCEMENT DETAILS, SEE TYPICAL SECTION DWG. NO. DK-07.
2. FOR JOINT REINFORCEMENT DETAILS, SEE DWGS. EX-01 AND EX-02.

NOTE:

EAST PARAPET SHOWN LOOKING WEST.
WEST PARAPET SIMILAR.

NOT FOR CONSTRUCTION

N:\31987-004\Contract_I-95\CADD\Bridge\BR1-749_DK02.dgn
5/31/2019 12:14:38 PM

ADDENDA / REVISIONS	SCALE AS NOTED	REHABILITATION OF I-95 FROM I-495 TO NORTH OF BRANDYWINE RIVER BRIDGE	CONTRACT T201407404	BRIDGE NO. 1 749 6142	DECK SLAB AND PARAPET REINFORCEMENT SPAN 1A	DK-02
			COUNTY NEW CASTLE	DESIGNED BY: DAN		SECTION WRA
				CHECKED BY: WAG		SHEET NO. 454

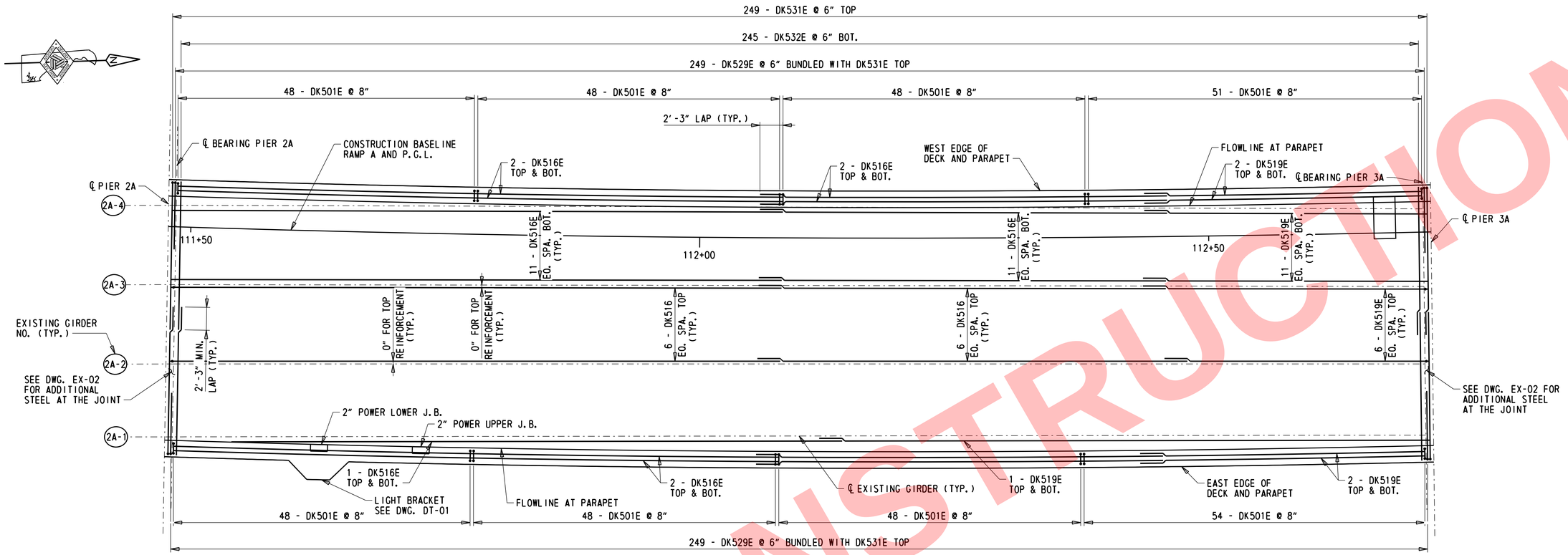

DECK SLAB REINFORCEMENT PLAN - SPAN 2A

1/16" = 1'-0"

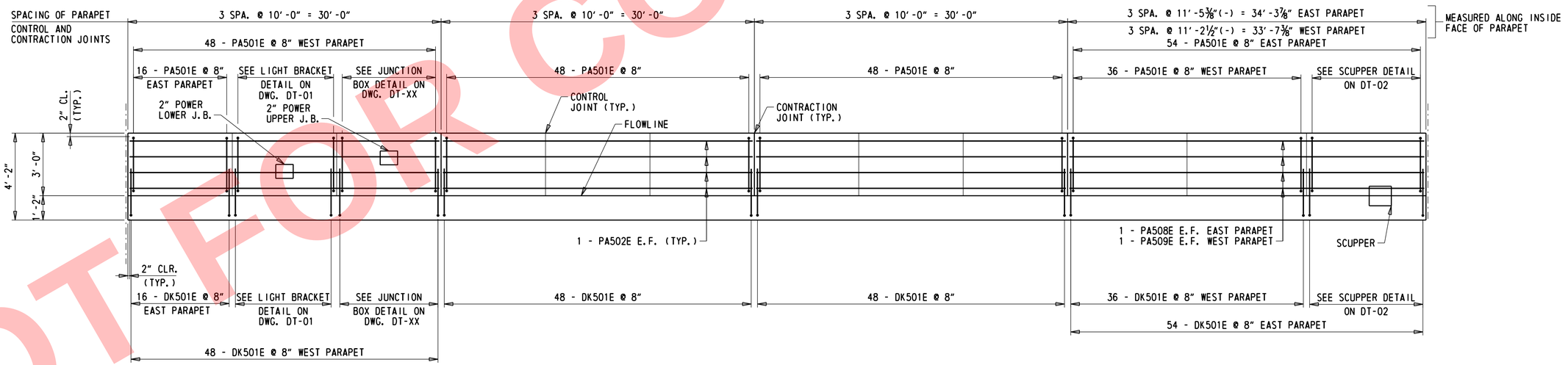

NOTES:

1. FOR ADDITIONAL DECK SLAB AND PARAPET REINFORCEMENT DETAILS, SEE TYPICAL SECTION DWG. NO. DK-07.
2. FOR JOINT REINFORCEMENT DETAILS, SEE DWGS. EX-01 AND EX-02.

NOTE:

LIGHT BRACKET NOT SHOWN FOR CLARITY, SEE DWG. DT-01.

PARAPET REINFORCEMENT DEVELOPED ELEVATION - SPAN 2A

HORIZONTAL - 1/4" = 1'-0"
VERTICAL - 3/8" = 1'-0"

NOTE:

EAST PARAPET SHOWN LOOKING WEST.
WEST PARAPET SIMILAR.

NOT FOR CONSTRUCTION

N:\31987-004\Contract I-95\CADD\Bridge\BR1-749_DK03.dgn
5/31/2019 12:04:39 PM

ADDENDA / REVISIONS	SCALE AS NOTED	REHABILITATION OF I-95 FROM I-495 TO NORTH OF BRANDYWINE RIVER BRIDGE	CONTRACT T201407404	BRIDGE NO. 1 749 6142	DECK SLAB AND PARAPET REINFORCEMENT SPAN 2A	DK-03
			COUNTY NEW CASTLE	DESIGNED BY: DAN		SECTION WRA
				CHECKED BY: WAG		SHEET NO. 455

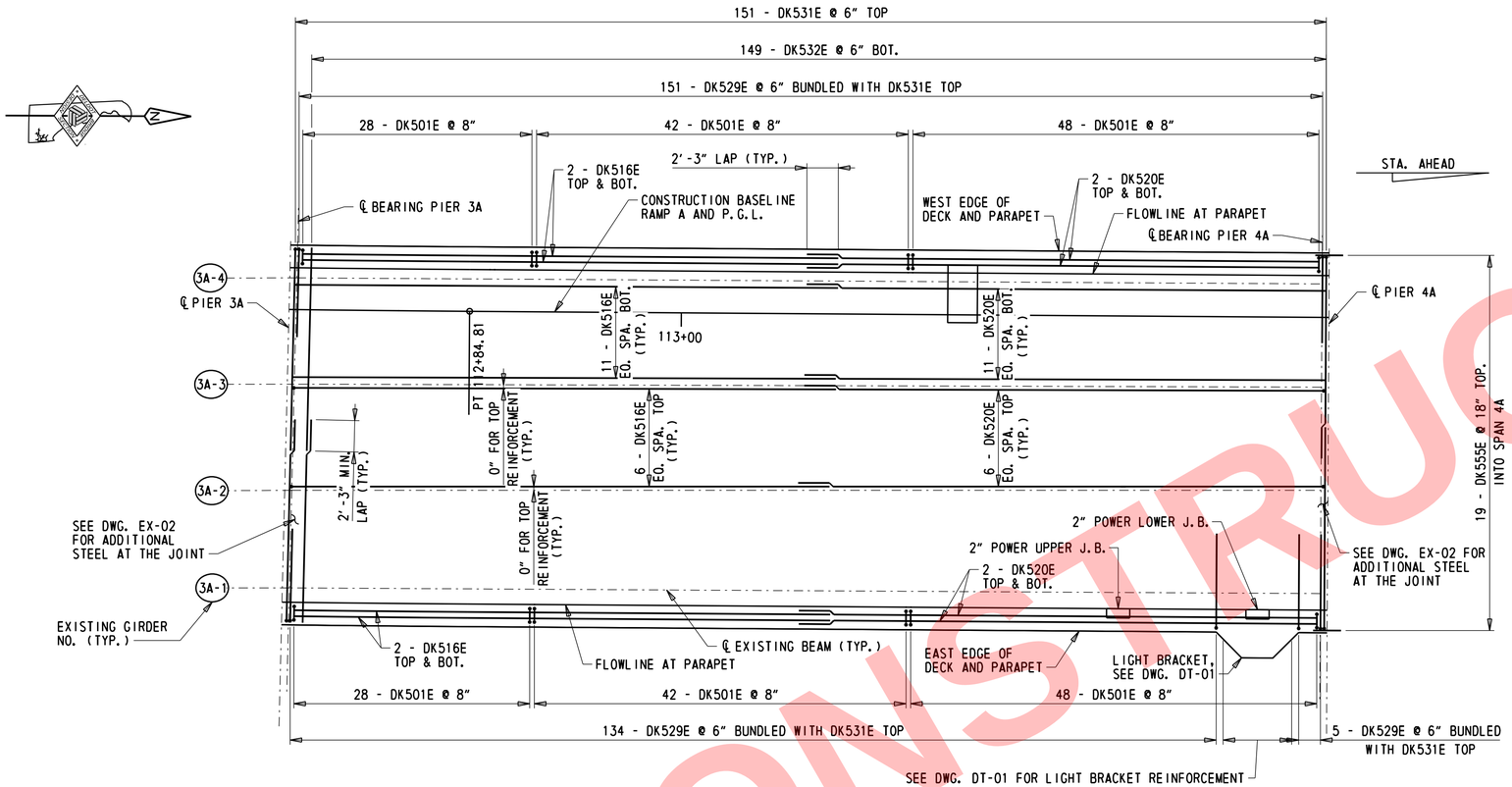

DECK SLAB REINFORCEMENT PLAN - SPAN 3A

1/8" = 1'-0"

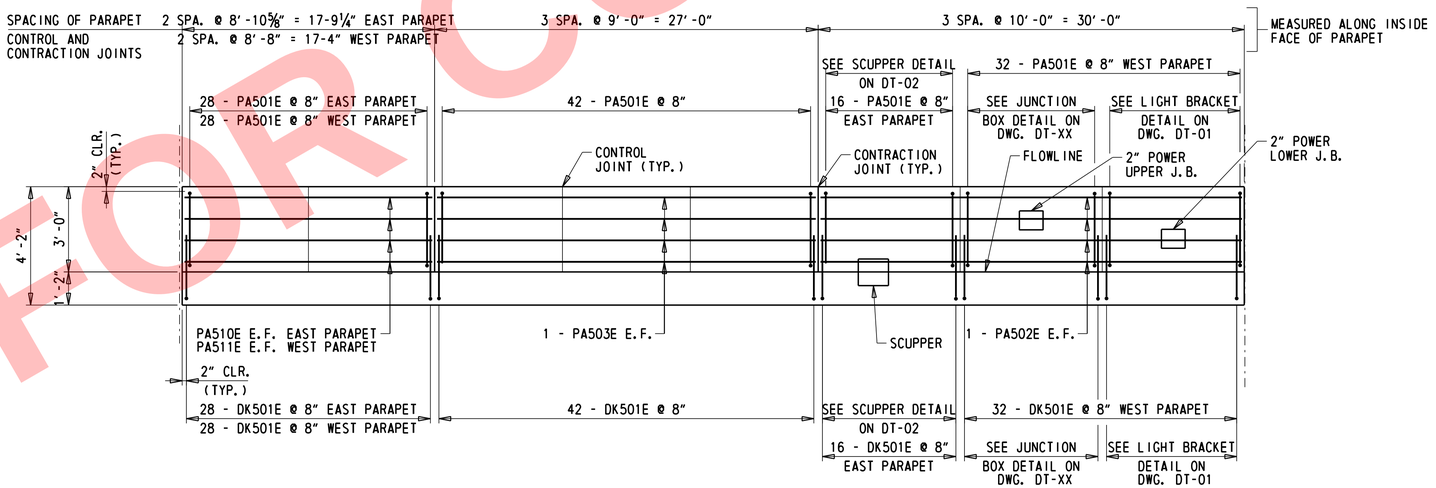

PARAPET REINFORCEMENT DEVELOPED ELEVATION - SPAN 3A

HORIZONTAL - 1/8" = 1'-0"
VERTICAL - 3/8" = 1'-0"

NOTES:

1. FOR ADDITIONAL DECK SLAB AND PARAPET REINFORCEMENT DETAILS, SEE TYPICAL SECTION DWG. NO. DK-07.
2. FOR JOINT REINFORCEMENT DETAILS, SEE DWGS. EX-01 AND EX-02.

NOTE:

EAST PARAPET SHOWN LOOKING WEST. WEST PARAPET SIMILAR.

NOT FOR CONSTRUCTION

ADDENDA / REVISIONS	SCALE AS NOTED	REHABILITATION OF I-95 FROM I-495 TO NORTH OF BRANDYWINE RIVER BRIDGE	CONTRACT T201407404	BRIDGE NO. 1 749 6142	DECK SLAB AND PARAPET REINFORCEMENT SPAN 3A	DK-04
			COUNTY NEW CASTLE	DESIGNED BY: DAN		SECTION WRA
				CHECKED BY: WAG		SHEET NO. 456

N:\31987-004\Contract\I-95\CADD\Bridge\BR1-749_DK04.dgn
5/31/2019 12:14:40 PM

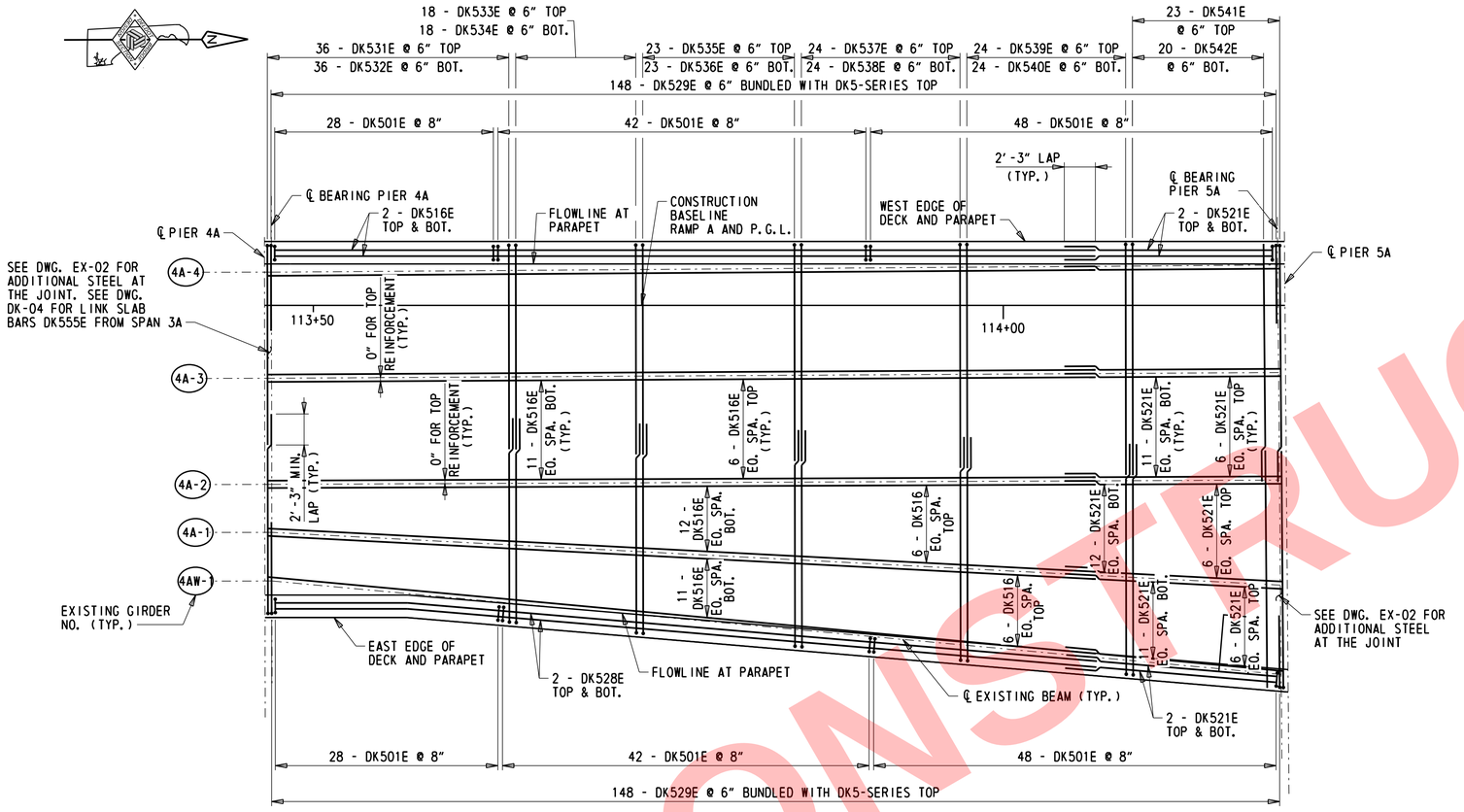

DECK SLAB REINFORCEMENT PLAN - SPAN 4A

1/16" = 1'-0"

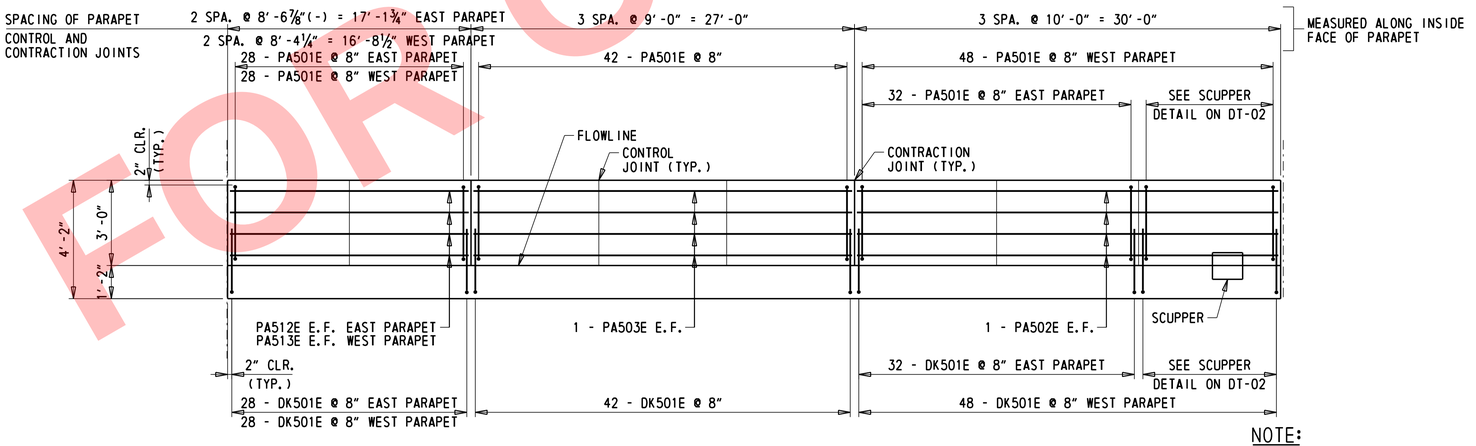

PARAPET REINFORCEMENT DEVELOPED ELEVATION - SPAN 4A

HORIZONTAL - 1/16" = 1'-0"
VERTICAL - 3/8" = 1'-0"

NOTE:
EAST PARAPET SHOWN LOOKING WEST. WEST PARAPET SIMILAR.

NOTES:
1. FOR ADDITIONAL DECK SLAB AND PARAPET REINFORCEMENT DETAILS, SEE TYPICAL SECTION ON DWG. NO. DK-08.
2. FOR JOINT REINFORCEMENT DETAILS, SEE DWG. EX-02.

NOT FOR CONSTRUCTION

ADDENDA / REVISIONS	SCALE AS NOTED	REHABILITATION OF I-95 FROM I-495 TO NORTH OF BRANDYWINE RIVER BRIDGE	CONTRACT T201407404	BRIDGE NO. 1 749 6142	DECK SLAB AND PARAPET REINFORCEMENT SPAN 4A	DK-05
			COUNTY NEW CASTLE	DESIGNED BY: DAN		SECTION WRA
				CHECKED BY: WAG		SHEET NO. 457

N:\31987-00A\Contract_I-95\CADD\Bridge\BR1-749_DK05.dgn
5/31/2019 12:14:41 PM

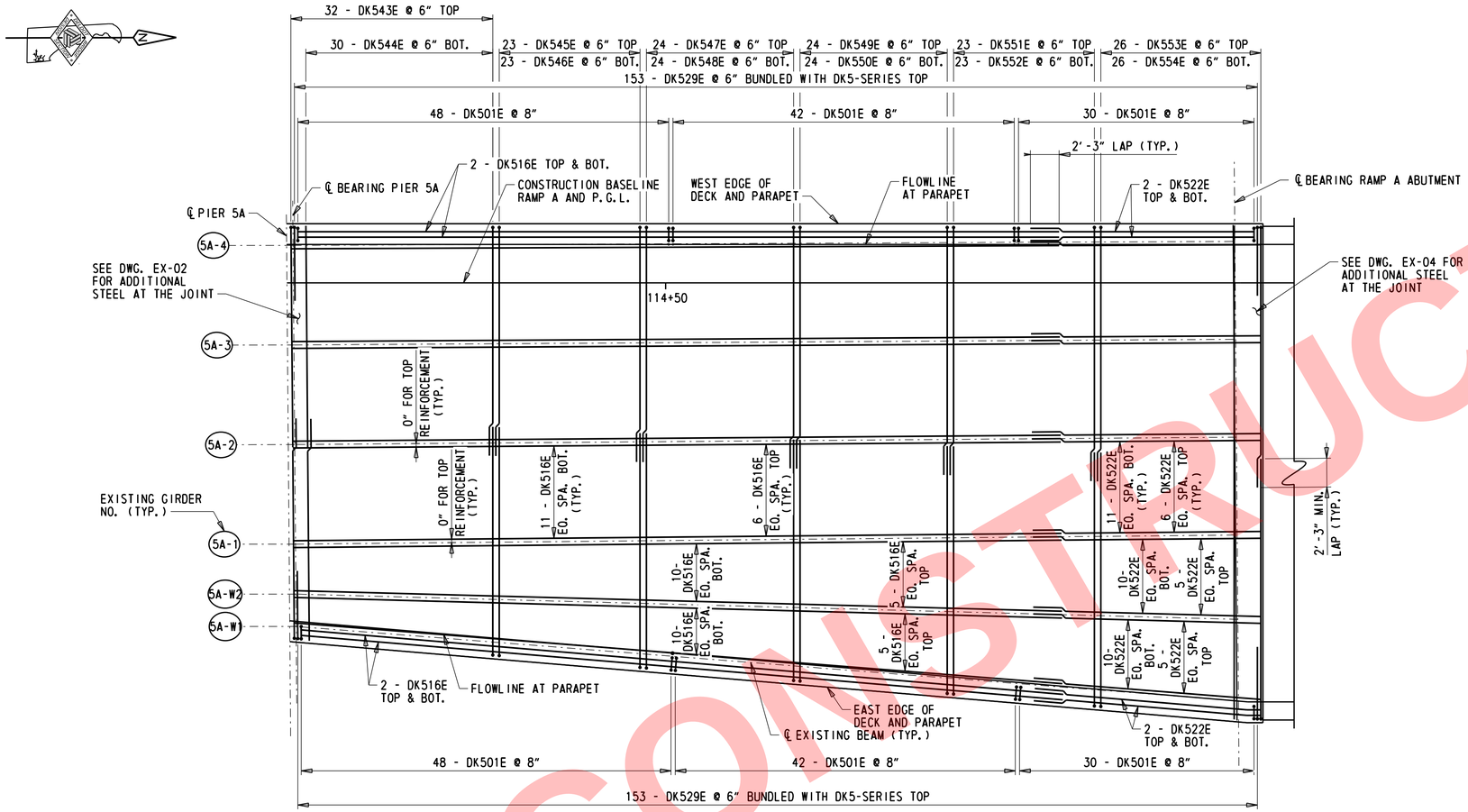

DECK SLAB REINFORCEMENT PLAN - SPAN 5A

1/16" = 1'-0"

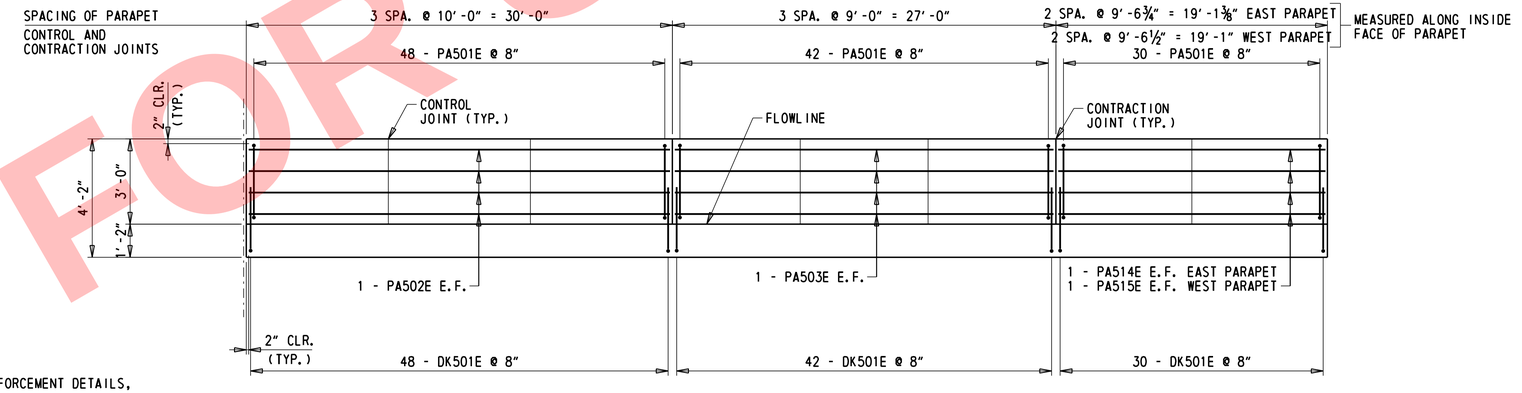

NOTES:

1. FOR ADDITIONAL DECK SLAB AND PARAPET REINFORCEMENT DETAILS, SEE TYPICAL SECTION ON DWG. NO. DK-09.
2. FOR JOINT REINFORCEMENT DETAILS, SEE DWG. EX-02.

PARAPET REINFORCEMENT DEVELOPED ELEVATION - SPAN 5A

HORIZONTAL - 1/16" = 1'-0"
VERTICAL - 3/8" = 1'-0"

NOTE:

EAST PARAPET SHOWN LOOKING WEST.
WEST PARAPET SIMILAR.

NOT FOR CONSTRUCTION

N:\31987-004\Const\I-95\CADD\Bridge\BR1-749_DK06.dgn
5/31/2019 12:14:42 PM

ADDENDA / REVISIONS		SCALE AS NOTED	REHABILITATION OF I-95 FROM I-495 TO NORTH OF BRANDYWINE RIVER BRIDGE	CONTRACT T201407404	BRIDGE NO. 1 749 6142	DECK SLAB AND PARAPET REINFORCEMENT SPAN 5A	DK-06
				COUNTY NEW CASTLE	DESIGNED BY: DAN		SECTION WRA
					CHECKED BY: WAG		SHEET NO. 458

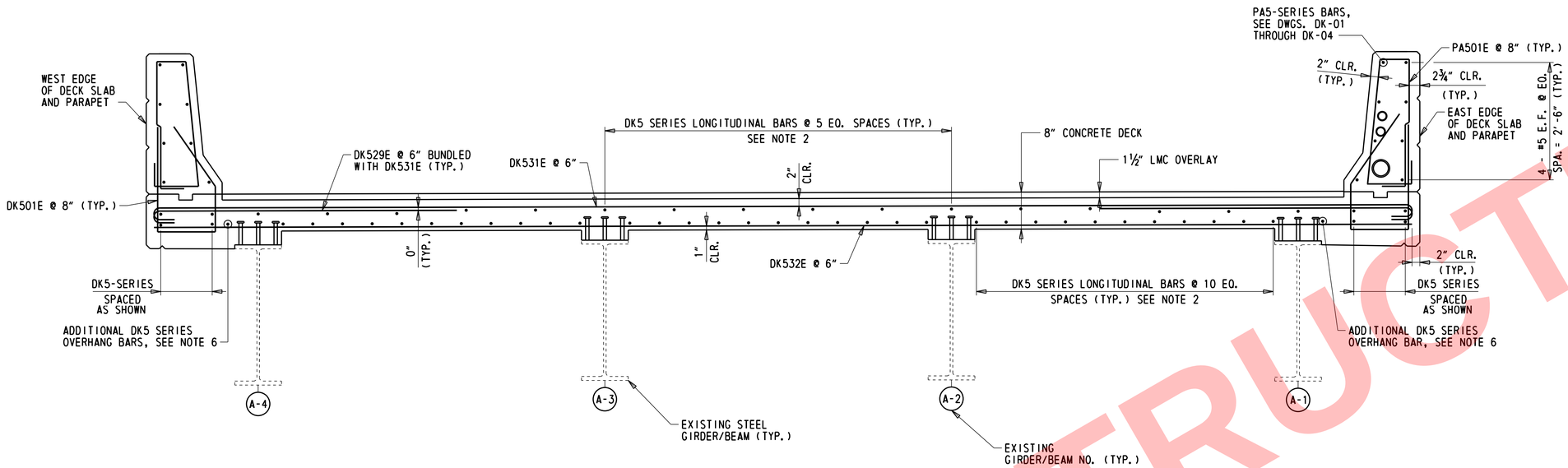

DECK SLAB TYPICAL REINFORCEMENT SECTION

(SPANS 0A, 1A, 2A, 3A)

¾" = 1'-0"

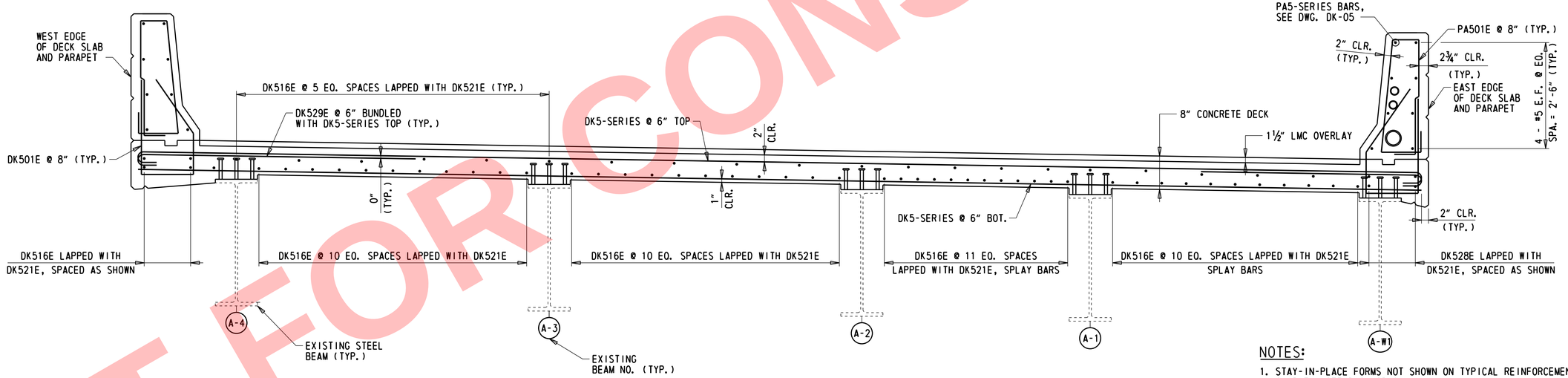

DECK SLAB TYPICAL REINFORCEMENT SECTION

(SPAN 4A)

¾" = 1'-0"

NOTES:

1. STAY-IN-PLACE FORMS NOT SHOWN ON TYPICAL REINFORCEMENT SECTION FOR CLARITY. SEE DWG. SD-01.
2. FOR PARAPET LONGITUDINAL BAR NUMBERS AND DECK LONGITUDINAL AND TRANSVERSE REINFORCEMENT, SEE DWG. DK-01 THROUGH DK-05.
3. FOR PARAPET CONTROL JOINT LAYOUT AND DETAILS, SEE DWGS. DK-01 THROUGH DK-05 AND PA-01.
4. FENCE AND RAILROAD PROTECTIVE BARRIER NOT SHOWN.
5. REINFORCEMENT FOR LIGHT BRACKET NOT SHOWN FOR CLARITY, SEE DWG. DT-01.
6. FOR ADDITIONAL DK5 SERIES OVERHANG BARS, SEE PLAN VIEW ON DK-01 THROUGH DK-04.
7. SCUPPERS NOT SHOWN FOR CLARITY. FOR REINFORCEMENT AROUND SCUPPERS SEE DWG. DT-02.

NOT FOR CONSTRUCTION

N:\31987-004\Control-I-95\CADD\Bridge\BR1-749_DK07.dgn
5/31/2019 12:14:42 PM

ADDENDA / REVISIONS		SCALE AS NOTED	REHABILITATION OF I-95 FROM I-495 TO NORTH OF BRANDYWINE RIVER BRIDGE	CONTRACT T201407404	BRIDGE NO. 1 749 6142	DECK SLAB AND PARAPET REINFORCEMENT TYPICAL SECTION – 1	DK-07
				COUNTY NEW CASTLE	DESIGNED BY: DAN		SECTION WRA
					CHECKED BY: WAG		SHEET NO. 459

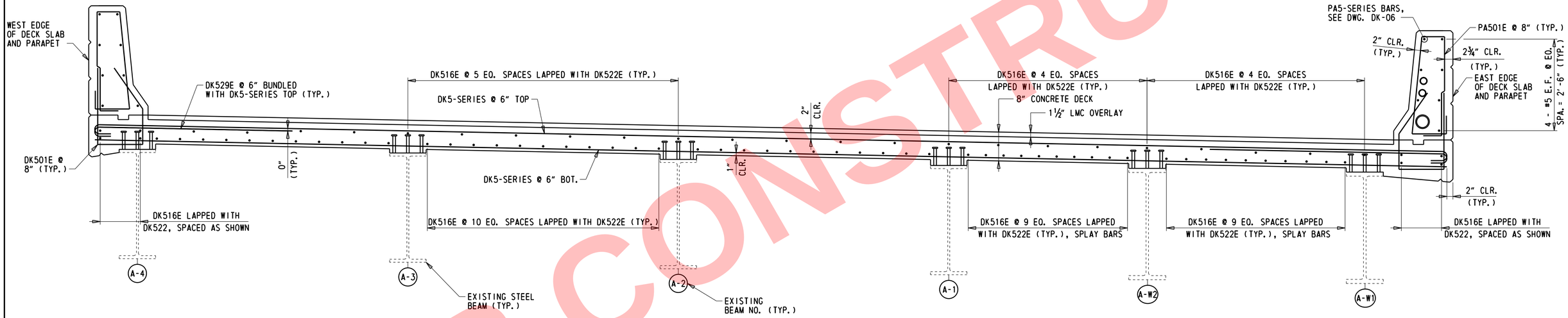

DECK SLAB TYPICAL REINFORCEMENT SECTION

(SPAN 5A)

¾" = 1'-0"

NOTES:

1. STAY-IN-PLACE FORMS NOT SHOWN ON TYPICAL REINFORCEMENT SECTION FOR CLARITY. SEE DWG. SD-01.
2. FOR PARAPET LONGITUDINAL BAR NUMBERS AND DECK LONGITUDINAL AND TRANSVERSE REINFORCEMENT BAR NUMBERS, SEE DWG. DK-06.
3. FOR PARAPET CONTROL JOINT LAYOUT AND DETAILS, SEE DWGS. DK-06 AND PA-01.

NOT FOR CONSTRUCTION

N:\31987-004\Contract I-95\CADD\Bridge\BR1-749_DK08.dgn
5/31/2019 12:14:43 PM

ADDENDA / REVISIONS		SCALE AS NOTED	REHABILITATION OF I-95 FROM I-495 TO NORTH OF BRANDYWINE RIVER BRIDGE	CONTRACT T201407404	BRIDGE NO. 1 749 6142	DECK SLAB AND PARAPET REINFORCEMENT TYPICAL SECTION – 2	DK-08
				COUNTY NEW CASTLE	DESIGNED BY: DAN		SECTION WRA
					CHECKED BY: WAG		SHEET NO. 460

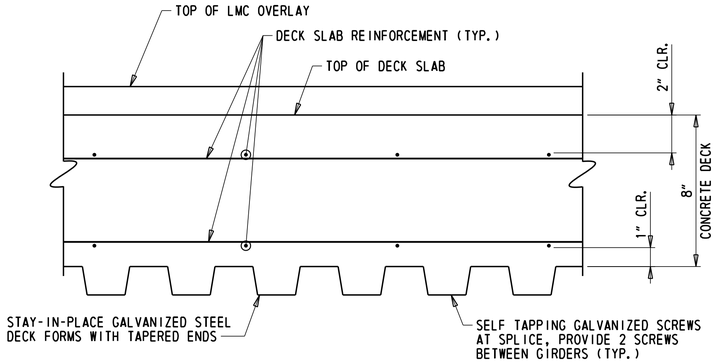

STAY-IN-PLACE FORM DETAIL

3" = 1'-0"

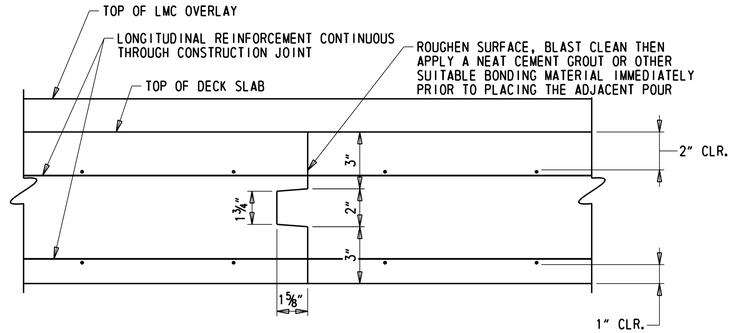

DECK SLAB CONSTRUCTION JOINT

3" = 1'-0"

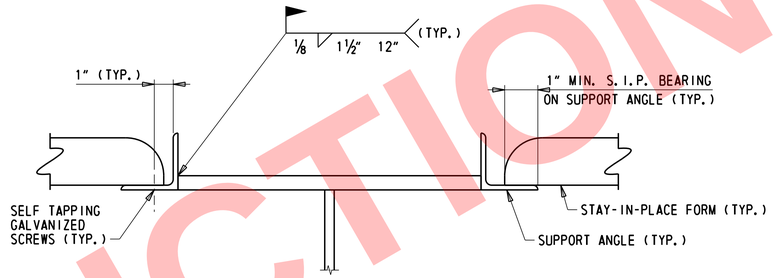

COMPRESSION FLANGE STAY-IN-PLACE FORM CONNECTION DETAIL

3" = 1'-0"

NOTES:

1. SEE DWG. BM-01 FOR LIMITS OF COMPRESSION FLANGE.

NOT FOR CONSTRUCTION

N:\31987-001\Contract_I-95\CADD\Bridge\BR1-749_S001.dgn
5/31/2019 12:14:44 PM

ADDENDA / REVISIONS		SCALE AS NOTED	REHABILITATION OF I-95 FROM I-495 TO NORTH OF BRANDYWINE RIVER BRIDGE	CONTRACT T201407404	BRIDGE NO. 1 749 6142	SUPERSTRUCTURE DETAILS	SD-01
				COUNTY NEW CASTLE	DESIGNED BY: DAN		SECTION WRA
					CHECKED BY: WAG		SHEET NO. 461

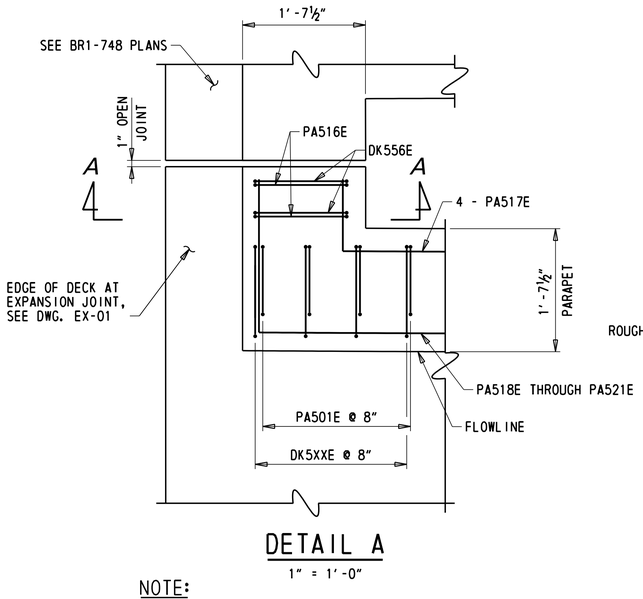

DETAIL A

1″ = 1′-0″

NOTE:

MAIN DECK REINFORCING NOT SHOWN FOR CLARITY

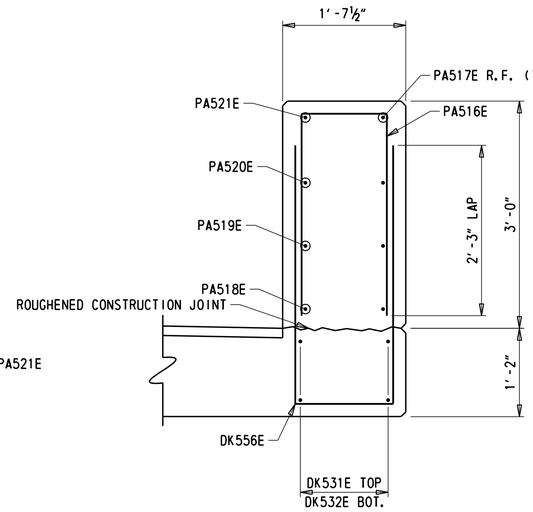

SECTION A-A

1″ = 1′-0″

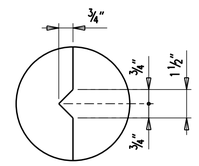

ARCHITECTURAL GROOVE DETAIL

3″ = 1′-0″

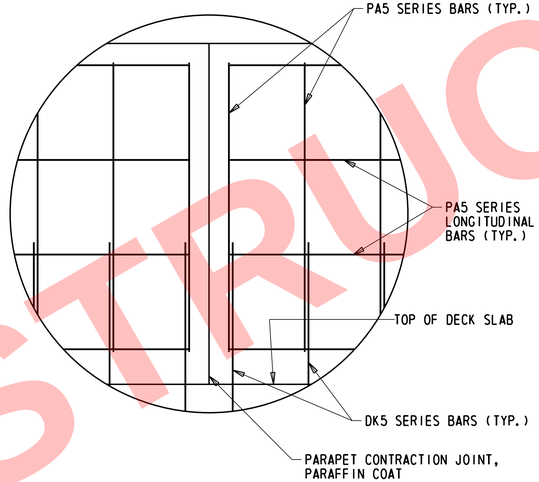

PARAPET CONTRACTION JOINT DETAIL

1½″ = 1′-0″

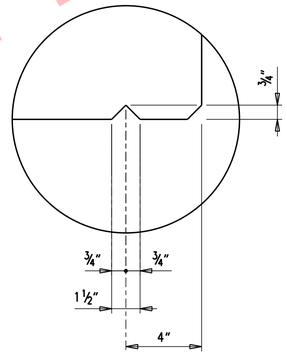

DRIP NOTCH DETAIL

3″ = 1′-0″

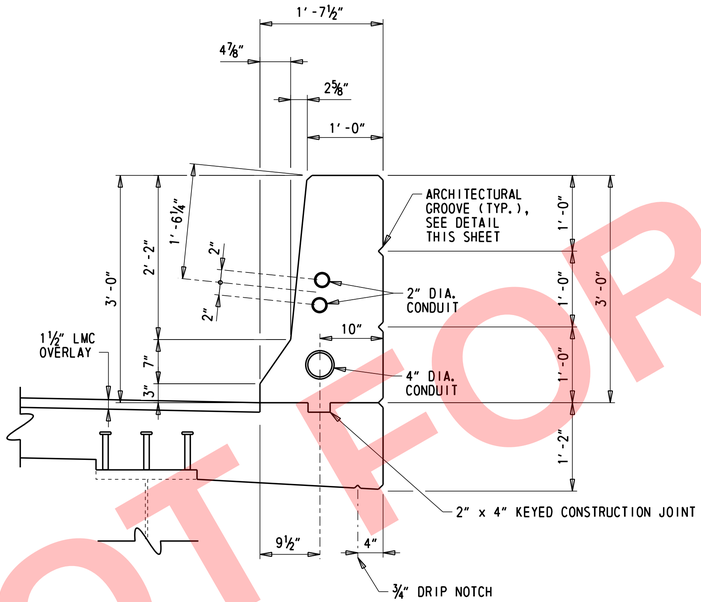

1′-7½″ WIDE PARAPET DETAIL

1″ = 1′-0″

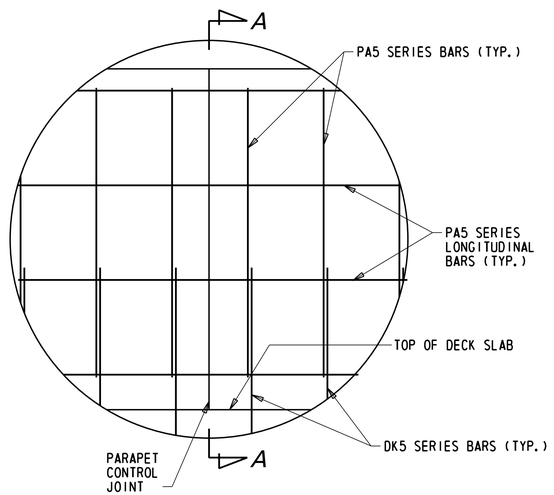

PARAPET CONTROL JOINT DETAIL

1½″ = 1′-0″

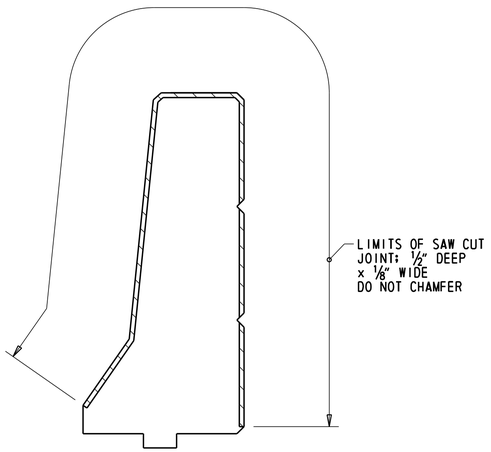

SECTION A-A

1½″ = 1′-0″

REINFORCEMENT NOT SHOWN FOR CLARITY.

NOT FOR CONSTRUCTION

N:\31987-00A\Contract\I-95\C400\Bridge\BR1-749_PA01.dgn
5/31/2019 12:14:45 PM

ADDENDA / REVISIONS		SCALE AS NOTED	REHABILITATION OF I-95 FROM I-495 TO NORTH OF BRANDYWINE RIVER BRIDGE	CONTRACT T201407404	BRIDGE NO. 1 749 6142	PARAPET DETAILS	PA-01
				COUNTY NEW CASTLE	DESIGNED BY: DAN		SECTION WRA
					CHECKED BY: WAG		SHEET NO. 462

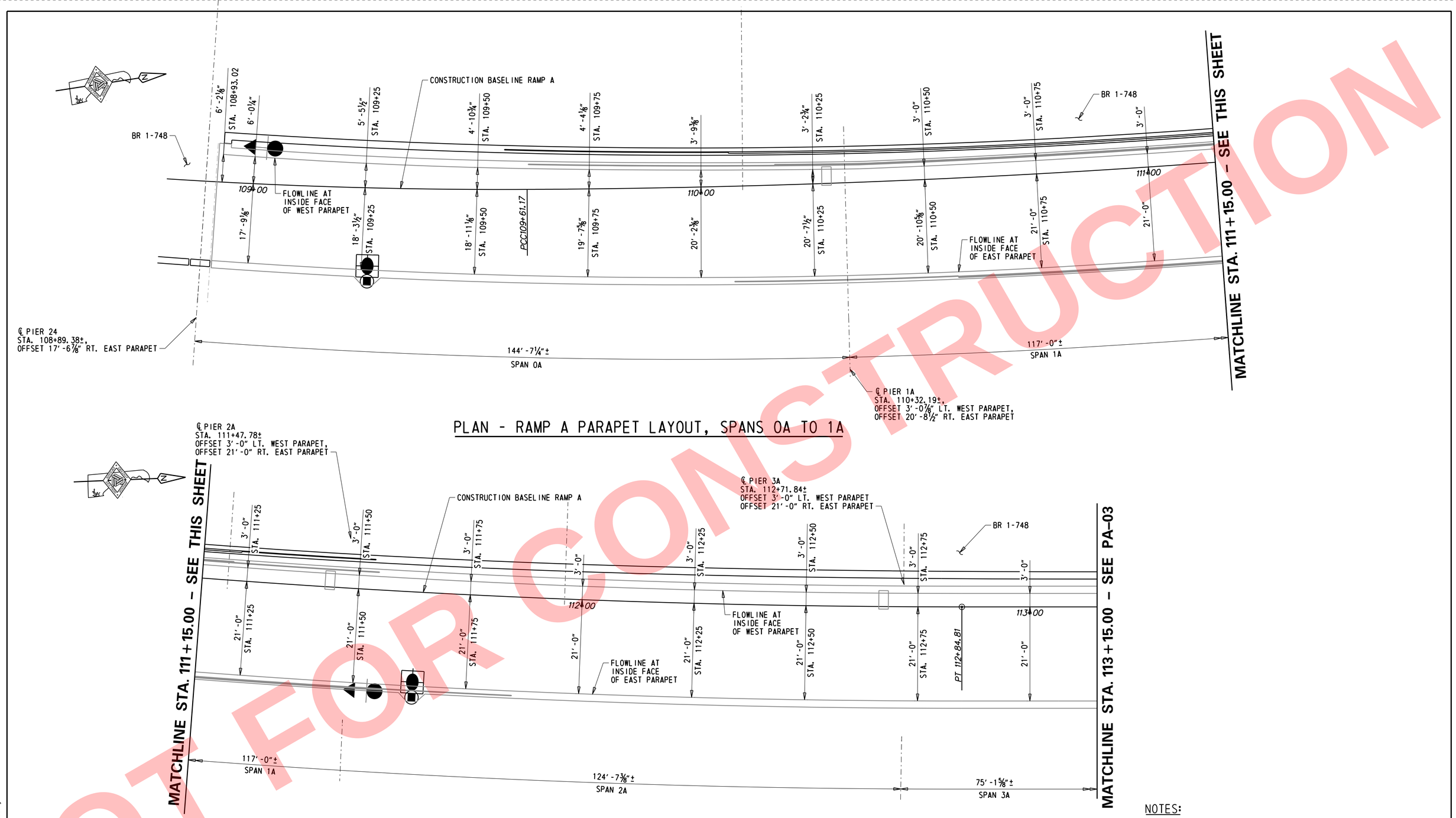

PLAN - RAMP A PARAPET LAYOUT, SPANS 0A TO 1A

PLAN - RAMP A PARAPET LAYOUT, SPANS 1A TO 3A

NOTES:

1. OFFSET DIMENSIONS BY STATION ARE MEASURED FROM CONSTRUCTION BASELINE RAMP A TO FLOW LINE AT BASE OF PARAPET. MEASUREMENTS TAKEN PERPENDICULAR TO LOCAL TANGENT AT NOTED STATION.
2. FENCE, RAILROAD PROTECTIVE BARRIER, LIGHTING, ETC. ON PARAPETS ARE NOT SHOWN FOR CLARITY.

NOT FOR CONSTRUCTION

ADDENDA / REVISIONS	SCALE 0 10 20 30 FEET	REHABILITATION OF I-95 FROM I-495 TO NORTH OF BRANDYWINE RIVER BRIDGE	CONTRACT T201407404	BRIDGE NO. 1 749 6142	RAMP A PARAPET LAYOUT SPANS 0A TO 3A	PA-02
			COUNTY NEW CASTLE	DESIGNED BY: DAN		SECTION WRA
				CHECKED BY: WAG		SHEET NO. 2-462A

N:\31987-004\Contract_I-95\CADD\Bridge\BR1-749_PA02.dgn
5/31/2019 12:14:52 PM

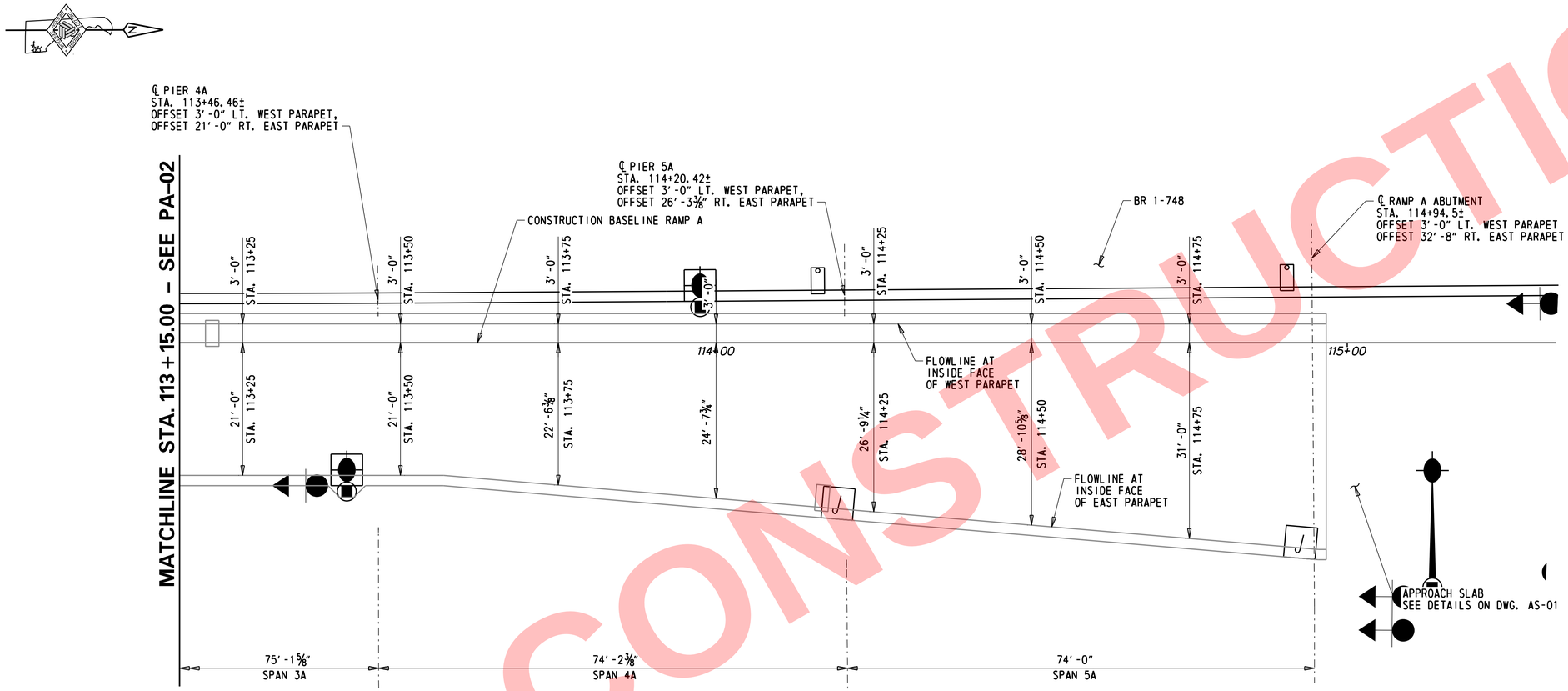

PLAN - RAMP A PARAPET LAYOUT, SPANS 3A TO 5A

NOTES:

1. OFFSET DIMENSIONS BY STATION ARE MEASURED FROM CONSTRUCTION BASELINE RAMP A TO FLOWLINE AT BASE OF PARAPET. MEASUREMENTS TAKEN PERPENDICULAR TO LOCAL TANGENT AT NOTED STATION.
2. FENCE, RAILROAD PROTECTIVE BARRIER, LIGHTING, ETC. ON PARAPETS ARE NOT SHOWN FOR CLARITY.

NOT FOR CONSTRUCTION

N:\31987-00A\Contract_I-95\CADD\Bridge\BR1-749_PA03.dgn
5/31/2019 12:14:53 PM

ADDENDA / REVISIONS	

SCALE
0 10 20 30
FEET

REHABILITATION OF I-95 FROM I-495 TO NORTH OF BRANDYWINE RIVER BRIDGE

CONTRACT	BRIDGE NO.	1 749 6142
T201407404	DESIGNED BY: DAN	
COUNTY	CHECKED BY: WAG	
NEW CASTLE		

RAMP A PARAPET LAYOUT SPANS 3A TO 5A

PA-03
SECTION: WRA
SHEET NO.: 2-462B

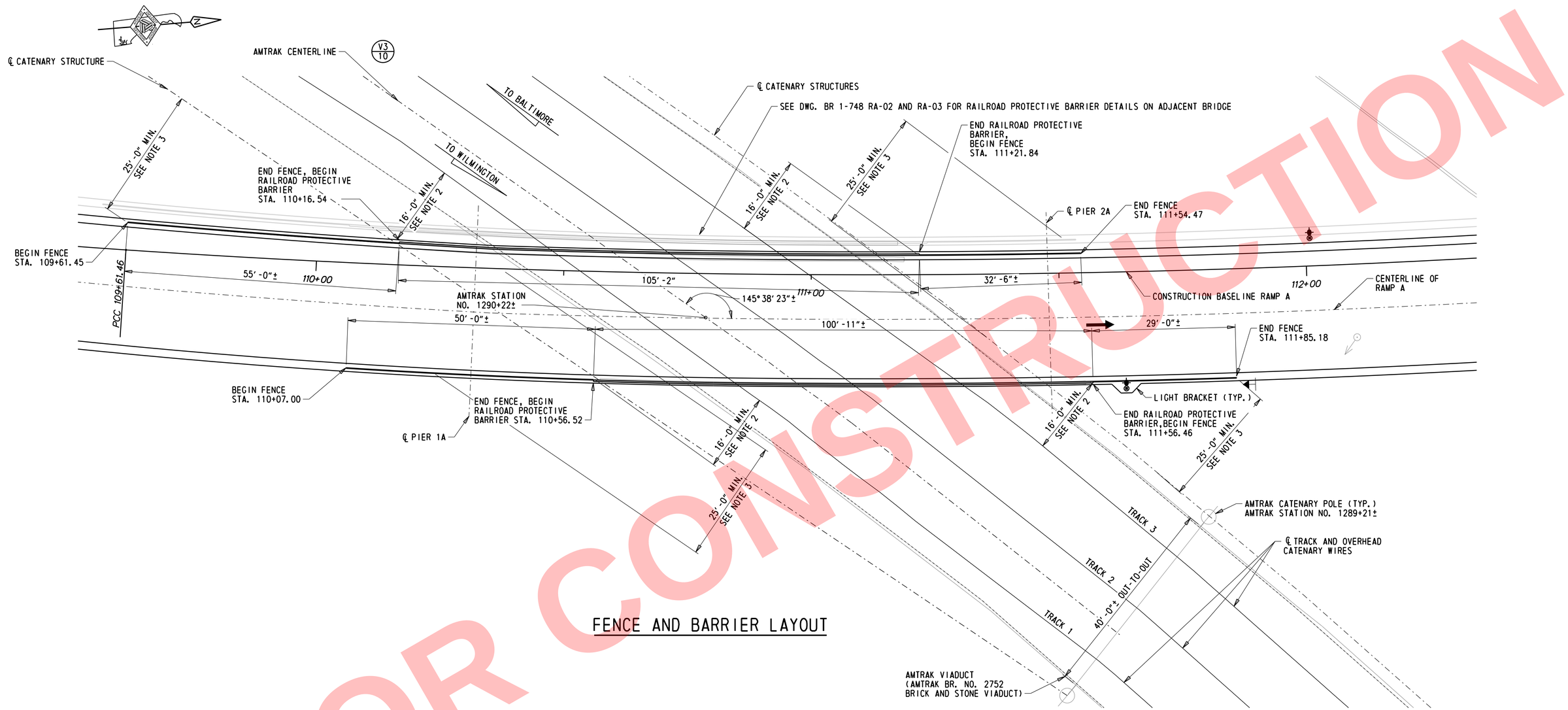

FENCE AND BARRIER LAYOUT

KEY:

V3/10 AMTRAK VALUATION & SECTION SHEET NUMBER

NOTES:

1. OVERHEAD BRIDGES SHALL BE PROVIDED WITH 6'-6" HIGH SOLID PROTECTION BARRIERS ABOVE THE SURFACE OF THE ROADWAY TO PROTECT PEDESTRIANS AGAINST CONTACT WITH RAILROAD WIRES PASSING UNDER THE BRIDGE AND TO PREVENT DAMAGE TO THE WIRES.
2. THE RAILROAD PROTECTIVE BARRIER SHALL EXTEND AT LEAST 16 FEET BEYOND THE POINT AT WHICH ANY CATENARY WIRE PASSES UNDER THE BRIDGE: HOWEVER, THE MINIMUM DISTANCE FROM THE END OF THE RAILROAD PROTECTIVE BARRIER MEASURED TO A POINT OUTSIDE THE BRIDGE AND NORMAL TO THE WIRE SHALL BE 16 FEET. THE RAILROAD PROTECTIVE BARRIER SHALL EXTEND AT LEAST TEN (10) FEET BEYOND THE POINT AT WHICH A SIGNAL POWER OR TRACTION POWER FEEDER WIRE PASSES UNDER THE BRIDGE; THE MINIMUM DISTANCE FROM THE END OF THE RAILROAD PROTECTIVE BARRIER MEASURED TO A POINT OUTSIDE THE BRIDGE AND NORMAL TO THE WIRE SHALL BE TEN (10) FEET.
3. WHERE HIGH VOLTAGE WIRES PASS OVER THE BRIDGE, A CHAIN LINK FENCE OR SUITABLE ALTERNATIVE, CAPABLE OF BEING ELECTRICALLY BONDED TO THE BARRIER AND RAIL RETURN SYSTEM, SHALL EXTEND FROM THE END OF THE SOLID BARRIER TO A POINT 25 FEET BEYOND AND NORMAL TO THE CENTERLINE OF THE STRUCTURES SUPPORTING THE WIRES ON EITHER SIDE OF THE BRIDGE.
4. NONMETALLIC BARRIERS SHALL BE PROVIDED WITH GROUND STRIPS, EITHER 3" x ¼" COPPER OR 5" x ¼" ALUMINUM. OTHER MATERIALS MAY BE USED SUBJECT TO THE APPROVAL OF THE ELECTRIC TRACTION DEPARTMENT. METALLIC BARRIERS SHALL BE BONDED AND GROUNDED BY A METHOD AND WITH MATERIALS APPROVED BY THE ELECTRIC TRACTION DEPARTMENT.
5. RAILROAD PROTECTIVE BARRIERS SHALL BE GROUNDED IN ACCORDANCE WITH DRAWING ET-1120-C, TYPICAL DETAILS FOR POWER BONDING OF STRUCTURES.
6. WHERE LOCAL CONDITIONS WARRANT, THE DIMENSIONS SHOWN ON THIS DRAWING MAY BE MODIFIED WITH THE APPROVAL OF THE ELECTRIC TRACTION DEPARTMENT.
7. FOR FENCE DETAILS, SEE BRIDGE SAFETY FENCE, TYPE 1, STANDARD NO. M-10.
8. FOR RAILROAD PROTECTIVE BARRIER DETAILS, SEE DWG. RA-02.

NOT FOR CONSTRUCTION

ADDENDA / REVISIONS		SCALE 0 10 20 30 FEET	REHABILITATION OF I-95 FROM I-495 TO NORTH OF BRANDYWINE RIVER BRIDGE	CONTRACT T201407404	BRIDGE NO. 1 749 6142	FENCE AND BARRIER LAYOUT	RA-01 SECTION
				COUNTY NEW CASTLE	DESIGNED BY: DAN		WRA SHEET NO.
					CHECKED BY: WAG		463

N:\31987-001\Contract_I-95\CADD\Bridge\BR1-749_RA01.dgn
5/31/2019 12:14:56 PM

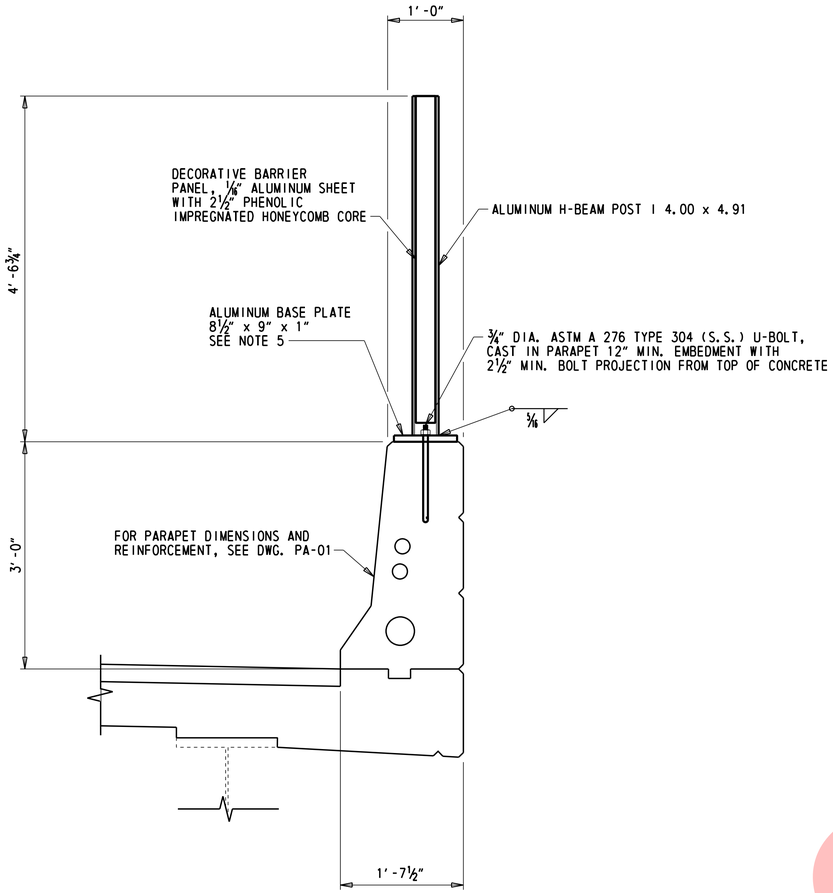

RAILROAD PROTECTIVE BARRIER

1" = 1'-0"

RAILROAD PROTECTIVE BARRIER NOTES:

1. COST TO REMOVE THE EXISTING RAILROAD PROTECTIVE BARRIER WILL BE INCIDENTAL TO ITEM 211000 - REMOVAL OF STRUCTURES AND OBSTRUCTIONS.
2. ALUMINUM PANELS, POSTS, AND BASE PLATES SHALL BE IN ACCORDANCE WITH SECTION 1044. PAYMENT WILL BE MADE UNDER ITEM 7275xx - RAILROAD PROTECTIVE BARRIER.
3. EXISTING DECORATIVE W'S ON THE EXISTING BARRIER SHALL BE SALVAGED, CLEANED AND PAINTED IN ACCORDANCE WITH THE PERTINENT ITEM. PAYMENT WILL BE INCIDENTAL TO ITEM 7275xx - RAILROAD PROTECTIVE BARRIER.
4. NUTS AND WASHERS SHALL BE IN CONFORMANCE WITH ASTM A 320 TYPE 304 (S.S.). WASHERS SHALL BE OVERSIZED TO COVER 1⅛" DIA. HOLES IN BASE PLATE. PAYMENT FOR ALL HARDWARE INCLUDING U-BOLTS WILL BE INCIDENTAL TO ITEM 7275xx - RAILROAD PROTECTIVE BARRIER.
5. ALUMINUM SURFACES IN CONTACT WITH CONCRETE SHALL BE IN ACCORDANCE WITH SUBSECTION 626.03.C.8.

NOT FOR CONSTRUCTION

N:\31987-00A\Control-I-95\CADD\Bridge\BR1-749_RA02.dgn
5/31/2019 12:14:54 PM

ADDENDA / REVISIONS	

SCALE AS NOTED

REHABILITATION OF I-95 FROM I-495 TO NORTH OF BRANDYWINE RIVER BRIDGE

CONTRACT T201407404	BRIDGE NO. 1 749 6142	RAILROAD PROTECTIVE BARRIER DETAILS
COUNTY NEW CASTLE	DESIGNED BY: DAN	
	CHECKED BY: WAG	

RA-02
SECTION WRA
SHEET NO. 464

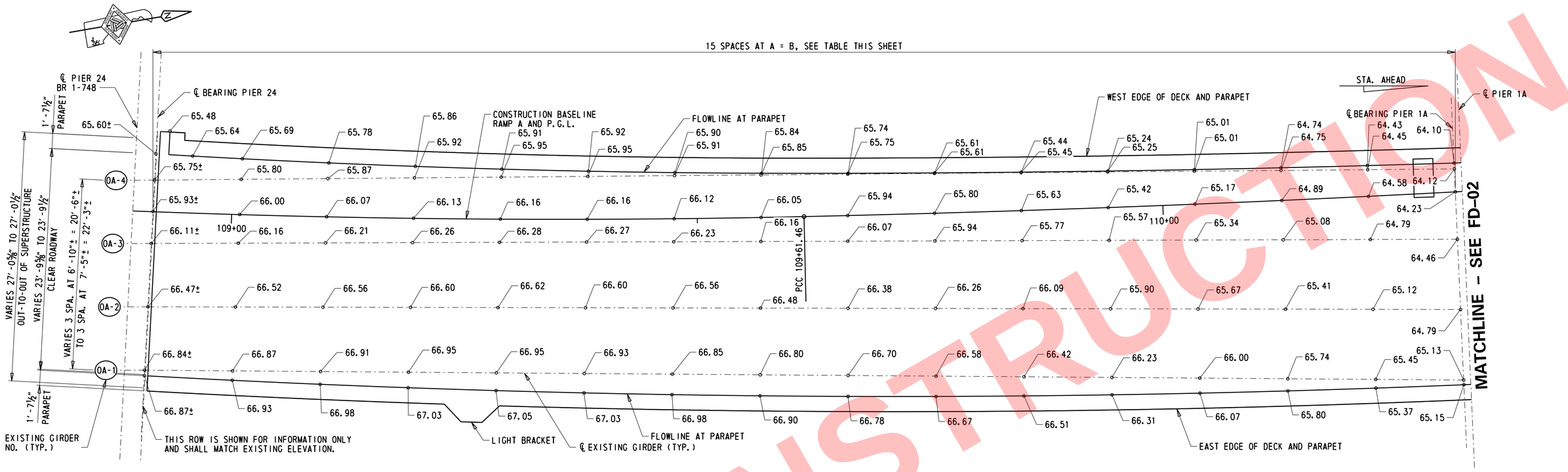

FINISHED BRIDGE DECK ELEVATIONS - SPAN OA

⅛" = 1'-0"

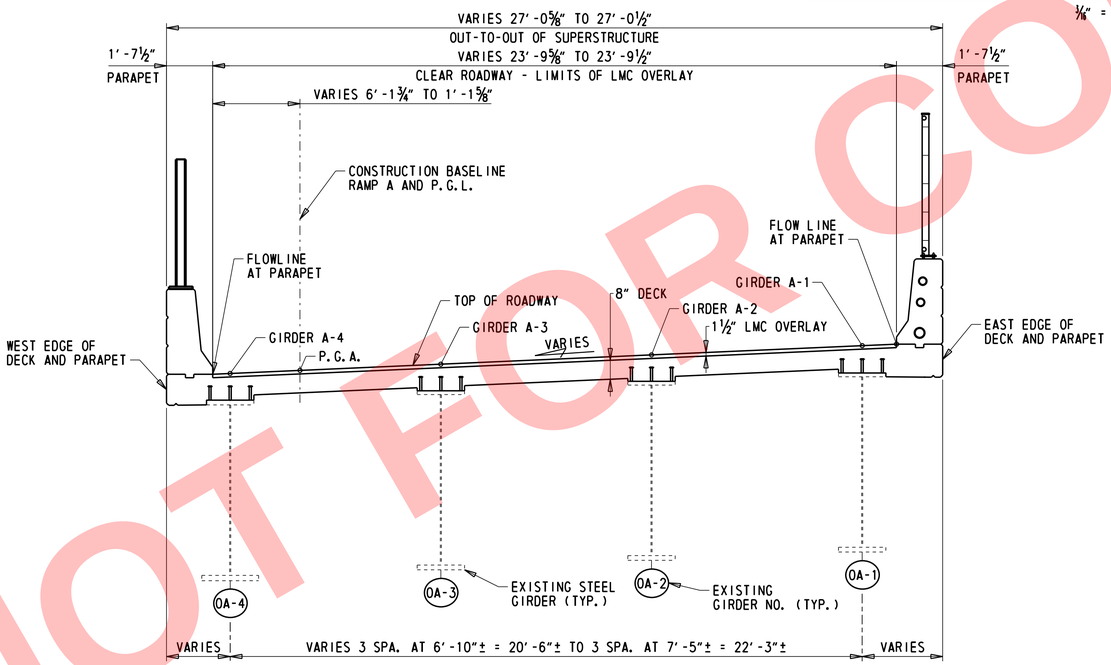

LOCATIONS OF FINISHED BRIDGE DECK ELEVATIONS

⅜" = 1'-0"

DECK ELEVATION SPACING TABLE		
LINE	A	B
FLOW LINE AT PARAPET	9'-3⅛" (-)	139'-5"±
GIRDER A-4	9'-3⅝" (-)	139'-6½"±
CONSTRUCTION BASELINE RAMP A	9'-3⅞" (-)	139'-10⅝"±
GIRDER A-3	9'-4⅛" (-)	140'-2¾"±
GIRDER A-2	9'-4¾" (-)	140'-11"±
GIRDER A-1	9'-5¼" (-)	141'-7¼"±
FLOW LINE AT PARAPET	9'-5⅜" (-)	141'-8⅛"

CROSS SLOPE TRANSITIONS			
STATION	LEFT SHOULDER	TRAVEL LANES	RIGHT SHOULDER
108+89.38	EX. (-5.38%)	EX. (+5.38%)	EX. (+5.38%)
109+55.00	-4.40%	+4.40%	+4.40%
110+80.00	-4.40%	+4.40%	+4.40%
114+20.00	+2.00%	-2.00%	-2.00%
115+21.54	+2.00%	-2.00%	-2.00%

NOTES:

1. FINISHED BRIDGE DECK ELEVATIONS SHOWN ARE TOP OF LMC.
2. FOR VERTICAL CURVE DATA, SEE DWG. PE-01.
3. FOR CROSS SLOPE TRANSITIONS, SEE TABLE THIS SHEET.
4. LEFT SHOULDER LINE FOLLOWS CONSTRUCTION BASELINE RAMP A. SEE STRIPING PLAN ON DWG. SS-17 FOR MORE INFORMATION.

NOT FOR CONSTRUCTION

N:\31987-00A\Contract-I-95\CADD\Bridge\BR1-749_FD01.dgn
5/31/2019 12:14:55 PM

ADDENDA / REVISIONS		SCALE AS NOTED	REHABILITATION OF I-95 FROM I-495 TO NORTH OF BRANDYWINE RIVER BRIDGE	CONTRACT T201407404	BRIDGE NO. 1 749 6142	FINISHED BRIDGE DECK ELEVATIONS SPAN 0A	FD-01
				COUNTY NEW CASTLE	DESIGNED BY: DAN		SECTION WRA
					CHECKED BY: WAG		SHEET NO. 465

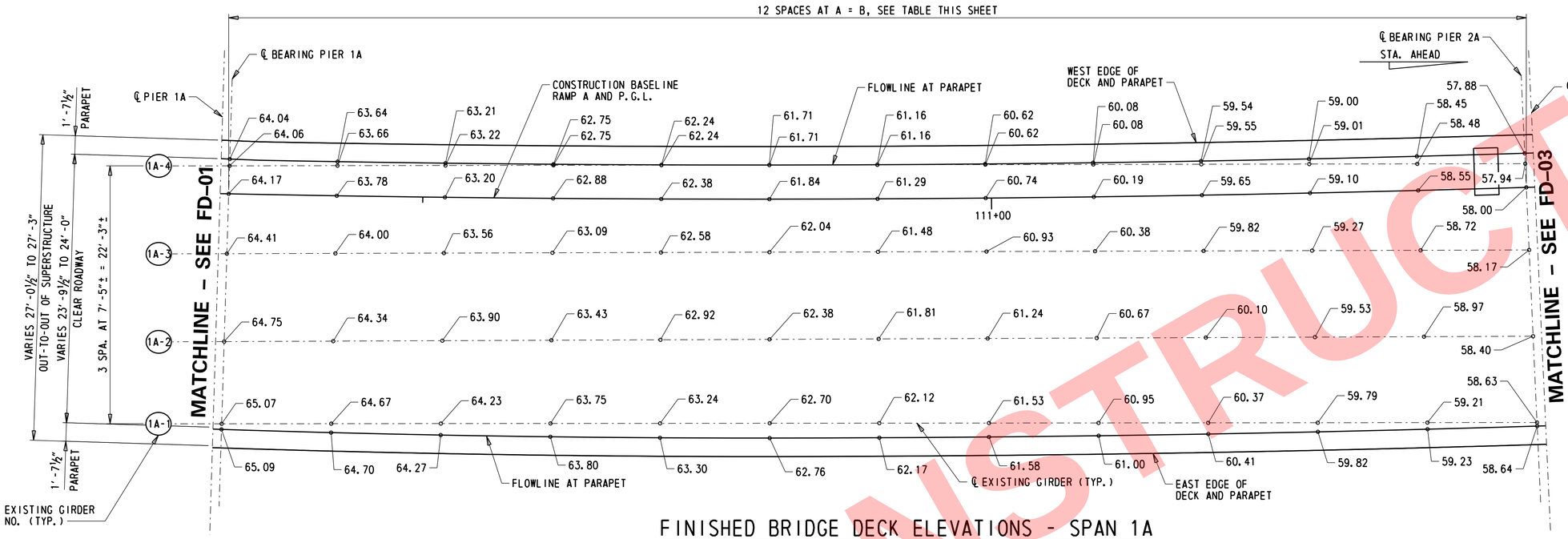

FINISHED BRIDGE DECK ELEVATIONS - SPAN 1A

1/16" = 1'-0"

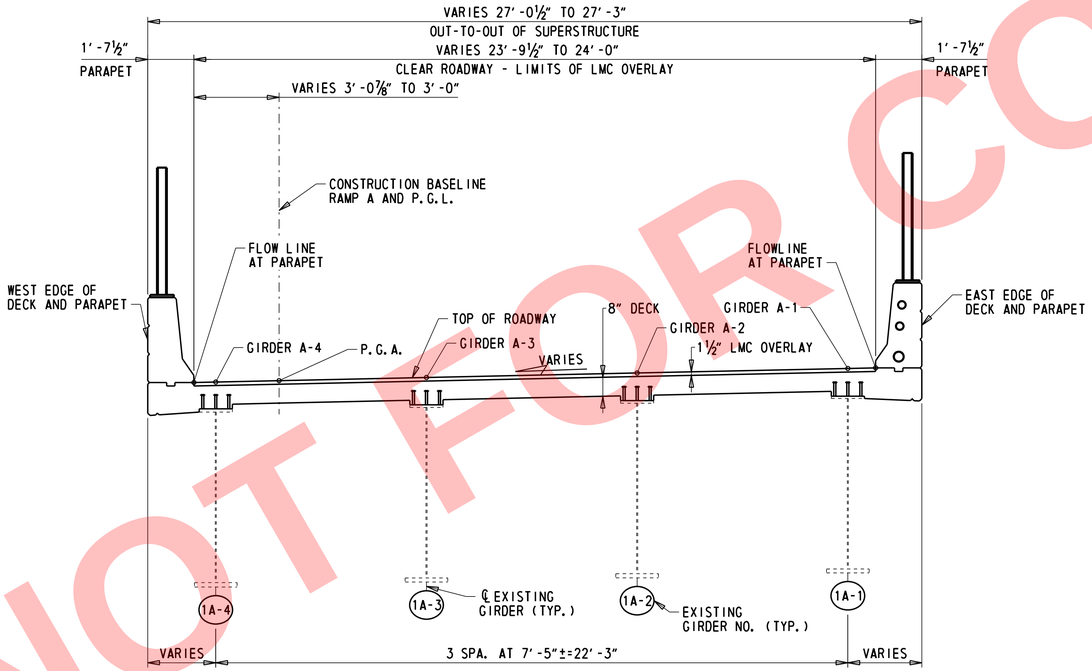

LOCATIONS OF FINISHED BRIDGE DECK ELEVATIONS

3/8" = 1'-0"

DECK ELEVATION SPACING TABLE

LINE	A	B
FLOW LINE AT PARAPET	9'-5⅞" (-)	113'-10⅜"±
GIRDER A-4	9'-5⅝" (-)	113'-10⅝"±
CONSTRUCTION BASELINE RAMP A	9'-6⅛" (-)	114'-1⅛"±
GIRDER A-3	9'-6½" (-)	114'-5⅝"±
GIRDER A-2	9'-7⅛" (-)	115'-0⅞"±
GIRDER A-1	9'-7⅝" (-)	115'-7⅛"±
FLOW LINE AT PARAPET	9'-7⅛" (-)	115'-8¼"±

NOTES:

1. FINISHED BRIDGE DECK ELEVATIONS SHOWN ARE TOP OF LMC.
2. FOR VERTICAL CURVE DATA, SEE DWG. PE-01.
3. FOR CROSS SLOPE TRANSITIONS, SEE TABLE ON DWG. FD-01
4. LEFT SHOULDER LINE FOLLOWS CONSTRUCTION BASELINE RAMP A. SEE STRIPING PLAN ON DWGS. SS-17 AND SS-18 FOR MORE INFORMATION.

NOT FOR CONSTRUCTION

N:\31987-004\Contract-I-95\CADD\Bridge\BR1-749_FD02.dgn
5/31/2019 12:14:56 PM

ADDENDA / REVISIONS	SCALE AS NOTED	REHABILITATION OF I-95 FROM I-495 TO NORTH OF BRANDYWINE RIVER BRIDGE	CONTRACT T201407404	BRIDGE NO. 1 749 6142	FINISHED BRIDGE DECK ELEVATIONS SPAN 1A	FD-02
			COUNTY NEW CASTLE	DESIGNED BY: DAN		SECTION WRA
				CHECKED BY: WAG		SHEET NO. 466

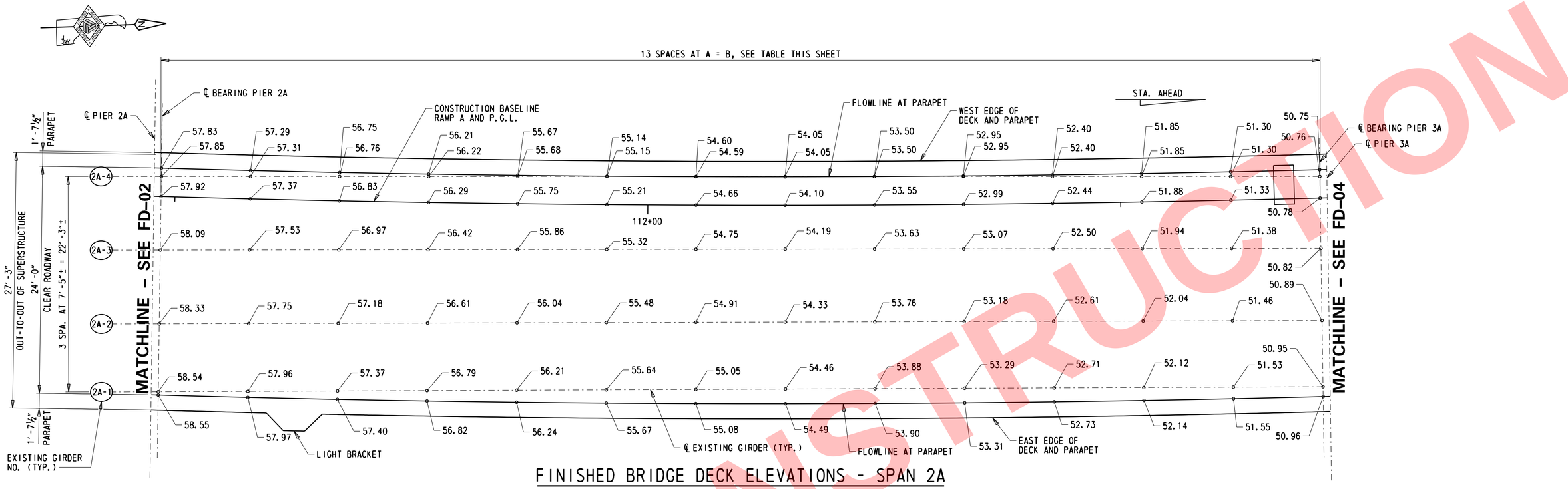

FINISHED BRIDGE DECK ELEVATIONS - SPAN 2A

1/16" = 1'-0"

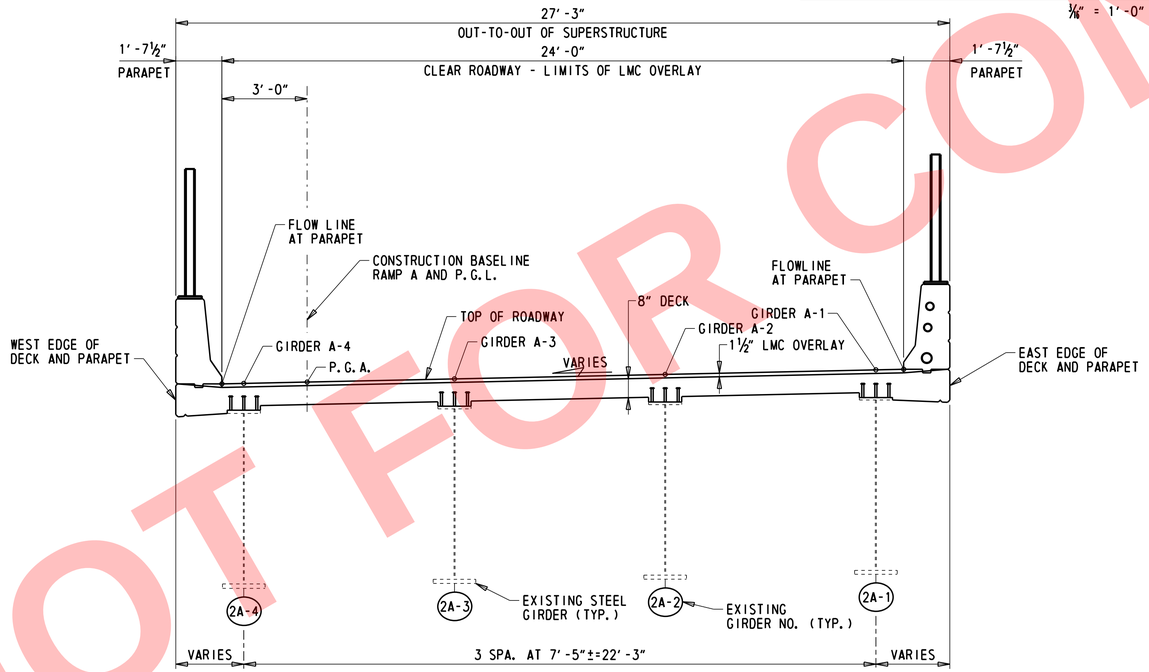

LOCATIONS OF FINISHED BRIDGE DECK ELEVATIONS

3/8" = 1'-0"

DECK ELEVATION SPACING TABLE		
LINE	A	B
FLOW LINE AT PARAPET	9'-5 1/16" (-)	122'-5 1/16"±
GIRDER A-4	9'-5 1/16" (-)	122'-5 7/8"±
CONSTRUCTION BASELINE RAMP A	9'-5 1/8" (-)	122'-6 7/8"±
GIRDER A-3	9'-5 1/4" (-)	122'-8 5/8"±
GIRDER A-2	9'- 5 1/2" (-)	122'- 11 3/8"±
GIRDER A-1	9'-5 11/16" (-)	123'-1 7/8"±
FLOW LINE AT PARAPET	9'-5 11/16" (-)	123"-2 1/4"±

NOTES:

1. FINISHED BRIDGE DECK ELEVATIONS SHOWN ARE TOP OF LMC.
2. FOR VERTICAL CURVE DATA, SEE DWG. PE-01.
3. FOR CROSS SLOPE TRANSITIONS, SEE TABLE ON DWG. FD-01.
4. LEFT SHOULDER LINE FOLLOWS CONSTRUCTION BASELINE RAMP A. SEE STRIPING PLAN ON DWG. SS-18 FOR MORE INFORMATION.

NOT FOR CONSTRUCTION

N:\31987-00A\Cntrct\I-95\CADD\Bridge\BRI-749_FD03.dgn
5/31/2019 12:14:57 PM

ADDENDA / REVISIONS		SCALE AS NOTED	REHABILITATION OF I-95 FROM I-495 TO NORTH OF BRANDYWINE RIVER BRIDGE	CONTRACT T201407404	BRIDGE NO. 1 749 6142	FINISHED BRIDGE DECK ELEVATIONS SPAN 2A	FD-03
				COUNTY NEW CASTLE	DESIGNED BY: DAN		SECTION WRA
					CHECKED BY: WAG		SHEET NO. 467

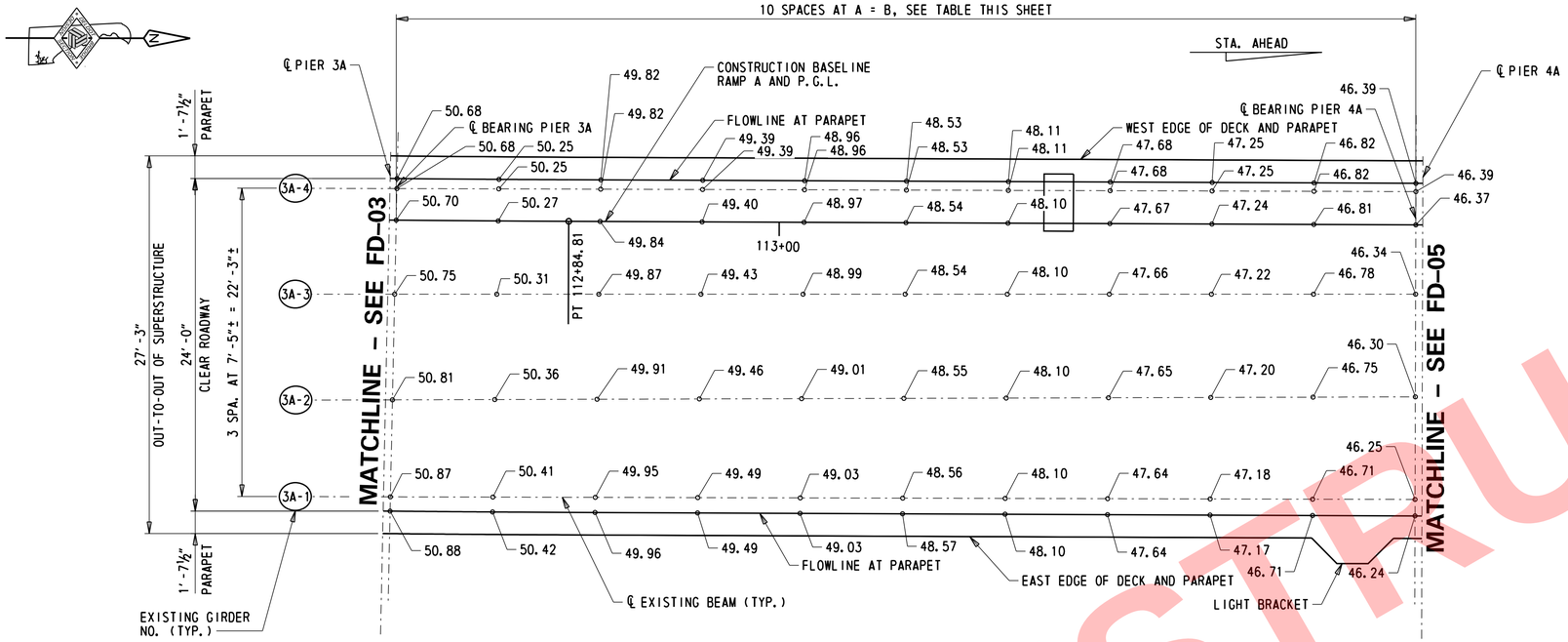

FINISHED BRIDGE DECK ELEVATIONS - SPAN 3A

3/16" = 1'-0"

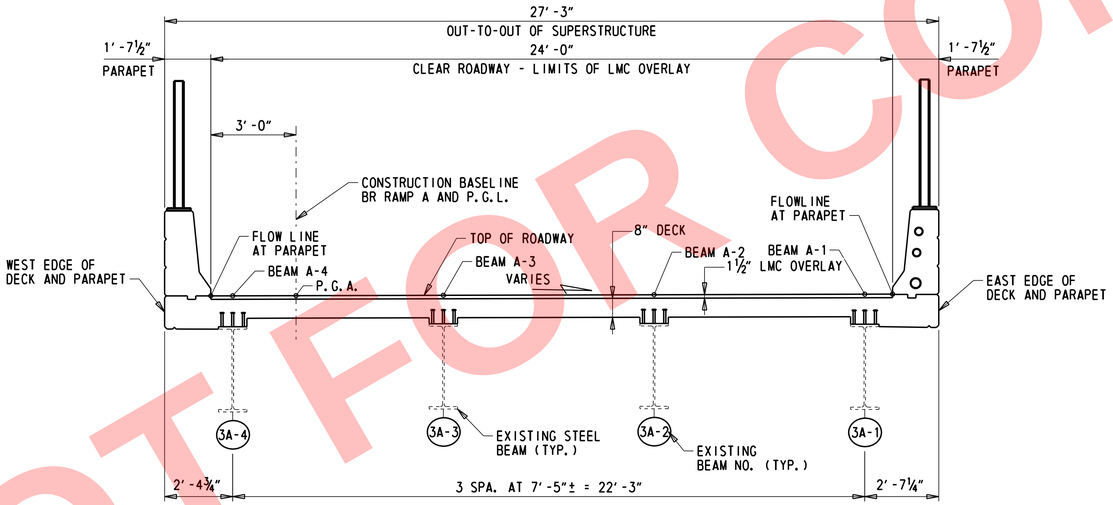

LOCATIONS OF FINISHED BRIDGE DECK ELEVATIONS

3/8" = 1'-0"

DECK ELEVATION SPACING TABLE		
LINE	A	B
FLOW LINE AT PARAPET	7'-4¼" (-)	73'-6 11/16"±
BEAM A-4	7'-4 5/16" (-)	73'-6⅞"±
CONSTRUCTION BASELINE RAMP A	7'-4⅝" (-)	73'-7⅜"±
BEAM A-3	7'-4 7/16" (-)	73'-8 9/16"±
BEAM A-2	7'-4⅝" (-)	73'-10¼"±
BEAM A-1	7'-4¾" (-)	73'-11¾"±
FLOW LINE AT PARAPET	7'-4 13/16" (-)	74'-0"±

NOTES:

1. FINISHED BRIDGE DECK ELEVATIONS SHOWN ARE TOP OF LMC.
2. FOR VERTICAL CURVE DATA, SEE DWG. PE-01.
3. FOR CROSS SLOPE TRANSITIONS, SEE TABLE ON DWG. FD-01.
4. LEFT SHOULDER LINE FOLLOWS CONSTRUCTION BASELINE RAMP A. SEE STRIPING PLAN ON DWG. SS-18 FOR MORE INFORMATION.

NOT FOR CONSTRUCTION

N:\31987-004\Contract_I-95\CADD\Bridge\BR1-749_FD04.dgn
5/31/2019 12:15:08 PM

ADDENDA / REVISIONS	SCALE AS NOTED	REHABILITATION OF I-95 FROM I-495 TO NORTH OF BRANDYWINE RIVER BRIDGE	CONTRACT T201407404	BRIDGE NO. 1 749 6142	FINISHED BRIDGE DECK ELEVATIONS SPAN 3A	FD-04
			COUNTY NEW CASTLE	DESIGNED BY: DAN		SECTION WRA
				CHECKED BY: WAG		SHEET NO. 468

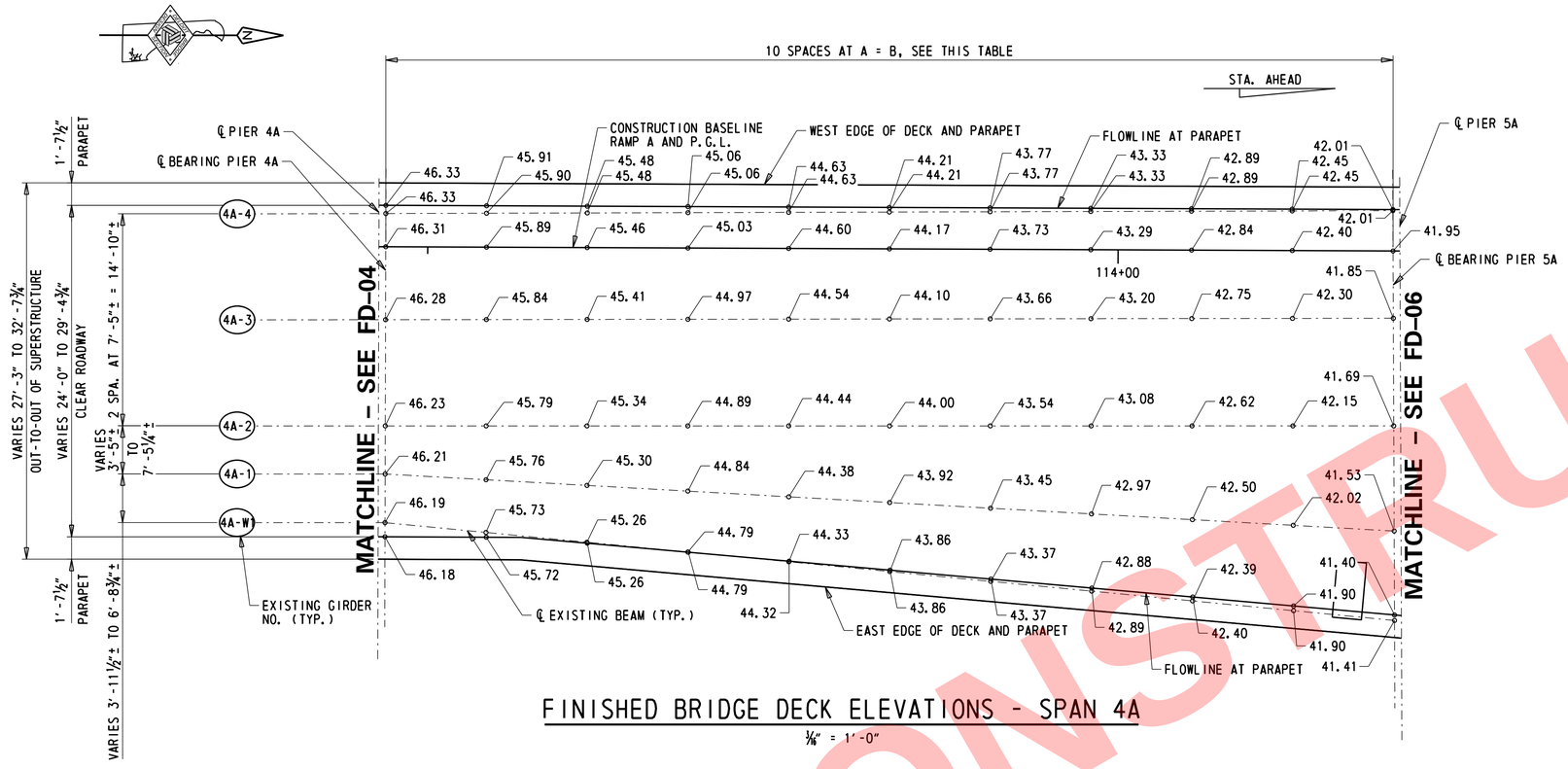

FINISHED BRIDGE DECK ELEVATIONS - SPAN 4A

⅛" = 1'-0"

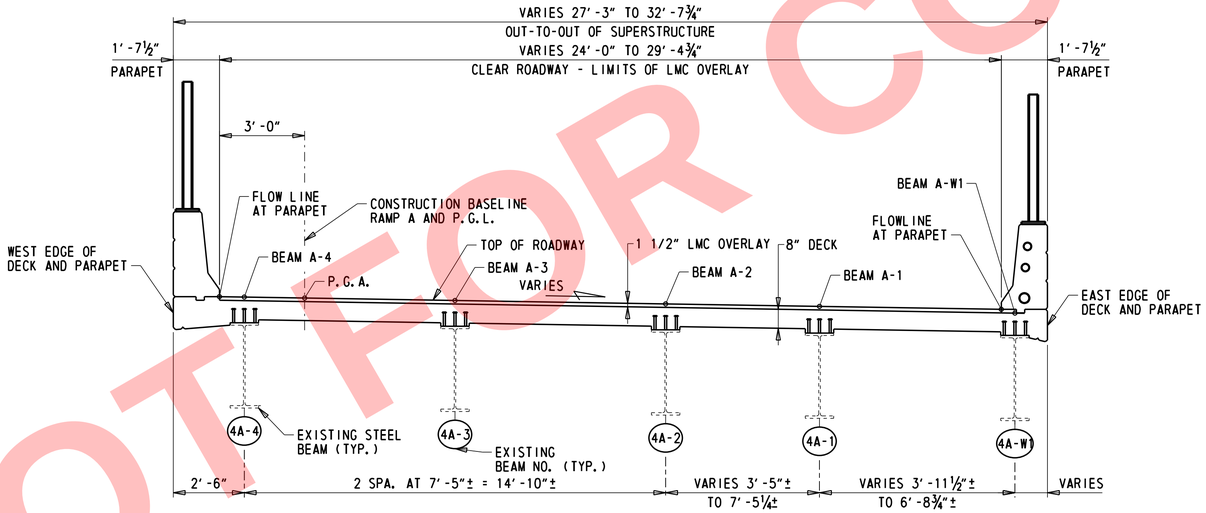

LOCATIONS OF FINISHED BRIDGE DECK ELEVATIONS

⅜" = 1'-0"

DECK ELEVATION SPACING TABLE		
LINE	A	B
FLOW LINE AT PARAPET	7'-3½" (-)	72'-11⅞"±
BEAM A-4	7'-3½" (-)	72'-11⅞"±
CONSTRUCTION BASELINE RAMP A	7'-3⅝" (-)	72'-11⅞"±
BEAM A-3	7'-3⅝" (-)	72'-11⅞"±
BEAM A-2	7'-3⅝" (-)	73'-0⅛"±
BEAM A-1	7'-3⅞" (-)	73'-2⅛"±
BEAM A-W1	7'-4⅛" (-)	73'-5⅛"±
FLOW LINE AT PARAPET	7'-4⅛" (-)	73'-4⅜"±

NOTES:

1. FINISHED BRIDGE DECK ELEVATIONS SHOWN ARE TOP OF LMC.
2. FOR VERTICAL CURVE DATA, SEE DWG. PE-01.
3. FOR CROSS SLOPE TRANSITIONS, SEE TABLE ON DWG. FD-01.
4. LEFT SHOULDER LINE FOLLOWS CONSTRUCTION BASELINE RAMP A. SEE STRIPING PLAN ON DWG. SS-18 FOR MORE INFORMATION.

NOT FOR CONSTRUCTION

N:\31987-00A\Const\I-95\CADD\Bridge\BR1-749_FD05.dgn
5/31/2019 12:15:10 PM

ADDENDA / REVISIONS		SCALE AS NOTED	REHABILITATION OF I-95 FROM I-495 TO NORTH OF BRANDYWINE RIVER BRIDGE	CONTRACT T201407404	BRIDGE NO. 1 749 6142	FINISHED BRIDGE DECK ELEVATIONS SPAN 4A	FD-05
				COUNTY NEW CASTLE	DESIGNED BY: DAN		SECTION WRA
					CHECKED BY: WAG		SHEET NO. 469

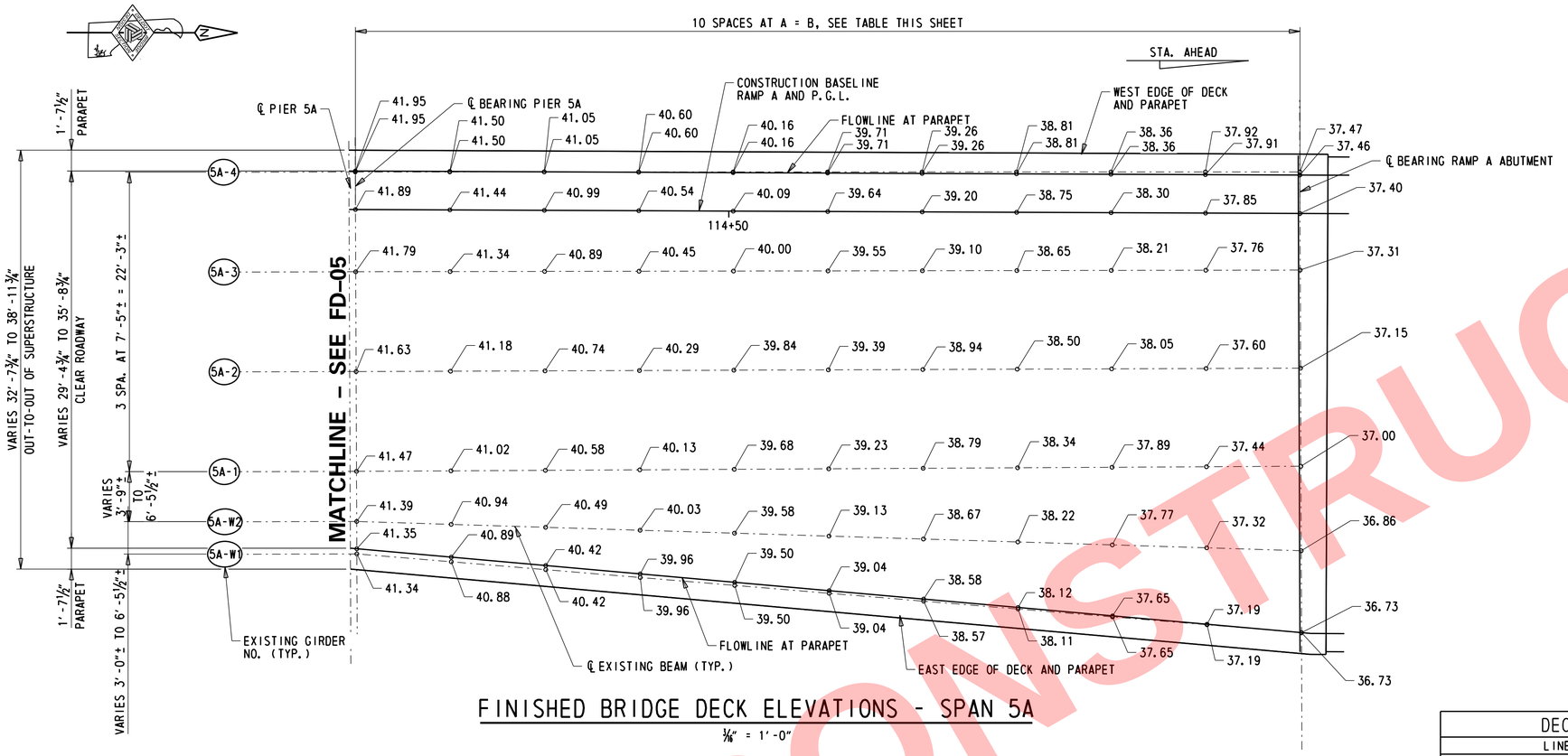

FINISHED BRIDGE DECK ELEVATIONS - SPAN 5A

1/16" = 1'-0"

DECK ELEVATION SPACING TABLE		
LINE	A	B
FLOW LINE AT PARAPET	7'-4⅜" (-)	73'-7"±
BEAM A-4	7'-4⅛" (-)	73'-7"±
CONSTRUCTION BASELINE RAMP A	7'-4⅜" (-)	73'-7"±
BEAM A-3	7'-4⅛" (-)	73'-6⅝"±
BEAM A-2	7'-4⅛" (-)	73'-6⅞"±
BEAM A-1	7'-4⅜" (-)	73'-6⅞"±
BEAM A-W2	7'-4⅛" (-)	73'-7⅜"±
BEAM A-W1	7'-4⅝" (-)	73'-10⅛"±
FLOW LINE AT PARAPET	7'-4⅝" (-)	73'-10⅝"±

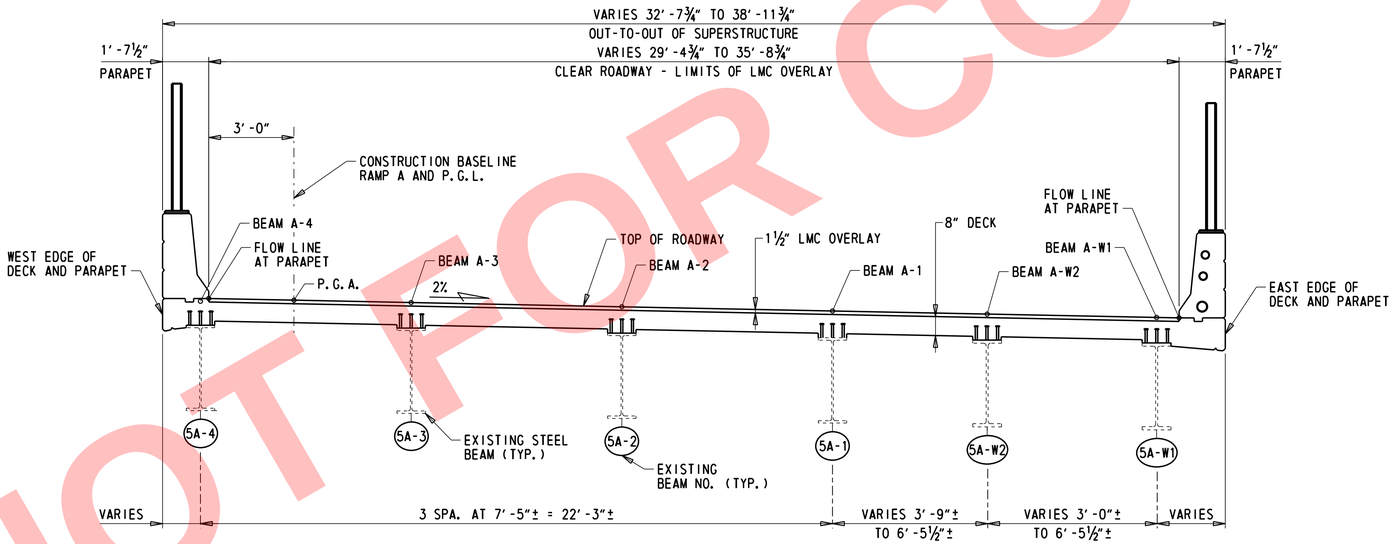

LOCATIONS OF FINISHED BRIDGE DECK ELEVATIONS

⅜" = 1'-0"

NOTES:

1. FINISHED BRIDGE DECK ELEVATIONS SHOWN ARE TOP OF LMC.
2. FOR VERTICAL CURVE DATA, SEE DWG. PE-01.
3. FOR CROSS SLOPE TRANSITIONS, SEE TABLE ON DWG. FD-01.
4. LEFT SHOULDER LINE FOLLOWS CONTRUCTION BASELINE RAMP A. SEE STRIPING PLAN ON DWG. SS-18 FOR MORE INFORMATION.

NOT FOR CONSTRUCTION

ADDENDA / REVISIONS		SCALE AS NOTED	REHABILITATION OF I-95 FROM I-495 TO NORTH OF BRANDYWINE RIVER BRIDGE	CONTRACT T201407404	BRIDGE NO. 1 749 6142	FINISHED BRIDGE DECK ELEVATIONS SPAN 5A	FD-06
				COUNTY NEW CASTLE	DESIGNED BY: DAN		SECTION WRA
					CHECKED BY: WAG		SHEET NO. 470

N:\31987-004\Contract I-95\CADD\Bridge\BR1-749_F006.dgn
5/31/2019 12:15:11 PM

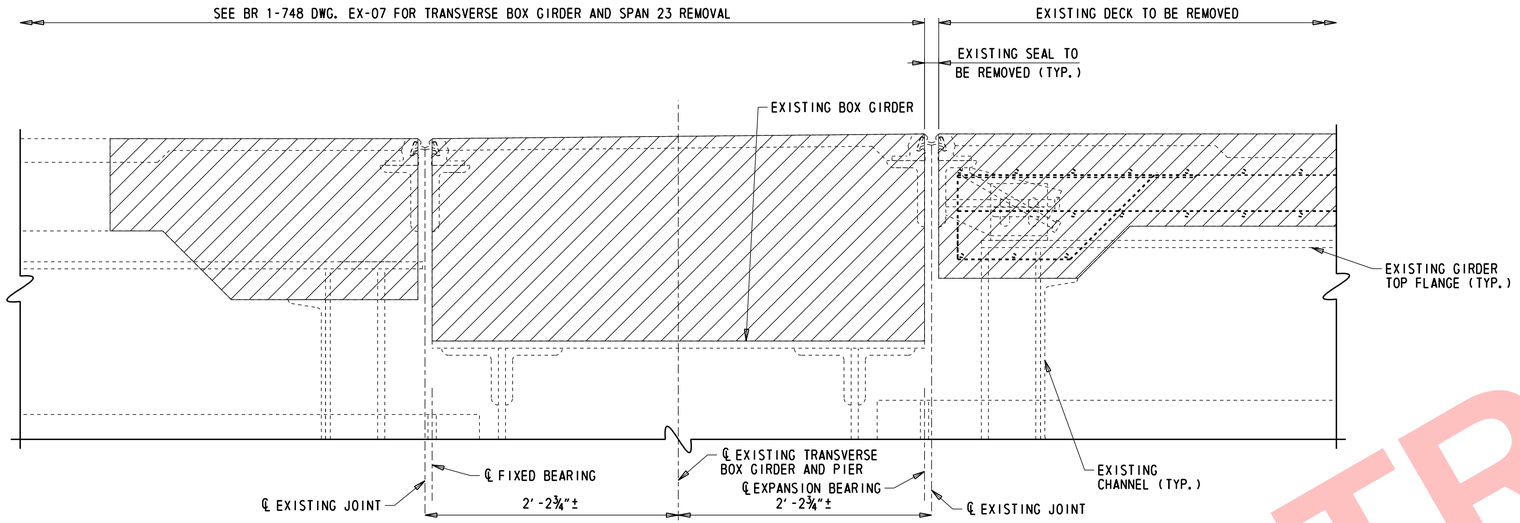

REMOVAL DETAIL - PIER 24

1½" = 1'-0"

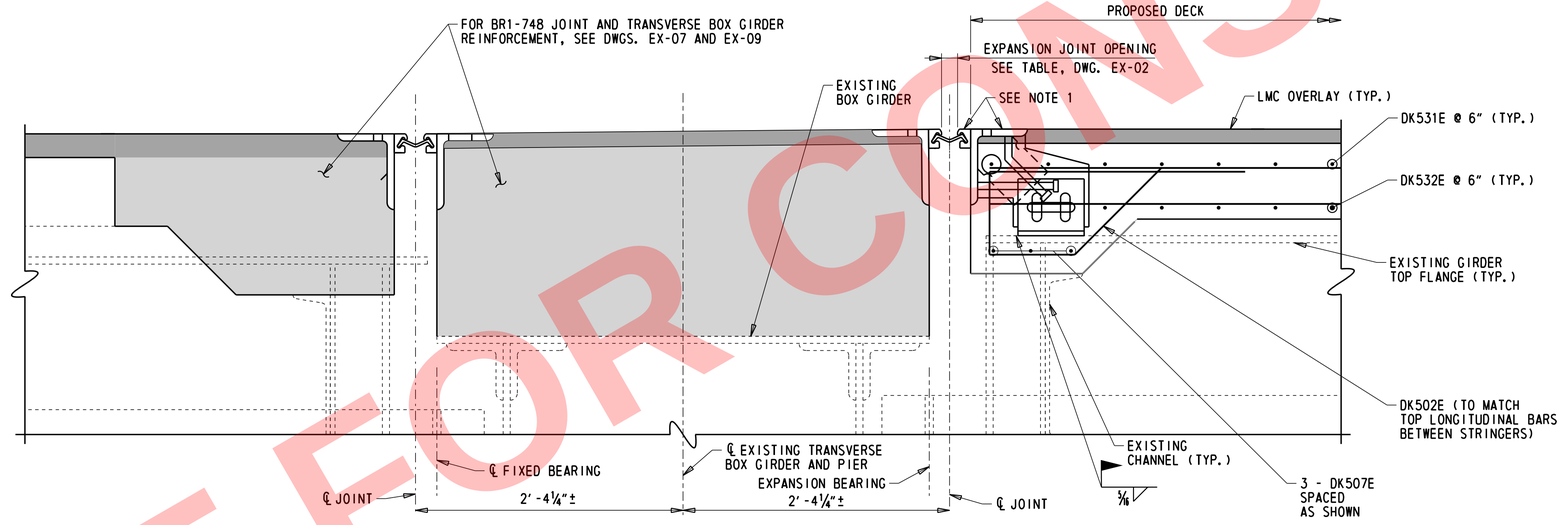

JOINT DETAIL - PIER 24

1½" = 1'-0"

NOTE:

SEE DWG. DK-01 FOR ADDITIONAL BARS AT OVERHANGS.

NOTES:

1. NEW STRIP SEAL ASSEMBLY SHOWN FOR GRAPHICAL PURPOSES ONLY. DETAILS MAY VARY BY MANUFACTURER. STRIP SEAL AND ASSEMBLY SHALL BE IN ACCORDANCE WITH ITEM 624000 - PREFABRICATED EXPANSION JOINT SYSTEM, 3".
2. FOR PARAPET JOINT PLATE DETAILS, SEE BR 1-748. CONSTRUCT PARAPET RECESS ON SPAN OA SIDE OF JOINT AS DETAILED IN PARAPET JOINT PLATE DETAILS ON DWG. EX-03.
3. FOR JOINT ASSEMBLY AND STEEL EXTRUSION DETAILS AND STRIP SEAL EXPANSION NOTES, SEE DWG. EX-02.

LEGEND:

- REMOVAL LIMITS
- CLASS D CONCRETE
- LMC OVERLAY

NOT FOR CONSTRUCTION

N:\31987-004\Contract_I-95\CADD\Bridge\BR1-749_EX01.dgn
5/31/2019 12:15:11 PM

ADDENDA / REVISIONS		SCALE AS NOTED	REHABILITATION OF I-95 FROM I-495 TO NORTH OF BRANDYWINE RIVER BRIDGE	CONTRACT T201407404	BRIDGE NO. 1 749 6142	EXPANSION JOINT DETAILS - 1	EX-01 SECTION WRA
				COUNTY NEW CASTLE	DESIGNED BY: DAN		SHEET NO. 471
					CHECKED BY: WAG		

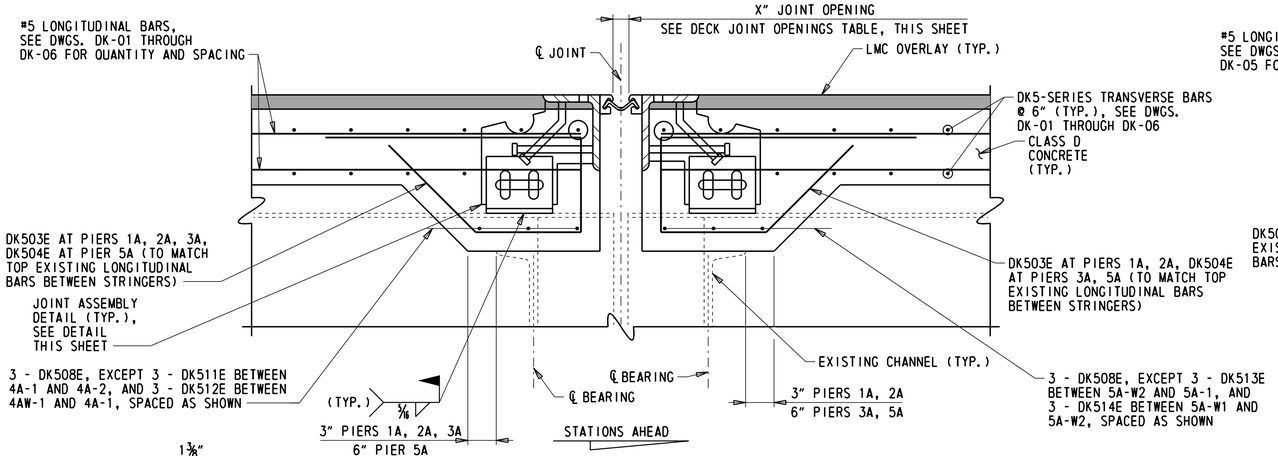

EXPANSION JOINT DETAIL

1½" = 1'-0"

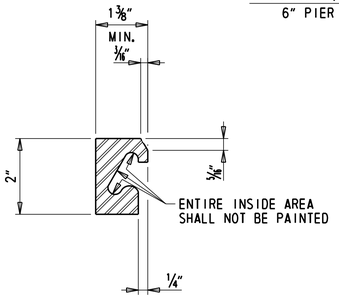

STEEL EXTRUSION DETAIL

6" = 1'-0"

LOCATION	TEMPERATURE (°F)									MOVEMENT CLASSIFICATION
	20°	30°	40°	50°	60°	68°	70°	80°	90°	100°	
PIER 24	2 1/4"	2 1/16"	2"	1 7/8"	1 3/4"	1 11/16"	1 5/8"	1 1/2"	1 7/16"	1 5/16"	3"
PIER 1A	2 1/8"	2 1/16"	2"	1 7/8"	1 3/4"	1 11/16"	1 5/8"	1 1/2"	1 7/16"	1 5/16"	3"
PIER 2A	2 1/8"	2"	1 15/16"	1 13/16"	1 3/4"	1 11/16"	1 11/16"	1 5/16"	1 1/2"	1 3/8"	3"
PIER 3A	2 3/8"	2 1/16"	2 1/16"	1 7/8"	1 3/4"	1 5/8"	1 5/8"	1 7/16"	1 3/8"	1 1/8"	3"
PIER 5A	2 1/16"	2 1/16"	2"	1 7/8"	1 3/4"	1 11/16"	1 5/8"	1 1/2"	1 1/16"	1 5/16"	3"

DECK JOINT OPENINGS

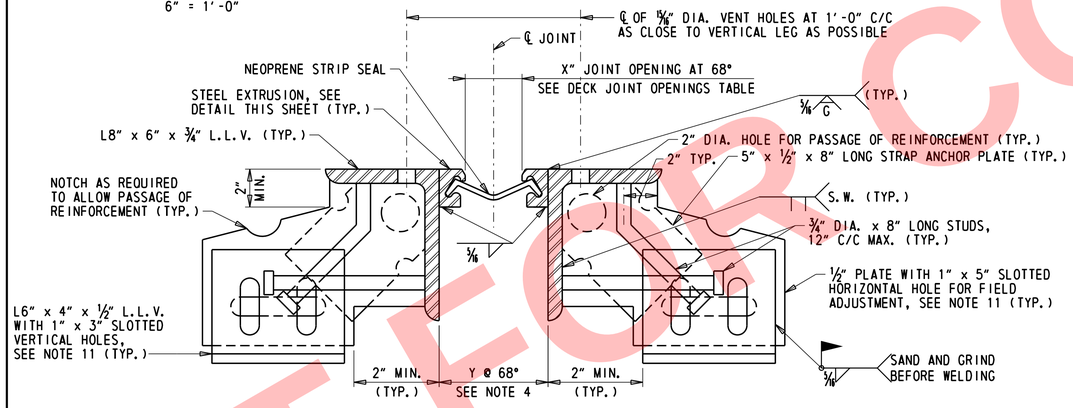

JOINT ASSEMBLY DETAIL

3" = 1'-0"

LEGEND:

- ULTA HIGH PERFORMANCE CONCRETE
- LMC OVERLAY

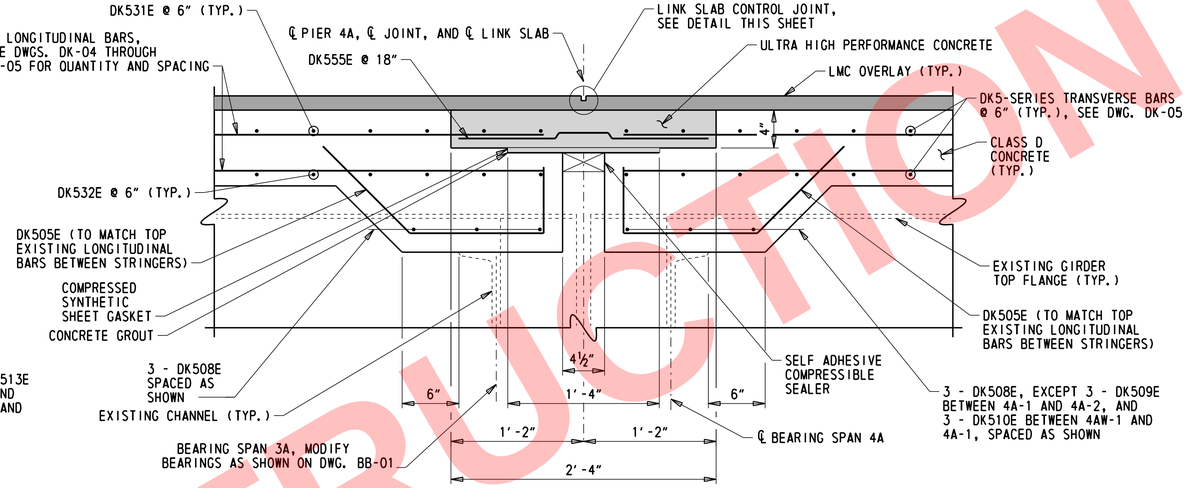

LINK SLAB DETAIL - PIER 4A

1½" = 1'-0"

STRIP SEAL EXPANSION JOINT NOTES:

1. STEEL FOR DECK JOINTS AND STEEL EXTRUSIONS SHALL BE AASHTO M270, GR. 36 (ASTM A36) AT MINIMUM.
2. NEOPRENE EXTRUSION TO MEET ASTM D-2628-81 MODIFIED, (RECOVERY TEST EXCLUDED).
3. THE EXPANSION JOINT SHALL BE CAPABLE OF SEALING THE DECK TO PREVENT MOISTURE AND OTHER CONTAMINANTS FROM DESCENDING THROUGH THE JOINT.
4. THE CONTRACTOR SHALL ADJUST THE OPEN JOINT (Y) AS REQUIRED BY THE WIDTH OF THE STEEL EXTRUSION USED SO AS TO PROVIDE A X" JOINT OPENING AT 68°F.
5. THE STRIP SEAL SHALL BE INSTALLED IN ONE PIECE ACROSS THE BRIDGE WIDTH. SPLICING OF THE STRIP SEAL IS NOT PERMITTED.
6. THE EXPANSION JOINT SYSTEM IS PAID FOR UNDER ITEM 624000 - PREFABRICATED EXPANSION JOINT SYSTEM, 3".
7. STEEL EXTRUSIONS SHALL BE HOT-DIP GALVANIZED. ENTIRE EXPANSION DAM SHALL BE PAINTED AFTER FABRICATION USING URETHANE SYSTEM.
8. LUBRICANT-ADHESIVE FOR USE IN INSTALLING AND BONDING NEOPRENE SEAL ELEMENTS TO STEEL JOINT COMPONENTS SHALL BE A ONE QUART MOISTURE-CURING POLYURETHANE AND HYDROCARBON SOLVENT MIXTURE HAVING THE FOLLOWING PHYSICAL PROPERTIES:

AVERAGE WEIGHT, POUNDS PER GALLON	8±10%
SOLIDS CONTENT	65%
ADHESIVE SHALL REMAIN LIQUID FROM	5°F TO 120°F
FILM STRENGTH, AS PER ASTM D-412	2,000 PSI
ELONGATION	250%

9. HOLES SHALL BE PLACED IN THE RIB PLATES AND STRAP ANCHOR PLATES FOR BAR REINFORCEMENT. IF THIS IS DONE IN FIELD AN APPROVED EPOXY-BONDED PAINT SHALL BE USED TO TOUCH-UP THE HOLES. PAYMENT INCIDENTAL TO ITEM NO. 624000 PREFABRICATED EXPANSION JOINT SYSTEM, 3".
10. STEEL EXTRUSIONS AND JOINT ANGLES SHALL BE CONTINUOUS ACROSS THE FULL WIDTH OF THE ROADWAY, NO SPLICING WILL BE PERMITTED.
11. IF WELD OPTION IS PROPOSED, SLOTTED HOLES IN ½" PLATE AND L6" x 4" x ½" MAY BE OMITTED.
12. PARAPET JOINT PLATES ARE REQUIRED. SEE VIEW B-B ON DWG. EX-03.

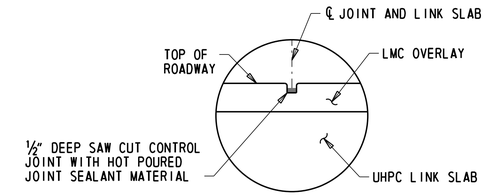

LINK SLAB CONTROL JOINT

3" = 1'-0"

LINK SLAB NOTES:

1. PAYMENT FOR ½" DEEP SAW CUT CONTROL JOINT AND HOT POURED JOINT SEALANT SHALL BE INCIDENTAL TO ITEM 625000 - LATEX-MODIFIED CONCRETE OVERLAY INSTALLATION.
2. COST OF CONCRETE GROUT, COMPRESSED SYNTHETIC SHEET GASKET, AND SELF ADHESIVE COMPRESSIBLE SEALER WILL BE INCIDENTAL TO ITEM 610500 - ULTRA HIGH PERFORMANCE CONCRETE.
3. FOR LINK SLAB SEQUENCE OF CONSTRUCTION NOTES, SEE DWG. BB-01.

NOTES:

1. NEW STRIP SEAL ASSEMBLY SHOWN FOR GRAPHICAL PURPOSES ONLY. DETAILS MAY VARY BY MANUFACTURER. STRIP SEAL AND ASSEMBLY SHALL BE IN ACCORDANCE WITH ITEM 624000 - PREFABRICATED EXPANSION JOINT SYSTEM, 3".
2. FOR PARAPET JOINT PLATE DETAILS, SEE BR 1-748. CONSTRUCT PARAPET RECESS ON SPAN OA SIDE OF JOINT AS DETAILED IN PARAPET JOINT PLATE DETAILS ON DWG. EX-03.
3. SEE DWG. EX-01 FOR PIER 24 JOINT DETAIL.

NOT FOR CONSTRUCTION

N:\31987-00A\Contract_I-95\CADD\Bridge\BR1-749_EX02.dgn
5/31/2019 12:15:12 PM

ADDENDA / REVISIONS		SCALE AS NOTED	REHABILITATION OF I-95 FROM I-495 TO NORTH OF BRANDYWINE RIVER BRIDGE	CONTRACT T201407404	BRIDGE NO. 1 749 6142	EXPANSION JOINT DETAILS – 2	EX-02
				COUNTY NEW CASTLE	DESIGNED BY: DAN		SECTION WRA
					CHECKED BY: WAG		SHEET NO. 472

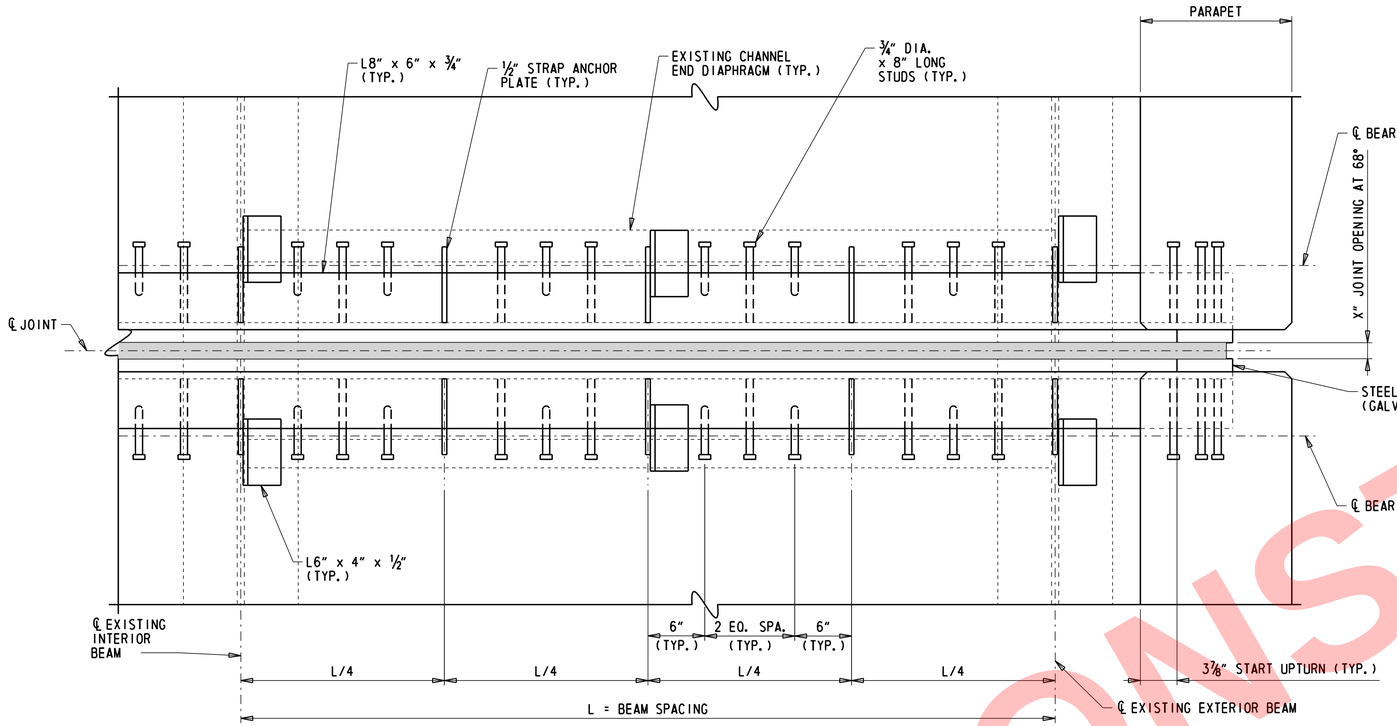

TYPICAL JOINT PLAN

1½" = 1'-0"

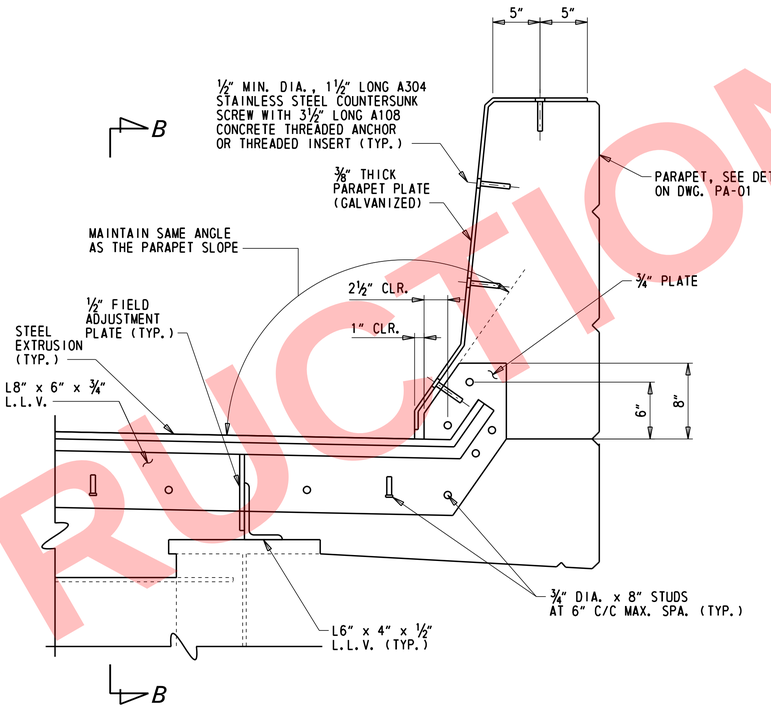

TYPICAL SECTION AT JOINT

1½" = 1'-0"

PARAPET JOINT PLATE NOTES:

1. FORM CONCRETE RECESS AREA IN PARAPET AND GRIND TO PROVIDE SMOOTH SURFACE. APPLY ONE COAT OF ASPHALT CEMENT TO FREE SIDE OF JOINT IN ACCORDANCE WITH SECTION 1012 OF THE STANDARD SPECIFICATIONS TO ALLOW BENT SLIDING PLATE TO MOVE FREELY WITHOUT FRICTION. PAYMENT WILL BE INCIDENTAL TO ITEM NO. 610008 - PORTLAND CEMENT CONCRETE MASONRY, PARAPET, CLASS A.
2. PLACE PARAPET CONCRETE WITH STEEL BENT PLATES, INSERTS, AND BOLTS IN PLACE TO ENSURE PROPER ALIGNMENT OF INSERTS AND HOLES IN THE STEEL PLATE. REMOVE PLATES TO INSTALL SEAL. APPLY APPROVED BONDBREAKER TO SLIDING PLATES PRIOR TO INSTALLATION.
3. GRIND ALL STEEL EDGES EXPOSED TO TRAFFIC TO ⅛" MIN. RADIUS.
4. BOLTS SHALL BE ASTM A 304 STAINLESS STEEL COUNTERSUNK SCREW WITH ASTM A 108 CONCRETE THREADED ANCHOR OR THREADED INSERT. HEAD OF BOLTS SHALL BE FLUSH WITH FACE OF STEEL PLATE.
5. THE CONTRACTOR SHALL SUBMIT WORKING DRAWINGS OF TRAFFIC BARRIER PLATES FOR APPROVAL.
6. FOR ADDITIONAL JOINT DETAILS, SEE DWG. EX-02.
7. ⅜" PARAPET PLATE SHALL BE UNPAINTED GALVANIZED STEEL. PAYMENT FOR PARAPET JOINT PLATES SHALL BE INCIDENTAL TO ITEM 624000 - PREFABRICATED EXPANSION JOINT SYSTEM, 3".
8. FOR JOINT ASSEMBLY DETAIL AND STRIP SEAL EXPANSION NOTES, SEE DWG. EX-01.

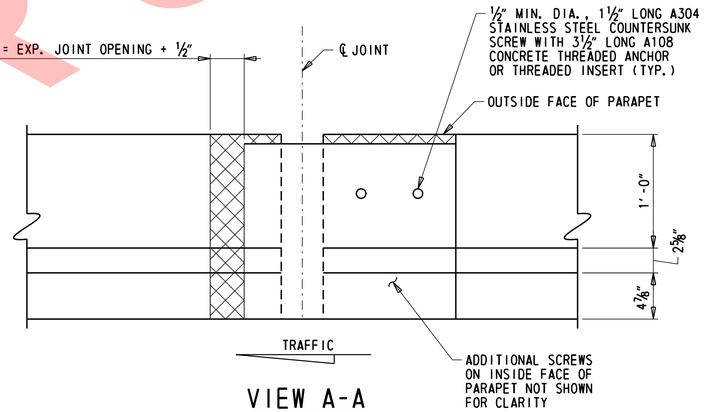

VIEW A-A

1½" = 1'-0"

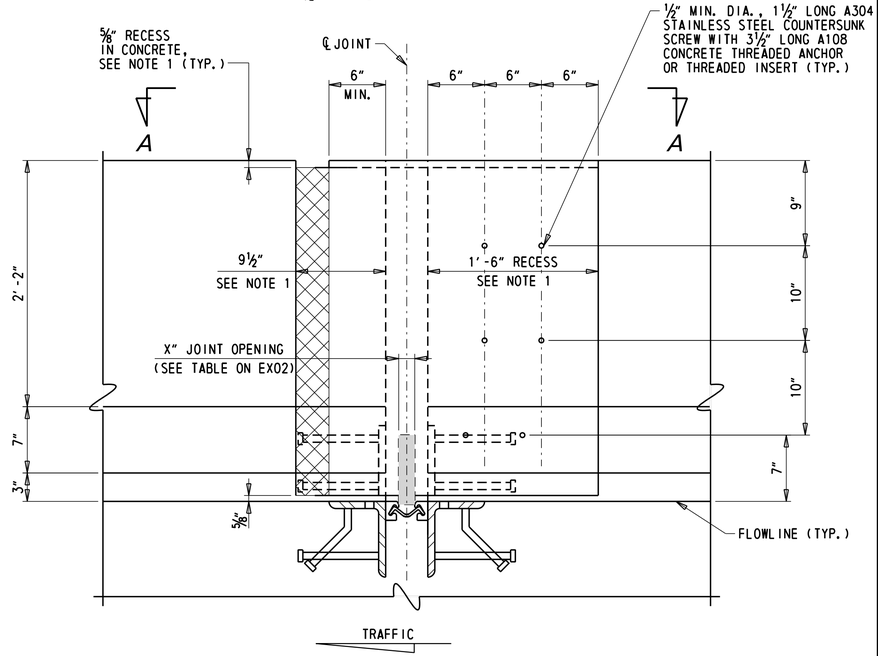

VIEW B-B

1½" = 1'-0"

NOT FOR CONSTRUCTION

ADDENDA / REVISIONS	SCALE AS NOTED	REHABILITATION OF I-95 FROM I-495 TO NORTH OF BRANDYWINE RIVER BRIDGE	CONTRACT T201407404	BRIDGE NO. 1 749 6142	EXPANSION JOINT DETAILS – 3	EX-03
			COUNTY NEW CASTLE	DESIGNED BY: DAN		SECTION WRA
				CHECKED BY: WAG		SHEET NO. 473

N:\31987-004\Contract_I-95\CADD\Bridge\BR1-749_EX03.dgn
5/31/2019 12:15:13 PM

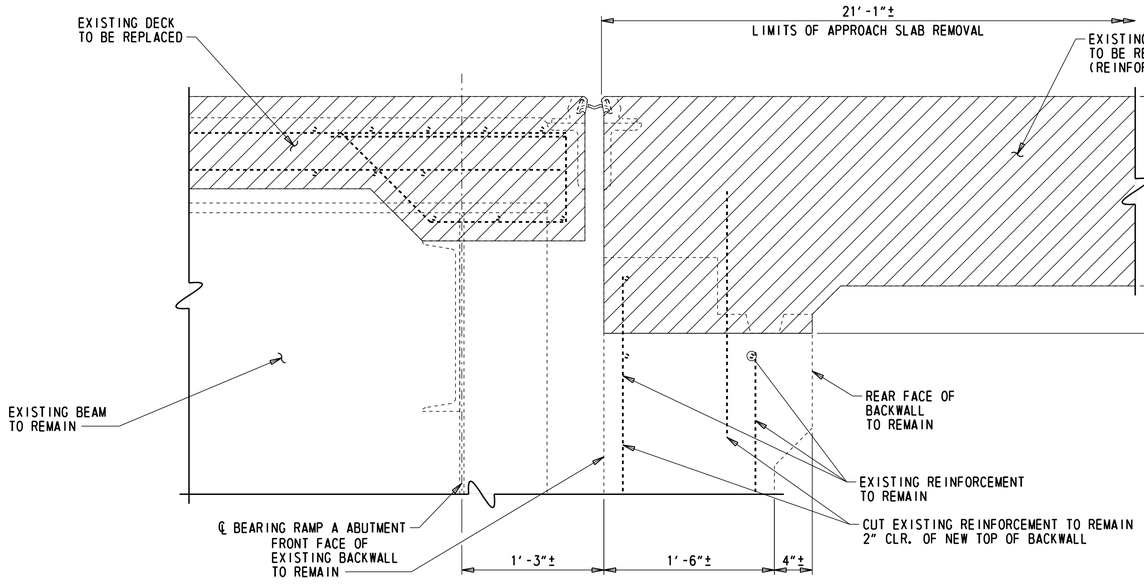

REMOVAL DETAIL - ORIGINAL

1½" = 1'-0"

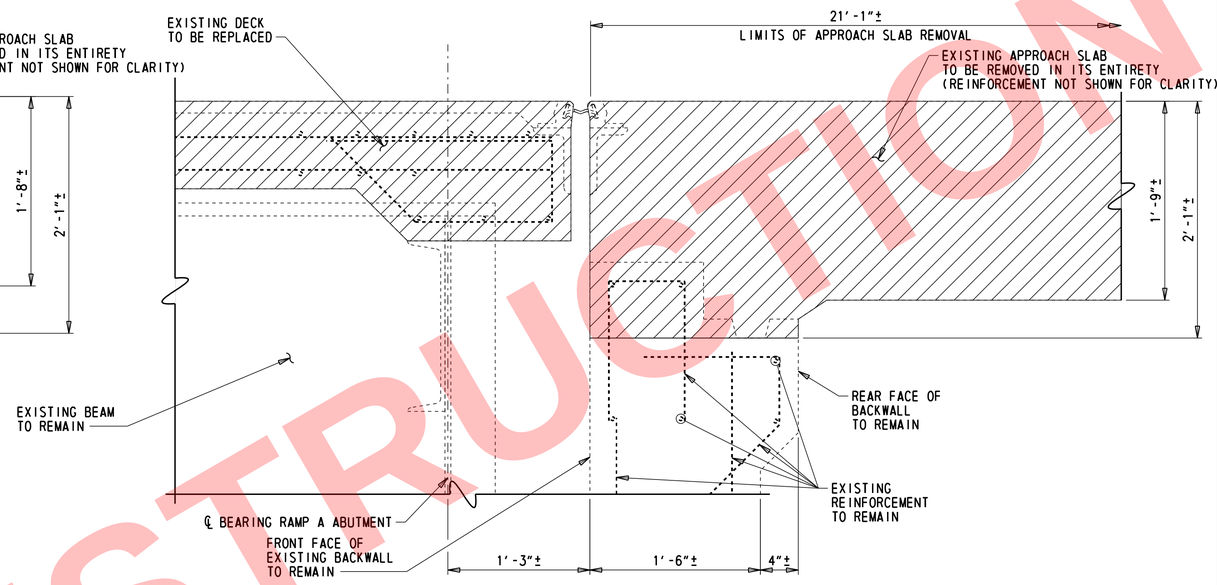

REMOVAL DETAIL - WIDENED

1½" = 1'-0"

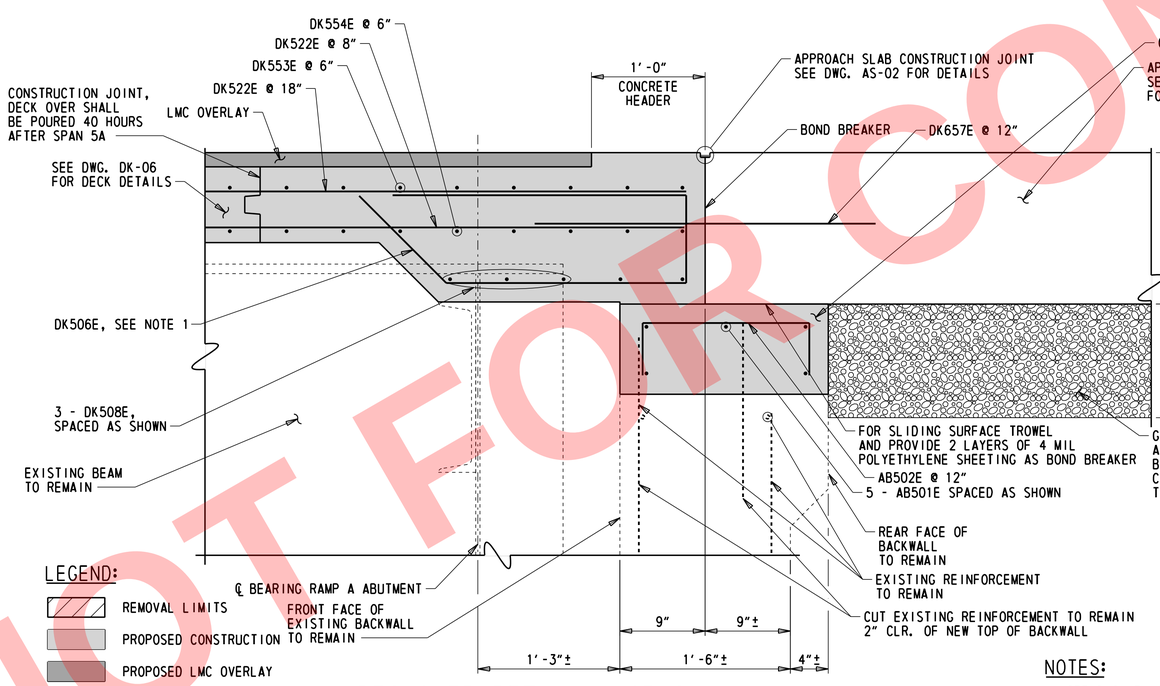

LEGEND:

- REMOVAL LIMITS
- PROPOSED CONSTRUCTION
- PROPOSED LMC OVERLAY

DECKOVER DETAIL - ORIGINAL

1½" = 1'-0"

NOTES:

1. SEE DWG. EX-05 FOR PLAN VIEW AND LIMITS OF ORIGINAL AND WIDENED SECTION.

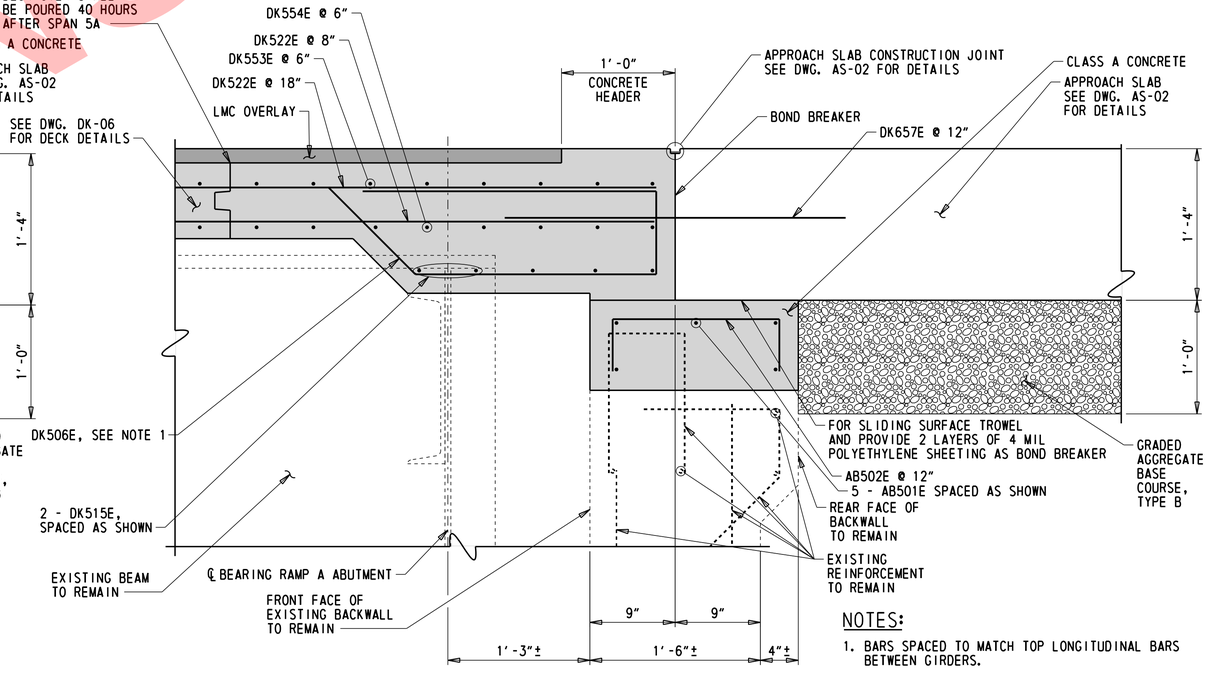

NOTES:

1. BARS SPACED TO MATCH TOP LONGITUDINAL BARS BETWEEN GIRDERS.

DECKOVER DETAIL - WIDENED

1½" = 1'-0"

NOT FOR CONSTRUCTION

N:\31987-004\Control I-95\CADD\Bridge\BR1-749_EX04.dgn
5/31/2019 12:15:14 PM

ADDENDA / REVISIONS	SCALE AS NOTED	REHABILITATION OF I-95 FROM I-495 TO NORTH OF BRANDYWINE RIVER BRIDGE	CONTRACT T201407404	BRIDGE NO. 1 749 6142	RAMP A ABUTMENT DECKOVER DETAILS – 1	EX-04
			COUNTY NEW CASTLE	DESIGNED BY: DAN		SECTION WRA
				CHECKED BY: WAG		SHEET NO. 474

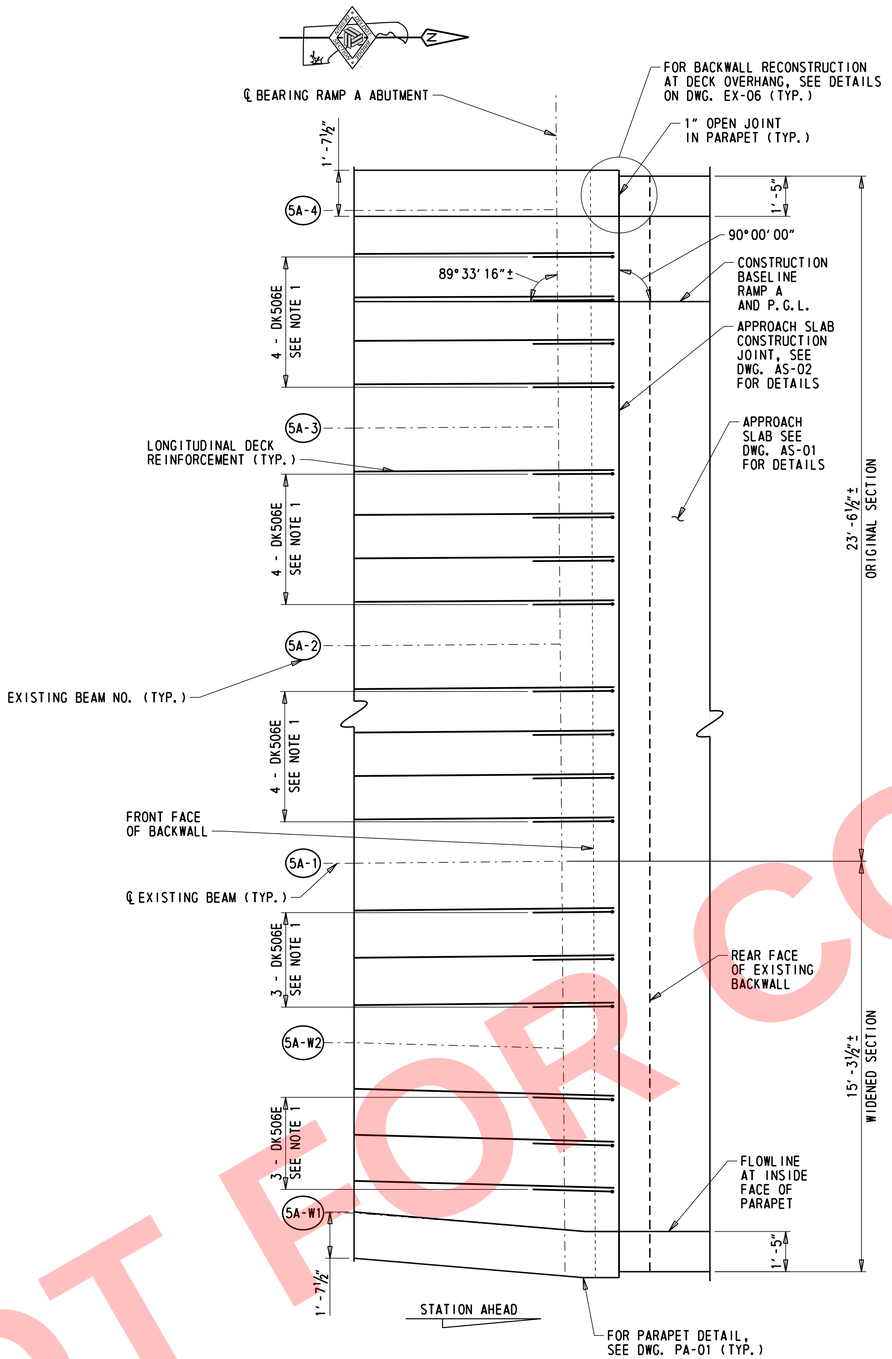

DECKOVER - REINFORCEMENT PLAN

⅜" = 1'-0"

NOTES:

1. BARS SPACED TO MATCH LONGITUDINAL BARS BETWEEN BEAMS. SEE DWG. DK-06 FOR ADDITIONAL BAR DETAILS.

NOT FOR CONSTRUCTION

N:\31987-004\Contract_I-95\CADD\Bridge\BR1-749_EX05.dgn
5/31/2019 12:15:15 PM

ADDENDA / REVISIONS		SCALE AS NOTED	REHABILITATION OF I-95 FROM I-495 TO NORTH OF BRANDYWINE RIVER BRIDGE	CONTRACT T201407404	BRIDGE NO. 1 749 6142	RAMP A ABUTMENT DECKOVER DETAILS - 2	EX-05
				COUNTY NEW CASTLE	DESIGNED BY: DAN		SECTION WRA
					CHECKED BY: WAG		SHEET NO. 475

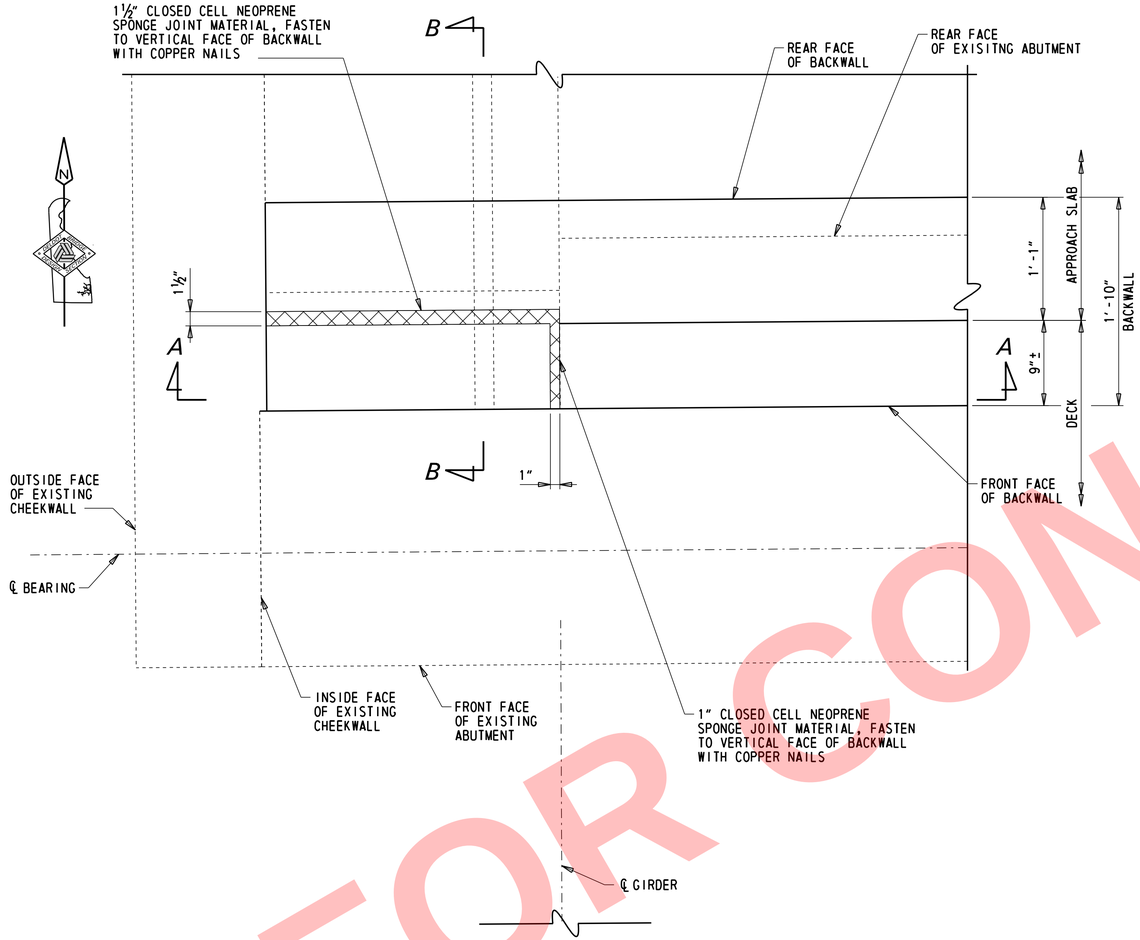

BACKWALL AT DECKOVER OVERHANG - PLAN

1½" = 1'-0"

NOTE:
NORTHWEST CORNER SHOWN,
NORTHEAST CORNER SIMILAR

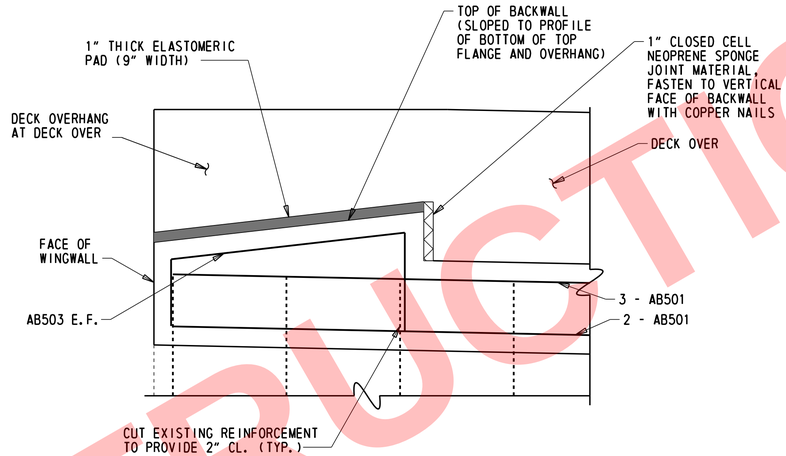

SECTION A-A

1½" = 1'-0"

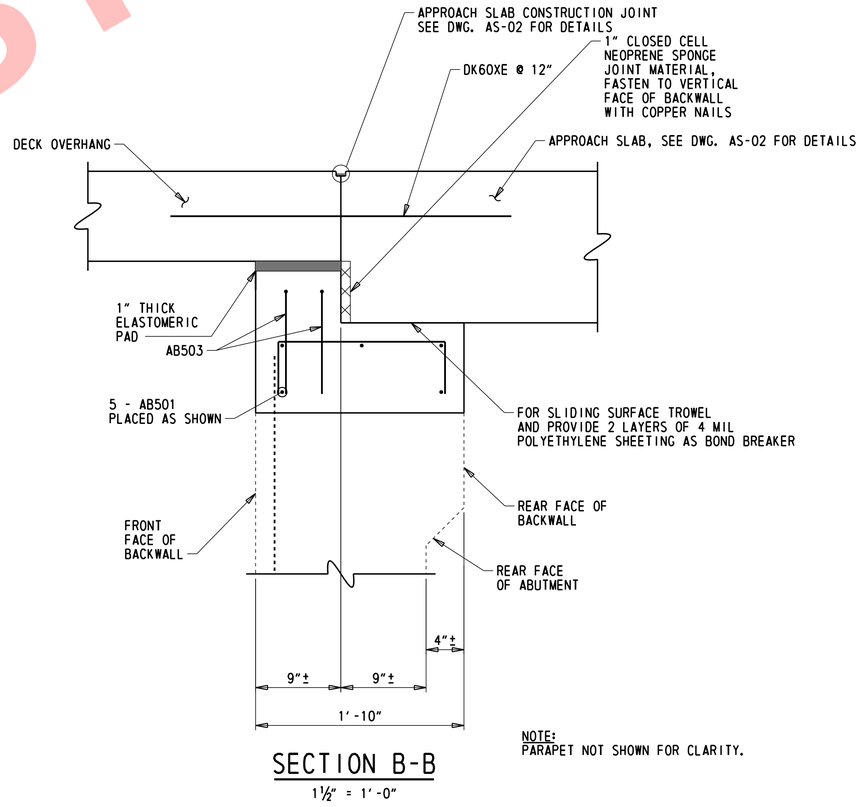

SECTION B-B

1½" = 1'-0"

NOTE:
PARAPET NOT SHOWN FOR CLARITY.

NOT FOR CONSTRUCTION

N:\31987-001\Control_I-95\CADD\Bridge\BR1-749_EX06.dgn
5/31/2019 12:15:15 PM

ADDENDA / REVISIONS	SCALE AS NOTED	REHABILITATION OF I-95 FROM I-495 TO NORTH OF BRANDYWINE RIVER BRIDGE	CONTRACT T201407404	BRIDGE NO. 1 749 6142	RAMP A ABUTMENT DECKOVER DETAILS – 3	EX-06
			COUNTY NEW CASTLE	DESIGNED BY: DAN		SECTION WRA
				CHECKED BY: WAG		SHEET NO. 476

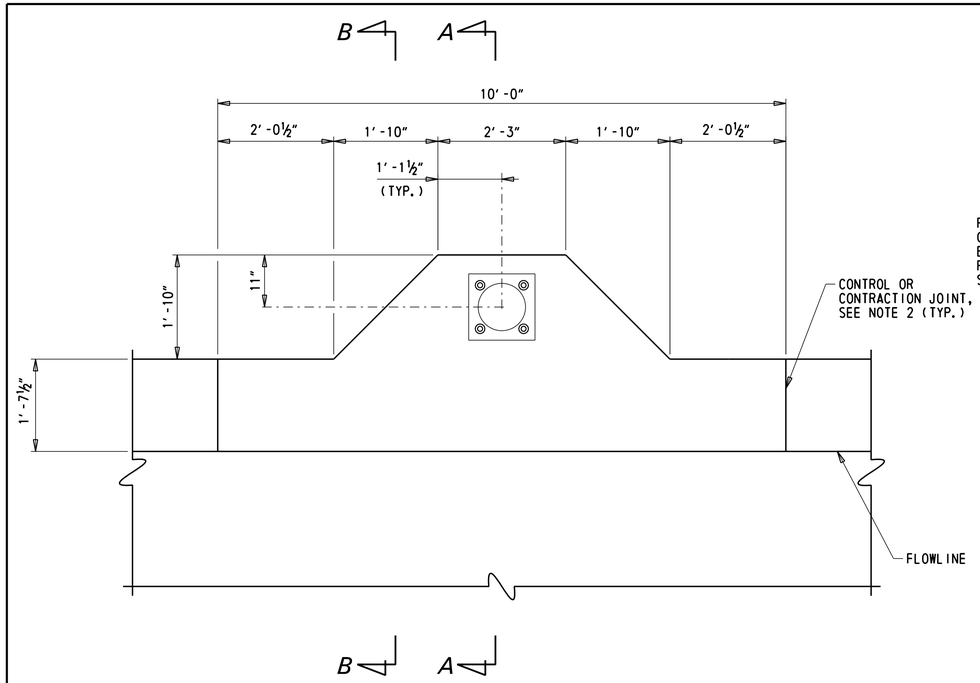

LIGHT BRACKET PLAN

¾" = 1'-0"

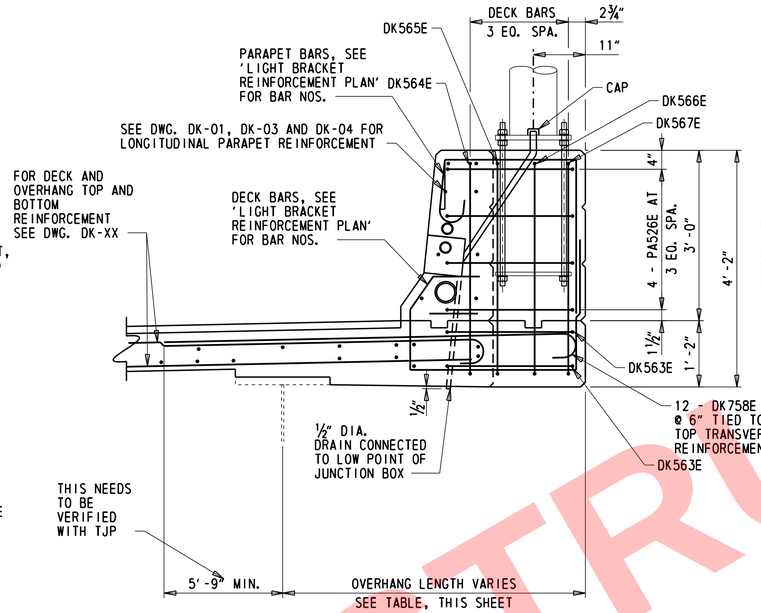

SECTION A-A

¾" = 1'-0"

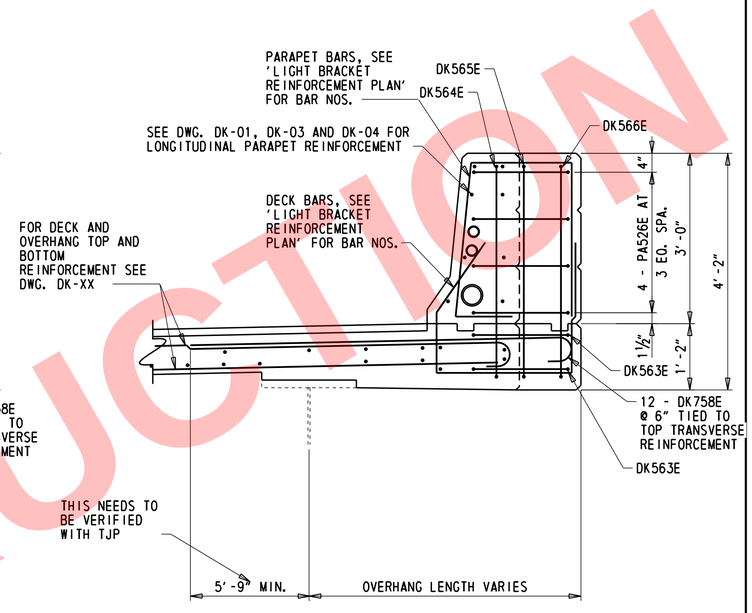

SECTION B-B

¾" = 1'-0"

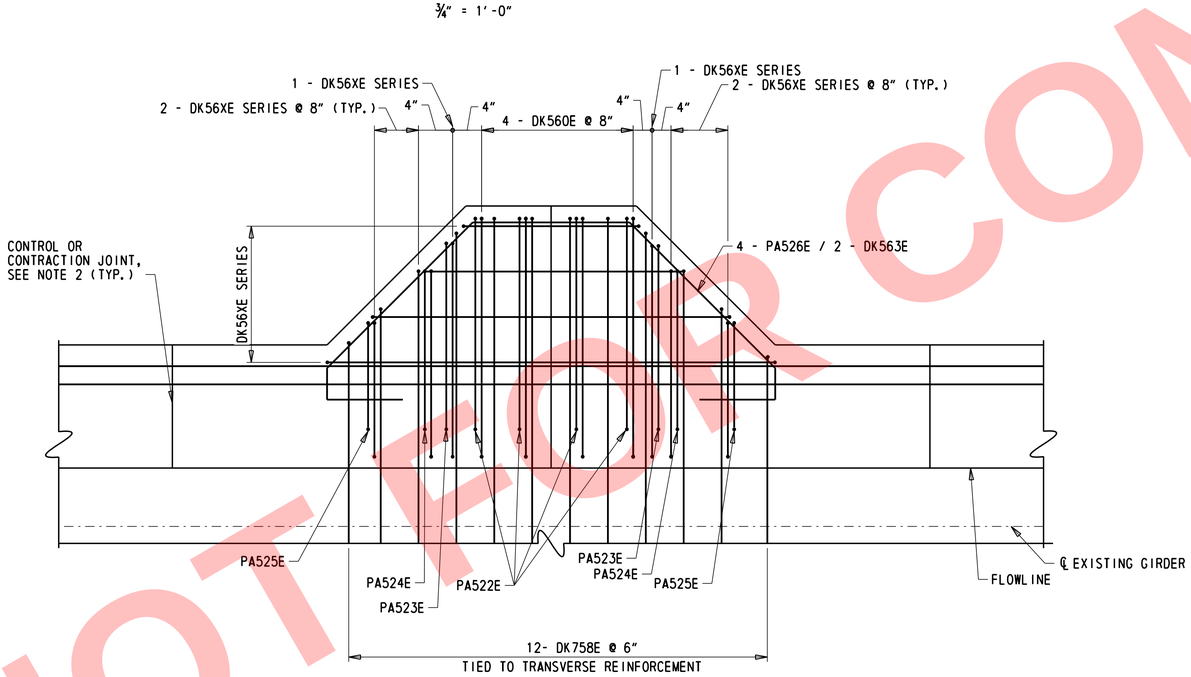

LIGHT BRACKET REINFORCEMENT PLAN

1" = 1'-0"

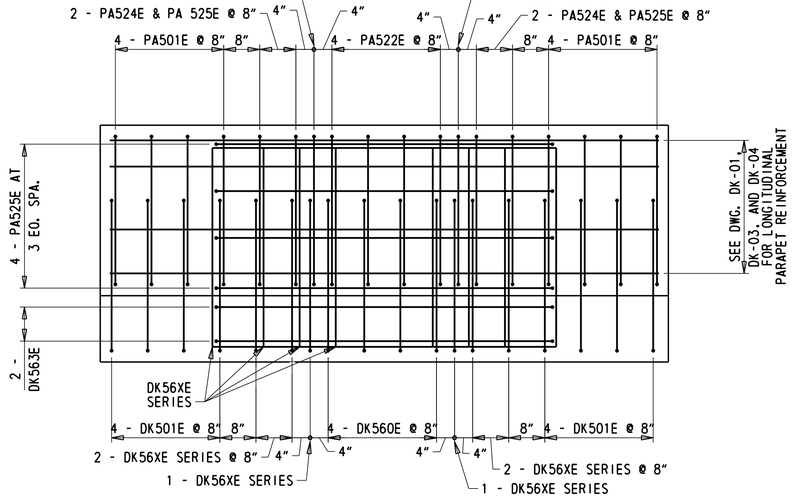

LIGHT BRACKET REINFORCEMENT ELEVATION

¾" = 1'-0"

SPAN NO.	LIGHT STANDARD NO.	LIGHT POLE STATION	LIGHT POLE OFFSET	OVERHANG LENGTH
0A	LS-8	109+25.9	20.9' RT.	5'-4"'
2A	LS-9	111+63.1	23.5' RT.	4'-2¾"
4A	LS-10	113+41.5	23.5' RT.	4'-7¾"'

NOTES:

1. REFER TO DWGS. DK-01, DK-03, AND DK-04 FOR TOP AND BOTTOM DECK BAR NUMBERS AND PARAPET BAR NUMBERS.
2. DETAIL SHOWN WITH CONTROL JOINT CONTINUOUS REINFORCEMENT.
3. FOR CONDUIT AND JUNCTION BOX LAYOUT, SEE DWG. PA-XX.

NOT FOR CONSTRUCTION

N:\31987-004\Control_I-95\CADD\Bridge\BR1-749_DT01.dgn
5/31/2019 12:15:16 PM

ADDENDA / REVISIONS	SCALE AS NOTED	REHABILITATION OF I-95 FROM I-495 TO NORTH OF BRANDYWINE RIVER BRIDGE	CONTRACT T201407404	BRIDGE NO. 1 749 6142	BRIDGE MOUNTED LIGHT BRACKET DETAILS	DT-01
			COUNTY NEW CASTLE	DESIGNED BY: DAN		SECTION WRA
				CHECKED BY: WAG		SHEET NO. 477

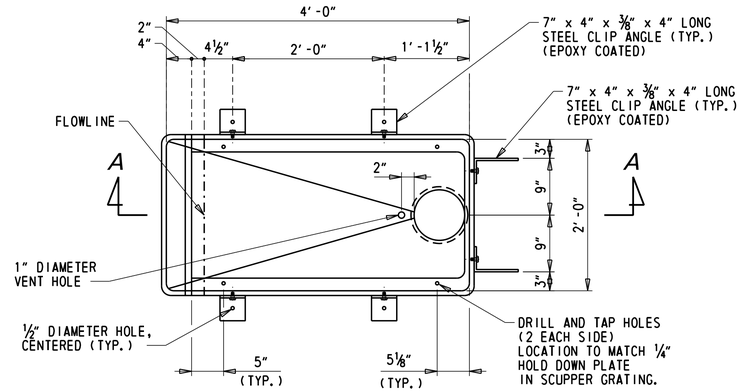

TYPE I PLAN VIEW

1" = 1'-0"

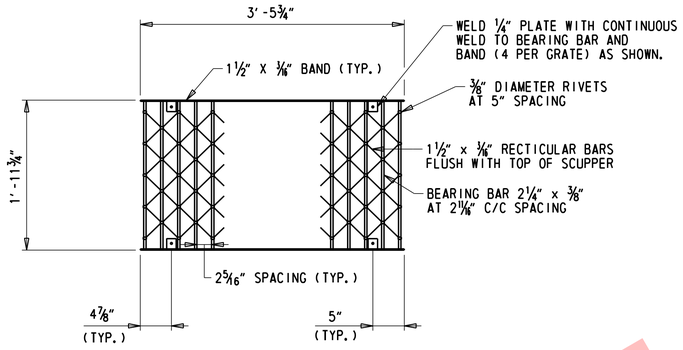

SCUPPER GRATING PLAN VIEW

1" = 1'-0"

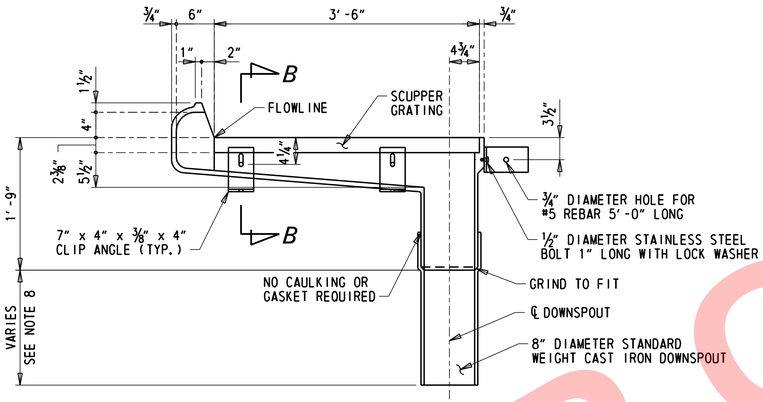

SECTION A-A

1" = 1'-0"

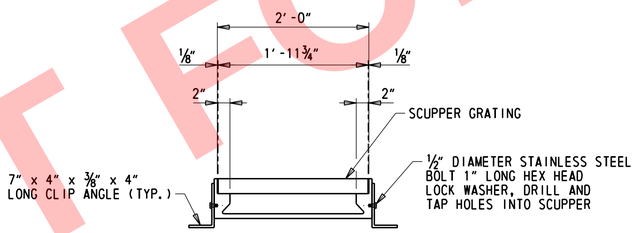

SECTION B-B

1" = 1'-0"

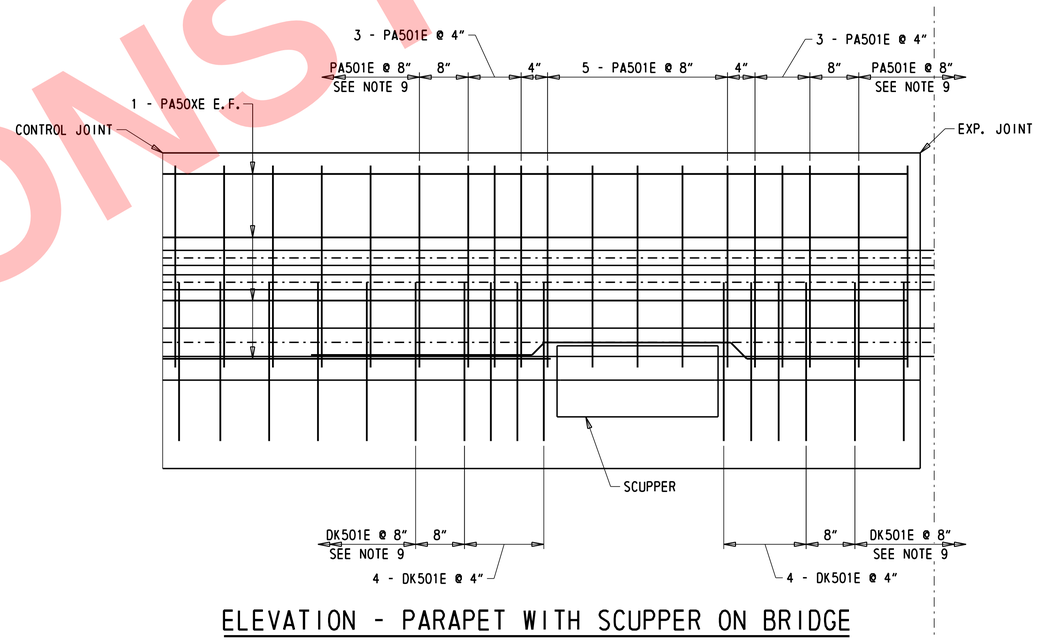

ELEVATION - PARAPET WITH SCUPPER ON BRIDGE

(SPAN OA SHOWN, OTHERS SIMILAR)

1" = 1'-0"

NOTES:

1. SCUPPERS SHALL BE GRAY CAST IRON, CONFORMING TO ASTM M 105 CLASS 30.
2. GRATINGS SHALL BE STRUCTURAL STEEL CONFORMING TO ASTM A 709 GRADE 36 AND EPOXY COATED.
3. STAINLESS STEEL BOLTS SHALL CONFORM TO ASTM A 193, IDENTIFICATION SYMBOL B 8 TYPE 304.
4. SCUPPERS SHALL BE PAINTED IN CONFORMANCE WITH SECTION 616.02 OF THE STANDARD SPECIFICATIONS. OUTSIDE OF SCUPPERS EXPOSED TO ATMOSPHERE BELOW THE CONCRETE DECK SLAB SHALL RECEIVE THE FIELD PAINT REQUIRED FOR STRUCTURAL STEEL AND SHALL MATCH THE COLOR OF EXISTING BEAM.
5. THE FURNISHING, FABRICATING, ERECTING, ETC. OF ALL SCUPPERS FOR THE BRIDGE, COMPLETE IN PLACE, WILL NOT BE MEASURED BUT WILL BE PAID FOR UNDER ITEM 615001 - STEEL STRUCTURES (LS).
6. THERE MUST BE A MINIMUM OF 5" OF CONCRETE UNDER ENTIRE SCUPPER AREA, WITH A MAT OF REBARS EQUIVALENT IN SIZE AND SPACING TO NORMAL BOTTOM MAT PATTERN OF DECK. THIS MAY REQUIRE THE LOWERING OF THE DECK IN THIS AREA.
7. GRATE AND SCUPPER SHALL BE SHIPPED AS UNIT WITH GRATE HOLD DOWN BOLTS IN PLACE (NOT WELDED).
8. EXTEND DOWNSPOUT TO A MINIMUM OF 8" BELOW THE BOTTOM FLANGE OF THE NEAREST STRUCTURAL STEEL SUPERSTRUCTURE MEMBER OR TRANSVERSE STRUCTURAL STEEL SUBSTRUCTURE MEMBER. DOWNSPOUT TERMINATION SHALL NOT REDUCE THE EXISTING CLEARANCES OVER ROADWAY(S) OR RAILROAD TRACK(S).
9. ADJUST BARS TO HOLD 8" SPACING TO CONTROL JOINT OR EXPANSION/CONTRACTION JOINT.

NOT FOR CONSTRUCTION

N:\31987-00\Con\ctc\I-95\C400\Bridge\BR\749_DT02.dgn
5/31/2019 12:15:07 PM

ADDENDA / REVISIONS	SCALE AS NOTED	REHABILITATION OF I-95 FROM I-495 TO NORTH OF BRANDYWINE RIVER BRIDGE	CONTRACT T201407404	BRIDGE NO. 1 749 6142	SCUPPER DETAILS	DT-02
			COUNTY NEW CASTLE	DESIGNED BY: DAN		SECTION WRA
				CHECKED BY: WAG		SHEET NO. 478

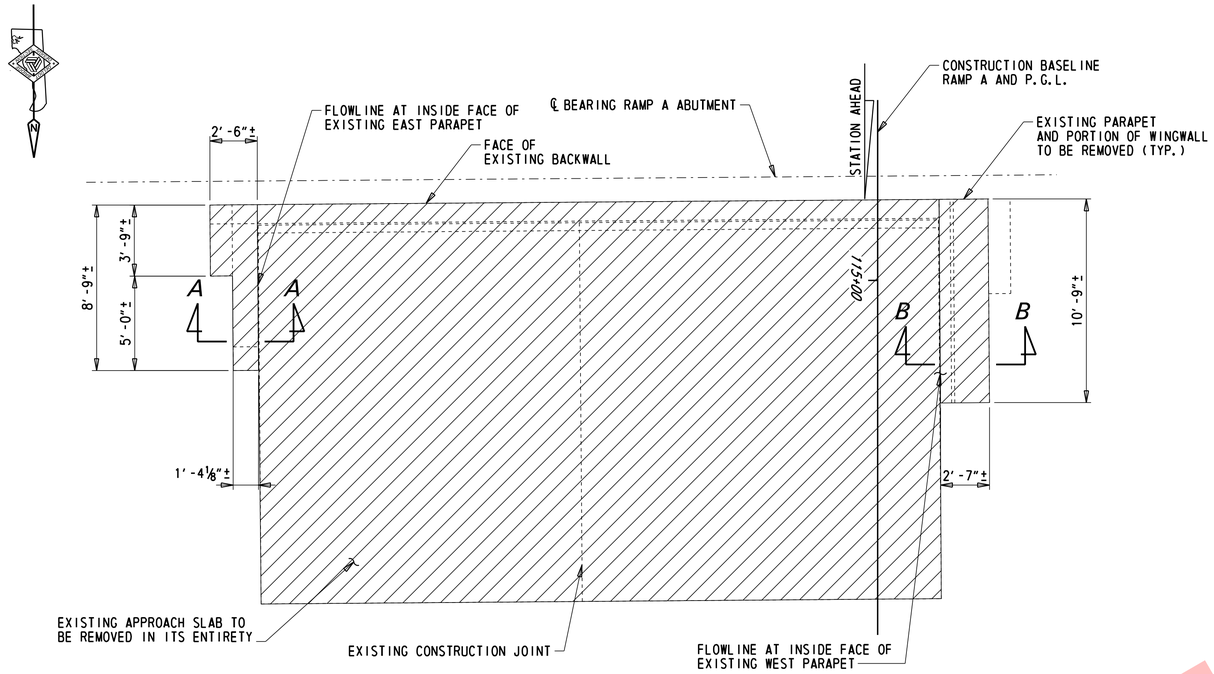

APPROACH SLAB AND ABUTMENT PARTIAL DEMOLITION PLAN

¼" = 1'-0"

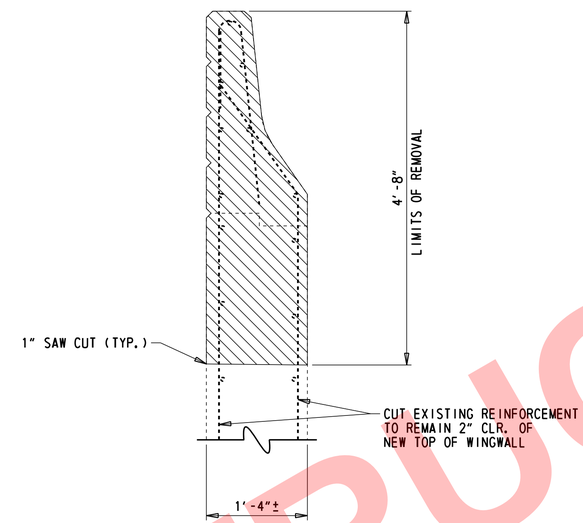

SECTION A-A REMOVAL

1" = 1'-0"

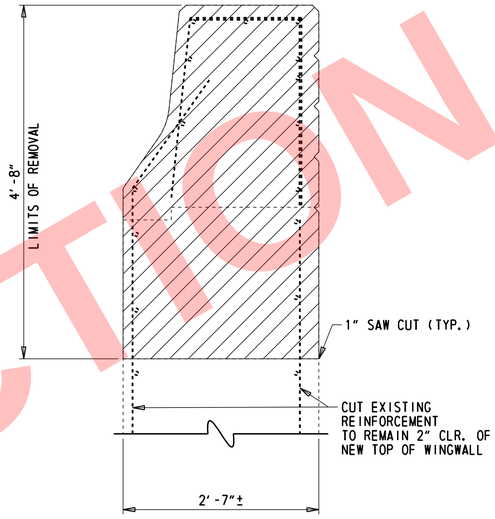

SECTION B-B REMOVAL

1" = 1'-0"

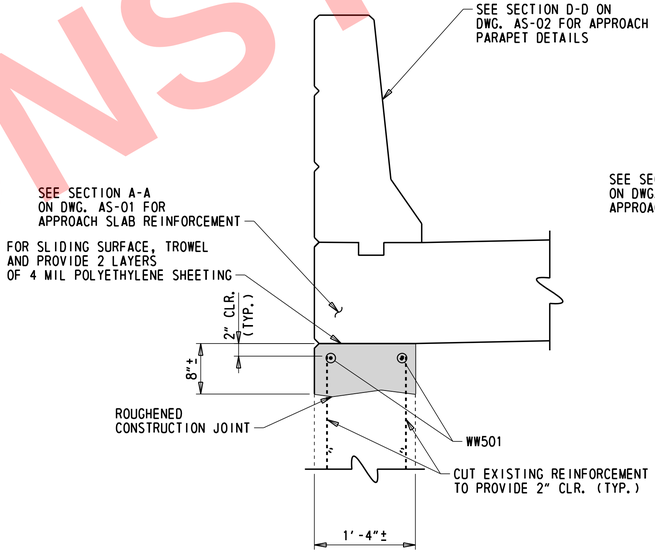

SECTION A-A RECONSTRUCTION

1" = 1'-0"

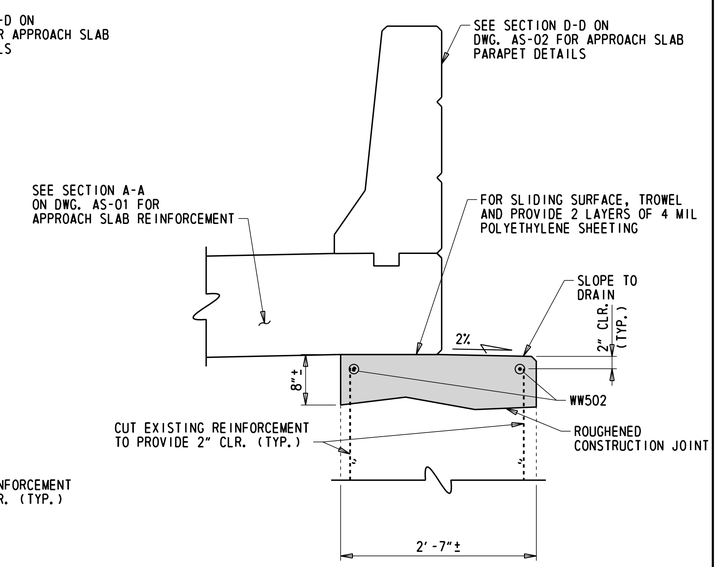

SECTION B-B RECONSTRUCTION

1" = 1'-0"

LEGEND:

REMOVAL LIMITS

CLASS A CONCRETE

NOT FOR CONSTRUCTION

N:\31987-004\Contract_I-95\CADD\Bridge\BR1-749_AS01.dgn
5/31/2019 12:15:18 PM

ADDENDA / REVISIONS	SCALE AS NOTED	REHABILITATION OF I-95 FROM I-495 TO NORTH OF BRANDYWINE RIVER BRIDGE	CONTRACT T201407404	BRIDGE NO. 1 749 6142	PARTIAL WINGWALL DEMOLITION PLAN AND DETAILS	AS-01
			COUNTY NEW CASTLE	DESIGNED BY: DAN		SECTION WRA
				CHECKED BY: WAG		SHEET NO. 479

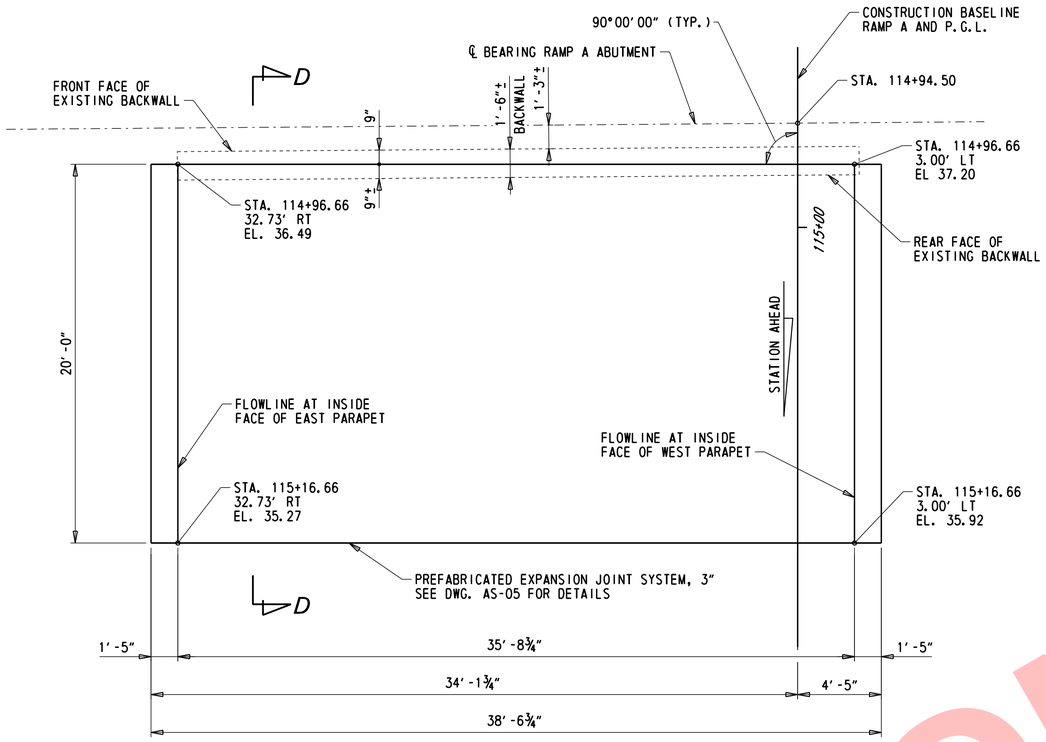

PLAN - APPROACH SLAB

¼" = 1'-0"

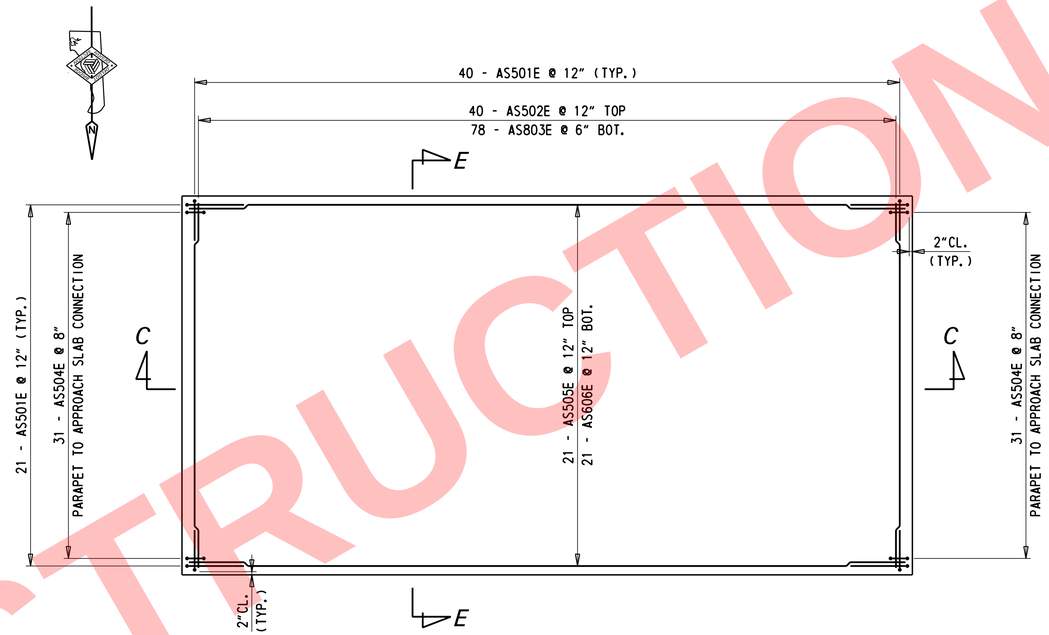

PLAN - APPROACH SLAB REINFORCEMENT

¼" = 1'-0"

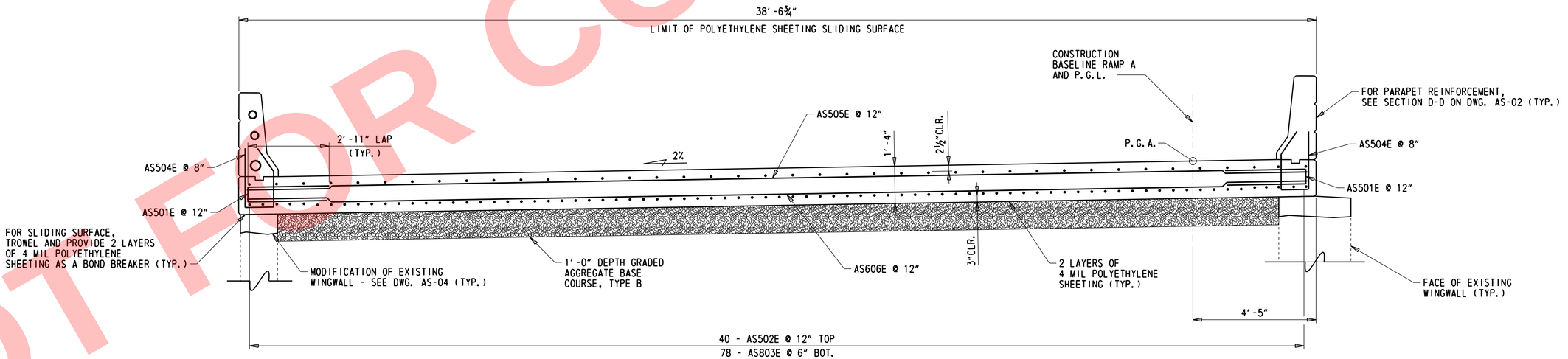

SECTION C-C

½" = 1'-0"

NOTES:

1. FOR SECTIONS B-B AND C-C, SEE DWG. AS-02.

NOT FOR CONSTRUCTION

N:\31987-004\Control I-95\CADD\Bridge\BR1-749_AS02.dgn
5/31/2019 12:15:19 PM

ADDENDA / REVISIONS	SCALE AS NOTED	REHABILITATION OF I-95 FROM I-495 TO NORTH OF BRANDYWINE RIVER BRIDGE	CONTRACT T201407404	BRIDGE NO. 1 749 6142	APPROACH SLAB PLAN AND TYPICAL SECTION	AS-02
			COUNTY NEW CASTLE	DESIGNED BY: DAN		SECTION WRA
				CHECKED BY: WAG		SHEET NO. 480

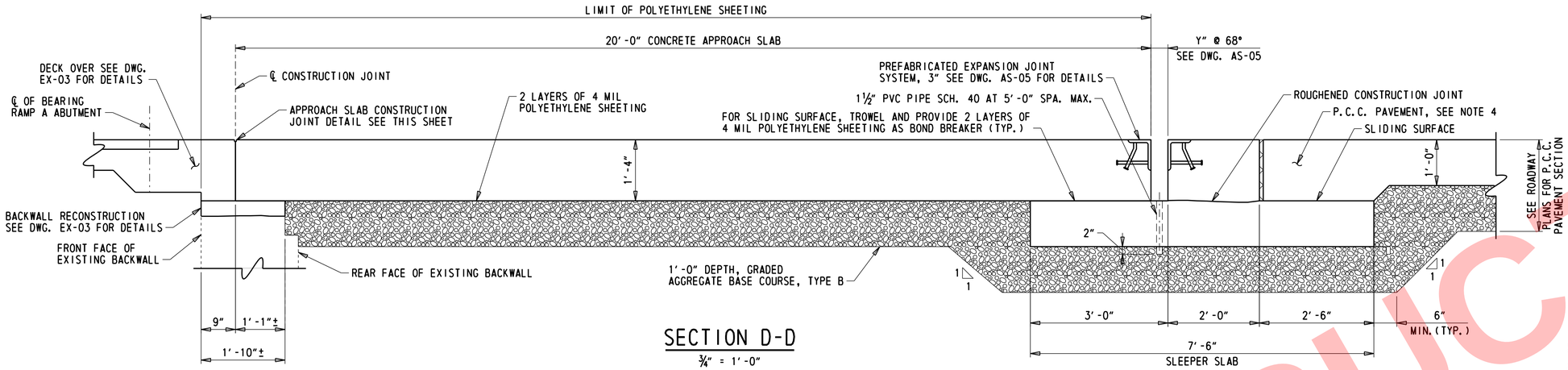

SECTION D-D

¾" = 1'-0"

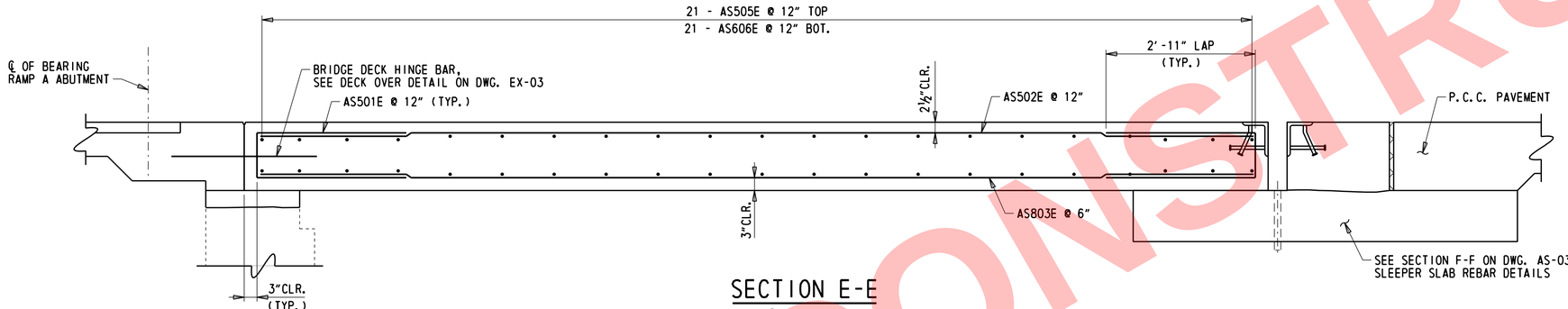

SECTION E-E

¾" = 1'-0"

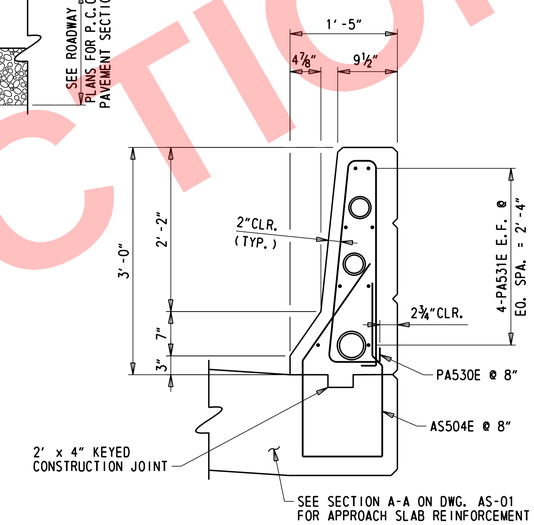

SECTION F-F

1" = 1'-0"

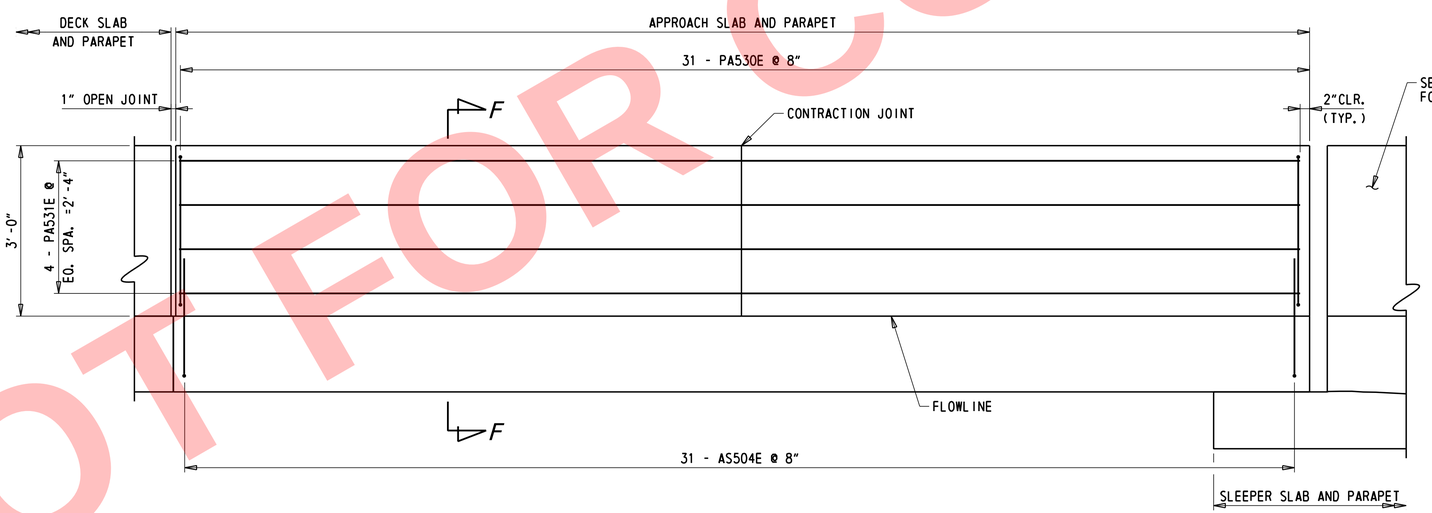

APPROACH SLAB WEST PARAPET REINFORCEMENT

¾" = 1'-0"

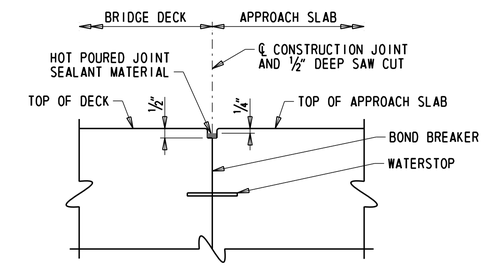

APPROACH SLAB CONSTRUCTION JOINT

NOT TO SCALE

NOTES:

1. FOR ADDITIONAL APPROACH SLAB REINFORCEMENT DETAILS SEE DWG. AS-01.
2. FOR ARMORED STRIP SEAL EXPANSION JOINT DETAILS, SEE DWG. AS-05.
3. PAYMENT FOR POLYETHYLENE SHEETING, BOND BREAKER, WATERSTOP, ½" DEEP SAW CUT, PVC PIPE, AND HOT POURED JOINT SEALANT WILL BE INCIDENTAL TO ITEM 610018 - PORTLAND CEMENT CONCRETE, APPROACH SLAB, CLASS D.
4. FOR ADDITIONAL ROADWAY PAVEMENT DETAILS, SEE DELDOT STANDARD P-1. PAYMENT FOR ROADWAY JOINTS SHALL BE INCIDENTAL TO ROADWAY PAVEMENT ITEM.

NOT FOR CONSTRUCTION

ADDENDA / REVISIONS	SCALE AS NOTED	REHABILITATION OF I-95 FROM I-495 TO NORTH OF BRANDYWINE RIVER BRIDGE	CONTRACT T201407404	BRIDGE NO. 1 749 6142	APPROACH SLAB DETAILS	AS-03 SECTION
			COUNTY NEW CASTLE	DESIGNED BY: DAN		WRA
				CHECKED BY: WAG		SHEET NO. 481

N:\31987-00A\Contract-I-95\C400\Bridge\BR1-749_AS03.dgn
5/31/2019 12:59:00 PM

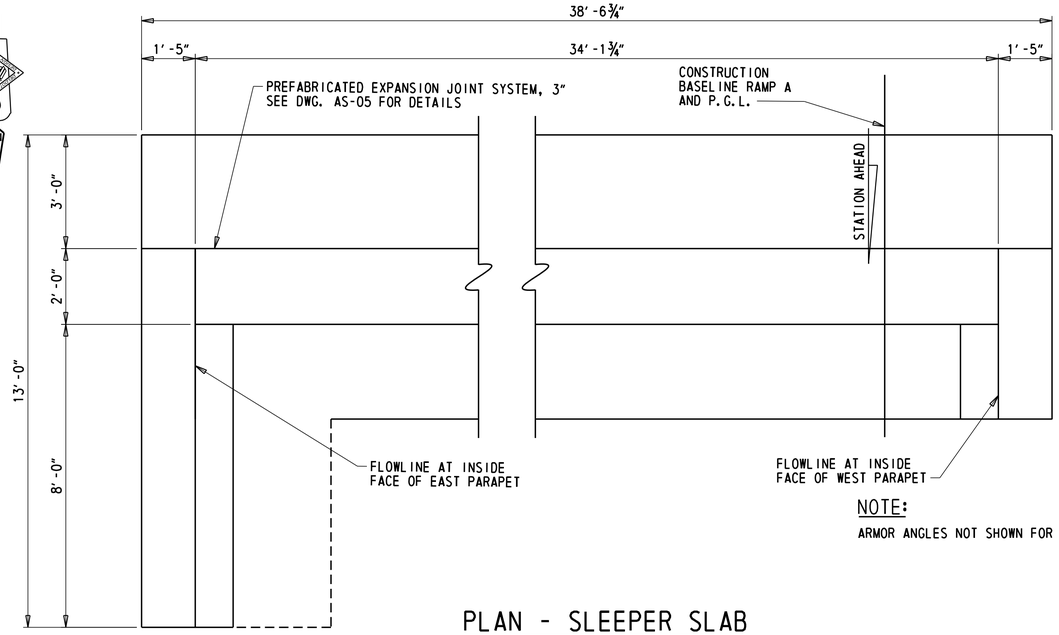

NOTE:

ARMOR ANGLES NOT SHOWN FOR CLARITY.

PLAN - SLEEPER SLAB

½″ = 1′-0″

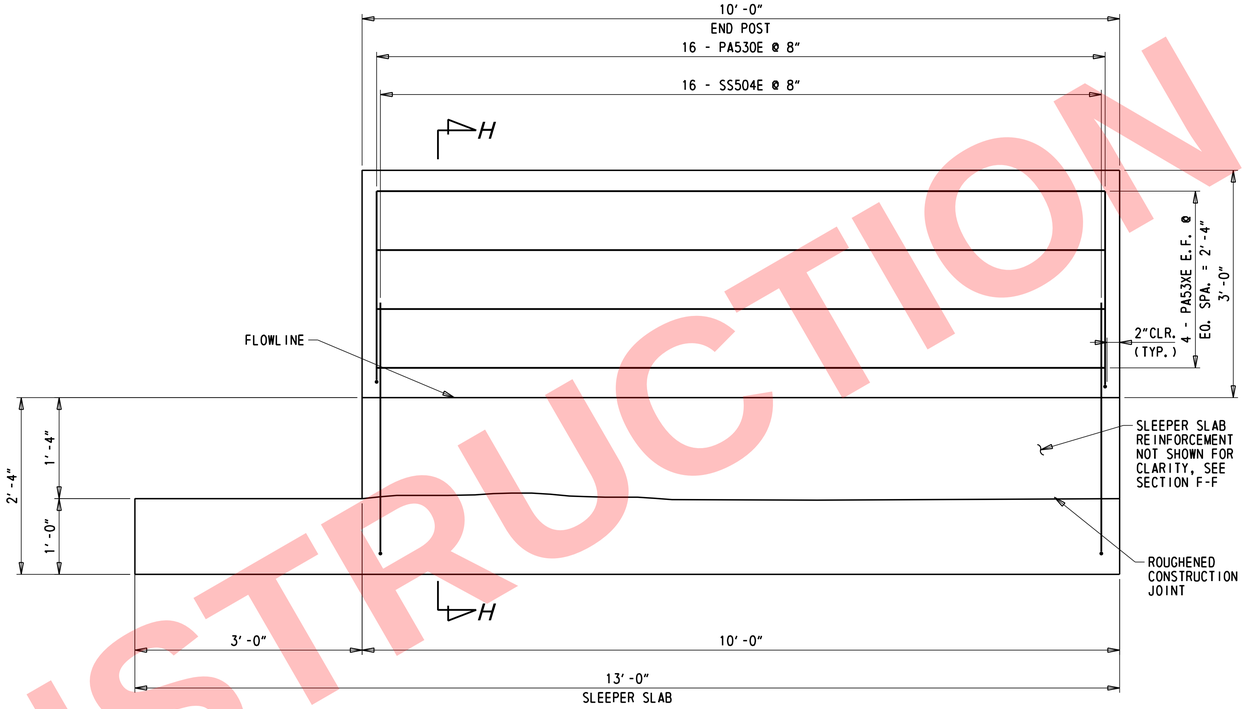

SECTION G-G

1″ = 1′-0″

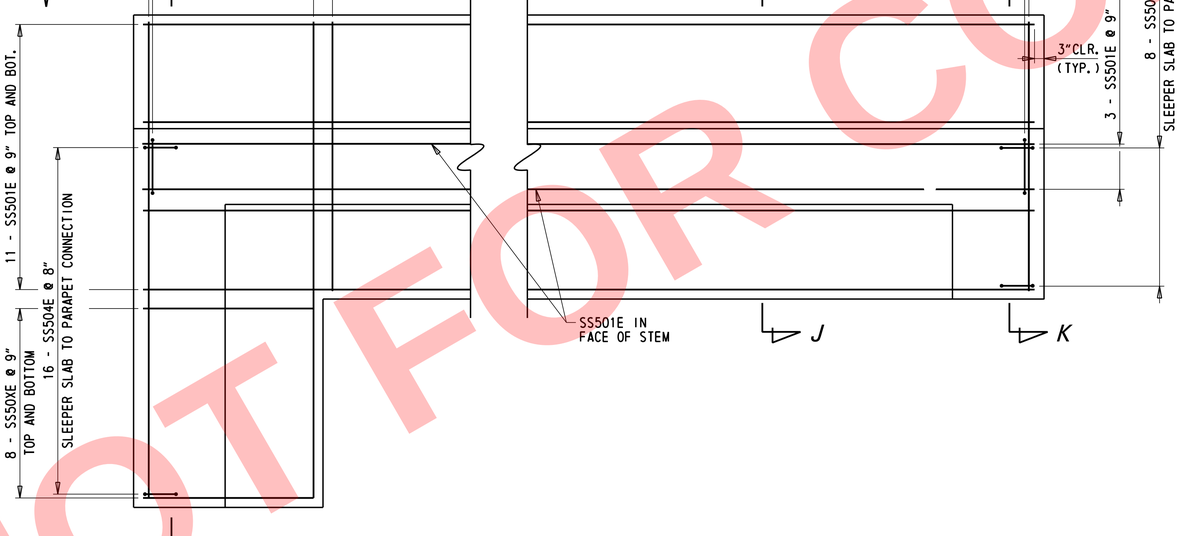

PLAN - SLEEPER SLAB REINFORCEMENT

½″ = 1′-0″

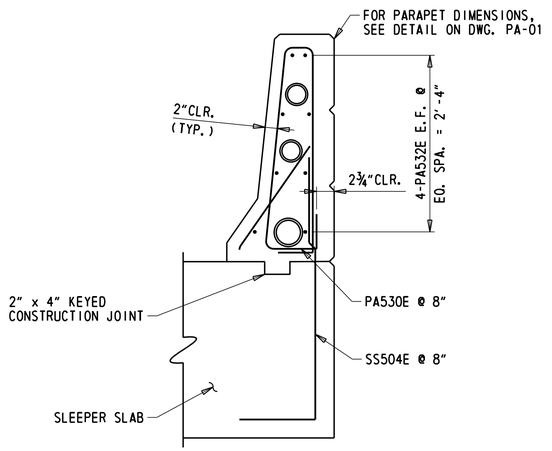

SECTION H-H

1″ = 1′-0″

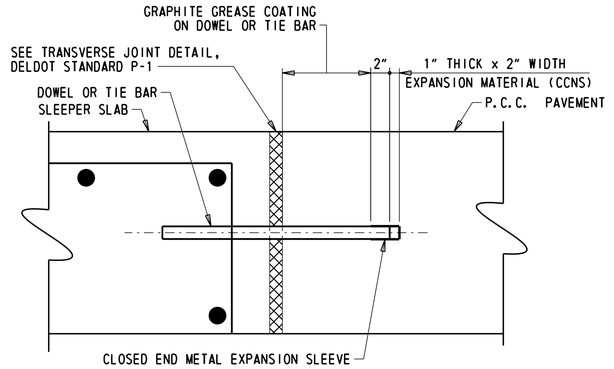

DETAIL A

N.T.S

CCNS = CLOSED CELL NEOPRENE SPONGE

NOTES:

1. FOR APPROACH SLAB PLAN AND DETAILS, SEE DWGS. AS-01 AND AS-02.
2. FOR ADDITIONAL ROADWAY PAVEMENT DETAILS, SEE DELDOT STANDARD P-1. PAYMENT FOR ROADWAY JOINTS SHALL BE INCIDENTAL TO ROADWAY PAVEMENT ITEM.
3. PAYMENT FOR CCNS, DOWEL OR TIE BAR, AND GRAPHITE GREASE COATING WILL BE INCIDENTAL TO ITEM 610008 - PORTLAND CEMENT CONCRETE, APPROACH SLAB, CLASS D.

NOT FOR CONSTRUCTION

ADDENDA / REVISIONS	SCALE AS NOTED	REHABILITATION OF I-95 FROM I-495 TO NORTH OF BRANDYWINE RIVER BRIDGE	CONTRACT T201407404	BRIDGE NO. 1 749 6142	SLEEPER SLAB PLAN AND DETAILS	AS-04
			COUNTY NEW CASTLE	DESIGNED BY: DAN		SECTION WRA
				CHECKED BY: WAG		SHEET NO. 482

N:\31987-00A\Contract_I-95\C&D\Bridge\BRT-749_AS04.dgn
5/31/2019 12:15:20 PM

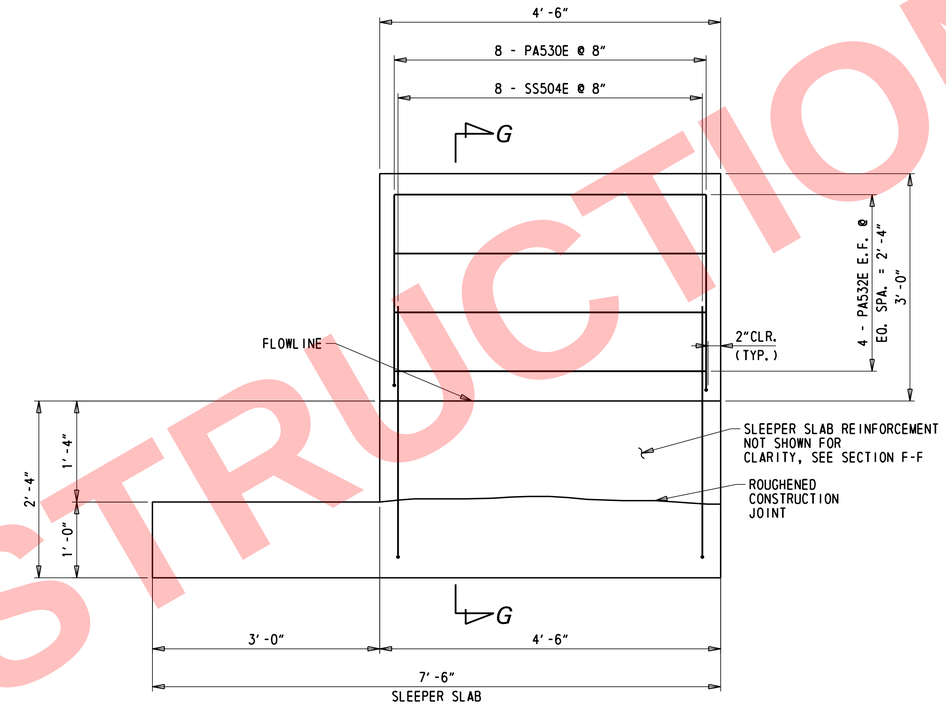

SECTION K-K

1" = 1'-0"

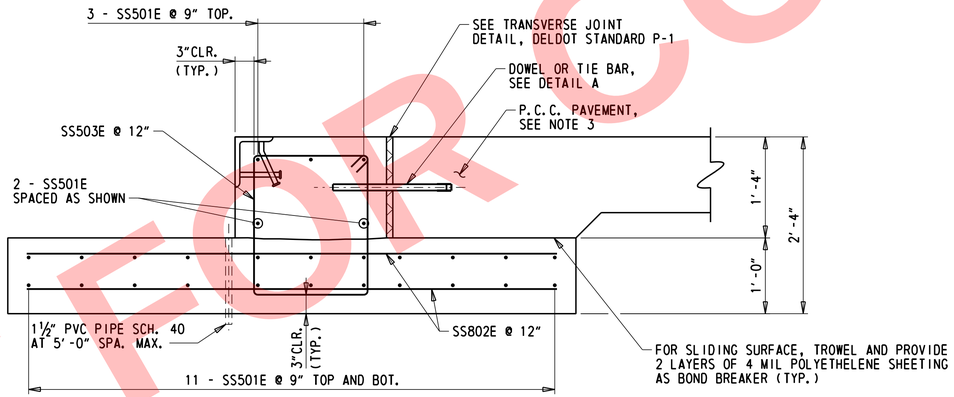

SECTION J-J

1" = 1'-0"

NOTES:

1. FOR APPROACH SLAB PLAN AND DETAILS, SEE DWGS. AS-02 AND AS-03.
2. FOR ADDITIONAL SLEEPER SLAB PLAN AND DETAILS, SEE DWG. AS-04.

NOT FOR CONSTRUCTION

N:\31987-004\Contract_I-95\CADD\Bridge\BR1-749_AS05.dgn
5/31/2019 12:15:21 PM

ADDENDA / REVISIONS	SCALE AS NOTED	REHABILITATION OF I-95 FROM I-495 TO NORTH OF BRANDYWINE RIVER BRIDGE	CONTRACT T201407404	BRIDGE NO. 1 749 6142	SLEEPER SLAB DETAILS	AS-05
			COUNTY NEW CASTLE	DESIGNED BY: DAN		SECTION WRA
				CHECKED BY: WAG		SHEET NO. 483

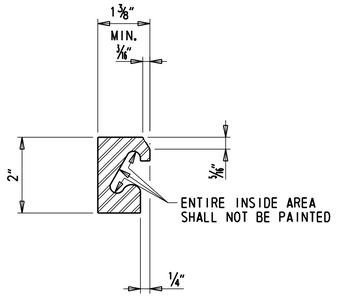

STEEL EXTRUSION DETAIL

6" = 1'-0"

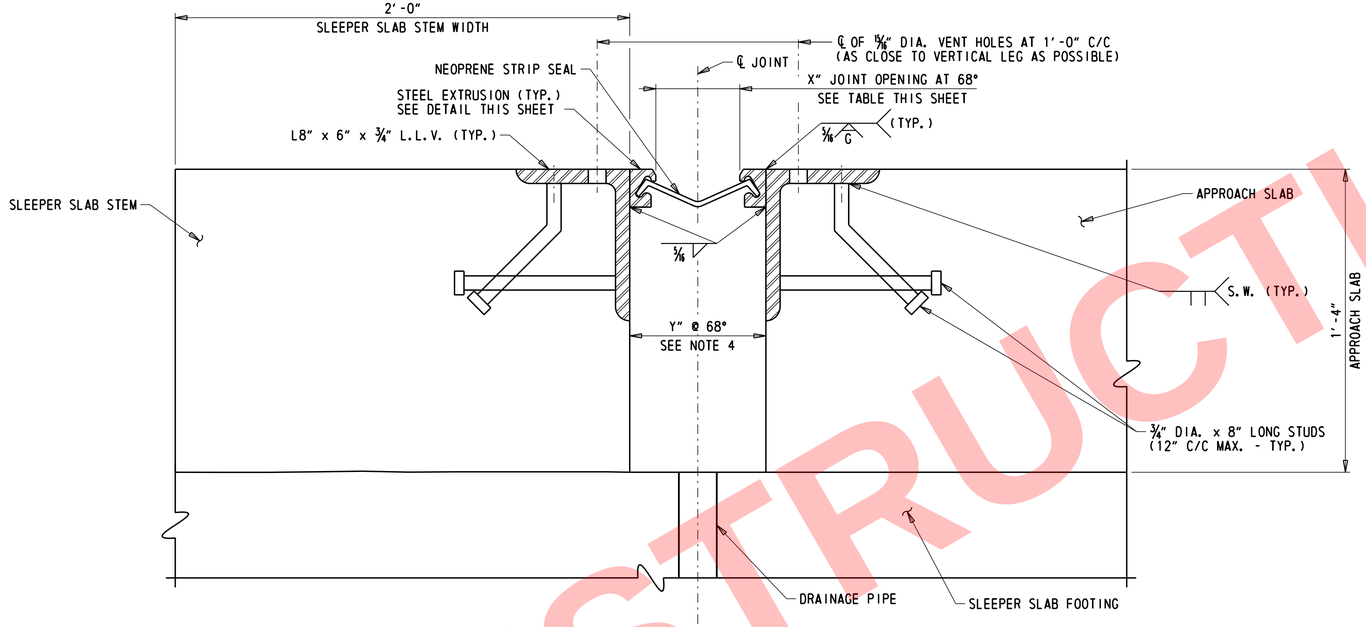

APPROACH SLAB JOINT ASSEMBLY DETAIL

3" = 1'-0"

STRIP SEAL EXPANSION JOINT NOTES:

1. STEEL FOR DECK JOINTS AND STEEL EXTRUSIONS SHALL BE AASHTO M270, GR. 36 (ASTM A36) AT MINIMIM.
2. NEOPRENE EXTRUSION TO MEET ASTM D-2628-81 MODIFIED, (RECOVERY TEST EXCLUDED).
3. THE EXPANSION JOINT SHALL BE CAPABLE OF SEALING THE APPROACH SLAB TO SLEEPER SLAB JOINT TO PREVENT MOISTURE AND OTHER CONTAMINANTS FROM DESCENDING THROUGH THE JOINT.
4. THE CONTRACTOR SHALL ADJUST THE OPEN JOINT (Y) AS REQUIRED BY THE WIDTH OF THE STEEL EXTRUSION USED SO AS TO PROVIDE A X" JOINT OPENING AT 68°F.
5. THE STRIP SEAL SHALL BE INSTALLED IN ONE PIECE ACROSS THE APPROACH SLAB WIDTH. SPLICING OF THE STRIP SEAL IS NOT PERMITTED.
6. THE EXPANSION JOINT SYSTEM IS PAID FOR UNDER ITEM 624000 - PREFABRICATED EXPANSION JOINT SYSTEM, 3".
7. STEEL EXTRUSIONS SHALL BE HOT-DIP GALVANIZED. ENTIRE EXPANSION DAM SHALL BE PAINTED AFTER FABRICATION USING URETHANE SYSTEM.
8. LUBRICANT-ADHESIVE FOR USE IN INSTALLING AND BONDING NEOPRENE SEAL ELEMENTS TO STEEL JOINT COMPONENTS SHALL BE A ONE QUART MOISTURE-CURING POLYURETHANE AND HYDROCARBON SOLVENT MIXTURE HAVING THE FOLLOWING PHYSICAL PROPERTIES:

AVERAGE WEIGHT, POUNDS PER GALLON	8±10%
SOLIDS CONTENT	65%
ADHESIVE SHALL REMAIN LIQUID FROM	5°F TO 120°F
FILM STRENGTH, AS PER ASTM D-412	2,000 PSI
ELONGATION	250%

9. STEEL EXTRUSIONS AND JOINT ANGLES SHALL BE CONTINUOUS ACROSS THE FULL WIDTH OF THE ROADWAY, NO SPLICING WILL BE PERMITTED.
10. PARAPET PLATES ARE REQUIRED AT JOINTS. SEE DETAILS ON DWG. EX-02.

APPROACH SLAB JOINT OPENINGS, X

TEMPERATURE °F	20°	30°	40°	50°	60°	68°	70°	80°	90°	100°
RAMP A ABUTMENT	2¼"	2"	1⅞"	1¾"	1¾"	1¼" ±	1¼" ±	1⅝"	1½"	1¼"

NOTES:

1. FOR APPROACH SLAB PLAN AND DETAILS, SEE DWGS. AS-01 AND AS-02.
2. FOR SLEEPER SLAB PLAN AND SECTIONS, SEE DWG. AS-03.
3. REMAINING SLEEPER SLAB AND APPROACH SLAB REINFORCEMENT NOT SHOWN FOR CLARITY. SEE DWGS. AS-01 THROUGH AS-03 FOR MORE INFORMATION.

NOT FOR CONSTRUCTION

ADDENDA / REVISIONS		SCALE AS NOTED	REHABILITATION OF I-95 FROM I-495 TO NORTH OF BRANDYWINE RIVER BRIDGE	CONTRACT T201407404	BRIDGE NO. 1 749 6142	APPROACH SLAB JOINT DETAILS	AS-06
				COUNTY NEW CASTLE	DESIGNED BY: DAN		SECTION WRA
					CHECKED BY: WAG		SHEET NO. 2-483A

N:\39187-001\Drawings\I-95\C400\Bridge\BR1-749_AS06.dgn 5/17/2019 12:51:21 PM

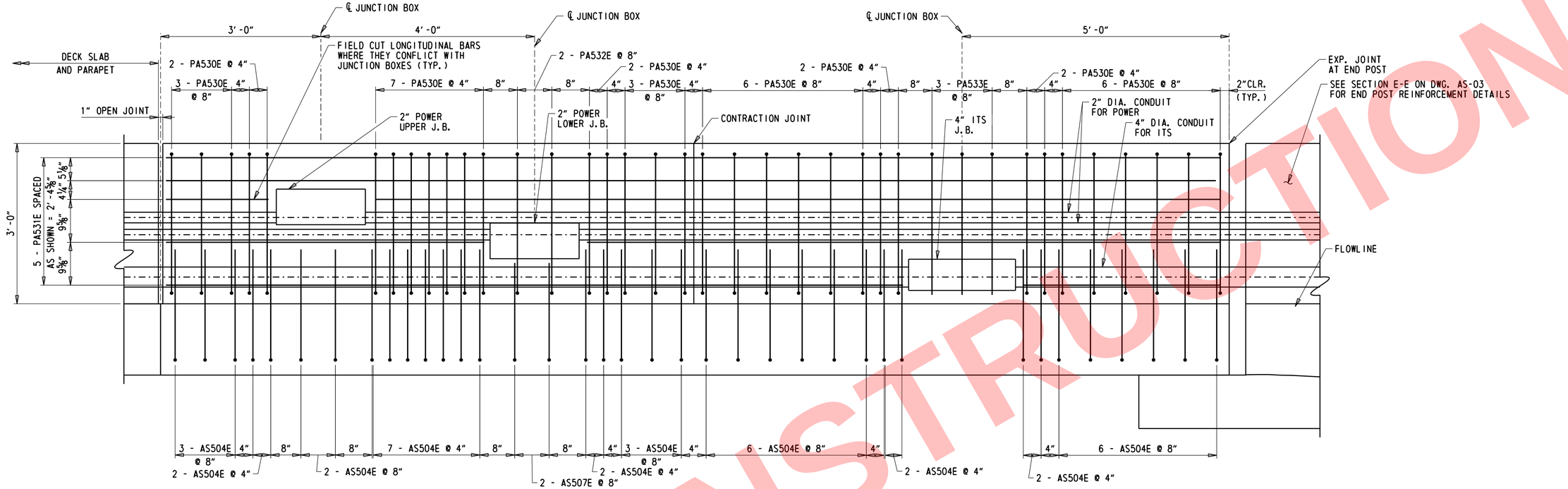

APPROACH SLAB EAST PARAPET REINFORCEMENT (LOOKING EAST)

1" = 1'-0"

NOT FOR CONSTRUCTION

NOTES:

1. FOR WEST PARAPET REINFORCEMENT, SEE DWG. AS-XX.
2.

N:\31987-00A\Contract_I-95\CADD\Bridge\BRI-749_AS07.dgn
5/31/2019 12:19:23 PM

ADDENDA / REVISIONS		SCALE AS NOTED	REHABILITATION OF I-95 FROM I-495 TO NORTH OF BRANDYWINE RIVER BRIDGE	CONTRACT T201407404	BRIDGE NO. 1 749 6142	EAST PARAPET REINFORCEMENT	AS-07 SECTION WRA
				COUNTY NEW CASTLE	DESIGNED BY: DAN		SHEET NO. 2-483B
					CHECKED BY: WAG		

(1) ANY MARK NUMBER WITH SUFFIX 'E' DENOTES EPOXY COATED REINFORCING STEEL.

(2) ALL MARK 'LOCATION PREFIXES' SHALL CONSIST OF TWO LETTERS AND ARE AS FOLLOWS: AB = ABUTMENT, AS = APPROACH SLAB, BC = BOX CULVERT, BW = BACKWALL, CL = COLUMN, DK = DECK, DL = DOWEL, FT = FOOTING, HW = HEADWALL, MS = MISC. BARS, PA = PARAPET, PR = PIER, SC = SHEETPILE CAP, SL = SLAB, SS = SLEEPER SLAB, TW = TOEWALL, WL = WALL (UNIQUE LOCATION), WW = WINGWALL

SPECIFICATIONS					BENDING DIMENSIONS (FEET-INCHES /QUARTER INCH)									
QTY.	SIZE	LENGTH	MARK	TYPE	A	B	C	D	E	F/R	G	H	J	K	O
DECK															
1832	5	6-3.2	DK501E	SP03		2-3.0	1-2.3	0-11.3	1-10.0			1-6.1		1-0.2	
12	5	4-10.0	DK502E	SP03		2-3.0	0-9.0	0-9.0	1-1.0			0-9.1		0-9.1	
60	5	5-1.0	DK503E	SP03		2-3.0	0-10.0	0-11.0	1-1.0			0-9.1		0-9.1	
46	5	5-2.0	DK504E	SP03		2-3.0	0-10.0	1-0.0	1-1.0			0-9.1		0-9.1	
28	5	2-10.0	DK505E	16		0-7.0	1-2.0	1-1.0				0-9.1		0-9.1	
18	5	6-6.2	DK506E	SP03		2-7.0	0-9.0	2-1.2	1-1.0			0-9.1		0-9.1	
9	5	6-6.0	DK507E	STR		6-6.0									
93	5	7-1.0	DK508E	STR		7-1.0									
3	5	3-1.0	DK509E	STR		3-1.0									
3	5	3-7.2	DK510E	STR		3-7.2									
3	5	7-1.1	DK511E	STR		7-1.1									
3	5	6-4.3	DK512E	STR		6-4.3									
3	5	3-5.0	DK513E	STR		3-5.0									
3	5	2-8.0	DK514E	STR		2-8.0									
6	5	6-1.2	DK515E	STR		6-1.2									
695	5	40-0.0	DK516E	STR		40-0.0									
59	5	28-6.0	DK517E	STR		28-6.0									
60	5	41-1.2	DK518E	STR		41-1.2									
59	5	10-9.2	DK519E	STR		10-9.2									
59	5	36-8.3	DK520E	STR		36-8.3									
77	5	36-2.0	DK521E	STR		36-2.0									
89	5	38-0.2	DK522E	STR		38-0.2									
4	5	32-9.3	DK523E	STR		32-9.3									
2	5	10-0.0	DK524E	STR		10-0.0									
2	5	15-0.0	DK525E	STR		15-0.0									
2	5	25-0.0	DK526E	STR		25-0.0									
2	5	35-0.0	DK527E	STR		35-0.0									
4	5	40-0.0	DK528E	31		10-1.0	29-10.0					2-6.1		29-8.3	39-9.3
2396	5	9-4.3	DK529E	18	0-7.0	8-9.3							0-5.0		
6	5	10-4.2	DK530E	18	0-7.0	9-9.2							0-5.0		
1906	5	15-5.3	DK531E	18	0-7.0	14-10.3							0-5.0		
1882	5	14-10.3	DK532E	STR		14-10.3									
36	5	15-10.2	DK533E	18	0-7.0	15-3.2							0-5.0		
36	5	15-3.2	DK534E	STR		15-3.2									
46	5	16-4.2	DK535E	18	0-7.0	15-9.2							0-5.0		
46	5	15-9.2	DK536E	STR		15-9.2									
48	5	16-10.2	DK537E	18	0-7.0	16-3.2							0-5.0		
48	5	16-3.2	DK538E	STR		16-3.2									
48	5	17-4.2	DK539E	18	0-7.0	16-9.2							0-5.0		

SPECIFICATIONS					BENDING DIMENSIONS (FEET-INCHES /QUARTER INCH)										
QTY.	SIZE	LENGTH	MARK	TYPE	A	B	C	D	E	F/R	G	H	J	K	O
DECK CONTINUED															
48	5	16-9.2	DK540E	STR		16-9.2									
46	5	17-10.2	DK541E	18	0-7.0	17-3.2							0-5.0		
40	5	17-3.2	DK542E	STR		17-3.2									
64	5	18-6.2	DK543E	18	0-7.0	17-11.2							0-5.0		
60	5	17-11.2	DK544E	STR		17-11.2									
46	5	19-0.2	DK545E	18	0-7.0	18-5.2							0-5.0		
46	5	18-5.2	DK546E	STR		18-5.2									
48	5	19-6.2	DK547E	18	0-7.0	18-11.2							0-5.0		
48	5	18-11.2	DK548E	STR		18-11.2									
48	5	20-0.2	DK549E	18	0-7.0	19-5.2							0-5.0		
48	5	19-5.2	DK550E	STR		19-5.2									
46	5	20-6.2	DK551E	18	0-7.0	19-11.2							0-5.0		
46	5	19-11.2	DK552E	STR		19-11.2									
52	5	21-0.2	DK553E	18	0-7.0	20-5.2							0-5.0		
52	5	20-5.2	DK554E	STR		20-5.2									
19	5	2-0.0	DK555E	STR		2-0.0									
2	5	8-1.2	DK556E	17		3-5.0	1-3.2	3-5.0							
40	6	4-6.0	DK657E	STR		4-6.0									
36	7	11-9.0	DK758E	18	0-10.0	10-11.0							0-7.0		
36	5	8-2.0	DK559E	STR		8-2.0									
12	5	8-7.3	DK501E	SP03		2-7.2	3-0.3	1-1.1	1-10.1			1-6.0		1-0.3	
6	5	7-11.1	DK561E	SP03		2-7.2	2-4.1	1-1.1	1-10.1			1-6.0		1-0.3	
6	5	7-4.0	DK562E	SP03		2-7.2	1-9.0	1-1.1	1-10.1			1-6.0		1-0.3	
6	5	10-4.0	DK563E	SP06	1-0.0	2-8.2	2-1.0	2-8.2	0-5.0	0-5.0	1-0.0	1-11.0	1-11.0	1-11.0	5-11.0
3	5	20-3.0	DK564E	T1	0-5.2	5-11.0	3-9.0	5-11.0	3-9.0		0-5.2				
3	5	17-10.0	DK565E	T1	0-5.2	4-8.2	3-9.0	4-8.2	3-9.0		0-5.2				
3	5	15-5.0	DK566E	T1	0-5.2	3-6.0	3-9.0	3-6.0	3-9.0		0-5.2				
3	5	13-0.2	DK567E	T1	0-5.2	2-3.3	3-9.0	2-3.3	3-9.0		0-5.2				
1832	5	7-10.2	PA501E	SP04	0-6.0	0-10.3	2-8.1	0-7.2	2-8.0		0-6.0	2-8.0		0-3.2	
200	5	29-8.0	PA502E	STR		29-8.0									
48	5	26-8.0	PA503E	STR		26-8.0									
8	5	21-7.0	PA504E	STR		21-7.0									
8	5	18-3.1	PA505E	STR		18-3.1									
8	5	26-5.3	PA506E	STR		26-5.3									
8	5	24-8.0	PA507E	STR		24-8.0									
8	5	33-11.3	PA508E	STR		33-11.3									
8	5	33-3.1	PA509E	STR		33-3.1									
8	5	17-5.1	PA510E	STR		17-5.1									
8	5	17-0.0	PA511E	STR		17-0.0									

SPECIFICATIONS					BENDING DIMENSIONS (FEET-INCHES /QUARTER INCH)										
QTY.	SIZE	LENGTH	MARK	TYPE	A	B	C	D	E	F/R	G	H	J	K	O
DECK CONTINUED															
8	5	16-9.3	PA512E	STR		16-9.3									
8	5	16-4.2	PA513E	STR		16-4.2									
8	5	18-9.1	PA514E	STR		18-9.1									
8	5	18-9.0	PA515E	STR		18-9.0									
2	5	6-7.2	PA516E	17		2-8.0	1-3.2	2-8.0							
4	5	29-3.1	PA517E	17		0-10.2	28-4.3								
1	5	31-8.0	PA518E	17		2-0.0	29-8.0								
1	5	31-3.2	PA519E	17		1-7.2	29-8.0								
1	5	31-2.2	PA520E	17		1-6.2	29-8.0								
1	5	31-1.1	PA521E	17		1-5.1	29-8.0								
12	5	8-9.2	PA522E	SP05		2-8.0	2-5.2	2-8.0	1-0.0				0-3.1	2-8.0	
6	5	8-1.0	PA523E	SP05		2-8.0	1-9.0	2-8.0	1-0.0				0-3.1	2-8.0	
6	5	7-7.3	PA524E	SP05		2-8.0	1-3.3	2-8.0	1-0.0				0-3.1	2-8.0	
12	5	10-4.0	PA525E	SP06	1-0.0	2-8.2	2-1.0	2-8.2	0-5.0	0-5.0	1-0.0	1-11.0	1-11.0	1-11.0	5-11.0
SUBSTRUCTURE - RAMP A ABUTMENT															
5	5	38-6.0	AB501	STR		38-6.0									
40	5	12-6.0	AB502	17		5-6.0	1-6.0	5-6.0							
4	5	3-6.2	AB503	17		0-7.0	2-1.0	0-10.2							
APPROACH SLAB															
122	5	6-10.2	AS501E	17		3-0.0	0-10.2	3-0.0							
40	5	19-8.0	AS502E	STR		19-8.0									
70	8	19-8.0	AS803E	STR		19-8.0									
62	5	7-0.0	AS504E	SP03		2-9.2	1-0.1	1-3.1	1-10.0				1-6.1		1-0.2
21	5	38-2.3	AS505E	STR		38-2.3									
21	6	38-2.3	AS606E	STR		38-2.3									
62	5	7-6.3	PA530E	SP04	0-6.0	0-8.0	2-9.0	0-4.3	2-9.0			0-6.0	2-9.0		0-3.0
16	5	19-8.0	PA531E	STR		19-8.0									
SLEEPER SLAB															
27	5	38-0.3	SS501E	STR		38-0.3									
80	8	7-0.0	SS802E	STR		7-0.0									
40	5	8-3.0	SS503E	T2	0-6.0	1-9.0	1-10.2	1-9.0	1-10.2			0-6.0			
16	5	8-4.1	SS504E	SP03		3-6.0	1-0.1	2-3.0	1-7.0				1-3.2		10-9.0
16	5	7-6.3	PA530E	SP04	0-6.0	0-8.0	2-9.0	0-4.3	2-9.0			0-6.0	2-9.0		0-3.0
16	5	4-2.0	PA532E	STR		4-2.0									
WINGWALL RECONSTRUCTION															
4	5	7-1.3	WW501	STR		7-1.3									
4	5	10-5.0	WW502	STR		10-5.0									

ASTM STANDARD ENGLISH REINFORCING BARS				RECOMMENDED END HOOKS, APPLICABLE TO ALL GRADES				STIRRUP AND TIE HOOKS, APPLICABLE TO ALL GRADES			
	NOMINAL DIMENSIONS				180° HOOKS		90° HOOKS		90° HOOK	135° HOOK	
BAR SIZE	DIAMETER (INCHES)	AREA (INCHES²)	WEIGHT (LBS./FT.)	D	A OR G	J	A OR G	D	A OR G	A OR G	A OR G
3	0.375	0.110	0.376	2¼"	5"	3"	6"	1½"	4"	4"	2½"
4	0.500	0.200	0.668	3"	6"	4"	8"	2"	4½"	4½"	3"
5	0.625	0.310	1.043	3¾"	7"	5"	10"	2½"	6"	5½"	3¾"
6	0.750	0.440	1.502	4½"	8"	6"	1-0"	4½"	1-0"	8"	4½"
7	0.875	0.600	2.044	5¼"	10"	7"	1-2"	5¼"	1-2"	9"	5¼"
8	1.000	0.790	2.670	6"	11"	8"	1-4"	6"	1-4"	10½"	6"
9	1.128	1.000	3.400	9½"	1-3"	11¾"	1-7"				
10	1.270	1.270	4.303	10¾"	1-5"	1-1¼"	1-10"				
11	1.410	1.560	5.313	1-0"	1-7"	1-2¾"	2-0"				
14	1.693	2.250	7.650	1-6¼"	2-3"	1-9¾"	2-7"				
18	2.257	4.000	13.600	2-0"	3-0"	2-4½"	3-5"				

NOTES:
1. FIGURES SHOWN IN CIRCLES REPRESENT BAR BEND TYPES.
2. STANDARD BAR BENDS INCLUDE ONLY THOSE TYPES BELOW, INDICATED AS SUCH.
3. ALL DIMENSIONS OUT-TO-OUT, EXCEPT "A" AND "G" ON STD. 180° AND 135° HOOKS.
4. "J" DIMENSIONS ON 180° HOOKS TO BE SHOWN ONLY WHERE NECESSARY TO RESTRICT HOOK SIZE, OTHERWISE STANDARD 'ACI' HOOKS ARE TO BE USED.
5. WHERE "J" IS NOT SHOWN, "J" WILL BE KEPT EQUAL TO OR LESS THAN "H" ON TYPES 3, 5 AND 22. WHERE "J" CAN EXCEED "H", IT SHALL BE SHOWN.
6. "H" DIMENSIONS OF STIRRUPS TO BE SHOWN AS NEEDED TO FIT WITHIN THE CONCRETE.
7. UNLESS OTHERWISE NOTED, DIAMETER "D" IS THE SAME FOR ALL BENDS AND HOOKS ON A BAR (EXCEPT FOR BEND TYPES 11 AND 13).
8. WHERE SLOPE DIFFERS FROM 45° OFFSET, "H" AND "K" MUST BE SHOWN.
9. WHERE BARS ARE TO BE BENT MORE ACCURATELY THAN STANDARD BENDING TOLERANCES, BENDING DIMENSIONS REQUIRING CLOSER FABRICATION SHOULD HAVE LIMITS INDICATED.
10. FOR RECOMMENDED DIAMETER "D", OF BENDS, HOOKS, ETC., REFER TO TABLE ABOVE, 'CRSI' OR 'ACI' TABLES WHERE APPLICABLE AND REQUIRED.
11. TYPE S1-S6, S11, T1-T3 AND T6-T9 APPLICABLE TO BAR SIZES #3 THROUGH #8.

STANDARD BAR BENDS

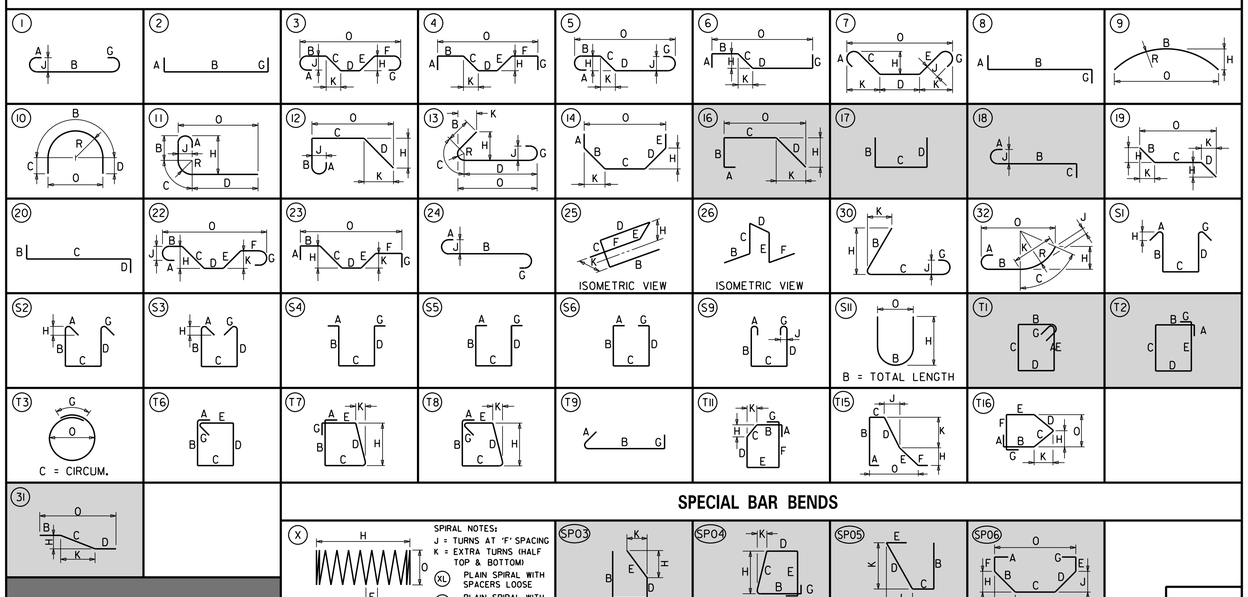

SPECIAL BAR BENDS

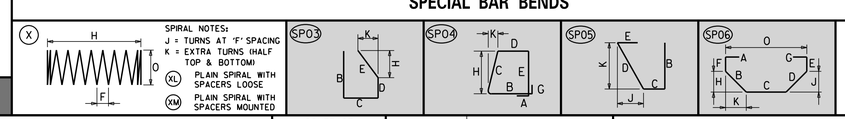

STIRRUP AND TIE HOOKS

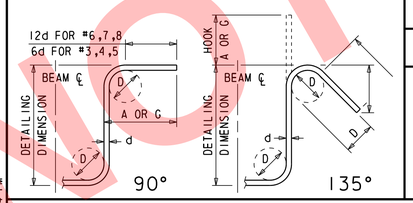

180° AND 90° END HOOKS

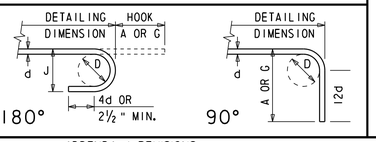

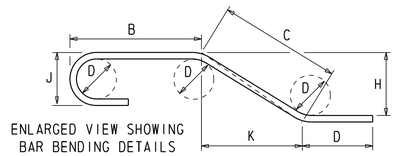

ADDENDA / REVISIONS

CONTRACT

COUNTY

BRIDGE NO.

DESIGNED BY:

CHECKED BY:

REHABILITATION OF I-95 FROM 1 MILE TO NORTH OF BRANDYWINE RIVER BRIDGE

1 749 6142

REINFORCEMENT SCHEDULE

SECTION

SHEET NO.

NOT FOR CONSTRUCTION

N:\31987-004\Control\I-95\CADD\Bridge\BR1-749_BR01.dgn
5/31/2019 12:15:24 PM

SECTION 200

1. REMOVAL OF STRUCTURES AND OBSTRUCTIONS:
   ITEMS TO BE REMOVED UNDER ITEM 211000 - REMOVAL OF STRUCTURES AND OBSTRUCTIONS ASSOCIATED WITH BRIDGE 1-758E SHALL INCLUDE, BUT NOT BE LIMITED TO, THE FOLLOWING:
   - DECORATIVE BARRIER

SECTION 600

2. PORTLAND CEMENT CONCRETE:
   USE PORTLAND CEMENT CONCRETE FOR CAST-IN-PLACE ELEMENTS AS FOLLOWS:
   (f'c = 28-DAY COMPRESSIVE STRENGTH)
   CLASS A - PARAPETS (f'c = 4.5 ksi)
   CLASS D - DECK (f'c = 4.5 ksi)
   A HIGHER CLASS CONCRETE MAY BE SUBSTITUTED FOR A LOWER CLASS CONCRETE AT NO ADDITIONAL COST TO THE DEPARTMENT WITH APPROVAL OF THE ENGINEER.
   - CHAMFER ALL EXPOSED EDGES ¾" X ¾" UNLESS OTHERWISE NOTED.
   - CONTRACTOR WILL SUPPLY CONCRETE FOR THE PARAPETS, BRIDGE DECK, AND APPROACH SLABS THAT INCLUDES A SHRINKAGE-REDUCING/COMPENSATING ADMIXTURE. PAYMENT FOR ADMIXTURE WILL BE INCIDENTAL TO ITS RESPECTIVE CONCRETE ITEM (ITEMS 610008, 610017, AND 610018). THE ADMIXTURE MAY BE SUPPLIED BY ONE PRODUCT THAT PROVIDES BOTH EXPANSION AND PORE WATER SURFACE TENSION OR TWO SEPARATE PRODUCTS EACH ADDED AT DOSAGE RECOMMENDED BY MANUFACTURER'S TECHNICAL DATA SHEETS AND HAVING THE FOLLOWING CHARACTERISTICS:
   (A) DESIGNED TO PROVIDE BOTH THE FOLLOWING CHARACTERISTICS:
   I. EXPANDS AT A RATE THAT CLOSELY COMPENSATES FOR SHRINKAGE OF THE CONCRETE MIX.
   II. REDUCES THE CAPILLARY SURFACE TENSION OF THE CONCRETE PORE WATER.
   (B) PROVIDES AT LEAST 80% SHRINKAGE REDUCTION AS MEASURED AND DOCUMENTED BY FIELD PERFORMANCE.
   (C) FORMULATED FOR USE IN FREEZING AND THAWING WEATHER.

3. BAR REINFORCEMENT:
   - REINFORCING STEEL SHALL CONFORM TO AASHTO M31 (ASTM A615), GRADE 60.
   - REINFORCING STEEL SHALL HAVE A 3" CLEAR COVER IF CAST AGAINST EARTH OR A 2" CLEAR COVER ELSEWHERE, UNLESS OTHERWISE SPECIFIED ON THE PLANS.
   - ALL REINFORCING STEEL SHALL BE PROTECTED WITH FUSION BONDED EPOXY. EPOXY COATED REINFORCING STEEL SHALL CONFORM TO ASTM A775.
   - ANY FIELD CUTTING OR FIELD BENDING MUST BE APPROVED BY THE ENGINEER. PAYMENT SHALL BE INCIDENTAL TO THE BAR REINFORCEMENT ITEM.
   - GALVANIZED REINFORCING STEEL MAY BE SUBSTITUTED FOR EPOXY-COATED REINFORCING STEEL AT NO ADDITIONAL COST TO THE DEPARTMENT WITH APPROVAL OF THE ENGINEER.
   - WELDING OF REINFORCEMENT DURING FABRICATION OR CONSTRUCTION IS NOT PERMITTED UNLESS SPECIFIED.

4. CONCRETE SEALER:
   REFER TO DIAGRAMS CONTAINING SILICONE ACRYLIC CONCRETE SEALER LIMITS ON DWG. TS-01 TO TS-03 AND PR-01 TO PR-10. EPOXY CONCRETE SEALER SHALL BE APPLIED TO THE BEAM SEATS AND BEARING PEDESTALS AT EACH PIER. SILICONE ACRYLIC CONCRETE SEALER SHALL BE APPLIED TO THE REMAINING EXPOSED CONCRETE SURFACES AT THE PIERS.

5. NOTE INTENTIONALLY DELETED.

6. NOTE INTENTIONALLY DELETED.

MISCELLANEOUS

7. DESIGN SPECIFICATIONS:
   (A) DELDOT BRIDGE DESIGN MANUAL, 2017 EDITION.
   (B) AASHTO LRFD BRIDGE SPECIFICATIONS, 2014, 7TH EDITION, CUSTOMARY U.S. UNITS INCLUDING 2015 AND 2016 INTERIMS.
   (C) PROVIDE MATERIALS AND PERFORM WORK IN ACCORDANCE WITH THE 2016 DELDOT STANDARD SPECIFICATIONS AND 2018 SUPPLEMENTAL SPECIFICATIONS.

8. LOADING:
   - DEAD LOADS INCLUDE 25 PSF FOR FUTURE WEARING SURFACE ON DECK SLAB AND 15 PSF FOR STAY-IN-PLACE FORMS (INCLUDES CONCRETE IN FORM CORRUGATIONS). PARAPET LOADS ARE DISTRIBUTED 75% TO THE EXTERIOR AND 25% TO THE FIRST INTERIOR BEAM.
   - DESIGN LIVE LOADS INCLUDE HL-93 LOADING.
   - FATIGUE DESIGN IS BASED ON THE FOLLOWING ONE DIRECTIONAL TRAFFIC VOLUMES: ADTT = 430 IN YEAR 2040.
   - LIVE LOAD DISTRIBUTION TO THE GIRDERS IS BASED ON THE AASHTO SIMPLIFIED METHOD.
   - THERMAL LOADS AND MOVEMENTS ARE BASED ON THE MODERATE TEMPERATURE RANGE AS STIPULATED IN THE AASHTO LRFD DESIGN SPECIFICATIONS AS 0° TO 120°F. THE NORMAL TEMPERATURE SHALL BE CONSIDERED TO BE 68° F.
   - LIVE LOAD DEFLECTION SHALL BE LIMITED TO L/800.
   - FOR REINFORCEMENT DISTRIBUTION REQUIREMENTS, CONSIDER CLASS 1 EXPOSURE CRITERIA FOR DECKS.

9. EXISTING CONDITIONS:
   - ALL EXISTING DIMENSIONS AND ELEVATIONS SHOWN ARE BASED ON THE BEST AVAILABLE INFORMATION AND ARE APPROXIMATE ONLY. THE CONTRACTOR SHALL FIELD VERIFY ALL EXISTING DIMENSIONS, GEOMETRY, AND ELEVATIONS AS NECESSARY PRIOR TO ORDERING ANY MATERIALS AND COMMENCING CONSTRUCTION TO ENSURE PROPER FIT OF THE PROPOSED CONSTRUCTION. PAYMENT SHALL BE INCIDENTAL TO ITEM 763501 - CONSTRUCTION ENGINEERING.

10. ROADWAY CLEARANCES:
    A MINIMUM OF 16'-6" SHALL BE MAINTAINED ABOVE ALL ROADWAYS.

11. CONTINGENT QUANTITIES:
    THESE CONTRACT DRAWINGS HAVE BEEN PREPARED BASED ON ORIGINAL CONTRACT PLANS AND FIELD INSPECTION NOTES TAKEN FROM NOVEMBER 16, 2014 THROUGH FEBRUARY 5, 2015. ADDITIONAL REPAIRS HAVE BEEN ADDED BASED ON THE AUGUST 2017 BIENNIAL BRIDGE INSPECTION REPORT. ACTUAL CONDITIONS MAY REQUIRE MODIFICATION IN CONSTRUCTION DETAILS AND WORK QUANTITIES. ALL DIMENSIONS AND DETAILS SHOWN ON THE PLANS SHALL BE VERIFIED BY THE CONTRACTOR PRIOR TO ORDERING ANY MATERIALS. SEE DWG. PN-04 FOR PAY ITEM CONTINGENCY PERCENTAGES.

12. UTILITIES:
    SEE UTILITY STATEMENT AND UTILITY RELOCATION PLAN SHEETS FOR FURTHER INFORMATION ON UTILITY COORDINATION.

13. ENVIRONMENTAL COMPLIANCE:
    REFER TO THE ENVIRONMENTAL COMPLIANCE PLAN FOR RESTRICTIONS AND ADDITIONAL GUIDANCE THAT MAY BE ASSOCIATED WITH THIS PROJECT.

14. ABBREVIATIONS:

ABUT. = ABUTMENT	F.F. = FRONT FACE	P.C.C. = PORTLAND CEMENT CONCRETE
BOT. = BOTTOM	FIX. = FIXED	P/R = POINT OF ROTATION
BRG. = BEARING	GR. = GRADE	R = RADIUS
C/C = CENTER TO CENTER	L.L.V. = LONG LEG VERTICAL	R.F. = REAR FACE
℄ = CENTERLINE	LMC = LATEX MODIFIED CONCRETE	RT = RIGHT
CLR. = CLEAR	LT = LEFT	S.W. = SHOP WELD
DIA. = DIAMETER	MAX. = MAXIMUM	SB = SOUTHBOUND
DWG. = DRAWING	MIN. = MINIMUM	SCH. = SCHEDULE
E.F. = EACH FACE	N.T.S. = NOT TO SCALE	SHLD. = SHOULDER
EL. = ELEVATION	NB = NORTHBOUND	STA. = STATION
EQ = ENTIRE QUANTITY	NO. = NUMBER	TRK = TRACK
EXP. = EXPANSION	OH = OVERHEAD	TYP. = TYPICAL

INDEX OF BRIDGE 1-758E SHEETS

BR. SHEET Nº	BR. DWG. Nº	TABLE OF CONTENTS
2-524	PN-01	BRIDGE PROJECT NOTES
2-525	PN-02	CONCRETE REPAIR DETAILS
2-526	PN-03	QUANTITIES AND LOAD RATINGS
2-527	PN-04	SUMMARY OF PROPOSED REPAIR AND RECONSTRUCTION ITEMS
2-528	PE-01	GENERAL PLAN AND ELEVATION
2-529 TO 2-531	TS-01 TO TS-03	BRIDGE TYPICAL SECTIONS
2-542	DM-01	MILLING AND HYDRODEMOLITION DETAILS
2-549	PA-01	PARAPET DETAILS
2-550	PA-02	DECORATIVE BARRIER DETAILS
2-551 TO 2-553	EX-01 TO EX-03	EXPANSION JOINT DETAILS
2-554	BR-01	REINFORCEMENT SCHEDULE
TOTAL BRIDGE SHEETS: 22		

NOT FOR CONSTRUCTION

DELAWARE DEPARTMENT OF TRANSPORTATION

ADDENDUMS / REVISIONS

NOT TO SCALE

REHABILITATION OF I-95 FROM I-495 TO NORTH OF BRANDYWINE RIVER BRIDGE

CONTRACT T201407404
COUNTY NEW CASTLE
BRIDGE NO. 1 758E 6141
DESIGNED BY: BJM
CHECKED BY: JRQ

BRIDGE PROJECT NOTES

1-758E PN-01
SHEET NO. 2-524
TOTAL SHTS. 2-731

\\758EPN_01.dgn 5/16/2019 5:18:24 PM

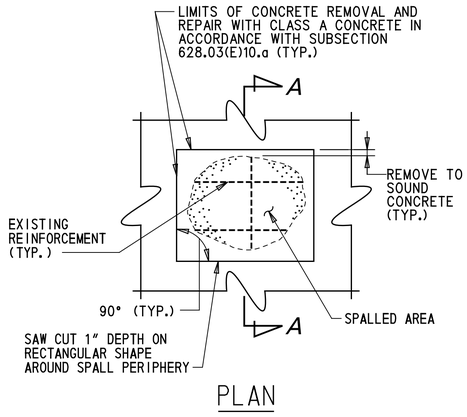

PLAN

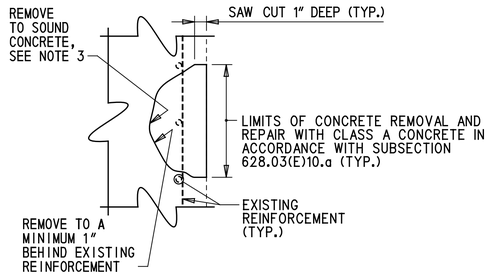

SECTION A-A

DEEP SPALL REPAIR

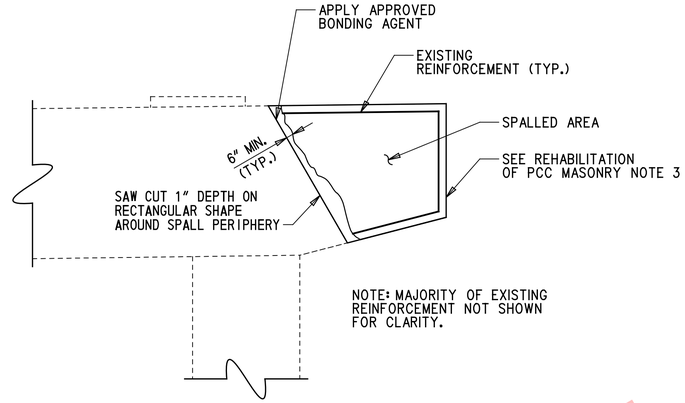

REHABILITATION OF PCC MASONRY

DEEP SPALL REPAIR NOTES

1. DEEP SPALL REPAIRS ARE DEFINED AS PATCHES THAT EXTEND BELOW THE TOP MAT OF REINFORCEMENT. DELAMINATED CONCRETE HAS BEEN ASSUMED AS DEEP SPALL REPAIRS.
2. ALL WORK INVOLVING METHODS OF CONCRETE REMOVAL; CLEANING OF CONCRETE SURFACE AND EXISTING REINFORCEMENT; REPAIRING OR REPLACING DAMAGED REINFORCEMENT AS RESULT OF CONSTRUCTION ACTIVITIES OR SECTION LOSS; PRESENCE OF CONTRACTION OR EXPANSION JOINTS; SURFACE PREPARATION; AND CONCRETE PLACEMENT SHALL BE PERFORMED IN ACCORDANCE WITH SUBSECTION 628.03(E) OF THE STANDARD SPECIFICATIONS. PAYMENT INCIDENTAL TO 628041 - DEEP SPALL REPAIR.
3. IF DEPTH OF REPAIR EXTENDS MORE THAN 6" BEYOND SURFACE OF CONCRETE, CONTRACTOR SHALL STOP WORK AND NOTIFY THE ENGINEER IMMEDIATELY.

REHABILITATION OF PCC MASONRY NOTES

1. REHABILITATION OF PCC MASONRY IS DEFINED AS DEEP SPALL PATCHES THAT EXCEED THE 0.5 C.Y. THRESHOLD IN A SINGLE AREA.
2. ALL WORK INVOLVING METHODS OF CONCRETE REMOVAL; CLEANING OF CONCRETE SURFACE AND EXISTING REINFORCEMENT; REPAIRING OR REPLACING DAMAGED REINFORCEMENT AS RESULT OF CONSTRUCTION ACTIVITIES OR SECTION LOSS; PRESENCE OF CONTRACTION OR EXPANSION JOINTS; SURFACE PREPARATION; AND CONCRETE PLACEMENT SHALL BE PERFORMED IN ACCORDANCE WITH SUBSECTION 628.03(E) OF THE STANDARD SPECIFICATIONS. PAYMENT INCIDENTAL TO 628042 - REHABILITATION OF PCC MASONRY.
3. DETAIL SHOWN FOR "REHABILITATION OF EXISTING PCC MASONRY" UTILIZES A GENERIC EXAMPLE USING PARTIAL RECONSTRUCTION OF AN EXISTING PIER CAP. SEE ABUTMENT AND PIER REHABILITATION SHEETS FOR SIZE AND LOCATION OF REPAIRS AT EACH SUBSTRUCTURE UNIT.
4. IF DEPTH OF REPAIR EXTENDS MORE THAN 6" BEYOND SURFACE OF CONCRETE, CONTRACTOR SHALL STOP WORK AND NOTIFY THE ENGINEER IMMEDIATELY.

REMOVAL OF EXISTING DECK REPAIR NOTES

1. AFTER EXISTING OVERLAY IS REMOVED, PRIOR TO HYDRODEMOLITION, ANY EXISTING DECK REPAIRS THAT ARE LOOSE, PARTIALLY DELAMINATED, OR OTHERWISE UNSOUND, WILL BE MEASURED BY THE ENGINEER AND MARKED FOR REMOVAL.
2. THE CONTRACTOR SHALL REMOVE THE EXISTING DECK REPAIRS IN ACCORDANCE WITH SECTION 628.03(F).
3. THE REMOVAL SHALL NOT INCLUDE ANY UNSOUND ORIGINAL BRIDGE DECK CONCRETE.
4. REFER TO ITEM 628502 - REMOVAL OF EXISTING DECK REPAIR FOR PAYMENT AND ADDITIONAL INFORMATION.
5. IF REMOVAL OF EXISTING DECK REPAIR REACHES FULL DEPTH, AND WITH THE APPROVAL OF THE ENGINEER, REPAIR AREA SHALL BE REPAIRED IN ACCORDANCE WITH SUBSECTION 628.03(F) AND PAID FOR UNDER ITEM 628053 - DECK REPAIR, FULL DEPTH. REMOVAL OF EXISTING DECK REPAIRS THAT ARE CHANGED TO DECK REPAIR, FULL DEPTH WILL ONLY BE PAID FOR ONCE UNDER ITEM 628053.

DECK REPAIR NOTES

1. AFTER PAVEMENT MILLING, PRIOR TO HYDRODEMOLITION, EXISTING AREAS OF DECK REQUIRING FULL DEPTH REPAIR AS DIRECTED BY THE ENGINEER, SHALL BE REPAIRED USING DETAIL SHOWN ON THIS SHEET.
2. ALL WORK INVOLVING METHODS OF CONCRETE REMOVAL; CLEANING OF CONCRETE SURFACE AND EXISTING REINFORCEMENT; REPAIRING OR REPLACING DAMAGED REINFORCEMENT AS RESULT OF CONSTRUCTION ACTIVITIES OR SECTION LOSS; PRESENCE OF CONTRACTION OR EXPANSION JOINTS; SURFACE PREPARATION; AND CONCRETE PLACEMENT SHALL BE PERFORMED IN ACCORDANCE WITH SUBSECTION 628.03(F) OF THE STANDARD SPECIFICATIONS AND ITEMS 760500 - TOTAL SURFACE HYDRODEMOLITION, AND ITEM 625503 - ADDITIONAL LATEX-MODIFIED CONCRETE FOR PARTIAL DECK REPAIRS. PAYMENT FOR FULL DEPTH DECK REPAIRS MADE AFTER MILLING AND PRIOR TO HYDRODEMOLITION WILL BE MADE UNDER ITEM 628053 - DECK REPAIR, FULL DEPTH. PAYMENT FOR FULL DEPTH DECK REPAIRS MADE AFTER HYDRODEMOLITION WILL BE MADE UNDER ITEM 628053 - DECK REPAIR, FULL DEPTH.
3. MILLING, HYDRODEMOLITION, AND LMC OVERLAY WILL BE PAID FOR UNDER THEIR RESPECTIVE ITEMS.

LEGEND:

- LIMITS OF REMOVAL, MECHANICAL MILLING (ITEM 760013)
- LIMITS OF HYDRODEMOLITION (ITEM 760500)
- LIMITS OF REMOVAL (ITEM 628053 OR 628502)
- CLASS D CONCRETE

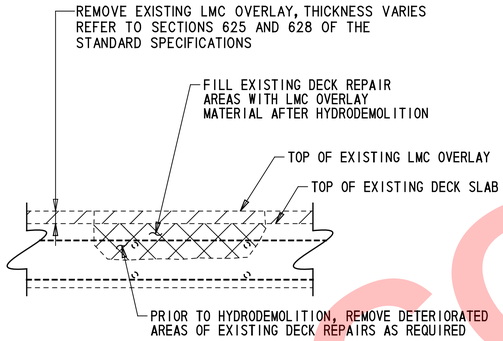

REMOVAL OF EXISTING DECK REPAIRS (ITEM 628502)

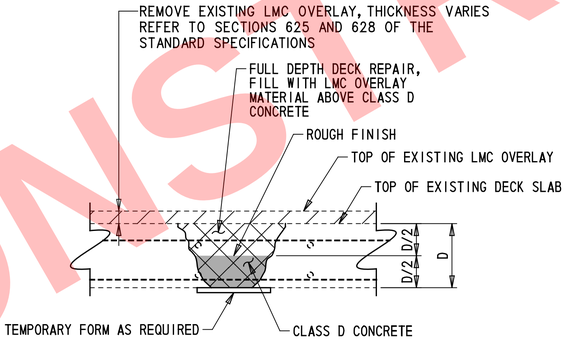

DECK REPAIR, FULL DEPTH (ITEM 628053)

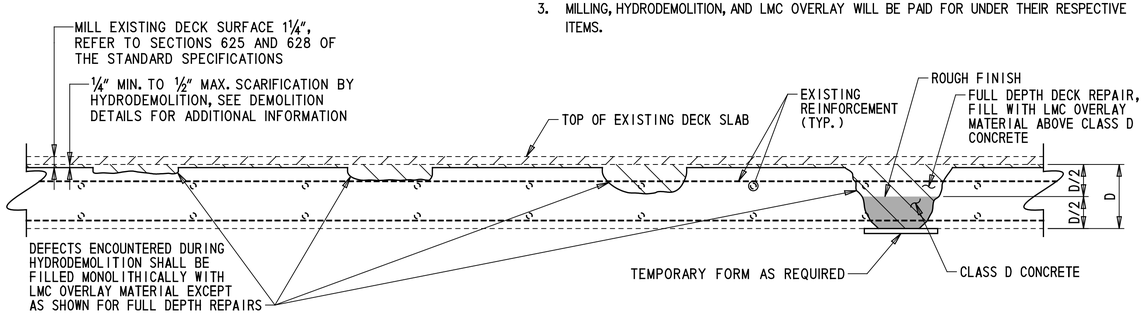

HYDRODEMOLITION AND DECK REPAIR (WITHOUT OVERLAY)

NOT FOR CONSTRUCTION

DELAMARE DEPARTMENT OF TRANSPORTATION	ADDENDUMS / REVISIONS	NOT TO SCALE	REHABILITATION OF I-95 FROM I-495 TO NORTH OF BRANDYWINE RIVER BRIDGE	CONTRACT T201407404	BRIDGE NO. 1 758E 6141	CONCRETE REPAIR DETAILS
				COUNTY NEW CASTLE	DESIGNED BY: BJM	
					CHECKED BY: JRQ	

1-758E PN-02
SHEET NO. 2-525
TOTAL SHTS. 2-731

C:\Bridge 1-758E_758EPN_02.dgn
5/16/2019 5:18:24 PM

QUANTITIES

ITEM Nº	ITEM TITLE	UNIT	QUANTITY
211000	REMOVAL OF STRUCTURES AND OBSTRUCTIONS	LS	1
602XXX	CLEANING BRIDGE SCUPPER	EA	1
604001	PROTECTIVE SHIELD	LS	1
610008	PORTLAND CEMENT CONCRETE MASONRY, SUPERSTRUCTURE, CLASS A	CY	4
610017	PORTLAND CEMENT CONCRETE MASONRY, SUPERSTRUCTURE, CLASS D	CY	20
611001	BAR REINFORCEMENT, EPOXY COATED	LB	3210
624000	PREFABRICATED EXPANSION JOINT SYSTEMS, 3"	LF	155
625000	LATEX-MODIFIED CONCRETE OVERLAY INSTALLATION	SY-IN	2170
625001	FURNISHING LATEX-MODIFIED CONCRETE OVERLAY	CY	82
6255XX	ADDITIONAL LATEX-MODIFIED CONCRETE FOR PARTIAL DECK REPAIRS	CY	9
628053	DECK REPAIR, FULL DEPTH	SF	15
6285XX	REMOVAL OF EXISTING DECK REPAIRS	SF	10
7275XX	DECORATIVE BARRIER	LF	160
760013	PAVEMENT MILLING, PORTLAND CEMENT CONCRETE PAVEMENT	SY-IN	1270
7605XX	TOTAL SURFACE HYDRODEMOLITION	SY	1270

NOTE:

QUANTITIES INCLUDE CONTINGENT PERCENTAGES AS NOTED IN NOTE 11 ON DWG. PN-01 AND AS SHOWN IN THE REPAIR TABLE ON DWG. PN-04.

LOAD RATING SUMMARY

DESIGN VEHICLE	RATING FACTOR	RATING WEIGHT (TON)	CONTROLLING MEMBER	CONTROLLING POINT	LOAD EFFECT
HL-93 TRUCK (INVENTORY)	1.47	N/A	SPAN E11, EXTERIOR BEAM S1	105	FLEXURE
HL-93 TANDEM (INVENTORY)	1.69	N/A	SPAN E11, EXTERIOR BEAM S1	105	FLEXURE
HL-93 TRUCK TRAIN (INVENTORY)	N/A	N/A	N/A	N/A	N/A
HS-20 TRUCK (INVENTORY)	1.94	69.97	SPAN E11, EXTERIOR BEAM S1	105	FLEXURE
HL-93 TRUCK (OPERATING)	1.90	N/A	SPAN E11, EXTERIOR BEAM S1	105	FLEXURE
HL-93 TANDEM (OPERATING)	2.20	N/A	SPAN E11, EXTERIOR BEAM S1	105	FLEXURE
HL-93 TRUCK TRAIN (OPERATING)	N/A	N/A	N/A	N/A	N/A
HS-20 TRUCK (OPERATING)	2.53	90.95	SPAN E11, EXTERIOR BEAM S1	105	FLEXURE
DE S220 & LEGAL-LANE (LEGAL)	3.58	71.54	SPAN E11, EXTERIOR BEAM S1	105	FLEXURE
DE S335 & LEGAL-LANE (LEGAL)	2.17	75.91	SPAN E11, EXTERIOR BEAM S1	105	FLEXURE
DE S437 & LEGAL-LANE (LEGAL)	2.08	76.05	SPAN E11, EXTERIOR BEAM S1	105	FLEXURE
DE T330 & LEGAL-LANE (LEGAL)	2.94	88.13	SPAN E11, EXTERIOR BEAM S1	105	FLEXURE
DE T435 & LEGAL-LANE (LEGAL)	2.63	92.20	SPAN E11, EXTERIOR BEAM S1	105	FLEXURE
DE T540 & LEGAL-LANE (LEGAL)	2.37	94.87	SPAN E11, EXTERIOR BEAM S1	105	FLEXURE

NOTE: LOAD RATING INCLUDES FUTURE WEARING SURFACE AS NOTED IN THE PLANS.

NOT FOR CONSTRUCTION

REPAIR NO.	REPAIR DESCRIPTION	LOCATION	REMARKS	DWG. NO.	ITEM NO.	ITEM DESCRIPTION	UNIT	QTY.	CONTINGENT %	TOTAL QTY.
1	JOINT REPLACEMENT (FULL REPLACEMENT)	PIER E6, PIER E7, PIER E8, PIER E9, PIER E10, PIER E11	FOR REPLACEMENT OF JOINT AT PIER H1, SEE BRIDGE 1-758H BRIDGE PLANS	EX-01 TO EX-03	610008	PORTLAND CEMENT CONCRETE MASONRY, SUPERSTRUCTURE, CLASS A	CY	4	0	4
					610017	PORTLAND CEMENT CONCRETE MASONRY, SUPERSTRUCTURE, CLASS D	CY	20	0	20
					611001	BAR REINFORCEMENT, EPOXY COATED	LB	3210	0	3210
					624000	PREFABRICATED EXPANSION JOINT SYSTEMS, 3"	LF	155	0	155
3	MILL EXISTING DECK/OVERLAY	ENTIRE BRIDGE		DM-01, PN-02	628053	DECK REPAIR, FULL DEPTH	SF	0	EQ	15
					760013	PAVEMENT MILLING, PORTLAND CEMENT CONCRETE PAVEMENT	SY-IN	1270	0	1270
4	HYDRODEMOLITION OF EXISTING DECK SURFACE	ENTIRE BRIDGE		DM-01, PN-02	6285XX	REMOVAL OF EXISTING DECK REPAIRS	SF	0	EQ	10
					7605XX	TOTAL SURFACE HYDRODEMOLITION	SY	1270	0	1270
5	FURNISH AND INSTALL LMC OVERLAY	ENTIRE BRIDGE		DM-01, PN-02	625000	LATEX-MODIFIED CONCRETE OVERLAY INSTALLATION	SY-IN	2170	0	2170
					625001	FURNISHING LATEX-MODIFIED CONCRETE OVERLAY	CY	65	25	82
					6255XX	ADDITIONAL LATEX-MODIFIED CONCRETE FOR PARTIAL DECK REPAIRS	CY	7	25	9
10	CLEAN SCUPPER AND DOWNSPOUT	SPAN E10			602XXX	CLEANING BRIDGE SCUPPER	EA	1	0	1
17	SALVAGE, REFURBISH, AND REINSTALL DECORATIVE BARRIER	SPANS E6 AND E7, EAST DECORATIVE BARRIER AT PIER JOINTS		PA-02	211000	REMOVAL OF STRUCTURES AND OBSTRUCTIONS	LS	1	0	1
					7275XX	DECORATIVE BARRIER	LF	160	0	160
19	REPLACE BRIDGE LIGHTING	1 EACH IN SPANS E7 AND E10	SEE LIGHTING PLANS FOR ITEMS AND PAYMENT		N/A					

NOT FOR CONSTRUCTION

LMC OVERLAY NOTES:

1. LONGITUDINAL CONSTRUCTION JOINTS IN THE LMC OVERLAY SHALL NOT BE PERMITTED ON BRIDGE 1-758E. THE OVERLAY SHALL BE PLACED FULL WIDTH OF THE BRIDGE DECK FROM FLOWLINE TO FLOWLINE.

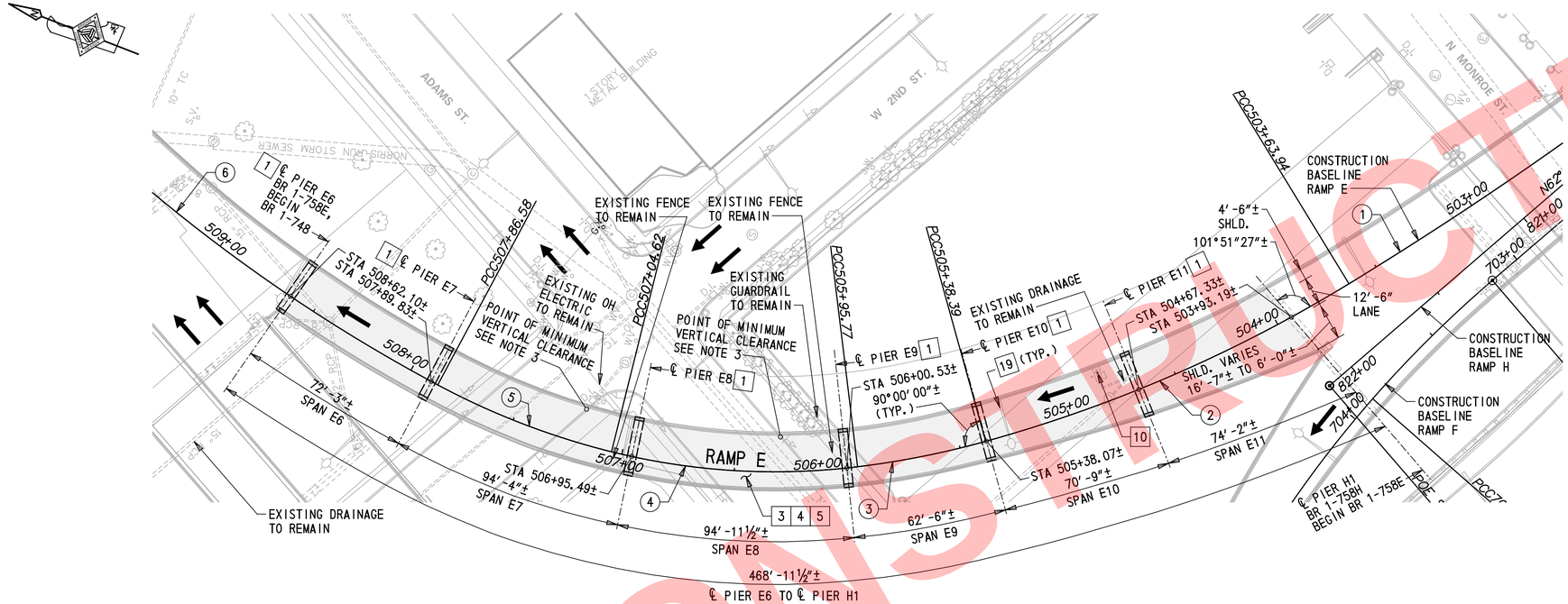

PLAN

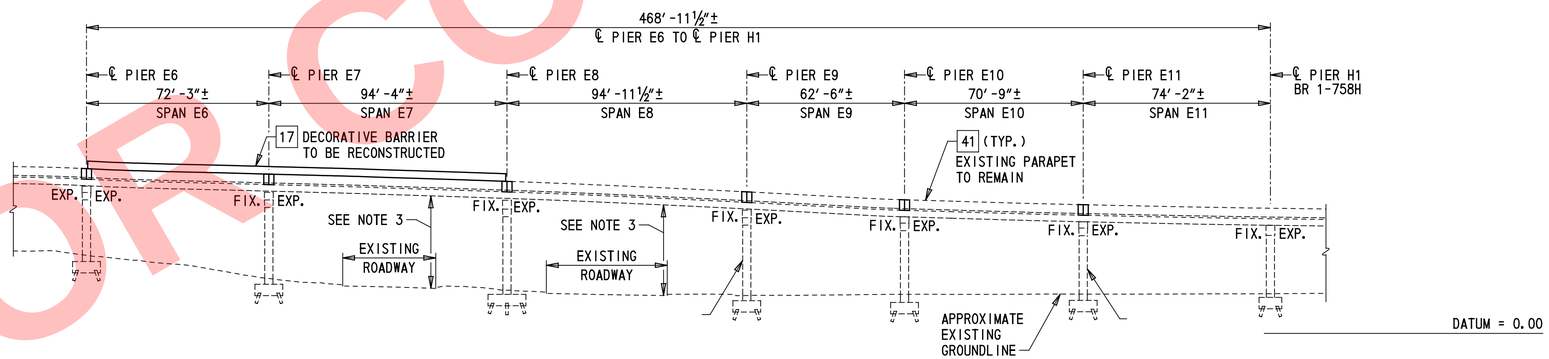

DEVELOPED SECTION ALONG CONSTRUCTION BASELINE RAMP E

HORIZONTAL CURVE DATA

CURVE (1)
P.C. STA. = 501+01.39
P.I. STA. = 502+32.95
L = 262.55′
R = 1646.00′
M.O. = 5.23
P.C.C. STA. = 503+63.94

CURVE (2)
P.C.C. STA. = 503+63.94
P.I. STA. = 504+51.73
L = 174.44′
R = 628.00′
M.O. = 6.05
P.C.C. STA. = 505+38.39

CURVE (3)
P.C.C. STA. = 505+38.39
P.I. STA. = 505+67.13
L = 57.38′
R = 385.00′
M.O. = 1.07
P.C.C. STA. = 505+95.77

CURVE (4)
P.C.C. STA. = 505+95.77
P.I. STA. = 506+50.81
L = 108.84′
R = 298.00′
M.O. = 4.96
P.C.C. STA. = 507+04.62

CURVE (5)
P.C.C. STA. = 507+04.62
P.I. STA. = 507+45.81
L = 81.96′
R = 331.00′
M.O. = 2.53
P.C.C. STA. = 507+86.58

CURVE (6)
P.C.C. STA. = 507+86.58
P.I. STA. = 509+23.60
L = 270.99′
R = 740.52′
M.O. = 12.36
P.T. STA. = 510+57.56

KEY:

[1] REPAIR NUMBER AS SHOWN ON DWG. PN-04

(1) CURVE DATA

LEGEND:

MILL AND OVERLAY DECK

NOTES:

1. DIMENSIONS SHOWN ARE MEASURED ALONG CONSTRUCTION BASELINE RAMP E.
2. PILES SHOWN ARE FOR INFORMATIONAL PURPOSES ONLY.
3. MINIMUM VERTICAL CLEARANCE IS BASED ON 2017 NBIS INSPECTION REPORT. MINIMUM CLEARANCE ABOVE 2ND STREET = 35′-0″±. MINIMUM CLEARANCE ABOVE ADAMS ST. = 34′-3″±.

NOT FOR CONSTRUCTION

DELAWARE DEPARTMENT OF TRANSPORTATION

ADDENDUMS / REVISIONS

SCALE 0 30 60 90 FEET

REHABILITATION OF I-95 FROM I-495 TO NORTH OF BRANDYWINE RIVER BRIDGE

CONTRACT	T201407404
COUNTY	NEW CASTLE
BRIDGE NO.	1 758E 6141
DESIGNED BY:	BJM
CHECKED BY:	JRQ

GENERAL PLAN AND ELEVATION

	1-758E PE-01
SHEET NO.	2-528
TOTAL SHTS.	2-731

\\758EPE_01.dgn 5/16/2019 5:18:29 PM

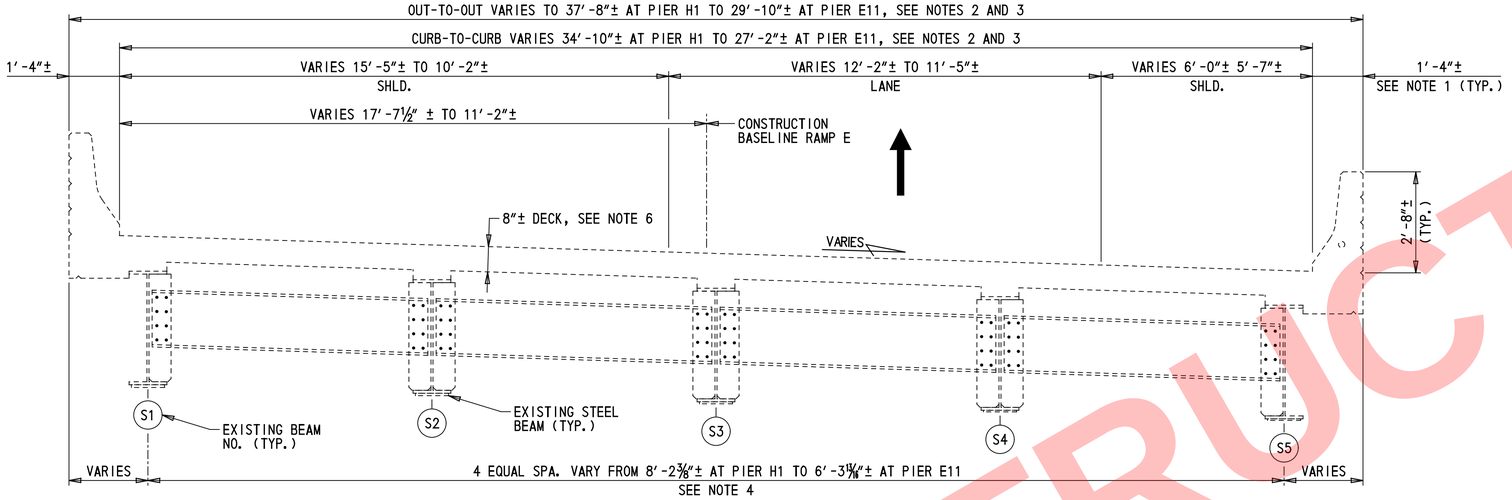

EXISTING TYPICAL SECTION

(STA. 503+93.19 TO STA. 504+67.33)

½″ = 1′-0″

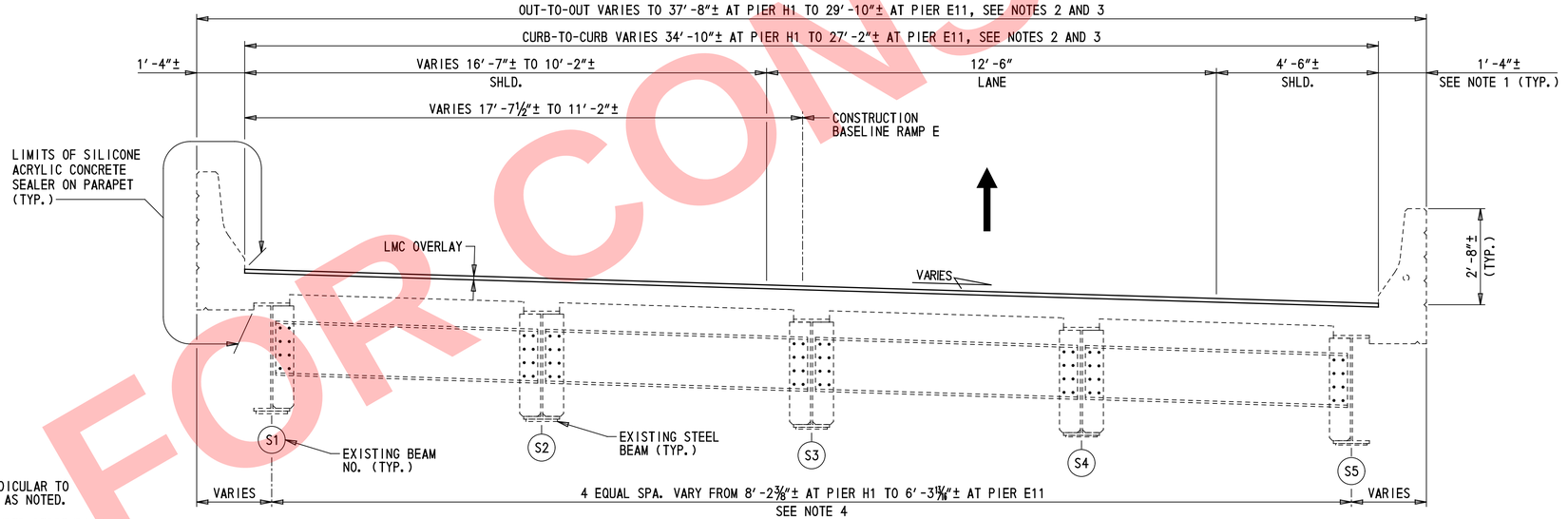

PROPOSED TYPICAL SECTION

(STA. 503+93.19 TO STA. 504+67.33)

½″ = 1′-0″

NOTES:

1. DIMENSIONS SHOWN ARE MEASURED PERPENDICULAR TO CONSTRUCTION BASELINE RAMP E, EXCEPT AS NOTED.
2. DIMENSIONS SHOWN AT PIER H1 ARE MEASURED PERPENDICULAR TO CONSTRUCTION BASELINE RAMP H FROM THE EAST PARAPET TO THE THEORETICAL INTERSECTION OF THE WEST PARAPET AND THE CENTERLINE OF PIER H1.
3. DIMENSIONS SHOWN AT PIER E11 ARE MEASURED PERPENDICULAR TO THE CONSTRUCTION BASELINE RAMP E.
4. BEAM SPACING SHOWN IS MEASURED ALONG THE PIER CENTERLINE.
5. FOR PARAPET DETAIL, DRIP NOTCH DETAIL, AND ARCHITECTURAL GROOVE DETAIL SEE DWG. PA-01.
6. SEE DWG. DM-01 FOR DEMOLITION DETAILS.

NOT FOR CONSTRUCTION

DELAWARE DEPARTMENT OF TRANSPORTATION	ADDENDUMS / REVISIONS	SCALE AS NOTED	REHABILITATION OF I-95 FROM I-495 TO NORTH OF BRANDYWINE RIVER BRIDGE	CONTRACT T201407404	BRIDGE NO. 1 758E 6141	BRIDGE TYPICAL SECTIONS STA. 503+93 TO 504+67	1-758E TS-01
				COUNTY NEW CASTLE	DESIGNED BY: BJM		SHEET NO. 2-529
					CHECKED BY: JRQ		TOTAL SHTS. 2-731

\Bridge 1-758E\758E_TS_01.dgn
5/16/2019 5:18:30 PM

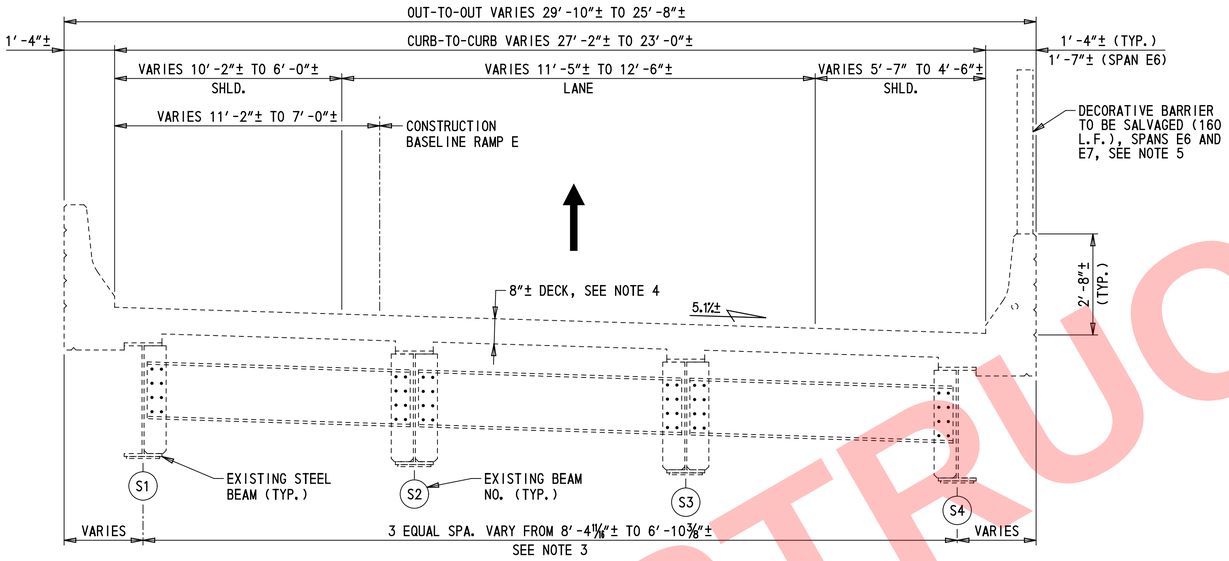

EXISTING TYPICAL SECTION

(STA. 504+67.33 TO STA. 506+00.53 AND STA. 507+89.83 TO STA. 508+62.10)

½″ = 1′-0″

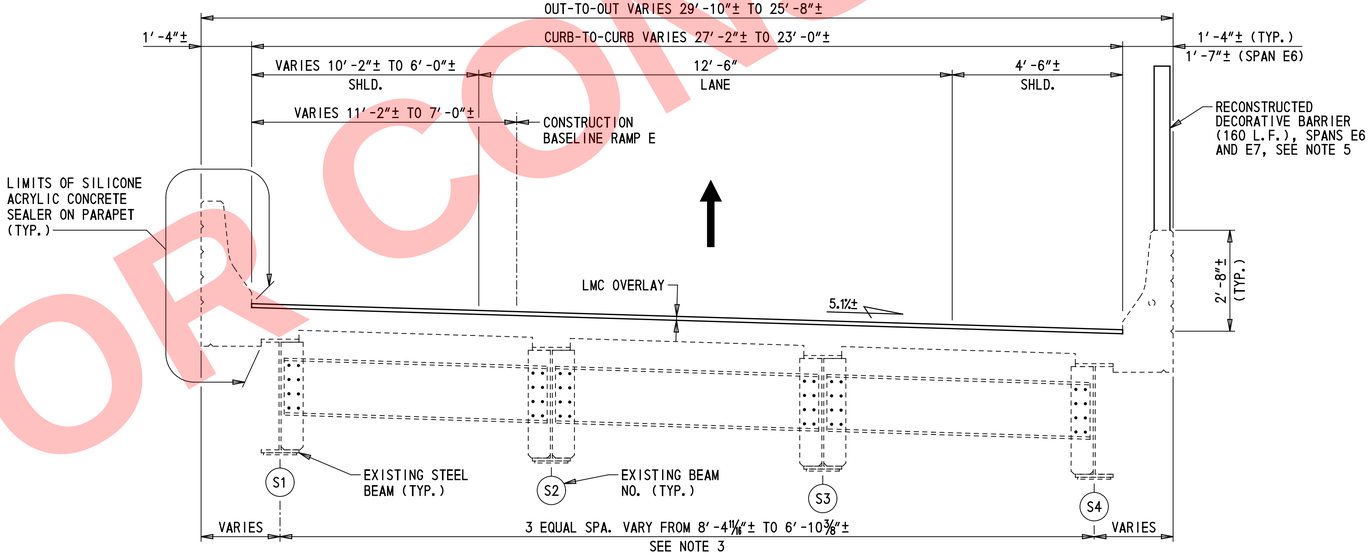

PROPOSED TYPICAL SECTION

(STA. 504+67.33 TO STA. 506+00.53 AND STA. 507+89.83 TO STA. 508+62.10)

½″ = 1′-0″

NOTES:

1. DIMENSIONS SHOWN ARE MEASURED PERPENDICULAR TO CONSTRUCTION BASELINE RAMP E.
2. FOR PARAPET DETAIL, DRIP NOTCH DETAIL, ARCHITECTURAL GROOVE DETAIL, AND DECORATIVE BARRIER DETAIL SEE DWG. PA-01.
3. FOR BEAM SPACING, SEE BEAM / GIRDER SPACING TABLE ON DWG. EX-02.
4. SEE DWG. DM-01 FOR DEMOLITION DETAILS.
5. FOR LIMITS OF DECORATIVE BARRIER REMOVAL AND REINSTALLATION, SEE DWG. PA-02.

NOT FOR CONSTRUCTION

DELAWARE DEPARTMENT OF TRANSPORTATION	ADDENDUMS / REVISIONS	SCALE AS NOTED	REHABILITATION OF I-95 FROM I-495 TO NORTH OF BRANDYWINE RIVER BRIDGE	CONTRACT T201407404	BRIDGE NO. 1 758E 6141	BRIDGE TYPICAL SECTIONS STA. 504+67 TO 506+00 & STA. 507+89 TO 508+62	1-758E TS-02
				COUNTY NEW CASTLE	DESIGNED BY: BJM		SHEET NO. 2-530
					CHECKED BY: JRQ		TOTAL SHTS. 2-731

\Bridge 1-758E\758ETS-02.dgn
5/7/2020 3:08:30 PM

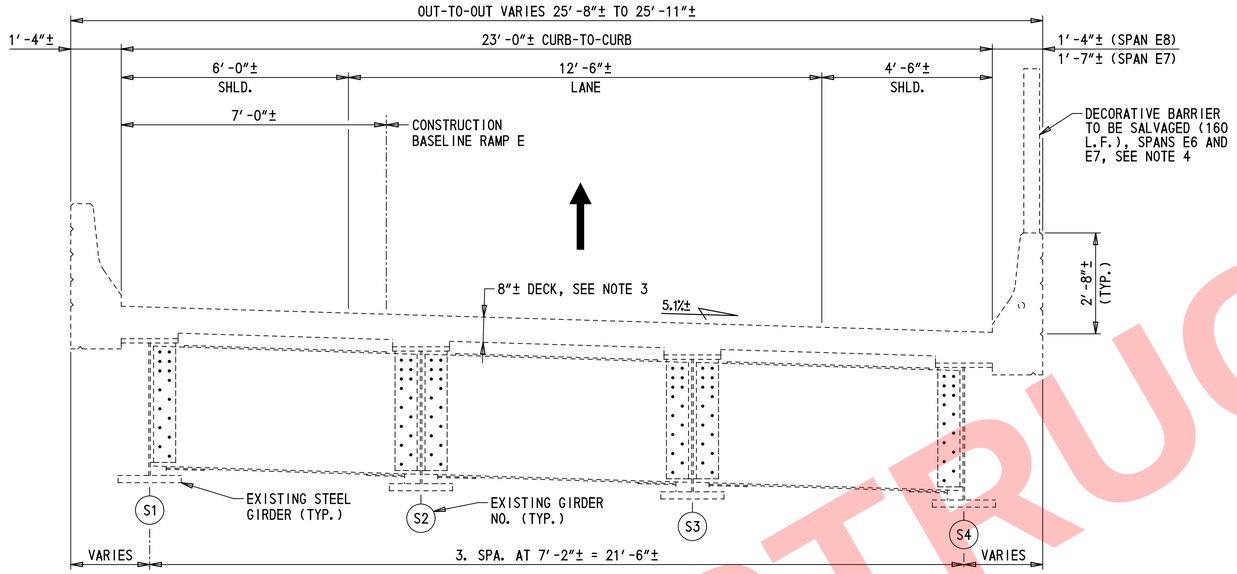

EXISTING TYPICAL SECTION
(STA. 506+00.53 TO STA. 507+89.83)
½" = 1'-0"

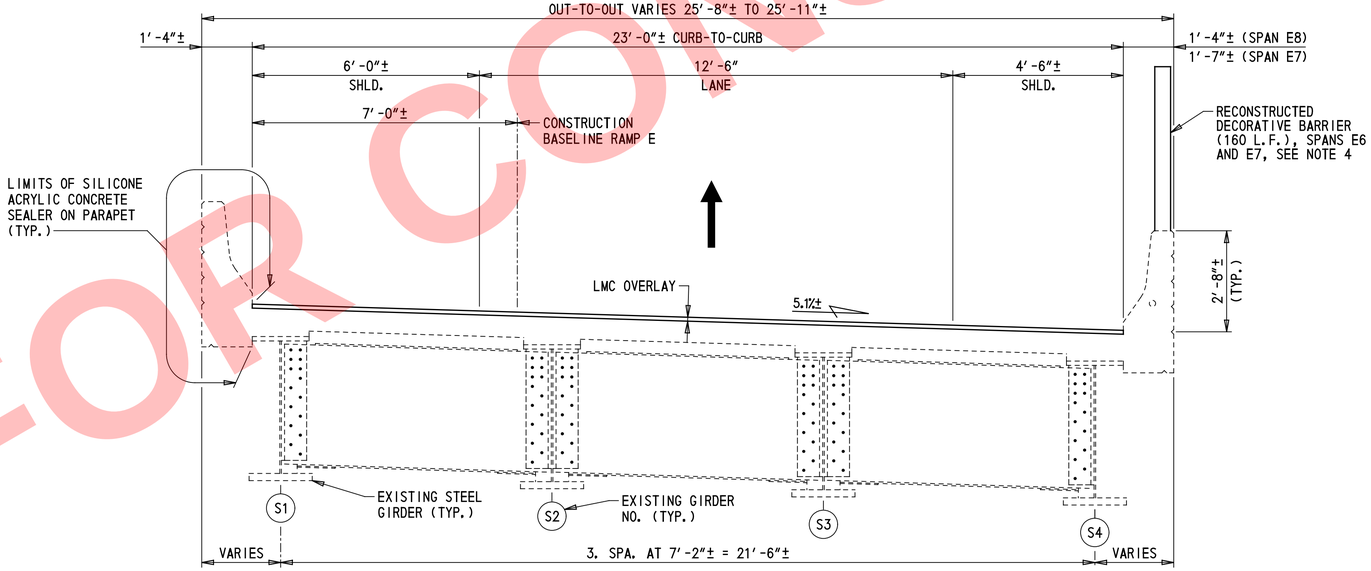

PROPOSED TYPICAL SECTION
(STA. 506+00.53 TO STA. 507+89.83)
½" = 1'-0"

NOTES:

1. DIMENSIONS SHOWN ARE MEASURED PERPENDICULAR TO CONSTRUCTION BASELINE RAMP E.
2. FOR PARAPET DETAIL, DRIP NOTCH DETAIL, ARCHITECTURAL GROOVE DETAIL, AND DECORATIVE BARRIER DETAIL SEE DWG. PA-01.
3. SEE DWG. DM-01 FOR DEMOLITION DETAILS.
4. FOR LIIMTS OF DECORATIVE BARRIER REMOVAL AND REINSTALLATION, SEE DWG. PA-02.

NOT FOR CONSTRUCTION

DELAWARE DEPARTMENT OF TRANSPORTATION

ADDENDUMS / REVISIONS

SCALE AS NOTED

REHABILITATION OF I-95 FROM I-495 TO NORTH OF BRANDYWINE RIVER BRIDGE

CONTRACT	BRIDGE NO.	1 758E 6141
T201407404	DESIGNED BY: BJM	
COUNTY	CHECKED BY: JRQ	
NEW CASTLE		

BRIDGE TYPICAL SECTIONS STA. 506+00 TO 507+89

1-758E TS-03
SHEET NO. 2-531
TOTAL SHTS. 2-731

\Bridge 1-758E_758ETS_03.dgn
5/18/2016 9:18:30 PM

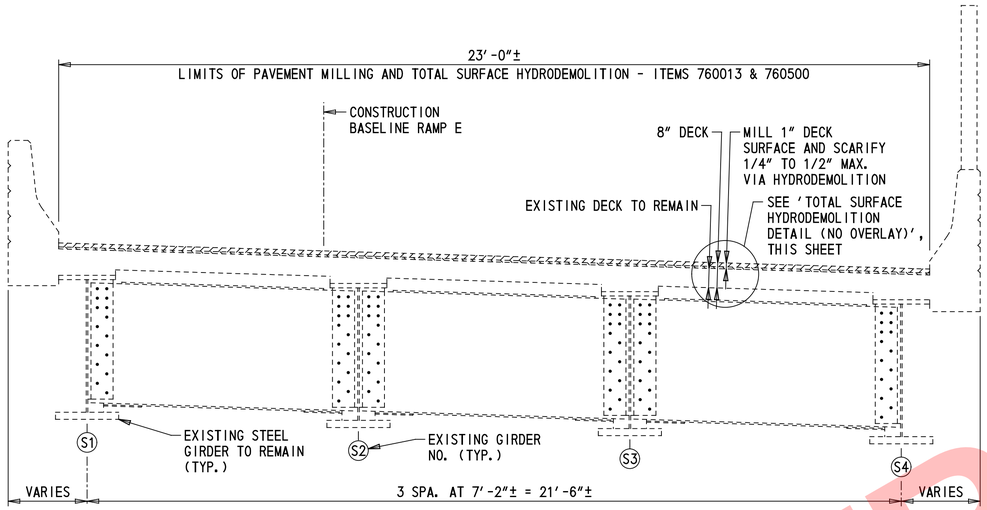

LIMITS OF DEMOLITION

(SPANS E7 AND E8 SHOWN, SPANS E6, E9, E10 AND E11 SIMILAR)

½″ = 1′-0″

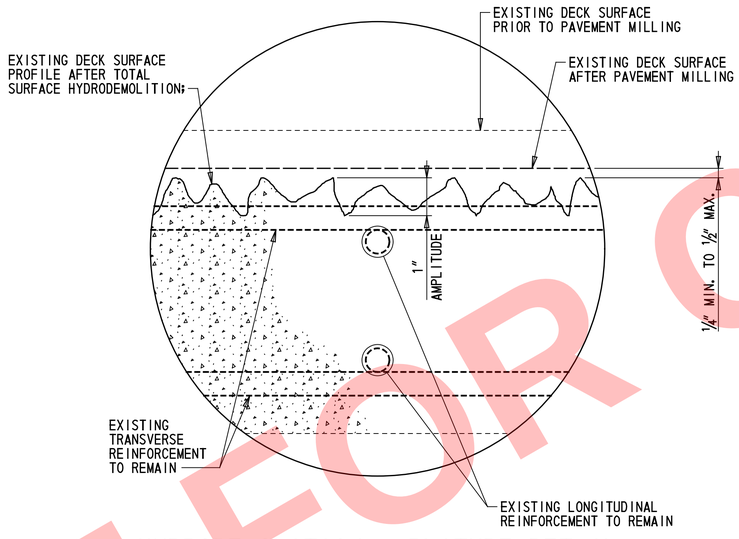

HYDRODEMOLITION AMPLITUDE DETAIL

6″ = 1′-0″

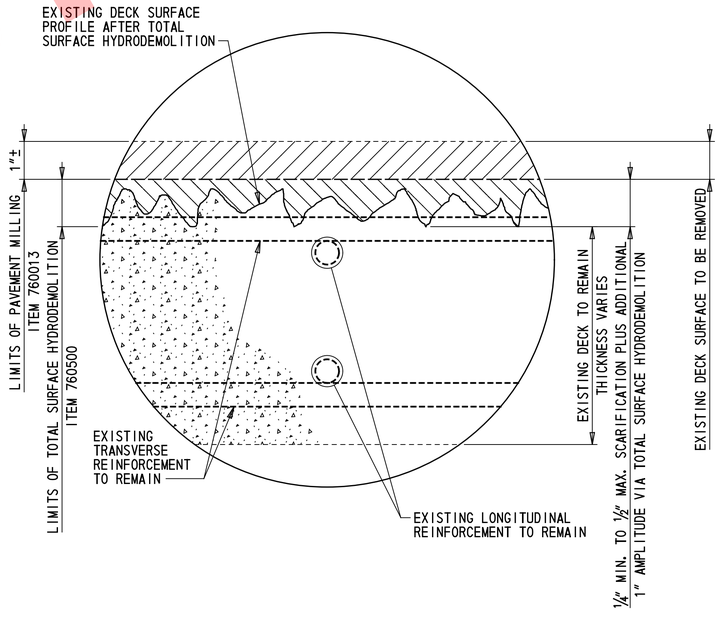

TOTAL SURFACE HYDRODEMOLITION DETAIL (NO OVERLAY)

6″ = 1′-0″

LEGEND:

- LIMITS OF REMOVAL, PAVEMENT MILLING (ITEM 760013)
- LIMITS OF REMOVAL, HYDRODEMOLITION (ITEM 760500)

DEMOLITION NOTES:

1. DECK AREAS THAT HAVE RECIEVED TOTAL SURFACE HYDRODEMOLITION SHALL ONLY BE ACCESSED BY EQUIPMENT NECESSARY TO COMPLETE THE WORK.

NOT FOR CONSTRUCTION

DELAWARE DEPARTMENT OF TRANSPORTATION	ADDENDUMS / REVISIONS	SCALE AS NOTED	REHABILITATION OF I-95 FROM I-495 TO NORTH OF BRANDYWINE RIVER BRIDGE	CONTRACT T201407404	BRIDGE NO. 1 758E 6141	MILLING AND HYDRODEMOLITION DETAILS	1-758E DM-01
				COUNTY NEW CASTLE	DESIGNED BY: BJM		SHEET NO. 2-542
					CHECKED BY: JRQ		TOTAL SHTS. 2-731

...\Bridge 1-758E\758EDM_01.dgn
5/16/2019 5:18:34 PM

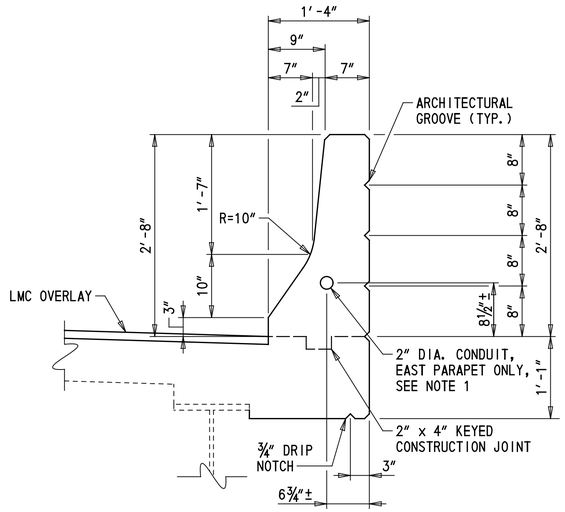

PARAPET DETAIL - TYPE 1

1″ = 1′-0″

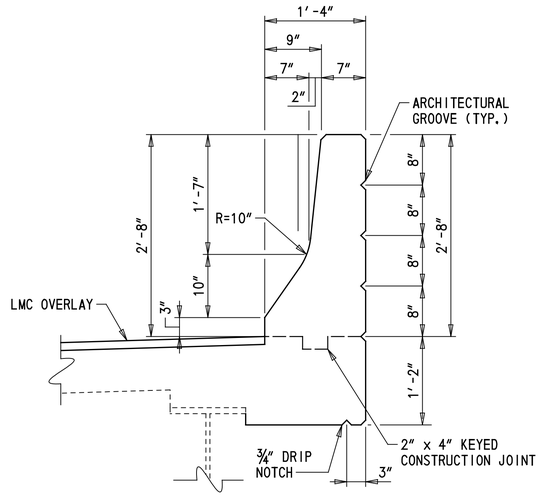

PARAPET DETAIL - TYPE 2

1″ = 1′-0″

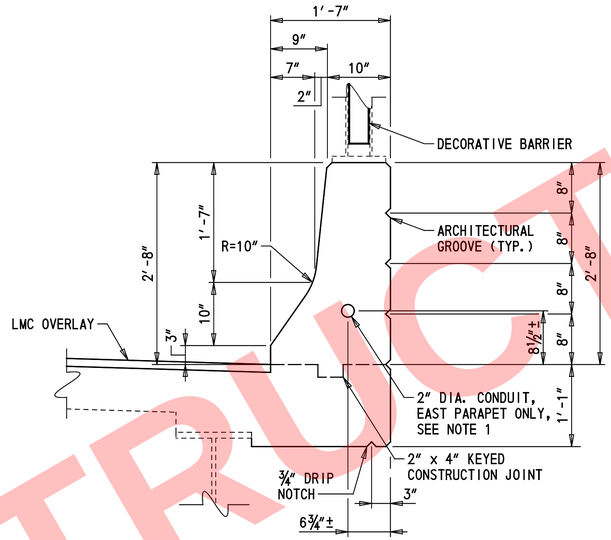

PARAPET DETAIL - TYPE 3

1″ = 1′-0″

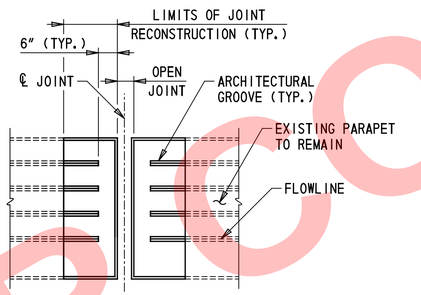

ARCHITECTURAL GROOVE TERMINATION DETAIL

½″ = 1′-0″

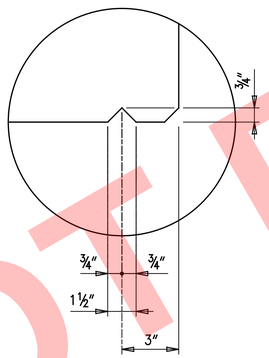

DRIP NOTCH DETAIL

3″ = 1′-0″

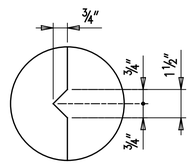

ARCHITECTURAL GROOVE DETAIL

3″ = 1′-0″

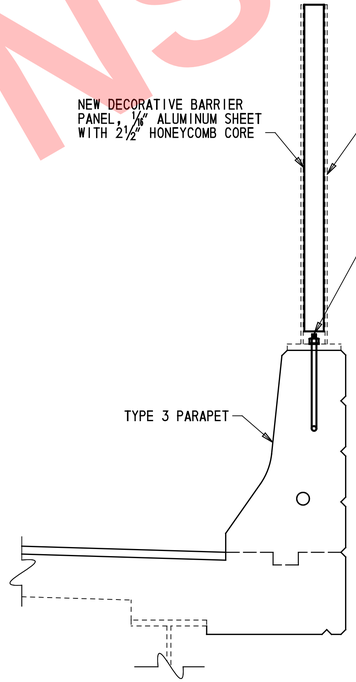

DECORATIVE BARRIER

1″ = 1′-0″

DECORATIVE BARRIER NOTES:

1. ALUMINUM PANELS SHALL BE IN ACCORDANCE WITH SECTION 1044. PAYMENT FOR NEW ALUMINUM PANELS WILL BE MADE UNDER ITEM 727503.
2. EXISTING ALUMINUM POSTS TO REMAIN OR TO BE SALVAGED SHALL BE BLAST CLEANED AND PAINTED IN ACCORDANCE WITH ITEM xxxxxx - ALUMINUM COATINGS.
3. EXISTING DECORATIVE W'S ON THE EXISTING PANELS SHALL BE SALVAGED, CLEANED AND PAINTED IN ACCORDANCE WITH THE PERTINENT ITEM. PAYMENT WILL BE INCIDENTAL TO ITEM 727503.
3. NUTS AND WASHERS SHALL BE IN CONFORMANCE WITH ASTM A 320 TYPE 304 (S.S.). WASHERS SHALL BE OVERSIZED TO COVER 1⅛″ DIA. HOLES IN BASE PLATE. PAYMENT FOR ALL HARDWARE INCLUDING U-BOLTS WILL BE INCIDENTAL TO ITEM 727503.
4. ALUMINUM SURFACES IN CONTACT WITH CONCRETE SHALL BE IN ACCORDANCE WITH SUBSECTION 626.03.C.8.

NOTES:

1. 2″ DIAMETER CONDUIT SHALL BE GALVANIZED STEEL IN ACCORDANCE WITH SPECIFICATIONS SECTION 1062. PAYMENT WILL BE INCIDENTAL TO ITEM 610008 - PORTLAND CEMENT CONCRETE MASONRY, PARAPET, CLASS A.
2. PARAPET DETAIL - TYPE 1 APPLIES TO THE EAST PARAPET IN SPANS E8, E9, E10 & E11.
3. PARAPET DETAIL - TYPE 2 APPLIES TO THE WEST PARAPET OVER THE ENTIRE LENGTH OF THE BRIDGE.
4. PARAPET DETAIL - TYPE 3 APPLIES TO THE EAST PARAPET IN SPANS E6 & E7.

NOT FOR CONSTRUCTION

DELAWARE DEPARTMENT OF TRANSPORTATION	ADDENDUMS / REVISIONS	SCALE AS NOTED	REHABILITATION OF I-95 FROM I-495 TO NORTH OF BRANDYWINE RIVER BRIDGE	CONTRACT T201407404	BRIDGE NO. 1 758E 6141	PARAPET DETAILS
				COUNTY NEW CASTLE	DESIGNED BY: JRQ	
					CHECKED BY: BSD	

1-758E PA-01 | SHEET NO. 2-549 | TOTAL SHTS. 2-731

\Bridge 1-758E\758EPA_01.dgn
5/18/2019 5:18:34 PM

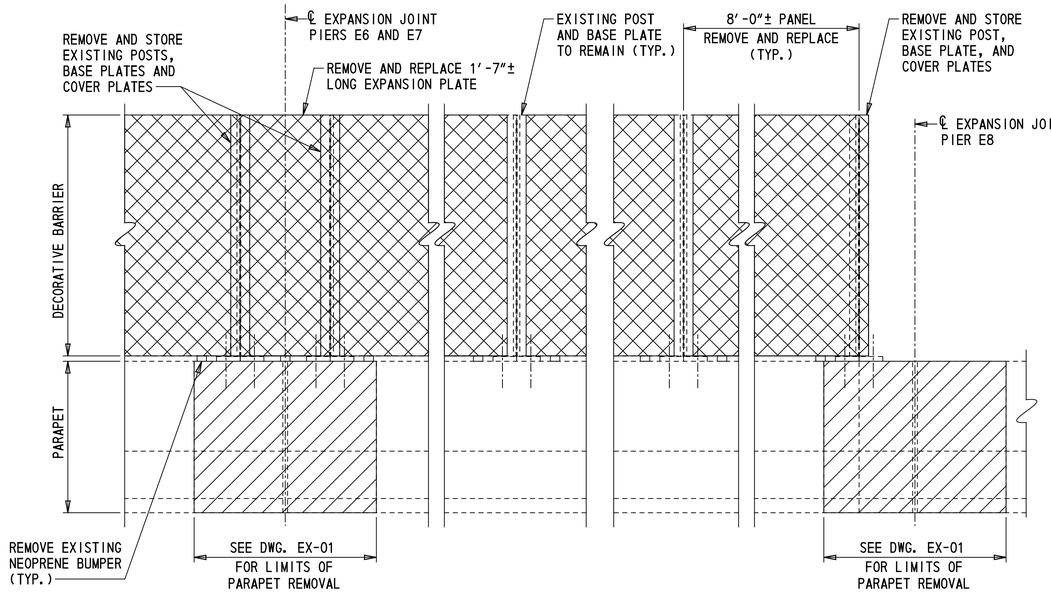

DECORATIVE BARRIER REMOVAL

(EAST PARAPET - WEST ELEVATION)
SCALE: ¾″ = 1′-0″

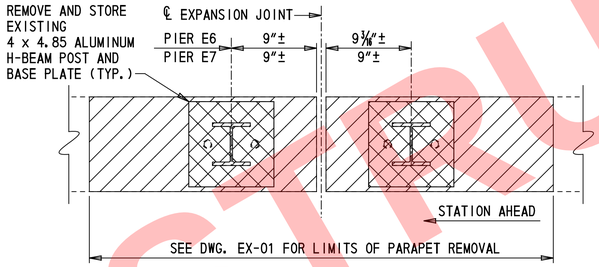

SECTION A-A REMOVAL

1½″=1′-0″

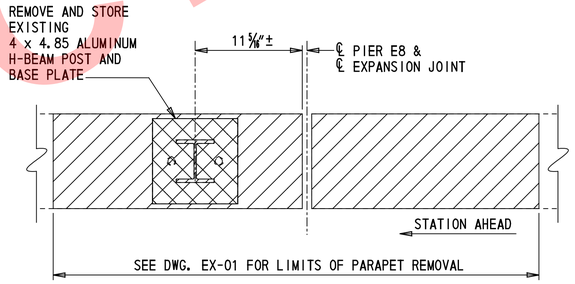

SECTION B-B REMOVAL

1½″=1′-0″

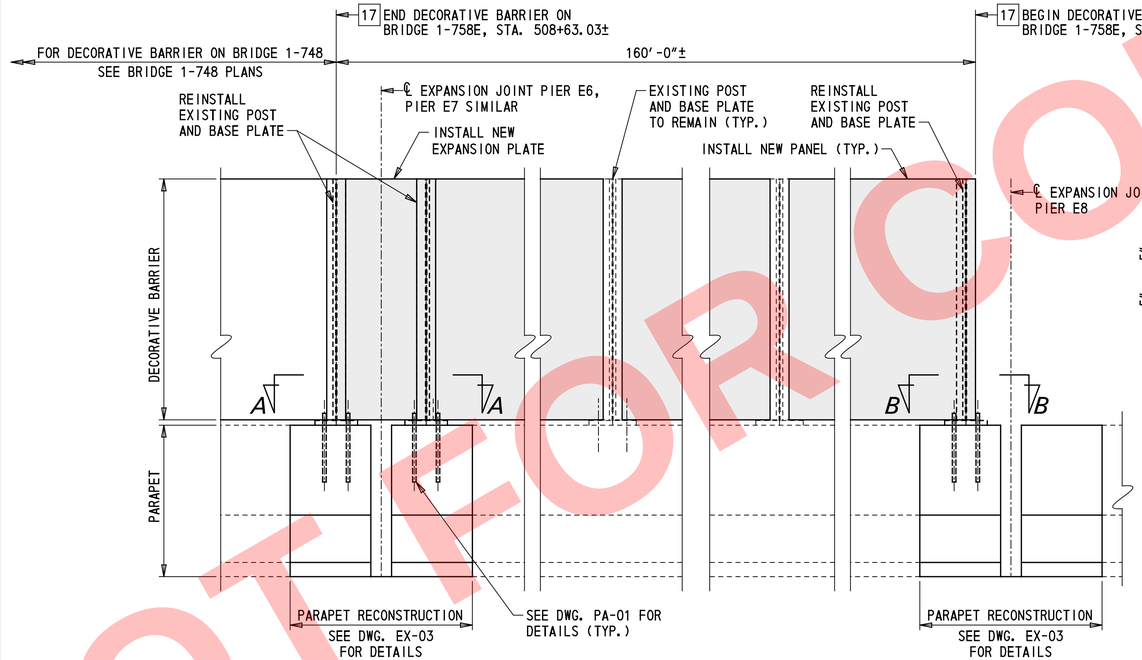

DECORATIVE BARRIER REINSTALLATION

(EAST PARAPET - WEST ELEVATION)
SCALE: ¾″ = 1′-0″

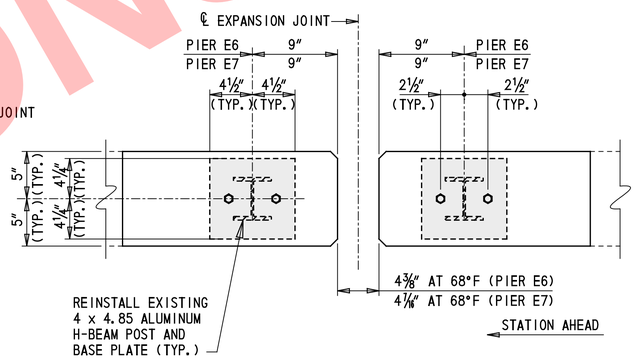

SECTION A-A REINSTALLATION

1½″=1′-0″

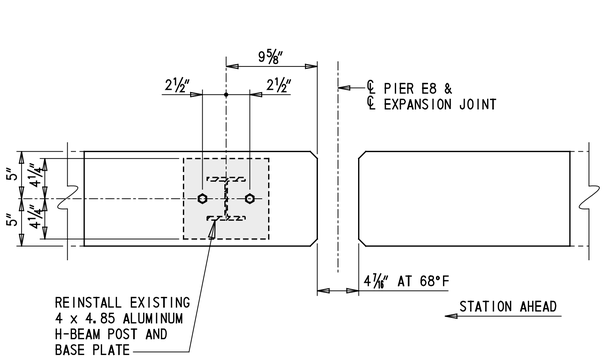

SECTION B-B REINSTALLATION

1½″=1′-0″

LEGEND:

- PARAPET REMOVAL LIMITS
- DECORATIVE BARRIER REMOVAL LIMITS - ITEM 211000
- DECORATIVE BARRIER INSTALLATION LIMITS

DECORATIVE BARRIER REMOVAL AND REINSTALLATION NOTES:

1. EXISTING BARRIER POST LOCATIONS SHOWN ARE BASED ON DIMENSIONS PROVIDED ON EXISTING CONTRACT 76-03-020, PLAN SHEET NO. 57. CONTRACTOR TO FIELD VERIFY EXISTING POST LOCATIONS PRIOR TO REMOVAL AND INSTALLATION OF PROPOSED ANCHOR BOLTS.
2. PRIOR TO PLACEMENT OF CONCRETE FOR PARAPET RECONSTRUCTION REQUIRED AS PART OF JOINT REPLACEMENT, INSTALL U-BOLTS AS SHOWN.
3. FOR DECORATIVE BARRIER SECTION AND ADDITIONAL DECORATIVE BARRIER NOTES, SEE DWG. PA-01.

NOT FOR CONSTRUCTION

DELAWARE DEPARTMENT OF TRANSPORTATION	ADDENDUMS / REVISIONS	SCALE AS NOTED	REHABILITATION OF I-95 FROM I-495 TO NORTH OF BRANDYWINE RIVER BRIDGE	CONTRACT T201407404	BRIDGE NO. 1 758E 6141	DECORATIVE BARRIER DETAILS
				COUNTY NEW CASTLE	DESIGNED BY: MLA	
					CHECKED BY: JRQ	

1-758E PA-02 | SHEET NO. 2-550 | TOTAL SHTS. 2-731

\\Bridges 1-758E\758EPA_02.dgn 5/16/2019 5:18:35 PM

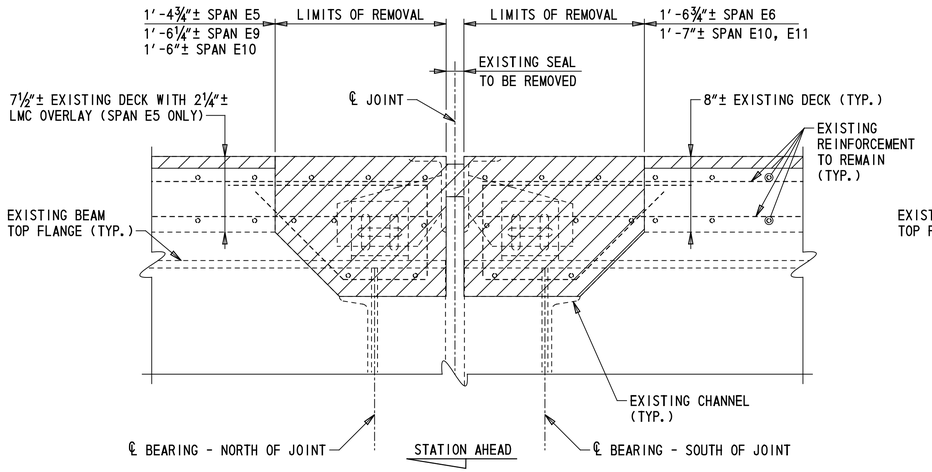

REMOVAL DETAIL - PIERS E6, E10 & E11

(PIER E10 SHOWN, OTHER SIMILAR)
1½″ = 1′-0″

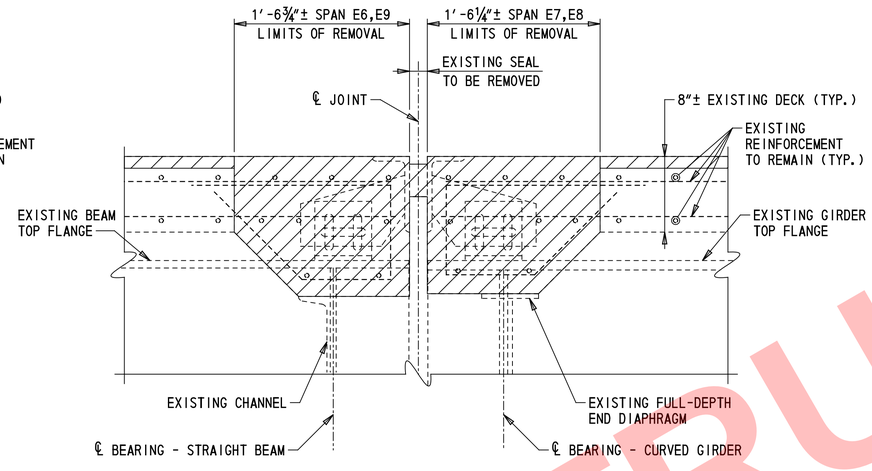

REMOVAL DETAIL - PIERS E7, E8 & E9

(PIER E7 SHOWN, OTHERS SIMILAR)
1½″ = 1′-0″

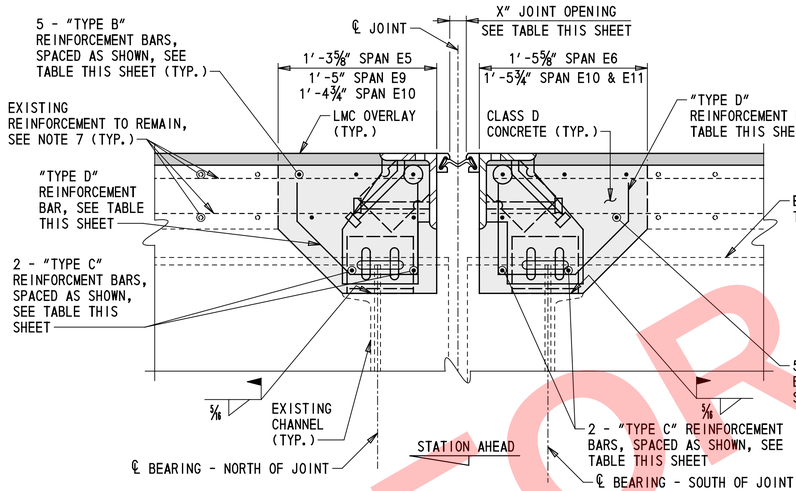

JOINT DETAIL - PIERS E6, E10 & E11

(PIER E10 SHOWN, OTHER SIMILAR)
1½″ = 1′-0″

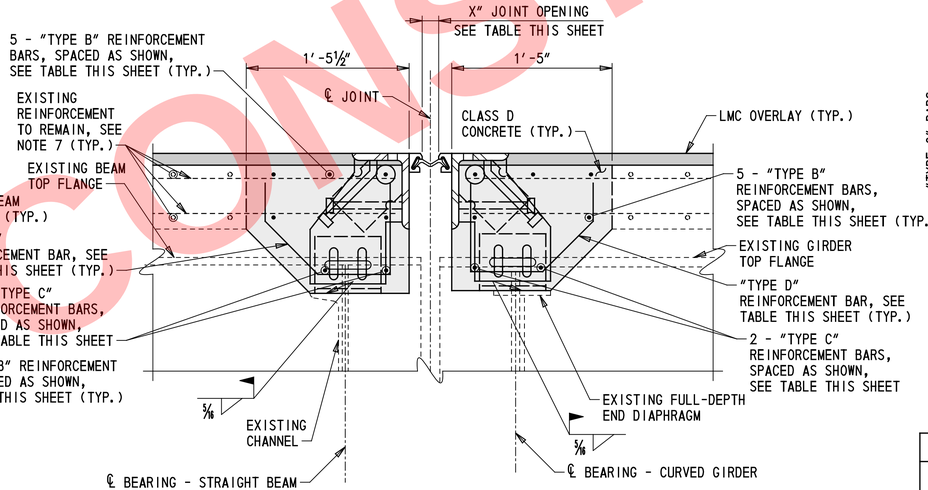

JOINT DETAIL - PIERS E7, E8 & E9

(PIER E7 SHOWN, OTHERS SIMILAR)
1½″ = 1′-0″

LEGEND:

- REMOVAL LIMITS
- PROPOSED CONSTRUCTION
- PROPOSED LMC OVERLAY

BAR REINFORCEMENT SCHEDULE

LOCATION	NORTH OF JOINT					SOUTH OF JOINT				
	"TYPE B" BAR	"TYPE C" BAR		"TYPE D" BAR		"TYPE B" BAR	"TYPE C" BAR		"TYPE D" BAR	
	MARK	MARK	QUANTITY	"D" MARK	QUANTITY	MARK	MARK	QUANTITY	"D" MARK	QUANTITY
PIER E6	DK501E	DK505E	6	DK511E	12	DK501E	DK505E	6	DK512E	12
PIER E7	DK501E	DK506E	6	DK512E	12	DK501E	DK507E	6	DK512E	12
PIER E8	DK501E	DK507E	6	DK512E	12	DK501E	DK507E	6	DK512E	12
PIER E9	DK502E	DK507E	6	DK512E	12	DK502E	DK506E	6	DK512E	12
PIER E10	DK503E	DK508E	6	DK512E	12	DK503E	DK508E	6	DK512E	15
PIER E11	DK504E	DK509E	6	DK513E	15	DK504E	DK510E	8	DK512E	20

BAR REINFORCEMENT NOTES:

1. QUANTITY FOR BAR "TYPE B" IS 5 PER SPAN AT EACH JOINT.
2. QUANTITY SHOWN IS FOR NUMBER OF BARS FOR THE PIER LOCATION SHOWN, NORTH OR SOUTH OF THE JOINT AS INDICATED.
3. "TYPE D" REINFORCEMENT BARS ARE SPACED TO MATCH EXISTING TOP LONGITUDINAL REINFORCEMENT BETWEEN BEAMS/GIRDERS. SEE TYPICAL JOINT REINFORCEMENT PLAN THIS SHEET.

JOINT RECONSTRUCTION NOTES:

1. NEW STRIP SEAL ASSEMBLY SHOWN FOR GRAPHICAL PURPOSES ONLY. DETAILS MAY VARY BY MANUFACTURER. STRIP SEAL AND ASSEMBLY SHALL BE IN ACCORDANCE WITH ITEM 624000 - PREFABRICATED EXPANSION JOINT SYSTEM, 3″.
2. CLASS D CONCRETE SHALL BE IN ACCORDANCE WITH ITEM 610017 - P.C.C. MASONRY, SUPERSTRUCTURE, CLASS D. CLEAN AND APPLY EPOXY BONDING COMPOUND TO ALL REMOVAL AND ROUGHENED SURFACES PRIOR TO PLACING CONCRETE. COST FOR THIS WORK WILL BE INCIDENTAL TO ITEM 610017.
3. EXISTING BARS TO REMAIN SHALL BE CLEANED IN ACCORDANCE WITH SECTION 628.03(E)7. BARS WITH CORROSION, BROKEN, OR WITH INADEQUATE BOND SHALL BE REPAIRED IN ACCORDANCE WITH SECTION 628.03(E)7. PAYMENT FOR THIS WORK WILL BE INCIDENTAL TO ITEM 624000 - PREFABRICATED EXPANSION JOINT SYSTEM, 3″.
4. ALL NEW REINFORCING STEEL REQUIRED TO COMPLETE THE JOINT HEADER REPAIRS SHALL BE EPOXY COATED AND HAVE 2″ MIN. CONCRETE COVER UNLESS SHOWN OTHERWISE. PAYMENT FOR ALL NEW REINFORCING STEEL SHALL BE UNDER ITEM 611001 - BAR REINFORCEMENT, EPOXY COATED.
5. THE CONTRACTOR SHALL USE CARE DURING THE REMOVAL OF THE EXISTING CONCRETE AND PORTIONS OF THE JOINT SYSTEM TO AVOID DAMAGE TO THE EXISTING PORTIONS OF THE STRUCTURE THAT ARE TO REMAIN IN PLACE. ANY DAMAGE INCURRED TO EXISTING PORTIONS OF THE STRUCTURE TO REMAIN SHALL BE REPAIRED BY THE CONTRACTOR TO COMPLETE SATISFACTION OF THE ENGINEER AT NO ADDITIONAL COST TO THE DEPARTMENT.
6. PRIOR TO REMOVAL OF THE EXISTING ROADWAY JOINT AND FABRICATION OF THE PROPOSED ROADWAY MATERIALS, THE CONTRACTOR SHALL FIELD VERIFY THE CROSS SLOPE OF THE ROADWAY AT EACH INDIVIDUAL JOINT LOCATION.
7. CUT EXISTING LONGITUDINAL DECK REINFORCEMENT 2″ CLEAR OF NEW EDGE OF JOINT.

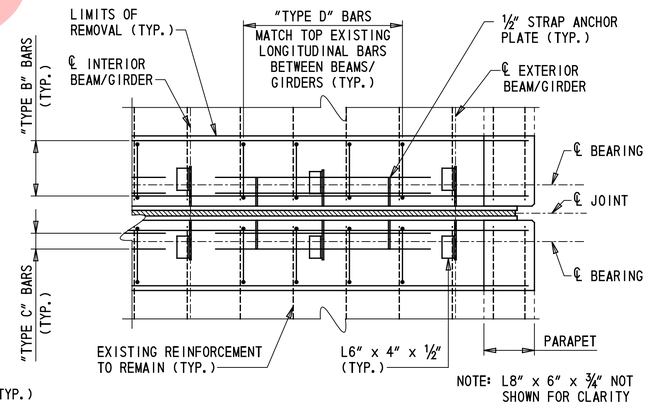

TYPICAL JOINT REINFORCEMENT PLAN

(PIER E7 JOINT SHOWN, OTHERS SIMILAR)
½″ = 1′-0″

DECK JOINT OPENINGS

LOCATION	TEMPERATURE (°F)										MOVEMENT CLASSIFICATION
	20	30	40	50	60	68	70	80	90	100	
PIER E6	2 3/16″	2 1/16″	2″	1 7/8″	1 3/4″	1 11/16″	1 5/8″	1 1/2″	1 7/16″	1 5/16″	3″
PIER E7	2 1/16″	2″	1 7/8″	1 13/16″	1 3/4″	1 11/16″	1 11/16″	1 5/8″	1 1/2″	1 7/16″	3″
PIER E8	2 1/16″	2″	1 7/8″	1 13/16″	1 3/4″	1 11/16″	1 11/16″	1 5/8″	1 1/2″	1 7/16″	3″
PIER E9	1 15/16″	1 7/8″	1 7/8″	1 13/16″	1 3/4″	1 11/16″	1 11/16″	1 5/8″	1 5/8″	1 5/16″	3″
PIER E10	2″	1 15/16″	1 7/8″	1 13/16″	1 3/4″	1 11/16″	1 11/16″	1 5/8″	1 5/16″	1 1/2″	3″
PIER E11	2″	1 15/16″	1 7/8″	1 13/16″	1 3/4″	1 11/16″	1 11/16″	1 5/8″	1 1/16″	1 1/2″	3″

NOTES:

1. FOR JOINT AT PIER H1, SEE DWG. 1-758H EX-01.
2. FOR JOINT ASSEMBLY DETAIL, SEE DWG. EX-02.
3. FOR STRIP SEAL EXPANSION JOINT NOTES, SEE DWG. EX-02.
4. FOR PARAPET RECONSTRUCTION AT JOINTS, SEE DWG. EX-03.
5. FOR TYPICAL JOINT PLAN, SEE DWG. EX-02.

NOT FOR CONSTRUCTION

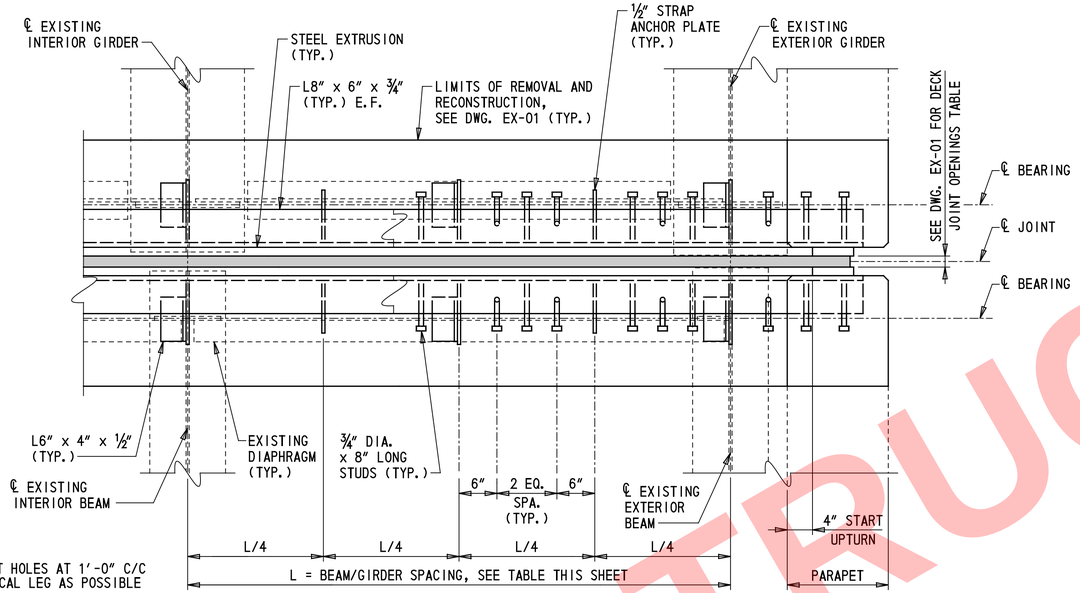

TYPICAL JOINT PLAN

(PIER E7 JOINT SHOWN, OTHERS SIMILAR)

1" = 1'-0"

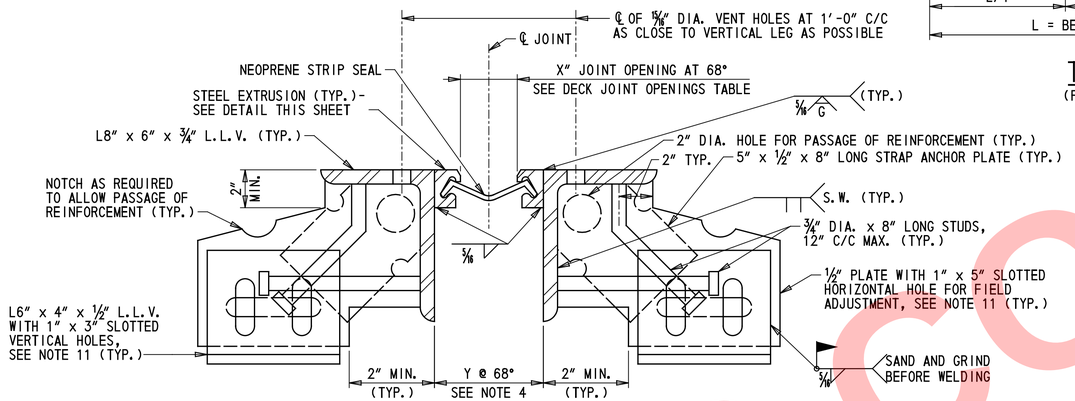

JOINT ASSEMBLY DETAIL

3" = 1'-0"

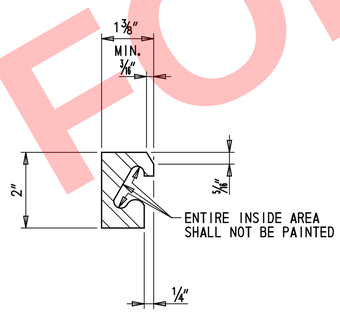

STEEL EXTRUSION DETAIL

6" = 1'-0"

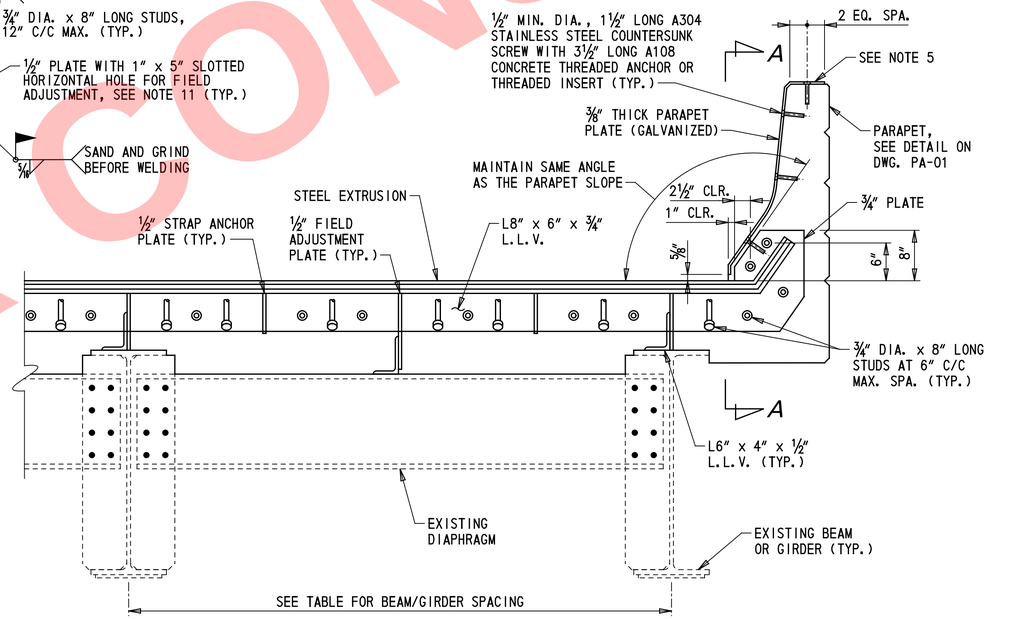

TYPICAL SECTION AT JOINT

(STRAIGHT BEAM SPAN SHOWN, CURVED GIRDER SPANS SIMILAR)

1" = 1'-0"

NOTE: SUPERELEVATION NOT SHOWN.

STRIP SEAL EXPANSION JOINT NOTES:

1. STEEL FOR DECK JOINTS AND STEEL EXTRUSIONS SHALL BE AASHTO M270, GR. 36 (ASTM A36) AT MINIMUM.
2. NEOPRENE EXTRUSION TO MEET D-2628-81 MODIFIED, (RECOVERY TESTS EXCLUDED).
3. THE EXPANSION JOINT SHALL BE CAPABLE OF SEALING THE DECK TO PREVENT MOISTURE AND OTHER CONTAMINANTS FROM DESCENDING THROUGH THE JOINT.
4. THE CONTRACTOR SHALL ADJUST THE OPEN JOINT (Y) AS REQUIRED BY THE WIDTH OF THE STEEL EXTRUSION USED SO AS TO PROVIDE A X" JOINT OPENING AT 68°F.
5. THE STRIP SEAL SHALL BE INSTALLED IN ONE PIECE ACROSS THE BRIDGE WIDTH. SPLICING OF THE STRIP SEAL IS NOT PERMITTED.
6. THE EXPANSION JOINT SYSTEM WILL BE PAID FOR UNDER ITEM 624000 - PREFABRICATED EXPANSION JOINT SYSTEM, 3".
7. STEEL EXTRUSIONS SHALL BE HOT-DIP GALVANIZED. ENTIRE EXPANSION DAM SHALL BE PAINTED AFTER FABRICATION USING URETHANE SYSTEM. COLOR OF PAINT SYSTEM TO BE APPLIED SHALL MATCH THE COLOR OF THE EXISTING STEEL STRUCTURE.
8. LUBRICANT-ADHESIVE FOR USE IN INSTALLING AND BONDING NEOPRENE SEAL ELEMENTS TO STEEL JOINT COMPONENTS SHALL BE A ONE QUART MOISTURE CURING POLYURETHANE AND HYDROCARBON SOLVENT MIXTURE HAVING THE FOLLOWING PHYSICAL PROPERTIES:

AVERAGE WEIGHT, POUNDS PER GALLON	8±10%
SOLIDS CONTENT	65%
ADHESIVE SHALL REMAIN LIQUID FROM	5°F TO 120°F
FILM STRENGTH, AS PER ASTM D-412	2,000 PSI
ELONGATION	250%

9. HOLES SHALL BE PLACED IN THE RIB PLATES AND STRAP ANCHORS PLATES FOR BAR REINFORCEMENT. IF THIS IS DONE IN THE FIELD AN APPROVED EPOXY-BONDED PAINT SHALL BE USED TO TOUCH-UP THE HOLES. PAYMENT INCIDENTAL TO ITEM 624000 - PREFABRICATED EXPANSION JOINT SYSTEM, 3".
10. STEEL EXTRUSIONS AND JOINT ANGLES SHALL BE CONTINUOUS ACROSS THE FULL WIDTH OF THE ROADWAY, NO SPLICING WILL BE PERMITTED.
11. IF WELD OPTION IS PROPOSED, SLOTTED HOLES IN ½" PLATE AND L6" x 4" x ½" MAY BE OMITTED.
12. SEE TYPICAL JOINT PLAN THIS SHEET FOR LAYOUT OF L6" x 4" x 1*2" AND STRAP ANCHORS.

NOTES:

1. FOR BEAM AND GIRDER DESIGNATIONS, SEE DWGS. TS-01 THROUGH TS-03.
2. FOR VIEW A-A, SEE DWG. EX-03.
3. DIMENSIONS IN BEAM SPACING TABLE ARE BASED ON AS-BUILT PLANS DATED APRIL 6, 1977. FIELD VERIFY ALL DIMESION PRIOR TO FABRICATING EXPANSION JOINTS.
4. FOR DECK JOINT OPENINGS TABLE, SEE DWG. EX-01.
5. WHERE PARAPET JOINT PLATES CONFLICT WITH DECORATIVE BARRIER POSTS ON THE EAST PARAPET AT PIERS E6, E7 & E8, OMIT THE TOP PLATE AND ASSOCIATED CONCRETE RECESS. MAINTAIN A 1" CLEARANCE TO THE TOP CHAMFER.
6. FOR PARAPET RECONSTRUCTION AT JOINTS, SEE DWG. EX-03.
7. FOR JOINT RECONSTRUCTION NOTES, SEE DWG. EX-01.

BEAM / GIRDER SPACING

LOCATION	DIMENSION "L" * S. END	DIMENSION "L" * N. END	NUMBER OF BEAMS / GIRDERS
SPAN E5	6'-10"±	4'-6⅜"±	4
SPAN E6	7'-1⅝"±	6'-10⅜"±	4
SPAN E7	7'-2"±	7'-2"±	4
SPAN E8	7'-2"±	7'-2"±	4
SPAN E9	7'-0⅝"±	7'-2"±	4
SPAN E10	8'-4¼"±	7'-1⅛"±	4
SPAN E11	8'-2⅜"±	6'-3⅛"±	5

*MEASURED ALONG ℄ PIER

NOT FOR CONSTRUCTION

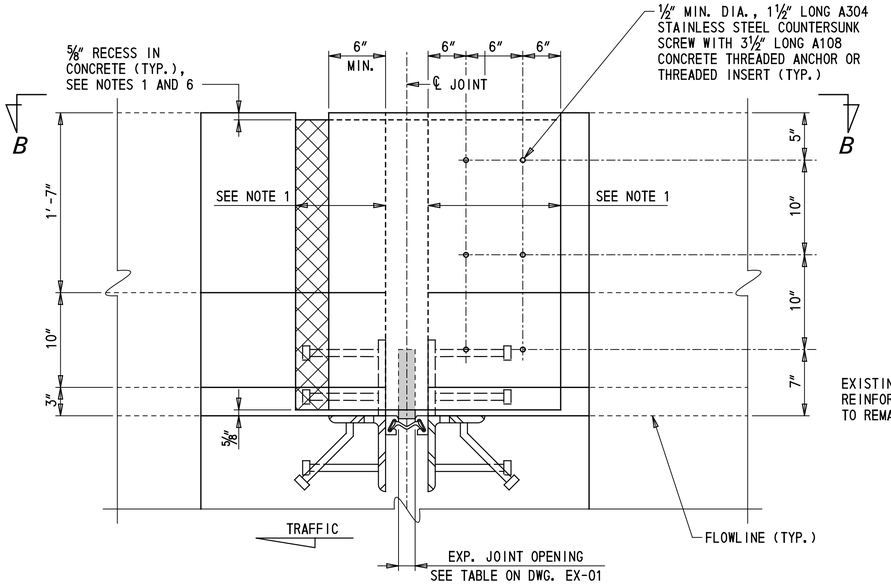

VIEW A-A

1½" = 1'-0"

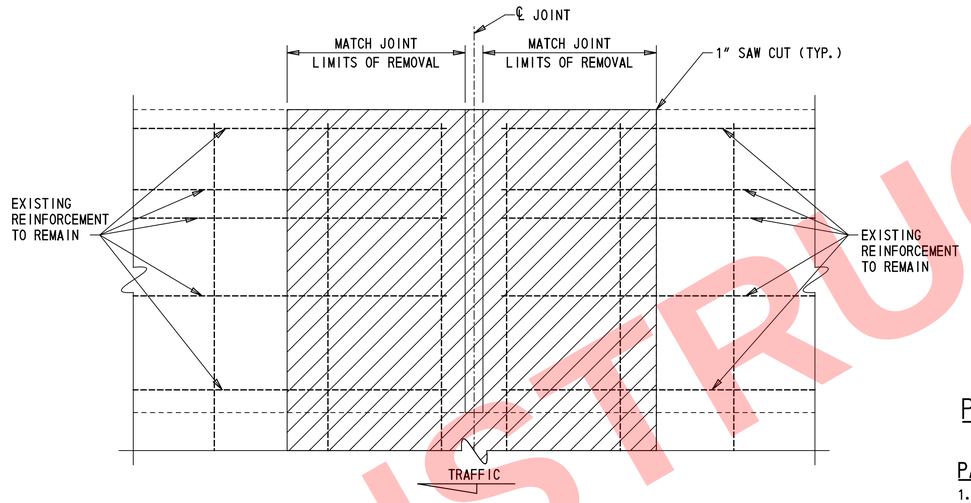

PARAPET REMOVAL AT EXPANSION JOINTS

1½" = 1'-0"

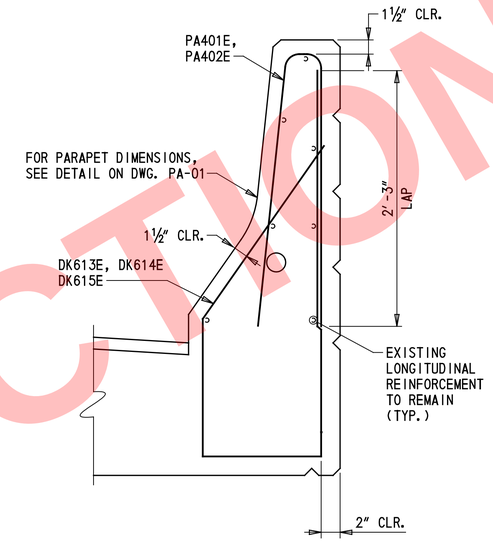

PARAPET DETAIL AT EXPANSION JOINTS

1½" = 1'-0"

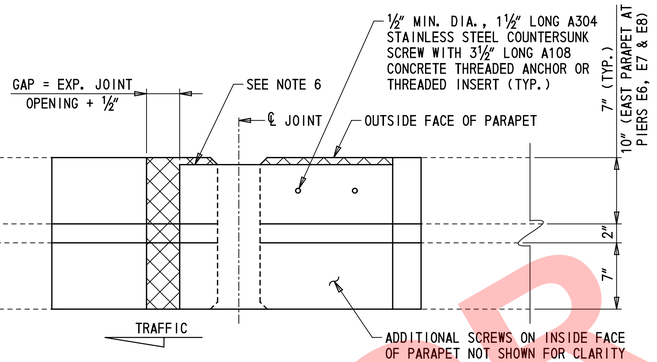

VIEW B-B

1½" = 1'-0"

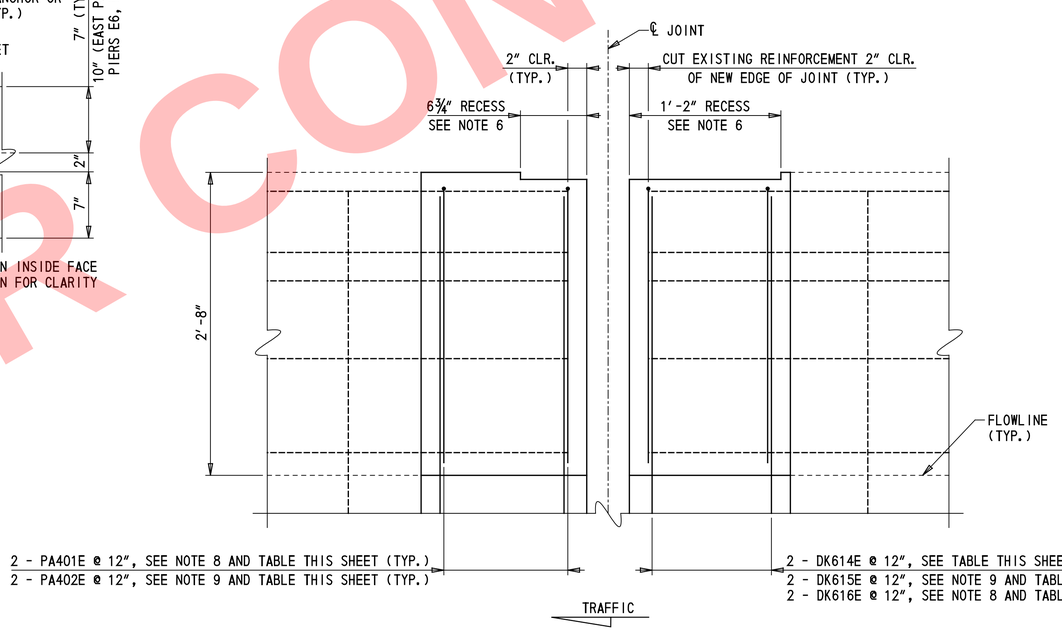

PARAPET RECONSTRUCTION AT EXPANSION JOINTS

1½" = 1'-0"

BAR REINFORCEMENT SCHEDULE

LOCATION	NORTH OF JOINT				SOUTH OF JOINT			
	EAST FASCIA		WEST FASCIA		EAST FASCIA		WEST FASCIA	
	PARAPET	DECK	PARAPET	DECK	PARAPET	DECK	PARAPET	DECK
PIER E6	PA402E	DK615E	PA401E	DK614E	PA402E	DK615E	PA401E	DK614E
PIER E7	PA402E	DK615E	PA401E	DK614E	PA402E	DK615E	PA401E	DK614E
PIER E8	PA402E	DK615E	PA401E	DK614E	PA402E	DK615E	PA401E	DK614E
PIER E9	PA401E	DK616E	PA401E	DK614E	PA401E	DK616E	PA401E	DK614E
PIER E10	PA401E	DK616E	PA401E	DK614E	PA401E	DK616E	PA401E	DK614E
PIER E11	PA401E	DK616E	PA401E	DK614E	PA401E	DK616E	PA401E	DK614E

LEGEND:

REMOVAL LIMITS

RECESS IN PARAPET

PARAPET JOINT PLATE NOTES:

1. FORM CONCRETE RECESS AREA IN PARAPET AND GRIND TO PROVIDE SMOOTH SURFACE. APPLY ONE COAT OF ASPHALT CEMENT TO FREE SIDE OF JOINT IN ACCORDANCE WITH SECTION 1012 OF THE STANDARD SPECIFICATIONS TO ALLOW BENT SLIDING PLATE TO MOVE FREELY WITHOUT FRICTION. PAYMENT WILL BE INCIDENTAL TO ITEM 610008 - PORTLAND CEMENT CONCRETE MASONRY, PARAPET, CLASS A.
2. PLACE PARAPET CONCRETE WITH STEEL BENT PLATES, INSERTS, AND BOLTS IN PLACE TO ENSURE PROPER ALIGNMENT OF INSERTS AND HOLES IN THE STEEL PLATE. REMOVE PLATES TO INSTALL SEAL. APPLY APPROVED BONDBREAKER TO SLIDING PLATES PRIOR TO INSTALLATION.
3. GRIND ALL STEEL EDGES EXPOSED TO TRAFFIC TO ⅛" MIN. RADIUS.
4. BOLTS SHALL BE ASTM A 304 STAINLESS STEEL COUNTERSUNK SCREWS WITH ASTM A 108 CONCRETE THREADED ANCHOR OR THREADED INSERT. HEAD OF BOLTS SHALL BE FLUSH WITH FACE OF STEEL PLATE.
5. THE CONTRACTOR SHALL SUBMIT WORKING DRAWINGS OF TRAFFIC BARRIER PLATES FOR APPROVAL.
6. WHERE PARAPET JOINT PLATES CONFLICT WITH DECORATIVE BARRIER POSTS ON THE EAST PARAPET AT PIERS E6, E7 & E8, OMIT THE TOP PLATE AND ASSOCIATED CONCRETE RECESS. MAINTAIN A 1" CLEAR TO THE TOP CHAMFER.
7. DECORATIVE BARRIER NOT SHOWN FOR CLARITY. SEE DWG. PA-02 FOR DECORATIVE BARRIER DETAILS.
8. IN THE EAST PARAPET FOR SPAN E10 AT PIER E10, PROVIDE 3 DK616E BARS AND 3 PA401E BARS @ 6" SPACING TO REPLACE THE REINFORCEMENT AT THE EXISTING JUNCTION BOX TO REMAIN.
9. IN THE EAST PARAPET FOR SPAN E5 AT PIER E6 AND SPAN E7 AT PIER E8, PROVIDE 3 DK615E BARS AND 3 PA402E BARS @ 6" SPACING TO REPLACE THE REINFORCEMENT AT THE EXISTING LIGHT POLE SUPPORT BRACKET TO REMAIN. IN THE EAST PARAPET FOR SPAN E6 AT PIERS E6 AND E7, SPAN E7 AT PIERS E7 AND E8, AND SPAN E8 AT PIER E8, PROVIDE 2 DK615E BARS AND 2 PA402E BARS @ 12" SPACING.
10. FOR ADDITIONAL JOINT NOTES AND DETAILS, SEE DWGS. EX-01 AND EX-02.
11. PAYMENT FOR PARAPET JOINT PLATES AND PARTIAL REMOVAL OF PARAPET FOR JOINT RECONSTRUCTION WILL BE INCIDENTAL TO ITEM 624000 - PREFABRICATED EXPANSION JOINT SYSTEM, 3".

NOT FOR CONSTRUCTION

(1) ANY MARK NUMBER WITH SUFFIX 'E' DENOTES EPOXY COATED REINFORCING STEEL.

(2) ALL MARK 'LOCATION PREFIXES' SHALL CONSIST OF TWO LETTERS AND ARE AS FOLLOWS: AB = ABUTMENT, AS = APPROACH SLAB, BC = BOX CULVERT, BW = BACKWALL, CL = COLUMN, DK = DECK, DL = DOWEL, FT = FOOTING, HW = HEADWALL, MS = MISC. BARS, PA = PARAPET, PR = PIER, SC = SHEETPILE CAP, SL = SLAB, TW = TOEWALL, WL = WALL (UNIQUE LOCATION), WW = WINGWALL

SPECIFICATIONS					BENDING DIMENSIONS (FEET-INCHES /QUARTER INCH)										
QTY.	SIZE	LENGTH	MARK	TYPE	A	B	C	D	E	F / R	G	H	J	K	O
DECK															
30	5	25-7 0	DK501E	STR		25-7 0									
10	5	25-4 0	DK502E	STR		25-4 0									
10	5	25-10 3	DK503E	STR		25-10 3									
10	5	29-4 2	DK504E	STR		29-4 2									
12	5	5-6 0	DK505E	STR		5-6 0									
12	5	5-10 0	DK506E	STR		5-10 0									
24	5	5-4 0	DK507E	STR		5-4 0									
12	5	5-8 3	DK508E	STR		5-8 3									
6	5	7-0 1	DK509E	STR		7-0 1									
8	5	4-11 3	DK510E	STR		4-11 3									
12	5	2-1 3	DK511E	DE20		0-0 0	0-5 1	0-5 1	0-6 0	0-9 1		0-3 3	0-0 0	0-3 3	
131	5	2-4 1	DK512E	DE20		0-0 0	0-4 0	0-7 2	0-7 2	0-9 1		0-5 2	0-0 0	0-5 2	
15	5	2-4 2	DK513E	DE20		0-0 0	0-4 0	0-8 0	0-7 0	0-9 2		0-5 3	0-0 0	0-5 3	
24	6	7-4 2	DK614E	DE16		3-4 2	1-0 2	1-2 2	1-9 0	0-0 0		1-5 1		1-0 1	
14	6	7-8 2	DK615E	DE16		3-2 2	1-3 2	1-0 0	2-2 2	0-0 0		1-9 2		1-3 2	
13	6	7-2 2	DK616E	DE16		3-3 2	1-0 2	1-1 2	1-9 0	0-0 0		1-5 1		1-0 1	
PARAPET															
37	4	5-0 4	PA401E	H1		2-4 0	0-5 2	2-3 2		0-1 3		0-6 2			
14	4	5-0 15	PA402E	16	0-0 0	2-5 0	0-6 2	2-4 1				2-4 0		0-3 1	0-9 3

SPECIFICATIONS					BENDING DIMENSIONS (FEET-INCHES /QUARTER INCH)										
QTY.	SIZE	LENGTH	MARK	TYPE	A	B	C	D	E	F / R	G	H	J	K	O

SPECIFICATIONS					BENDING DIMENSIONS (FEET-INCHES /QUARTER INCH)										
QTY.	SIZE	LENGTH	MARK	TYPE	A	B	C	D	E	F / R	G	H	J	K	O

ASTM STANDARD ENGLISH REINFORCING BARS

BAR SIZE	NOMINAL DIMENSIONS: DIAMETER (INCHES)	AREA (INCHES²)	WEIGHT (LBS./FT.)
3	0.375	0.110	0.376
4	0.500	0.200	0.668
5	0.625	0.310	1.043
6	0.750	0.440	1.502
7	0.875	0.600	2.044
8	1.000	0.790	2.670
9	1.128	1.000	3.400
10	1.270	1.270	4.303
11	1.410	1.560	5.313
14	1.693	2.250	7.650
18	2.257	4.000	13.600

RECOMMENDED END HOOKS, APPLICABLE TO ALL GRADES

	180° HOOKS		90° HOOKS
	D	A OR G	J	A OR G
3	2¼″	5″	3″	6″
4	3″	6″	4″	8″
5	3¾″	7″	5″	10″
6	4½″	8″	6″	1-0″
7	5¼″	10″	7″	1-2″
8	6″	11″	8″	1-4″
9	9½″	1-3″	11¾″	1-7″
10	10¾″	1-5″	1-1¼″	1-10″
11	1-0″	1-7″	1-2¾″	2-0″
14	1-6¼″	2-3″	1-9¾″	2-7″
18	2-0″	3-0″	2-4½″	3-5″

STIRRUP AND TIE HOOKS, APPLICABLE TO ALL GRADES

	90° HOOK	135° HOOK	
	D	A OR G	A OR G	A OR G
3	1½″	4″	4″	2½″
4	2″	4½″	4½″	3″
5	2½″	6″	5½″	3¾″
6	3″	7″	6″	4½″
7	3½″	8″	7″	5¼″
8	4″	9″	8″	6″
9	4½″	10″	9″	6¾″
10	5″	11″	10″	7½″
11	5½″	12″	11″	8¼″
14	7″	14″	14″	10½″
18	9″	18″	18″	13½″

NOTES:

1. FIGURES SHOWN IN CIRCLES REPRESENT BAR BEND TYPES.
2. STANDARD BAR BENDS INCLUDE ONLY THOSE TYPES BELOW, INDICATED AS SUCH.
3. ALL DIMENSIONS OUT-TO-OUT, EXCEPT "A" AND "G" ON STD. 180° AND 135° HOOKS.
4. "J" DIMENSIONS ON 180° HOOKS TO BE SHOWN ONLY WHERE NECESSARY TO RESTRICT HOOK SIZE, OTHERWISE STANDARD 'ACI' HOOKS ARE TO BE USED.
5. WHERE "J" IS NOT SHOWN, "J" WILL BE KEPT EQUAL TO OR LESS THAN "H" ON TYPES 3, 5 AND 22. WHERE "J" CAN EXCEED "H", IT SHALL BE SHOWN.
6. "H" DIMENSIONS OF STIRRUPS TO BE SHOWN AS NEEDED TO FIT WITHIN THE CONCRETE.
7. UNLESS OTHERWISE NOTED, DIAMETER "D" IS THE SAME FOR ALL BENDS AND HOOKS ON A BAR (EXCEPT FOR BEND TYPES 11 AND 13).
8. WHERE SLOPE DIFFERS FROM 45° OFFSET, "H" AND "K" MUST BE SHOWN.
9. WHERE BARS ARE TO BE BENT MORE ACCURATELY THAN STANDARD BENDING TOLERANCES, BENDING DIMENSIONS REQUIRING CLOSER FABRICATION SHOULD HAVE LIMITS INDICATED.
10. FOR RECOMMENDED DIAMETER "D", OF BENDS, HOOKS, ETC., REFER TO TABLE ABOVE, 'CRSI' OR 'ACI' TABLES WHERE APPLICABLE AND REQUIRED.
11. TYPE S1-S6, S11, T1-T3 AND T6-T9 APPLICABLE TO BAR SIZES #3 THROUGH #8.

STIRRUP AND TIE HOOKS

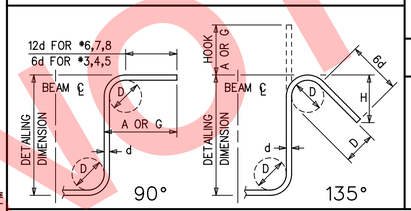

180° AND 90° END HOOKS

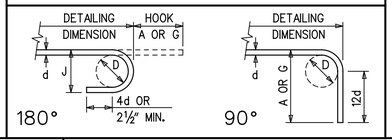

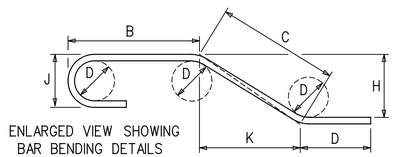

STANDARD BAR BENDS

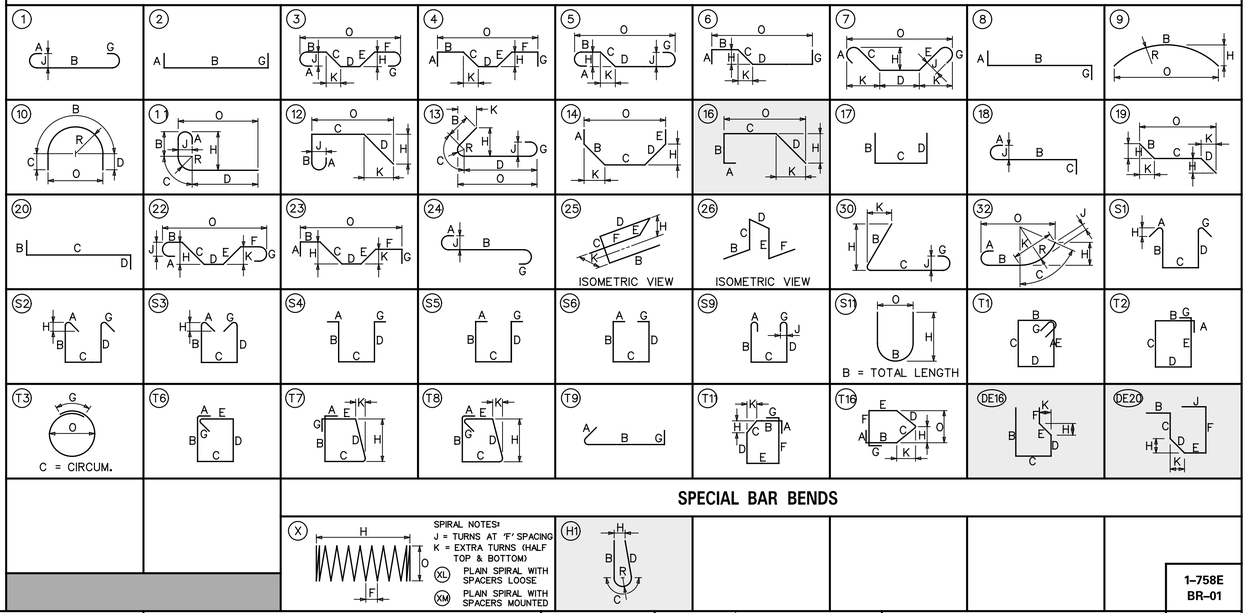

SPECIAL BAR BENDS

NOT FOR CONSTRUCTION

1–758E
BR–01

DELAWARE
DEPARTMENT OF TRANSPORTATION

ADDENDUMS / REVISIONS

SCALE AS NOTED

REHABILITATION OF I-95
FROM I-495 TO NORTH OF
BRANDYWINE RIVER BRIDGE

CONTRACT	BRIDGE NO.	1 758E 6141
T201407404	DESIGNED BY: BJM	
COUNTY	CHECKED BY: JRQ	
NEW CASTLE		

REINFORCEMENT SCHEDULE

SHEET NO. 2-554
TOTAL SHTS. 2-731

...\Bridge 1-758E\758EBR_01.dgn
5/16/2019 5:18:37 PM

SECTION 200

1. REMOVAL OF STRUCTURES AND OBSTRUCTIONS:
   ITEMS TO BE REMOVED UNDER ITEM 211000 - REMOVAL OF STRUCTURES AND OBSTRUCTIONS ASSOCIATED WITH BRIDGE 1-758F SHALL INCLUDE, BUT NOT BE LIMITED TO, THE FOLLOWING:
   - APPROACH SLAB
   - PORTION OF BACKWALL AND U-WALLS
   - ABUTMENT DECK JOINT
   - PARAPETS AT ABUTMENT

SECTION 600

2. PORTLAND CEMENT CONCRETE:
   USE PORTLAND CEMENT CONCRETE FOR CAST-IN-PLACE ELEMENTS AS FOLLOWS:
   (f'c = 28-DAY COMPRESSIVE STRENGTH)
   CLASS A - PARAPETS, ABUTMENT (f'c = 4.5 ksi)
   CLASS D - DECK, APPROACH SLAB, SLEEPER SLAB (f'c = 4.5 ksi)
   A HIGHER CLASS CONCRETE MAY BE SUBSTITUTED FOR A LOWER CLASS CONCRETE AT NO ADDITIONAL COST TO THE DEPARTMENT WITH APPROVAL OF THE ENGINEER.
   - CHAMFER ALL EXPOSED EDGES ¾" X ¾" UNLESS OTHERWISE NOTED.
   - CONTRACTOR WILL SUPPLY CONCRETE FOR THE PARAPETS, BRIDGE DECK, AND APPROACH SLABS THAT INCLUDES A SHRINKAGE-REDUCING/COMPENSATING ADMIXTURE. PAYMENT FOR ADMIXTURE WILL BE INCIDENTAL TO ITS RESPECTIVE CONCRETE ITEM (ITEMS 610008, 610017, AND 610018). THE ADMIXTURE MAY BE SUPPLIED BY ONE PRODUCT THAT PROVIDES BOTH EXPANSION AND PORE WATER SURFACE TENSION OR TWO SEPARATE PRODUCTS EACH ADDED AT DOSAGE RECOMMENDED BY MANUFACTURER'S TECHNICAL DATA SHEETS AND HAVING THE FOLLOWING CHARACTERISTICS:
   (A) DESIGNED TO PROVIDE BOTH THE FOLLOWING CHARACTERISTICS:
   I. EXPANDS AT A RATE THAT CLOSELY COMPENSATES FOR SHRINKAGE OF THE CONCRETE MIX.
   II. REDUCES THE CAPILLARY SURFACE TENSION OF THE CONCRETE PORE WATER.
   (B) PROVIDES AT LEAST 80% SHRINKAGE REDUCTION AS MEASURED AND DOCUMENTED BY FIELD PERFORMANCE.
   (C) FORMULATED FOR USE IN FREEZING AND THAWING WEATHER.

3. BAR REINFORCEMENT:
   - REINFORCING STEEL SHALL CONFORM TO AASHTO M31 (ASTM A615), GRADE 60.
   - REINFORCING STEEL SHALL HAVE A 3" CLEAR COVER IF CAST AGAINST EARTH OR A 2" CLEAR COVER ELSEWHERE, UNLESS OTHERWISE SPECIFIED ON THE PLANS.
   - ALL REINFORCING STEEL SHALL BE PROTECTED WITH FUSION BONDED EPOXY, EXCEPT AS NOTED ON THE PLANS. EPOXY COATED REINFORCING STEEL SHALL CONFORM TO ASTM A775.
   - ANY FIELD CUTTING OR FIELD BENDING MUST BE APPROVED BY THE ENGINEER. PAYMENT SHALL BE INCIDENTAL TO THE BAR REINFORCEMENT ITEM.
   - GALVANIZED REINFORCING STEEL MAY BE SUBSTITUTED FOR EPOXY-COATED REINFORCING STEEL AT NO ADDITIONAL COST TO THE DEPARTMENT WITH APPROVAL OF THE ENGINEER.
   - WELDING OF REINFORCEMENT DURING FABRICATION OR CONSTRUCTION IS NOT PERMITTED UNLESS SPECIFIED.

4. CONCRETE SEALER:
   REFER TO DIAGRAMS CONTAINING SILICONE ACRYLIC CONCRETE SEALER LIMITS ON DWGS. TS-01 TO TS-03, AB-01, PR-01 TO PR-03 AND AS-01. EPOXY CONCRETE SEALER SHALL BE APPLIED TO THE BEAM SEATS AND BEARING PEDESTALS AT EACH PIER. SILICONE ACRYLIC CONCRETE SEALER SHALL BE APPLIED TO THE REMAINING EXPOSED CONCRETE SURFACES AT THE ABUTMENT, PIERS AND U-WALLS.

5. NOTE INTENTIONALLY DELETED.

6. NOTE INTENTIONALLY DELETED.

MISCELLANEOUS

7. DESIGN SPECIFICATIONS:
   (A) DELDOT BRIDGE DESIGN MANUAL, 2017 EDITION.
   (B) AASHTO LRFD BRIDGE SPECIFICATIONS, 2014, 7TH EDITION, CUSTOMARY U.S. UNITS INCLUDING 2015 AND 2016 INTERIMS.
   (C) PROVIDE MATERIALS AND PERFORM WORK IN ACCORDANCE WITH THE 2016 DELDOT STANDARD SPECIFICATIONS AND 2018 SUPPLEMENTAL SPECIFICATIONS.

8. LOADING:
   - DEAD LOADS INCLUDE 25 PSF FOR FUTURE WEARING SURFACE ON DECK SLAB AND 15 PSF FOR STAY-IN-PLACE FORMS (INCLUDES CONCRETE IN FORM CORRUGATIONS). PARAPET LOADS ARE DISTRIBUTED 75% TO THE EXTERIOR AND 25% TO THE FIRST INTERIOR BEAM.
   - DESIGN LIVE LOADS INCLUDE HL-93 LOADING.
   - FATIGUE DESIGN IS BASED ON THE FOLLOWING ONE DIRECTIONAL TRAFFIC VOLUMES: ADTT = 483 IN YEAR 2040.
   - LIVE LOAD DISTRIBUTION TO THE GIRDERS IS BASED ON THE AASHTO SIMPLIFIED METHOD.
   - THERMAL LOADS AND MOVEMENTS ARE BASED ON THE MODERATE TEMPERATURE RANGE AS STIPULATED IN THE AASHTO LRFD DESIGN SPECIFICATIONS AS 0° TO 120°F. THE NORMAL TEMPERATURE SHALL BE CONSIDERED TO BE 68° F.
   - LIVE LOAD DEFLECTION SHALL BE LIMITED TO L/800.
   - FOR REINFORCEMENT DISTRIBUTION REQUIREMENTS, CONSIDER CLASS 1 EXPOSURE CRITERIA FOR DECKS.

9. EXISTING CONDITIONS:
   - ALL EXISTING DIMENSIONS AND ELEVATIONS SHOWN ARE BASED ON THE BEST AVAILABLE INFORMATION AND ARE APPROXIMATE ONLY. THE CONTRACTOR SHALL FIELD VERIFY ALL EXISTING DIMENSIONS, GEOMETRY, AND ELEVATIONS AS NECESSARY PRIOR TO ORDERING ANY MATERIALS AND COMMENCING CONSTRUCTION TO ENSURE PROPER FIT OF THE PROPOSED CONSTRUCTION. PAYMENT SHALL BE INCIDENTAL TO ITEM 763501 - CONSTRUCTION ENGINEERING.

10. ROADWAY CLEARANCES:
    A MINIMUM OF 14'-5" SHALL BE MAINTAINED ABOVE LANCASTER AVENUE AND NORTH ADAMS STREET AND TEMPORARY VERTICAL CLEARANCE SIGNS SHALL BE INSTALLED. ALL MOT ITEMS WILL BE INCLUDED IN ITEM 801500 - MAINTENANCE OF TRAFFIC - ALL INCLUSIVE.

11. CONTINGENT QUANTITIES:
    THESE CONTRACT DRAWINGS HAVE BEEN PREPARED BASED ON ORIGINAL CONTRACT PLANS, SHOP DRAWINGS AND FIELD INSPECTION NOTES TAKEN FROM NOVEMBER 16, 2014 THROUGH FEBRUARY 5, 2015. ACTUAL CONDITIONS MAY REQUIRE MODIFICATION IN CONSTRUCTION DETAILS AND WORK QUANTITIES. ALL DIMENSIONS AND DETAILS SHOWN ON THE PLANS SHALL BE VERIFIED BY THE CONTRACTOR PRIOR TO ORDERING ANY MATERIALS. SEE DWG. PN-04 FOR PAY ITEM CONTINGENCY PERCENTAGES.

12. UTILITIES:
    SEE UTILITY STATEMENT AND UTILITY RELOCATION PLAN SHEETS FOR FURTHER INFORMATION ON UTILITY COORDINATION.

13. ENVIRONMENTAL COMPLIANCE:
    REFER TO THE ENVIRONMENTAL COMPLIANCE PLAN FOR RESTRICTIONS AND ADDITIONAL GUIDANCE THAT MAY BE ASSOCIATED WITH THIS PROJECT.

14. ABBREVIATIONS:

ABUT. = ABUTMENT	LMC = LATEX MODIFIED CONCRETE
B.O.F. = BOTTOM OF FOOTING	LT = LEFT
BOT. = BOTTOM	MAX. = MAXIMUM
BRG. = BEARING	MIN. = MINIMUM
C/C = CENTER TO CENTER	N.T.S. = NOT TO SCALE
℄ = CENTERLINE	NO. = NUMBER
CLR. = CLEAR	OH = OVERHEAD
DIA. = DIAMETER	P.C.C. = PORTLAND CEMENT CONCRETE
DWG. = DRAWING	R = RADIUS
E.F. = EACH FACE	R.F. = REAR FACE
EL. = ELEVATION	RT = RIGHT
EQ = ENTIRE QUANTITY	S.W. = SHOP WELD
EXP. = EXPANSION	SCH. = SCHEDULE
F.F. = FRONT FACE	SHLD. = SHOULDER
FIX. = FIXED	STA. = STATION
GR. = GRADE	TYP. = TYPICAL
L.L.V. = LONG LEG VERTICAL	UG = UNDERGROUND

INDEX OF BRIDGE 1-758F SHEETS

BR. SHEET Nº	BR. DWG. Nº	TABLE OF CONTENTS
2-555	PN-01	BRIDGE PROJECT NOTES
2-556	PN-02	CONCRETE REPAIR DETAILS
2-557	PN-03	QUANTITIES AND LOAD RATINGS
2-558	PN-04	SUMMARY OF PROPOSED REPAIR AND RECONSTRUCTION ITEMS
2-559	PE-01	GENERAL PLAN AND ELEVATION
2-560 TO 2-562	TS-01 TO TS-03	BRIDGE TYPICAL SECTIONS
2-567	DM-01	MILLING AND HYDRODEMOLITION DETAILS
2-571	PA-01	PARAPET DETAILS
2-572 TO 2-574	EX-01 TO EX-03	EXPANSION JOINT DETAILS
2-575 TO 2-576	EX-04 TO EX-05	DECK OVER DETAILS
2-577 TO 2-578	AS-01 TO AS-02	APPROACH SLAB DETAILS
2-579 TO 2-581	AS-03 TO AS-05	SLEEPER SLAB DETAILS
2-582	BR-01	REINFORCEMENT SCHEDULE
		TOTAL BRIDGE SHEETS: 26

NOT FOR CONSTRUCTION

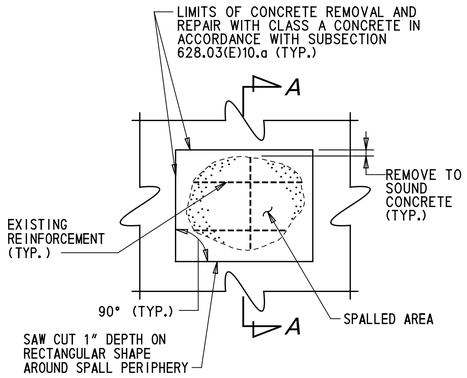

PLAN

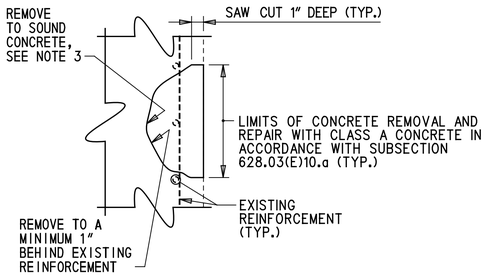

SECTION A-A

DEEP SPALL REPAIR

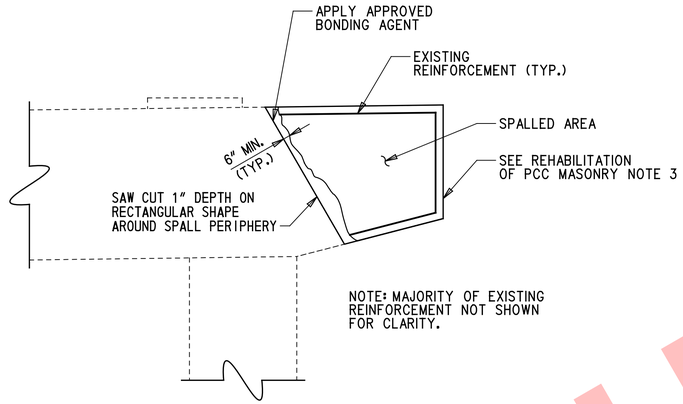

REHABILITATION OF PCC MASONRY

DEEP SPALL REPAIR NOTES

1. DEEP SPALL REPAIRS ARE DEFINED AS PATCHES THAT EXTEND BELOW THE TOP MAT OF REINFORCEMENT. DELAMINATED CONCRETE HAS BEEN ASSUMED AS DEEP SPALL REPAIRS.
2. ALL WORK INVOLVING METHODS OF CONCRETE REMOVAL; CLEANING OF CONCRETE SURFACE AND EXISTING REINFORCEMENT; REPAIRING OR REPLACING DAMAGED REINFORCEMENT AS RESULT OF CONSTRUCTION ACTIVITIES OR SECTION LOSS; PRESENCE OF CONTRACTION OR EXPANSION JOINTS; SURFACE PREPARATION; AND CONCRETE PLACEMENT SHALL BE PERFORMED IN ACCORDANCE WITH SUBSECTION 628.03(E) OF THE STANDARD SPECIFICATIONS. PAYMENT INCIDENTAL TO 628041 - DEEP SPALL REPAIR.
3. IF DEPTH OF REPAIR EXTENDS MORE THAN 6" BEYOND SURFACE OF CONCRETE, CONTRACTOR SHALL STOP WORK AND NOTIFY THE ENGINEER IMMEDIATELY.

REHABILITATION OF PCC MASONRY NOTES

1. REHABILITATION OF PCC MASONRY IS DEFINED AS DEEP SPALL PATCHES THAT EXCEED THE 0.5 C.Y. THRESHOLD IN A SINGLE AREA.
2. ALL WORK INVOLVING METHODS OF CONCRETE REMOVAL; CLEANING OF CONCRETE SURFACE AND EXISTING REINFORCEMENT; REPAIRING OR REPLACING DAMAGED REINFORCEMENT AS RESULT OF CONSTRUCTION ACTIVITIES OR SECTION LOSS; PRESENCE OF CONTRACTION OR EXPANSION JOINTS; SURFACE PREPARATION; AND CONCRETE PLACEMENT SHALL BE PERFORMED IN ACCORDANCE WITH SUBSECTION 628.03(E) OF THE STANDARD SPECIFICATIONS. PAYMENT INCIDENTAL TO 628042 - REHABILITATION OF PCC MASONRY.
3. DETAIL SHOWN FOR "REHABILITATION OF EXISTING PCC MASONRY" UTILIZES A GENERIC EXAMPLE USING PARTIAL RECONSTRUCTION OF AN EXISTING PIER CAP. SEE ABUTMENT AND PIER REHABILITATION SHEETS FOR SIZE AND LOCATION OF REPAIRS AT EACH SUBSTRUCTURE UNIT.
4. IF DEPTH OF REPAIR EXTENDS MORE THAN 6" BEYOND SURFACE OF CONCRETE, CONTRACTOR SHALL STOP WORK AND NOTIFY THE ENGINEER IMMEDIATELY.

REMOVAL OF EXISTING DECK REPAIR NOTES

1. AFTER EXISTING OVERLAY IS REMOVED, PRIOR TO HYDRODEMOLITION, ANY EXISTING DECK REPAIRS THAT ARE LOOSE, PARTIALLY DELAMINATED, OR OTHERWISE UNSOUND, WILL BE MEASURED BY THE ENGINEER AND MARKED FOR REMOVAL.
2. THE CONTRACTOR SHALL REMOVE THE EXISTING DECK REPAIRS IN ACCORDANCE WITH SECTION 628.03(F).
3. THE REMOVAL SHALL NOT INCLUDE ANY UNSOUND ORIGINAL BRIDGE DECK CONCRETE.
4. REFER TO ITEM 628502 - REMOVAL OF EXISTING DECK REPAIR FOR PAYMENT AND ADDITIONAL INFORMATION.
5. IF REMOVAL OF EXISTING DECK REPAIR REACHES FULL DEPTH, AND WITH THE APPROVAL OF THE ENGINEER, REPAIR AREA SHALL BE REPAIRED IN ACCORDANCE WITH SUBSECTION 628.03(F) AND PAID FOR UNDER ITEM 628053 - DECK REPAIR, FULL DEPTH. REMOVAL OF EXISTING DECK REPAIRS THAT ARE CHANGED TO DECK REPAIR, FULL DEPTH WILL ONLY BE PAID FOR ONCE UNDER ITEM 628053.

DECK REPAIR NOTES

1. AFTER PAVEMENT MILLING, PRIOR TO HYDRODEMOLITION, EXISTING AREAS OF DECK REQUIRING FULL DEPTH REPAIR AS DIRECTED BY THE ENGINEER, SHALL BE REPAIRED USING DETAIL SHOWN ON THIS SHEET.
2. ALL WORK INVOLVING METHODS OF CONCRETE REMOVAL; CLEANING OF CONCRETE SURFACE AND EXISTING REINFORCEMENT; REPAIRING OR REPLACING DAMAGED REINFORCEMENT AS RESULT OF CONSTRUCTION ACTIVITIES OR SECTION LOSS; PRESENCE OF CONTRACTION OR EXPANSION JOINTS; SURFACE PREPARATION; AND CONCRETE PLACEMENT SHALL BE PERFORMED IN ACCORDANCE WITH SUBSECTION 628.03(F) OF THE STANDARD SPECIFICATIONS AND ITEMS 760500 - TOTAL SURFACE HYDRODEMOLITION, AND ITEM 625503 - ADDITIONAL LATEX-MODIFIED CONCRETE FOR PARTIAL DECK REPAIRS. PAYMENT FOR FULL DEPTH DECK REPAIRS MADE AFTER MILLING AND PRIOR TO HYDRODEMOLITION WILL BE MADE UNDER ITEM 628053 - DECK REPAIR, FULL DEPTH. PAYMENT FOR FULL DEPTH DECK REPAIRS MADE AFTER HYDRODEMOLITION WILL BE MADE UNDER ITEM 628053 - DECK REPAIR, FULL DEPTH.
3. MILLING, HYDRODEMOLITION, AND LMC OVERLAY WILL BE PAID FOR UNDER THEIR RESPECTIVE ITEMS.

LEGEND:

- LIMITS OF REMOVAL, MECHANICAL MILLING (ITEM 760013)
- LIMITS OF HYDRODEMOLITION (ITEM 760500)
- LIMITS OF REMOVAL (ITEM 628053 OR 628502)
- CLASS D CONCRETE

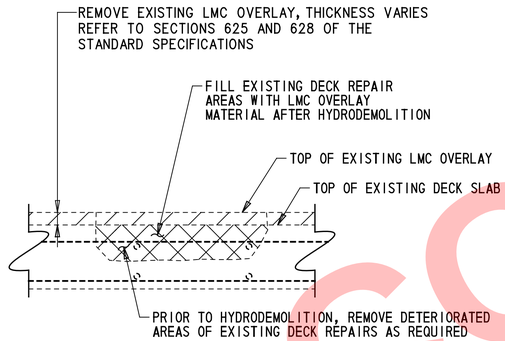

REMOVAL OF EXISTING DECK REPAIRS (ITEM 628502)

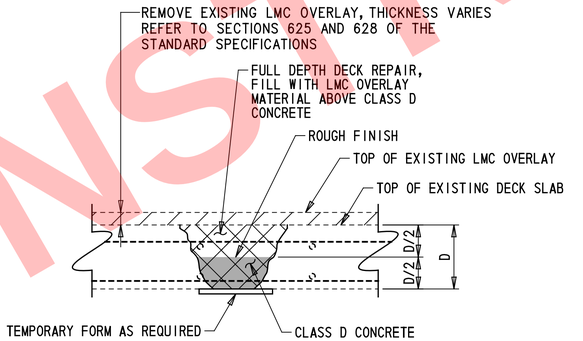

DECK REPAIR, FULL DEPTH (ITEM 628053)

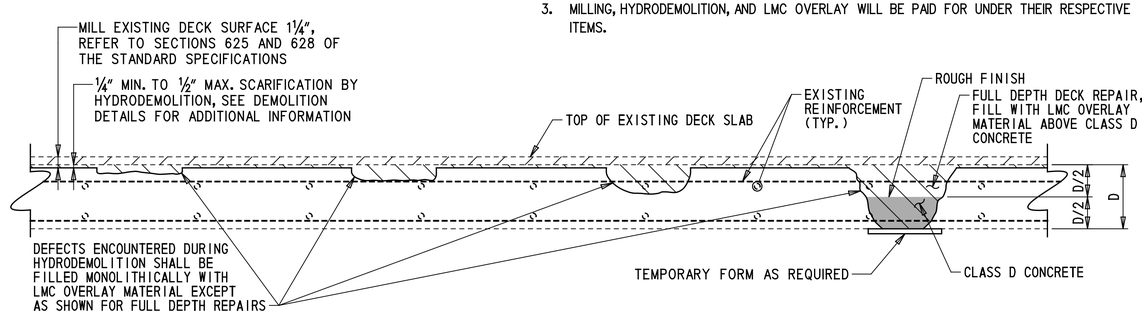

HYDRODEMOLITION AND DECK REPAIR (WITHOUT OVERLAY)

NOT FOR CONSTRUCTION

DELAWARE DEPARTMENT OF TRANSPORTATION	ADDENDUMS / REVISIONS	NOT TO SCALE	REHABILITATION OF I-95 FROM I-495 TO NORTH OF BRANDYWINE RIVER BRIDGE	CONTRACT T201407404 / COUNTY NEW CASTLE	BRIDGE NO. 1 758F 6149 / DESIGNED BY: BJM / CHECKED BY: JRQ

CONCRETE REPAIR DETAILS

1-758F PN-02 | SHEET NO. 2-556 | TOTAL SHTS. 2-731

...\Bridge 1-758F\758FPN_02.dgn
5/16/2019 9:28:53 PM

QUANTITIES

ITEM Nº	ITEM TITLE	UNIT	QUANTITY
207000	STRUCTURAL EXCAVATION	CY	23
211000	REMOVAL OF STRUCTURES AND OBSTRUCTIONS	LS	1
301001	GRADED AGGREGATE BASE COURSE, TYPE B	CY	30
602XXX	CLEANING BRIDGE SCUPPER	EA	1
604001	PROTECTIVE SHIELD	LS	1
610002	PORTLAND CEMENT CONCRETE MASONRY, ABUTMENT ABOVE FOOTING, CLASS A	CY	1
610008	PORTLAND CEMENT CONCRETE MASONRY, PARAPET, CLASS A	CY	8
610017	PORTLAND CEMENT CONCRETE MASONRY, SUPERSTRUCTURE, CLASS D	CY	11
610018	PORTLAND CEMENT CONCRETE MASONRY, APPROACH SLAB, CLASS D	CY	42
611000	BAR REINFORCEMENT	LB	300
611001	BAR REINFORCEMENT, EPOXY COATED	LB	12720
624000	PREFABRICATED EXPANSION JOINT SYSTEMS, 3"	CY	103
625000	LATEX-MODIFIED CONCRETE OVERLAY INSTALLATION	SY-IN	1630
625001	FURNISHING LATEX-MODIFIED CONCRETE OVERLAY	CY	63
6255XX	ADDITIONAL LATEX-MODIFIED CONCRETE FOR PARTIAL DECK REPAIRS	CY	7
628053	DECK REPAIR, FULL DEPTH	SF	10
6285XX	REMOVAL OF EXISTING DECK REPAIRS	SF	5
760013	PAVEMENT MILLING, PORTLAND CEMENT CONCRETE PAVEMENT	SY-IN	950
7605XX	TOTAL SURFACE HYDRODEMOLITION	SY	950

NOTE:

QUANTITIES INCLUDE CONTINGENT PERCENTAGES AS NOTED IN NOTE 11 ON DWG. PN-01 AND AS SHOWN IN THE REPAIR TABLE ON DWG. PN-04.

LOAD RATING SUMMARY

DESIGN VEHICLE	*RATING FACTOR*	*RATING WEIGHT (TON)*	*CONTROLLING MEMBER*	*CONTROLLING POINT*	*LOAD EFFECT*
HL-93 TRUCK (INVENTORY)	*1.31*	*N/A*	*SPAN F2, BEAM S2*	*110*	*SHEAR*
HL-93 TANDEM (INVENTORY)	*1.58*	*N/A*	*SPAN F2, BEAM S2*	*110*	*SHEAR*
HL-93 TRUCK TRAIN (INVENTORY)	*N/A*	*N/A*	*N/A*	*N/A*	*N/A*
HS-20 (INVENTORY)	*1.69*	*60.98*	*SPAN F2, BEAM S2*	*110*	*SHEAR*
HL-93 TRUCK (OPERATING)	*1.70*	*N/A*	*SPAN F2, BEAM S2*	*110*	*SHEAR*
HL-93 TANDEM (OPERATING)	*2.05*	*N/A*	*SPAN F2, BEAM S2*	*110*	*SHEAR*
HL-93 TRUCK TRAIN (OPERATING)	*N/A*	*N/A*	*N/A*	*N/A*	*N/A*
HS-20 (OPERATING)	*2.20*	*79.05*	*SPAN F2, BEAM S2*	*110*	*SHEAR*
DE S220 & LEGAL-LANE (LEGAL)	*3.87*	*77.31*	*SPAN F2, BEAM S2*	*110*	*SHEAR*
DE S335 & LEGAL-LANE (LEGAL)	*2.22*	*77.86*	*SPAN F2, BEAM S2*	*110*	*SHEAR*
DE S437 & LEGAL-LANE (LEGAL)	*2.15*	*78.82*	*SPAN F2, BEAM S2*	*110*	*SHEAR*
DE T330 & LEGAL-LANE (LEGAL)	*3.04*	*91.06*	*SPAN F2, BEAM S2*	*110*	*SHEAR*
DE T435 & LEGAL-LANE (LEGAL)	*2.48*	*86.72*	*SPAN F2, BEAM S2*	*110*	*SHEAR*
DE T540 & LEGAL-LANE (LEGAL)	*2.40*	*96.05*	*SPAN F2, BEAM S2*	*110*	*SHEAR*

NOTE: LOAD RATING INCLUDES FUTURE WEARING SURFACE AS NOTED IN THE PLANS.

NOT FOR CONSTRUCTION

REPAIR NO.	REPAIR DESCRIPTION	LOCATION	REMARKS	DWG. NO.	ITEM NO.	ITEM DESCRIPTION	UNIT	QTY.	CONTINGENT %	TOTAL QTY.
1	JOINT REPLACEMENT (FULL REPLACEMENT)	PIER F2, PIER F3, PIER F4	FOR REPLACEMENT OF JOINT AT PIER H1, SEE BRIDGE 1-758H BRIDGE PLANS	EX-01 TO EX-03	610008	PORTLAND CEMENT CONCRETE MASONRY, PARAPET, CLASS A	CY	2	0	2
					610017	PORTLAND CEMENT CONCRETE MASONRY, SUPERSTRUCTURE, CLASS D	CY	8	0	8
					611001	BAR REINFORCEMENT, EPOXY COATED	LB	1700	0	1700
					624000	PREFABRICATED EXPANSION JOINT SYSTEMS, 3"	LF	78	0	78
3	MILL EXISTING DECK/OVERLAY	ENTIRE BRIDGE		PN-02, DM-01	628053	DECK REPAIR, FULL DEPTH	SF	0	EQ	10
					760013	PAVEMENT MILLING, PORTLAND CEMENT CONCRETE PAVEMENT	SY-IN	950	0	950
4	HYDRODEMOLITION OF EXISTING DECK SURFACE	ENTIRE BRIDGE		PN-02, DM-01	6285XX	REMOVAL OF EXISTING DECK REPAIRS	SF	0	EQ	5
					7605XX	TOTAL SURFACE HYDRODEMOLITION	SY	950	0	950
5	FURNISH AND INSTALL LMC OVERLAY	ENTIRE BRIDGE		PN-02, DM-01	625000	LATEX-MODIFIED CONCRETE OVERLAY INSTALLATION	SY-IN	1630	0	1630
					625001	FURNISHING LATEX-MODIFIED CONCRETE OVERLAY	CY	50	25	63
					6255XX	ADDITIONAL LATEX-MODIFIED CONCRETE FOR PARTIAL DECK REPAIRS	CY	5	25	7
9	REMOVE AND REPLACE CONCRETE APPROACH SLAB	APPROACH F1		AS-01 TO AS-05	207000	STRUCTURAL EXCAVATION	CY	23	0	23
					211000	REMOVAL OF STRUCTURES AND OBSTRUCTIONS	LS	1	0	1
					301001	GRADED AGGREGATE BASE COURSE, TYPE B	CY	30	0	30
					610008	PORTLAND CEMENT CONCRETE MASONRY, PARAPET, CLASS A	CY	5	0	5
					610018	PORTLAND CEMENT CONCRETE MASONRY, APPROACH SLAB, CLASS D	CY	42	0	42
					611000	BAR REINFORCEMENT	LB	140	0	140
					611001	BAR REINFORCEMENT, EPOXY COATED	LB	10320	0	10320
					624000	PREFABRICATED EXPANSION JOINT SYSTEMS, 3"	LF	25	0	25
10	CLEAN SCUPPER AND DOWNSPOUT	SPAN F1			602XXX	CLEANING BRIDGE SCUPPER	EA	1	0	1
19	REPLACE BRIDGE LIGHTING	SPANS F1, F2, AND F4	SEE LIGHTING PLANS FOR ITEMS AND PAYMENT		N/A					
46	REPLACE ABUTMENT JOINT WITH DECK-OVER	ABUTMENT F1		EX-04 TO EX-05	211000	REMOVAL OF STRUCTURES AND OBSTRUCTIONS	LS	1	0	1
					610002	PORTLAND CEMENT CONCRETE MASONRY, ABUTMENT ABOVE FOOTING, CLASS A	CY	1	0	1
					610008	PORTLAND CEMENT CONCRETE MASONRY, PARAPET, CLASS A	CY	1	0	1
					610017	PORTLAND CEMENT CONCRETE MASONRY, SUPERSTRUCTURE, CLASS D	CY	3	0	3
					611000	BAR REINFORCEMENT	LB	160	0	160
					611001	BAR REINFORCEMENT, EPOXY COATED	LB	700	0	700

NOT FOR CONSTRUCTION

LMC OVERLAY NOTES:

1. LONGITUDINAL CONSTRUCTION JOINTS IN THE LMC OVERLAY SHALL NOT BE PERMITTED ON BRIDGE 1-758F. THE OVERLAY SHALL BE PLACED FULL WIDTH OF THE BRIDGE DECK FROM FLOWLINE TO FLOWLINE.

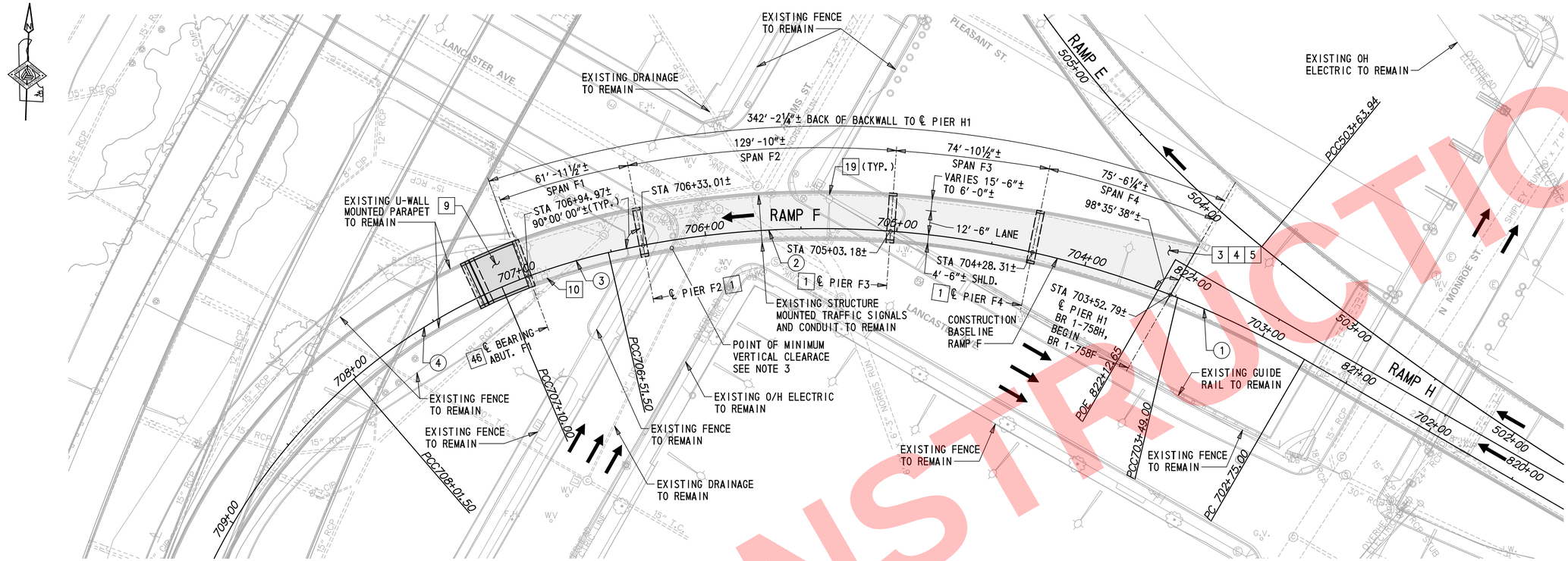

PLAN

KEY:

[1] REPAIR NUMBER AS SHOWN ON DWG. PN-04

(1) CURVE DATA

LEGEND:

MILL AND OVERLAY DECK

REMOVAL AND RECONSTRUCTION

HORIZONTAL CURVE DATA

CURVE (1)
P.C. STA. = 702+75.00
P.I. STA. = 703+12.06
L = 74.00′
R = 520.00′
M.O. = 1.32
P.C.C. STA. = 703+49.00

CURVE (2)
P.C.C. STA. = 703+49.00
P.I. STA. = 705+05.05
L = 302.50′
R = 499.50′
M.O. = 22.73
P.C.C. STA. = 706+51.50

CURVE (3)
P.C.C. STA. = 706+51.50
P.I. STA. = 706+80.83
L = 58.50′
R = 329.50′
M.O. = 1.30
P.C.C. STA. = 707+10.00

CURVE (4)
P.C.C. STA. = 707+10.00
P.I. STA. = 707+56.12
L = 91.50′
R = 294.50′
M.O. = 3.55
P.C.C. STA. = 708+01.50

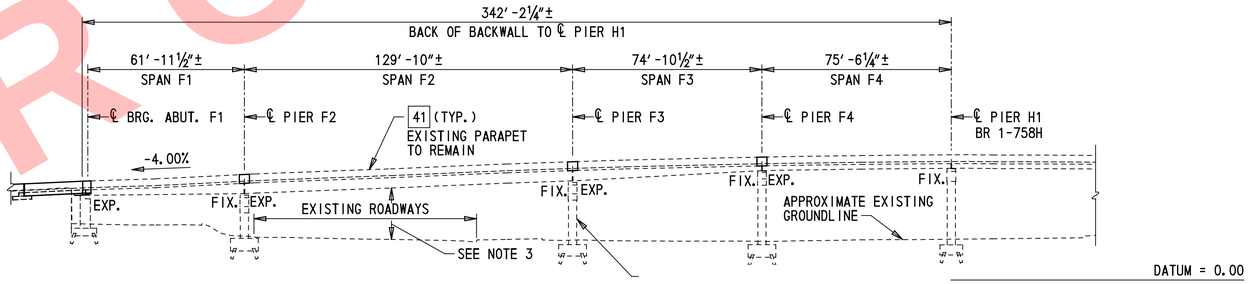

DEVELOPED SECTION ALONG CONSTRUCTION BASELINE RAMP F

NOTES:

1. DIMENSIONS SHOWN ARE MEASURED ALONG CONSTRUCTION BASELINE RAMP F.
2. PILES SHOWN ARE FOR INFORMATION PURPOSES ONLY.
3. MINIMUM VERTICAL CLEARANCE IS BASED ON 2014 NBIS INSPECTION REPORT. MINIMUM CLEARANCE ABOVE ADAMS ST. = 15′-5″±.

NOT FOR CONSTRUCTION

DELAWARE DEPARTMENT OF TRANSPORTATION

ADDENDUMS / REVISIONS

SCALE 0 30 60 90 FEET

REHABILITATION OF I-95 FROM I-495 TO NORTH OF BRANDYWINE RIVER BRIDGE

CONTRACT	BRIDGE NO.	1 758F 6149
T201407404	DESIGNED BY: BJM	
COUNTY	CHECKED BY: JRQ	
NEW CASTLE		

GENERAL PLAN AND ELEVATION

1-758F PE-01
SHEET NO. 2-559
TOTAL SHTS. 2-731

\\758PE_01.dgn
5/16/2019 3:28:58 PM

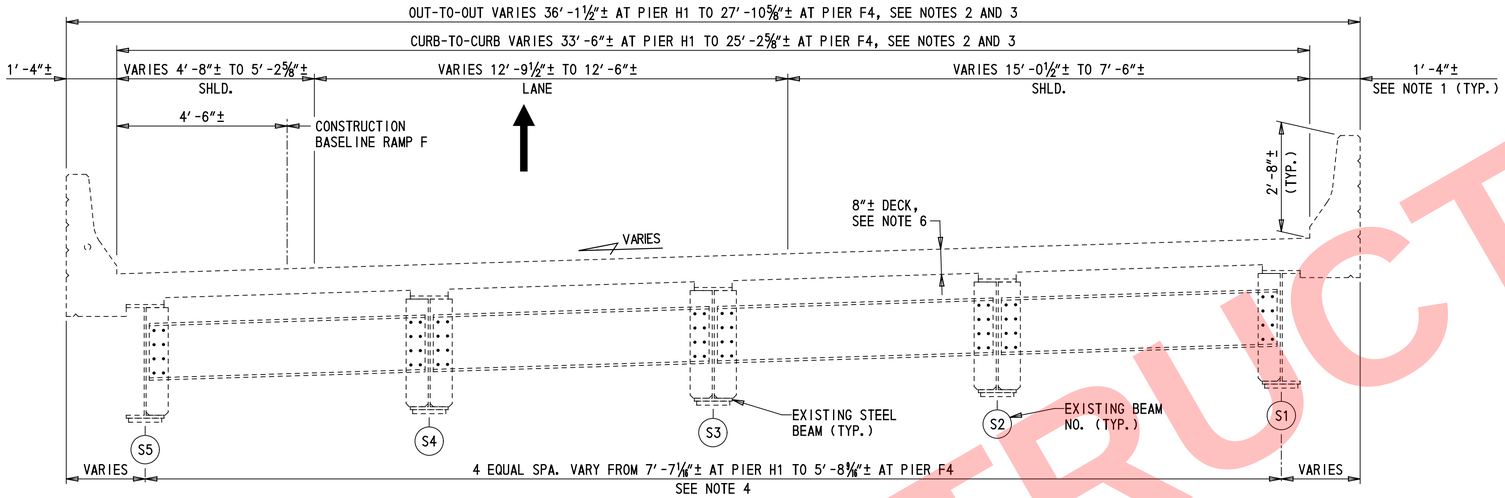

EXISTING TYPICAL SECTION

(STA. 703+52.79 TO 704+28.31)

½″ = 1′-0″

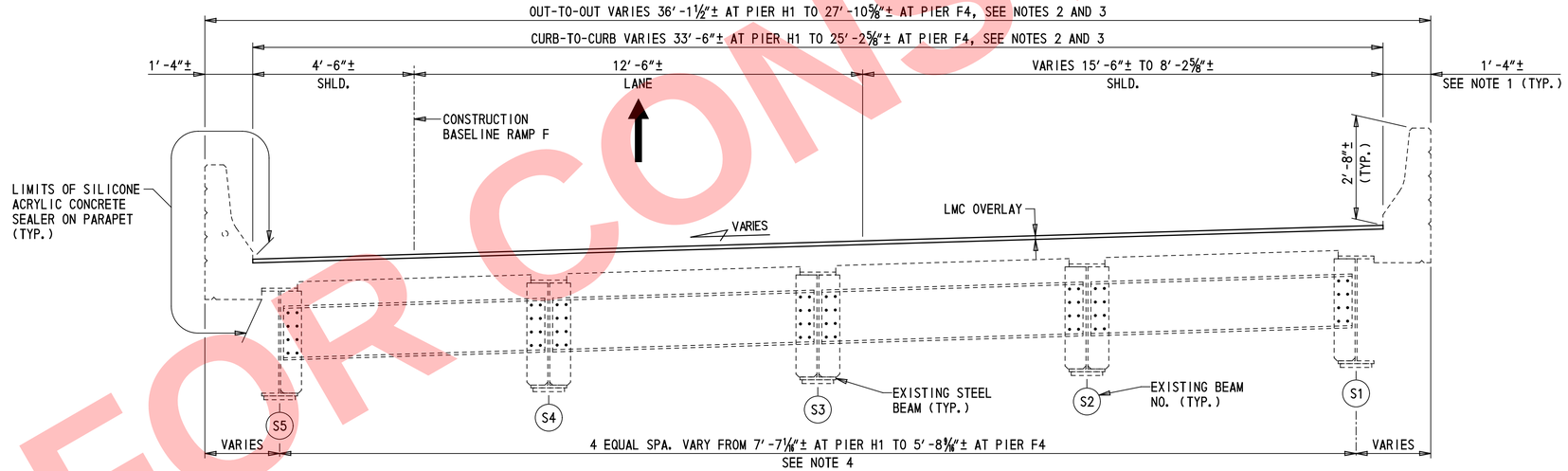

PROPOSED TYPICAL SECTION

(STA. 703+52.79 TO 704+28.31)

½″ = 1′-0″

NOTES:

1. DIMENSIONS SHOWN ARE MEASURED PERPENDICULAR TO CONSTRUCTION BASELINE RAMP F, EXCEPT AS NOTED.
2. DIMENSIONS SHOWN AT PIER H1 ARE MEASURED PERPENDICULAR TO CONSTRUCTION BASELINE RAMP H FROM THE EAST PARAPET TO THE THEORETICAL INTERSECTION OF THE WEST PARAPET AND THE CENTERLINE OF PIER H1.
3. DIMENSIONS SHOWN AT PIER F4 ARE MEASURED PERPENDICULAR TO THE CONSTRUCTION BASELINE RAMP F.
4. BEAM SPACING SHOWN IS MEASURED ALONG THE PIER CENTERLINE.
5. FOR PARAPET DEATIL, DRIP NOTCH DETAIL, AND ARCHITECTURAL GROOVE DETAIL SEE DWG. PA-01.
6. SEE DWG. DM-01 FOR DEMOLITION DETAILS.

NOT FOR CONSTRUCTION

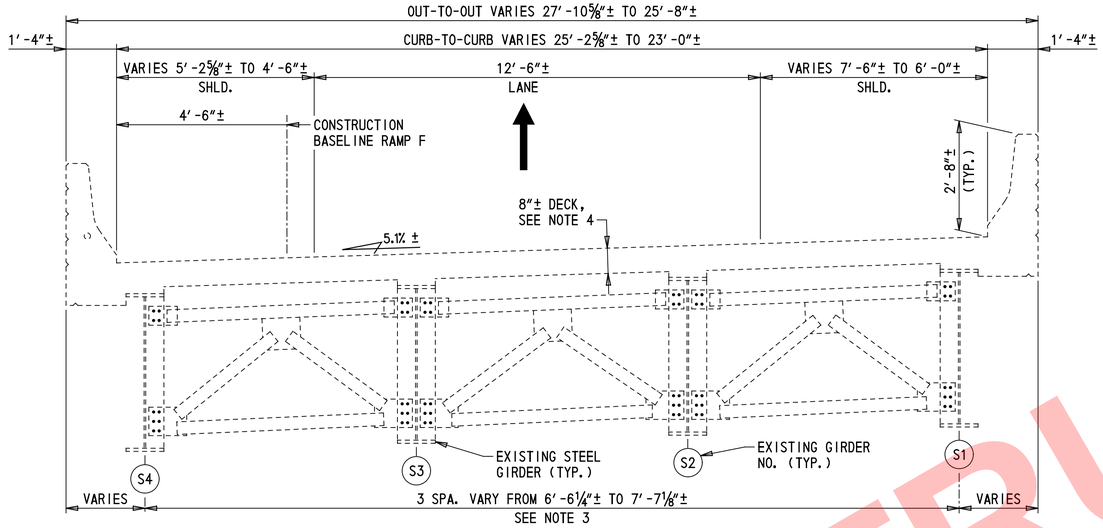

EXISTING TYPICAL SECTION

(STA. 704+28.31 TO 705+03.18 AND 706+33.01 TO 706+94.97)

½" = 1'-0"

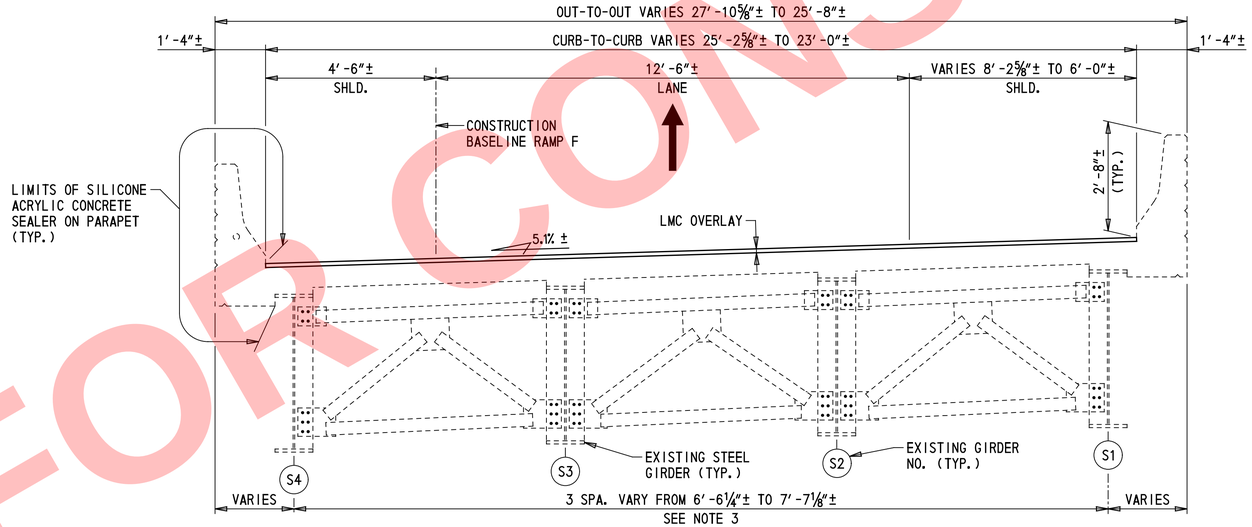

PROPOSED TYPICAL SECTION

(STA. 704+28.31 TO 705+03.18 AND 706+33.01 TO 706+94.97)

½" = 1'-0"

NOTES:

1. DIMENSIONS SHOWN ARE MEASURED PERPENDICULAR TO CONSTRUCTION BASELINE RAMP F.
2. FOR PARAPET DETAIL, DRIP NOTCH DETAIL, AND ARCHITECTURAL GROOVE DETAIL SEE DWG. PA-01.
3. FOR GIRDER SPACING, SEE BEAM / GIRDER SPACING TABLE ON DWG. EX-02.
4. SEE DWG. DM-01 FOR DEMOLITION DETAILS.

NOT FOR CONSTRUCTION

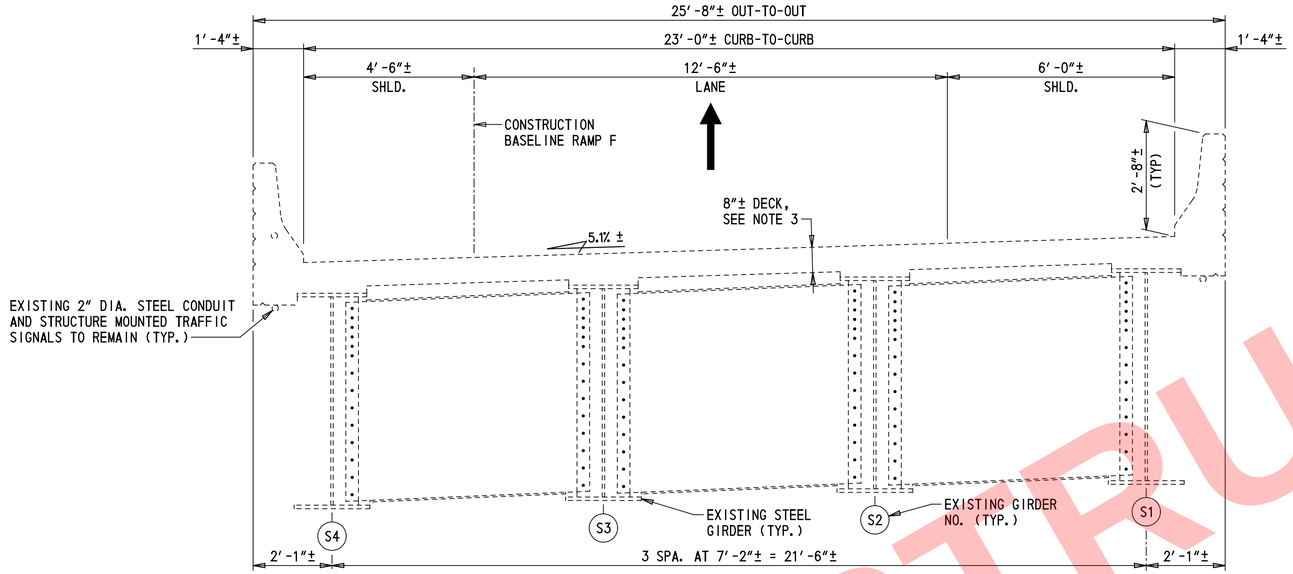

EXISTING TYPICAL SECTION

(STA. 705+03.18 TO 706+33.01)

½″ = 1′-0″

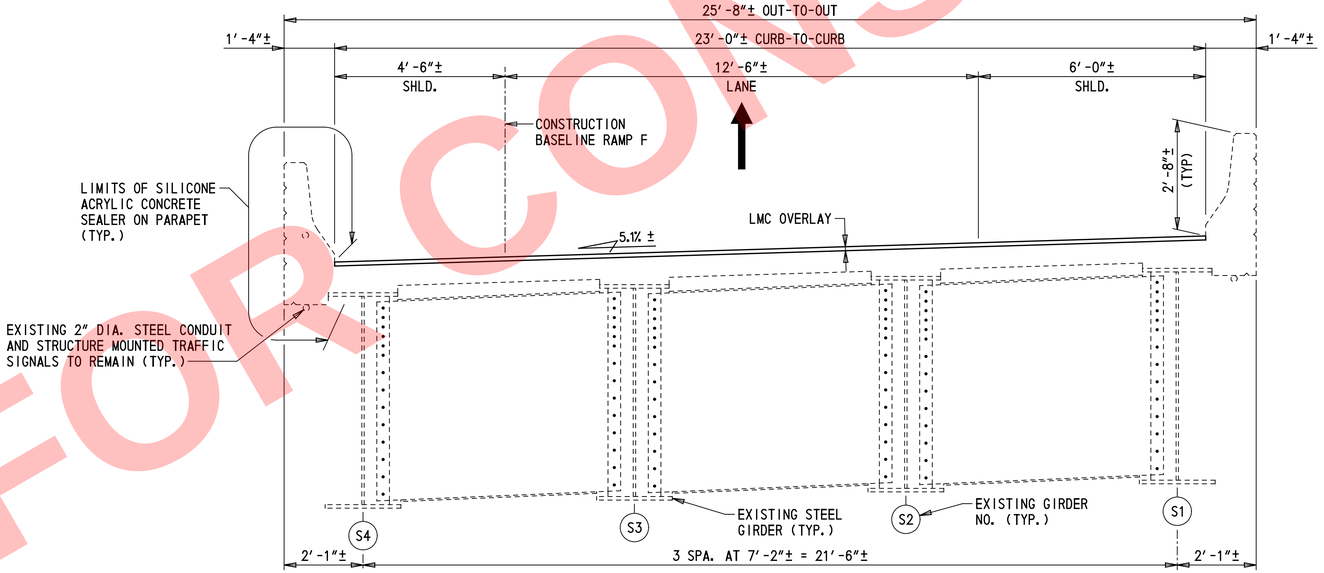

PROPOSED TYPICAL SECTION

(STA. 705+03.18 TO 706+33.01)

½″ = 1′-0″

NOTES:

1. DIMENSIONS SHOWN ARE MEASURED PERPENDICULAR TO CONSTRUCTION BASELINE RAMP F.
2. FOR PARAPET DETAIL, DRIP NOTCH DETAIL, AND ARCHITECTURAL GROOVE DETAIL SEE DWG. PA-01.
3. SEE DWG. DM-01 FOR DEMOLITION DETAILS.

NOT FOR CONSTRUCTION

DELAWARE DEPARTMENT OF TRANSPORTATION

ADDENDUMS / REVISIONS

SCALE AS NOTED

REHABILITATION OF I-95 FROM I-495 TO NORTH OF BRANDYWINE RIVER BRIDGE

CONTRACT	BRIDGE NO.	1 758F 6149
T201407404	DESIGNED BY: BJM	
COUNTY	CHECKED BY: JRQ	
NEW CASTLE		

BRIDGE TYPICAL SECTIONS STA. 705+03 TO 706+33

1-758F TS-03
SHEET NO. 2-562
TOTAL SHTS. 2-731

\\Bridge 1-758F\758FTS_03.dgn
5/16/2019 5:29:00 PM

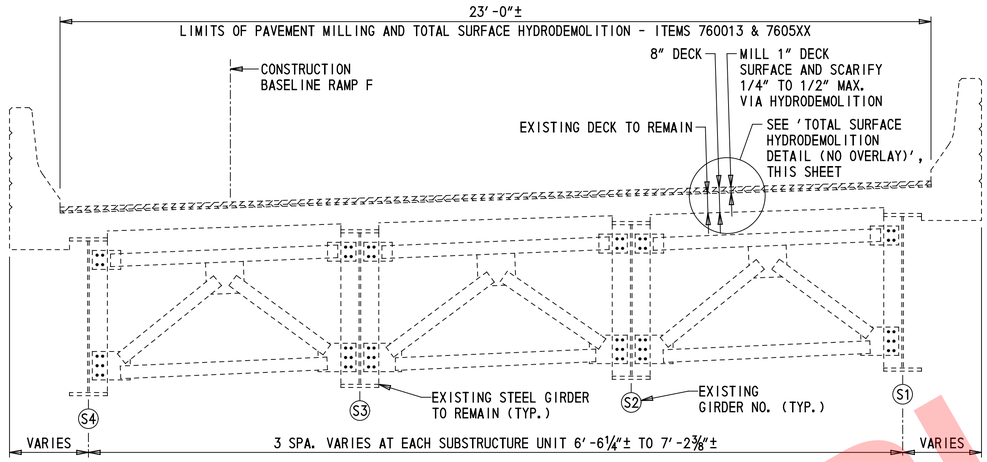

LIMITS OF DEMOLITION

(SPANS F1 AND F3 SHOWN, SPANS F2 AND F4 SIMILAR)

½″ = 1′-0″

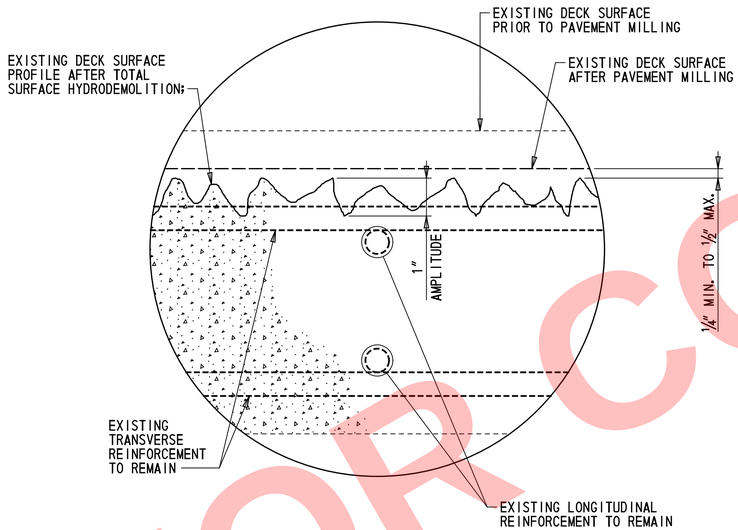

HYDRODEMOLITION AMPLITUDE DETAIL

6″ = 1′-0″

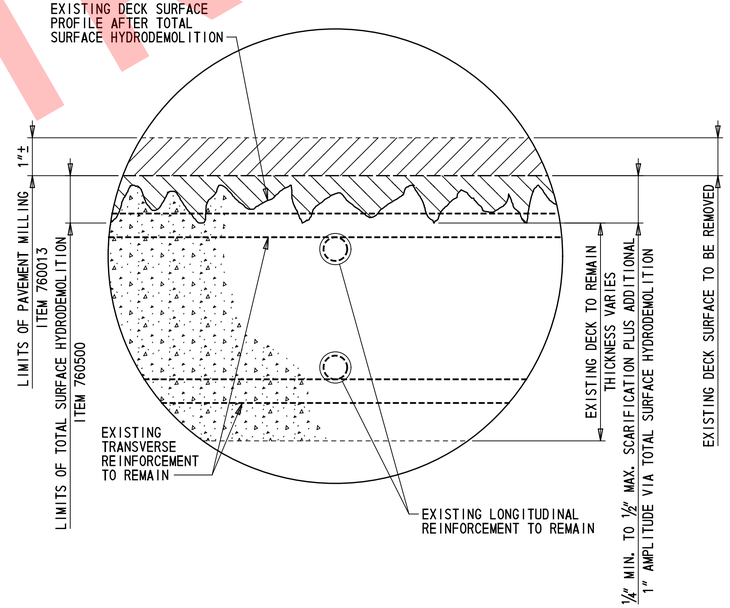

TOTAL SURFACE HYDRODEMOLITION DETAIL (NO OVERLAY)

6″ = 1′-0″

LEGEND:

- LIMITS OF REMOVAL, PAVEMENT MILLING (ITEM 760013)
- LIMITS OF REMOVAL, HYDRODEMOLITION (ITEM 760500)

DEMOLITION NOTES:

1. DECK AREAS THAT HAVE RECIEVED TOTAL SURFACE HYDRODEMOLITION SHALL ONLY BE ACCESSED BY EQUIPMENT NECESSARY TO COMPLETE DECK WORK.

NOT FOR CONSTRUCTION

DELAWARE DEPARTMENT OF TRANSPORTATION	ADDENDUMS / REVISIONS	SCALE AS NOTED	REHABILITATION OF I-95 FROM I-495 TO NORTH OF BRANDYWINE RIVER BRIDGE	CONTRACT T201407404	BRIDGE NO. 1 758F 6149	MILLING AND HYDRODEMOLITION DETAILS	1-758F DM-01
				COUNTY NEW CASTLE	DESIGNED BY: BJM		SHEET NO. 2-567
					CHECKED BY: JRQ		TOTAL SHTS. 2-731

...\Bridge 1-758F\758FDM_01.dgn
5/16/2019 5:29:03 PM

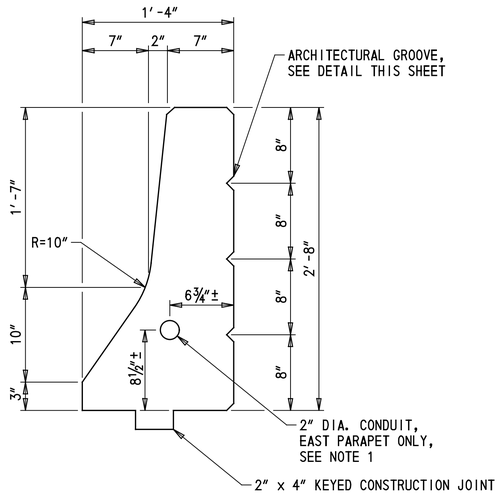

PARAPET DETAIL

1½" = 1'-0"

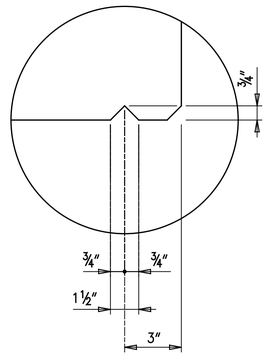

DRIP NOTCH DETAIL

3" = 1'-0"

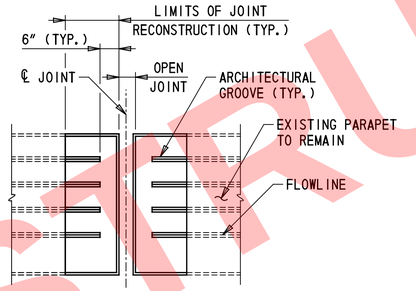

ARCHITECTURAL GROOVE TERMINATION DETAIL

(DETAIL SHOWN AT EXPANSION JOINT, DETAIL AT DECK OVER SIMILAR)

½" = 1'-0"

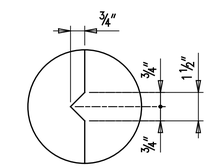

ARCHITECTURAL GROOVE DETAIL

3" = 1'-0"

NOTES:

1. 2" DIAMETER CONDUIT SHALL BE GALVANIZED STEEL IN ACCORDANCE WITH SPECIFICATIONS SECTION 1062. PAYMENT WILL BE INCIDENTAL TO ITEM 610008 - PORTLAND CEMENT CONCRETE MASONRY, PARAPET, CLASS A.

NOT FOR CONSTRUCTION

1-758F
PA-01

DELAWARE DEPARTMENT OF TRANSPORTATION

ADDENDUMS / REVISIONS

SCALE AS NOTED

REHABILITATION OF I-95 FROM I-495 TO NORTH OF BRANDYWINE RIVER BRIDGE

CONTRACT T201407404
COUNTY NEW CASTLE
BRIDGE NO. 1 758F 6149
DESIGNED BY: JRQ
CHECKED BY: CWM

PARAPET DETAILS

SHEET NO. 2-571
TOTAL SHTS. 2-731

...\Bridge 1-758F\758FPA_01.dgn
5/16/2019 5:29:04 PM

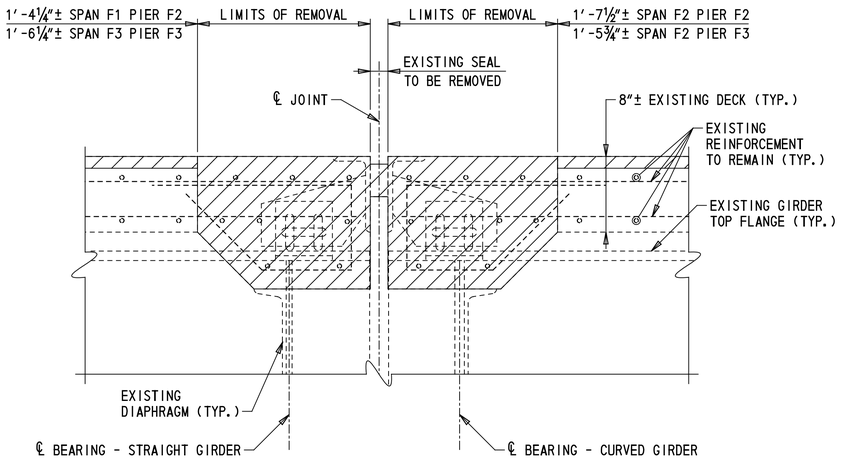

REMOVAL DETAIL - PIERS F2 & F3

(PIER F3 SHOWN, PIER F2 SIMILAR)
1½″ = 1′-0″

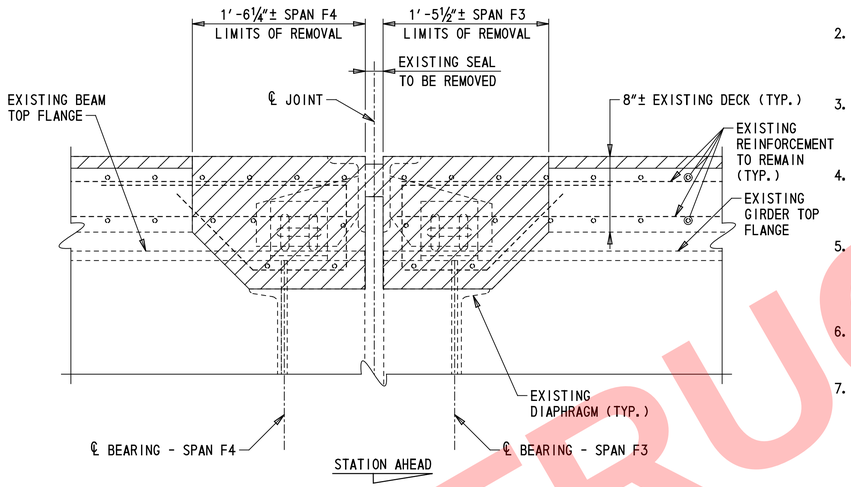

REMOVAL DETAIL - PIER F4

1½″ = 1′-0″

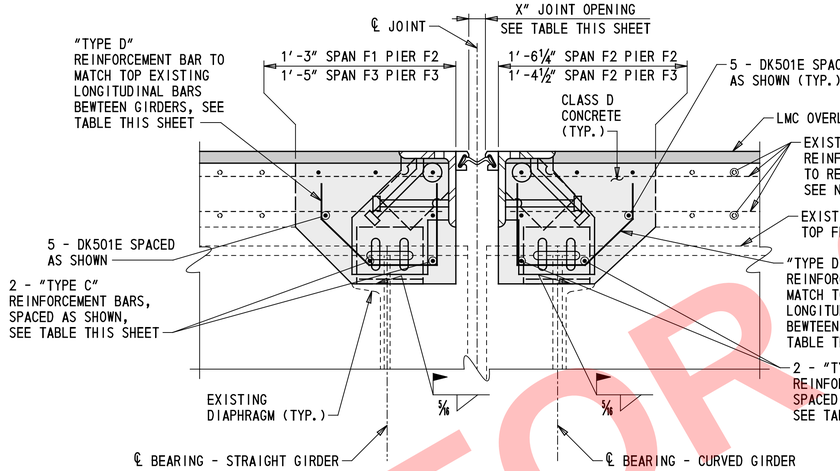

JOINT DETAIL - PIERS F2 & F3

(PIER F3 SHOWN, PIER F2 SIMILAR)
1½″ = 1′-0″

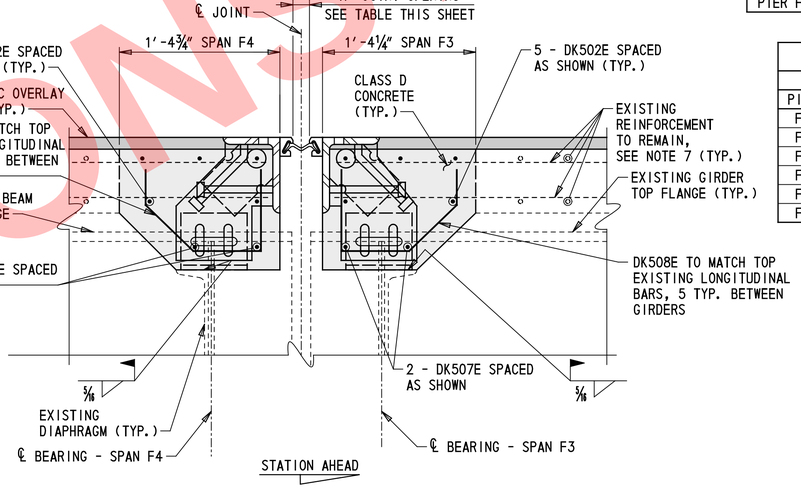

JOINT DETAIL - PIER F4

1½″ = 1′-0″

LEGEND:

- REMOVAL LIMITS
- PROPOSED CONSTRUCTION
- PROPOSED LMC OVERLAY

JOINT RECONSTRUCTION NOTES:

1. NEW STRIP SEAL ASSEMBLY SHOWN FOR GRAPHICAL PURPOSES ONLY. DETAILS MAY VARY BY MANUFACTURER. STRIP SEAL AND ASSEMBLY SHALL BE IN ACCORDANCE WITH ITEM 624000 - PREFABRICATED EXPANSION JOINT SYSTEM, 3″.
2. CLASS D CONCRETE SHALL BE IN ACCORDANCE WITH ITEM 610017 - P.C.C. MASONRY, SUPERSTRUCTURE, CLASS D. CLEAN AND APPLY EPOXY BONDING COMPOUND TO ALL REMOVAL AND ROUGHENED SURFACES PRIOR TO PLACING CONCRETE. COST FOR THIS WORK WILL BE INCIDENTAL TO ITEM 610017.
3. EXISTING BARS TO REMAIN SHALL BE CLEANED IN ACCORDANCE WITH SECTION 628.03(E)7. BARS WITH CORROSION, BROKEN, OR WITH INADEQUATE BOND SHALL BE REPAIRED IN ACCORDANCE WITH SECTION 628.03(E)7. PAYMENT FOR THIS WORK WILL BE INCIDENTAL TO ITEM 624000 - PREFABRICATED EXPANSION JOINT SYSTEM, 3″.
4. ALL NEW REINFORCING STEEL REQUIRED TO COMPLETE THE JOINT HEADER REPAIRS SHALL BE EPOXY COATED AND HAVE 2″ MIN. CONCRETE COVER UNLESS SHOWN OTHERWISE. PAYMENT FOR ALL NEW REINFORCING STEEL SHALL BE UNDER ITEM 611001 - BAR REINFORCEMENT, EPOXY COATED.
5. THE CONTRACTOR SHALL USE CARE DURING THE REMOVAL OF THE EXISTING CONCRETE AND PORTIONS OF THE JOINT SYSTEM TO AVOID DAMAGE TO THE EXISTING PORTIONS OF THE STRUCTURE THAT ARE TO REMAIN IN PLACE. ANY DAMAGE INCURRED TO EXISTING PORTIONS OF THE STRUCTURE TO REMAIN SHALL BE REPAIRED BY THE CONTRACTOR TO COMPLETE SATISFACTION OF THE ENGINEER AT NO ADDITIONAL COST TO THE DEPARTMENT.
6. PRIOR TO REMOVAL OF THE EXISTING ROADWAY JOINT AND FABRICATION OF THE PROPOSED ROADWAY MATERIALS, THE CONTRACTOR SHALL FIELD VERIFY THE CROSS SLOPE OF THE ROADWAY AT EACH INDIVIDUAL JOINT LOCATION.
7. CUT EXISTING LONGITUDINAL DECK REINFORCEMENT 2″ CLEAR OF NEW EDGE OF JOINT.

DECK JOINT OPENINGS

LOCATION	TEMPERATURE (°F)									MOVEMENT CLASSIFICATION
	20	30	40	50	60	68	70	80	90	100	
PIER F2	2 3/16″	2 1/16″	1 15/16″	1 7/8″	1 3/4″	1 11/16″	1 5/8″	1 1/16″	1 1/16″	1 1/16″	3″
PIER F3	2″	1 15/16″	1 7/8″	1 13/16″	1 3/4″	1 11/16″	1 11/16″	1 5/8″	1 1/16″	1 1/2″	3″
PIER F4	2″	1 15/16″	1 7/8″	1 13/16″	1 3/4″	1 11/16″	1 11/16″	1 5/8″	1 1/16″	1 1/2″	3″

BAR REINFORCEMENT SCHEDULE

LOCATION			'TYPE C BAR'		'TYPE D BAR'	
PIER	SPAN	BAYS	MARK	QUANTITY PER BAY	MARK	QUANTITY PER BAY
F2	F1	ALL BAYS	DK503E	2	DK510E	4
F2	F2	BAYS 1 & 2	DK504E	2	DK509E	4
F2	F2	BAY 3	DK505E	2	DK509E	4
F3	F2	BAYS 1 & 2	DK504E	2	DK508E	4
F3	F2	BAY 3	DK505E	2	DK508E	4
F3	F3	ALL BAYS	DK503E	2	DK508E	5

NOTES:

1. FOR JOINT AT PIER H1, SEE DWG. 1-758H EX-01.
2. FOR JOINT ASSEMBLY DETAIL, SEE DWG. EX-02.
3. FOR STRIP SEAL EXPANSION JOINT NOTES, SEE DWG. EX-02.
4. FOR PARAPET RECONSTRUCTION AT JOINTS, SEE DWG. EX-03.
5. FOR TYPICAL JOINT PLAN, SEE DWG. EX-02.

NOT FOR CONSTRUCTION

\\Bridge 1-758F_758FEX_01.dgn
5/16/2016 9:29:04 PM

DELAWARE
DEPARTMENT OF TRANSPORTATION

ADDENDUMS / REVISIONS

SCALE AS NOTED

REHABILITATION OF I-95
FROM I-495 TO NORTH OF
BRANDYWINE RIVER BRIDGE

CONTRACT	BRIDGE NO.	1 758F 6149
T201407404	DESIGNED BY: BSD	
COUNTY	CHECKED BY: AFM	
NEW CASTLE		

EXPANSION JOINT
DETAILS - 1

1-758F EX-01
SHEET NO. 2-572
TOTAL SHTS. 2-731

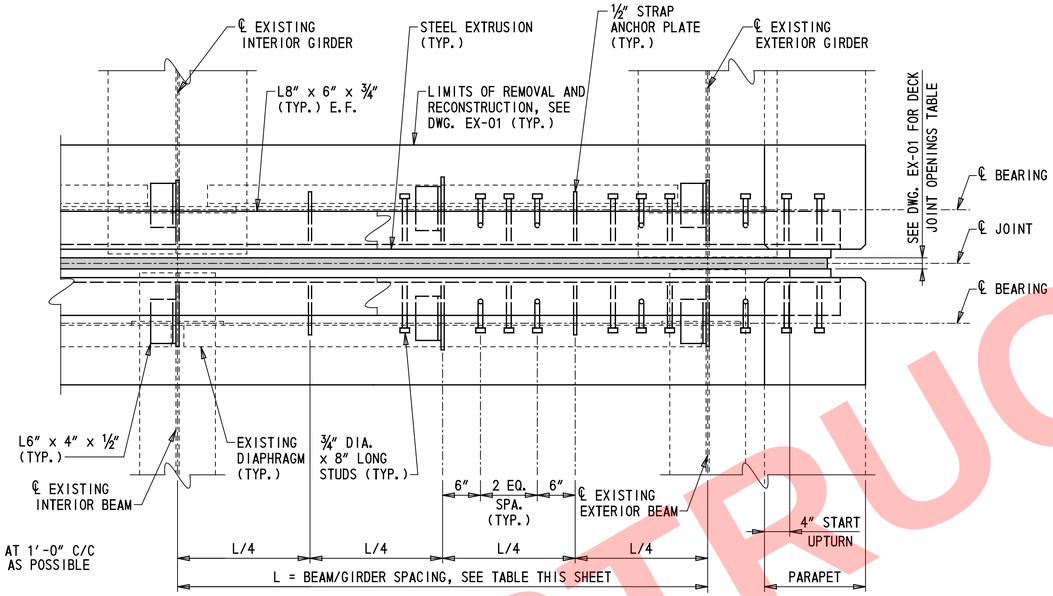

TYPICAL JOINT PLAN

(PIER F4 JOINT SHOWN, OTHERS SIMILAR)

1″ = 1′-0″

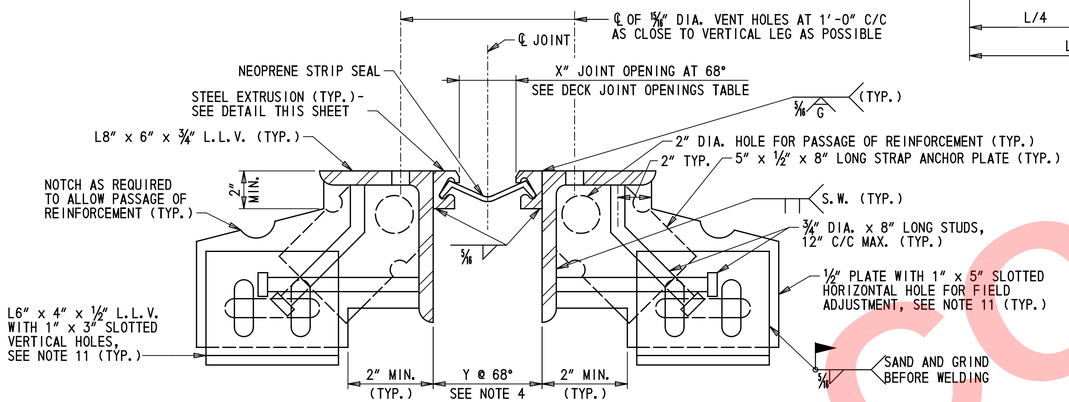

JOINT ASSEMBLY DETAIL

3″ = 1′-0″

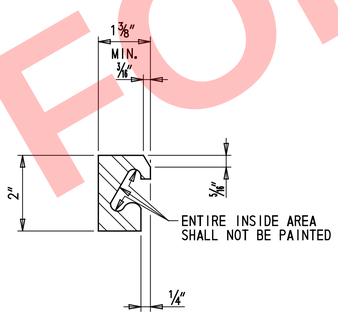

STEEL EXTRUSION DETAIL

6″ = 1′-0″

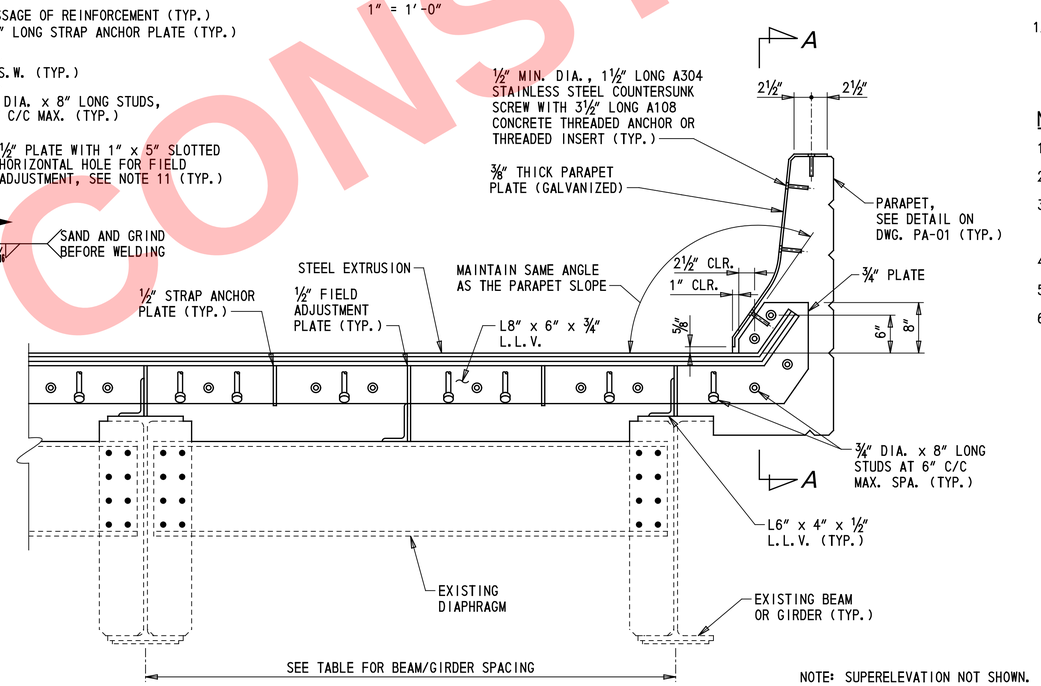

NOTE: SUPERELEVATION NOT SHOWN.

TYPICAL SECTION AT JOINT

(STRAIGHT BEAMS SPAN SHOWN, CURVED GIRDER SPAN SIMILAR)

1″ = 1′-0″

STRIP SEAL EXPANSION JOINT NOTES:

1. STEEL FOR DECK JOINTS AND STEEL EXTRUSIONS SHALL BE AASHTO M270, GR. 36 (ASTM A36) AT MINIMUM.
2. NEOPRENE EXTRUSION TO MEET D-2628-81 MODIFIED, (RECOVERY TESTS EXCLUDED).
3. THE EXPANSION JOINT SHALL BE CAPABLE OF SEALING THE DECK TO PREVENT MOISTURE AND OTHER CONTAMINANTS FROM DESCENDING THROUGH THE JOINT.
4. THE CONTRACTOR SHALL ADJUST THE OPEN JOINT (Y) AS REQUIRED BY THE WIDTH OF THE STEEL EXTRUSION USED SO AS TO PROVIDE A X″ JOINT OPENING AT 68°F.
5. THE STRIP SEAL SHALL BE INSTALLED IN ONE PIECE ACROSS THE BRIDGE WIDTH. SPLICING OF THE STRIP SEAL IS NOT PERMITTED.
6. THE EXPANSION JOINT SYSTEM WILL BE PAID FOR UNDER ITEM 624000 - PREFABRICATED EXPANSION JOINT SYSTEM, 3″.
7. STEEL EXTRUSIONS SHALL BE HOT-DIPPED GALVANIZED. ENTIRE EXPANSION DAM SHALL BE PAINTED AFTER FABRICATION USING URETHANE SYSTEM. COLOR OF PAINT SYSTEM TO BE APPLIED SHALL MATCH THE COLOR OF THE EXISTING STEEL STRUCTURE.
8. LUBRICANT-ADHESIVE FOR USE IN INSTALLING AND BONDING NEOPRENE SEAL ELEMENTS TO STEEL JOINT COMPONENTS SHALL BE A ONE QUART MOISTURE CURING POLYURETHANE AND HYDROCARBON SOLVENT MIXTURE HAVING THE FOLLOWING PHYSICAL PROPERTIES:

AVERAGE WEIGHT, POUNDS PER GALLON	8±10%
SOLIDS CONTENT	65%
ADHESIVE SHALL REMAIN LIQUID FROM	5°F TO 120°F
FILM STRENGTH, AS PER ASTM D-412	2,000 PSI
ELONGATION	250%

9. HOLES SHALL BE PLACED IN THE RIB PLATES AND STRAP ANCHOR PLATES FOR BAR REINFORCEMENT. IF THIS IS DONE IN THE FIELD AN APPROVED EPOXY-BONDED PAINT SHALL BE USED TO TOUCH-UP THE HOLES. PAYMENT INCIDENTAL TO ITEM 624000 - PREFABRICATED EXPANSION JOINT SYSTEM, 3″.
10. STEEL EXTRUSIONS AND JOINT ANGLES SHALL BE CONTINUOUS ACROSS THE FULL WIDTH OF THE ROADWAY, NO SPLICING WILL BE PERMITTED.
11. IF WELD OPTION IS PROPOSED, SLOTTED HOLES IN ½″ PLATE AND L6″ x 4″ x ½″ MAY BE OMITTED.
12. SEE TYPICAL JOINT PLAN THIS SHEET FOR LAYOUT OF L6″ x 4″ x ½″ AND STRAP ANCHORS.

NOTES:

1. FOR BEAM AND GIRDER DESIGNATIONS, SEE DWGS. TS-01 THROUGH TS-03.
2. FOR VIEW A-A, SEE DWG. EX-03.
3. DIMENSIONS IN BEAM SPACING TABLE ARE BASED ON AS-BUILT PLANS DATED APRIL 6, 1977. FIELD VERIFY ALL DIMENSION PRIOR TO FABRICATING EXPANSION JOINTS.
4. FOR DECK JOINT OPENINGS TABLE, SEE DWG. EX-01.
5. FOR PARAPET RECONSTRUCTION AT JOINTS, SEE DWG. EX-03.
6. FOR JOINT RECONSTRUCTION NOTES, SEE DWG. EX-01.

BEAM / GIRDER SPACING

LOCATION	DIMENSION "L" ✳ S. END	DIMENSION "L" ✳ N. END	NUMBER OF BEAMS / GIRDERS
SPAN F1 BAYS 1 & 2	7′-2⅜″±	7′-2¼″±	4
SPAN F1 BAY 3	6′-6¼″±	7′-1⅜″±	4
SPAN F2	7′-2″±	7′-2″±	4
SPAN F3	7′-2⅛″±	7′-7⅛″±	4
SPAN F4	5′-8¾″±	7′-7⅛″±	5

✳MEASURED ALONG ℄ PIER

NOT FOR CONSTRUCTION

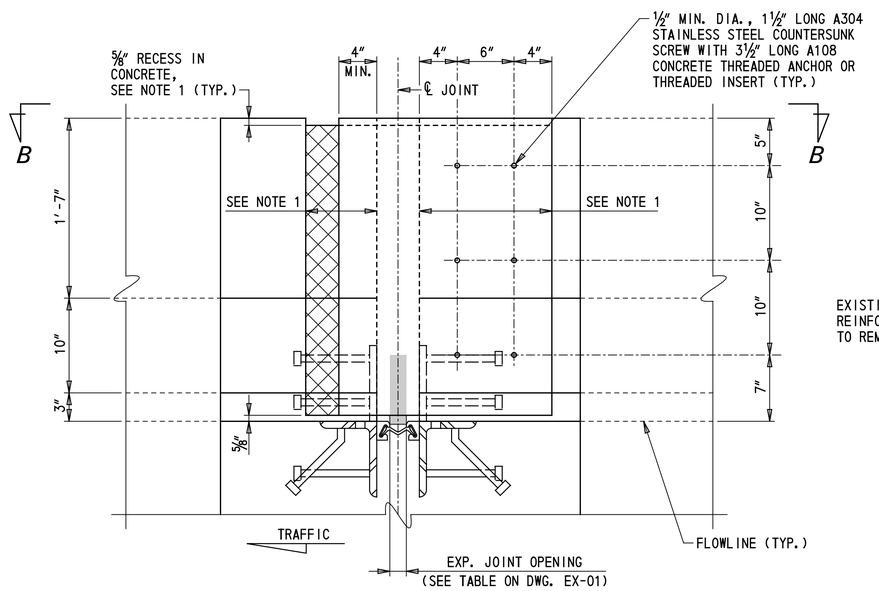

VIEW A-A

1½" = 1'-0"

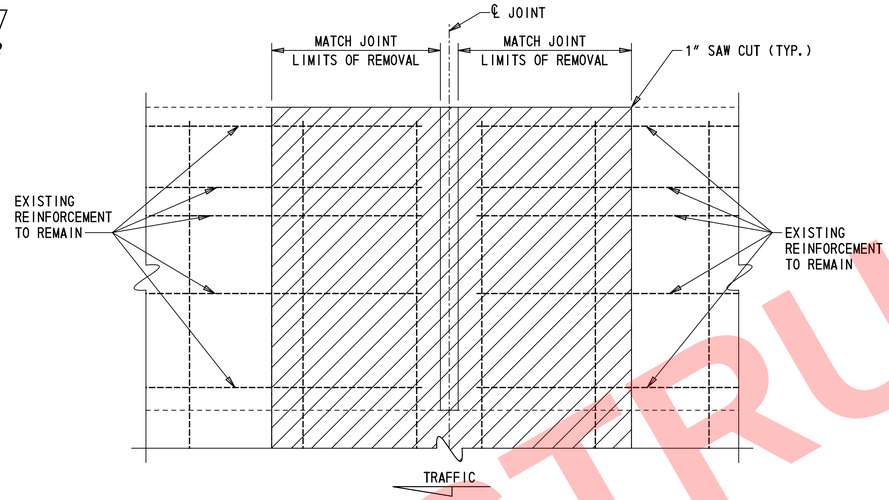

PARAPET REMOVAL AT EXPANSION JOINTS

1½" = 1'-0"

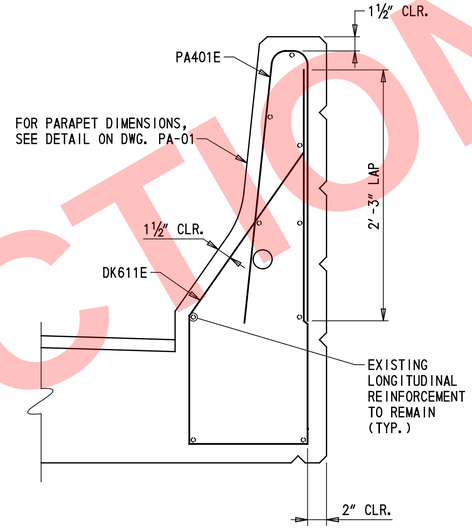

PARAPET DETAIL AT EXPANSION JOINTS

1½" = 1'-0"

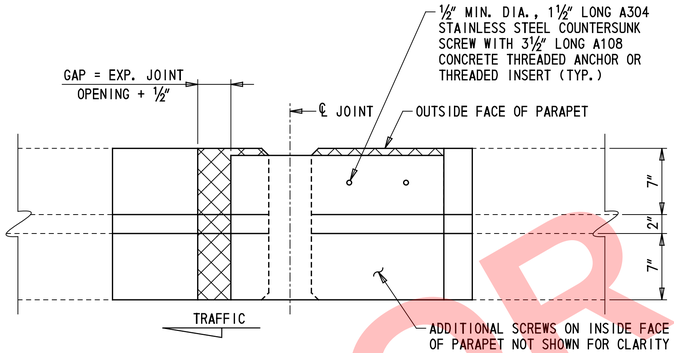

VIEW B-B

1½" = 1'-0"

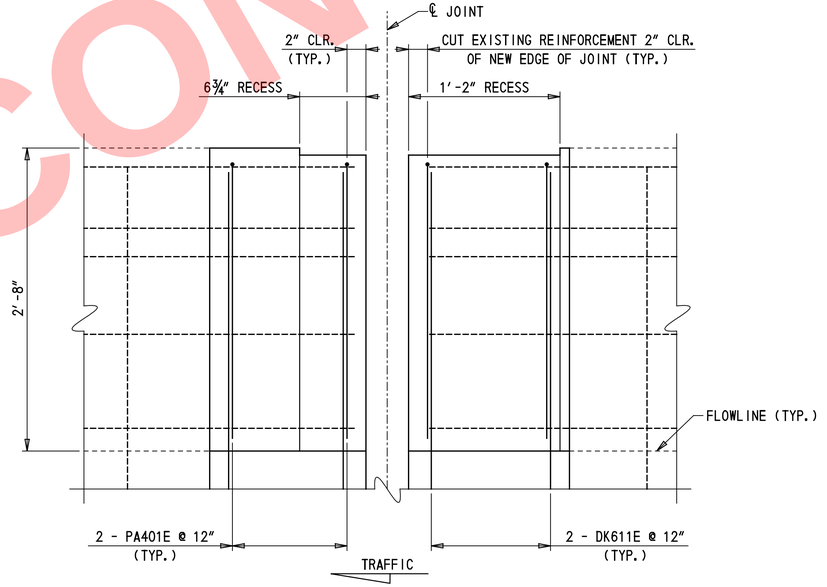

PARAPET RECONSTRUCTION AT EXPANSION JOINTS

1½" = 1'-0"

PARAPET JOINT PLATE NOTES:

1. FORM CONCRETE RECESS AREA IN PARAPET AND GRIND TO PROVIDE SMOOTH SURFACE. APPLY ONE COAT OF ASPHALT CEMENT TO FREE SIDE OF JOINT IN ACCORDANCE WITH SECTION 1012 OF THE STANDARD SPECIFICATIONS TO ALLOW BENT SLIDING PLATE TO MOVE FREELY WITHOUT FRICTION. PAYMENT WILL BE INCIDENTAL TO ITEM 610008 - PORTLAND CEMENT CONCRETE, PARAPET, CLASS A.
2. PLACE PARAPET CONCRETE WITH STEEL BENT PLATES, INSERTS, AND BOLTS IN PLACE TO ENSURE PROPER JOINT SYSTEM, 3". ALIGNMENT OF INSERTS AND HOLES IN THE STEEL PLATE. REMOVE PLATES TO INSTALL SEAL. APPLY APPROVED BONDBREAKER TO SLIDING PLATES PRIOR TO INSTALLATION.
3. GRIND ALL STEEL EDGES EXPOSED TO TRAFFIC TO ⅛" MIN. RADIUS.
4. BOLTS SHALL BE ASTM A 304 STAINLESS STELL COUNTERSUNK SCREW WITH ASTM A 108 CONCRETE THREADED ANCHOR OR THREADED INSERT. HEAD OF BOLTS SHALL BE FLUSH WITH FACE OF STEEL PLATE.
5. THE CONTRACTOR SHALL SUBMIT WORKING DRAWINGS OF TRAFFIC BARRIER PLATES FOR APPROVAL.
6. FOR ADDITIONAL JOINT NOTES AND DETAILS, SEE DWGS. EX-01 AND EX-02.
7. PAYMENT FOR PARAPET JOINT PLATES AND PARTIAL REMOVAL OF PARAPET FOR JOINT RECONSTRUCTION WILL BE INCIDENTAL TO ITEM 624000 - PREFABRICATED EXPANSION JOINT SYSTEM, 3".

LEGEND:

REMOVAL LIMITS

RECESS IN PARAPET

NOT FOR CONSTRUCTION

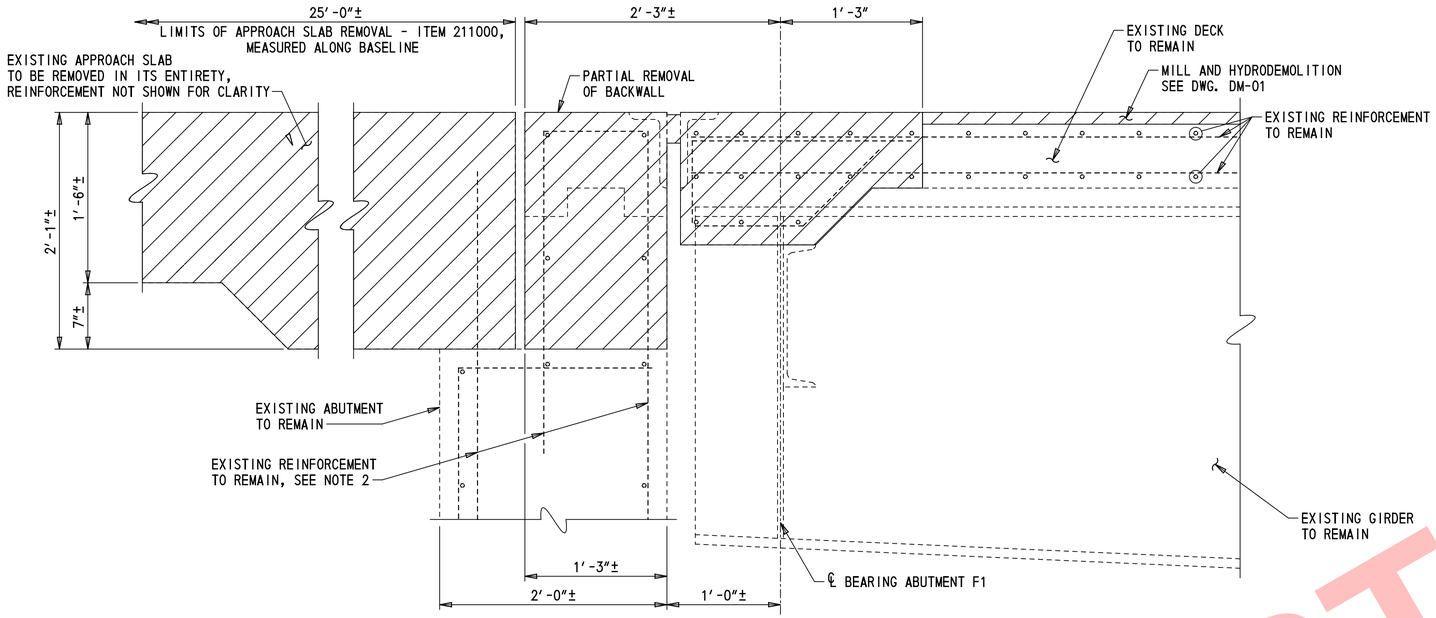

ABUTMENT JOINT AND BACKWALL REMOVAL DETAIL

1½″ = 1′-0″

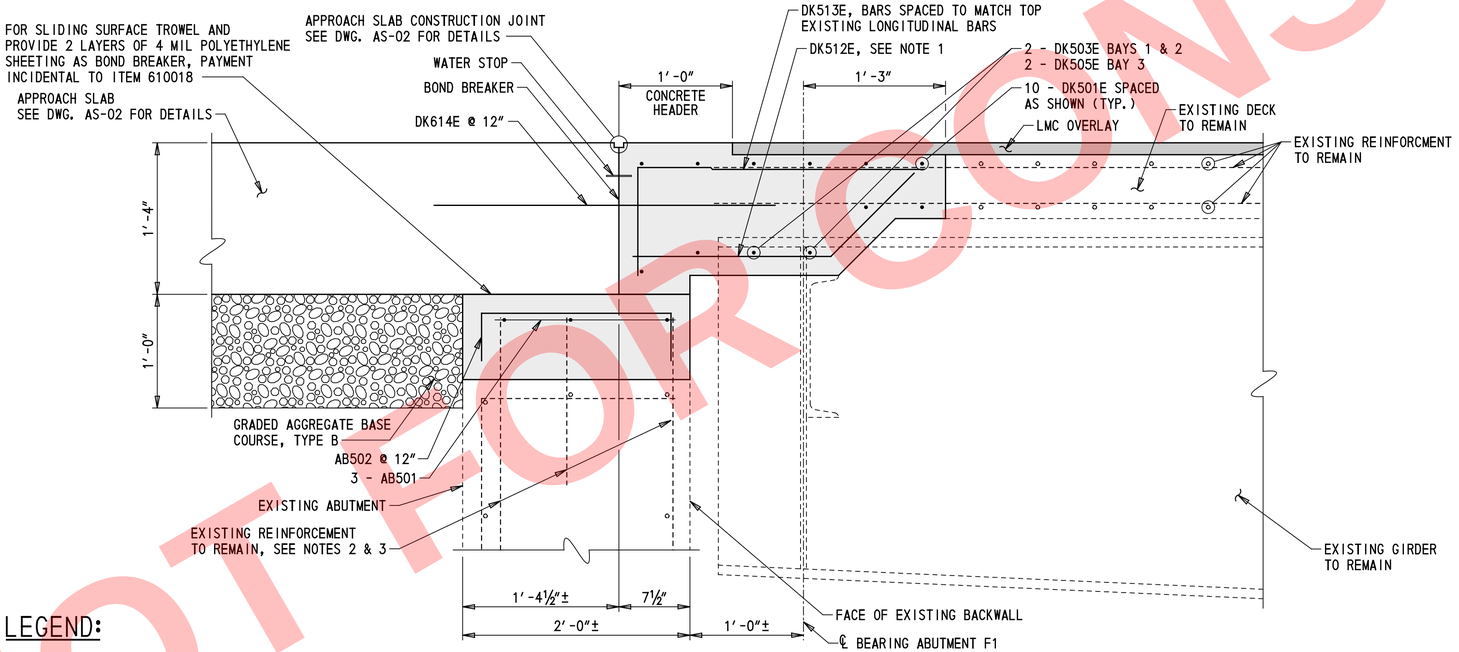

DECK OVER DETAIL

1½″ = 1′-0″

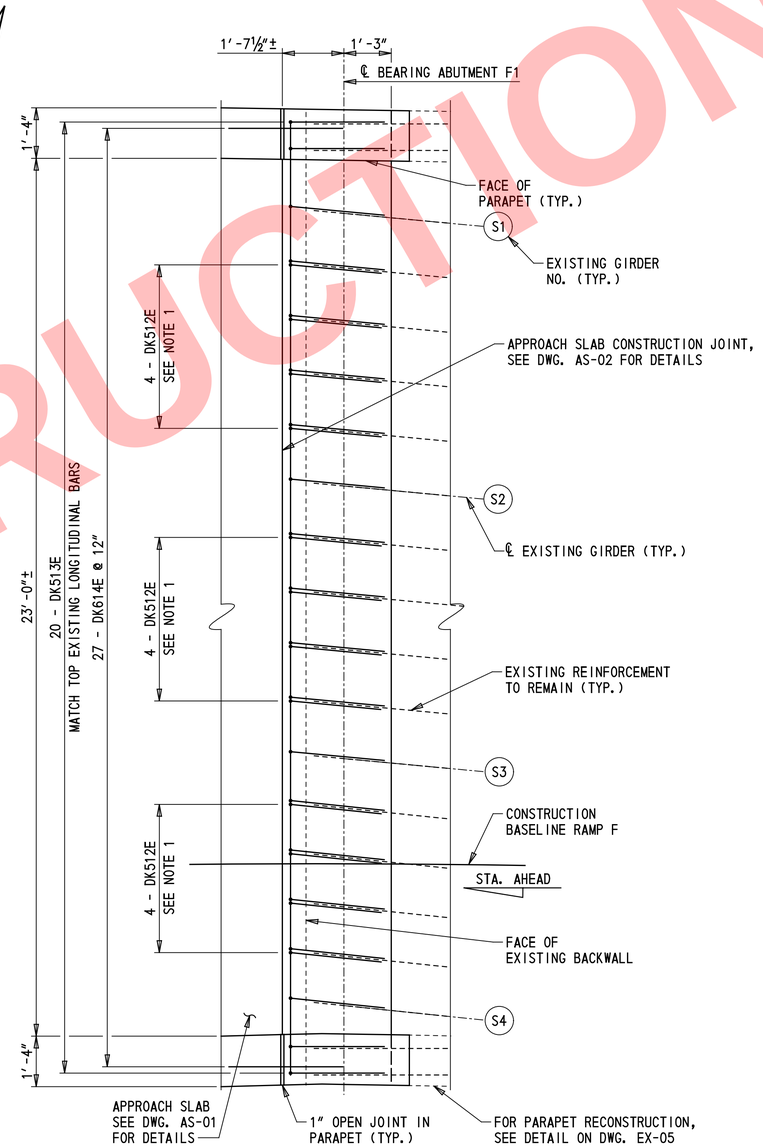

DECK OVER PLAN

½″ = 1′-0″

LEGEND:

- REMOVAL LIMITS - ITEM 211000
- PROPOSED CONSTRUCTION
- PROPOSED LMC OVERLAY

NOTES:

1. BARS SPACED TO MATCH EXISTING TOP LONGITUDINAL BARS BETWEEN GIRDERS.
2. CUT EXISTING REINFORCEMENT TO REMAIN 2″ CLEAR OF NEW TOP OF BACKWALL.
3. EXISTING BARS TO REMAIN SHALL BE CLEANED IN ACCORDANCE WITH SECTION 628.03(E)7. BARS WITH CORROSION, BROKEN, OR WITH INADEQUATE BOND SHALL BE REPAIRED IN ACCORDANCE WITH SECTION 628.03(E)7. PAYMENT FOR THIS WORK WILL BE INCIDENTAL TO ITEM 610017 - PORTLAND CEMENT CONCRETE MASONRY, SUPERSTRUCTURE, CLASS D.

NOT FOR CONSTRUCTION

DELAWARE DEPARTMENT OF TRANSPORTATION	ADDENDUMS / REVISIONS	SCALE AS NOTED	REHABILITATION OF I-95 FROM I-495 TO NORTH OF BRANDYWINE RIVER BRIDGE	CONTRACT T201407404	BRIDGE NO. 1 758F 6149	ABUTMENT F1 DECK OVER DETAILS – 1
				COUNTY NEW CASTLE	DESIGNED BY: BSD	
					CHECKED BY: JRQ	

1-758F EX-04 | SHEET NO. 2-575 | TOTAL SHTS. 2-731

\Bridge 1-758F\758FEX_04.dgn
5/16/2019 9:29:06 PM

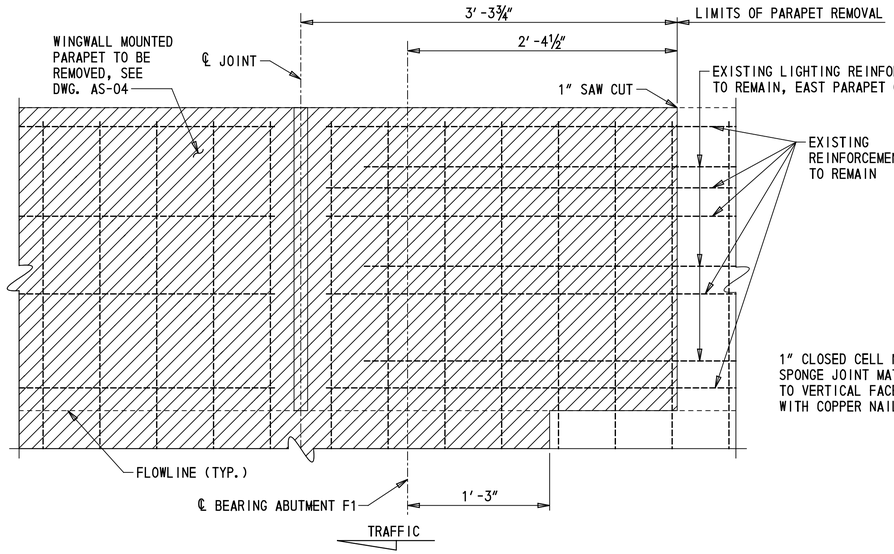

PARAPET REMOVAL AT DECK OVER

1½″ = 1′-0″

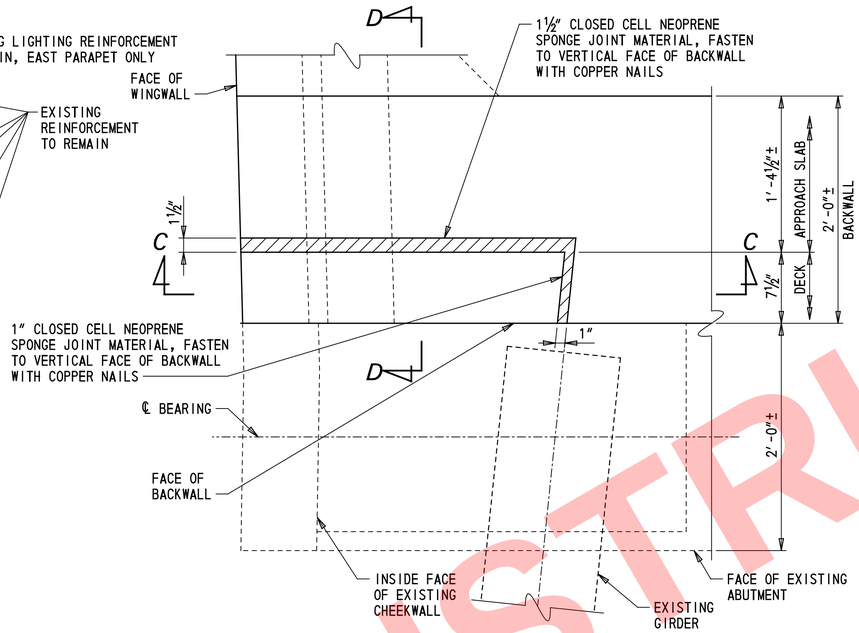

DECK OVER AT OVERHANG PLAN

1½″ = 1′-0″

NOTE: EAST END OF ABUTMENT SHOWN, WEST END SIMILAR

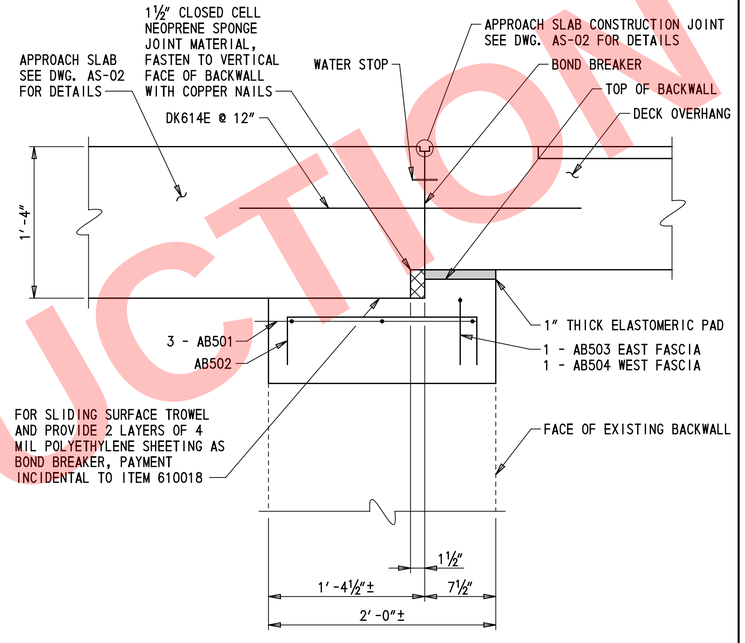

SECTION D-D

1½″ = 1′-0″

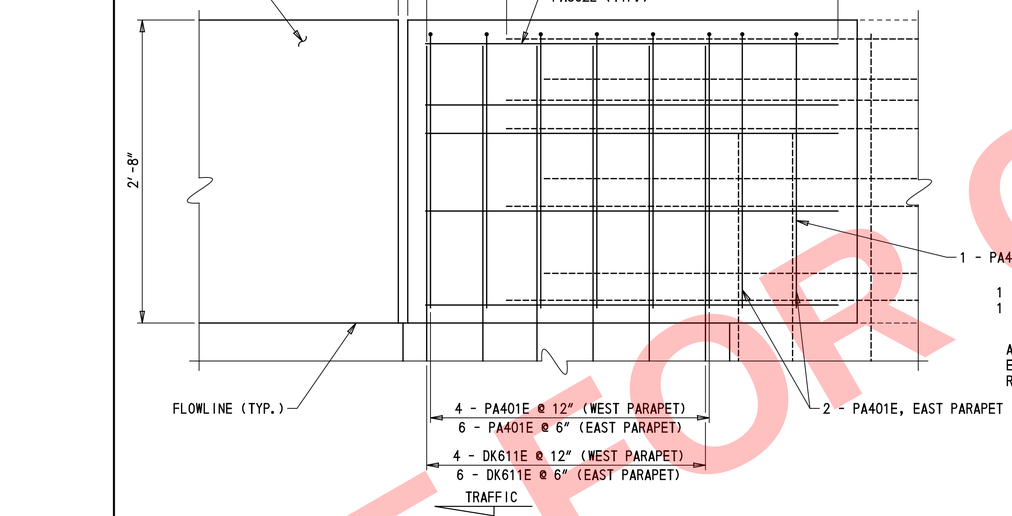

PARAPET RECONSTRUCTION AT DECK OVER

1½″ = 1′-0″

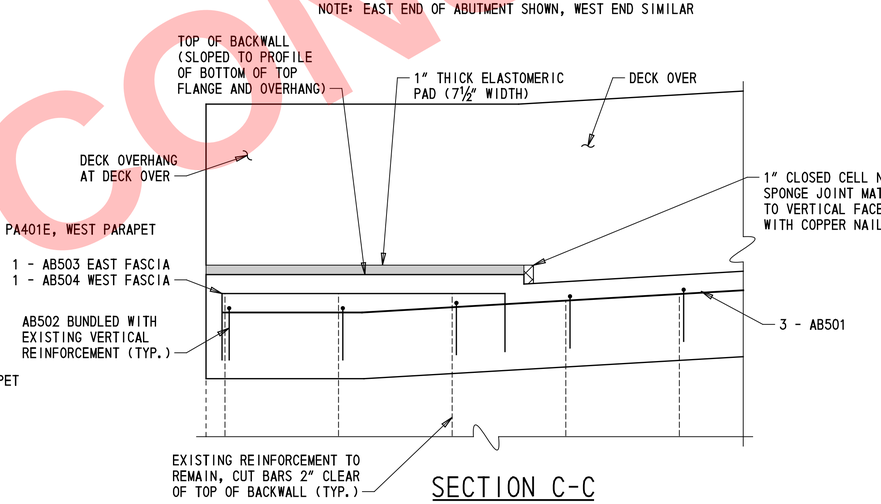

SECTION C-C

1½″ = 1′-0″

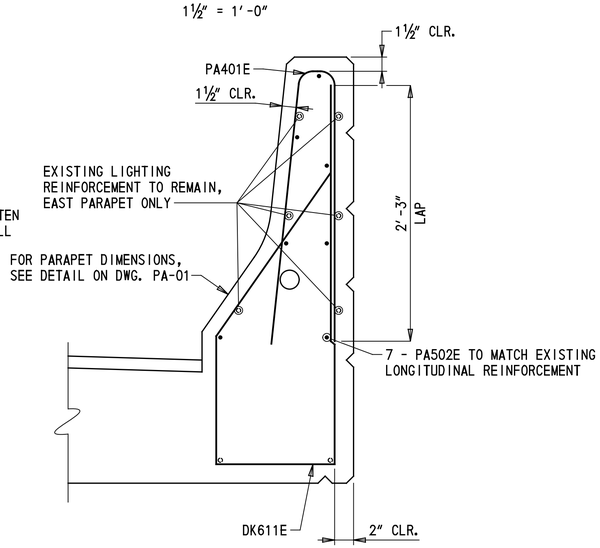

PARAPET DETAIL AT DECK OVER

1½″ = 1′-0″

LEGEND:

▨ REMOVAL LIMITS - ITEM 211000

NOTES:

1. EXISTING BARS TO REMAIN SHALL BE CLEANED IN ACCORDANCE WITH SECTION 628.03(E)7. BARS WITH CORROSION, BROKEN, OR WITH INADEQUATE BOND SHALL BE REPAIRED IN ACCORDANCE WITH SECTION 628.03(E)7. PAYMENT FOR THIS WORK WILL BE INCIDENTAL TO ITEM 610008 - PORTLAND CEMENT CONCRETE MASONRY, PARAPET, CLASS A.

NOT FOR CONSTRUCTION

DELAWARE DEPARTMENT OF TRANSPORTATION	ADDENDUMS / REVISIONS	SCALE AS NOTED	REHABILITATION OF I-95 FROM I-495 TO NORTH OF BRANDYWINE RIVER BRIDGE	CONTRACT T201407404	BRIDGE NO. 1 758F 6149	ABUTMENT F1 DECK OVER DETAILS – 2	1-758F EX-05
				COUNTY NEW CASTLE	DESIGNED BY: BSD		SHEET NO. 2-576
					CHECKED BY: JRQ		TOTAL SHTS. 2-731

...\Bridge 1-758F\758FEX_05.dgn
5/16/2019 5:29:06 PM

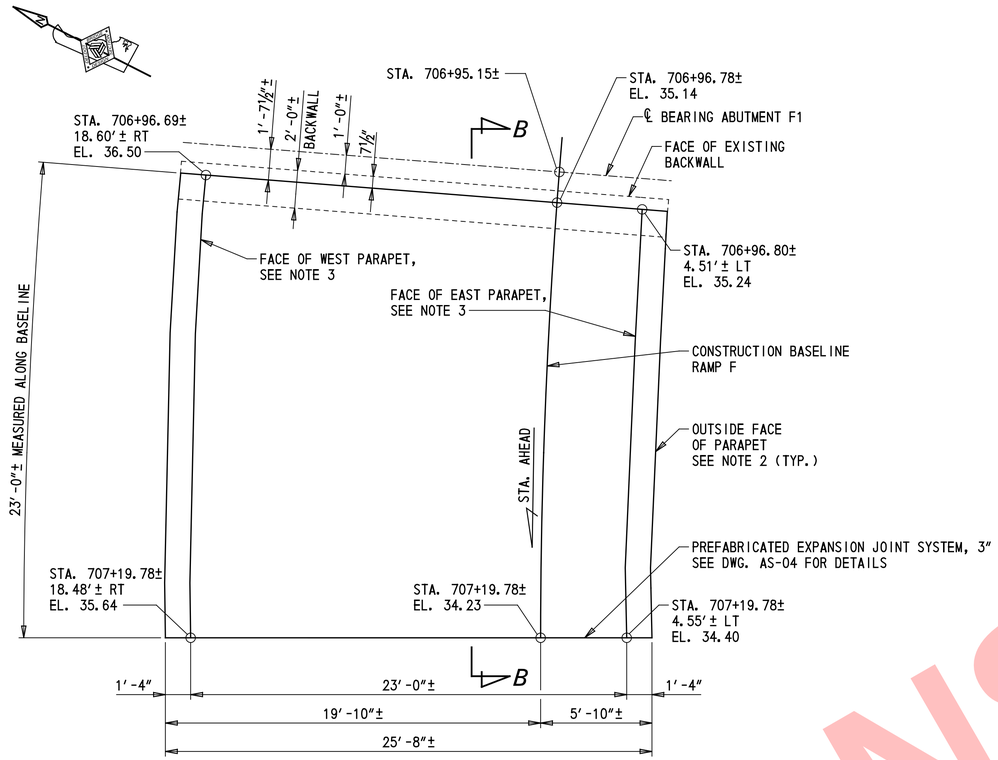

APPROACH SLAB PLAN

¼" = 1'-0"

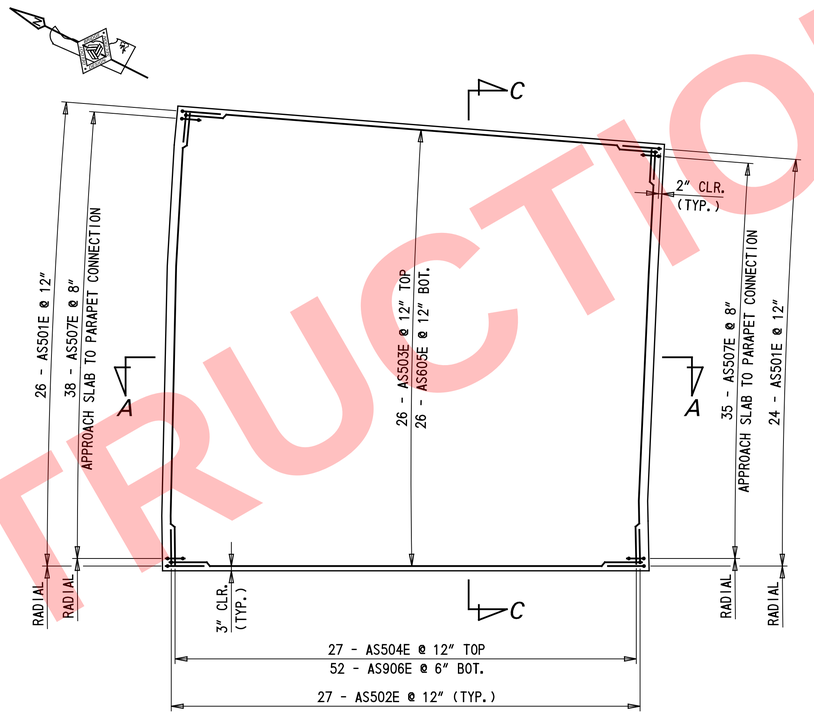

APPROACH SLAB REINFORCEMENT PLAN

¼" = 1'-0"

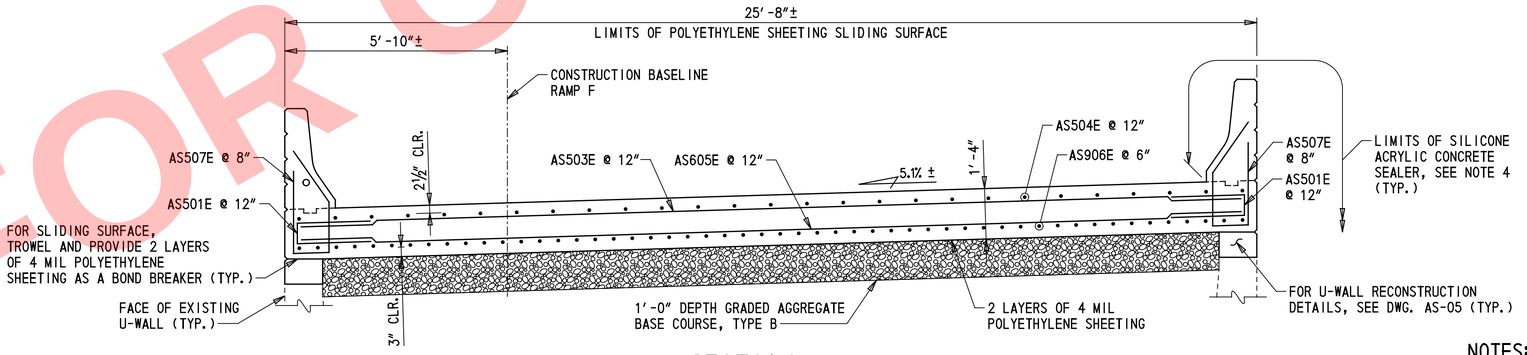

SECTION A-A

½" = 1'-0"

NOTES:

1. FOR SECTIONS B-B AND C-C, SEE DWG. AS-02.
2. OUTSIDE FACE OF PARAPET SHALL BE CONSTRUCTED FLUSH WITH FRONT FACE OF EXISTING WINGWALLS AND U-WALLS.
3. FLOWLINE AT PARAPET SHALL MATCH FLOWLINE OF EXISTING PARAPET ON BRIDGE AND U-WALLS.
4. LIMITS OF SILICONE ACRYLIC CONCRETE SEALER SHALL EXTEND FROM INSIDE FACE OF PARAPET TO EXISTING GROUNDLINE AT OUTSIDE FACE OF U-WALL.

NOT FOR CONSTRUCTION

...\Bridge 1-758F\758FAS-01.dgn
5/16/2019 5:29:08 PM

DELAWARE DEPARTMENT OF TRANSPORTATION	ADDENDUMS / REVISIONS	SCALE AS NOTED	REHABILITATION OF I-95 FROM I-495 TO NORTH OF BRANDYWINE RIVER BRIDGE	CONTRACT T201407404 / COUNTY NEW CASTLE	BRIDGE NO. 1 758F 6149 / DESIGNED BY: BSD / CHECKED BY: CWM	APPROACH SLAB PLAN AND TYPICAL SECTION

1-758F AS-01

SHEET NO. 2-577

TOTAL SHTS. 2-731

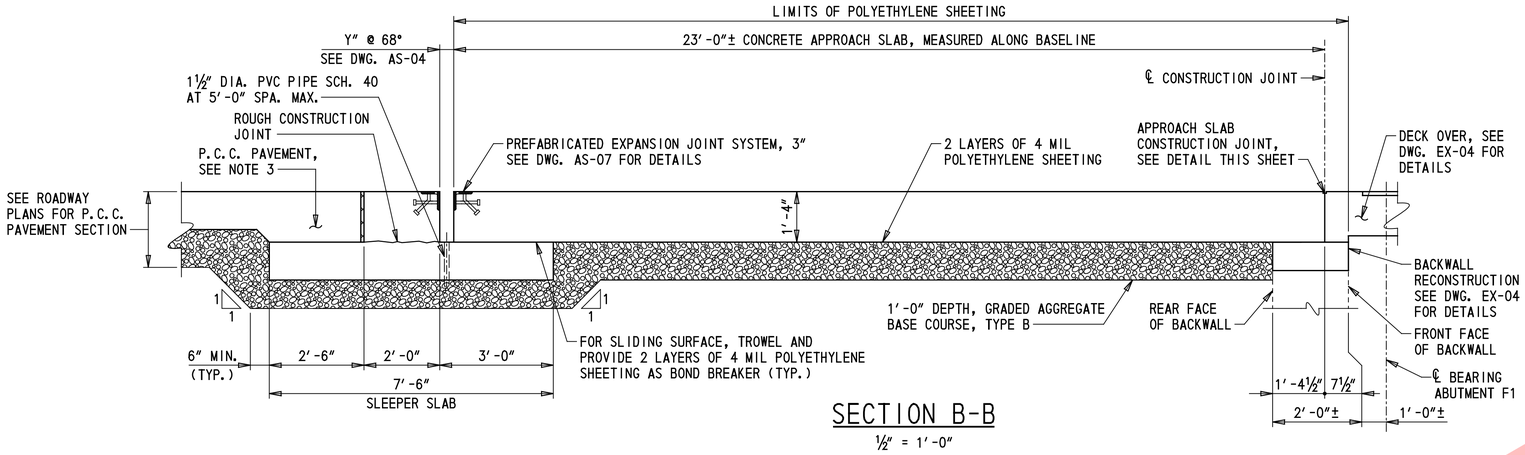

SECTION B-B

½" = 1'-0"

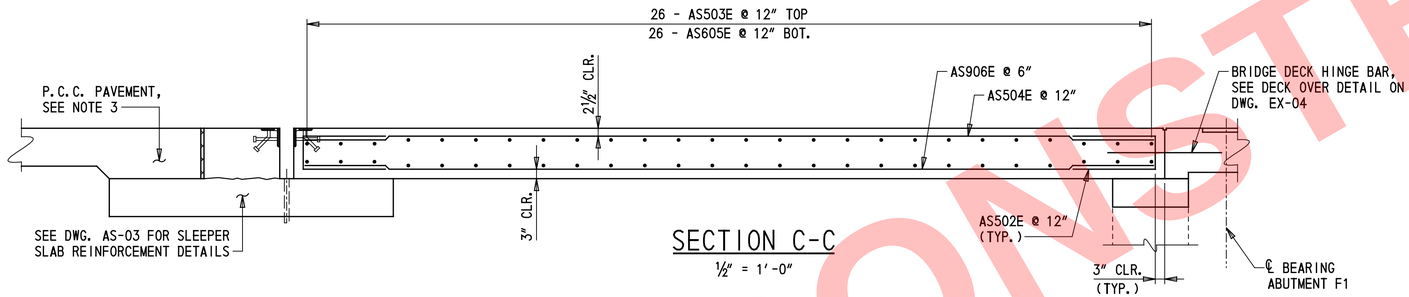

SECTION C-C

½" = 1'-0"

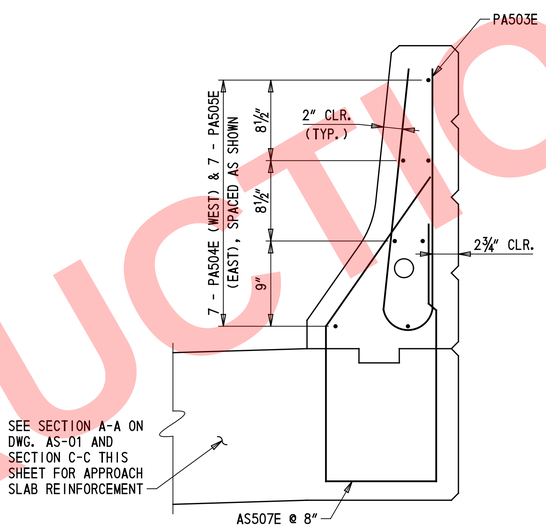

SECTION D-D

1½" = 1'-0"

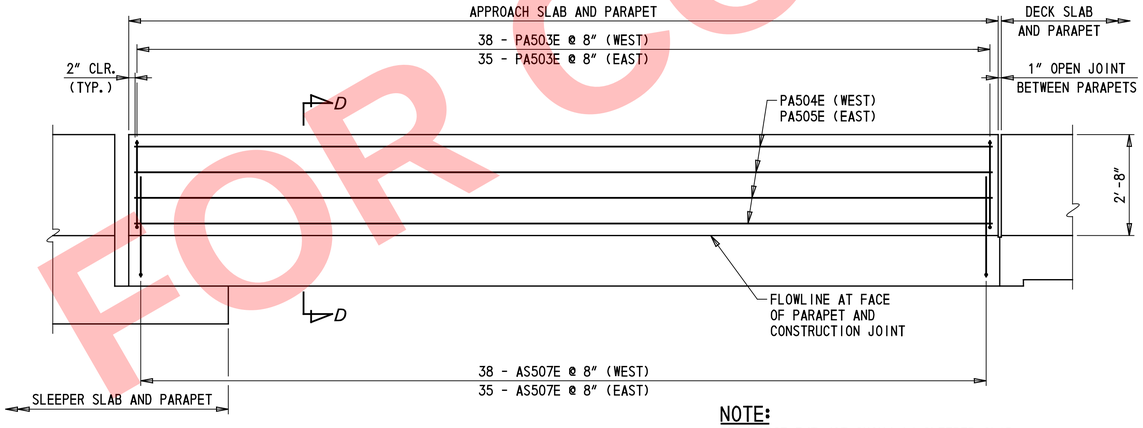

NOTE:
REINFORCEMENT NOT SHOWN IN SLEEPER SLAB
AND APPROACH SLAB FOR CLARITY.

APPROACH SLAB PARAPET REINFORCEMENT ELEVATION

½" = 1'-0"

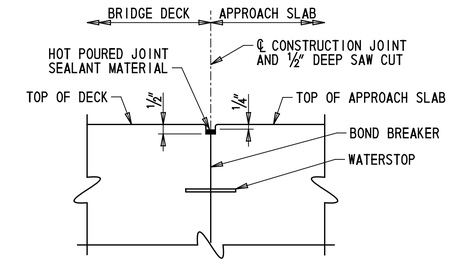

APPROACH SLAB CONSTRUCTION JOINT

NOT TO SCALE

NOTES:

1. FOR ADDITIONAL APPROACH SLAB REINFORCEMENT DETAILS. SEE DWG. AS-01.
2. PAYMENT FOR POLYETHEYLENE SHEETING, BOND BREAKER, WATERSTOP, ½" DEEP SAW CUT, AND HOT POURED JOINT SEALANT WILL BE INCIDENTAL TO ITEM 610018 - PORTLAND CEMEMT CONCRETE, APPROACH SLAB, CLASS D.
3. FOR ADDITIONAL ROADWAY PAVEMENT DETAILS, SEE DELDOT STANDARD P-1. PAYMENT FOR ROADWAY JOINTS WILL BE INCIDENTAL TO ROADWAY PAVEMENT ITEM.
4. FOR ARMORED STRIP SEAL EXPANSION JOINT DETAILS, SEE DWG. AS-04.

NOT FOR CONSTRUCTION

DELAWARE DEPARTMENT OF TRANSPORTATION	ADDENDUMS / REVISIONS	SCALE AS NOTED	REHABILITATION OF I-95 FROM I-495 TO NORTH OF BRANDYWINE RIVER BRIDGE	CONTRACT T201407404	BRIDGE NO. 1 758F 6149	APPROACH SLAB DETAILS	1-758F AS-02
				COUNTY NEW CASTLE	DESIGNED BY: BSD		SHEET NO. 2-578
					CHECKED BY: CWM		TOTAL SHTS. 2-731

I:\Bridge 1-758F\758FAS-02.dgn
5/16/2019 5:29:03 PM

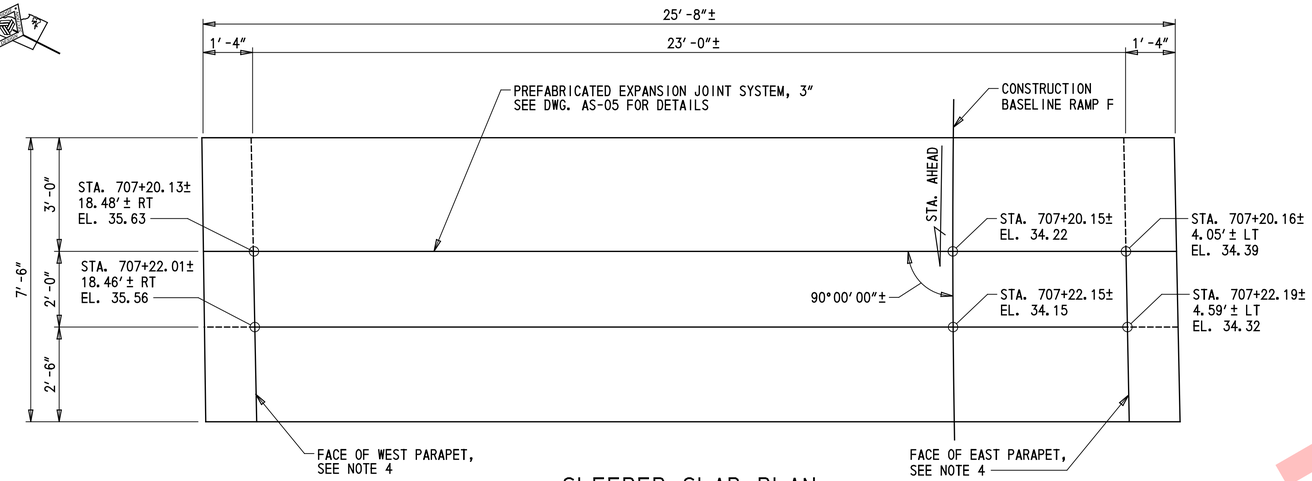

SLEEPER SLAB PLAN

½″ = 1′-0″

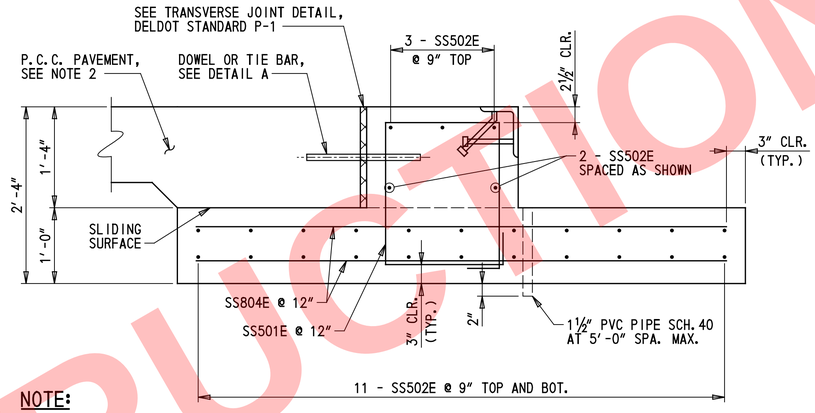

NOTE:

APPROACH SLAB NOT SHOWN FOR CLARITY.

SECTION E-E

1″ = 1′-0″

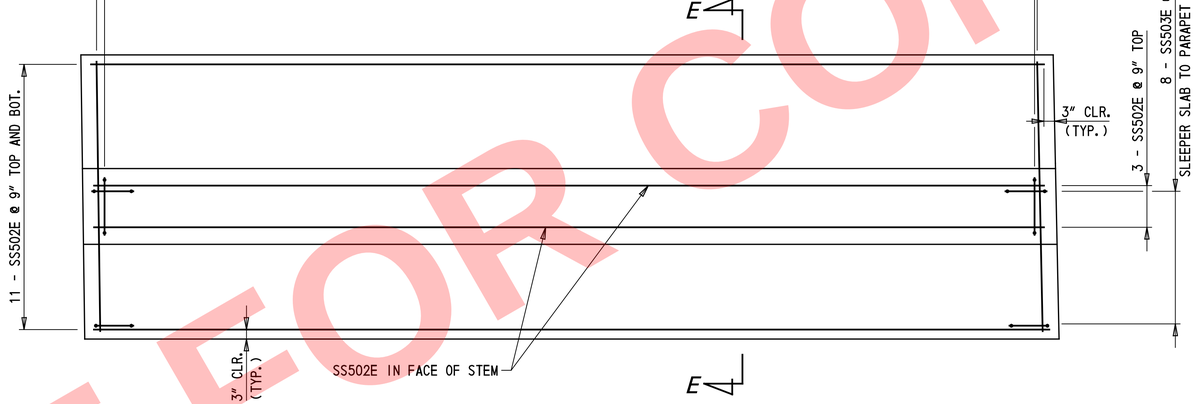

SLEEPER SLAB REINFORCEMENT PLAN

½″ = 1′-0″

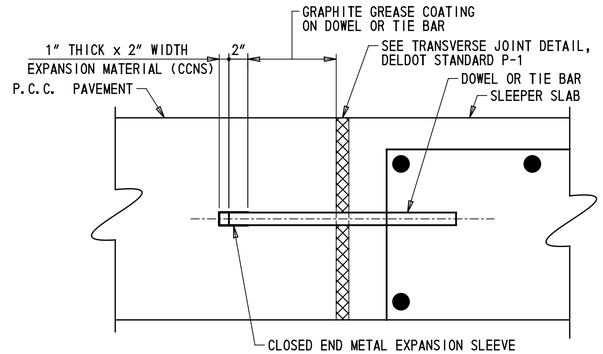

DETAIL A

N.T.S

CCNS = CLOSED CELL NEOPRENE SPONGE

NOTES:

1. FOR APPROACH SLAB PLAN AND DETAILS, SEE DWGS. AS-01 AND AS-02.
2. FOR ADDITIONAL ROADWAY PAVEMENT DETAILS, SEE DELDOT STANDARD P-1. PAYMENT FOR ROADWAY JOINTS SHALL BE INCIDENTAL TO ROADWAY PAYMENT ITEM.
3. PAYMENT FOR CCNS, DOWEL OR TIE BAR, AND GRAPHITE GREASE COATING WILL BE INCIDENTAL TO ITEM 610018 - PORTLAND CEMENT CONCRETE, APPROACH SLAB, CLASS D.
4. FLOWLINE AT PARAPET SHALL MATCH FLOWLINE OF EXISTING PARAPET ON U-WALLS. OUTSIDE FACE OF PARAPETS SHALL BE CONSTRUCTED FLUSH WITH FRONT FACE OF EXISTING U-WALLS.

NOT FOR CONSTRUCTION

DELAWARE DEPARTMENT OF TRANSPORTATION	ADDENDUMS / REVISIONS	SCALE AS NOTED	REHABILITATION OF I-95 FROM I-495 TO NORTH OF BRANDYWINE RIVER BRIDGE	CONTRACT T201407404	BRIDGE NO. 1 758F 6149	SLEEPER SLAB PLAN, SECTION, AND DETAILS	1-758F AS-03 / SHEET NO. 2-579 / TOTAL SHTS. 2-731
				COUNTY NEW CASTLE	DESIGNED BY: BSD / CHECKED BY: JRQ		

\Bridge 1-758F\758FAS_03.dgn
5/16/2019 5:29:09 PM

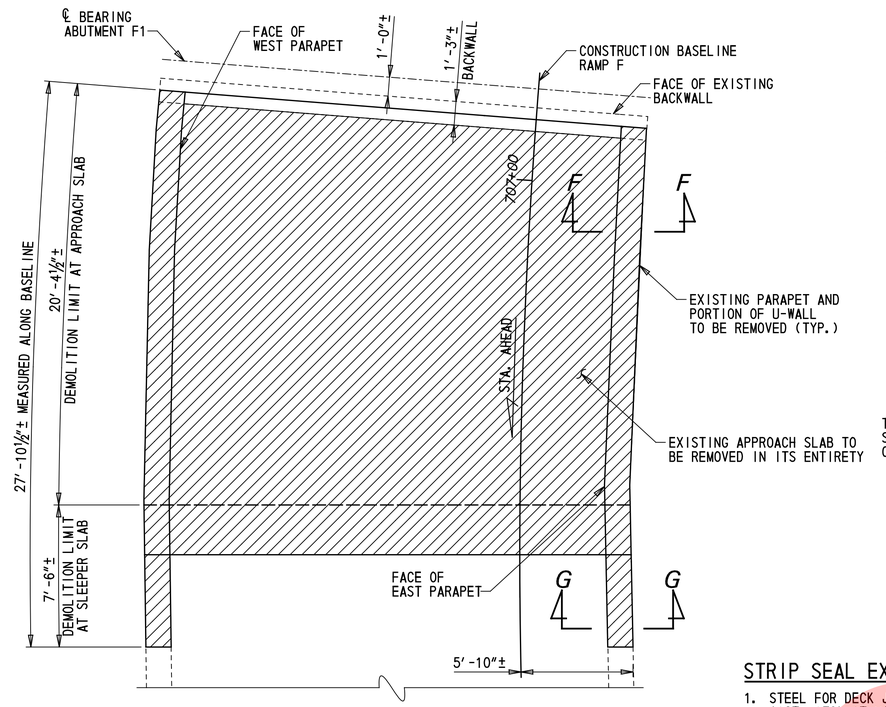

U-WALL PARTIAL DEMOLITION PLAN

¼" = 1'-0"

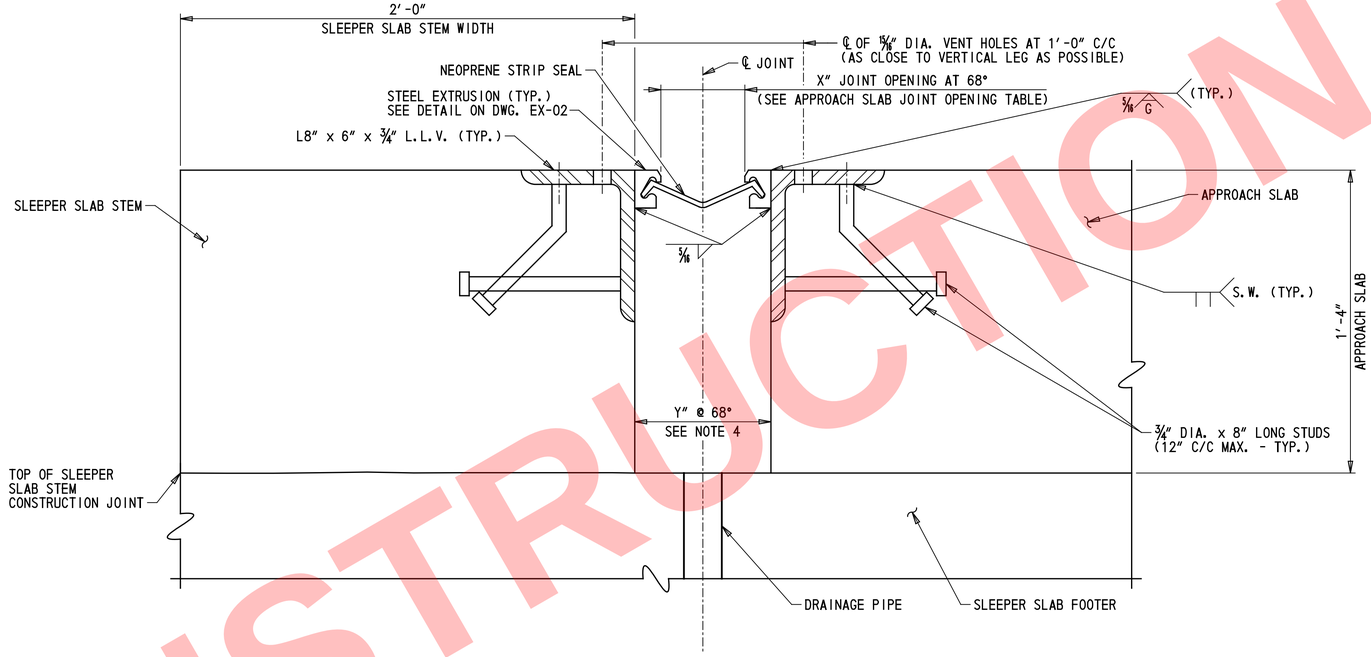

APPROACH SLAB JOINT ASSEMBLY DETAIL

3" = 1'-0"

NOTES:

1. FOR SECTIONS F-F AND G-G, SEE DWG. AS-05.

LEGEND:

REMOVAL LIMITS - ITEM 211000

STRIP SEAL EXPANSION JOINT NOTES:

1. STEEL FOR DECK JOINTS AND STEEL EXTRUSIONS SHALL BE AASHTO M270, GR. 36 (ASTM A36) AT MINIMUM.
2. NEOPRENE EXTRUSION TO MEET D-2628-81 MODIFIED, (RECOVERY TESTS EXCLUDED).
3. THE EXPANSION JOINT SHALL BE CAPABLE OF SEALING THE APPROACH SLAB TO SLEEPER SLAB JOINT TO PREVENT MOISTURE AND OTHER CONTAMINANTS FROM DESCENDING THROUGH THE JOINT.
4. THE CONTRACTOR SHALL ADJUST THE OPEN JOINT (Y) AS REQUIRED BY THE WIDTH OF THE STEEL EXTRUSION USED SO AS TO PROVIDE A X" JOINT OPENING AT 68°F.
5. THE STRIP SEAL SHALL BE INSTALLED IN ONE PIECE ACROSS THE APPROACH SLAB BRIDGE WIDTH. SPLICING OF THE STRIP SEAL IS NOT PERMITTED.
6. THE EXPANSION JOINT SYSTEM WILL BE PAID FOR UNDER ITEM 624000 - PREFABRICATED EXPANSION JOINT SYSTEM, 3".
7. STEEL EXTRUSIONS SHALL BE HOT-DIP GALVANIZED. ENTIRE EXPANSION DAM SHALL BE PAINTED AFTER FABRICATION USING URETHANE SYSTEM. COLOR OF PAINT SYSTEM TO BE APPLIED SHALL MATCH THE COLOR OF THE EXISTING STEEL STRUCTURE.
8. LUBRICANT-ADHESIVE FOR USE IN INSTALLING AND BONDING NEOPRENE SEAL ELEMENTS TO STEEL JOINT COMPONENTS SHALL BE A ONE QUART MOISTURE CURING POLYURETHANE AND HYDROCARBON SOLVENT MIXTURE HAVING THE FOLLOWING PHYSICAL PROPERTIES:

AVERAGE WEIGHT, POUNDS PER GALLON	8±10%
SOLIDS CONTENT	65%
ADHESIVE SHALL REMAIN LIQUID FROM	5°F TO 120°F
FILM STRENGTH, AS PER ASTM D-412	2,000 PSI
ELONGATION	250%

9. STEEL EXTRUSIONS AND JOINT ANGLES SHALL BE CONTINUOUS ACROSS THE FULL WIDTH OF THE ROADWAY. NO SPLICING WILL BE PERMITTED.
10. TRAFFIC PARAPET PLATES ARE REQUIRED. SEE DETAILS ON DWGS. EX-02 AND EX-03 AND JOINT OPENING TABLE, THIS SHEET.

APPROACH SLAB JOINT OPENINGS

TEMPERATURE °F	20°	30°	40°	50°	60°	68°	70°	80°	90°	100°	MOVEMENT CLASSIFICATION
ABUTMENT F1	2"	1 15/16"	1 7/8"	1 13/16"	1 ¾"	1 11/16"	1 11/16"	1 5/8"	1 ½"	1 ½"	3"

NOT FOR CONSTRUCTION

DELAWARE DEPARTMENT OF TRANSPORTATION	ADDENDUMS / REVISIONS	SCALE AS NOTED	REHABILITATION OF I-95 FROM I-495 TO NORTH OF BRANDYWINE RIVER BRIDGE	CONTRACT T201407404 / COUNTY NEW CASTLE	BRIDGE NO. 1 758F 6149 / DESIGNED BY: JRQ / CHECKED BY: CWM

APPROACH SLAB REMOVAL AND JOINT ASSEMBLY DETAILS

1-758F AS-04 | SHEET NO. 2-580 | TOTAL SHTS. 2-731

J:\Bridge 1-758F\758FAS_04.dgn
5/16/2019 5:29:11 PM

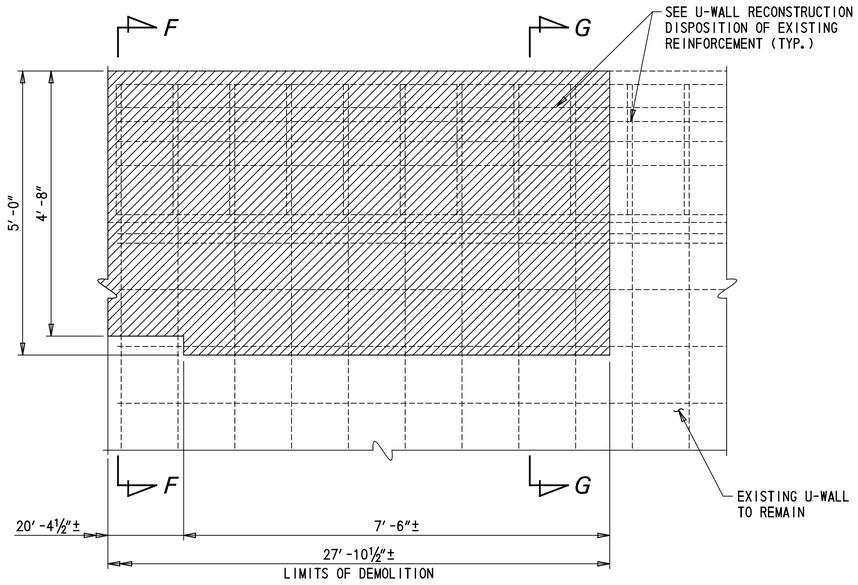

PARTIAL U-WALL REMOVAL

¾" = 1'-0"

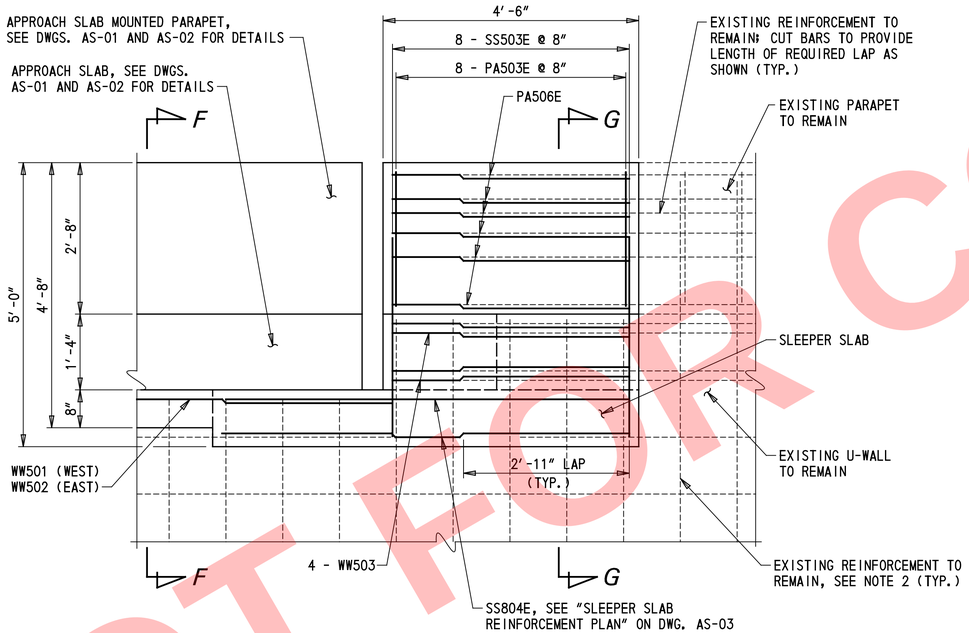

U-WALL RECONSTRUCTION

¾" = 1'-0"

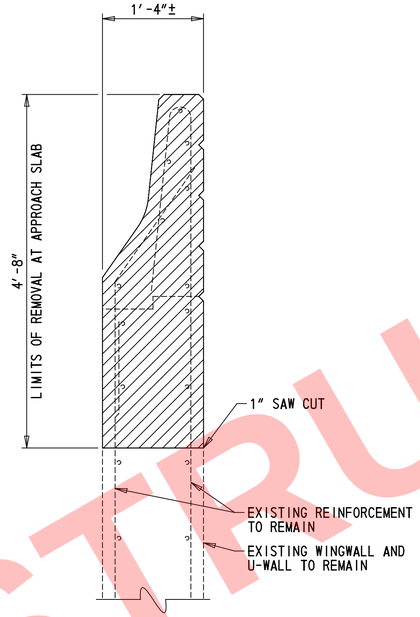

SECTION F-F REMOVAL

1" = 1'-0"

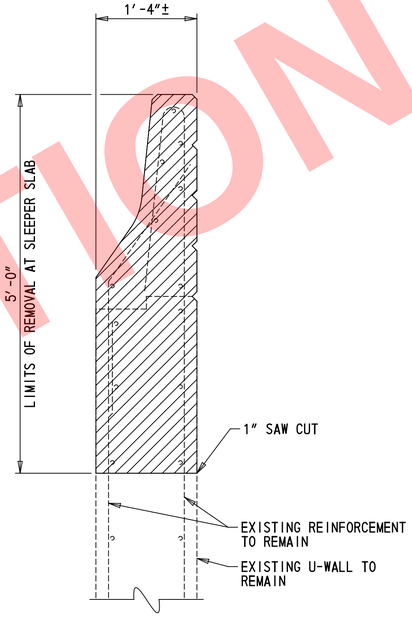

SECTION G-G REMOVAL

1" = 1'-0"

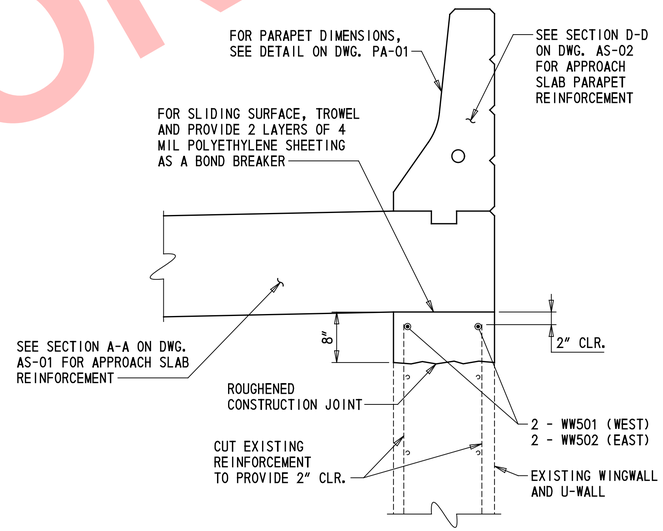

SECTION F-F CONSTRUCTION

1" = 1'-0"

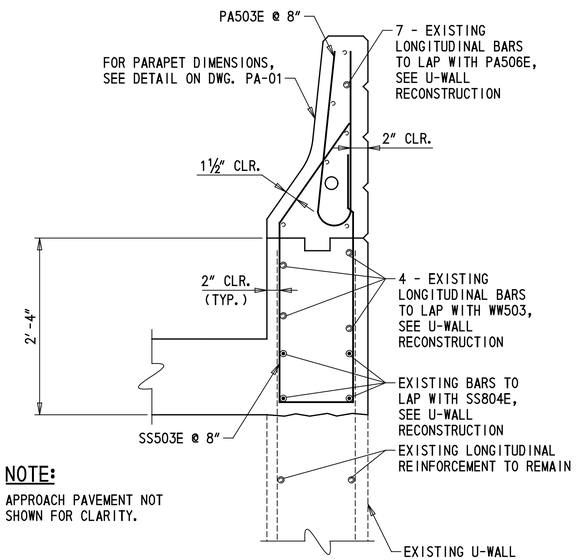

NOTE:

APPROACH PAVEMENT NOT SHOWN FOR CLARITY.

SECTION G-G CONSTRUCTION

1" = 1'-0"

LEGEND:

REMOVAL LIMITS - ITEM 211000

NOTES:

1. FOR U-WALL PARTIAL DEMOLITION PLAN, SEE DWG. AS-04.
2. EXISTING REINFORCING TO REMAIN SHALL BE CLEANED IN ACCORDANCE WITH SECTION 628.

NOT FOR CONSTRUCTION

...\Bridge 1-758F\758FAS_05.dgn
5/16/2019 5:29:12 PM

DELAWARE DEPARTMENT OF TRANSPORTATION	ADDENDUMS / REVISIONS	SCALE AS NOTED	REHABILITATION OF I-95 FROM I-495 TO NORTH OF BRANDYWINE RIVER BRIDGE	CONTRACT T201407404	BRIDGE NO. 1 758F 6149	U-WALL PARTIAL REMOVAL AND RECONSTRUCTION	1-758F AS-05
				COUNTY NEW CASTLE	DESIGNED BY: BSD		SHEET NO. 2-581
					CHECKED BY: CWM		TOTAL SHTS. 2-731

(1) ANY MARK NUMBER WITH SUFFIX 'E' DENOTES EPOXY COATED REINFORCING STEEL.

(2) ALL MARK 'LOCATION PREFIXES' SHALL CONSIST OF TWO LETTERS AND ARE AS FOLLOWS: AB = ABUTMENT, AS = APPROACH SLAB, BC = BOX CULVERT, BW = BACKWALL, CL = COLUMN, DK = DECK, DL = DOWEL, FT = FOOTING, HW = HEADWALL, MS = MISC. BARS, PA = PARAPET, PR = PIER, SC = SHEETPILE CAP, SL = SLAB, TW = TOEWALL, WL = WALL (UNIQUE LOCATION), WW = WINGWALL

SPECIFICATIONS					BENDING DIMENSIONS (FEET-INCHES /QUARTER INCH)										
QTY.	SIZE	LENGTH	MARK	TYPE	A	B	C	D	E	F / R	G	H	J	K	O
ABUTMENT															
3	5	25-40	AB501	STR		25-40									
27	5	2-60	AB502	17		0-50	1-80	0-50							
1	5	3-53	AB503	17		0-70	2-43	0-60							
1	5	2-83	AB504	17		0-62	1-73	0-62							
WINGWALL															
2	5	24-100	WW501	STR		24-100									
2	5	22-110	WW502	STR		22-110									
8	5	4-20	WW503	STR		4-20									
DECK															
30	5	25-40	DK501E	STR		25-40									
10	5	27-62	DK502E	STR		27-62									
16	5	5-91	DK503E	STR		5-91									
8	5	5-00	DK504E	STR		5-00									
6	5	5-20	DK505E	STR		5-20									
8	5	4-42	DK506E	STR		4-42									
6	5	6-30	DK507E	STR		6-30									
62	5	2-22	DK508E	DE20		0-00	0-33	0-63	0-72	0-82		0-43	0-00	0-43	
12	5	2-43	DK509E	DE20		0-00	0-33	0-70	0-91	0-83		0-50	0-00	0-50	
12	5	2-12	DK510E	DE20		0-00	0-33	0-70	0-60	0-83		0-50	0-00	0-50	
34	6	7-22	DK611E	DE16		3-32	1-02	1-12	1-90	0-00		1-51		1-00	
12	5	3-83	DK512E	16	0-00	0-00	1-82	1-02				0-90		0-90	2-52
20	5	5-51	DK513E	17		2-61	0-112	0-00							
27	6	3-00	DK614E	STR		3-00									
PARAPET															
37	4	5-00	PA401E	H1		2-30	0-53	2-31		0-13		0-63			
14	5	3-72	PA502E	STR		3-72									
89	5	4-112	PA503E	H1		2-12	0-82	2-12		0-22		0-23			
7	5	24-00	PA504E	STR		24-00									
7	5	22-10	PA505E	STR		22-10									
14	5	4-20	PA506E	STR		4-20									

SPECIFICATIONS					BENDING DIMENSIONS (FEET-INCHES /QUARTER INCH)										
QTY.	SIZE	LENGTH	MARK	TYPE	A	B	C	D	E	F / R	G	H	J	K	O
APPROACH SLAB															
54	5	4-83	AS501E	17		2-00	0-83	2-00							
50	5	4-102	AS502E	17		2-00	0-102	2-00							
26	5	25-41	AS503E	STR		25-41									
1 X 27	5	24-00	AS504E	STR		24-00									
		T0				T0									
		22-10				22-10									
26	6	25-41	AS605E	STR		25-41									
1 X 52	9	24-00	AS906E	STR		24-00									
		T0				T0									
		22-10				22-10									
73	5	6-02	AS507E	DE16		2-20	0-110	1-42	1-70	0-00		1-32		0-103	
SLEEPER SLAB															
27	5	7-90	SS501E	T2	0-60	1-60	1-102	1-60	1-102		0-60				
27	5	25-20	SS502E	STR		25-20									
16	5	8-12	SS503E	DE16		3-20	1-00	2-42	1-70	0-00		1-32		0-110	
54	8	7-00	SS804E	STR		7-00									

SPECIFICATIONS					BENDING DIMENSIONS (FEET-INCHES /QUARTER INCH)										
QTY.	SIZE	LENGTH	MARK	TYPE	A	B	C	D	E	F / R	G	H	J	K	O

ASTM STANDARD ENGLISH REINFORCING BARS

BAR SIZE	NOMINAL DIMENSIONS: DIAMETER (INCHES)	NOMINAL DIMENSIONS: AREA (INCHES²)	NOMINAL DIMENSIONS: WEIGHT (LBS./FT.)
3	0.375	0.110	0.376
4	0.500	0.200	0.668
5	0.625	0.310	1.043
6	0.750	0.440	1.502
7	0.875	0.600	2.044
8	1.000	0.790	2.670
9	1.128	1.000	3.400
10	1.270	1.270	4.303
11	1.410	1.560	5.313
14	1.693	2.250	7.650
18	2.257	4.000	13.600

RECOMMENDED END HOOKS, APPLICABLE TO ALL GRADES

BAR SIZE	180° HOOKS: D	180° HOOKS: A OR G	180° HOOKS: J	90° HOOKS: A OR G
3	2¼"	5"	3"	6"
4	3"	6"	4"	8"
5	3¾"	7"	5"	10"
6	4½"	8"	6"	1-0"
7	5¼"	10"	7"	1-2"
8	6"	11"	8"	1-4"
9	9½"	1-3"	11¾"	1-7"
10	10¾"	1-5"	1-1¼"	1-10"
11	1-0"	1-7"	1-2¾"	2-0"
14	1-6¼"	2-3"	1-9¾"	2-7"
18	2-0"	3-0"	2-4½"	3-5"

STIRRUP AND TIE HOOKS, APPLICABLE TO ALL GRADES

BAR SIZE	90° HOOK: D	90° HOOK: A OR G	135° HOOK: A OR G	135° HOOK: A OR G
3	1½"	4"	4"	2½"
4	2"	4½"	4½"	3"
5	2½"	6"	5½"	3¾"
6	4½"	1-0"	8"	4½"
7	5¼"	1-2"	9"	5¼"
8	6"	1-4"	10½"	6"

NOTES:

1. FIGURES SHOWN IN CIRCLES REPRESENT BAR BEND TYPES.
2. STANDARD BAR BENDS INCLUDE ONLY THOSE TYPES BELOW, INDICATED AS SUCH.
3. ALL DIMENSIONS OUT-TO-OUT, EXCEPT "A" AND "G" ON STD. 180° AND 135° HOOKS.
4. "J" DIMENSIONS ON 180° HOOKS TO BE SHOWN ONLY WHERE NECESSARY TO RESTRICT HOOK SIZE, OTHERWISE STANDARD 'ACI' HOOKS ARE TO BE USED.
5. WHERE "J" IS NOT SHOWN, "J" WILL BE KEPT EQUAL TO OR LESS THAN "H" ON TYPES 3, 5 AND 22. WHERE "J" CAN EXCEED "H", IT SHALL BE SHOWN.
6. "H" DIMENSIONS OF STIRRUPS TO BE SHOWN AS NEEDED TO FIT WITHIN THE CONCRETE.
7. UNLESS OTHERWISE NOTED, DIAMETER "D" IS THE SAME FOR ALL BENDS AND HOOKS ON A BAR (EXCEPT FOR BEND TYPES 11 AND 13).
8. WHERE SLOPE DIFFERS FROM 45° OFFSET, "H" AND "K" MUST BE SHOWN.
9. WHERE BARS ARE TO BE BENT MORE ACCURATELY THAN STANDARD BENDING TOLERANCES, BENDING DIMENSIONS REQUIRING CLOSER FABRICATION SHOULD HAVE LIMITS INDICATED.
10. FOR RECOMMENDED DIAMETER "D", OF BENDS, HOOKS, ETC., REFER TO TABLE ABOVE, 'CRSI' OR 'ACI' TABLES WHERE APPLICABLE AND REQUIRED.
11. TYPE S1-S6, S11, T1-T3 AND T6-T9 APPLICABLE TO BAR SIZES #3 THROUGH #8.

STIRRUP AND TIE HOOKS

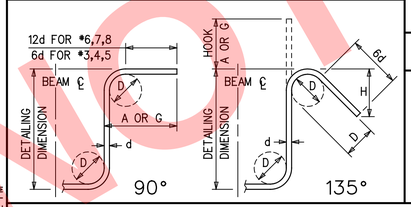

180° AND 90° END HOOKS

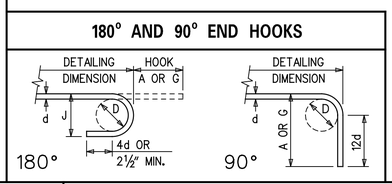

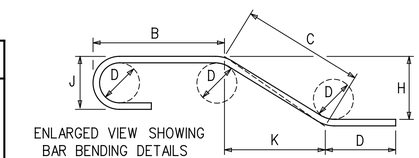

ENLARGED VIEW SHOWING BAR BENDING DETAILS

STANDARD BAR BENDS

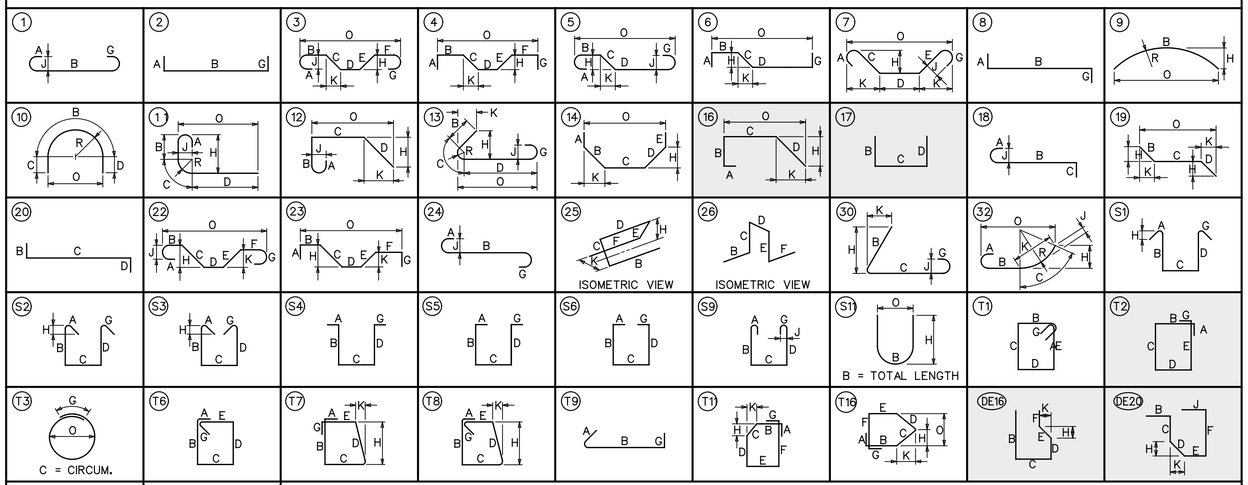

SPECIAL BAR BENDS

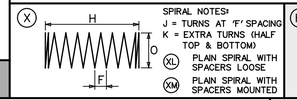

NOT FOR CONSTRUCTION

DELAWARE DEPARTMENT OF TRANSPORTATION

ADDENDUMS / REVISIONS

SCALE AS NOTED

REHABILITATION OF I-95 FROM I-495 TO NORTH OF BRANDYWINE RIVER BRIDGE

CONTRACT	BRIDGE NO.	1 758F 6149
T201407404	DESIGNED BY: BJM	
COUNTY	CHECKED BY: JRQ	
NEW CASTLE		

REINFORCEMENT SCHEDULE

1-758F BR-01	
SHEET NO.	2-582
TOTAL SHTS.	2-731

I:\Bridge 1-758F\758FBR_01.dgn
5/16/2019 5:29:12 PM

SECTION 200

1. REMOVAL OF STRUCTURES AND OBSTRUCTIONS:
   ITEMS TO BE REMOVED UNDER ITEM #211000 - REMOVAL OF STRUCTURES AND OBSTRUCTIONS ASSOCIATED WITH BRIDGE 1-758G SHALL INCLUDE, BUT NOT BE LIMITED TO, THE FOLLOWING:
   - CONCRETE APPROACH SLAB
   - PORTION OF CONCRETE BACKWALL AND U-WALLS
   - EXPANSION JOINT AT ABUTMENT
   - PORTION OF CONCRETE PARAPETS AT ABUTMENT

SECTION 600

2. PORTLAND CEMENT CONCRETE:
   USE PORTLAND CEMENT CONCRETE FOR CAST-IN-PLACE ELEMENTS AS FOLLOWS:
   (f'c = 28-DAY COMPRESSIVE STRENGTH)
   CLASS A - PARAPETS, PIERS, ABUTMENTS, U-WALLS (f'c = 4.5 ksi)
   CLASS D - DECK, APPROACH SLAB, SLEEPER SLAB (f'c = 4.5 ksi)
   A HIGHER CLASS CONCRETE MAY BE SUBSTITUTED FOR A LOWER CLASS CONCRETE AT NO ADDITIONAL COST TO THE DEPARTMENT WITH APPROVAL OF THE ENGINEER.
   -CHAMFER ALL EXPOSED EDGES ¾" X ¾" UNLESS OTHERWISE NOTED.
   -CONTRACTOR SHALL SUPPLY CONCRETE FOR THE PARAPETS, BRIDGE DECK, AND APPROACH SLABS THAT INCLUDES A SHRINKAGE-REDUCING/COMPENSATING ADMIXTURE. PAYMENT FOR ADMIXTURE WILL BE INCIDENTAL TO ITS RESPECTIVE CONCRETE ITEM (ITEMS 610008, 610017, AND 610018). THE ADMIXTURE MAY BE SUPPLIED BY ONE PRODUCT THAT PROVIDES BOTH EXPANSION AND PORE WATER SURFACE TENSION OR TWO SEPARATE PRODUCTS EACH ADDED AT DOSAGE RECOMMENDED BY MANUFACTURER'S TECHNICAL DATA SHEETS AND HAVING THE FOLLOWING CHARACTERISTICS:
   (A) DESIGNED TO PROVIDE BOTH THE FOLLOWING CHARACTERISTICS:
   I. EXPANDS AT A RATE THAT CLOSELY COMPENSATES FOR SHRINKAGE OF THE CONCRETE MIX.
   II. REDUCES THE CAPILLARY SURFACE TENSION OF THE CONCRETE PORE WATER.
   (B) PROVIDES AT LEAST 80% SHRINKAGE REDUCTION AS MEASURED AND DOCUMENTED BY FIELD PERFORMANCE.
   (C) FORMULATED FOR USE IN FREEZING AND THAWING WEATHER.

3. BAR REINFORCEMENT:
   -REINFORCING STEEL SHALL CONFORM TO AASHTO M31 (ASTM A615), GRADE 60.
   -REINFORCING STEEL SHALL HAVE A 3" CLEAR COVER IF CAST AGAINST EARTH OR A 2" CLEAR COVER ELSEWHERE, UNLESS OTHERWISE SPECIFIED ON THE PLANS.
   -ALL REINFORCING STEEL SHALL BE PROTECTED WITH FUSION BONDED EPOXY, EXCEPT AS NOTED ON THE PLANS. EPOXY COATED REINFORCING STEEL SHALL CONFORM TO ASTM A775.
   -ANY FIELD CUTTING OR FIELD BENDING MUST BE APPROVED BY THE ENGINEER. PAYMENT SHALL BE INCIDENTAL TO THE BAR REINFORCEMENT ITEM.
   -GALVANIZED REINFORCING STEEL MAY BE SUBSTITUTED FOR EPOXY-COATED REINFORCING STEEL AT NO ADDITIONAL COST TO THE DEPARTMENT WITH APPROVAL OF THE ENGINEER.
   -WELDING OF REINFORCEMENT DURING FABRICATION OR CONSTRUCTION IS NOT PERMITTED UNLESS SPECIFIED.

4. CONCRETE SEALER:
   REFER TO DIAGRAMS CONTAINING SILICONE-BASED ACRYLIC CONCRETE SEALER LIMITS ON DWGS. AB-01, PR-01 TO PR-08, AND TS-01. EPOXY CONCRETE SEALER SHALL BE APPLIED TO THE BEAM SEATS AND BEARING PEDESTALS AT EACH PIER. SILICONE-BASED ACRYLIC CONCRETE SEALER SHALL BE APPLIED TO THE REMAINING EXPOSED CONCRETE SURFACES AT THE PIERS, ABUTMENTS, AND U-WALLS.

5. STRUCTURAL STEEL:
   PROVIDE STRUCTURAL STEEL CONFORMING TO AASHTO M270, GRADE 50 (ASTM A709, GRADE 50) DESIGNATION, EXCEPT WHEN NOTED OTHERWISE. THE ADDITIONAL REQUIREMENTS FOR CHARPY V-NOTCH TESTING (DENOTED AS 'CVN' ON PLANS) OF AASHTO M270 FOR PRIMARY LOAD CARRYING MEMBERS SHALL BE INCLUDED. SUPPLEMENTAL NOTCH TOUGHNESS REQUIREMENTS ARE MANDATORY FOR:
   - JACKING DIAPHRAGMS

   ALL FASTENERS ARE ⅞" DIAMETER ASTM F3125 GR. A325 HIGH STRENGTH BOLTS, TYPE 1, UNLESS OTHERWISE NOTED.

   PROVIDE MATERIALS AND PERFORM WORK IN ACCORDANCE WITH AASHTO/AWS D1.5M/1.5:2015 BRIDGE WELDING CODE, AND CONTRACT DOCUMENTS. MAKE TACK WELDS WITH THE SAME TYPE OF ELECTRODE AND INCORPORATE IN THE FINAL WELD. NO OTHER TACK WELDING WILL BE PERMITTED, EXCEPT AS NOTED ON THE PLANS. DO NOT USE FORM SUPPORT SYSTEMS THAT WILL CAUSE UNACCEPTABLE OVERSTRESS OR DEFORMATION TO PERMANENT BRIDGE MEMBERS.

   SET ANCHOR BOLTS TO TEMPLATE IN CORED HOLES. FILL THE HOLES WITH NON-SHRINK GROUT TO BE FLUSH WITH THE TOP CONCRETE SURFACE.

   PAINTING OF EXISTING STRUCTURAL STEEL SHALL BE IN ACCORDANCE WITH SECTION 616. EXISTING STEEL SHALL BE PAINTED AS INDICATED ON THE PLANS. COLOR SHALL MATCH EXISTING STEEL.

6. BEARINGS:
   ALL ELASTOMERIC BEARINGS SHALL BE STEEL LAMINATED ELASTOMERIC DESIGNED AS PER AASHTO 14.7.5, METHOD B, AND SHALL CONFORM TO SECTION 623 OF THE STANDARD SPECIFICATIONS. PAYMENT WILL BE MADE UNDER ITEM #623000 - ELASTOMERIC BEARINGS.

MISCELLANEOUS

7. DESIGN SPECIFICATIONS:
   (A) 2017 DELDOT BRIDGE DESIGN MANUAL.
   (B) 2014 AASHTO LRFD BRIDGE DESIGN SPECIFICATIONS, 7TH EDITION, U.S. CUSTOMARY UNITS INCLUDING 2015 AND 2016 INTERIM REVISIONS.
   (C) PROVIDE MATERIALS AND PERFORM WORK IN ACCORDANCE WITH THE 2016 DELDOT STANDARD SPECIFICATIONS AND 2018 SUPPLEMENTAL SPECIFICATIONS.

8. LOADING:
   -DEAD LOADS INCLUDE 25 PSF FOR FUTURE WEARING SURFACE ON DECK SLAB AND 15 PSF FOR STAY-IN-PLACE FORMS (INCLUDES CONCRETE IN FORM CORRUGATIONS). PARAPET LOADS ARE DISTRIBUTED 75% TO THE EXTERIOR AND 25% TO THE FIRST INTERIOR BEAM.
   -DESIGN LIVE LOADS INCLUDE HL-93 LOADING.
   -FATIGUE DESIGN IS BASED ON THE FOLLOWING ONE DIRECTIONAL TRAFFIC VOLUMES: ADTT = 525 IN YEAR 2040.
   -LIVE LOAD DISTRIBUTION TO THE BEAMS IS BASED ON THE AASHTO SIMPLIFIED METHOD.
   -THERMAL LOADS AND MOVEMENTS ARE BASED ON THE MODERATE TEMPERATURE RANGE AS STIPULATED IN THE AASHTO LRFD DESIGN SPECIFICATIONS AS 0° TO 120°F. THE NORMAL TEMPERATURE SHALL BE CONSIDERED TO BE 68° F.
   -LIVE LOAD DEFLECTION SHALL BE LIMITED TO L/800.
   -FOR REINFORCEMENT DISTRIBUTION REQUIREMENTS, CONSIDER CLASS I EXPOSURE CRITERIA FOR DECKS.

9. EXISTING CONDITIONS:
   -ALL EXISTING DIMENSIONS AND ELEVATIONS SHOWN ARE BASED ON THE BEST AVAILABLE INFORMATION AND ARE APPROXIMATE ONLY. THE CONTRACTOR SHALL FIELD VERIFY ALL EXISTING DIMENSIONS, GEOMETRY, AND ELEVATIONS AS NECESSARY PRIOR TO ORDERING ANY MATERIALS AND COMMENCING CONSTRUCTION TO ENSURE PROPER FIT OF THE PROPOSED CONSTRUCTION. PAYMENT SHALL BE INCIDENTAL TO ITEM #763501 - CONSTRUCTION ENGINEERING.

10. ROADWAY CLEARANCES:
    A MINIMUM OF 16'-6" SHALL BE MAINTAINED ABOVE ALL ROADWAYS.

11. CONTINGENT QUANTITIES:
    THESE CONTRACT DRAWINGS HAVE BEEN PREPARED BASED ON ORIGINAL CONTRACT PLANS, SHOP DRAWINGS, AND FIELD INSPECTION NOTES TAKEN FROM NOVEMBER 16, 2014 THROUGH FEBRUARY 5, 2015. ACTUAL CONDITIONS MAY REQUIRE MODIFICATION IN CONSTRUCTION DETAILS AND WORK QUANTITIES. ALL DIMENSIONS AND DETAILS SHOWN ON THE PLANS SHALL BE VERIFIED BY THE CONTRACTOR PRIOR TO ORDERING ANY MATERIALS. SEE DWG. PN-04 FOR PAY ITEM CONTINGENCY PERCENTAGES.

12. UTILITIES:
    SEE UTILITY STATEMENT AND UTILITY RELOCATION PLAN SHEETS FOR FURTHER INFORMATION ON UTILITY COORDINATION.

13. ENVIRONMENTAL COMPLIANCE:
    REFER TO THE ENVIRONMENTAL COMPLIANCE PLAN FOR RESTRICTIONS AND ADDITIONAL GUIDANCE THAT MAY BE ASSOCIATED TO THIS PROJECT.

14. ABBREVIATIONS:
    BOT. = BOTTOM
    C/C = CENTER-TO-CENTER
    ℄ =CENTERLINE
    CLR. = CLEAR
    DIA. = DIAMETER
    DWG. = DRAWING
    E.F. = EACH FACE
    EL. = ELEVATION
    EXP. = EXPANSION
    EQ = ENTIRE QUANTITY
    FIX. = FIXED
    L.L.V. = LONG LEG VERTICAL
    LMC = LATEX MODIFIED CONCRETE
    LT = LEFT
    MAX. = MAXIMUM
    MIN. = MINIMUM
    NO. = NUMBER
    N.T.S. = NOT TO SCALE
    OH = OVERHEAD
    P.C.C. = PORTLAND CEMENT CONCRETE
    R = RADIUS
    RT = RIGHT
    S.S. = STAINLESS STEEL
    S.W. = SHOP WELD
    SCH. = SCHEDULE
    SHLD. = SHOULDER
    STA. = STATION
    TRK = TRACK
    TYP. = TYPICAL
    UG = UNDERGROUND

INDEX OF BRIDGE 1-758G SHEETS

BR. SHEET Nº	BR. DWG. Nº	TABLE OF CONTENTS
2-579	PN-01	BRIDGE PROJECT NOTES
2-580	PN-02	CONCRETE REPAIR DETAILS
2-581	PN-03	QUANTITIES AND LOAD RATINGS
2-582	PN-04	SUMMARY OF PROPOSED REPAIR AND RECONSTRUCTION ITEMS
2-583 TO 2-584	PE-01 TO PE-02	GENERAL PLAN AND ELEVATION
2-585	TS-01	BRIDGE TYPICAL SECTIONS
2-595	DM-01	MILLING AND HYDRODEMOLITION DETAILS
2-596	BB-01	BEARING DETAILS
2-597 TO 2-598	RH-01 TO RH-02	JACKING DETAILS
2-600	PA-01	PARAPET DETAILS
2-601 TO 2-605	EX-01 TO EX-05	EXPANSION JOINT DETAILS
2-606 TO 2-607	EX-06 TO EX-08	NORTH ABUTMENT DECK OVER DETAILS
2-608 TO 2-612	AS-01 TO AS-05	APPROACH SLAB AND SLEEPER SLAB DETAILS
2-615	BR-01	REINFORCING BAR LIST
TOTAL BRIDGE SHEETS: 26		

NOT FOR CONSTRUCTION

N:\31087-00A\Control-I-95\CADD\Bridge\BR1-758G_PN01.dgn
5/31/2019 12:15:24 PM

ADDENDA / REVISIONS		NOT TO SCALE	REHABILITATION OF I-95 FROM I-495 TO NORTH OF BRANDYWINE RIVER BRIDGE	CONTRACT T201407404	BRIDGE NO. 1 758G 6149	BRIDGE PROJECT NOTES	PN-01
				COUNTY NEW CASTLE	DESIGNED BY: DAN		SECTION WRA
					CHECKED BY: WAG		SHEET NO. 2-583

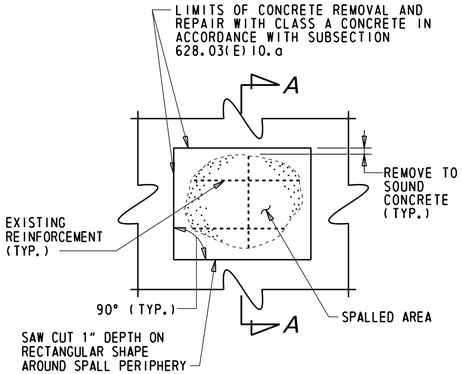

PLAN

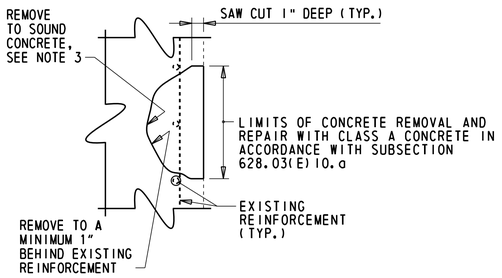

SECTION A-A

DEEP SPALL REPAIR

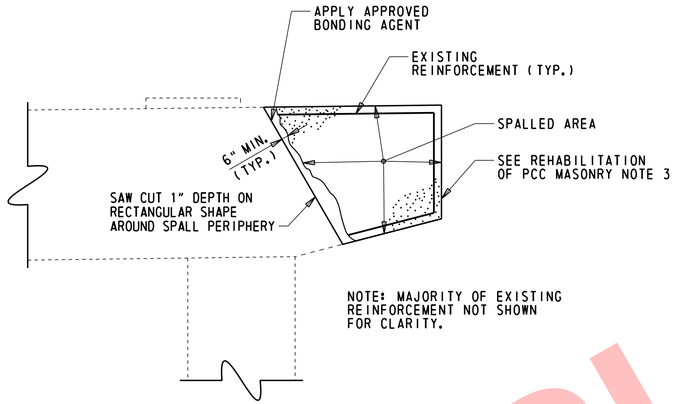

REHABILITATION OF PCC MASONRY

DEEP SPALL REPAIR NOTES

1. DEEP SPALL REPAIRS ARE DEFINED AS PATCHES THAT EXTEND BELOW THE TOP MAT OF REINFORCEMENT. DELAMINATED CONCRETE HAS BEEN ASSUMED AS DEEP SPALL REPAIRS.
2. ALL WORK INVOLVING METHODS OF CONCRETE REMOVAL; CLEANING OF CONCRETE SURFACE AND EXISTING REINFORCEMENT; REPAIRING OR REPLACING DAMAGED REINFORCEMENT AS RESULT OF CONSTRUCTION ACTIVITIES OR SECTION LOSS; PRESENCE OF CONTRACTION OR EXPANSION JOINTS; SURFACE PREPARATION; AND CONCRETE PLACEMENT SHALL BE PERFORMED IN ACCORDANCE WITH SUBSECTION 628.03(E) OF THE STANDARD SPECIFICATIONS. PAYMENT INCIDENTAL TO 628041 - DEEP SPALL REPAIR.
3. IF DEPTH OF REPAIR EXTENDS MORE THAN 6" BEYOND SURFACE OF CONCRETE, CONTRACTOR SHALL STOP WORK AND NOTIFY THE ENGINEER IMMEDIATELY.

REHABILITATION OF PCC MASONRY NOTES

1. REHABILITATION OF PCC MASONRY IS DEFINED AS DEEP SPALL PATCHES THAT EXCEED THE 0.5 C.Y. THRESHOLD IN A SINGLE AREA.
2. ALL WORK INVOLVING METHODS OF CONCRETE REMOVAL; CLEANING OF CONCRETE SURFACE AND EXISTING REINFORCEMENT; REPAIRING OR REPLACING DAMAGED REINFORCEMENT AS RESULT OF CONSTRUCTION ACTIVITIES OR SECTION LOSS; PRESENCE OF CONTRACTION OR EXPANSION JOINTS; SURFACE PREPARATION; AND CONCRETE PLACEMENT SHALL BE PERFORMED IN ACCORDANCE WITH SUBSECTION 628.03(E) OF THE STANDARD SPECIFICATIONS. PAYMENT INCIDENTAL TO 628042 - REHABILITATION OF PCC MASONRY.
3. DETAIL SHOWN FOR "REHABILITATION OF EXISTING PCC MASONRY" UTILIZES A GENERIC EXAMPLE USING PARTIAL RECONSTRUCTION OF AN EXISTING PIER CAP. SEE ABUTMENT AND PIER REHABILITATION SHEETS FOR SIZE AND LOCATION OF REPAIRS AT EACH SUBSTRUCTURE UNIT.
4. IF DEPTH OF REPAIR EXTENDS MORE THAN 6" BEYOND SURFACE OF CONCRETE, CONTRACTOR SHALL STOP WORK AND NOTIFY THE ENGINEER IMMEDIATELY.

REMOVAL OF EXISTING DECK REPAIR NOTES

1. AFTER EXISTING OVERLAY IS REMOVED, PRIOR TO HYDRODEMOLITION, ANY EXISTING DECK REPAIRS THAT ARE LOOSE, PARTIALLY DELAMINATED, OR OTHERWISE UNSOUND, WILL BE MEASURED BY THE ENGINEER AND MARKED FOR REMOVAL.
2. THE CONTRACTOR SHALL REMOVE THE EXISTING DECK REPAIRS IN ACCORDANCE WITH SECTION 628.03(F).
3. THE REMOVAL SHALL NOT INCLUDE ANY UNSOUND ORIGINAL BRIDGE DECK CONCRETE.
4. REFER TO ITEM 6285xx - REMOVAL OF EXISTING DECK REPAIR FOR PAYMENT AND ADDITIONAL INFORMATION.
5. IF REMOVAL OF EXISTING DECK REPAIR REACHES FULL DEPTH, AND WITH THE APPROVAL OF THE ENGINEER, REPAIR AREA SHALL BE REPAIRED IN ACCORDANCE WITH SUBSECTION 628.03(F) AND PAID FOR UNDER ITEM 628053 - DECK REPAIR, FULL DEPTH. REMOVAL OF EXISTING DECK REPAIRS THAT ARE CHANGED TO DECK REPAIR, FULL DEPTH WILL ONLY BE PAID FOR ONCE UNDER ITEM 628053.

DECK REPAIR NOTES

1. AFTER EXISTING OVERLAY IS REMOVED (WHERE APPLICABLE), PRIOR TO HYDRODEMOLITION, EXISTING AREAS OF DECK REQUIRING FULL DEPTH REPAIR AS DIRECTED BY THE ENGINEER, SHALL BE REPAIRED USING DETAIL SHOWN ON THIS SHEET.
2. ALL WORK INVOLVING METHODS OF CONCRETE REMOVAL; CLEANING OF CONCRETE SURFACE AND EXISTING REINFORCEMENT; REPAIRING OR REPLACING DAMAGED REINFORCEMENT AS RESULT OF CONSTRUCTION ACTIVITIES OR SECTION LOSS; PRESENCE OF CONTRACTION OR EXPANSION JOINTS; SURFACE PREPARATION; AND CONCRETE PLACEMENT SHALL BE PERFORMED IN ACCORDANCE WITH SUBSECTION 628.03(F) OF THE STANDARD SPECIFICATIONS AND ITEMS 7605xx - TOTAL SURFACE HYDRODEMOLITION, AND ITEM 6255xx - ADDITIONAL LATEX-MODIFIED CONCRETE FOR PARTIAL DECK REPAIRS. PAYMENT FOR FULL DEPTH DECK REPAIRS MADE AFTER MILLING AND PRIOR TO HYDRODEMOLITION WILL BE MADE UNDER ITEM 628053 - DECK REPAIR, FULL DEPTH. PAYMENT FOR FULL DEPTH DECK REPAIRS MADE AFTER HYDRODEMOLITION WILL BE MADE UNDER ITEM 628053 - DECK REPAIR, FULL DEPTH.
3. MILLING, HYDRODEMOLITION, AND LMC OVERLAY WILL BE PAID FOR UNDER THEIR RESPECTIVE ITEMS.

LEGEND:

- LIMITS OF REMOVAL, MECHANICAL MILLING (ITEM 760013)
- LIMITS OF HYDRODEMOLITION (ITEM 7605xx)
- LIMITS OF REMOVAL (ITEM 628053 OR 6285xx)
- CLASS D CONCRETE

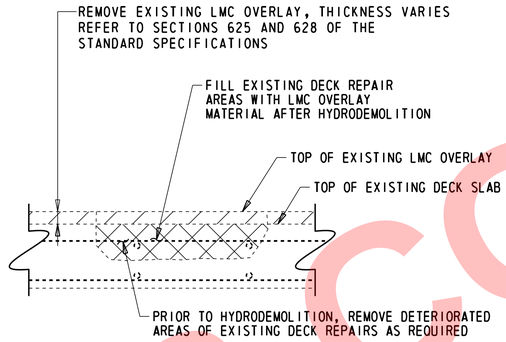

REMOVAL OF EXISTING DECK REPAIRS (ITEM 6285xx)

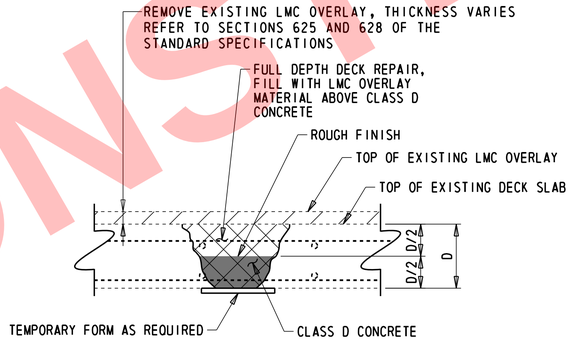

DECK REPAIR, FULL DEPTH (ITEM 628053)

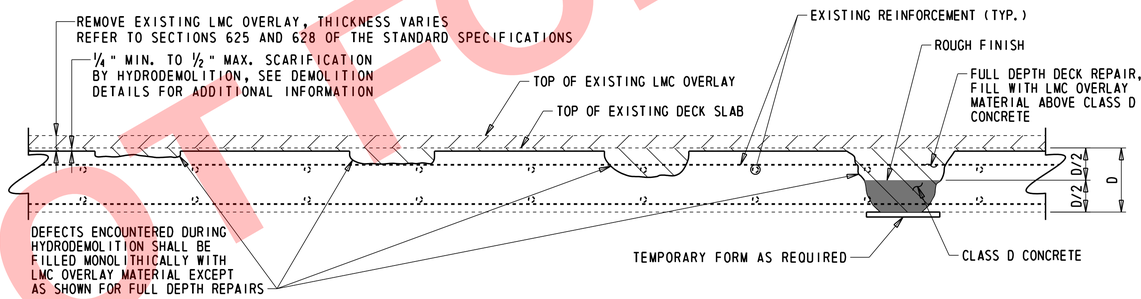

HYDRODEMOLITION AND DECK REPAIR (WITH OVERLAY)

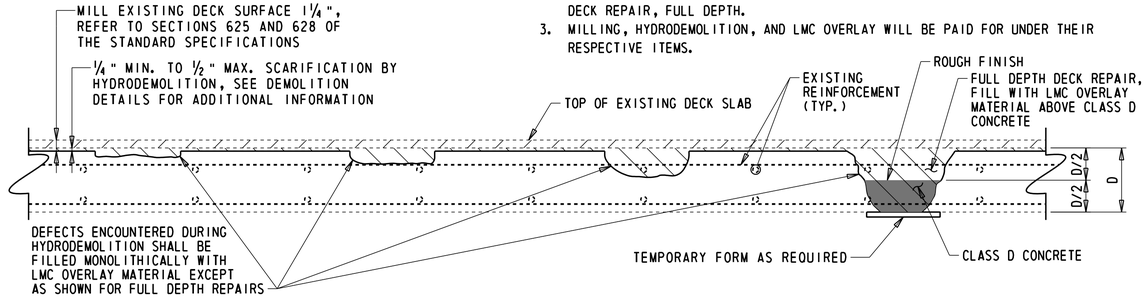

HYDRODEMOLITION AND DECK REPAIR (WITHOUT OVERLAY)

NOT FOR CONSTRUCTION

N:\31987-00A\Control-I-95\CADD\Bridge\BR1-758G_PN04.dgn
5/31/2019 12:15:25 PM

ADDENDA / REVISIONS		NOT TO SCALE	REHABILITATION OF I-95 FROM I-495 TO NORTH OF BRANDYWINE RIVER BRIDGE	CONTRACT T201407404	BRIDGE NO. 1 758G 6149	CONCRETE REPAIR DETAILS	PN-02
				COUNTY NEW CASTLE	DESIGNED BY: DAN		SECTION WRA
					CHECKED BY: WAG		SHEET NO. 584

QUANTITIES

ITEM Nº	ITEM TITLE	UNIT	QUANTITY
207000	STRUCTURAL EXCAVATION	CY	42
211000	REMOVAL OF STRUCTURES AND OBSTRUCTIONS	LS	1
301001	GRADED AGGREGATE BASE COURSE, TYPE B	CY	26
604000	JACKING BRIDGE	LS	1
610002	PORTLAND CEMENT CONCRETE MASONRY, ABUTMENT ABOVE FOOTING, CLASS A	CY	1
610008	PORTLAND CEMENT CONCRETE MASONRY, PARAPET, CLASS A	CY	11
610017	PORTLAND CEMENT CONCRETE MASONRY, SUPERSTRUCTURE, CLASS D	CY	28
610018	PORTLAND CEMENT CONCRETE MASONRY, APPROACH SLAB, CLASS D	CY	49
611000	BAR REINFORCEMENT	LB	315
611001	BAR REINFORCEMENT, EPOXY COATED	LB	17412
613000	EPOXY CONCRETE SEALER	SF	816
613001	SILICONE BASED ACRYLIC CONCRETE SEALER	SF	24022
615006	STEEL STRUCTURE REPAIR	LS	1
623000	ELASTOMERIC BEARINGS	EA	4
624000	PREFABRICATED EXPANSION JOINT SYSTEM, 3"	LF	283
625000	LATEX-MODIFIED CONCRETE OVERLAY INSTALLATION	SY-IN	2969
625001	FURNISHING LATEX-MODIFIED CONCRETE OVERLAY	CY	104
6255XX	ADDITIONAL LATEX-MODIFIED CONCRETE FOR PARTIAL DECK REPAIRS	CY	38
628001	REPAIR OF CONCRETE STRUCTURES BY EPOXY INJECTION	LF	58
628041	DEEP SPALL REPAIR	CF	20
628042	REHABILITATION OF P.C.C. MASONRY	CY	2
628053	DECK REPAIR, FULL DEPTH	SF	3
6285XX	REMOVAL OF EXISTING DECK REPAIRS	SF	2
760013	PAVEMENT MILLING, PORTLAND CEMENT CONCRETE PAVEMENT	SY-IN	2561
7605XX	TOTAL SURFACE HYDRODEMOLITION	SY	1906

NOTE: QUANTITIES INCLUDE CONTINGENT PERCENTAGES AS NOTED IN NOTE 11 ON DWG. PN-01 AND AS SHOWN IN THE REPAIR TABLE ON DWG. PN-04.

LOAD RATING SUMMARY

DESIGN VEHICLE	*RATING FACTOR*	*RATING WEIGHT (TON)*	*CONTROLLING MEMBER*	*CONTROLLING POINT*	*LOAD EFFECT*
HL-93 TRUCK (INVENTORY)	*1.64*	*N/A*	*INTERIOR BEAM*	*100*	*BEARING*
HL-93 TANDEM (INVENTORY)	*1.99*	*N/A*	*INTERIOR BEAM*	*110*	*BEARING*
HL-93 TRUCK TRAIN (INVENTORY)	*N/A*	*N/A*	*N/A*	*N/A*	*N/A*
HS-20 (INVENTORY)	*2.45*	*88.23*	*INTERIOR BEAM*	*100*	*BEARING*
HL-93 TRUCK (OPERATING)	*2.13*	*N/A*	*INTERIOR BEAM*	*100*	*BEARING*
HL-93 TANDEM (OPERATING)	*2.58*	*N/A*	*INTERIOR BEAM*	*110*	*BEARING*
HL-93 TRUCK TRAIN (OPERATING)	*N/A*	*N/A*	*N/A*	*N/A*	*N/A*
HS-20 (OPERATING)	*3.18*	*114.38*	*INTERIOR BEAM*	*100*	*BEARING*
DE S220 & LEGAL-LANE (LEGAL)	*5.02*	*100.41*	*INTERIOR BEAM*	*100*	*BEARING*
DE S335 & LEGAL-LANE (LEGAL)	*2.87*	*100.38*	*INTERIOR BEAM*	*100*	*BEARING*
DE S437 & LEGAL-LANE (LEGAL)	*2.73*	*100.21*	*EXTERIOR BEAM*	*105*	*FLEXURE*
DE S330 & LEGAL-LANE (LEGAL)	*3.63*	*108.96*	*INTERIOR BEAM*	*100*	*BEARING*
DE S435 & LEGAL-LANE (LEGAL)	*3.04*	*106.51*	*INTERIOR BEAM*	*100*	*BEARING*
DE S540 & LEGAL-LANE (LEGAL)	*2.79*	*111.56*	*INTERIOR BEAM*	*100*	*BEARING*

NOTE: LOAD RATING INCLUDES FUTURE WEARING SURFACE AS NOTED IN THE PLANS.

NOT FOR CONSTRUCTION

N:\31987-00A\Contract_I-95\C4D\Bridge\BR1-758G_PN03.dgn
5/31/2019 12:15:26 PM

ADDENDA / REVISIONS		NOT TO SCALE	REHABILITATION OF I-95 FROM I-495 TO NORTH OF BRANDYWINE RIVER BRIDGE	CONTRACT T201407404	BRIDGE NO. 1 758G 6149	QUANTITIES AND LOAD RATINGS	PN-03
				COUNTY NEW CASTLE	DESIGNED BY: DAN		SECTION WRA
					CHECKED BY: WAG		SHEET NO. 585

REPAIR NO.	REPAIR DESCRIPTION	LOCATION	REMARKS	DWG. NO.	ITEM NO.	ITEM DESCRIPTION	UNIT	QTY.	CONTINGENT %	TOTAL QTY.
1	JOINT REPLACEMENT (FULL REPLACEMENT)	PIER 27F, PIER 28F, PIER 29F, PIER 30F, PIER 31F, PIER 32F, PIER 33F, PIER 34F, PIER 35F		EX-01 TO EX-04	610008	PORTLAND CEMENT CONCRETE MASONRY, PARAPET, CLASS A	CY	5	0	5
					610017	PORTLAND CEMENT CONCRETE MASONRY, SUPERSTRUCTURE, CLASS D	CY	25	0	25
					611001	BAR REINFORCEMENT, EPOXY COATED	LB	5615	0	5615
					624000	PREFABRICATED EXPANSION JOINT SYSTEM, 3"	LF	257	0	257
3	MILL EXISTING DECK/OVERLAY	ENTIRE BRIDGE		DM-01	628053	DECK REPAIR, FULL DEPTH	SF	2	25	3
					760013	PAVEMENT MILLING, PORTLAND CEMENT CONCRETE PAVEMENT	SYIN	2561	0	2561
4	HYDRODEMOLITION OF EXISTING DECK SURFACE	ENTIRE BRIDGE		DM-01	6285XX	REMOVAL OF EXISTING DECK REPAIRS	SF	1	25	2
					7605XX	TOTAL SURFACE HYRDODEMOLITION	SY	1906	0	1906
5	FURNISH AND INSTALL LMC OVERLAY	ENTIRE BRIDGE		DM-01	625000	LATEX-MODIFIED CONCRETE OVERLAY INSTALLATION	SYIN	2969	0	2969
					625001	FURNISHING LATEX-MODIFIED CONCRETE OVERLAY	CY	83	25	104
					6255XX	ADDITIONAL LATEX-MODIFIED CONCRETE FOR PARTIAL DECK REPAIRS	CY	30	25	38
9	REMOVE AND REPLACE CONCRETE APPROACH SLAB	ABUTMENT 36F		AS-01 TO AS-07	207000	STRUCTURAL EXCAVATION	CY	42	0	42
					211000	REMOVAL OF STRUCTURES AND OBSTRUCTIONS	LS	1	0	1
					301001	GRADED AGGREGATE BASE COURSE, TYPE B	CY	26	0	26
					610008	PORTLAND CEMENT CONCRETE MASONRY, PARAPET, CLASS A	CY	5	0	5
					610018	PORTLAND CEMENT CONCRETE MASONRY, APPROACH SLAB, CLASS D	CY	49	0	49
					611000	BAR REINFORCEMENT	LB	161	0	161
					611001	BAR REINFORCEMENT, EPOXY COATED	LB	11047	0	11047
					624000	PREFABRICATED EXPANSION JOINT SYSTEM, 3"	LF	26	0	26
19	REPLACE BRIDGE LIGHTING	ENTIRE BRIDGE	SEE LIGHTING PLANS FOR ITEMS AND PAYMENT		-	-	-	-	-	-
24	JACK AND REPLACE EXISTING BRIDGE BEARINGS	ABUTMENT F36		RH-01 TO RH-02, BB-01	604000	JACKING BRIDGE	LS	1	0	1
					623000	ELASTOMERIC BEARING	EA	4	0	4
41	COATING CONCRETE SURFACES	PARAPETS FULL LENGTH OF BRIDGE		TS-01	613000	EPOXY CONCRETE SEALER	SF	816	0	816
					613001	SILICONE-BASED ACRYLIC CONCRETE SEALER	SF	24022	0	24022
46	REPLACE ABUTMENT JOINT WITH DECK-OVER	ABUTMENT 36F		EX-05 TO EX-07	211000	REMOVAL OR STRUCTURES AND OBSTRUCTIONS	LS	1	0	1
					610002	PORTLAND CEMENT CONCRETE MASONRY, ABUTMENT ABOVE FOOTING, CLASS A	CY	1	0	1
					610008	PORTLAND CEMENT CONCRETE MASONRY, PARAPET, CLASS A	CY	1	0	1
					610017	PORTLAND CEMENT CONCRETE MASONRY, SUPERSTRUCTURE, CLASS D	CY	3	0	3
					611000	BAR REINFORCEMENT	LB	155	0	155
					611001	BAR REINFORCEMENT, EPOXY COATED	LB	750	0	750
M16	BR 1-758G: GRIND SMOOTH GOUGES IN BOTTOM FLANGE OF BEAM 1 IN SPAN F34	BEAM 1, SPAN F34		BM-01	615006	STEEL STRUCTURE REPAIR	LS	1	0	1

LMC OVERLAY NOTES:

1. LONGITUDINAL CONSTRUCTION JOINTS IN THE LMC OVERLAY SHALL NOT BE PERMITTED ON BR 1-758G. THE OVERLAY SHALL BE PLACED FULL WIDTH OF THE BRIDGE DECK FROM FLOWLINE TO FLOWLINE.

NOT FOR CONSTRUCTION

N:\31987-00A\Const\St_I-95\CADD\Bridge\BR1-758G_PN02.dgn
5/31/2019 12:15:27 PM

ADDENDA / REVISIONS		NOT TO SCALE	REHABILITATION OF I-95 FROM I-495 TO NORTH OF BRANDYWINE RIVER BRIDGE	CONTRACT T201407404	BRIDGE NO. 1 758G 6149	SUMMARY OF PROPOSED REPAIR AND RECONSTRUCTION ITEMS	PN-04 SECTION WRA
				COUNTY NEW CASTLE	DESIGNED BY: DAN		SHEET NO. 5 of 6
					CHECKED BY: WAG		

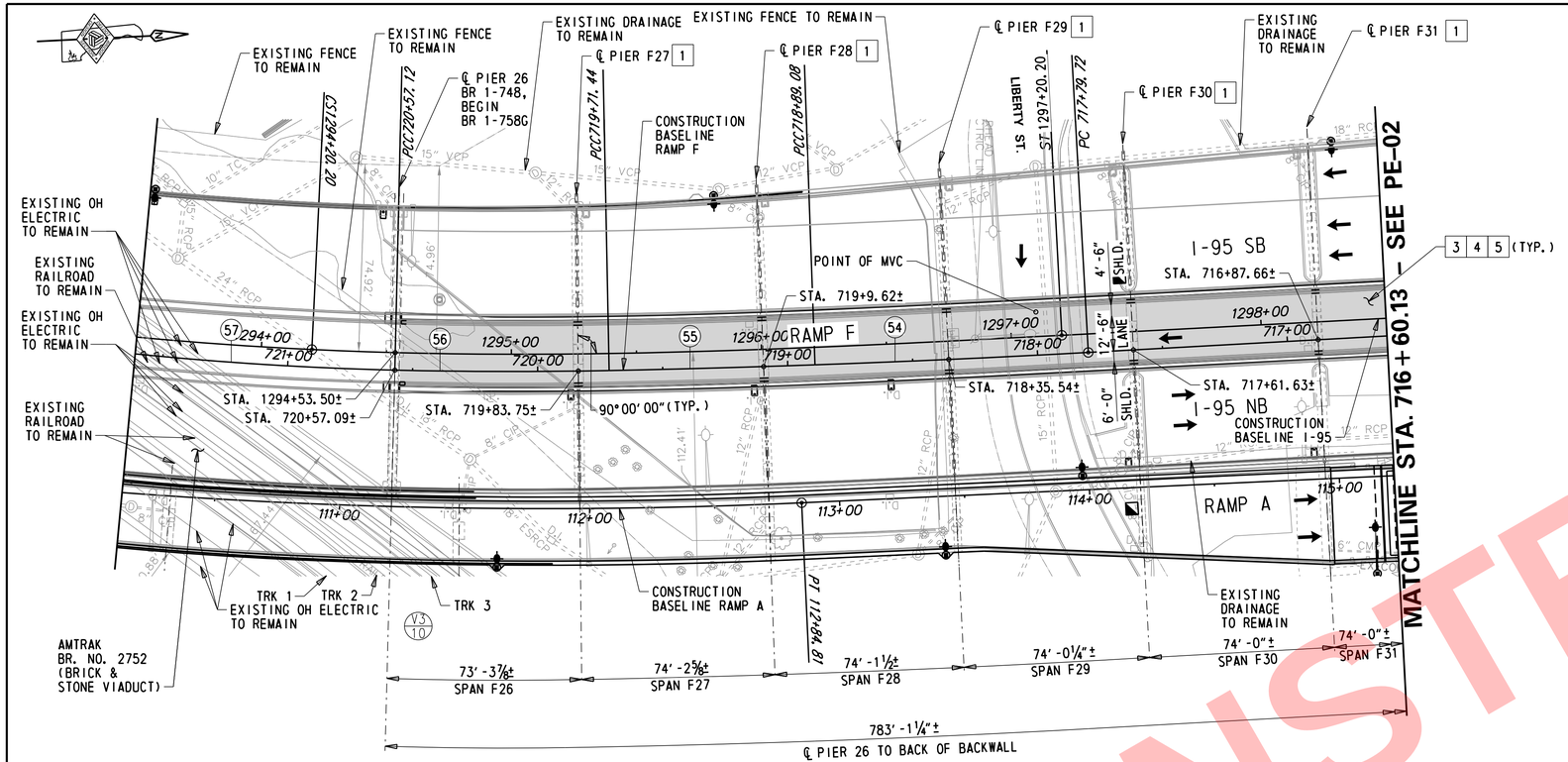

PLAN

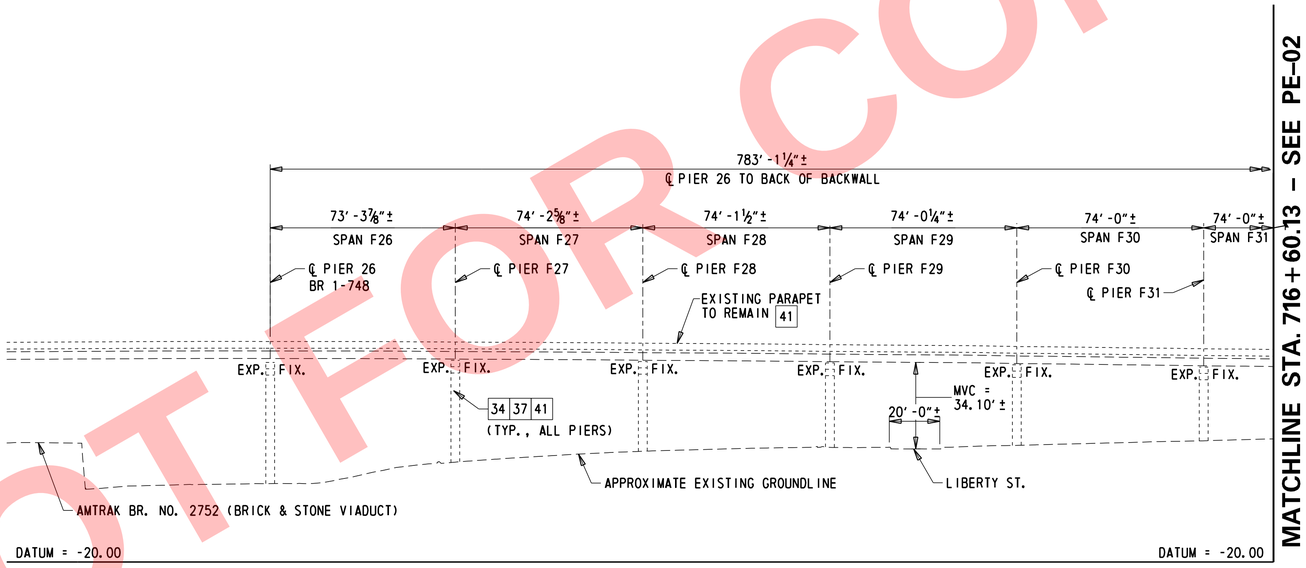

DEVELOPED SECTION ALONG CONSTRUCTION BASELINE RAMP F

NOTES:

1. MINIMUM VERTICAL CLEARANCE (MVC) IS BASED ON 2014 NBIS INSPECTION REPORT.

KEY:

- 1 — REPAIR NUMBER AS SHOWN ON DWG. NO. PN-04
- (1) — CURVE DATA
- (V3/10) — AMTRAK VALUATION SECTION & SHEET NUMBER

LEGEND:

- 3 4 5 — MILL EXISTING OVERLAY, HYDRODEMO EXISTING DECK SURFACE, AND FURNISH AND INSTALL NEW LMC OVERLAY

HORIZONTAL CURVE DATA

CURVE (54)
P.I. STA. 718+34.4019
DELTA = 1°-8'-59.0128"
Dc = 1°-3'-04.6753"
R = 5450.00'
T = 54.6830'
L = 109.3624'
E = 0.2743'
P.C. STA. = 717+79.7188
P.T. STA. = 718+89.0813

CURVE (55)
P.I. STA. 719+30.2614
DELTA = 0°-53'-12.5713"
Dc = 1°-4'-36.4294"
R = 5321.00'
T = 41.1801'
L = 82.3586'
E = 0.1593'
P.C. STA. = 718+89.0813
P.T. STA. = 719+71.4398

CURVE (56)
P.I. STA. 720+14.2889
DELTA = 2°-28'-27.3352"
Dc = 2°-53'-15.4527"
R = 1984.1830'
T = 42.8491'
L = 85.6849'
E = 0.4625'
P.C. STA. = 719+71.4398
P.T. STA. = 720+57.1247

CURVE (57)
P.I. STA. 722+62.7411
DELTA = 17°-37'-22.3248"
Dc = 4°-19'-10.1404"
R = 1326.4498'
T = 205.6163'
L = 407.9855'
E = 15.8420'
P.C. STA. = 720+57.1247
P.T. STA. = 724+65.1103

NOT FOR CONSTRUCTION

ADDENDA / REVISIONS		SCALE	REHABILITATION OF I-95 FROM I-495 TO NORTH OF BRANDYWINE RIVER BRIDGE	CONTRACT	BRIDGE NO. 1 758G 6149	GENERAL PLAN AND ELEVATION 1 OF 2	PE-01
		0 30 60 90 SCALE AS NOTED FEET		T201407404	DESIGNED BY: DAN		SECTION WRA
				COUNTY NEW CASTLE	CHECKED BY: WAG		SHEET NO. 587

N:\31987-004\Cntrct\I-95\C/OD\Bridge\BR1-758G_PE01.dgn
5/31/2019 12:15:30 PM

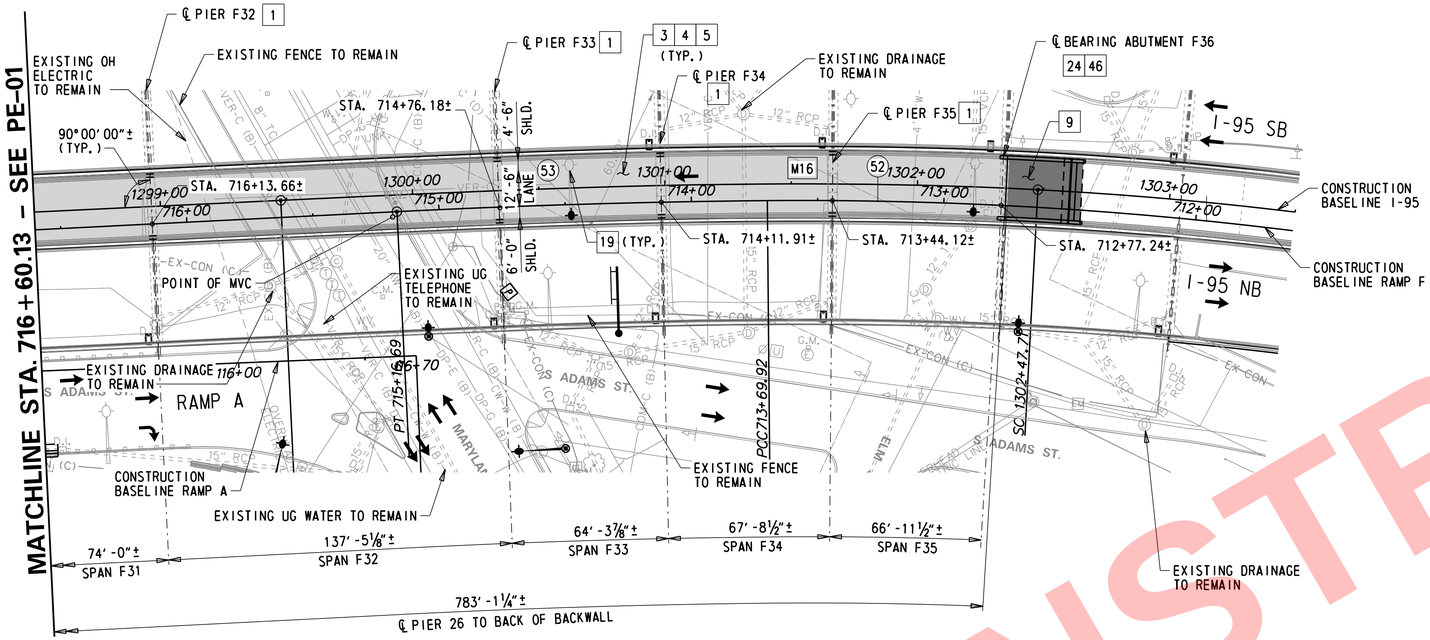

PLAN

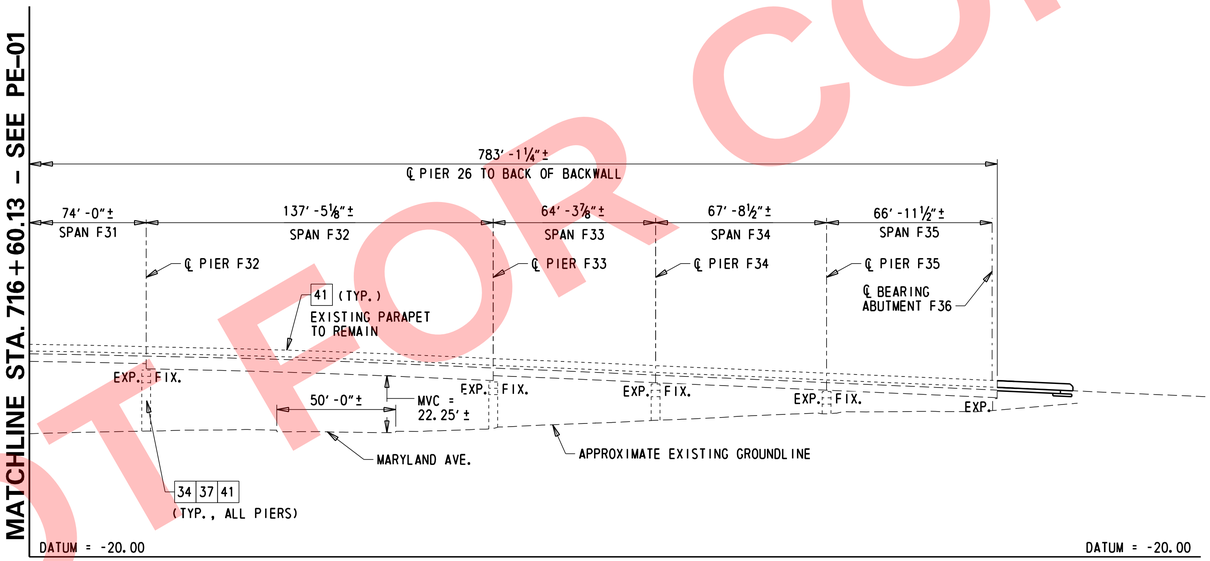

DEVELOPED SECTION ALONG CONSTRUCTION BASELINE RAMP F

KEY:

1 REPAIR NUMBER AS SHOWN ON DWG. NO. PN-04

(1) CURVE DATA

PROPOSED BRIDGE MOUNTED LIGHT POLE

EXISTING BRIDGE MOUNTED LIGHT POLE TO REMAIN

LEGEND:

3 4 5 MILL EXISTING OVERLAY, HYDRODEMO EXISTING DECK SURFACE, AND FURNISH AND INSTALL NEW LMC OVERLAY

REMOVE AND RECONSTRUCT APPROACH SLAB

HORIZONTAL CURVE DATA

CURVE (52)

P.I. STA. 712+31.9853
DELTA = 10°-1'-56.4653"
Dc = 3°-37'-38.2866"
R = 1579.5702'
T = 138.6439'
L = 276.5789'
E = 6.0729'
P.C. STA. = 710+93.3415
P.T. STA. = 713+69.9204

CURVE (53)

P.I. STA. 714+43.3155
DELTA = 2°-22'-14.9094"
Dc = 1°-36'-55.1905"
R = 3547.00'
T = 73.3951'
L = 146.7692'
E = 0.7593'
P.C. STA. = 713+69.9204
P.T. STA. = 715+16.6896

NOTES:

1. MINIMUM VERTICAL CLEARANCE (MVC) IS BASED ON 2014 NBIS INSPECTION REPORT.

NOT FOR CONSTRUCTION

ADDENDA / REVISIONS	SCALE	REHABILITATION OF I-95 FROM I-495 TO NORTH OF BRANDYWINE RIVER BRIDGE	CONTRACT T201407404	BRIDGE NO. 1 758G 6149	GENERAL PLAN AND ELEVATION 2 OF 2	PE-02
	0 30 60 90 SCALE AS NOTED FEET		COUNTY NEW CASTLE	DESIGNED BY: DAN		SECTION WRA
				CHECKED BY: WAG		SHEET NO. 588

N:\31987-00\Design\Roadway\PE\I-95\C400\Bridge\BR1-758G_PE02.dgn
5/13/2019 12:59:51 PM

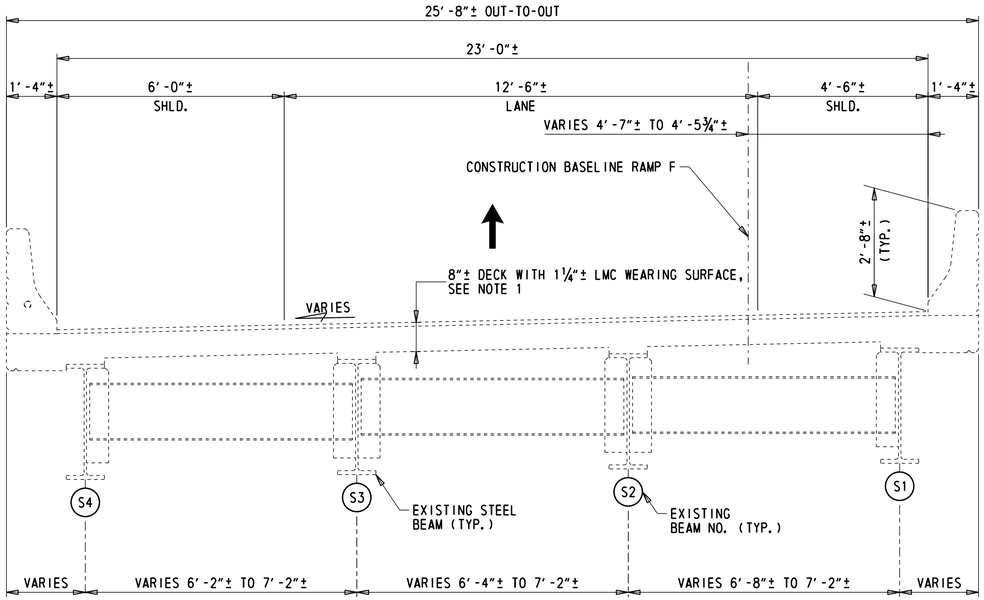

EXISTING TYPICAL SECTION

(STA. 712+77.24 TO STA. 720+57.09)

½" = 1'-0"

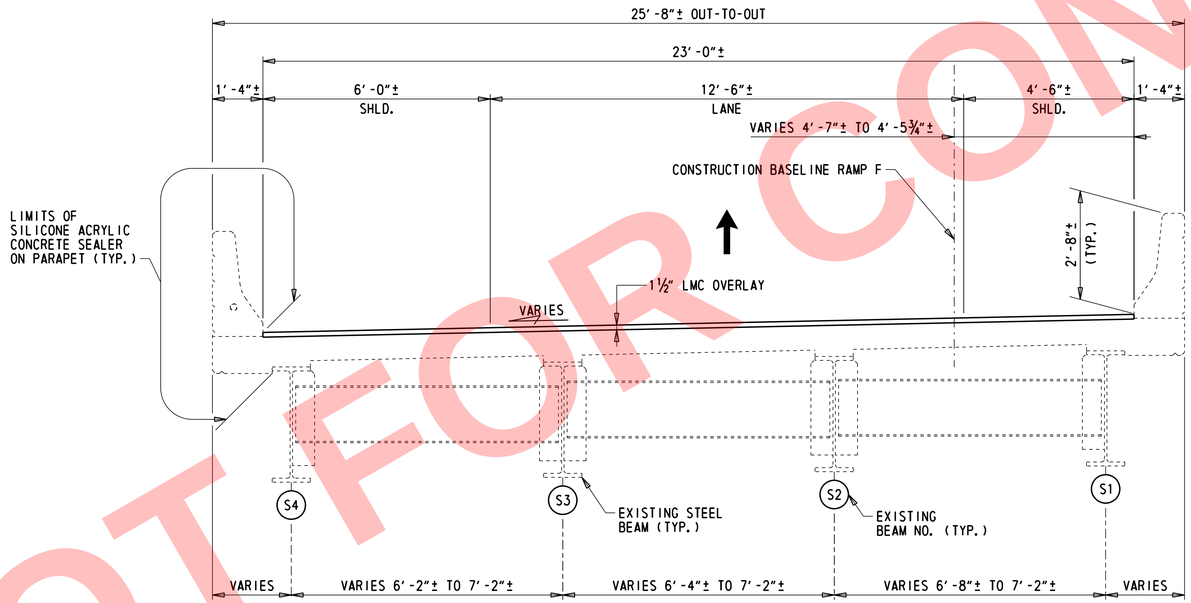

PROPOSED TYPICAL SECTION

(STA. 712+77.24 TO STA. 720+57.09)

½" = 1'-0"

NOTES:

1. 8½"± DECK AND NO WEARING SURFACE IN SPAN F30 AND 8"± DECK AND NO WEARING SURFACE IN SPAN F31 TO SPAN F35. SEE DWG. DM-01 FOR ADDITIONAL INFORMATION.
2. FOR PARAPET DETAIL, DRIP NOTCH DETAIL, AND ARCHITECTURAL GROOVE DETAIL SEE DWG. PA-01.

NOT FOR CONSTRUCTION

N:\31987-004\Control-I-95\CADD\Bridge\BR1-758G_TS01.dgn
5/31/2019 12:19:32 PM

ADDENDA / REVISIONS		SCALE AS NOTED	REHABILITATION OF I-95 FROM I-495 TO NORTH OF BRANDYWINE RIVER BRIDGE	CONTRACT T201407404	BRIDGE NO. 1 758G 6149	BRIDGE TYPICAL SECTIONS	TS-01
				COUNTY NEW CASTLE	DESIGNED BY: DAN		SECTION WRA
					CHECKED BY: WAG		SHEET NO. 589

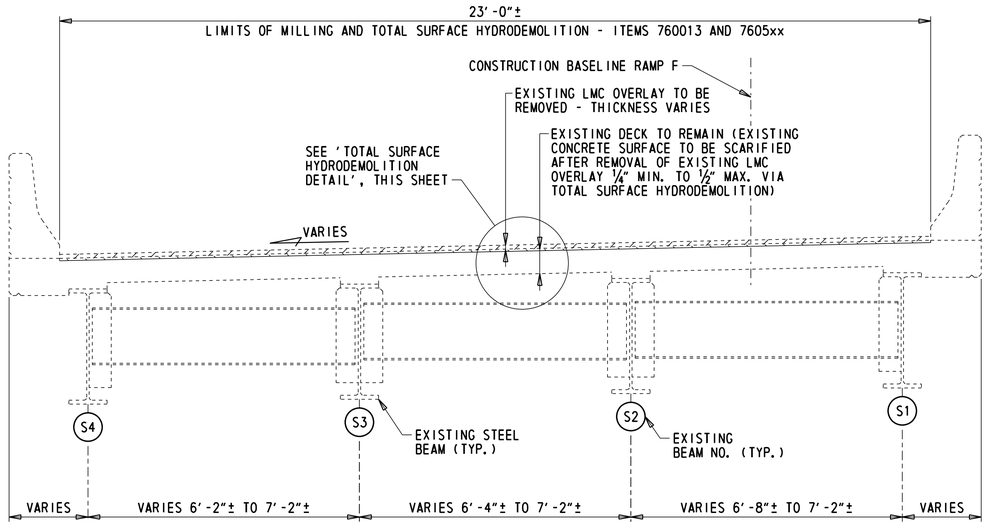

LIMITS OF DEMOLITION
(SPANS F27, F28, F29)
½" = 1'-0"

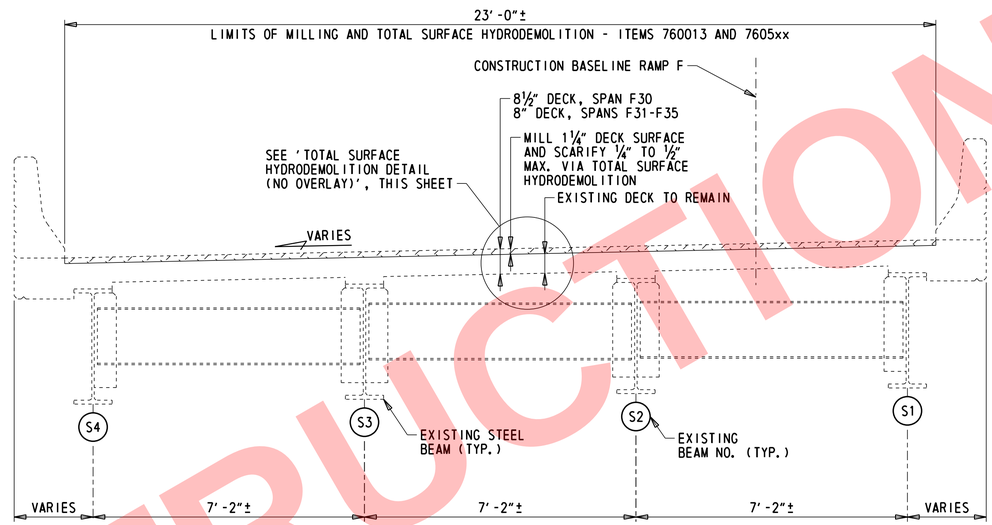

LIMITS OF DEMOLITION
(SPANS F30, F31, F32, F33, F34, F35)
½" = 1'-0"

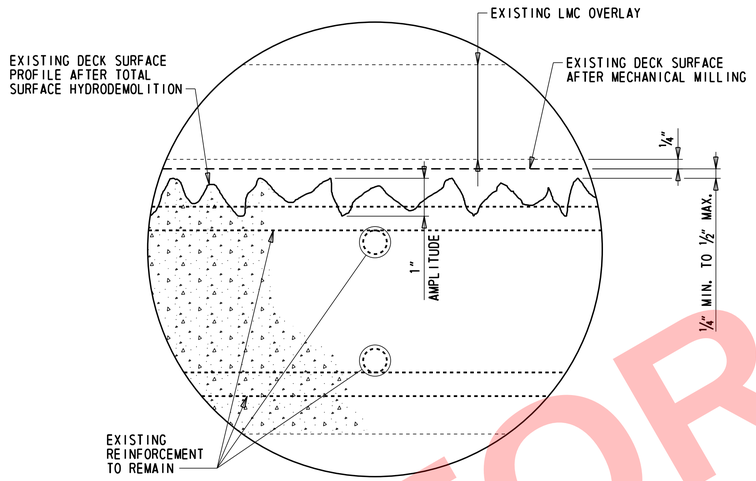

HYDRODEMOLITION AMPLITUDE DETAIL
6" = 1'-0"

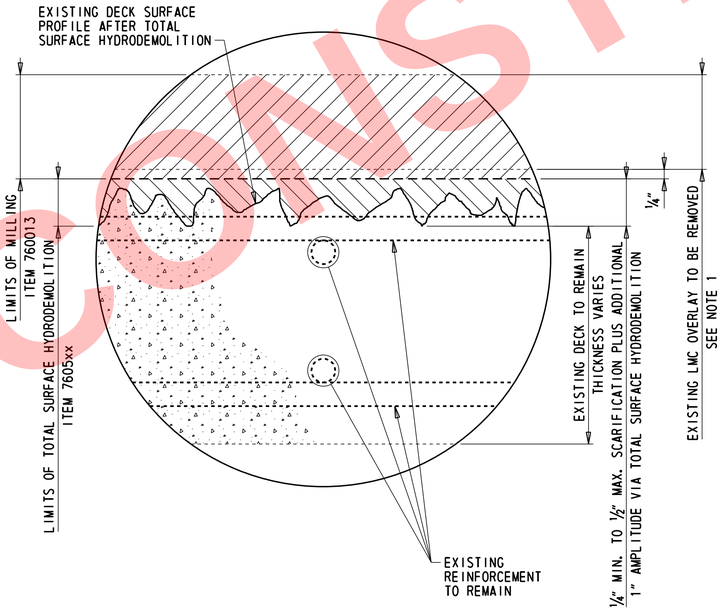

TOTAL SURFACE HYDRODEMOLITION DETAIL
6" = 1'-0"

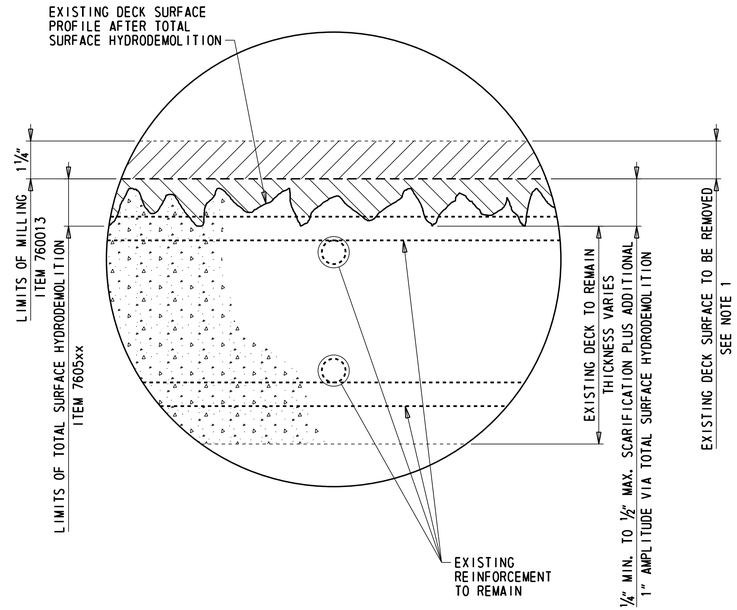

TOTAL SURFACE HYDRODEMOLITION DETAIL (NO OVERLAY)
6" = 1'-0"

LEGEND:

- LIMITS OF REMOVAL, MECHANICAL MILLING (ITEM 760013)
- LIMITS OF REMOVAL, HYDRODEMOLITION (ITEM 7605xx)

DEMOLITION NOTES:

1. THICKNESS OF EXISTING LMC OVERLAY VARIES. DECK CORES DEPICTING THE OVERLAY THICKNESS WERE TAKEN IN NOVEMBER/DECEMBER 2014. THE CORING REPORT IS AVAILABLE UPON REQUEST.
2. VEHICLES AND EQUIPMENT SHOULD BE KEPT OFF OF AREAS OF THE DECK THAT HAVE RECIEVED TOTAL SURFACE HYDRODEMOLITION AS MUCH AS REASONABLY POSSIBLE - ONLY EQUIPMENT NECESSARY TO COMPLETE THE WORK WILL BE ALLOWED ON THOSE AREAS.

NOT FOR CONSTRUCTION

N:\31987-004\Control-195\CADD\Bridge\BR1-758G_DM01.dgn
5/31/2019 12:15:32 PM

ADDENDA / REVISIONS		SCALE AS NOTED	REHABILITATION OF I-95 FROM I-495 TO NORTH OF BRANDYWINE RIVER BRIDGE	CONTRACT T201407404	BRIDGE NO. 1 758G 6149	MILLING AND HYDRODEMOLITION DETAILS	DM-01
				COUNTY NEW CASTLE	DESIGNED BY: DAN		SECTION WRA
					CHECKED BY: WAG		SHEET NO. 599

STEEL REINFORCED ELASTOMERIC BEARING NOTES:

1. PROVIDE ALL STEEL REINFORCED ELASTOMERIC BEARINGS IN ACCORDANCE WITH SECTION 623 - 'BEARING DEVICES' OF THE STANDARD SPECIFICATIONS.
2. ANCHOR BOLTS SHALL BE UNPAINTED AASHTO M 314 (ASTM F 1554) GRADE 105 GALVANIZED STEEL. NUTS AND WASHERS SHALL BE UNPAINTED ASTM A 563 AND ASTM F 436 GALVANIZED STEEL, RESPECTIVELY. PLATE WASHERS SHALL BE UNPAINTED ASTM A 709, GRADE 36 GALVANIZED STEEL. ANCHOR BOLTS AND HARDWARE SHALL BE HOT-DIP GALVANIZED IN ACCORDANCE WITH ASTM A 153.
3. USE SWEDGED ANCHOR BOLTS. BOLTS SHALL BE GROUTED IN CORED HOLES. THE CORED HOLES SHALL HAVE A DIAMETER OF 3¾". WHEN CORING HOLES, DO NOT COME INTO CONTACT WITH THE REINFORCING BARS.
4. SOLE PLATES AND KEEPER PLATES SHALL BE ASTM A 709 GRADE 50. SOLE PLATE SHALL BE BEVELED TO MATCH GRADE WHEN GRADE EXCEEDS 1 PERCENT. STEEL SURFACES OF SOLE PLATE TO BE MACHINE FINISHED AS SHOWN IN THE DETAILS, MEASURED IN ACCORDANCE WITH ANSI B46.1.
5. SOLE PLATES SHALL MEET A FLATNESS REQUIREMENT OF 0.5 PERCENT IN THE DIRECTION BEING MEASURED (WIDTH, LENGTH, AND DIAGONALS) MAXIMUM, BUT NOT TO EXCEED ⅛ INCH.
6. ALL STAINLESS STEEL SHALL BE ASTM A 240 TYPE 304. 16 GAGE STAINLESS STEEL SHEETING SHALL HAVE #8 MIRROR FINISH. THE STAINLESS STEEL LOAD PLATE SHALL BE FACTORY VULCANIZED TO THE ELASTOMERIC BEARING.
7. BEARING ASSEMBLY SHALL BE SHIPPED FROM FACTORY TO JOB SITE AS AN ASSEMBLED UNIT TO PREVENT DAMAGE OF THE STAINLESS STEEL SHEET AND PTFE SLIDING SURFACE. THE PTFE SHALL BE PROTECTED FROM DIRECT EXPOSURE TO ULTRAVIOLET RAYS AT ALL TIMES.
8. BEARING SHALL BE PLACED NORMAL TO CENTERLINE OF BEAM.
9. STEEL REINFORCED ELASTOMERIC BEARINGS SHALL BE ATTACHED TO THE TOP OF CONCRETE PEDESTAL WITH AN APPROVED EPOXY ADHESIVE IN ACCORDANCE WITH SECTION 623.03(C) OF THE STANDARD SPECIFICATIONS IN SUCH A WAY THAT VISIBLE CONCRETE SURFACES WILL NOT BE STAINED. ENSURE THE EPOXY ADHESIVE HAS SET PRIOR TO PLACEMENT OF BEAMS.
10. PAYMENT FOR FABRICATION AND INSTALLATION OF STEEL REINFORCED ELASTOMERIC BEARINGS, ANCHOR BOLTS, NUTS, WASHERS, AND SOLE PLATES WILL BE MADE UNDER ITEM 623000 - ELASTOMERIC BEARINGS.
11. SOLE PLATE SHALL BE SHOP PAINTED IN ACCORDANCE WITH SECTION 616. CONTRACTOR SHALL TOUCH UP SOLE PLATE PAINT SYSTEM, IN ACCORDANCE WITH THE MANUFACTURER'S RECOMMENDATIONS, AFTER WELDING THE SOLE PLATE TO THE GIRDER. CONTRACTOR SHALL TOUCH UP THE PAINT SYSTEM FOR THE BEAMS AFFECTED BY BEARING INSTALLATION. ALL PAINT SHALL CONFORM TO SECTION 616 OF THE STANDARD SPECIFICATIONS AND MATCH THE COLOR OF THE EXISTING BEAMS.
12. PTFE SHEET SHALL BE DIMPLED LUBRICATED MEETING THE REQUIREMENTS OF ASTM D 4894 OR D 4895. PTFE SHEET SHALL HAVE THE SAME PLAN AREA AS THE LOAD PLATE.

STEEL REINFORCED ELASTOMERIC BEARING TABLE

LOCATION	BEARING DESIGNATION						LAMINATED ELASTOMERIC BEARING					
	MARK	TYPE	NEOPRENE HARDNESS (SHORE A)	TOTAL NO. REQUIRED	CAPACITY PER PAD		DIMENSION					TOTAL PAD THICKNESS 'T'
					REACTION ⊗	MOVEMENT ⊠	'L'	'W'	LAYER THICKNESS 'Ti'	LAYER THICKNESS 'Te'	INTERIOR LAYERS	
ABUTMENT F36	EX1	EXP.	60± 5 DURO	4	105.84 KIPS	5/8"	12"	15"	0.625"	0.35"	1	1.475"

LEGEND:

⊗ MAX. UN-FACTORED SERVICE 1 REACTION (W/O DYNAMIC LOAD ALLOWANCE).

⊠ TEMPERATURE MOVEMENT.

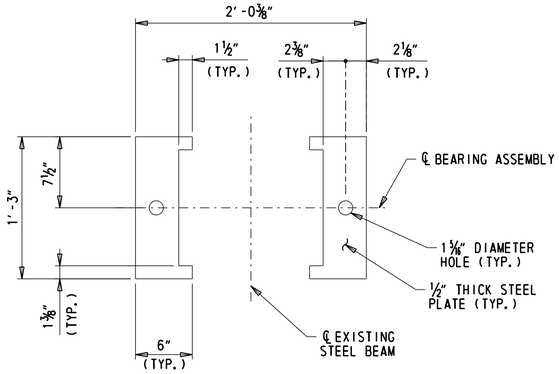

STEEL KEEPER BAR SYSTEM

1½" = 1'-0"

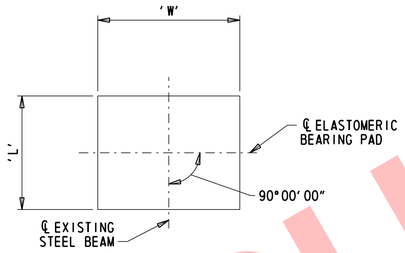

ELASTOMERIC BEARING PAD PLAN

1½" = 1'-0"

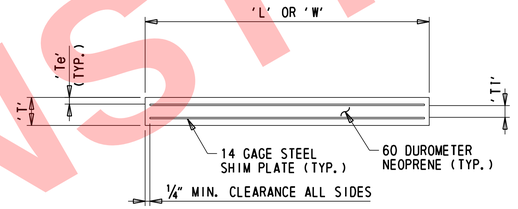

ELASTOMERIC BEARING PAD ELEVATION

NOT TO SCALE

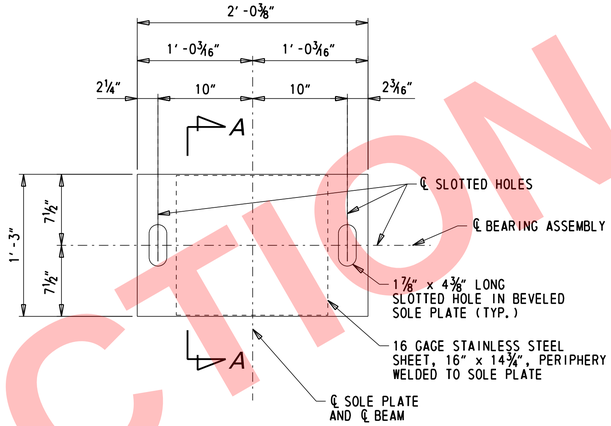

SOLE PLATE PLAN

1½" = 1'-0"

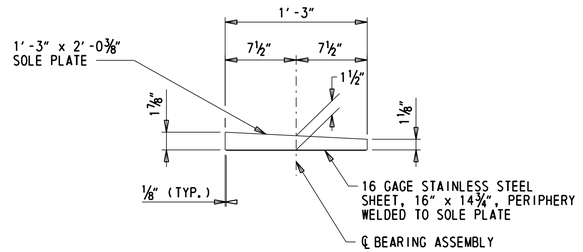

SECTION A-A

1½" = 1'-0"

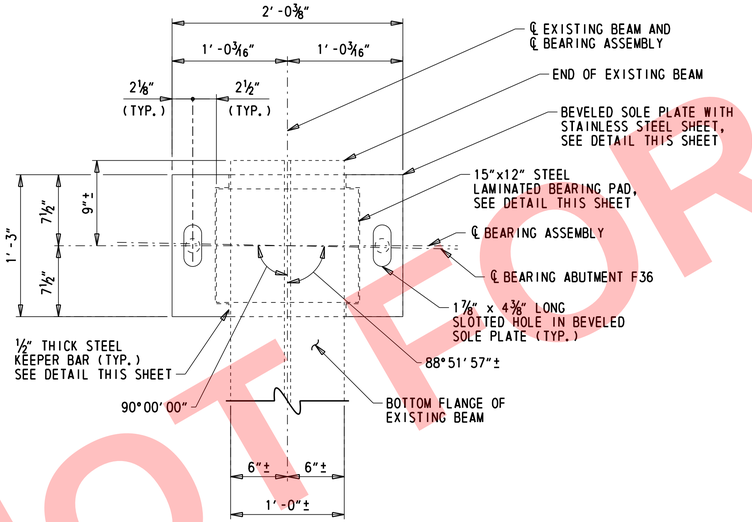

EXPANSION BEARING PLAN

1½" = 1'-0"

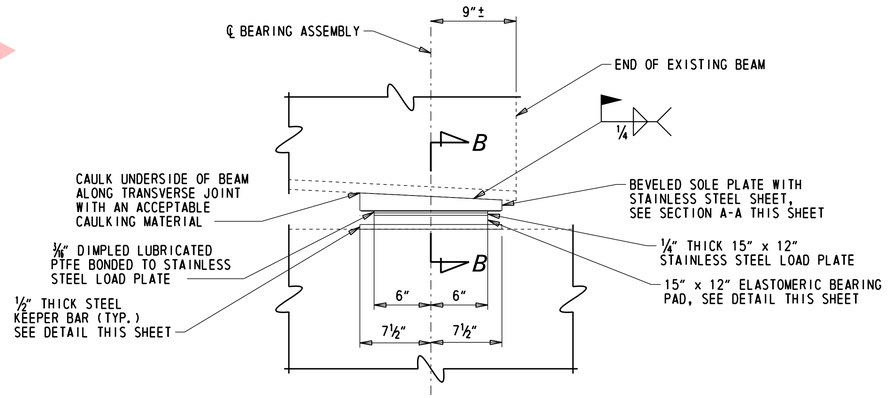

EXPANSION BEARING ELEVATION

1½" = 1'-0"

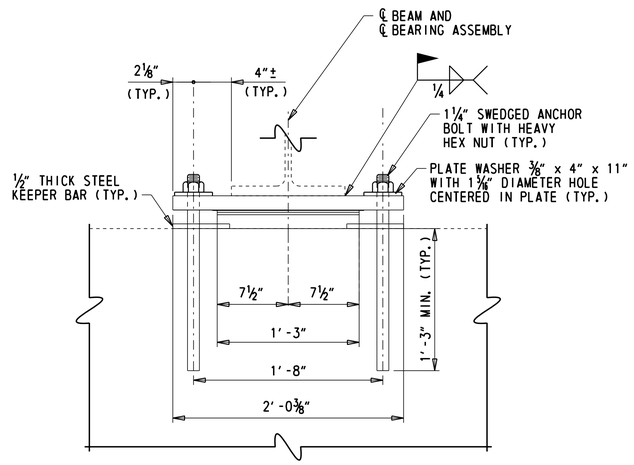

SECTION B-B

1½" = 1'-0"

NOT FOR CONSTRUCTION

N:\31987-004\Contract I-95\CADD\Bridge\BR1-758G_BB01.dgn
5/31/2019 12:19:33 PM

ADDENDA / REVISIONS		SCALE AS NOTED	REHABILITATION OF I-95 FROM I-495 TO NORTH OF BRANDYWINE RIVER BRIDGE	CONTRACT T201407404	BRIDGE NO. 1 758G 6149	BEARING DETAILS	BB-01 SECTION
				COUNTY NEW CASTLE	DESIGNED BY: DAN		WRA
					CHECKED BY: WAG		SHEET NO. 600

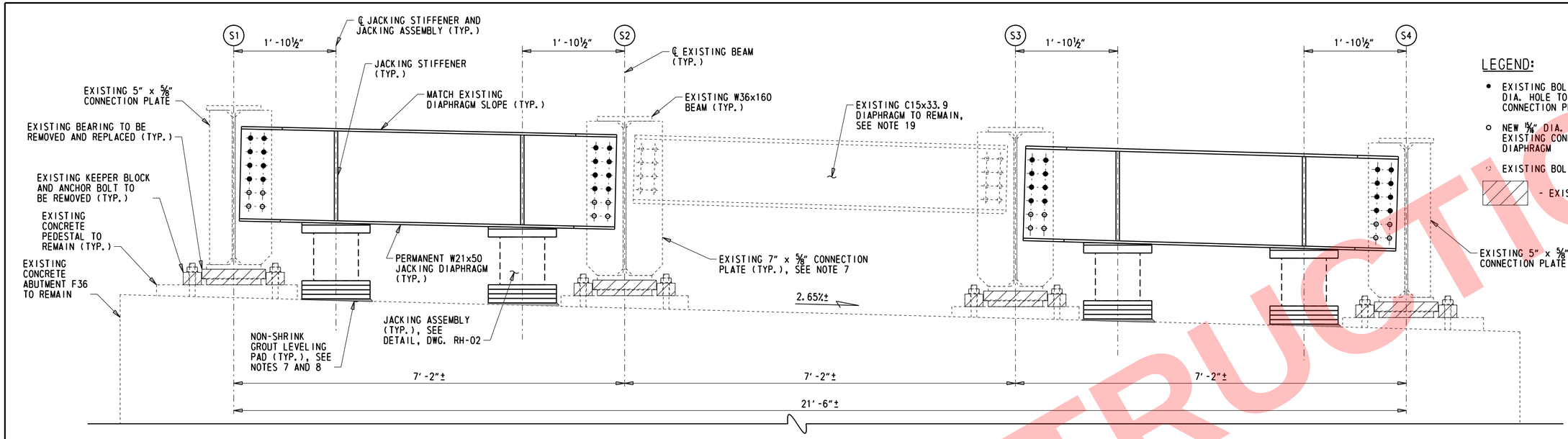

JACKING SCHEME - ELEVATION

1" = 1'-0"

(LOOKING BACK STATION)

LEGEND:

- ● EXISTING BOLT TO BE REMOVED AND NEW 5/8" DIA. HOLE TO BE DRILLED IN EXISTING CONNECTION PLATE AND JACKING DIAPHRAGM
- ○ NEW 5/8" DIA. HOLE TO BE DRILLED IN EXISTING CONNECTION PLATE AND JACKING DIAPHRAGM
- ⊗ EXISTING BOLT TO REMAIN
- ▨ - EXISTING BEARING TO BE REMOVED

NOTE:

CONCRETE DECK AND CONCRETE END DIAPHRAGM NOT SHOWN FOR CLARITY.
EXISTING C15x33.9 DIAPHRAGMS IN BAYS 1 AND 3 TO BE REMOVED (NOT SHOWN).
REMOVAL OF EXISTING DIAPHRAGMS WILL BE INCIDENTAL TO ITEM 604000 - JACKING BRIDGE.

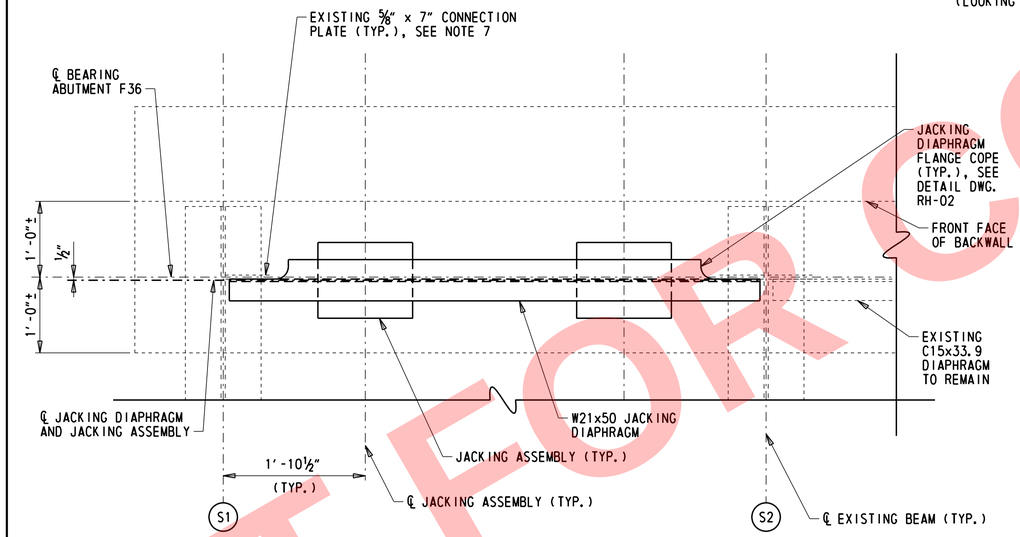

JACKING DIAPHRAGM SCHEME - PARTIAL PLAN

1" = 1'-0"

UNFACTORED LOADS FOR JACKING

SUBSTRUCTURE UNIT	BEAM	DL+15%	DL+LL+IMP
ABUTMENT F36	S1	45.2 KIP	104.0 KIP
	S2	42.0 KIP	114.5 KIP
	S3	41.6 KIP	114.2 KIP
	S4	44.5 KIP	103.5 KIP

FACTORED LOADS FOR JACKING

SUBSTRUCTURE UNIT	BEAM	DL+15%	DL+LL+IMP
ABUTMENT F36	S1	59.6 KIP	165.0 KIP
	S2	55.4 KIP	184.7 KIP
	S3	54.9 KIP	184.2 KIP
	S4	58.6 KIP	164.4 KIP

BRIDGE JACKING NOTES:

1. CONTRACTOR SHALL VERIFY COMPATIBILITY OF THE JACKING ASSEMBLY WITH HYDRAULIC JACK PRIOR TO FABRICATION. ALTERNATE JACKING SCHEMES OR ASSEMBLIES MAY BE SUBMITTED TO THE ENGINEER FOR APPROVAL. ANY ALTERNATIVE DESIGN SHALL BE STRUCTURALLY EQUIVALENT AND MAY BE REJECTED BY THE ENGINEER FOR ANY REASON INCLUDING REASONS NOT RELATED TO STRUCTURAL EQUIVALENCY.
2. THE CONTRACTOR SHALL VERIFY ALL EXISTING FIELD DIMENSIONS PRIOR TO ORDERING OR FABRICATING THE JACKING DIAPHRAGM, AND JACKING ASSEMBLY AND PRIOR TO DRILLING HOLES IN EXISTING CONNECTION PLATES.
3. ALL STEEL PLATES AND STEEL ROLLED SHAPES SHALL BE AASHTO M270 GRADE 50 MATERIAL.
4. UNLESS OTHERWISE NOTED, ALL BOLTS SHALL BE 7/8" DIAMETER ASTM F3125 GR. A325. ALL BOLTS ARE DESIGNED WITH THE THREADS INCLUDED IN THE SHEAR PLANE. ALL HOLES FOR BOLTS SHALL BE 15/16" DIAMETER.
5. ALL METAL WORK AND ALL WELDING SHALL BE PERFORMED IN ACCORDANCE WITH THE STANDARD SPECIFICATIONS, SECTION 615.
6. JACKING ASSEMBLY, JACKING STIFFENERS, AND TEMPORARY BEARING STIFFENERS SHALL BE SET PLUMB TO VERTICAL.
7. EXISTING STEEL CONNECTION PLATES AT LOCATIONS TO BE IN CONTACT WITH PERMANENT JACKING DIAPHRAGMS SHALL BE CLEANED THROUGHLY AND A PRIME COAT APPLIED IN CONFORMANCE WITH SECTION 616 PRIOR TO INSTALLING THE PERMANENT JACKING DIAPHRAGM. THE FULL AREA OF THE PERMANENT JACKING DIAPHRAGM TO BE IN CONTACT WITH THE EXISTING CONNECTION PLATES SHALL ALSO BE CLEANED THROUGHLY AND A PRIME COAT APPLIED IN CONFORMANCE WITH SECTION 616. THE REMAINDER OF THE PERMANENT JACKING DIAPHRAGM SHALL BE FULLY PRIMED AND PAINTED IN CONFORMANCE WITH SECTION 616.
8. NON-SHRINK GROUT SHALL BE IN ACCORDANCE WITH THE STANDARD SPECIFICATIONS, SECTION 1047.02.
9. PLACE A NON-SHRINK GROUT PAD BENEATH THE JACKING ASSEMBLY AND THE EXISTING BEAM SEAT TO ENSURE FULL AND LEVEL BEARING.
10. THE WORK SHALL CONSIST OF JACKING THE EXISTING BEAMS ALONG THE BEARING LINE, REMOVING THE EXISTING BEARINGS, AND INSTALLING NEW ELASTOMERIC BEARING ASSEMBLIES.
11. THE ENGINEER SHALL BE PRESENT DURING ALL JACKING OPERATIONS TO ENSURE CONFORMANCE WITH ALL PERTINENT CONTRACT PROVISIONS PRIOR TO COMMENCING THE JACKING OPERATION.
12. THE CONTRACTOR SHALL HAVE THE PROPOSED BEARING ASSEMBLIES FOR THE BEARING LINE BEING REPLACED ON SITE PRIOR TO JACKING.
13. JACKING AND BEARING REPLACEMENT SHALL BE PERFORMED PRIOR TO CONSTRUCTION OF THE NEW DECK OVER AND APPROACH SLAB.
14. THE HYDRAULIC JACKS ON THE BEARING LINE REQUIRED TO LIFT THE EXISTING BEAMS SHALL BE OPERATED CONCURRENTLY (MANIFOLDED) TO PROVIDE AN EQUAL AND BALANCED LIFTING FORCE SUCH THAT THE BRIDGE IS LIFTED EVENLY.

    THE MAXIMUM DIFFERENTIAL DISPLACEMENT BETWEEN ANY TWO ADJACENT BEAMS IS NOT TO EXCEED 1/8" AT ANY TIME.

    THE MAXIMUM VERTICAL DISPLACEMENT OF ANY BEAM FROM THE EXISTING LOCATION SHALL NOT EXCEED 1/4" AT ANY TIME.
15. THE CONTRACTOR SHALL USE ONLY THOSE JACKS WITH LOCK-NUTS CAPABLE OF SUPPORTING A LOAD EQUAL TO THE RATED CAPACITY OF THE JACK IN THE EVENT THE JACK LOSES HYDRAULIC PRESSURE. THE CONTRACTOR SHALL ADVANCE THE LOCK-NUTS ON ALL JACKS SUCH THAT THE MAXIMUM DISTANCE BETWEEN THE TOP OF A JACK AND THE LOCK-NUT SHALL NOT EXCEED 1/8" AT ANY TIME DURING THE JACKING PROCEDURE.
16. LIVE LOAD SHALL BE TEMPORARILY REMOVED FROM THE BRIDGE DURING JACKING AND UNTIL THE BRIDGE IS FULLY SUPPORTED BY THE JACKING ASSEMBLIES.
17. THE HYDRAULIC JACKS SHALL HAVE A MINIMUM CAPACITY OF 100 TONS. THE FACTORED LOADS FOR JACKING WERE USED TO SIZE THE JACKING DIAPHRAGM, JACKING ASSEMBLY, AND HYDRAULIC JACK. IT IS RECOMMENDED TO PERFORM THIS WORK DURING STAGE 3A WHEN THE BRIDGE IS CLOSED TO LIVE LOAD. IF THE CONTRACTOR ELECTS TO PERFORM THE WORK IN STAGE 3A, THE JACKING DIAPHRAGM, JACKING ASSEMBLY, AND HYDRAULIC JACK MAY BE REDESIGNED FOR FACTORED DEAD LOADS AND ANY APPLIED CONSTRUCTION LOADS. REDESIGN OF THESE ELEMENTS WILL BE THE SOLE RESPONSIBILITY OF THE CONTRACTOR.
18. THE FACTORED LOADS FOR JACKING USE A DEAD LOAD FACTOR OF 1.30 AND A LIVE LOAD FACTOR OF 1.75. THE FACTORED LOADS ON THIS SHEET WERE USED FOR THE DESIGN OF THE JACKING ASSEMBLY AND THE HYDRAULIC JACK.
19. THE CONTRACTOR MAY REMOVE THE EXISTING STEEL DIAPHRAGM TEMPORARILY TO FACILITATE THE INSTALLATION OF THE PROPOSED ANCHOR BOLTS IF REQUIRED BY THEIR SELECTED MEANS AND METHODS. NEW HIGH STRENGTH BOLTS WILL BE REQUIRED TO REINSTALL THE DIAPHRAGM. CLEAN AND PAINT CONNECTION PLATES PER NOTE 7 ON THIS SHEET. ALL COSTS ASSOCIATED WITH REMOVING AND REINSTALLING THE DIAPHRAGM WILL BE CONSIDERED INCIDENTAL TO ITEM 623000 - ELASTOMERIC BEARINGS.

NOT FOR CONSTRUCTION

ADDENDA / REVISIONS	SCALE AS NOTED	REHABILITATION OF I-95 FROM I-495 TO NORTH OF BRANDYWINE RIVER BRIDGE	CONTRACT T201407404	BRIDGE NO. 1 758G 6149	JACKING SCHEME ABUTMENT F36	RH-01
			COUNTY NEW CASTLE	DESIGNED BY: DAN		SECTION WRA
				CHECKED BY: WAG		SHEET NO. 601

N:\31987-00A\Contract\I-95\C&D\Bridge\BR1-758G_RH01.dgn
5/31/2019 12:15:34 PM

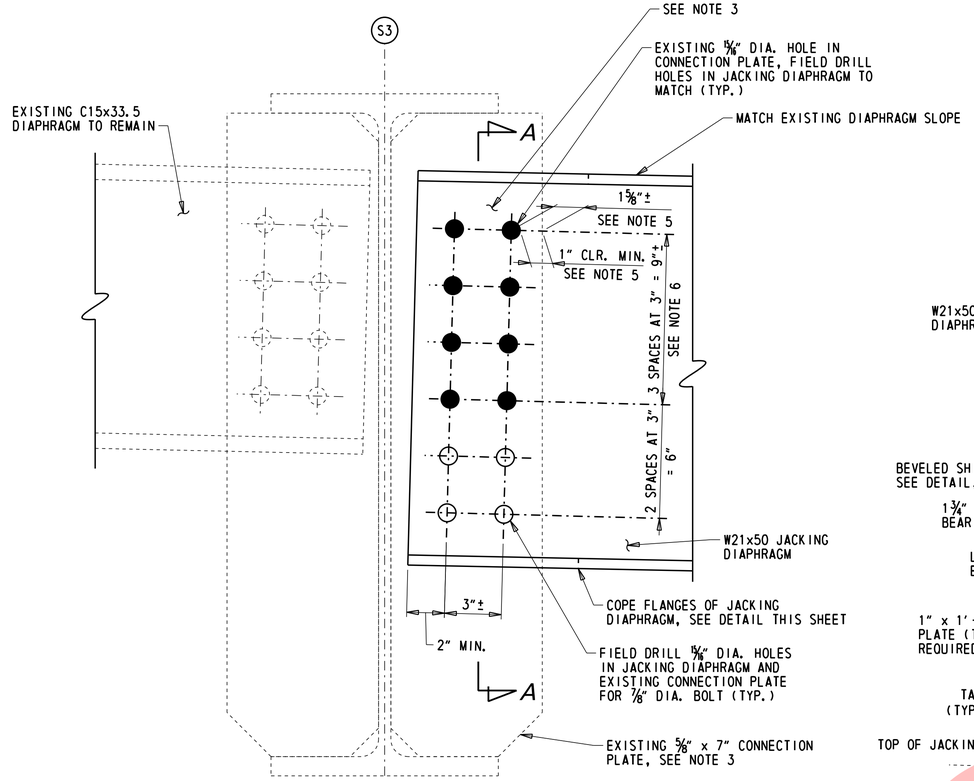

NOTE: GIRDER S3 SHOWN, (OTHERS SIMILAR)

CONNECTION DETAIL

3" = 1'-0"

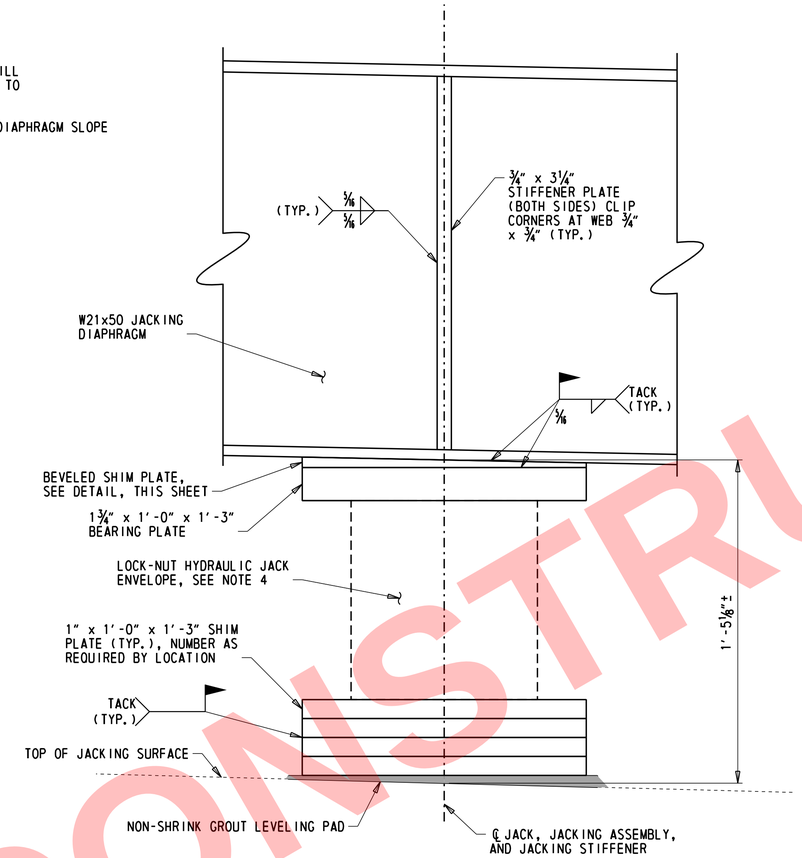

JACKING ASSEMBLY

3" = 1'-0"

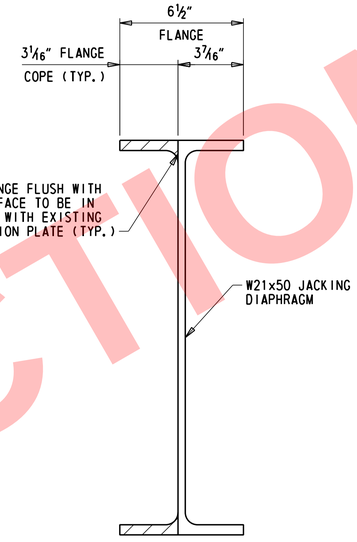

SECTION A-A

3" = 1'-0"

LEGEND:

- PORTION OF FLANGE TO BE COPED

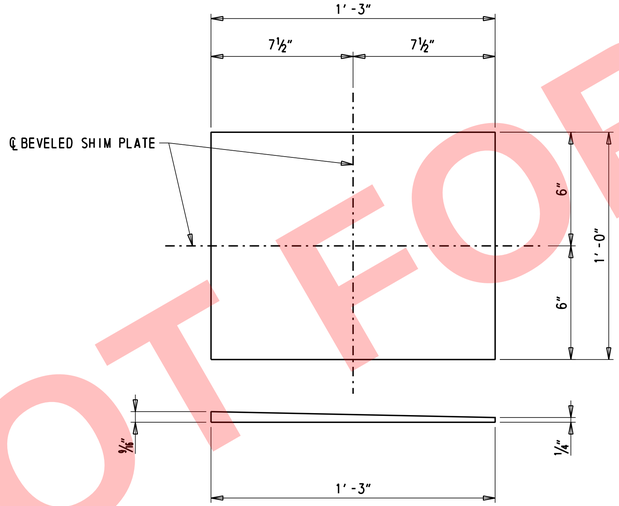

BEVELED SHIM PLATE DETAIL

3" = 1'-0"

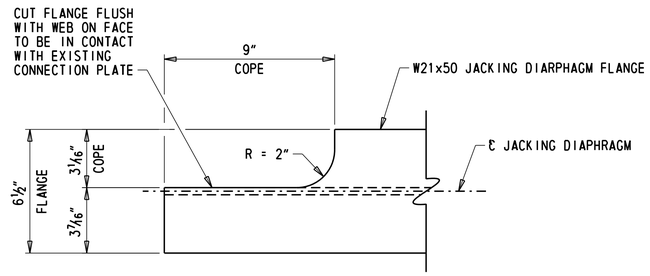

JACKING DIAPHRAGM FLANGE COPE DETAIL

3" = 1'-0"

NOTES:

1. REFER TO DWG. RH-01 FOR BRIDGE JACKING NOTES.
2. AFTER THE BRIDGE IS SET ON THE NEW BEARINGS, THE W21x50 JACKING DIAPHRAGMS ARE TO REMAIN IN PLACE AS PART OF THE COMPLETED STRUCTURE.
3. EXISTING STEEL CONNECTION PLATES THAT ARE TO BE CONNECTED TO NEW JACKING DIAPHRAGMS SHALL BE THOROUGHLY CLEANED AND PRIMED PRIOR TO PLACING NEW STEEL IN CONFORMANCE WITH SECTION 616. THE INSIDE SURFACE OF THE JACKING DIAPHAGM THAT IS TO CONNECT TO THE CONNECTION PLATE SHALL RECIEVE A SHOP PRIME COAT. THE REMAINDER OF THE JACKING DIAPHRAGM SHALL BE PRIMED AND PAINTED IN ACCORDANCE WITH SECTION 616.
4. JACK ENVELOPE WILL VARY BASED ON CONTRACTOR'S SELECTED HYDRAULIC LOCK-NUT JACK. CONTRACTOR SHALL VERIFY PRIOR TO ORDERING JACKS THAT THE JACKING ASSEMBLY HAS SUFFICIENT AREA TO SUPPORT THE SELECTED JACK. ADJUST SHIM PLATE PLAN AREA AS NEEDED TO SUPPORT SELECTED JACK.
5. CONTRACTOR SHALL VERIFY THE EXISTING BOLT CLEARANCE PRIOR TO ORDERING OR FABRICATING MATERIAL. THE MINIMUM CLEARANCE BETWEEN THE EDGE OF THE BOLT HOLE AND THE EDGE OF THE EXISTING CONNECTION PLATE IS 1". IF THE EXISTING CLEARANCE OR THE CLEARANCE AFTER DRILLING THE HOLE TO SIZE WILL RESULT IN LESS THAN 1" CLEARANCE, NOTIFY THE ENGINEER IMMEDIATELY.
6. CONTRACTOR SHALL VERIFY THE EXISTING BOLT SPACING PRIOR TO ORDERING OR FABRICATING MATERIAL. IF VERTICAL OR HORIZONTAL SPACING VARIES FROM THOSE SHOWN ON THESE PLANS, NOTIFY THE ENGINEER IMMEDIATELY.

NOT FOR CONSTRUCTION

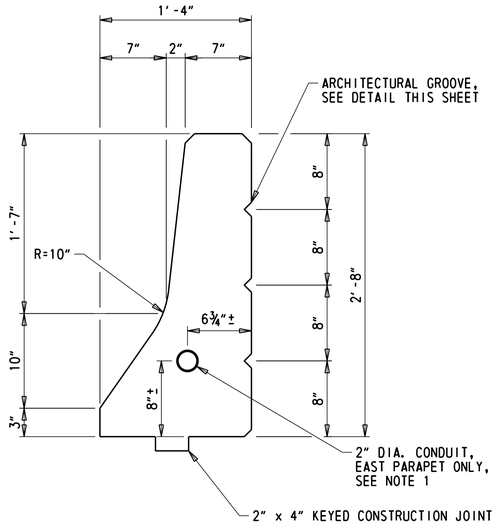

PARAPET DETAIL

1½" = 1'-0"

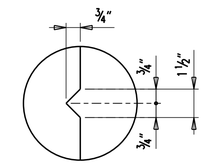

ARCHITECTURAL GROOVE DETAIL

3" = 1'-0"

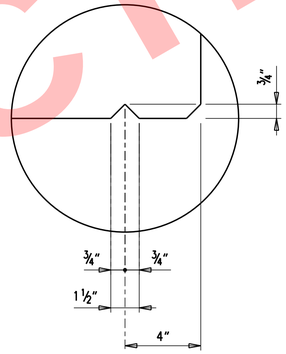

DRIP NOTCH DETAIL

3" = 1'-0"

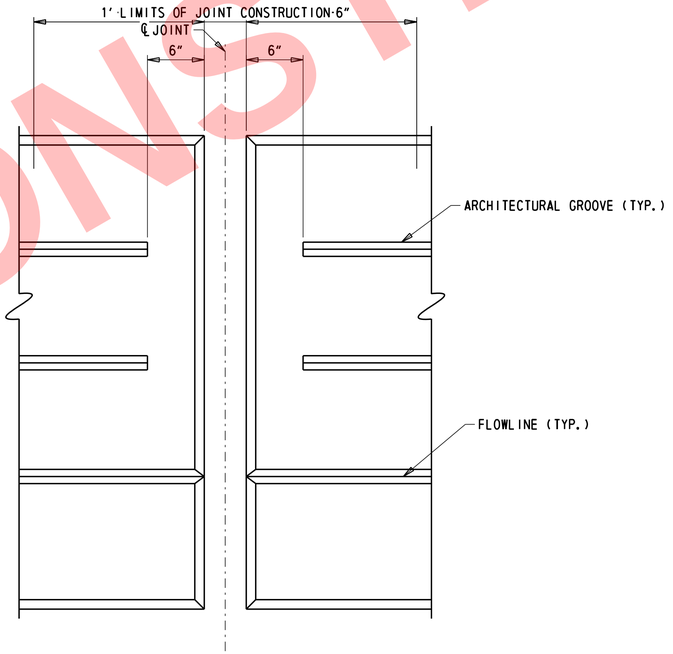

ARCHITECTURAL GROOVE TERMINATION DETAIL

1½" = 1'-0"

NOTES:

1. 2" DIAMETER CONDUIT SHALL BE GALVANIZED STEEL IN ACCORDANCE WITH SPECIFICATIONS SECTION 1062. PAYMENT WILL BE INCIDENTAL TO ITEM 610008 - PORTLAND CEMENT CONCRETE MASONRY, PARAPET, CLASS A.

NOT FOR CONSTRUCTION

N:\31987-004\Contract_I-95\CADD\Bridge\BR1-758G_PA01.dgn
5/31/2019 12:15:36 PM

ADDENDA / REVISIONS		SCALE AS NOTED	REHABILITATION OF I-95 FROM I-495 TO NORTH OF BRANDYWINE RIVER BRIDGE	CONTRACT T201407404	BRIDGE NO. 1 758G 6149	PARAPET DETAILS	PA-01
				COUNTY NEW CASTLE	DESIGNED BY: DAN		SECTION WRA
					CHECKED BY: WAG		SHEET NO. 604

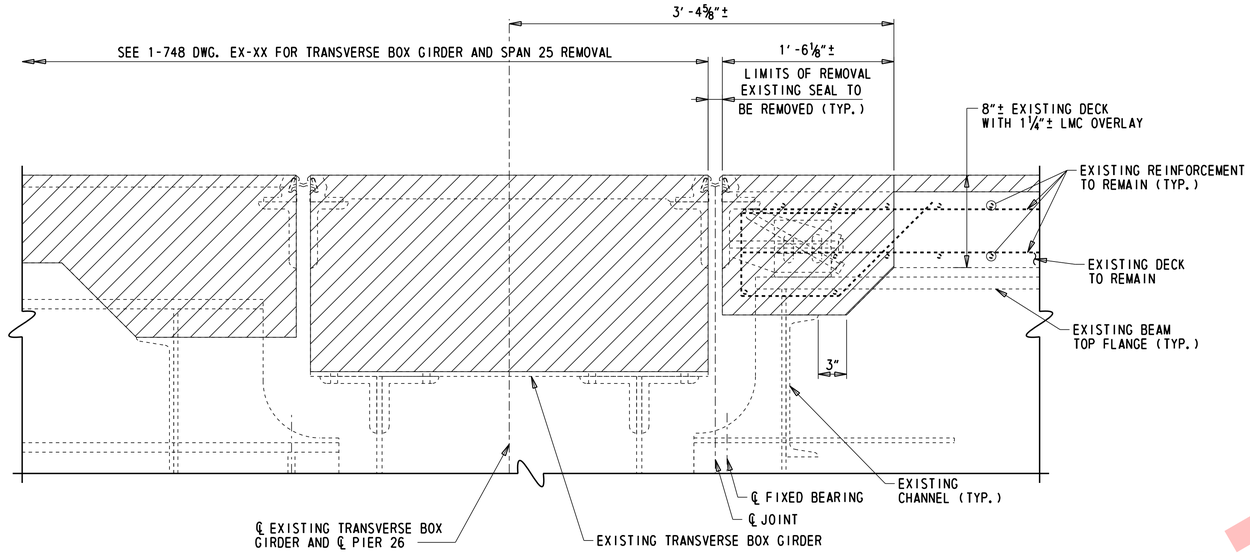

REMOVAL DETAIL - PIER 26

1½" = 1'-0"

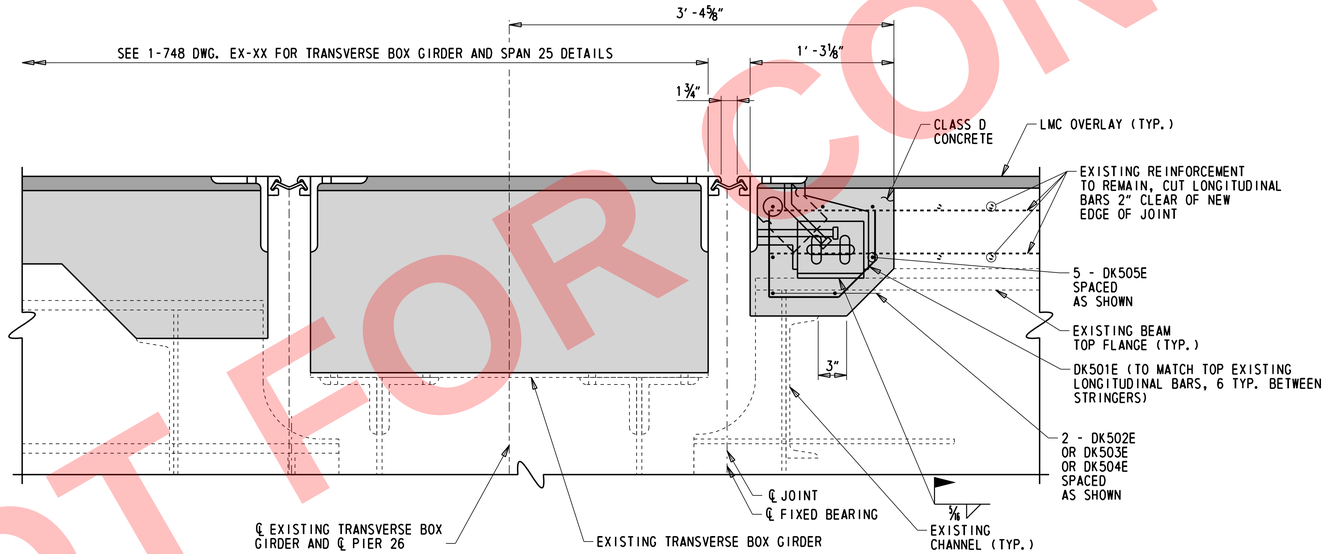

JOINT DETAIL - PIER 26

1½" = 1'-0"

REMOVAL LIMITS
CLASS D CONCRETE
LMC OVERLAY

JOINT RECONSTRUCTION NOTES:

1. NEW STRIP SEAL ASSEMBLY SHOWN FOR GRAPHICAL PURPOSES ONLY. DETAILS MAY VARY BY MANUFACTURER. STRIP SEAL AND ASSEMBLY SHALL BE IN ACCORDANCE WITH ITEM 624000 - PREFABRICATED EXPANSION JOINT SYSTEM, 3".
2. CLASS D CONCRETE SHALL BE IN ACCORDANCE WTIH ITEM 610017 - PORTLAND CEMENT CONCRETE MASONRY, SUPERSTRUCTURE, CLASS D. CLEAN AND APPLY EPOXY BONDING COMPOUND TO ALL REMOVAL AND ROUGHENED SURFACES PRIOR TO PLACING CONCRETE. COST FOR THIS WORK WILL BE INCIDENTAL TO ITEM 610017.
3. EXISTING BARS TO REMAIN SHALL BE CLEANED IN ACCORDANCE WITH SECTION 628.03(E)7. BARS WITH CORROSION, BROKEN, OR WITH INADEQUATE BOND SHALL BE REPAIRED IN ACCORDANCE WITH SUBSECTION 628.03(E)7. PAYMENT FOR THIS WORK WILL BE INCIDENTAL TO ITEM 624000 - PREFABRICATED EXPANSION JOINT SYSTEM, 3".
4. ALL NEW REINFORCING STEEL REQUIRED TO COMPLETE THE JOINT HEADER REPAIRS SHALL HAVE 2" MIN. CONCRETE COVER UNLESS SHOWN OTHERWISE. PAYMENT FOR ALL NEW REINFORCING STEEL SHALL BE UNDER ITEM 611000 - BAR REINFORCEMENT.
5. THE CONTRACTOR SHALL USE CARE DURING THE REMOVAL OF THE EXISTING CONCRETE AND PORTIONS OF THE JOINT SYSTEM TO AVOID DAMAGE TO THE EXISTING PORTIONS OF THE STRUCTURE THAT ARE TO REMAIN IN PLACE. ANY DAMAGE INCURRED TO EXISTING PORTIONS OF THE STRUCTURE TO REMAIN SHALL BE REPAIRED BY THE CONTRACTOR TO THE COMPLETE SATISFACTION OF THE ENGINEER AT NO ADDITIONAL COST TO THE DEPARTMENT.
6. PRIOR TO REMOVAL OF THE EXISTING ROADWAY JOINT AND FABRICATION OF THE PROPOSED JOINT MATERIALS, THE CONTRACTOR SHALL FIELD VERIFY THE CROSS SLOPE OF THE ROADWAY AT EACH INDIVIDUAL JOINT LOCATION.

NOTES:

1. FOR JOINT ASSEMBLY AND STEEL EXTRUSION DETAILS AND STRIP SEAL EXPANSION NOTES, SEE DWG. EX-03.

NOT FOR CONSTRUCTION

N:\31987-004\Contract_I-95\CADD\Bridge\BR1-758G_EX01.dgn
5/31/2019 12:15:37 PM

ADDENDA / REVISIONS	SCALE AS NOTED	REHABILITATION OF I-95 FROM I-495 TO NORTH OF BRANDYWINE RIVER BRIDGE	CONTRACT T201407404	BRIDGE NO. 1 758G 6149	EXPANSION JOINT DETAILS – 1	EX-01
			COUNTY NEW CASTLE	DESIGNED BY: DAN		SECTION WRA
				CHECKED BY: WAG		SHEET NO. 605

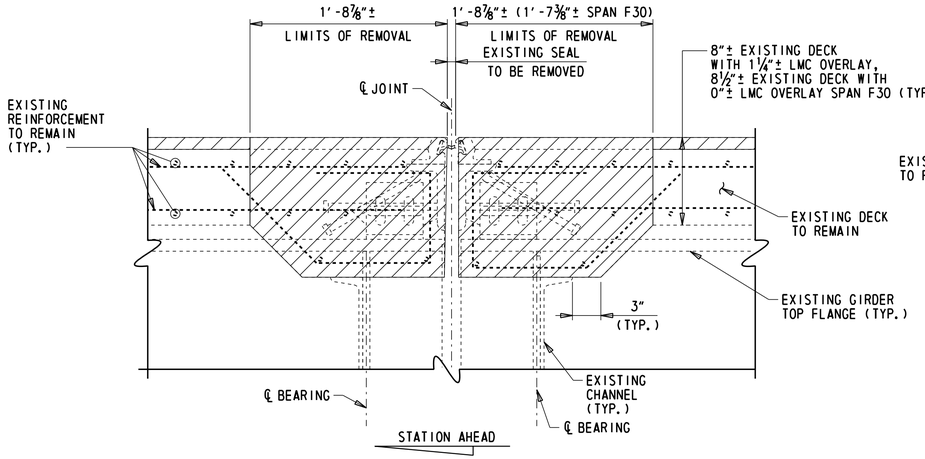

REMOVAL DETAIL - PIERS F27, F28, F29, F30

1½" = 1'-0"

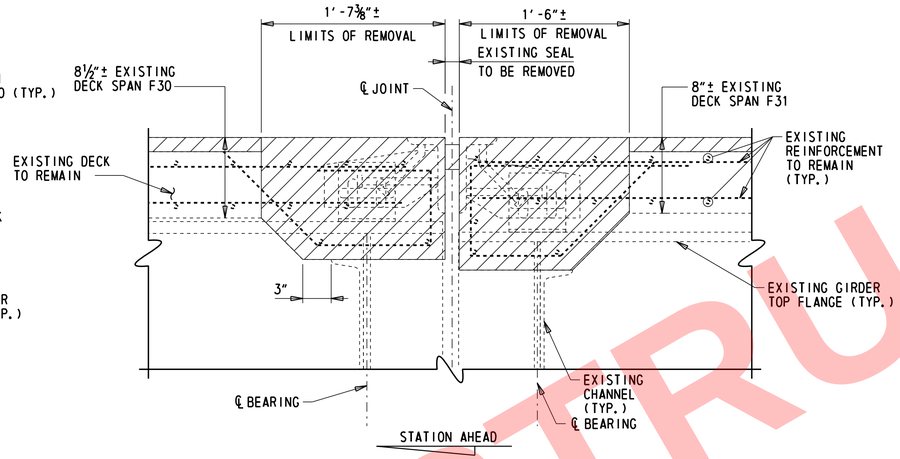

REMOVAL DETAIL - PIER F31

1½" = 1'-0"

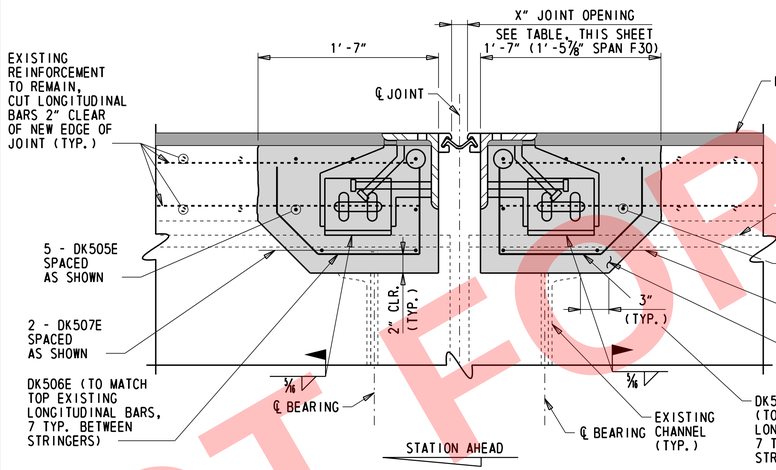

JOINT DETAIL - PIERS F27, F28, F29, F30

1½" = 1'-0"

NOTE: L6" x 4" x ½" L.L.V. SHOWN ON TOP OF GIRDER.

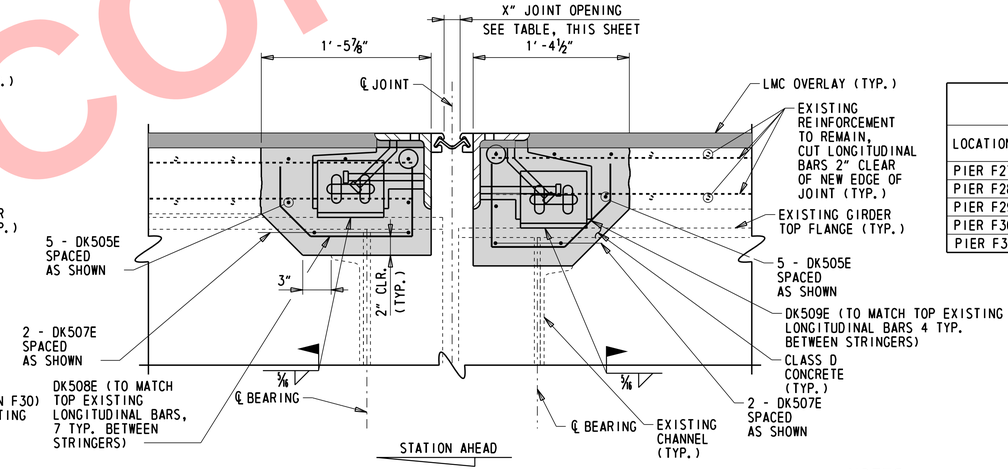

JOINT DETAIL - PIER F31

1½" = 1'-0"

DECK JOINT OPENINGS, X											
LOCATION	TEMPERATURE (°F)										MOVEMENT CLASSIFICATION
	20°	30°	40°	50°	60°	68°	70°	80°	90°	100°	
PIER F27	2"	1 5/16"	1 7/8"	1 11/16"	1 3/4"	1 11/16"	1 11/16"	1 5/8"	1 11/16"	1 1/2"	3"
PIER F28	2"	1 5/16"	1 7/8"	1 11/16"	1 3/4"	1 11/16"	1 11/16"	1 5/8"	1 11/16"	1 1/2"	3"
PIER F29	2"	1 5/16"	1 7/8"	1 11/16"	1 3/4"	1 11/16"	1 11/16"	1 5/8"	1 11/16"	1 1/2"	3"
PIER F30	2"	1 5/16"	1 7/8"	1 11/16"	1 3/4"	1 11/16"	1 11/16"	1 5/8"	1 11/16"	1 1/2"	3"
PIER F31	2"	1 5/16"	1 7/8"	1 11/16"	1 3/4"	1 11/16"	1 11/16"	1 5/8"	1 11/16"	1 1/2"	3"

NOTES:

1. FOR JOINT AT PIER 26, SEE DWG. EX-01.
2. FOR JOINT AT PIERS F32, F33, F34 AND F35 SEE DWG. EX-03.
3. FOR JOINT ASSEMBLY AND STEEL EXTRUSION DETAILS AND STRIP SEAL EXPANSION JOINT NOTES, SEE DWG. EX-03.
4. FOR PARAPET RECONSTRUCTION AT JOINTS, SEE DWG. EX-05.
5. FOR JOINT RECONSTRUCTION NOTES, SEE EX-01.

LEGEND:

- REMOVAL LIMITS
- PROPOSED CONSTRUCTION
- PROPOSED LMC OVERLAY

NOT FOR CONSTRUCTION

N:\31987-00A\Contract_I-95\C400\Bridge\BR1-758G_EX02.dgn
5/31/2019 12:19:38 PM

ADDENDA / REVISIONS		SCALE AS NOTED	REHABILITATION OF I-95 FROM I-495 TO NORTH OF BRANDYWINE RIVER BRIDGE	CONTRACT T201407404	BRIDGE NO. 1 758G 6149	EXPANSION JOINT DETAILS – 2	EX–02 SECTION
				COUNTY NEW CASTLE	DESIGNED BY: DAN		WRA
					CHECKED BY: WAG		SHEET NO. 606

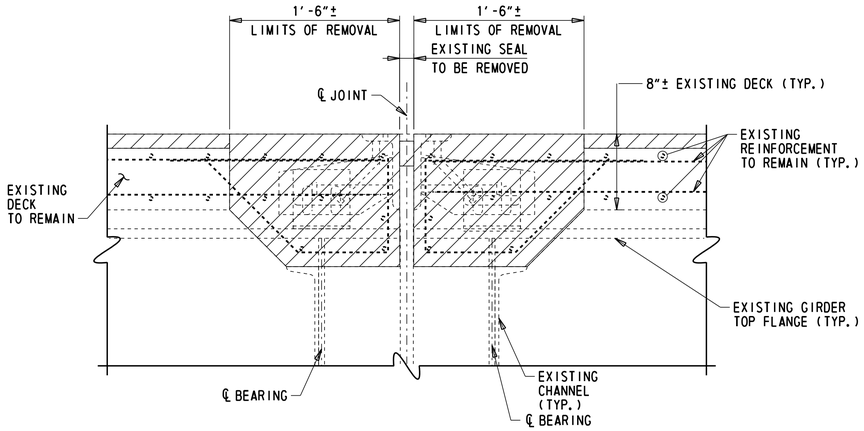

REMOVAL DETAIL - PIERS F32, F33, F34, F35

1½" = 1'-0"

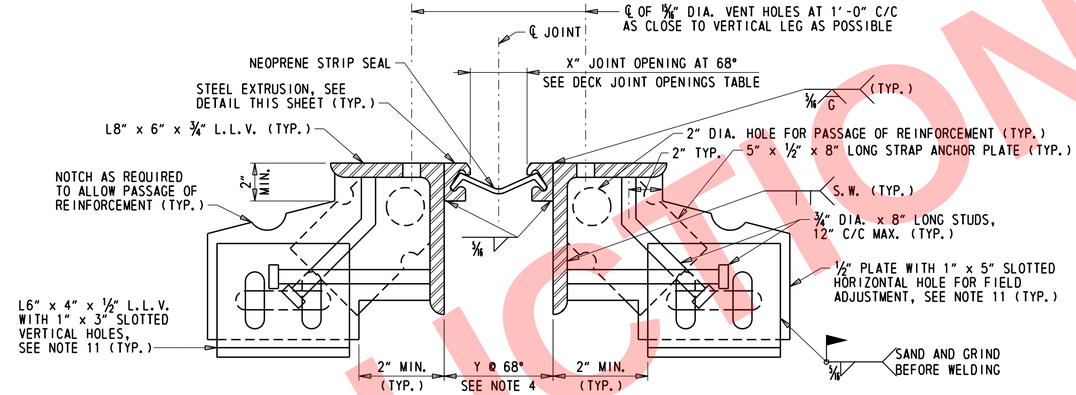

JOINT ASSEMBLY DETAIL

3" = 1'-0"

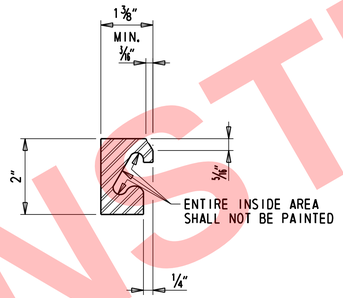

STEEL EXTRUSION DETAIL

6" = 1'-0"

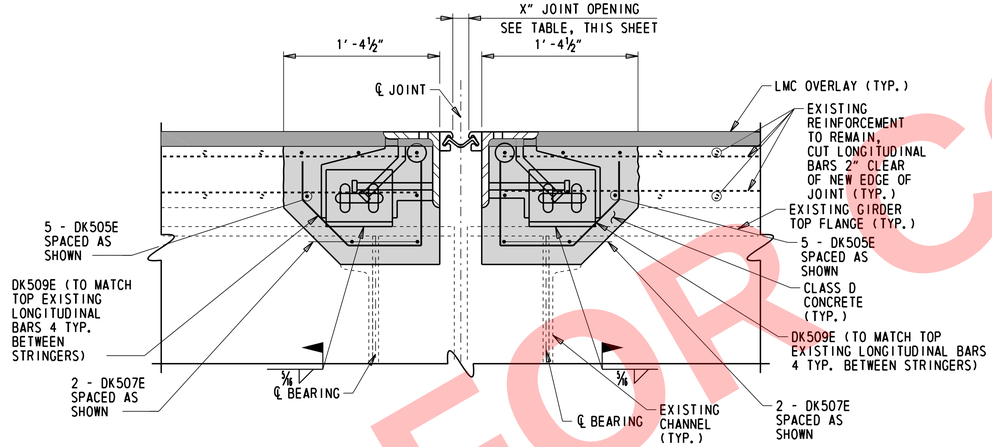

JOINT DETAIL - PIERS F32, F33, F34, F35

1½" = 1'-0"

DECK JOINT OPENINGS, X

LOCATION	TEMPERATURE (°F)									MOVEMENT
	20°	30°	40°	50°	60°	68°	70°	80°	90°	100°	CLASSIFICATION
PIER F32	2"	1 15/16"	1 7/8"	1 13/16"	1 3/4"	1 11/16"	1 11/16"	1 5/8"	1 9/16"	1 1/2"	3"
PIER F33	2 3/16"	2 1/16"	1 15/16"	1 7/8"	1 3/4"	1 11/16"	1 5/8"	1 9/16"	1 1/16"	1 1/2"	3"
PIER F34	1 15/16"	1 7/8"	1 7/8"	1 13/16"	1 3/4"	1 11/16"	1 11/16"	1 5/8"	1 5/8"	1 9/16"	3"
PIER F35	1 15/16"	1 7/8"	1 7/8"	1 13/16"	1 3/4"	1 11/16"	1 11/16"	1 5/8"	1 5/8"	1 9/16"	3"

NOTES:

1. FOR JOINT AT PIER F26, SEE DWG. EX-01.
2. FOR JOINTS AT PIERS F27, F28, F29, F30, AND F31, SEE DWG. EX-02.
3. FOR PARAPET RECONSTRUCTION AT JOINTS, SEE DWG. EX-05.
4. FOR JOINT RECONSTRUCTION NOTES, SEE DWG. EX-01.
5. FOR JOINT LAYOUT PLAN, SEE DWG. EX-04.

LEGEND:

- REMOVAL LIMITS
- PROPOSED CONSTRUCTION
- PROPOSED LMC OVERLAY

STRIP SEAL EXPANSION JOINT NOTES:

1. STEEL FOR DECK JOINTS AND STEEL EXTRUSIONS SHALL BE AASHTO M270, GRADE 36 (ASTM A36).
2. NEOPRENE EXTRUSION TO MEET ASTM D-2628-81 MODIFIED, (RECOVERY TEST EXCLUDED).
3. THE EXPANSION JOINT SHALL BE CAPABLE OF SEALING THE DECK TO PREVENT MOISTURE AND OTHER CONTAMINANTS FROM DESCENDING THROUGH THE JOINT.
4. THE CONTRACTOR SHALL ADJUST THE OPEN JOINT (Y) AS REQUIRED BY THE WIDTH OF THE STEEL EXTRUSION USED SO AS TO PROVIDE A X" JOINT OPENING AT 68°F.
5. THE STRIP SEAL SHALL BE INSTALLED IN ONE PIECE ACROSS THE BRIDGE WIDTH. SPLICING OF THE STRIP SEAL IS NOT PERMITTED.
6. THE EXPANSION JOINT SYSTEM WILL BE PAID FOR UNDER ITEM 624000 - PREFABRICATED EXPANSION JOINT SYSTEM, 3".
7. STEEL EXTRUSIONS SHALL BE HOT DIPPED GALVANIZED. ENTIRE JOINT ASSEMBLY AND EXTRUSION SHALL BE PAINTED AFTER FABRICATION USING URETHANE SYSTEM IN CONFORMANCE WITH SECTION 616 AND ASTM D 6386. PAYMENT FOR GALVANIZING AND PAINTING WILL BE INCIDENTAL TO ITEM 624000 - PREFABRICATION EXPANSION JOINT SYSTEM, 3". PAINT COLOR SHALL MATCH EXISTING BEAMS/GIRDERS.
8. LUBRICANT-ADHESIVE FOR USE IN INSTALLING AND BONDING NEOPRENE SEAL ELEMENTS TO STEEL JOINT COMPONENTS SHALL BE A ONE QUART MOISTURE-CURING POLYURETHANE AND HYDROCARBON SOLVENT MIXTURE HAVING THE FOLLOWING PHYSICAL PROPERTIES:

AVERAGE WEIGHT, POUNDS PER GALLON	8±10%
SOLIDS CONTENT	65%
ADHESIVE SHALL REMAIN LIQUID FROM	5°F TO 120°F
FILM STRENGTH, AS PER ASTM D-412	2,000 PSI
ELONGATION	250%

9. HOLES SHALL BE PLACED IN THE RIB PLATES AND STRAP ANCHOR PLATES FOR BAR REINFORCEMENT. IF THIS IS DONE IN FIELD AN APPROVED EPOXY-BONDED PAINT SHALL BE USED TO TOUCH-UP THE HOLES. PAYMENT INCIDENTAL TO ITEM 624000 - PREFABRICATED EXPANSION JOINT SYSTEM, 3".
10. STEEL EXTRUSIONS AND JOINT ANGLES SHALL BE CONTINUOUS ACROSS THE FULL WIDTH OF THE ROADWAY, NO SPLICING WILL BE PERMITTED.
11. IF WELD OPTION IS PROPOSED, SLOTTED HOLES IN ½" PLATE AND L6" x 4" x ½" MAY BE OMITTED.
12. SEE TYPICAL JOINT PLAN ON DWG. EX-04 FOR LAYOUT OF L6"x4"x½" AND STRAP ANCHORS.
13. PARAPET PLATES ARE REQUIRED AT JOINTS, SEE DETAILS ON EX-05 AND JOINT OPENING TABLE, THIS SHEET.

NOT FOR CONSTRUCTION

N:\31987-001\Control_I-95\CADD\Bridge\BR1-7586_EX03.dgn
5/31/2019 12:15:39 PM

ADDENDA / REVISIONS		SCALE AS NOTED	REHABILITATION OF I-95 FROM I-495 TO NORTH OF BRANDYWINE RIVER BRIDGE	CONTRACT T201407404	BRIDGE NO. 1 758G 6149	EXPANSION JOINT DETAILS – 3	EX-03 SECTION WRA
				COUNTY NEW CASTLE	DESIGNED BY: DAN		SHEET NO. 607
					CHECKED BY: WAG		

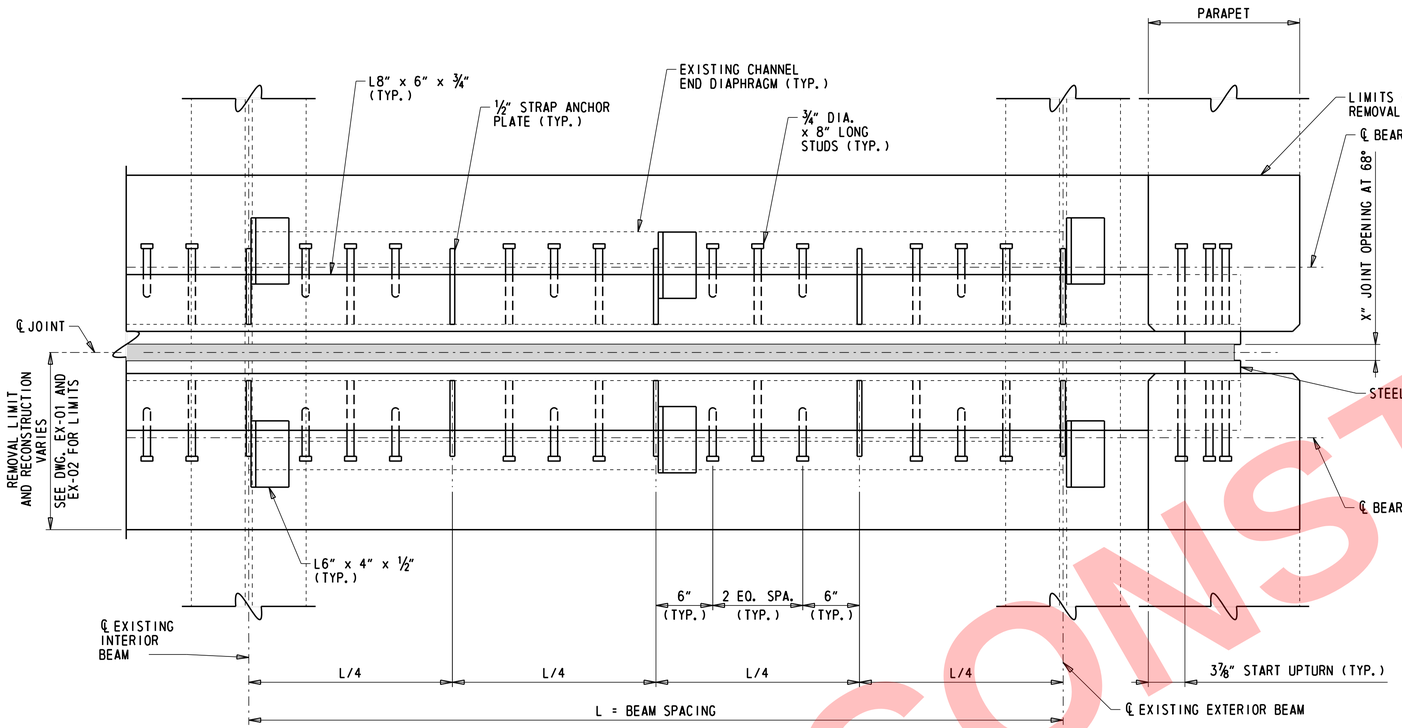

TYPICAL JOINT PLAN

1½" = 1'-0"

NOTES:

1. FOR ADDITIONAL JOINT DETAILS SEE DWGS. EX-01 THROUGH EX-03.
2. FOR PARAPET RECONSTRUCTION AT JOINTS SEE DWG. EX-05.
3. FOR JOINT ASSEMBLY DETAIL AND STRIP SEAL EXPANSION NOTES, SEE DWG. EX-03.
4. FOR JOINT RECONSTRUCTION NOTES, SEE DWG. EX-01.

NOT FOR CONSTRUCTION

N:\31987-004\Contract_I-95\CADD\Bridge\BR1-758G_EX04.dgn
5/31/2019 12:15:40 PM

ADDENDA / REVISIONS		SCALE AS NOTED	REHABILITATION OF I-95 FROM I-495 TO NORTH OF BRANDYWINE RIVER BRIDGE	CONTRACT T201407404	BRIDGE NO. 1 758G 6149	EXPANSION JOINT DETAILS – 4	EX-04
				COUNTY NEW CASTLE	DESIGNED BY: DAN		SECTION WRA
					CHECKED BY: WAG		SHEET NO. 608

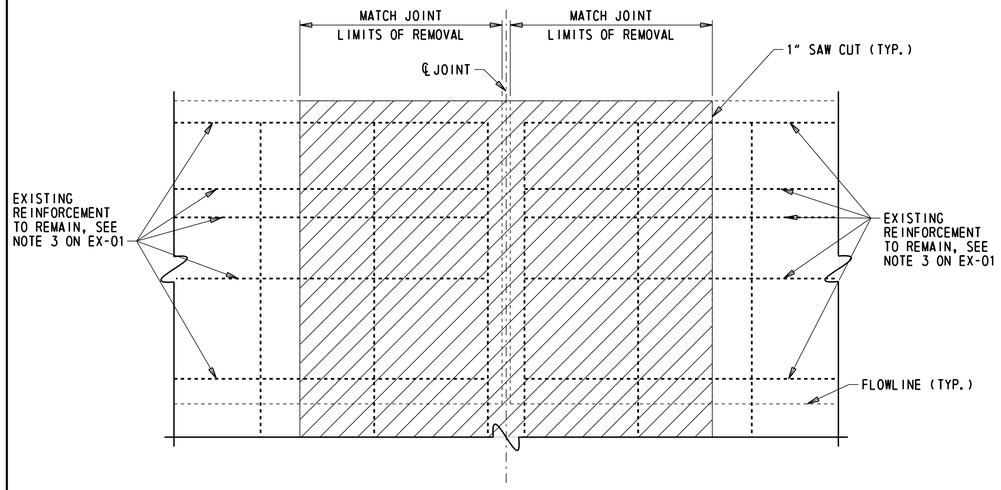

PARAPET REMOVAL AT EXPANSION JOINTS

1½" = 1'-0"

PARAPET JOINT PLATE NOTES:

1. FORM CONCRETE RECESS AREA IN PARAPET AND GRIND TO PROVIDE SMOOTH SURFACE. APPLY ONE COAT OF ASPHALT CEMENT TO FREE SIDE OF JOINT IN ACCORDANCE WITH SECTION 1012 OF THE STANDARD SPECIFICATIONS TO ALLOW BENT SLIDING PLATE TO MOVE FREELY WITHOUT FRICTION. PAYMENT WILL BE INCIDENTAL TO ITEM 610008 - PORTLAND CEMENT CONCRETE MASONRY, PARAPET, CLASS A.
2. PLACE PARAPET CONCRETE WITH STEEL BENT PLATES, INSERTS, AND BOLTS IN PLACE TO ENSURE PROPER ALIGNMENT OF INSERTS AND HOLES IN THE STEEL PLATE. REMOVE PLATES TO INSTALL SEAL. APPLY APPROVED BONDBREAKER TO SLIDING PLATES PRIOR TO INSTALLATION.
3. GRIND ALL STEEL EDGES EXPOSED TO TRAFFIC TO ⅛" MIN. RADIUS.
4. BOLTS SHALL BE ASTM TYPE 304 STAINLESS STEEL COUNTERSUNK SCREW WITH ASTM A 108 CONCRETE THREADED ANCHOR OR THREADED INSERT. HEAD OF BOLTS SHALL BE FLUSH WITH FACE OF STEEL PLATE.
5. THE CONTRACTOR SHALL SUBMIT WORKING DRAWINGS OF TRAFFIC BARRIER PLATES FOR APPROVAL.
6. FOR ADDITIONAL JOINT NOTES AND DETAILS, SEE DWGS. EX-01 THROUGH EX-04.
7. ⅜" PARAPET PLATE SHALL BE UNPAINTED GALVANIZED STEEL. PAYMENT FOR PARAPET JOINT PLATES AND PARTIAL REMOVAL OF PARAPET FOR JOINT RECONSTRUCTION WILL BE INCIDENTAL TO ITEM 624000 - PREFABRICATED EXPANSION JOINT SYSTEM, 3".

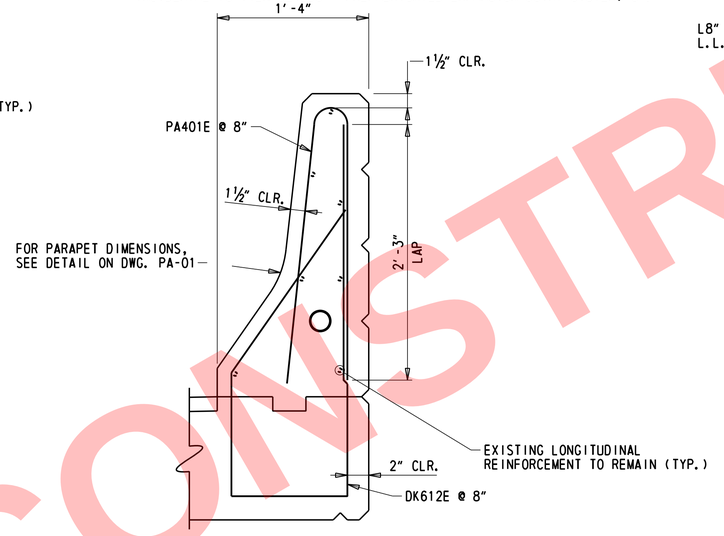

PARAPET REINFORCEMENT AT EXPANSION JOINTS

1½" = 1'-0"

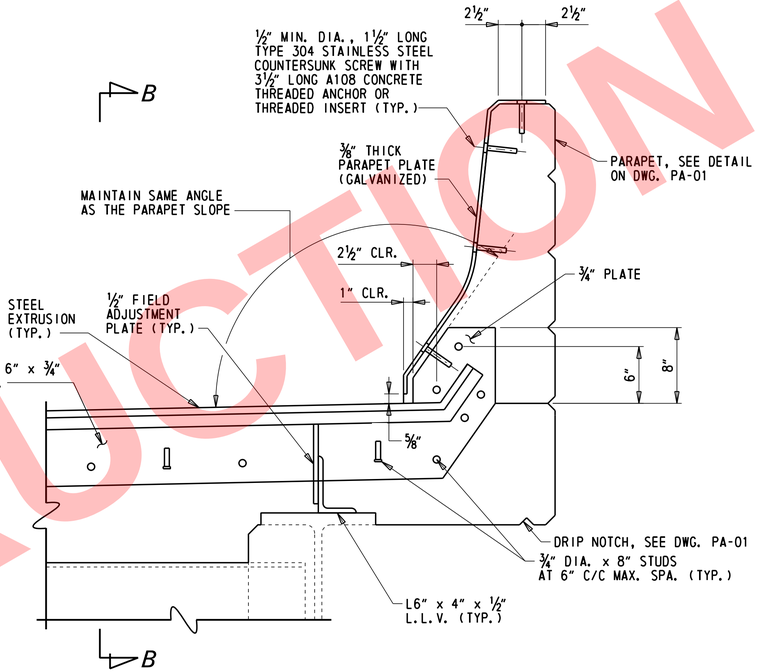

TYPICAL SECTION AT JOINT

1½" = 1'-0"

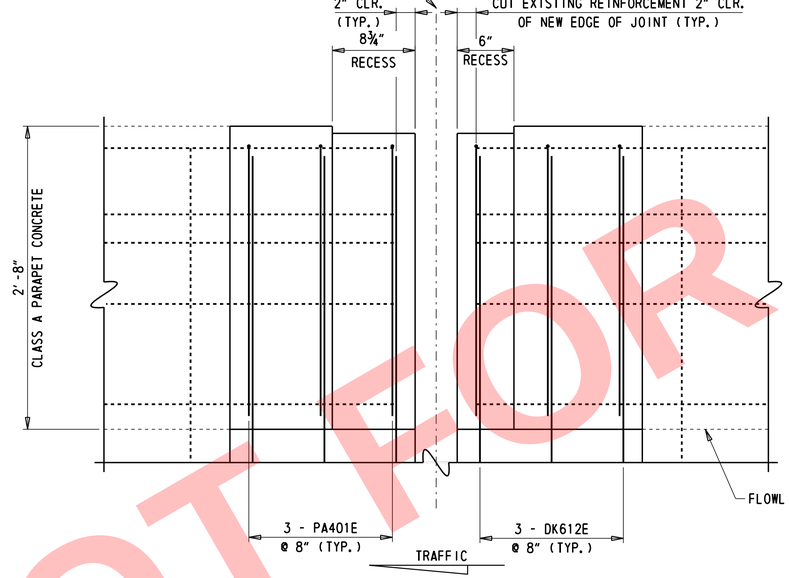

PARAPET RECONSTRUCTION AT EXPANSION JOINTS

1½" = 1'-0"

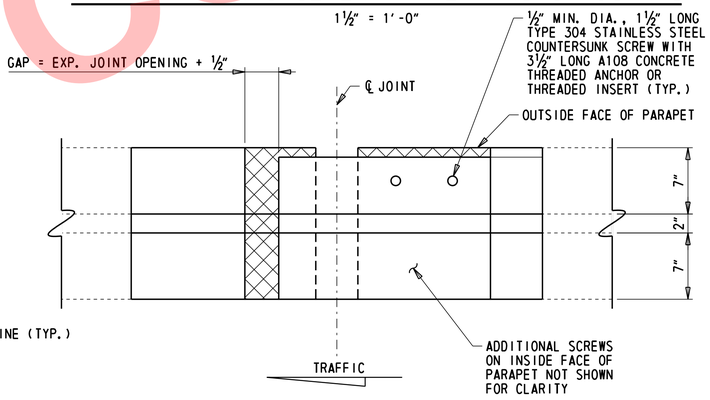

VIEW A-A

1½" = 1'-0"

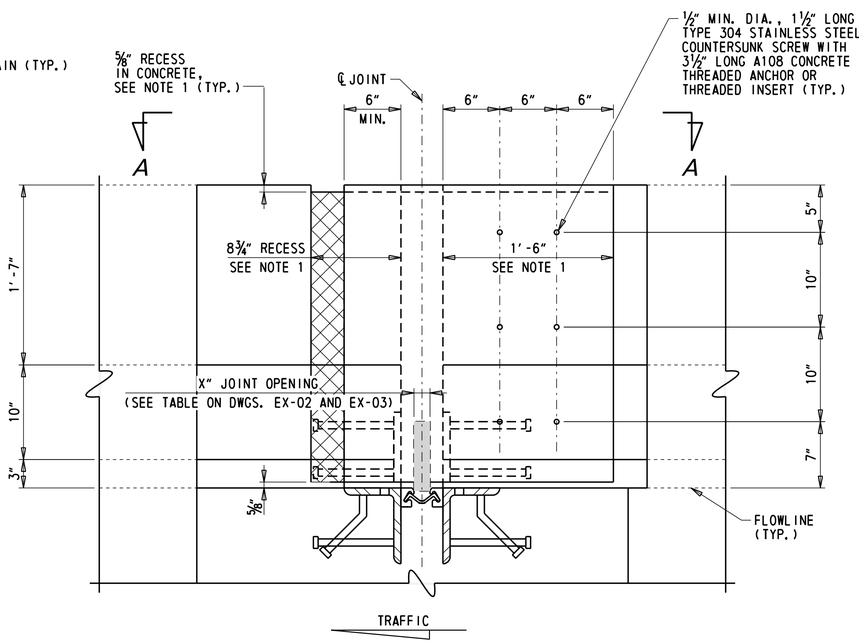

VIEW B-B

1½" = 1'-0"

LEGEND:

- REMOVAL LIMITS
- RECESS IN PARAPET

NOT FOR CONSTRUCTION

N:\31987-004\Contract\I-95\CADD\Bridge\BRI-7586_EX05.dgn
5/31/2019 - 12:15:40 PM

ADDENDA / REVISIONS		SCALE AS NOTED	REHABILITATION OF I-95 FROM I-495 TO NORTH OF BRANDYWINE RIVER BRIDGE	CONTRACT	BRIDGE NO. 1 758G 6149	EXPANSION JOINT DETAILS – 5	EX-05
				T201407404	DESIGNED BY: DAN		SECTION
				COUNTY			WRA
				NEW CASTLE	CHECKED BY: WAG		SHEET NO.
							609

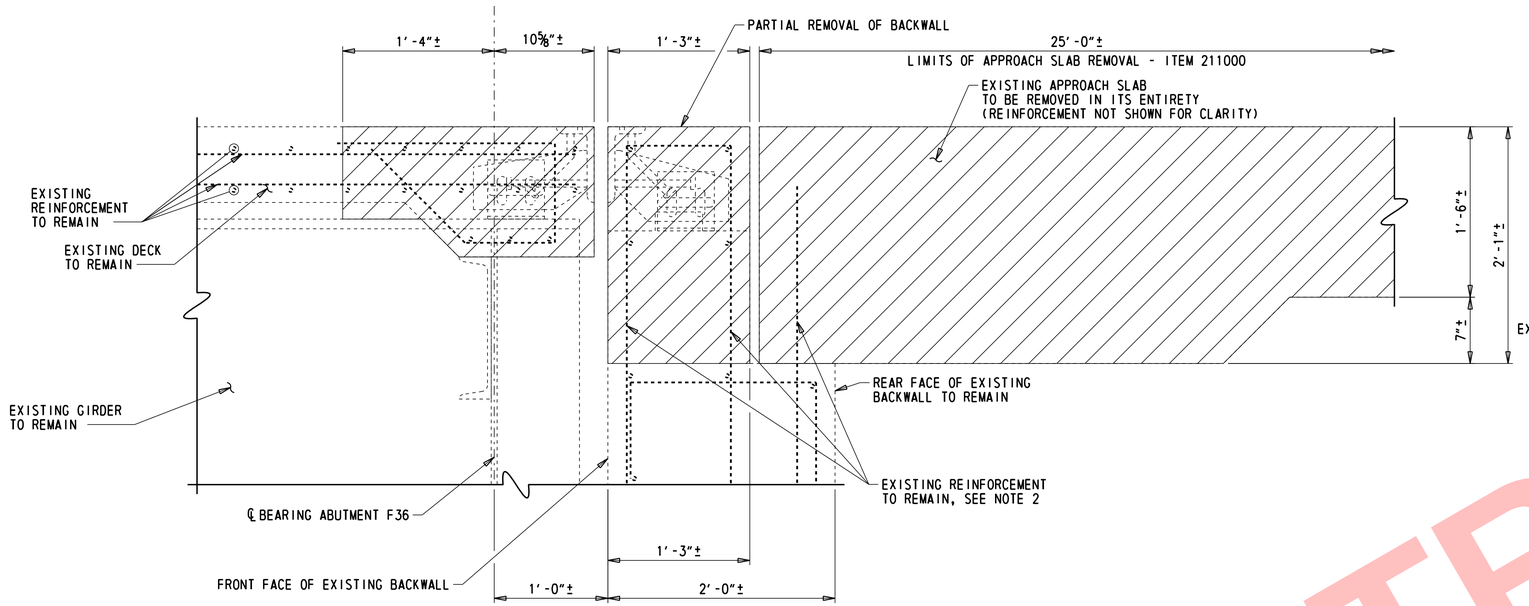

ABUTMENT F36 JOINT AND BACKWALL REMOVAL DETAIL

1½″ = 1′-0″

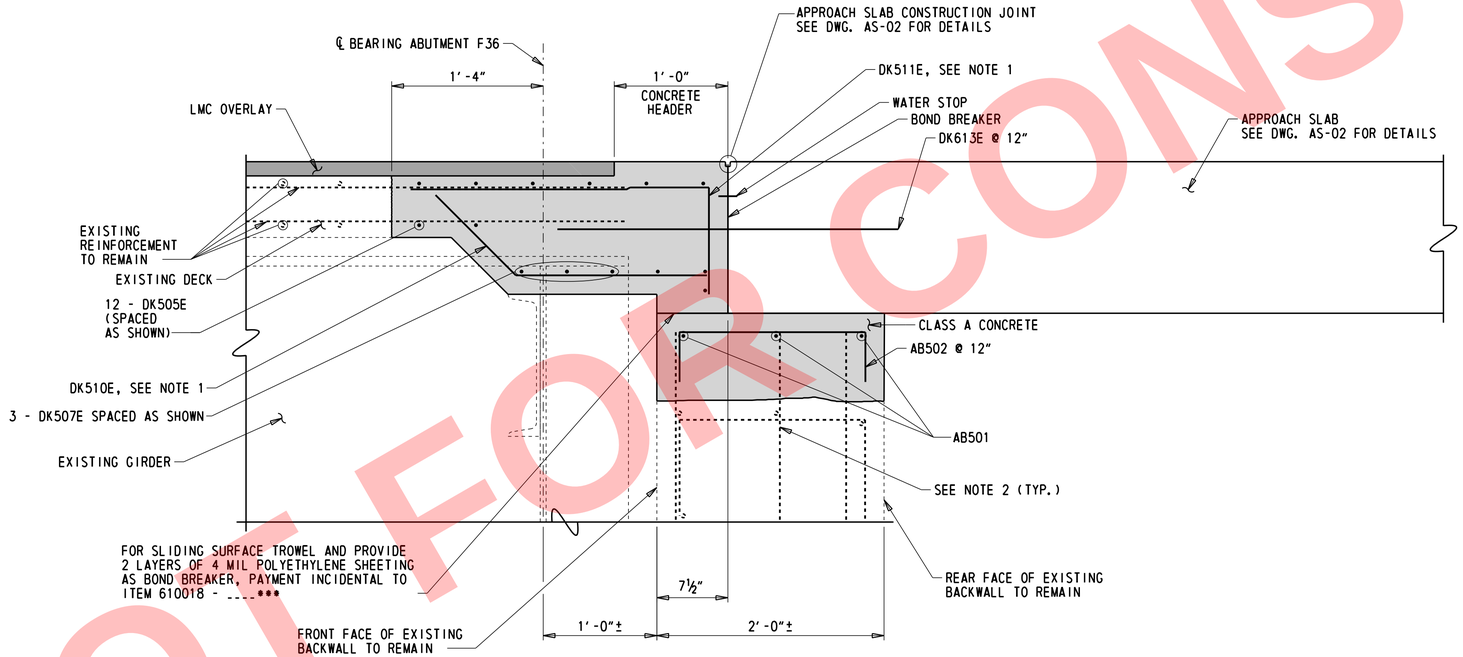

DECKOVER DETAIL

1½″ = 1′-0″

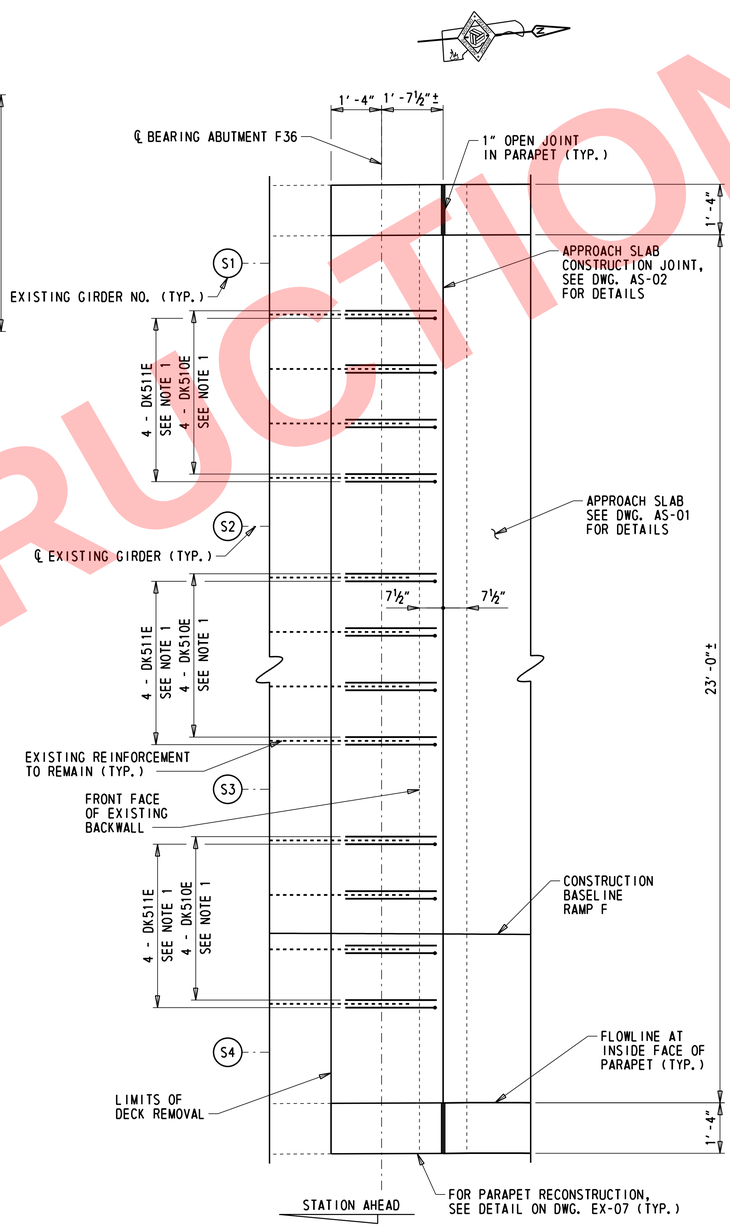

PLAN - DECKOVER

½″ = 1′-0″

LEGEND:

- REMOVAL LIMITS - ITEM 211000
- PROPOSED CONSTRUCTION
- PROPOSED LMC OVERLAY

NOTES:

1. BARS SPACED TO MATCH EXISTING TOP LONGITUDINAL BARS BETWEEN GIRDERS.
2. CUT EXISTING REINFORCEMENT TO REMAIN 2″ CLEAR OF NEW TOP OF BACKWALL.
3. EXISTING BARS TO REMAIN SHALL BE CLEANED IN ACCORDANCE WITH SUBSECTION 628.03(E)7. BARS WITH CORROSION, BROKEN, OR WITH INADEQUATE BOND SHALL BE REPAIRED IN ACCORDANCE WITH SUBSECTION 628.03(E)7.

NOT FOR CONSTRUCTION

N:\31987-004\Contract_I-95\CADD\Bridge\BRI-758G_EX06.dgn
5/31/2019 12:15:41 PM

ADDENDA / REVISIONS		SCALE AS NOTED	REHABILITATION OF I-95 FROM I-495 TO NORTH OF BRANDYWINE RIVER BRIDGE	CONTRACT T201407404	BRIDGE NO. 1 758G 6149	ABUTMENT F36 DECKOVER DETAILS – 1	EX-06
				COUNTY NEW CASTLE	DESIGNED BY: DAN		SECTION WRA
					CHECKED BY: WAG		SHEET NO. 610

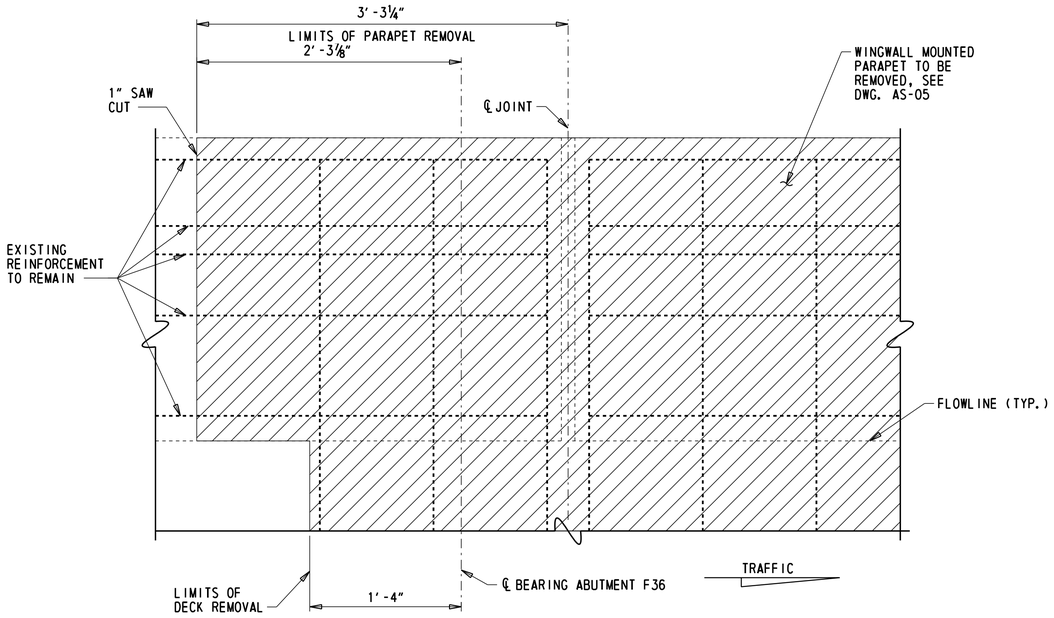

PARAPET REMOVAL AT DECKOVER

1½" = 1'-0"

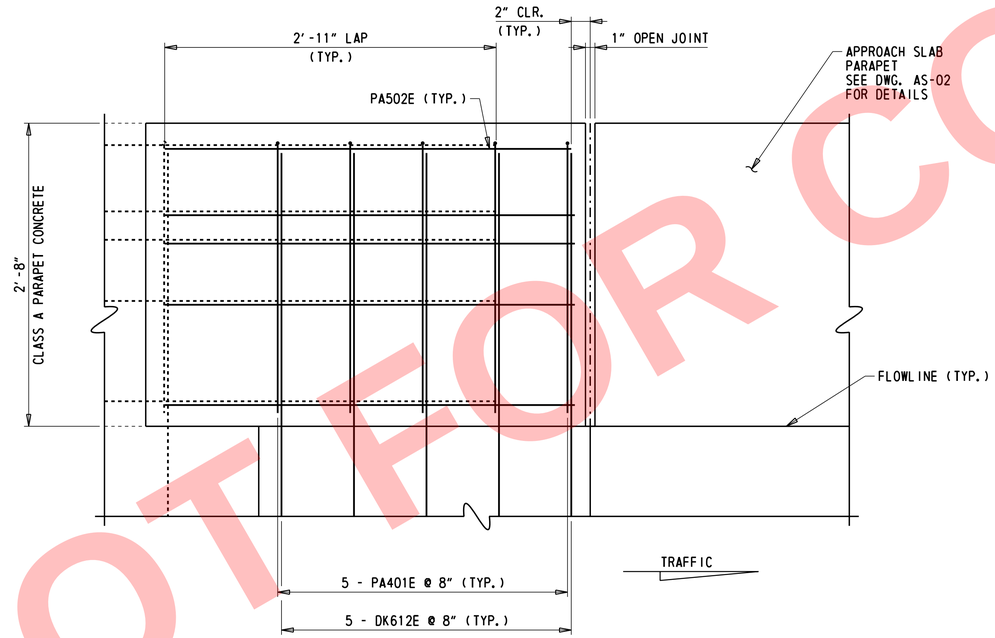

PARAPET RECONSTRUCTION AT DECKOVER

1½" = 1'-0"

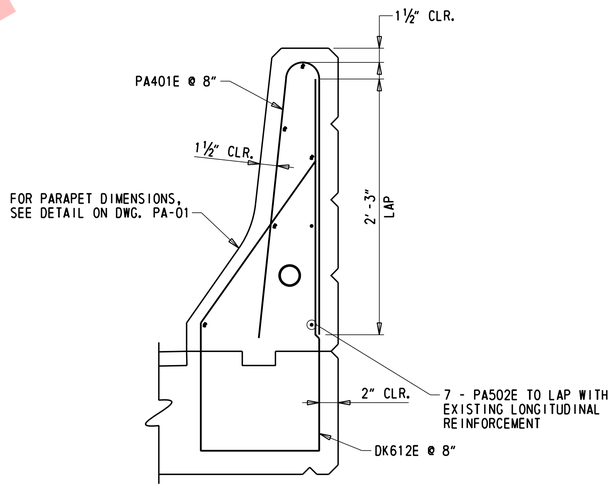

PARAPET REINFORCEMENT AT DECKOVER

1½" = 1'-0"

LEGEND:

REMOVAL LIMITS - ITEM 211000

NOT FOR CONSTRUCTION

N:\31987-00A\Contract\I-95\C4DD\Bridge\BRI-758G_EX07.dgn
5/31/2019 12:15:42 PM

ADDENDA / REVISIONS	SCALE AS NOTED	REHABILITATION OF I-95 FROM I-495 TO NORTH OF BRANDYWINE RIVER BRIDGE	CONTRACT T201407404	BRIDGE NO. 1 758G 6149	ABUTMENT F36 DECKOVER DETAILS – 2	EX-07
			COUNTY NEW CASTLE	DESIGNED BY: DAN		SECTION WRA
				CHECKED BY: WAG		SHEET NO. 611

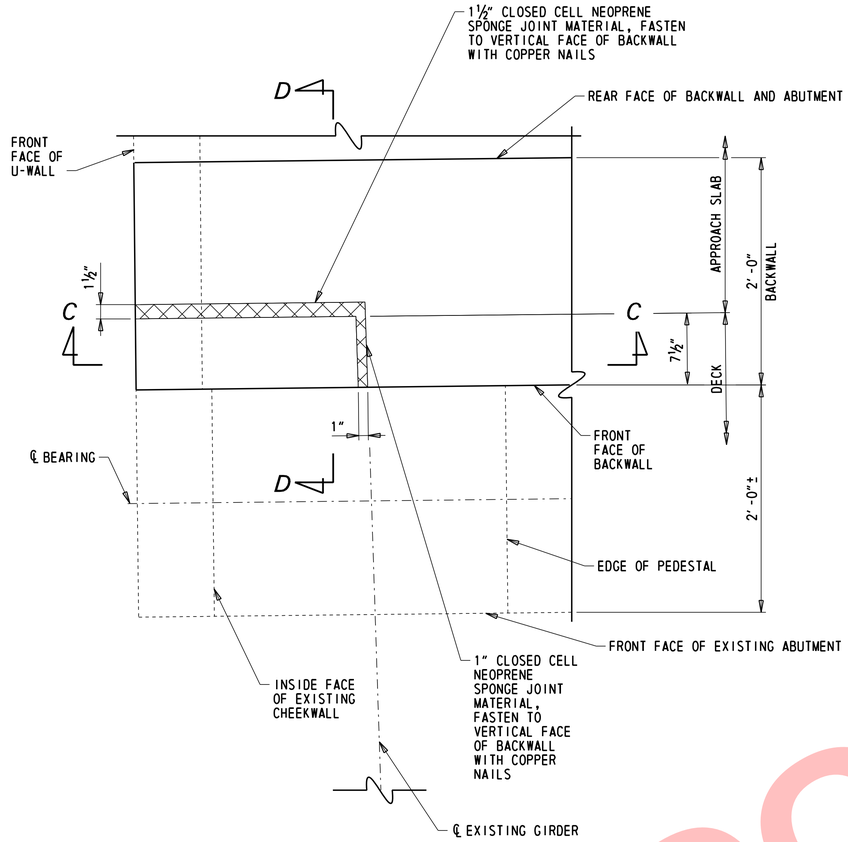

PLAN - TYPICAL DECKOVER DETAIL AT OVERHANG

1½" = 1'-0"

(WEST END OF ABUTMENT F36 SHOWN, EAST END SIMILAR)

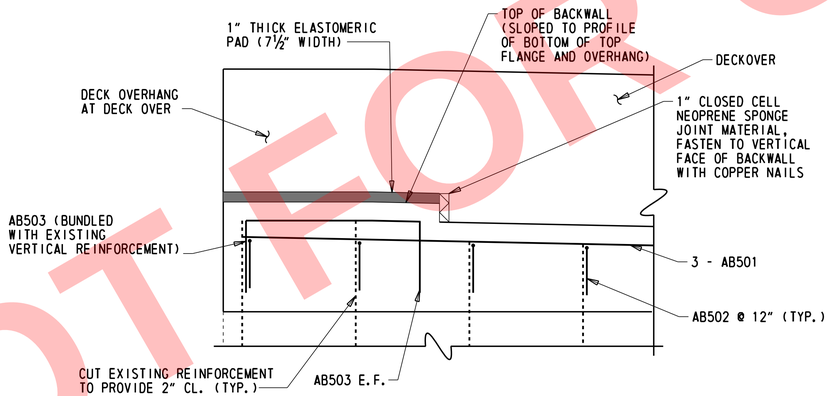

SECTION C-C

1½" = 1'-0"

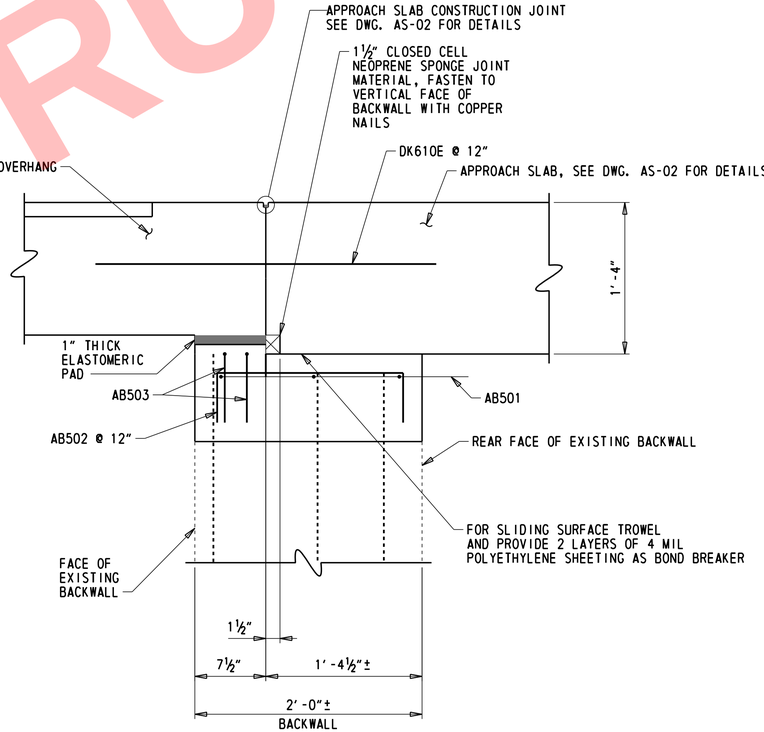

SECTION D-D

1½" = 1'-0"

NOT FOR CONSTRUCTION

N:\31987-004\Control I-95\CADD\Bridge\BR1-758G_EX08.dgn
5/31/2019 12:15:43 PM

ADDENDA / REVISIONS	SCALE AS NOTED	REHABILITATION OF I-95 FROM I-495 TO NORTH OF BRANDYWINE RIVER BRIDGE	CONTRACT T201407404	BRIDGE NO. 1 758G 6149	ABUTMENT F36 DECKOVER DETAILS – 3	EX-08
			COUNTY NEW CASTLE	DESIGNED BY: DAN		SECTION WRA
				CHECKED BY: WAG		SHEET NO. 612

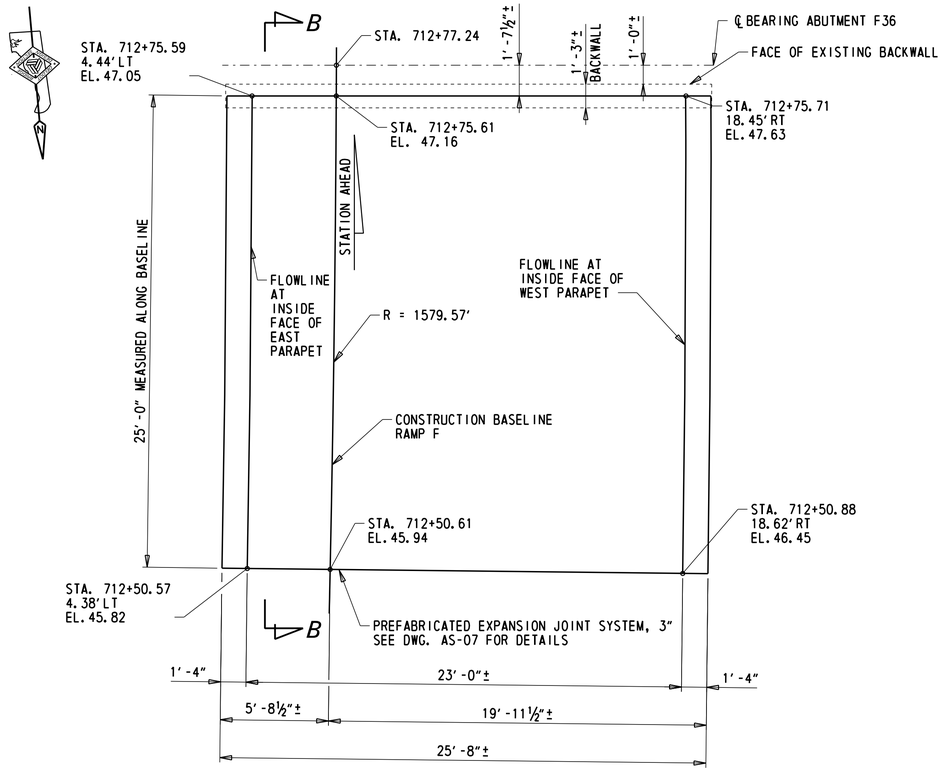

PLAN - APPROACH SLAB

¼" = 1'-0"

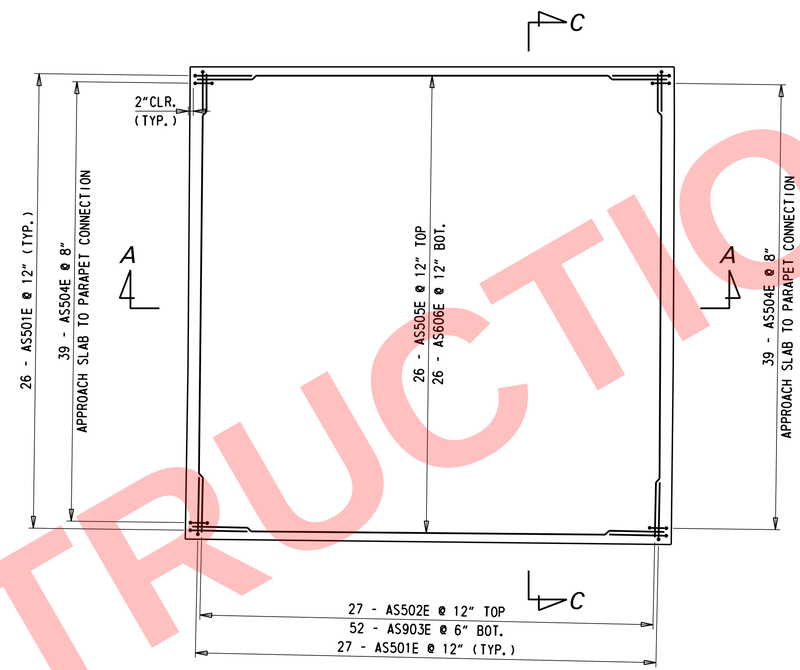

PLAN - APPROACH SLAB REINFORCEMENT

¼" = 1'-0"

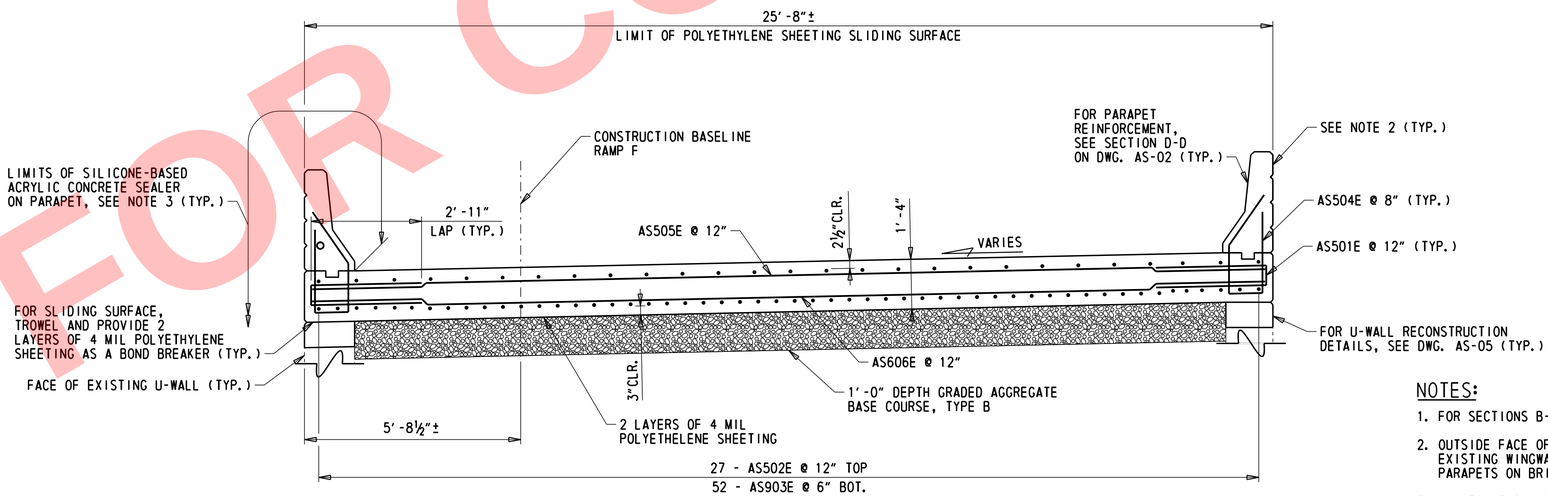

SECTION A-A

½" = 1'-0"

NOTES:

1. FOR SECTIONS B-B AND C-C, SEE DWG. AS-02.
2. OUTSIDE FACE OF PARAPETS SHALL BE CONSTRUCTED FLUSH WITH FRONT FACE OF EXISTING WINGWALLS. FLOWLINE AT PARAPET SHALL MATCH FLOWLINE OF EXISTING PARAPETS ON BRIDGE AND U-WALLS.
3. LIMITS OF SILICONE ACRYLIC CONCRETE SEALERS SHALL EXTEND FROM INSIDE FACE OF PARAPET TO EXISTING GROUNDLINE AT OUTSIDE FACE OF U-WALL.

NOT FOR CONSTRUCTION

ADDENDA / REVISIONS	SCALE AS NOTED	REHABILITATION OF I-95 FROM I-495 TO NORTH OF BRANDYWINE RIVER BRIDGE	CONTRACT T201407404	BRIDGE NO. 1 758G 6149	APPROACH SLAB PLAN AND TYPICAL SECTION	AS-01 SECTION WRA
			COUNTY NEW CASTLE	DESIGNED BY: DAN		SHEET NO. 613
				CHECKED BY: WAG		

N:\31987-00A\Cad\civil\I-95\CADD\Bridge\BR1-758G_AS01.dgn
5/31/2019 12:19:43 PM

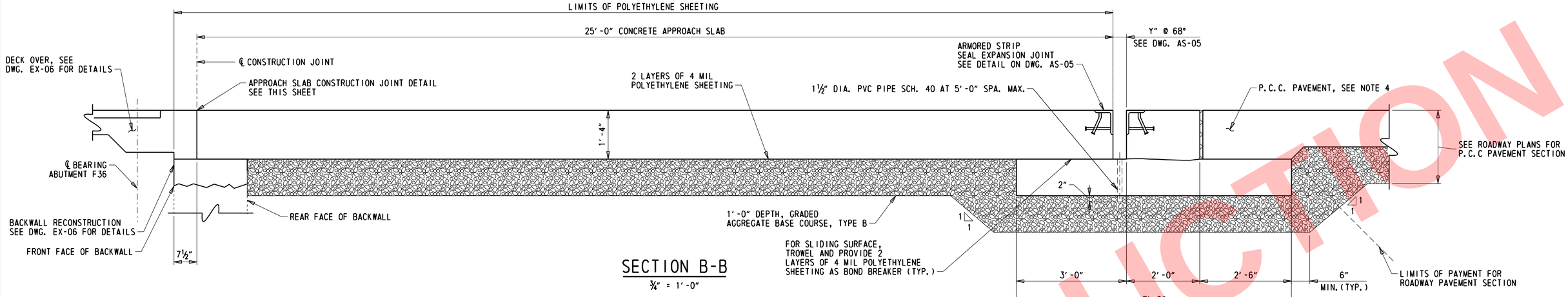

SECTION B-B

¾" = 1'-0"

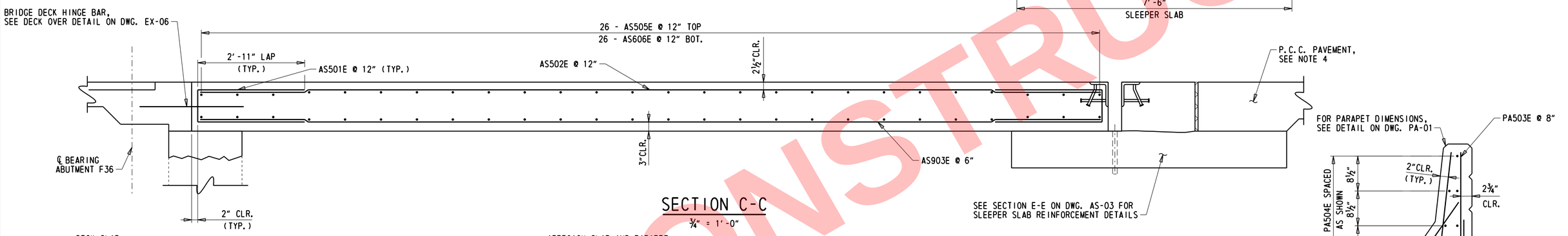

SECTION C-C

¾" = 1'-0"

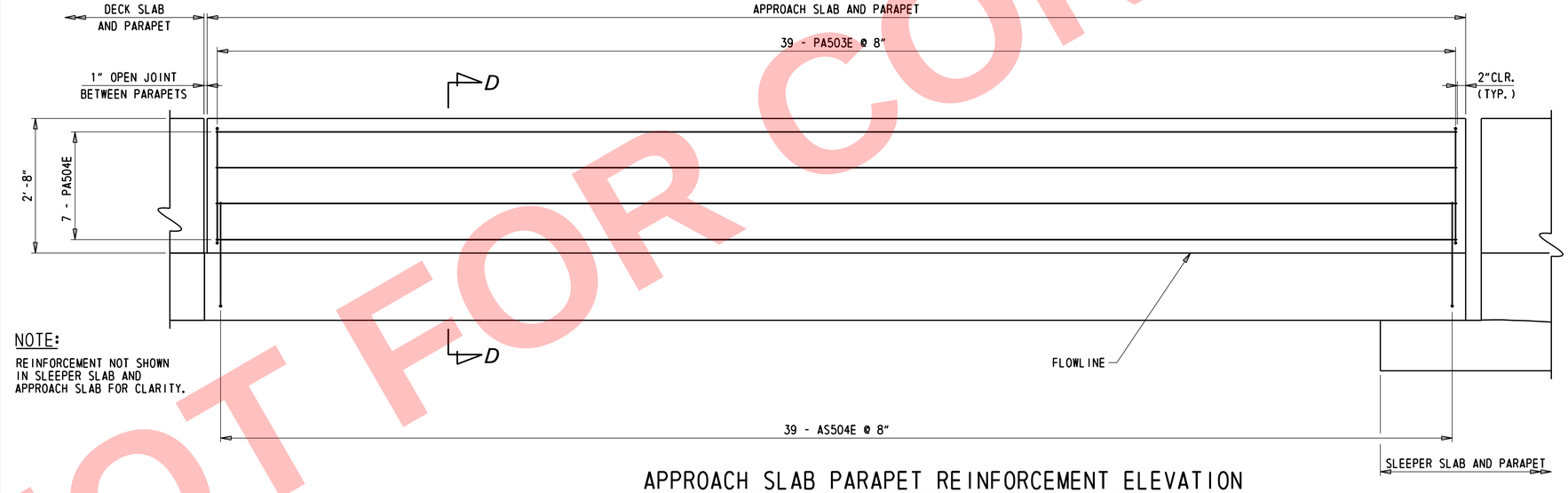

NOTE:

REINFORCEMENT NOT SHOWN IN SLEEPER SLAB AND APPROACH SLAB FOR CLARITY.

APPROACH SLAB PARAPET REINFORCEMENT ELEVATION

¾" = 1'-0"

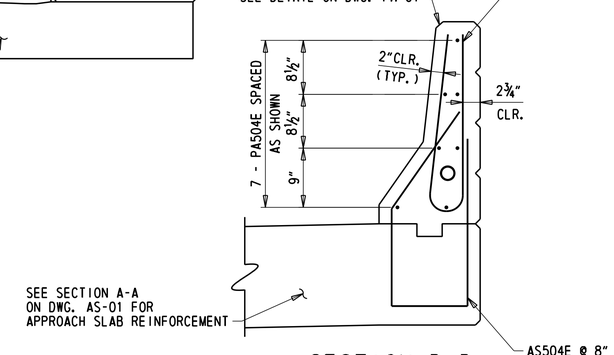

SECTION D-D

1" = 1'-0"

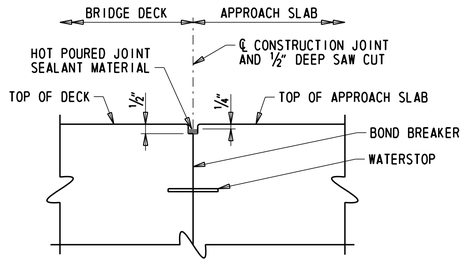

APPROACH SLAB CONSTRUCTION JOINT

NOT TO SCALE

NOTES:

1. FOR ARMORED STRIP SEAL EXPANSION JOINT DETAILS, SEE DWG. AS-05.
2. FOR ADDITIONAL APPROACH SLAB REINFORCEMENT DETAILS SEE DWG. AS-01.
3. PAYMENT FOR POLYETHYLENE SHEETING, BOND BREAKER, WATERSTOP, ½" DEEP SAW CUT, AND HOT POURED JOINT SEALANT WILL BE INCIDENTAL TO ITEM 610018 - PORTLAND CEMENT CONCRETE, APPROACH SLAB, CLASS D.
4. FOR ADDITIONAL ROADWAY PAVEMENT DETAILS, SEE DELDOT STANDARD P-1. PAYMENT FOR ROADWAY JOINTS WILL BE INCIDENTAL TO ROADWAY PAVEMENT ITEM.
5. HOT POURED JOINT SEALANT MATERIAL SHALL BE IN CONFORMANCE WITH SUBSECTION 1042.02.2.A.

NOT FOR CONSTRUCTION

ADDENDA / REVISIONS		SCALE AS NOTED	REHABILITATION OF I-95 FROM I-495 TO NORTH OF BRANDYWINE RIVER BRIDGE	CONTRACT T201407404	BRIDGE NO. 1 758G 6149	APPROACH SLAB DETAILS	AS-02
				COUNTY NEW CASTLE	DESIGNED BY: DAN		SECTION WRA
					CHECKED BY: WAG		SHEET NO. 614

N:\31987-004\Control I-95\CADD\Bridge\BR1-7586_AS02.dgn
5/31/2019 12:15:44 PM

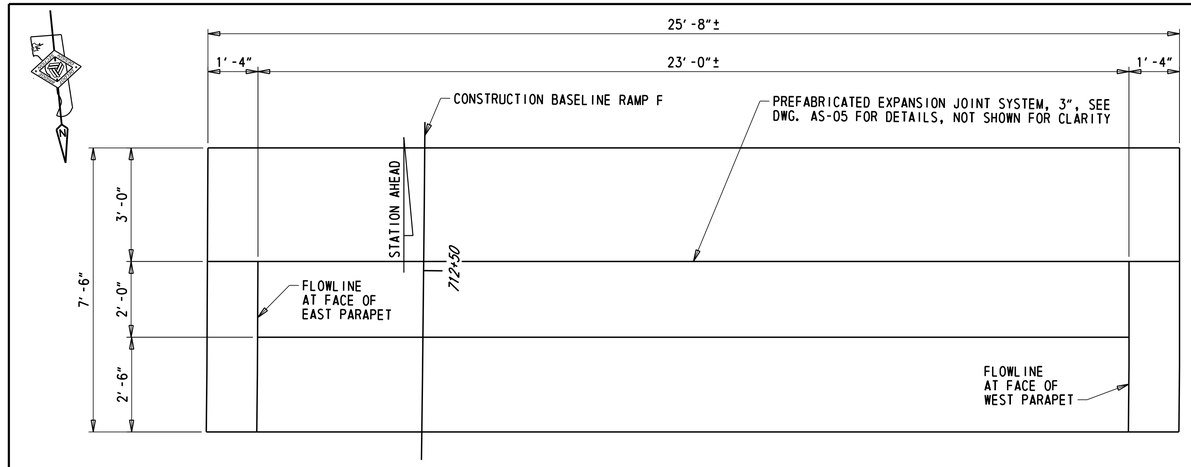

PLAN - SLEEPER SLAB

½" = 1'-0"

NOTES:

ARMOR ANGLES NOT SHOWN FOR CLARITY.

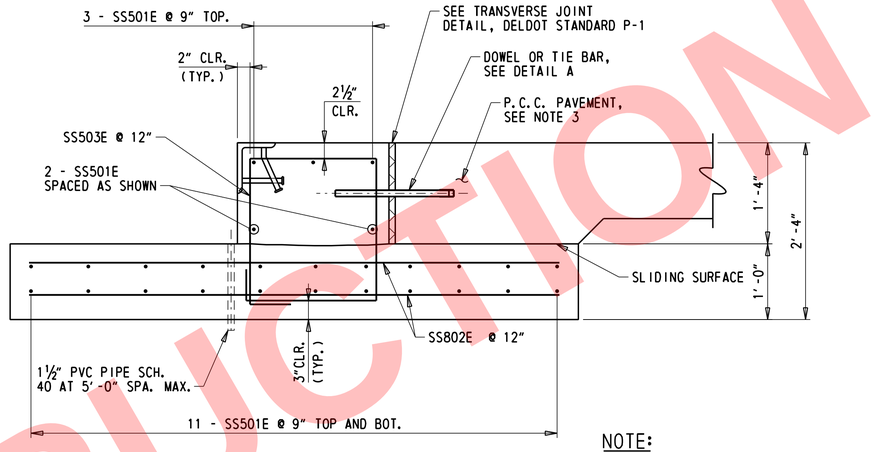

SECTION E-E

1" = 1'-0"

NOTE:

APPROACH SLAB NOT SHOWN FOR CLARITY

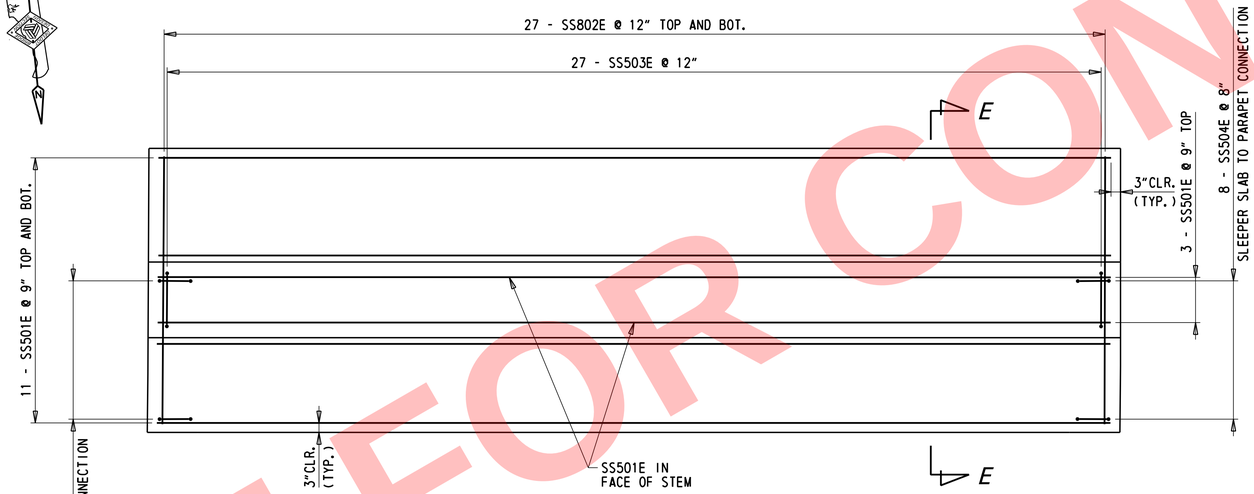

PLAN - SLEEPER SLAB REINFORCEMENT

½" = 1'-0"

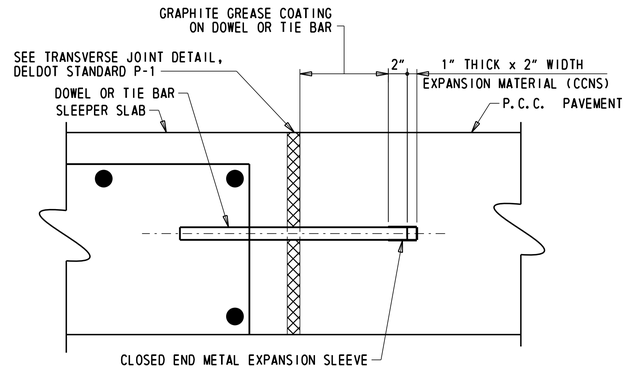

DETAIL A

N.T.S

CCNS = CLOSED CELL NEOPRENE SPONGE

NOTES:

1. FOR APPROACH SLAB PLAN AND DETAILS, SEE DWGS. AS-01 AND AS-02.
2. FOR ADDITIONAL ROADWAY PAVEMENT DETAILS, SEE DELDOT STANDARD P-1. PAYMENT FOR ROADWAY JOINTS SHALL BE INCIDENTAL TO ROADWAY PAYMENT ITEM.
3. PAYMENT FOR CCNS, DOWEL OR TIE BAR, AND GRAPHITE GREASE COATING WILL BE INCIDENTAL TO ITEM 610018 - PORTLAND CEMENT CONCRETE, APPROACH SLAB, CLASS D.

NOT FOR CONSTRUCTION

ADDENDA / REVISIONS		SCALE AS NOTED	REHABILITATION OF I-95 FROM I-495 TO NORTH OF BRANDYWINE RIVER BRIDGE	CONTRACT T201407404	BRIDGE NO. 1 758G 6149	SLEEPER SLAB PLAN, SECTION, AND DETAILS	AS-03
				COUNTY NEW CASTLE	DESIGNED BY: DAN		SECTION WRA
					CHECKED BY: WAG		SHEET NO. 615

N:\31987-00A\Contract_I-95\C&D\Bridge\BR1-758G_AS03.dgn
5/31/2019 12:15:45 PM

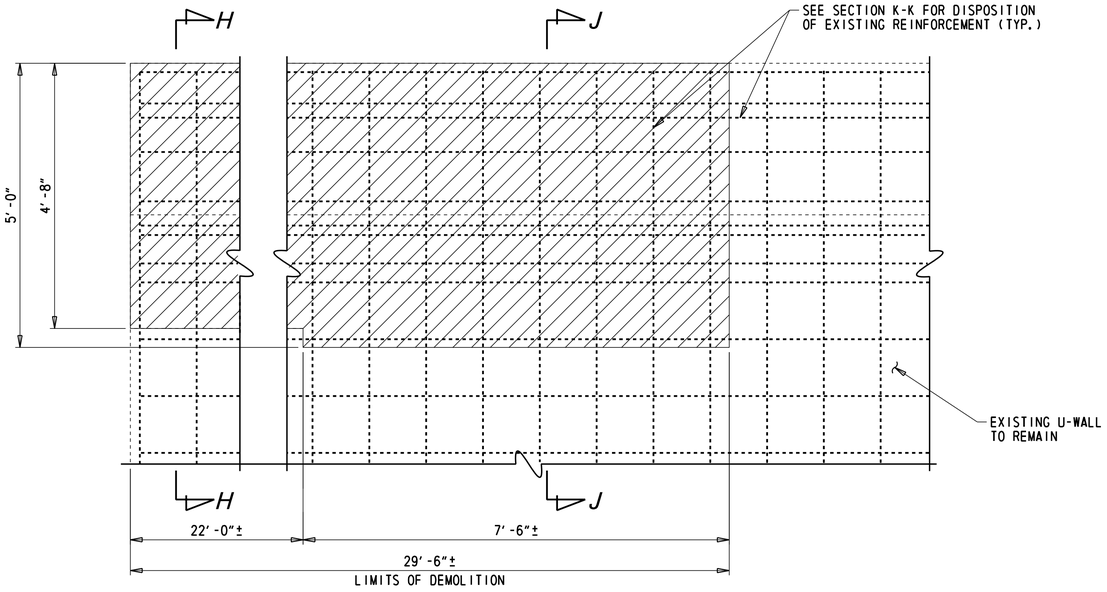

PARTIAL U-WALL REMOVAL

¾" = 1'-0"

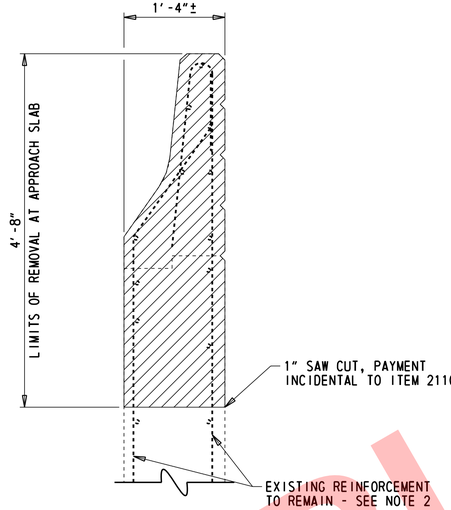

SECTION H-H REMOVAL

1" = 1'-0"

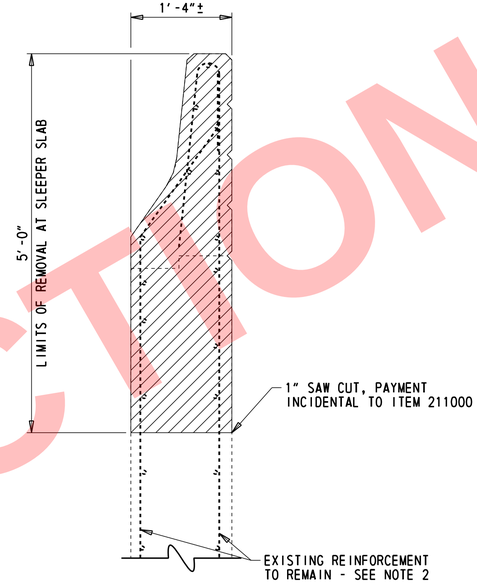

SECTION J-J REMOVAL

1" = 1'-0"

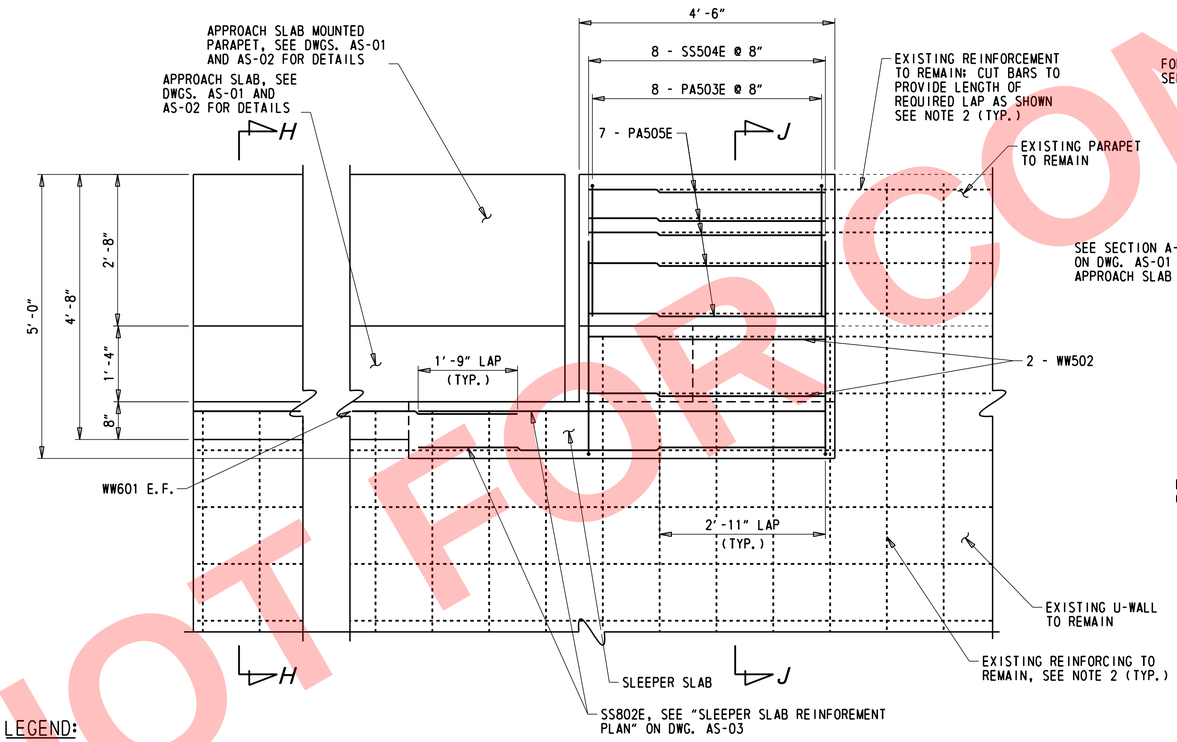

LEGEND:

REMOVAL LIMITS - ITEM 211000

U-WALL RECONSTRUCTION

¾" = 1'-0"

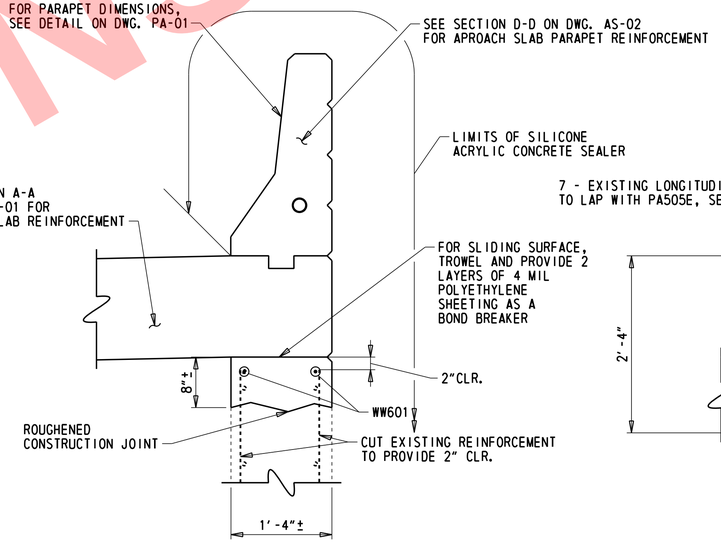

SECTION H-H CONSTRUCTION

1" = 1'-0"

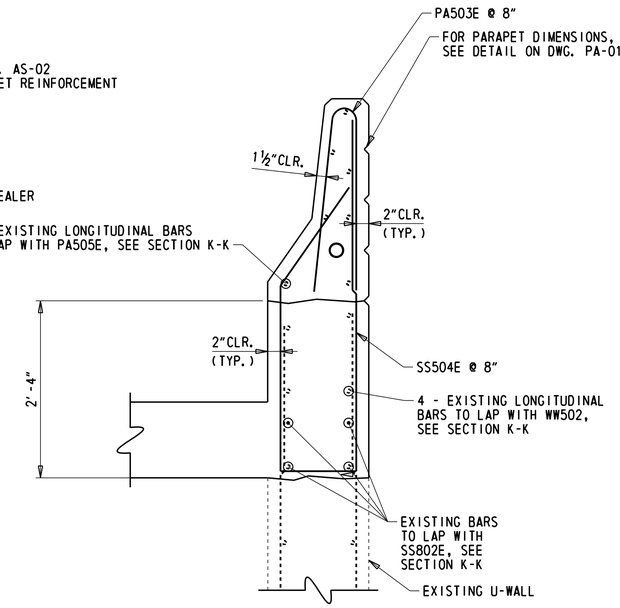

SECTION J-J CONSTRUCTION

1" = 1'-0"

NOTES:

1. FOR U-WALL PARTIAL DEMOLTION PLAN AND SECTIONS H-H AND J-J, SEE DWG. AS-05.
2. EXISTING BARS TO REMAIN SHALL BE CLEANED IN ACCORDANCE WITH SUBSECTION 628.03(E)7. BARS WITH CORROSION, BROKEN, OR WITH INADEQUATE BOND SHALL BE REPAIRED IN ACCORDANCE WITH SUBSECTION 628.03(E)7. PAYMENT FOR THIS WORK WILL BE INCIDENTAL TO ITEM 624000 - PREFABRICATED EXPANSION JOINT SYSTEM, 3".

NOT FOR CONSTRUCTION

N:\31987-004\Contract\I-95\CADD\Bridge\BR1-758G_AS04.dgn
5/31/2019 12:15:46 PM

ADDENDA / REVISIONS	SCALE AS NOTED	REHABILITATION OF I-95 FROM I-495 TO NORTH OF BRANDYWINE RIVER BRIDGE	CONTRACT T201407404	BRIDGE NO. 1 758G 6149	U-WALL PARTIAL REMOVAL AND RECONSTRUCTION	AS-04
				DESIGNED BY: DAN		SECTION WRA
			COUNTY NEW CASTLE	CHECKED BY: WAG		SHEET NO. 616

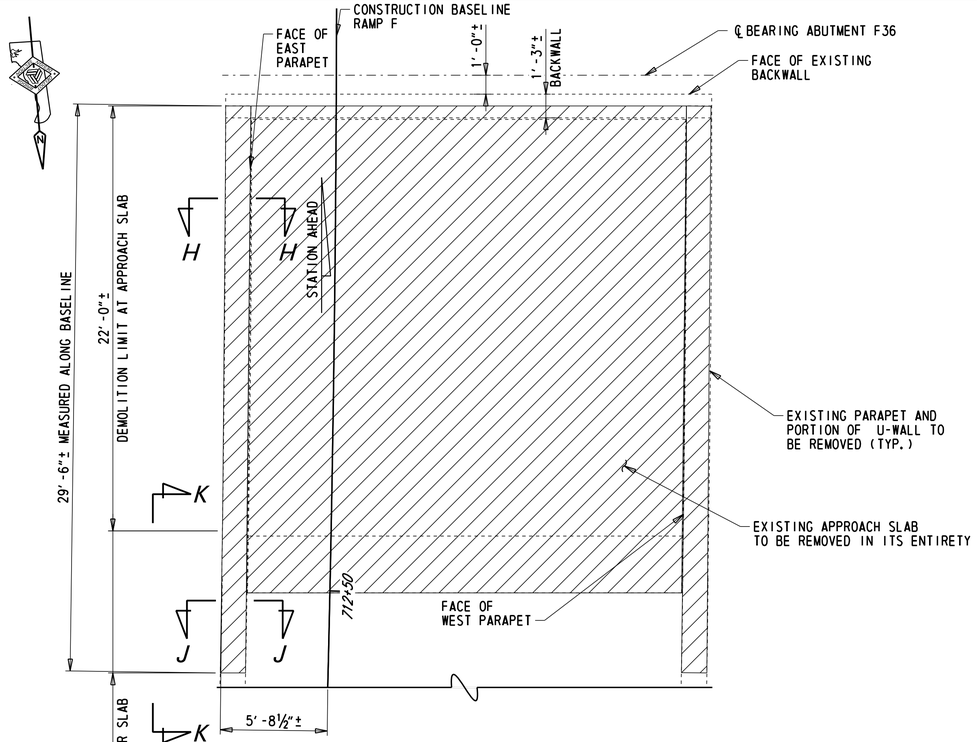

U-WALL PARTIAL DEMOLITION PLAN

¼" = 1'-0"

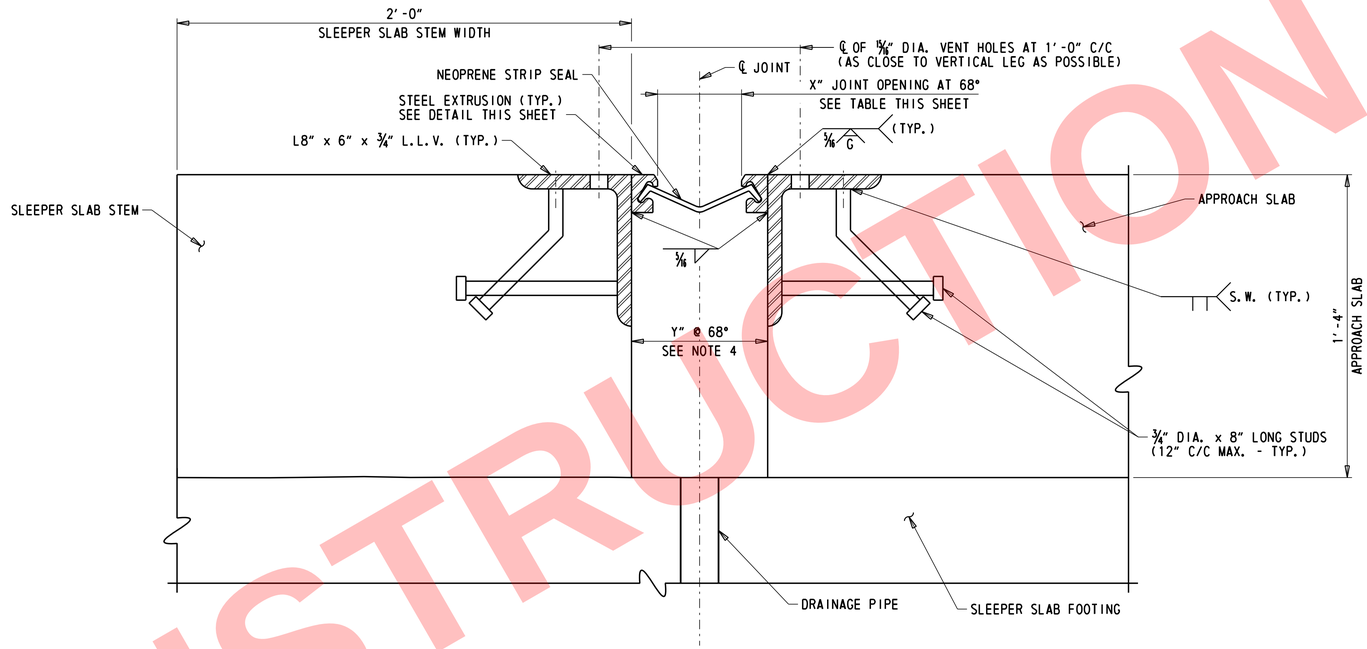

APPROACH SLAB JOINT ASSEMBLY DETAIL

3" = 1'-0"

STRIP SEAL EXPANSION JOINT NOTES:

1. STEEL FOR DECK JOINTS AND STEEL EXTRUSIONS SHALL BE AASHTO M270, GR. 36 (ASTM A36) AT MINIMIM.
2. NEOPRENE EXTRUSION TO MEET ASTM D-2628-81 MODIFIED, (RECOVERY TEST EXCLUDED).
3. THE EXPANSION JOINT SHALL BE CAPABLE OF SEALING THE APPROACH SLAB TO SLEEPER SLAB JOINT TO PREVENT MOISTURE AND OTHER CONTAMINANTS FROM DESCENDING THROUGH THE JOINT.
4. THE CONTRACTOR SHALL ADJUST THE OPEN JOINT (Y) AS REQUIRED BY THE WIDTH OF THE STEEL EXTRUSION USED SO AS TO PROVIDE A X" JOINT OPENING AT 68°F.
5. THE STRIP SEAL SHALL BE INSTALLED IN ONE PIECE ACROSS THE APPROACH SLAB WIDTH. SPLICING OF THE STRIP SEAL IS NOT PERMITTED.
6. THE EXPANSION JOINT SYSTEM IS PAID FOR UNDER ITEM 624000 - PREFABRICATED EXPANSION JOINT SYSTEM, 3".
7. STEEL EXTRUSIONS SHALL BE HOT-DIP GALVANIZED. ENTIRE EXPANSION DAM SHALL BE PAINTED AFTER FABRICATION USING URETHANE SYSTEM AND COLOR SHALL MATCH EXISTING BEAMS.
8. LUBRICANT-ADHESIVE FOR USE IN INSTALLING AND BONDING NEOPRENE SEAL ELEMENTS TO STEEL JOINT COMPONENTS SHALL BE A ONE QUART MOISTURE-CURING POLYURETHANE AND HYDROCARBON SOLVENT MIXTURE HAVING THE FOLLOWING PHYSICAL PROPERTIES:

AVERAGE WEIGHT, POUNDS PER GALLON	8±10%
SOLIDS CONTENT	65%
ADHESIVE SHALL REMAIN LIQUID FROM	5°F TO 120°F
FILM STRENGTH, AS PER ASTM D-412	2,000 PSI
ELONGATION	250%

9. STEEL EXTRUSIONS AND JOINT ANGLES SHALL BE CONTINUOUS ACROSS THE FULL WIDTH OF THE ROADWAY. NO SPLICING WILL BE PERMITTED.
10. PARAPET PLATES ARE REQUIRED AT JOINTS. SEE DETAILS ON EX-05 AND JOINT OPENING TABLE, THIS SHEET.

APPROACH SLAB JOINT OPENINGS

TEMPERATURE °F	20°	30°	40°	50°	60°	68°	70°	80°	90°	100°
ABUTMENT F36	2⅛"	2"	1⅞"	1 11/16"	1¾"	1 11/16" ±	1 11/16" ±	1⅝"	1½"	1⅛"

LEGEND:

▨ REMOVAL LIMITS - ITEM 211000

NOTES:

1. FOR SECTIONS H-H, J-J, AND K-K, SEE DWG. AS-04.

NOT FOR CONSTRUCTION

N:\31887-004\Control-I-95\CADD\Bridge\BR1-758G_AS05.dgn
5/31/2019 12:15:48 PM

ADDENDA / REVISIONS		SCALE AS NOTED	REHABILITATION OF I-95 FROM I-495 TO NORTH OF BRANDYWINE RIVER BRIDGE	CONTRACT T201407404	BRIDGE NO. 1 758G 6149	APPROACH SLAB REMOVAL AND JOINT ASSEMBLY DETAILS	AS-05 SECTION
				COUNTY NEW CASTLE	DESIGNED BY: DAN		WRA SHEET NO.
					CHECKED BY: WAG		617

(1) ANY MARK NUMBER WITH SUFFIX 'E' DENOTES EPOXY COATED REINFORCING STEEL.

(2) ALL MARK 'LOCATION PREFIXES' SHALL CONSIST OF TWO LETTERS AND ARE AS FOLLOWS: AB = ABUTMENT, AS = APPROACH SLAB, BC = BOX CULVERT, BW = BACKWALL, CL = COLUMN, DK = DECK, DL = DOWEL, FT = FOOTING, HW = HEADWALL, MS = MISC. BARS, PA = PARAPET, PR = PIER, SC = SHEETPILE CAP, SL = SLAB, SS = SLEEPER SLAB, TW = TOEWALL, WL = WALL (UNIQUE LOCATION), WW = WINGWALL

SPECIFICATIONS					BENDING DIMENSIONS (FEET-INCHES /QUARTER INCH)										
QTY.	SIZE	LENGTH	MARK	TYPE	A	B	C	D	E	F/R	G	H	J	K	O
JOINT 26															
18	5	2-4.3	DK501E	DE24		0-10.0	0-7.2	0-5.2	0-5.3			0-4.0		0-4.0	0-10.0
2	5	4-10.0	DK502E	STR		4-10.0									
2	5	4-6.0	DK503E	STR		4-6.0									
2	5	4-5.0	DK504E	STR		4-5.0									
5	5	25-4.0	DK505E	STR		25-4.0									
6	6	7-2.0	DK612E	SP03		3-3.2	1-0.2	1-1.0	1-9.0			1-5.0		1-0.0	
6	4	5-0.0	PA401E	H1		2-3.0	0-5.2	2-3.2		0-11		0-6.1			
JOINT F27															
10	5	25-4.0	DK505E	STR		25-4.0									
42	5	2-8.3	DK506E	DE24		0-10.0	0-10.3	0-6.1	0-5.3			0-4.2		0-4.2	0-10.
12	5	5-5.0	DK507E	STR		5-5.0									
12	6	7-2.0	DK612E	SP03		3-3.2	1-0.2	1-1.0	1-9.0			1-5.0		1-0.0	
12	4	5-0.0	PA401E	H1		2-3.0	0-5.2	2-3.2		0-11		0-6.1			
JOINT F28															
10	5	25-4.0	DK505E	STR		25-4.0									
42	5	2-8.3	DK506E	DE24		0-10.0	0-10.3	0-6.1	0-5.3			0-4.2		0-4.2	0-10.0
12	5	5-5.0	DK507E	STR		5-5.0									
12	6	7-2.0	DK612E	SP03		3-3.2	1-0.2	1-1.0	1-9.0			1-5.0		1-0.0	
12	4	5-0.0	PA401E	H1		2-3.0	0-5.2	2-3.2		0-11		0-6.1			
JOINT F29															
10	5	25-4.0	DK505E	STR		25-4.0									
42	5	2-8.3	DK506E	DE24		0-10.0	0-10.3	0-6.1	0-5.3			0-4.2		0-4.2	0-10.0
12	5	5-5.0	DK507E	STR		5-5.0									
12	6	7-2.0	DK612E	SP03		3-3.2	1-0.2	1-1.0	1-9.0			1-5.0		1-0.0	
12	4	5-0.0	PA401E	H1		2-3.0	0-5.2	2-3.2		0-11		0-6.1			
JOINT F30															
10	5	25-4.0	DK505E	STR		25-4.0									
21	5	2-8.3	DK506E	DE24		0-10.0	0-10.3	0-6.1	0-5.3			0-4.2		0-4.2	0-10.0
12	5	5-5.0	DK507E	STR		5-5.0									
21	5	2-6.1	DK508E	DE24		0-10.0	0-10.3	0-4.2	0-5.0			0-3.2		0-3.2	0-10.0
12	6	7-2.0	DK612E	SP03		3-3.2	1-0.2	1-1.0	1-9.0			1-5.0		1-0.0	
12	4	5-0.0	PA401E	H1		2-3.0	0-5.2	2-3.2		0-11		0-6.1			
JOINT F31															
10	5	25-4.0	DK505E	STR		25-4.0									
12	5	5-5.0	DK507E	STR		5-5.0									
21	5	2-6.1	DK508E	DE24		0-10.0	0-10.3	0-4.2	0-5.0			0-3.2		0-3.2	0-10.0
12	5	2-6.1	DK509E	DE24		0-10.2	0-7.3	0-7.0	0-5.0			0-5.0		0-5.0	0-10.2
12	6	7-2.0	DK612E	SP03		3-3.2	1-0.2	1-1.0	1-9.0			1-5.0		1-0.0	
12	4	5-0.0	PA401E	H1		2-3.0	0-5.2	2-3.2		0-11		0-6.1			

SPECIFICATIONS					BENDING DIMENSIONS (FEET-INCHES /QUARTER INCH)										
QTY.	SIZE	LENGTH	MARK	TYPE	A	B	C	D	E	F/R	G	H	J	K	O
JOINT F32															
10	5	25-4.0	DK505E	STR		25-4.0									
12	5	5-5.0	DK507E	STR		5-5.0									
24	5	2-6.1	DK509E	DE24		0-10.2	0-7.3	0-7.0	0-5.0			0-5.0		0-5.0	0-10.2
12	6	7-2.0	DK612E	SP03		3-3.2	1-0.2	1-1.0	1-9.0			1-5.0		1-0.0	
12	4	5-0.0	PA401E	H1		2-3.0	0-5.2	2-3.2		0-11		0-6.1			
JOINT F33															
10	5	25-4.0	DK505E	STR		25-4.0									
12	5	5-5.0	DK507E	STR		5-5.0									
24	5	2-6.1	DK509E	DE24		0-10.2	0-7.3	0-7.0	0-5.0			0-5.0		0-5.0	0-10.2
12	6	7-2.0	DK612E	SP03		3-3.2	1-0.2	1-1.0	1-9.0			1-5.0		1-0.0	
12	4	5-0.0	PA401E	H1		2-3.0	0-5.2	2-3.2		0-11		0-6.1			
JOINT F34															
10	5	25-4.0	DK505E	STR		25-4.0									
12	5	5-5.0	DK507E	STR		5-5.0									
24	5	2-6.1	DK509E	DE24		0-10.2	0-7.3	0-7.0	0-5.0			0-5.0		0-5.0	0-10.2
12	6	7-2.0	DK612E	SP03		3-3.2	1-0.2	1-1.0	1-9.0			1-5.0		1-0.0	
12	4	5-0.0	PA401E	H1		2-3.0	0-5.2	2-3.2		0-11		0-6.1			
JOINT F35															
10	5	25-4.0	DK505E	STR		25-4.0									
12	5	5-5.0	DK507E	STR		5-5.0									
24	5	2-6.1	DK509E	DE24		0-10.2	0-7.3	0-7.0	0-5.0			0-5.0		0-5.0	0-10.2
12	6	7-2.0	DK612E	SP03		3-3.2	1-0.2	1-1.0	1-9.0			1-5.0		1-0.0	
12	4	5-0.0	PA401E	H1		2-3.0	0-5.2	2-3.2		0-11		0-6.1			
DECKOVER - ABUTMENT F36															
11	5	25-4.0	DK505E	STR		25-4.0									
9	5	5-5.0	DK507E	STR		5-5.0									
12	5	2-8.2	DK510E	29		1-0.0	1-8.2					0-8.2		0-8.2	2-6.0
20	5	3-6.3	DK511E	20			2-7.2	0-11.1							
10	6	7-2.0	DK612E	SP03		3-3.2	1-0.2	1-1.0	1-9.0			1-5.0		1-0.0	
27	6	3-0.0	DK613E	STR		3-0.0									
10	4	5-0.0	PA401E	H1		2-3.0	0-5.2	2-3.2		0-11		0-6.1			
10	5	3-7.0	PA502E	STR		3-7.0									

SPECIFICATIONS					BENDING DIMENSIONS (FEET-INCHES /QUARTER INCH)										
QTY.	SIZE	LENGTH	MARK	TYPE	A	B	C	D	E	F/R	G	H	J	K	O
SUBSTRUCTURE - ABUTMENT F36															
3	5	25-4.0	AB501	STR		25-4.0									
24	5	2-8.0	AB502	17		0-5.0	1-9.0	0-5.0							
4	5	2-7.2	AB503	17		0-5.1	1-9.0	0-5.1							
APPROACH SLAB															
106	5	6-8.2	AS501E	17		2-11.0	0-10.2	2-11.0							
27	5	24-8.0	AS502E	STR		24-8.0									
52	9	24-8.0	AS903E	STR		24-8.0									
78	5	7-0.0	AS504E	SP03		2-9.2	1-0.1	1-3.1	1-10.0			1-6.1		1-0.2	
26	5	25-4.0	AS505E	STR		25-4.0									
26	6	25-4.0	AS606E	STR		25-4.0									
78	5	4-10.2	PA503E	H1		2-1.2	0-8.0	2-1.0		0-2.0		0-2.2			
14	5	24-8.0	PA504E	STR		24-8.0									
SLEEPER SLAB															
27	5	25-2.0	SS501E	STR		25-2.0									
54	8	7-0.0	SS802E	STR		7-0.0									
27	5	8-3.0	SS503E	T2	0-6.0	1-9.0	1-10.2	1-9.0	1-10.2		0-6.0				
16	5	9-8.0	SS504E	SP03		4-7.2	1-0.0	2-5.2	1-7.0			1-3.2		10-9.0	
16	5	4-10.2	PA503E	H1		2-1.2	0-8.0	2-1.0		0-2.0		0-2.2			
14	5	4-2.0	PA505E	STR		4-2.0									
U-WALL															
4	6	23-9.0	WW601	STR		23-9.0									
4	5	4-2.0	WW502	STR		4-2.0									

ASTM STANDARD ENGLISH REINFORCING BARS				RECOMMENDED END HOOKS, APPLICABLE TO ALL GRADES				STIRRUP AND TIE HOOKS, APPLICABLE TO ALL GRADES			
NOMINAL DIMENSIONS					180° HOOKS		90° HOOKS		90° HOOK	135° HOOK	
BAR SIZE	DIAMETER (INCHES)	AREA (INCHES²)	WEIGHT (LBS./FT.)	D	A OR G	J	A OR G	D	A OR G	A OR G	A OR G
3	0.375	0.110	0.376	2¼"	5"	3"	6"	1½"	4"	4"	2½"
4	0.500	0.200	0.668	3"	6"	4"	8"	2"	4½"	4½"	3"
5	0.625	0.310	1.043	3¾"	7"	5"	10"	2½"	6"	5½"	3¾"
6	0.750	0.440	1.502	4½"	8"	6"	1-0"	4½"	1-0"	8"	4½"
7	0.875	0.600	2.044	5¼"	10"	7"	1-2"	5¼"	1-2"	9"	5¼"
8	1.000	0.790	2.670	6"	11"	8"	1-4"	6"	1-4"	10½"	6"
9	1.128	1.000	3.400	9½"	1-3"	11¾"	1-7"				
10	1.270	1.270	4.303	10¾"	1-5"	1-1¼"	1-10"				
11	1.410	1.560	5.313	1-0"	1-7"	1-2¾"	2-0"				
14	1.693	2.250	7.650	1-6¼"	2-3"	1-9¾"	2-7"				
18	2.257	4.000	13.600	2-0"	3-0"	2-4½"	3-5"				

NOTES:
1. FIGURES SHOWN IN CIRCLES REPRESENT BAR BEND TYPES.
2. STANDARD BAR BENDS INCLUDE ONLY THOSE TYPES BELOW, INDICATED AS SUCH.
3. ALL DIMENSIONS OUT-TO-OUT, EXCEPT "A" AND "G" ON STD. 180° AND 135° HOOKS.
4. "J" DIMENSIONS ON 180° HOOKS TO BE SHOWN ONLY WHERE NECESSARY TO RESTRICT HOOK SIZE, OTHERWISE STANDARD 'ACI' HOOKS ARE TO BE USED.
5. WHERE "J" IS NOT SHOWN, "J" WILL BE KEPT EQUAL TO OR LESS THAN "H" ON TYPES 3, 5 AND 22. WHERE "J" CAN EXCEED "H", IT SHALL BE SHOWN.
6. "H" DIMENSIONS OF STIRRUPS TO BE SHOWN AS NEEDED TO FIT WITHIN THE CONCRETE.
7. UNLESS OTHERWISE NOTED, DIAMETER "D" IS THE SAME FOR ALL BENDS AND HOOKS ON A BAR (EXCEPT FOR BEND TYPES 11 AND 13).
8. WHERE SLOPE DIFFERS FROM 45° OFFSET, "H" AND "K" MUST BE SHOWN.
9. WHERE BARS ARE TO BE BENT MORE ACCURATELY THAN STANDARD BENDING TOLERANCES, BENDING DIMENSIONS REQUIRING CLOSER FABRICATION SHOULD HAVE LIMITS INDICATED.
10. FOR RECOMMENDED DIAMETER "D", OF BENDS, HOOKS, ETC., REFER TO TABLE ABOVE, 'CRSI' OR 'ACI' TABLES WHERE APPLICABLE AND REQUIRED.
11. TYPE S1-S6, S11, T1-T3 AND T6-T9 APPLICABLE TO BAR SIZES #3 THROUGH #8.

STANDARD BAR BENDS

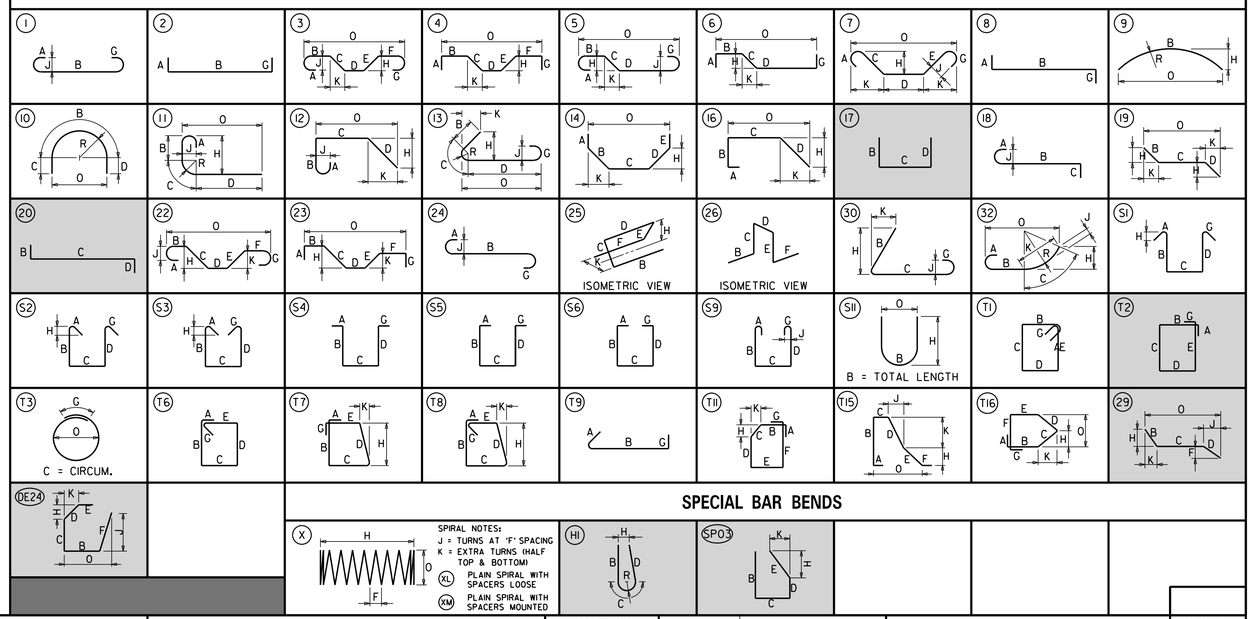

SPECIAL BAR BENDS

STIRRUP AND TIE HOOKS

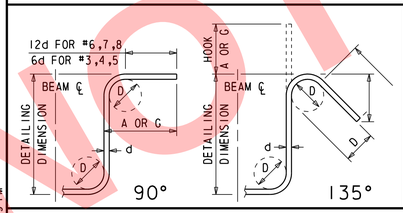

180° AND 90° END HOOKS

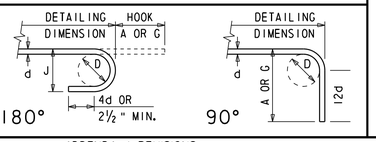

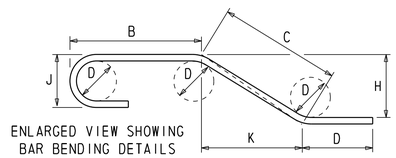

ADDENDA / REVISIONS

CONTRACT

COUNTY

BRIDGE NO.

DESIGNED BY:

CHECKED BY:

REHABILITATION OF I-95 OVER BRANDYWINE RIVER BRIDGE NORTHBOUND

1 758G 6149

REINFORCEMENT SCHEDULE

SECTION

SHEET NO.

NOT TO SCALE

N:\31987-004\Contract_I-95\C400\Bridge\BR1-758G_BR01.dgn
5/31/2019 12:15:49 PM

NOT FOR CONSTRUCTION

SECTION 200

1. REMOVAL OF STRUCTURES AND OBSTRUCTIONS:
   ITEMS TO BE REMOVED UNDER ITEM 211000 - REMOVAL OF STRUCTURES AND OBSTRUCTIONS ASSOCIATED WITH BRIDGE 1-758H SHALL INCLUDE, BUT NOT BE LIMITED TO, THE FOLLOWING:
   - APPROACH SLAB
   - PORTION OF BACKWALL AND WINGWALL
   - ABUTMENT DECK JOINT
   - PARAPETS AT ABUTMENT
   - PARAPETS AT SPAN H4
   - DECK AT SPAN H4
   - BRIDGE-MOUNTED OVERHEAD SIGN STRUCTURE

SECTION 600

2. PORTLAND CEMENT CONCRETE:
   USE PORTLAND CEMENT CONCRETE FOR CAST-IN-PLACE ELEMENTS AS FOLLOWS:
   (f'c = 28-DAY COMPRESSIVE STRENGTH)
   CLASS A - PARAPETS, PIERS, ABUTMENT (f'c = 4.5 ksi)
   CLASS D - DECK, APPROACH SLAB, SLEEPER SLAB (f'c = 4.5 ksi)
   A HIGHER CLASS CONCRETE MAY BE SUBSTITUTED FOR A LOWER CLASS CONCRETE AT NO ADDITIONAL COST TO THE DEPARTMENT WITH APPROVAL OF THE ENGINEER.
   - CHAMFER ALL EXPOSED EDGES ¾" X ¾" UNLESS OTHERWISE NOTED.
   - DO NOT SLIP-FORM BARRIERS, UNLESS OTHERWISE APPROVED BY THE DEPARTMENT.
   - CONTRACTOR WILL SUPPLY CONCRETE FOR THE PARAPETS, BRIDGE DECK, AND APPROACH SLABS THAT INCLUDES A SHRINKAGE-REDUCING/COMPENSATING ADMIXTURE. PAYMENT FOR ADMIXTURE WILL BE INCIDENTAL TO ITS RESPECTIVE CONCRETE ITEM (ITEMS 610008, 610017, AND 610018). THE ADMIXTURE MAY BE SUPPLIED BY ONE PRODUCT THAT PROVIDES BOTH EXPANSION AND PORE WATER SURFACE TENSION OR TWO SEPARATE PRODUCTS EACH ADDED AT DOSAGE RECOMMENDED BY MANUFACTURER'S TECHNICAL DATA SHEETS AND HAVING THE FOLLOWING CHARACTERISTICS:
   (A) DESIGNED TO PROVIDE BOTH THE FOLLOWING CHARACTERISTICS:
   I. EXPANDS AT A RATE THAT CLOSELY COMPENSATES FOR SHRINKAGE OF THE CONCRETE MIX.
   II. REDUCES THE CAPILLARY SURFACE TENSION OF THE CONCRETE PORE WATER.
   (B) PROVIDES AT LEAST 80% SHRINKAGE REDUCTION AS MEASURED AND DOCUMENTED BY FIELD PERFORMANCE.
   (C) FORMULATED FOR USE IN FREEZING AND THAWING WEATHER.

3. BAR REINFORCEMENT:
   - REINFORCING STEEL SHALL CONFORM TO AASHTO M31 (ASTM A615), GRADE 60.
   - REINFORCING STEEL SHALL HAVE A 3" CLEAR COVER IF CAST AGAINST EARTH OR A 2" CLEAR COVER ELSEWHERE, UNLESS OTHERWISE SPECIFIED ON THE PLANS.
   - ALL REINFORCING STEEL SHALL BE PROTECTED WITH FUSION BONDED EPOXY, EXCEPT AS NOTED ON THE PLANS. EPOXY COATED REINFORCING STEEL SHALL CONFORM TO AASHTO M284 (ASTM D3963).
   - ANY FIELD CUTTING OR FIELD BENDING MUST BE APPROVED BY THE ENGINEER. PAYMENT SHALL BE INCIDENTAL TO THE BAR REINFORCEMENT ITEM.
   - GALVANIZED REINFORCING STEEL MAY BE SUBSTITUTED FOR EPOXY-COATED REINFORCING STEEL AT NO ADDITIONAL COST TO THE DEPARTMENT WITH APPROVAL OF THE ENGINEER.
   - WELDING OF REINFORCEMENT DURING FABRICATION OR CONSTRUCTION IS NOT PERMITTED UNLESS SPECIFIED.

4. CONCRETE SEALER:
   REFER TO DIAGRAMS CONTAINING SILICONE ACRYLIC CONCRETE SEALER LIMITS ON DWGS. TS-01 TO TS-03, AB-01, PR-01 TO PR-14 AND AS-01. EPOXY CONCRETE SEALER SHALL BE APPLIED TO THE BEAM SEATS AND BEARING PEDESTALS AT EACH PIER. SILICONE ACRYLIC CONCRETE SEALER SHALL BE APPLIED TO THE REMAINING EXPOSED CONCRETE SURFACES AT THE ABUTMENT, PIERS AND RETAINING WALL.

5. STRUCTURAL STEEL:
   PROVIDE STRUCTURAL STEEL CONFORMING TO AASHTO M270, GRADE 50 (ASTM A709, GRADE 50) DESIGNATION, EXCEPT WHEN NOTED OTHERWISE. THE ADDITIONAL REQUIREMENTS FOR CHARPY V-NOTCH TESTING (DENOTED AS 'CVN' ON PLANS) OF AASHTO M270 FOR PRIMARY LOAD CARRYING MEMBERS SHALL BE INCLUDED. SUPPLEMENTAL NOTCH TOUGHNESS REQUIREMENTS ARE MANDATORY FOR:
   - ALL DIAPHRAGM MEMBERS AND DIAPHRAGM CONNECTION PLATES

   ALL FASTENERS ARE ⅞" DIAMETER ASTM A325 HIGH STRENGTH BOLTS, TYPE I, UNLESS OTHERWISE NOTED.

   PROVIDE MATERIALS AND PERFORM WORK IN ACCORDANCE WITH AASHTO/AWS D1.5M/D1.5:2015 BRIDGE WELDING CODE, AND CONTRACT DOCUMENTS. MAKE TACK WELDS WITH THE SAME TYPE OF ELECTRODE AND INCORPORATE IN THE FINAL WELD. NO OTHER TACK WELDING WILL BE PERMITTED, EXCEPT AS NOTED ON THE PLANS.

   DO NOT USE FORM SUPPORT SYSTEMS THAT WILL CAUSE UNACCEPTABLE OVERSTRESS OR DEFORMATION TO PERMANENT BRIDGE MEMBERS.

MISCELLANEOUS

7. DESIGN SPECIFICATIONS:
   (A) DELDOT BRIDGE DESIGN MANUAL, 2016 EDITION.
   (B) AASHTO LRFD BRIDGE SPECIFICATIONS, 2014, 7TH EDITION, CUSTOMARY U.S. UNITS INCLUDING 2015 AND 2016 INTERIMS.
   (C) PROVIDE MATERIALS AND PERFORM WORK IN ACCORDANCE WITH THE DELDOT STANDARD SPECIFICATIONS, AUGUST 2016.

8. LOADING:
   - DEAD LOADS INCLUDE 25 PSF FOR FUTURE WEARING SURFACE ON DECK SLAB AND 15 PSF FOR STAY-IN-PLACE FORMS (INCLUDES CONCRETE IN FORM CORRUGATIONS). PARAPET LOADS ARE DISTRIBUTED 75% TO THE EXTERIOR AND 25% TO THE FIRST INTERIOR BEAM.
   - DESIGN LIVE LOADS INCLUDE HL-93 LOADING.
   - FATIGUE DESIGN IS BASED ON THE FOLLOWING ONE DIRECTIONAL TRAFFIC VOLUMES: ADTT = 915 IN YEAR 2040.
   - LIVE LOAD DISTRIBUTION TO THE GIRDERS IS BASED ON THE AASHTO SIMPLIFIED METHOD.
   - THERMAL LOADS AND MOVEMENTS ARE BASED ON THE MODERATE TEMPERATURE RANGE AS STIPULATED IN THE AASHTO LRFD DESIGN SPECIFICATIONS AS 0° TO 120°F. THE NORMAL TEMPERATURE SHALL BE CONSIDERED TO BE 68° F.
   - LIVE LOAD DEFLECTION SHALL BE LIMITED TO L/800.
   - FOR REINFORCEMENT DISTRIBUTION REQUIREMENTS, CONSIDER CLASS 1 EXPOSURE CRITERIA FOR DECKS.

9. EXISTING CONDITIONS:
   - ALL EXISTING DIMENSIONS AND ELEVATIONS SHOWN ARE BASED ON THE BEST AVAILABLE INFORMATION AND ARE APPROXIMATE ONLY. THE CONTRACTOR SHALL FIELD VERIFY ALL EXISTING DIMENSIONS, GEOMETRY, AND ELEVATIONS AS NECESSARY PRIOR TO ORDERING ANY MATERIALS AND COMMENCING CONSTRUCTION TO ENSURE PROPER FIT OF THE PROPOSED CONSTRUCTION. PAYMENT SHALL BE INCIDENTAL TO ITEM 763501 - CONSTRUCTION ENGINEERING.

10. ROADWAY CLEARANCES:
    A MINIMUM OF 16'-6" SHALL BE MAINTAINED ABOVE MONROE STREET. A TEMPORARY MINIMUM OF 13'-3" SHALL BE MAINTAINED ABOVE MADISON STREET AND TEMPORARY VERTICAL CLEARANCE SIGNS SHALL BE INSTALLED. ALL MOT ITEMS WILL BE INCLUDED IN ITEM 801500 - MAINTENANCE OF TRAFFIC - ALL INCLUSIVE.

11. CONTINGENT QUANTITIES:
    THESE CONTRACT DRAWINGS HAVE BEEN PREPARED BASED ON ORIGINAL CONTRACT PLANS AND FIELD INSPECTION NOTES TAKEN FROM NOVEMBER 16, 2014 THROUGH FEBRUARY 5, 2015. ACTUAL CONDITIONS MAY REQUIRE MODIFICATION IN CONSTRUCTION DETAILS AND WORK QUANTITIES. ALL DIMENSIONS AND DETAILS SHOWN ON THE PLANS SHALL BE VERIFIED BY THE CONTRACTOR PRIOR TO ORDERING ANY MATERIALS. SEE DWG. PN-04 FOR PAY ITEM CONTINGENCY PERCENTAGES.

12. UTILITIES:
    SEE UTILITY STATEMENT AND UTILITY RELOCATION PLAN SHEETS FOR FURTHER INFORMATION ON UTILITY COORDINATION.

13. ENVIRONMENTAL COMPLIANCE:
    REFER TO THE ENVIRONMENTAL COMPLIANCE PLAN FOR RESTRICTIONS AND ADDITIONAL GUIDANCE THAT MAY BE ASSOCIATED WITH THIS PROJECT.

14. ABBREVIATIONS:

ABUT. = ABUTMENT	EXP. = EXPANSION	OH = OVERHEAD
BOT. = BOTTOM	F.F. = FRONT FACE	P.C.C. = PORTLAND CEMENT CONCRETE
BRG. = BEARING	FIX. = FIXED	P/R = POINT OF ROTATION
C/C = CENTER TO CENTER	GR. = GRADE	R = RADIUS
℄ = CENTERLINE	L.L.V. = LONG LEG VERTICAL	R.F. = REAR FACE
CLR. = CLEAR	LMC = LATEX MODIFIED CONCRETE	RT = RIGHT
DIA. = DIAMETER	LT = LEFT	S.W. = SHOP WELD
DWG. = DRAWING	MAX. = MAXIMUM	SCH. = SCHEDULE
E.F. = EACH FACE	MIN. = MINIMUM	SHLD. = SHOULDER
EL. = ELEVATION	N.T.S. = NOT TO SCALE	STA. = STATION
EQ = ENTIRE QUANTITY	NO. = NUMBER	TYP. = TYPICAL

INDEX OF BRIDGE 1-758H SHEETS

BR. SHEET Nº	BR. DWG. Nº	TABLE OF CONTENTS
2-619	PN-01	BRIDGE PROJECT NOTES
2-620	PN-02	CONCRETE REPAIR DETAILS
2-621	PN-03	QUANTITIES AND LOAD RATINGS
2-622	PN-04	SUMMARY OF PROPOSED REPAIR AND RECONSTRUCTION ITEMS
2-623	PE-01	GENERAL PLAN AND ELEVATION
2-624 TO 2-627	TS-01 TO TS-04	BRIDGE TYPICAL SECTIONS
2-643	DM-01	DEMOLITION DETAILS
2-644	PA-01	PARAPET DETAILS
2-645 TO 2-648	EX-01 TO EX-04	EXPANSION JOINT DETAILS
2-649 TO 2-650	EX-05 TO EX-06	DECK OVER DETAILS
2-651 TO 2-652	AS-01 TO AS-02	APPROACH SLAB DETAILS
2-653 TO 2-656	AS-03 TO AS-06	SLEEPER SLAB DETAILS
2-657	DT-01 TO DT-02	BRIDGE MOUNTED SIGN SUPPORT DETAILS
2-658	BR-01	REINFORCEMENT SCHEDULE
TOTAL BRIDGE SHEETS: 40		

NOT FOR CONSTRUCTION

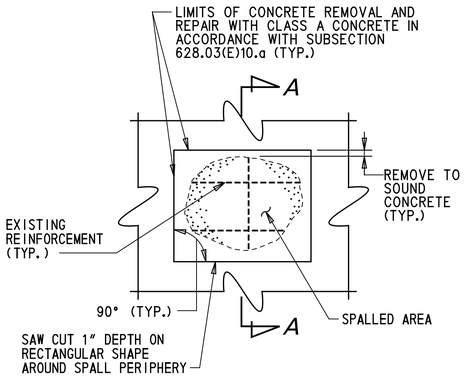

PLAN

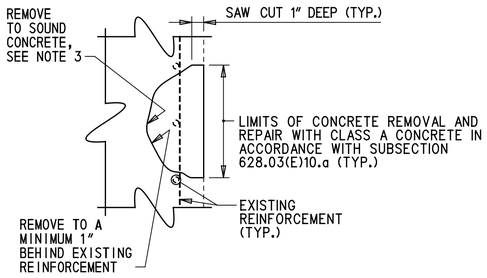

SECTION A-A

DEEP SPALL REPAIR

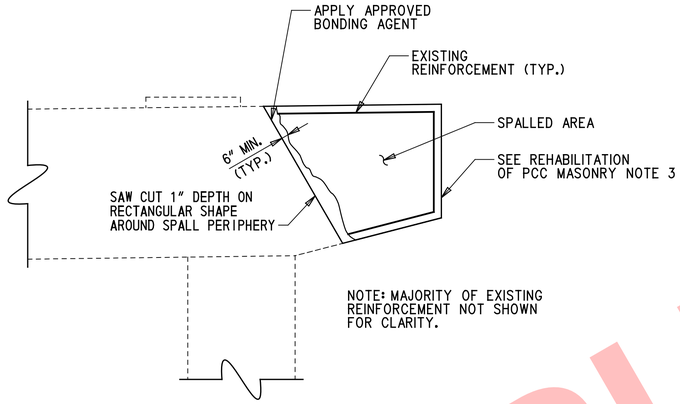

REHABILITATION OF PCC MASONRY

DEEP SPALL REPAIR NOTES

1. DEEP SPALL REPAIRS ARE DEFINED AS PATCHES THAT EXTEND BELOW THE TOP MAT OF REINFORCEMENT. DELAMINATED CONCRETE HAS BEEN ASSUMED AS DEEP SPALL REPAIRS.
2. ALL WORK INVOLVING METHODS OF CONCRETE REMOVAL; CLEANING OF CONCRETE SURFACE AND EXISTING REINFORCEMENT; REPAIRING OR REPLACING DAMAGED REINFORCEMENT AS RESULT OF CONSTRUCTION ACTIVITIES OR SECTION LOSS; PRESENCE OF CONTRACTION OR EXPANSION JOINTS; SURFACE PREPARATION; AND CONCRETE PLACEMENT SHALL BE PERFORMED IN ACCORDANCE WITH SUBSECTION 628.03(E) OF THE STANDARD SPECIFICATIONS. PAYMENT INCIDENTAL TO 628041 - DEEP SPALL REPAIR.
3. IF DEPTH OF REPAIR EXTENDS MORE THAN 6" BEYOND SURFACE OF CONCRETE, CONTRACTOR SHALL STOP WORK AND NOTIFY THE ENGINEER IMMEDIATELY.

REHABILITATION OF PCC MASONRY NOTES

1. REHABILITATION OF PCC MASONRY IS DEFINED AS DEEP SPALL PATCHES THAT EXCEED THE 0.5 C.Y. THRESHOLD IN A SINGLE AREA.
2. ALL WORK INVOLVING METHODS OF CONCRETE REMOVAL; CLEANING OF CONCRETE SURFACE AND EXISTING REINFORCEMENT; REPAIRING OR REPLACING DAMAGED REINFORCEMENT AS RESULT OF CONSTRUCTION ACTIVITIES OR SECTION LOSS; PRESENCE OF CONTRACTION OR EXPANSION JOINTS; SURFACE PREPARATION; AND CONCRETE PLACEMENT SHALL BE PERFORMED IN ACCORDANCE WITH SUBSECTION 628.03(E) OF THE STANDARD SPECIFICATIONS. PAYMENT INCIDENTAL TO 628042 - REHABILITATION OF PCC MASONRY.
3. DETAIL SHOWN FOR "REHABILITATION OF EXISTING PCC MASONRY" UTILIZES A GENERIC EXAMPLE USING PARTIAL RECONSTRUCTION OF AN EXISTING PIER CAP. SEE ABUTMENT AND PIER REHABILITATION SHEETS FOR SIZE AND LOCATION OF REPAIRS AT EACH SUBSTRUCTURE UNIT.
4. IF DEPTH OF REPAIR EXTENDS MORE THAN 6" BEYOND SURFACE OF CONCRETE, CONTRACTOR SHALL STOP WORK AND NOTIFY THE ENGINEER IMMEDIATELY.

REMOVAL OF EXISTING DECK REPAIR NOTES

1. AFTER EXISTING OVERLAY IS REMOVED, PRIOR TO HYDRODEMOLITION, ANY EXISTING DECK REPAIRS THAT ARE LOOSE, PARTIALLY DELAMINATED, OR OTHERWISE UNSOUND, WILL BE MEASURED BY THE ENGINEER AND MARKED FOR REMOVAL.
2. THE CONTRACTOR SHALL REMOVE THE EXISTING DECK REPAIRS IN ACCORDANCE WITH SECTION 628.03(F).
3. THE REMOVAL SHALL NOT INCLUDE ANY UNSOUND ORIGINAL BRIDGE DECK CONCRETE.
4. REFER TO ITEM 6285xx - REMOVAL OF EXISTING DECK REPAIR FOR PAYMENT AND ADDITIONAL INFORMATION.
5. IF REMOVAL OF EXISTING DECK REPAIR REACHES FULL DEPTH, AND WITH THE APPROVAL OF THE ENGINEER, REPAIR AREA SHALL BE REPAIRED IN ACCORDANCE WITH SUBSECTION 628.03(F) AND PAID FOR UNDER ITEM 628053 - DECK REPAIR, FULL DEPTH. REMOVAL OF EXISTING DECK REPAIRS THAT ARE CHANGED TO DECK REPAIR, FULL DEPTH WILL ONLY BE PAID FOR ONCE UNDER ITEM 628053.

DECK REPAIR NOTES

1. AFTER PAVEMENT MILLING, PRIOR TO HYDRODEMOLITION, EXISTING AREAS OF DECK REQUIRING FULL DEPTH REPAIR AS DIRECTED BY THE ENGINEER, SHALL BE REPAIRED USING DETAIL SHOWN ON THIS SHEET.
2. ALL WORK INVOLVING METHODS OF CONCRETE REMOVAL; CLEANING OF CONCRETE SURFACE AND EXISTING REINFORCEMENT; REPAIRING OR REPLACING DAMAGED REINFORCEMENT AS RESULT OF CONSTRUCTION ACTIVITIES OR SECTION LOSS; PRESENCE OF CONTRACTION OR EXPANSION JOINTS; SURFACE PREPARATION; AND CONCRETE PLACEMENT SHALL BE PERFORMED IN ACCORDANCE WITH SUBSECTION 628.03(F) OF THE STANDARD SPECIFICATIONS AND ITEMS 7605xx - TOTAL SURFACE HYDRODEMOLITION, AND ITEM 6255xx - ADDITIONAL LATEX-MODIFIED CONCRETE FOR PARTIAL DECK REPAIRS. PAYMENT FOR FULL DEPTH DECK REPAIRS MADE AFTER MILLING AND PRIOR TO HYDRODEMOLITION WILL BE MADE UNDER ITEM 628053 - DECK REPAIR, FULL DEPTH. PAYMENT FOR FULL DEPTH DECK REPAIRS MADE AFTER HYDRODEMOLITION WILL BE MADE UNDER ITEM 628053 - DECK REPAIR, FULL DEPTH.
3. MILLING, HYDRODEMOLITION, AND LMC OVERLAY WILL BE PAID FOR UNDER THEIR RESPECTIVE ITEMS.

LEGEND:

- LIMITS OF REMOVAL, MECHANICAL MILLING (ITEM 760013)
- LIMITS OF HYDRODEMOLITION (ITEM 7605xx)
- LIMITS OF REMOVAL (ITEM 628053 OR 6285xx)
- CLASS D CONCRETE

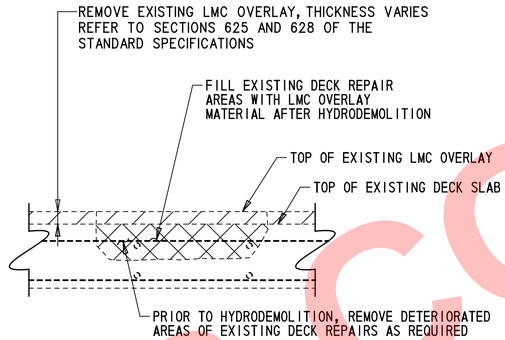

REMOVAL OF EXISTING DECK REPAIRS (ITEM 6285xx)

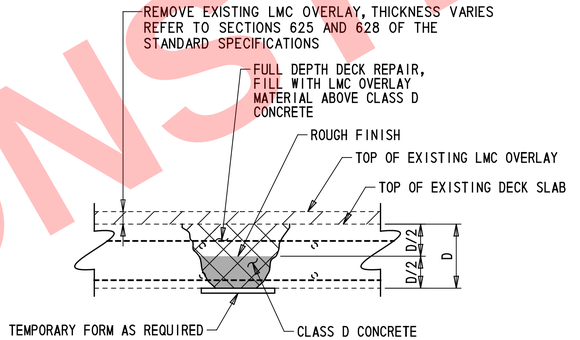

DECK REPAIR, FULL DEPTH (ITEM 628053)

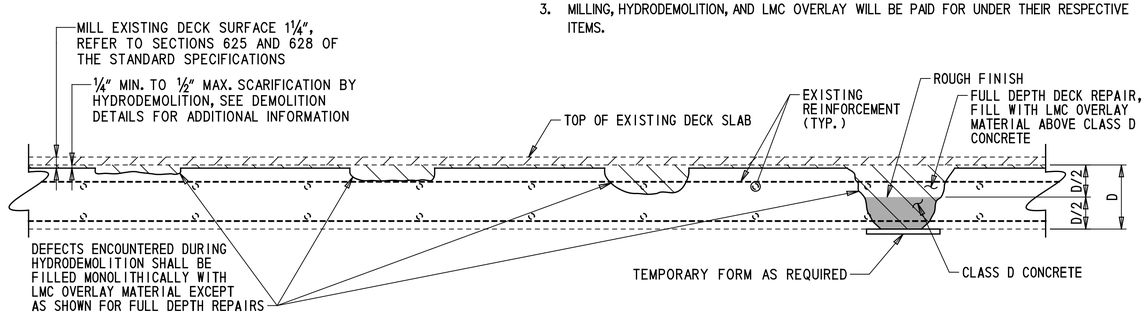

HYDRODEMOLITION AND DECK REPAIR (WITHOUT OVERLAY)

NOT FOR CONSTRUCTION

DELAWARE DEPARTMENT OF TRANSPORTATION	ADDENDUMS / REVISIONS	NOT TO SCALE	REHABILITATION OF I-95 FROM I-495 TO NORTH OF BRANDYWINE RIVER BRIDGE	CONTRACT T201407404 / COUNTY NEW CASTLE; BRIDGE NO. 1 758H 057; DESIGNED BY: JRQ; CHECKED BY: CWM	CONCRETE REPAIR DETAILS

1-758H PN-02 | SHEET NO. 2-620 | TOTAL SHTS. 2-731

J:\Bridge 1-758H\758HPN_02.dgn
2/6/2018 8:46:32 PM

QUANTITIES

ITEM Nº	ITEM TITLE	UNIT	QUANTITY
207000	STRUCTURAL EXCAVATION	CY	34
211000	REMOVAL OF STRUCTURES AND OBSTRUCTIONS	LS	1
301001	GRADED AGGREGATE BASE COURSE, TYPE B	CY	40
602XXX	CLEANING BRIDGE SCUPPER	EA	3
604001	PROTECTIVE SHIELD	LS	1
610002	PORTLAND CEMENT CONCRETE MASONRY, ABUTMENT ABOVE FOOTING, CLASS A	CY	2
610008	PORTLAND CEMENT CONCRETE MASONRY, PARAPET, CLASS A	CY	29
610017	PORTLAND CEMENT CONCRETE MASONRY, SUPERSTRUCTURE, CLASS D	CY	125
610018	PORTLAND CEMENT CONCRETE MASONRY, APPROACH SLAB, CLASS D	CY	60
611000	BAR REINFORCEMENT	LB	312
611001	BAR REINFORCEMENT, EPOXY COATED	LB	46410
613003	HIGH MOLECULAR WEIGHT METHACRYLATE CONCRETE SEALER	SF	25900
615004	REPLACING STEEL RIVETS/BOLTS	EA	2
617001	STEEL SIGN STRUCTURE, TUBULAR ARCH, OVERHEAD	LS	1
624000	PREFABRICATED EXPANSION JOINT SYSTEMS, 3"	LF	381
625000	LATEX-MODIFIED CONCRETE OVERLAY INSTALLATION	SY-IN	4910
625001	FURNISHING LATEX-MODIFIED CONCRETE OVERLAY	CY	513
6255XX	ADDITIONAL LATEX-MODIFIED CONCRETE FOR PARTIAL DECK REPAIRS	CY	17
628053	DECK REPAIR, FULL DEPTH	SF	15
6285XX	REMOVAL OF EXISTING DECK REPAIRS	SF	10
724004	PERMANENT IMPACT ATTENUATOR, TYPE 4	LS	1
760013	PAVEMENT MILLING, PORTLAND CEMENT CONCRETE PAVEMENT	SY-IN	2870
7605XX	TOTAL SURFACE HYDRODEMOLITION	SY	2720

NOTE:

QUANTITIES INCLUDE CONTINGENT PERCENTAGES AS NOTED IN NOTE 11 ON DWG. PN-01 AND AS SHOWN IN THE REPAIR TABLE ON DWG. PN-04.

LOAD RATING SUMMARY

DESIGN VEHICLE	RATING FACTOR	RATING WEIGHT (TON)	CONTROLLING MEMBER	CONTROLLING POINT	LOAD EFFECT
HL-93 TRUCK (INVENTORY)	1.52	N/A	SPAN H4, GIRDER S1	105	FLEXURE
HL-93 TANDEM (INVENTORY)	1.76	N/A	SPAN H4, GIRDER S1	105	FLEXURE
HL-93 TRUCK TRAIN (INVENTORY)	N/A	N/A	N/A	N/A	N/A
HS-20 (INVENTORY)	2.03	73.07	SPAN H4, GIRDER S1	105	FLEXURE
HL-93 TRUCK (OPERATING)	1.97	N/A	SPAN H4, GIRDER S1	105	FLEXURE
HL-93 TANDEM (OPERATING)	2.28	N/A	SPAN H4, GIRDER S1	105	FLEXURE
HL-93 TRUCK TRAIN (OPERATING)	N/A	N/A	N/A	N/A	N/A
HS-20 (OPERATING)	2.63	94.73	SPAN H4, GIRDER S1	105	FLEXURE
DE S220 & LEGAL-LANE (LEGAL)	3.53	70.68	SPAN H4, GIRDER S1	105	FLEXURE
DE S335 & LEGAL-LANE (LEGAL)	1.97	68.83	SPAN H4, GIRDER S1	105	FLEXURE
DE S437 & LEGAL-LANE (LEGAL)	1.87	68.56	SPAN H4, GIRDER S1	105	FLEXURE
DE T330 & LEGAL-LANE (LEGAL)	2.76	82.88	SPAN H4, GIRDER S1	105	FLEXURE
DE T435 & LEGAL-LANE (LEGAL)	2.42	84.78	SPAN H4, GIRDER S1	105	FLEXURE
DE T540 & LEGAL-LANE (LEGAL)	2.15	85.93	SPAN H4, GIRDER S1	105	FLEXURE

NOTE: LOAD RATING INCLUDES FUTURE WEARING SURFACE AS NOTED IN THE PLANS.

NOT FOR CONSTRUCTION

REPAIR NO.	REPAIR DESCRIPTION	LOCATION	REMARKS	DWG. NO.	ITEM NO.	ITEM DESCRIPTION	UNIT	QTY.	CONTINGENT %	TOTAL QTY.
1	JOINT REPLACEMENT (FULL REPLACEMENT)	PIER H1, PIER H2, PIER H3, PIER H4, PIER H5, PIER H6, PIER H7		EX-01 TO EX-04	610008	PORTLAND CEMENT CONCRETE MASONRY, PARAPET, CLASS A	CY	4	0	4
					610017	PORTLAND CEMENT CONCRETE MASONRY, SUPERSTRUCTURE, CLASS D	CY	38	0	38
					611001	BAR REINFORCEMENT, EPOXY COATED	LB	6930	0	6930
					624000	PREFABRICATED EXPANSION JOINT SYSTEMS, 3"	LF	340	0	340
3	MILL EXISTING DECK/OVERLAY	ENTIRE BRIDGE		DM-01, PN-02	628053	DECK REPAIR, FULL DEPTH	SF	0	EQ	15
					760013	PAVEMENT MILLING, PORTLAND CEMENT CONCRETE PAVEMENT	SY-IN	2870	0	2870
4	HYDRODEMOLITION OF EXISTING DECK SURFACE	ENTIRE BRIDGE		DM-01, PN-02	6285XX	REMOVAL OF EXISTING DECK REPAIRS	SF	0	EQ	10
					7605XX	TOTAL SURFACE HYDRODEMOLITION	SY	2720	0	2720
5	FURNISH AND INSTALL LMC OVERLAY	ENTIRE BRIDGE		DM-01, PN-02	625000	LATEX-MODIFIED CONCRETE OVERLAY INSTALLATION	SY-IN	4910	0	4910
					625001	FURNISHING LATEX-MODIFIED CONCRETE OVERLAY	CY	410	25	513
					6255XX	ADDITIONAL LATEX-MODIFIED CONCRETE FOR PARTIAL DECK REPAIRS	CY	13	25	17
9	REMOVE AND REPLACE CONCRETE APPROACH SLAB	APPROACH H8		AS-01 TO AS-06	207000	STRUCTURAL EXCAVATION	CY	34	0	34
					211000	REMOVAL OF STRUCTURES AND OBSTRUCTIONS	LS	1	0	1
					301001	GRADED AGGREGATE BASE COURSE, TYPE B	CY	40	0	40
					610008	PORTLAND CEMENT CONCRETE MASONRY, PARAPET, CLASS A	CY	5	0	5
					610018	PORTLAND CEMENT CONCRETE MASONRY, APPROACH SLAB, CLASS D	CY	60	0	60
					611000	BAR REINFORCEMENT	LB	62	0	62
					611001	BAR REINFORCEMENT, EPOXY COATED	LB	11240	0	11240
					624000	PREFABRICATED EXPANSION JOINT SYSTEMS, 3"	LF	41	0	41
10	CLEAN SCUPPER AND DOWNSPOUT	1 EACH SPAN IN SPANS H1, H2, AND H3			602XXX	CLEANING BRIDGE SCUPPER	EA	3	0	3
14	REMOVE AND REPLACE BRIDGE PARAPET	SPAN H4	INCLUDES REMOVING AND REPLACING A PORTION OF THE DECK AND OVERHANG	PA-01, DT-01	211000	REMOVAL OF STRUCTURES AND OBSTRUCTIONS	LS	1	0	1
					610008	PORTLAND CEMENT CONCRETE MASONRY, PARAPET, CLASS A	CY	14	0	14
					610017	PORTLAND CEMENT CONCRETE MASONRY, SUPERSTRUCTURE, CLASS D	CY	80	0	80
					611001	BAR REINFORCEMENT, EPOXY COATED	LB	25000	0	25000
19	REPLACE BRIDGE LIGHTING	1 EACH IN SPANS H3, H5, AND H7	SEE LIGHTING PLANS FOR ITEMS AND PAYMENT		N/A					
22	INSTALL NEW BRIDGE MOUNTED SIGN STRUCTURE	SPAN H4		DT-01	610008	PORTLAND CEMENT CONCRETE MASONRY, PARAPET, CLASS A	CY	5	0	5
					610017	PORTLAND CEMENT CONCRETE MASONRY, SUPERSTRUCTURE, CLASS D	CY	2	0	2
					611001	BAR REINFORCEMENT, EPOXY COATED	LB	2300	0	2300
					617001	STEEL SIGN STRUCTURE, TUBULAR ARCH, OVERHEAD	LS	1	0	1
45	SEAL DECK WITH HMWM CONCRETE SEALER	ENTIRE BRIDGE		TS-01 TO TS-04	613003	HIGH MOLECULAR WEIGHT METHACRYLATE CONCRETE SEALER	SF	25900	0	25900
46	REPLACE ABUTMENT JOINT WITH DECK-OVER	ABUTMENT H8		EX-05 TO EX-06	211000	REMOVAL OF STRUCTURES AND OBSTRUCTIONS	LS	1	0	1
					610002	PORTLAND CEMENT CONCRETE MASONRY, ABUTMENT ABOVE FOOTING, CLASS A	CY	2	0	2
					610008	PORTLAND CEMENT CONCRETE MASONRY, PARAPET, CLASS A	CY	1	0	1
					610017	PORTLAND CEMENT CONCRETE MASONRY, SUPERSTRUCTURE, CLASS D	CY	5	0	5
					611000	BAR REINFORCEMENT	LB	250	0	250
					611001	BAR REINFORCEMENT, EPOXY COATED	LB	940	0	940
M17	BR 1-758H: REMOVE CONCRETE FROM BEARING 6 AT PIER H3 IN SPAN H3	SPAN H3, PIER H3, BEARING 6			211000	REMOVAL OF STRUCTURES AND OBSTRUCTIONS	LS	1	0	1
M18	BR 1-758H: REPLACE MISSING ANCHOR AT DOWNSPOUT SUPPORT ON WEST FACE OF COLUMN H3 AT PIER H2	PIER H2, COLUMN H3, DOWNSPOUT SUPPORT			615004	REPLACING STEEL RIVETS/BOLTS	EA	1	100	2

NOT FOR CONSTRUCTION

LMC OVERLAY NOTES:

1. LONGITUDINAL CONSTRUCTION JOINTS SHALL BE LIMITED TO ONLY THOSE NECESSARY TO COMPLETE THE WORK, HOWEVER THE CONTRACTOR MAY ELECT TO PLACE AN OPTIONAL LONGITUDINAL CONSTRUCTION JOINT IN THE LMC OVERLAY AS NECESSITATED BY THE WIDTH OF THE BRIDGE. LONGITUDINAL CONSTRUCTION JOINTS IN THE LMC OVERLAY MAY ONLY BE PLACED AT THE LOCATION OF THE FINAL LANE LINES.

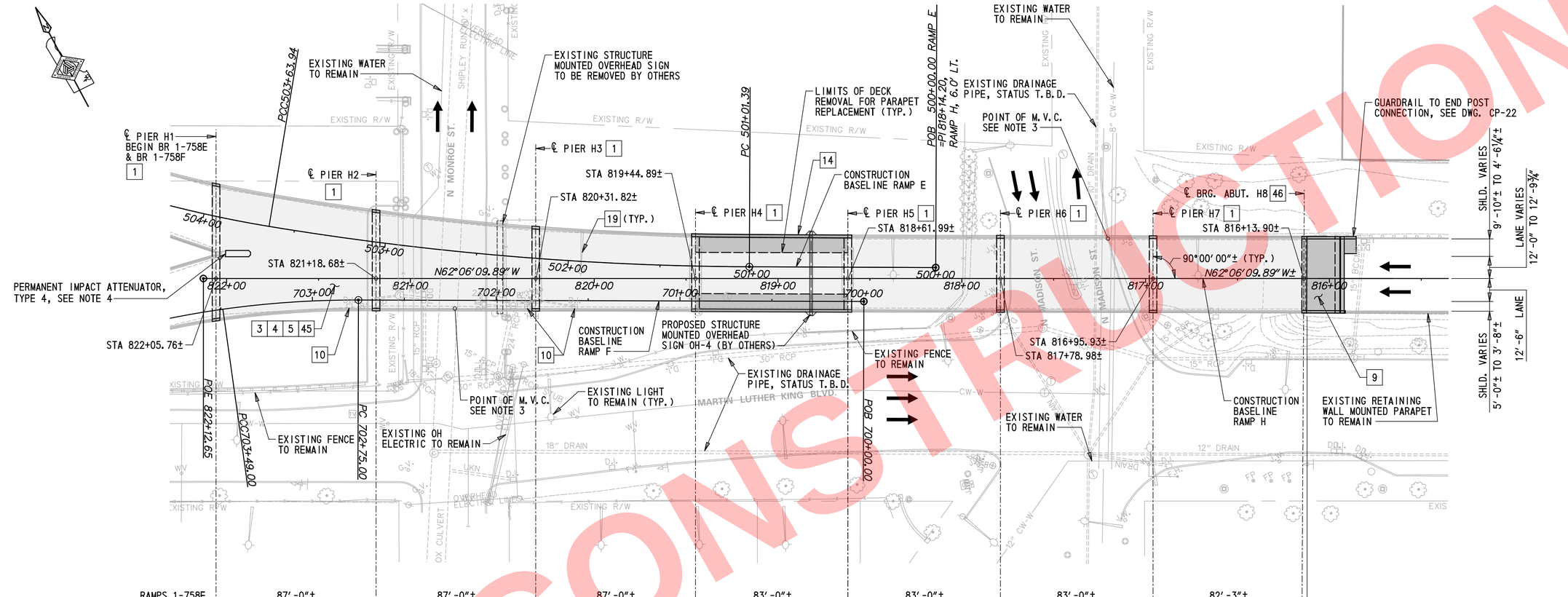

PLAN

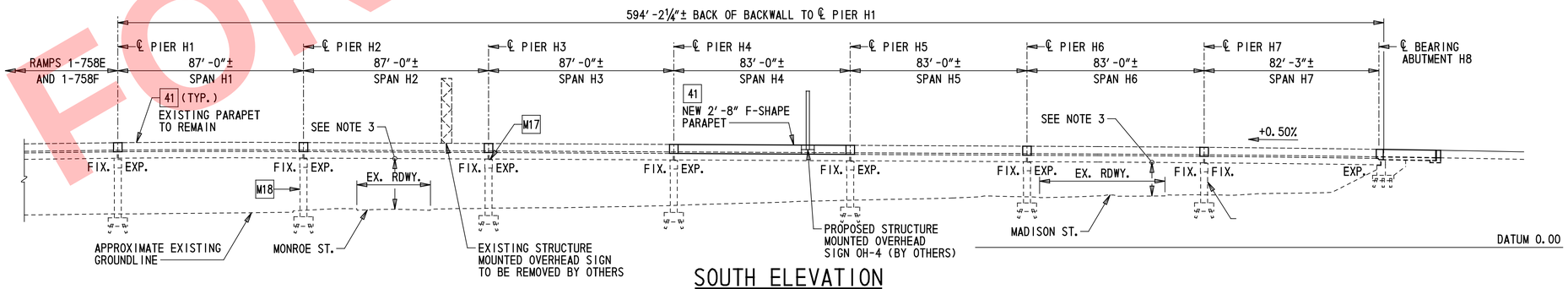

SOUTH ELEVATION

HORIZONTAL CURVE DATA

1. FOR RAMP E BASELINE HORIZONTAL CURVE DATA, SEE 1-758E DWG. PE-01.
2. FOR RAMP F BASELINE HORIZONTAL CURVE DATA, SEE 1-758F DWG. PE-01.

NOTES:

1. DIMENSIONS SHOWN ARE MEASURED ALONG CONSTRUCTION BASELINE RAMP H.
2. PILES SHOWN ARE FOR INFORMATIONAL PURPOSES ONLY.
3. MINIMUM VERTICAL CLEARANCES ARE BASED ON 2014 NBIS INSPECTION REPORT. MINIMUM CLEARANCE ABOVE MONROE ST. = 22'-11"±. MINIMUM CLEARANCE ABOVE MADISON ST. = 14'-3"±.
4. PERMANENT IMPACT ATTENUATOR, TYPE 4 SHALL BE COMPATIBLE WITH MOUNTING TO THE BRIDGE DECK SURFACE. PAYMENT FOR PERMANENT IMPACT ATTENUATOR, TYPE 4 WILL BE MADE UNDER ITEM 724004 - PERMANENT IMPACT ATTENUATOR, TYPE 4.

KEY:

[1] REPAIR NUMBER AS SHOWN ON DWG. PN-04

LEGEND:

MILL AND OVERLAY DECK

REMOVAL AND RECONSTRUCTION

NOT FOR CONSTRUCTION

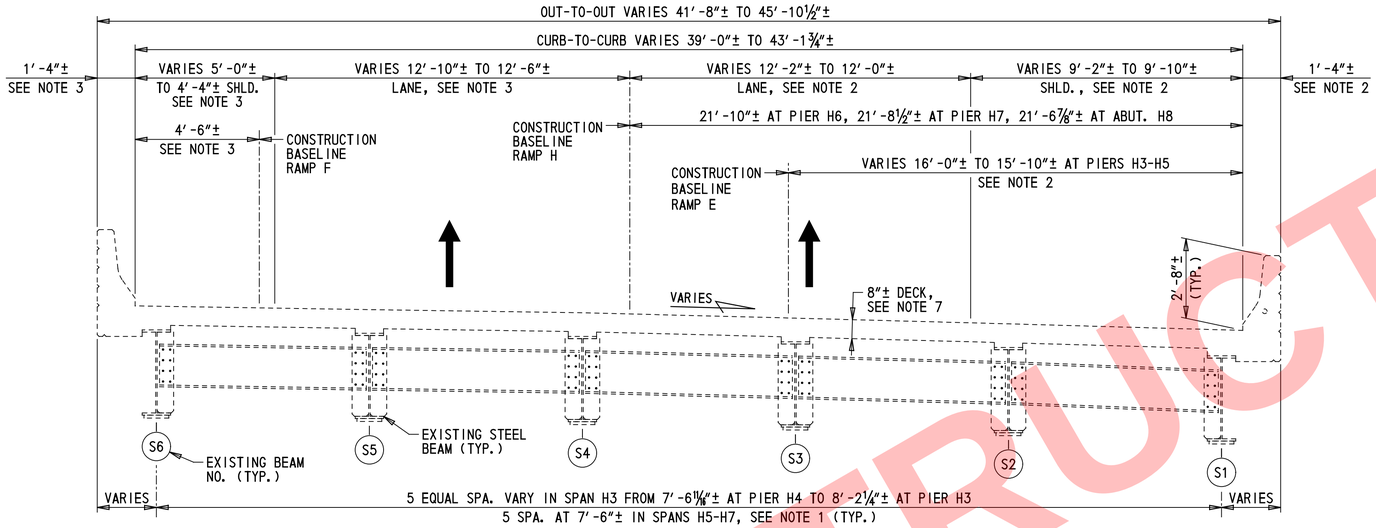

EXISTING TYPICAL SECTION

(STA. 816+13.90 TO STA. 818+61.99 AND STA. 819+44.89 TO STA. 820+31.82)

⅜″ = 1′-0″

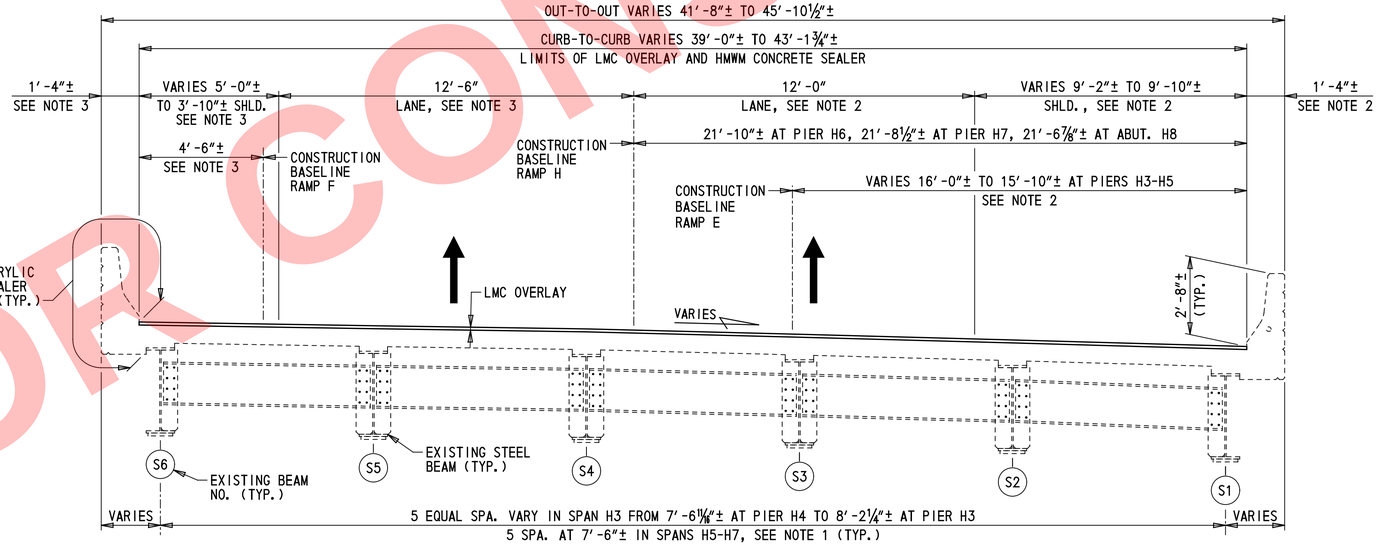

PROPOSED TYPICAL SECTION

(STA. 816+13.90 TO STA. 818+61.99 AND STA. 819+44.89 TO STA. 820+31.82)

⅜″ = 1′-0″

NOTES:

1. DIMENSIONS SHOWN ARE MEASURED PERPENDICULAR TO CONSTRUCTION BASELINE RAMP H, EXCEPT AS NOTED.
2. DIMENSIONS MEASURED PERPENDICULAR TO CONSTRUCTION BASELINE RAMP E STARTING AT STA. 500+00.
3. DIMENSIONS MEASURED PERPENDICULAR TO CONSTRUCTION BASELINE RAMP F STARTING AT STA. 700+00.
4. GORE NOT SHOWN FOR CLARITY. EXISTING GORE WIDTH VARIES FROM 0′-0″ TO 4′-4⅞″± WIDE IN SPAN H3. PROPOSED GORE WIDTH VARIES FROM 0′-0″ TO 5′-7½″ IN SPANS H3 THROUGH H5. SEE DWGS. TS-02 THROUGH TS-04 FOR ADDITIONAL INFORMATION.
5. FOR SPAN H4 TYPICAL SECTION INFORMATION, SEE DWG. TS-02.
6. FOR PARAPET DETAIL, DRIP NOTCH DETAIL, AND ARCHITECTURAL GROOVE DETAIL SEE DWG. PA-01.
7. SEE DWG. DM-01 FOR DEMOLITION DETAILS.

NOT FOR CONSTRUCTION

DELAWARE DEPARTMENT OF TRANSPORTATION	ADDENDUMS / REVISIONS	SCALE AS NOTED	REHABILITATION OF I-95 FROM I-495 TO NORTH OF BRANDYWINE RIVER BRIDGE	CONTRACT T201407404	BRIDGE NO. 1 758H 057	BRIDGE TYPICAL SECTIONS STA. 816+13 TO 818+61 & STA. 819+44 TO 820+31
				COUNTY NEW CASTLE	DESIGNED BY: BSD	
					CHECKED BY: CWM	

1-758H TS-01
SHEET NO. 2-624
TOTAL SHTS. 2-731

J:\Bridge 1-758H\758HTS_01.dgn
2/8/2018 6:46:43 PM

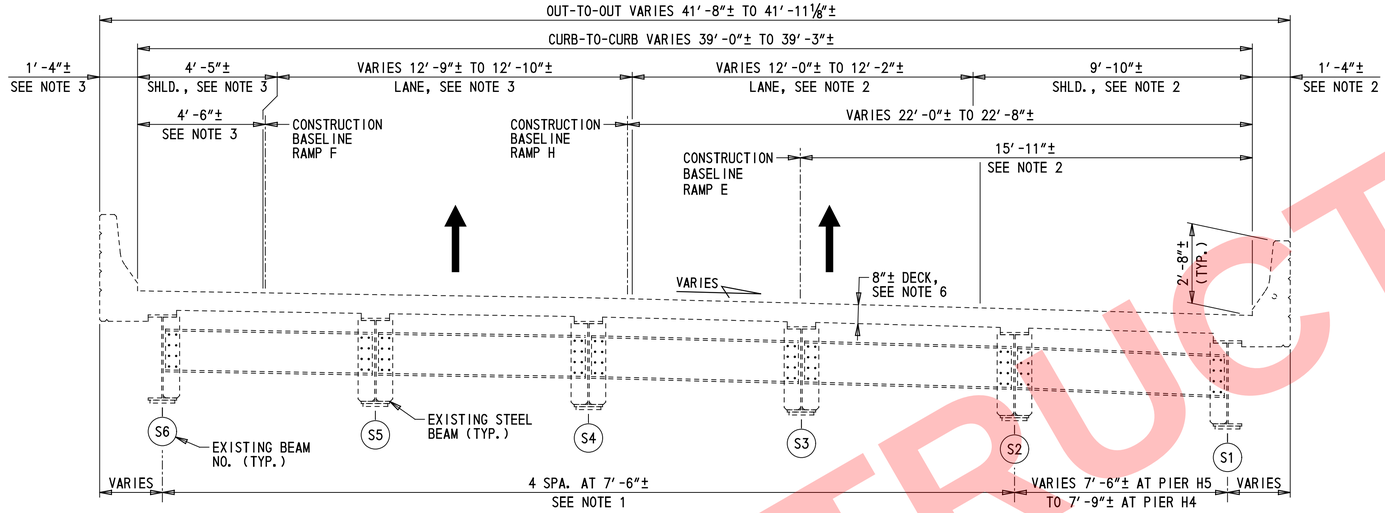

EXISTING TYPICAL SECTION

(STA. 818+61.99 TO STA. 819+44.89)

⅜″ = 1′-0″

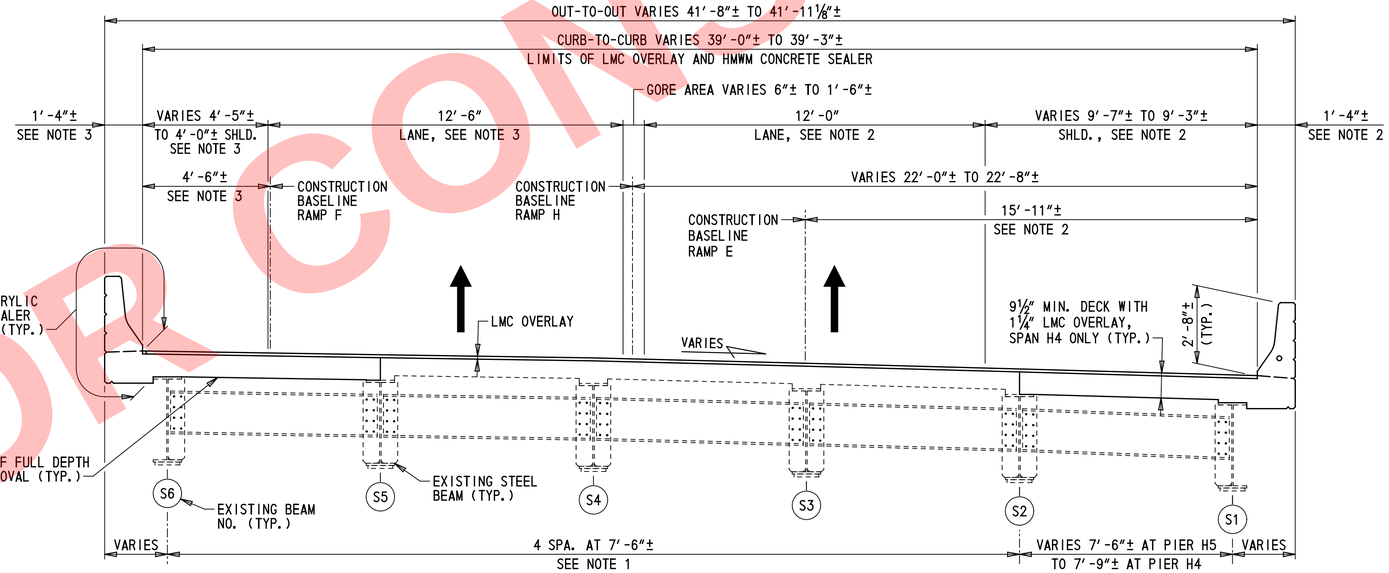

PROPOSED TYPICAL SECTION

(STA. 818+61.99 TO STA. 819+44.89)

⅜″ = 1′-0″

NOTES:

1. DIMENSIONS SHOWN ARE MEASURED PERPENDICULAR TO CONSTRUCTION BASELINE RAMP H, EXCEPT AS NOTED.
2. DIMENSIONS MEASURED PERPENDICULAR TO CONSTRUCTION BASELINE RAMP E.
3. DIMENSIONS MEASURED PERPENDICULAR TO CONSTRUCTION BASELINE RAMP F.
4. FOR PARAPET DETAIL, DRIP NOTCH DETAIL, AND ARCHITECTURAL GROOVE DETAIL SEE DWG. PA-01.
5. FOR DECK PARTIAL DEMOLITION DETAILS, SEE DWG. DM-01.
6. SEE DWG. DM-01 FOR DEMOLITION DETAILS.

NOT FOR CONSTRUCTION

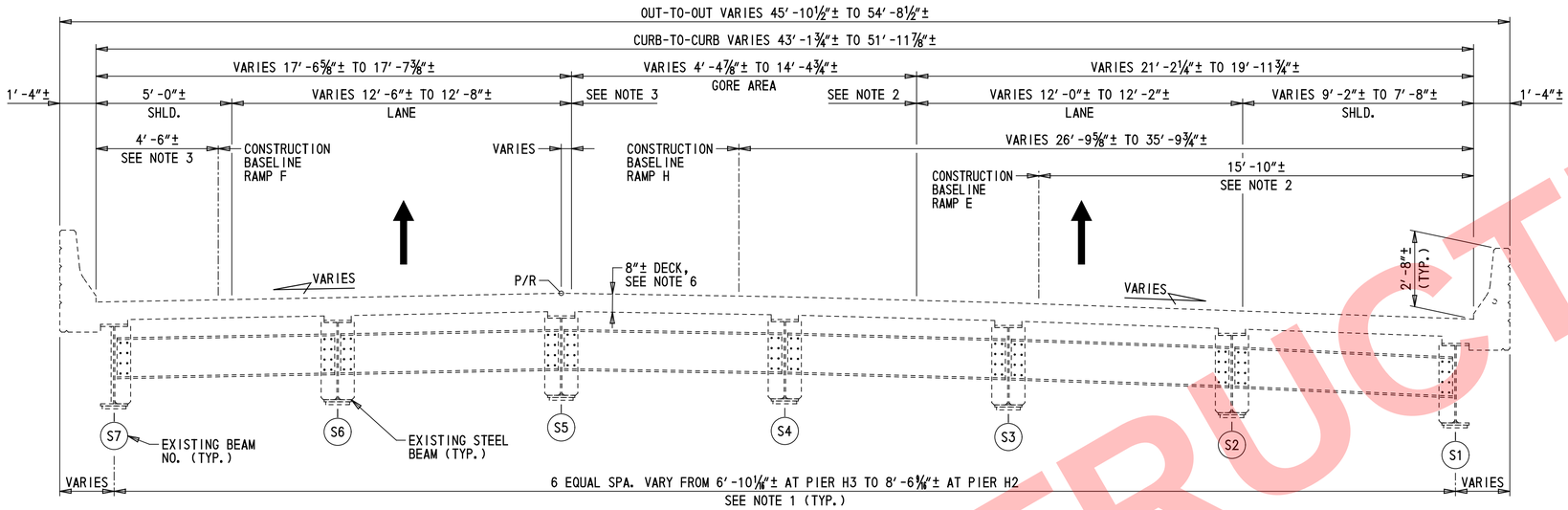

EXISTING TYPICAL SECTION

(STA. 820+31.82 TO 821+18.68)

⅜" = 1'-0"

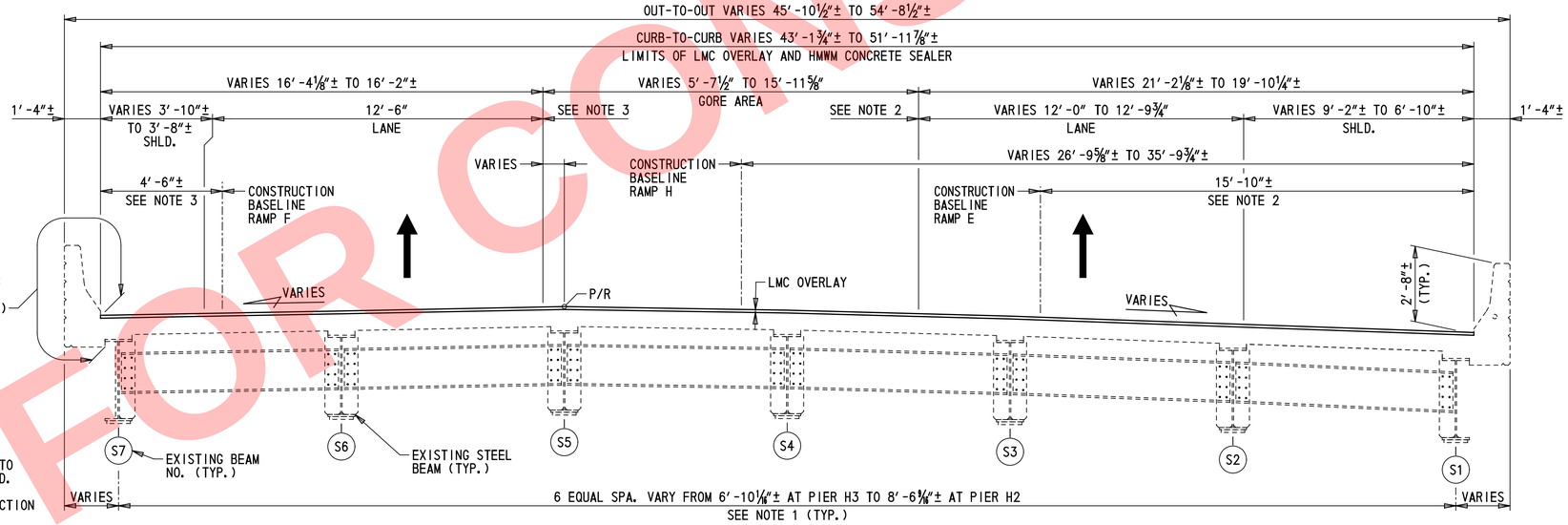

PROPOSED TYPICAL SECTION

(STA. 820+31.82 TO 821+18.68)

⅜" = 1'-0"

NOTES:

1. DIMENSIONS SHOWN ARE MEASURED PERPENDICULAR TO CONSTRUCTION BASELINE RAMP H, EXCEPT AS NOTED.
2. DIMENSIONS MEASURED PERPENDICULAR TO CONSTRUCTION BASELINE RAMP E.
3. DIMENSIONS MEASURED PERPENDICULAR TO CONSTRUCTION BASELINE RAMP F.
4. FOR PARAPET DETAIL, DRIP NOTCH DETAIL, AND ARCHITECTURAL GROOVE DETAIL SEE DWG. PA-01.
5. REMOVAL OF EXISTING OVERHEAD SIGN STRUCTURE INCIDENTAL TO ITEM 211000 - REMOVAL OF STRUCTURES AND OBSTRUCTIONS.
6. SEE DWG. DM-01 FOR DEMOLITION DETAILS.

NOT FOR CONSTRUCTION

DELAWARE DEPARTMENT OF TRANSPORTATION

ADDENDUMS / REVISIONS

SCALE AS NOTED

REHABILITATION OF I-95 FROM I-495 TO NORTH OF BRANDYWINE RIVER BRIDGE

CONTRACT T201407404
COUNTY NEW CASTLE
BRIDGE NO. 1 758H 057
DESIGNED BY: BSD
CHECKED BY: CWM

BRIDGE TYPICAL SECTIONS STA. 820+31 TO 821+18

1-758H TS-03
SHEET NO. 2-626
TOTAL SHTS. 2-731

\Bridge 1-758H\758HTS_03.dgn 2/8/2018 6:46:44 PM

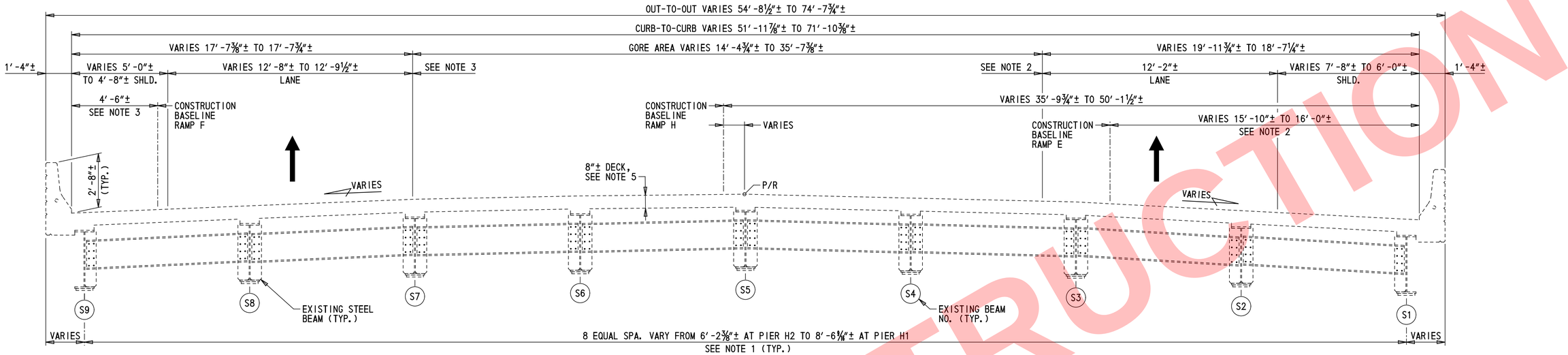

EXISTING TYPICAL SECTION

(STA. 821+18.68 TO 822+05.76)

⅜″ = 1′-0″

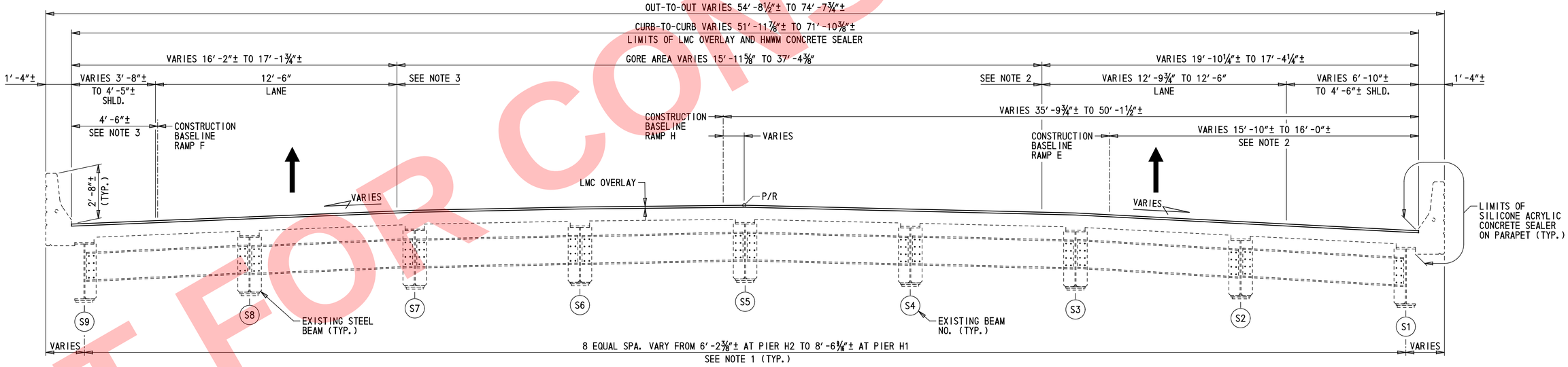

PROPOSED TYPICAL SECTION

(STA. 821+18.68 TO 822+05.76)

⅜″ = 1′-0″

NOTES:

1. DIMENSIONS SHOWN ARE MEASURED PERPENDICULAR TO CONSTRUCTION BASELINE RAMP H, EXCEPT AS NOTED.
2. DIMENSIONS MEASURED PERPENDICULAR TO CONSTRUCTION BASELINE RAMP E.
3. DIMENSIONS MEASURED PERPENDICULAR TO CONSTRUCTION BASELINE RAMP F.
4. FOR PARAPET DETAIL, DRIP NOTCH DETAIL, AND ARCHITECTURAL GROOVE DETAIL SEE DWG. PA-01.
5. SEE DWG. DM-01 FOR DEMOLITION DETAILS.

NOT FOR CONSTRUCTION

DELAWARE DEPARTMENT OF TRANSPORTATION	ADDENDUMS / REVISIONS	SCALE AS NOTED	REHABILITATION OF I-95 FROM I-495 TO NORTH OF BRANDYWINE RIVER BRIDGE	CONTRACT T201407404	BRIDGE NO. 1 758H 057	BRIDGE TYPICAL SECTIONS STA. 821+18 TO 822+05	1-758H TS-04
				COUNTY NEW CASTLE	DESIGNED BY: BSD		SHEET NO. 2-627
					CHECKED BY: CWM		TOTAL SHTS. 2-731

C:\Bridge 1-758H\758HTS_04.dgn
2/8/2018 6:46:44 PM

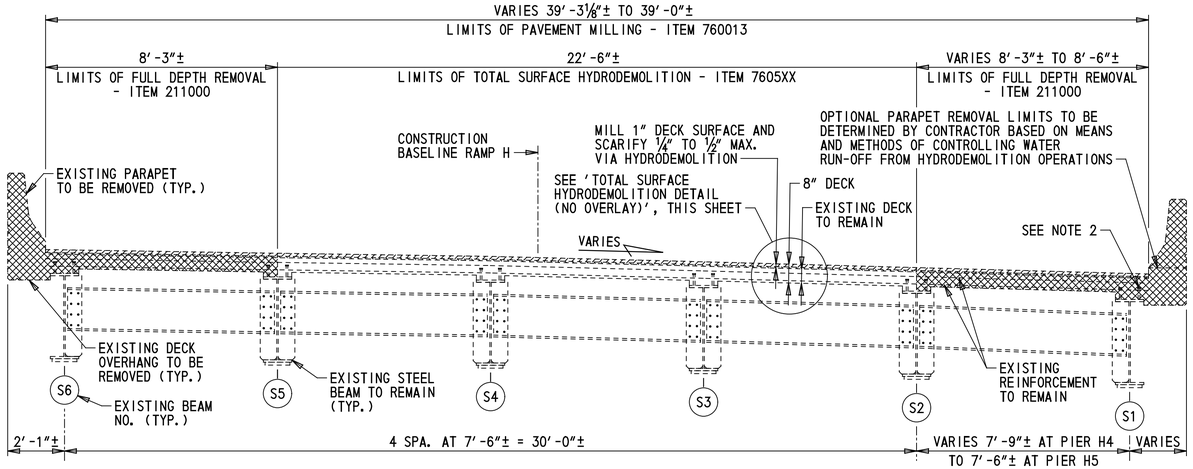

SPAN H4 LIMITS OF DEMOLITION

⅜" = 1'-0"

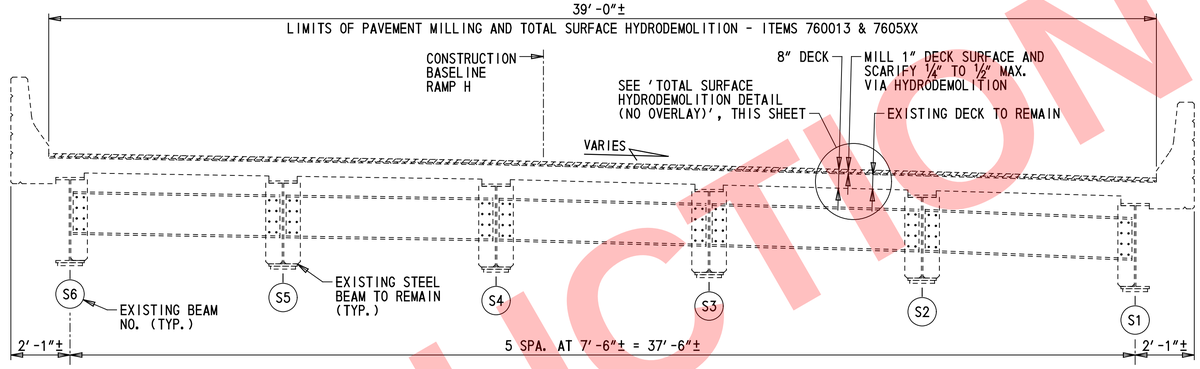

TYPICAL LIMITS OF DEMOLITION

(SPANS H5-H7 SHOWN, SPANS H1-H3 SIMILAR)

⅜" = 1'-0"

SUGGESTED SEQUENCE OF CONSTRUCTION:

THIS SEQUENCE OF CONTRUCTION REPRESENTS THE GENERAL ORDER OF OPERATIONS REQUIRED TO RECONSTRUCT THE FASCIA PARAPETS AND PLACE THE PROPOSED OVERLAY. IT IS NOT INTENDED TO REPRESENT ALL ACTIVITIES NECESSARY TO COMPLETE THE WORK AS SPECIFIED. THE CONTRACTOR MAY ALTER THIS SUGGESTED SEQUENCE AND THE REMOVAL AND RECONSTRUCTION LIMITS SUBJECT TO PRIOR APPROVAL BY THE ENGINEER.

1. INSTALL TEMPORARY WORKS INCLUDING PROTECTIVE SHIELDS, RAILINGS, ETC. AS NECESSARY TO PROTECT THE WORK ZONE AND AREAS UNDER AND ADJACENT TO THE CONSTRUCTION.
2. REMOVE EXISTING PARAPETS TO THE LIMITS SHOWN.
3. REMOVE THE EXISTING DECK TO THE LIMITS SHOWN.
4. RECONSTRUCT THE DECK AND OVERHANGS. SEE DWG. DT-01 FOR DETAILS.
5. CONSTRUCT NEW 32" F-SHAPE PARAPETS. SEE DWGS. PA-01 AND DT-01 FOR DETAILS.
6. REMOVE EXISTING DECK SURFACE VIA PAVEMENT MILLING WITHIN THE LIMITS OF TOTAL SURFACE HYDRODEMOLITION AS SHOWN.
7. PERFORM TOTAL SURFACE HYDRODEMOLITION TO THE LIMITS SHOWN.
8. PLACE NEW LMC OVERLAY.

DEMOLITION NOTES:

1. EXISTING TOP AND BOTTOM TRANSVERSE REINFORCEMENT BARS TO REMAIN SHALL BE INTEGRATED INTO NEW DECK. NEW DECK BARS SHALL BE LAPPED WITH TOP BARS. SEE DWG. DT-01 FOR ADDITIONAL DETAILS.

   EXISTING BARS TO REMAIN SHALL BE CLEANED IN ACCORDANCE WITH SECTION 628.03(E)(7). BARS WITH CORROSION, BROKEN, OR WITH INADEQUATE BOND SHALL BE REPAIRED IN ACCORDANCE WITH SECTION 628.03(E)(7). PAYMENT FOR THIS WORK WILL BE INCIDENTAL TO ITEM 211000 - REMOVAL OF STRUCTURES AND OBSTRUCTIONS.

   ALL EXISTING LONGITUDINAL REINFORCEMENT WITHIN THE LIMITS OF FULL DEPTH REMOVAL SHALL BE REMOVED AND REPLACED. EXISTING LONGITUDINAL REINFORCEMENT NOT SHOWN FOR CLARITY. SEE DWG. DT-01 FOR ADDITIONAL DETAILS.
2. EXISTING STUD SHEAR CONNECTORS ON TOP FLANGE OF FASCIA BEAMS SHALL REMAIN IN PLACE FOLLOWING FULL DEPTH REMOVAL OF THE DECK. EXISTING STUD SHEAR CONNECTORS SHALL BE CLEANED OF ALL LOOSE CONCRETE, DEBRIS, OIL, ETC. PAYMENT FOR CLEANING EXISTING STUD SHEAR CONNECTORS WILL BE INCIDENTAL TO ITEM 211000. EXISTING STUD SHEAR CONNECTORS DAMAGED DURING REMOVAL OPERATIONS SHALL BE REPLACED IN-KIND AT THE CONTRACTOR'S EXPENSE. CONTRACTOR MAY CHOOSE TO REMOVE AND REPLACE IN-KIND ALL STUD SHEAR CONNECTORS ON FASCIA BEAMS AT NO ADDITIONAL COST TO THE DEPARTMENT.
3. TYPICAL SECTION SHOWN IS VALID FOR SPANS AS NOTED. SUPERSTRUCTURE WIDTH VARIES AT OTHER SECTIONS OF THE BRIDGE, BUT PROCEDURES FOR REMOVAL AND PLACEMENT OF LMC OVERLAY ARE SIMILAR.
4. VEHICLES AND EQUIPMENT SHOULD BE KEPT OFF OF AREAS OF THE DECK THAT HAVE RECEIVED TOTAL SURFACE HYDRODEMOLITION AS MUCH AS REASONABLY POSSIBLE - ONLY EQUIPMENT NECESSARY TO COMPLETE THE WORK WILL BE ALLOWED ON THOSE AREAS.

LEGEND:

- LIMITS OF REMOVAL, PAVEMENT MILLING (ITEM 760013)
- LIMITS OF REMOVAL, HYDRODEMOLITION (ITEM 7605XX)
- LIMITS OF REMOVAL (ITEM 211000)

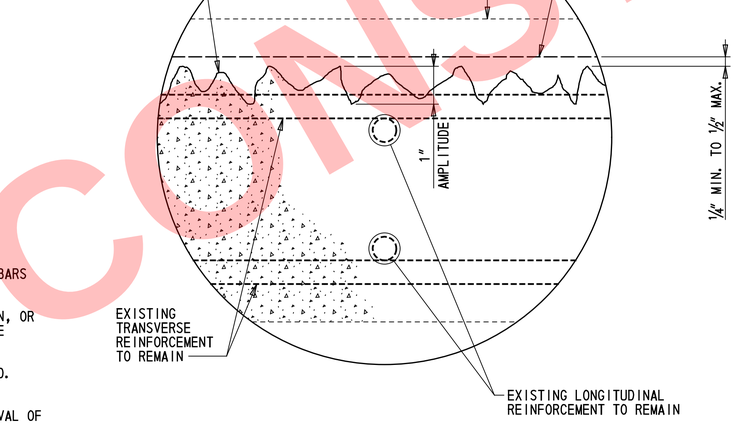

HYDRODEMOLITION AMPLITUDE DETAIL

6" = 1'-0"

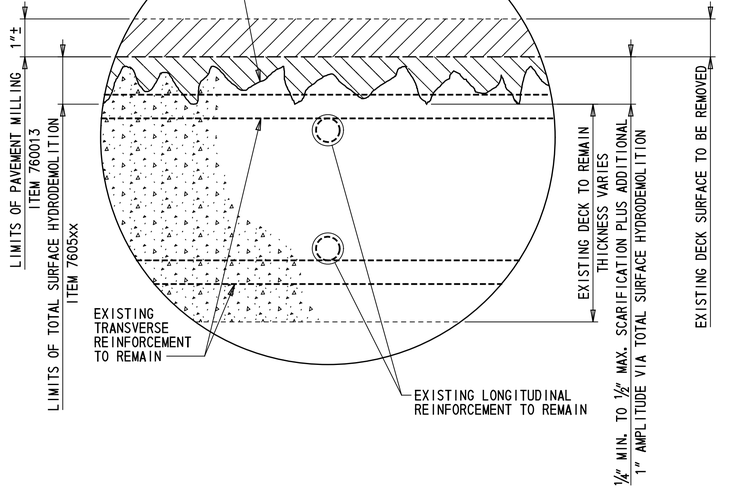

TOTAL SURFACE HYDRODEMOLITION DETAIL (NO OVERLAY)

6" = 1'-0"

NOT FOR CONSTRUCTION

DELAWARE DEPARTMENT OF TRANSPORTATION	ADDENDUMS / REVISIONS	SCALE AS NOTED	REHABILITATION OF I-95 FROM I-495 TO NORTH OF BRANDYWINE RIVER BRIDGE	CONTRACT T201407404 / COUNTY NEW CASTLE	BRIDGE NO. 1 758H 057 / DESIGNED BY: JRQ / CHECKED BY: CWM	DEMOLITION DETAILS	1-758H DM-01 / SHEET NO. 2-643 / TOTAL SHTS. 2-731

\Bridge 1-758H\758HDM_01.dgn
2/8/2018 6:46:52 PM

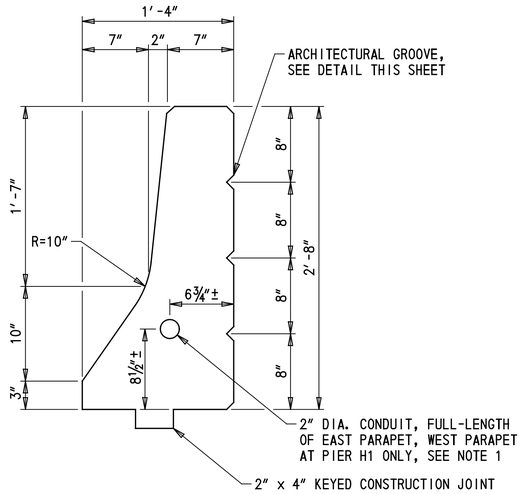

PARAPET DETAIL

1½″ = 1′-0″

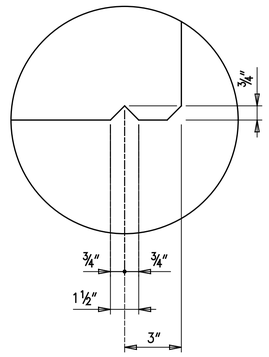

DRIP NOTCH DETAIL

3″ = 1′-0″

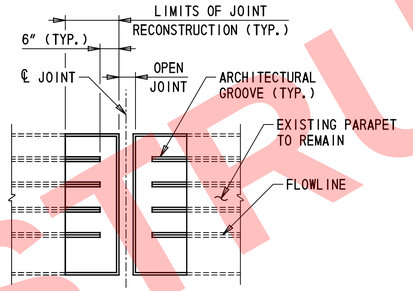

ARCHITECTURAL GROOVE TERMINATION DETAIL

(DETAIL SHOWN AT EXPANSION JOINT, DETAIL AT DECK OVER SIMILAR)

½″ = 1′-0″

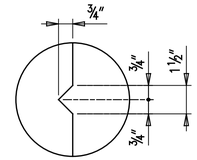

ARCHITECTURAL GROOVE DETAIL

3″ = 1′-0″

NOTES:

1. 2″ DIAMETER CONDUIT SHALL BE GALVANIZED STEEL IN ACCORDANCE WITH SPECIFICATIONS SECTION 1062. PAYMENT WILL BE INCIDENTAL TO ITEM 610008 - PORTLAND CEMENT CONCRETE MASONRY, PARAPET, CLASS A.

NOT FOR CONSTRUCTION

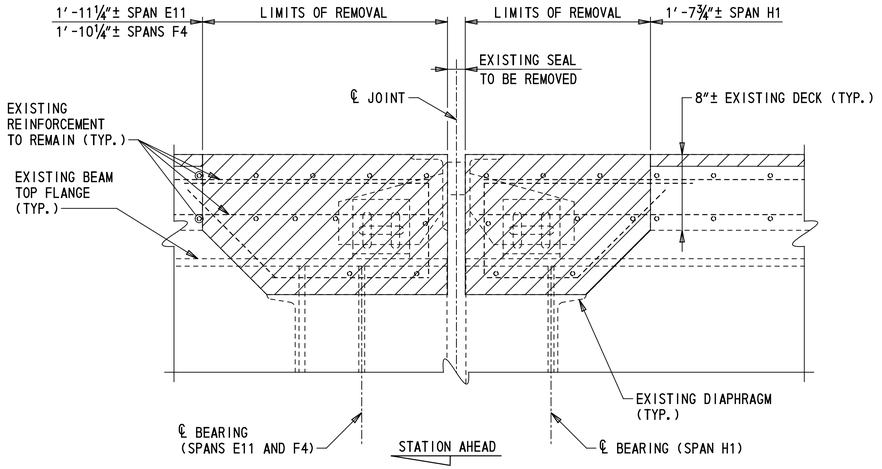

REMOVAL DETAIL - PIER H1

1½″ = 1′-0″

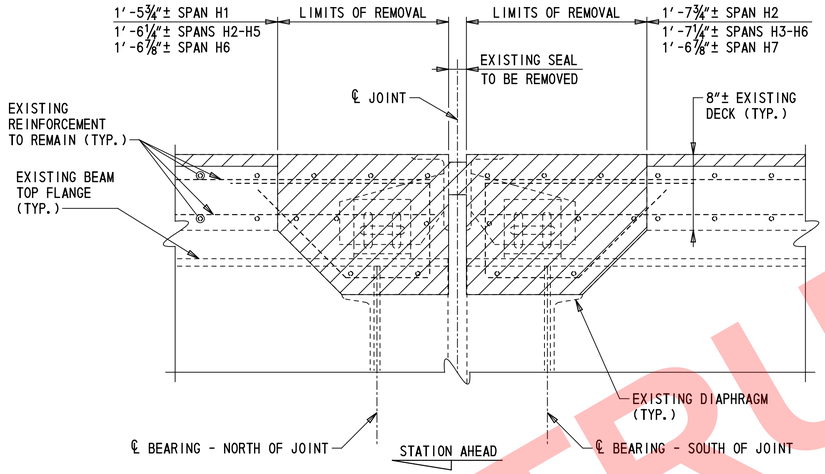

REMOVAL DETAIL - PIERS H2 THROUGH H7

1½″ = 1′-0″

JOINT RECONSTRUCTION NOTES:

1. NEW STRIP SEAL ASSEMBLY SHOWN FOR GRAPHICAL PURPOSES ONLY. DETAILS MAY VARY BY MANUFACTURER. STRIP SEAL AND ASSEMBLY SHALL BE IN ACCORDANCE WITH ITEM 624000 - PREFABRICATED EXPANSION JOINT SYSTEM, 3″.
2. CLASS D CONCRETE SHALL BE IN ACCORDANCE WITH ITEM 610017 - P.C.C. MASONRY, SUPERSTRUCTURE, CLASS D. CLEAN AND APPLY EPOXY BONDING COMPOUND TO ALL REMOVAL AND ROUGHENED SURFACES PRIOR TO PLACING CONCRETE. COST FOR THIS WORK WILL BE INCIDENTAL TO ITEM 610017.
3. EXISTING BARS TO REMAIN SHALL BE CLEANED IN ACCORDANCE WITH SECTION 628.03(E)7. BARS WITH CORROSION, BROKEN, OR WITH INADEQUATE BOND SHALL BE REPAIRED IN ACCORDANCE WITH SECTION 628.03(E)7. PAYMENT FOR THIS WORK WILL BE INCIDENTAL TO ITEM 624000 - PREFABRICATED EXPANSION JOINT SYSTEM, 3″.
4. ALL NEW REINFORCING STEEL REQUIRED TO COMPLETE THE JOINT HEADER REPAIRS SHALL BE EPOXY COATED AND HAVE 2″ MIN. CONCRETE COVER UNLESS SHOWN OTHERWISE. PAYMENT FOR ALL NEW REINFORCING STEEL SHALL BE UNDER ITEM 611001 - BAR REINFORCEMENT, EPOXY COATED.
5. THE CONTRACTOR SHALL USE CARE DURING THE REMOVAL OF THE EXISTING CONCRETE AND PORTIONS OF THE JOINT SYSTEM TO AVOID DAMAGE TO THE EXISTING PORTIONS OF THE STRUCTURE THAT ARE TO REMAIN IN PLACE. ANY DAMAGE INCURRED TO EXISTING PORTIONS OF THE STRUCTURE TO REMAIN SHALL BE REPAIRED BY THE CONTRACTOR TO COMPLETE SATISFACTION OF THE ENGINEER AT NO ADDITIONAL COST TO THE DEPARTMENT.
6. PRIOR TO REMOVAL OF THE EXISTING ROADWAY JOINT AND FABRICATION OF THE PROPOSED ROADWAY MATERIALS, THE CONTRACTOR SHALL FIELD VERIFY THE CROSS SLOPE OF THE ROADWAY AT EACH INDIVIDUAL JOINT LOCATION.
7. CUT EXISTING LONGITUDINAL DECK REINFORCEMENT 2″ CLEAR OF NEW EDGE OF JOINT.

NOTES:

1. FOR JOINT ASSEMBLY AND STRIP SEAL EXPANSION JOINT NOTES, SEE DWG. EX-02.
2. FOR TYPICAL JOINT PLAN, SEE DWG. EX-02.
3. FOR PARAPET RECONSTRUCTION AT JOINTS, SEE DWG. EX-03.

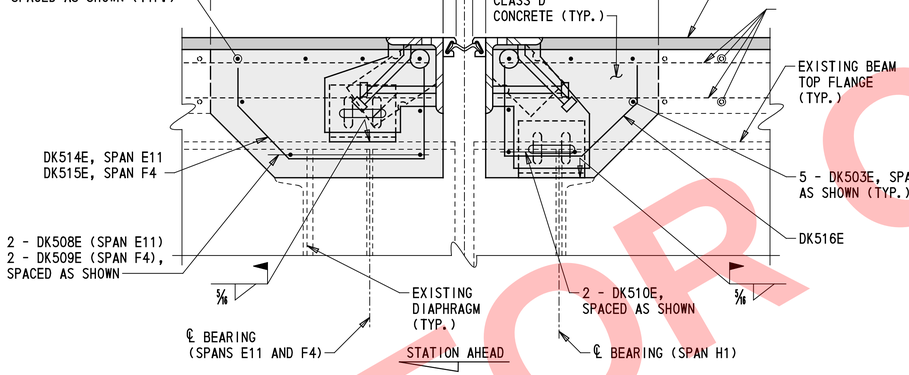

JOINT DETAIL - PIER H1

1½″ = 1′-0″

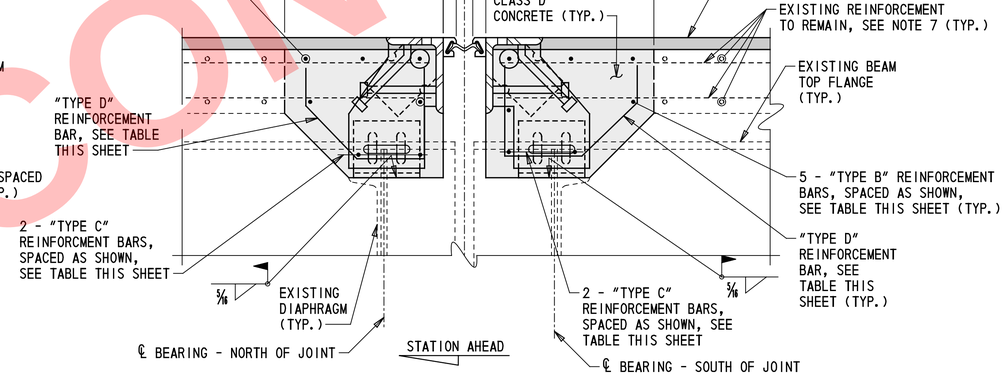

JOINT DETAIL - PIERS H2 THROUGH H7

1½″ = 1′-0″

LEGEND:

- REMOVAL LIMITS
- PROPOSED CONSTRUCTION
- PROPOSED LMC OVERLAY

DECK JOINT OPENINGS

LOCATION	TEMPERATURE (°F)										MOVEMENT CLASSIFICATION
	20	30	40	50	60	68	70	80	90	100	
PIERS H1-H6	2″	1 15/16″	1 7/8″	1 13/16″	1 3/4″	1 11/16″	1 11/16″	1 5/8″	1 3/4″	1 1/2″	3″
PIER H7	1 5/8″	1 5/8″	1 5/8″	1 5/8″	1 5/8″	1 5/8″	1 5/8″	1 5/8″	1 5/8″	1 5/8″	3″

BAR REINFORCEMENT SCHEDULE

LOCATION	NORTH OF JOINT					SOUTH OF JOINT				
	"TYPE B" BAR	"TYPE C" BAR		"TYPE D" BAR		"TYPE B" BAR	"TYPE C" BAR		"TYPE D" BAR	
	MARK	MARK	QUANTITY	MARK	QUANTITY	MARK	MARK	QUANTITY	MARK	QUANTITY
PIER H2	DK504E	DK511E	16	DK517E	40	DK504E	DK508E	12	DK516E	30
PIER H3	DK505E	DK512E	12	DK517E	30	DK505E	DK508E	10	DK516E	25
PIER H4	DK506E	DK509E	10	DK517E	25	DK506E	DK509E	*	DK516E	20
PIER H5	DK507E	DK509E	10	DK517E	20	DK507E	DK509E	10	DK516E	20
PIER H6	DK507E	DK509E	10	DK517E	20	DK507E	DK509E	10	DK516E	20
PIER H7	DK507E	DK509E	10	DK518E	20	DK507E	DK509E	10	DK518E	20

*2 - DK509E PER BAY IN BAYS 2-5, AND 2 - DK513E IN BAY 1

NOT FOR CONSTRUCTION

DELAWARE
DEPARTMENT OF TRANSPORTATION

ADDENDUMS / REVISIONS

SCALE AS NOTED

REHABILITATION OF I-95
FROM I-495 TO NORTH OF
BRANDYWINE RIVER BRIDGE

CONTRACT T201407404
COUNTY NEW CASTLE
BRIDGE NO. 1 758H 057
DESIGNED BY: BJM
CHECKED BY: JRQ

EXPANSION JOINT
DETAILS - 1

1-758H
EX-01
SHEET NO. 2-645
TOTAL SHTS. 2-731

C:\Bridge 1-758H\758HEX_01.dgn
2/28/2018 6:49:54 PM

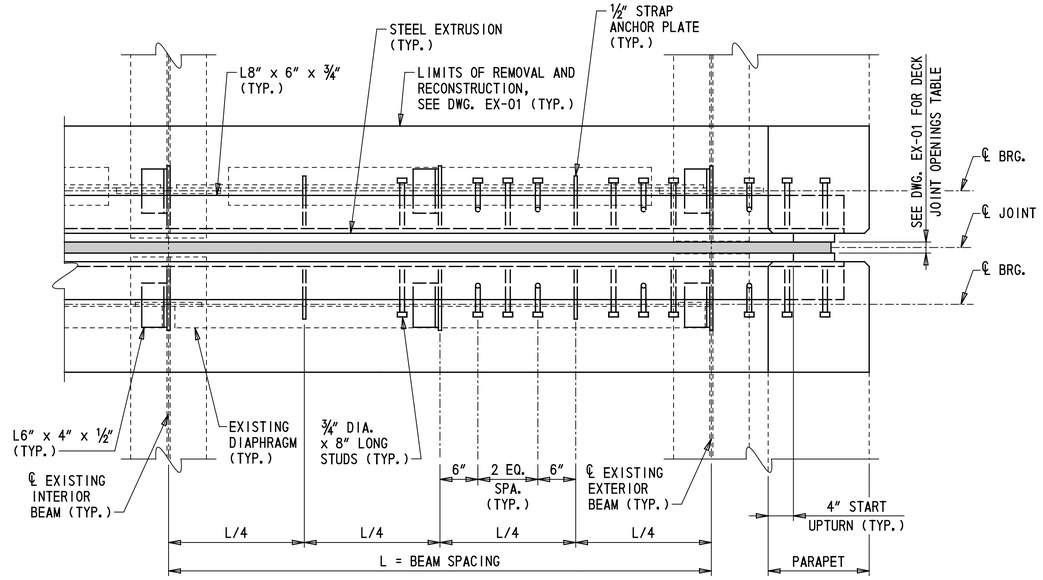

TYPICAL JOINT PLAN

1" = 1'-0"

BEAM SPACING			
LOCATION	DIMENSION "L" *		NUMBER OF BEAMS
	S. END	N. END	
SPAN E11	8'-2⅜"±	-	5
SPAN F4	7'-7⅛"±	-	5
SPAN H1	6'-2⅜"±	8'-6⅜"±	9
SPAN H2	6'-10⅛"±	8'-2⅜"±	7
SPAN H3	7'-6⅛"±	8'-2¼"±	6
SPAN H4, BAY 1	7'-6"±	7'-9"±	6
SPAN H4, BAYS 2-5	7'-6"±	7'-6"±	6
SPAN H5	7'-6"±	7'-6"±	6
SPAN H6	7'-6"±	7'-6"±	6
SPAN H7	7'-6"±	7'-6"±	6

*MEASURED ALONG ℄ PIER

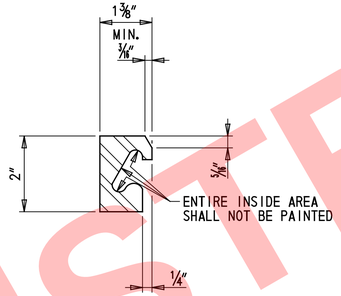

STEEL EXTRUSION DETAIL

6" = 1'-0"

STRIP SEAL EXPANSION JOINT NOTES:

1. STEEL FOR DECK JOINTS AND STEEL EXTRUSIONS SHALL BE AASHTO M270, GR. 36 (ASTM A36) AT MINIMUM.
2. NEOPRENE EXTRUSION TO MEET D-2628-81 MODIFIED, (RECOVERY TESTS EXCLUDED).
3. THE EXPANSION JOINT SHALL BE CAPABLE OF SEALING THE DECK TO PREVENT MOISTURE AND OTHER CONTAMINANTS FROM DESCENDING THROUGH THE JOINT.
4. THE CONTRACTOR SHALL ADJUST THE OPEN JOINT (Y) AS REQUIRED BY THE WIDTH OF THE STEEL EXTRUSION USED SO AS TO PROVIDE A X" JOINT OPENING AT 68°F.
5. THE STRIP SEAL SHALL BE INSTALLED IN ONE PIECE ACROSS THE BRIDGE WIDTH. SPLICING OF THE STRIP SEAL IS NOT PERMITTED.
6. THE EXPANSION JOINT SYSTEM WILL BE PAID FOR UNDER ITEM 624000 - PREFABRICATED EXPANSION JOINT SYSTEM, 3".
7. STEEL EXTRUSIONS SHALL BE HOT-DIP GALVANIZED. ENTIRE EXPANSION DAM SHALL BE PAINTED AFTER FABRICATION USING URETHANE SYSTEM. COLOR OF PAINT SYSTEM TO BE APPLIED SHALL MATCH THE COLOR OF THE EXISTING STEEL STRUCTURE.
8. LUBRICANT-ADHESIVE FOR USE IN INSTALLING AND BONDING NEOPRENE SEAL ELEMENTS TO STEEL JOINT COMPONENTS SHALL BE A ONE QUART MOISTURE CURING POLYURETHANE AND HYDROCARBON SOLVENT MIXTURE HAVING THE FOLLOWING PHYSICAL PROPERTIES:

AVERAGE WEIGHT, POUNDS PER GALLON	8±10%
SOLIDS CONTENT	65%
ADHESIVE SHALL REMAIN LIQUID FROM	5°F TO 120°F
FILM STRENGTH, AS PER ASTM D-412	2,000 PSI
ELONGATION	250%

9. HOLES SHALL BE PLACED IN THE RIB PLATES AND STRAP ANCHORS PLATES FOR BAR REINFORCEMENT. IF THIS IS DONE IN THE FIELD AN APPROVED EPOXY-BONDED PAINT SHALL BE USED TO TOUCH-UP THE HOLES. PAYMENT INCIDENTAL TO ITEM 624000 - PREFABRICATED EXPANSION JOINT SYSTEM, 3".
10. ANCHOR PLATE AND STEEL EXTRUSION SHALL BE WELDED TO WATERTIGHT AT CONSTRUCTION JOINTS. PAYMENT INCIDENTAL TO ITEM 624000 - PREFABRICATED EXPANSION JOINT SYSTEM, 3".
11. IF WELD OPTION IS PROPOSED, SLOTTED HOLES IN ½" PLATE AND L6" x 4" x ½" MAY BE OMITTED.
12. AT AREAS WHERE STEEL MEMBERS ARE TO BE SPLICED, USE OF COMPLETE JOINT PENETRATION (CJP) AND PARTIAL JOINT PENETRATION WELD (PJP) ARE BOTH PERMITTED. THE THICKNESS OF PJP WELD MUST BE MINIMUM HALF OF THE STEEL MEMBER THICKNESS.
13. SEE TYPICAL JOINT PLAN THIS SHEET FOR LAYOUT OF L6" x 4" x ½" AND STRAP ANCHORS.

NOTES:

1. FOR BEAM DESIGNATIONS, SEE DWGS. TS-01 THROUGH TS-03.
2. FOR VIEW A-A, SEE DWG. EX-03.
3. DIMENSIONS IN BEAM SPACING TABLE ARE BASED ON AS-BUILT PLANS DATED APRIL 6, 1977. FIELD VERIFY ALL DIMENSIONS PRIOR TO FABRICATING EXPANSION JOINTS.
4. FOR DECK JOINT OPENINGS TABLE, SEE DWG. EX-01.

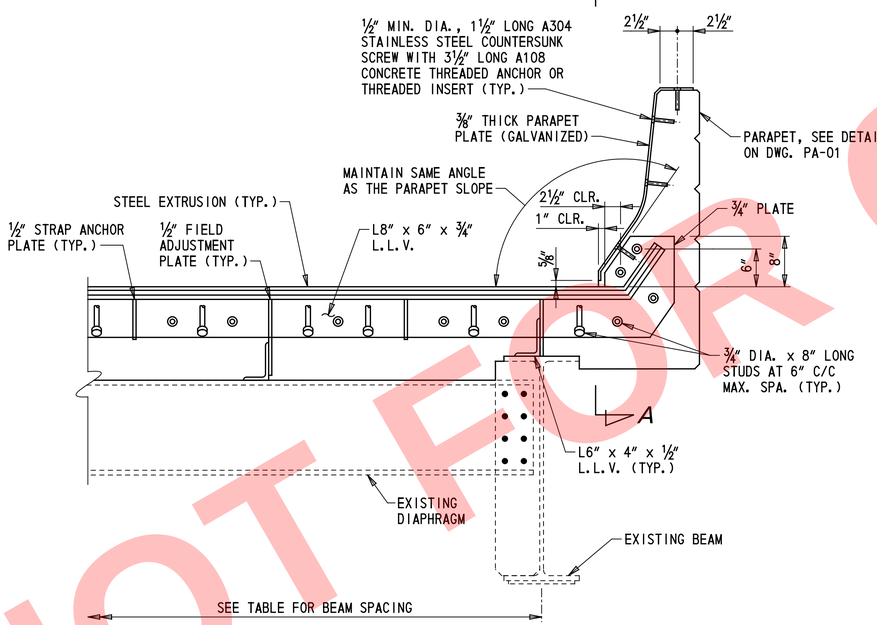

TYPICAL SECTION AT JOINT

1" = 1'-0"

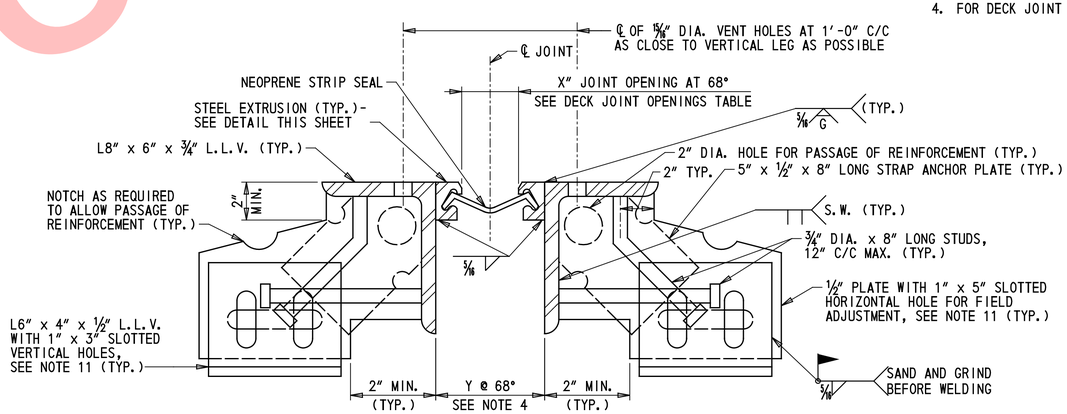

JOINT ASSEMBLY DETAIL

3" = 1'-0"

NOT FOR CONSTRUCTION

DELAWARE DEPARTMENT OF TRANSPORTATION	ADDENDUMS / REVISIONS	SCALE AS NOTED	REHABILITATION OF I-95 FROM I-495 TO NORTH OF BRANDYWINE RIVER BRIDGE	CONTRACT T201407404	BRIDGE NO. 1 758H 057	EXPANSION JOINT DETAILS – 2
				COUNTY NEW CASTLE	DESIGNED BY: BJM	
					CHECKED BY: JRQ	

1-758H EX-02

SHEET NO. 2-646

TOTAL SHTS. 2-731

C:\Bridge 1-758H\1-758HEX_02.dgn 6/4/2014 PM 2/8/2016

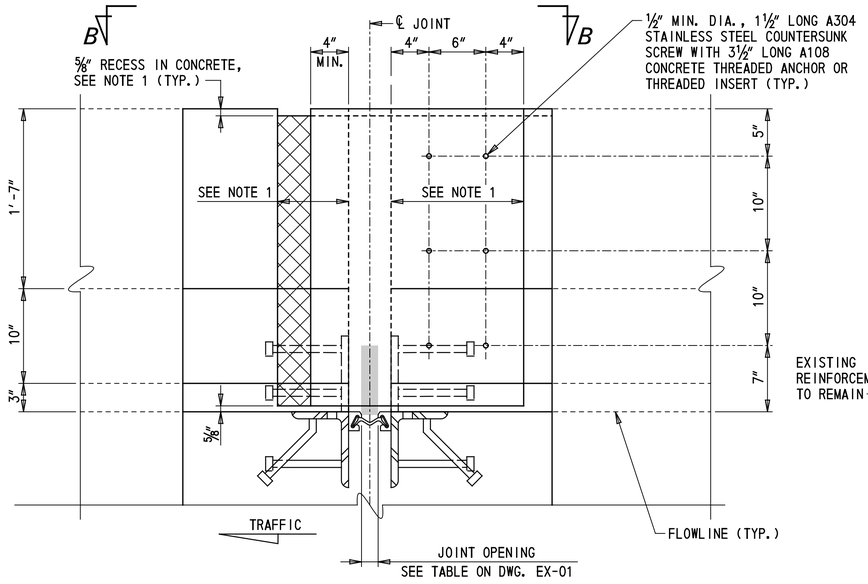

VIEW A-A

1½" = 1'-0"

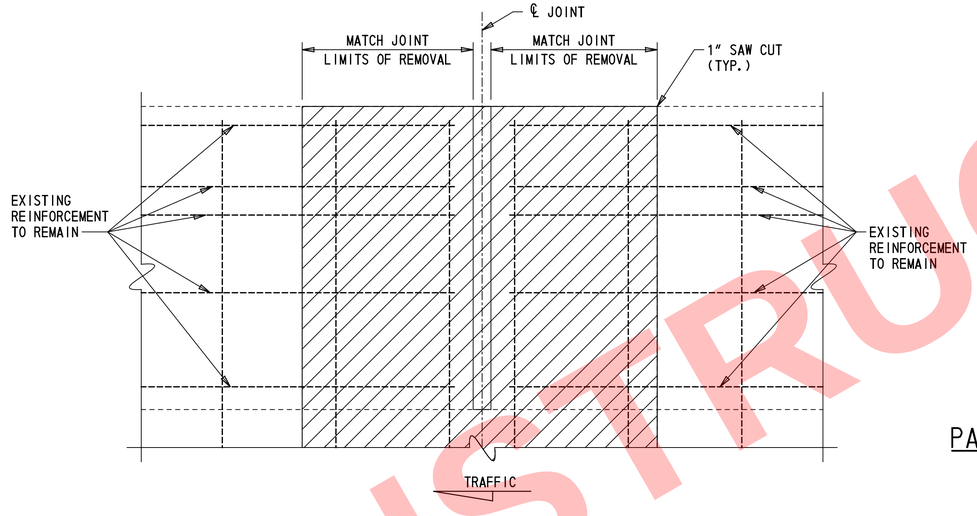

PARAPET REMOVAL AT EXPANSION JOINTS

1½" = 1'-0"

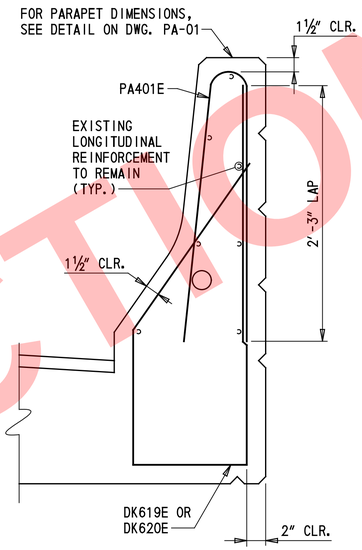

PARAPET DETAIL AT EXPANSION JOINTS

1½" = 1'-0"

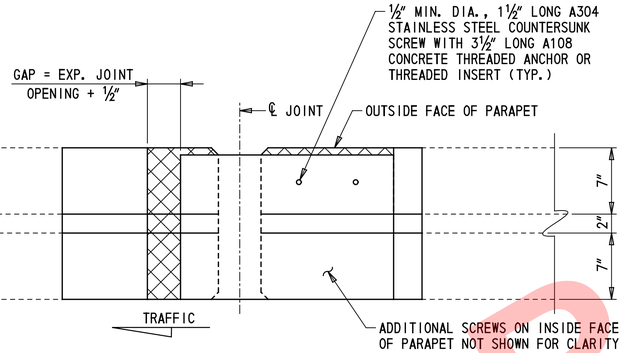

VIEW B-B

1½" = 1'-0"

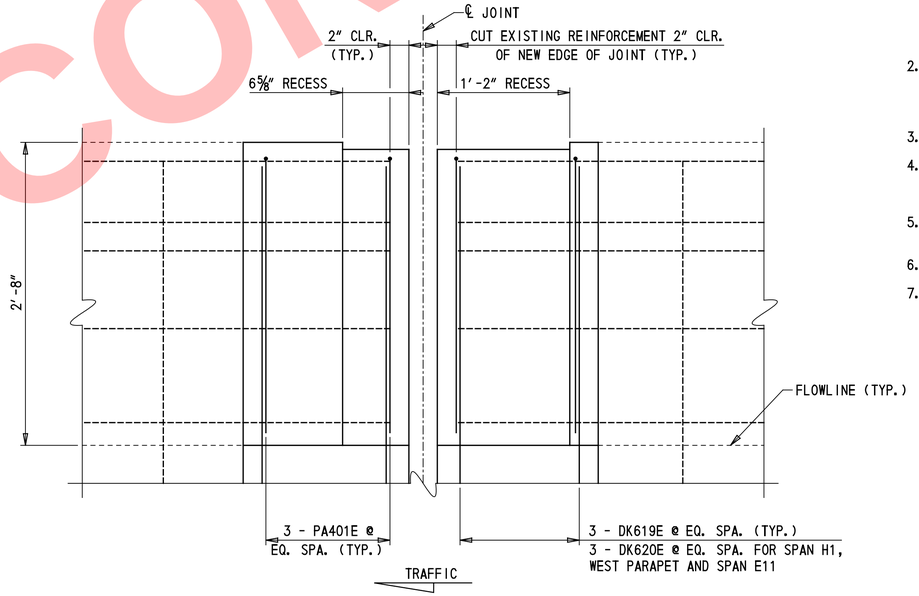

PARAPET RECONSTRUCTION AT EXPANSION JOINTS

1½" = 1'-0"

PARAPET JOINT PLATE NOTES:

1. FORM CONCRETE RECESS AREA IN PARAPET AND GRIND TO PROVIDE SMOOTH SURFACE. APPLY ONE COAT OF ASPHALT CEMENT IN ACCORDANCE WITH SECTION 1012 OF THE STANDARD SPECIFICATIONS TO ALLOW BENT SLIDING PLATE TO MOVE FREELY WITHOUT FRICTION. PAYMENT WILL BE INCIDENTAL TO ITEM 610008 - PORTLAND CEMENT CONCRETE MASONRY, PARAPET, CLASS A.
2. PLACE PARAPET CONCRETE WITH STEEL BENT PLATES, INSERTS, AND BOLTS IN PLACE TO INSURE PROPER ALIGNMENT OF INSERTS AND HOLES IN THE STEEL PLATE. REMOVE PLATES TO INSTALL SEAL. APPLY APPROVED BONDBREAKER TO SLIDING PLATES PRIOR TO INSTALLATION.
3. GRIND ALL STEEL EDGES EXPOSED TO TRAFFIC TO ⅛" MIN. RADIUS.
4. BOLTS SHALL BE ASTM A304 STAINLESS STEEL COUNTERSUNK SCREW WITH ASTM A108 CONCRETE THREADED ANCHOR OR THREADED INSERT. HEAD OF BOLTS SHALL BE FLUSH WITH FACE OF STEEL PLATE.
5. THE CONTRACTOR SHALL SUBMIT WORKING DRAWINGS OF TRAFFIC BARRIER PLATES FOR APPROVAL.
6. FOR ADDITIONAL JOINT NOTES AND DETAILS, SEE DWGS. EX-01 AND EX-02.
7. PAYMENT FOR PARAPET JOINT PLATES AND PARTIAL REMOVAL OF PARAPET FOR JOINT RECONSTRUCTION WILL BE INCIDENTAL TO ITEM 624000 - PREFABRICATED EXPANSION JOINT SYSTEM, 3".

LEGEND:

REMOVAL LIMITS

RECESS IN PARAPET

NOT FOR CONSTRUCTION

DELAWARE DEPARTMENT OF TRANSPORTATION	ADDENDUMS / REVISIONS	SCALE AS NOTED	REHABILITATION OF I-95 FROM I-495 TO NORTH OF BRANDYWINE RIVER BRIDGE	CONTRACT T201407404	BRIDGE NO. 1 758H 057	EXPANSION JOINT DETAILS – 3	1-758H EX-03
				COUNTY NEW CASTLE	DESIGNED BY: BJM		SHEET NO. 2-647
					CHECKED BY: JRQ		TOTAL SHTS. 2-731

\Bridge 1-758H\758HEX_03.dgn
2/8/2018 6:46:55 PM

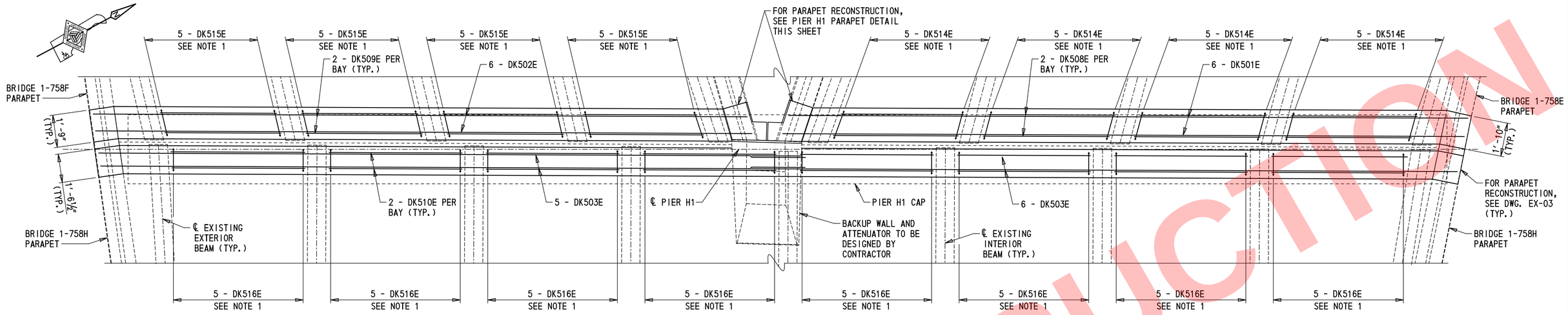

PIER H1 DECK PLAN

⅜" = 1'-0"

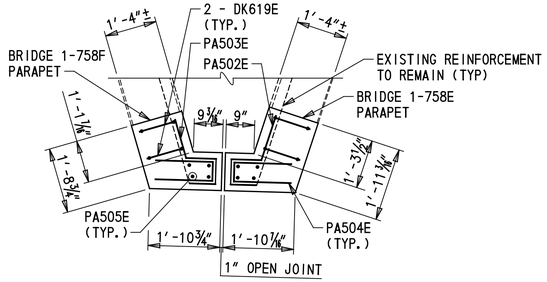

NOTE: BACKUP WALL NOT SHOWN FOR CLARITY

PIER H1 PARAPET DETAIL

½" = 1'-0"

NOT FOR CONSTRUCTION

NOTES:

1. BARS SPACED TO MATCH EXISTING TOP LONGITUDINAL BARS BETWEEN BEAMS.
2. FOR BEAM SPACING TABLE, SEE DWG. EX-02.
3. FOR ADDITIONAL JOINT NOTES AND DETAILS, SEE DWGS. EX-01 THROUGH EX-03.

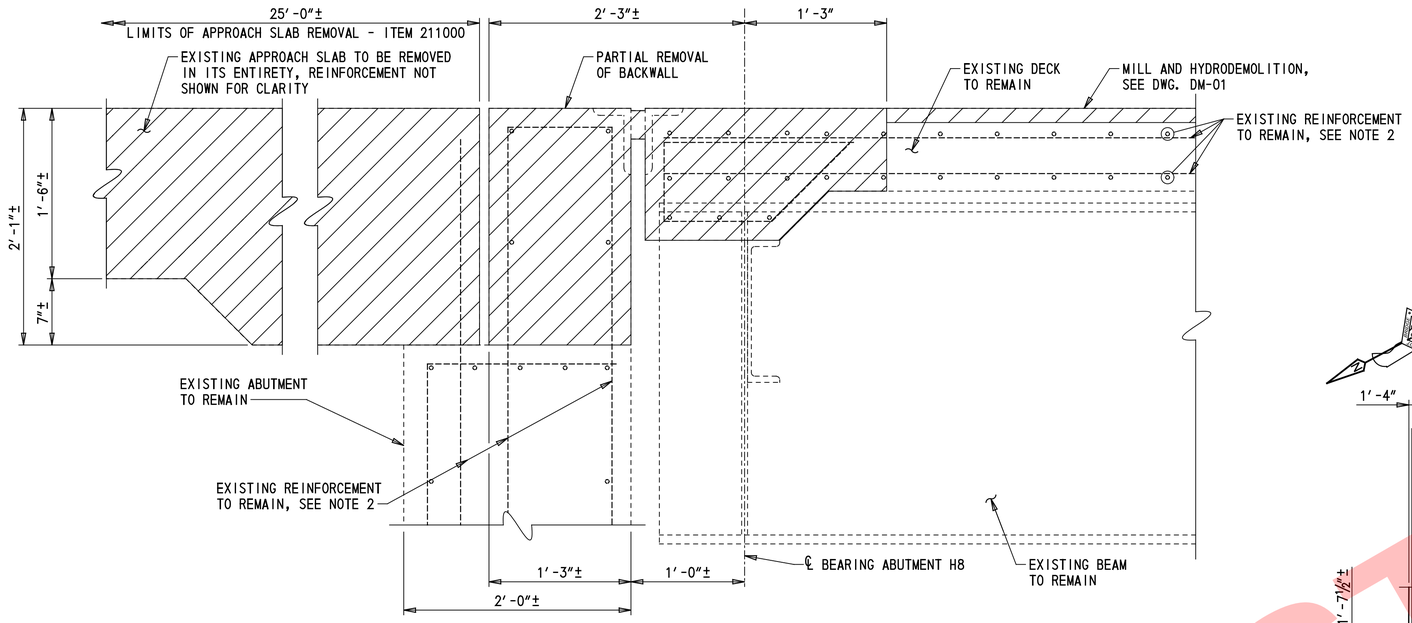

ABUTMENT JOINT AND BACKWALL REMOVAL DETAIL

1½″ = 1′-0″

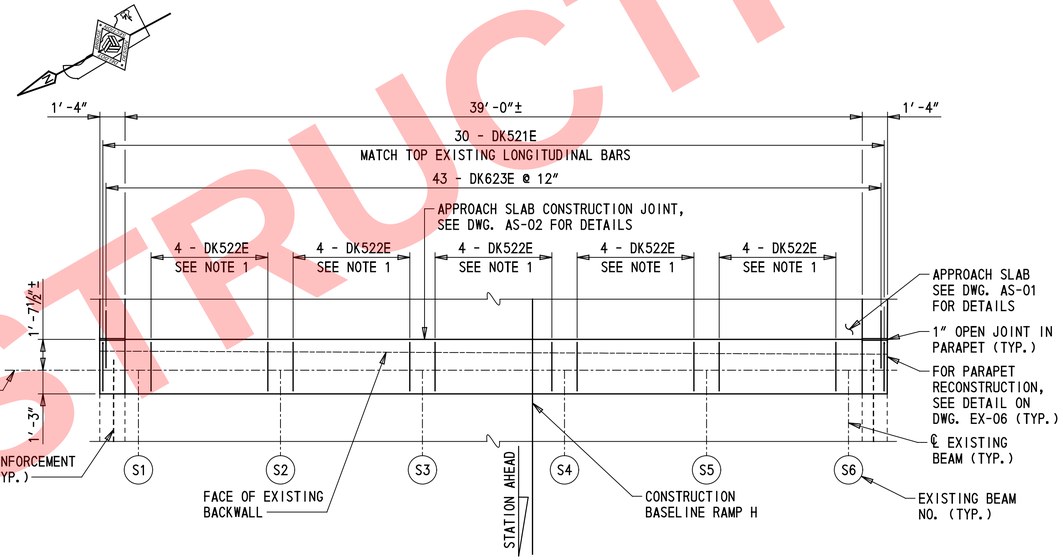

DECK OVER PLAN

¼″ = 1′-0″

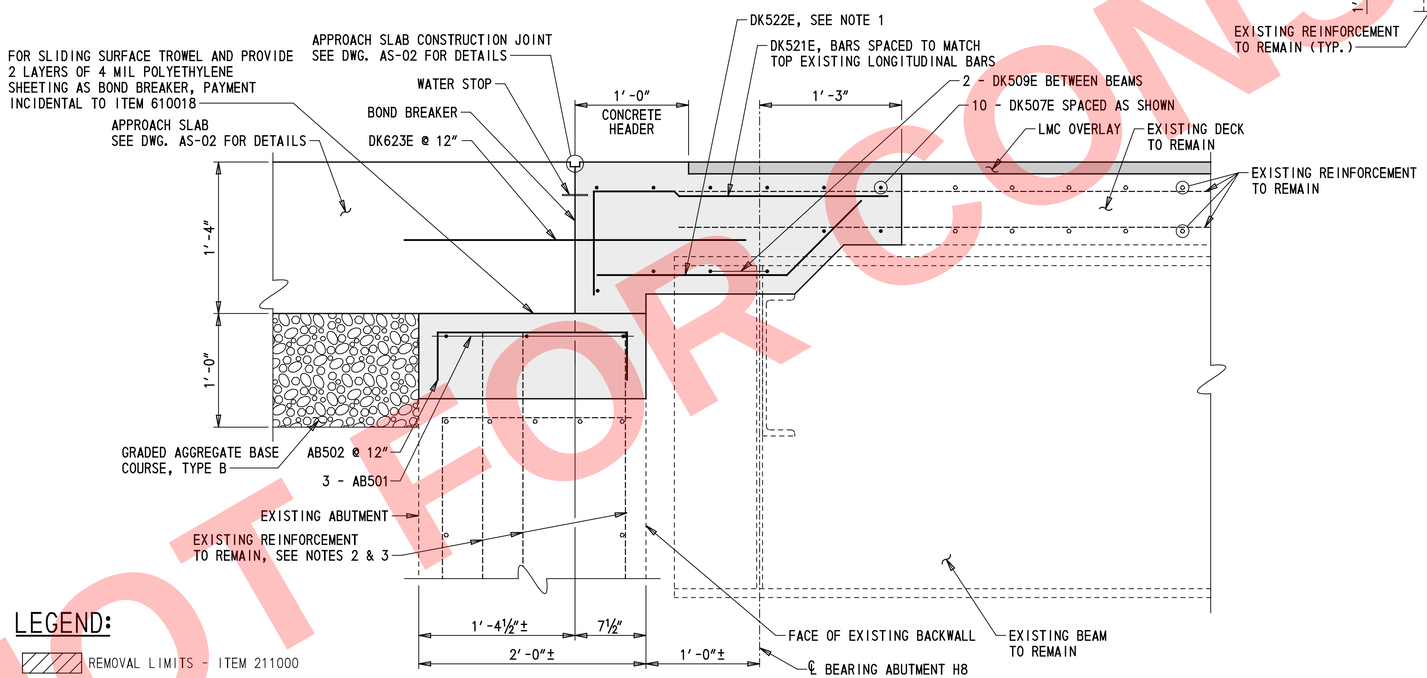

DECK OVER DETAIL

1½″ = 1′-0″

LEGEND:

- REMOVAL LIMITS - ITEM 211000
- PROPOSED CONSTRUCTION
- PROPOSED LMC OVERLAY

NOTES:

1. BARS SPACED TO MATCH EXISTING TOP LONGITUDINAL BARS BETWEEN BEAMS.
2. CUT EXISTING REINFORCEMENT TO REMAIN 2″ CLEAR OF NEW TOP OF BACKWALL.
3. EXISTING BARS TO REMAIN SHALL BE CLEANED IN ACCORDANCE WITH SECTION 628.03(E)7. BARS WITH CORROSION, BROKEN, OR WITH INADEQUATE BOND SHALL BE REPAIRED IN ACCORDANCE WITH SECTION 628.03(E)7. PAYMENT FOR THIS WORK WILL BE INCIDENTAL TO ITEM 610017 - PORTLAND CEMENT CONCRETE MASONRY, SUPERSTRUCTURE, CLASS D.

NOT FOR CONSTRUCTION

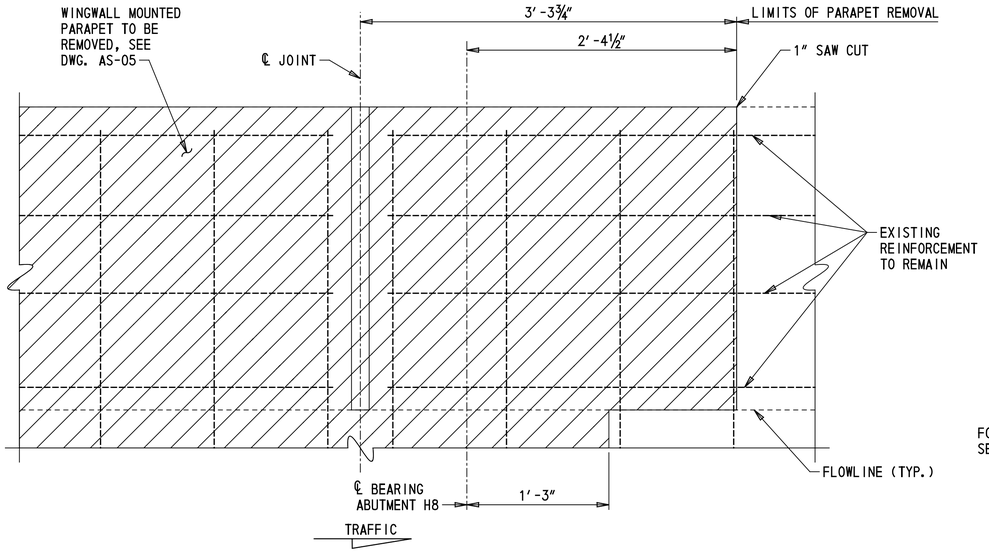

PARAPET REMOVAL AT DECK OVER

1½″ = 1′-0″

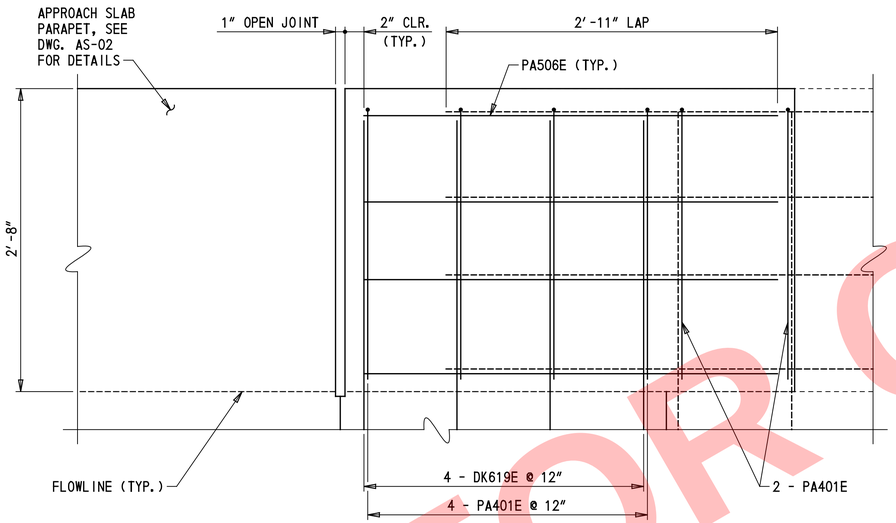

PARAPET RECONSTRUCTION AT DECK OVER

1½″ = 1′-0″

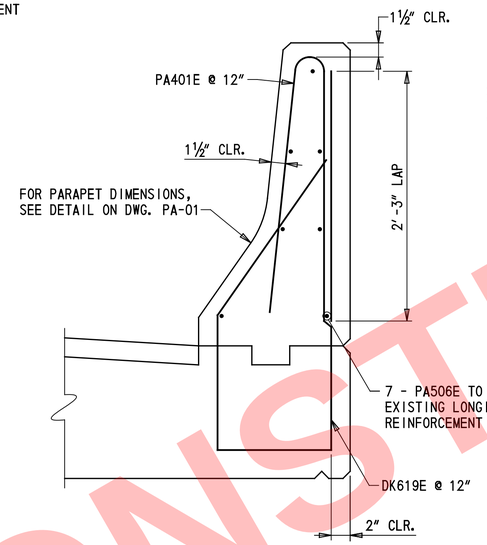

PARAPET DETAIL

1½″ = 1′-0″

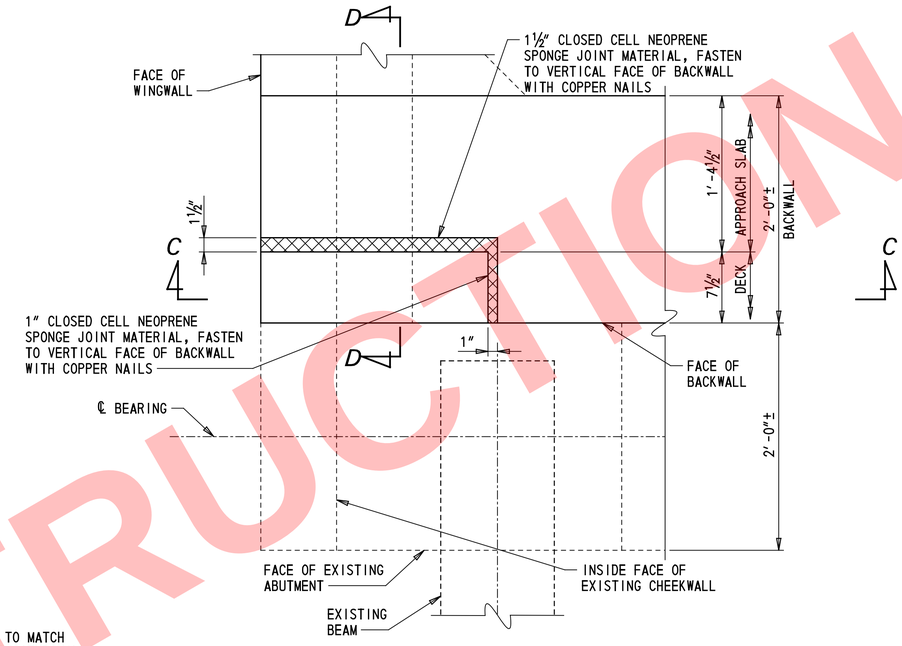

DECK OVER AT OVERHANG PLAN

1½″ = 1′-0″

NOTE: EAST END OF ABUTMENT SHOWN, WEST END SIMILAR

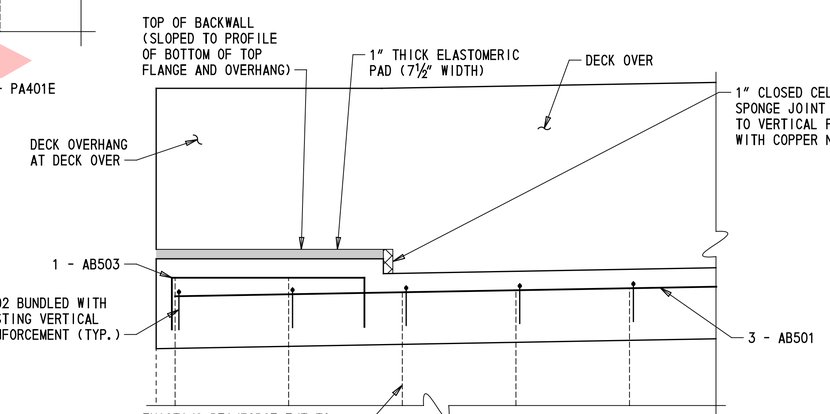

SECTION C-C

1½″ = 1′-0″

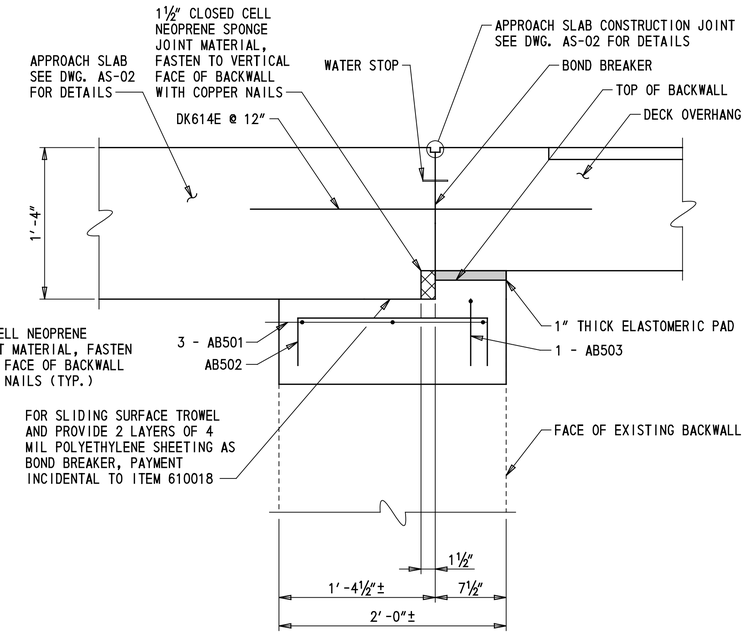

SECTION D-D

1½″ = 1′-0″

NOTES:

1. EXISTING BARS TO REMAIN SHALL BE CLEANED IN ACCORDANCE WITH SECTION 628.03(E)7. BARS WITH CORROSION, BROKEN, OR WITH INADEQUATE BOND SHALL BE REPAIRED IN ACCORDANCE WITH SECTION 628.03(E)7. PAYMENT FOR THIS WORK WILL BE INCIDENTAL TO ITEM 610008 - PORTLAND CEMENT CONCRETE MASONRY, PARAPET, CLASS A.

LEGEND:

REMOVAL LIMITS - ITEM 211000

NOT FOR CONSTRUCTION

DELAWARE DEPARTMENT OF TRANSPORTATION	ADDENDUMS / REVISIONS	SCALE AS NOTED	REHABILITATION OF I-95 FROM I-495 TO NORTH OF BRANDYWINE RIVER BRIDGE	CONTRACT T201407404	BRIDGE NO. 1 758H 057	ABUTMENT H8 DECK OVER DETAILS - 2	1-758H EX-06
				COUNTY NEW CASTLE	DESIGNED BY: BJM		SHEET NO. 2-650
					CHECKED BY: JRQ		TOTAL SHTS. 2-731

\Bridge 1-758H\758HEX_06.dgn
2/8/2018 6:46:57 PM

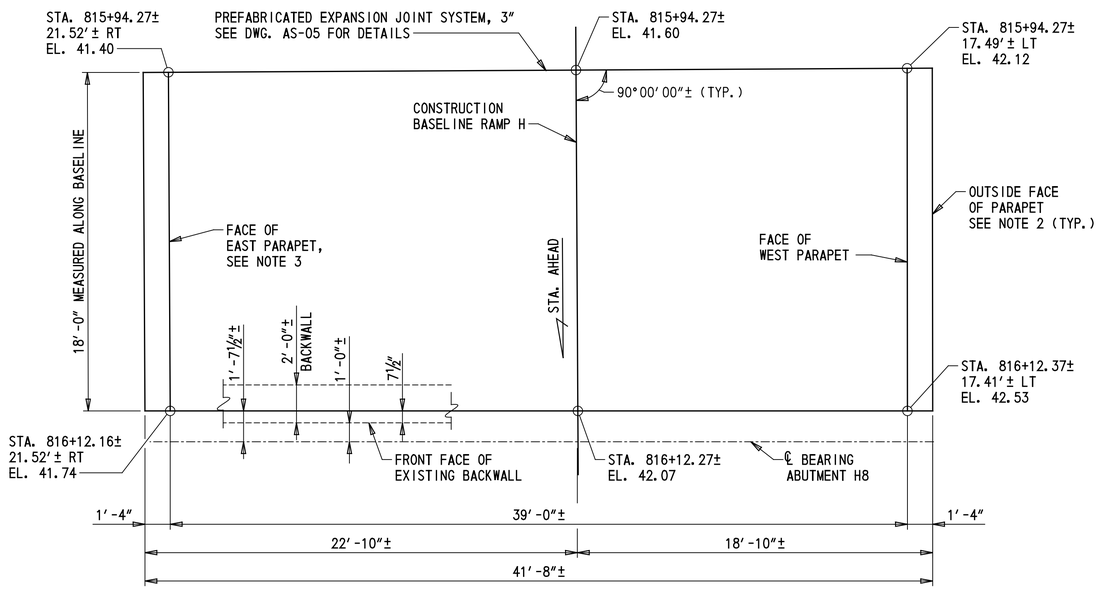

APPROACH SLAB PLAN

¼″ = 1′-0″

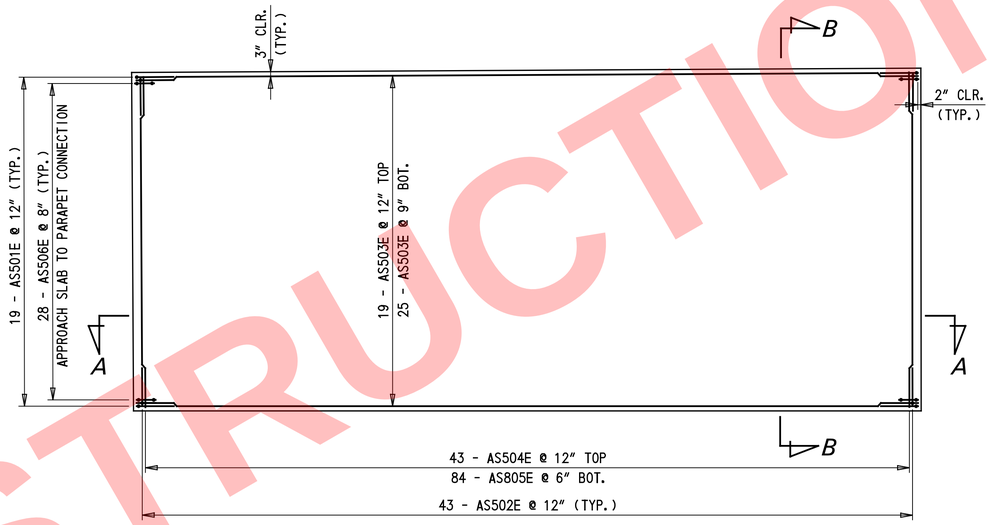

APPROACH SLAB REINFORCEMENT PLAN

¼″ = 1′-0″

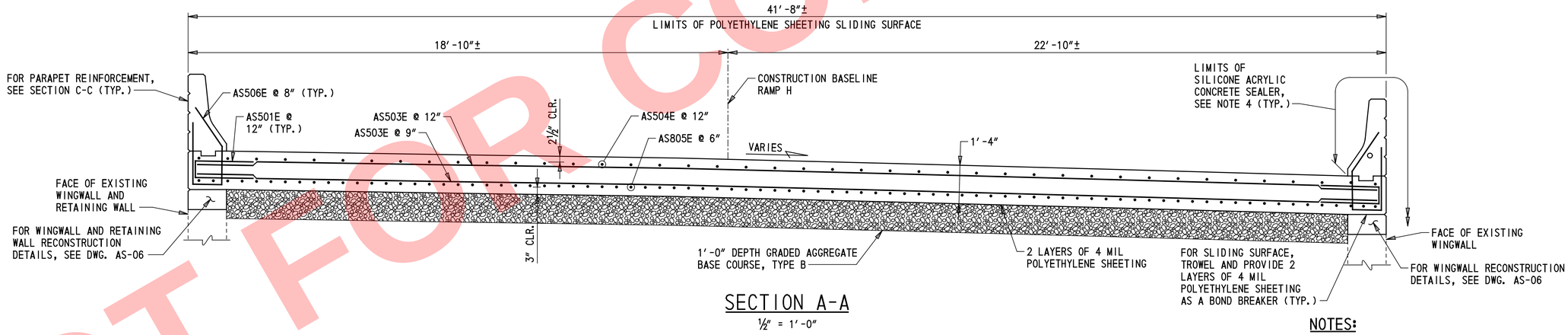

SECTION A-A

½″ = 1′-0″

NOTES:

1. FOR SECTION B-B, SEE DWG. AS-02.
2. OUTSIDE FACE OF PARAPET SHALL BE CONSTRUCTED FLUSH WITH FRONT FACE OF EXISTING WINGWALL AND RETAINING WALL. FLOWLINE AT PARAPET SHALL MATCH FLOWLINE OF EXISTING PARAPET ON BRIDGE AND RETAINING WALL.
3. OUTSIDE FACE OF PARAPET SHALL BE CONSTRUCTED FLUSH WITH FRONT FACE OF EXISTING WINGWALL. FLOWLINE AT PARAPET SHALL MATCH FLOWLINE OF EXISTING PARAPET ON BRIDGE.
4. LIMITS OF SILICONE ACRYLIC CONCRETE SEALER SHALL EXTEND FROM INSIDE FACE OF PARAPET TO EXISTING GROUNDLINE AT OUTSIDE FACE OF WINGWALL AND RETAINING WALL.

NOT FOR CONSTRUCTION

1-758H
AS-01

DELAWARE
DEPARTMENT OF TRANSPORTATION

ADDENDUMS / REVISIONS

SCALE AS NOTED

REHABILITATION OF I-95
FROM I-495 TO NORTH OF
BRANDYWINE RIVER BRIDGE

CONTRACT	BRIDGE NO. 1 758H 057	APPROACH SLAB PLAN AND TYPICAL SECTION	SHEET NO. 2-651
T201407404	DESIGNED BY: BJM		TOTAL SHTS. 2-731
COUNTY NEW CASTLE	CHECKED BY: CWM		

\Bridges 1-758H\758HAS_01.dgn
2/8/2018 6:46:57 PM

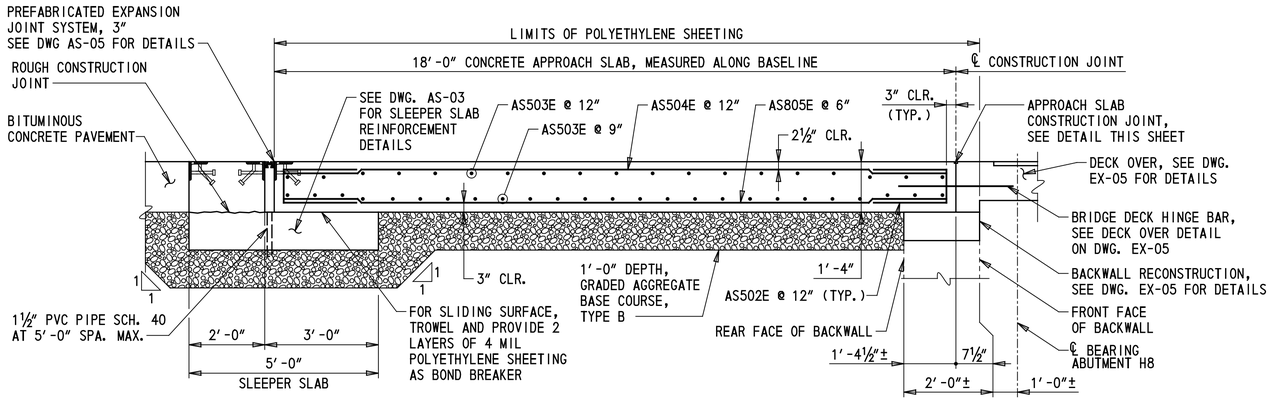

SECTION B-B

½" = 1'-0"

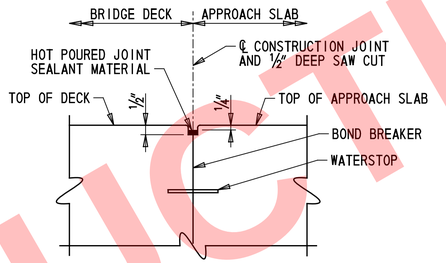

APPROACH SLAB CONSTRUCTION JOINT

NOT TO SCALE

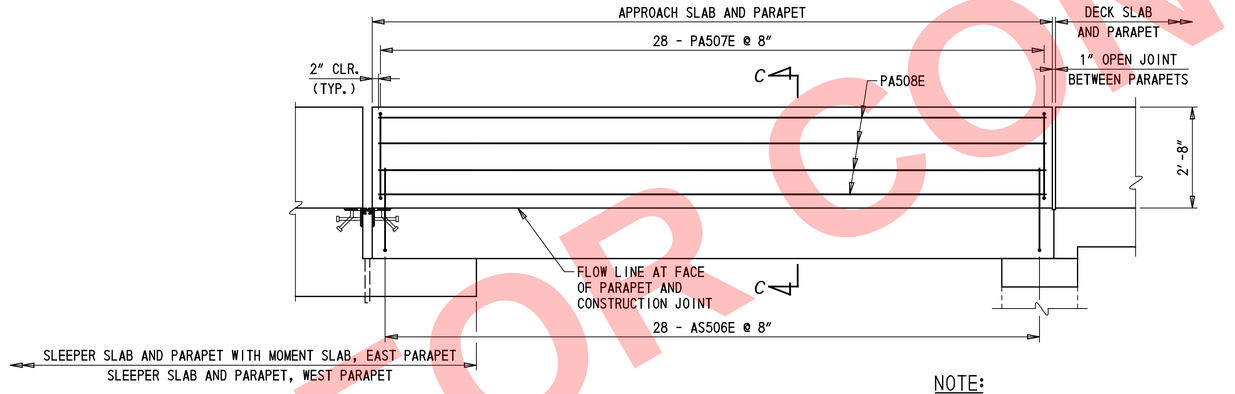

NOTE:

REINFORCEMENT NOT SHOWN IN SLEEPER SLAB AND APPROACH SLAB FOR CLARITY.

APPROACH SLAB PARAPET REINFORCEMENT ELEVATION

½" = 1'-0"

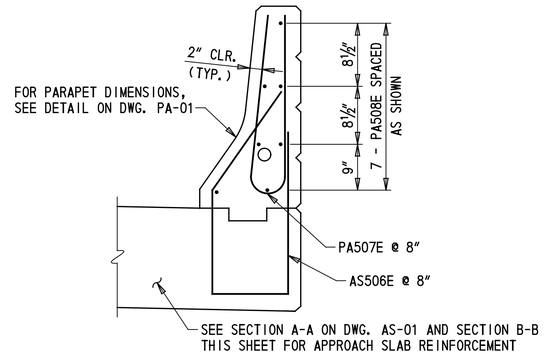

SECTION C-C

1" = 1'-0"

NOTES:

1. FOR ARMORED STRIP SEAL EXPANSION JOINT DETAILS, SEE DWG. AS-05.
2. FOR ADDITIONAL APPROACH SLAB REINFORCEMENT DETAILS, SEE DWG. AS-01.
3. PAYMENT FOR POLYETHYLENE SHEETING, BOND BREAKER, WATERSTOP, ½" DEEP SAW CUT, AND HOT POURED JOINT SEALANT WILL BE INCIDENTAL TO ITEM 610018 - PORTLAND CEMENT CONCRETE, APPROACH SLAB, CLASS D.

NOT FOR CONSTRUCTION

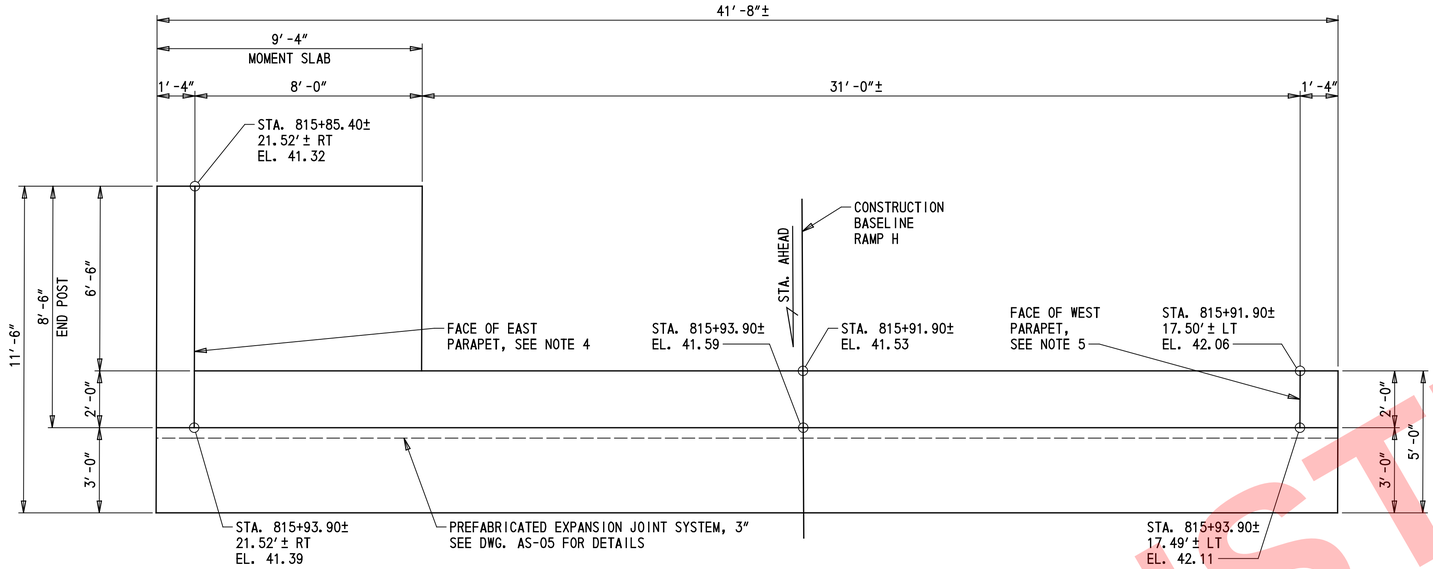

SLEEPER SLAB PLAN

3/8″ = 1′-0″

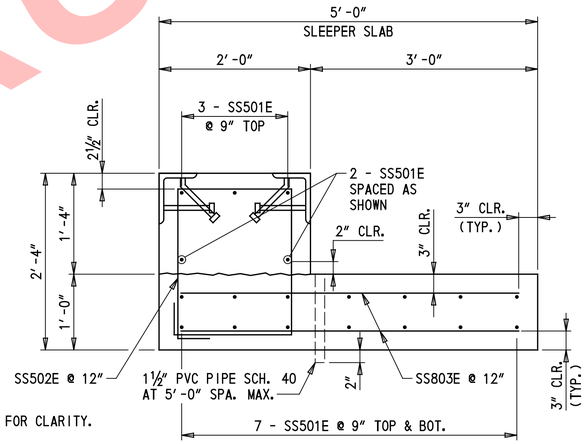

NOTE:
APPROACH SLAB NOT SHOWN FOR CLARITY.

SECTION F-F

1″ = 1′-0″

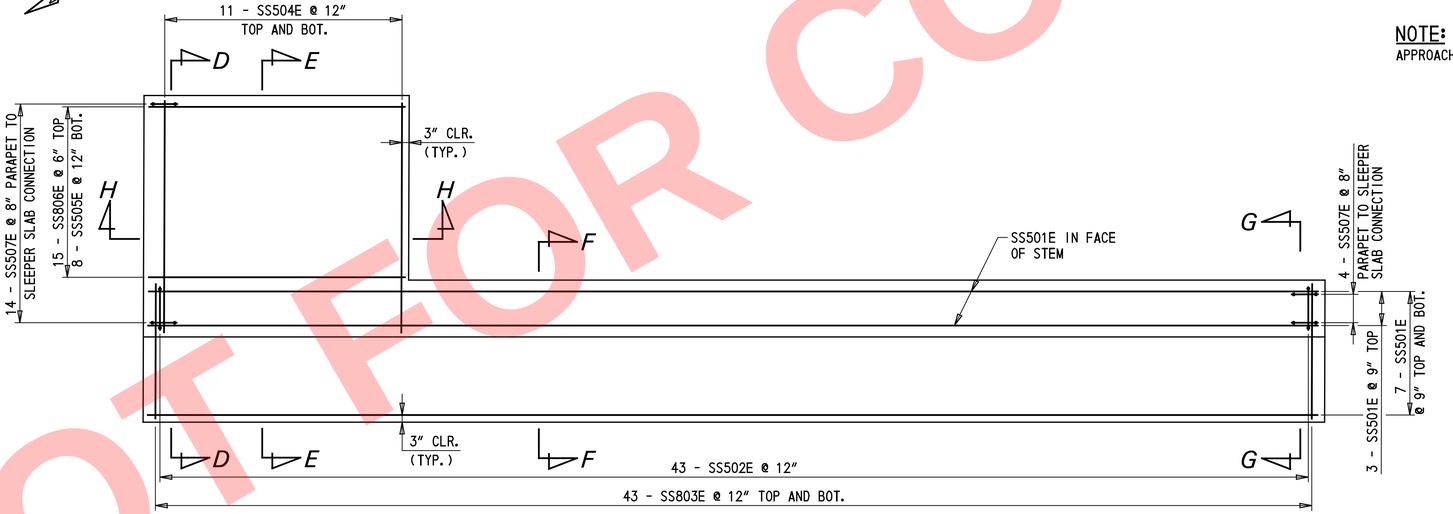

SLEEPER SLAB REINFORCEMENT PLAN

3/8″ = 1′-0″

NOTES:

1. FOR APPROACH SLAB PLAN AND DETAILS, SEE DWGS. AS-01 AND AS-02.
2. FOR SECTIONS D-D, E-E AND H-H, SEE DWG. AS-04.
3. FOR SECTION G-G, SEE DWG. AS-06.
4. FLOWLINE AT PARAPET SHALL MATCH FLOWLINE OF EXISTING PARAPET ON RETAINING WALL.
5. OUTSIDE FACE OF PARAPET SHALL BE CONSTRUCTED FLUSH WITH THE FRONT FACE OF EXISTING RETAINING WALL. FLOWLINE AT PARAPET SHALL MATCH FLOWLINE OF EXISTING PARAPET ON RETAINING WALL.

NOT FOR CONSTRUCTION

DELAWARE
DEPARTMENT OF TRANSPORTATION

ADDENDUMS / REVISIONS

SCALE AS NOTED

REHABILITATION OF I-95
FROM I-495 TO NORTH OF
BRANDYWINE RIVER BRIDGE

CONTRACT	BRIDGE NO.	1 758H 057
T201407404	DESIGNED BY: BJM	
COUNTY	CHECKED BY: CWM	
NEW CASTLE		

SLEEPER SLAB PLAN
AND DETAILS

1-758H AS-03
SHEET NO. 2-653
TOTAL SHTS. 2-731

...\Bridge 1-758H\758HAS_03.dgn
2/8/2018 6:49:58 PM

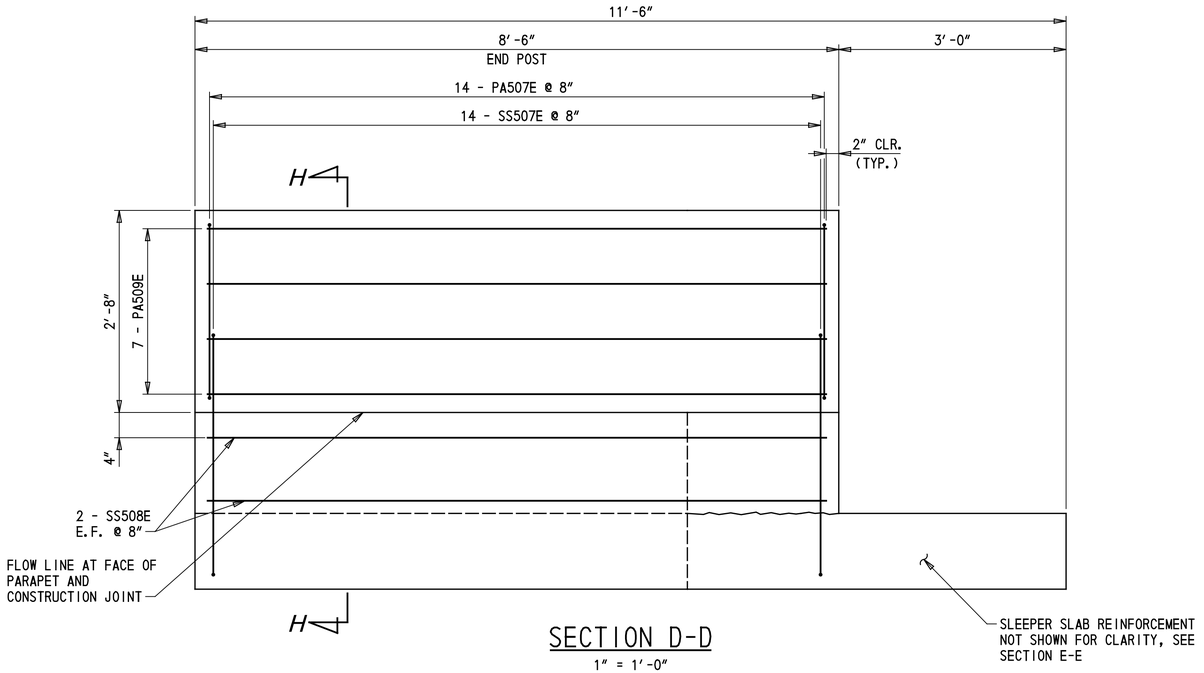

SECTION D-D

1″ = 1′-0″

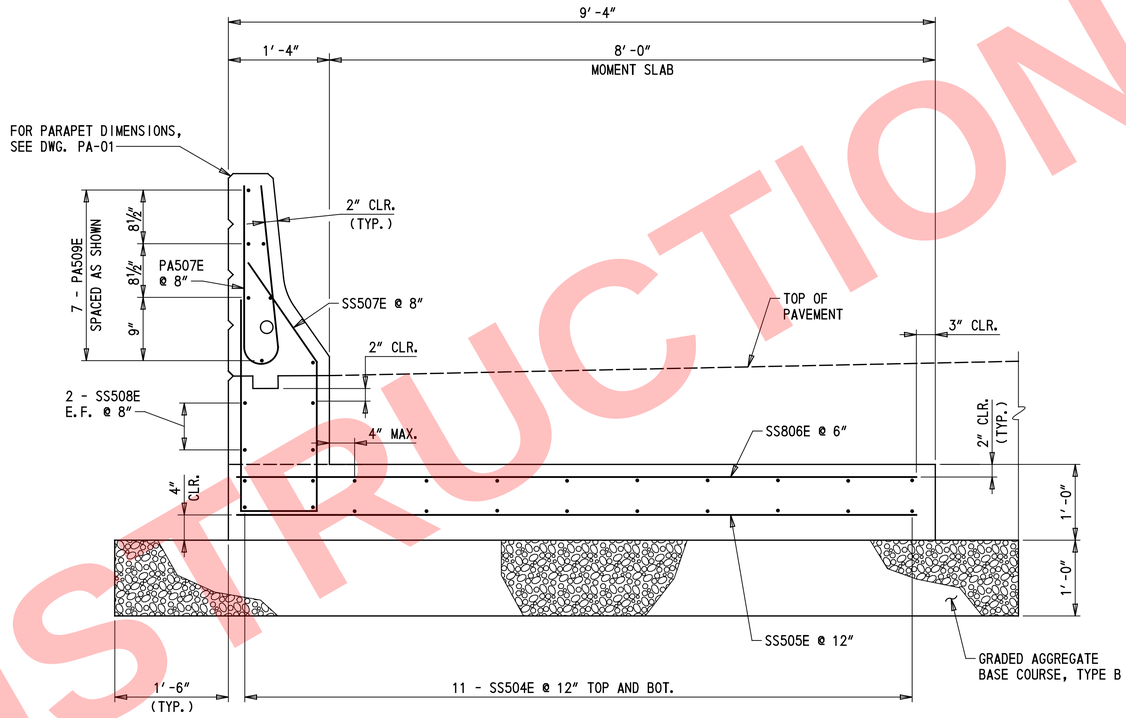

SECTION H-H

1″ = 1′-0″

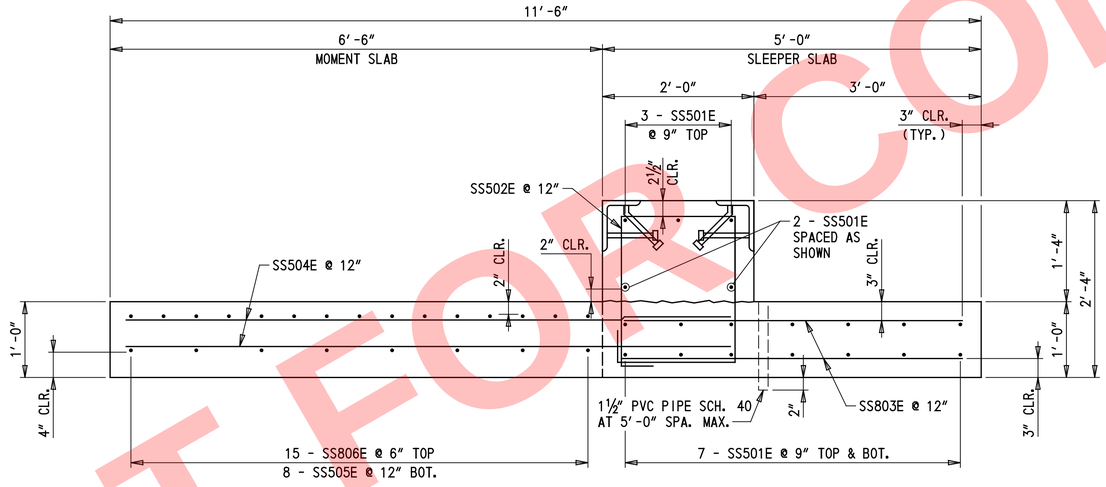

SECTION E-E

1″ = 1′-0″

NOTE:
APPROACH SLAB NOT SHOWN FOR CLARITY.

NOTES:

1. FOR APPROACH SLAB PLAN AND DETAILS, SEE DWGS. AS-01 AND AS-02.
2. FOR SLEEPER SLAB PLAN AND REINFORCEMENT PLAN, SEE DWG. AS-03.

NOT FOR CONSTRUCTION

DELAWARE DEPARTMENT OF TRANSPORTATION	ADDENDUMS / REVISIONS	SCALE AS NOTED	REHABILITATION OF I-95 FROM I-495 TO NORTH OF BRANDYWINE RIVER BRIDGE	CONTRACT T201407404	BRIDGE NO. 1 758H 057	SLEEPER SLAB DETAILS	1-758H AS-04
				COUNTY NEW CASTLE	DESIGNED BY: JRQ		SHEET NO. 2-654
					CHECKED BY: CWM		TOTAL SHTS. 2-731

\Bridges 1-758H\758HAS_04.dgn
2/8/2018 6:46:39 PM

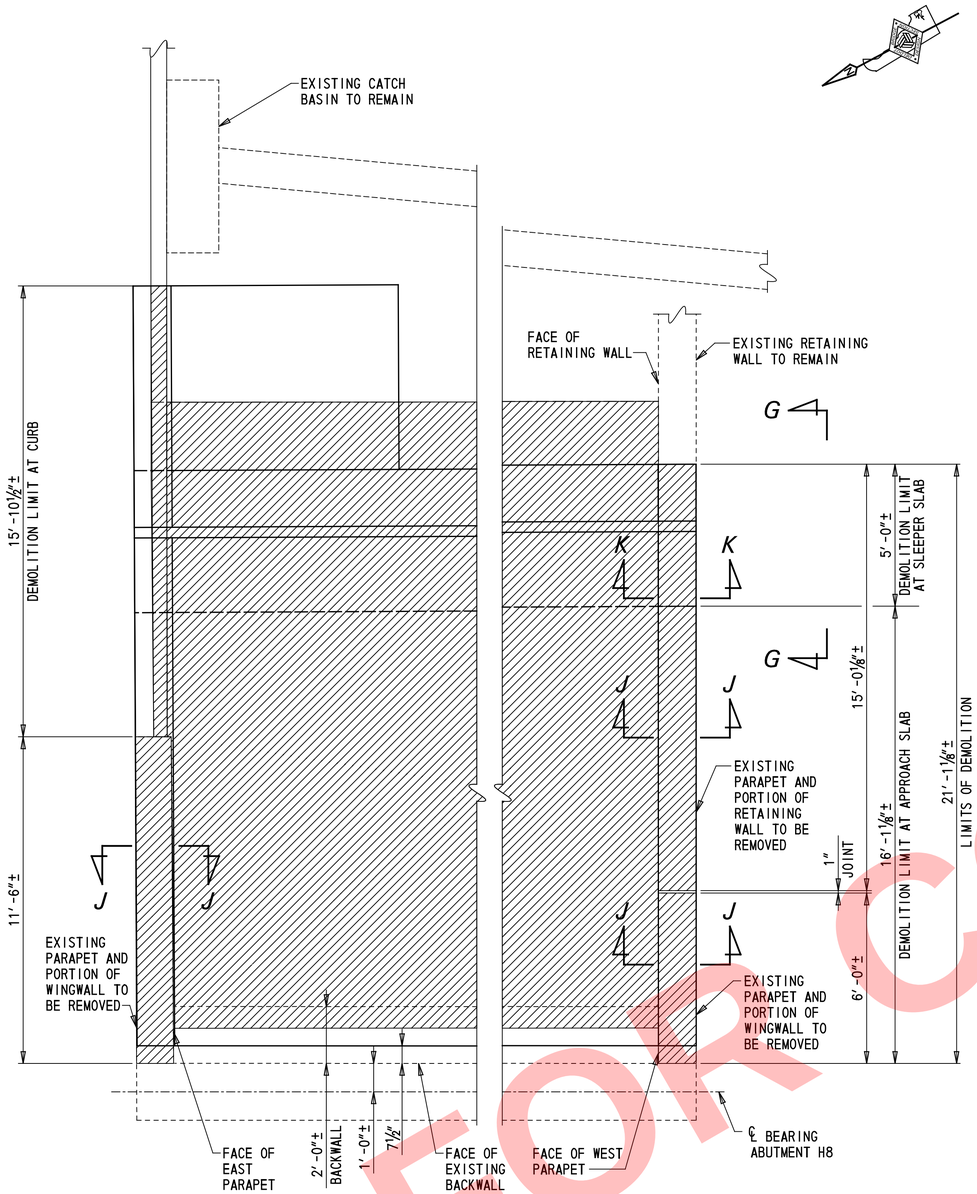

WINGWALL AND RETAINING WALL PARTIAL DEMOLITION PLAN

⅜" = 1'-0"

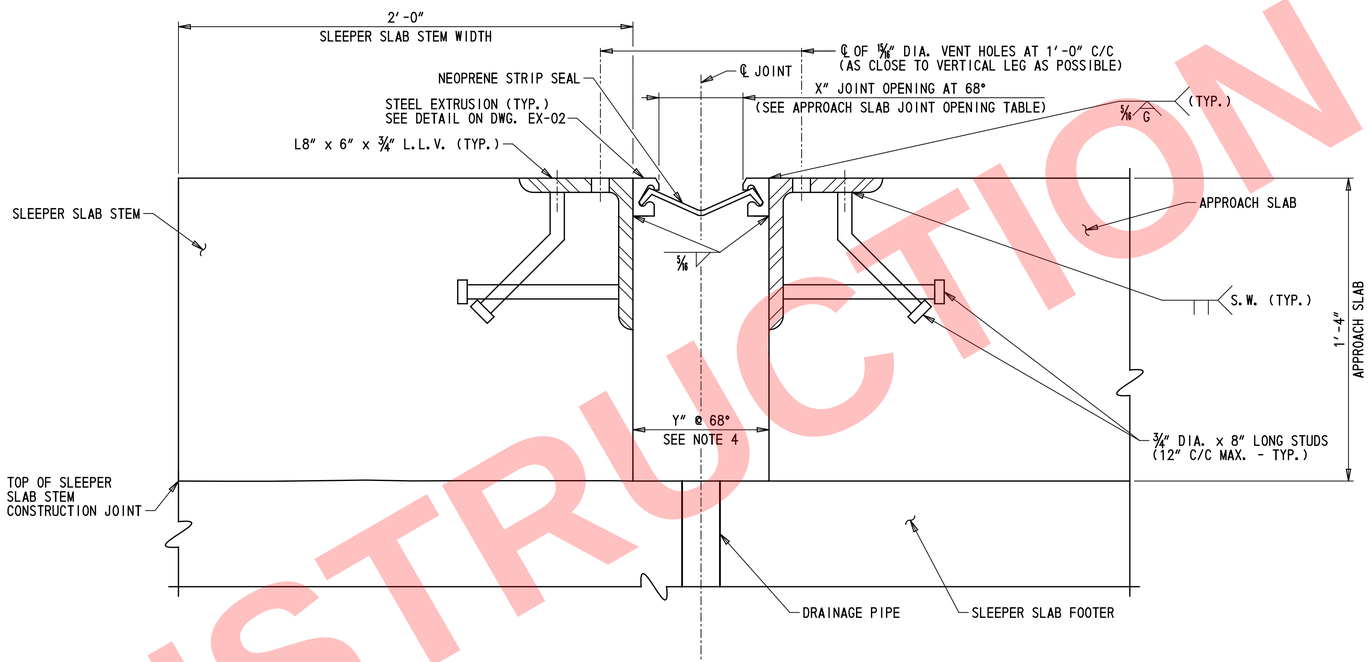

APPROACH SLAB JOINT ASSEMBLY DETAIL

3" = 1'-0"

STRIP SEAL EXPANSION JOINT NOTES:

1. STEEL FOR DECK JOINTS AND STEEL EXTRUSIONS SHALL BE AASHTO M270, GR. 36 (ASTM A36) AT MINIMUM.
2. NEOPRENE EXTRUSION TO MEET D-2628-81 MODIFIED, (RECOVERY TESTS EXCLUDED).
3. THE EXPANSION JOINT SHALL BE CAPABLE OF SEALING THE APPROACH SLAB TO SLEEPER SLAB JOINT TO PREVENT MOISTURE AND OTHER CONTAMINANTS FROM DESCENDING THROUGH THE JOINT.
4. THE CONTRACTOR SHALL ADJUST THE OPEN JOINT (Y) AS REQUIRED BY THE WIDTH OF THE STEEL EXTRUSION USED SO AS TO PROVIDE A X" JOINT OPENING AT 68°F.
5. THE STRIP SEAL SHALL BE INSTALLED IN ONE PIECE ACROSS THE APPROACH SLAB BRIDGE WIDTH. SPLICING OF THE STRIP SEAL IS NOT PERMITTED.
6. THE EXPANSION JOINT SYSTEM WILL BE PAID FOR UNDER ITEM 624000 - PREFABRICATED EXPANSION JOINT SYSTEM, 3".
7. STEEL EXSTRUSIONS SHALL BE HOT-DIP GALVANIZED. ENTIRE EXPANSION DAM SHALL BE PAINTED AFTER FABRICATION USING URETHANE SYSTEM. COLOR OF PAINT SYSTEM TO BE APPLIED SHALL MATCH THE COLOR OF THE EXISTING STEEL STRUCTURE.
8. LUBRICANT-ADHESIVE FOR USE IN INSTALLING AND BONDING NEOPRENE SEAL ELEMENTS TO STEEL JOINT COMPONENTS SHALL BE A ONE QUART MOISTURE CURING POLYURETHANE AND HYDROCARBON SOLVENT MIXTURE HAVING THE FOLLOWING PHYSICAL PROPERTIES:

AVERAGE WEIGHT, POUNDS PER GALLON	8±10%
SOLIDS CONTENT	65%
ADHESIVE SHALL REMAIN LIQUID FROM	5°F TO 120°F
FILM STRENGTH, AS PER ASTM D-412	2,000 PSI
ELONGATION	250%

9. STEEL EXTRUSIONS SHALL BE WELDED TO WATERTIGHT AT CONSTRUCTION JOINTS. PAYMENT INCIDENTAL TO ITEM 624000 - PREFABRICATED EXPANSION JOINT SYSTEM, 3".
10. TRAFFIC PARAPET PLATES ARE REQUIRED. SEE DETAILS ON DWG. EX-02, DWG. EX-03, AND JOINT OPENING TABLE, THIS SHEET.

NOTES:

1. FOR SECTIONS G-G, J-J, AND K-K, SEE DWG. AS-06.

LEGEND:

REMOVAL LIMITS - ITEM 211000

APPROACH SLAB JOINT OPENINGS											MOVEMENT CLASSIFICATION
TEMPERATURE °F	20°	30°	40°	50°	60°	68°	70°	80°	90°	100°	
ABUTMENT H8	2 1/16"	2"	1 7/8"	1 13/16"	1 3/4"	1 11/16"	1 11/16"	1 5/8"	1 1/2"	1 7/16"	3"

NOT FOR CONSTRUCTION

DELAWARE DEPARTMENT OF TRANSPORTATION	ADDENDUMS / REVISIONS	SCALE AS NOTED	REHABILITATION OF I-95 FROM I-495 TO NORTH OF BRANDYWINE RIVER BRIDGE	CONTRACT T201407404	BRIDGE NO. 1 758H 057	APPROACH SLAB REMOVAL AND JOINT ASSEMBLY DETAILS
				COUNTY NEW CASTLE	DESIGNED BY: CWM	SHEET NO. 2-655
					CHECKED BY: JRQ	TOTAL SHTS. 2-731

1-758H AS-05

...\Bridge 1-758H\758HAS_05.dgn
2/6/2018 8:49:59 PM

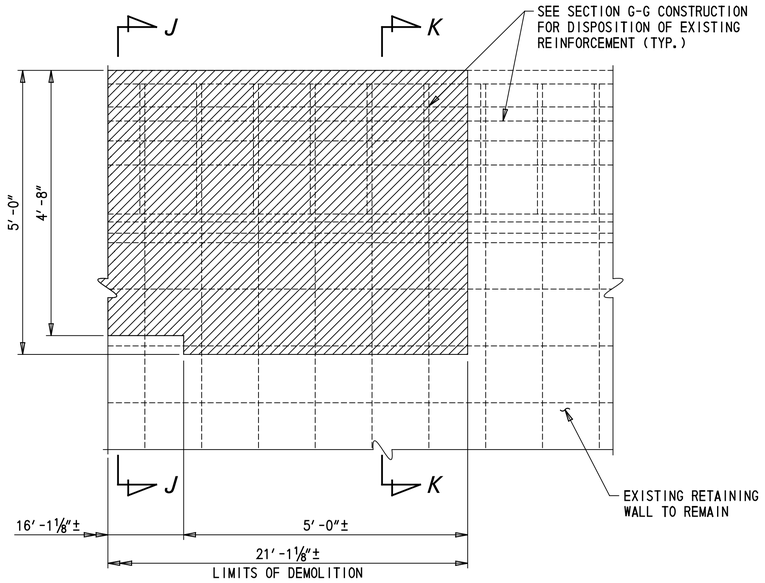

SECTION G-G REMOVAL

¾" = 1'-0"

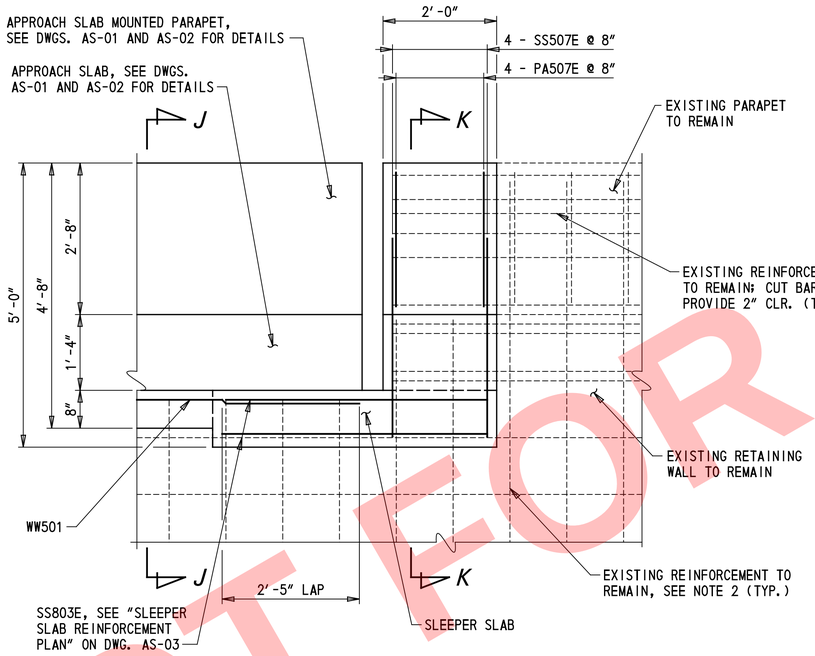

SECTION G-G CONSTRUCTION

¾" = 1'-0"

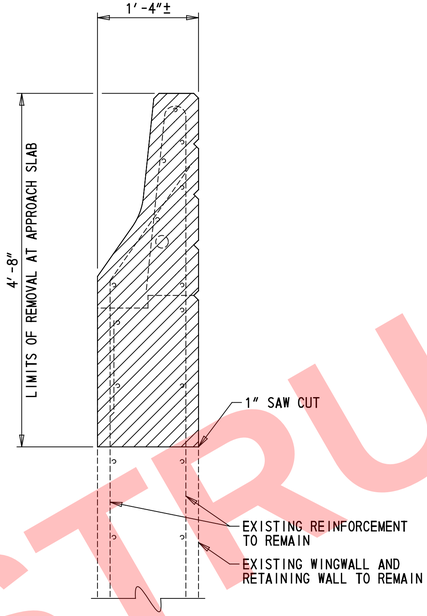

SECTION J-J REMOVAL

1" = 1'-0"

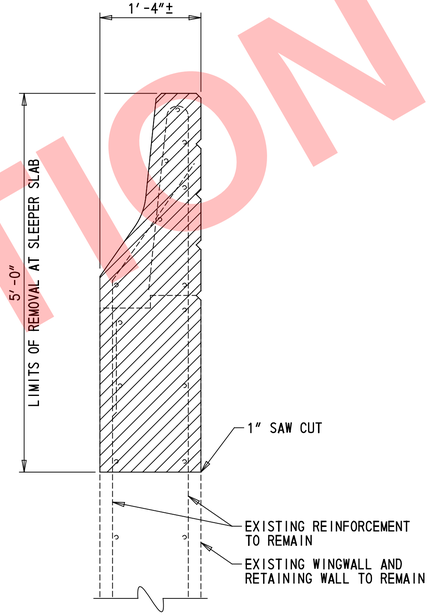

SECTION K-K REMOVAL

1" = 1'-0"

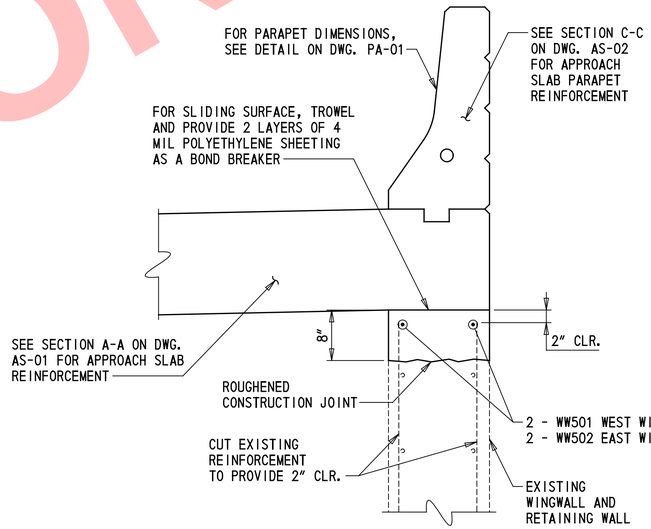

SECTION J-J CONSTRUCTION

1" = 1'-0"

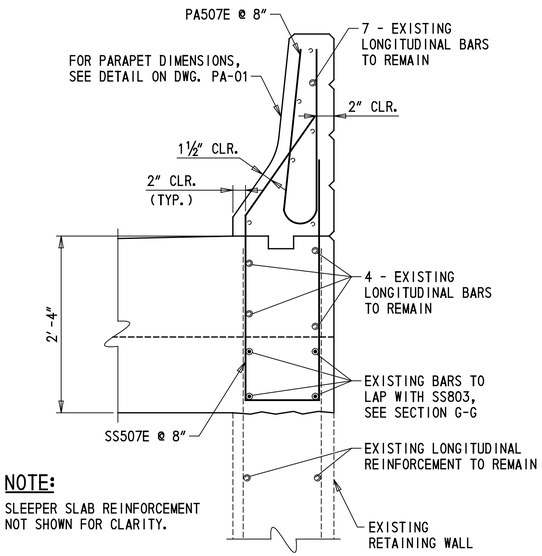

SECTION K-K CONSTRUCTION

1" = 1'-0"

NOTE:

SLEEPER SLAB REINFORCEMENT NOT SHOWN FOR CLARITY.

LEGEND:

REMOVAL LIMITS - ITEM 211000

NOTES:

1. FOR WINGWALL AND RETAINING WALL PARTIAL DEMOLITION PLAN, SEE DWG. AS-05.
2. EXISTING REINFORCING TO REMAIN SHALL BE CLEANED IN ACCORDANCE WITH SECTION 628.

NOT FOR CONSTRUCTION

J:\Bridge 1-758H\758HAS-06.dgn
2/8/2018 8:47:00 PM

DELAWARE
DEPARTMENT OF TRANSPORTATION

ADDENDUMS / REVISIONS	

SCALE AS NOTED

REHABILITATION OF I-95 FROM I-495 TO NORTH OF BRANDYWINE RIVER BRIDGE

CONTRACT	BRIDGE NO.	1 758H 057
T201407404	DESIGNED BY: CWM	
COUNTY	CHECKED BY: JRQ	
NEW CASTLE		

RETAINING WALL PARTIAL REMOVAL AND RECONSTRUCTION

1-758H AS-06	
SHEET NO.	2-656
TOTAL SHTS.	2-731

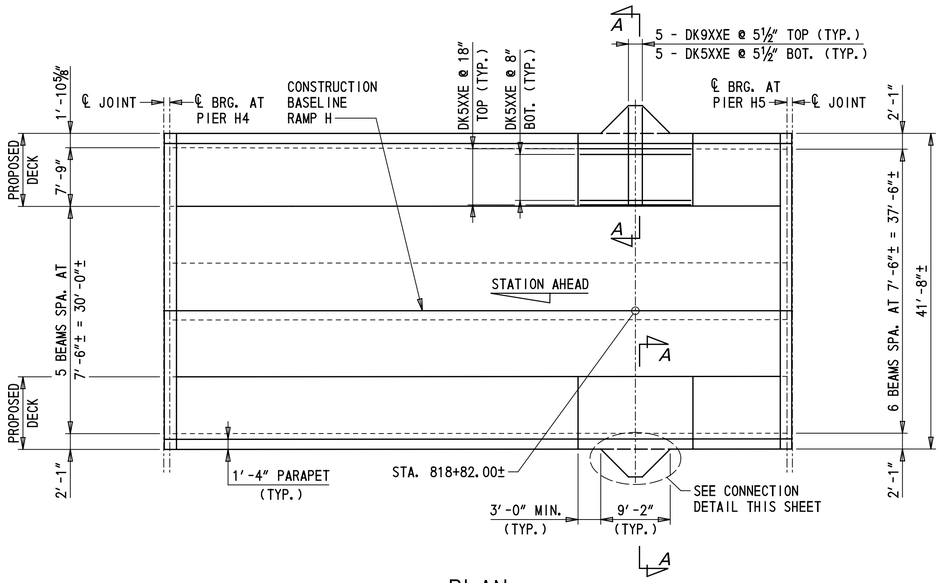

PLAN

1" = 10"

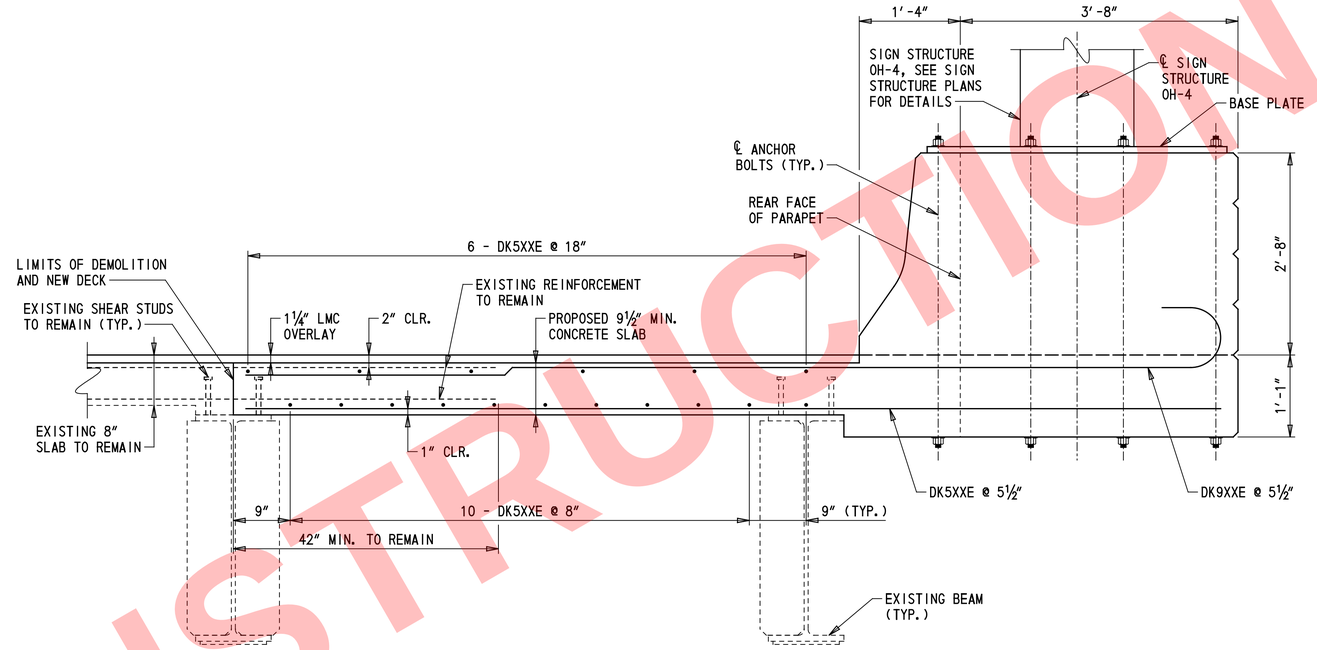

SECTION A-A

1" = 1'-0"

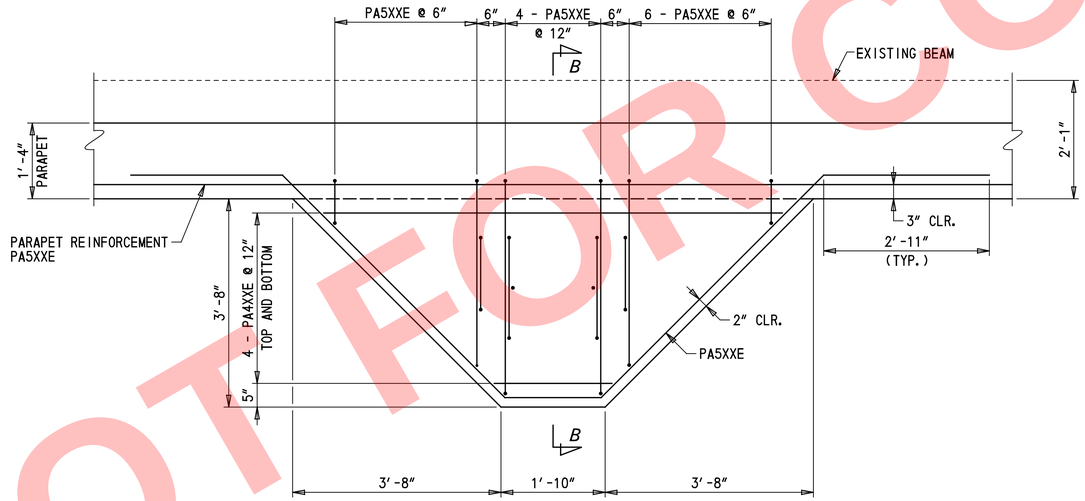

CONNECTION DETAIL

¾" = 1'-0"

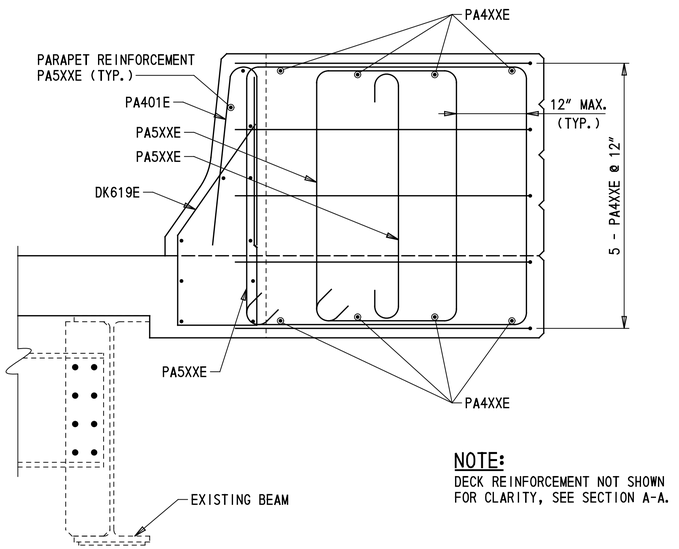

SECTION B-B

1" = 1'-0"

NOTE:
DECK REINFORCEMENT NOT SHOWN FOR CLARITY, SEE SECTION A-A.

NOT FOR CONSTRUCTION

DELAWARE DEPARTMENT OF TRANSPORTATION	ADDENDUMS / REVISIONS	SCALE AS NOTED	REHABILITATION OF I-95 FROM I-495 TO NORTH OF BRANDYWINE RIVER BRIDGE	CONTRACT T201407404	BRIDGE NO. 1 758H 057	BRIDGE MOUNTED SIGN SUPPORT DETAILS	1-758H DT-01
				COUNTY NEW CASTLE	DESIGNED BY: BSD		SHEET NO. 2-657
					CHECKED BY: HAB		TOTAL SHTS. 2-731

...\Bridge 1-758H\758HDT_01.dgn
2/8/2018 6:47:06 PM

① ANY MARK NUMBER WITH SUFFIX 'E' DENOTES EPOXY COATED REINFORCING STEEL.

② ALL MARK 'LOCATION PREFIXES' SHALL CONSIST OF TWO LETTERS AND ARE AS FOLLOWS: AB = ABUTMENT, AS = APPROACH SLAB, BC = BOX CULVERT, BW = BACKWALL, CL = COLUMN, DK = DECK, DL = DOWEL, FT = FOOTING, HW = HEADWALL, MS = MISC. BARS, PA = PARAPET, PR = PIER, SC = SHEETPILE CAP, SL = SLAB, TW = TOEWALL, WL = WALL (UNIQUE LOCATION), WW = WINGWALL

SPECIFICATIONS					BENDING DIMENSIONS (FEET-INCHES /QUARTER INCH)										
QTY.	SIZE	LENGTH	MARK	TYPE	A	B	C	D	E	F/R	G	H	J	K	O
ABUTMENT															
3	5	41-40	AB501	STR		41-40									
43	5	2-50	AB502	17		0-50	1-70	0-50							
2	5	2-12	AB503	17		0-51	1-30	0-51							
WINGWALL															
2	5	18-61	WW501	STR		18-61									
2	5	11-20	WW502	STR		11-20									
DECK															
6	5	37-00	DK501E	STR		37-00									
6	5	35-72	DK502E	STR		35-72									
5	5	38-60	DK503E	STR		38-60									
10	5	54-42	DK504E	STR		54-42									
10	5	45-62	DK505E	STR		45-62									
10	5	41-70	DK506E	STR		41-70									
40	5	41-40	DK507E	STR		41-40									
30	5	6-101	DK508E	STR		6-101									
98	5	6-20	DK509E	STR		6-20									
16	5	7-22	DK510E	STR		7-22									
16	5	4-101	DK511E	STR		4-101									
12	5	5-60	DK512E	STR		5-60									
2	5	6-50	DK513E	STR		6-50									
23	5	2-92	DK514E	DE20	0-00	0-00	0-40	0-73	1-01	0-92		0-52	0-00	0-52	
22	5	2-71	DK515E	DE20	0-00	0-00	0-33	0-63	1-01	0-82		0-43	0-00	0-43	
155	5	2-52	DK516E	DE20	0-00	0-00	0-32	0-82	0-80	0-92		0-60	0-00	0-60	
135	5	2-40	DK517E	DE20	0-00	0-00	0-32	0-82	0-62	0-92		0-60	0-00	0-60	
40	5	2-50	DK518E	DE20	0-00	0-00	0-32	0-82	0-72	0-92		0-60	0-00	0-60	
96	6	7-23	DK619E	DE16		3-40	1-00	1-21	1-82	0-00		1-43		0-113	
12	6	6-103	DK620E	DE16		3-20	1-00	1-01	1-82	0-00		1-43		0-113	
30	5	3-60	DK521E	17		2-70	0-110	0-00							
20	5	2-70	DK522E	16	0-00	0-00	1-80	0-110				0-73		0-73	2-33
43	6	3-00	DK623E	STR		3-00									

SPECIFICATIONS					BENDING DIMENSIONS (FEET-INCHES /QUARTER INCH)										
QTY.	SIZE	LENGTH	MARK	TYPE	A	B	C	D	E	F/R	G	H	J	K	O
PARAPET															
84	4	5-00	PA401E	H1		2-30	0-53	2-31		0-13		0-63			
4	5	3-41	PA502E	DE28		0-00	1-23	0-92	0-80		0-80	1-20		0-41	
4	5	3-20	PA503E	DE28		0-00	1-02	0-92	0-80		0-80	1-00		0-33	
4	5	3-60	PA504E	17		1-60	0-60	1-60							
8	5	3-20	PA505E	STR		3-20									
14	5	3-72	PA506E	STR		3-72									
72	5	4-112	PA507E	H1		2-12	0-82	2-12		0-22		0-23			
14	5	17-72	PA508E	STR		17-72									
7	5	8-20	PA509E	STR		8-20									
APPROACH SLAB															
38	5	4-83	AS501E	17		2-00	0-83	2-00							
86	5	4-102	AS502E	17		2-00	0-102	2-00							
44	5	41-30	AS503E	STR		41-30									
43	5	17-42	AS504E	STR		17-42									
84	8	17-42	AS805E	STR		17-42									
56	5	6-03	AS506E	DE16		2-20	0-111	1-42	1-70	0-00		1-32		0-103	
SLEEPER SLAB															
19	5	41-20	SS501E	STR		41-20									
43	5	7-90	SS502E	T2	0-60	1-60	1-102	1-60	1-102		0-60				
86	8	4-60	SS803E	STR		4-60									
22	5	8-00	SS504E	STR		8-00									
8	5	8-100	SS505E	STR		8-100									
15	8	8-100	SS806E	STR		8-100									
18	5	8-12	SS507E	DE16		3-20	1-00	2-42	1-70	0-00		1-32		0-110	
4	5	8-20	SS508E	STR		8-20									

SPECIFICATIONS					BENDING DIMENSIONS (FEET-INCHES /QUARTER INCH)										
QTY.	SIZE	LENGTH	MARK	TYPE	A	B	C	D	E	F/R	G	H	J	K	O

ASTM STANDARD ENGLISH REINFORCING BARS

BAR SIZE	NOMINAL DIAMETER (INCHES)	NOMINAL AREA (INCHES²)	NOMINAL WEIGHT (LBS./FT.)
3	0.375	0.110	0.376
4	0.500	0.200	0.668
5	0.625	0.310	1.043
6	0.750	0.440	1.502
7	0.875	0.600	2.044
8	1.000	0.790	2.670
9	1.128	1.000	3.400
10	1.270	1.270	4.303
11	1.410	1.560	5.313
14	1.693	2.250	7.650
18	2.257	4.000	13.600

RECOMMENDED END HOOKS, APPLICABLE TO ALL GRADES

BAR SIZE	180° HOOKS D	180° HOOKS A OR G	180° HOOKS J	90° HOOKS A OR G
3	2¼″	5″	3″	6″
4	3″	6″	4″	8″
5	3¾″	7″	5″	10″
6	4½″	8″	6″	1-0″
7	5¼″	10″	7″	1-2″
8	6″	11″	8″	1-4″
9	9½″	1-3″	11¾″	1-7″
10	10¾″	1-5″	1-1¼″	1-10″
11	1-0″	1-7″	1-2¾″	2-0″
14	1-6¼″	2-3″	1-9¾″	2-7″
18	2-0″	3-0″	2-4½″	3-5″

STIRRUP AND TIE HOOKS, APPLICABLE TO ALL GRADES

BAR SIZE	90° HOOK D	90° HOOK A OR G	135° HOOK A OR G	135° HOOK A OR G
3	1½″	4″	4″	2½″
4	2″	4½″	4½″	3″
5	2½″	6″	5½″	3¾″
6	4½″	1-0″	8″	4½″
7	5¼″	1-2″	9″	5¼″
8	6″	1-4″	10½″	6″

NOTES:

1. FIGURES SHOWN IN CIRCLES REPRESENT BAR BEND TYPES.
2. STANDARD BAR BENDS INCLUDE ONLY THOSE TYPES BELOW, INDICATED AS SUCH.
3. ALL DIMENSIONS OUT-TO-OUT, EXCEPT "A" AND "G" ON STD. 180° AND 135° HOOKS.
4. "J" DIMENSIONS ON 180° HOOKS TO BE SHOWN ONLY WHERE NECESSARY TO RESTRICT HOOK SIZE, OTHERWISE STANDARD 'ACI' HOOKS ARE TO BE USED.
5. WHERE "J" IS NOT SHOWN, "J" WILL BE KEPT EQUAL TO OR LESS THAN "H" ON TYPES 3, 5 AND 22. WHERE "J" CAN EXCEED "H", IT SHALL BE SHOWN.
6. "H" DIMENSIONS OF STIRRUPS TO BE SHOWN AS NEEDED TO FIT WITHIN THE CONCRETE.
7. UNLESS OTHERWISE NOTED, DIAMETER "D" IS THE SAME FOR ALL BENDS AND HOOKS ON A BAR (EXCEPT FOR BEND TYPES 11 AND 13).
8. WHERE SLOPE DIFFERS FROM 45° OFFSET, "H" AND "K" MUST BE SHOWN.
9. WHERE BARS ARE TO BE BENT MORE ACCURATELY THAN STANDARD BENDING TOLERANCES, BENDING DIMENSIONS REQUIRING CLOSER FABRICATION SHOULD HAVE LIMITS INDICATED.
10. FOR RECOMMENDED DIAMETER "D", OF BENDS, HOOKS, ETC., REFER TO TABLE ABOVE, 'CRSI' OR 'ACI' TABLES WHERE APPLICABLE AND REQUIRED.
11. TYPE S1-S6, S11, T1-T3 AND T6-T9 APPLICABLE TO BAR SIZES #3 THROUGH #8.

STIRRUP AND TIE HOOKS

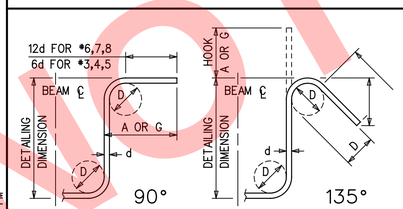

180° AND 90° END HOOKS

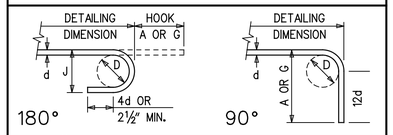

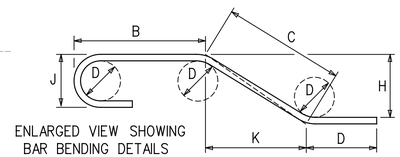

ENLARGED VIEW SHOWING BAR BENDING DETAILS

STANDARD BAR BENDS

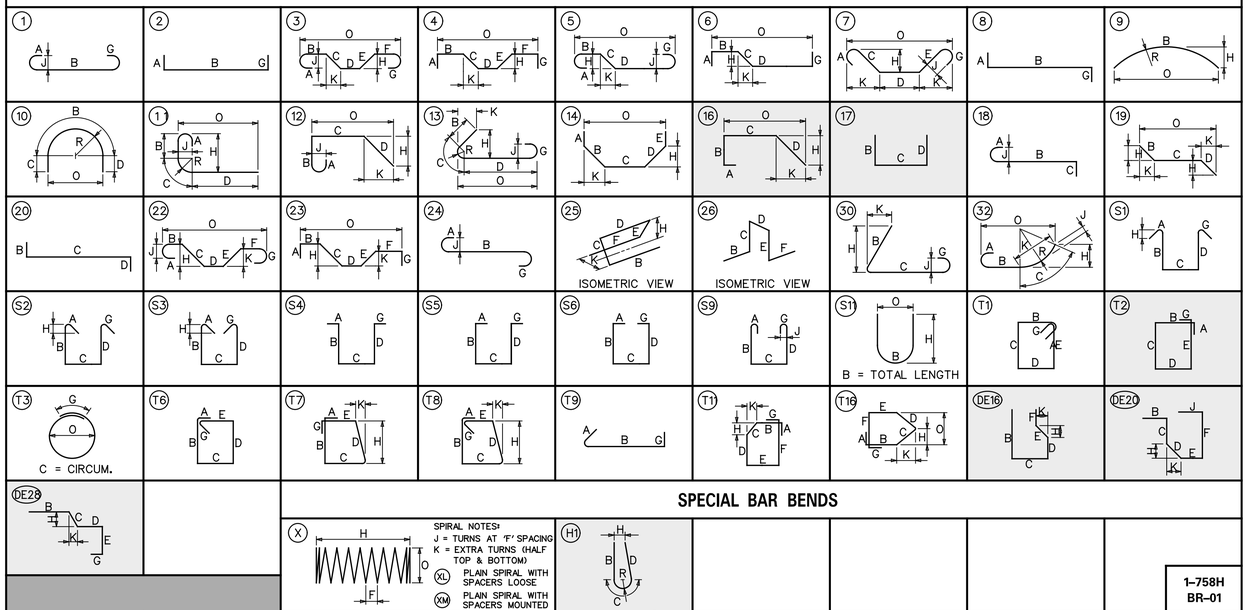

SPECIAL BAR BENDS

NOT FOR CONSTRUCTION

DELAWARE DEPARTMENT OF TRANSPORTATION	ADDENDUMS / REVISIONS	NOT TO SCALE	REHABILITATION OF I-95 FROM I-495 TO NORTH OF BRANDYWINE RIVER BRIDGE

CONTRACT	T201407404	BRIDGE NO.	1 758H 057
COUNTY	NEW CASTLE	DESIGNED BY: BJM	CHECKED BY: JRQ

REINFORCMENT SCHEDULE

1-758H BR-01

SHEET NO. 2-658

TOTAL SHTS. 2-731

...\Bridge 1-758H\758HBR_01.dgn
2/8/2018 6:47:07 PM

SECTION 200

1. SIGNING:
   TO AVOID DAMAGE, SIGNS WITHIN PROJECT LIMITS MAY BE REMOVED DURING CONSTRUCTION IF NEEDED, BUT MUST BE REPLACED TO MATCH EXISTING CONDITIONS BEFORE REOPENING THE ROADWAY. ALL WORK RELATED TO MOVING AND REINSTALLING THE SIGN SHALL BE INCIDENTAL TO ITEM #211000 - REMOVAL OF STRUCTURES AND OBSTRUCTIONS. IF THE SIGN IS DAMAGED DURING CONSTRUCTION, THE SIGN MUST BE REPLACED AT THE CONTRACTOR'S EXPENSE.

MISCELLANEOUS

2. ROADWAY CLEARANCES:
   A MINIMUM OF 14'-6" SHALL BE MAINTAINED ABOVE ALL ROADWAYS.

3. UTILITIES:
   SEE UTILITY STATEMENT AND UTILITY RELOCATION PLAN SHEETS FOR FURTHER INFORMATION ON UTILITY COORDINATION.

4. ENVIRONMENTAL COMPLIANCE:
   REFER TO THE ENVIRONMENTAL COMPLIANCE PLAN FOR RESTRICTIONS AND ADDITIONAL GUIDANCE THAT MAY BE ASSOCIATED TO THIS PROJECT.

5. THE WORK PROPOSED HEREIN APPLIES TO THE FOLLOWING BRIDGES IN THE CONTRACT:
   I-751 000
   I-752 000
   I-753 000
   I-754 000
   I-755 000
   I-756 6167
   I-757 009

6. SCOPE OF WORK:
   - CLEAN AND PAINT STRUCTURAL STEEL
   - CLEAN AND GREASE BRIDGE BEARINGS

INDEX OF BRIDGE 1-751 TO 1-757 SHEETS

BR. SHEET Nº	BR. DWG. Nº	TABLE OF CONTENTS
XXX	PN-01	BRIDGE PROJECT NOTES AND QUANTITIES
		TOTAL BRIDGE SHEETS: 1

QUANTITIES

ITEM Nº	ITEM TITLE	UNIT	QUANTITY
616000	CLEANING AND PAINTING EXISTING STEEL	LS	1
616003	TESTING AND DISPOSAL OF EXISTING HAZARDOUS STEEL COATING	LS	1
623004	CLEAN AND GREASE BRIDGE BEARINGS	EA	342

NOT FOR CONSTRUCTION

N:\31987-001\Control\I-95\CADD\Bridge\BR1-751_PN01.dgn
5/31/2019 12:19:50 PM

ADDENDA / REVISIONS		NOT TO SCALE	REHABILITATION OF I-95 FROM I-495 TO NORTH OF BRANDYWINE RIVER BRIDGE	CONTRACT T201407404	BRIDGE NO.	BRIDGE PROJECT NOTES AND QUANTITIES	SECTION WRA
				COUNTY NEW CASTLE	DESIGNED BY: DAN		SHEET NO. 2-659
					CHECKED BY: WAG		

BRIDGE PROJECT NOTES

SECTION 100

1. ANY DAMAGE TO ITEMS NOTED TO BE RELOCATED OR RESET BY THE CONTRACTOR, AT THE DISCRETION OF THE ENGINEER, SHALL BE REPAIRED AND/OR REPLACED IN KIND AT THE CONTRACTOR'S EXPENSE.

SECTION 200

2. ITEMS TO BE REMOVED UNDER ITEM 211000 - REMOVAL OF STRUCTURES AND OBSTRUCTIONS SHALL INCLUDE, BUT NOT BE LIMITED TO THE FOLLOWING:
   - APPROACH SLABS
   - PARTIAL REMOVAL OF ABUTMENT BACK WALL
   - PARTIAL REMOVAL OF WINGWALLS
   - PARTIAL REMOVAL OF RETAINING WALLS
   - STEEL ROCKER BEARINGS
   - BEARING PEDESTALS

3. DEMOLITION:
   THE CONTRACTOR SHALL PREVENT DEBRIS FROM FALLING INTO THE AREAS BELOW THE BRIDGE. CONTRACTOR SHALL CONSTRUCT ADEQUATE PROTECTIVE SHIELDS TO PREVENT DEBRIS FROM FALLING FROM THE BRIDGE. THE CONTRACTOR SHALL PROMPTLY REMOVE FALLEN DEBRIS TO THE SATISFACTION OF THE ENGINEER. IF THE ENGINEER DETERMINES THAT ADEQUATE PROTECTIVE DEVICES ARE NOT BEING EMPLOYED, THE WORK SHALL BE SUSPENDED UNTIL ADEQUATE PROTECTION IS PROVIDED.

   THE COST OF FURNISHING, INSTALLING, MAINTAINING, REMOVING AND DISPOSING OF ALL SHIELDING, PLATFORMS, NETS, SCREENS OR OTHER PROTECTIVE DEVICES SHALL BE INCLUDED IN THE UNIT PRICES BID FOR ITEM 604001 - PROTECTIVE SHIELD.

   DURING WORK THE CONTRACTOR SHALL USE CARE TO COLLECT ALL DEBRIS AND WATER USED FOR CONSTRUCTION PROMPTLY AND PREVENT ANY POLLUTION OF THE PROJECT AREA. THE COLLECTION AND DISPOSAL OF CONSTRUCTION WATER AND DEBRIS WILL NOT BE MEASURED, BUT WILL BE CONSIDERED INCIDENTAL TO THE WORK ITEM WHICH GENERATED THE WATER AND DEBRIS.

   BLASTING OR USE OF EXPLOSIVES IS NOT PERMITTED FOR ANY PART OF STRUCTURE REMOVAL OPERATIONS.

4. THE CONTRACTOR SHALL PERFORM ALL WORK WITH CARE SO THAT ANY MATERIALS WHICH ARE TO REMAIN IN PLACE, OR WHICH ARE TO REMAIN THE PROPERTY OF THE STATE, WILL NOT BE DAMAGED. IF THE CONTRACTOR DAMAGES ANY MATERIALS WHICH ARE TO REMAIN IN PLACE OR WHICH ARE TO REMAIN THE PROPERTY OF THE STATE, THE DAMAGED MATERIALS SHALL BE REPAIRED OR REPLACED IN A MANNER SATISFACTORY TO THE ENGINEER AT THE EXPENSE OF THE CONTRACTOR.

SECTION 600

5. PORTLAND CEMENT CONCRETE:
   USE PORTLAND CEMENT CONCRETE FOR CAST-IN-PLACE ELEMENTS AS FOLLOWS:
   (f'c = 28-DAY COMPRESSIVE STRENGTH)
   CLASS A - PARAPET, SUBSTRUCTURE, ABUTMENT ABOVE FOOTING (f'c = 4.5 ksi)
   CLASS D - DECK, APPROACH SLAB (f'c = 4.5 ksi)

   A HIGHER CLASS CONCRETE MAY BE SUBSTITUTED FOR A LOWER CLASS CONCRETE AT NO ADDITIONAL COST TO DELDOT WITH APPROVAL OF THE BRIDGE DESIGN ENGINEER.

   ALL EXPOSED EDGES SHALL BE CHAMFERED ¾" UNLESS OTHERWISE NOTED.

   DO NOT SLIP-FORM BARRIERS.

   CONTRACTOR WILL SUPPLY CONCRETE FOR THE PARAPETS, BRIDGE DECK, AND APPROACH SLABS THAT INCLUDES A SHRINKAGE-REDUCING/COMPENSATING ADMIXTURE. PAYMENT FOR ADMIXTURE WILL BE INCIDENTAL TO ITS RESPECTIVE CONCRETE ITEM (ITEMS 610008, 610017, AND 610018). THE ADMIXTURE MAY BE SUPPLIED BY ONE PRODUCT THAT PROVIDES BOTH EXPANSION AND PORE WATER SURFACE TENSION OR TWO SEPARATE PRODUCTS EACH ADDED AT DOSAGE RECOMMENDED BY MANUFACTURER'S TECHNICAL DATA SHEETS AND HAVING THE FOLLOWING CHARACTERISTICS:

   (A) DESIGNED TO PROVIDE BOTH THE FOLLOWING CHARACTERISTICS:
      I. EXPANDS AT A RATE THAT CLOSELY COMPENSATES FOR SHRINKAGE OF THE CONCRETE MIX.
      II. REDUCES THE CAPILLARY SURFACE TENSION OF THE CONCRETE PORE WATER.
   (B) PROVIDES AT LEAST 80% SHRINKAGE REDUCTION AS MEASURED AND DOCUMENTED BY FIELD PERFORMANCE.
   (C) FORMULATED FOR USE IN FREEZING AND THAWING WEATHER.

6. BAR REINFORCEMENT:
   REINFORCING STEEL SHALL CONFORM TO AASHTO M31 (ASTM A615), GRADE 60.

   REINFORCING STEEL SHALL HAVE A 3" CLEAR COVER IF CAST AGAINST EARTH OR A 2" CLEAR COVER ELSEWHERE, UNLESS OTHERWISE SPECIFIED ON THE PLANS.

   ALL REINFORCING STEEL SHALL BE PROTECTED WITH FUSION BONDED EPOXY. EPOXY COATED REINFORCING STEEL SHALL CONFORM TO AASHTO M284 (ASTM D3963).

   ANY FIELD CUTTING OR FIELD BENDING MUST BE APPROVED BY THE ENGINEER. PAYMENT SHALL BE INCIDENTAL TO THE BAR REINFORCEMENT ITEM.

   WELDING OF REINFORCEMENT DURING FABRICATION OR CONSTRUCTION IS NOT PERMITTED UNLESS SPECIFIED.

   EXISTING DETERIORATED REINFORCEMENT SHALL BE REPLACED IN-KIND, AS DIRECTED BY THE ENGINEER.

   REINFORCING STEEL DAMAGED DURING CONCRETE REMOVAL SHALL BE REPAIRED OR REPLACED TO THE SATISFACTION OF THE ENGINEER AT CONRACTOR'S SOLE EXPENSE.

7. CONCRETE SEALER:
   REFER TO DWG. DT-01, PROTECTIVE COATING LIMITS NOTES FOR THE BARRIER AND SUBSTRUCTURE. TO BE PAID UNDER ITEM 613000 - EPOXY CONCRETE SEALER AND ITEM 613001 - SILICONE-BASED ACRYLIC CONCRETE SEALER.

   THE CONCRETE SEALER COLOR SHALL BE FEDERAL STANDARD COLOR NO. 37925 (INSIGNIA WHITE) AS PER FED-STD-595C. THE COLOR SHALL BE SUBMITTED FOR APPROVAL.

8. STRUCTURAL STEEL:
   PROVIDE STRUCTURAL STEEL CONFORMING TO AASHTO M270 (ASTM A709), GRADE 50, EXCEPT WHEN NOTED OTHERWISE.

   PROVIDE MATERIALS AND PERFORM WORK IN ACCORDANCE WITH AASHTO/AWS D1.5 BRIDGE WELDING CODE AND CONTRACT DOCUMENTS. MAKE TACK WELDS WITH THE SAME TYPE OF ELECTRODE AND INCORPORATE IN THE FINAL WELD.

   ALL BOLTED CONNECTIONS SHALL BE MADE WITH ASTM A325, TYPE 1, HIGH STRENGTH BOLTS UNLESS OTHERWISE NOTED. NUTS SHALL MEET ASTM A563 AND WASHERS SHALL MEET ASTM F436.

   PROVIDE WELDED STUD SHEAR CONNECTORS CONFORMING TO AASHTO M169.

   STRUCTURAL STEEL DAMAGED DURING CONSTRUCTION SHALL BE REPAIRED AT CONTRACTOR'S SOLE EXPENSE.

9. BEARINGS:
   ALL BEARINGS SHALL BE STEEL-REINFORCED ELASTOMERIC BEARINGS DESIGNED IN ACCORDANCE WITH "METHOD B" IN THE AASHTO LRFD BRIDGE DESIGN SPECIFICATIONS, CHAPTER 14.7.5.

10. COATINGS:
    ALL EXISTING STRUCTURAL STEEL THAT IS TO REMAIN IN PLACE INCLUDING REMAINING BEARINGS AND DOWNSPOUTS, SHALL BE CLEANED AND PAINTED IN ACCORDANCE WITH ITEM 616000 - CLEANING AND PAINTING EXISTING STEEL.

    PAINTING OF NEW STRUCTURAL STEEL SHALL BE INCIDENTAL TO ITEM 615001 - STEEL STRUCTURES.

    THE FINAL COLOR SHALL BE FEDERAL STANDARD COLOR NO. XXXXX (TAN) OF FED-STD-595C. THE COLOR SHALL BE SUBMITTED FOR APPROVAL.

    NOTE THAT THE EXISTING PAINT MAY CONTAIN LEAD.

SECTION 800

11. MAINTENANCE OF TRAFFIC:
    MAINTENANCE OF TRAFFIC SHALL BE AS PER THE CONSTRUCTION PHASING AND MAINTENANCE OF TRAFFIC (MOT) PLANS.

12. TEMPORARY MOUNTED BARRIERS:
    THE CONTRACTOR SHALL PREPARE A WORKING DRAWING SUBMITTAL OF THE PROPOSED MEANS AND METHODS TO ANCHOR THE PORTABLE P.C.C. STRUCTURE MOUNTED BARRIER DESIGNED FOR TL-4 IMPACT LOADING, AND THE REPAIRS OF THE BOLT HOLES IN THE DECK TO THE ENGINEER FOR APPROVAL. THE CONTRACTOR SHALL ADJUST THE LOCATION OF ANCHORS TO AVOID CONFLICT WITH BAR REINFORCEMENT IN THE DECK. PAYMENT INCIDENTAL TO ITEM 807003 - FURNISH AND INSTALL TEMPORARY PCC SAFETY BARRIER, PINNED IN CONCRETE.

13. DO NOT PERFORM ANY WORK DIRECTLY OVER OPEN LANES OF TRAFFIC WITHOUT ADEQUATE SHIELDING OR WORK PLATFORMS (AS SHOWN IN DWG. CS-01), LANE CLOSURES OR DETOURS IN ACCORDANCE WITH THE CONTRACT PLANS AND SPECIFICATIONS.

MISCELLANEOUS

14. DESIGN SPECIFICATIONS:
    (A) 2017 DELDOT BRIDGE DESIGN MANUAL
    (B) 2014 AASHTO LRFD BRIDGE DESIGN SPECIFICATIONS, 7TH ED., U.S. CUSTOMARY UNITS
    (C) PROVIDE MATERIALS AND PERFORM WORK IN ACCORDANCE WITH THE 2016 DELDOT STANDARD SPECIFICATIONS

15. LOADING:
    DEAD LOADS INCLUDE 25 PSF FOR FUTURE WEARING SURFACE ON DECK SLAB AND 15 PSF FOR STAY-IN-PLACE FORMS (INCLUDES CONCRETE IN FORM CORRUGATIONS).

    DESIGN LIVE LOADS INCLUDE HL-93 LOADING.

    FATIGUE DESIGN IS BASED ON THE FOLLOWING ONE DIRECTIONAL TRAFFIC VOLUME: ADTT = 1928

    LIVE LOAD DISTRIBUTION TO THE GIRDERS IS BASED ON A GRILLAGE ANALYSIS.

    THERMAL LOADS AND MOVEMENTS ARE BASED ON THE MODERATE TEMPERATURE RANGE AS STIPULATED IN THE AASHTO LRFD DESIGN SPECIFICATIONS AS 0°F TO 120°F FOR STEEL. THE NORMAL TEMPERATURE SHALL BE CONSIDERED TO BE 68°F.

    LIVE LOAD DEFLECTION SHALL BE LIMITED TO L/800.

    FOR SEISMIC LOADS, CONSIDER SEISMIC ZONE 1, WITH A SITE CLASS C, AND OPERATIONAL CATEGORY ESSENTIAL.

    FOR REINFORCEMENT DISTRIBUTION REQUIREMENTS, CONSIDER CLASS 1 EXPOSURE CRITERIA FOR DECKS.

    BARRIERS HAVE BEEN DESIGNED FOR NCHRP 350 TEST LEVEL 4 (TL-4) REQUIREMENTS.

17. STORAGE OR STOCKPILING OF MATERIALS OR EQUIPMENT ON THE BRIDGE DECK IS PROHIBITED WITHOUT PRIOR WRITTEN CONSENT OF THE ENGINEER. TO REQUEST STORAGE OR STOCKPILING AREAS ON THE BRIDGE, THE CONTRACTOR SHALL SUBMIT STRUCTURAL ANALYSIS PREPARED AND SEALED BY A PROFESSIONAL ENGINEER REGISTERED IN THE STATE OF DELAWARE LISTING THE RESULTANT STRESSES IN THE BRIDGE ALONG WITH SPECIFIC LOCATIONS, DIMENSIONS, AND WEIGHTS OF EQUIPMENT OR MATERIALS TO BE STORED. REFER TO DELDOT STANDARD SPECIFICATIONS SECTION 104.16.

18. EXISTING CONDITIONS:
    ALL EXISTING DIMENSIONS AND ELEVATIONS SHOWN ARE BASED ON THE BEST AVAILABLE INFORMATION AND ARE APPROXIMATE ONLY. THE CONTRACTOR SHALL FIELD VERIFY ALL EXISTING DIMENSIONS, GEOMETRY, AND ELEVATIONS AS NECESSARY PRIOR TO ORDERING ANY MATERIALS AND COMMENCING CONSTRUCTION TO ENSURE PROPER FIT OF THE PROPOSED CONSTRUCTION. PAYMENT SHALL BE INCIDENTAL TO ITEM 763501 - CONSTRUCTION ENGINEERING.

    THE CONTRACTOR SHALL NOT CONSIDER ANY OF THE DATA ON THE EXISTING STRUCTURE SUPPLIED IN THE ORIGINAL DESIGN DRAWINGS OR MADE AVAILABLE BY THE DEPARTMENT OR ITS AUTHORIZED AGENTS AS ACCURATE REPRESENTATION OF ANY OF THE CONDITIONS THAT WILL BE ENCOUNTERED IN THE FIELD.

    THE INFORMATION SHOWN ON THESE PLANS FOR THE EXISTING BRIDGE MAY NOT BE ACCURATE AND SHOULD NOT BE CONSIDERED THE SOLE BASIS FOR COMPUTATION OF UNIT PRICES FOR BIDDING PURPOSES. THE CONTRACTOR SHALL ASSUME THAT CONDITIONS AFFECTING THE COST AND/OR QUANTITIES OF THE WORK TO BE PERFORMED MAY DIFFER FROM THOSE INDICATED AND MAY NEED TO BE VERIFIED.

19. CONTIGENT QUANTITIES:
    THESE CONTRACT DRAWINGS HAVE BEEN PREPARED BASED ON ORIGINAL CONTRACT PLANS AND FIELD INSPECTION NOTES. ACTUAL CONDITION MAY REQUIRE MODIFICATION IN CONSTRUCTION DETAILS AND WORK QUANTITIES. ALL DIMENSIONS AND DETAILS SHOWN ON THE PLANS SHALL BE VERIFIED BY THE CONTRACTOR PRIOR TO ORDERING ANY MATERIALS. THE FOLLOWING PAY ITEMS INCLUDE 25% CONTINGENCY FACTORS TO ACCOUNT FOR THE ANTICIPATED VARIATIONS IN THE ACTUAL QUANTITY.
    - ITEM 628001 - REPAIR OF CONCRETE STRUCTURE BY EPOXY INJECTION
    - ITEM 628041 - DEEP SPALL REPAIR
    - ITEM 628053 - DECK REPAIR, FULL DEPTH
    - ITEM 628043 - REHABILITATION OF P.C.C. STRUCTURES

20. UTILITIES:
    SEE UTILITY STATEMENT AND UTILITY RELOCATION PLAN SHEETS FOR FURTHER INFORMATION ON UTILITY COORDINATION.

21. ENVIRONMENTAL COMPLIANCE:
    REFER TO THE ENVIRONMENTAL COMPLIANCE PLAN FOR RESTRICTIONS AND ADDITIONAL GUIDANCE THAT MAY BE ASSOCIATED TO THIS PROJECT.

22. PLANS OF THE EXISTING STRUCTURE ARE AVAILABLE AND CAN BE OBTAINED THROUGH THE DEPARTMENT. THE EXISTING PLANS ARE AS FOLLOWS:

CONTRACT NO.	DESCRIPTION
I-2 (42)	ORIGINAL SUBSTRUCTURE
I-2 (43)	ORIGINAL SUPERSTRUCTURE STEELWORK
I-2 (43) SHOP DRAWINGS	ORIGINAL SUPERSTRUCTURE STEELWORK SHOP DRAWINGS
64-04-025	ORIGINAL SUPERSTRUCTURE DECK AND RAILING
71-04-003	BRIDGE DECK RESURFACING
77-07-003	NORTH ABUTMENT REPAIR AND APPROACH SLABS
82-091-02	BRIDGE DECK RESURFACING
83-099-07	STANDPIPE INSTALLATION
85-091-03	SLOPE PAVEMENT REPAIRS
99-074-05	BRIDGE REHABILITATION
21-074-05	BRIDGE REHABILITATION

23. A CURRENT LOAD RATING OF THE BRIDGE IS ON FILE AND MAY BE OBTAINED FROM THE BRIDGE MANAGEMENT SECTION

NOT FOR CONSTRUCTION

2/8/2018 4:34:52 PM
T:\Users\Projects\423009.98\600_CADD\05_Plans\PN01_BR1-759.dgn

DELAWARE
DEPARTMENT OF TRANSPORTATION

ADDENDUMS / REVISIONS

NOT TO SCALE

REHABILITATION OF I-95
FROM I-495 TO NORTH OF
BRANDYWINE RIVER BRIDGE

CONTRACT	BRIDGE NO. 1 759 059
T201407404	DESIGNED BY: RMB
COUNTY	CHECKED BY: DEF
NEW CASTLE	

BRIDGE PROJECT NOTES

1-759 PN-01
SHEET NO. 2-660
TOTAL SHTS. 2-731

BRIDGE NO. 1-759 INDEX OF SHEETS

SHEET NO.	DWG. NO.	TABLE OF CONTENTS
001	PN-01	BRIDGE PROJECT NOTES
002	IS-01	INDEX OF BRIDGE SHEETS AND QUANTITY SUMMARY
003	PN-02	SUMMARY OF PROPOSED REPAIR AND RECONSTRUCTION ITEMS
004	PE-01	GENERAL PLAN AND ELEVATION - 1
005	PE-02	GENERAL PLAN AND ELEVATION - 2
006	PE-03	GENERAL PLAN AND ELEVATION - 3
007	TS-01	BRIDGE TYPICAL SECTION
008	DT-01	CONCRETE REPAIR DETAILS
009	SR-01	DEMOLITION DETAILS - 1
010	SR-02	DEMOLITION DETAILS - 2
011	AB-01	ABUTMENT A - DETAILS
012	AB-02	ABUTMENT B - DETAILS
013	WW-01	WINGWALL AND RETAINING WALL DETAILS
014	PR-01	PIER 1, SOUTH FACE - DETAILS
015	PR-02	PIER 1, NORTH FACE - DETAILS
016	PR-03	PIER 2, SOUTH FACE - DETAILS
017	PR-04	PIER 2, NORTH FACE - DETAILS
018	PR-05	PIER 3, SOUTH FACE - DETAILS
019	PR-06	PIER 3, NORTH FACE - DETAILS
020	PR-07	PIER 4, SOUTH FACE - DETAILS
021	PR-08	PIER 4, NORTH FACE - DETAILS
022	PR-09	PIER 5, SOUTH FACE - DETAILS
023	PR-10	PIER 5, NORTH FACE - DETAILS
024	PR-11	PIER 6, SOUTH FACE - DETAILS
025	PR-12	PIER 6, NORTH FACE - DETAILS
026	PR-13	PIER 7, SOUTH FACE - DETAILS
027	PR-14	PIER 7, NORTH FACE - DETAILS
028	PR-15	PIER 8, SOUTH FACE - DETAILS
029	PR-16	PIER 8, NORTH FACE - DETAILS
030	PR-17	PIER 9, SOUTH FACE - DETAILS
031	PR-18	PIER 9, NORTH FACE - DETAILS
032	PR-19	PIER 10, SOUTH FACE - DETAILS
033	PR-20	PIER 10, NORTH FACE - DETAILS
034	PR-21	PIER 11, SOUTH FACE - DETAILS
035	PR-22	PIER 11, NORTH FACE - DETAILS
036	PR-23	PIER 12, SOUTH FACE - DETAILS
037	PR-24	PIER 12, NORTH FACE - DETAILS
038	PR-25	PIER STRENGTHENING DETAILS - 1
039	PR-26	PIER STRENGTHENING DETAILS - 2
040	PR-27	PEDESTAL DETAILS
041	BD-01	BEARING DETAILS
042	BD-02	BRIDGE JACKING DETAILS - 1
043	BD-03	BRIDGE JACKING DETAILS - 2
044	BD-04	BRIDGE JACKING DETAILS - 3
045	BD-05	BRIDGE JACKING DETAILS - 4
046	FR-01	FRAMING PLAN - 1
047	FR-02	FRAMING PLAN - 2
048	FR-03	FRAMING PLAN - 3
049	FR-04	FRAMING PLAN - 4
050	FR-05	FRAMING PLAN - 5
051	DT-02	DIAPHRAGM DETAILS
052	DT-03	SEISMIC RETROFIT DETAIL
053	DK-01	DECK DETAILS - 1
054	DK-02	DECK DETAILS - 2
055	EX-01	EXPANSION JOINT DETAILS - 1
056	EX-02	EXPANSION JOINT DETAILS - 2
057	EX-03	EXPANSION JOINT DETAILS - 3
058	EX-04	EXPANSION JOINT DETAILS - 4
059	AS-01	SOUTHBOUND ROADWAY APPROACH SLAB PLANS
060	AS-02	NORTHBOUND ROADWAY APPROACH SLAB PLANS
061	AS-03	APPROACH SLAB DETAILS
062	AS-04	APPROACH SLABS SOUTHBOUND REINFORCEMENT - 1
063	AS-05	APPROACH SLABS SOUTHBOUND REINFORCEMENT - 2
064	AS-06	APPROACH SLABS NORTHBOUND REINFORCEMENT - 1
065	AS-07	APPROACH SLABS NORTHBOUND REINFORCEMENT - 2
066	PA-01	BARRIER DETAILS
067	PA-02	RAILING DETAILS
068	PA-03	BARRIER ELEVATIONS - 1
069	PA-04	BARRIER ELEVATIONS - 2
070	DT-04	BRIDGE DRAINAGE PLAN
071	CS-01	CONSTRUCTION SEQUENCE
072	BR-01	REINFORCING BAR SUMMARY

TOTAL BRIDGE 1-759 SHEETS: 72

BRIDGE NO. 1-759 QUANTITY SUMMARY

ITEM NO.	ITEM DESCRIPTION	UNITS	QUANTITY
201000	CLEARING AND GRUBBING	LS	1
207000	STRUCTURAL EXCAVATION	CY	40
211000	REMOVAL OF STRUCTURES AND OBSTRUCTIONS	LS	1
301001	GRADED AGGREGATE BASE COURSE, TYPE B	CY	320
602100	REPLACE DRAINAGE INLET GRATE(S)	EACH	36
6025XX	CLEANING BRIDGE SCUPPER	EACH	36
6025XX	BRIDGE DRAINAGE SYSTEM	LS	1
604000	JACKING BRIDGE	LS	1
604001	PROTECTIVE SHIELD	LS	1
610002	PORTLAND CEMENT CONCRETE MASONRY, ABUTMENT ABOVE FOOTING, CLASS A	CY	20
610005	PORTLAND CEMENT CONCRETE MASONRY, SUBSTRUCTURE, CLASS A	CY	242
610008	PORTLAND CEMENT CONCRETE MASONRY, PARAPET, CLASS A	CY	60
610017	PORTLAND CEMENT CONCRETE MASONRY, SUPERSTRUCTURE, CLASS D	CY	250
610018	PORTLAND CEMENT CONCRETE, APPROACH SLAB, CLASS D	CY	490
611001	BAR REINFORCEMENT, EPOXY COATED	LB	213000
613000	EPOXY CONCRETE SEALER	SF	12200
613001	SILICONE-BASED ACRYLIC CONCRETE SEALER	SF	102400
615001	STEEL STRUCTURES	LS	1
615006	STEEL STRUCTURE REPAIR	LS	1
616000	CLEANING AND PAINTING EXISITNG STEEL	LS	1
616003	TESTING AND DISPOSAL OF EXISITNG HAZARDOUS STEEL COATING	LS	1
623000	ELASTOMERIC BEARINGS	EACH	156
623004	CLEAN AND GREASE BRIDGE BEARINGS	EACH	60
624000	PREFABRICATED EXPANSION JOINT SYSTEM, 3"	LF	290
6245XX	FINGER JOINT SYSTEM	LF	570
625000	LATEX MODIFIED CONCRETE OVERLAY INSTALLATION	SYIN	45410
625001	FURNISHING LATEX-MODIFIED CONCRETE OVERLAY	CY	1261
6255XX	ADDITIONAL LATEX-MODIFIED CONCRETE FOR PARTIAL DECK REPAIRS	CY	25
626001	STEEL HAND RAILING, TYPE 1	LF	440
628001	REPAIR OF CONCRETE STRUCTURE BY EPOXY INJECTION	LF	90
628041	DEEP SPALL REPAIR	CF	180
628042	REHABILITATION OF P.C.C. MASONRY	CY	8
628053	DECK REPAIR, FULL DEPTH	SF	1140
628070	DRILLING HOLES AND INSTALLING DOWELS	EACH	4370
6285XX	REMOVAL OF EXISTING DECK REPAIR	SF	1140
6285XX	REHABILITATION OF EXISTING CONCRETE STRUCTURE, FIBER REINFORCED POLYMER WRAP	LS	1
760013	PAVEMENT MILLING, PORTLAND CEMENT CONCRETE PAVEMENT	SYIN	62440
7605XX	TOTAL SURFACE HYDRODEMOLITION	SY	22710

NOT FOR CONSTRUCTION

2/8/2018 4:34:54 PM
f:\Dover\Projects\425009.98\600_CADD\05_Plans\ISO1_BR1-759.dgn

DELAWARE
DEPARTMENT OF TRANSPORTATION

ADDENDUMS / REVISIONS

NOT TO SCALE

REHABILITATION OF I-95
FROM I-495 TO NORTH OF
BRANDYWINE RIVER BRIDGE

CONTRACT T201407404
COUNTY NEW CASTLE
BRIDGE NO. 1 759 059
DESIGNED BY: RMB
CHECKED BY: DEF

INDEX OF BRIDGE SHEETS
AND QUANTITY SUMMARY

1-759
IS-01
SHEET NO. 2-661
TOTAL SHTS. 2-731

REPAIR NO.	REPAIR DESCRIPTION	LOCATION	REMARKS	ITEM NO.	ITEM DESCRIPTION	UNIT
1	JOINT REPLACEMENT (FULL REPLACEMENT)	ABUTMENTS A AND B; PIERS 2, 5, 8 AND 11	ABUTMENT JOINTS MOVED TO APPROACH END OF APPROACH SLABS. REMOVE EXISTING BACKWALL HEADER TO THE BOTTOM OF THE PROPOSED APPROACH SLAB AND CONSTRUCT SLAB OVER-BACKWALL ABUTMENT DETAIL. REPLACE FINGER JOINTS AT THE PIERS.	604001	PROTECTIVE SHIELD	LS
				610002	PORTLAND CEMENT CONCRETE MASONRY, ABUTMENT ABOVE FOOTING, CLASS A	CY
				611001	BAR REINFORCEMENT, EPOXY COATED	LB
				610017	PORTLAND CEMENT CONCRETE MASONRY, SUPERSTRUCTURE, CLASS D	CY
				624000	PREFABRICATED EXPANSION JOINT SYSTEM, 3"	LF
				6245XX	FINGER JOINT SYSTEM	LF
3	MILL EXISTING DECK/OVERLAY	ENTIRE BRIDGE	MILL EXISTING LMC OVERLAY, 2 3/4" DEPTH. REMOVE EXISTING DECK REPAIRS. IF REMOVAL EXTENDS FULL-DEPTH, MAKE FULL DEPTH DECK REPAIRS.	604001	PROTECTIVE SHIELD	LS
				628053	DECK REPAIR, FULL DEPTH	SF
				6285XX	REMOVAL OF EXISTING DECK REPAIRS	SF
				760013	PAVEMENT MILLING, PORTLAND CEMENT CONCRETE PAVEMENT	SYIN
4	HYDRODEMOLITION OF EXISTING DECK SURFACE	ENTIRE BRIDGE	1/4" SCARIFICATION BY HYDRODEMOLITION. MAKE REQUIRED FULL-DEPTH DECK REPAIRS.	628053	DECK REPAIR, FULL DEPTH	SF
				7605XX	HYDRODEMOLITION	SY
5	FURNISH AND INSTALL LMC OVERLAY	ENTIRE BRIDGE	CONSTRUCT 2" LMC OVERLAY. FILL DEFFECTS ENCOUNTERED DURING HYDRODEMOLITION MONOLITHICALLY WITH LMC OVERLAY.	625000	LATEX-MODIFIED CONCRETE OVERLAY INSTALLATION	SYIN
				625001	FURNISHING LATEX-MODIFIED CONCRETE OVERLAY	CY
				6255XX	ADDITIONAL LATEX-MODIFIED CONCRETE FOR PARTIAL DECK REPAIRS	CY
6	REPAIR SPALL/DELAMINATION IN SOFFIT	ENTIRE BRIDGE		625053	DECK REPAIR, FULL DEPTH	SF
9	REMOVE AND REPLACE CONCRETE APPROACH SLAB	ALL FOUR (4) APPROACH SLABS		207000	STRUCTURAL EXCAVATION	CY
				211000	REMOVAL OF STRUCTURES AND OBSTRUCTIONS	LS
				301001	GRADED AGGREGATE BASE COURSE, TYPE B	CY
				610018	PORTLAND CEMENT CONCRETE MASONRY, APPROACH SLAB, CLASS D	CY
				611001	BAR REINFORCEMENT, EPOXY COATED	LB
10	CLEAN SCUPPER AND DOWNSPOUT	ENTIRE BRIDGE DRAINAGE SYSTEM		6025XX	CLEANING BRIDGE SCUPPER	EACH
12	BRIDGE DRAINAGE SYSTEM REPAIRS AND MODIFICATIONS	ALL SCUPPERS. SEE DWG. DT-04 FOR DRAINAGE REPAIR LOCATIONS.	MODIFY BRIDGE SCUPPERS AND DRAINAGE GRATE ELEVATIONS TO ACCOMMODATE REDUCED DECK / OVERLAY THICKNESS. REPLACE ALL BRIDGE SCUPPER DRAINAGE GRATES. REPAIR DRAINAGE SYSTEM AS SHOWN ON THE PLANS.	602100	REPLACE DRAINAGE INLET GRATE(S)	EACH
				6025XY	BRIDGE DRAINAGE SYSTEM	LS
14	REMOVE AND REPLACE BRIDGE PARAPET	SECTIONS AT EXPANSION JOINT REPLACEMENTS. MEDIAN AND EXTERIOR APPROACH SLAB BARRIER. BARRIER ON WING WALLS AND RETAINING WALLS.		211000	REMOVAL OF STRUCTURES AND OBSTRUCTIONS	LS
				604001	PROTECTIVE SHIELD	LS
				610008	PORTLAND CEMENT CONCRETE MASONRY, PARAPET, CLASS A	CY
				611001	BAR REINFORCEMENT, EPOXY COATED	LB
18	SALVAGE, AND REINSTALL STEEL BRIDGE RAIL	SECTIONS AT EXPANSION JOINT REPLACEMENTS. MEDIAN AND EXTERIOR APPROACH SLAB BARRIER. STEEL BRIDGE RAIL ON WING WALLS AND RETAINING WALLS.	TOUCH UP PAINT AS NECESSARY.	616000	CLEANING AND PAINTING EXISTING STEEL	LS
				626001	STEEL HAND RAILING, TYPE 1	LF
24	JACK AND REPLACE EXISTING BRIDGE BEARINGS	BEARINGS AT ABUTMENTS A AND B; PIERS 2, 3, 5, 7, 8, 10, AND 11.		604000	JACKING BRIDGE	LS
				623000	ELASTOMERIC BEARING	EACH
31	REPAIR STEEL DIAPHRAGMS	SEE DWG. FR-01 THROUGH FR-05 FOR LOCATIONS OF DIAPHRAGM REPAIRS.		615006	STEEL STRUCTURE REPAIR	LS
32	CLEAN AND PAINT EXISTING STEEL STRUCTURE	ENTIRE BRIDGE		616000	CLEANING AND PAINTING EXISTING STEEL	LS
				616003	TESTING AND DISPOSAL OF EXISTING HAZARDOUS STEEL COATING	LS
33	CLEAN AND GREASE BRIDGE BEARINGS	BEARINGS AT PIERS 1, 4, 6, 9, AND 12.		623004	CLEAN AND GREASE BRIDGE BEARINGS	EACH
34	SEAL CRACKS IN CONCRETE SUBSTRUCTURE	ALL SUBSTRUCTURE UNITS INCLUDING PIERS, ABUTMENTS, AND WINGWALLS.		628001	REPAIR OF CONCRETE STRUCTURES BY EPOXY INJECTION	LF
37	REPAIR DEEP SPALLS IN CONCRETE SUBSTRUCTURE	ALL SUBSTRUCTURE UNITS INCLUDING PIERS, ABUTMENTS, AND WINGWALLS.		628041	DEEP SPALL REPAIR	CF
				628042	REHABILITATION OF P.C.C. MASONRY	CY
38	STRENGTHEN PIER WITH FRP	ALL PIERS		628XXX	REHABILITATION OF EXISTING CONCRETE STRUCTURE, FIBER REINFORCED POLYMER WRAP	LS
39	RECONSTRUCT BEARING PEDESTAL AND CONSTRUCTING SHEAR BLOCKS	ABUTMENTS A AND B; PIERS 2, 3, 5, 7, 8, 10, AND 11.		211000	REMOVAL OF STRUCTURES AND OBSTRUCTIONS	LS
				610005	PORTLAND CEMENT CONCRETE MASONRY, SUBSTRUCTURE, CLASS A	CY
				611001	BAR REINFORCEMENT, EPOXY COATED	LB
				628070	DRILLING HOLES AND INSTALLING DOWELS	EACH
40	ADD SEISMIC RESTRAINERS	ALL GIRDERS AT PIERS 5 AND 8.		615001	STEEL STRUCTURES	LS
41	CLEAN AND SEAL CONCRETE SURFACES	ALL SUBSTRUCTURE UNITS, INCLUDING PIERS, ABUTMENTS, AND WINGWALLS. ALL BARRIER ON BRIDGE, APPROACH SLABS, WINGWALLS, AND RETAINING WALLS.	INCLUDES CLEANING DIRT AND DEBRIS FROM TOPS OF SUBSTRUCTURE UNITS	613000	EPOXY CONCRETE SEALER	SF
				613001	SILICONE-BASED ACRYLIC CONCRETE SEALER	SF

NOT FOR CONSTRUCTION

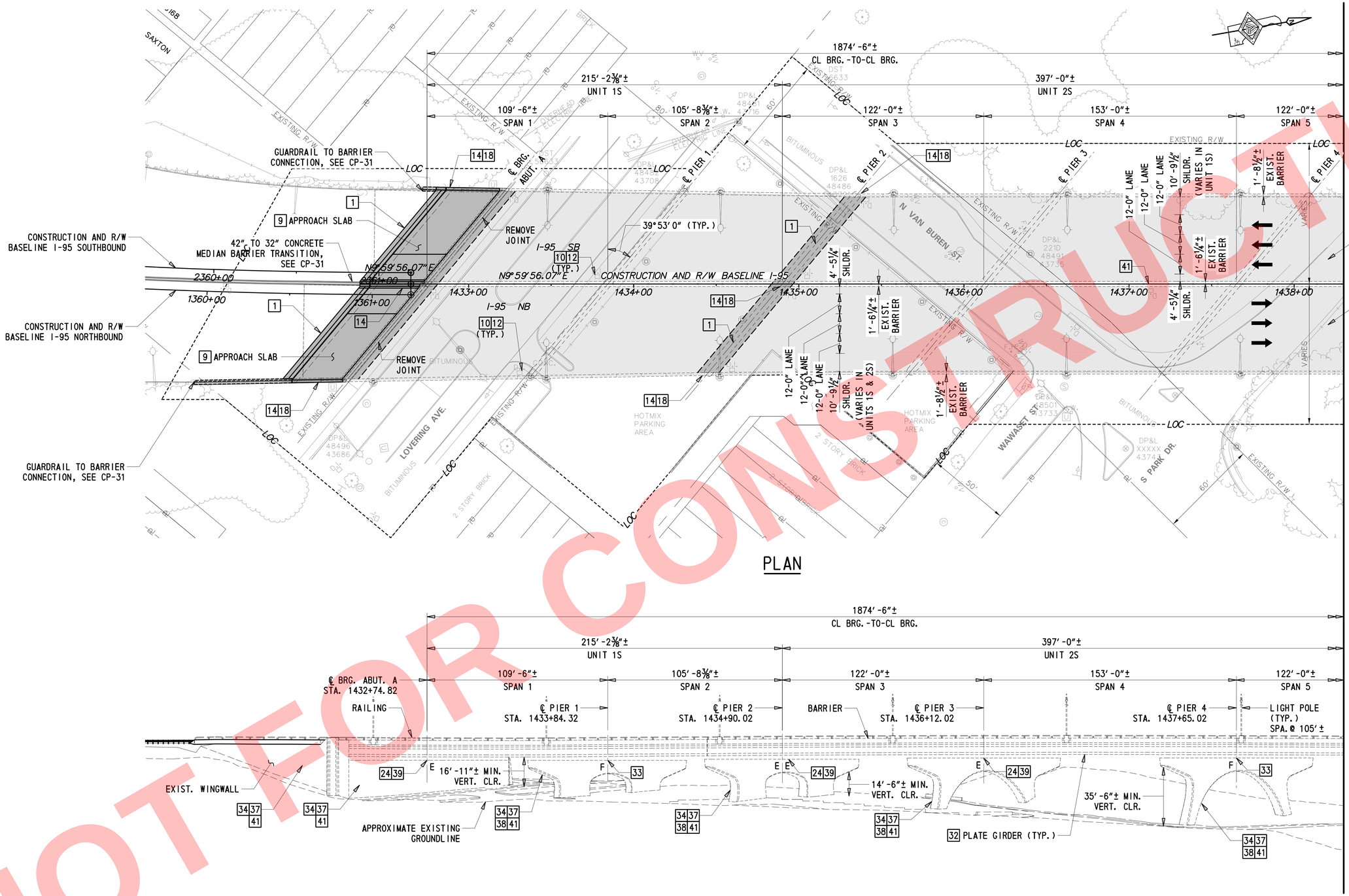

PLAN

ELEVATION

LEGEND:

- MILL AND OVERLAY DECK
- REMOVAL AND NEW APPROACH SLAB & DECK JOINT CONSTRUCTION
- E EXPANSION BEARING
- F FIXED BEARING

KEY:

[1] REPAIR NUMBER AS SHOWN ON DWG. PN-02.

NOT FOR CONSTRUCTION

DELAWARE DEPARTMENT OF TRANSPORTATION	ADDENDUMS / REVISIONS	SCALE 0 30 60 90 FEET	REHABILITATION OF I-95 FROM I-495 TO NORTH OF BRANDYWINE RIVER BRIDGE	CONTRACT T201407404	BRIDGE NO. 1 759 059	GENERAL PLAN AND ELEVATION – 1	1-759 PE-01
				COUNTY NEW CASTLE	DESIGNED BY: RMB		SHEET NO. 2-663
					CHECKED BY: DEF		TOTAL SHTS. 2-731

2/8/2018 4:15:13 PM
T:\Dover\Projects\425009.98\600_CADD\05_Plans\PE01_BR1-759.dgn

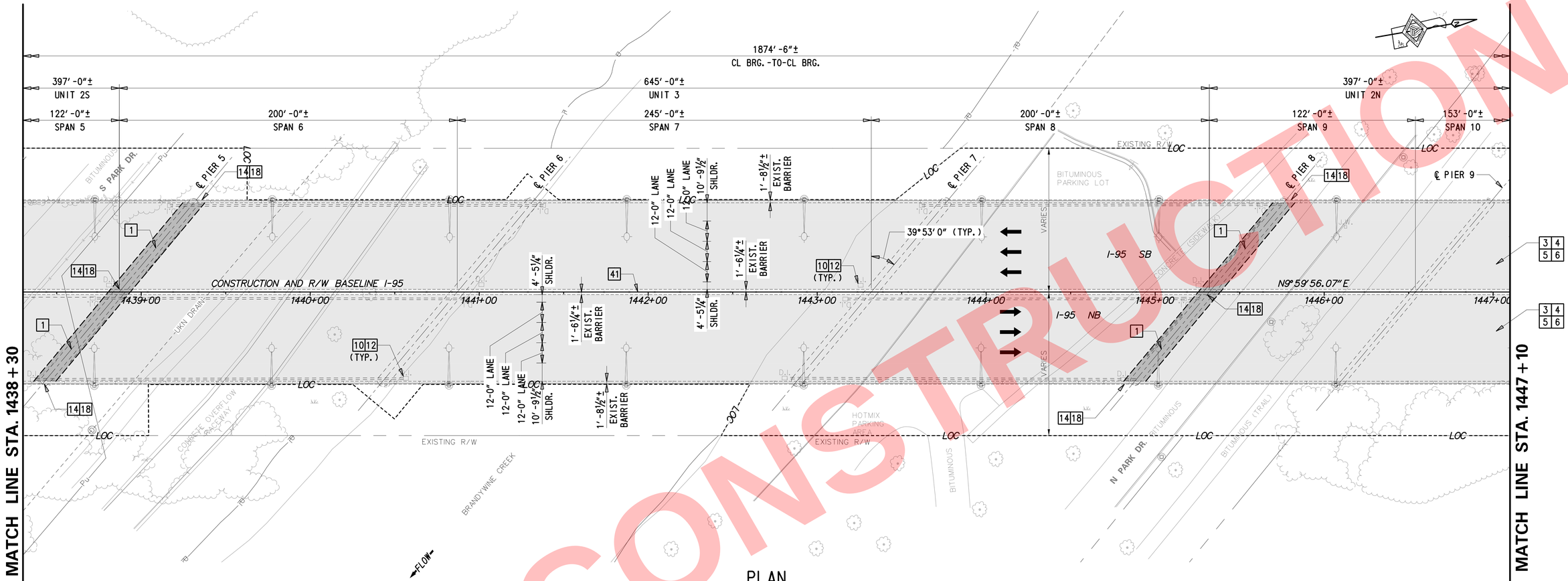

LEGEND:

MILL AND OVERLAY DECK

REMOVAL AND NEW DECK JOINT CONSTRUCTION

E EXPANSION BEARING

F FIXED BEARING

KEY:

1 REPAIR NUMBER AS SHOWN ON DWG. PN-02.

NOT FOR CONSTRUCTION

DELAWARE DEPARTMENT OF TRANSPORTATION	ADDENDUMS / REVISIONS	SCALE 0 30 60 90 FEET	REHABILITATION OF I-95 FROM I-495 TO NORTH OF BRANDYWINE RIVER BRIDGE	CONTRACT T201407404	BRIDGE NO. 1 759 059	GENERAL PLAN AND ELEVATION – 2	1-759 PE-02
				COUNTY NEW CASTLE	DESIGNED BY: RMB		SHEET NO. 2-664
					CHECKED BY: DEF		TOTAL SHTS. 2-731

2/8/2018 4:35:16 PM
T:\Dover\Projects\425009.9B\600_CADD\05_Plans\PE02_BR1-759.dgn

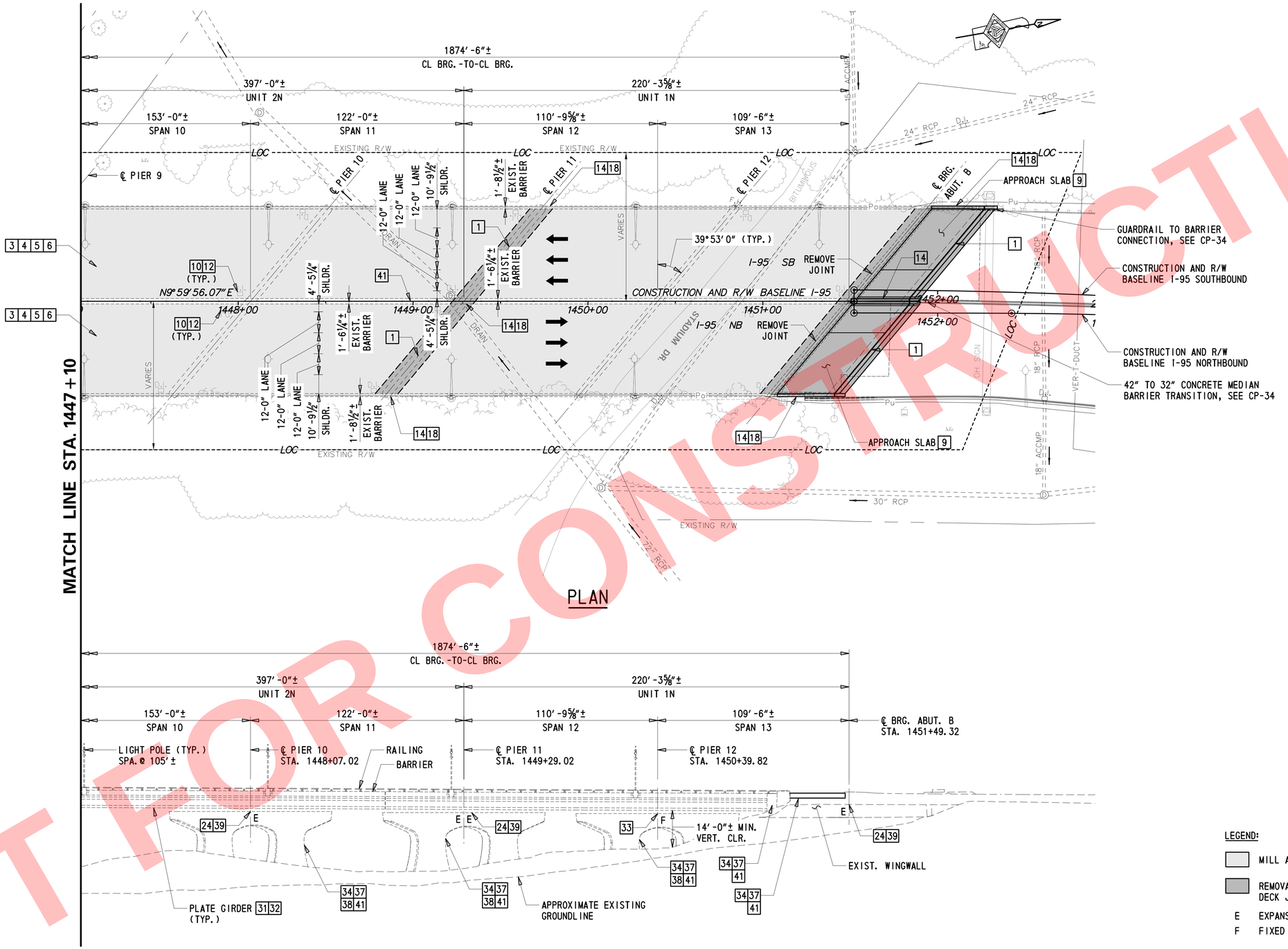

NOT FOR CONSTRUCTION

LEGEND:

- MILL AND OVERLAY DECK
- REMOVAL AND NEW APPROACH SLAB & DECK JOINT CONSTRUCTION
- E EXPANSION BEARING
- F FIXED BEARING

KEY:

[1] REPAIR NUMBER AS SHOWN ON DWG. PN-02.

DELAWARE DEPARTMENT OF TRANSPORTATION

ADDENDUMS / REVISIONS

SCALE 0 30 60 90 FEET

REHABILITATION OF I-95 FROM I-495 TO NORTH OF BRANDYWINE RIVER BRIDGE

CONTRACT	BRIDGE NO.	1 759 059
T201407404	DESIGNED BY: RMB	
COUNTY	CHECKED BY: DEF	
NEW CASTLE		

GENERAL PLAN AND ELEVATION – 3

1-759 PE-03
SHEET NO. 2-665
TOTAL SHTS. 2-731

2/8/2018 4:35:18 PM
F:\Dover\Projects\425009.98\600_CADD\05_Plans\PE03_BR1-759.dgn

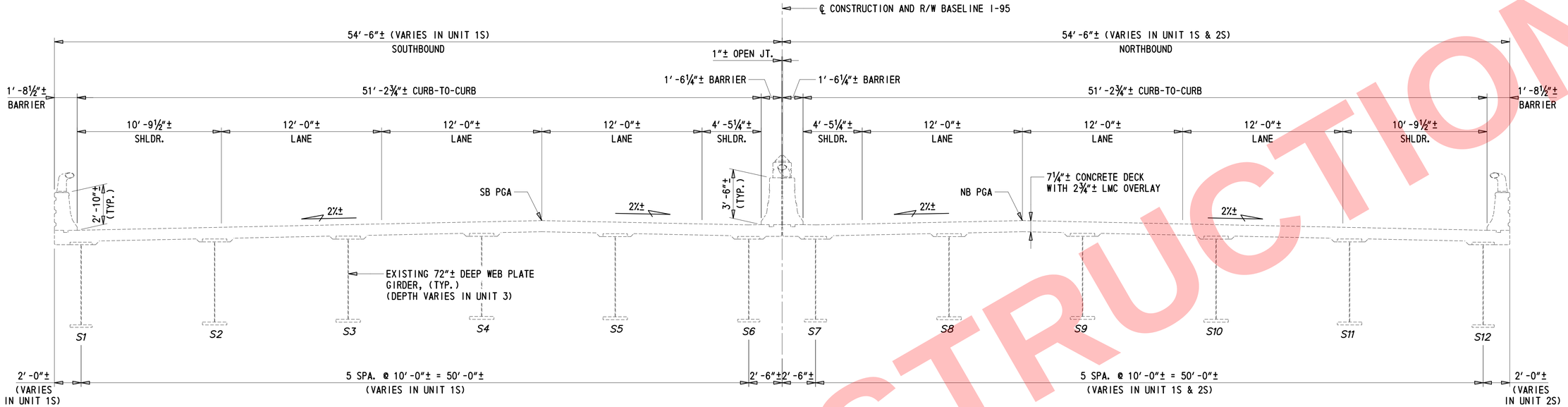

EXISTING TYPICAL SECTION

¼″ = 1′-0″

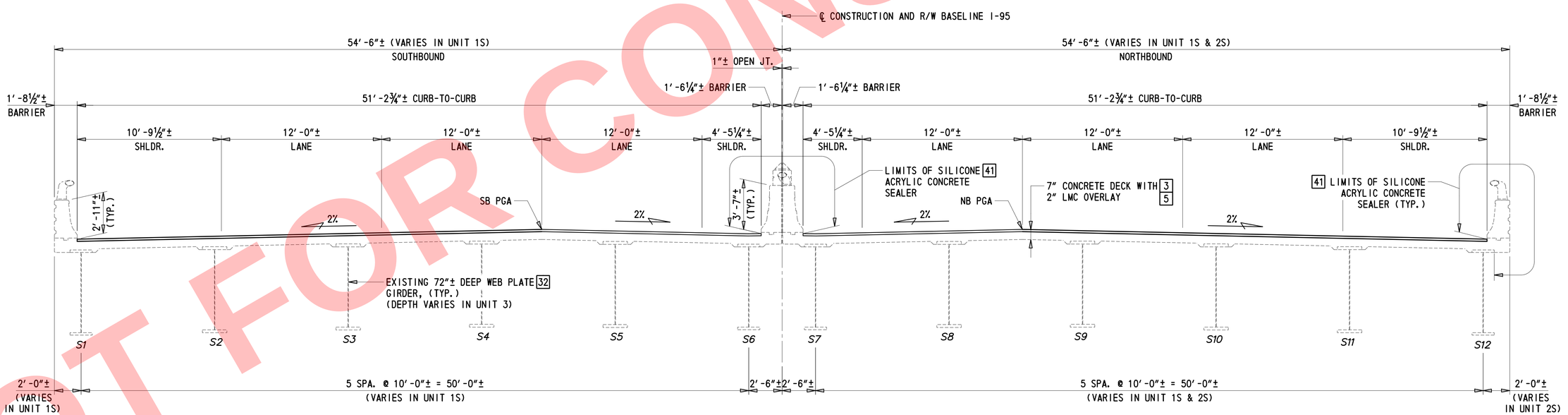

PROPOSED TYPICAL SECTION

¼″ = 1′-0″

KEY:

[1] REPAIR NUMBER AS SHOWN ON DWG. PN-02.

NOT FOR CONSTRUCTION

2/8/2018 4:35:20 PM
F:\Dover\Projects\425009.98\600_CADD\05_Plans\TS01_BR1-759.dgn

DELAWARE
DEPARTMENT OF TRANSPORTATION

ADDENDUMS / REVISIONS

SCALE AS NOTED

REHABILITATION OF I-95
FROM I-495 TO NORTH OF
BRANDYWINE RIVER BRIDGE

CONTRACT	BRIDGE NO.	1 759 059
T201407404	DESIGNED BY: RMB	
COUNTY	CHECKED BY: DEF	
NEW CASTLE		

BRIDGE TYPICAL SECTION

1-759 TS-01	
SHEET NO.	2-666
TOTAL SHTS.	2-731

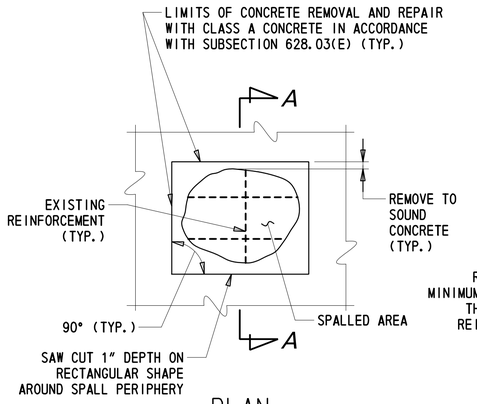

PLAN

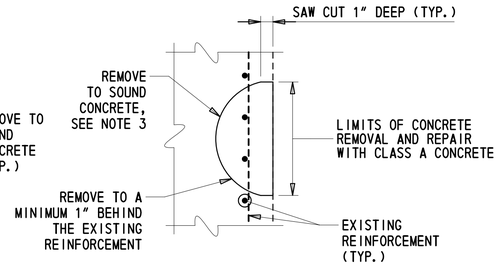

SECTION A-A

DEEP SPALL REPAIR

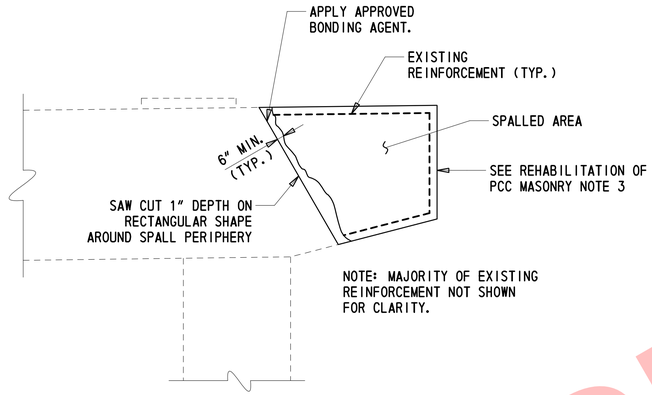

REHABILITATION OF PCC MASONRY

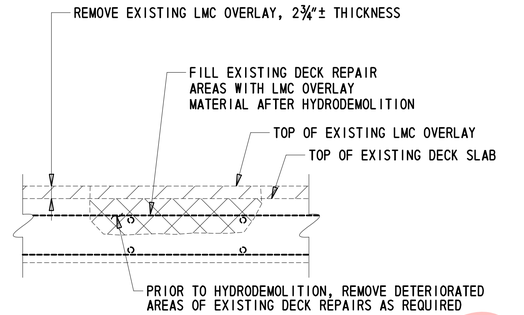

REMOVAL OF EXISTING DECK REPAIRS (ITEM 6285xx)

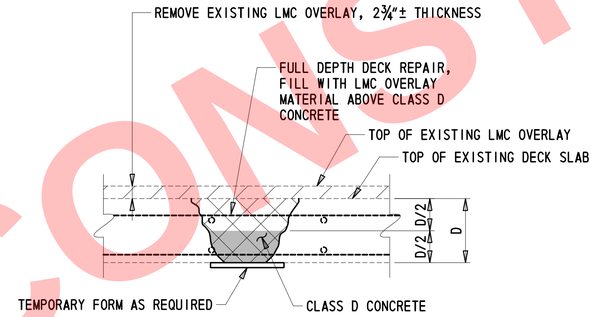

DECK REPAIR, FULL DEPTH (ITEM 628053)

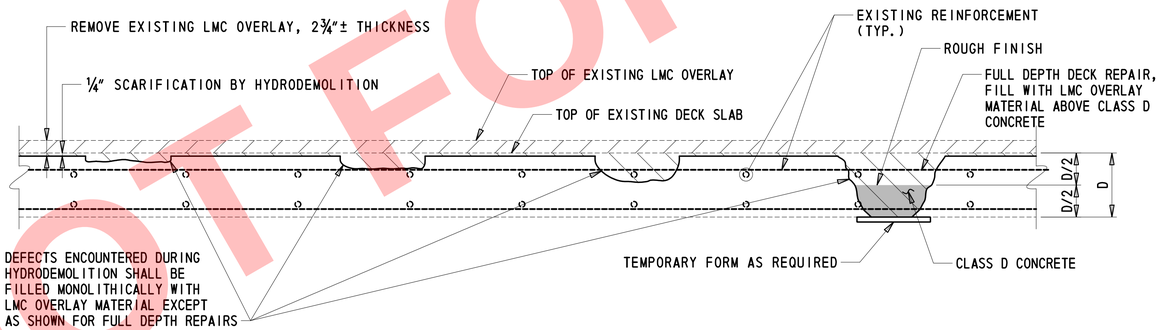

HYDRODEMOLITION AND DECK REPAIR (WITH OVERLAY)

LEGEND:

- LIMITS OF REMOVAL, MECHANICAL MILLING (ITEM 760013)
- LIMITS OF HYDRODEMOLITION (ITEM 7605XX)
- LIMITS OF REMOVAL (ITEM 628053 OR 6285XX)

DEEP SPALL REPAIR NOTES

1. DEEP SPALLS ARE DEFINED AS PATCHES THAT EXTEND BELOW THE TOP MAT OF REINFORCEMENT.
2. ALL WORK INVOLVING METHODS OF CONCRETE REMOVAL; CLEANING OF CONCRETE SURFACE AND EXISTING REINFORCEMENT; REPAIRING OR REPLACING DAMAGED REINFORCEMENT AS RESULT OF CONSTRUCTION ACTIVITIES OR SECTION LOSS; PRESENCE OF CONTRACTION OR EXPANSION JOINTS; SURFACE PREPARATION; AND CONCRETE PLACEMENT SHALL BE PERFORMED IN ACCORDANCE WITH SUBSECTION 628.03(E) OF THE STANDARD SPECIFICATIONS. PAYMENT INCIDENTAL TO 628041 - DEEP SPALL REPAIR.
3. IF DEPTH OF REPAIR EXTENDS MORE THAN 6" BEYOND SURFACE OF CONCRETE, CONTRACTOR SHALL STOP WORK AND NOTIFY THE ENGINEER IMMEDIATELY.

REHABILITATION OF PCC MASONRY

1. REHABILITATION OF PCC MASONRY IS DEFINED AS DEEP SPALL PATCHES THAT EXCEED THE 0.5 C.Y. THRESHOLD IN A SINGLE AREA.
2. ALL WORK INVOLVING METHODS OF CONCRETE REMOVAL; CLEANING OF CONCRETE SURFACE AND EXISTING REINFORCEMENT; REPAIRING OR REPLACING DAMAGED REINFORCEMENT AS RESULT OF CONSTRUCTION ACTIVITIES OR SECTION LOSS; PRESENCE OF CONTRACTION OR EXPANSION JOINTS; SURFACE PREPARATION; AND CONCRETE PLACEMENT SHALL BE PERFORMED IN ACCORDANCE WITH SUBSECTION 628.03(E) OF THE STANDARD SPECIFICATIONS. PAYMENT INCIDENTAL TO 628042 - REHABILITATION OF PCC MASONRY.
3. DETAIL SHOWN FOR "REHABILITATION OF EXISTING PCC MASONRY" UTILIZES A GENERIC EXAMPLE USING PARTIAL RECONSTRUCTION OF AN EXISTING PIER CAP. SEE ABUTMENT AND PIER REHABILITATION SHEETS FOR SIZE AND LOCATION OF REPAIRS AT EACH SUBSTRUCTURE UNIT.
4. IF DEPTH OF REPAIR EXTENDS MORE THAN 6" BEYOND SURFACE OF CONCRETE, CONTRACTOR SHALL STOP WORK AND NOTIFY THE ENGINEER IMMEDIATELY.

REMOVAL OF EXISTING DECK REPAIR NOTES

1. AFTER EXISTING OVERLAY IS REMOVED, PRIOR TO HYDRODEMOLITION, ANY EXISTING DECK REPAIRS THAT ARE LOOSE, PARTIALLY DELAMINATED, OR OTHERWISE UNSOUND, WILL BE MEASURED BY THE ENGINEER AND MARKED FOR REMOVAL.
2. THE CONTRACTOR SHALL REMOVE THE EXISTING DECK REPAIRS IN ACCORDANCE WITH SECTION 628.03(F).
3. THE REMOVAL SHALL NOT INCLUDE ANY UNSOUND ORIGINAL BRIDGE DECK CONCRETE.
4. REFER TO ITEM 6285xx - REMOVAL OF EXISTING DECK REPAIR FOR PAYMENT AND ADDITIONAL INFORMATION.
5. IF REMOVAL OF EXISTING DECK REPAIR REACHES FULL DEPTH, AND WITH THE APPROVAL OF THE ENGINEER, REPAIR AREA SHALL BE REPAIRED IN ACCORDANCE WITH SUBSECTION 628.03(F) AND PAID FOR UNDER ITEM 628053 - DECK REPAIR, FULL DEPTH. REMOVAL OF EXISTING DECK REPAIRS THAT ARE CHANGED TO DECK REPAIR, FULL DEPTH WILL ONLY BE PAID FOR ONCE UNDER ITEM 628053.

DECK REPAIR NOTES

1. AFTER EXISTING OVERLAY IS REMOVED, PRIOR TO HYDRODEMOLITION, EXISTING AREAS OF DECK REQUIRING FULL DEPTH REPAIR SHALL BE REPAIRED USING DETAIL SHOWN ON THIS SHEET.
2. ALL WORK INVOLVING METHODS OF CONCRETE REMOVAL; CLEANING OF CONCRETE SURFACE AND EXISTING REINFORCEMENT; REPAIRING OR REPLACING DAMAGED REINFORCEMENT AS RESULT OF CONSTRUCTION ACTIVITIES OR SECTION LOSS; PRESENCE OF CONTRACTION OR EXPANSION JOINTS; SURFACE PREPARATION; AND CONCRETE PLACEMENT SHALL BE PERFORMED IN ACCORDANCE WITH SUBSECTION 628.03(F) OF THE STANDARD SPECIFICATIONS, ITEM 7605xx - TOTAL SURFACE HYDRODEMOLITION AND ITEM 6255xx - ADDITIONAL LATEX-MODIFIED CONCRETE FOR PARTIAL DECK REPAIRS.
3. MILLING, HYDRODEMOLITION, FULL DEPTH DECK REPAIRS, AND LMC OVERLAY WILL BE PAID FOR UNDER THEIR RESPECTIVE ITEMS.

SUBSTRUCTURE PROTECTIVE COATING LIMITS

1. APPLY EPOXY CONCRETE SEALER TO THE TOPS OF THE PIERS AND ABUTMENTS, BEARING PEDESTALS, AND THE VERTICAL SURFACE OF THE BACKWALL. TO BE PAID UNDER ITEM 613000.
2. APPLY SILICONE ACRYLIC CONCRETE SEALER TO ALL EXPOSED FACES OF THE ABUTMENTS, PIERS, WINGWALLS, AND RETAINING WALLS THAT DO NOT REQUIRE AN EPOXY SEALER OR ARE WRAPPED IN FIBER REINFORCED POLYMER. TO BE PAID UNDER ITEM 613001.
3. APPLY SILICONE ACRYLIC CONCRETE SEALER TO THE BRIDGE BARRIER, APPROACH SLAB BARRIER, AND BARRIER ATTACHED TO THE WINGWALLS AND RETAINING WALLS. APPLY SILICONCE ACRYLIC CONCRETE SEALER TO THE BARRIER TO THE LIMITS SHOWN ON THE PLANS. TO BE PAID UNDER ITEM 613001.

NOTES:

1. SHALLOW SPALLS AS DEFINED BY SUBSECTION 628.03(E)-1 OF THE STANDARD SPECIFICATIONS SHALL NOT BE REPAIRED, EXCEPT AS REQUIRED FOR SURFACE PREPARATION FOR REHABILITATION OF EXISTING CONCRETE STRUCTURE, FIBER REINFORCED POLYMER WRAP (ITEM 6285XX). PAYMENT FOR SURFACE PREPARATION SHALL BE INCIDENTAL TO ITEM 6285XX.
2. WHERE CRACK AND SPALL REPAIRS ARE SHOWN CONCURRENTLY, REMOVE CONCRETE TO THE LIMITS SHOWN FOR DEEP SPALL REPAIR OR REHABILITATION OF PCC MASONRY REPAIR DETAILS . IF THE CRACK WITHIN THE SPALL AREA EXTENDS DEEPER THAN THE LIMITS OF CONCRETE REMOVAL, REPAIR THE CRACK WITHIN THE SPALL REPAIR AREA BY EPOXY INJECTION. NEXT, COMPLETE THE SPALL REPAIR. THEN, REPAIR CRACKS THAT EXTEND BEYOND THE LIMITS OF THE SPALL REPAIR AREA. SPALL REPAIRS SHALL BE PAID UNDER ITEM 628041, REHABILITATION OF PCC MASONRY SHALL BE PAID UNDER ITEM 628042, AND REPAIR OF CRACKS BY EPOXY INJECTION SHALL BE PAID UNDER ITEM 628001.

NOT FOR CONSTRUCTION

DELAWARE DEPARTMENT OF TRANSPORTATION	ADDENDUMS / REVISIONS	NOT TO SCALE	REHABILITATION OF I-95 FROM I-495 TO NORTH OF BRANDYWINE RIVER BRIDGE	CONTRACT T201407404 / COUNTY NEW CASTLE	BRIDGE NO. 1 759 059 / DESIGNED BY: RMB / CHECKED BY: DEF	CONCRETE REPAIR DETAILS	SHEET NO. 2-667 / TOTAL SHTS. 2-731

1-759
DT-01

2/8/2018 4:15:21 PM
H:\Dover\Projects\425009.98\600_CADD\05_Plans\DT01_BR1-759.dgn

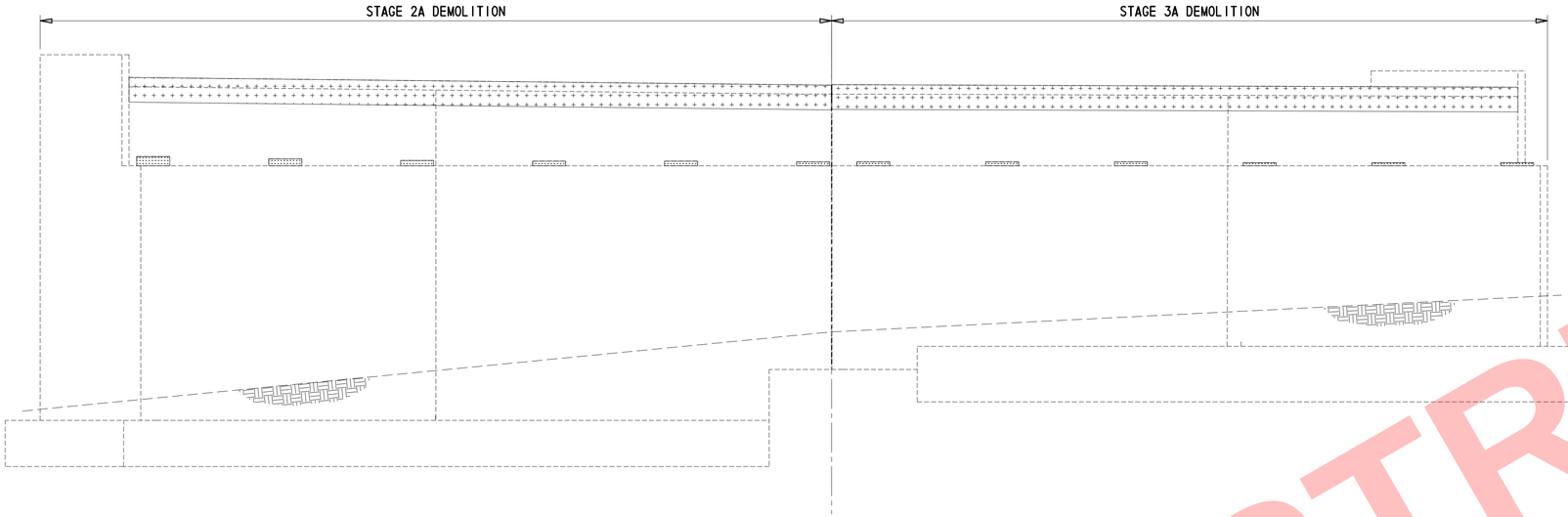

ELEVATION - ABUTMENT A

1/8" = 1'-0"

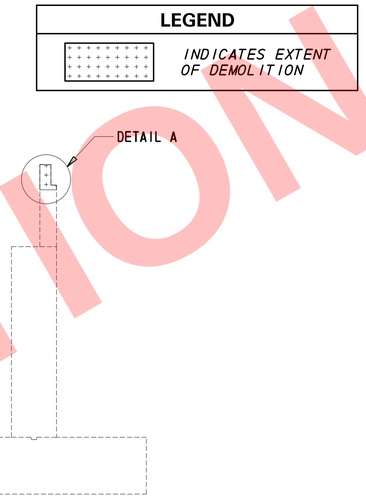

SECTION - ABUTMENT A

1/8" = 1'-0"

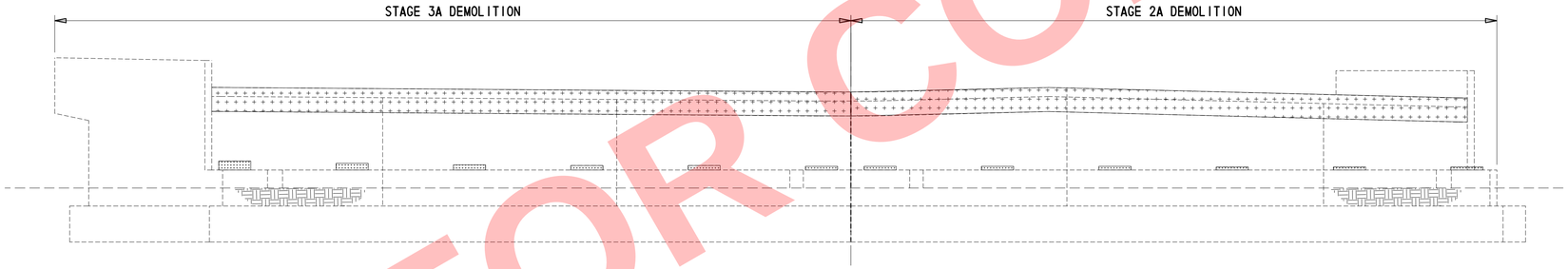

ELEVATION - ABUTMENT B

1/8" = 1'-0"

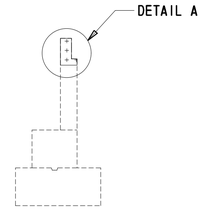

SECTION - ABUTMENT B

1/8" = 1'-0"

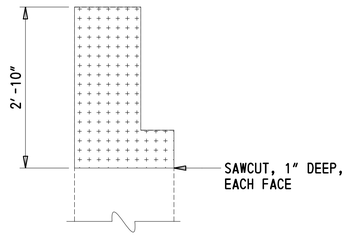

DETAIL A

3/4" = 1'-0"

NOTES:

1. AFTER SAWCUT, INTENTIONALLY ROUGHEN SURFACE AND REMOVE ALL LOOSE CONCRETE TO PROVIDE A SOUND BOND BETWEEN EXISTING AND NEW CONCRETE.
2. DO NOT DAMAGE EXISTING VERTICAL REINFORCEMENT TO REMAIN. SEE DWG. AB-01 AND AB-02 FOR DETAILS.
3. FOR LIMITS OF WINGWALL AND RETAINING WALL DEMOLITION, SEE DWG. SR-02.
4. FOR SEQUENCE OF CONSTRUCTION, SEE DWG. CS-01.

NOT FOR CONSTRUCTION

DELAWARE DEPARTMENT OF TRANSPORTATION	ADDENDUMS / REVISIONS	SCALE AS NOTED	REHABILITATION OF I-95 FROM I-495 TO NORTH OF BRANDYWINE RIVER BRIDGE	CONTRACT T201407404	BRIDGE NO. 1 759 059	DEMOLITION DETAILS - 1	1-759 SR-01
				COUNTY NEW CASTLE	DESIGNED BY: RMB		SHEET NO. 2-668
					CHECKED BY: DEF		TOTAL SHTS. 2-731

2/8/2018 4:35:21 PM
I:\Dover_Projects\425009.98\600_CADD\05_Plans\SR01_BR1-759.dgn

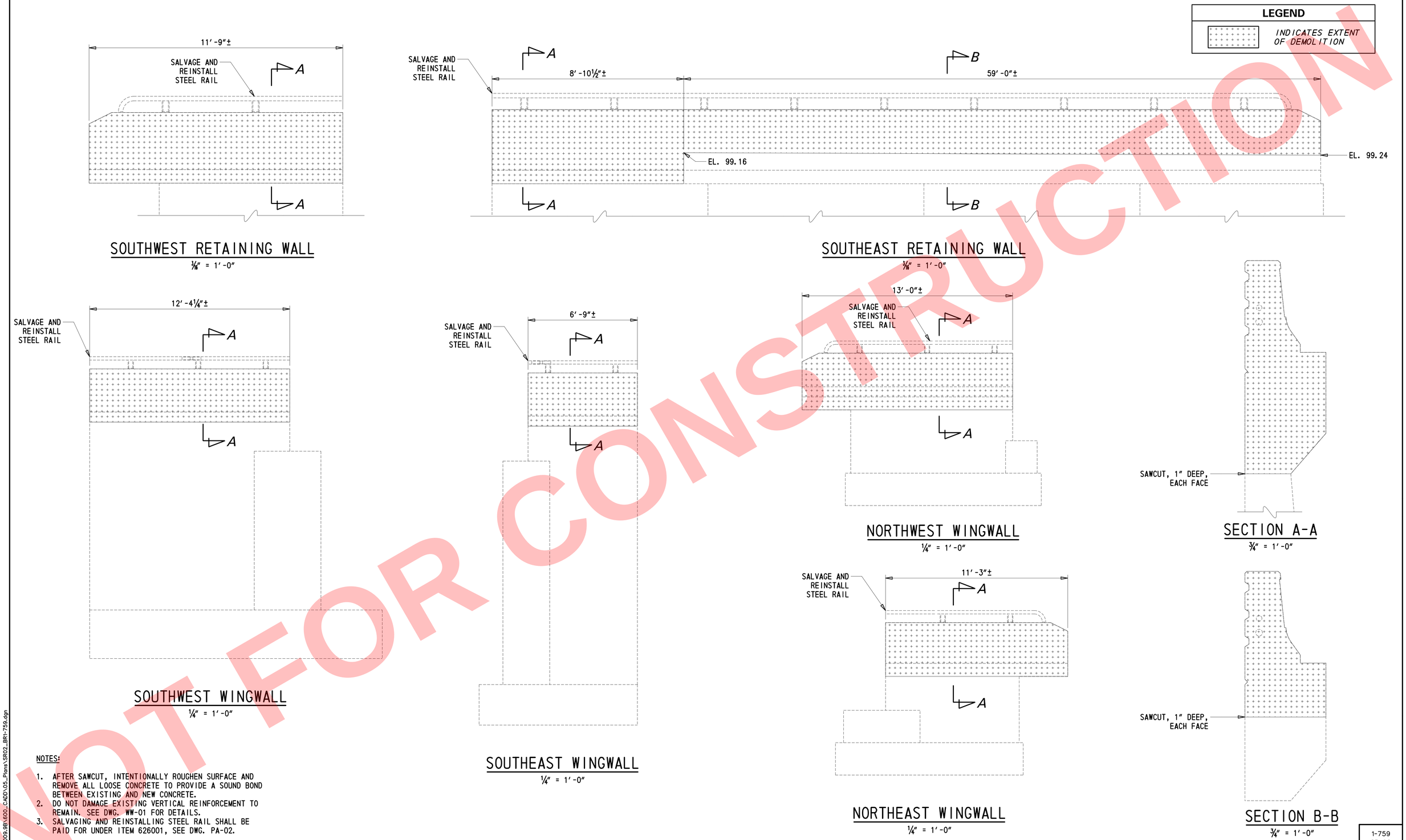

NOT FOR CONSTRUCTION

NOTES:

1. AFTER SAWCUT, INTENTIONALLY ROUGHEN SURFACE AND REMOVE ALL LOOSE CONCRETE TO PROVIDE A SOUND BOND BETWEEN EXISTING AND NEW CONCRETE.
2. DO NOT DAMAGE EXISTING VERTICAL REINFORCEMENT TO REMAIN. SEE DWG. WW-01 FOR DETAILS.
3. SALVAGING AND REINSTALLING STEEL RAIL SHALL BE PAID FOR UNDER ITEM 626001, SEE DWG. PA-02.

DELAWARE DEPARTMENT OF TRANSPORTATION	ADDENDUMS / REVISIONS	SCALE AS NOTED	REHABILITATION OF I-95 FROM I-495 TO NORTH OF BRANDYWINE RIVER BRIDGE	CONTRACT T201407404	BRIDGE NO. 1 759 059	DEMOLITION DETAILS – 2	1-759 SR-02
				COUNTY NEW CASTLE	DESIGNED BY: RMB		SHEET NO. 2-669
					CHECKED BY: DEF		TOTAL SHTS. 2-731

2/8/2018 4:35:25 PM
T:\Dover\Projects\425009.9B\600_CADD\05_Plans\SR02_BR1-759.dgn

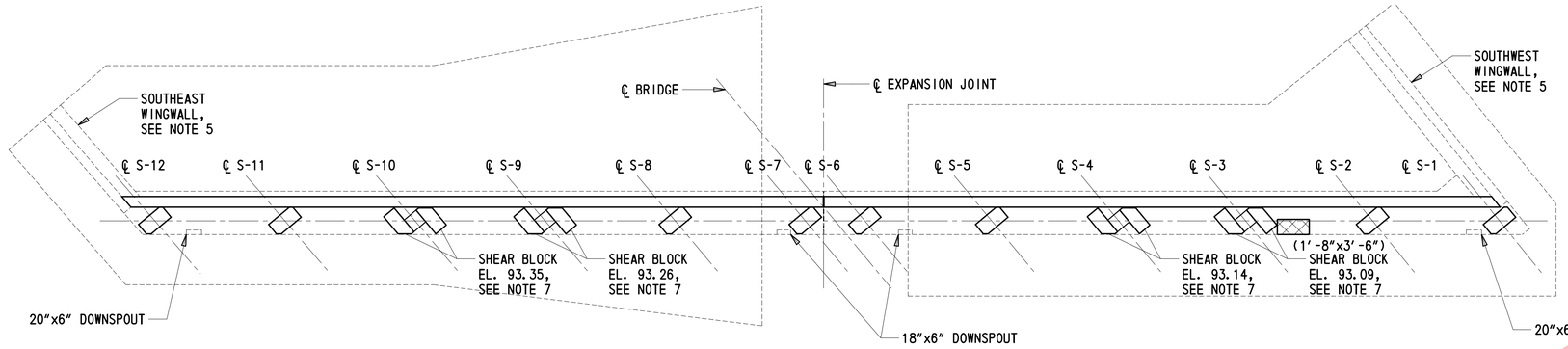

PLAN - ABUTMENT A

1/8″ = 1′-0″

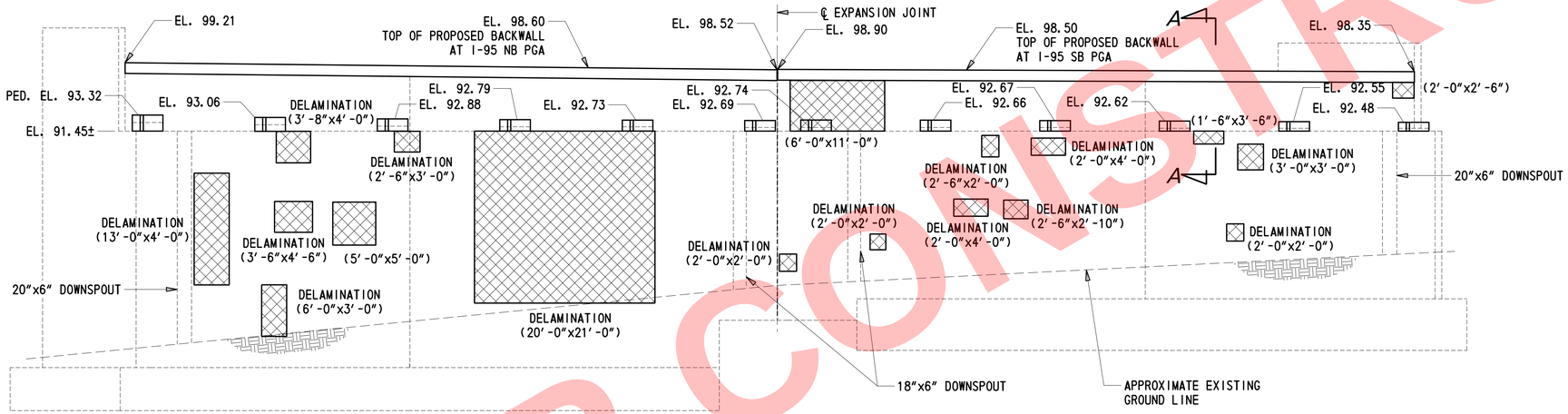

ELEVATION - ABUTMENT A

1/8″ = 1′-0″

NOTE: SHEAR BLOCKS NOT SHOWN FOR CLARITY

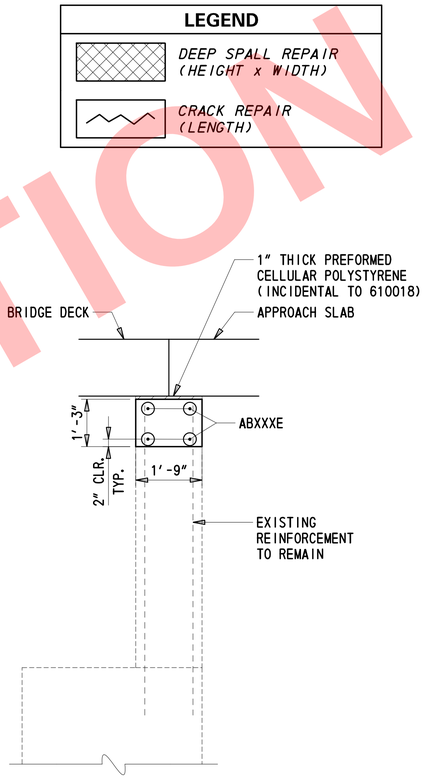

SECTION A-A

1/2″ = 1′-0″

NOTES:

1. ENGINEER SHALL CONFIRM CONTRACTOR DELINEATION OF CRACK AND SPALL AREAS PRIOR TO COMMENCEMENT OF REPAIRS.
2. FOR DEEP SPALL REPAIR DETAILS, SEE DWG. DT-01.
3. EXISTING PEDESTALS NOT SHOWN FOR CLARITY. EXISTING PEDESTALS SHALL BE REMOVED TO THE TOP OF EXISTING ABUTMENT.
4. FOR PROPOSED PEDESTAL DETAILS, SEE DWG. PR-27.
5. FOR ABUTMENT DEMO DETAILS, SEE DWG. SR-01.
6. FOR WINGWALL DEMO DETAILS, SEE DWG. SR-02. FOR WINGWALL RECONSTRUCTION DETAILS, SEE DWG. WW-01.
7. FOR SHEAR BLOCK DETAILS, SEE DWG. AB-02.

RECONSTRUCTION NOTES:

1. APPLY AN EPOXY BONDING COMPOUND BETWEEN EXISTING AND NEW CONCRETE (INCIDENTAL TO ITEM 610002).
2. CUT EXISTING VERTICAL REINFORCEMENT TO REMAIN 2″ BELOW TOP OF PROPOSED TOP OF BACKWALL ELEVATION.
3. EXISTING REINFORCING STEEL TO REMAIN SHALL BE CLEANED BY GRIT BLASTING (INCIDENTAL TO ITEM 610002).

CONCRETE REPAIR QUANTITIES		
ABUTMENT A		PAID FOR UNDER ITEM NO.
DEEP SPALL REPAIR	63 CF	628041/628042
CRACK REPAIR	0 LF	628001

NOT FOR CONSTRUCTION

2/8/2018 4:35:27 PM
F:\Users\Projects\425009.98\600_CADD\05_Plans\AB01_BR1-759.dgn

DELAWARE DEPARTMENT OF TRANSPORTATION

ADDENDUMS / REVISIONS

SCALE AS NOTED

REHABILITATION OF I-95 FROM I-495 TO NORTH OF BRANDYWINE RIVER BRIDGE

CONTRACT	BRIDGE NO. 1 759 059
T201407404	DESIGNED BY: RMB
COUNTY	CHECKED BY: DEF
NEW CASTLE	

ABUTMENT A - DETAILS

1-759 AB-01
SHEET NO. 2-670
TOTAL SHTS. 2-731

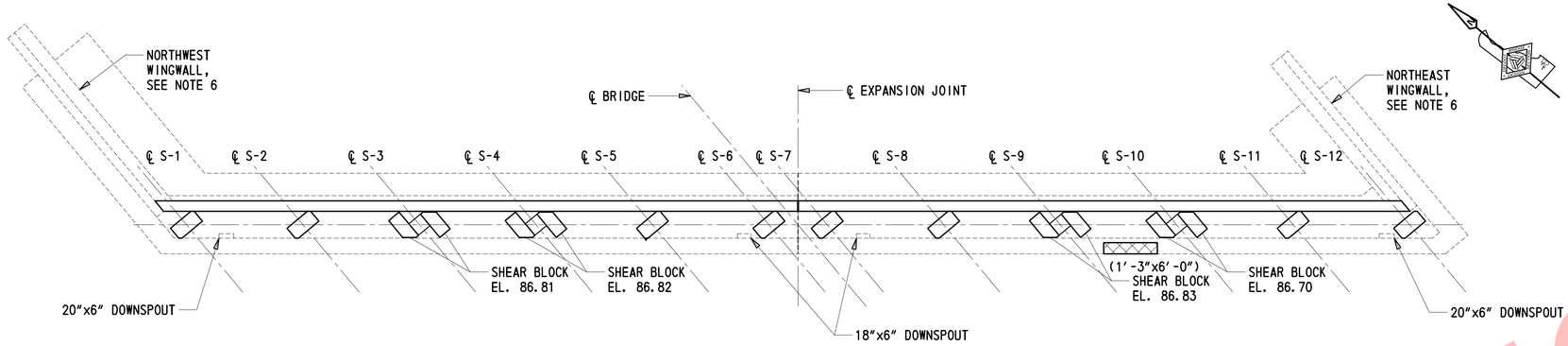

PLAN - ABUTMENT B

1/8″ = 1′-0″

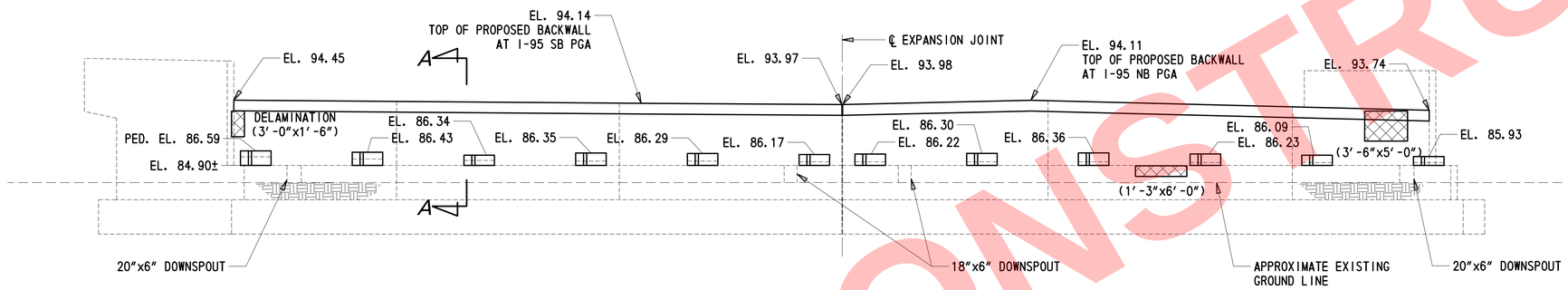

ELEVATION - ABUTMENT B

1/8″ = 1′-0″

NOTE: SHEAR BLOCKS NOT SHOWN FOR CLARITY

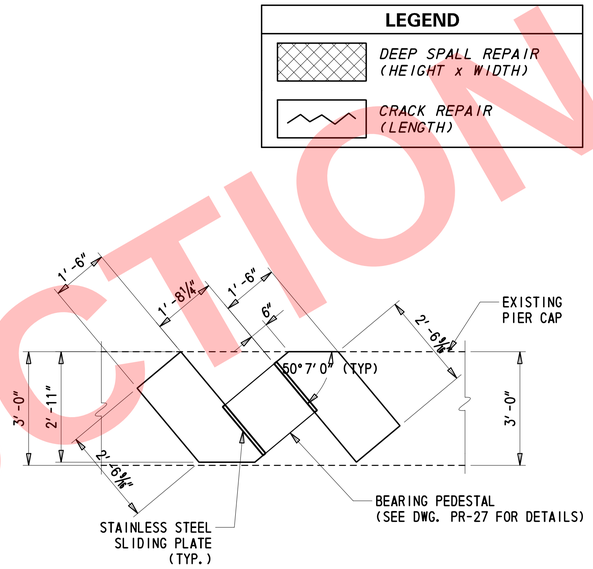

SHEAR BLOCK DETAIL

1/2″ = 1′-0″

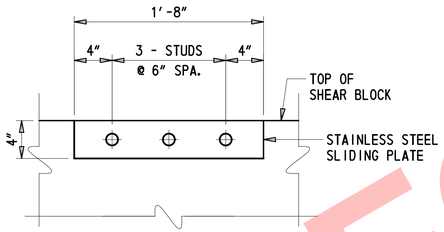

SECTION D-D

1½″ = 1′-0″

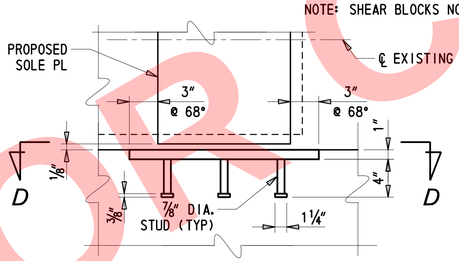

SLIDING PLATE DETAIL

1½″ = 1′-0″

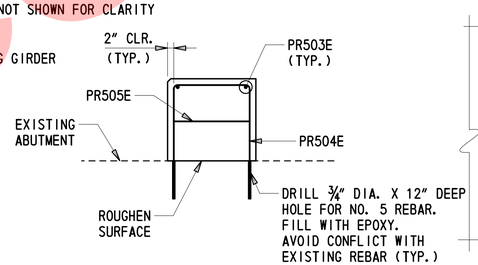

SECTION C-C

1/2″ = 1′-0″

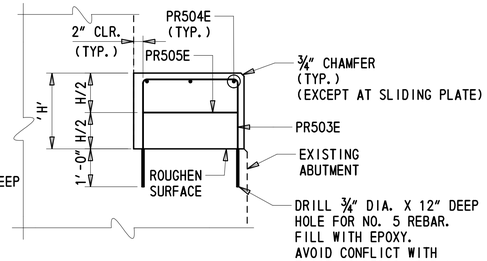

SECTION B-B

1/2″ = 1′-0″

SHEAR BLOCK REINFORCING

1/2″ = 1′-0″

NOTES:

1. ENGINEER SHALL CONFIRM CONTRACTOR DELINEATION OF CRACK AND SPALL AREAS PRIOR TO COMMENCEMENT OF REPAIRS.
2. FOR DEEP SPALL REPAIR DETAILS, SEE DWG. DT-01.
3. EXISTING PEDESTALS NOT SHOWN FOR CLARITY. EXISTING PEDESTALS SHALL BE REMOVED TO THE TOP OF EXISTING ABUTMENT.
4. FOR PROPOSED PEDESTAL DETAILS, SEE DWG. PR-27.
5. FOR ABUTMENT DEMO DETAILS, SEE DWG. SR-01.
6. FOR WINGWALL DEMO DETAILS, SEE DWG. SR-02. FOR WINGWALL RECONSTRUCTION DETAILS, SEE DWG. PA-04.
7. FOR ABUTMENT SECTION A-A, SEE DWG. AB-01.
8. THE STAINLESS STEEL SLIDING PLATE IS INCIDENTAL TO ITEM 610002. SEE DWG. PN-01 FOR MATERIAL PROPERTIES.

CONCRETE REPAIR QUANTITIES		
ABUTMENT B		PAID FOR UNDER ITEM NO.
DEEP SPALL REPAIR	10 CF	628041/628042
CRACK REPAIR	0 LF	628001

NOT FOR CONSTRUCTION

2/8/2018 4:35:29 PM
I:\Dover\Projects\425009.98\600_CADD\05_Plans\AB02_BR1-759.dgn

DELAWARE DEPARTMENT OF TRANSPORTATION

ADDENDUMS / REVISIONS

SCALE AS NOTED

REHABILITATION OF I-95 FROM I-495 TO NORTH OF BRANDYWINE RIVER BRIDGE

CONTRACT T201407404
COUNTY NEW CASTLE
BRIDGE NO. 1 759 059
DESIGNED BY: RMB
CHECKED BY: DEF

ABUTMENT B - DETAILS

1-759 AB-02
SHEET NO. 2-671
TOTAL SHTS. 2-731

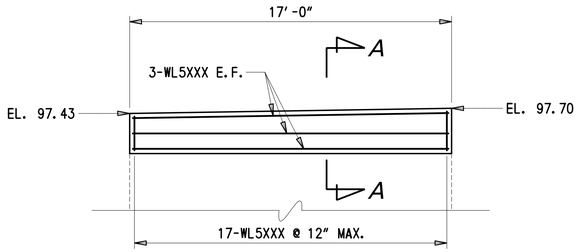

SOUTHWEST RETAINING WALL - ELEVATION

3/16″ = 1′-0″

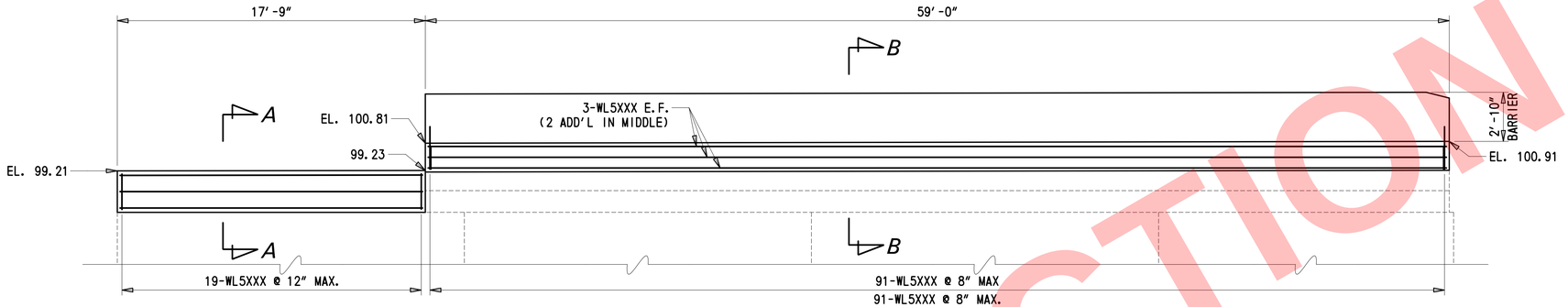

SOUTHEAST RETAINING WALL - ELEVATION

3/16″ = 1′-0″

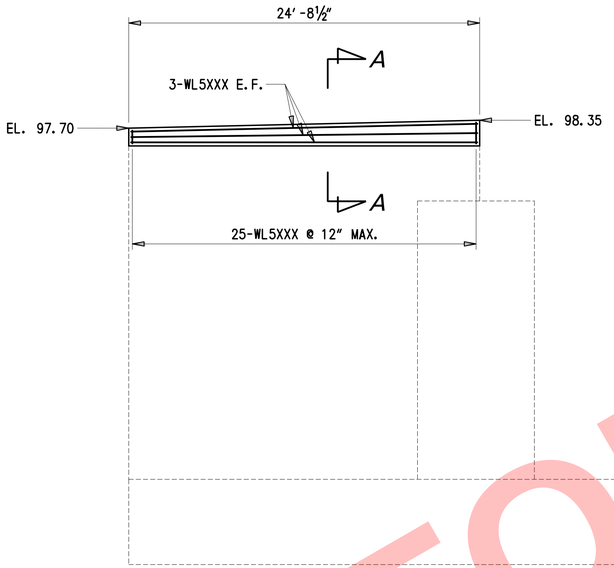

SOUTHWEST WINGWALL - ELEVATION

1/4″ = 1′-0″

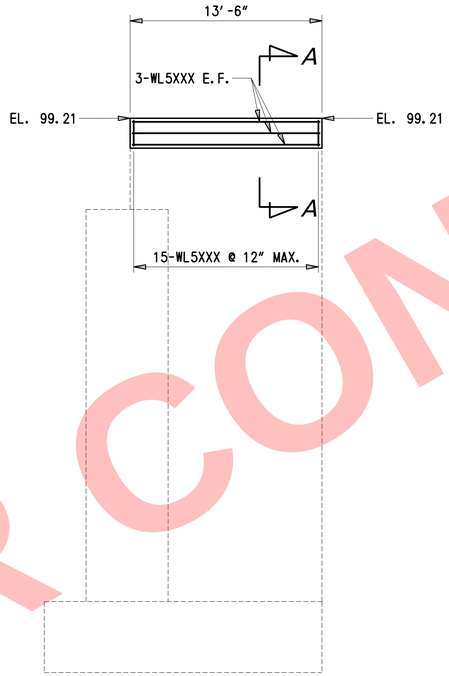

SOUTHEAST WINGWALL - ELEVATION

1/4″ = 1′-0″

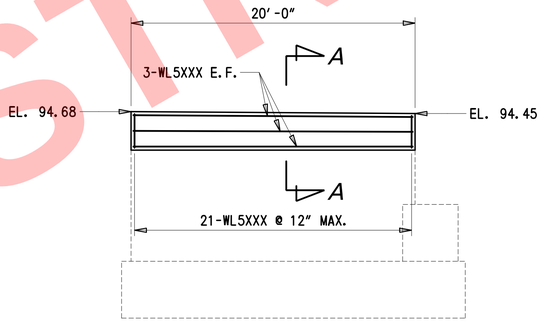

NORTHWEST WINGWALL - ELEVATION

1/4″ = 1′-0″

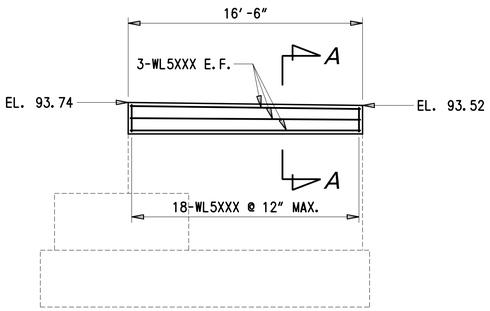

NORTHEAST WINGWALL - ELEVATION

1/4″ = 1′-0″

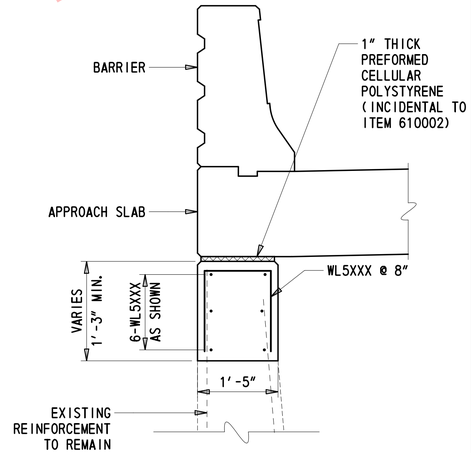

SECTION A-A

3/4″ = 1′-0″

BARRIER, APPROACH SLAB, AND POLYSTYRENE NOT SHOWN IN ELEVATION VIEWS

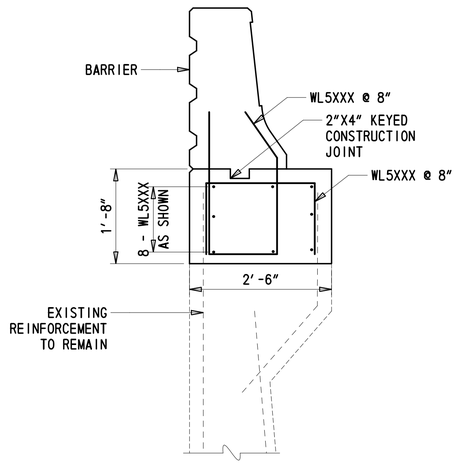

SECTION B-B

3/4″ = 1′-0″

NOTES:

1. FOR WINGWALL AND RETAINING WALL DEMO DETAILS, SEE DWG. SR-02.
2. FOR BARRIER DETAILS, SEE DWG. PA-01 THROUGH PA-04.
3. FOR APPROACH SLAB DETAILS SEE DWG. AS-01 THROUGH AS-07.

RECONSTRUCTION NOTES:

1. APPLY AN EPOXY BONDING COMPOUND BETWEEN EXISTING AND NEW CONCRETE (INCIDENTAL TO ITEM 610002).
2. CUT EXISTING VERTICAL REINFORCEMENT TO REMAIN 2″ BELOW TOP OF PROPOSED TOP OF WINGWALL/RETAINING WALL ELEVATION.
3. EXISTING REINFORCING STEEL TO REMAIN SHALL BE CLEANED BY GRIT BLASTING (INCIDENTAL TO ITEM 610002).

NOT FOR CONSTRUCTION

DELAWARE
DEPARTMENT OF TRANSPORTATION

ADDENDUMS / REVISIONS

SCALE AS NOTED

REHABILITATION OF I-95
FROM I-495 TO NORTH OF
BRANDYWINE RIVER BRIDGE

CONTRACT	BRIDGE NO. 1 759 059
T201407404	DESIGNED BY: RMB
COUNTY	CHECKED BY: DEF
NEW CASTLE	

WINGWALL AND
RETAINING WALL
DETAILS

1-759 WW-01
SHEET NO. 2-672
TOTAL SHTS. 2-731

2/8/2018 4:35:31 PM
I:\Dover\Projects\425009.98\600_CADD\05_Plans\WW01_BR1-759.dgn

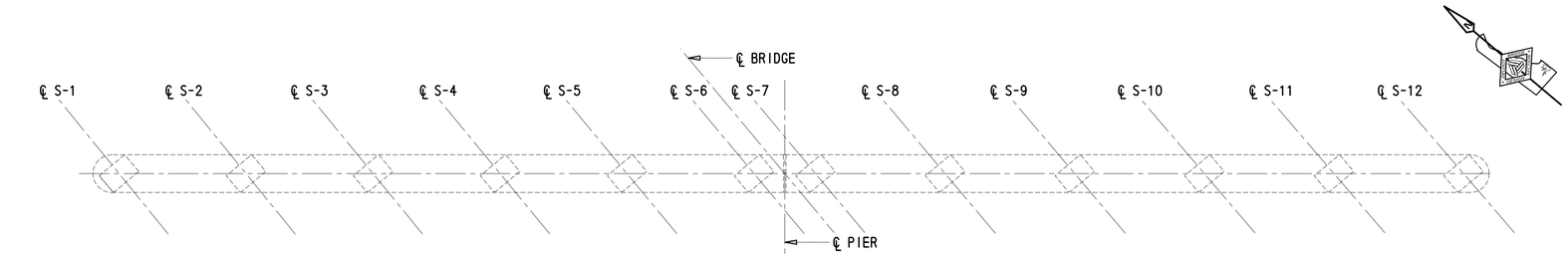

PLAN
1/8" = 1'-0"

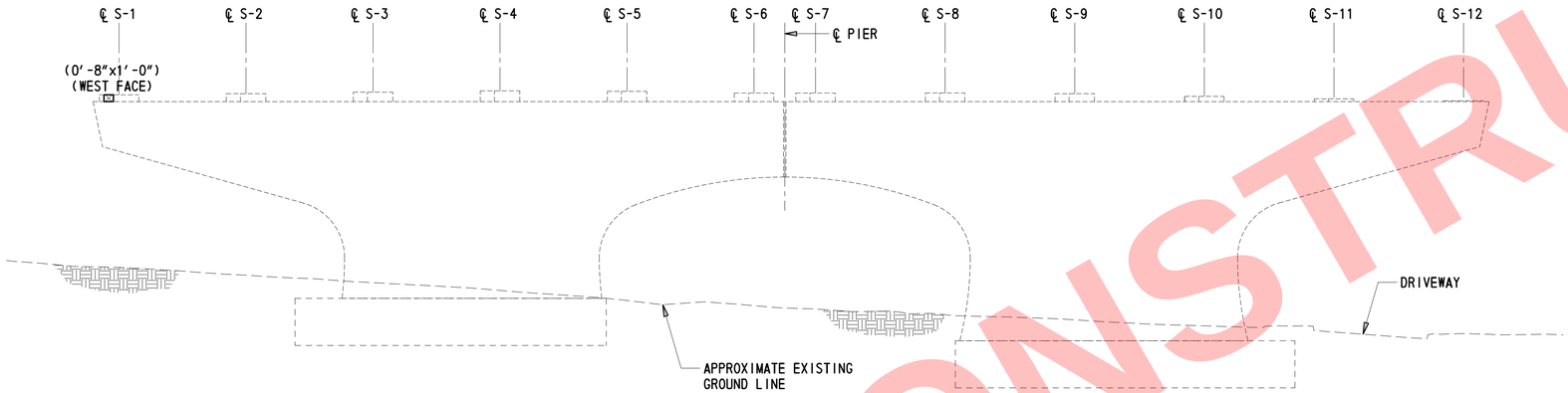

ELEVATION
1/8" = 1'-0"

LEGEND

- DEEP SPALL REPAIR (HEIGHT x WIDTH)
- CRACK REPAIR (LENGTH)

CONCRETE REPAIR QUANTITIES		
PIER 1		PAID FOR UNDER ITEM NO.
DEEP SPALL REPAIR	1 CF	628041/628042
CRACK REPAIR	0 LF	628001

NOTES:

1. ENGINEER SHALL CONFIRM CONTRACTOR DELINEATION OF CRACK AND SPALL AREAS PRIOR TO COMMENCEMENT OF REPAIRS.
2. FOR DEEP SPALL REPAIR DETAILS, SEE DWG. DT-01.
3. FOR PIER STRENGTHENING DETAILS, SEE DWG. PR-25.

NOT FOR CONSTRUCTION

2/8/2018 4:35:33 PM
T:\Dover\Projects\425009.98\600_CADD\05_Plans\PR01_BR1-759.dgn

DELAWARE
DEPARTMENT OF TRANSPORTATION

ADDENDUMS / REVISIONS

SCALE AS NOTED

REHABILITATION OF I-95
FROM I-495 TO NORTH OF
BRANDYWINE RIVER BRIDGE

CONTRACT T201407404
COUNTY NEW CASTLE
BRIDGE NO. 1 759 059
DESIGNED BY: DJC
CHECKED BY: DEF

PIER 1, SOUTH FACE
DETAILS

1-759
PR-01
SHEET NO. 2-673
TOTAL SHTS. 2-731

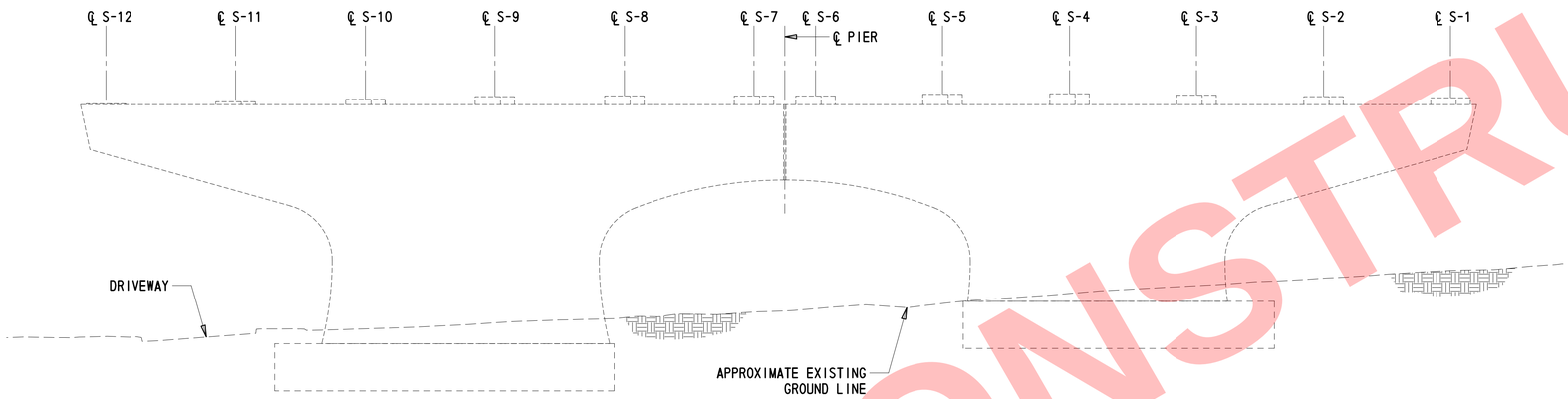

ELEVATION
1/8" = 1'-0"

LEGEND

- DEEP SPALL REPAIR (HEIGHT x WIDTH)
- CRACK REPAIR (LENGTH)

CONCRETE REPAIR QUANTITIES		
PIER 1		PAID FOR UNDER ITEM NO.
DEEP SPALL REPAIR	0 CF	628041/628042
CRACK REPAIR	0 LF	628001

NOTES:

1. ENGINEER SHALL CONFIRM CONTRACTOR DELINEATION OF CRACK AND SPALL AREAS PRIOR TO COMMENCEMENT OF REPAIRS.
2. FOR DEEP SPALL REPAIR DETAILS, SEE DWG. DT-01.
3. FOR PIER STRENGTHENING DETAILS, SEE DWG. PR-25.
4. SHEET INCLUDED PENDING DESIGN LEVEL INSPECTION.

NOT FOR CONSTRUCTION

2/8/2018 4:35:34 PM
T:\Dover\Projects\425009.9B\600_CADD\05_Plans\PR02_BR1-759.dgn

DELAWARE DEPARTMENT OF TRANSPORTATION	ADDENDUMS / REVISIONS	SCALE AS NOTED	REHABILITATION OF I-95 FROM I-495 TO NORTH OF BRANDYWINE RIVER BRIDGE	CONTRACT T201407404	BRIDGE NO. 1 759 059	PIER 1, NORTH FACE DETAILS	1-759 PR-02
				COUNTY NEW CASTLE	DESIGNED BY: DJC		SHEET NO. 2-674
					CHECKED BY: DEF		TOTAL SHTS. 2-731

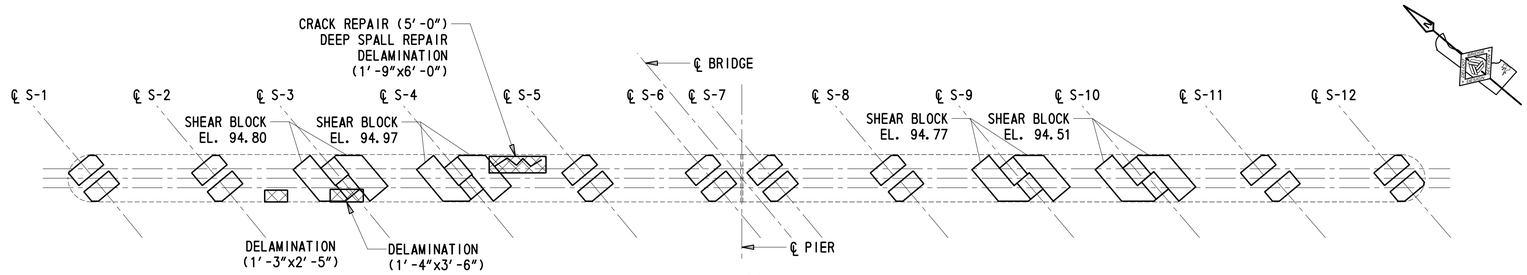

PLAN

1/8" = 1'-0"

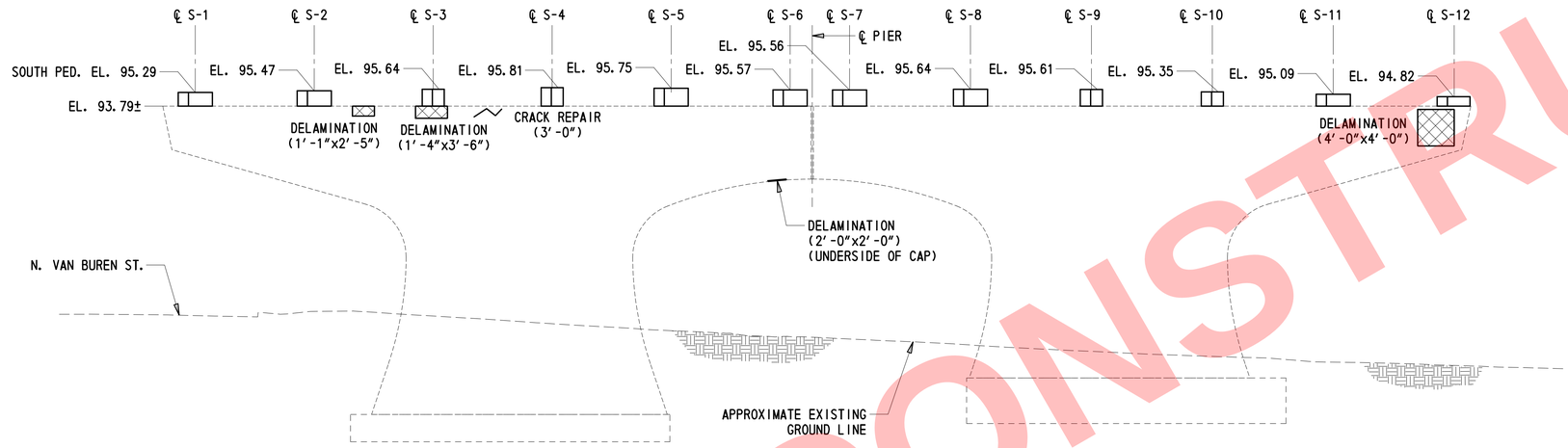

ELEVATION

1/8" = 1'-0"

NOTE: SHEAR BLOCKS & NORTH PEDESTALS NOT SHOWN FOR CLARITY

CONCRETE REPAIR QUANTITIES		
PIER 2		*PAID FOR UNDER ITEM NO.*
DEEP SPALL REPAIR	*11 CF*	*628041/628042*
CRACK REPAIR	*8 LF*	*628001*

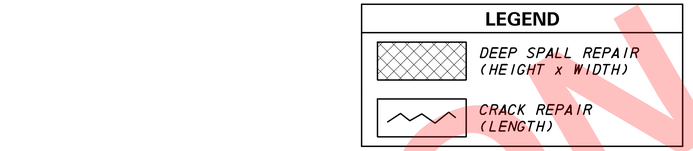

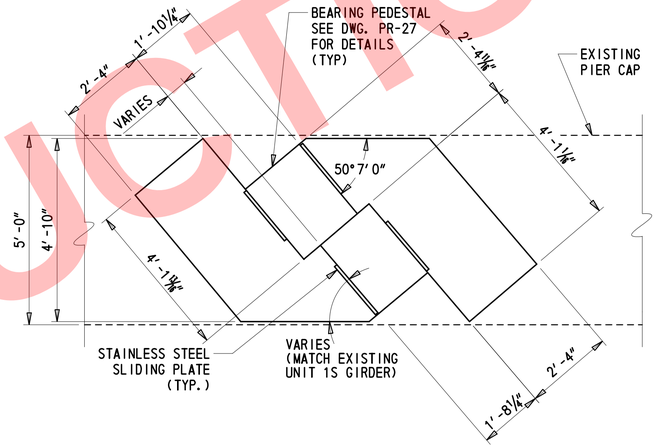

SHEAR BLOCK DETAIL

1/2" = 1'-0"

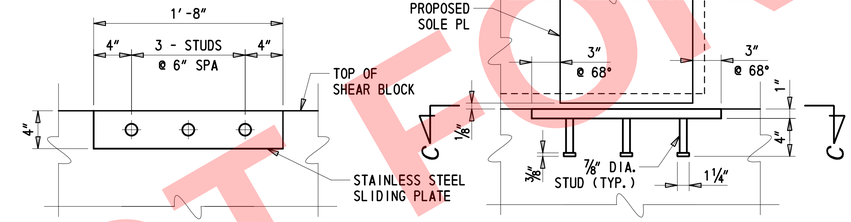

SECTION C-C

1 1/2" = 1'-0"

SLIDING PLATE DETAIL

1 1/2" = 1'-0"

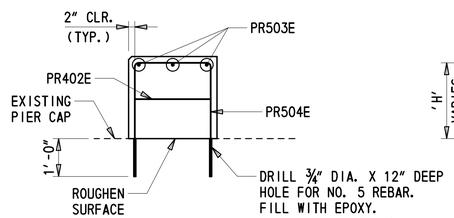

SECTION B-B

1/2" = 1'-0"

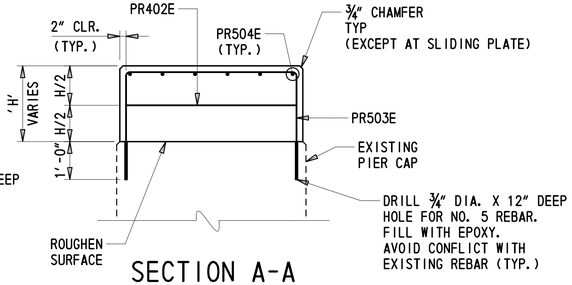

SECTION A-A

1/2" = 1'-0"

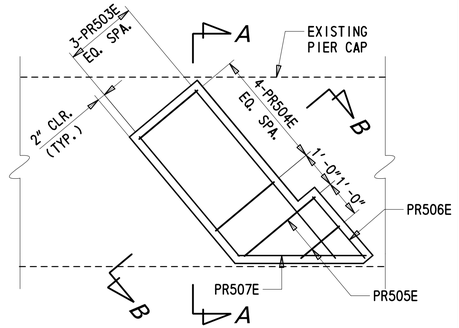

SHEAR BLOCK REINFORCING

1/2" = 1'-0"

NOTES:

1. ENGINEER SHALL CONFIRM CONTRACTOR DELINEATION OF CRACK AND SPALL AREAS PRIOR TO COMMENCEMENT OF REPAIRS.
2. FOR DEEP SPALL REPAIR DETAILS, SEE DWG. DT-01.
3. EXISTING PEDESTALS NOT SHOWN FOR CLARITY. EXISTING PEDESTALS SHALL BE REMOVED TO THE TOP OF EXISTING PIER CAP.
4. FOR PROPOSED PEDESTAL DETAILS, SEE DWG. PR-27.
5. NORTH PEDESTALS NOT SHOWN FOR CLARITY, SEE DWG. PR-04.
6. FOR PIER STRENGTHENING DETAILS, SEE DWG. PR-25.
7. STAINLESS STEEL SLIDING PLATES ARE INCIDENTAL TO ITEM 610002. SEE DWG. PN-01 FOR MATERIAL PROPERTIES.

NOT FOR CONSTRUCTION

2/8/2018 4:35:36 PM
F:\Dover\Projects\25009.98\600_CADD\05_Plans\PR03_BR1-759.dgn

DELAWARE
DEPARTMENT OF TRANSPORTATION

ADDENDUMS / REVISIONS

SCALE AS NOTED

REHABILITATION OF I-95
FROM I-495 TO NORTH OF
BRANDYWINE RIVER BRIDGE

CONTRACT	BRIDGE NO. 1 759 059
T201407404	DESIGNED BY: DJC
COUNTY	CHECKED BY: DEF
NEW CASTLE	

PIER 2, SOUTH FACE
DETAILS

1-759 PR-03
SHEET NO. 2-675
TOTAL SHTS. 2-731

NOT FOR CONSTRUCTION

LEGEND

- DEEP SPALL REPAIR (HEIGHT x WIDTH)
- CRACK REPAIR (LENGTH)

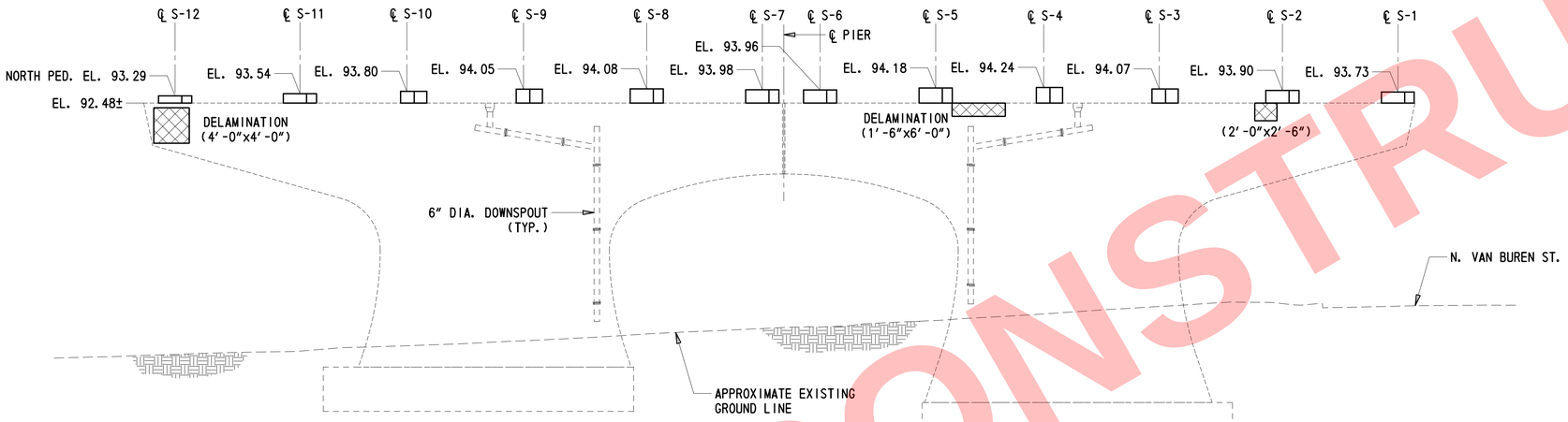

ELEVATION

1/8″ = 1′-0″

NOTE: SHEAR BLOCKS & SOUTH PEDESTALS NOT SHOWN FOR CLARITY

CONCRETE REPAIR QUANTITIES		
PIER 2		PAID FOR UNDER ITEM NO.
DEEP SPALL REPAIR	8 CF	628041/628042
CRACK REPAIR	0 LF	628001

NOTES:

1. ENGINEER SHALL CONFIRM CONTRACTOR DELINEATION OF CRACK AND SPALL AREAS PRIOR TO COMMENCEMENT OF REPAIRS.
2. FOR DEEP SPALL REPAIR DETAILS, SEE DWG. DT-01.
3. EXISTING PEDESTALS NOT SHOWN FOR CLARITY. EXISTING PEDESTALS SHALL BE REMOVED TO THE TOP OF EXISTING PIER CAP.
4. FOR PROPOSED PEDESTAL DETAILS, SEE DWG. PR-27.
5. SOUTH PEDESTALS NOT SHOWN FOR CLARITY, SEE DWG. PR-03.
6. SHEAR BLOCK ELEVATION AND DETIALS NOT SHOWN FOR CLARITY, SEE DWG. PR-03.
7. FOR PIER STRENGTHENING DETAILS, SEE DWG. PR-25.

DELAWARE DEPARTMENT OF TRANSPORTATION

ADDENDUMS / REVISIONS

SCALE AS NOTED

REHABILITATION OF I-95 FROM I-495 TO NORTH OF BRANDYWINE RIVER BRIDGE

CONTRACT T201407404

COUNTY NEW CASTLE

BRIDGE NO. 1 759 059

DESIGNED BY: DJC

CHECKED BY: DEF

PIER 2, NORTH FACE DETAILS

1-759 PR-04

SHEET NO. 2-676

TOTAL SHTS. 2-731

2/8/2018 4:35:38 PM
I:\Dover\Projects\425009.98\600_CADD\05_Plans\PR04_BR1-759.dgn

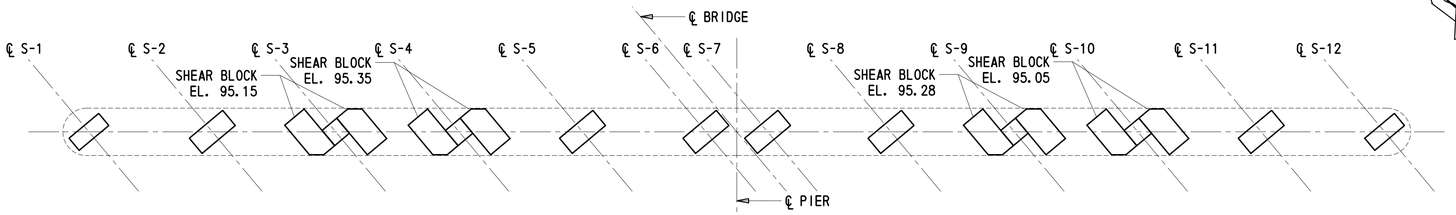

PLAN

1/8" = 1'-0"

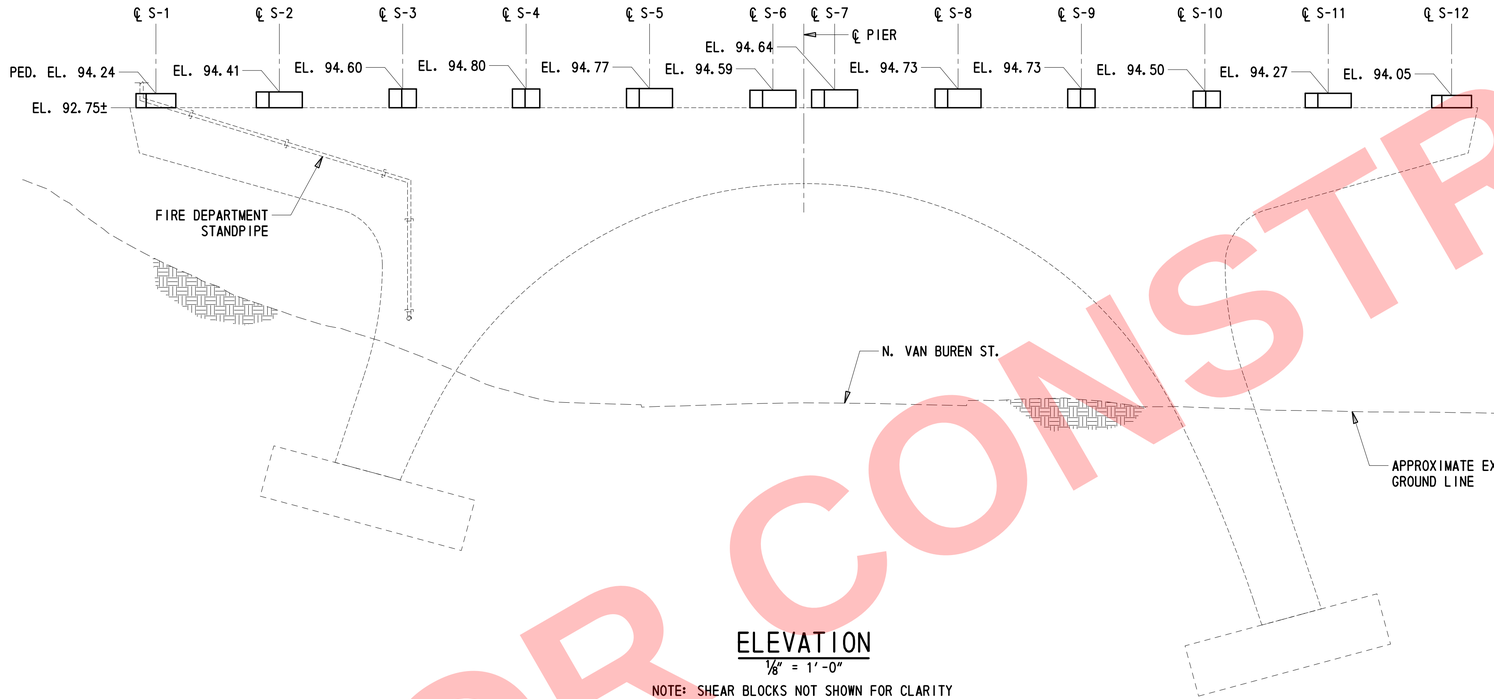

ELEVATION

1/8" = 1'-0"

NOTE: SHEAR BLOCKS NOT SHOWN FOR CLARITY

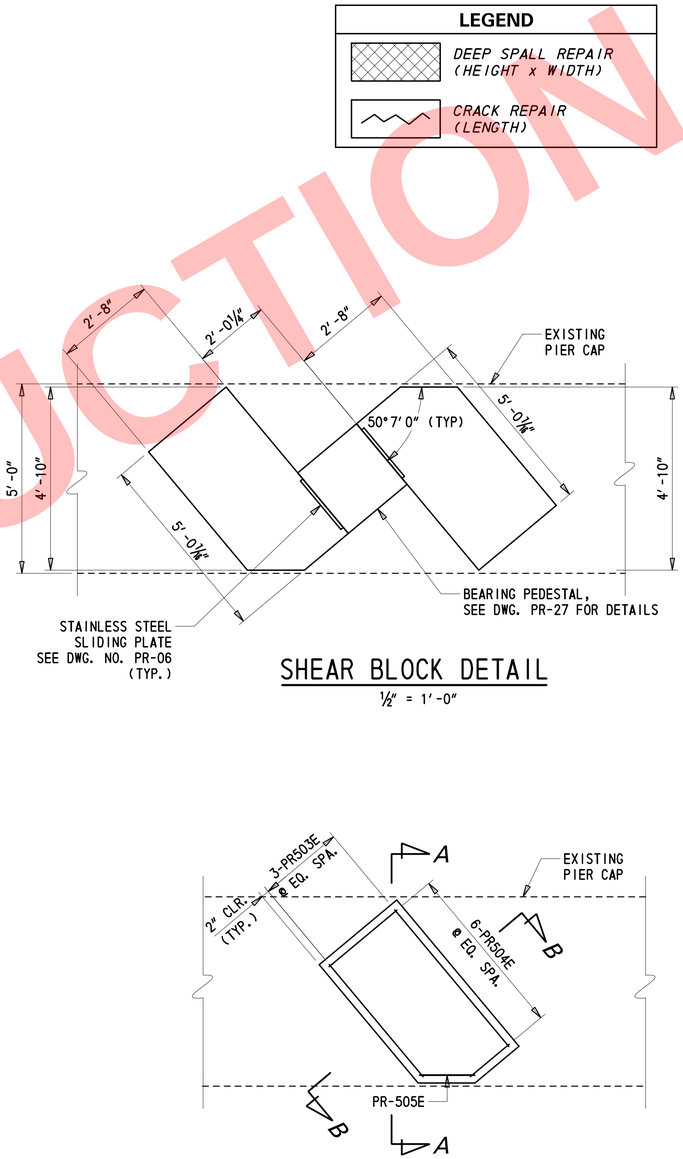

SHEAR BLOCK DETAIL

½" = 1'-0"

SHEAR BLOCK REINFORCING

½" = 1'-0"

CONCRETE REPAIR QUANTITIES		
PIER 3		*PAID FOR UNDER ITEM NO.*
DEEP SPALL REPAIR	*0 CF*	*628041/628042*
CRACK REPAIR	*0 LF*	*628001*

NOTES:

1. ENGINEER SHALL CONFIRM CONTRACTOR DELINEATION OF CRACK AND SPALL AREAS PRIOR TO COMMENCEMENT OF REPAIRS.
2. FOR DEEP SPALL REPAIR DETAILS, SEE DWG. DT-01.
3. EXISTING PEDESTALS NOT SHOWN FOR CLARITY. EXISTING PEDESTALS SHALL BE REMOVED TO THE TOP OF EXISTING PIER CAP.
4. FOR PROPOSED PEDESTAL DETAILS, SEE DWG. PR-27.
5. FOR PIER STRENGTHENING DETAILS, SEE DWG. PR-26.

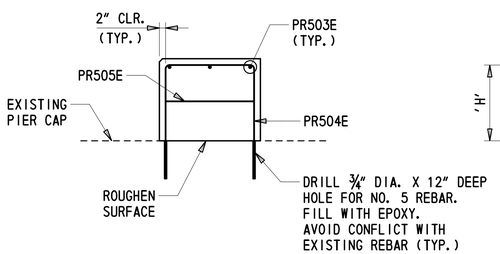

SECTION B-B

½" = 1'-0"

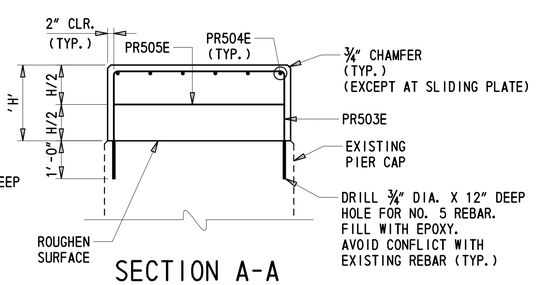

SECTION A-A

½" = 1'-0"

NOT FOR CONSTRUCTION

DELAWARE DEPARTMENT OF TRANSPORTATION	ADDENDUMS / REVISIONS	SCALE AS NOTED	REHABILITATION OF I-95 FROM I-495 TO NORTH OF BRANDYWINE RIVER BRIDGE	CONTRACT T201407404	BRIDGE NO. 1 759 059	PIER 3, SOUTH FACE DETAILS
				COUNTY NEW CASTLE	DESIGNED BY: DJC	
					CHECKED BY: DEF	

1-759
PR-05

SHEET NO. 2-677

TOTAL SHTS. 2-731

2/8/2018 4:35:39 PM
F:\Dover\Projects\425009.98\600_CADD\05_Plans\PR05_BR1-759.dgn

NOT FOR CONSTRUCTION

LEGEND

- DEEP SPALL REPAIR (HEIGHT x WIDTH)
- CRACK REPAIR (LENGTH)

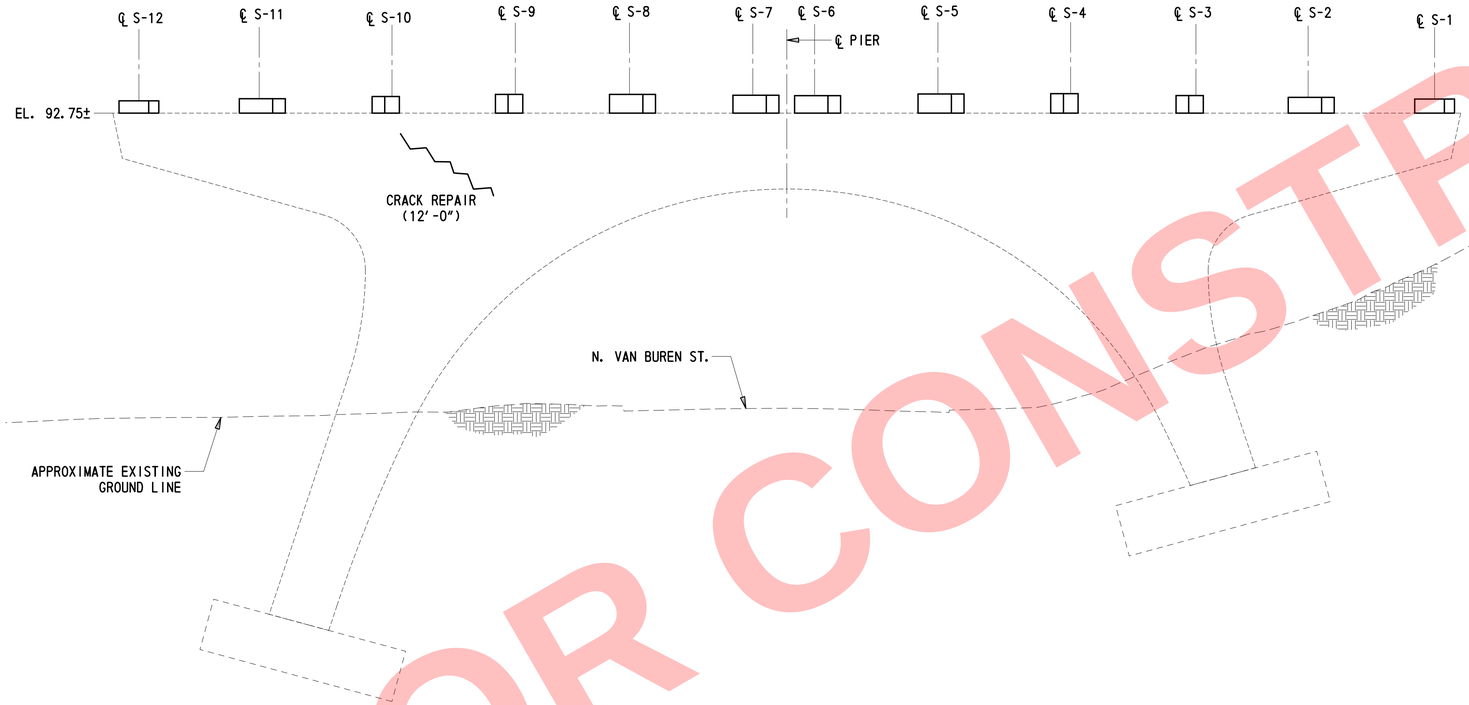

ELEVATION

1/8″ = 1′-0″

NOTE: SHEAR BLOCKS NOT SHOWN FOR CLARITY

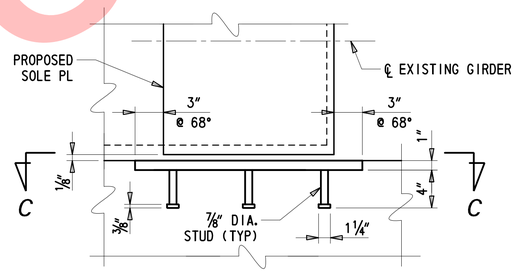

SLIDING PLATE DETAIL

1 1/2″ = 1′-0″

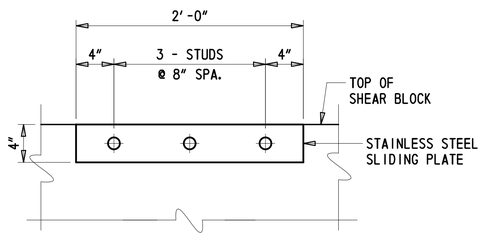

SECTION C-C

1 1/2″ = 1′-0″

CONCRETE REPAIR QUANTITIES		
PIER 3		*PAID FOR UNDER ITEM NO.*
DEEP SPALL REPAIR	*0 CF*	*628041/628042*
CRACK REPAIR	*12 LF*	*628001*

NOTES:

1. ENGINEER SHALL CONFIRM CONTRACTOR DELINEATION OF CRACK AND SPALL AREAS PRIOR TO COMMENCEMENT OF REPAIRS.
2. FOR DEEP SPALL REPAIR DETAILS, SEE DWG. DT-01.
3. EXISTING PEDESTALS NOT SHOWN FOR CLARITY. EXISTING PEDESTALS SHALL BE REMOVED TO THE TOP OF EXISTING PIER CAP.
4. FOR PROPOSED PEDESTAL DETAILS, SEE DWG. PR-27.
5. SHEAR BLOCK ELEVATION AND DETIALS NOT SHOWN FOR CLARITY, SEE DWG. PR-05.
6. FOR PIER STRENGTHENING DETAILS, SEE DWG. PR-26.
7. STAINLESS STEEL SLIDING PLATES ARE INCIDENTAL TO ITEM 610002. SEE PN-01 FOR MATERIAL PROPERTIES.

2/8/2018 4:35:41 PM
F:\Dover\Projects\425009.98\600_CADD\05_Plans\PR06_BR1-759.dgn

DELAWARE DEPARTMENT OF TRANSPORTATION

ADDENDUMS / REVISIONS

SCALE AS NOTED

REHABILITATION OF I-95 FROM I-495 TO NORTH OF BRANDYWINE RIVER BRIDGE

CONTRACT T201407404

COUNTY NEW CASTLE

BRIDGE NO. 1 759 059

DESIGNED BY: DJC

CHECKED BY: DEF

PIER 3, NORTH FACE DETAILS

1-759
PR-06

SHEET NO. 2-678

TOTAL SHTS. 2-731

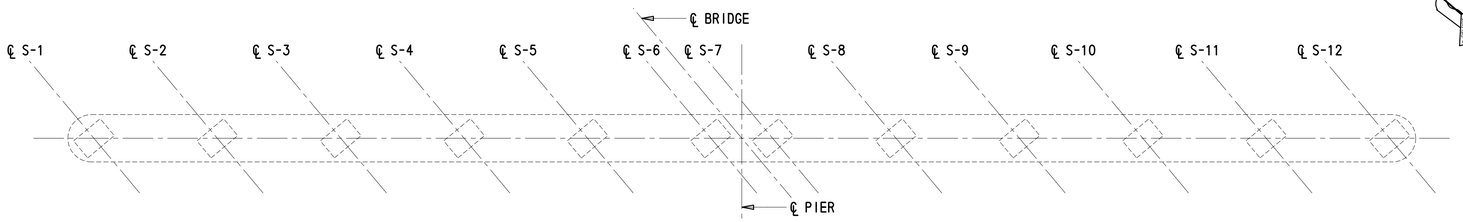

PLAN

1/8" = 1'-0"

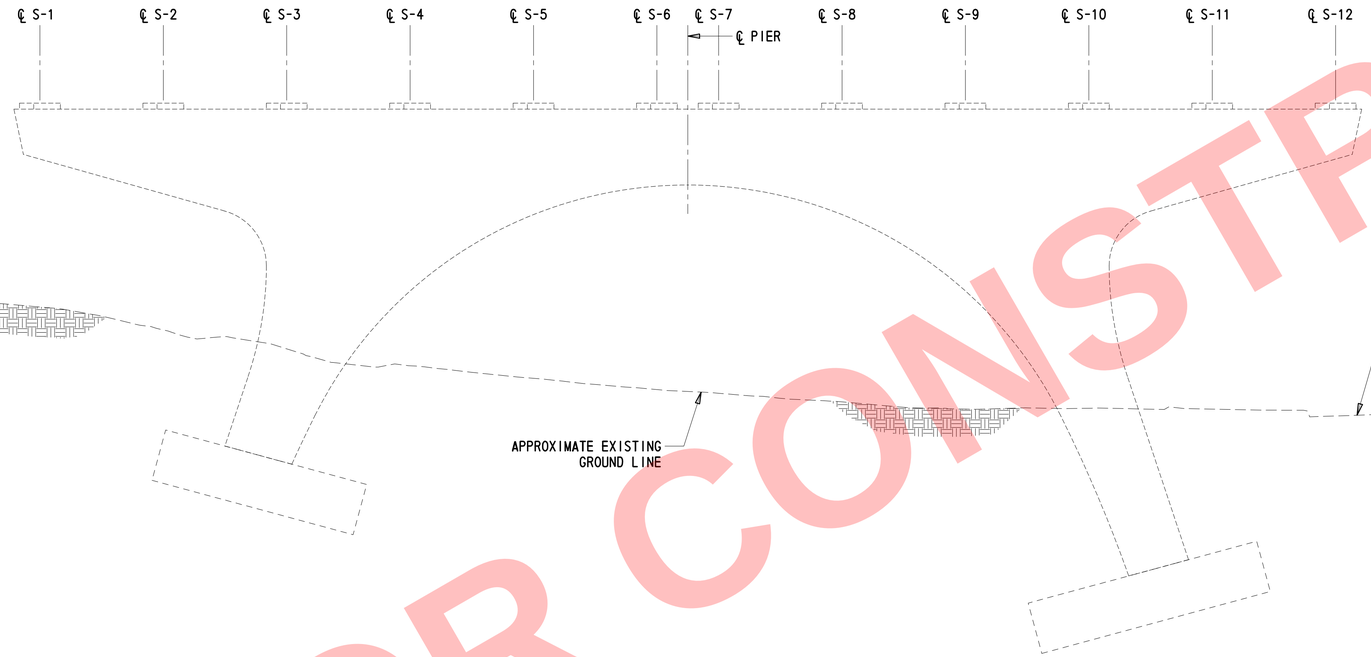

ELEVATION

1/8" = 1'-0"

LEGEND

- DEEP SPALL REPAIR (HEIGHT x WIDTH)
- CRACK REPAIR (LENGTH)

CONCRETE REPAIR QUANTITIES		
PIER 4		PAID FOR UNDER ITEM NO.
DEEP SPALL REPAIR	0 CF	628041/628042
CRACK REPAIR	0 LF	628001

NOTES:

1. ENGINEER SHALL CONFIRM CONTRACTOR DELINEATION OF CRACK AND SPALL AREAS PRIOR TO COMMENCEMENT OF REPAIRS.
2. FOR DEEP SPALL REPAIR DETAILS, SEE DWG. DT-01.
3. FOR PIER STRENGTHENING DETAILS, SEE DWG. PR-26.
4. SHEET INCLUDED PENDING DESIGN LEVEL INSPECTION.

NOT FOR CONSTRUCTION

2/8/2018 4:35:43 PM
I:\Docs\Projects\425009.98\600_CADD\05_Plans\PR07_BR1-759.dgn

DELAWARE DEPARTMENT OF TRANSPORTATION

ADDENDUMS / REVISIONS

SCALE AS NOTED

REHABILITATION OF I-95 FROM I-495 TO NORTH OF BRANDYWINE RIVER BRIDGE

CONTRACT T201407404

COUNTY NEW CASTLE

BRIDGE NO. 1 759 059

DESIGNED BY: DJC

CHECKED BY: DEF

PIER 4, SOUTH FACE DETAILS

1-759
PR-07

SHEET NO. 2-679

TOTAL SHTS. 2-731

NOT FOR CONSTRUCTION

LEGEND

- DEEP SPALL REPAIR (HEIGHT x WIDTH)
- CRACK REPAIR (LENGTH)

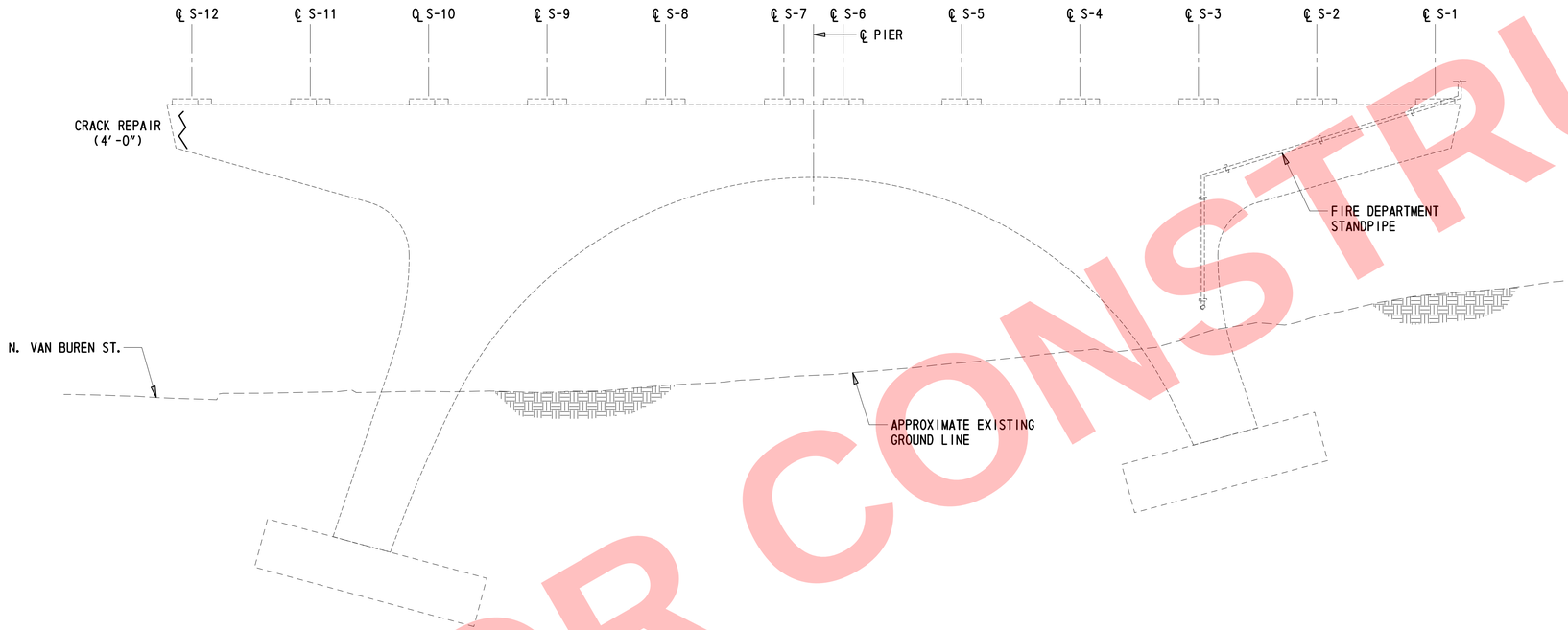

ELEVATION
1/8" = 1'-0"

CONCRETE REPAIR QUANTITIES		
PIER 4		PAID FOR UNDER ITEM NO.
DEEP SPALL REPAIR	0 CF	628041/628042
CRACK REPAIR	4 LF	628001

NOTES:

1. ENGINEER SHALL CONFIRM CONTRACTOR DELINEATION OF CRACK AND SPALL AREAS PRIOR TO COMMENCEMENT OF REPAIRS.
2. FOR DEEP SPALL REPAIR DETAILS, SEE DWG. DT-01.
3. FOR PIER STRENGTHENING DETAILS, SEE DWG. PR-26.

2/8/2018 4:35:44 PM
F:\Dover\Projects\425009.98\600_CADD\05_Plans\PR08_BRI-759.dgn

DELAWARE DEPARTMENT OF TRANSPORTATION

ADDENDUMS / REVISIONS

SCALE AS NOTED

REHABILITATION OF I-95 FROM I-495 TO NORTH OF BRANDYWINE RIVER BRIDGE

CONTRACT	BRIDGE NO.	1 759 059
T201407404	DESIGNED BY:	DJC
COUNTY	CHECKED BY:	DEF
NEW CASTLE		

PIER 4, NORTH FACE DETAILS

1-759 PR-08	
SHEET NO.	2-680
TOTAL SHTS.	2-731

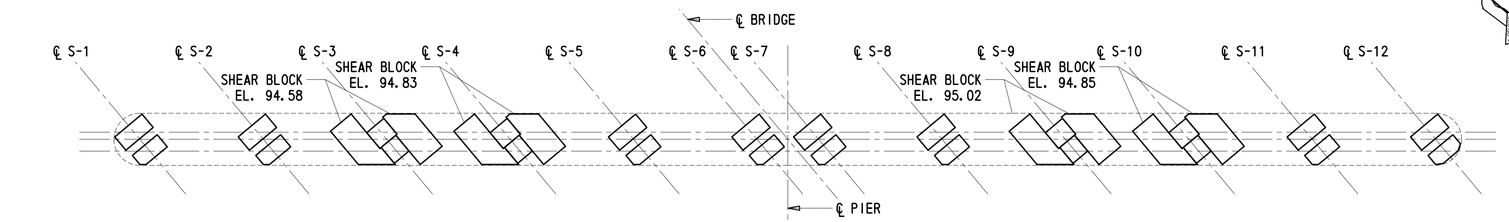

PLAN

1⁄8″ = 1′-0″

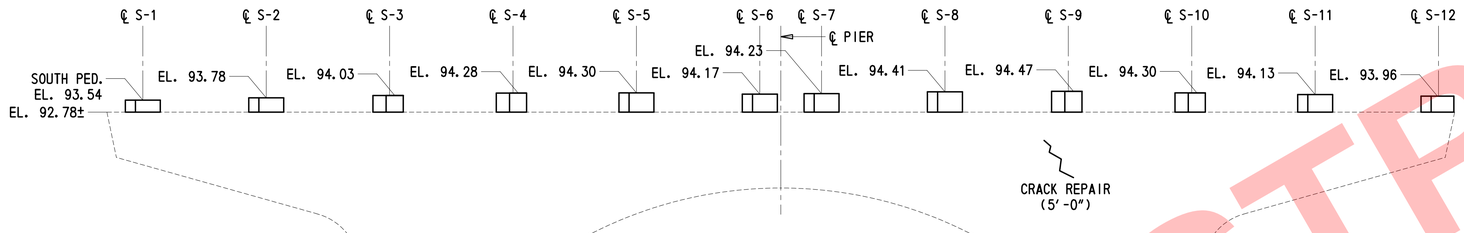

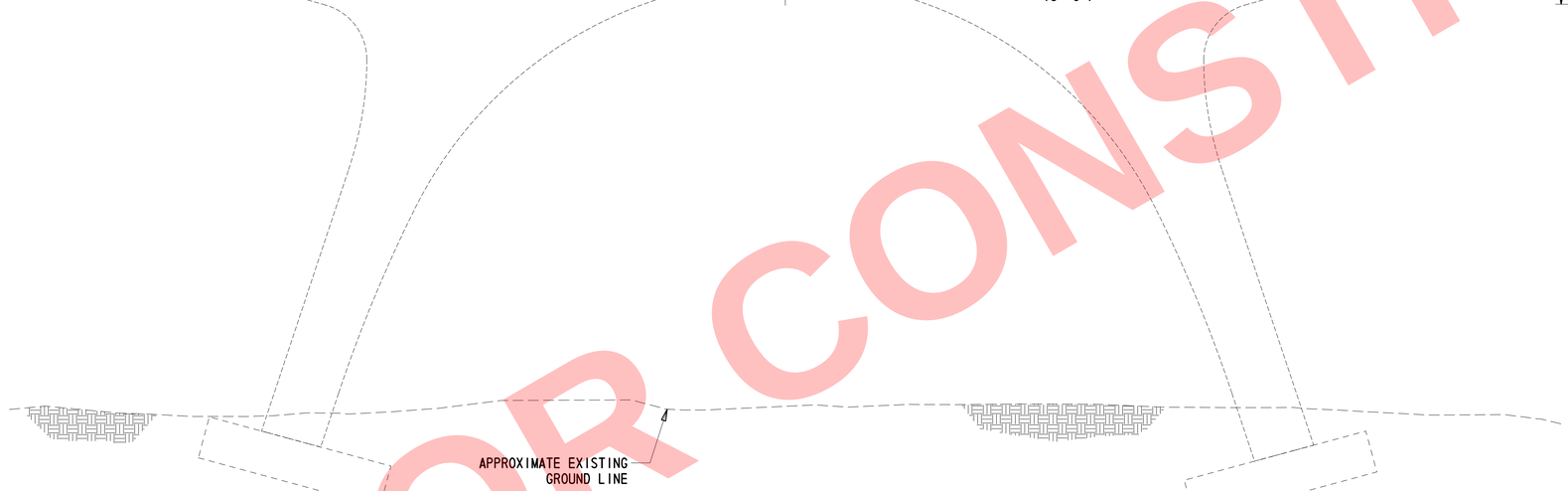

ELEVATION

1⁄8″ = 1′-0″

NOTE: SHEAR BLOCKS & NORTH PEDESTALS NOT SHOWN FOR CLARITY

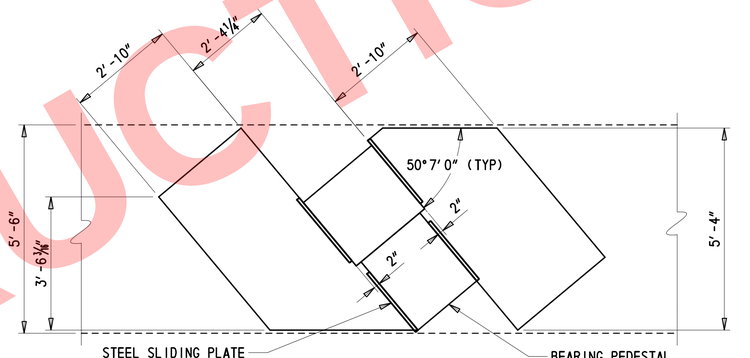

SHEAR BLOCK DETAIL

½″ = 1′-0″

CONCRETE REPAIR QUANTITIES		
PIER 5		*PAID FOR UNDER ITEM NO.*
DEEP SPALL REPAIR	*0 CF*	*628041/628042*
CRACK REPAIR	*5 LF*	*628001*

NOTES:

1. ENGINEER SHALL CONFIRM CONTRACTOR DELINEATION OF CRACK AND SPALL AREAS PRIOR TO COMMENCEMENT OF REPAIRS.
2. FOR DEEP SPALL REPAIR DETAILS, SEE DWG. DT-01.
3. EXISTING PEDESTALS NOT SHOWN FOR CLARITY. EXISTING PEDESTALS SHALL BE REMOVED TO THE TOP OF EXISTING PIER CAP.
4. FOR PROPOSED PEDESTAL DETAILS, SEE DWG. PR-27.
5. NORTH PEDESTALS NOT SHOWN FOR CLARITY, SEE DWG. PR-10.
6. FOR PIER STRENGTHENING DETAILS, SEE DWG. PR-26.

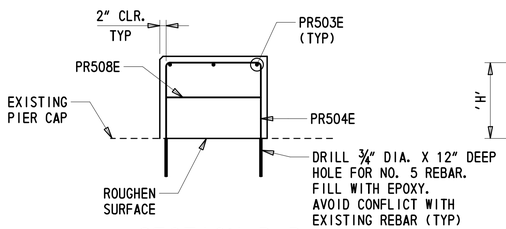

SECTION B-B

½″ = 1′-0″

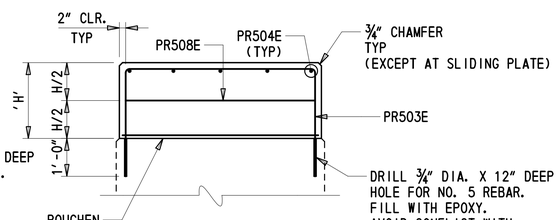

SECTION A-A

½″ = 1′-0″

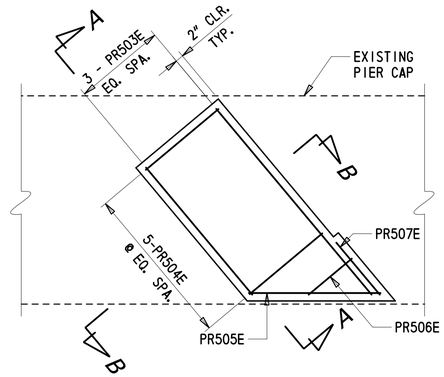

SHEAR BLOCK REINFORCING

½″ = 1′-0″

NOT FOR CONSTRUCTION

2/8/2018 4:35:46 PM
f:\dover\Projects\25009.98\600_CADD\05_Plans\PR09_BR1-759.dgn

DELAWARE DEPARTMENT OF TRANSPORTATION	ADDENDUMS / REVISIONS	SCALE AS NOTED	REHABILITATION OF I-95 FROM I-495 TO NORTH OF BRANDYWINE RIVER BRIDGE	CONTRACT T201407404	BRIDGE NO. 1 759 059	PIER 5, SOUTH FACE DETAILS	1-759 PR-09
				COUNTY NEW CASTLE	DESIGNED BY: DJC		SHEET NO. 2-681
					CHECKED BY: DEF		TOTAL SHTS. 2-731

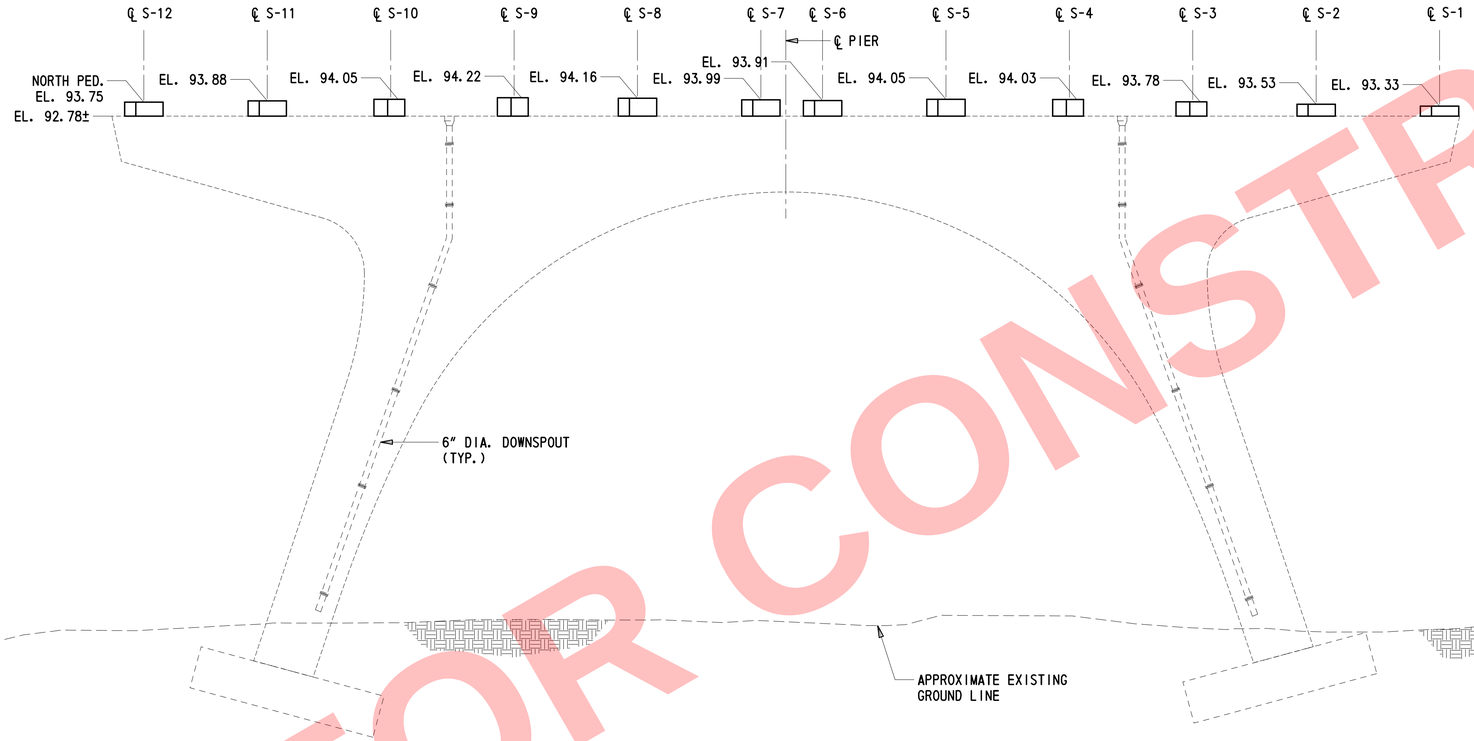

ELEVATION

1/8" = 1'-0"

NOTE: SHEAR BLOCKS & NORTH PEDESTALS NOT SHOWN FOR CLARITY

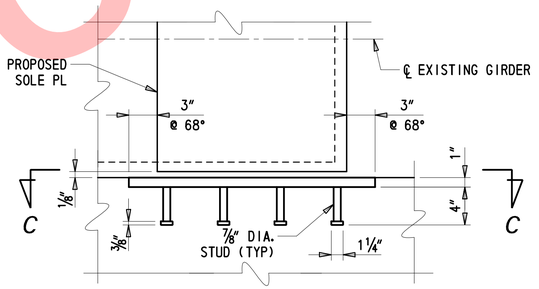

SLIDING PLATE DETAIL

1½" = 1'-0"

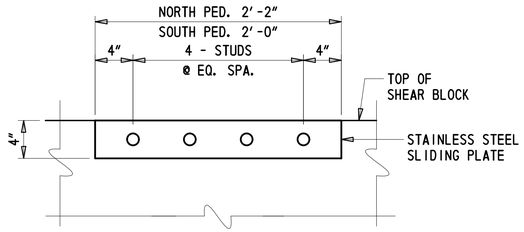

SECTION C-C

1½" = 1'-0"

NOTES:

1. ENGINEER SHALL CONFIRM CONTRACTOR DELINEATION OF CRACK AND SPALL AREAS PRIOR TO COMMENCEMENT OF REPAIRS.
2. FOR DEEP SPALL REPAIR DETAILS, SEE DWG. DT-01.
3. EXISTING PEDESTALS NOT SHOWN FOR CLARITY. EXISTING PEDESTALS SHALL BE REMOVED TO THE TOP OF EXISTING PIER CAP.
4. FOR PROPOSED PEDESTAL DETAILS, SEE DWG. PR-27.
5. NORTH PEDESTALS NOT SHOWN FOR CLARITY, SEE DWG. PR-09.
6. SHEAR BLOCK ELEVATION AND DETIALS NOT SHOWN FOR CLARITY, SEE DWG. PR-09.
7. FOR PIER STRENGTHENING DETAILS, SEE DWG. PR-26.
8. STAINLESS STEEL SLIDING PLATES ARE INCIDENTAL TO ITEM 610002. SEE DWG. PN-01 FOR MATERIAL PROPERTIES.

CONCRETE REPAIR QUANTITIES		
PIER 5		PAID FOR UNDER ITEM NO.
DEEP SPALL REPAIR	0 CF	628041/628042
CRACK REPAIR	0 LF	628001

NOT FOR CONSTRUCTION

DELAWARE DEPARTMENT OF TRANSPORTATION	ADDENDUMS / REVISIONS	SCALE AS NOTED	REHABILITATION OF I-95 FROM I-495 TO NORTH OF BRANDYWINE RIVER BRIDGE	CONTRACT T201407404	BRIDGE NO. 1 759 059	PIER 5, NORTH FACE DETAILS
				COUNTY NEW CASTLE	DESIGNED BY: DJC	
					CHECKED BY: DEF	

1-759 PR-10 | SHEET NO. 2-682 | TOTAL SHTS. 2-731

2/8/2018 4435548 PM
T:\Dover\Projects\425009.98\600_CADD\05_Plans\PR10_BR1-759.dgn

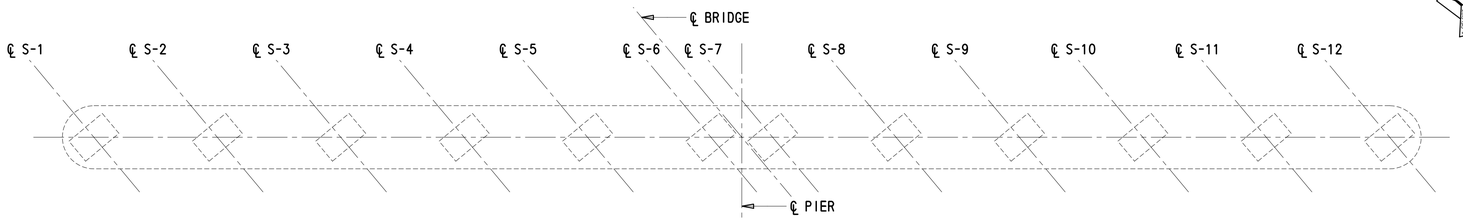

PLAN

1/8" = 1'-0"

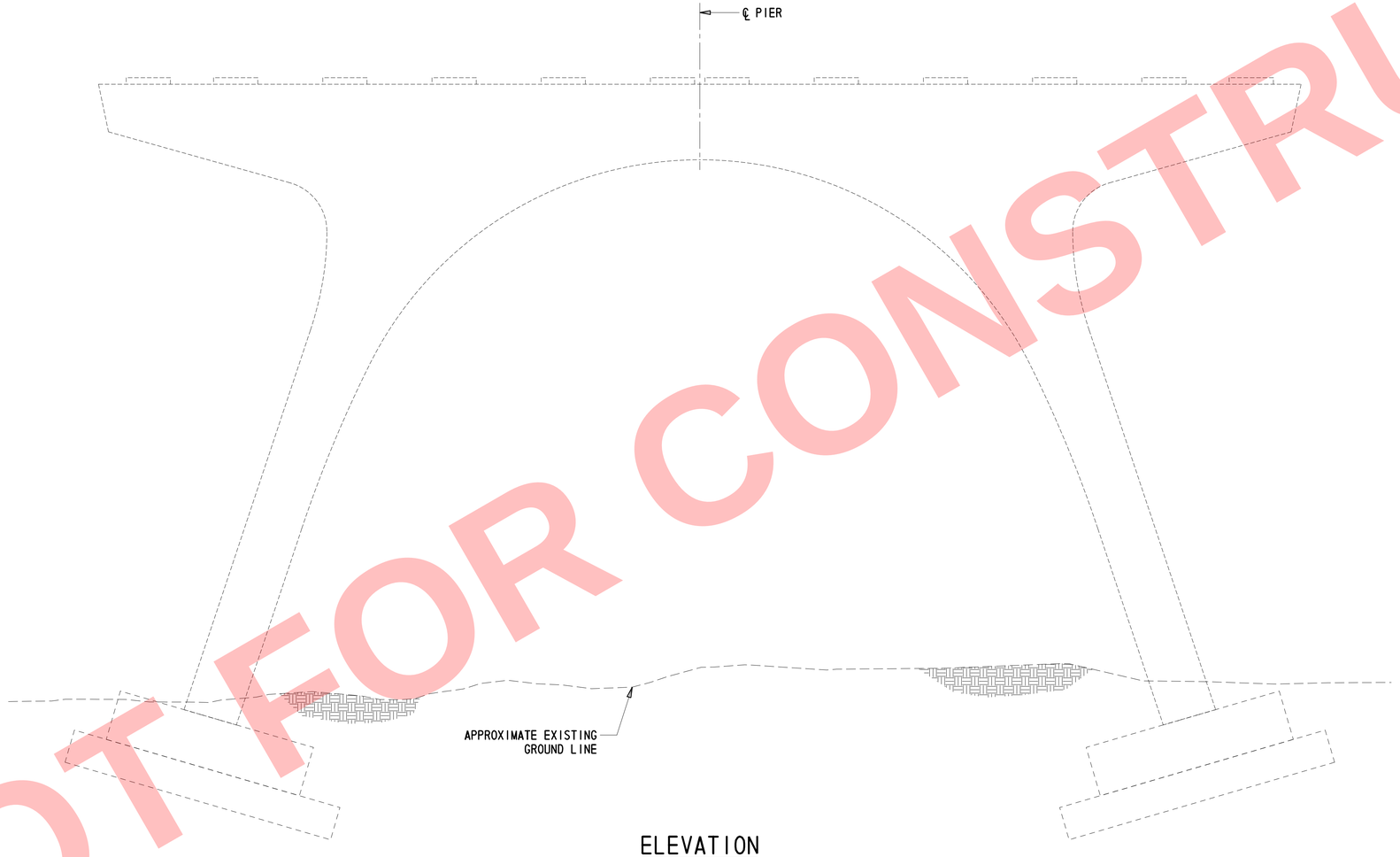

ELEVATION

1/8" = 1'-0"

LEGEND

- DEEP SPALL REPAIR (HEIGHT x WIDTH)
- CRACK REPAIR (LENGTH)

CONCRETE REPAIR QUANTITIES		
PIER 6		PAID FOR UNDER ITEM NO.
DEEP SPALL REPAIR	0 CF	628041/628042
CRACK REPAIR	0 LF	628001

NOTES:

1. ENGINEER SHALL CONFIRM CONTRACTOR DELINEATION OF CRACK AND SPALL AREAS PRIOR TO COMMENCEMENT OF REPAIRS.
2. FOR DEEP SPALL REPAIR DETAILS, SEE DWG. DT-01.
3. FOR PIER STRENGTHENING DETAILS, SEE DWG. PR-26.
4. SHEET INCLUDED PENDING DESIGN LEVEL INSPECTION.

NOT FOR CONSTRUCTION

2/8/2018 4:13:49 PM
T:\Dover\Projects\425009.98\600_CADD\05_Plans\PR11_BR1-759.dgn

DELAWARE
DEPARTMENT OF TRANSPORTATION

ADDENDUMS / REVISIONS

SCALE AS NOTED

REHABILITATION OF I-95
FROM I-495 TO NORTH OF
BRANDYWINE RIVER BRIDGE

CONTRACT	BRIDGE NO. 1 759 059
T201407404	DESIGNED BY: DJC
COUNTY	CHECKED BY: DEF
NEW CASTLE	

PIER 6, SOUTH FACE
DETAILS

1-759 PR-11
SHEET NO. 2-683
TOTAL SHTS. 2-731

LEGEND

- DEEP SPALL REPAIR (HEIGHT x WIDTH)
- CRACK REPAIR (LENGTH)

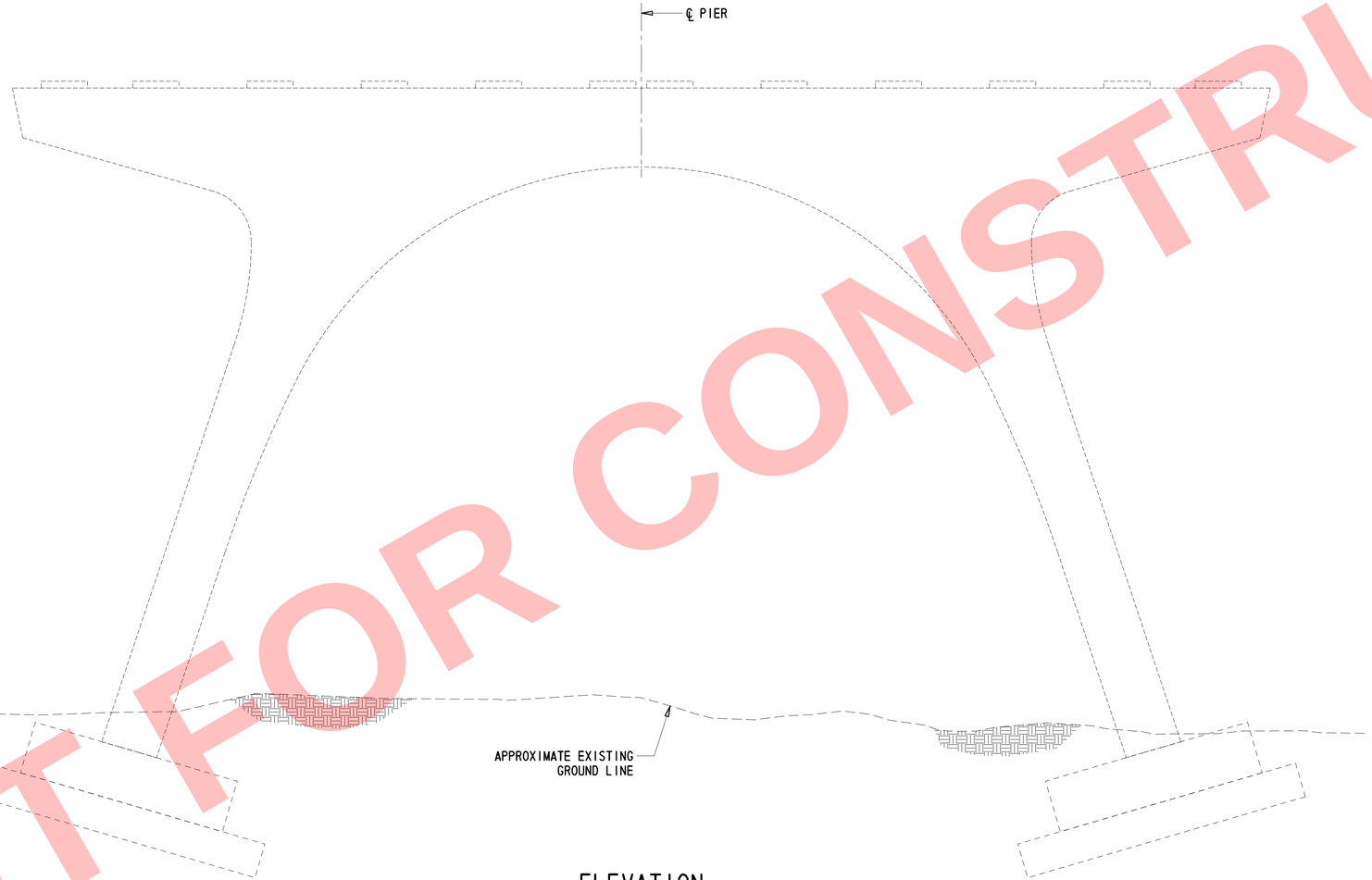

ELEVATION
1/8" = 1'-0"

CONCRETE REPAIR QUANTITIES		
PIER 6		PAID FOR UNDER ITEM NO.
DEEP SPALL REPAIR	0 CF	628041/628042
CRACK REPAIR	0 LF	628001

NOTES:

1. ENGINEER SHALL CONFIRM CONTRACTOR DELINEATION OF CRACK AND SPALL AREAS PRIOR TO COMMENCEMENT OF REPAIRS.
2. FOR DEEP SPALL REPAIR DETAILS, SEE DWG. DT-01.
3. FOR PIER STRENGTHENING DETAILS, SEE DWG. PR-26.
4. SHEET INCLUDED PENDING DESIGN LEVEL INSPECTION.

NOT FOR CONSTRUCTION

2/8/2018 413551 PW
T:\Dover\Projects\425009.98\600_CADD\05_Plans\PR12_BR1-759.dgn

DELAWARE
DEPARTMENT OF TRANSPORTATION

ADDENDUMS / REVISIONS

SCALE AS NOTED

REHABILITATION OF I-95
FROM I-495 TO NORTH OF
BRANDYWINE RIVER BRIDGE

CONTRACT T201407404
COUNTY NEW CASTLE
BRIDGE NO. 1 759 059
DESIGNED BY: DJC
CHECKED BY: DEF

PIER 6, NORTH FACE
DETAILS

1-759
PR-12
SHEET NO. 2-684
TOTAL SHTS. 2-731

CONCRETE REPAIR QUANTITIES		
PIER 7		PAID FOR UNDER ITEM NO.
DEEP SPALL REPAIR	16 CF	628041/628042
CRACK REPAIR	0 LF	628001

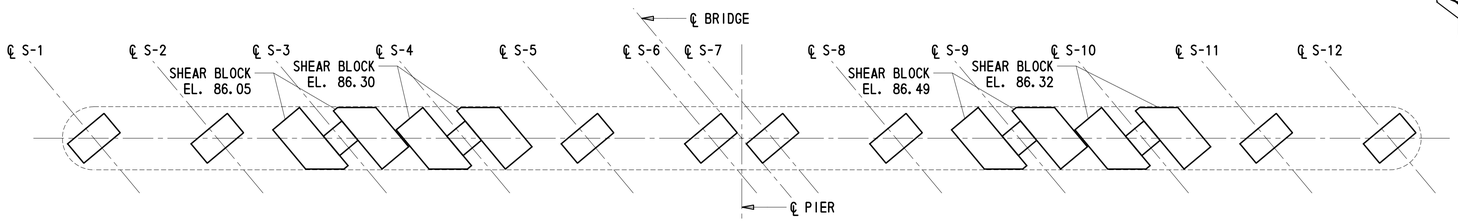

PLAN
1⁄8″ = 1′-0″

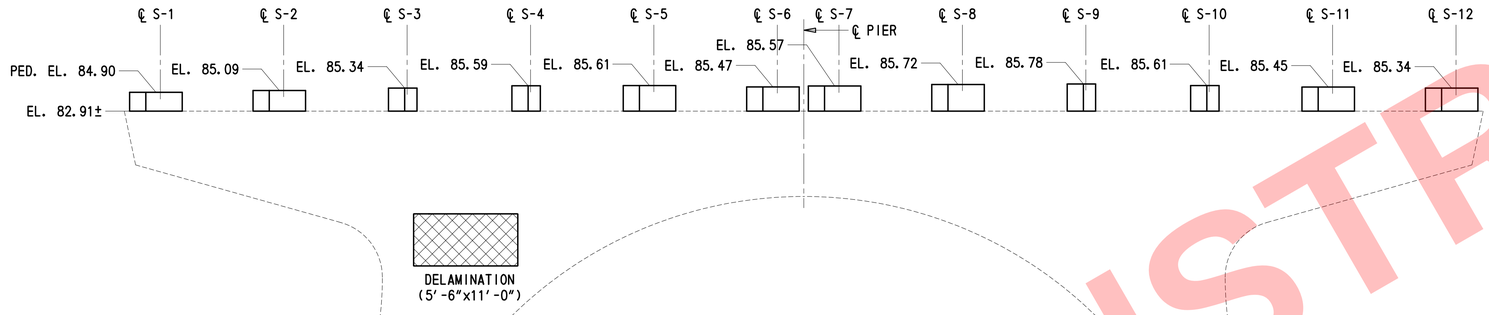

ELEVATION
1⁄8″ = 1′-0″

NOTE: SHEAR BLOCKS NOT SHOWN FOR CLARITY

NOTES:

1. ENGINEER SHALL CONFIRM CONTRACTOR DELINEATION OF CRACK AND SPALL AREAS PRIOR TO COMMENCEMENT OF REPAIRS.
2. FOR DEEP SPALL REPAIR DETAILS, SEE DWG. DT-01.
3. EXISTING PEDESTALS NOT SHOWN FOR CLARITY. EXISTING PEDESTALS SHALL BE REMOVED TO THE TOP OF EXISTING PIER CAP.
4. FOR PROPOSED PEDESTAL DETAILS, SEE DWG. PR-27.
5. FOR PIER STRENGTHENING DETAILS, SEE DWG. PR-26.

LEGEND

- DEEP SPALL REPAIR (HEIGHT x WIDTH)
- CRACK REPAIR (LENGTH)

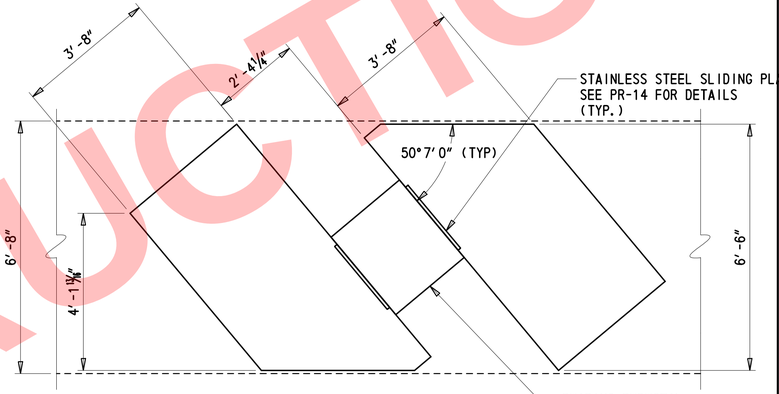

SHEAR BLOCK DETAIL
½″ = 1′-0″

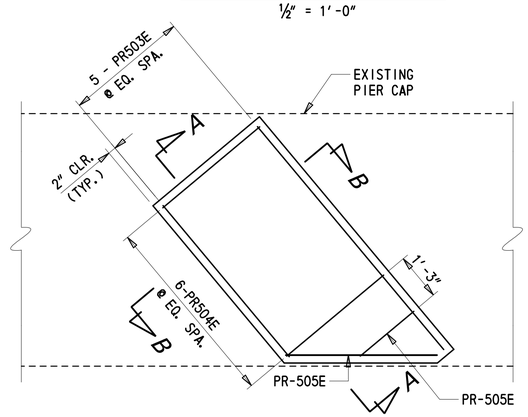

SHEAR BLOCK REINFORCING
½″ = 1′-0″

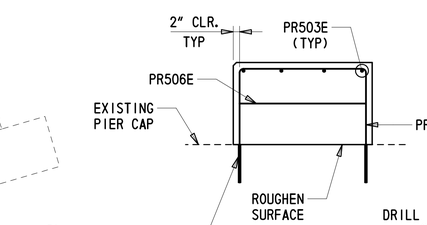

SECTION B-B
½″ = 1′-0″

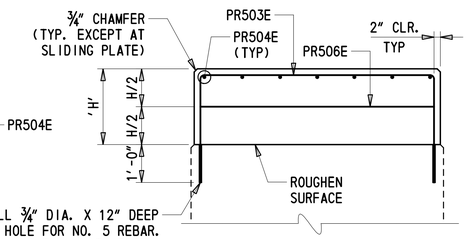

SECTION A-A
½″ = 1′-0″

NOT FOR CONSTRUCTION

DELAWARE DEPARTMENT OF TRANSPORTATION

ADDENDUMS / REVISIONS

SCALE AS NOTED

REHABILITATION OF I-95 FROM I-495 TO NORTH OF BRANDYWINE RIVER BRIDGE

CONTRACT	BRIDGE NO.	1 759 059
T201407404	DESIGNED BY: DJC	
COUNTY	CHECKED BY: DEF	
NEW CASTLE		

PIER 7, SOUTH FACE DETAILS

1-759 PR-13
SHEET NO. 2-685
TOTAL SHTS. 2-731

2/8/2018 4:35:52 PM
f:\Dover\Projects\425009.98\600_CADD\05_Plans\PR13_BR1-759.dgn

CONCRETE REPAIR QUANTITIES		
PIER 7		PAID FOR UNDER ITEM NO.
DEEP SPALL REPAIR	2 CF	628041/628042
CRACK REPAIR	0 LF	628001

LEGEND

- DEEP SPALL REPAIR (HEIGHT x WIDTH)
- CRACK REPAIR (LENGTH)

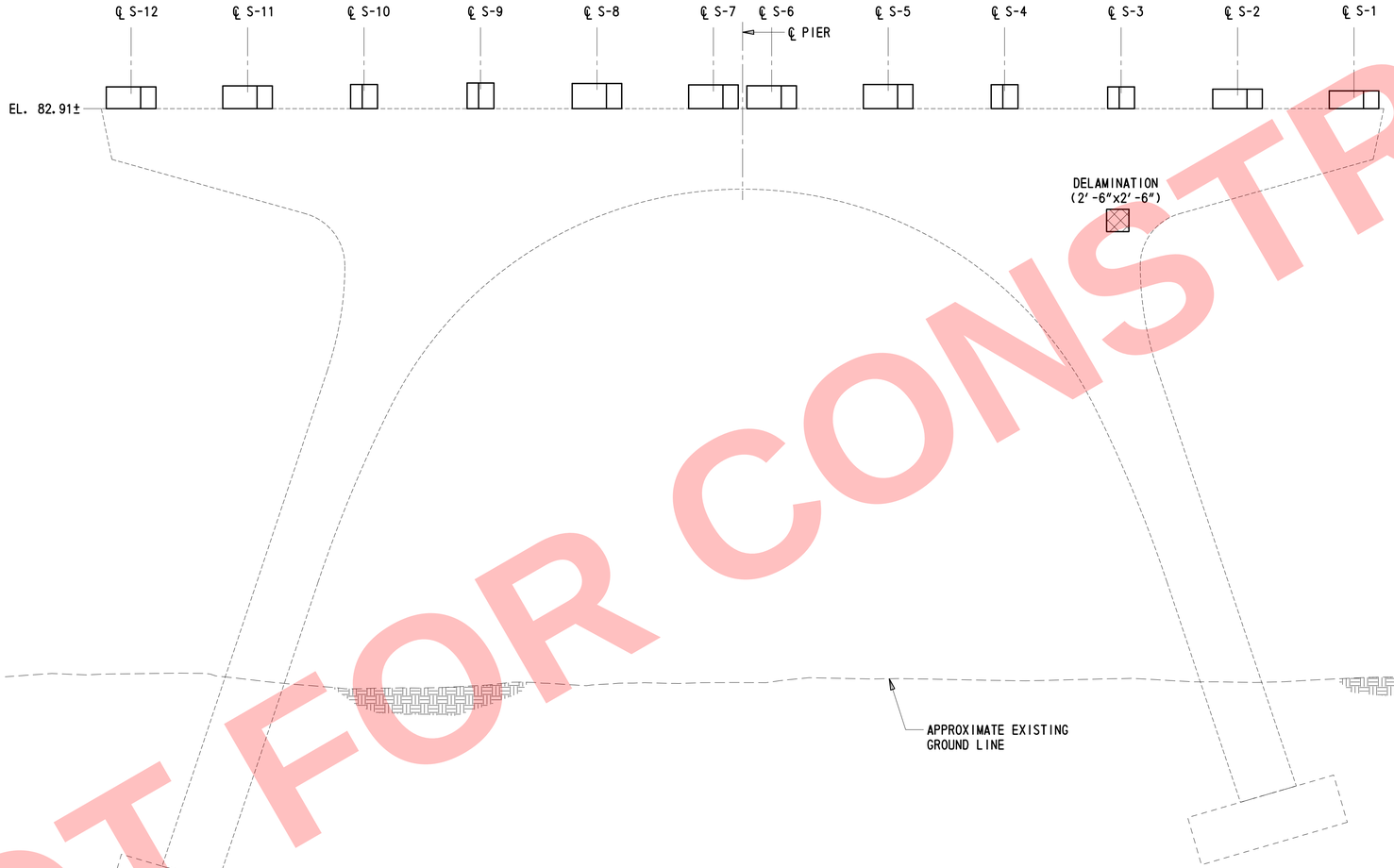

ELEVATION

1/8" = 1'-0"

NOTE: SHEAR BLOCKS NOT SHOWN FOR CLARITY

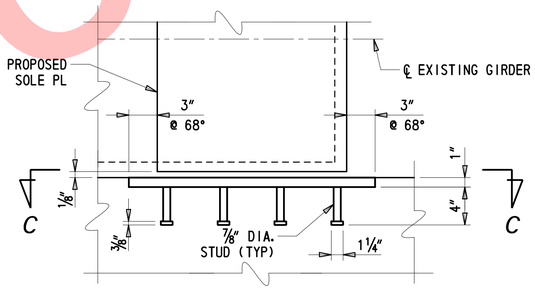

SLIDING PLATE DETAIL

1½" = 1'-0"

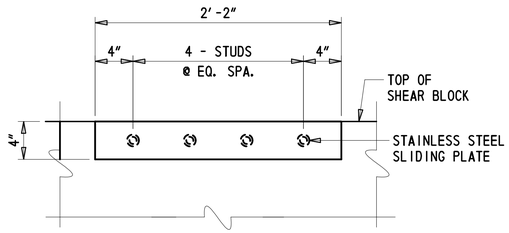

SECTION C-C

1½" = 1'-0"

NOTES:

1. ENGINEER SHALL CONFIRM CONTRACTOR DELINEATION OF CRACK AND SPALL AREAS PRIOR TO COMMENCEMENT OF REPAIRS.
2. FOR DEEP SPALL REPAIR DETAILS, SEE DWG. DT-01.
3. EXISTING PEDESTALS NOT SHOWN FOR CLARITY. EXISTING PEDESTALS SHALL BE REMOVED TO THE TOP OF EXISTING PIER CAP.
4. FOR PROPOSED PEDESTAL DETAILS, SEE DWG. PR-27.
5. SOUTH PEDESTALS NOT SHOWN FOR CLARITY, SEE DWG. PR-13.
6. SHEAR BLOCK ELEVATION AND DETIALS NOT SHOWN FOR CLARITY, SEE DWG. PR-13.
7. FOR PIER STRENGTHENING DETAILS, SEE DWG. PR-26.
8. STAINLESS STEEL SLIDING PLATES ARE INCIDENTAL TO ITEM 610002. SEE DWG. PN-01 FOR MATERIAL PROPERTIES.

NOT FOR CONSTRUCTION

1-759
PR-14

DELAWARE
DEPARTMENT OF TRANSPORTATION

ADDENDUMS / REVISIONS

SCALE AS NOTED

REHABILITATION OF I-95
FROM I-495 TO NORTH OF
BRANDYWINE RIVER BRIDGE

CONTRACT	BRIDGE NO. 1 759 059
T201407404	DESIGNED BY: DJC
COUNTY	CHECKED BY: DEF
NEW CASTLE	

PIER 7, NORTH FACE
DETAILS

SHEET NO. 2-686
TOTAL SHTS. 2-731

2/8/2018 413554, PM
T:\Dover\Projects\425009.98\600_CADD\05_Plans\PR14_BR1-759.dgn

CONCRETE REPAIR QUANTITIES		
PIER 8		PAID FOR UNDER ITEM NO.
DEEP SPALL REPAIR	14 CF	628041/628042
CRACK REPAIR	37 LF	628001

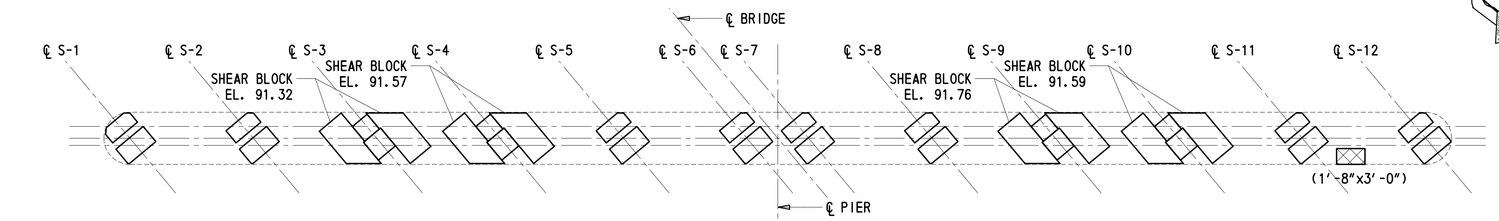

PLAN
1/8″ = 1′-0″

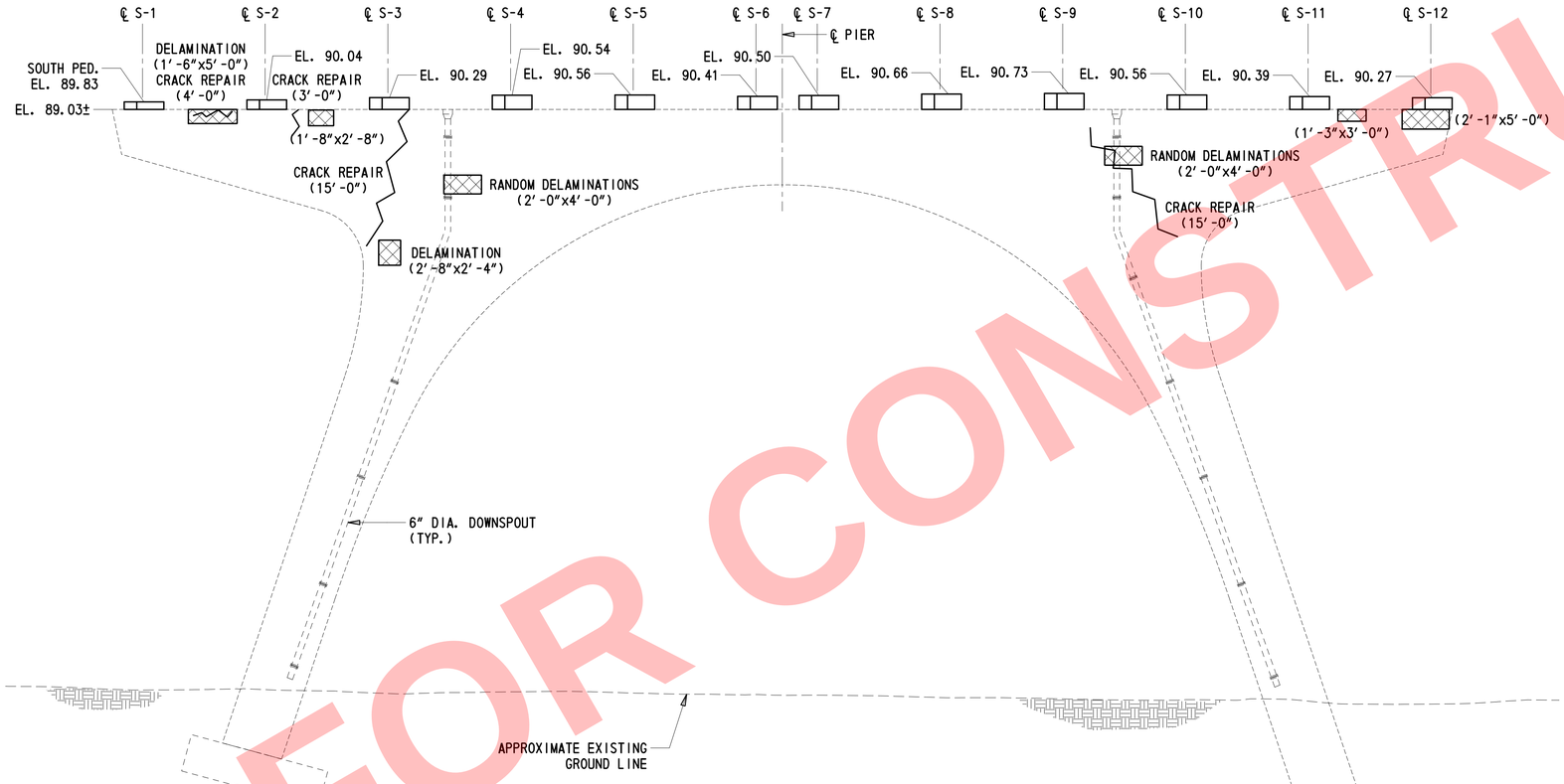

ELEVATION
1/8″ = 1′-0″

NOTE: SHEAR BLOCKS AND NORTH PEDESTALS NOT SHOWN FOR CLARITY

NOTES:

1. ENGINEER SHALL CONFIRM CONTRACTOR DELINEATION OF CRACK AND SPALL AREAS PRIOR TO COMMENCEMENT OF REPAIRS.
2. FOR DEEP SPALL REPAIR DETAILS, SEE DWG. DT-01.
3. EXISTING PEDESTALS NOT SHOWN FOR CLARITY. EXISTING PEDESTALS SHALL BE REMOVED TO THE TOP OF EXISTING PIER CAP.
4. FOR PROPOSED PEDESTAL DETAILS, SEE DWG. PR-27.
5. NORTH PEDESTALS NOT SHOWN FOR CLARITY, SEE DWG. PR-16.
6. FOR PIER STRENGTHENING DETAILS, SEE DWG. PR-26.

LEGEND

- DEEP SPALL REPAIR (HEIGHT x WIDTH)
- CRACK REPAIR (LENGTH)

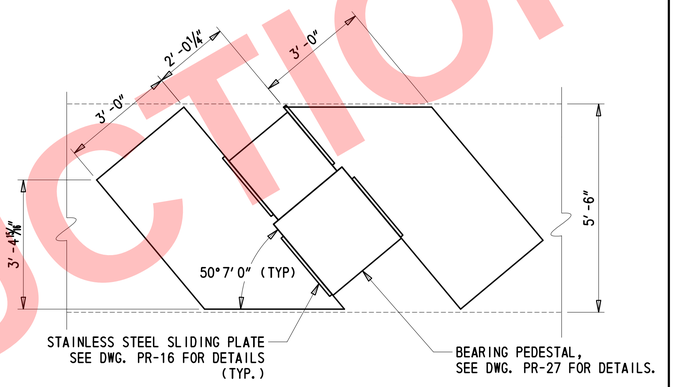

SHEAR BLOCK DETAIL
½″ = 1′-0″

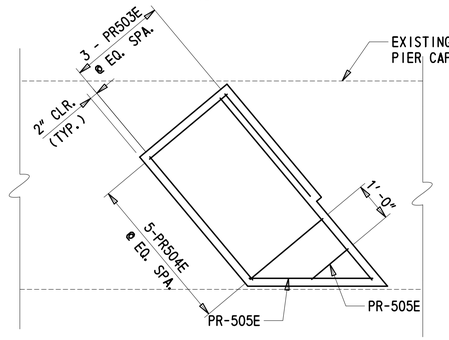

SHEAR BLOCK REINFORCING
½″ = 1′-0″

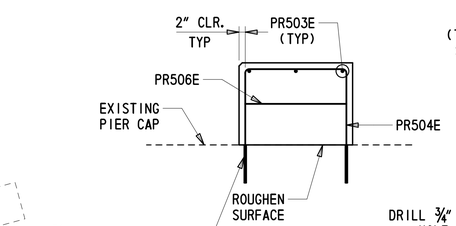

SECTION B-B
½″ = 1′-0″

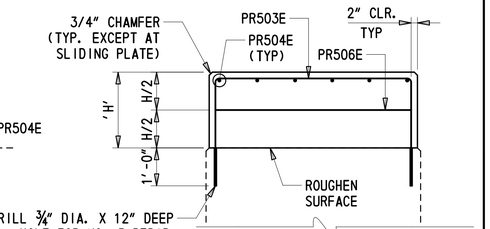

SECTION A-A
½″ = 1′-0″

NOT FOR CONSTRUCTION

2/8/2018 4:35:56 PM
F:\Dover\Projects\425009.98\600_CADD\05_Plans\PR15_BR1-759.dgn

DELAWARE DEPARTMENT OF TRANSPORTATION

ADDENDUMS / REVISIONS

SCALE AS NOTED

REHABILITATION OF I-95 FROM I-495 TO NORTH OF BRANDYWINE RIVER BRIDGE

CONTRACT	BRIDGE NO.	1 759 059
T201407404	DESIGNED BY: DJC	
COUNTY	CHECKED BY: DEF	
NEW CASTLE		

PIER 8, SOUTH FACE DETAILS

1-759 PR-15
SHEET NO. 2-687
TOTAL SHTS. 2-731

CONCRETE REPAIR QUANTITIES		
PIER 8		PAID FOR UNDER ITEM NO.
DEEP SPALL REPAIR	17 CF	628041/628042
CRACK REPAIR	4 LF	628001

LEGEND

- DEEP SPALL REPAIR (HEIGHT x WIDTH)
- CRACK REPAIR (LENGTH)

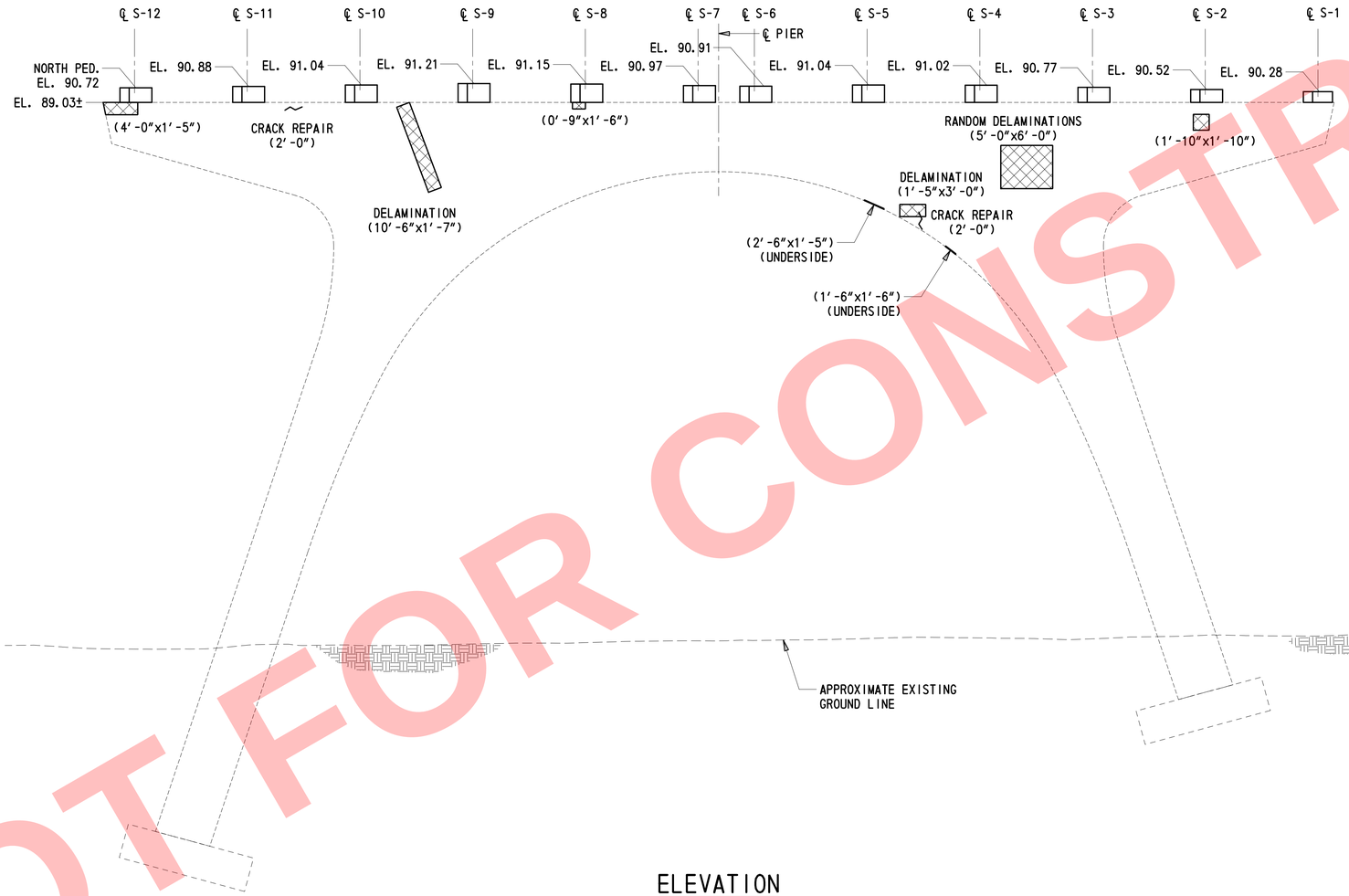

ELEVATION

1/8″ = 1′-0″

NOTE: SHEAR BLOCKS AND SOUTH PEDESTALS NOT SHOWN FOR CLARITY

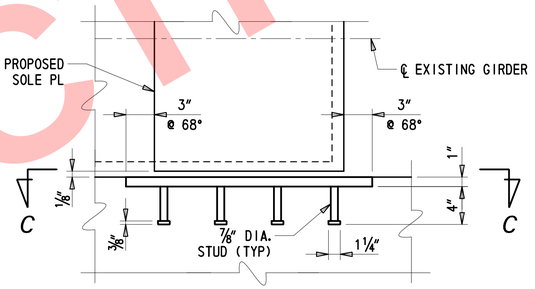

SLIDING PLATE DETAIL

1½″ = 1′-0″

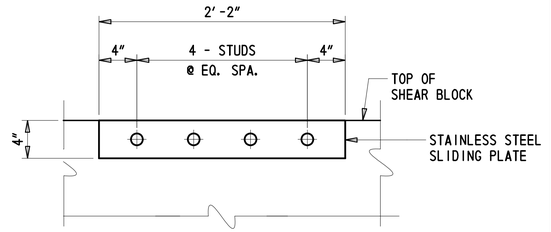

SECTION C-C

1½″ = 1′-0″

NOTES:

1. ENGINEER SHALL CONFIRM CONTRACTOR DELINEATION OF CRACK AND SPALL AREAS PRIOR TO COMMENCEMENT OF REPAIRS.
2. FOR DEEP SPALL REPAIR DETAILS, SEE DWG. DT-01.
3. EXISTING PEDESTALS NOT SHOWN FOR CLARITY. EXISTING PEDESTALS SHALL BE REMOVED TO THE TOP OF EXISTING PIER CAP.
4. FOR PROPOSED PEDESTAL DETAILS, SEE DWG. PR-27.
5. SOUTH PEDESTALS NOT SHOWN FOR CLARITY, SEE DWG. PR-15.
6. SHEAR BLOCK ELEVATION AND DETIALS NOT SHOWN FOR CLARITY, SEE DWG. PR-15.
7. FOR PIER STRENGTHENING DETAILS, SEE DWG. PR-26.
8. STAINLESS STEEL SLIDING PLATES ARE INCIDENTAL TO ITEM 610002. SEE DWG. PN-01 FOR MATERIAL PROPERTIES.

NOT FOR CONSTRUCTION

DELAWARE DEPARTMENT OF TRANSPORTATION

ADDENDUMS / REVISIONS

SCALE AS NOTED

REHABILITATION OF I-95 FROM I-495 TO NORTH OF BRANDYWINE RIVER BRIDGE

CONTRACT	BRIDGE NO.	1 759 059
T201407404	DESIGNED BY:	DJC
COUNTY	CHECKED BY:	DEF
NEW CASTLE		

PIER 8, NORTH FACE DETAILS

1-759 PR-16	
SHEET NO.	2-688
TOTAL SHTS.	2-731

2/8/2018 4:35:57 PM
I:\Dover\Projects\423009.98\600_CADD\05_Plans\PR16_BR1-759.dgn

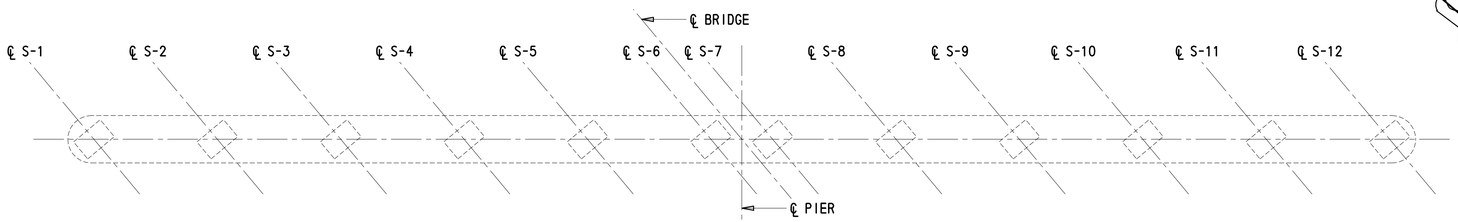

PLAN

1/8" = 1'-0"

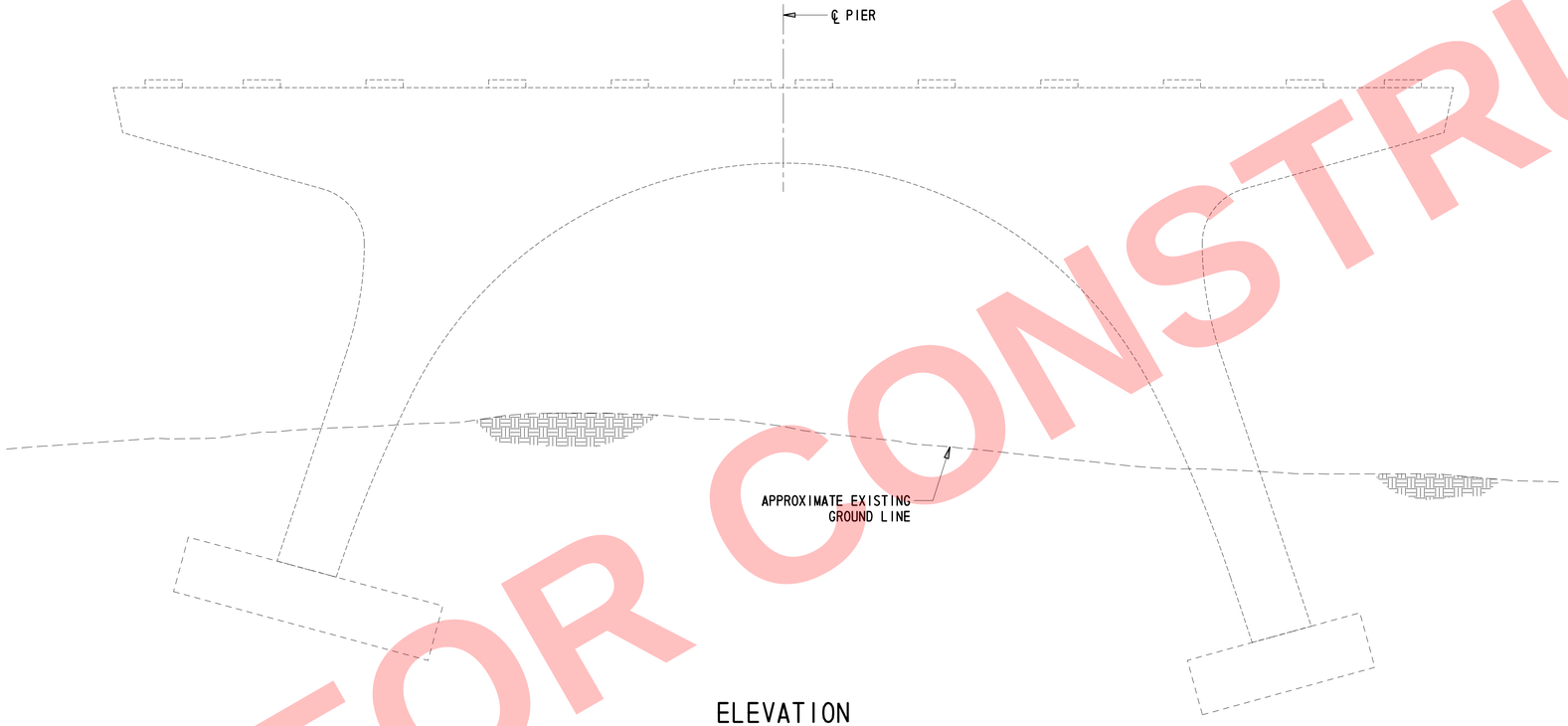

ELEVATION

1/8" = 1'-0"

LEGEND

- DEEP SPALL REPAIR (HEIGHT x WIDTH)
- CRACK REPAIR (LENGTH)

CONCRETE REPAIR QUANTITIES

PIER 9		PAID FOR UNDER ITEM NO.
DEEP SPALL REPAIR	0 CF	628041/628042
CRACK REPAIR	0 LF	628001

NOTES:

1. ENGINEER SHALL CONFIRM CONTRACTOR DELINEATION OF CRACK AND SPALL AREAS PRIOR TO COMMENCEMENT OF REPAIRS.
2. FOR DEEP SPALL REPAIR DETAILS, SEE DWG. DT-01.
3. FOR PIER STRENGTHENING DETAILS, SEE DWG. PR-26.
4. SHEET INCLUDED PENDING DESIGN LEVEL INSPECTION.

NOT FOR CONSTRUCTION

2/8/2018 4:35:59 PM
f:\dover\Projects\x25009.98\600_CADD\05_Plans\PR17_BR1-759.dgn

DELAWARE
DEPARTMENT OF TRANSPORTATION

ADDENDUMS / REVISIONS

SCALE AS NOTED

REHABILITATION OF I-95
FROM I-495 TO NORTH OF
BRANDYWINE RIVER BRIDGE

CONTRACT	BRIDGE NO. 1 759 059
T201407404	DESIGNED BY: DJC
COUNTY	CHECKED BY: DEF
NEW CASTLE	

PIER 9, SOUTH FACE
DETAILS

1-759
PR-17

SHEET NO. 2-689

TOTAL SHTS. 2-731

LEGEND	
	DEEP SPALL REPAIR (HEIGHT x WIDTH)
	CRACK REPAIR (LENGTH)

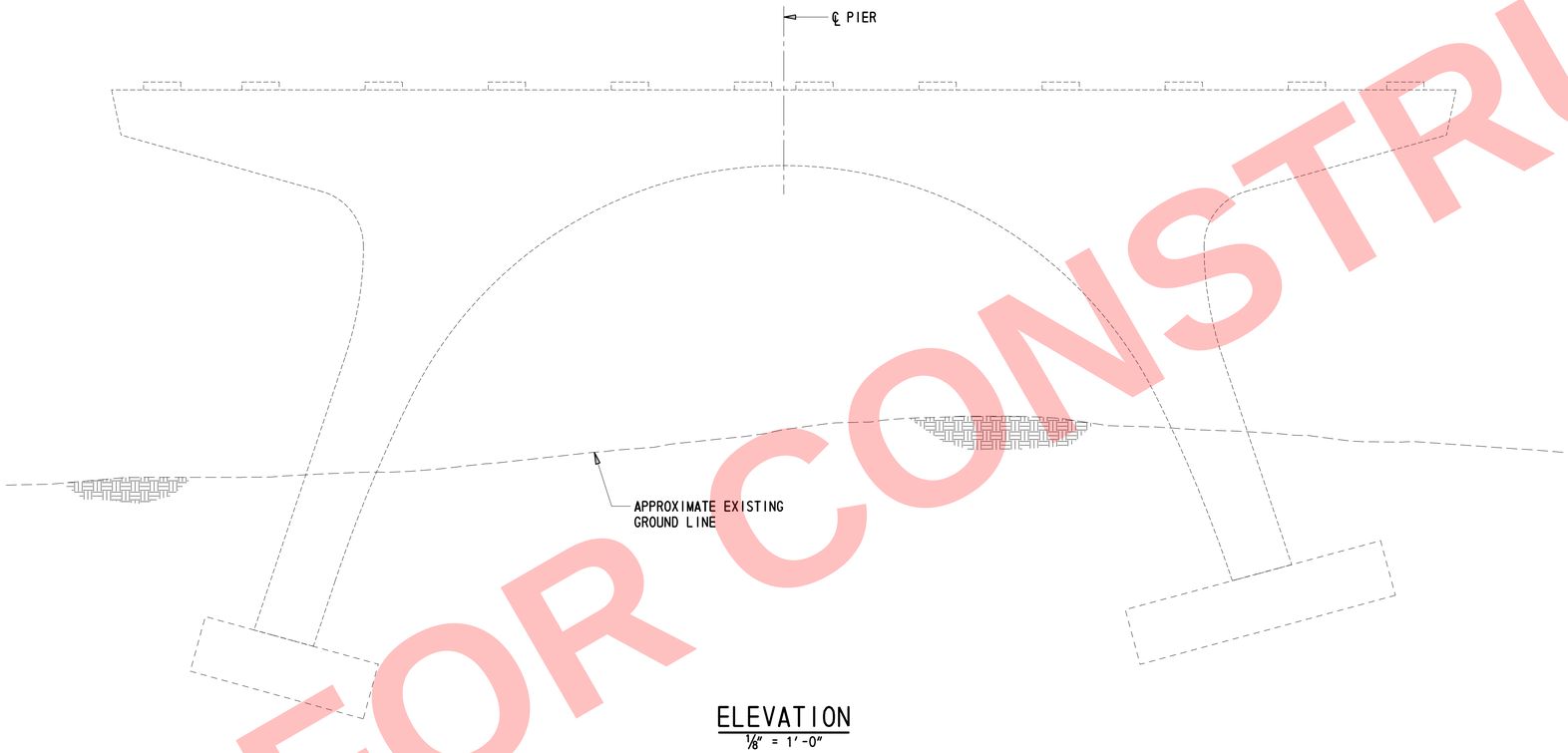

ELEVATION
1/8" = 1'-0"

CONCRETE REPAIR QUANTITIES		
PIER 9		PAID FOR UNDER ITEM NO.
DEEP SPALL REPAIR	0 CF	628041/628042
CRACK REPAIR	0 LF	628001

NOTES:

1. ENGINEER SHALL CONFIRM CONTRACTOR DELINEATION OF CRACK AND SPALL AREAS PRIOR TO COMMENCEMENT OF REPAIRS.
2. FOR DEEP SPALL REPAIR DETAILS, SEE DWG. DT-01.
3. FOR PIER STRENGTHENING DETAILS, SEE DWG. PR-26.
4. SHEET INCLUDED PENDING DESIGN LEVEL INSPECTION.

NOT FOR CONSTRUCTION

2/8/2018 4:36:00 PM
T:\Dover\Projects\425009.9B\600_CADD\05_Plans\PR18_BR1-759.dgn

DELAWARE DEPARTMENT OF TRANSPORTATION	ADDENDUMS / REVISIONS	SCALE AS NOTED	REHABILITATION OF I-95 FROM I-495 TO NORTH OF BRANDYWINE RIVER BRIDGE	CONTRACT T201407404 / COUNTY NEW CASTLE	BRIDGE NO. 1 759 059 / DESIGNED BY: DJC / CHECKED BY: DEF	PIER 9, NORTH FACE DETAILS	1-759 PR-18 / SHEET NO. 2-690 / TOTAL SHTS. 2-731

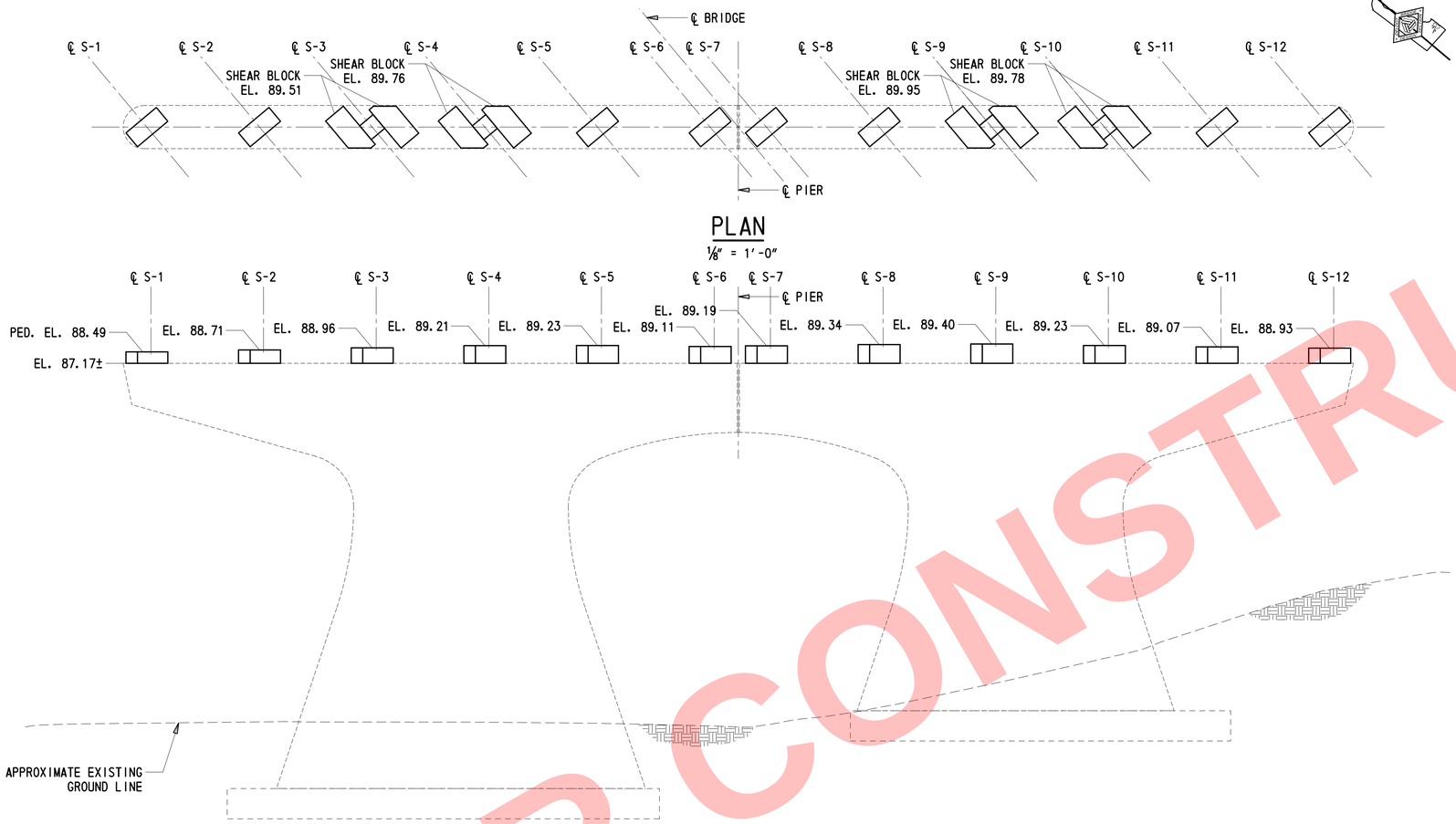

PLAN

1/8" = 1'-0"

ELEVATION

1/8" = 1'-0"

NOTE: SHEAR BLOCKS NOT SHOWN FOR CLARITY

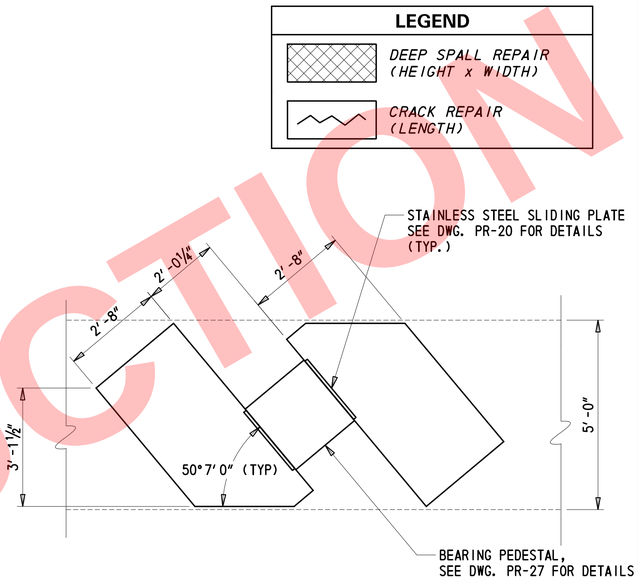

SHEAR BLOCK DETAIL

1/2" = 1'-0"

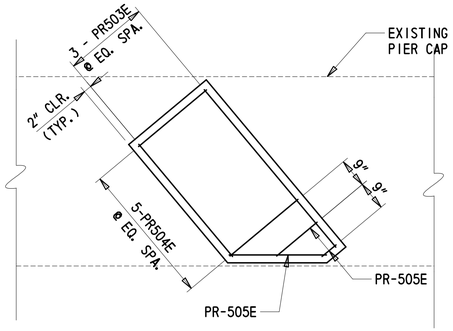

SHEAR BLOCK REINFORCING

1/2" = 1'-0"

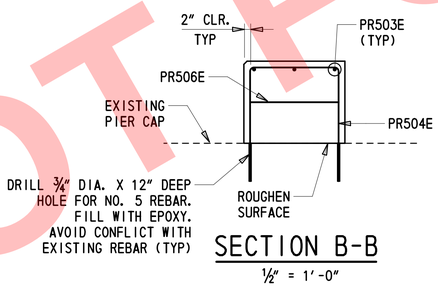

SECTION B-B

1/2" = 1'-0"

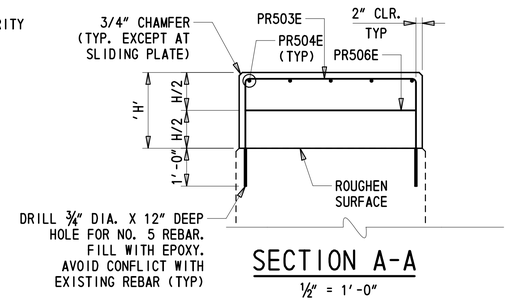

SECTION A-A

1/2" = 1'-0"

CONCRETE REPAIR QUANTITIES		
PIER 10		PAID FOR UNDER ITEM NO.
DEEP SPALL REPAIR	0 CF	628041/628042
CRACK REPAIR	0 LF	628001

NOTES:

1. ENGINEER SHALL CONFIRM CONTRACTOR DELINEATION OF CRACK AND SPALL AREAS PRIOR TO COMMENCEMENT OF REPAIRS.
2. FOR DEEP SPALL REPAIR DETAILS, SEE DWG. DT-01.
3. EXISTING PEDESTALS NOT SHOWN FOR CLARITY. EXISTING PEDESTALS SHALL BE REMOVED TO THE TOP OF EXISTING PIER CAP.
4. FOR PROPOSED PEDESTAL DETAILS, SEE DWG. PR-27.
5. FOR PIER STRENGTHENING DETAILS, SEE DWG. PR-25.

NOT FOR CONSTRUCTION

DELAWARE DEPARTMENT OF TRANSPORTATION	ADDENDUMS / REVISIONS	SCALE AS NOTED	REHABILITATION OF I-95 FROM I-495 TO NORTH OF BRANDYWINE RIVER BRIDGE	CONTRACT T201407404	BRIDGE NO. 1 759 059	PIER 10, SOUTH FACE DETAILS
				COUNTY NEW CASTLE	DESIGNED BY: DJC	
					CHECKED BY: DEF	

1-759
PR-19

SHEET NO. 2-691

TOTAL SHTS. 2-731

2/8/2018 4:36:02 PM
I:\Dover\Projects\425009.98\600_CADD\05_Plans\PR19_BR1-759.dgn

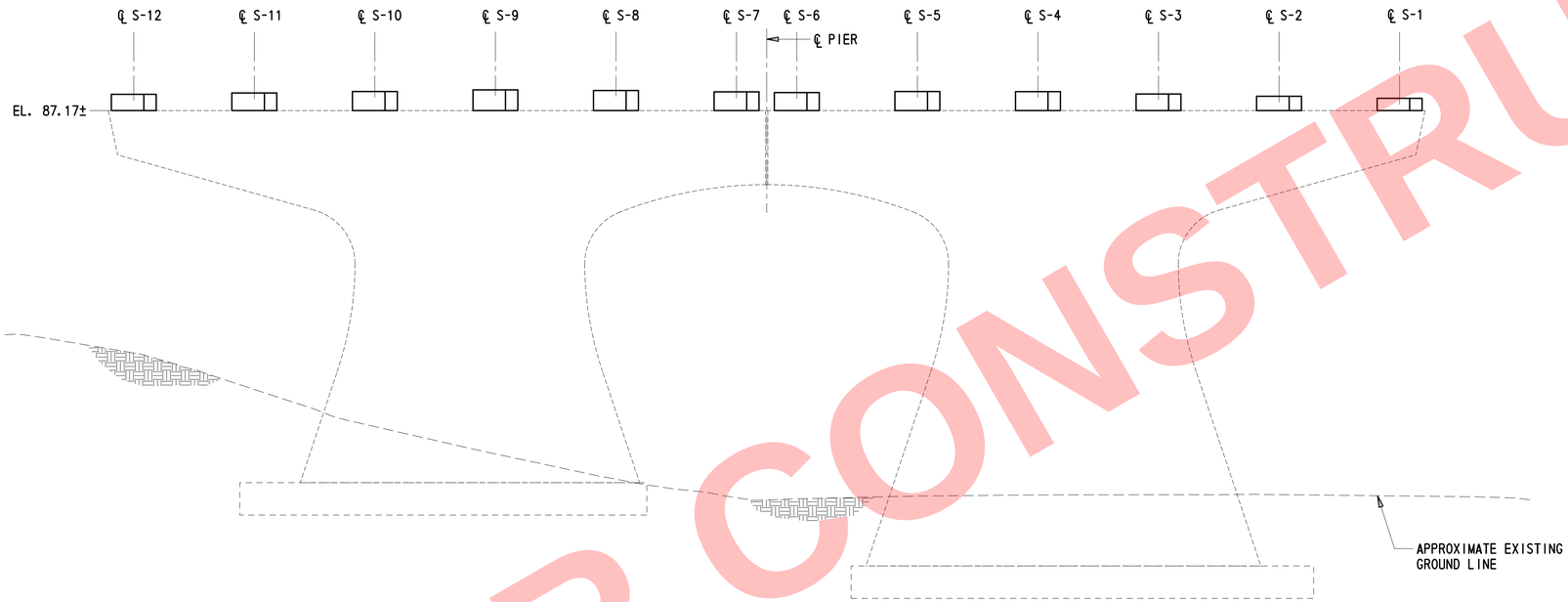

ELEVATION

1⁄8″ = 1′-0″

NOTE: SHEAR BLOCKS NOT SHOWN FOR CLARITY

CONCRETE REPAIR QUANTITIES		
PIER 10		PAID FOR UNDER ITEM NO.
DEEP SPALL REPAIR	0 CF	628041/628042
CRACK REPAIR	0 LF	628001

LEGEND

- DEEP SPALL REPAIR (HEIGHT x WIDTH)
- CRACK REPAIR (LENGTH)

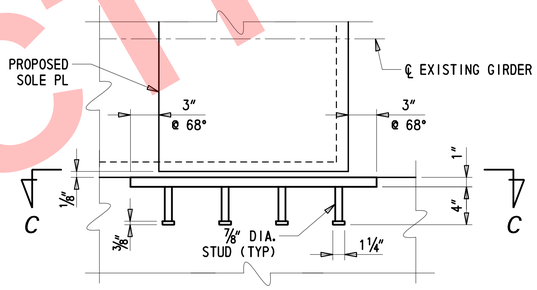

SLIDING PLATE DETAIL

1½″ = 1′-0″

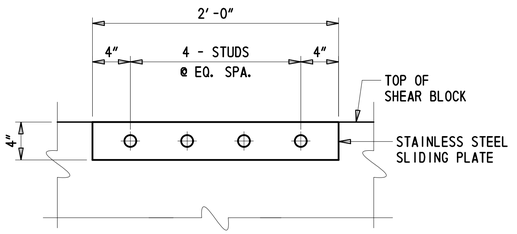

SECTION C-C

1½″ = 1′-0″

NOTES:

1. ENGINEER SHALL CONFIRM CONTRACTOR DELINEATION OF CRACK AND SPALL AREAS PRIOR TO COMMENCEMENT OF REPAIRS.
2. FOR DEEP SPALL REPAIR DETAILS, SEE DWG. DT-01.
3. EXISTING PEDESTALS NOT SHOWN FOR CLARITY. EXISTING PEDESTALS SHALL BE REMOVED TO THE TOP OF EXISTING PIER CAP.
4. FOR PROPOSED PEDESTAL DETAILS, SEE DWG. PR-27.
5. SHEAR BLOCK ELEVATION AND DETIALS NOT SHOWN FOR CLARITY, SEE DWG. PR-19.
6. FOR PIER STRENGTHENING DETAILS, SEE DWG. PR-25.
7. STAINLESS STEEL SLIDING PLATES ARE INCIDENTAL TO ITEM 610002. SEE DWG. PN-01 FOR MATERIAL PROPERTIES.

NOT FOR CONSTRUCTION

DELAWARE DEPARTMENT OF TRANSPORTATION

ADDENDUMS / REVISIONS

SCALE AS NOTED

REHABILITATION OF I-95 FROM I-495 TO NORTH OF BRANDYWINE RIVER BRIDGE

CONTRACT T201407404

COUNTY NEW CASTLE

BRIDGE NO. 1 759 059

DESIGNED BY: DJC

CHECKED BY: DEF

PIER 10, NORTH FACE DETAILS

1-759 PR-20

SHEET NO. 2-692

TOTAL SHTS. 2-731

2/8/2018 4:36:04 PM
I:\Dover\Projects\425009.98\600_CADD\05_Plans\PR20_BR1-759.dgn

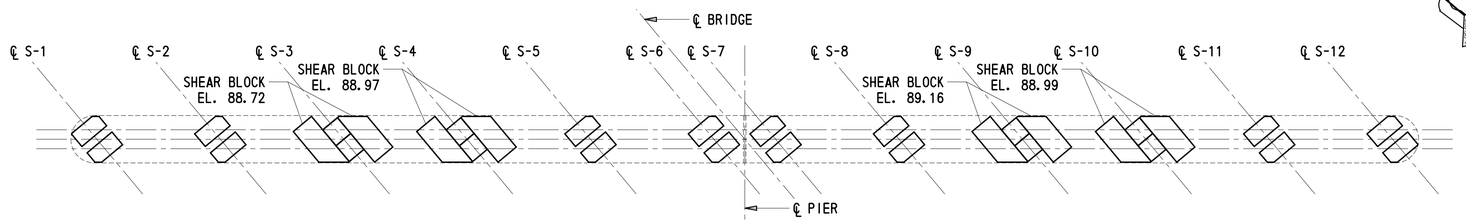

PLAN

1/8" = 1'-0"

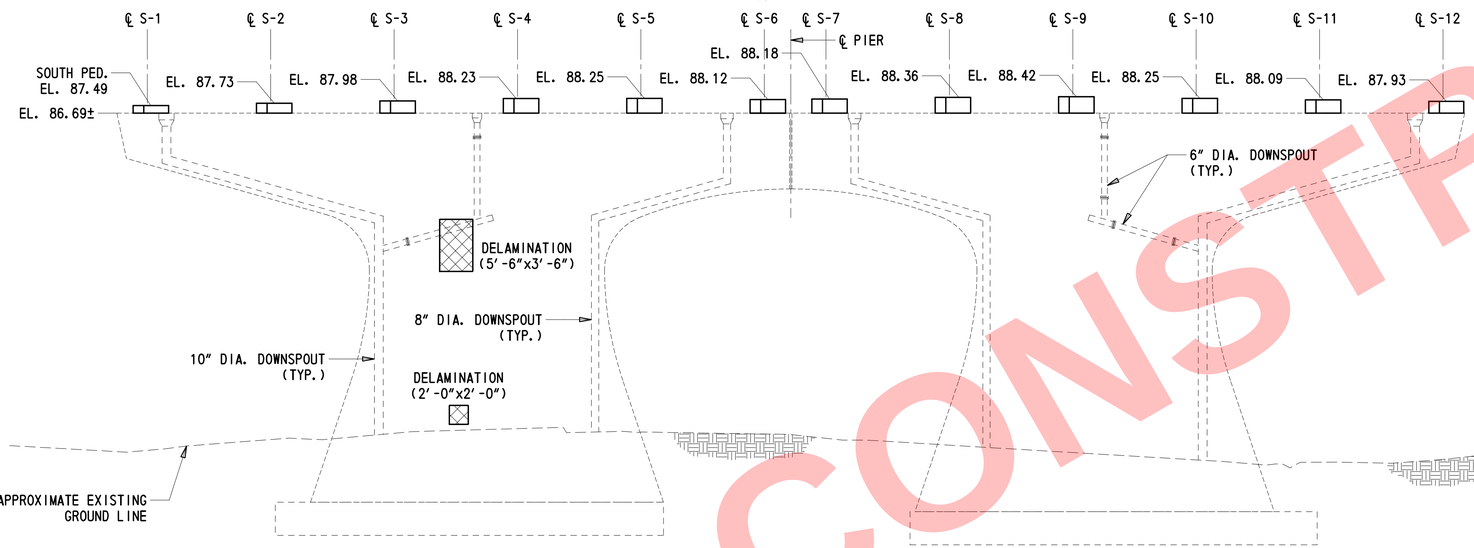

ELEVATION

1/8" = 1'-0"

NOTE: SHEAR BLOCKS AND NORTH PEDESTALS NOT SHOWN FOR CLARITY

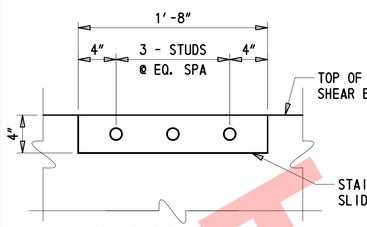

SECTION C-C

1½" = 1'-0"

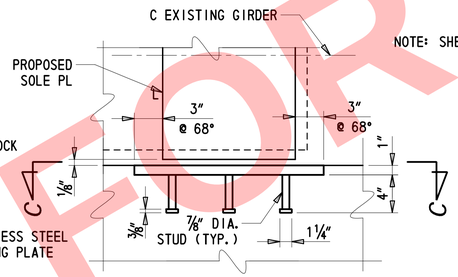

SLIDING PLATE DETAIL

1½" = 1'-0"

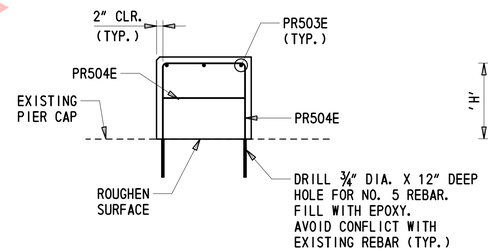

SECTION B-B

½" = 1'-0"

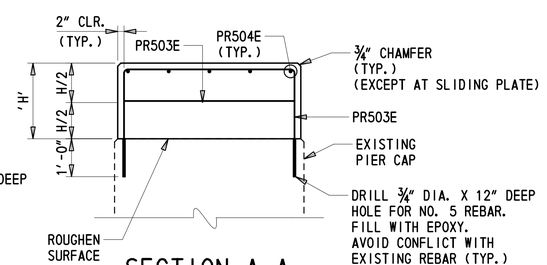

SECTION A-A

½" = 1'-0"

NOTES:

1. ENGINEER SHALL CONFIRM CONTRACTOR DELINEATION OF CRACK AND SPALL AREAS PRIOR TO COMMENCEMENT OF REPAIRS.
2. FOR DEEP SPALL REPAIR DETAILS, SEE DWG. DT-01.
3. EXISTING PEDESTALS NOT SHOWN FOR CLARITY. EXISTING PEDESTALS SHALL BE REMOVED TO THE TOP OF EXISTING PIER CAP.
4. FOR PROPOSED PEDESTAL DETAILS, SEE DWG. PR-27.
5. NORTH PEDESTALS NOT SHOWN FOR CLARITY, SEE DWG. PR-22.
6. FOR PIER STRENGTHENING DETAILS, SEE DWG. PR-25.
7. STAINLESS STEEL SLIDING PLATES ARE INCIDENTAL TO ITEM 610002. SEE DWG. PN-01 FOR MATERIAL PROPERTIES.

LEGEND

- DEEP SPALL REPAIR (HEIGHT x WIDTH)
- CRACK REPAIR (LENGTH)

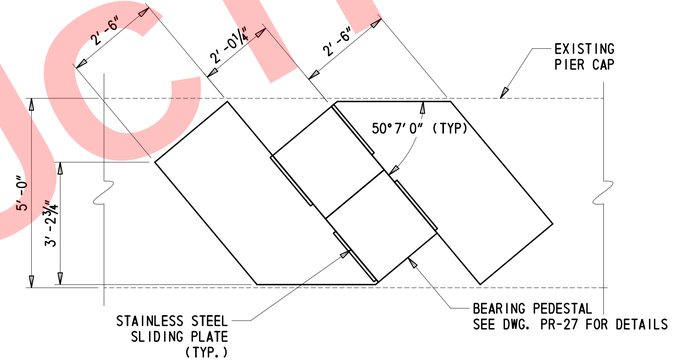

SHEAR BLOCK DETAIL

½" = 1'-0"

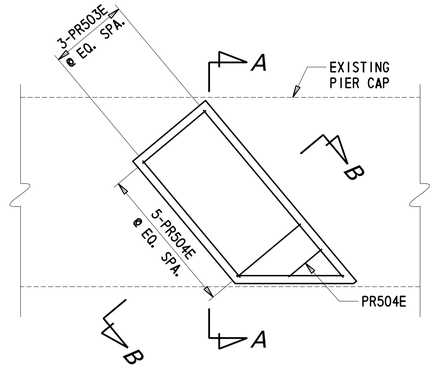

SHEAR BLOCK REINFORCING

½" = 1'-0"

CONCRETE REPAIR QUANTITIES

PIER 11		PAID FOR UNDER ITEM NO.
DEEP SPALL REPAIR	6 CF	628041/628042
CRACK REPAIR	0 LF	628001

NOT FOR CONSTRUCTION

2/8/2018 4:36:05 PM
f:\dover\Projects\x25009.98\600_CADD\05_Plans\PR21_BR1-759.dgn

DELAWARE DEPARTMENT OF TRANSPORTATION

ADDENDUMS / REVISIONS

SCALE AS NOTED

REHABILITATION OF I-95 FROM I-495 TO NORTH OF BRANDYWINE RIVER BRIDGE

CONTRACT	BRIDGE NO. 1 759 059
T201407404	DESIGNED BY: DJC
COUNTY	CHECKED BY: DEF
NEW CASTLE	

PIER 11, SOUTH FACE DETAILS

1-759 PR-21
SHEET NO. 2-693
TOTAL SHTS. 2-731

NOT FOR CONSTRUCTION

LEGEND

- DEEP SPALL REPAIR (HEIGHT x WIDTH)
- CRACK REPAIR (LENGTH)

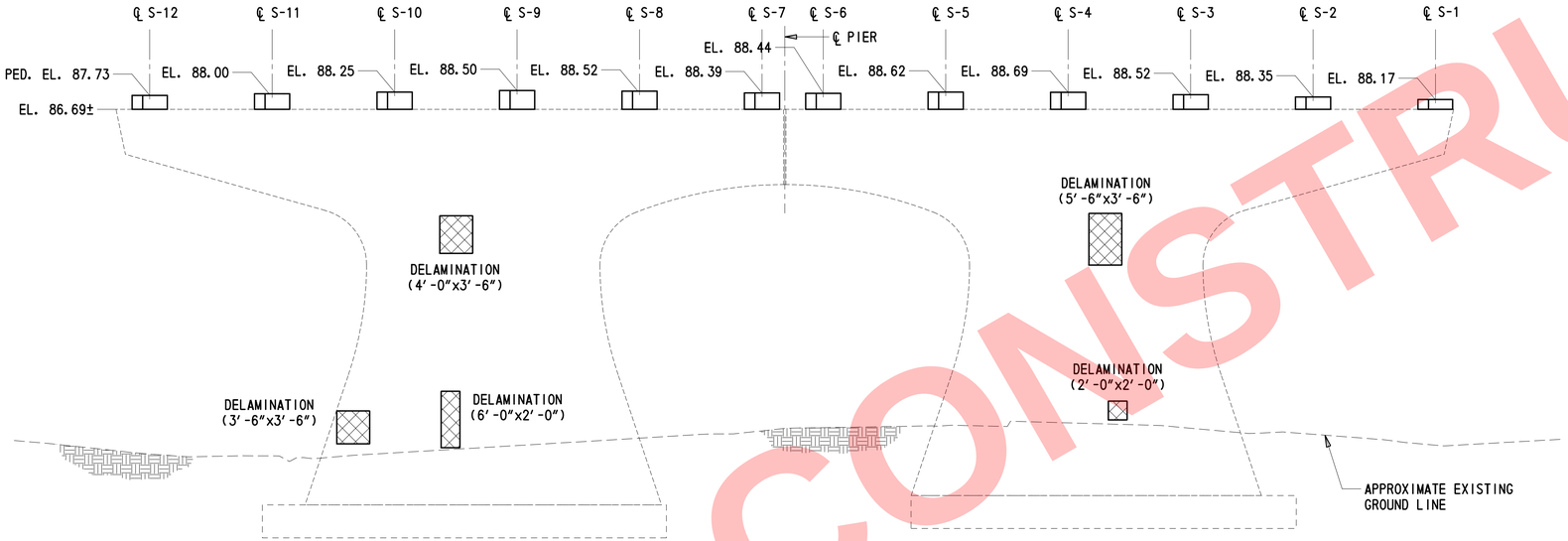

ELEVATION

1/8″ = 1′-0″

NOTE: SHEAR BLOCKS AND SOUTH PEDESTALS NOT SHOWN FOR CLARITY

CONCRETE REPAIR QUANTITIES		
PIER 11		PAID FOR UNDER ITEM NO.
DEEP SPALL REPAIR	16 CF	628041/628042
CRACK REPAIR	0 LF	628001

NOTES:

1. ENGINEER SHALL CONFIRM CONTRACTOR DELINEATION OF CRACK AND SPALL AREAS PRIOR TO COMMENCEMENT OF REPAIRS.
2. FOR DEEP SPALL REPAIR DETAILS, SEE DWG. DT-01.
3. EXISTING PEDESTALS NOT SHOWN FOR CLARITY. EXISTING PEDESTALS SHALL BE REMOVED TO THE TOP OF EXISTING PIER CAP.
4. FOR PROPOSED PEDESTAL DETAILS, SEE DWG. PR-27.
5. SOUTH PEDESTALS NOT SHOWN FOR CLARITY, SEE DWG. PR-21.
6. SHEAR BLOCK ELEVATION AND DETIALS NOT SHOWN FOR CLARITY, SEE DWG. PR-21.
7. FOR PIER STRENGTHENING DETAILS, SEE DWG. PR-25.

2/8/2018 4:36:07 PM
I:\Dover\Projects\425009.98\600_CADD\05_Plans\PR22_BR1-759.dgn

DELAWARE DEPARTMENT OF TRANSPORTATION

ADDENDUMS / REVISIONS

SCALE AS NOTED

REHABILITATION OF I-95 FROM I-495 TO NORTH OF BRANDYWINE RIVER BRIDGE

CONTRACT	BRIDGE NO.	1 759 059
T201407404	DESIGNED BY: DJC	
COUNTY	CHECKED BY: DEF	
NEW CASTLE		

PIER 11, NORTH FACE DETAILS

1-759 PR-22
SHEET NO. 2-694
TOTAL SHTS. 2-731

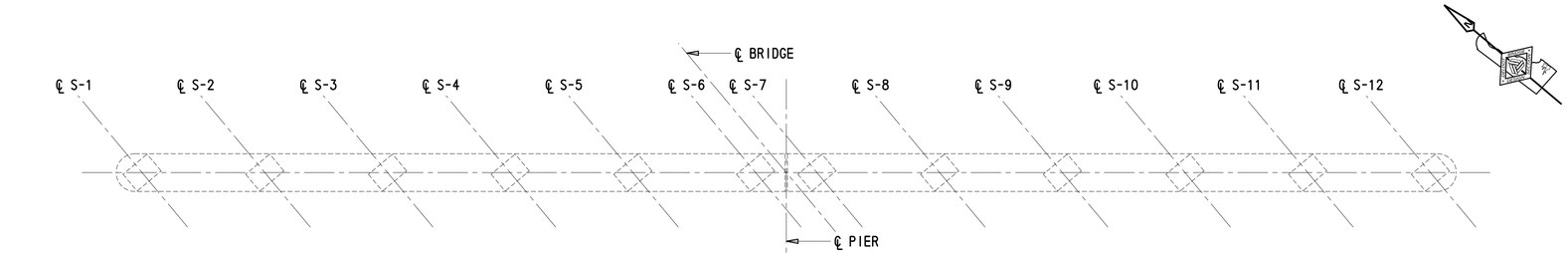

PLAN

1/8" = 1'-0"

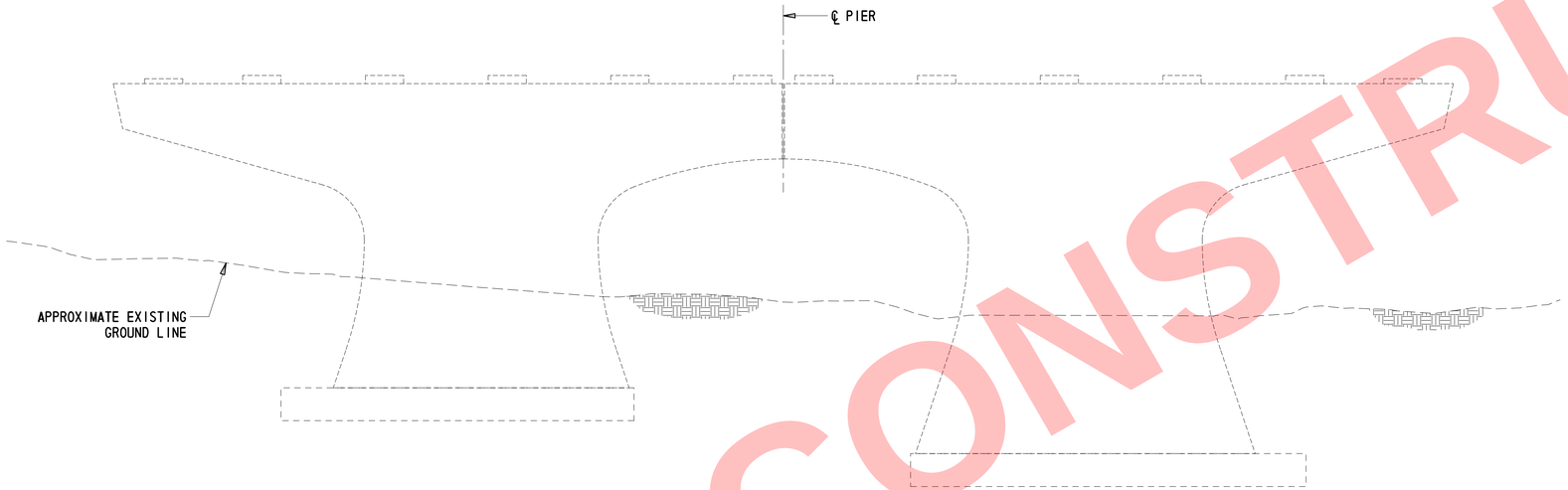

ELEVATION

1/8" = 1'-0"

LEGEND

- DEEP SPALL REPAIR (HEIGHT x WIDTH)
- CRACK REPAIR (LENGTH)

CONCRETE REPAIR QUANTITIES		
PIER 12		PAID FOR UNDER ITEM NO.
DEEP SPALL REPAIR	0 CF	628041/628042
CRACK REPAIR	0 LF	628001

NOTES:

1. ENGINEER SHALL CONFIRM CONTRACTOR DELINEATION OF CRACK AND SPALL AREAS PRIOR TO COMMENCEMENT OF REPAIRS.
2. FOR DEEP SPALL REPAIR DETAILS, SEE DWG. DT-01.
3. FOR PIER STRENGTHENING DETAILS, SEE DWG. PR-25.
4. SHEET INCLUDED PENDING DESIGN LEVEL INSPECTION.

NOT FOR CONSTRUCTION

2/8/2018 4:36:09 PM
T:\Dover\Projects\425009.98\600_CADD\05_Plans\PR23_BR1-759.dgn

DELAWARE
DEPARTMENT OF TRANSPORTATION

ADDENDUMS / REVISIONS

SCALE AS NOTED

REHABILITATION OF I-95
FROM I-495 TO NORTH OF
BRANDYWINE RIVER BRIDGE

CONTRACT T201407404
COUNTY NEW CASTLE

BRIDGE NO. 1 759 059
DESIGNED BY: DJC
CHECKED BY: DEF

PIER 12, SOUTH FACE
DETAILS

1-759
PR-23

SHEET NO. 2-695
TOTAL SHTS. 2-731

NOT FOR CONSTRUCTION

LEGEND

- DEEP SPALL REPAIR (HEIGHT x WIDTH)
- CRACK REPAIR (LENGTH)

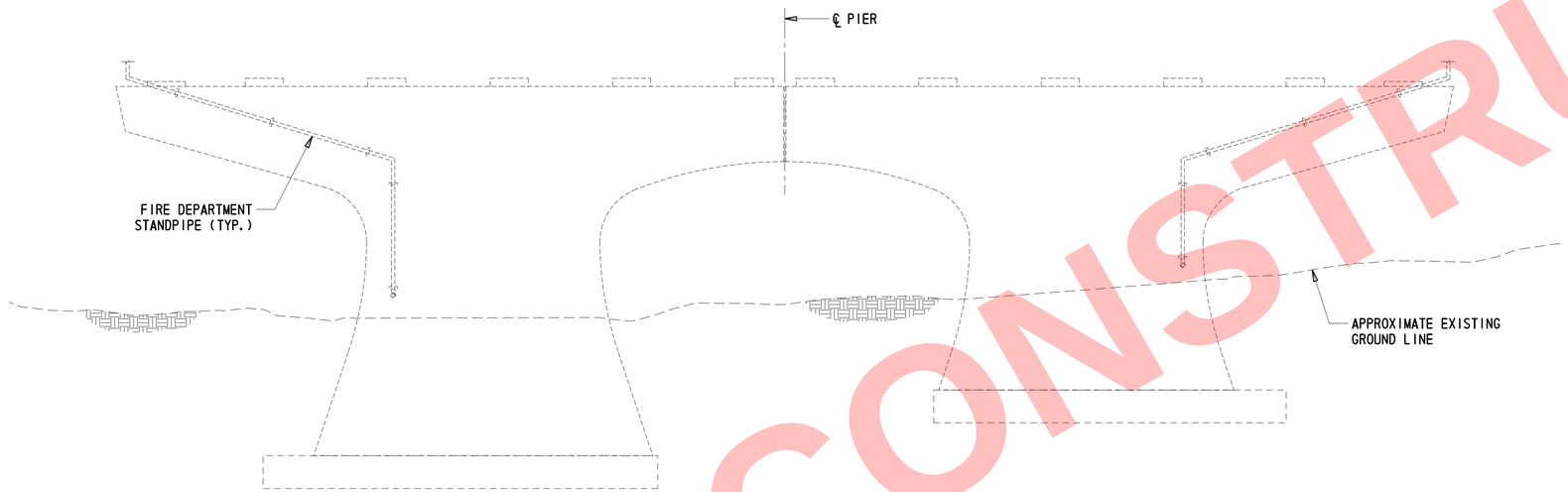

ELEVATION
1/8" = 1'-0"

NOTES:

1. ENGINEER SHALL CONFIRM CONTRACTOR DELINEATION OF CRACK AND SPALL AREAS PRIOR TO COMMENCEMENT OF REPAIRS.
2. FOR DEEP SPALL REPAIR DETAILS, SEE DWG. DT-01.
3. FOR PIER STRENGTHENING DETAILS, SEE DWG. PR-25.
4. SHEET INCLUDED PENDING DESIGN LEVEL INSPECTION.

CONCRETE REPAIR QUANTITIES

PIER 12		PAID FOR UNDER ITEM NO.
DEEP SPALL REPAIR	0 CF	628041/628042
CRACK REPAIR	0 LF	628001

2/8/2018 4:36:10 PM
I:\Dover_Projects\X25009.98\600_CADD\05_Plans\PR24_BR1-759.dgn

DELAWARE DEPARTMENT OF TRANSPORTATION

ADDENDUMS / REVISIONS

SCALE AS NOTED

REHABILITATION OF I-95 FROM I-495 TO NORTH OF BRANDYWINE RIVER BRIDGE

CONTRACT T201407404
COUNTY NEW CASTLE
BRIDGE NO. 1 759 059
DESIGNED BY: DJC
CHECKED BY: DEF

PIER 12, NORTH FACE DETAILS

1-759 PR-24
SHEET NO. 2-696
TOTAL SHTS. 2-731

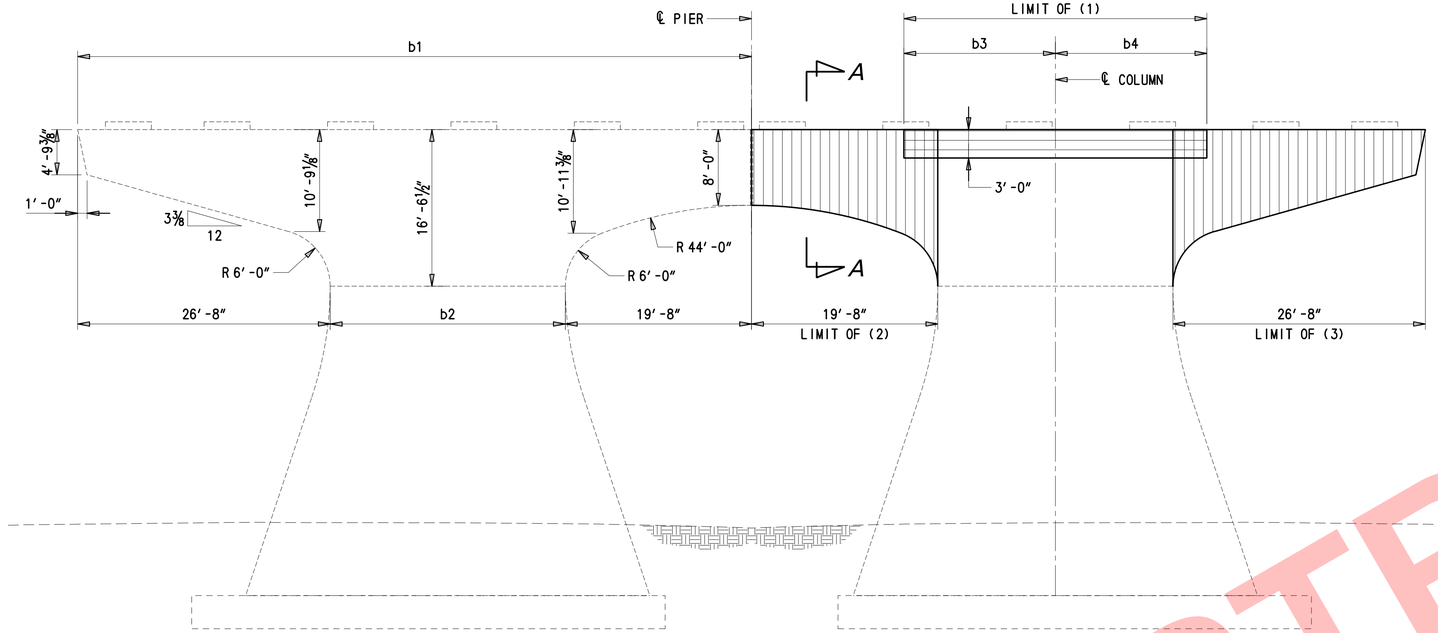

PIER GEOMETRY

(SOUTHBOUND SHOWN, NORTHBOUND SIMILAR)

ELEVATION

1/8″ = 1′-0″

(LOOKING STATIONS AHEAD)

FRP PLACEMENT

(NORTHBOUND SHOWN, SOUTHBOUND SHOWN, SIMILAR)

(1) NEGATIVE MOMENT FRP MATERIAL LAYERS TO BE EQUALLY APPLIED ON EACH FACE OF PIER CAP. SEE DESIGN CRITERIA TABLE FOR ADDITIONAL REQUIRED CAPACITY.

(2) SHEAR U-SHAPED FRP

(3) WRAP TO BE APPLIED EQUALLY ON EACH FACE OF PIER CAP. SEE DESIGN CRITERIA TABLE FOR ADDITIONAL REQUIRED CAPACITY.

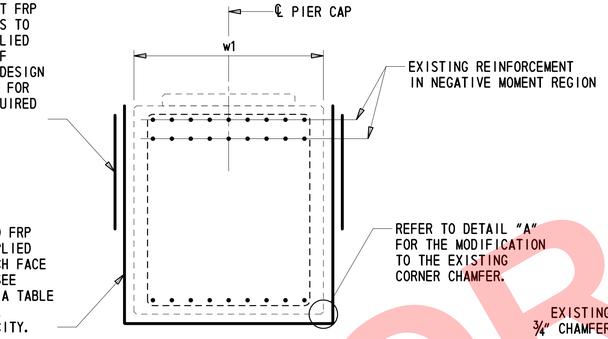

SECTION A-A

NOT TO SCALE

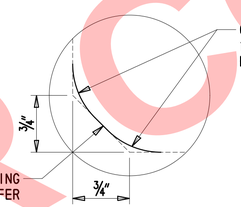

DETAIL 'A'

1″ = 1′-0″

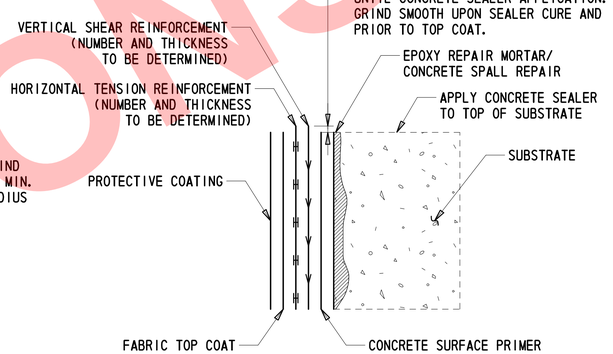

FRP WRAPPING DIAGRAM

NOT TO SCALE

GENERAL FRP NOTES:

1. THE DRAWINGS ON THIS SHEET SHOULD SERVE AS THE BASIS FOR A PRELIMINARY DESIGN. DEVIATIONS DUE TO MANUFACTURER SPECIFIC DETAILING ARE EXPECTED. EXCESSIVE DEVIATION WITHOUT MERIT WILL NOT BE CONSIDERED.
2. THE CONTRACTOR SHALL SUBMIT A FRP STRENGTHENING SYSTEM TO PROVIDE THE NECESSARY CAP STRENGTHENING SHOWN ON THIS SHEET. THE FRP STRENGTHENING SYSTEM DESIGN SHALL BE PERFORMED BY A PROFESSIONAL ENGINEER REGISTERED IN THE STATE OF DELAWARE WITH EXPERIENCE IN BRIDGE DESIGN, IN ACCORDANCE WITH THE AASHTO "GUIDE SPECIFICATIONS FOR THE DESIGN OF BONDED FRP SYSTEMS FOR REPAIR AND STRENGTHENING OF CONCRETE BRIDGE ELEMENTS", AND SHALL BE SUBMITTED FOR APPROVAL BY THE ENGINEER.
3. WORK SHALL NOT BEGIN UNTIL ALL SUBMITTALS REQUIRED IN SPECIAL PROVISION 6285XX HAVE BEEN RECEIVED AND APPROVED BY THE ENGINEER.
4. ALL CONCRETE SURFACES SHALL BE REPAIRED AND CLEANED IN ACCORDANCE WITH SPECIAL PROVISION 6285XX AND THE MANUFACTURER'S RECOMMENDATIONS.
5. UNLESS OTHERWISE SPECIFIED, FRP PLACEMENT CAN ONLY OCCUR WHEN CONCRETE TEMPERATURES ARE IN EXCESS OF 45 °F, BUT DO NOT EXCEED 100°F.
6. INSTALLATION OF THE FRP SYSTEM SHALL BE IN ACCORDANCE WITH SPECIAL PROVISION 6285XX AND THE MANUFACTURER'S RECOMMENDATIONS.
7. IF THE DESIGN REQUIRES THE FRP TO WRAP AROUND AN EDGE, THEN THE EDGE SHALL BE ROUNDED TO A MINIMUM 1" RADIUS. REFER TO DETAIL 'A' ON THIS SHEET.
8. A TECHNICAL REPRESENTATIVE FROM THE MANUFACTURER SHALL BE PRESENT DURING THE INITIAL INSTALLATION TO APPROVE WITH THE ENGINEER THE DEGREE OF PREPARATION AND THE APPLICATION OF THE FRP WRAP SYSTEM. THE REPRESENTATIVE SHALL REMAIN ON-SITE UNTIL THE ENGINEER DETERMINES THAT THE CONTRACTOR IS FAMILIAR WITH THE CORRECT INSTALLATION PROCEDURES.

EXTERNALLY BONDED FRP STRENGTHENING SYSTEM DESIGN CRITERIA:

1. DESIGN METHOD:

   STRUT-AND-TIE METHODOLOGY WAS USED TO ANALYZE THE EXISTING STRENGTH OF THE PIER SUBSTRUCTURE UNITS. DESIGN CRITERIA WILL BE PRESENTED IN TERMS OF THE EXISTING AND REQUIRED TENSILE CAPACITY OF THE TIES IN THE STRUT-AND-TIE MODEL.

2. MATERIAL PROPERTIES:

   CLEAR COVER = 3.0″
   f′c = 3.0 KSI
   fy = 40.0 KSI

3. THE TOTAL REQUIRED (FACTORED) STRENGTH AFTER STRENGTHENING SHALL BE COMPUTED BY THE FOLLOWING FORMULA:

   $Fu < Fr = \phi Fst + \phi Ffrp$

   WHERE,

   Fu = TOTAL FACTORED LOAD IN TENSION TIES
   Fr = TOTAL REQUIRED (FACTORED) TENSION AFTER STRENGHTENING
   ϕ Fst = ASSUMED EXISTING (FACTORED) TENSILE STRENGTH = ϕ (fy) (Ast)
   ϕ Ffrp = ASSUMED REQUIRED (FACTORED) TENSILE STRENGTH OF FRP WRAP

FRP STRENGTHENING SYSTEM DESIGN CRITERIA

PIER	PIER GEOMETRY					(1) NEGATIVE MOMENT CAPACITY (STM MODEL - TOP HORIZONTAL TENSION TIES)				(2) INTERIOR OVERHANG SHEAR CAPACITY (STM MODEL - VERTICAL TENSION TIES)				(3) EXTERIOR OVERHANG SHEAR CAPACITY (STM MODEL - VERTICAL TENSION TIES)			
	b1	b2	b3	b4	w1	Fu	Ast	ϕ Fst	ϕ Ffrp	Fu	Ast	ϕ Fst	ϕ Ffrp	Fu	Ast	ϕ Fst	ϕ Ffrp
	[FT-IN]	[FT-IN]	[FT-IN]	[FT-IN]	[FT-IN]	[KIPS]	[IN2]	[KIPS]	[KIPS]	[KIPS/FT]	[IN2/FT]	[KIPS/FT]	[KIPS/FT]	[KIPS/FT]	[IN2/FT]	[KIPS/FT]	[KIPS/FT]
PIER 1 N.	74′-8″	28′-4″	16′-10″	17′-6″	4′-0″	3333.4	40.0	1440.0	1893.4	113.8	1.17	42.1	71.7	176.6	1.32	47.5	129.1
PIER 1 S.	73′-4″	27′-0″	16′-5″	17′-3″	4′-0″	3258.8	48.0	1728.0	1530.8	103.4	1.06	38.2	65.2	173.5	1.32	47.5	126.0
PIER 2 N.	72′-2″	25′-10″	16′-3″	16′-7″	5′-0″	2230.8	31.5	1134.0	1096.8	86.3	0.92	33.1	53.2	124.6	0.88	31.7	92.9
PIER 2 S.	71′-2″	24′-10″	15′-9″	16′-9″	5′-0″	2278.6	31.5	1134.0	1144.6	86.7	0.92	33.1	53.6	124.2	0.88	31.7	92.5
PIER 10 N.	71′-2″	24′-10″	28′-10″	29′-10″	5′-0″	3345.0	45.0	1620.0	1725.0	116.9	0.92	33.1	83.8	183.7	1.17	42.1	141.6
PIER 10 S.	71′-2″	24′-10″	15′-9″	29′-10″	5′-0″	3345.0	54.0	1944.0	1401.0	116.9	0.92	33.1	83.8	183.7	1.17	42.1	141.6
PIER 11 N.	71′-2″	24′-10″	15′-9″	16′-9″	5′-0″	2314.4	31.5	1134.0	1180.0	89.3	0.92	33.1	56.2	124.4	0.88	31.7	92.7
PIER 11 S.	71′-2″	24′-10″	15′-9″	16′-9″	5′-0″	2317.8	31.5	1134.0	1183.8	90.4	0.92	33.1	57.3	124.4	0.88	31.7	92.7
PIER 12 N.	71′-2″	24′-10″	15′-9″	3′-9″	4′-0″	3094.6	40.0	1440.0	1654.6	104.7	0.92	33.1	71.6	164.6	1.32	47.5	117.1
PIER 12 S.	71′-2″	24′-10″	15′-9″	3′-9″	4′-0″	3094.6	48.0	1728.0	1366.6	104.7	0.92	33.1	71.6	164.6	1.32	47.5	117.1

NOT FOR CONSTRUCTION

DELAWARE DEPARTMENT OF TRANSPORTATION

ADDENDUMS / REVISIONS

SCALE AS NOTED

REHABILITATION OF I-95 FROM I-495 TO NORTH OF BRANDYWINE RIVER BRIDGE

CONTRACT T201407404
COUNTY NEW CASTLE
BRIDGE NO. 1 759 059
DESIGNED BY: JWS
CHECKED BY: DEF

PIER STRENGTHENING DETAILS - 1

1-759 PR-25
SHEET NO. 2-697
TOTAL SHTS. 2-731

2/8/2018 4:36:12 PM
T:\Dover\Projects\425009.98\600_CADD\05_Plans\PR25_BR1-759.dgn

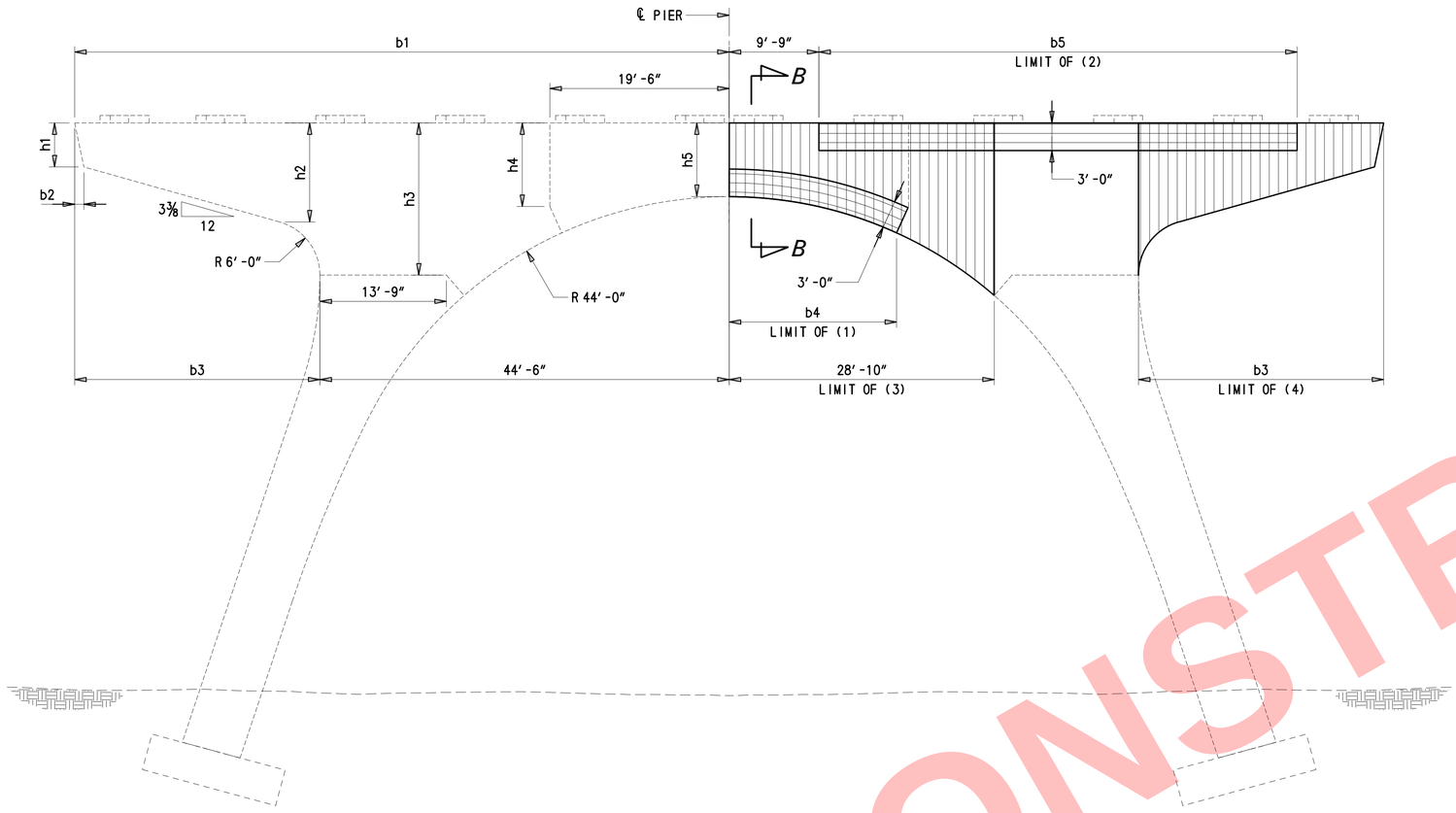

PIER GEOMETRY
(SOUTHBOUND SHOWN, NORTHBOUND SIMILAR)

ELEVATION
⅛″ = 1′-0″
(LOOKING STATIONS AHEAD)

FRP PLACEMENT
(NORTHBOUND SHOWN, SOUTHBOUND SIMILAR)

NOTES:

1. FOR GENERAL FRP NOTES, SEE SHEET PR-25.
2. FOR EXTERNALLY BONDED FRP STRENGTHENING SYSTEM DESIGN METHODOLOGY, MATERIAL PROPERTIES AND DESIGN STRENGTH EQUATION, SEE SHEET PR-25.
2. FOR CHAMFERED CORNER DETAIL AND FRP WRAPPING DIAGRAM, SEE SHEET PR-25.

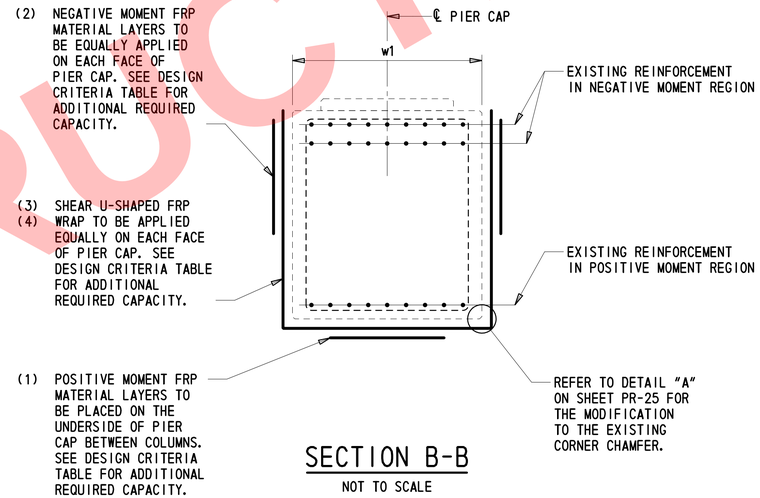

SECTION B-B
NOT TO SCALE

FRP STRENGTHENING SYSTEM DESIGN CRITERIA

PIER	PIER GEOMETRY										
	b1 [FT-IN]	b2 [FT-IN]	b3 [FT-IN]	b4 [FT-IN]	b5 [FT-IN]	h1 [FT-IN]	h2 [FT-IN]	h3 [FT-IN]	h4 [FT-IN]	h5 [FT-IN]	w1 [FT-IN]
PIER 3	71′-2″	1′-0″	26′-8″	0′-0″	52′-2″	4′-9⅜″	10′-9⅛″	16′-6½″	9′-1″	8′-0″	5′-0″
PIER 4	71′-2″	1′-0″	26′-8″	9′-9″	52′-2″	4′-9⅜″	10′-9⅛″	16′-6½″	9′-1″	8′-0″	5′-0″
PIER 5	71′-2″	1′-0″	26′-8″	9′-9″	19′-7″	4′-9⅜″	10′-9⅛″	16′-6½″	9′-1″	8′-0″	5′-6″
PIER 6	71′-9″	1′-2¼″	27′-3″	16′-4″	26′-1″	5′-8⅛″	11′-9⅛″	17′-6½″	10′-1″	9′-0″	6′-8″
PIER 7	71′-9″	1′-2¼″	27′-3″	9′-9″	26′-1″	5′-8⅛″	11′-9⅛″	17′-6½″	10′-1″	9′-0″	6′-8″
PIER 8	71′-2″	1′-0″	26′-8″	9′-9″	19′-7″	4′-9⅜″	10′-9⅛″	16′-6½″	9′-1″	8′-0″	5′-6″
PIER 9	71′-2″	1′-0″	26′-8″	9′-9″	52′-2″	4′-9⅜″	10′-9⅛″	16′-6½″	9′-1″	8′-0″	5′-0″

FRP STRENGTHENING SYSTEM DESIGN CRITERIA

PIER	(1) POSITIVE MOMENT CAPACITY (STM MODEL - BOTTOM HORIZONTAL TENSION TIES)				(2) NEGATIVE MOMENT CAPACITY (STM MODEL - TOP HORIZONTAL TENSION TIES)				(3) INTERIOR OVERHANG SHEAR CAPACITY (STM MODEL - VERTICAL TENSION TIES)				(4) EXTERIOR OVERHANG SHEAR CAPACITY (STM MODEL - VERTICAL TENSION TIES)			
	Fu [KIPS]	Ast [IN2]	Ø Fst [KIPS]	Ø Ffrp [KIPS]	Fu [KIPS]	Ast [IN2]	Ø Fst [KIPS]	Ø Ffrp [KIPS]	Fu [KIPS/FT]	Ast [IN2/FT]	Ø Fst [KIPS/FT]	Ø Ffrp [KIPS/FT]	Fu [KIPS/FT]	Ast [IN2/FT]	Ø Fst [KIPS/FT]	Ø Ffrp [KIPS/FT]
PIER 3	1201.0	37.4	1347.8	0.0	2106.0	32.0	1152.0	954.0	229.6	1.76	63.4	166.2	191.8	1.17	42.1	149.7
PIER 4	1437.0	37.4	1347.8	89.2	2316.8	32.0	1152.0	1164.8	239.4	1.76	63.4	176.0	193.5	1.17	42.1	151.4
PIER 5	1131.0	18.7	673.9	457.1	1781.9	36.0	1296.0	485.9	202.1	0.88	31.7	170.4	166.8	0.88	31.7	135.1
PIER 6	1976.0	23.4	842.4	1133.6	3685.9	88.0	3168.0	517.9	378.7	2.64	95.0	283.7	308.6	2.88	103.7	204.9
PIER 7	1747.0	23.4	842.4	904.6	3516.6	88.0	3168.0	348.6	364.8	2.64	95.0	269.8	304.6	2.88	103.7	200.9
PIER 8	1157.0	18.7	673.9	483.1	1772.1	36.0	1296.0	476.1	204.2	0.88	31.7	172.5	167.7	0.88	31.7	136.0
PIER 9	1376.0	25.0	898.6	477.4	2272.1	32.0	1152.0	1120.1	236.7	0.88	31.7	205.0	193.2	1.17	42.1	151.1

NOT FOR CONSTRUCTION

2/8/2018 4:36:13 PM
F:\Dover\Projects\425009.98\600_CADD\05_Plans\PR26_BR1-759.dgn

DELAWARE DEPARTMENT OF TRANSPORTATION

ADDENDUMS / REVISIONS

SCALE AS NOTED

REHABILITATION OF I-95 FROM I-495 TO NORTH OF BRANDYWINE RIVER BRIDGE

CONTRACT T201407404
COUNTY NEW CASTLE
BRIDGE NO. 1 759 059
DESIGNED BY: JWS
CHECKED BY: DEF

PIER STRENGTHENING DETAILS – 2

1-759 PR-26
SHEET NO. 2-698
TOTAL SHTS. 2-731

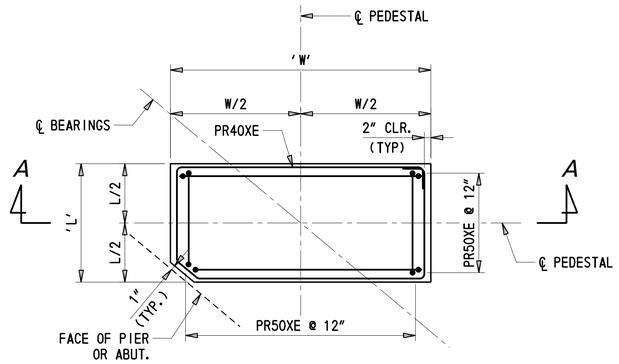

PLAN

¾" = 1'-0"

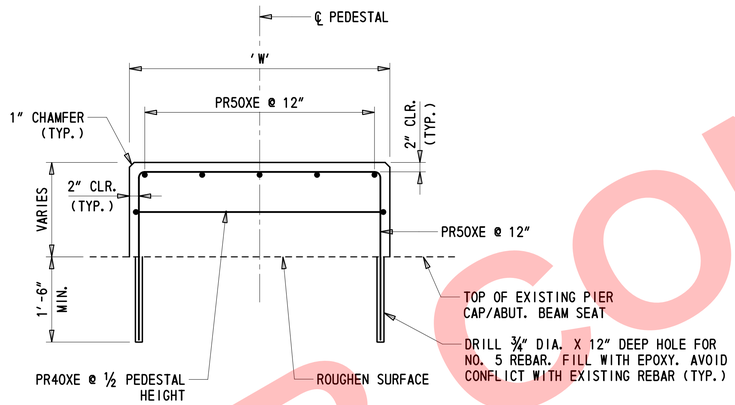

SECTION A-A

¾" = 1'-0"

PEDESTAL REINFORCEMENT

PIER AND ABUTMENT PEDESTAL DIMENSIONS

UNIT	LOCATION					
	S1, S12		S2, S5-S8, S11		S3, S4, S9, S10	
	LENGTH (L)	WIDTH (W)	LENGTH (L)	WIDTH (W)	LENGTH (L)	WIDTH (W)
ABUT. A	1'-8"	3'-3"	1'-8"	3'-3"	1'-8"	1'-8¼"
PIER 2 S.	1'-9"	3'-5"	1'-9"	3'-5"	2'-4¾"	1'-10¼"
PIER 2 N.	1'-9"	3'-5"	1'-9"	3'-5"	2'-4¾"	1'-10¼"
PIER 3	1'-8"	4'-1"	2'-1"	4'-7"	2'-1"	2'-¼"
PIER 5 S.	1'-8"	3'-5"	1'-8"	3'-5"	2'-2¼"	2'-¼"
PIER 5 N.	1'-10"	3'-9"	1'-10"	3'-9"	2'-2¼"	2'-4¼"
PIER 7	2'-8"	5'-0"	2'-8"	5'-0"	2'-8"	2'-4¼"
PIER 8 S.	2'-1"	3'-9"	2'-1"	3'-9"	2'-5½"	2'-4¼"
PIER 8 N.	1'-8"	3'-5"	1'-8"	3'-5"	2'-½"	2'-¼"
PIER 10	2'-1"	4'-7"	2'-1"	4'-7"	2'-1"	2'-¼"
PIER 11 S.	1'-9"	3'-5"	1'-9"	3'-5"	2'-2¼"	2'-¼"
PIER 11 N.	1'-9"	3'-5"	1'-9"	3'-5"	2'-2¼"	2'-¼"
ABUT. B	1'-8"	3'-3"	1'-8"	3'-3"	1'-8"	1'-8¼"

NOTES:

1. EXISTING PEDESTALS NOT SHOWN FOR CLARITY.
2. PEDESTAL CONCRETE SHALL BE PAID FOR UNDER ITEM 610005.

NOT FOR CONSTRUCTION

2/8/2018 4:36:15 PM
T:\Dover_Projects\425009.98\600_CADD\05_Plans\PR27_BR1-759.dgn

DELAWARE
DEPARTMENT OF TRANSPORTATION

ADDENDUMS / REVISIONS

SCALE AS NOTED

REHABILITATION OF I-95
FROM I-495 TO NORTH OF
BRANDYWINE RIVER BRIDGE

CONTRACT T201407404
COUNTY NEW CASTLE
BRIDGE NO. 1 759 059
DESIGNED BY: DJC
CHECKED BY: DEF

PEDESTAL DETAILS

1-759
PR-27
SHEET NO. 2-699
TOTAL SHTS. 2-731

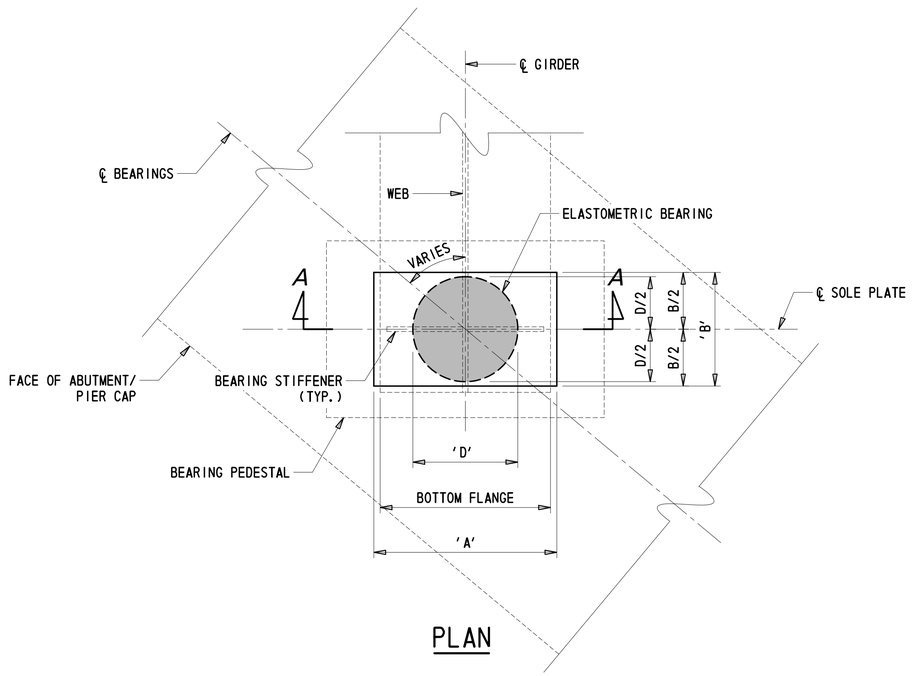

PLAN

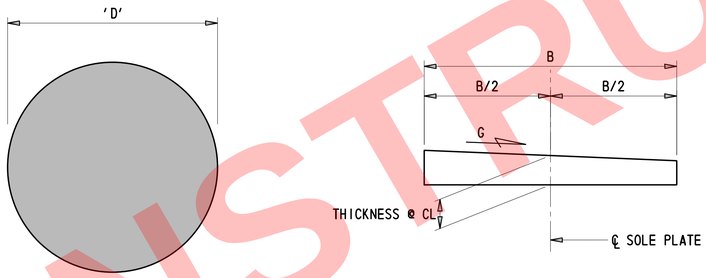

STEEL REINFORCED ELASTOMERIC BEARING PLAN

BEVELED SOLE PLATE

STEEL REINFORCED ELASTOMERIC BEARING TABLE

LOCATION	UNIT	MARK	TYPE	NEOPRENE HARDNESS (SHORE A)	TOTAL NO. REQ'D.	BEARING DESIGN BASIS			DIAMETER 'D'	SHAPE FACTOR		AREA (IN²)	INTERIOR LAYERS	TOTAL PAD THICKNESS 'T' (IN)
						REACTION (KIPS)*		MOVEMENT (IN)**		INTERIOR LAYERS	COVER LAYER			
						DEAD LOAD	LIVE LOAD							
ABUT. A	1S	E1	EXP.	60 ± 5 DURO	12	84.57	119.52	1.03	12	8.00	12.00	113.10	3	2.1034
PIER 2	1S	E1	EXP.	60 ± 5 DURO	12	75.11	105.78	1.03	12	8.00	12.00	113.10	3	2.1034
PIER 2	2S	E2	EXP.	60 ± 5 DURO	12	87.06	119.91	2.56	12	6.00	12.00	113.10	7	4.9568
PIER 3	2S	E3	EXP.	60 ± 5 DURO	12	309.48	212.49	0.93	16	10.67	16.00	201.06	5	3.0926
PIER 5	2S	E3	EXP.	60 ± 5 DURO	12	85.74	108.43	1.13	16	10.67	16.00	201.06	5	3.0926
PIER 5	3	E4	EXP.	60 ± 5 DURO	12	143.17	122.80	1.86	18	9.00	18.00	254.47	7	4.9568
PIER 7	3	E4	EXP.	60 ± 5 DURO	12	547.43	270.29	1.86	18	9.00	18.00	254.47	7	4.9568
PIER 8	3	E5	EXP.	60 ± 5 DURO	12	145.64	134.31	4.16	16	8.00	16.00	201.06	12	8.0548
PIER 8	2N	E3	EXP.	60 ± 5 DURO	12	88.36	107.99	1.13	16	10.67	16.00	201.06	5	3.0926
PIER 10	2N	E3	EXP.	60 ± 5 DURO	12	306.51	208.39	1.43	16	10.67	16.00	201.06	5	3.0926
PIER 11	2N	E2	EXP.	60 ± 5 DURO	12	86.38	108.46	2.56	12	6.00	12.00	113.10	7	4.9568
PIER 11	1N	E1	EXP.	60 ± 5 DURO	12	81.63	105.76	1.03	12	8.00	12.00	113.10	5	2.1034
ABUT. B	1N	E1	EXP.	60 ± 5 DURO	12	79.94	106.61	1.03	12	8.00	12.00	113.10	5	2.1034

* MAX. UN-FACTORED SERVICE 1 REACTION PER BEARING (W/O DYNAMIC LOAD ALLOWANCE).
** TEMPERATURE MOVEMENTS FROM 0°F TO 120 °F.

SOLE PLATE TABLE

LOCATION	UNIT	WIDTH - A (IN)	LENGTH - B (IN)	THICKNESS @ CL (IN)	BEVEL - G (%)
ABUT. A	1S	20.00	14.00	1.50	0.00%
PIER 2	1S	20.00	14.00	1.50	0.00%
PIER 2	2S	24.00	14.00	1.50	0.00%
PIER 3	2S	24.00	18.00	1.50	0.00%
PIER 5	2S	24.00	18.00	1.50	0.00%
PIER 5	3	28.00	20.00	1.50	4.12%
PIER 7	3	28.00	20.00	1.50	0.00%
PIER 8	3	28.00	18.00	1.50	2.86%
PIER 8	2N	24.00	18.00	1.50	0.00%
PIER 10	2N	24.00	18.00	1.50	0.00%
PIER 11	2N	24.00	14.00	1.50	0.00%
PIER 11	1N	20.00	14.00	1.50	0.00%
ABUT. B	1N	20.00	14.00	1.50	0.00%

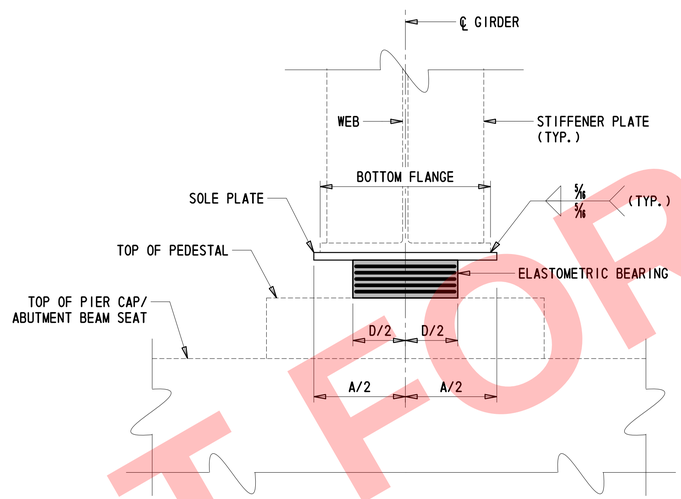

SECTION A-A

TYPICAL BEARING DETAIL

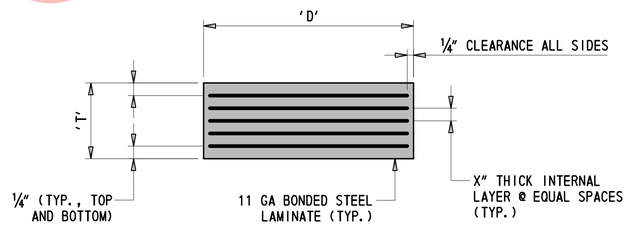

STEEL REINFORCED ELASTOMERIC BEARING ELEVATION

NOTES:

1. PROVIDE ALL STEEL REINFORCED ELASTOMERIC BEARINGS IN ACCORDANCE WITH SECTION 623 - 'BEARING DEVICES' OF THE STANDARD SPECIFICATIONS.
2. SOLE PLATES SHALL BE ASTM A 709 GRADE 50W(OR SPECIFY A HIGHER GRADE) AND TO BE BEVELED TO MATCH GRADE WHEN GRADE EXCEEDS 1 PERCENT. STEEL SURFACES OF SOLE PLATES TO BE MACHINE FINISHED AS SHOWN IN THE DETAILS, MEASURED IN ACCORDANCE WITH ANSI B46.1.
3. SOLE PLATES SHALL MEET A FLATNESS REQUIREMENT OF 0.5 PERCENT IN THE DIRECTION BEING MEASURED (WIDTH, LENGTH, AND DIAGONALS) MAXIMUM, BUT NOT TO EXCEED 1/8 INCH.
4. STEEL REINFORCED ELASTOMERIC BEARINGS SHALL BE ATTACHED TO THE TOP OF CONCRETE PEDESTAL WITH AN APPROVED EPOXY ADHESIVE IN ACCORDANCE WITH SECTION 623.03(C) OF THE STANDARD SPECIFICATIONS IN SUCH A WAY THAT VISIBLE CONCRETE SURFACES WILL NOT BE STAINED. ENSURE THE EPOXY ADHESIVE HAS SET PRIOR TO PLACEMENT OF BEAMS.
5. PAYMENT FOR FABRICATION AND INSTALLATION OF STEEL REINFORCED ELASTOMERIC BEARINGS AND SOLE PLATES SHALL BE INCIDENTAL TO ITEM 62300.

NOT FOR CONSTRUCTION

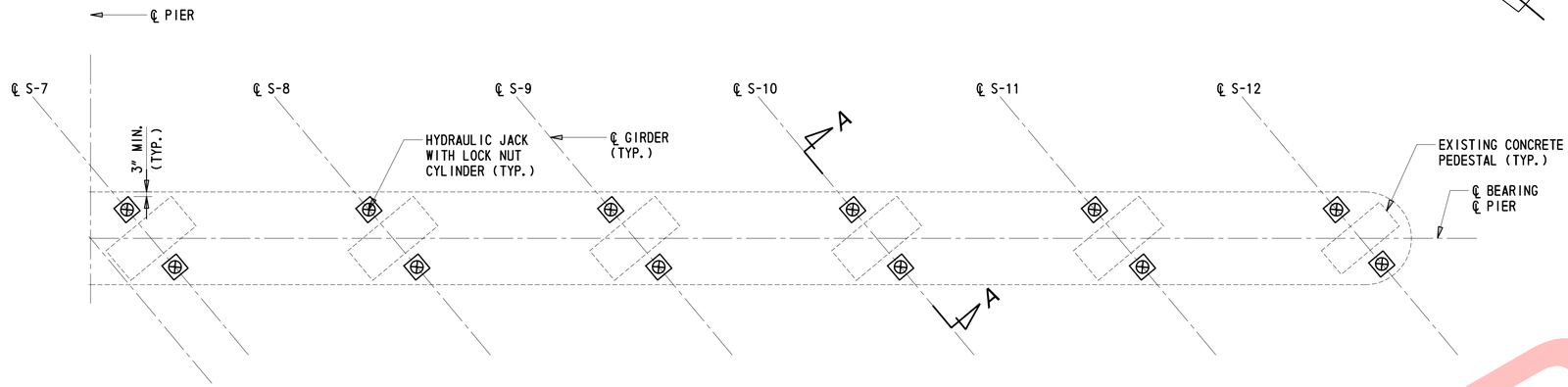

PROPOSED JACKING - PLAN
PIERS 3, 7, AND 10

(NB SHOWN, SB SIMILAR)

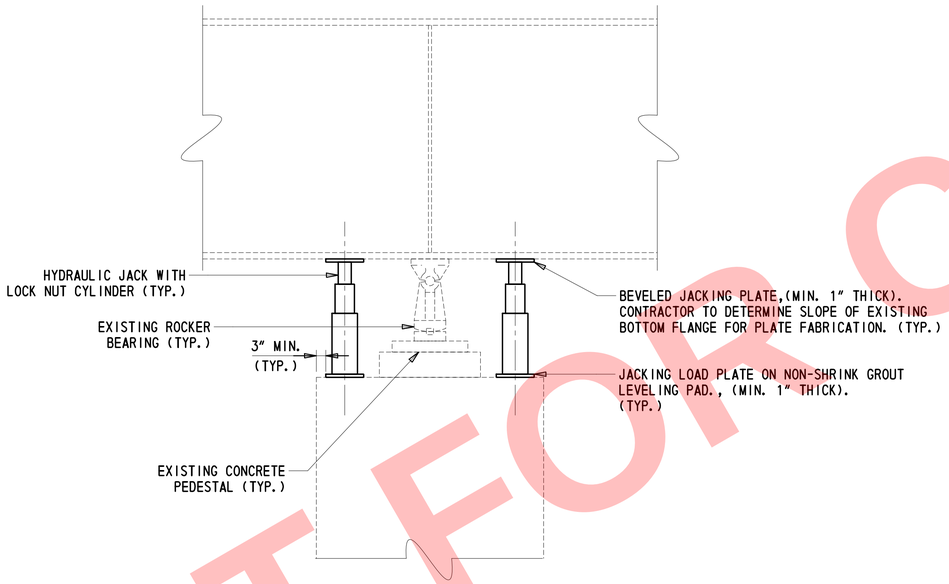

SECTION A-A

BRIDGE JACKING NOTES:

1. LIVE LOAD, SUPPLIES, AND MATERIALS ARE NOT PERMITTED ON THE STRUCTURE DURING JACKING OPERATIONS AND WHEN THE SUPERSTRUCTURE IS IN AN ELEVATED POSITION.
2. MONITOR THE JACKING FORCES APPLIED TO THE GIRDERS DURING JACKING OPERATIONS. THE APPLIED JACKING FORCE SHALL BE SUFFICIENT TO RAISE THE EXISTING GIRDERS TO THE REQUIRED ELEVATION NECESSARY TO REPLACE BEARINGS AND INSTALL NEW PEDESTALS.
3. THE MINIMUM CAPACITY OF THE HYDRAULIC JACKS IS TO BE 165% OF THE TOTAL ANTICIPATED UNFACTORED JACKING LOAD. JACKED LOADS SHALL BE SECURED BY TEMPORARY BLOCKING, OR THE USE OF LOCKNUT JACKS. HYDRAULIC PRESSURE IS NOT TO BE USED TO SUPPORT LOADS. DURING JACKING, BLOCKING OR OTHER MEANS OF SUPPORT IS TO BE MAINTAINED WITHIN 1 INCH BELOW THE LIFTED STRUCTURE. JACK ALL SIX GIRDERS (S1-S6 OR S7-S12) AT A SUBSTRUCTURE UNIT SIMULTANEOUSLY AND ENSURE A MAXIMUM OF 1/8" IN JACKED HEIGHT DIFFERENTIAL BETWEEN ANY TWO GIRDERS. ALL JACKS SHALL DISPLAY HEIGHT OF LIFT.
4. IT IS THE RESPONSIBILITY OF THE CONTRACTOR TO PROVIDE SHOP DRAWING DETAILS AND CALCULATIONS FOR THE PROPOSED JACKING OPERATION AND INFORMATION ON THE TYPE OF JACK AND JACKING SEQUENCE TO THE ENGINEER FOR APPROVAL. THE CONTRACTOR SHALL SUBMIT CALCULATIONS TO VERIFY ALL CONNECTIONS AND END DIAPHRAGMS TO CARRY JACKING AND SUPERSTRUCTURE LOADS (DEAD). ALL DRAWINGS AND CALCULATIONS ARE TO BE SEALED BY A PROFESSIONAL ENGINEER REGISTERED IN THE STATE OF DELAWARE. PAYMENT SHALL BE MADE UNDER ITEM #604000 - JACKING BRIDGE.
5. THE CONTRACTOR SHALL PERFORM END DIAPHRAGM REPAIRS AT JACKING LOCATIONS, PRIOR TO JACKING THE BRIDGE.
6. THE CONTRACTOR SHALL TEMPORARILY DISCONNECT AND/OR TEMPORARILY REMOVE ANY DRAINAGE PIPES, STAND PIPES, METAL RAIL, GUARDRAIL, ETC. THAT MAY INTERFERE WITH JACKING OPERATIONS PRIOR TO JACKING THE BRIDGE. RECONNECT AND/OR REINSTALL ANY ITEMS THAT WERE TEMPORARILY DISCONNECTED AND/OR REMOVED WHEN JACKING OPERATIONS ARE COMPLETE. PAYMENT SHALL BE INCIDENTAL TO ITEM #604000 - JACKING BRIDGE.
7. ALL PAINTED AREAS DAMAGED DURING CONSTRUCTION BY THE CONTRACTOR SHALL BE REPAINTED BY THE CONTRACTOR AT NO ADDITIONAL COST TO THE DEPARTMENT.
8. THE CONTRACTOR MAY SUBMIT AN ALTERNATE JACKING ARRANGEMENT AND DESIGN BY SUBMITTING DRAWINGS AND CALCULATIONS FOR THE ALTERNATE DESIGN TO THE ENGINEER FOR APPROVAL. ALL DRAWINGS AND CALCULATIONS ARE TO BE SEALED BY A PROFESSIONAL ENGINEER REGISTERED IN THE STATE OF DELAWARE.
9. PROVIDE TEMPORARY LOAD PLATES BELOW JACKS TO ENSURE DISTRIBUTION OF LOAD SO AS NOT TO OVERSTRESS CONCRETE.
10. ALL JACKING, TEMPORARY SUPPORT SYSTEMS, AND ALL TEMPORARY WORKS FOR BEARING REPLACEMENT SHALL BE PAID FOR UNDER ITEM 604000.

GIRDER LOADS (KIPS)

	PIER 3		PIER 7		PIER 10	
GIRDER NO.	UNFACTORED	FACTORED	UNFACTORED	FACTORED	UNFACTORED	FACTORED
S-1/S-12	275.4	358.1	479.3	623.1	269.4	350.2
S-2/S-11	253.7	329.8	476.1	618.9	255.6	332.3
S-3/S-10	243.6	316.7	449.3	584.1	241.9	314.5
S-4/S-9	242.9	315.7	454.4	590.7	242.6	315.4
S-5/S-8	264.7	344.1	490.3	637.4	263.8	343.0
S-6/S-7	274.3	356.6	492.0	639.6	274.6	356.9

UNFACTORED LOAD = DEAD LOAD ONLY
FACTORED LOAD = DEAD LOAD * 1.30 LOAD FACTOR

NOT FOR CONSTRUCTION

DELAWARE DEPARTMENT OF TRANSPORTATION

ADDENDUMS / REVISIONS

NOT TO SCALE

REHABILITATION OF I-95 FROM I-495 TO NORTH OF BRANDYWINE RIVER BRIDGE

CONTRACT T201407404
COUNTY NEW CASTLE
BRIDGE NO. 1 759 059
DESIGNED BY: RMB
CHECKED BY: DEF

BRIDGE JACKING DETAILS - 1

1-759 BD-02
SHEET NO. 2-701
TOTAL SHTS. 2-731

2/8/2018 4:36:18 PM
f:\Dover\Projects\425009.98\600_CADD\05_Plans\BD02_BR1-759.dgn

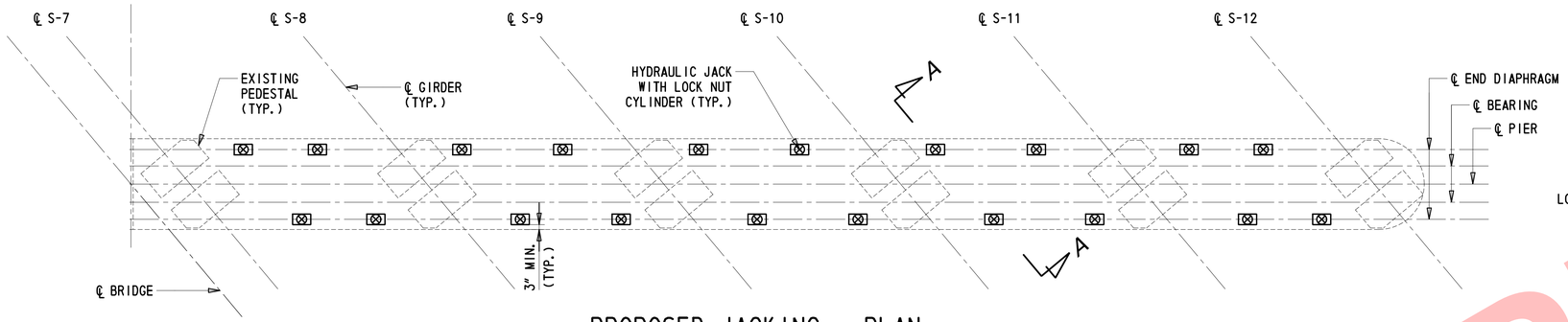

PROPOSED JACKING - PLAN
PIERS 2 AND 11

(NB SHOWN, SB SIMILAR)

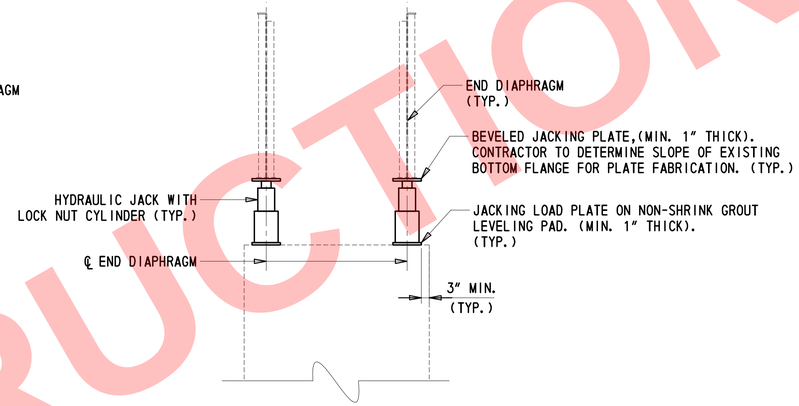

SECTION A-A

(GIRDERS, PEDESTAL, BEARING, AND DECK NOT SHOWN FOR CLARITY)

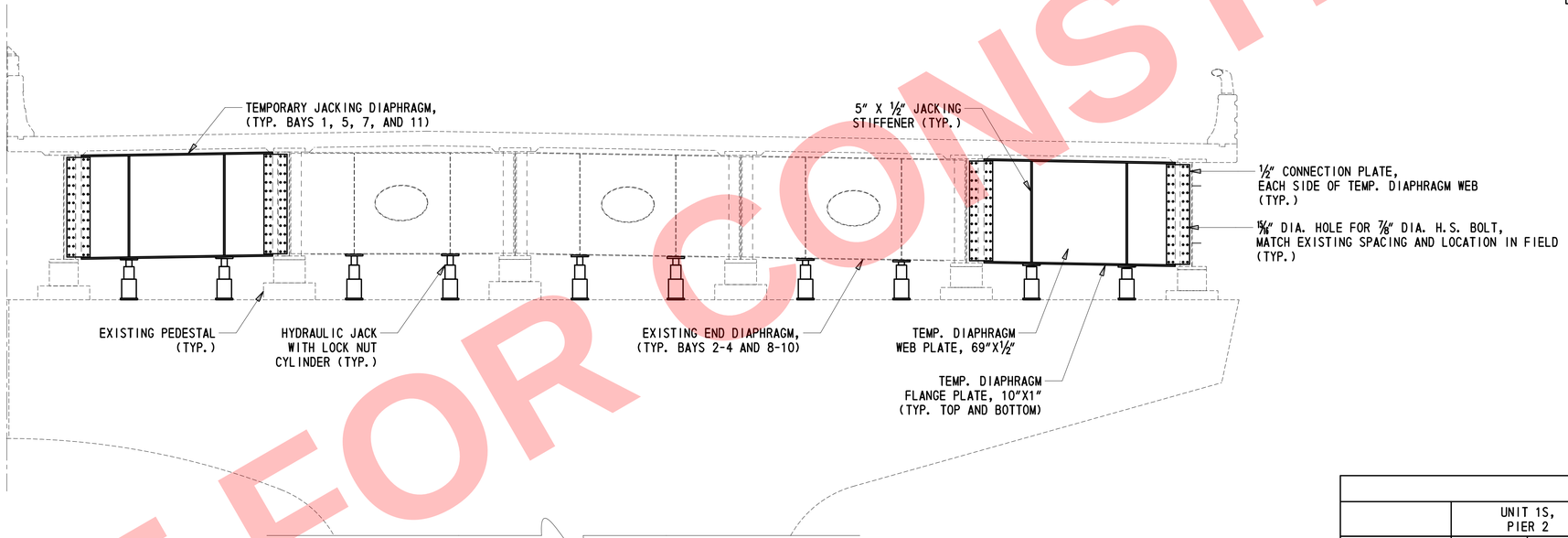

PROPOSED JACKING - TYPICAL SECTION
PIERS 2 AND 11

(NB SHOWN, SB SIMILAR)

GIRDER LOADS (KIPS)

	UNIT 1S, PIER 2		UNIT 2S, PIER 2		UNIT 2N, PIER 11		UNIT 1N, PIER 11	
GIRDER NO.	UNFACTORED	FACTORED	UNFACTORED	FACTORED	UNFACTORED	FACTORED	UNFACTORED	FACTORED
S-1/S-12	65.8	85.6	76.4	99.3	77.1	100.3	69.5	90.4
S-2/S-11	59.5	77.4	70.6	91.7	67.3	87.4	66.1	85.9
S-3/S-10	58.0	75.4	67.2	87.3	66.6	86.6	61.5	80.0
S-4/S-9	57.8	75.1	66.9	87.0	65.8	85.6	62.8	81.6
S-5/S-8	61.9	80.5	72.0	93.6	71.7	93.3	64.6	84.0
S-6/S-7	67.0	87.1	77.8	101.1	76.9	100.0	73.1	95.0

UNFACTORED LOAD = DEAD LOAD ONLY
FACTORED LOAD = DEAD LOAD * 1.30 LOAD FACTOR

NOTES:

1. SEE DWG. BD-02 FOR BRIDGE JACKING NOTES.
2. WHERE TEMPORARY DIAPHRAGMS ARE REQUIRED FOR BRIDGE JACKING, REMOVE AND SALVAGE EXISTING DIAPHRAGMS AND INSTALL TEMPORARY DIAPHRAGM. AFTER BRIDGE JACKING IS COMPLETE, REINSTALL SALVAGED DIAPHRAGM.

NOT FOR CONSTRUCTION

2/8/2018 4:36:20 PM
F:\Dover\Projects\425009.98\600_CADD\05_Plans\BD03_BRT-759.dgn

DELAWARE DEPARTMENT OF TRANSPORTATION

ADDENDUMS / REVISIONS

NOT TO SCALE

REHABILITATION OF I-95 FROM I-495 TO NORTH OF BRANDYWINE RIVER BRIDGE

CONTRACT T201407404
COUNTY NEW CASTLE
BRIDGE NO. 1 759 059
DESIGNED BY: RMB
CHECKED BY: DEF

BRIDGE JACKING DETAILS – 2

1-759 BD-03
SHEET NO. 2-702
TOTAL SHTS. 2-731

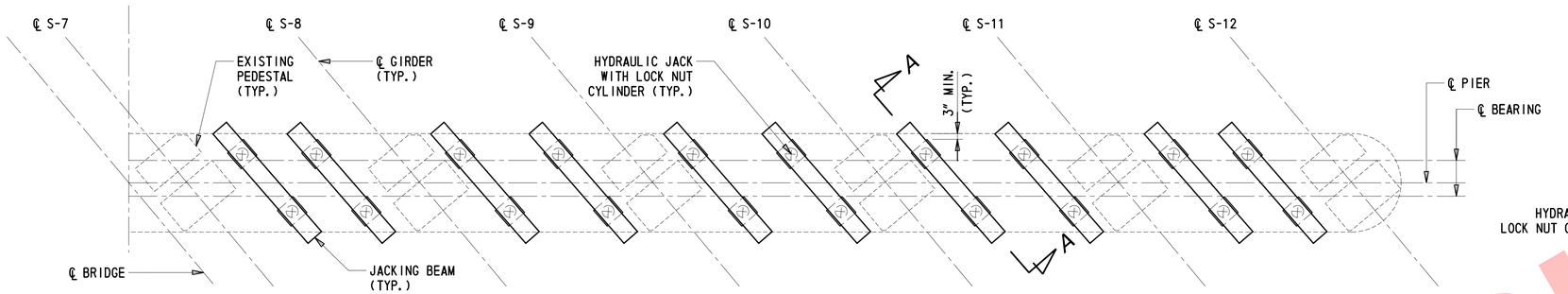

PROPOSED JACKING - PLAN
PIERS 5 AND 8

(NB SHOWN, SB SIMILAR)

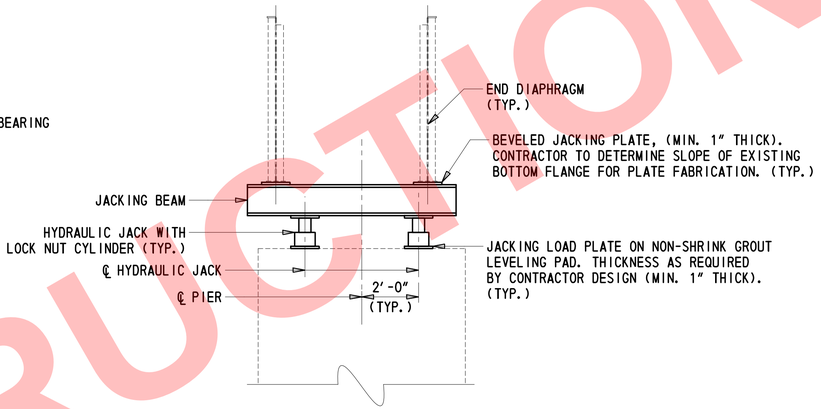

SECTION A-A

(GIRDERS, PEDESTAL, BEARING,AND DECK NOT SHOWN FOR CLARITY)

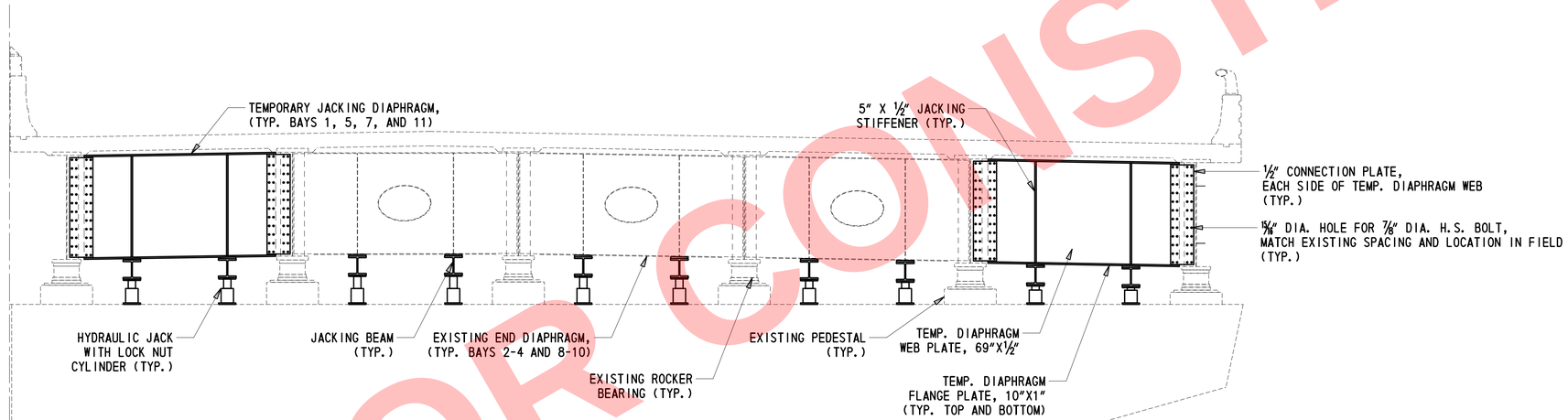

PROPOSED JACKING - TYPICAL SECTION
PIERS 5 AND 8

(NB SHOWN, SB SIMILAR)

NOTES:

1. SEE DWG. BD-02 FOR BRIDGE JACKING NOTES.
2. WHERE TEMPORARY DIAPHRAGMS ARE REQUIRED FOR BRIDGE JACKING, REMOVE AND SALVAGE EXISTING DIAPHRAGMS AND INSTALL TEMPORARY DIAPHRAGM. AFTER BRIDGE JACKING IS COMPLETE, REINSTALL SALVAGED DIAPHRAGM.

GIRDER LOADS (KIPS)

	UNIT 2S, PIER 5		UNIT 3, PIER 5		UNIT 3, PIER 8		UNIT 2N, PIER 8	
GIRDER NO.	UNFACTORED	FACTORED	UNFACTORED	FACTORED	UNFACTORED	FACTORED	UNFACTORED	FACTORED
S-1/S-12	76.4	99.3	123.8	160.9	126.4	164.4	76.5	99.5
S-2/S-11	68.6	89.2	126.8	164.8	120.0	156.1	71.1	92.4
S-3/S-10	66.1	85.9	116.2	151.0	117.0	152.1	66.7	86.7
S-4/S-9	65.6	85.3	118.9	154.6	115.8	152.5	68.2	88.6
S-5/S-8	71.2	92.6	125.3	162.9	130.1	169.2	70.3	91.3
S-6/S-7	76.4	99.3	129.1	167.9	125.2	162.8	79.2	102.9

UNFACTORED LOAD = DEAD LOAD ONLY
FACTORED LOAD = DEAD LOAD * 1.30 LOAD FACTOR

NOT FOR CONSTRUCTION

2/8/2018 4:36:22 PM
F:\Dover\Projects\425009.98\600_CADD\05_Plans\BD04_BR1-759.dgn

DELAWARE DEPARTMENT OF TRANSPORTATION

ADDENDUMS / REVISIONS

NOT TO SCALE

REHABILITATION OF I-95 FROM I-495 TO NORTH OF BRANDYWINE RIVER BRIDGE

CONTRACT T201407404
COUNTY NEW CASTLE
BRIDGE NO. 1 759 059
DESIGNED BY: RMB
CHECKED BY: DEF

BRIDGE JACKING DETAILS – 3

1-759 BD-04
SHEET NO. 2-703
TOTAL SHTS. 2-731

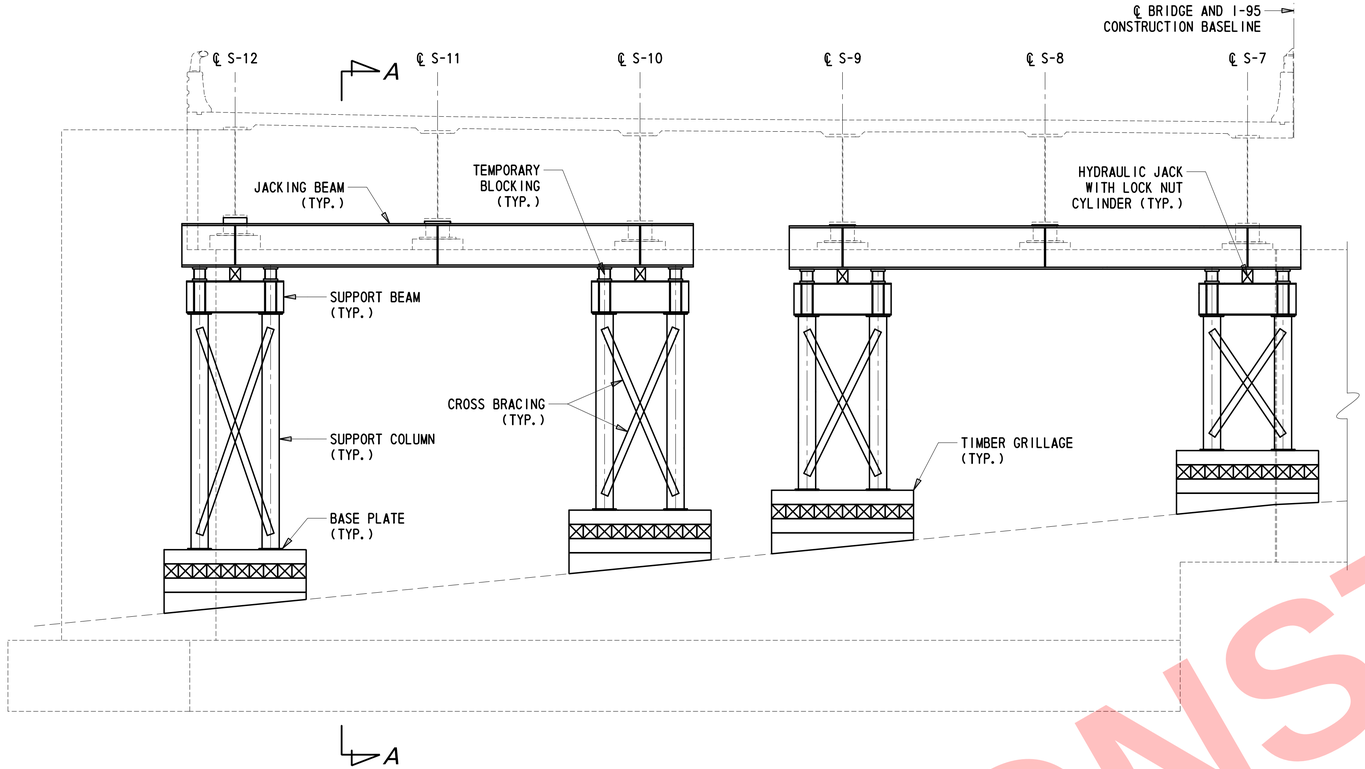

PROPOSED JACKING - TYPICAL SECTION
ABUTMENT A

(NB SHOWN, SB SIMILAR)

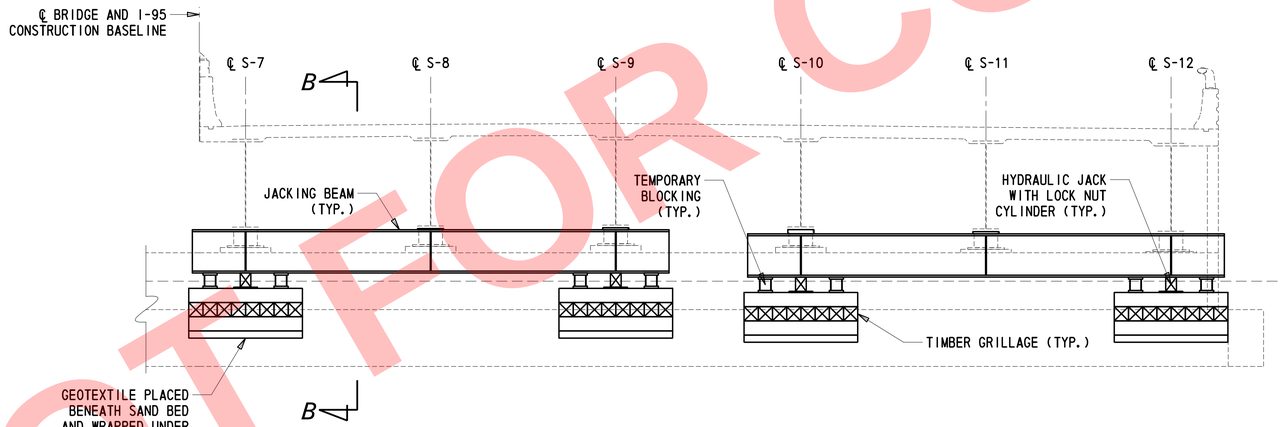

PROPOSED JACKING - TYPICAL SECTION
ABUTMENT B

(NB SHOWN, SB SIMILAR)

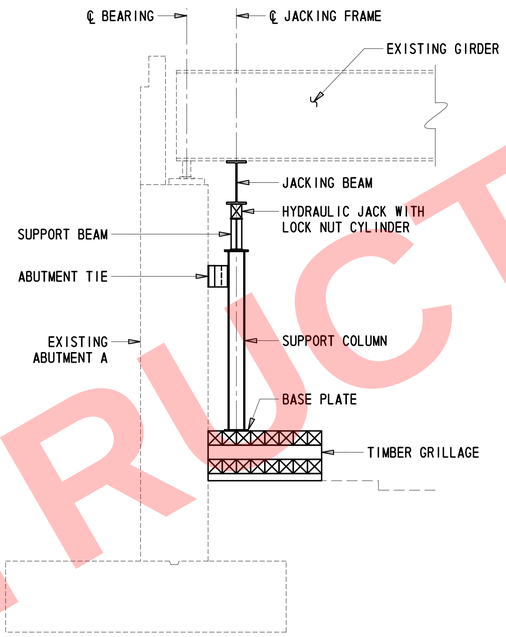

SECTION A-A

GIRDER LOADS (KIPS)		
GIRDER NO.	ABUTMENT A	
	UNFACTORED	FACTORED
S-1/S-12	74.0	96.2
S-2/S-11	69.9	90.8
S-3/S-10	66.7	86.7
S-4/S-9	67.5	87.7
S-5/S-8	70.4	91.5
S-6/S-7	75.8	98.6

UNFACTORED LOAD = DEAD LOAD ONLY
FACTORED LOAD = DEAD LOAD * 1.30 LOAD FACTOR

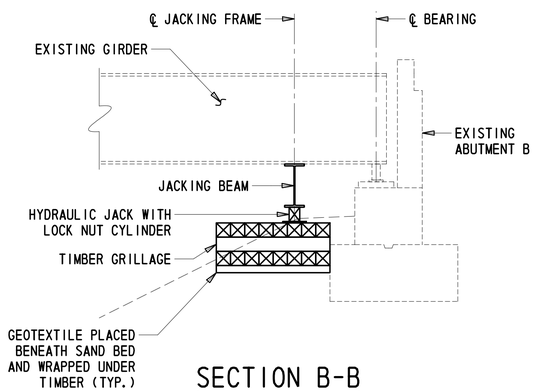

SECTION B-B

GIRDER LOADS (KIPS)		
GIRDER NO.	ABUTMENT B	
	UNFACTORED	FACTORED
S-1/S-12	70.1	91.1
S-2/S-11	62.8	81.6
S-3/S-10	61.7	80.2
S-4/S-9	60.9	79.1
S-5/S-8	66.2	86.0
S-6/S-7	71.6	93.0

UNFACTORED LOAD = DEAD LOAD ONLY
FACTORED LOAD = DEAD LOAD * 1.30 LOAD FACTOR

NOTES:

1. SEE DWG. BD-02 FOR BRIDGE JACKING NOTES.

NOT FOR CONSTRUCTION

2/8/2018 4:36:24 PM
I:\Dover\Projects\425009.98\600_CADD\05_Plans\BD05_BR1-759.dgn

DELAWARE DEPARTMENT OF TRANSPORTATION

ADDENDUMS / REVISIONS

NOT TO SCALE

REHABILITATION OF I-95 FROM I-495 TO NORTH OF BRANDYWINE RIVER BRIDGE

CONTRACT	BRIDGE NO. 1 759 059
T201407404	DESIGNED BY: RMB
COUNTY	CHECKED BY: DEF
NEW CASTLE	

BRIDGE JACKING DETAILS – 4

1-759 BD-05
SHEET NO. 2-704
TOTAL SHTS. 2-731

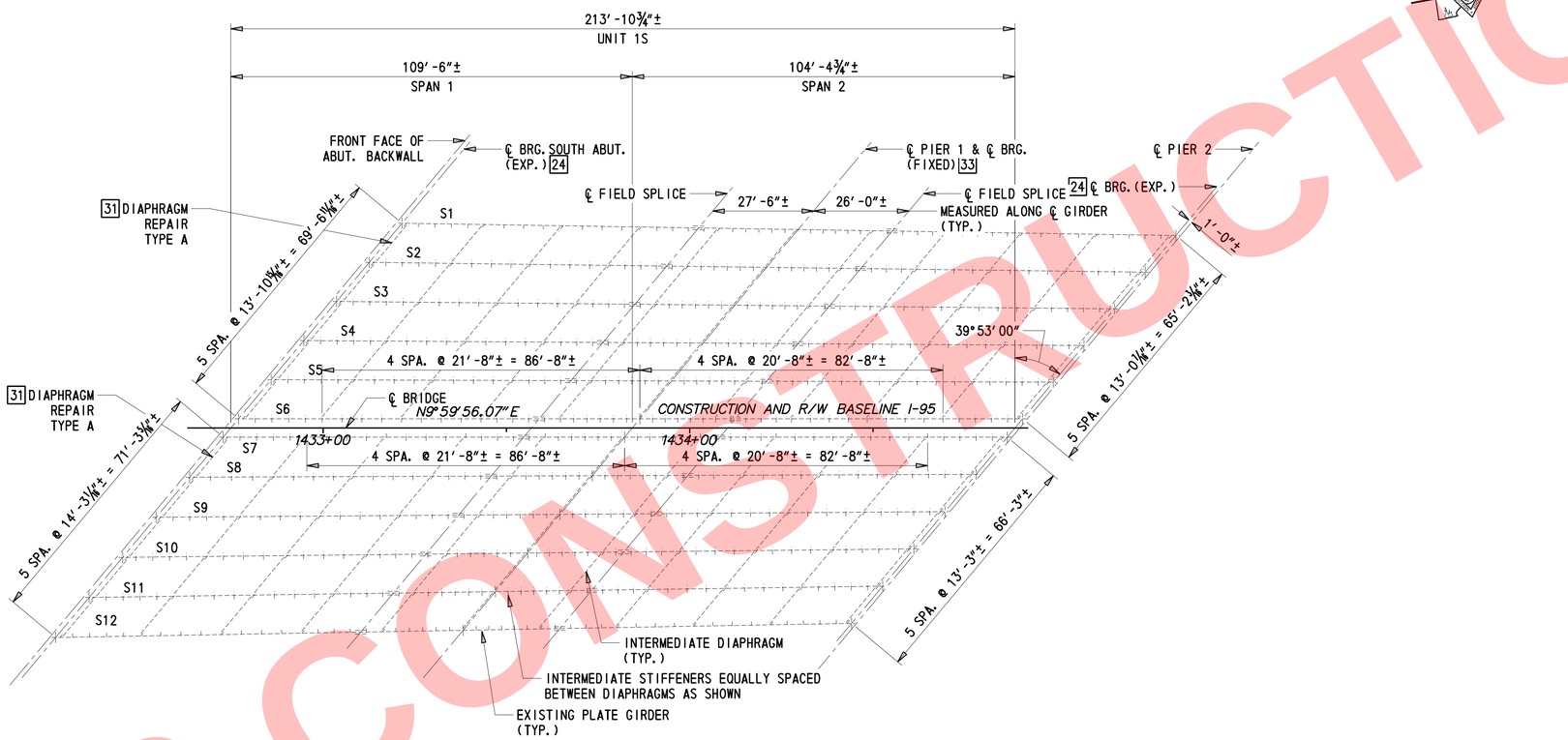

UNIT 1S

NOT FOR CONSTRUCTION

NOTES:

1. BRIDGE SPAN LENGTHS ARE MEASURED FROM CENTERLINE BEARING TO CENTERLINE BEARING ALONG THE BASELINE.
2. FOR DIAPHRAGM REPAIR DETAILS, SEE DWG. DT-02.
3. FOR BEARING DETAILS, SEE DWG. BD-01.
4. FOR JACKING DETAILS, SEE DWG. BD-03 AND BD-05.

KEY:

1 REPAIR NUMBER AS SHOWN ON DWG. PN-02.

DELAWARE DEPARTMENT OF TRANSPORTATION	ADDENDUMS / REVISIONS	SCALE 0 20 40 60 FEET	REHABILITATION OF I-95 FROM I-495 TO NORTH OF BRANDYWINE RIVER BRIDGE	CONTRACT T201407404	BRIDGE NO. 1 759 059	FRAMING PLAN – 1
				COUNTY NEW CASTLE	DESIGNED BY: RMB	
					CHECKED BY: DEF	

1-759
FR-01
SHEET NO. 2-705
TOTAL SHTS. 2-731

2/8/2018 4:36:25 PM
T:\Dover\Projects\425009.9B\600_CADD\05_Plans\FR01_BR1-759.dgn

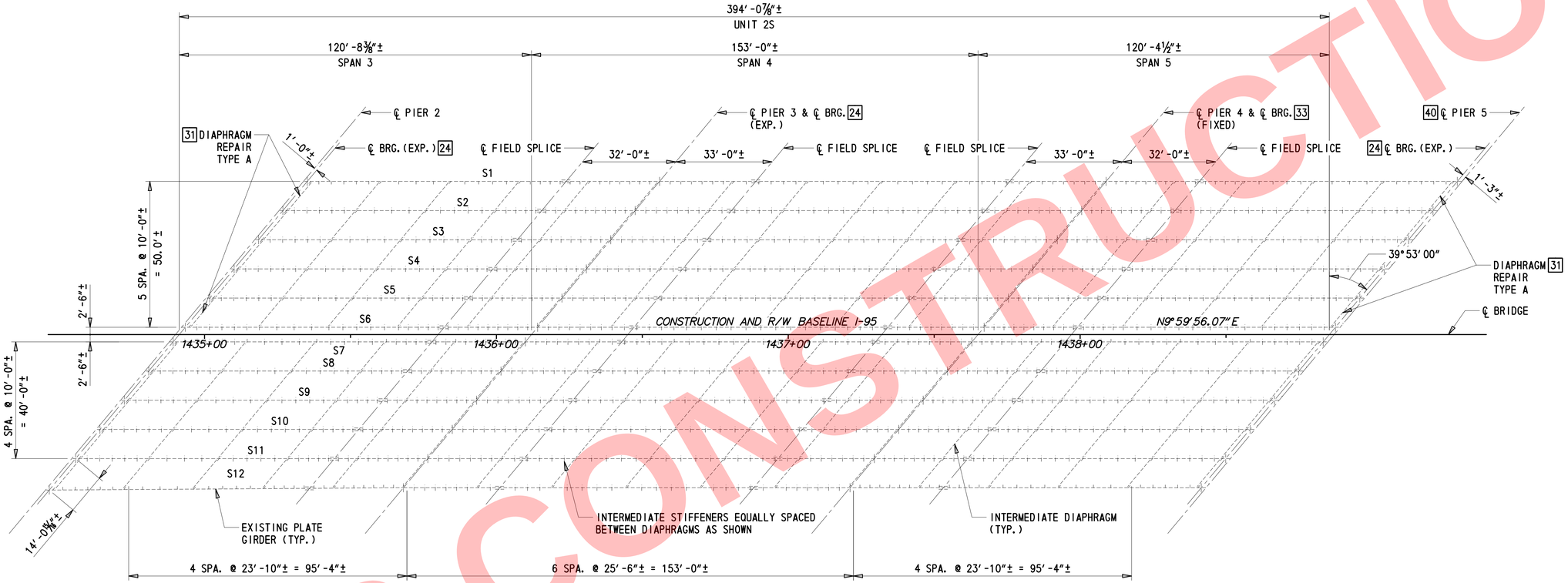

UNIT 2S

NOTES:

1. BRIDGE SPAN LENGTHS ARE MEASURED FROM CENTERLINE BEARING TO CENTERLINE BEARING ALONG THE BASELINE.
2. FOR DIAPHRAGM REPAIR DETAILS, SEE DWG. DT-02.
3. FOR SEISMIC RETROFIT DETAIL, SEE DWG. DT-04.
4. FOR BEARING DETAILS, SEE DWG. BD-01.
5. FOR JACKING DETAILS, SEE DWG. BD-03 AND BD-04.

KEY:

[1] REPAIR NUMBER AS SHOWN ON DWG. PN-02.

NOT FOR CONSTRUCTION

DELAWARE DEPARTMENT OF TRANSPORTATION	ADDENDUMS / REVISIONS	SCALE 0 20 40 60 FEET	REHABILITATION OF I-95 FROM I-495 TO NORTH OF BRANDYWINE RIVER BRIDGE	CONTRACT T201407404 / COUNTY NEW CASTLE	BRIDGE NO. 1 759 059 / DESIGNED BY: RMB / CHECKED BY: DEF	FRAMING PLAN – 2	1-759 FR-02 / SHEET NO. 2-706 / TOTAL SHTS. 2-731

2/8/2018 4:36:27 PM
T:\Dover\Projects\425009.98\600_CADD\05_Plans\FR02_BR1-759.dgn

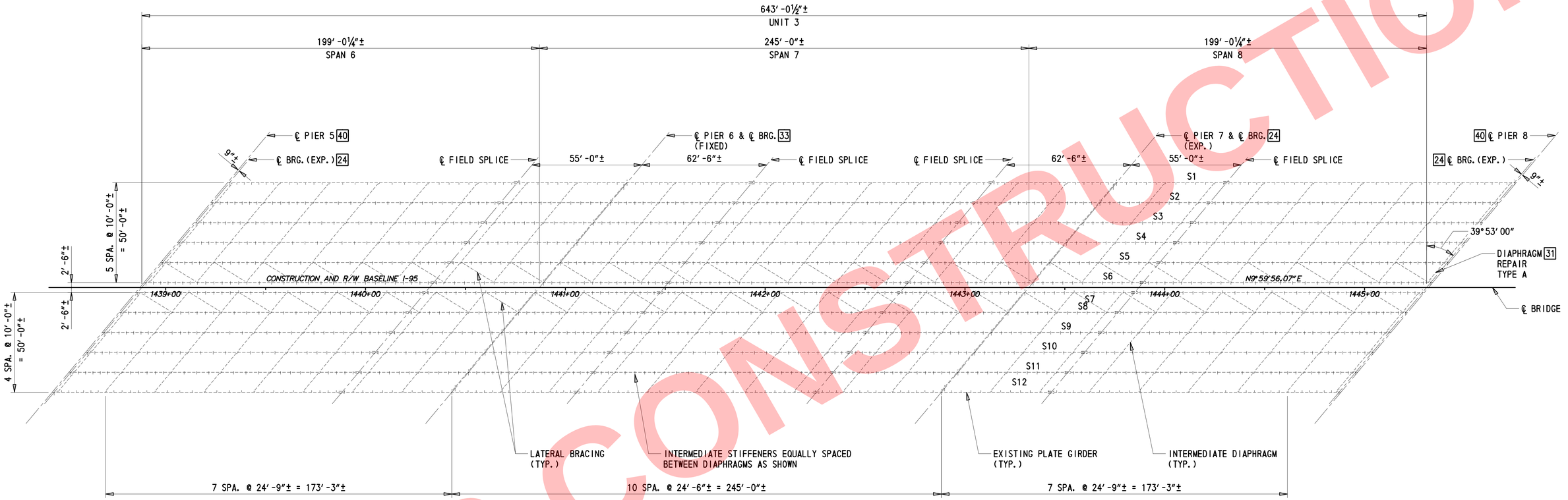

UNIT 3

NOTES:

1. BRIDGE SPAN LENGTHS ARE MEASURED FROM CENTERLINE BEARING TO CENTERLINE BEARING ALONG THE BASELINE.
2. FOR SEISMIC RETROFIT DETAIL, SEE DWG. DT-04.
3. FOR DIAPHRAGM REPAIR DETAILS, SEE DWG. DT-02.
4. FOR BEARING DETAILS, SEE DWG. BD-01.
5. FOR JACKING DETAILS, SEE DWG. BD-03 AND BD-04.

KEY:

[1] REPAIR NUMBER AS SHOWN ON DWG. PN-02.

NOT FOR CONSTRUCTION

DELAWARE DEPARTMENT OF TRANSPORTATION	ADDENDUMS / REVISIONS	SCALE 0 25 50 75 FEET	REHABILITATION OF I-95 FROM I-495 TO NORTH OF BRANDYWINE RIVER BRIDGE	CONTRACT T201407404	BRIDGE NO. 1 759 059	FRAMING PLAN – 3	1-759 FR-03
				COUNTY NEW CASTLE	DESIGNED BY: RMB		SHEET NO. 2-707
					CHECKED BY: DEF		TOTAL SHTS. 2-731

2/8/2018 4:36:28 PM
I:\Dover\Projects\425009.98\600_CADD\05_Plans\FR03_BR1-759.dgn

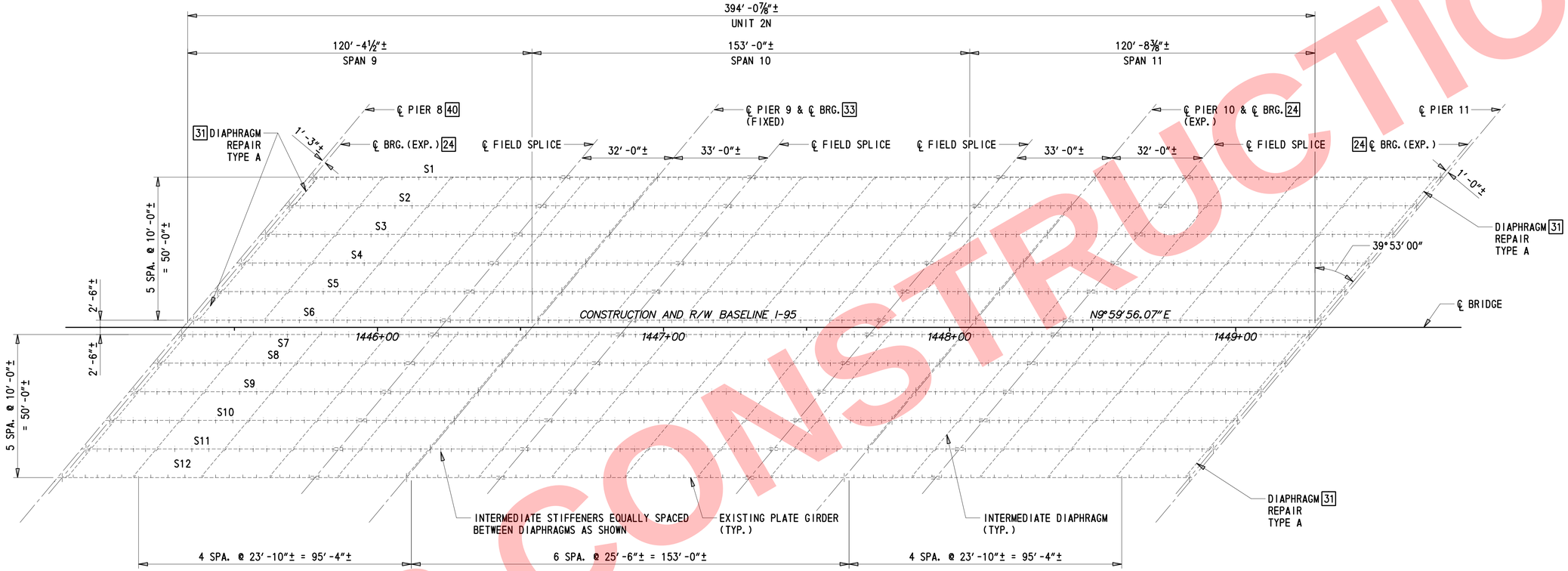

UNIT 2N

NOTES:

1. BRIDGE SPAN LENGTHS ARE MEASURED FROM CENTERLINE BEARING TO CENTERLINE BEARING ALONG THE BASELINE.
2. FOR DIAPHRAGM REPAIR DETAILS, SEE DWG. DT-02.
3. FOR SEISMIC RETROFIT DETAIL, SEE DWG. DT-04.
4. FOR BEARING DETAILS, SEE DWG. BD-01.
5. FOR JACKING DETAILS, SEE DWG. BD-03 AND BD-04.

KEY:

[1] REPAIR NUMBER AS SHOWN ON DWG. PN-02.

NOT FOR CONSTRUCTION

DELAWARE DEPARTMENT OF TRANSPORTATION	ADDENDUMS / REVISIONS	SCALE 0 20 40 60 FEET	REHABILITATION OF I-95 FROM I-495 TO NORTH OF BRANDYWINE RIVER BRIDGE	CONTRACT T201407404	BRIDGE NO. 1 759 059	1-759 FR-04
				COUNTY NEW CASTLE	DESIGNED BY: RMB	SHEET NO. 2-708
					CHECKED BY: DEF	TOTAL SHTS. 2-731
					FRAMING PLAN – 4	

2/8/2018 4:36:30 PM
I:\Dover\Projects\425009.98\600_CADD\05_Plans\FR04_BR1-759.dgn

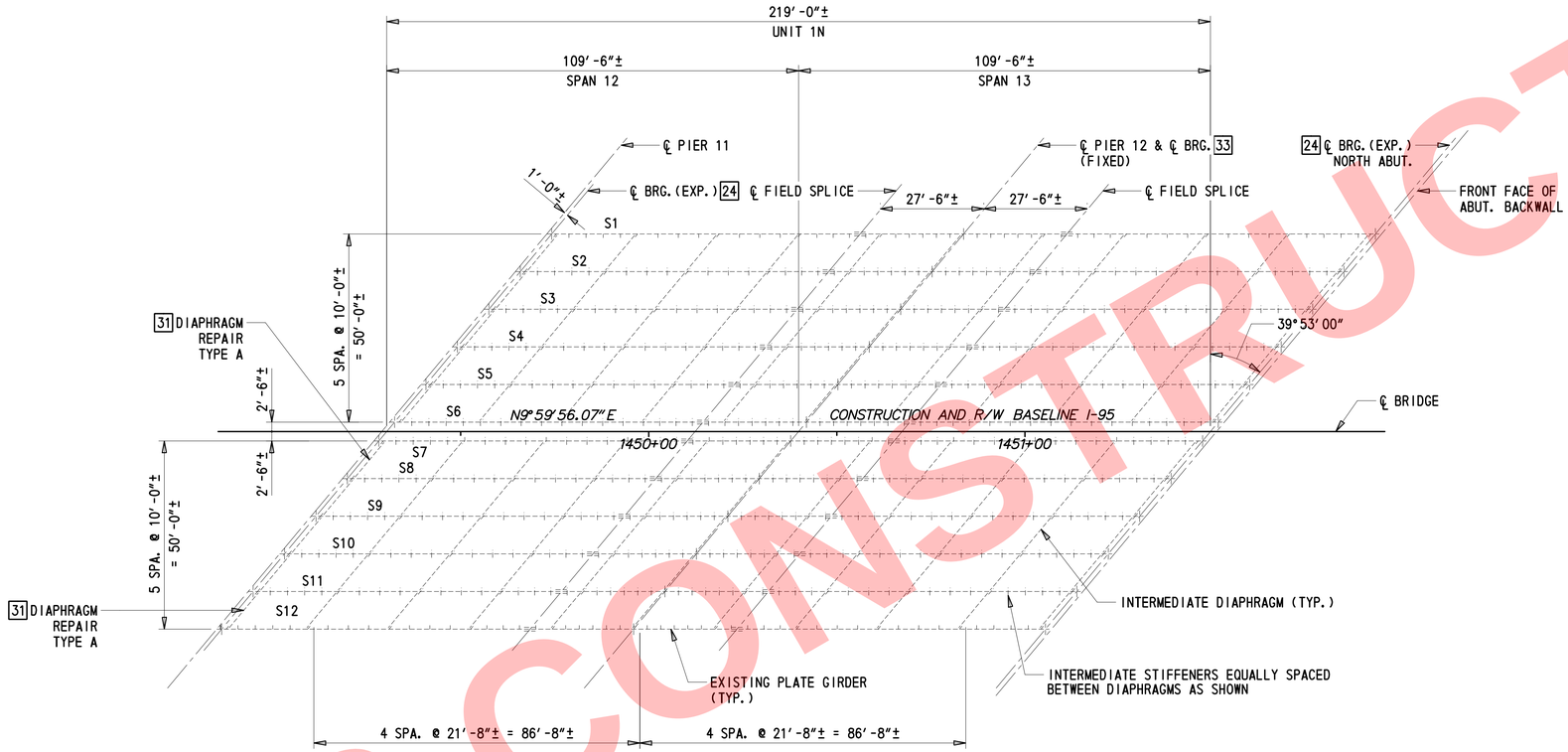

UNIT 1N

NOTES:

1. BRIDGE SPAN LENGTHS ARE MEASURED FROM CENTERLINE BEARING TO CENTERLINE BEARING ALONG THE BASELINE.
2. FOR DIAPHRAGM REPAIR DETAILS, SEE DWG. DT-02.
3. FOR BEARING DETAILS, SEE DWG. BD-01.
4. FOR JACKING DETAILS, SEE DWG. BD-03 AND BD-05.

KEY:

[1] REPAIR NUMBER AS SHOWN ON DWG. PN-02.

NOT FOR CONSTRUCTION

DELAWARE DEPARTMENT OF TRANSPORTATION	ADDENDUMS / REVISIONS	SCALE 0 20 40 60 FEET	REHABILITATION OF I-95 FROM I-495 TO NORTH OF BRANDYWINE RIVER BRIDGE	CONTRACT T201407404	BRIDGE NO. 1 759 059	FRAMING PLAN – 5
				COUNTY NEW CASTLE	DESIGNED BY: RMB	
					CHECKED BY: DEF	

1-759 FR-05 | SHEET NO. 2-709 | TOTAL SHTS. 2-731

2/8/2018 4:36:32 PM
I:\Dover\Projects\425009.98\600_CADD\05_Plans\FR05_BR1-759.dgn

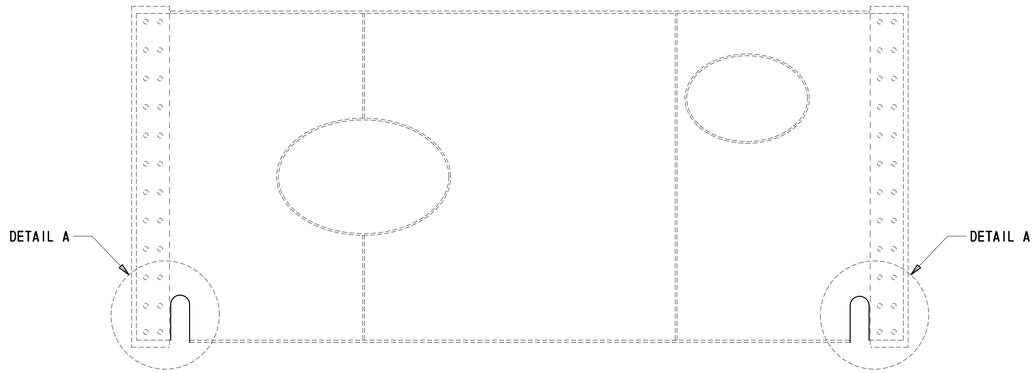

DIAPHRAGM REPAIR - TYPE A

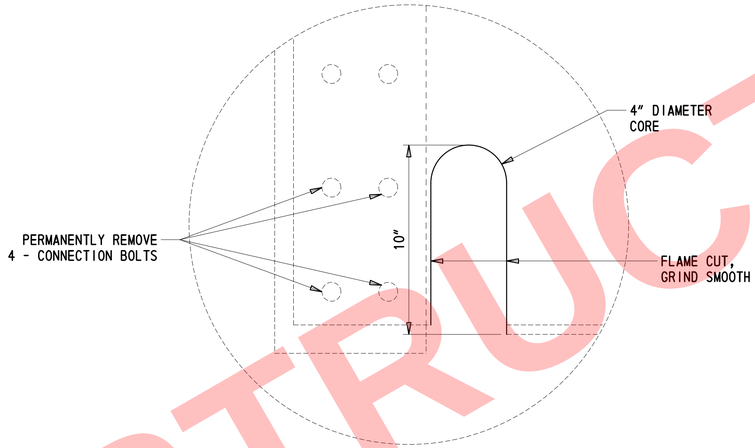

DETAIL A

NOT FOR CONSTRUCTION

NOTES:

1. SEE DWGS. FR-01 THROUGH FR-05 FOR DIAPHRAGM REPAIR AND REPLACEMENT LOCATIONS.
2. FOR THE TYPE A DIAPHRAGM REPAIR, THE REPAIR MUST BE COMPLETED TO BOTH ENDS OF THE DIAPHRAGM.
3. DIAPHRAGM REPAIRS SHALL BE PAID FOR UNDER ITEM 615006.

TYPE A REPAIR PROCEDURE:

1. CORE A 4" DIAMETER HOLE THROUGH THE DIAPHRAGM WEB, CLOSE TO THE CONNECTION PLATE, BUT AVOID REMOVING MATERIAL FROM THE CONNECTION PLATE.
2. FLAME CUT THE PORTION OF THE DIAPHRAGM REMAINING, MAKING THE CUT TANGENT TO THE CORE.
3. GRIND THE FLAME CUT SURFACES SMOOTH. ALL SURFACES SHOULD BE GROUND SMOOTH TO AN ANSI ROUGHNESS OF 500 OR LESS.
4. PRIME AND PAINT ALL BARE STEEL. PRIMING AND PAINTING SHALL BE PAID FOR UNDER ITEM 616000.

2/8/2018 4:36:33 PM
I:\Dover\Projects\425009.98\600_CADD\05_Plans\DT02_BR1-759.dgn

DELAWARE DEPARTMENT OF TRANSPORTATION	ADDENDUMS / REVISIONS	NOT TO SCALE	REHABILITATION OF I-95 FROM I-495 TO NORTH OF BRANDYWINE RIVER BRIDGE	CONTRACT T201407404	BRIDGE NO. 1 759 059	DIAPHRAGM DETAILS
				COUNTY NEW CASTLE	DESIGNED BY: RMB	
					CHECKED BY: DEF	

1-759
DT-02

SHEET NO. 2-710
TOTAL SHTS. 2-731

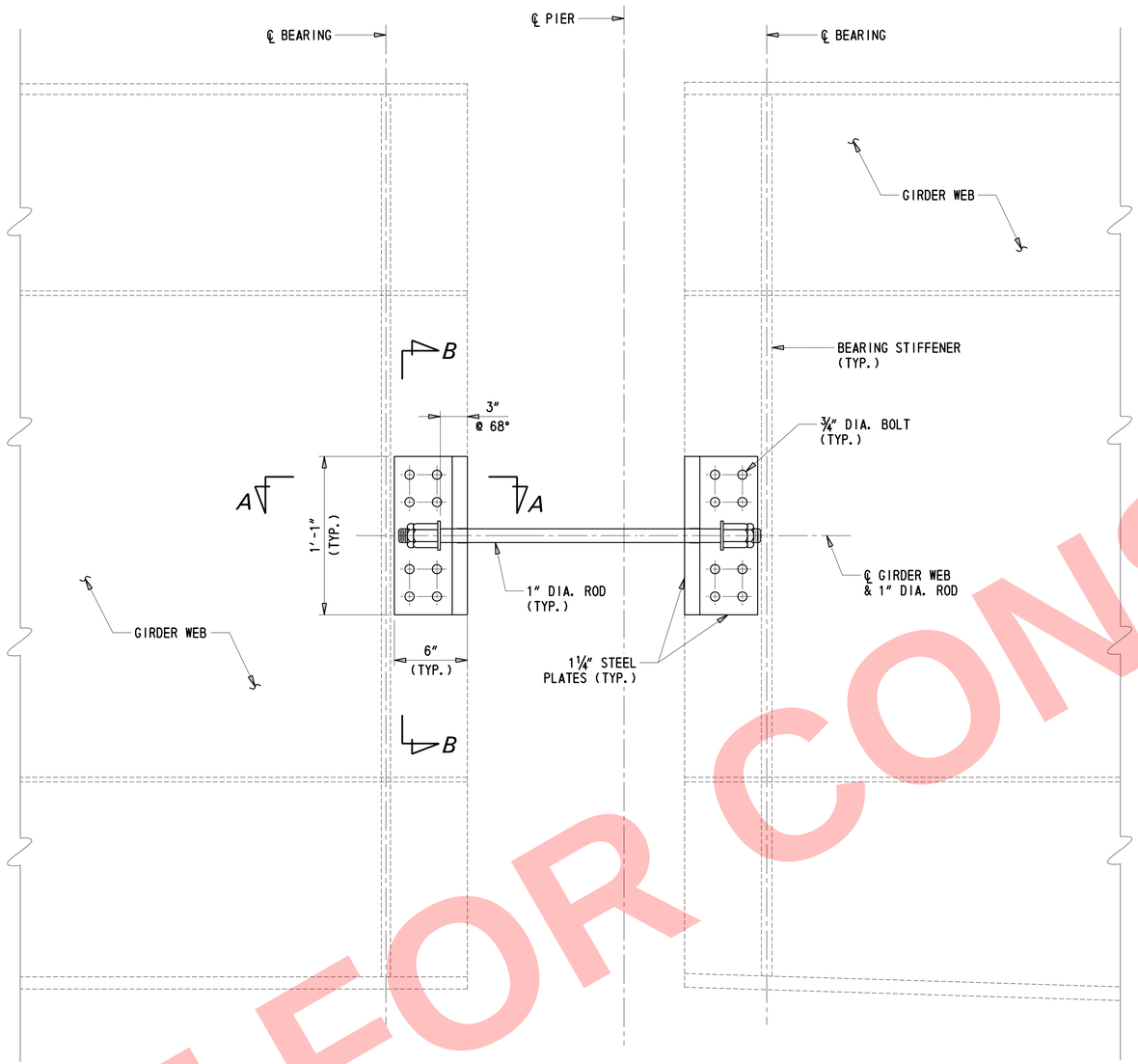

LONGITUDINAL RESTRAINT

(S12 AT PIER 5 SHOWN, OTHER LOCATIONS SIMILAR)

2" = 1'-0"

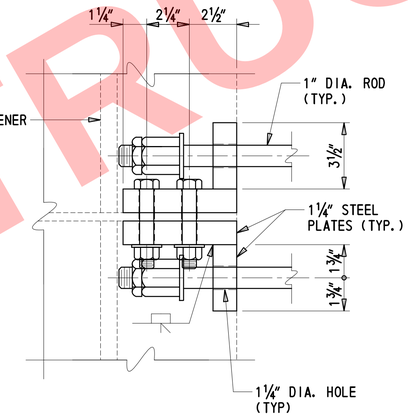

SECTION A-A

3" = 1'-0"

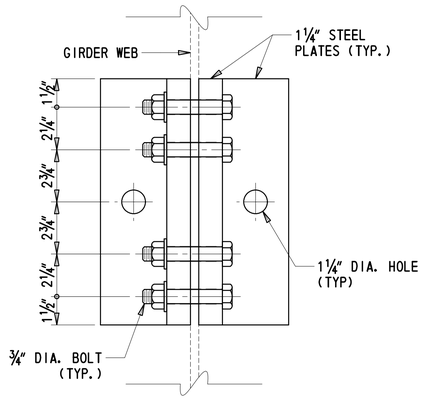

SECTION B-B

3" = 1'-0"

NOTES:

1. LONGITUDINAL RESTRAINT PLATES SHALL BE ASTM A 709 GRADE 50W. LONGITUDINAL RESTRAINT ROD SHALL BE ASTM A7-22 GRADE 150.

2. DRILLING BOLT HOLES THROUGH EXISTING GIRDER WEB IS INCIDENTAL TO ITEM 615000.

NOT FOR CONSTRUCTION

2/8/2018 4:36:35 PM
f:\Dover\Projects\x25009.98\k600_CADD\05_Plans\DT04_BR1-759.dgn

DELAWARE
DEPARTMENT OF TRANSPORTATION

ADDENDUMS / REVISIONS

SCALE AS NOTED

REHABILITATION OF I-95
FROM I-495 TO NORTH OF
BRANDYWINE RIVER BRIDGE

CONTRACT	BRIDGE NO.	1 759 059
T201407404	DESIGNED BY: DJC	
COUNTY	CHECKED BY: DEF	
NEW CASTLE		

SEISMIC RETROFIT DETAILS

	1-759 DT-03
SHEET NO.	2-711
TOTAL SHTS.	2-731

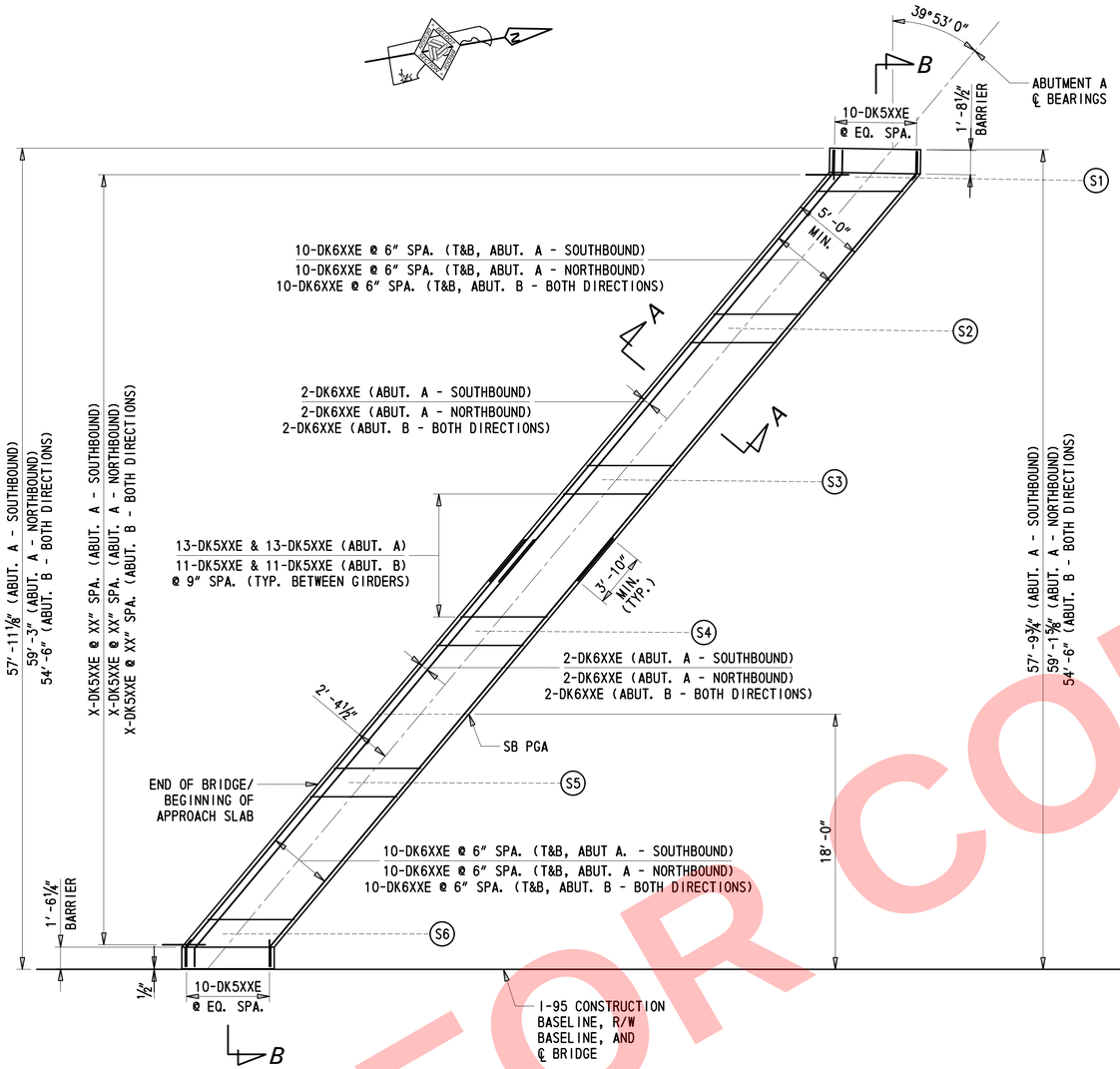

DECK PLAN AT ABUTMENT

⅜" = 1'-0"

(ABUT. A - SOUTHBOUND SHOWN,
OTHER ABUT. LOCATIONS SIMILAR)

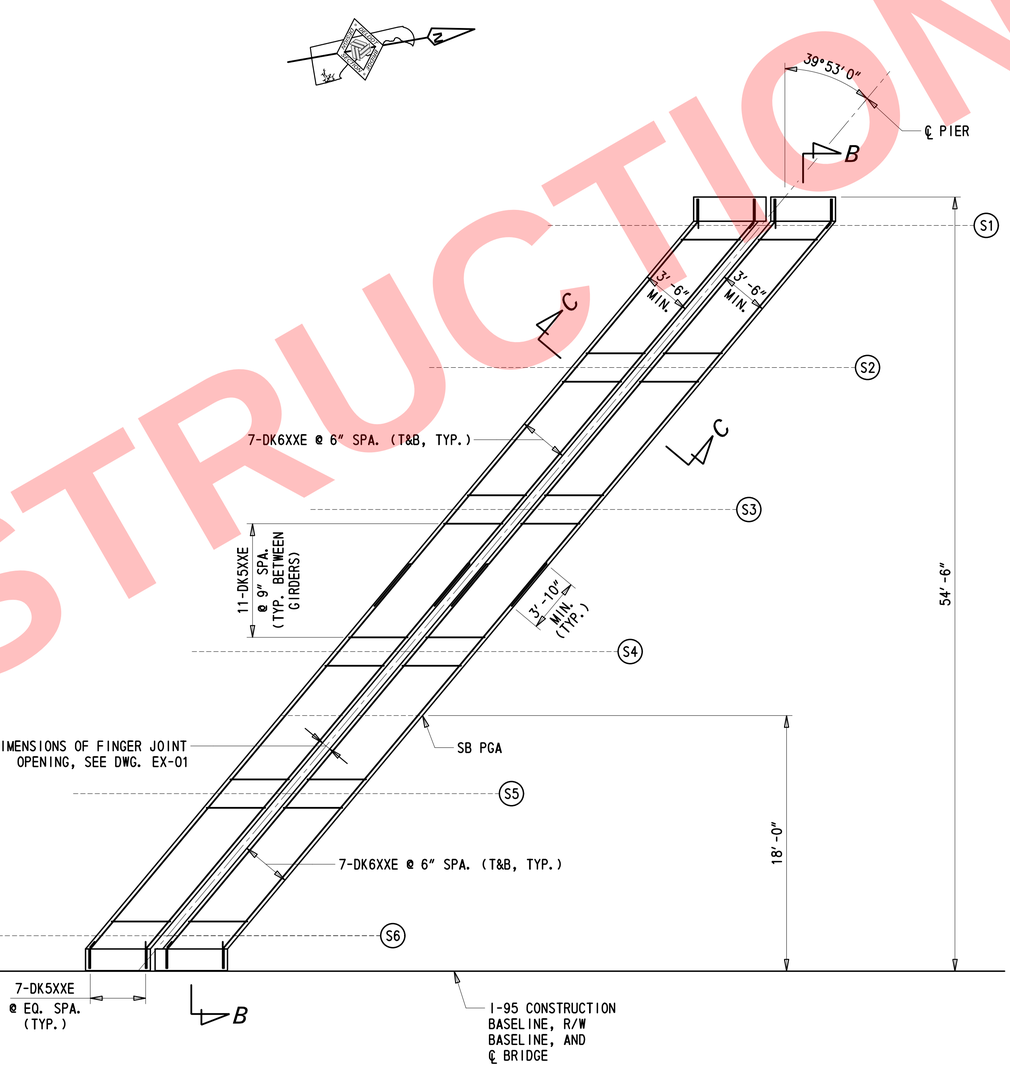

DECK PLAN AT PIER

⅜" = 1'-0"

(SOUTHBOUND SHOWN, NORTHBOUND SIMILAR)

CROSS-REFERENCE NOTES:

1. FOR DECK SECTION VIEWS, SEE DWG. DK-02.
2. FOR BARRIER DETAILS AT JOINT, SEE DWG. EX-03.
3. FOR TYPICAL BARRIER DIMENSIONS, SEE DWG. PA-01.
4. FOR RAILING DETAILS, SEE DWG. PA-02.
5. FOR BARRIER ELEVATIONS, SEE DWG. PA-03 AND PA-04.

NOT FOR CONSTRUCTION

2/8/2018 4:36:36 PM
f:\Dover\Projects\425009.98\600_CADD\05_Plans\DK01_BR1-759.dgn

DELAWARE
DEPARTMENT OF TRANSPORTATION

ADDENDUMS / REVISIONS

SCALE AS NOTED

REHABILITATION OF I-95
FROM I-495 TO NORTH OF
BRANDYWINE RIVER BRIDGE

CONTRACT	BRIDGE NO. 1 759 059
T201407404	DESIGNED BY: JWS
COUNTY	CHECKED BY: DEF
NEW CASTLE	

DECK DETAILS – 1

1-759 DK-01
SHEET NO. 2-712
TOTAL SHTS. 2-731

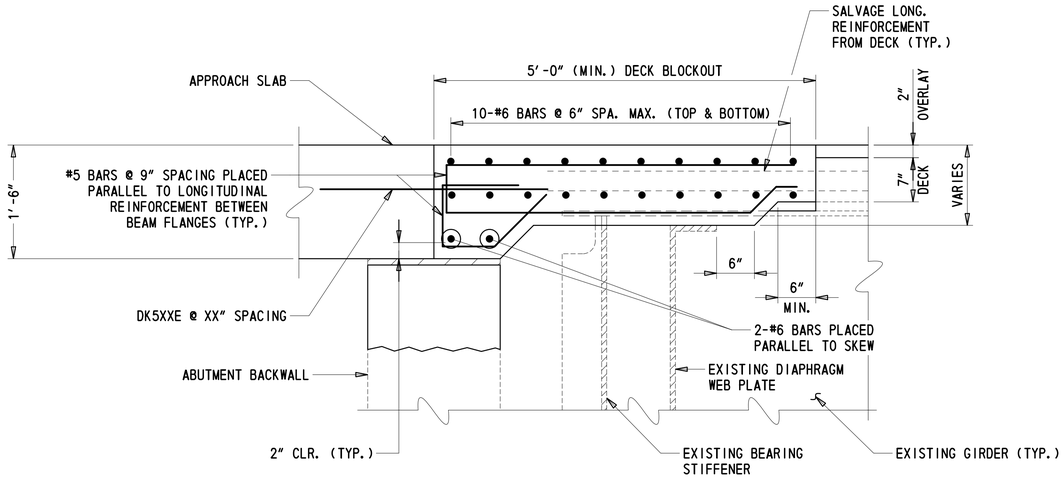

SECTION A-A

1″ = 1′-0″

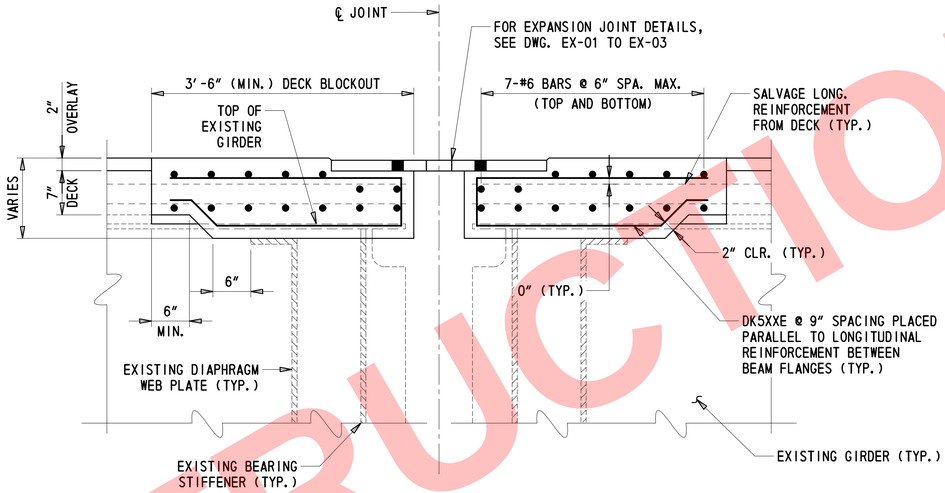

SECTION C-C

1″ = 1′-0″

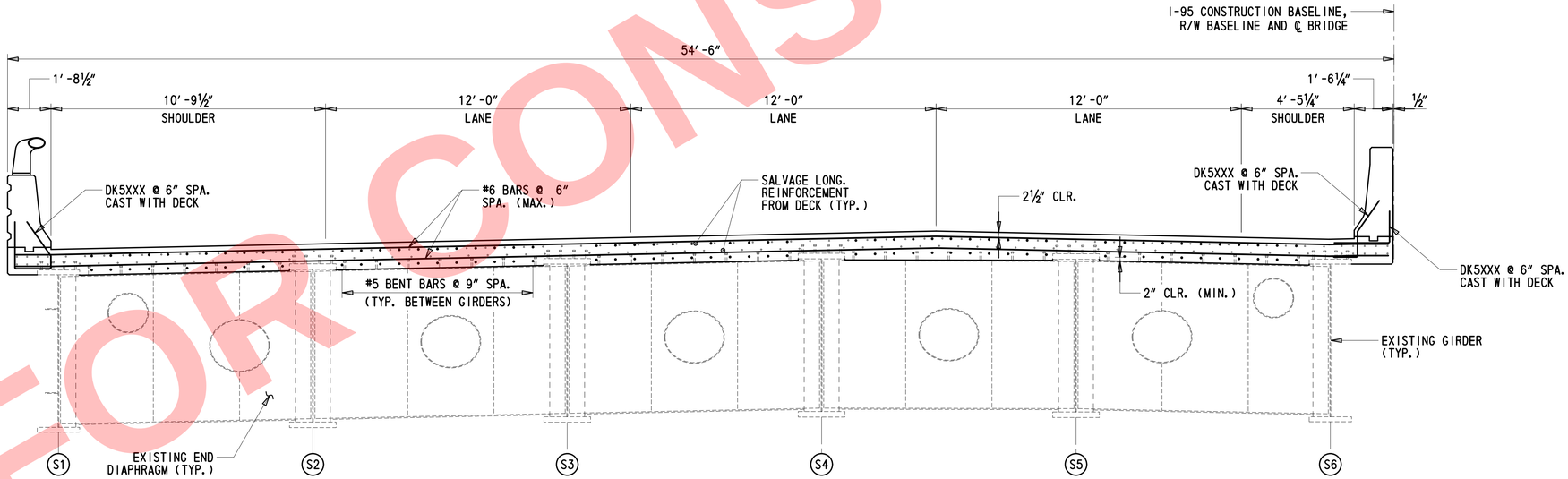

SECTION B-B

⅜″ = 1′-0″

(SOUTHBOUND SHOWN, NORTHBOUND SIMILAR)

CROSS-REFERENCE NOTES:

1. FOR DECK PLAN VIEWS, SEE DWG. DK-01.
2. FOR BARRIER DETAILS AT JOINT, SEE DWG. EX-03.
3. FOR TYPICAL BARRIER DIMENSIONS, SEE DWG. PA-01.
4. FOR RAILING DETAILS, SEE DWG. PA-02.
5. FOR BARRIER ELEVATIONS, SEE DWG. PA-03 AND PA-04.

NOT FOR CONSTRUCTION

2/8/2018 4:36:38 PM
T:\Dover\Projects\X25009.98\600_CADD\05_Plans\DK02_BR1-759.dgn

DELAWARE
DEPARTMENT OF TRANSPORTATION

ADDENDUMS / REVISIONS

SCALE AS NOTED

REHABILITATION OF I-95
FROM I-495 TO NORTH OF
BRANDYWINE RIVER BRIDGE

CONTRACT	BRIDGE NO. 1 759 059
T201407404	DESIGNED BY: JWS
COUNTY	CHECKED BY: DEF
NEW CASTLE	

DECK DETAILS – 2

1-759 DK-02	
SHEET NO.	2-713
TOTAL SHTS.	2-731

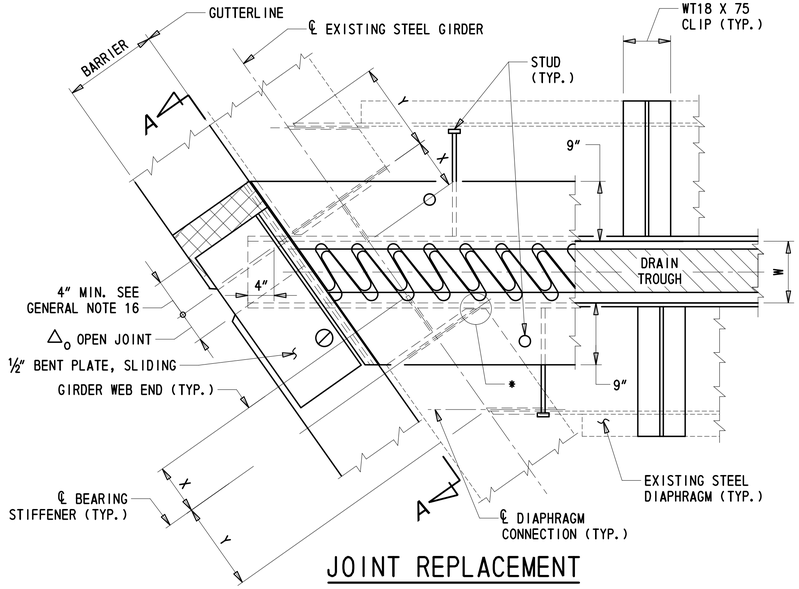

JOINT REPLACEMENT

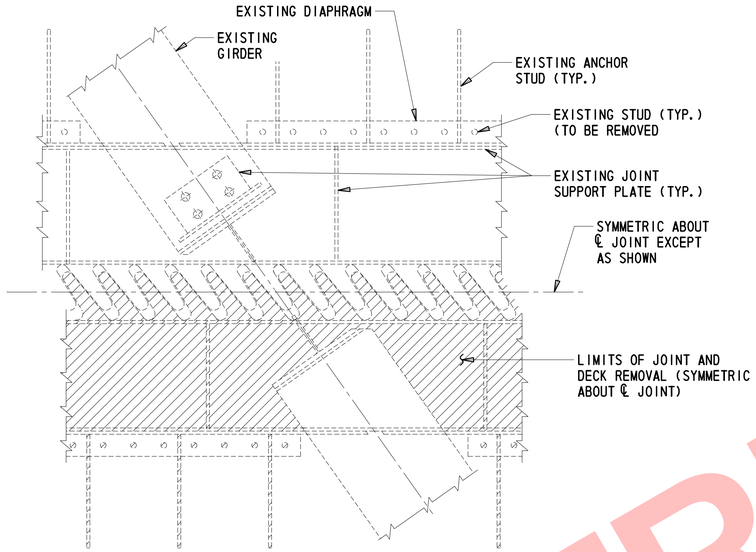

EXISTING JOINT

* EXISTING BEAM TOP FLANGES HAVE CLIPPED FLANGES. DO NOT CLIP FLANGES OR MODIFY BEARING STIFFENERS WITHOUT WRITTEN APPROVAL FROM THE ENGINEER.

PLAN AT PIER

NOTE: DECK REMOVAL LIMITS NOT SHOWN FOR CLARITY

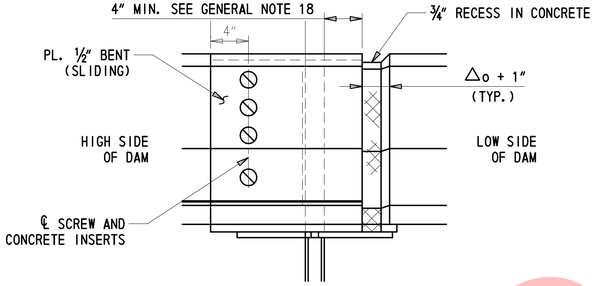

SECTION A-A

NOTE: FORM CONCRETE RECESS AREA IN BARRIER AND GRIND TO PROVIDE SMOOTH SURFACE, APPLY ONE COAT OF ASPHALT CEMENT PAINT WA-1 OR PERFORMANCE GRADED ASPHALT CEMENT PG 64-22 TO ALLOW BENT SLIDING PLATE TO MOVE FREELY WITHOUT FRICTION, INCIDENTAL TO ITEM 624XXX.

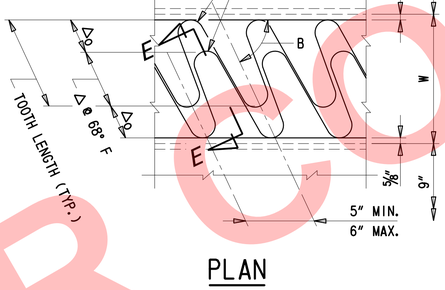

PLAN

TOOTH PLATE NOTE:

THE SCROLL IS TO BE MADE BY A SINGLE CUT OF A MACHINE GUIDED TORCH. SHARP CORNERS TO BE REMOVED BY GRINDING.

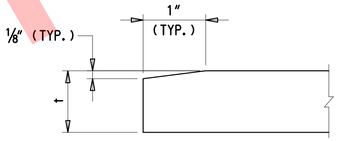

SECTION E-E

TOOTH PLATE DETAIL

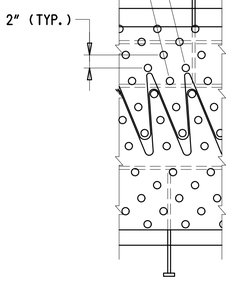

BALL STUD DETAIL

(SEE GENERAL NOTE 6)

NOTES:

1. ALL REINFORCEMENT STEEL BARS SHOWN MEET THE REQUIREMENTS OF ASTM A 615, A 996 OR A 706. DO NOT WELD GRADE 60 STEEL BARS UNLESS SPECIFIED. REINFORCEMENT STEEL BARS SHALL BE PAID UNDER ITEM 611001.
2. PROVIDE MATERIALS AND WORKMANSHIP IN ACCORDANCE WITH DELAWARE DEPARTMENT OF TRANSPORTATION STANDARD SPECIFICATIONS SECTIONS 610, 611, AND 615.
3. ALL STEEL SHALL BE GALVANIZED STEEL IN ACCORDANCE WITH SECTIONS 615 AND 1039.
4. PROVIDE AASHTO M 270, GRADE 36 (ASTM A 709, GRADE 36) UNLESS OTHERWISE SPECIFIED ON DESIGN DRAWINGS. ANCHOR STUDS TO BE IN ACCORDANCE WITH SECTION 1039.05. STUDS MAY BE PIGGY BACKED TO ACHIEVE REQUIRED LENGTH.
5. USE FLATHEAD STAINLESS STEEL ASTM F 738 OR F 593 (TYPE 304) FOR COUNTERSUNK SCREWS WITH INSERTS. ALL CONCRETE INSERTS AND COUNTERSUNK MACHINE SCREWS ARE ¾" DIAMETER UNLESS OTHERWISE SPECIFIED.
6. BALL TYPE OR MILD STEEL KNOCK-OFF STUDS SHOULD BE PROVIDED UNLESS OTHERWISE SPECIFIED. BALL STUDS ARE TO BE ⅜" DIAMETER BY 1#4" HEIGHT. KNOCK-OFF STUDS WILL BE ANTI-SKID TYPE. KNOCK-OFF STUDS ARE TO BE ⅜" NOMINAL DIAMETER BY ¼" HEIGHT. ALTERNATE PATTERNS OTHER THAN SHOWN ON BALL OR KNOCK-OFF STUD DETAIL MUST BE APPROVED BY THE DEPARTMENT.
7. ALL BOLTS TO CONFORM TO ASTM A 325.
8. USE THIS DRAWING AS A GUIDE IN THE PREPARATION OF SHOP DRAWINGS.
9. CONSTRUCT EXPANSION DAM TO MATCH ROADWAY GRADE AND CROSS SLOPE.
10. PLACE CONCRETE UNDER THE DAM AND VIBRATE UNTIL THE CONCRETE IS FORCED THROUGH THE ⅞" DIAMETER AIR HOLES. STRIKE OFF EXCESS CONCRETE. AFTER CONCRETE HAS CURED, INSPECT THE HOLES AND REMOVE UNSOUND CONCRETE. CLEAN THE HOLES WITH AN AIR JET AND FILL WITH APPROVED SEALER.
11. FABRICATOR TO PROVIDE A CHART SHOWING JOINT OPENING FOR TEMPERATURES BETWEEN 0°F TO 120°F, IN 10°F INTERVALS ON SHOP DRAWINGS.
12. PERFORM NON-DESTRUCTIVE TESTING OF WELDS AS REQUIRED IN ACCORDANCE WITH AASHTO/AWS SPECIFICATIONS.
13. BEFORE PLACING JOINT CONCRETE APPLY APPROVED EPOXY BONDING AGENT TO THE EXPOSED FACE OF THE EXISTING DECK, INCIDENTAL TO ITEM 624XXX.
14. FABRICATOR TO SHOW DETAIL OF ALL SHIPPING AND ERECTION TEMPORARY ATTACHMENTS ON SHOP DRAWINGS. AFTER ERECTION, AND AFTER OPENING IS ADJUSTED FOR ERECTION TEMPERATURE, TEMPORARY ATTACHMENTS ARE TO BE REMOVED BY CHIPPING CONNECTION WELDS AND GRINDING SURFACE SMOOTH.
15. PLACE CLASS D CEMENT CONCRETE IN THE JOINT AREA EXCEPT AS SPECIFIED OR INDICATED, PAID FOR UNDER ITEM 610017.
16. MAINTAIN 4" MIN. BETWEEN EDGE OF STEEL TO THE EDGE OF CONCRETE AT TEMPERATURE OF 0°F. GRIND ALL EDGES EXPOSED TO TRAFFIC OR PEDESTRIANS TO ⅛" MIN. RADIUS.
17. CONTRACTOR SHALL CONDUCT A CAREFUL SURVEY AT EACH JOINT LOCATION TO VERIFY EXISTING CONDITIONS OF BEAMS, DIAPHRAGMS, EXPANSION JOINTS, DRAINAGE DEVICES, AND COVER PLATES. ANY CONFLICTS WITH PROPOSED FINGER JOINT DETAILS AND EXISTING CONDITIONS SHALL BE PROMPTLY REPORTED TO THE ENGINEER. SHOP DRAWINGS SHALL BE PREPARED WITH DETAILS AND DIMENSIONS THAT REFLECT EXISTING CONDITIONS AT EACH JOINT.
18. THE DRAINAGE INLETS AND LIGHT POLE BLISTERS SHALL NOT BE DISTRUBED.

FINGER JOINT DATA TABLE

LOCATION	TEMPERATURE (°F) 0°F		68°F		120°F		MOVEMENT CLASSIFICATION	TOOTH LENGTH	B (SKEW)	W at 68°F	TOOTH PLATE THICKNESS, t
	△o (IN)	△ (IN)	△o (IN)	△ (IN)	△o (IN)	△ (IN)					
PIER 2	5¼" (+)	1¾" (-)	3¼"	3¾"	1 1⁄16" (+)	5 5⁄16" (-)	4½"	7"	50°10'1.2"	7 13⁄16" (+)	1¼"
PIER 5	4 1⁄16" (+)	1¾" (+)	3"	3½"	1 1⁄16" (+)	4 13⁄16" (-)	4"	6½"	50°10'1.2"	7⅜" (-)	1¼"
PIER 8	7⅜" (+)	1 5⁄16" (+)	4⅜"	5"	2¼" (+)	7⅜" (-)	6⅞"	9⅜"	50°10'1.2"	10 1⁄16" (+)	1½"
PIER 11	5 5⁄16" (-)	1 1⁄16" (+)	3¼"	3¾"	1 1⁄16" (-)	5 5⁄16" (+)	4½"	7"	50°10'1.2"	7 13⁄16" (+)	1¼"

EXISTING DIMENSIONS

LOCATION	X	Y
PIER 2	8¼"±	1'-2"±
PIER 5	8¾"±	1'-2"±
PIER 8	6¾"±	1'-4"±
PIER 11	8¼"±	1'-2½"±

NOT FOR CONSTRUCTION

2/8/2018 4:36:40 PM
I:\Docver\Projects\425009.98\600_CADD\05_Plans\EX01_BR1-759.dgn

DELAWARE DEPARTMENT OF TRANSPORTATION

ADDENDUMS / REVISIONS

NOT TO SCALE

REHABILITATION OF I-95 FROM I-495 TO NORTH OF BRANDYWINE RIVER BRIDGE

CONTRACT T201407404
COUNTY NEW CASTLE
BRIDGE NO. 1 759 059
DESIGNED BY: NAH
CHECKED BY: DEF

EXPANSION JOINT DETAILS – 1

1-759 EX-01
SHEET NO. 2-714
TOTAL SHTS. 2-731

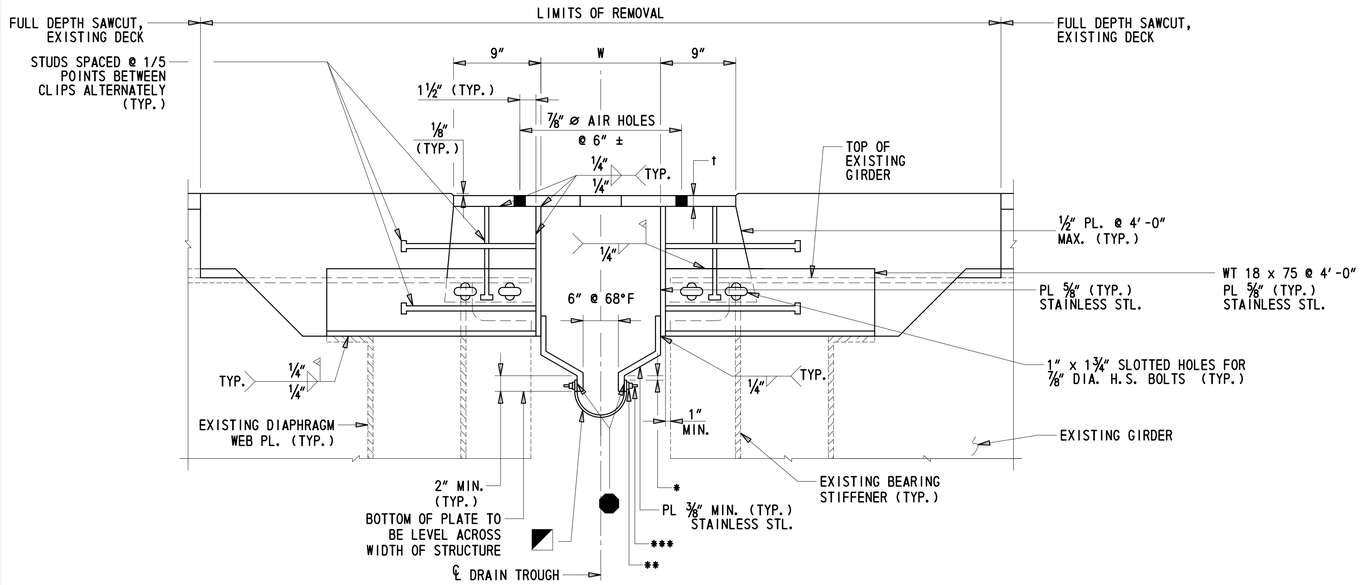

SECTION AT PIER

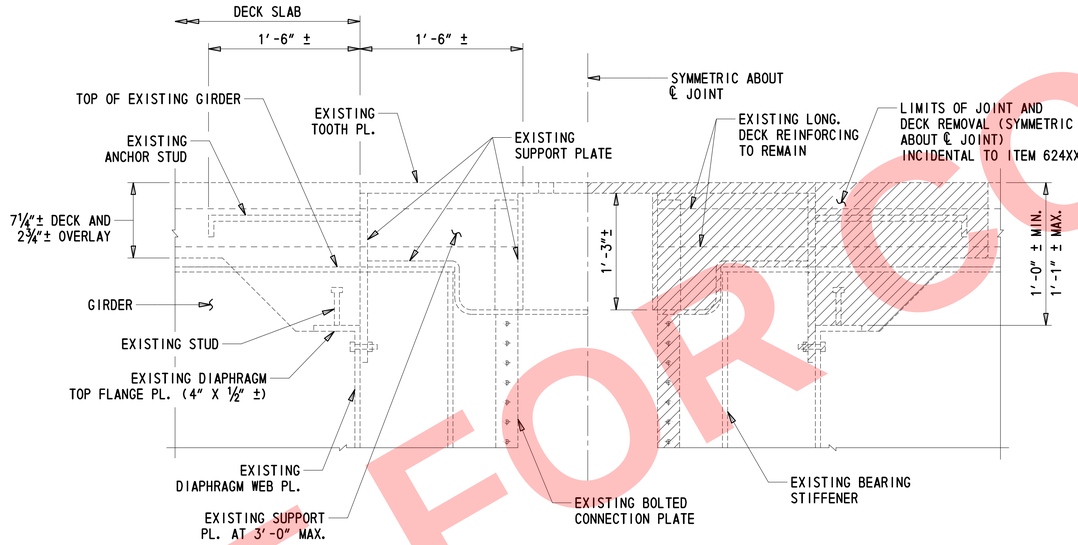

EXISTING SECTION AT PIER

TYPICAL STUD

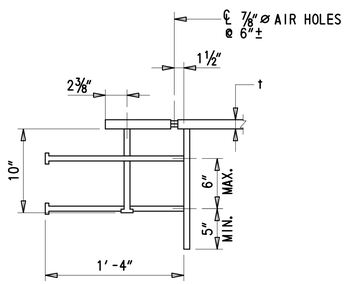

STUD DETAIL

NOTES:

1. ALL VERTICAL STUDS ARE ¾" DIA. x 10" LONG.
2. HORIZONTAL STUDS ARE ¾" DIA. x 16" LONG.
3. MINIMUM DEPTH OF CONCRETE OVER DIAPHRAGMS IS 12".
4. BEFORE PLACING BLOCKOUT APPLY APPROVED EPOXY BONDING AGENT TO TRANSVERSE CONSTRUCTION JOINTS.
5. DO NOT DAMAGE EXISTING SHEAR STUDS.
6. SEE DWG. DK-01 AND DK-02 FOR DECK RECONSTRUCTION DETAILS.

LEGEND:

* VARY TO MATCH CROSS SLOPE OF BRIDGE DECK.

** 1½" x ¼" PL. STAINLESS STEEL (TYPE 304), FULL LENGTH OF DRAIN TROUGH.

*** ⅜" STAINLESS STEEL STUDS WITH SELF LOCKING NUT & WASHER @ 12" C.C.

● APPLY ¼" BEAD OF AN EXTERIOR RATED SILICONE CAULK SEALANT PRIOR TO ASSEMBLY.

◪ SEE SPECIAL PROVISIONS FOR RUBBERIZED TROUGH MATERIAL.

NOT FOR CONSTRUCTION

2/8/2018 4:36:41 PM
I:\Docver\Projects\425009.98\600_CADD\05_Plans\EX02_BR1-759.dgn

DELAWARE DEPARTMENT OF TRANSPORTATION	ADDENDUMS / REVISIONS	NOT TO SCALE	REHABILITATION OF I-95 FROM I-495 TO NORTH OF BRANDYWINE RIVER BRIDGE	CONTRACT T201407404	BRIDGE NO. 1 759 059	EXPANSION JOINT DETAILS – 2	1-759 EX-02
				COUNTY NEW CASTLE	DESIGNED BY: NAH		SHEET NO. 2-715
					CHECKED BY: DEF		TOTAL SHTS. 2-731

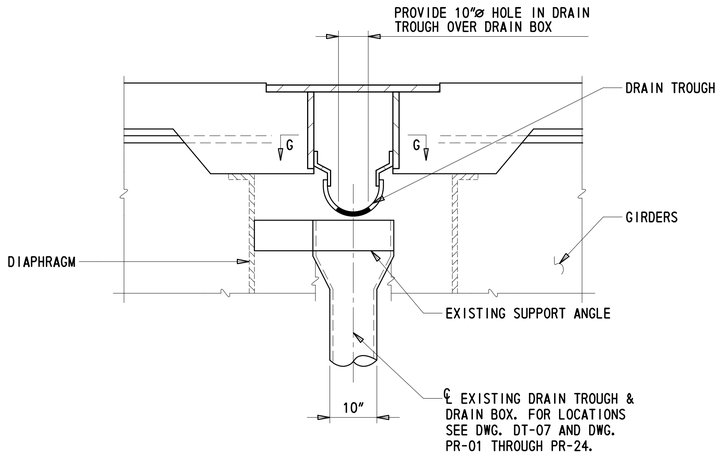

TYPICAL SECTION AT DRAIN BOX

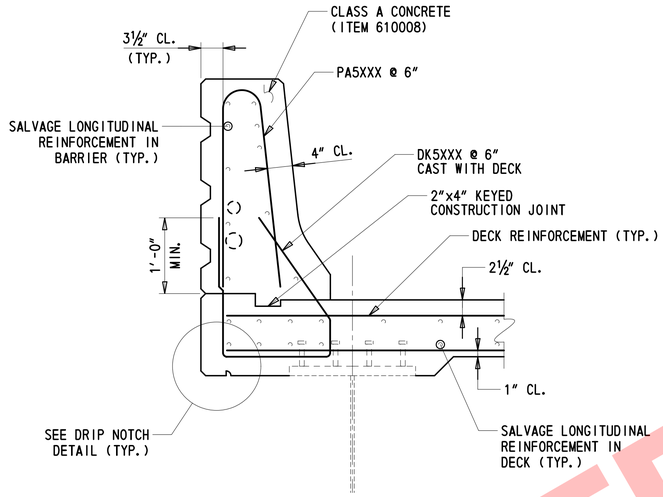

EXTERIOR BARRIER AT JOINT

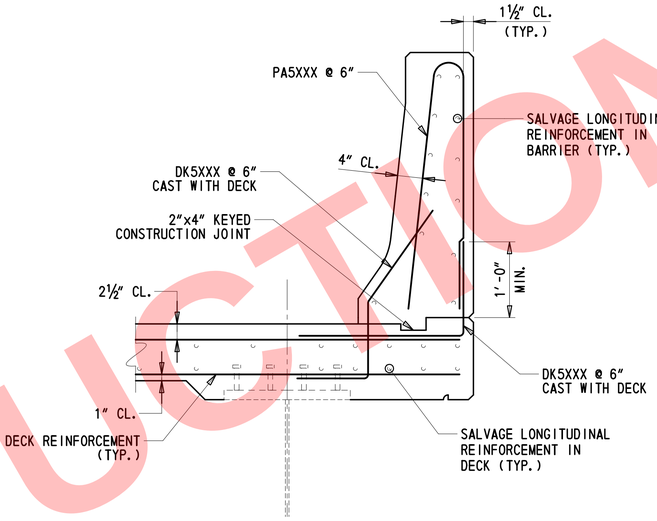

MEDIAN BARRIER AT JOINT

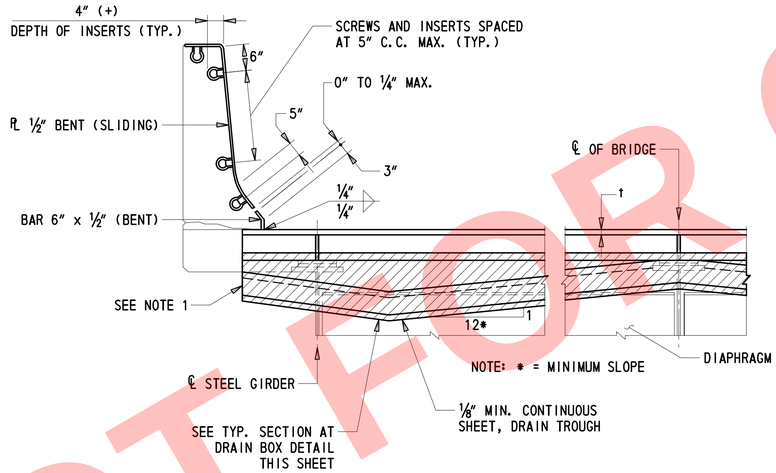

TYPICAL SECTION

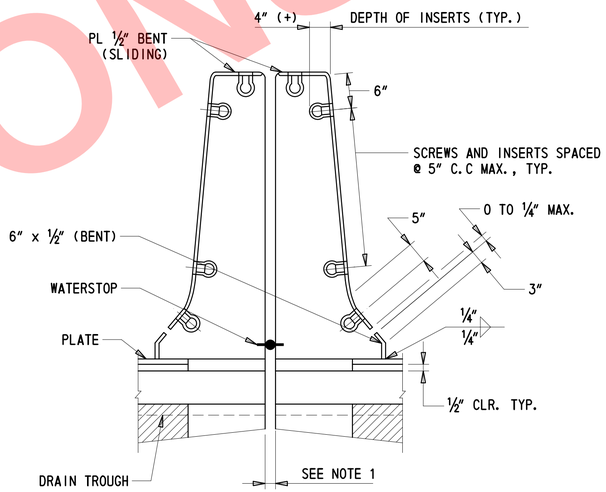

SECTION AT SPLIT MEDIAN BARRIER

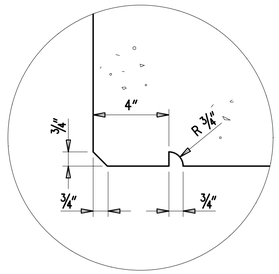

DRIP NOTCH DETAIL

1" = 3'-0"

NOTES:

1. ENDS OF DRAIN TROUGH TO BE CLOSED AND MADE WATER TIGHT PER MANUFACTURERS RECOMMENDATIONS.
2. TROUGH SYSTEM AS SHOWN MAY BE SUBSTITUTED BY APPROVED EQUAL.

CROSS REFERENCE NOTES:

1. FOR EXTERIOR AND MEDIAN BARRIER DIMENSIONS, SEE DWG. PA-01.
2. FOR DECK REINFORCING DETAILS AT JOINTS, SEE DWG. DK-01.
3. FOR FINGER JOINT DETAILS, SEE DWG. EX-01 AND EX-02.

NOT FOR CONSTRUCTION

2/8/2018 4:36:43 PM
f:\Dover\Projects\425009.98\600_CADD\05_Plans\EX03_BR1-759.dgn

DELAWARE
DEPARTMENT OF TRANSPORTATION

ADDENDUMS / REVISIONS

NOT TO SCALE

REHABILITATION OF I-95
FROM I-495 TO NORTH OF
BRANDYWINE RIVER BRIDGE

CONTRACT	BRIDGE NO.	1 759 059
T201407404	DESIGNED BY: NAH	
COUNTY		
NEW CASTLE	CHECKED BY: DEF	

EXPANSION JOINT
DETAILS – 3

1-759 EX-03
SHEET NO. 2-716
TOTAL SHTS. 2-731

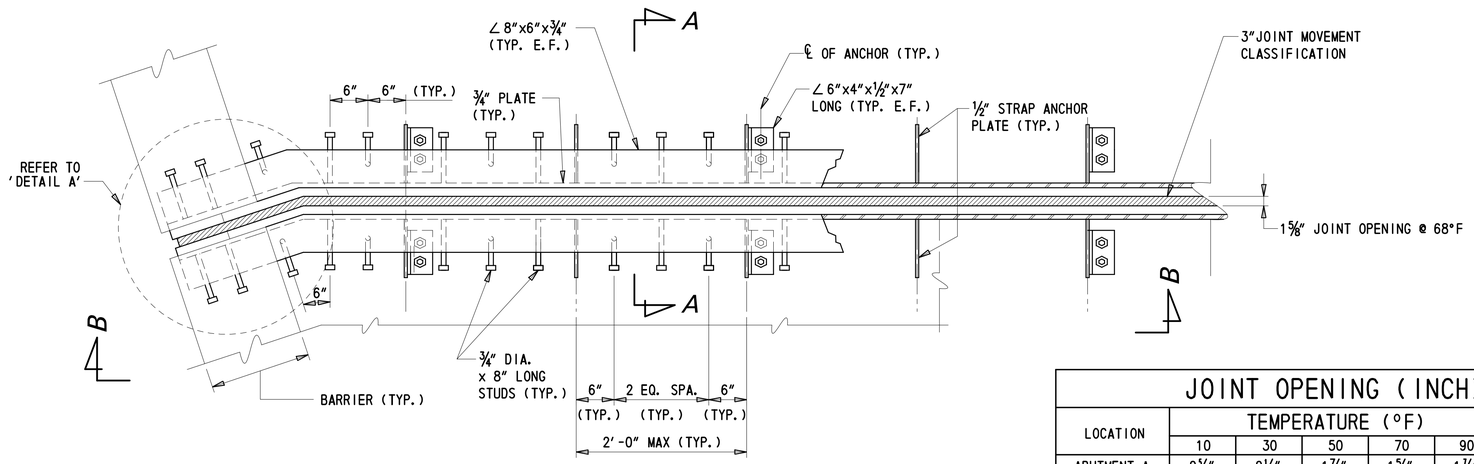

TYPICAL JOINT PLAN

JOINT OPENING (INCH)						
LOCATION	TEMPERATURE (°F)					MOVEMENT CLASSIFICATION
	10	30	50	70	90	
ABUTMENT A	2 5/16"	2 1/16"	1 7/8"	1 5/8"	1 1/16"	3"
ABUTMENT B	2 5/16"	2 1/16"	1 7/8"	1 5/8"	1 1/16"	3"

STRIP SEAL EXPANSION JOINT NOTES

1. STEEL FOR DECK JOINTS AND STEEL EXTRUSIONS SHALL BE AASHTO M270, GR. 36 (ASTM A36) AT MINIMUM.
2. NEOPRENE EXTRUSION TO MEET D-2628-81 MODIFIED, (RECOVERY TESTS EXCLUDED).
3. THE EXPANSION JOINT SHALL BE CAPABLE OF SEALING THE DECK TO PREVENT MOISTURE AND OTHER CONTAMINANTS FROM DESCENDING THROUGH THE JOINT.
4. THE CONTRACTOR SHALL ADJUST THE OPEN JOINT AS REQUIRED BY THE WIDTH OF THE STEEL EXTRUSION USED SO AS TO PROVIDE A 1⅝" JOINT OPENING AT 68°F.
5. THE STRIP SEAL SHALL BE INSTALLED IN ONE PIECE ACROSS THE BRIDGE WIDTH. SPLICING OF THE STRIP SEAL IS NOT PERMITTED.
6. THE EXPANSION JOINT SYSTEM IS PAID FOR UNDER ITEM 624000.
7. ENTIRE EXPANSION DAM SHALL BE PAINTED AFTER FABRICATION USING URETHANE SYSTEM. THE STEEL EXTRUSIONS SHALL BE GALVANIZED IN THEIR ENTIRETY AND PAINTED AS DETAILED IN THE 'STEEL EXTRUSION DETAIL.'
8. LUBRICANT-ADHESIVE FOR USE IN INSTALLING AND BONDING NEOPRENE SEAL ELEMENTS TO STEEL JOINT COMPONENTS SHALL BE A ONE QUART MOISTURE-CURING POLYURETHANE AND HYDROCARBON SOLVENT MIXTURE HAVING THE FOLLOWING PHYSICAL PROPERTIES:

AVERAGE WEIGHT, POUNDS PER GALLON	8 +/- 10%
SOLIDS CONTENT	65%
ADHESIVE SHALL REMAIN LIQUID FROM	5°F TO 120°F
FILM STRENGTH, AS PER ASTM D-412	2,000 PSI
ELONGATION	250%

9. HOLES SHALL BE PLACED IN THE RIB PLATES AND STRAP ANCHOR PLATES FOR BAR REINFORCEMENT. IF THIS IS DONE IN THE FIELD AN APPROVED EPOXY-BONDED PAINT SHALL BE USED TO TOUCH-UP THE HOLES. PAYMENT INCIDENTAL TO ITEM 624000.
10. ANCHOR PLATE AND STEEL EXTRUSION SHALL BE WELDED TO BE WATERTIGHT AT CONSTRUCTION JOINTS. PAYMENT INCIDENTAL TO ITEM 624000.
11. AT AREAS WHERE STEEL MEMBERS ARE TO BE SPLICED, USE OF COMPLETE JOINT PENETRATION (CJP) AND PARTIAL JOINT PENETRATION (PJP) WELD ARE BOTH PERMITTED. THE THICKNESS OF PJP WELD MUST BE MINIMUM HALF OF THE STEEL MEMBER THICKNESS.
12. FOR APPROACH AND SLEEPER SLAB REINFORCING DETAILS, SEE DWG. 1-759 AS-04 THROUGH AS-07.

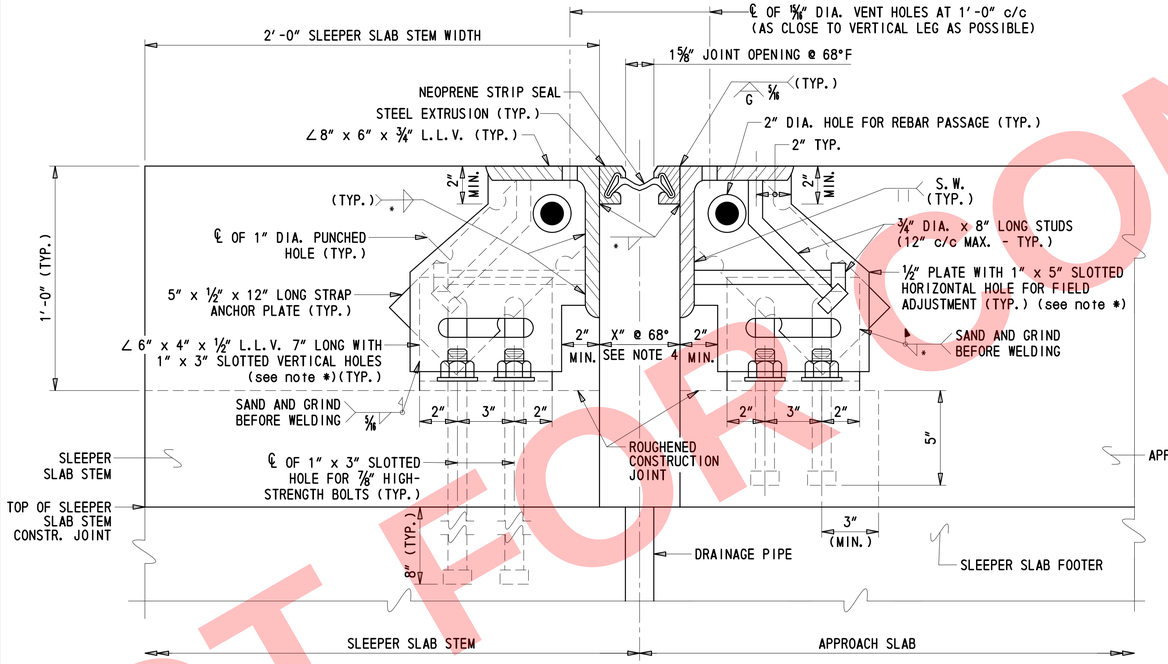

SECTION A-A (APPROACH SLAB TO SLEEPER SLAB)

* IF WELD OPTION IS PROPOSED, SLOTTED HOLES IN ½" PLATE AND 6"x4"x½" L.L.V. MAY BE OMITTED.

NOTE: L.L.V. DENOTES LONG LEG VERTICAL.

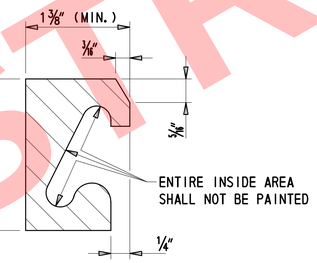

STEEL EXTRUSION DETAIL

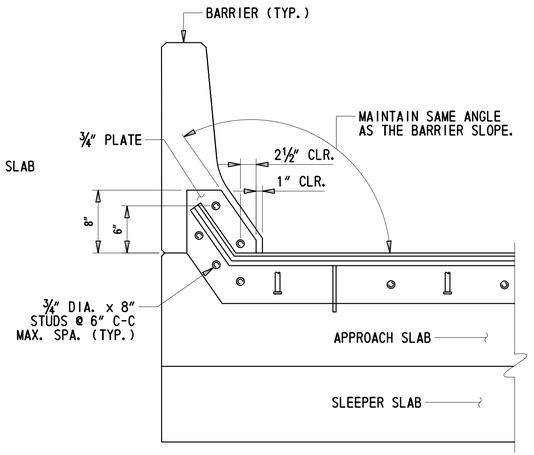

SECTION (B-B)

NOTE: CROSS SLOPE AND ANCHOR BOLTS NOT SHOWN FOR CLARITY.

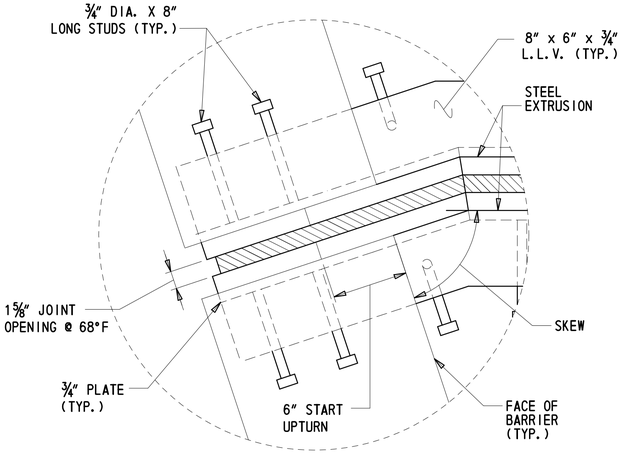

DETAIL A

NOT FOR CONSTRUCTION

2/8/2018 4:36:45 PM
I:\Dover Projects\425009.98\600_CADD\05_Plans\EX04_BR1-759.dgn

DELAWARE DEPARTMENT OF TRANSPORTATION	ADDENDUMS / REVISIONS	NOT TO SCALE	REHABILITATION OF I-95 FROM I-495 TO NORTH OF BRANDYWINE RIVER BRIDGE	CONTRACT T201407404	BRIDGE NO. 1 759 059	EXPANSION JOINT DETAILS - 4	1-759 EX-04
				COUNTY NEW CASTLE	DESIGNED BY: NAH		SHEET NO. 2-717
					CHECKED BY: DEF		TOTAL SHTS. 2-731

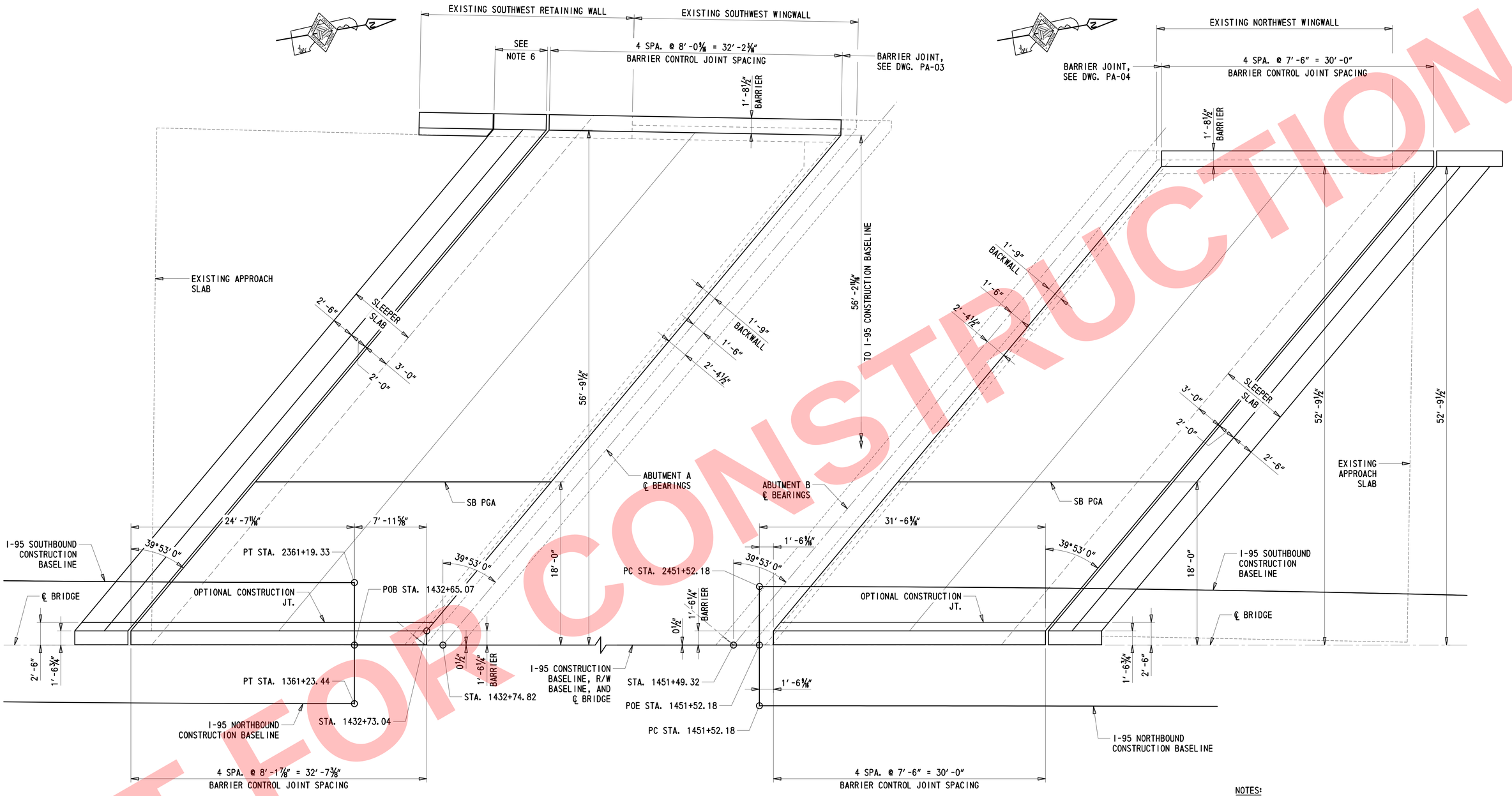

PLAN - APPROACH SLABS AT SOUTHBOUND ROADWAY ABUTMENTS

3/16" = 1'-0"

NOTES:

1. FOR BRIDGE PLAN AND ELEVATION, SEE DWG. PE-1 THROUGH PE-03.
2. FOR ABUTMENT A PLAN AND ELEVATION, SEE DWG. AB-01.
3. FOR ABUTMENT B PLAN AND ELEVATION, SEE DWG. AB-02.
4. FOR APPROACH SLAB DETAILS, SEE DWG. AS-03.
5. FOR APPROACH SLAB REINFORCING, SEE DWG. AS-04 AND AS-05.
6. FOR RETAINING WALL ELEVATION AT SLEEPER SLAB, SEE 'DETAIL A', DWG. AS-03 AND DWG. WW-01.

NOT FOR CONSTRUCTION

DELAWARE DEPARTMENT OF TRANSPORTATION	ADDENDUMS / REVISIONS	SCALE AS NOTED	REHABILITATION OF I-95 FROM I-495 TO NORTH OF BRANDYWINE RIVER BRIDGE	CONTRACT T201407404	BRIDGE NO. 1 759 059	SOUTHBOUND ROADWAY APPROACH SLAB PLANS	1-759 AS-01
				COUNTY NEW CASTLE	DESIGNED BY: NAH		SHEET NO. 2-718
					CHECKED BY: DEF		TOTAL SHTS. 2-731

2/8/2018 4:35:46 PM
F:\Dover\Projects\25009.98\600_CADD\05_Plans\ASO1_BR1-759.dgn

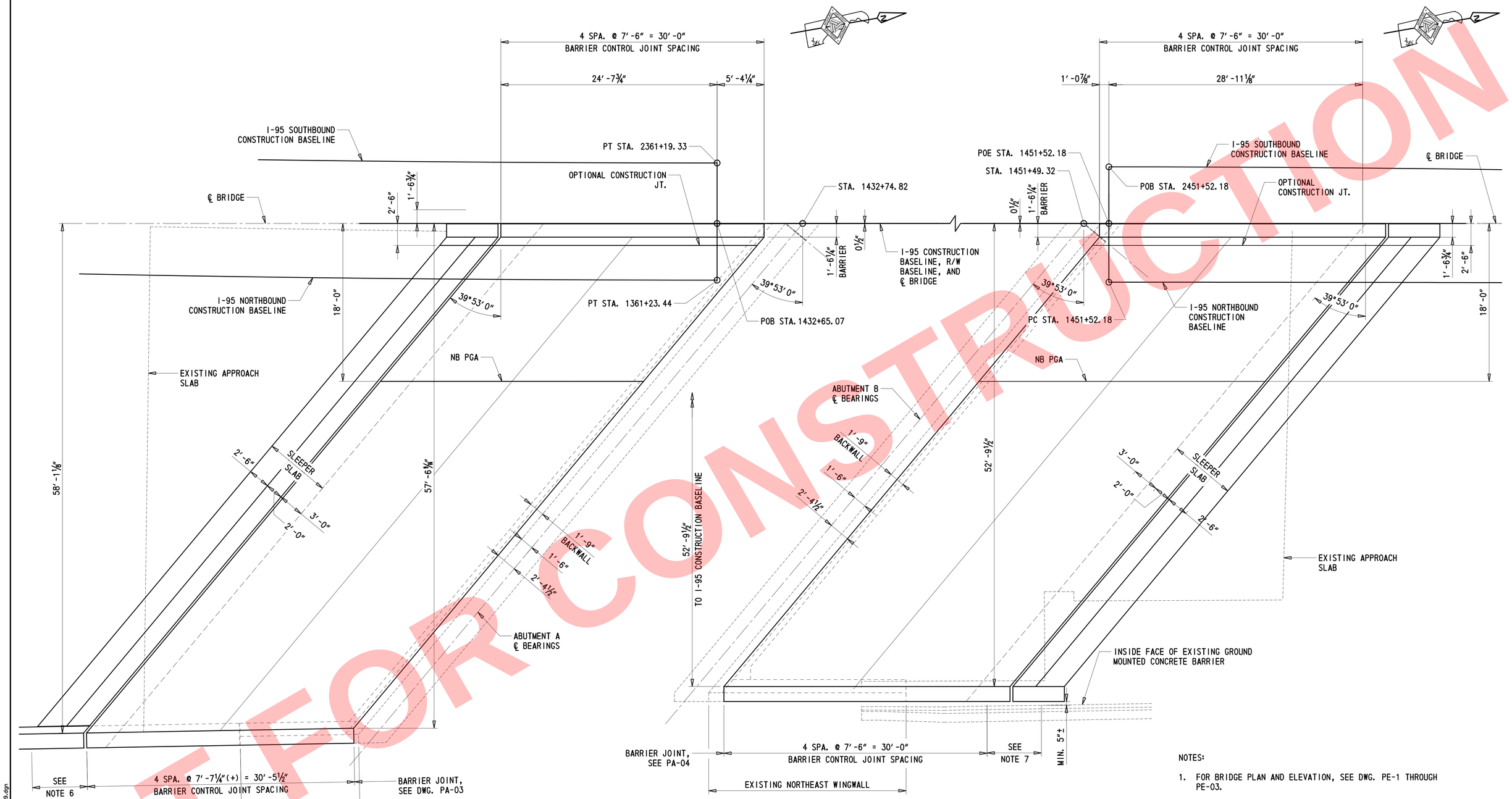

PLAN - APPROACH SLABS AT NORTHBOUND ROADWAY ABUTMENTS

⅜″ = 1′-0″

NOTES:

1. FOR BRIDGE PLAN AND ELEVATION, SEE DWG. PE-1 THROUGH PE-03.
2. FOR ABUTMENT A PLAN AND ELEVATION, SEE DWG. AB-01.
3. FOR ABUTMENT B PLAN AND ELEVATION, SEE DWG. AB-02.
4. FOR APPROACH SLAB DETAILS, SEE DWG. AS-03.
5. FOR APPROACH SLAB REINFORCING, SEE DWG. AS-06 AND AS-07.
6. FOR RETAINING WALL ELEVATION AT SLEEPER SLAB, SEE 'DETAIL A', DWG. AS-03 AND DWG. WW-02.
7. FOR SECTION OF APPROACH SLAB INSIDE OF EXISTING BARRIER, SEE 'DETAIL C', DWG. AS-03.

NOT FOR CONSTRUCTION

DELAWARE DEPARTMENT OF TRANSPORTATION	ADDENDUMS / REVISIONS	SCALE AS NOTED	REHABILITATION OF I-95 FROM I-495 TO NORTH OF BRANDYWINE RIVER BRIDGE	CONTRACT T201407404	BRIDGE NO. 1 759 059	NORTHBOUND ROADWAY APPROACH SLAB PLANS	1-759 AS-02
				COUNTY NEW CASTLE	DESIGNED BY: NAH		SHEET NO. 2-719
					CHECKED BY: DEF		TOTAL SHTS. 2-731

2/8/2018 4:36:48 PM
f:\Dover\Projects\425009.98\600_CADD\05_Plans\AS02_BR1-759.dgn

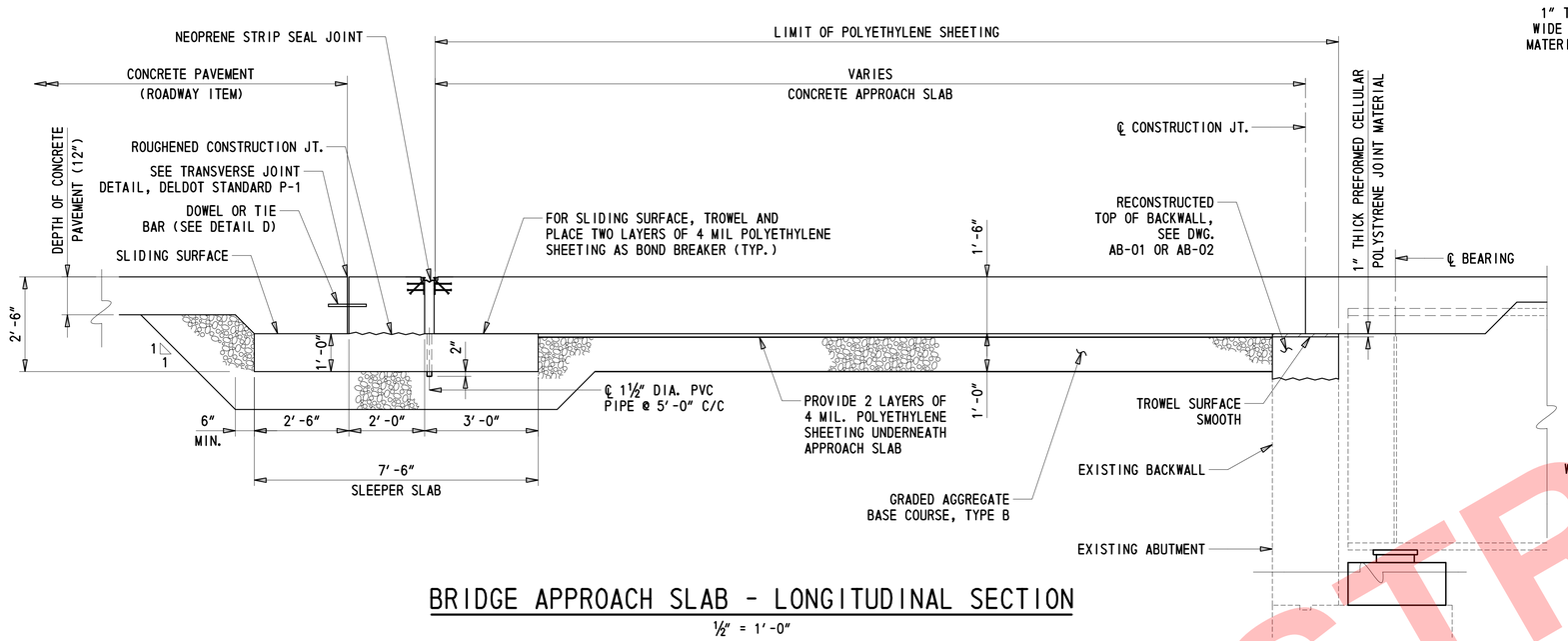

BRIDGE APPROACH SLAB - LONGITUDINAL SECTION

½" = 1'-0"

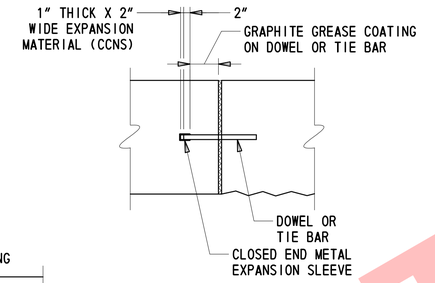

DETAIL D

NOT TO SCALE

CCNS: CLOSED CELL NEOPRENE SPONGE

NOTES:

1. FOR APPROACH SLAB PLANS, SEE DWG. AS-01 AND AS-02.
2. FOR APPROACH SLAB REINFORCING, SEE DWG. AS-04 THROUGH AS-07.
3. THE SLEEPER SLAB CONCRETE SHALL BE PAID UNDER ITEM 610018.
4. PAYMENT FOR POLYETHYLENE SHEETING, BOND BREAKER, WATERSTOP, HOT POURED JOINT SEALANT SHALL BE INCIDENTAL TO ITEM 610018.
5. FOR ADDITIONAL ROADWAY PAVEMENT DETAILS, SEE DELDOT STANDARD P-1. PAYMENT FOR ROADWAY JOINTS SHALL BE INCIDENTAL TO ROADWAY PAVEMENT ITEM.

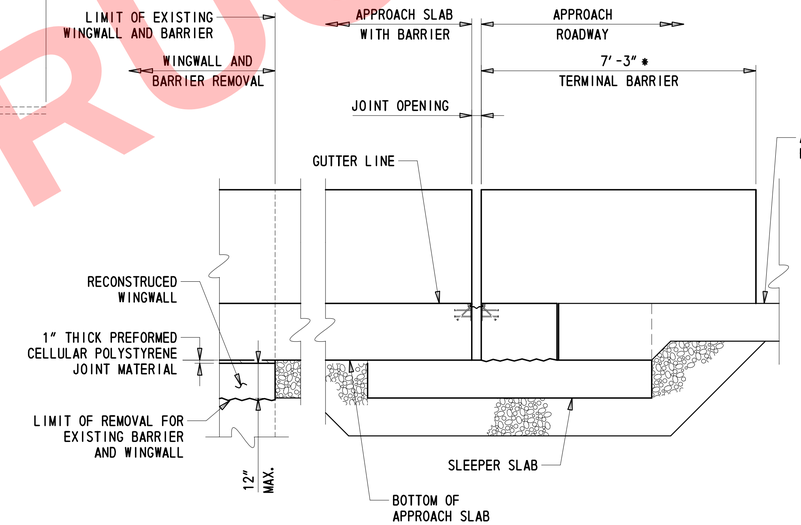

DETAIL B

* MEASURED ALONG SKEW

NOT TO SCALE

FOR LOCATION OF DETAIL B, SEE DWG. AS-01 (SOUTHBOUND ROADWAY, NORTH ABUTMENT).

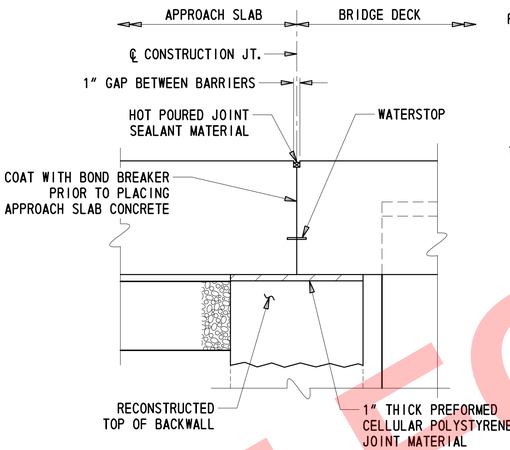

JOINT BETWEEN APPROACH SLAB AND SLAB-OVER BACKWALL

NOT TO SCALE

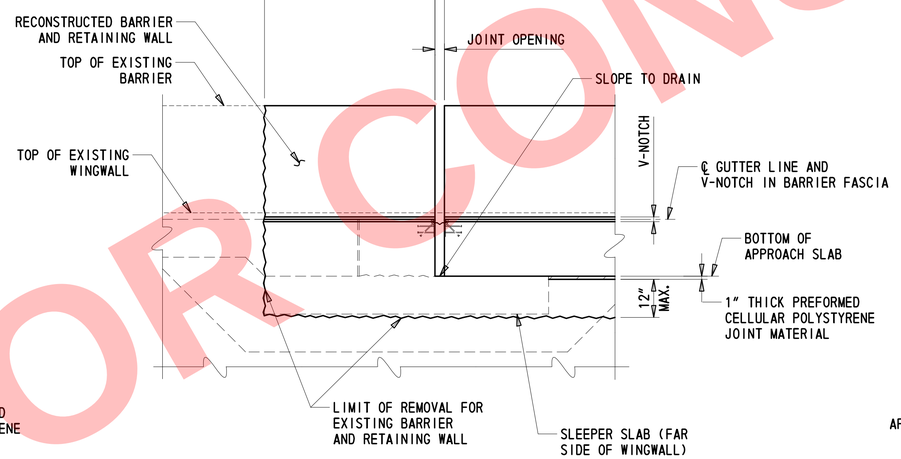

* MEASURED ALONG SKEW

DETAIL A

NOT TO SCALE

FOR LOCATION OF DETAIL A, SEE DWG. AS-01 AND AS-02. VIEW IS LOOKING AT FASCIA OF NORTHBOUND APPROACH SLAB. VIEW AT SOUTHBOUND ROADWAY IS SIMILAR, OPPOSITE HAND.

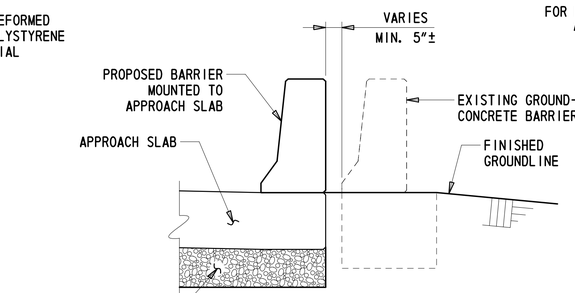

DETAIL C

NOT TO SCALE

FOR LOCATION OF DETAIL C, SEE DWG. AS-02 (NORTHBOUND ROADWAY, NORTH ABUTMENT). VIEW IS LOOKING UPSTATION.

NOT FOR CONSTRUCTION

DELAWARE DEPARTMENT OF TRANSPORTATION	ADDENDUMS / REVISIONS	SCALE AS NOTED	REHABILITATION OF I-95 FROM I-495 TO NORTH OF BRANDYWINE RIVER BRIDGE	CONTRACT T201407404	BRIDGE NO. 1 759 059	APPROACH SLAB DETAILS
				COUNTY NEW CASTLE	DESIGNED BY: NAH	SHEET NO. 2-720
					CHECKED BY: DEF	TOTAL SHTS. 2-731

1-759
AS-03

2/8/2018 4:36:50 PM
F:\Dover\Projects\425009.98\600_CADD\05_Plans\AS03_BR1-759.dgn

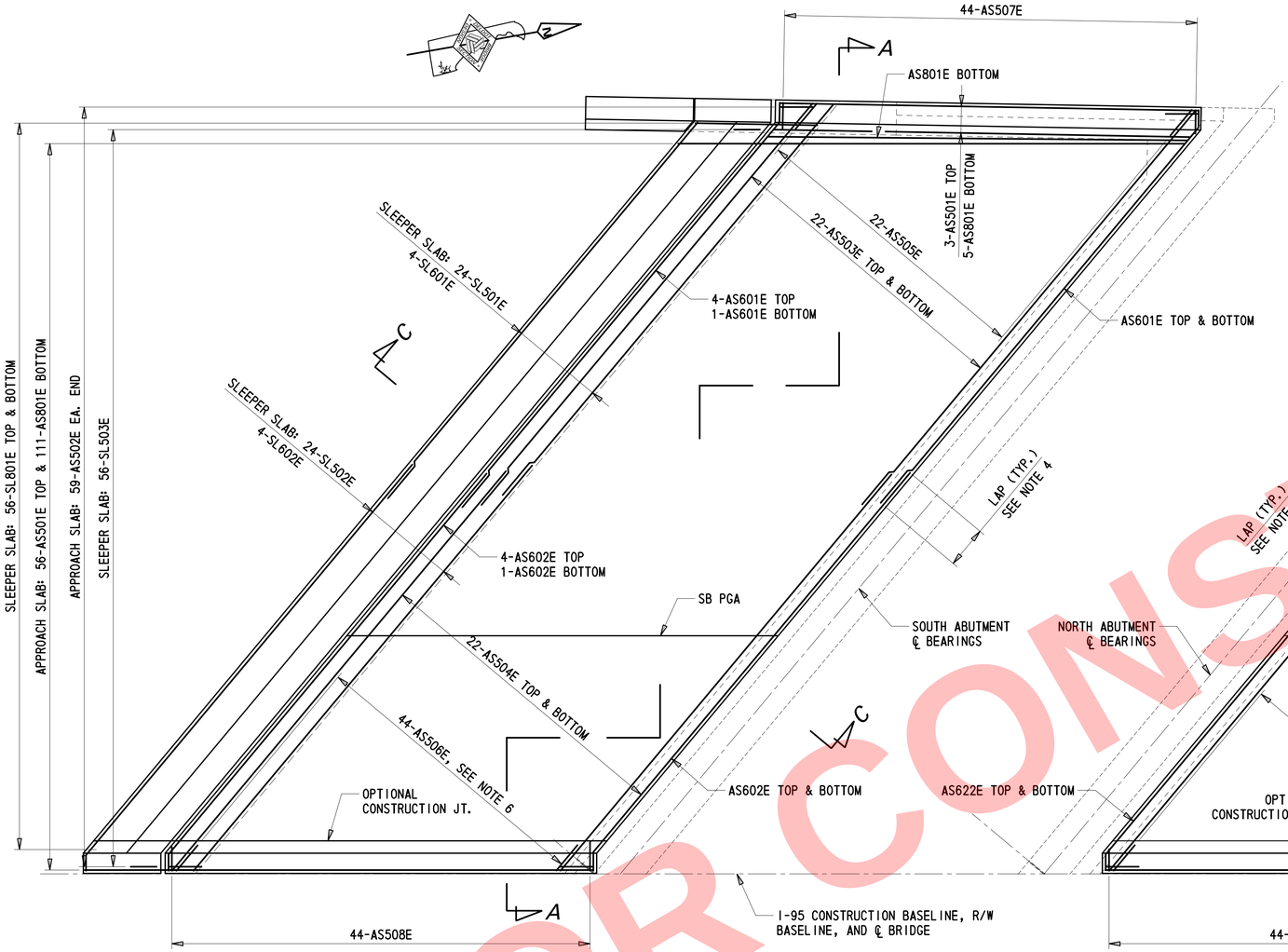

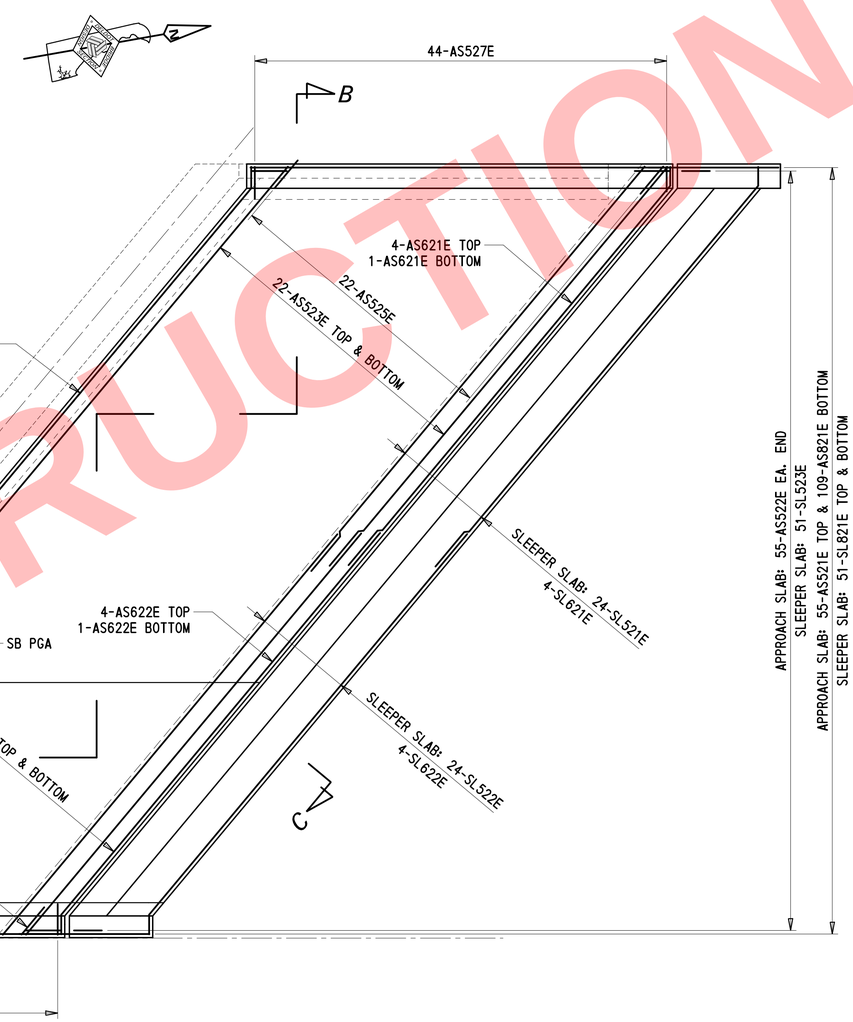

PLAN - APPROACH SLAB AT SOUTH ABUTMENT SOUTHBOUND ROADWAY

3/16" = 1'-0"

PLAN - APPROACH SLAB AT NORTH ABUTMENT SOUTHBOUND ROADWAY

3/16" = 1'-0"

NOTES:

1. FOR APPROACH SLAB PLANS, SEE DWG. AS-01.
2. FOR SECTIONS A-A, B-B, AND C-C, SEE DWG. AS-05.
3. FOR REINFORCING BAR LIST, SEE DWG. BR-01.
4. FOR BAR LAP LENGTHS, SEE DWG. AS-05.
5. FOR SLAB DOWELS, SEE DWG. DK-02.
6. REPLACE 44-AS506E/44-AS526E WITH 22-AS505E/ 22-AS525E IF THE OPTIONAL CONSTRUCTION JOINT IS NOT USED.

NOT FOR CONSTRUCTION

DELAWARE DEPARTMENT OF TRANSPORTATION	ADDENDUMS / REVISIONS	SCALE AS NOTED	REHABILITATION OF I-95 FROM I-495 TO NORTH OF BRANDYWINE RIVER BRIDGE	CONTRACT T201407404	BRIDGE NO. 1 759 059	APPROACH SLABS SOUTHBOUND ROADWAY REINFORCEMENT – 1
				COUNTY NEW CASTLE	DESIGNED BY: NAH	
					CHECKED BY: DEF	

1-759
AS-04

SHEET NO. 2-721

TOTAL SHTS. 2-731

2/8/2018 4:36:52 PM
T:\Dover\Projects\X25009.98\600_CADD\05_Plans\AS04_BR1-759.dgn

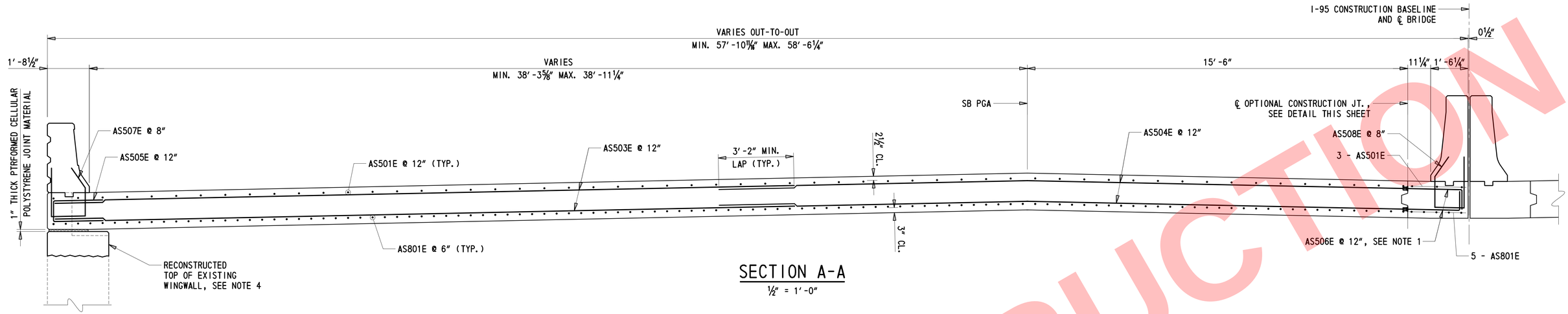

SECTION A-A

½″ = 1′-0″

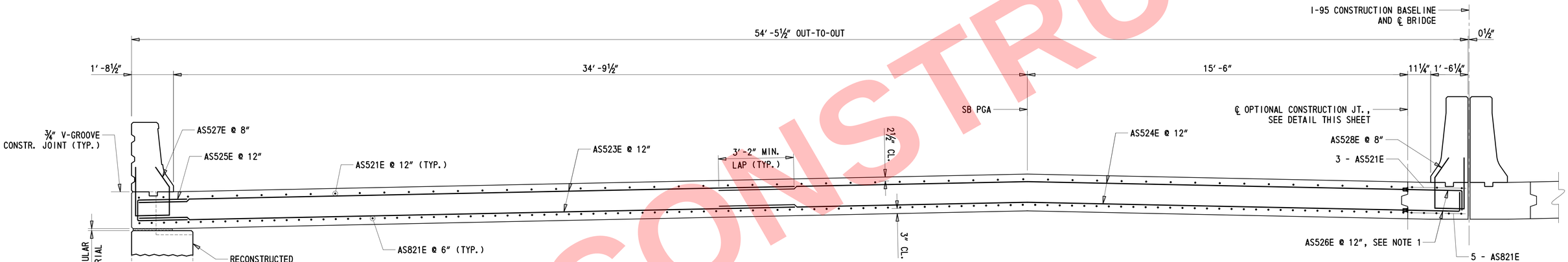

SECTION B-B

½″ = 1′-0″

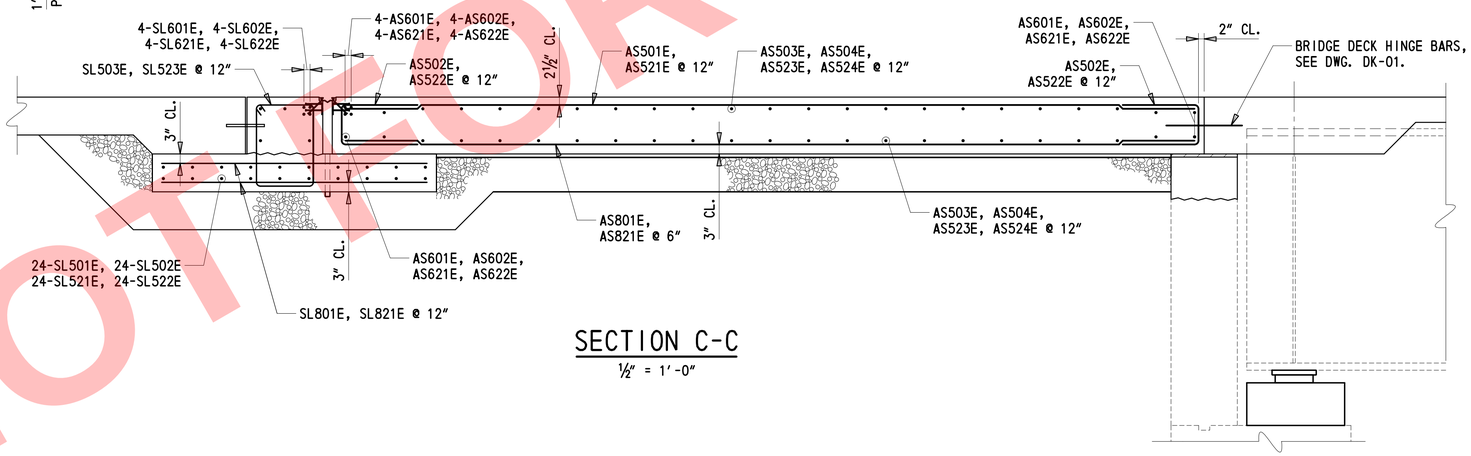

SECTION C-C

½″ = 1′-0″

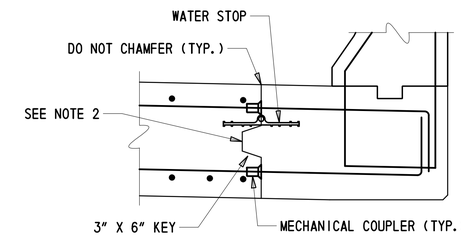

OPTIONAL CONSTRUCTION JOINT DETAIL

NOT TO SCALE

NOTES:

1. REPLACE 44-AS506E/44-AS526E WITH 22-AS505E/ 22-AS525E IF THE OPTIONAL CONSTRUCTION JOINT IS NOT USED.
2. AT CONSTRUCTION JOINTS, PREPARE SURFACE AND BONDING AGENT IMMEDIATELY PRIOR TO PLACEMENT OF ADJACENT CONCRETE IN ACCORDANCE SECTION 610.03G.
3. FOR APPROACH SLAB BEYOND WINGWALL, PROVIDE GRADED AGGREGATE BASE COURSE TO OUTSIDE EDGE OF APPROACH SLAB.
4. FOR WINGWALL RECONSTRUCTION SEE DWG. WW-01.

NOT FOR CONSTRUCTION

2/8/2018 4:36:53 PM
T:\Dover\Projects\425009.98\600_CADD\05_Plans\AS05_BR1-759.dgn

DELAWARE DEPARTMENT OF TRANSPORTATION	ADDENDUMS / REVISIONS	SCALE AS NOTED	REHABILITATION OF I-95 FROM I-495 TO NORTH OF BRANDYWINE RIVER BRIDGE	CONTRACT T201407404	BRIDGE NO. 1 759 059	APPROACH SLABS SOUTHBOUND ROADWAY REINFORCEMENT – 2	SHEET NO. 2-722
				COUNTY NEW CASTLE	DESIGNED BY: NAH		TOTAL SHTS. 2-731
					CHECKED BY: DEF		1-759 AS-05

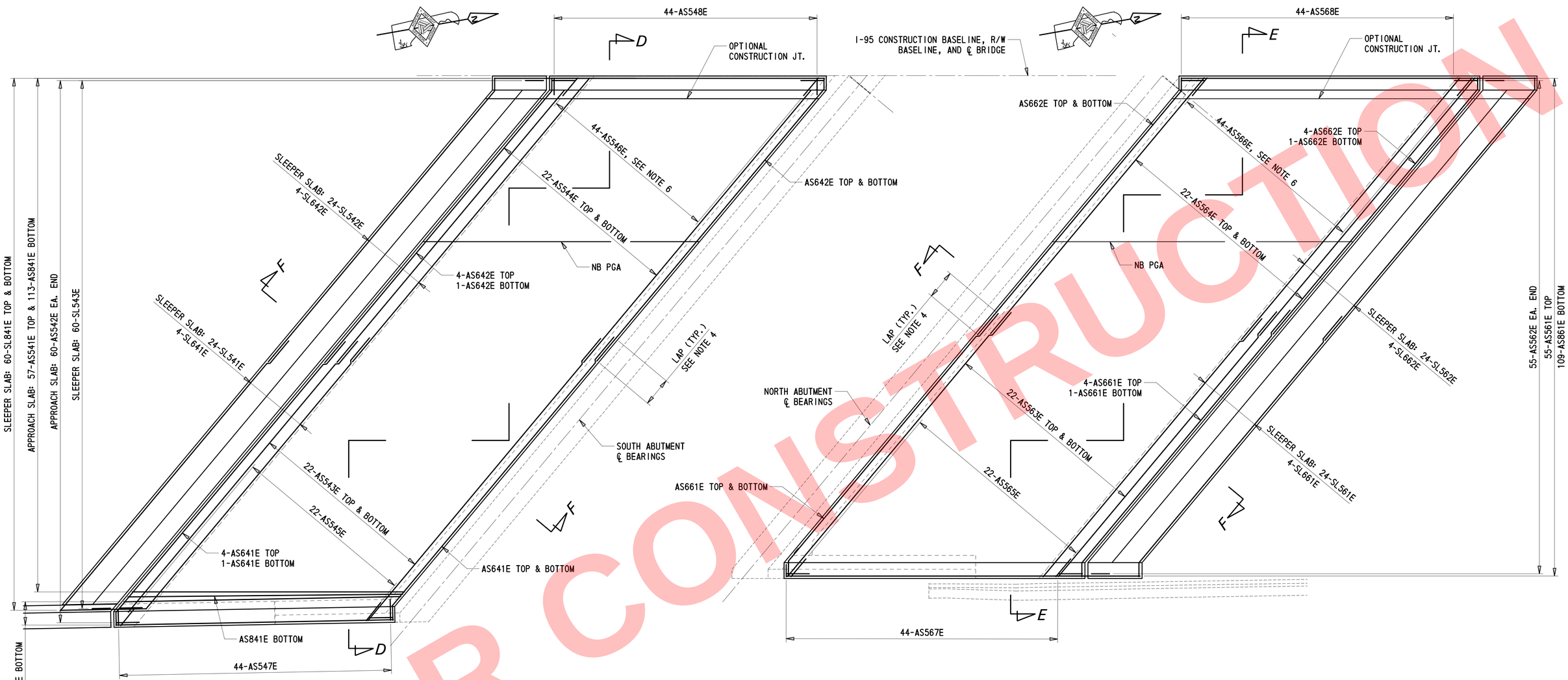

PLAN - APPROACH SLAB AT SOUTH ABUTMENT NORTHBOUND ROADWAY

3/16" = 1'-0"

PLAN - APPROACH SLAB AT NORTH ABUTMENT NORTHBOUND ROADWAY

3/16" = 1'-0"

NOTES:

1. FOR APPROACH SLAB PLANS, SEE DWG. NO. AS-02.
2. FOR SECTIONS D-D, E-E, AND F-F, SEE DWG. NO. AS-07.
3. FOR REINFORCING BAR LIST, SEE DWG. NO. BR-01.
4. FOR BAR LAP LENGTHS, SEE DWG. NO. AS-07.
5. FOR SLAB DOWELS, SEE DWG. DK-02.
6. REPLACE 44-AS546E/44-AS566E WITH 22-AS545E/ 22-AS565E IF THE OPTIONAL CONSTRUCTION JOINT IS NOT USED.

NOT FOR CONSTRUCTION

2/8/2018 413655 PM
T:\Dover\Projects\425009.98\600_CADD\05_Plans\AS06_BR1-759.dgn

DELAWARE
DEPARTMENT OF TRANSPORTATION

ADDENDUMS / REVISIONS

SCALE AS NOTED

REHABILITATION OF I-95
FROM I-495 TO NORTH OF
BRANDYWINE RIVER BRIDGE

CONTRACT	BRIDGE NO.	1 759 059
T201407404	DESIGNED BY: NAH	
COUNTY	CHECKED BY: DEF	
NEW CASTLE		

APPROACH SLABS
NORTHBOUND ROADWAY
REINFORCEMENT - 1

1-759 AS-06	
SHEET NO.	2-723
TOTAL SHTS.	2-731

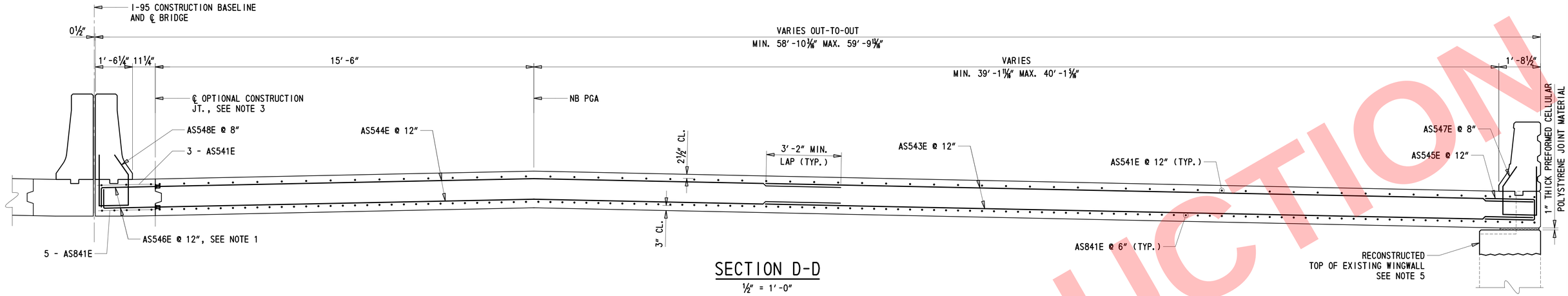

SECTION D-D

½" = 1'-0"

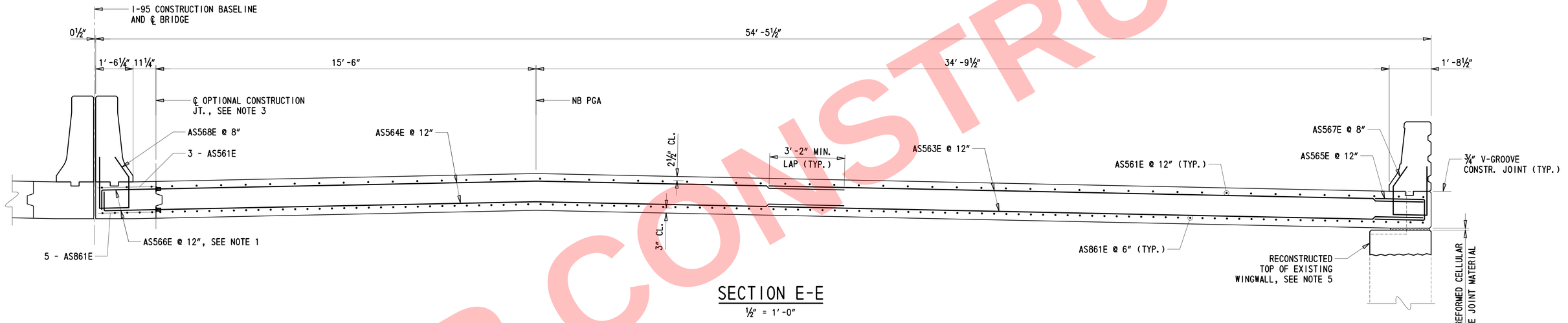

SECTION E-E

½" = 1'-0"

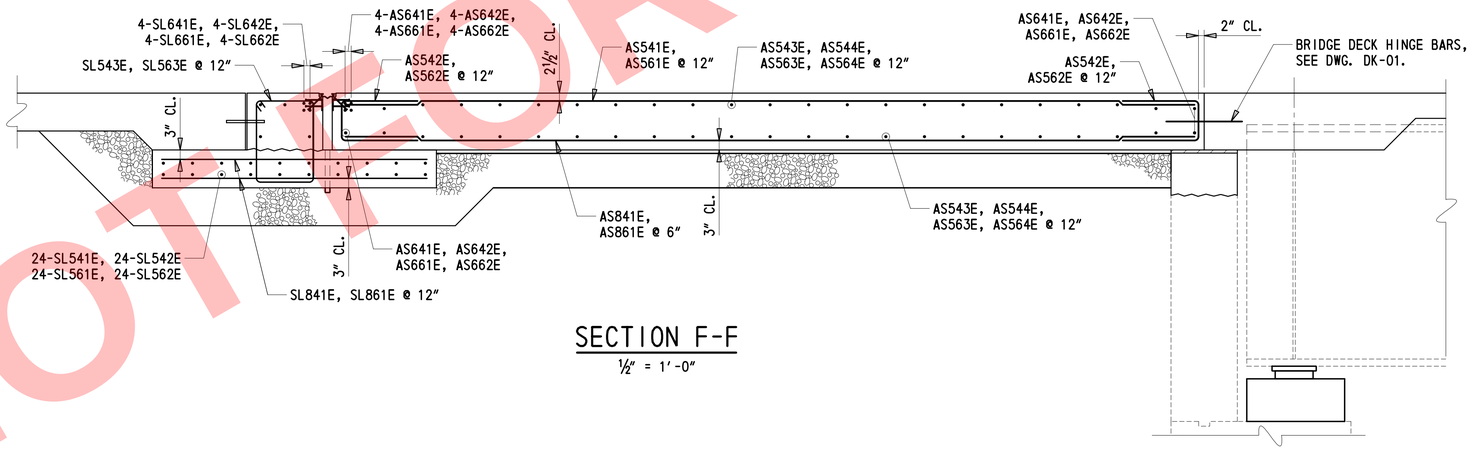

SECTION F-F

½" = 1'-0"

NOTES:

1. REPLACE 44-AS546E/44-AS566E WITH 22-AS544E/ 22-AS565E IF THE OPTIONAL CONSTRUCTION JOINT IS NOT USED.
2. AT CONSTRUCTION JOINTS, PREPARE SURFACE AND BONDING AGENT IMMEDIATELY PRIOR TO PLACEMENT OF ADJACENT CONCRETE IN ACCORDANCE SECTION 610.03G.
3. FOR CONSTRUCTION JOINT DETAIL, SEE DWG. NO. AS-05.
4. FOR APPROACH SLAB BEYOND WINGWALL, PROVIDE GRADED AGGREGATE BASE COURSE TO OUTSIDE EDGE OF APPROACH SLAB.
5. FOR WINGWAL RECONSTRUCTION DETAILS SEE DWG. WW-01.

NOT FOR CONSTRUCTION

DELAWARE DEPARTMENT OF TRANSPORTATION	ADDENDUMS / REVISIONS	SCALE AS NOTED	REHABILITATION OF I-95 FROM I-495 TO NORTH OF BRANDYWINE RIVER BRIDGE	CONTRACT T201407404 / COUNTY NEW CASTLE	BRIDGE NO. 1 759 059 / DESIGNED BY: NAH / CHECKED BY: DEF	APPROACH SLABS NORTHBOUND ROADWAY REINFORCEMENT – 2	1-759 AS-07 / SHEET NO. 2-724 / TOTAL SHTS. 2-731

2/8/2018 4:36:57 PM
F:\Dover\Projects\425009.98\600_CADD\05_Plans\AS07_BR1-759.dgn

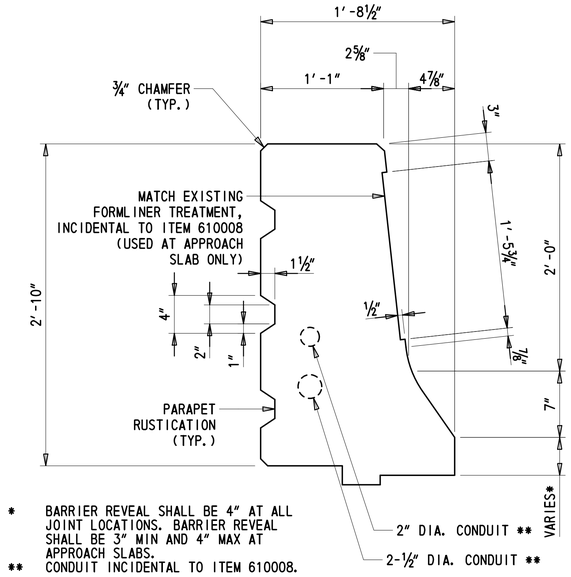

* BARRIER REVEAL SHALL BE 4″ AT ALL JOINT LOCATIONS. BARRIER REVEAL SHALL BE 3″ MIN AND 4″ MAX AT APPROACH SLABS.
** CONDUIT INCIDENTAL TO ITEM 610008.

TYPICAL EXTERIOR BARRIER

1½″ = 1′-0″

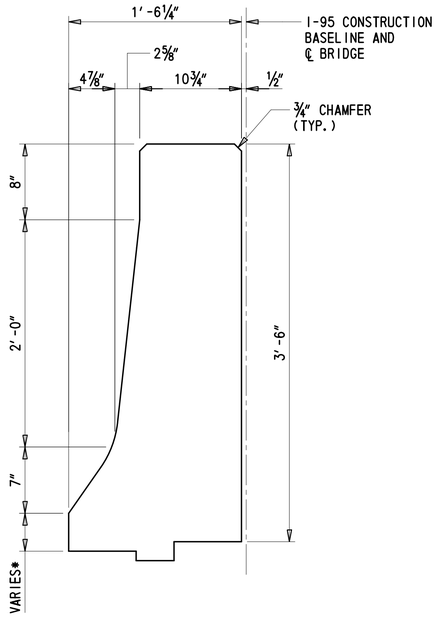

TYPICAL MEDIAN BARRIER

1½″ = 1′-0″

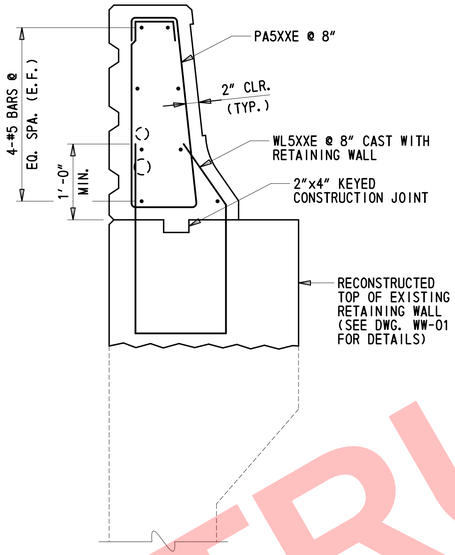

EXTERIOR BARRIER AT RETAINING WALL

1″ = 1′-0″

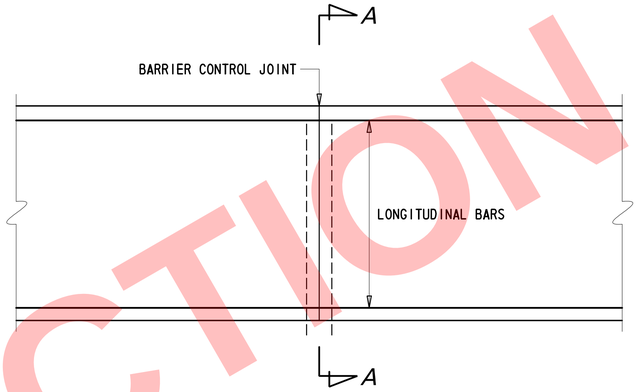

BARRIER CONTROL JOINT DETAIL

(REINFORCEMENT CONTINUOUS THROUGH JOINT)

NTS

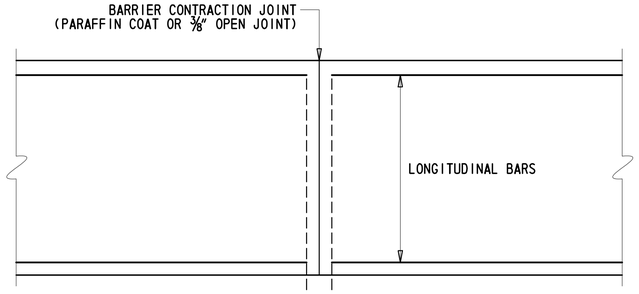

BARRIER CONTRACTION JOINT DETAIL

(REINFORCEMENT NOT CONTINUOUS THROUGH JOINT)

NTS

NOTE: USE OF PARAFFIN COAT AT THE JOINT OR A ⅜″ OPEN JOINT IS PERMITTED. BARRIER EXPANSION JOINT DETAIL SIMILAR TO BARRIER CONTRACTION JOINT DETAIL WITH OPENING TYPICALLY GREATER THAN 2 INCHES.

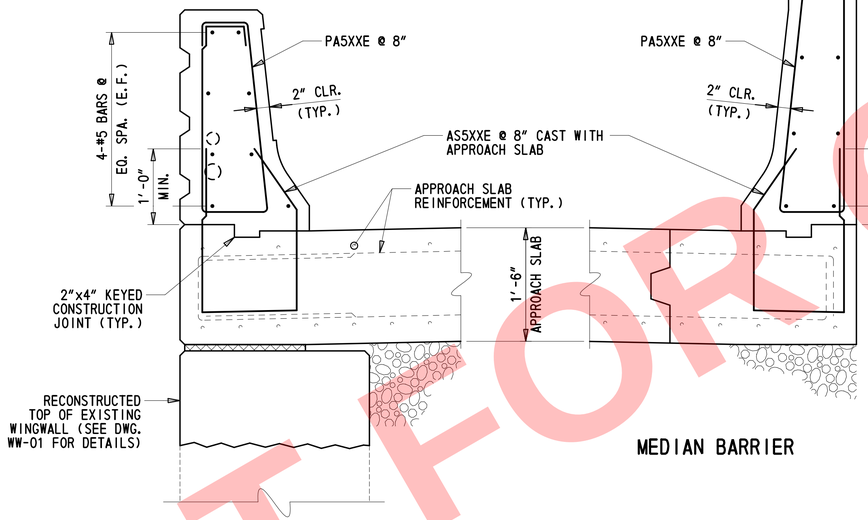

BARRIER AT APPROACH SLAB

1″ = 1′-0″

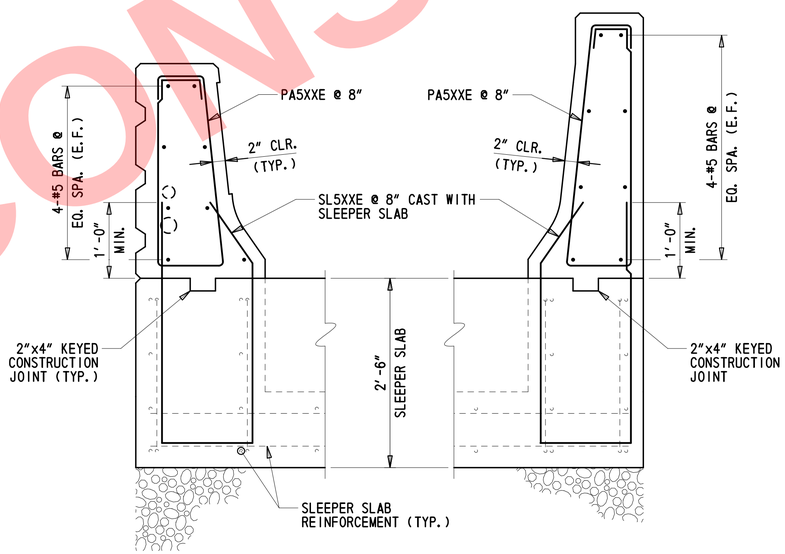

BARRIER AT SLEEPER SLAB

1″ = 1′-0″

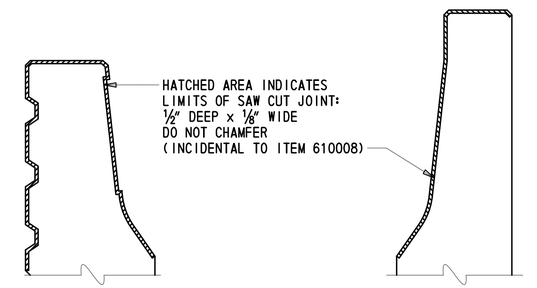

SECTION A-A

(REINFORCEMENT NOT SHOWN FOR CLARITY)

NTS

CROSS-REFERENCE NOTES:

1. FOR RAILING DETAILS, SEE DWG. PA-02.
2. FOR LOCATION OF BARRIER JOINTS AND BARRIER ELEVATION DETAILS, SEE DWG. PA-03 AND PA-04.
3. FOR APPROACH SLAB AND SLEEPER SLAB DETAILS, SEE DWG. AS-01 TO AS-07.
4. FOR WINGWALL DETAILS, SEE DWG. WW-01.

NOT FOR CONSTRUCTION

2/8/2018 4:36:58 PM
I:\Dover\Projects\425009.98\600_CADD\05_Plans\PA01_BR1-759.dgn

DELAWARE DEPARTMENT OF TRANSPORTATION

ADDENDUMS / REVISIONS

SCALE AS NOTED

REHABILITATION OF I-95 FROM I-495 TO NORTH OF BRANDYWINE RIVER BRIDGE

CONTRACT	BRIDGE NO. 1 759 059
T201407404	DESIGNED BY: JWS
COUNTY	CHECKED BY: DEF
NEW CASTLE	

BARRIER DETAILS

1-759 PA-01
SHEET NO. 2-725
TOTAL SHTS. 2-731

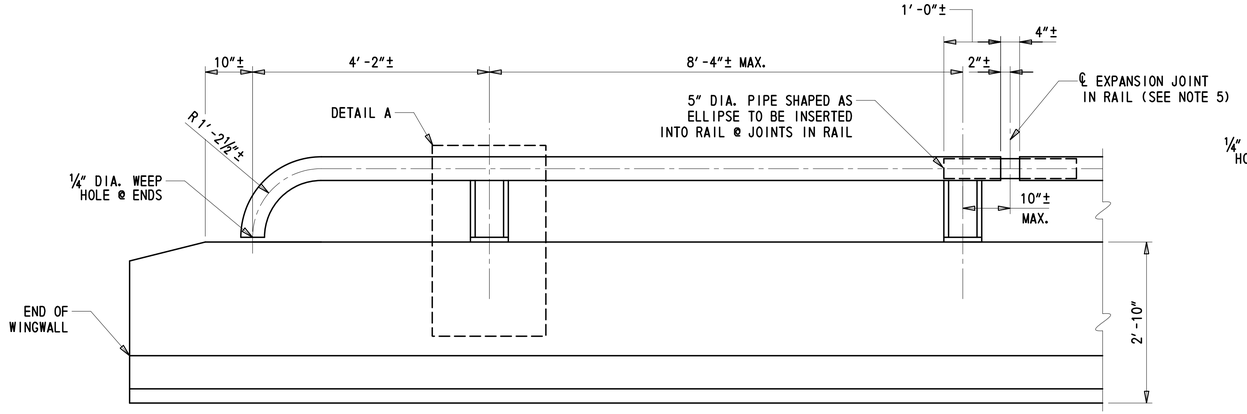

TYPICAL RAIL - EXTERIOR BARRIER ELEVATION

3/4" = 1'-0"

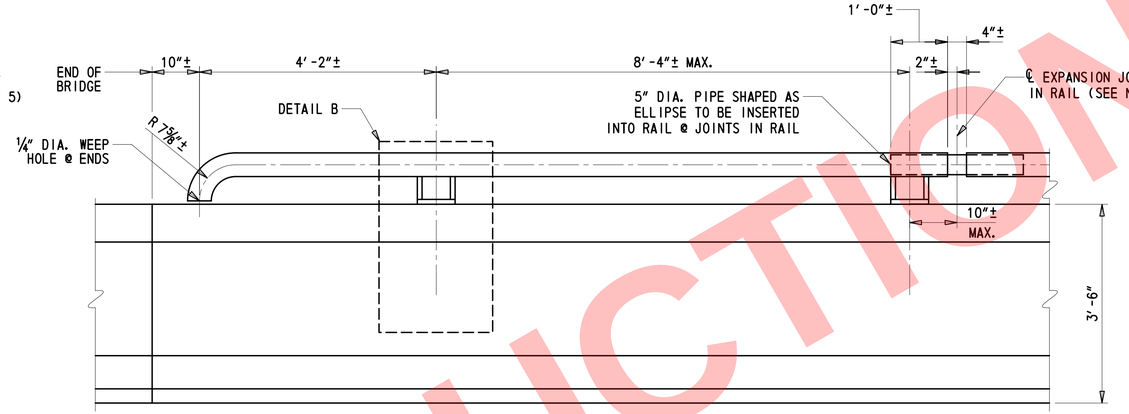

TYPICAL RAIL - MEDIAN BARRIER ELEVATION

3/4" = 1'-0"

DETAIL A

1 1/2" = 1'-0"

TYPICAL RAIL ON EXTERIOR BARRIER

1 1/2" = 1'-0"

DETAIL B

1 1/2" = 1'-0"

TYPICAL RAIL ON MEDIAN BARRIER

1 1/2" = 1'-0"

NOTES:

1. REMOVAL, SALVAGE, AND REINSTALLATION OF STEEL BRIDGE RAILING AT APPROACH SLAB BARRIER REPLACEMENTS AND BRIDGE EXPANSION JOINT REPLACEMENTS SHALL BE PAID UNDER ITEM 626001.
2. ANY TOUCHUP PAINT REQUIRED TO STEEL BRIDGE RAILING SHALL BE INCIDENTAL TO ITEM 616000. RAILINGS AND RAILING POSTS SHALL BE PAINTED GLOSS BLACK IN COLOR, FED-STD-595C. PAINTING SHALL BE IN ACCORDANCE WITH STANDARD SPECIFICATIONS SECTION 605.38 AND 820.02.
3. ANY ADJUSTMENTS OR MODIFICATIONS TO STEEL BRIDGE RAILING SHALL BE INCIDENTAL TO ITEM 626001.
4. ANY NEW RAILING AND RAILING POSTS SHALL BE GALVANIZED IN ACCORDANCE WITH ASTM A123 AND A153 AND PAINTED ACCORDING TO NOTE 2.
5. AN EXPANSION JOINT IN THE RAILING MUST BE LOCATED BETWEEN THE RAILING POSTS ON EITHER SIDE OF BRIDGE EXPANSION JOINTS. FOR BRIDGE EXPANSION JOINT DETAILS, SEE DWG. EX-01 TO EX-02.
6. ASTM A449 ANCHOR BOLTS SHALL BE MECHANICALLY GALVANIZED IN ACCORDANCE WITH ASTM B695 AND INCIDENTAL TO ITEM 262001.

NOT FOR CONSTRUCTION

DELAWARE DEPARTMENT OF TRANSPORTATION	ADDENDUMS / REVISIONS	SCALE AS NOTED	REHABILITATION OF I-95 FROM I-495 TO NORTH OF BRANDYWINE RIVER BRIDGE	CONTRACT T201407404	BRIDGE NO. 1 759 059	RAILING DETAILS	1-759 PA-02
				COUNTY NEW CASTLE	DESIGNED BY: JWS		SHEET NO. 2-726
					CHECKED BY: DEF		TOTAL SHTS. 2-731

2/8/2018 4:37:00 PM
F:\Dover\Projects\X25009.98\600_CADD\05_Plans\PA02_BR1-759.dgn

NOTES:

1. STEEL RAILING NOT SHOWN FOR CLARITY. FOR RAILING DETAILS SEE DWG. PA-02.
2. FOR BARRIER SECTIONS SEE DWG. PA-01.
3. FOR WINGWALL DETAILS SEE DWG. WW-01.
4. FOR APPROACH SLAB DETAILS SEE DWG. AS-03.
5. CONTRACTOR MAY CUT EXISTING ELECTRICAL AND ITMS CONDUIT RUNNING THROUGH BARRIER DURING DEMOLITION OF APPROACH BARRIER. NEW CONDUITS SHALL BE INSTALLED IN BARRIER AND NEW ELECTRICAL AND ITMS FEEDS TO BE SPLICED ONTO TERMINATED FEEDS TO RESTORE CONNECTION.

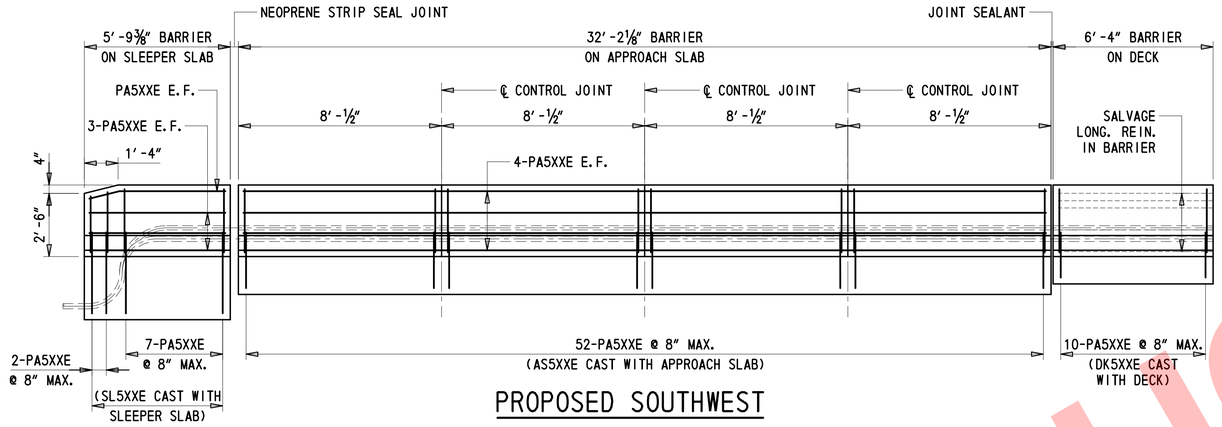

PROPOSED SOUTHWEST EXTERIOR BARRIER REINFORCEMENT

1″ = 3′-0″

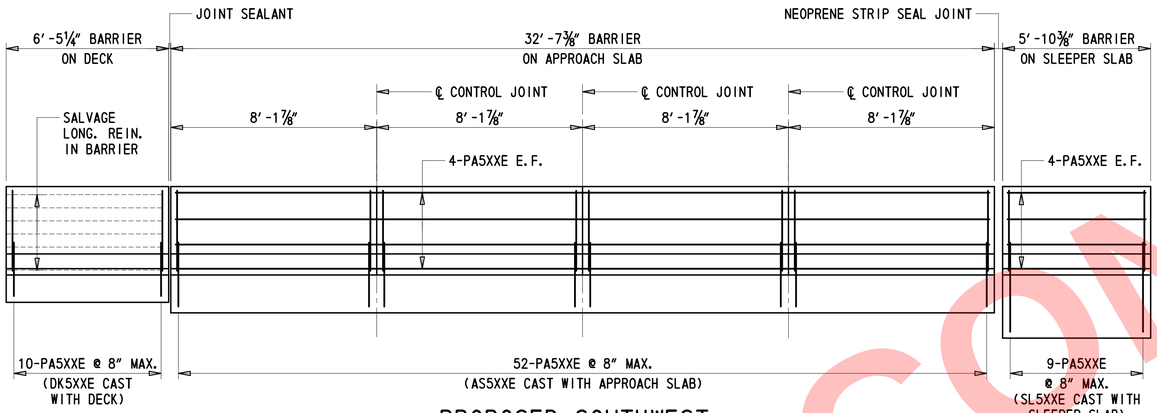

PROPOSED SOUTHWEST MEDIAN BARRIER REINFORCEMENT

1″ = 3′-0″

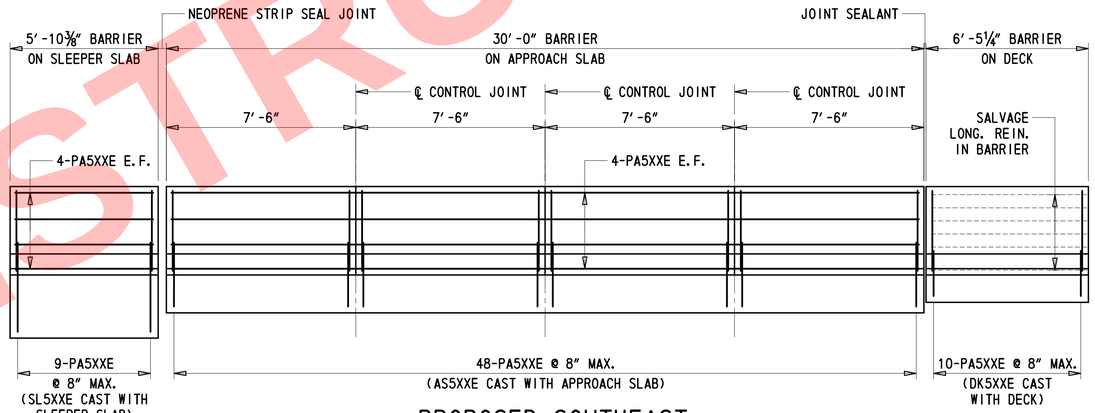

PROPOSED SOUTHEAST MEDIAN BARRIER REINFORCEMENT

1″ = 3′-0″

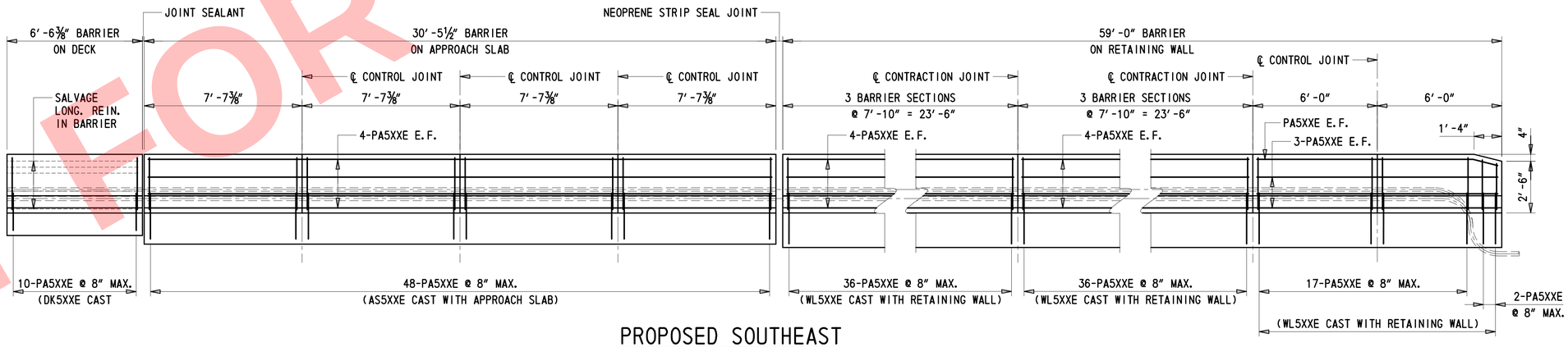

PROPOSED SOUTHEAST EXTERIOR BARRIER REINFORCEMENT

1″ = 3′-0″

NOT FOR CONSTRUCTION

2/8/2018 4:37:02 PM
f:\Dover\Projects\x25009.98\K600_CADD\05_Plans\PA03_BR1-759.dgn

DELAWARE DEPARTMENT OF TRANSPORTATION

ADDENDUMS / REVISIONS

SCALE AS NOTED

REHABILITATION OF I-95 FROM I-495 TO NORTH OF BRANDYWINE RIVER BRIDGE

CONTRACT	BRIDGE NO. 1 759 059
T201407404	DESIGNED BY: JWS
COUNTY	CHECKED BY: DEF
NEW CASTLE	

BARRIER ELEVATIONS – 1

1-759 PA-03
SHEET NO. 2-727
TOTAL SHTS. 2-731

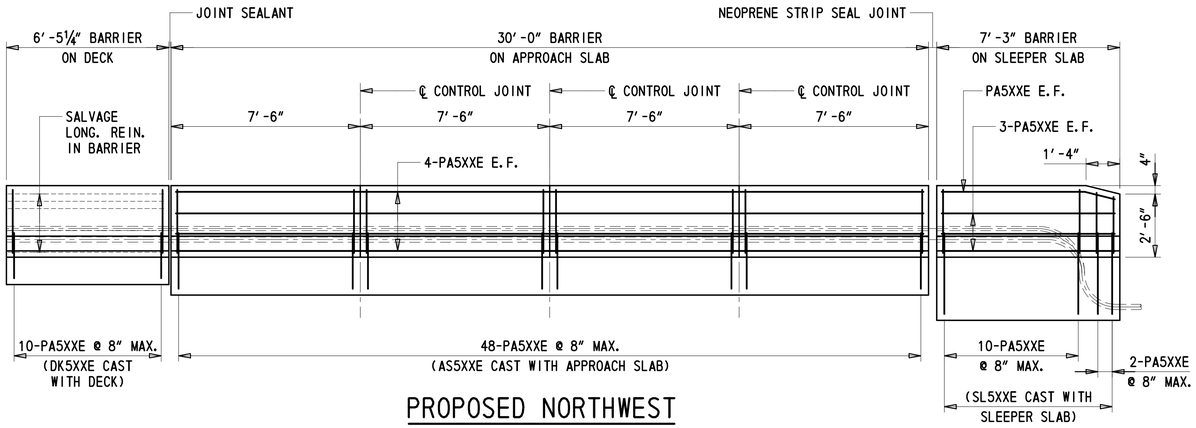

PROPOSED NORTHWEST EXTERIOR BARRIER REINFORCEMENT

1″ = 3′-0″

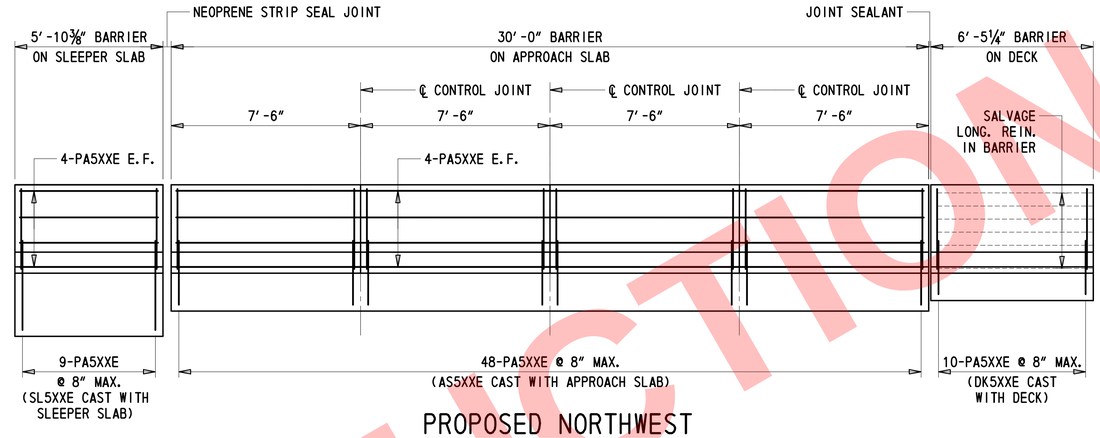

PROPOSED NORTHWEST MEDIAN BARRIER REINFORCEMENT

1″ = 3′-0″

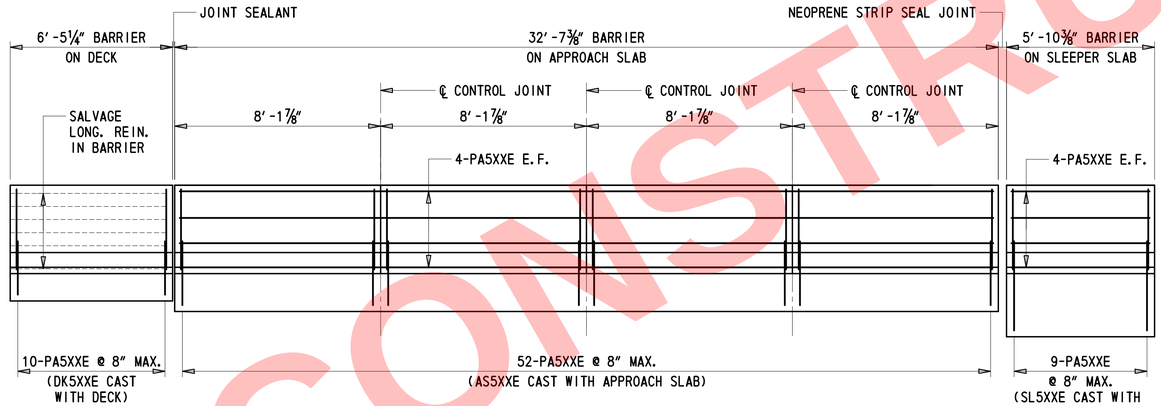

PROPOSED NORTHEAST MEDIAN BARRIER REINFORCEMENT

1″ = 3′-0″

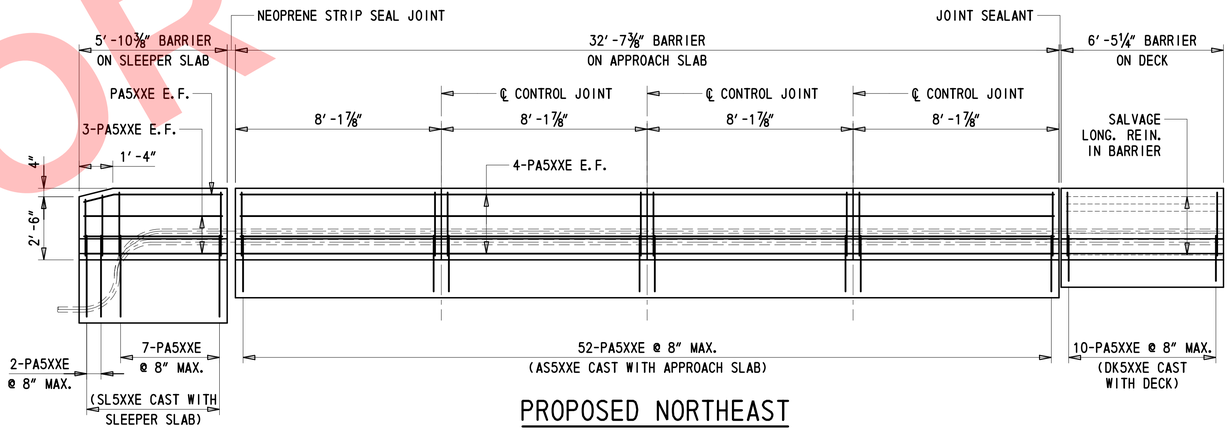

PROPOSED NORTHEAST EXTERIOR BARRIER REINFORCEMENT

1″ = 3′-0″

NOTES:

1. STEEL RAILING NOT SHOWN FOR CLARITY. FOR RAILING DETAILS SEE DWG. PA-02.
2. FOR BARRIER SECTIONS SEE DWG. PA-01.
3. FOR WINGWALL DETAILS SEE DWG. WW-01.
4. FOR APPROACH SLAB DETAILS SEE DWG. AS-03.
5. CONTRACTOR MAY CUT EXISTING ELECTRICAL AND ITMS CONDUIT RUNNING THROUGH BARRIER DURING DEMOLITION OF APPROACH BARRIER. NEW CONDUITS SHALL BE INSTALLED IN BARRIER AND NEW ELECTRICAL AND ITMS FEEDS TO BE SPLICED ONTO TERMINATED FEEDS TO RESTORE CONNECTION.

NOT FOR CONSTRUCTION

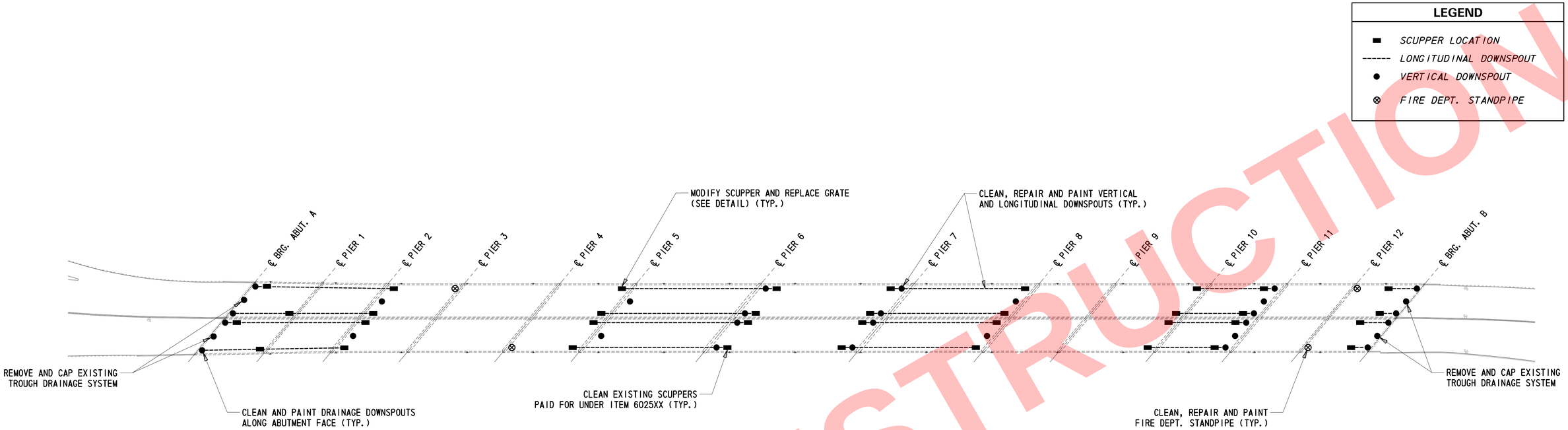

DRAINAGE REPAIR LOCATION PLAN

1" = 80'

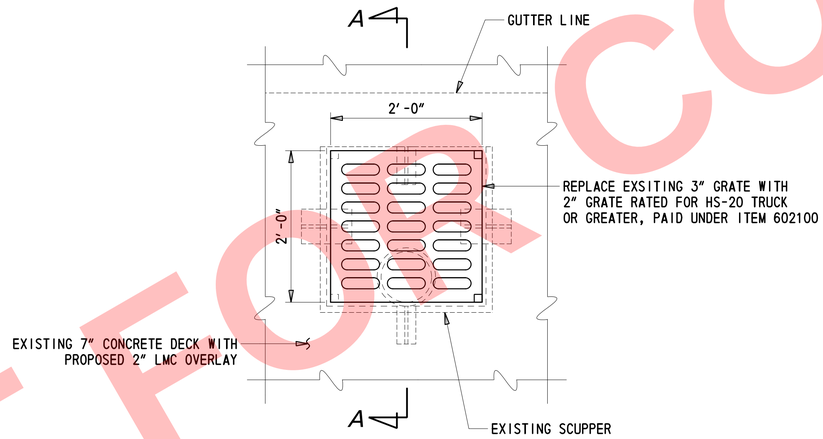

PLAN OF DRAINAGE INLET

(INLET AT GIRDER S1 SHOWN, OTHER LOCATIONS SIMILAR)

1" = 1'-0'

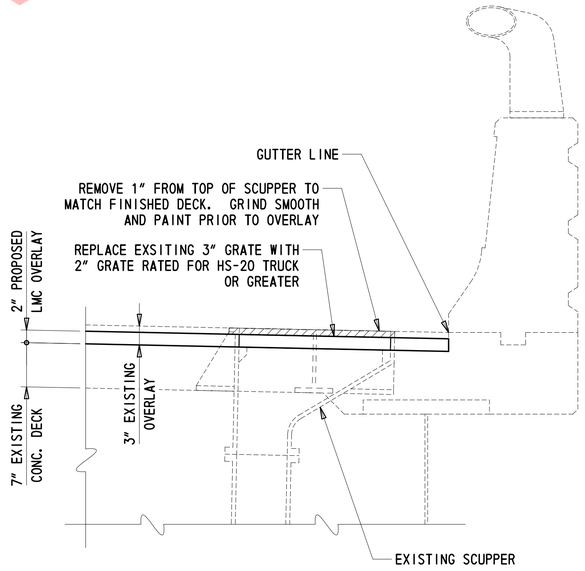

SECTION A-A

1" = 1'-0'

NOTES:

1. WORK ON THE DRAINAGE SYSTEM SHALL BE PAID FOR UNDER ITEM 6025XX, UNLESS OTHERWISE NOTED.
2. SCUPPERS SHALL BE CLEANED PRIOR TO ANY DRAINAGE SYSTEM WORK.
3. CLEANING AND PAINTING EXISTING DRAINAGE SHALL BE INCIDENTAL TO ITEM 616000.

NOT FOR CONSTRUCTION

2/8/2018 4:37:05 PM
T:\Dover\Projects\425009.9B\600_CADD\05_Plans\DT06_BR1-759.dgn

DELAWARE DEPARTMENT OF TRANSPORTATION	ADDENDUMS / REVISIONS	SCALE 0 80 160 240 FEET	REHABILITATION OF I-95 FROM I-495 TO NORTH OF BRANDYWINE RIVER BRIDGE	CONTRACT T201407404	BRIDGE NO. 1 759 059	BRIDGE DRAINAGE PLAN	1-759 DT-04
				COUNTY NEW CASTLE	DESIGNED BY: DJC		SHEET NO. 2-729
					CHECKED BY: DEF		TOTAL SHTS. 2-731

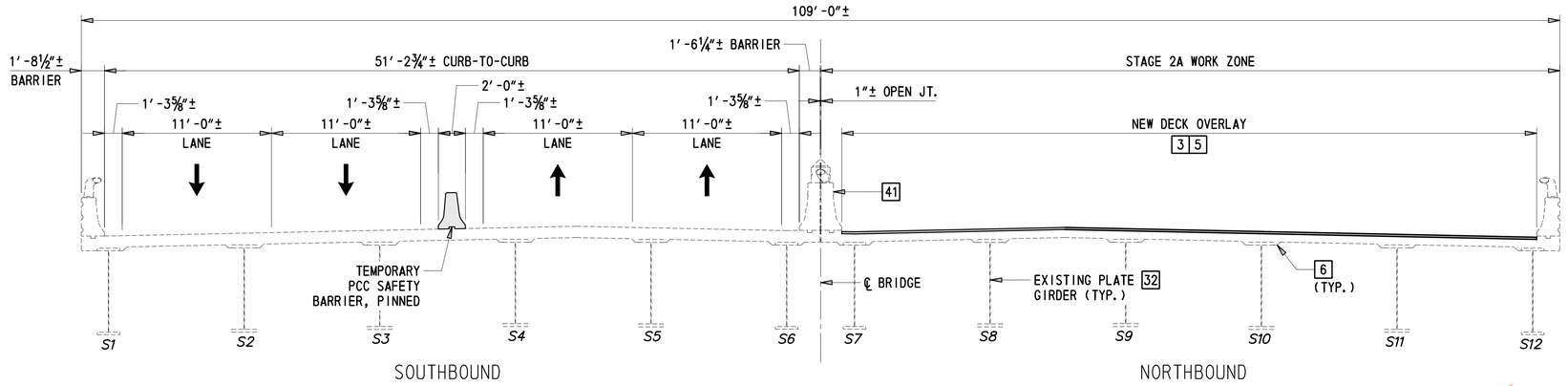

STAGE 2A

3/16″ = 1′-0″

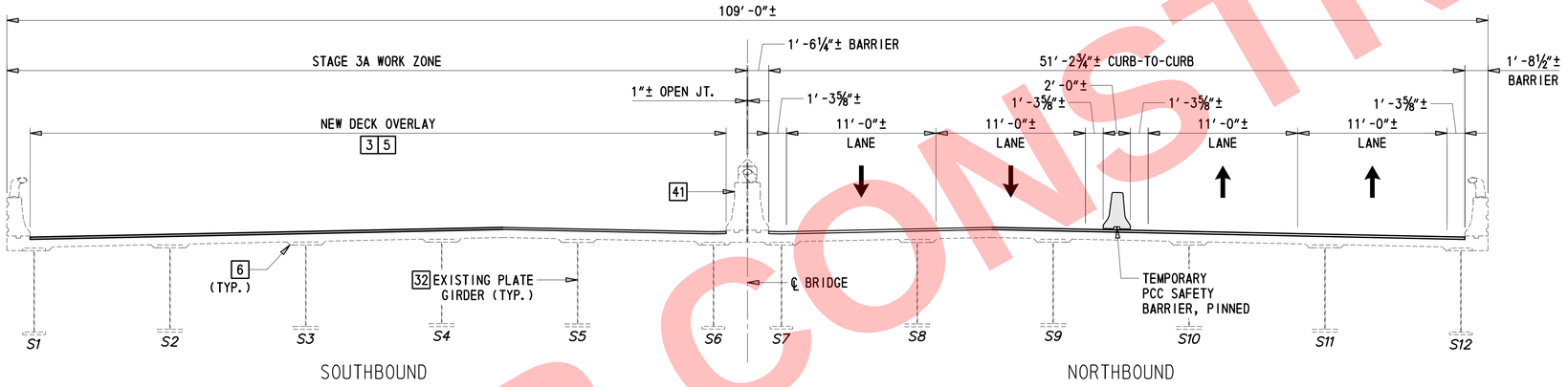

STAGE 3A

3/16″ = 1′-0″

SUBSTRUCTURE ACCESS DETAILS

1. UTILIZE PARKING LOT BETWEEN PIERS 1 - 3 FOR STAGING AND ACCESS.
2. ABUTMENT A - ACCESS VIA TEMPORARY SIDEWALK AND SHOULDER CLOSURES ON LOVERING AVE.
3. PIER 1 - UTILIZE TEMPORARY SHOULDER CLOSURE ON LOVERING AVE. TO ACCESS THE SOUTH FACE. ACCESS NORTH FACE VIA PARKING LOT.
4. PIERS 2 AND 3 - ACCESS VIA PARKING LOT AND SHORT-TERM CLOSURE OF NORTH VAN BUREN STREET AND ADJACENT SIDEWALKS. LIMIT CLOSURE OF NORTH VAN BUREN STREET TO XX DAYS.
5. PIER 4 - WORK CAN BE PERFORMED WITH MINIMAL IMPACT TO NORTH VAN BUREN STREET AND SOUTH PARK DRIVE.
6. PIERS 5 AND 6 - CLOSE SOUTH PARK DRIVE. TEMPORARILY REMOVE GUARDRAIL ALONG SOUTH PARK DRIVE TO PROVIDE ACCESS TO PIERS 5 AND 6. INSTALL STABILIZED CONSTRUCTION ENTRANCE FROM ROADWAY. LEVEL AND GRADE SLOPE. INSTALL PROTECTIVE SHIELDING OVER RACEWAY AND STONE FACE. INSTALL TEMPORARY BRIDGE OVER RACEWAY (ENSURE STONE FACE IS PROTECTED). CONSTRUCT TEMPORARY STONE CAUSEWAY ON THE EDGE OF THE BRANDYWINE CREEK TO ACCESS THE NORTH FACE OF PIER 5. LIMIT CLOSURE OF SOUTH PARK DRIVE TO XX DAYS.
7. UTILIZE THE PARKING LOT BETWEEN PIERS 7 AND 8 FOR STAGING AND ACCESS. TEMPORARILY CLOSE TH PEDESTRIAN PATH ADJACENT TO THE PARKING LOT.
8. PIER 7 - LEVEL THE GROUND NEAR THE BRANDYWINE CREEK TO ACCESS THE SOUTH FACE. DO NOT ENCROACH UPON THE BRANDYWINE CREEK WHEN LEVELING THE GROUND.
9. PIER 8 - ACCESS THE SOUTH FACE FROM THE PARKING LOT. UTILIZE A TEMPORARY SIGNAL LANE CLOSURE OF NORTH PARK DRIVE TO ACCESS THE NORTH FACE. VEHICULAR ACCESS MUST BE PROVIDED TO NORTH PARK DRIVE AT ALL TIMES.
10. PIER 9 - UTILIZE A TEMPORARY DETOUR OF THE MULTI-USE PATH TO ACCESS THE SOUTH FACE.
11. PIERS 9, 10, 11, AND 12 - INSTALL A TEMPORARY ACCESS ROAD WITH STABILIZED CONSTRUCTION ENTRANCE FROM STADIUM DRIVE (ENTER TO THE EAST OF PIER 12). STONE AND LEVELING MAY BE REQUIRED FROM PIER 11 TO PIER 12. REPLACE DETERIORATED MANHOLE COVER NEAR PIER 11 PRIOR TO GRADING.
12. ABUTMENT B - ACCESS FROM STADIUM DRIVE USING A SINGLE LANE CLOSURE. TEMPORARILY REMOVE FENCE ADJACENT TO ROADWAY DURING OPERATION.

SEQUENCE OF CONSTRUCTION

SUBSTRUCTURE REPAIRS

1. COMPLETE CONCRETE SUBSTRUCTURE REPAIRS.
2. REMOVE AND SALVAGE DOWNSPOUTS FROM PIERS THAT INTERFERE WITH INSTALLATION OF FRP WRAP AND APPLICATION OF EPOXY AND SILICONE ACRYLIC CONCRETE SEALERS TO THE SUBSTRUCTURE.
3. STRENGTHEN PIERS WITH FRP WRAP.
4. APPLY EPOXY AND SILICONE ACRYLIC CONCRETE SEALER TO THE SUBSTRUCTURE.
5. REINSTALL DOWNSPOUTS TO PIERS.

STAGE 2A

6. IMPLEMENT CROSS OVER IN ACCORDANCE WITH THE MOT PLANS TO PERFORM WORK ON THE NORTHBOUND BRIDGE.
7. INSTALL PROTECTIVE SHIELDING, FULL WIDTH OF BRIDGE UNDER CONSTRUCTION (NORTHBOUND OR SOUTHBOUND) IN SPANS 1, 2, 3, 4, 8, 9, AND 13, AND AT DECK JOINT REPLACEMENT LOCATIONS.REMOVE DECK JOINTS, INCLUDING BARRIER SECTIONS AT JOINTS. REMOVE AND SALVAGE EXISTING STEEL RAIL AT THE BARRIER SECTIONS BEING REMOVED.
8. REMOVE AND SLAVAGE END DIAPHRAGMS AS NOTED IN THE BRIDGE JACKING DETAILS. INSTALL TEMPORARY JACKING DIAPHRAGMS AS NOTED IN THE BRIDGE JACKING DETAILS.
9. JACK THE SUPERSTRUCTURE.
10. REMOVE EXISTING BEARINGS AND PEDESTALS AND INSTALL NEW CONCRETE PEDESTALS, ELASTOMERIC BEARINGS.
11. LOWER THE SUPERSTRUCTURE AND REMOVE THE JACKS.
12. INSTALL CONCRETE SHEAR BLOCKS.
13. INSTALL LONGITUDINAL SEISMIC RESTRAINERS.
14. REPAIR EXISTING END DIAPHRAGMS AS NOTED IN THE FRAMING PLAN AND DIAPHRAGM DETAILS.
    REMOVE TEMPORARY END DIAPHRAGMS AND REINSTALL SALVAGED END DIAPHRAGMS.
15. INSTALL FINGER JOINTS AT PIERS 2, 5, 8, AND 11. RECONSTRUCT BARRIER AT FINGER JOINTS.
16. REMOVE EXISTING APPROACH SLABS AND APPROACH SLAB BARRIER. PARTIALLY DEMOLISH WINGWALLS, RETAINING WALLS, AND ABUTMENT BACKWALLS. REMOVE AND SALVAGE STEEL RAIL ON TOP OF BARRIER SECTIONS THAT ARE BEING REMOVED.
17. CONSTRUCT APPROACH SLABS AND APPROACH SLAB BARRIER. RECONSTRUCT BARRIER ON TOP OF WINGWALLS AND RETAINING WALLS.
18. CONSTRUCT SLAB-OVER DECK DETAIL AT ABUTMENTS.
19. INSTALL STRIP SEAL EXPANSION JOINTS AT THE APPROACH END OF THE APPROACH SLABS.
20. CLEAN OUT SCUPPERS AND DOWNSPOUTS. REPLACE SCUPPER GRATES AND ADJUST SCUPPER TO PROPOSED ELEVATION.
21. REPAIR/REPLACE DRAINAGE PIPES AS NOTED IN THE BRIDGE DRAINAGE PLAN.
22. MILL EXISTING DECK OVERLAY, 2¾″ DEPTH.
23. REMOVE EXISTING UNSOUND DECK REPAIRS. MAKE FULL-DEPTH DECK REPAIRS AS DETERMINED BY THE ENGINEER.
24. SCARIFY ¼″ BY HYDRODEMOLITION. MAKE FULL-DEPTH DECK REPAIRS AS DETERMINED BY THE ENGINEER.
25. REPAIR SOFFIT SPALLS WITH FULL-DEPTH DECK REPAIRS AS DETERMINED BY THE ENGINEER.
26. REMOVAL OF PROTECTIVE SHIELDS MAY TAKE PLACE DURING ANY STEP FOLLOWING THIS STEP.
27. INSTALL LATEX MODIFIED CONCRETE OVERLAY, 2″ DEPTH. USE ADDITIONAL LATEX-MODIFIED CONCRETE TO FILL IN DEFFECTS ENCOUNTERED DURING HYDRODEMOLITION MONOLITHICALLLY WITH LATEX-MODIFIED CONCRETE OVERLAY.
28. APPLY SILICONE SEALER TO BARRIERS.
29. REINSTALL SALVAGED STEEL RAIL ON TOP OF BARRIER SECTIONS.
30. CLEAN AND PAINT STEEL SUPERSTRUCTURE.

STAGE 3A

31. IMPLEMENT CROSS OVER IN ACCORDANCE WITH THE MOT PLANS TO PERFORM WORK ON THE SOUTHBOUND BRIDGE.
32. REPEAT STEPS 7-30.
33. INSTALL PERMANENT PAVEMENT MARKINGS IN ACCORDANCE WITH THE SIGNING AND STRIPING PLANS.

LEGEND:

- TEMPORARY STRUCTURE
- REMOVAL & NEW CONSTRUCTION

KEY:

1 REPAIR NUMBER AS SHOWN ON DWG. PN-02.

NOT FOR CONSTRUCTION

DELAWARE DEPARTMENT OF TRANSPORTATION	ADDENDUMS / REVISIONS	SCALE AS NOTED	REHABILITATION OF I-95 FROM I-495 TO NORTH OF BRANDYWINE RIVER BRIDGE	CONTRACT T201407404	BRIDGE NO. 1 759 059	CONSTRUCTION PHASING	1-759 CS-01
				COUNTY NEW CASTLE	DESIGNED BY: RMB		SHEET NO. 2-730
					CHECKED BY: DEF		TOTAL SHTS. 2-731

2/8/2018 4:37:07 PM
T:\Dover\Projects\425009.98\600_CADD\05_Plans\CS01_BR1-759.dgn

(1) ANY MARK NUMBER WITH SUFFIX 'E' DENOTES EPOXY COATED REINFORCING STEEL.

(2) ALL MARK 'LOCATION PREFIXES' SHALL CONSIST OF TWO LETTERS AND ARE AS FOLLOWS: AB = ABUTMENT, AS = APPROACH SLAB, BC = BOX CULVERT, BW = BACKWALL, CL = COLUMN, DK = DECK, DL = DOWEL, FT = FOOTING, HW = HEADWALL, MS = MISC. BARS, PA = PARAPET, PR = PIER, SC = SHEETPILE CAP, SL = SLAB, TW = TOEWALL, WL = WALL (UNIQUE LOCATION), WW = WINGWALL

SPECIFICATIONS					BENDING DIMENSIONS (FEET-INCHES /QUARTER INCH)									
QTY.	SIZE	LENGTH	MARK	TYPE	A	B	C	D	E	F/R	G	H	J	K	O
ABUTMENT REINFORCEMENT															
XX	X	XX-XX	ABXXXE	XXX											
APPROACH SLAB REINFORCEMENT															
XX	X	XX-XX	ASXXXE	XXX											
DECK JOINT REINFORCEMENT															
XX	X	XX-XX	DKXXXE	XXX											

SPECIFICATIONS					BENDING DIMENSIONS (FEET-INCHES /QUARTER INCH)									
QTY.	SIZE	LENGTH	MARK	TYPE	A	B	C	D	E	F/R	G	H	J	K	O
BARRIER REINFORCEMENT															
XX	X	XX-XX	PAXXXE	XXX											
PEDESTAL AND SHEAR BLOCK REINFORCEMENT															
XX	X	XX-XX	PRXXXE	XXX											

SPECIFICATIONS					BENDING DIMENSIONS (FEET-INCHES /QUARTER INCH)									
QTY.	SIZE	LENGTH	MARK	TYPE	A	B	C	D	E	F/R	G	H	J	K	O
SLEEPER SLAB REINFORCEMENT															
XX	X	XX-XX	SLXXXE	XXX											
WINGWALL & RETAINING WALL REINFORCEMENT															
XX	X	XX-XX	WLXXXE	XXX											
XX	X	XX-XX	WWXXXE	XXX											

NOT FOR CONSTRUCTION

ASTM STANDARD ENGLISH REINFORCING BARS

BAR SIZE	NOMINAL DIMENSIONS: DIAMETER (INCHES)	AREA (INCHES²)	WEIGHT (LBS./FT.)
3	0.375	0.110	0.376
4	0.500	0.200	0.668
5	0.625	0.310	1.043
6	0.750	0.440	1.502
7	0.875	0.600	2.044
8	1.000	0.790	2.670
9	1.128	1.000	3.400
10	1.270	1.270	4.303
11	1.410	1.560	5.313
14	1.693	2.250	7.650
18	2.257	4.000	13.600

RECOMMENDED END HOOKS, APPLICABLE TO ALL GRADES

BAR SIZE	180° HOOKS: D	180° HOOKS: A OR G	180° HOOKS: J	90° HOOKS: A OR G
3	2¼″	5″	3″	6″
4	3″	6″	4″	8″
5	3¾″	7″	5″	10″
6	4½″	8″	6″	1-0″
7	5¼″	10″	7″	1-2″
8	6″	11″	8″	1-4″
9	9½″	1-3″	11¾″	1-7″
10	10¾″	1-5″	1-1¼″	1-10″
11	1-0″	1-7″	1-2¾″	2-0″
14	1-6¼″	2-3″	1-9¾″	2-7″
18	2-0″	3-0″	2-4½″	3-5″

STIRRUP AND TIE HOOKS, APPLICABLE TO ALL GRADES

BAR SIZE	90° HOOK: D	90° HOOK: A OR G	135° HOOK: A OR G	135° HOOK: A OR G
3	1½″	4″	4″	2½″
4	2″	4½″	4½″	3″
5	2½″	6″	5½″	3¾″
6	4½″	1-0″	8″	4½″
7	5¼″	1-2″	9″	5¼″
8	6″	1-4″	10½″	6″

NOTES:
1. FIGURES SHOWN IN CIRCLES REPRESENT BAR BEND TYPES.
2. STANDARD BAR BENDS INCLUDE ONLY THOSE TYPES BELOW, INDICATED AS SUCH.
3. ALL DIMENSIONS OUT-TO-OUT, EXCEPT "A" AND "G" ON STD. 180° AND 135° HOOKS.
4. "J" DIMENSIONS ON 180° HOOKS TO BE SHOWN ONLY WHERE NECESSARY TO RESTRICT HOOK SIZE, OTHERWISE STANDARD 'ACI' HOOKS ARE TO BE USED.
5. WHERE "J" IS NOT SHOWN, "J" WILL BE KEPT EQUAL TO OR LESS THAN "H" ON TYPES 3, 5 AND 22. WHERE "J" CAN EXCEED "H", IT SHALL BE SHOWN.
6. "H" DIMENSIONS OF STIRRUPS TO BE SHOWN AS NEEDED TO FIT WITHIN THE CONCRETE.
7. UNLESS OTHERWISE NOTED, DIAMETER "D" IS THE SAME FOR ALL BENDS AND HOOKS ON A BAR (EXCEPT FOR BEND TYPES 11 AND 13).
8. WHERE SLOPE DIFFERS FROM 45° OFFSET, "H" AND "K" MUST BE SHOWN.
9. WHERE BARS ARE TO BE BENT MORE ACCURATELY THAN STANDARD BENDING TOLERANCES, BENDING DIMENSIONS REQUIRING CLOSER FABRICATION SHOULD HAVE LIMITS INDICATED.
10. FOR RECOMMENDED DIAMETER "D", OF BENDS, HOOKS, ETC., REFER TO TABLE ABOVE, 'CRSI' OR 'ACI' TABLES WHERE APPLICABLE AND REQUIRED.
11. TYPE S1-S6, S11, T1-T3 AND T6-T9 APPLICABLE TO BAR SIZES #3 THROUGH #8.

STANDARD BAR BENDS

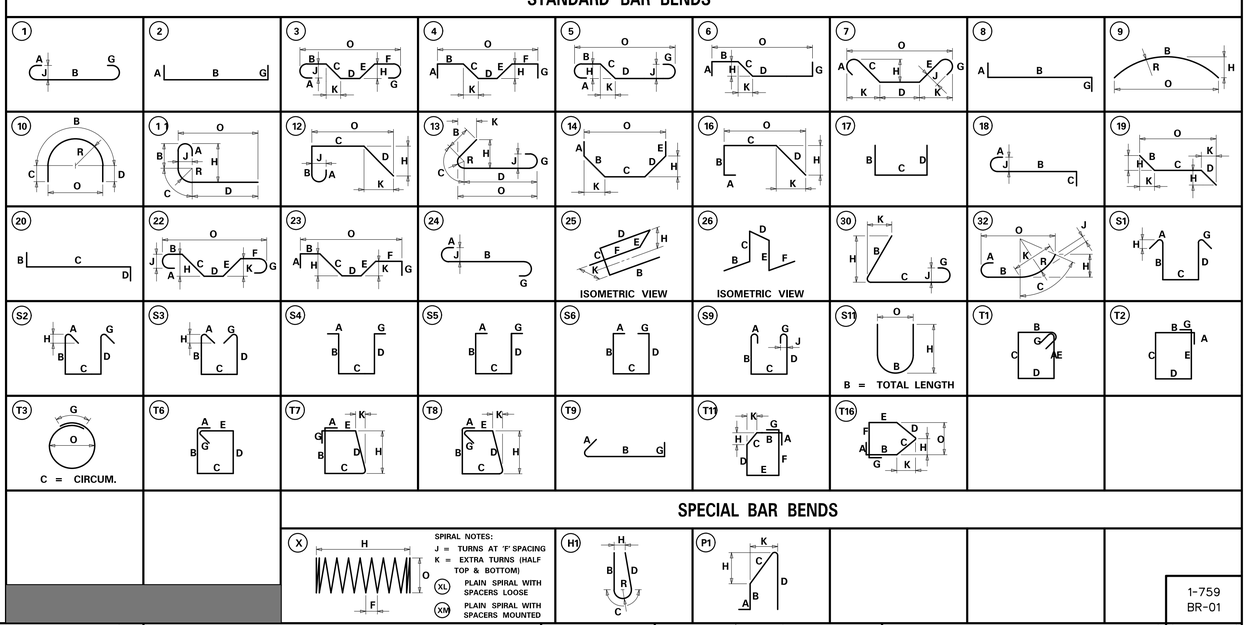

SPECIAL BAR BENDS

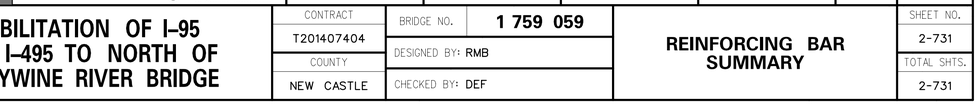

SPIRAL NOTES:
J = TURNS AT 'F' SPACING
K = EXTRA TURNS (HALF TOP & BOTTOM)
XL PLAIN SPIRAL WITH SPACERS LOOSE
XM PLAIN SPIRAL WITH SPACERS MOUNTED

STIRRUP AND TIE HOOKS

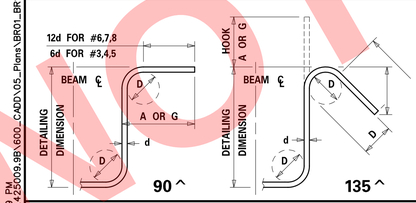

180° AND 90° END HOOKS

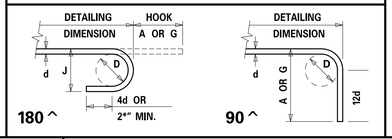

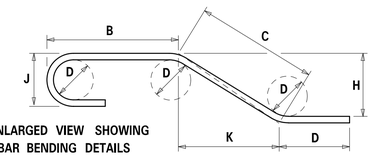

ENLARGED VIEW SHOWING BAR BENDING DETAILS

ADDENDUMS / REVISIONS

NOT TO SCALE

DELAWARE DEPARTMENT OF TRANSPORTATION

REHABILITATION OF I-95 FROM I-495 TO NORTH OF BRANDYWINE RIVER BRIDGE

CONTRACT	BRIDGE NO.	1 759 059
T201407404	DESIGNED BY: RMB	
COUNTY	CHECKED BY: DEF	
NEW CASTLE		

REINFORCING BAR SUMMARY

1-759 BR-01	SHEET NO.	TOTAL SHTS.
	2-731	2-731

2/8/2018 4:37:00 PM
F:\Dover\Projects\X25009.98\600_CADD\05_Plans\BRO1_BR1-759.dgn